SIEMENS

Manual Collection

SIMATIC

S7-1500, ET 200MP

Automation system S7-1500
Automation system ET 200MP

This document contains a compilation of all manuals for the S7-1500/ET 200MP system family.
Use the bookmarks on the left edge of the screen to navigate.

Edition 02/2023

support.industry.siemens.com

SIEMENS

Edition 01/2023

SYSTEM MANUAL

SIMATIC

S7-1500/ET 200MP

Automation system

support.industry.siemens.com

SIEMENS

SIMATIC

S7-1500/ET 200MP Automation system

System Manual

Introduction 1

Safety information 2

New properties/functions 3

System overview 4

Application planning 5

Installation 6

Wiring 7

Configuring 8

Basics of program execution 9

Protection 10

Flexible automation concepts 11

Commissioning 12

CPU display 13

Maintenance 14

Test and service functions 15

Technical specifications 16

Dimension drawings A

Accessories/spare parts B

Decommissioning C

01/2023

A5E03461182-AK

Legal information

Warning notice system

This manual contains notices you have to observe in order to ensure your personal safety, as well as to prevent damage to property. The notices referring to your personal safety are highlighted in the manual by a safety alert symbol, notices referring only to property damage have no safety alert symbol. These notices shown below are graded according to the degree of danger.

⚠ DANGER
indicates that death or severe personal injury **will** result if proper precautions are not taken.

⚠ WARNING
indicates that death or severe personal injury **may** result if proper precautions are not taken.

⚠ CAUTION
indicates that minor personal injury can result if proper precautions are not taken.

NOTICE
indicates that property damage can result if proper precautions are not taken.

If more than one degree of danger is present, the warning notice representing the highest degree of danger will be used. A notice warning of injury to persons with a safety alert symbol may also include a warning relating to property damage.

Qualified Personnel

The product/system described in this documentation may be operated only by **personnel qualified** for the specific task in accordance with the relevant documentation, in particular its warning notices and safety instructions. Qualified personnel are those who, based on their training and experience, are capable of identifying risks and avoiding potential hazards when working with these products/systems.

Proper use of Siemens products

Note the following:

⚠ WARNING
Siemens products may only be used for the applications described in the catalog and in the relevant technical documentation. If products and components from other manufacturers are used, these must be recommended or approved by Siemens. Proper transport, storage, installation, assembly, commissioning, operation and maintenance are required to ensure that the products operate safely and without any problems. The permissible ambient conditions must be complied with. The information in the relevant documentation must be observed.

Trademarks

All names identified by ® are registered trademarks of Siemens AG. The remaining trademarks in this publication may be trademarks whose use by third parties for their own purposes could violate the rights of the owner.

Disclaimer of Liability

We have reviewed the contents of this publication to ensure consistency with the hardware and software described. Since variance cannot be precluded entirely, we cannot guarantee full consistency. However, the information in this publication is reviewed regularly and any necessary corrections are included in subsequent editions.

Siemens AG
Digital Industries
Postfach 48 48
90026 NÜRNBERG
GERMANY

Ⓟ 02/2023 Subject to change

Copyright © Siemens AG 2013 - 2023.
All rights reserved

Table of contents

1 Introduction ... 9

1.1 S7-1500/ET 200MP documentation guide ... 11
1.1.1 Information classes S7-1500/ET 200MP ... 11
1.1.2 SIMATIC Technical Documentation ... 13

2 Safety information ... 15

2.1 Security information ... 15

2.2 General safety instructions ... 16
2.2.1 Warnings in this document ... 16
2.2.2 Safety-related symbols ... 16
2.2.2.1 Devices without explosion protection ... 16
2.2.2.2 Devices with explosion protection ... 17
2.2.3 Intended use ... 18
2.2.4 Changes to the device and spare parts ... 18
2.2.5 Target group and personnel qualifications ... 19
2.2.6 Personal protective equipment ... 19
2.2.7 Open Source Software ... 20
2.2.8 Safe working ... 21
2.2.8.1 Working on electrical parts ... 21
2.2.9 Residual risks ... 21
2.2.9.1 Live parts ... 21
2.2.9.2 Conductive pollution ... 22
2.2.9.3 Overheating ... 22
2.2.9.4 Uncontrolled movements ... 23
2.2.9.5 Unsafe operating states ... 23
2.2.10 Behavior in case of emergency ... 23
2.2.11 Material damage ... 24
2.2.11.1 Transport and storage ... 24
2.2.11.2 Installation and connection ... 24

3 New properties/functions ... 25

4 System overview ... 32

4.1 Overview of the SIMATIC S7-1500 automation system ... 32
4.1.1 The SIMATIC automation systems ... 32
4.1.2 Comparison of SIMATIC automation systems ... 34
4.1.3 Areas of application SIMATIC S7-1500 and ET 200MP ... 36
4.1.4 Plant components and automation levels ... 37
4.1.5 Scalability ... 38
4.1.6 Overview of features ... 40

4.2 Configuration ... 43
4.2.1 Configuration of the SIMATIC S7-1500 Automation System ... 43
4.2.2 Configuration of the distributed I/O system SIMATIC ET 200MP ... 44
4.2.3 Configuration of a fail-safe system with SIMATIC S7-1500 ... 45

4.3 Components ... 49

4.4 CPUs ... 53
4.4.1 What can you do with the CPU? ... 54
4.4.2 Technical specifications of CPUs ... 56
4.4.3 Web server ... 59
4.4.4 Safety ... 60
4.4.5 Security ... 62
4.4.6 Diagnostics ... 64
4.4.7 Trace ... 65

4.5 Interface modules for SIMATIC S7-1500 I/O devices ... 67

4.6 Input and output modules ... 68
4.6.1 Which I/O devices are the correct ones? ... 69
4.6.2 Digital input modules ... 70
4.6.3 Digital output modules ... 73
4.6.4 Fail-safe digital modules ... 75
4.6.5 Analog input modules ... 76
4.6.6 Analog output modules ... 79

4.7 Communication ... 81
4.7.1 Interfaces for communications ... 81
4.7.2 CM communication modules / CP communications processors ... 81
4.7.3 Communication module IO-Link Master ... 84
4.7.4 Safety-related communication via fail-safe modules ... 85

4.8 Technology functions ... 86
4.8.1 Motion control ... 86
4.8.2 PID Control ... 91
4.8.3 Technology functions of the compact CPUs ... 92
4.8.4 Technology modules for counting, measuring and position detection ... 93
4.8.5 Technology module for time-based IO ... 94
4.8.6 Technology module for weighing technology ... 95
4.8.7 Technology Module TM NPU ... 96

4.9 Power supply ... 97

4.10 Connection elements and system cabling ... 99

4.11 Software ... 102
4.11.1 TIA Portal ... 102
4.11.2 TIA Selection Tool ... 103
4.11.3 SIMATIC Automation Tool ... 103
4.11.4 SINETPLAN ... 104
4.11.5 PRONETA ... 105
4.11.6 SIMATIC S7 app ... 105

5 Application planning ... 106

5.1 Hardware configuration ... 106
5.1.1 Hardware configuration of the S7-1500 automation system ... 106
5.1.2 Hardware configuration of the ET 200MP distributed I/O system with PROFINET interface module ... 108
5.1.3 Hardware configuration of the ET 200MP distributed I/O system with PROFIBUS interface module ... 110

5.2 System and load power supply ... 111
5.2.1 Use of system power supplies ... 113
5.2.2 Special considerations for the use of a system power supply in the first power segment ... 115
5.2.3 Special requirements when using the power supply PS 60W 24/48/60VDC HF ... 117

5.3 Power balance calculation ... 121

5.4 Use of load power supplies ... 124

6 Installation ... 125

6.1 Basics ... 125

6.2 Installing the mounting rail ... 127

6.3 Installing the standard rail adapter ... 132

6.4 Installing a system power supply ... 138

6.5 Installing a load current supply ... 140

6.6 Installing the CPU ... 142

6.7 Installing the interface module ... 144

6.8 Installing I/O modules ... 146

7 Wiring ... 148

7.1 Rules and regulations for operation ... 148

7.2 Additional rules and regulations for operation of the S7-1500/ET 200MP with fail-safe modules ... 151
7.2.1 Safety extra-low voltage (SELV, PELV) for failsafe modules ... 151
7.2.2 Requirements of sensors and actuators for fail-safe modules ... 152
7.2.3 Capacitive crosstalk of digital input/output signals ... 154

7.3 Operation on grounded infeed ... 154

7.4 Electrical configuration ... 158

7.5 Wiring rules ... 162

7.6 Connecting the supply voltage ... 167

7.7 Connecting system power supply and load current supply ... 168

7.8 Connecting the CPU/interface module to the load current supply ... 170

7.9 Connecting interfaces for communication ... 172

7.10 Front connector for the I/O modules ... 174
7.10.1 Wiring front connectors for I/O modules without shield contact element ... 176
7.10.2 Wiring front connectors for I/O modules with shield contact element ... 178
7.10.3 Bringing the front connector into final position ... 185

7.11 Marking the I/O modules ... 187
7.11.1 Labeling strips ... 187
7.11.2 Optional marking ... 188

8 Configuring ... 189

8.1 Configuring the CPU ... 190
8.1.1 Reading out the configuration ... 191
8.1.2 Address assignment ... 197

8.1.2.1 Addressing - overview ... 197
8.1.2.2 Addressing digital modules ... 198
8.1.2.3 Addressing analog modules ... 200
8.1.3 Process images and process image partitions ... 203
8.1.3.1 Process image - overview ... 203
8.1.3.2 Update process image partitions in the user program ... 204
8.2 Configuring ET 200MP distributed I/O system ... 205
8.3 Assigning PROFIsafe address to fail-safe modules with SIMATIC Safety ... 206
9 Basics of program execution ... 207
9.1 Events and OBs ... 207
9.2 Asynchronous instructions ... 210
10 Protection ... 223
10.1 Overview of the protection functions ... 223
10.2 Protection of confidential configuration data ... 224
10.3 Configuring access protection for the CPU ... 224
10.4 Using the display to set additional password protection ... 229
10.5 Using the user program to set additional access protection ... 229
10.6 Know-how protection ... 230
10.7 Copy protection ... 233
10.8 Protection by locking the CPU/interface module ... 235
11 Flexible automation concepts ... 236
11.1 Standard machine projects ... 236
11.2 Configuration control (option handling) ... 237
11.2.1 Configuring ... 239
11.2.2 Creating the control data record ... 241
11.2.2.1 Control data record for the S7-1500 Automation System ... 244
11.2.2.2 Control data record for the ET 200MP distributed I/O system ... 245
11.2.2.3 Feedback data record of the ET 200MP distributed I/O system ... 246
11.2.2.4 Examples of configuration control ... 247
11.2.3 Transferring the control data record in the startup program of the CPU ... 250
11.2.4 Behavior during operation ... 254
12 Commissioning ... 255
12.1 Overview ... 255
12.2 Check before powering on for the first time ... 256
12.3 Procedure for commissioning the S7-1500 automation system ... 257
12.3.1 Removing/inserting a SIMATIC memory card on the CPU ... 258
12.3.2 First power-on of the CPU ... 261
12.4 Procedure for commissioning the ET 200MP distributed I/O system ... 262
12.4.1 Commissioning the ET 200MP for PROFINET IO ... 262
12.4.2 Commissioning the ET 200MP for PROFIBUS DP ... 263

12.5 Operating modes ... 264
12.5.1 STARTUP mode ... 264
12.5.2 STOP mode ... 267
12.5.3 RUN mode ... 267
12.5.4 Operating mode transitions ... 268

12.6 CPU memory reset ... 271
12.6.1 Automatic memory reset ... 272
12.6.2 Manual memory reset ... 272

12.7 Backing up and restoring the CPU configuration ... 274

12.8 Time synchronization ... 278
12.8.1 Example: Configuring the IP address of the NTP server in STEP 7 or setting it in the user program ... 280

12.9 Identification and maintenance data ... 282
12.9.1 Reading out and entering I&M data ... 282
12.9.2 Record structure for I&M data ... 285
12.9.3 Example: Read out firmware version of the CPU with Get_IM_Data ... 287

12.10 Shared commissioning of projects ... 289

13 CPU display ... 290

14 Maintenance ... 299

14.1 Removing and inserting I/O modules ... 299

14.2 Replacing the display/front cover ... 300

14.3 Replacement of I/O modules and front connectors ... 303
14.3.1 Coding element on the I/O module and on the front connector ... 303
14.3.2 Replacing an I/O module ... 306
14.3.3 Replacing a front connector ... 307

14.4 Replacing the coding element at the power connector of the system power supply and load current supply ... 310

14.5 Firmware update ... 312

14.6 Reset to factory settings ... 319
14.6.1 Resetting the CPU to factory settings ... 319
14.6.2 Resetting interface module (PROFINET IO) to factory settings ... 324

14.7 Fault reactions with fail-safe modules ... 325

14.8 Maintenance and repair ... 327

15 Test and service functions ... 328

15.1 Test functions ... 328

15.2 Reading out/saving service data ... 333

16 Technical specifications ... 336

16.1 Standards, approvals and safety instructions ... 336

16.2 Electromagnetic compatibility ... 347

16.3 Electromagnetic compatibility of fail-safe modules ... 349

16.4 Shipping and storage conditions ... 349

16.5 Mechanical and climatic ambient conditions 350
16.6 Information on insulation tests, protection class, degree of protection and rated voltage 354
16.7 Use of the S7-1500/ET 200MP in zone 2 hazardous areas 355
A Dimension drawings 356
A.1 Dimension drawings of the mounting rails 356
A.2 Dimension drawing of shielding bracket for 35 mm modules 359
A.3 Dimension drawing of shielding bracket for 25 mm modules 360
A.4 Dimension drawing of shielding bracket for 35 mm modules 360
A.5 Dimension drawing of shielding bracket for 25 mm modules 361
A.6 Dimension drawing of infeed element for 35 mm modules 361
A.7 Dimension drawing of infeed element for 25 mm modules 361
A.8 Dimension drawings of the labeling strips 362
A.9 Dimension drawing of test probe for measurement tap 362
B Accessories/spare parts 363
C Decommissioning 367
C.1 Introduction 367
C.2 Securely removing data 367
C.3 Recycling and disposal 369
Glossary 370
Index 381

Introduction

1

Purpose of the documentation

This documentation provides important information on configuring, installing, wiring and commissioning the S7-1500 automation system/ET 200MP distributed I/O system.

Basic knowledge required

General knowledge in the field of automation engineering is required to understand this documentation.

Validity of the documentation

This documentation applies to all products of the SIMATIC S7-1500 and SIMATIC ET 200MP product families.

Conventions

STEP 7: In this documentation, "STEP 7" is used as a synonym for all versions of the configuration and programming software "STEP 7 (TIA Portal)".

Please also observe notes marked as follows:

Note

A note contains important information on the product described in the documentation, on the handling of the product or on the section of the documentation to which particular attention should be paid.

Special information

Note

Important note for maintaining the operational safety of your plant

Plants with safety-related features are subject to special operational safety requirements on the part of the operator. The supplier is also required to comply with certain measures for product monitoring. Siemens informs system operators in the form of personal notifications about product developments and properties which may be or become important issues in terms of operational safety.

You need to subscribe to the corresponding notifications to ensure that you always remain up-to-date and are able to make any necessary changes to your plant regarding operational safety should the need arise.

Register with Industry Online Support. Follow the links below and click on "Email on update" on the right-hand side in each case:

- SIMATIC S7-300/S7-300F (https://support.industry.siemens.com/cs/ww/en/ps/13751)
- SIMATIC S7-400/S7-400H/S7-400F/FH (https://support.industry.siemens.com/cs/ww/en/ps/13828)
- SIMATIC WinAC RTX (F) (https://support.industry.siemens.com/cs/ww/en/ps/13915)
- SIMATIC S7-1500/SIMATIC S7-1500F (https://support.industry.siemens.com/cs/ww/en/ps/13716)
- SIMATIC S7-1200/SIMATIC S7-1200F (https://support.industry.siemens.com/cs/ww/en/ps/13883)
- Distributed I/O (https://support.industry.siemens.com/cs/ww/en/ps/14029)
- STEP 7 (TIA Portal) (https://support.industry.siemens.com/cs/ww/en/ps/14340)

Note

Increased safety measures

Anywhere that errors can cause injury or property damage, special standards must be applied to the safety of the entire plant. Special, plant-specific rules exist for this purpose, which must also be taken into account by the owner when setting up the controller.

For electronic controllers with safety responsibility, the measures that must be taken to prevent or control errors are based on the risk posed by the plant. For this, the owner must ensure implementation of additional measures for the plant, e.g. use of safety-related controllers such as the S7-1500 F fail-safe automation system.

Note

When using F-CPUs in safety mode and fail-safe modules, note the description of the fail-safe system SIMATIC Safety Programming and Operating Manual SIMATIC Safety - Configuring and Programming (https://support.automation.siemens.com/WW/view/en/54110126).

Note

Product information

The Product Information for the S7-1500 automation system/ET 200MP distributed I/O system contains:

- Module overview of SIMATIC S7-1500 and ET 200MP
- Additions to the documentation

The product information can be found on the Internet (https://support.automation.siemens.com/WW/view/en/68052815).

Industry Mall

The Industry Mall is the catalog and order system of Siemens AG for automation and drive solutions on the basis of Totally Integrated Automation (TIA) and Totally Integrated Power (TIP).

You can find catalogs for all automation and drive products on the Internet (https://mall.industry.siemens.com).

1.1 S7-1500/ET 200MP documentation guide

1.1.1 Information classes S7-1500/ET 200MP

The documentation for the SIMATIC S7-1500 automation system and the ET 200MP distributed I/O system is arranged into three areas.

This arrangement enables you to access the specific content you require. Changes and supplements to the manuals are documented in a Product Information.

You can download the documentation free of charge from the Internet (https://support.industry.siemens.com/cs/ww/en/view/109742691).

Basic information

The System Manual and Getting Started describe in detail the configuration, installation, wiring and commissioning of the SIMATIC S7-1500 and ET 200MP systems.

The STEP 7 online help supports you in the configuration and programming.

Examples:

- Getting Started S7-1500
- S7-1500/ET 200MP System Manual
- Online help TIA Portal

Device information

Equipment manuals contain a compact description of the module-specific information, such as properties, wiring diagrams, characteristics and technical specifications.

Examples:

- Equipment Manuals CPUs
- Equipment Manuals Interface Modules
- Equipment Manuals Digital Modules
- Equipment Manuals Analog Modules
- Equipment Manuals Communications Modules
- Equipment Manuals Technology Modules
- Equipment Manuals Power Supply Modules

General information

The function manuals contain detailed descriptions on general topics relating to the SIMATIC S7-1500 and ET 200MPsystems.

Examples:

- Function Manual Diagnostics
- Function Manual Communication
- Function Manual Motion Control
- Function Manual Web Server
- Function Manual Cycle and Response Times
- PROFINET Function Manual
- PROFIBUS Function Manual

Product Information

Changes and supplements to the manuals are documented in a Product Information. The Product Information takes precedence over the device and system manuals.

You can find the latest Product Information on the S7-1500 and ET 200MP systems on the Internet (https://support.industry.siemens.com/cs/de/en/view/68052815).

Manual Collection S7-1500/ET 200MP

The Manual Collection contains the complete documentation on the SIMATIC S7-1500 automation system and the ET 200MP distributed I/O system gathered together in one file.

You can find the Manual Collection on the Internet.
(https://support.industry.siemens.com/cs/ww/en/view/86140384)

Manual Collection fail-safe modules

The Manual Collection contains the complete documentation on the fail-safe SIMATIC modules, gathered together in one file.

You can find the Manual Collection on the Internet.
(https://support.industry.siemens.com/cs/de/en/view/109806400)

SIMATIC S7-1500 comparison list for programming languages

The comparison list contains an overview of which instructions and functions you can use for which controller families.

You can find the comparison list on the Internet
(https://support.industry.siemens.com/cs/ww/en/view/86630375).

1.1.2 SIMATIC Technical Documentation

Additional SIMATIC documents will complete your information. You can find these documents and their use at the following links and QR codes.

The Industry Online Support gives you the option to get information on all topics. Application examples support you in solving your automation tasks.

Overview of the SIMATIC Technical Documentation

Here you will find an overview of the SIMATIC documentation available in Siemens Industry Online Support:

Industry Online Support International
(https://support.industry.siemens.com/cs/ww/en/view/109742705)

Watch this short video to find out where you can find the overview directly in Siemens Industry Online Support and how to use Siemens Industry Online Support on your mobile device:

Quick introduction to the technical documentation of automation products per video (https://support.industry.siemens.com/cs/us/en/view/109780491)

YouTube video: Siemens Automation Products - Technical Documentation at a Glance (https://youtu.be/TwLSxxRQQsA)

mySupport

With "mySupport" you can get the most out of your Industry Online Support.

Registration	You must register once to use the full functionality of "mySupport". After registration, you can create filters, favorites and tabs in your personal workspace.
Support requests	Your data is already filled out in support requests, and you can get an overview of your current requests at any time.
Documentation	In the Documentation area you can build your personal library.
Favorites	You can use the "Add to mySupport favorites" to flag especially interesting or frequently needed content. Under "Favorites", you will find a list of your flagged entries.
Recently viewed articles	The most recently viewed pages in mySupport are available under "Recently viewed articles".
CAx data	The CAx data area gives you access to the latest product data for your CAx or CAe system. You configure your own download package with a few clicks: • Product images, 2D dimension drawings, 3D models, internal circuit diagrams, EPLAN macro files • Manuals, characteristics, operating manuals, certificates • Product master data

You can find "mySupport" on the Internet. (https://support.industry.siemens.com/My/ww/en)

Application examples

The application examples support you with various tools and examples for solving your automation tasks. Solutions are shown in interplay with multiple components in the system - separated from the focus on individual products.

You can find the application examples on the Internet.
(https://support.industry.siemens.com/cs/ww/en/ps/ae)

Safety information 2

2.1 Security information

Siemens provides products and solutions with industrial security functions that support the secure operation of plants, systems, machines and networks.

In order to protect plants, systems, machines and networks against cyber threats, it is necessary to implement – and continuously maintain – a holistic, state-of-the-art industrial security concept. Siemens' products and solutions constitute one element of such a concept.

Customers are responsible for preventing unauthorized access to their plants, systems, machines and networks. Such systems, machines and components should only be connected to an enterprise network or the internet if and to the extent such a connection is necessary and only when appropriate security measures (e.g. firewalls and/or network segmentation) are in place.

For additional information on industrial security measures that may be implemented, please visit (https://www.siemens.com/industrialsecurity).

Siemens' products and solutions undergo continuous development to make them more secure. Siemens strongly recommends that product updates are applied as soon as they are available and that the latest product versions are used. Use of product versions that are no longer supported, and failure to apply the latest updates may increase customers' exposure to cyber threats.

To stay informed about product updates, subscribe to the Siemens Industrial Security RSS Feed visit (https://www.siemens.com/cert).

2.2 General safety instructions

2.2.1 Warnings in this document

You can find explanations of the warnings used in this document in the "Legal information" section.

2.2.2 Safety-related symbols

2.2.2.1 Devices without explosion protection

The following table contains an explanation of the symbols located in your SIMATIC device, its packaging or the accompanying documentation.

Symbol	Meaning
	General warning sign **Caution/Notice** You must read the product documentation. The product documentation contains information about the potential risks and enable you to recognize risks and implement countermeasures.
	Read the information provided by the product documentation. ISO 7010 M002
	Ensure the device is only installed by electrically skilled person. IEC 60417 No. 6182
CABLE SPEC.	Note that connected mains lines must be designed according to the expected minimum and maximum ambient temperature.
EMC	Note that the device must be constructed and connected in accordance with EMC regulations.
230V MODULES	Note that a 230 V device can be exposed to electrical voltages which can be dangerous. ANSI Z535.2
III 24V MODULES	Note that a device of Protection Class III may only be supplied with a protective low voltage according to the standard SELV/PELV. IEC 60417-1-5180 "Class III equipment"

Symbol	Meaning
INDOOR USE ONLY INDUSTRIAL USE ONLY	Be aware that the device is only approved for the industrial field and only for indoor use.
	Note that an enclosure is required for installing the device. Enclosures are considered: • Standing control cabinet • Serial control cabinet • Terminal boxes • Wall enclosure

2.2.2.2 Devices with explosion protection

The following table contains an explanation of the symbols located in your SIMATIC device, its packaging or the accompanying documentation.

Symbol	Meaning
ONLY EX MODULES	The assigned safety symbols apply to devices **with Ex approval**. You must read the product documentation. The product documentation contains information about the potential risks and enable you to recognize risks and implement countermeasures.
	Read the information provided by the product documentation. ISO 7010 M002
	Ensure the device is only installed by electrically skilled person. IEC 60417 No. 6182
F<2N DISPLAY F<4N HOUSING	Observe the mechanical rating of the device.
CABLE SPEC.	Note that connected mains lines must be designed according to the expected minimum and maximum ambient temperature.
EMC	Note that the device must be constructed and connected in accordance with EMC regulations.
U = 0V	When the device is under voltage, note that it may not be installed or removed, or plugged or pulled.
230V MODULES	Note that a 230 V device can be exposed to electrical voltages which can be dangerous. ANSI Z535.2

Symbol	Meaning
III 24V MODULES	Note that a device of Protection Class III may only be supplied with a protective low voltage according to the standard SELV/PELV. IEC 60417-1-5180 "Class III equipment"
INDOOR USE ONLY INDUSTRIAL USE ONLY	Be aware that the device is only approved for the industrial field and only for indoor use.
ZONE 2 INSIDE CABINET IP54	For Zone 2 potentially explosive atmospheres, be aware that the device may only be used when it is installed in an enclosure with a degree of protection ≥ IP54.
ZONE 22 INSIDE CABINET IP6x	For Zone 22 potentially explosive atmospheres, be aware that the device may only be used when it is installed in an enclosure with a degree of protection ≥ IP6x.

2.2.3 Intended use

The system is used to control machines and plants.

Intended use also includes observance of this documentation, in particular the safety instructions and conditions of use. See section Technical specifications.

2.2.4 Changes to the device and spare parts

Modifications to the device can impair the safety and function of the device.

- Do not make any changes or modifications to the device.
- Do not remove or paste over safety instructions on the device.
- Do not tape over, cover or install ventilation slots.
- Only use original spare parts and accessories.
- Only use the software provided by Siemens.

2.2.5 Target group and personnel qualifications

All persons working with this device require the following knowledge:

- Contents of this document as well as contents of the enclosed documents.
- Handling the device (after instruction)
- Relevant standards and regulations
- Accident prevention regulations

The following activities are reserved for specially qualified personnel:

Working on electrical parts

Work on electrical parts may only be performed by the following persons:

- Qualified electricians
- Persons electrotechnically trained under the direction and supervision of qualified personnel.

Commissioning and configuration

Commissioning and configuration requires general knowledge in the field of automation technology.

2.2.6 Personal protective equipment

The personal protective equipment depends on the activity and is determined by the operator.

During the activities of packing, unpacking and installation (to avoid damage to property):

- ESD wrist strap
- ESD shoes

2.2.7 Open Source Software

This product, solution or service ("Product") contains third-party software components. These components are Open Source Software licensed under a license approved by the Open Source Initiative (https://www.opensource.com) or similar licenses as determined by SIEMENS ("OSS") and/or commercial or freeware software components. With respect to the OSS components, the applicable OSS license conditions prevail over any other terms and conditions covering the Product. The OSS portions of this Product are provided royalty-free and can be used at no charge.

If SIEMENS has combined or linked certain components of the Product with/to OSS components licensed under the GNU LGPL version 2 or later as per the definition of the applicable license, and if use of the corresponding object file is not unrestricted ("LGPL Licensed Module", whereas the LGPL Licensed Module and the components that the LGPL Licensed Module is combined with or linked to is the "Combined Product"), the following additional rights apply, if the relevant LGPL license criteria are met: (i) you are entitled to modify the Combined Product for your own use, including but not limited to the right to modify the Combined Product to relink modified versions of the LGPL Licensed Module, and (ii) you may reverse-engineer the Combined Product, but only to debug your modifications. The modification right does not include the right to distribute such modifications and you shall maintain in confidence any information resulting from such reverse-engineering of a Combined Product.

Certain OSS licenses require SIEMENS to make source code available, for example, the GNU General Public License, the GNU Lesser General Public License and the Mozilla Public License. If such licenses are applicable and this Product is not shipped with the required source code, a copy of this source code can be obtained by anyone in receipt of this information during the period required by the applicable OSS licenses by contacting the following address:

Siemens AG
LC DI FA SL
Werner-von-Siemens Str. 60
91052 Erlangen
Germany

Keyword: Open Source Request (please specify Product name and version, if applicable)

SIEMENS may charge a handling fee of up to 5 EUR to fulfil the request.

Warranty regarding further use of the Open Source Software

SIEMENS' warranty obligations are set forth in your agreement with SIEMENS. If you modify the product or the OSS components or use them in a way other than that specified by SIEMENS, the warranty will be voided and no technical support will be provided. The following license terms may contain limitations of liability that apply between you and the respective licensor. For the avoidance of doubt, SIEMENS does not make any warranty commitment on behalf of or binding upon any third-party licensor. The Open Source Software used in the product and the license agreements concerning this software can be found in the Readme_OSS.

2.2.8 Safe working

2.2.8.1 Working on electrical parts

- Only work on electrical parts if you are a qualified specialist (see section Target group and personnel qualifications (Page 19)).
- Always observe the country-specific safety rules.
- Notify all those who will be affected by the procedure.
- Observe the five safety rules:
  1. Disconnect
  2. Secure to prevent reconnection
  3. Verify safe isolation from all poles of the voltage
  4. Ground and short-circuit
  5. Erect barriers around or cover adjacent live parts

After completing work:

- Restore operational readiness in reverse order.

2.2.9 Residual risks

Despite all the technical and procedural risk reductions that have been carried out, not all dangers can be avoided.

The following sections describe these residual risks and measures to avoid them.

2.2.9.1 Live parts

Electrocution on contact with live parts leads to life-threatening injuries (death).

Operation

- Do not open the device.
- Never use damaged devices.
- Pull the plug and not the cable.

Installation and connection

- Only work on electrical parts if you are a qualified specialist (see section Target group and personnel qualifications (Page 19)).
- Adhere to the protective measures for safe working on electrical parts (see section Working on electrical parts (Page 21))
- Fuse the connecting cables according to the cable cross-section.
- Install the device in a control cabinet. The enclosures, cabinets or electrical equipment rooms must guarantee protection against electric shock and spread of fire.
- Ground the device in compliance with the applicable regulations.
- For the 24 V DC supply (SELV/PELV), only use power supply units that provide safe electrical extra-low voltage in accordance with IEC 61131-2 or IEC 61010-2-201.

Maintenance

- Only work on electrical parts if you are a qualified specialist (see section Target group and personnel qualifications (Page 19)).
- Adhere to the protective measures for safe working on electrical parts (see section Working on electrical parts (Page 21)).

2.2.9.2 Conductive pollution

Electrocution during transmission of electrical energy via conductive contamination to the body leads to life-threatening injuries (death).

- Install the device in a control cabinet.
- Keep the control cabinet free of conductive contamination.

2.2.9.3 Overheating

Smoke development and fire due to overheating of the device and lines lead to burns and life-threatening injuries (death).

Overheating may be caused by the following:

- Incorrect mounting position
- Insufficient air supply (e.g. due to taped or closed ventilation slots)
- Damaged cables

Installation and connection

- Follow the instructions for the mounting position.
- Adhere to the specified ventilation clearances.
- Fuse the connecting cables according to the cable cross-section.

Maintenance

- Check plug-in connections and cables regularly for damage.

2.2.9.4 Uncontrolled movements

When using Motion Control, uncontrolled movements can occur which result in personal injury of unknown extent.

- Follow the safety instructions described in the Motion Control function manuals.

2.2.9.5 Unsafe operating states

Unsafe operating conditions can result in personal injury of unknown extent.

The following factors can be causes:

- Manipulation of the software, e.g. viruses, trojans or worms.

Manipulation of the software, e.g. viruses, trojans or worms.

- Adhere to the protective measures against tampering with the software (see section Security information (Page 15)).
- Keep the software up-to-date.
- Protect files stored on removable media from malware with appropriate protective measures, e.g. virus scanner.
- Set up access protection for the CPU.

2.2.10 Behavior in case of emergency

- Force EMERGENCY OFF

When the safe operating state has been restored:

- Unlock the EMERGENCY OFF mechanism.
- Ensure (as the person responsible for the system) that the system starts up in a controlled and defined manner.

2.2.11 Material damage

2.2.11.1 Transport and storage

- Only pack, store, transport and ship electronic components, modules or devices in the original product packaging or in other suitable materials, e.g. conductive foam rubber or aluminum foil.
- Transport the device only in the transport packaging provided.
- Observe the limits during transport and storage. See section Technical specifications.

2.2.11.2 Installation and connection

- Only touch components, modules and devices when you have grounded yourself with one of the following measures:
  - With an ESD wrist strap
  - With ESD shoes or ESD grounding strips in ESD areas with conductive flooring.
- Place electronic components, modules and devices only on conductive surfaces (e.g. tables with ESD coating, conducting ESD plastic foam, ESD packing bags, ESD transport containers).
- Ensure that there is sufficient overvoltage protection.
- Do not install/remove the following elements when the power is on:
  - Front connectors
  - I/O modules
  - CPU

New properties/functions

3

What's new in the S7-1500, ET 200MP system manual, Edition 01/2023 since the previous version 11/2022?

What's new?		What are the customer benefits?	Where can I find the information?
New contents	General safety instructions	The sections contains a compilation of general safety instructions for the SIMATIC S7-1500/ET 200MP automation system.	Section General safety instructions (Page 16)

What's new in the S7-1500, ET 200MP system manual, Edition 11/2022 since the previous version 05/2021?

What's new?		What are the customer benefits?	Where can I find the information?
New contents	S7-1500 Motion Control KinPlus	The "S7-1500T Motion Control KinPlus" software enables control of kinematics with 5 or 6 interpolating axes.	S7-1500T Motion Control (https://support.industry.siemens.com/cs/ww/en/view/109751049) function manuals
	Technology and standard CPUs	Expansion of the work memory	Section Technical specifications of CPUs (Page 56)
	Increase in the number of simultaneously active jobs for asynchronous instructions (OUC and S7 communication)	The CPU can process a larger number of asynchronous instructions in parallel with the cyclic user program.	Section Asynchronous instructions (Page 210)
	Management of web server certificates during CPU runtime	You can load or update web server certificates not only in STOP mode but also in RUN mode.	Web server (https://support.industry.siemens.com/cs/ww/en/view/59193560) function manual
	New web API methods	Many new API methods extend your access options to the CPU via the web API.	

What's new in the system manual S7-1500, ET 200MP, Edition 05/2021 since the previous version 11/2019

What's new?		What are the customer benefits?	Where can I find the information?
New contents	Active backplane bus	The field of usage of the active backplane bus comprises applications with high demands on availability. Applications in which even short plant downtimes would result in significant economic damage. The active backplane bus provides you with the following advantages: • Reaction-free pulling and plugging of I/O modules during operation • Reserve capacity (= gaps in system configuration) for later use	Section Components (Page 49) Active backplane bus (https://support.industry.siemens.com/cs/de/de/view/109778694/en) manual
	CPU 1518(F)-4 PN/DP MFP	A Linux-based operating system (SIMATIC Industrial OS) is pre-installed on the CPUs 1518(F)-4 PN/DP MFP (multifunctional platform) to allow you to use Linux-based apps and software, for example.	Starting from section System overview (Page 32)
	CPU 1518(F)-4 PN/DP	Expansion of work memory and motion control resources: • Code work memory: 6 MB (standard CPU), 9 MB (F-CPU) • Data work memory: 60 MB • Motion control resources: 15360 This expansion allows you to implement larger and more extensive applications with the CPUs.	Starting from section System overview (Page 32)
	CPU 1518T-4 PN/DP	Extension of the CPU portfolio with the CPU 1518T-4 PN/DP: CPU 1518T-4 PN/DP offers a very large program and data memory for demanding usage in applications that contain central I/O in addition to distributed automation structures. CPU 1518T-4 PN/DP features high-performance, extended motion control functions, for example: • Synchronous operation functions • Kinematics functions Important technical specifications: • Code work memory: 9 MB • Data work memory: 60 MB • Motion control resources: 15360 • Extended Motion Control resources: 512	Starting from section System overview (Page 32)

What's new?		What are the customer benefits?	Where can I find the information?
	CPU 1518TF-4 PN/DP	Extension of the CPU portfolio with the CPU 1518TF-4 PN/DP: CPU 1518TF-4 PN/DP offers a very large program and data memory for demanding usage in applications that contain central I/O in addition to distributed automation structures. The CPU can also be used for Safety functions according to IEC 61508 up to SIL 3 and ISO 13849 up to PLe for safety applications. CPU 1518TF-4 PN/DP features high-performance, extended motion control functions, for example: • Synchronous operation functions • Kinematics functions Important technical specifications: • Code work memory: 9 MB • Data work memory: 60 MB • Motion control resources: 15360 • Extended Motion Control resources: 512	Starting from section System overview (Page 32)
	New Motion Control technology functions for the following tasks: • Desynchronization of gearing or camming • Following value shift in gearing or camming • Simulation of the kinematic motions • Copying the calculated cam elements	Extended areas of application	Section Motion Control (Page 86)
Changed contents	With the introduction of DHCP (Dynamic Host Configuration Protocol), NTP servers can also be obtained via DHCP. This changes the configuration, in order to define where the NTP server obtains its configuration from: • via the hardware configuration of the CPU • via DHCP • via the block T_CONFIG	More assignment options from NTP servers to the CPU.	Section Time synchronization (Page 278)

What's new in the system manual S7-1500, ET 200MP; Edition 11/2019 since the previous version 12/2017

What's new?		What are the customer benefits?	Where can I find the information?
New contents	DIN rail adapter	You install the SIMATIC S7-1500/ET 200MP automation system on a standard 35 mm DIN rail using the DIN rail adapter.	Sec. Installing the standard rail adapter (Page 132)
	Communication module IO-Link Master	With the IO-Link master, you can do the following during operation: • Changing parameters for the production and processing of product variants and batches down to sensor/actuator level • Specify remote diagnostics or detailed diagnostics up to the sensor/actuator	Section Communication module IO-Link Master (Page 84)
	Communications processor CP 1545-1	Communication processors connect the SIMATIC S7-1500 automation system securely with networks. With the integrated security functions, communication processors protect the S7-1500 automation system and lower-level networks from unauthorized access. Communication processors use encryption to protect data transfer against manipulation and espionage.	Section CM communication modules / CP communications processors (Page 81)
	Technology Module TM NPU	With the technology module TM NPU you can: • Process large amounts of data via neural networks • Perform visual quality check • Control robot systems via screen • Using pick-and-place applications	Section Technology Module TM NPU (Page 96)
	Basic analog input module	The new, simple and inexpensive analog input module provides data for temperature measurement with RTD via 8 channels.	Section Analog input modules (Page 76)

What's new in the system manual S7-1500, ET 200MP; Edition 12/2017 since the previous version 09/2016

What's new?		What are the customer benefits?	Where can I find the information?
New contents	Technology CPUs	• Extension of the Technology-CPU portfolio by the CPUs 1516T(F)-3 PN/DP • All technology CPUs feature the new technology object TO_Kinematics. With the TO_Kinematics, you can implement complex motion control applications for controlling 2D, 3D and 4D kinematics.	Starting from section System overview (Page 32)
	CPU 1518(F)-4 PN/DP MFP	• Extension of the CPU portfolio by the CPUs 1518(F)-4 PN/DP MFP (multifunctional platform) • The CPU can execute STEP 7 blocks of the "usual" user program as well as blocks and applications programmed with C/C++. • The multifunctional platform offers you the option of running C/C++ code synchronously in the CPU cycle (via the CPU function library). In addition, the multifunctional platform can run C/C++ applications as separate applications in parallel to CPU runtime. • With C/C++ applications you can implement parallel processes for the STEP 7 user program, e.g. for pre-processing or sending data via Industrial Ethernet. A CPU can perform several tasks at the same time, the complexity of functions is reduced and the time required for implementation is reduced. • You can re-use existing technological know-how in C/C++ code synchronously and asynchronously to the STEP 7 user program.	Starting from section System overview (Page 32)
	Password provider	As an alternative to manual entry of password, you can connect a password provider to STEP 7. A password provider offers you the following advantages: • More convenient handling of passwords. STEP 7 automatically imports the password for the blocks. This saves you time • Optimum block protection as the users do not know the password themselves	Section Know-how protection (Page 230)

What's new?		What are the customer benefits?	Where can I find the information?
	GetSMCinfo instruction	With the help of the GetSMCinfo instruction you can respond to information provided by the memory card in the user program and if required, replace the memory card as a precautionary measure. This process makes sense if you write to the card often in your application, for example if you use data logs.	Section Overview of SIMATIC Memory Card
	Testing with breakpoints	When testing with breakpoints, you execute a program from one breakpoint to another. Testing with breakpoints provides you with the following advantages: • Testing SCL and STL program code with the help of breakpoints • Localization of logic errors step by step • Simple and quick analysis of complex programs prior to actual commissioning • Recording of current values within individual executed loops • Use of breakpoints for program validation also possible in SCL/STL networks within LAD/FBD blocks	Section Test functions (Page 328)
Changed contents	PS 60W 24/48/60VDC HF system power supply	The PS 60W 24/48/60VDC HF enables extended retentivity of the CPU's data work memory. In the event of failure of the supply voltage, the PS 60W 24/48/60VDC HF supplies sufficient power for the CPU to back up the entire data work memory (without retentive data) to the SIMATIC Memory Card.	Section Use of system power supplies (Page 113)
	Time synchronization	For all applications that require the exact time, you update the CPU time using the NTP method. This also automatically sets the CPU time beyond subnet limits.	Section Time synchronization (Page 278)
	Reading out the identification and maintenance data using the Get_IM_Data instruction	With the Get_IM_Data instruction you can read out the identification and maintenance data of the modules without much programming work. With the Get_IM_Data instruction you can access identification and maintenance data (I&M) of a module in the user program. I&M data is information saved in a module. This allows you to • Check the system configurations • React to hardware changes • React to hardware faults in the user program. Finding and elimination of hardware errors is easier.	Section Reading out and entering I&M data (Page 282)

What's new in the system manual S7-1500, ET 200MP; Edition 09/2016 since the previous version 12/2014

What's new?		What are the customer benefits?	Where can I find the information?
New contents	Compact CPUs	You can use compact CPUs for smaller to medium-sized applications. The compact CPUs have integrated analog and digital on-board I/O as well as integrated technology functions.	Starting from section System overview (Page 32)
	Technology CPUs	You can use technology CPUs for demanding applications. Technology CPUs are equipped with expanded motion control functions.	Starting from section System overview (Page 32)
	Fail-safe modules	With fail-safe modules, you replace the conventional safety engineering technical setup. For example, this involves replacement of switching devices for EMERGENCY OFF, protective door monitoring and two-hand operation.	Starting from section System overview (Page 32)
	Formatting, erasing or converting a SIMATIC Memory Card via the display	Your SIMATIC Memory Card is formatted, erased or converted to a program card directly via the display without having to use STEP 7. You save time.	Section SIMATIC Memory Card
Changed contents	Asynchronous instructions	You are given an overview of the resource consumption of asynchronous instructions. This ensures adequate resources in the CPU.	Section Asynchronous instructions (Page 210)
	Configuration control	Configuration control provides you with the following advantages: • Different configuration levels of a standard machine can be handled in a single project. • No changes to the hardware configuration or user program are needed. • Centralized/distributed configuration of a system is flexibly variable • Easy handling during maintenance, versioning and upgrades. • Hardware savings: You only use the I/O modules that you currently need. • Potential savings when building, commissioning and creating documentation for standard machines.	Section Configuration control (Page 237)
	Wiring rules for the power supply elements	You are given information on proper connection of the power supply elements.	Section Wiring rules (Page 162)
	Connecting the CPU/interface module to the load current supply	You are given information on proper connection of the CPU/interface module to the load current supply.	Section. Connecting the CPU/interface module to the load current supply (Page 170)
	Firmware update via accessible devices	You are given information on fast firmware updates via accessible devices in the network.	Section Firmware update (Page 312)

System overview

4

4.1 Overview of the SIMATIC S7-1500 automation system

4.1.1 The SIMATIC automation systems

You need optimum solutions for every application in order to automate your machines and plants economically and flexibly.

The SIMATIC controller portfolio includes a variety of systems:

- The SIMATIC S7-1200 Basic Controller is the intelligent choice for compact automation solutions with integrated communication and technology functions.
- If plant complexity and system performance are priorities, the SIMATIC S7-1500 automation system is the right choice for you. The SIMATIC S7-1500 controller builds on the more simple functionality of the SIMATIC S7-1200 Basic Controller and fulfills the highest demands on performance, flexibility and networking capability.
- The SIMATIC ET 200SP Distributed Controller combines the advantages of the S7-1500 and the very compact design of the ET 200SP with high channel density. By using distributed intelligence, you save costs and space in the control cabinet.
- For use outside the cabinet, the CPU 1513pro-2 PN and CPU 1516pro-2 PN offer you SIMATIC S7-1500 functionality in the design of the ET 200pro in the degree of protection IP65/IP67.
- If you require PC-based automation, use the SIMATIC S7-1500 software controller. The PC-based controller is autonomous from the operating system during operation.
- If you want to increase the availability of your system, use the redundant system S7-1500R/H. In the system, two CPUs (primary and backup CPU) process the user program in parallel and permanently synchronize all relevant data. In the event of failure of the primary CPU, the backup CPU takes over control of the process at the point of interruption.

The SIMATIC controllers are integrated into the Totally Integrated Automation Portal and offer consistent data management and a uniform operating concept. With its integrated functions, engineering in the TIA Portal ensures consistent functionality.

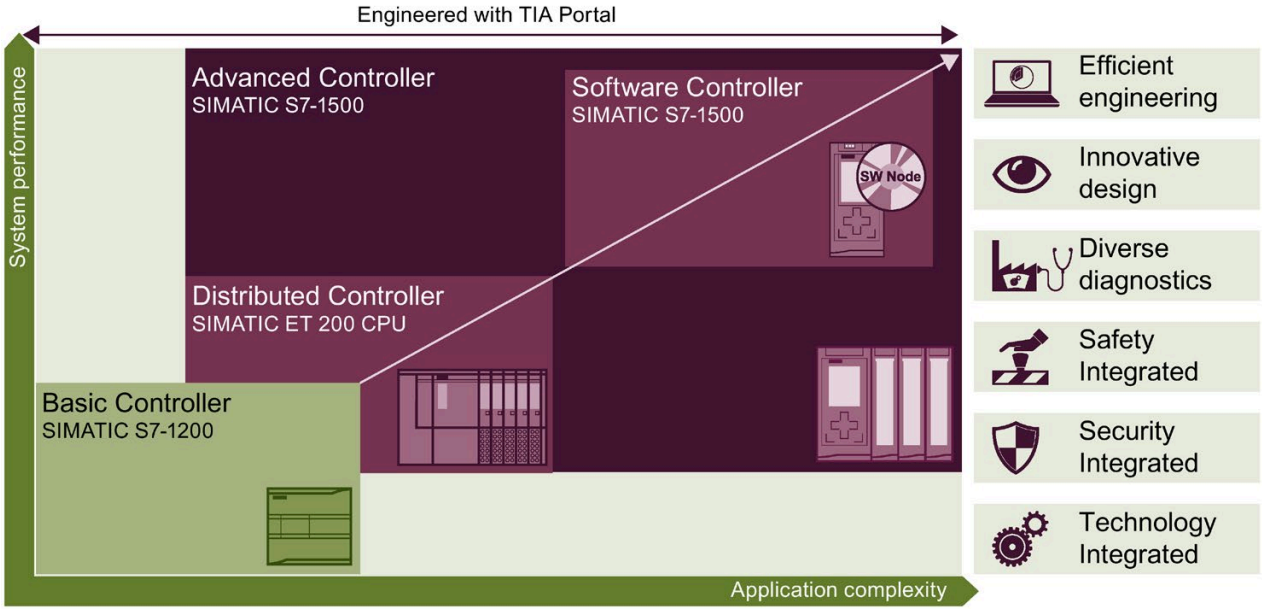

Figure 4-1 Overview of SIMATIC automation systems

The SIMATIC S7-1500 automation system supports all conventional communication standards.

All the SIMATIC S7-1500 CPUs offer integrated motion control functions. Technology CPUs are available for extended motion control functions.

The SIMATIC S7-1500 CPUs are also available as fail-safe controllers.

Diagnostic functions across all components simplify troubleshooting. Changes to the parameter assignment can be implemented quickly and easily with the integrated display.

Integrated security functions help against:

- Manipulation
- Theft of know-how

Integrated security functions offer additional security mechanisms for the configuration of secured networks.

4.1.2 Comparison of SIMATIC automation systems

The tables below compare the main technical specifications of the SIMATIC systems.

	Basic Controller	**Controller**	
	SIMATIC S7-1200	**SIMATIC ET 200SP CPU**	**SIMATIC ET 200SP Controller 1515SP PC**
Data work memory, max. Code work memory, max.	150 KB	1 MB 200 KB	5 MB 1 MB
Load memory/mass storage, max.	32 GB (via SIMATIC Memory Card)	32 GB (via SIMATIC Memory Card)	320 MB
I/O address area, max.	1024/1024 bytes	32/32 KB	32/32 KB
Integrated interfaces, max.	1 x PROFINET IO (2-port switch)	1 x PROFINET IO (3-Port switch) 2 x PROFINET	1 x PROFINET IO (2-port switch) 1 x PROFINET
Controller with integrated inputs and outputs	X	---	---
Configuration control	---	X	X
Web server	X	X	X
Isochronous mode	---	Distributed	Distributed
Integrated display	---	---	As Windows application
Technology integrated	Motion Control PID Control	Motion Control PID Control	Motion Control PID Control
Extended motion control functions	---	In T-CPUs	In T-CPUs
Security integrated	X	X	X
Integrated system diagnostics	X	X	X
Integrated safety functionality	In F-CPUs	In F-CPUs	In F-CPUs
Degree of protection	IP20	IP20	IP20

	Distributed Controller	**Advanced Controller**		
	SIMATIC ET 200pro	**SIMATIC S7-1500**	**Software Controller** **SIMATIC S7-1500**	**SIMATIC S7-1500R/H**
Data work memory, max. Code work memory, max.	5 MB 1.5 MB	60 MB 9 MB	20 MB 5 MB	60 MB 9 MB
Load memory/mass storage, max.	32 GB (via memory card)	32 GB (via memory card)	320 MB	32 GB
I/O address area, max.	32/32 KB	32/32 KB	32/32 KB	32/32 KB
Integrated interfaces, max.	1 x PROFINET IO (3-Port switch) 1 x PROFINET IO	1 x PROFINET IO (2-port switch) 1 x PROFINET IO 1 x PROFINET 1 x PROFIBUS	Support the hardware interfaces	1 x PROFINET IO (2-port switch) 1 x PROFINET 1 x H-Sync interface
Controller with integrated inputs and outputs	---	C-CPU	---	---
Configuration control	X	X	X	---
Web server	X	X	X	---
Isochronous mode	Distributed	Distributed	Distributed (support using CP 1625)	---
Integrated display	---	X	As Windows application	X
Technology integrated	Motion Control PID Control	Motion Control PID Control C-CPUs: High-speed counters, PWM, PTO, frequency output	Motion Control PID Control	PID Control
Extended motion control functions	---	In T-CPUs	In T-CPUs	
Security integrated	X	X	X	X
Integrated system diagnostics	X	X	X	X
Integrated safety functionality	In F-CPUs	In F-CPUs	In F-CPUs	---
Degree of protection	IP65/67	IP20	Depending on hardware	IP20
Redundancy connections (synchronization link)	---	---	---	PROFINET ring (R-CPUs) Fiber-optic cable (H-CPUs)
System redundancy	---	---	---	Yes

4.1.3 Areas of application SIMATIC S7-1500 and ET 200MP

Area of application SIMATIC S7-1500

The SIMATIC S7-1500 automation system offers you the required flexibility and performance for a wide range of controller applications in machine and plant engineering. The scalable configuration makes it possible for you to adapt your PLC onsite to the local conditions.

As well as the standard motion control and technology functions available in the S7-1500, SIMATIC S7-1500 technology CPUs offer you additional features such as enhanced synchronous operation and kinematics functions.

The SIMATIC S7-1500 automation system conforms with IP20 degree of protection and is intended for use in a dry environment and installation in a control cabinet.

SIMATIC S7-1500R/H CPUs (redundant or fault-tolerant CPUs) offer you the option to increase the availability of your system. In order to be able to switch from the primary CPU to the backup CPU in case of need, the user program is processed synchronously on two CPUs.

Area of application Distributed I/O system ET 200MP

SIMATIC ET 200MP is a modular, scalable and universally usable distributed I/O system. SIMATIC ET 200MP offers the same system benefits as the SIMATIC S7-1500. A central controller accesses the I/O modules of the ET 200MP as central I/O modules via PROFINET or PROFIBUS.

SIMATIC ET 200MP convinces with its high performance:

- For shortest response times
- For large configuration limits
- For fastest applications

This is also accompanied by the high-speed backplane bus, special input/output modules and the consistent use of PROFINET mechanisms.

Area of application F-system SIMATIC Safety with S7-1500 and ET 200MP

By using fail-safe SIMATIC S7-1500 CPUs and modules, you can implement applications for safety engineering. This enables you to achieve almost seamless integration of machine safety into the SIMATIC S7-1500 and ET 200MP. You use one system at the same time for both your standard and fail-safe automation. This provides you with economic benefits, reliability as well as potential savings on hardware, engineering tasks and storage costs.

4.1.4 Plant components and automation levels

The Advanced Controllers SIMATIC S7-1500 are used for complete production automation and in applications for medium-sized and high-end machines. The combination of the individual SIMATIC components offers powerful and flexible automation solutions that cover all ranges of control applications:

- The process signals are connected to the central controller via fieldbus
- All modules are located directly in the automation system or in the distributed I/O system
- F-CPUs with integrated safety functionality ensure fail-safe processes
- SIMATIC S7-1500 is intended for installation in the control cabinet with IP20 degree of protection

The SIMATIC S7-1500 is integrated across all communication standards consistently in the various automation levels.

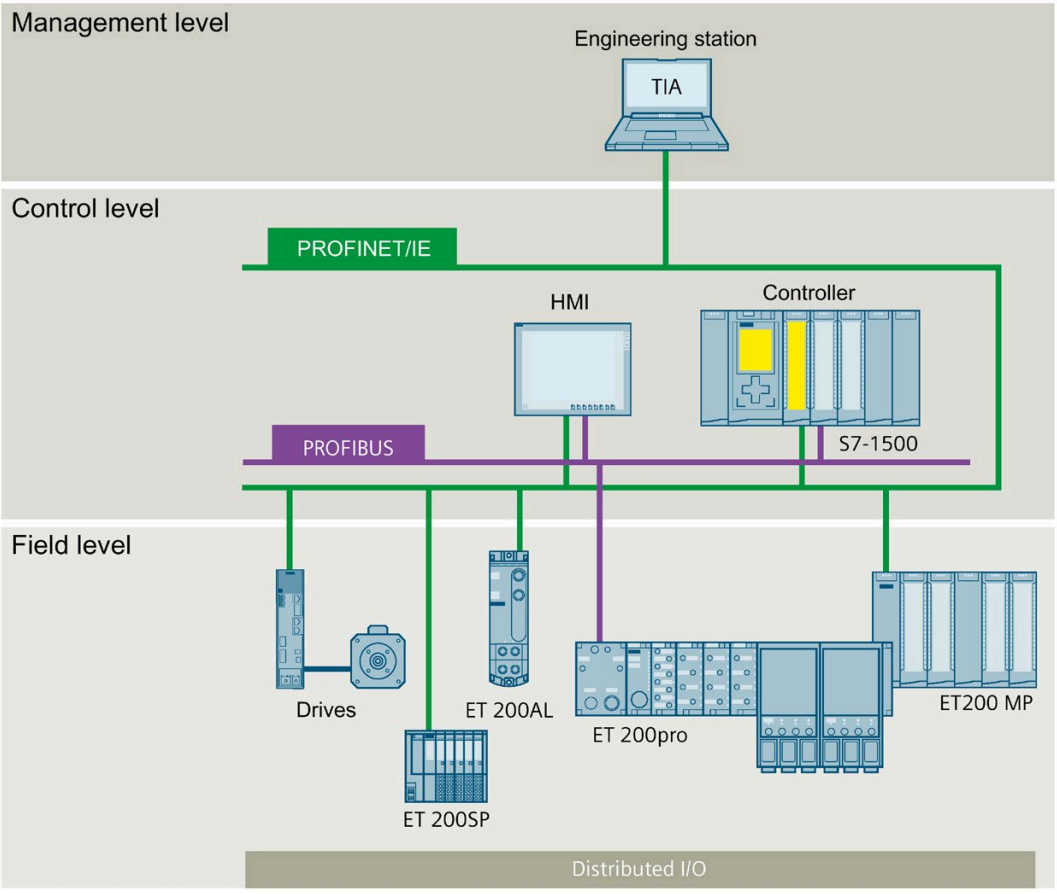

Figure 4-2 Basic structure: SIMATIC S7-1500 at management, control and field level

You can also find an overview of the SIMATIC S7-1500 automation system on the Internet (https://new.siemens.com/global/en/products/automation/systems/industrial/plc/simatic-s7-1500.html).

4.1.5 Scalability

In order to suit the requirements of your plant planning, the SIMATIC S7-1500 controllers can be scaled in their processing speed and configuration limits. They also offer networking facilities via different communications standards.

Safety Integrated, Motion Control, and other technology functions can be used for all plant sizes.

Different example applications with different SIMATIC S7-1500 CPUs are shown in the following:

SIMATIC S7-1500 with integrated I/O

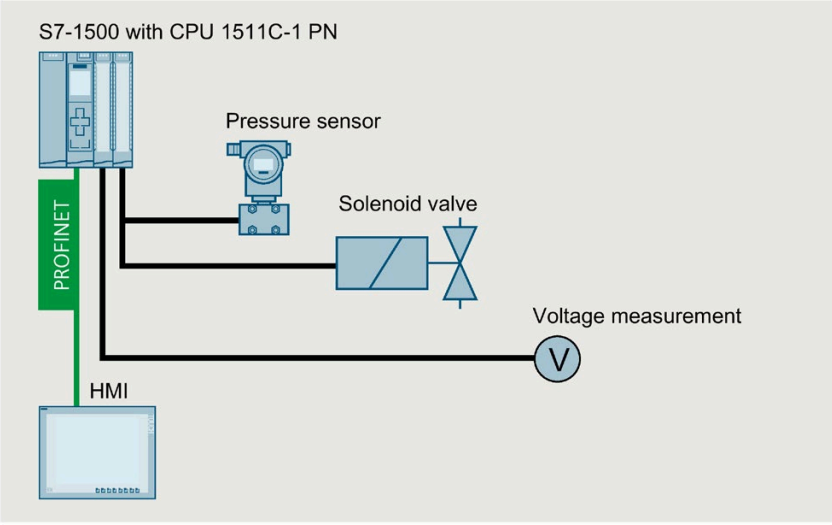

Figure 4-3 Example: Plant configuration with SIMATIC S7-1500 with integrated I/O

SIMATIC S7-1500 with I/O, ET 200MP and HMI device

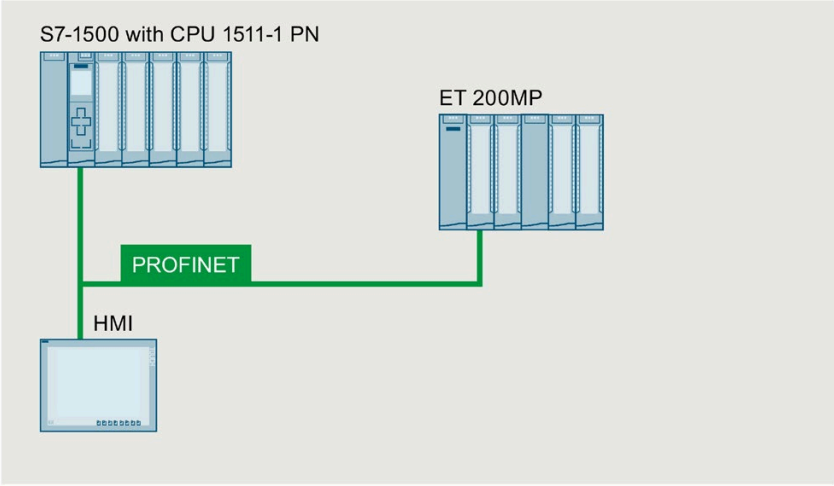

Figure 4-4 Example: Plant configuration with SIMATIC S7-1500 with I/O, ET 200MP and HMI device

SIMATIC S7-1500 with Motion Control, distributed I/O and IO-Link devices

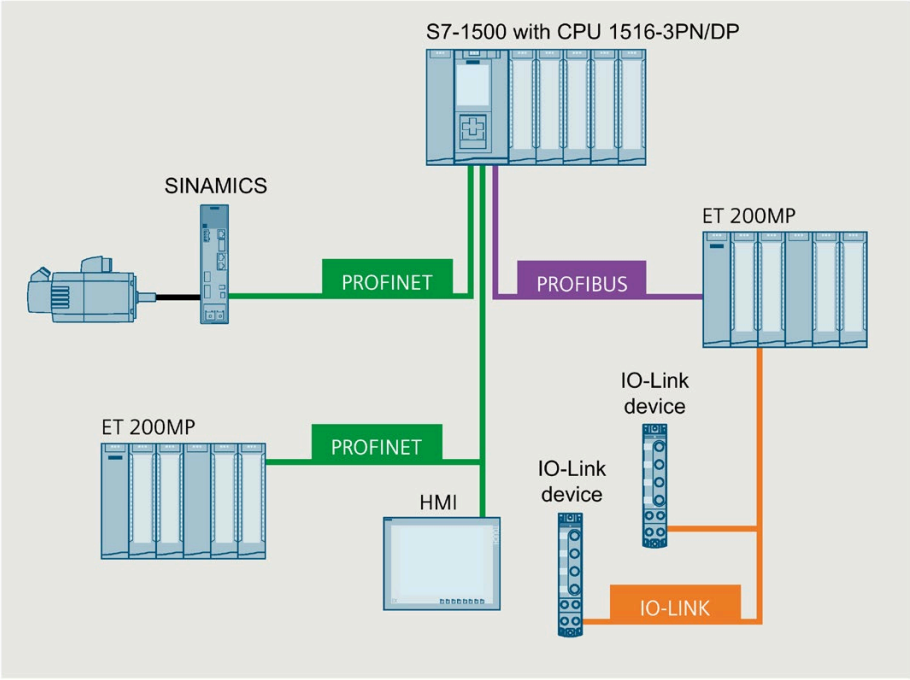

Figure 4-5 Example: Plant configuration with SIMATIC S7-1500, Motion Control, distributed I/O and IO-Link devices

SIMATIC S7-1500 with safety und WLAN integration

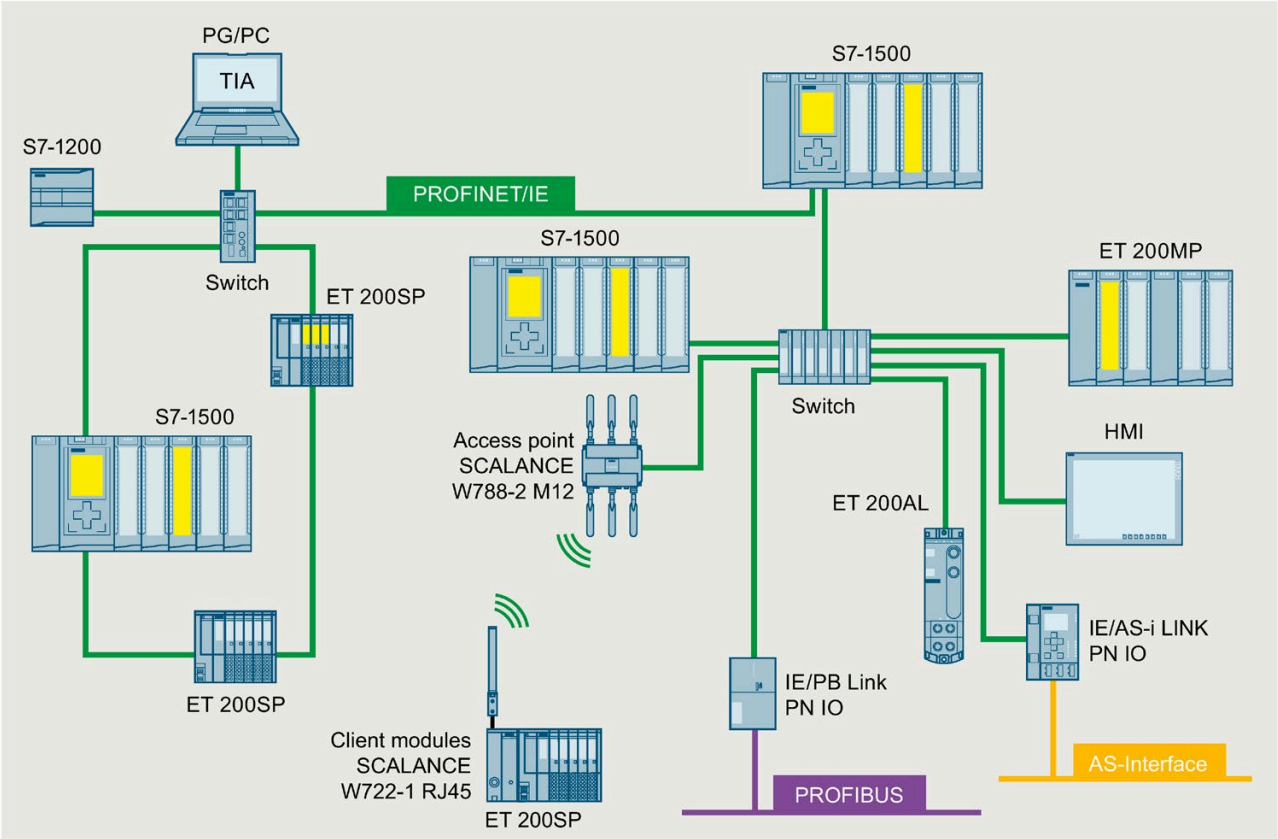

Figure 4-6 Example: Plant configuration with SIMATIC S7-1500 and Safety on PROFINET

4.1.6 Overview of features

Automation system SIMATIC S7-1500

Through the integration of numerous new performance features, the S7-1500 automation system offers you excellent operability and the highest performance.

Important properties and functions

Easy to use

- Uniform front connectors
- Pre-wiring position enables easy connecting and reconnecting
- Integrated shield for high signal measurement quality

High performance

- Fast signal processing for faster reaction times and high productivity
- Fast backplane bus for high baud rate and efficient transmission protocol
- Location-independent information acquisition thanks to integrated web server
- High number of connections and PROFINET ports
- Variety of networking options in systems (IO controller, I-device, shared device)

Variety of diagnostics

- Integrated system diagnostics for uniform display concept without additional programming effort
- User-defined interrupts
- Evaluate system errors using system blocks

Innovative design

- Onboard display for diagnostics and first commissioning
- High degree of variability through scalability up to 30 I/O modules per rack
- Innovative labeling system maximizes organization in very limited spaces
- Compact CPUs with integrated analog and digital on-board I/O and integrated technology functions

Communication standards

- PROFINET IO
- PROFIBUS DP
- Point-to-point (RS232, RS485)

Efficient engineering

- STEP 7 language innovations while maintaining proven functions
- Support of various programming languages (STL, LAD, FBD, SCL, GRAPH)
- Consistency check by STEP 7 instead of in the CPU

Safety Integrated

- Easy integration of fail-safe CPUs (F-CPUs) and fail-safe modules (F-modules)
- One F-CPU for fail-safe and non-fail-safe applications
- Setting of all F parameters via software

Security Integrated

- Protection level concept for greater access protection
- Know-how protection against unauthorized access and modifications
- Copy protection on the SIMATIC Memory Card against copying of user programs

Technology Integrated

- Motion control functionality supports the connection of PROFIdrive-capable drives
- Technology CPUs with advanced motion control functions
- Easy programming of motion sequences with PLCopen motion control blocks
- Temperature controller
- PID control for continuous and discrete closed-loop control processes with autotuning for easy commissioning and optimal control performance
- Seamless integration into TIA Portal for synchronous configuration and uniform operating concept
- TRACE support for effective commissioning, diagnostics and fast optimization of drives and closed-loop controls

Figure 4-7 SIMATIC S7-1500 automation system - Properties and functions

Distributed I/O system ET 200MP

The ET 200MP distributed I/O system is a scalable and flexible system for connecting the process signals to a CPU via a fieldbus.

The modules have a very high channel density and a low variety of parts. This simplifies ordering, logistics and spare parts handling significantly.

Important properties and functions

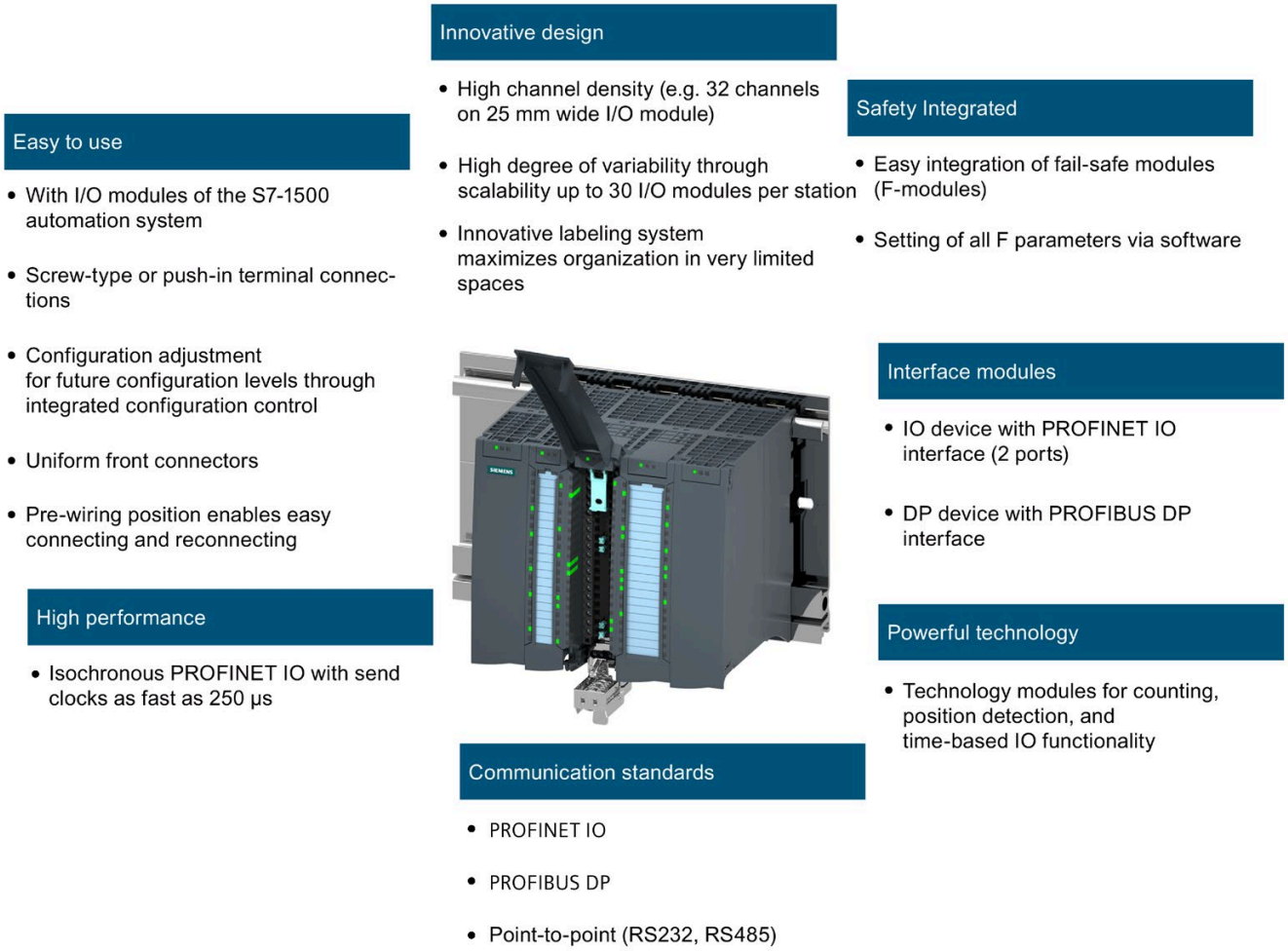

Figure 4-8 SIMATIC ET 200MP distributed I/O system - Properties and functions

4.2 Configuration

4.2.1 Configuration of the SIMATIC S7-1500 Automation System

Configuration

The SIMATIC S7-1500 automation system is made up of the following components:

- CPU (standard, fail-safe, compact or technology CPU)
- Digital and analog I/O modules
- Communications modules (PROFINET/Ethernet, PROFIBUS, point-to-point)
- Technology modules (counting, position detection, time-based IO)
- Load current supply
- System power supply (optional)

You install the S7-1500 automation system on a mounting rail. You can install up to 32 modules (CPU, system power supply and 30 I/O modules) on the mounting rail. You connect the modules to each other with U connectors.

Configuration example

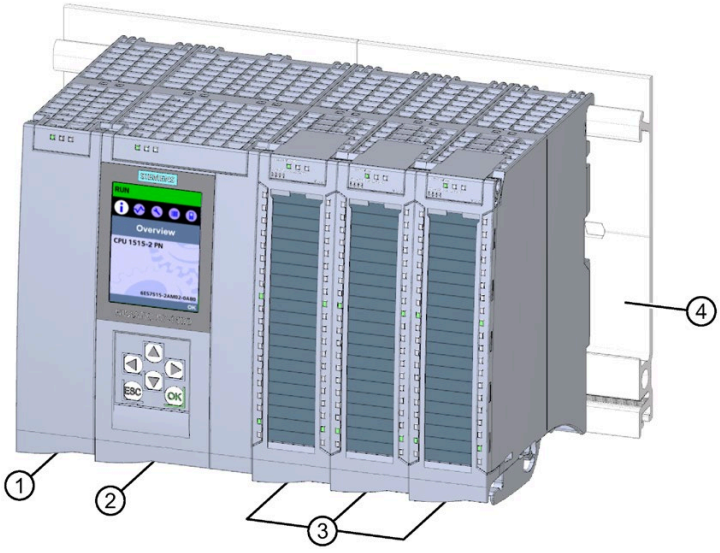

① System power supply
② CPU
③ I/O modules
④ Mounting rail with integrated DIN rail profile

Figure 4-9 Example configuration of an S7-1500 automation system

4.2.2 Configuration of the distributed I/O system SIMATIC ET 200MP

Configuration

The SIMATIC ET 200MP distributed I/O system is made up of the following components:

- Interface module (PROFINET or PROFIBUS)
- Digital and analog I/O modules
- Communications modules (point-to-point)
- Technology modules (counting, position detection, time-based IO)
- System power supply (optional)

The ET 200MP distributed I/O system is installed on a mounting rail like the S7-1500 automation system.
The I/O modules of the SIMATIC ET 200MP distributed I/O system can be used in a decentralized configuration (with an ET 200MP interface module) or in a centralized configuration (with an S7-1500 CPU).

Example of a configuration with the IM 155-5 PN ST interface module

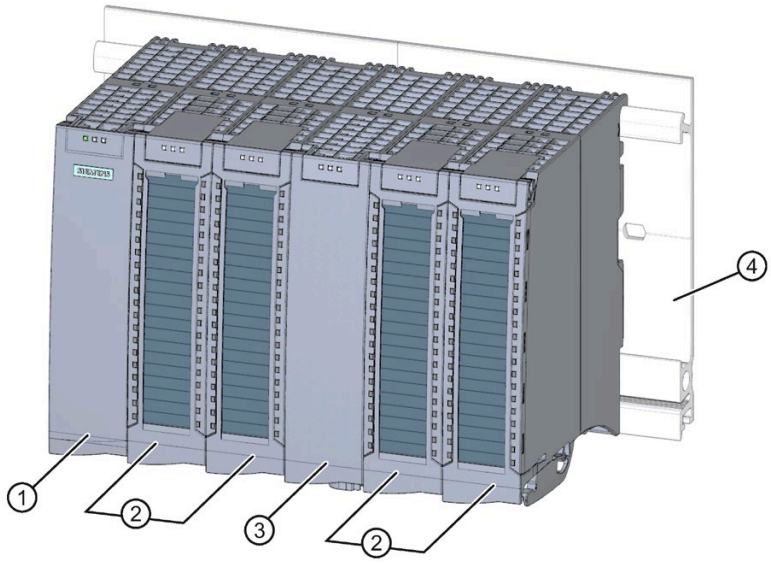

① Interface module
② I/O modules
③ System power supply
④ Mounting rail with integrated DIN rail profile

Figure 4-10 Example of a configuration of the ET 200MP with IM 155-5 PN ST

Example of a configuration with the IM 155-5 DP ST interface module

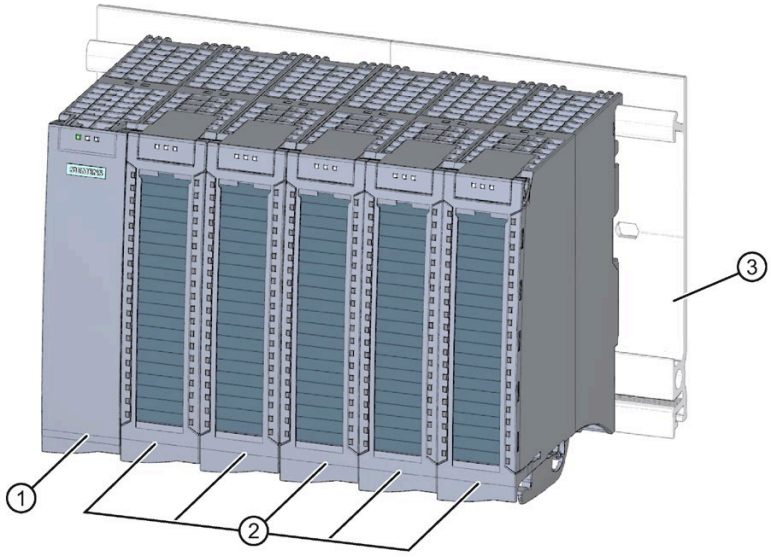

① Interface module
② I/O modules
③ Mounting rail with integrated DIN rail profile

Figure 4-11 Example of a configuration of the ET 200MP with IM 155-5 DP ST

4.2.3 Configuration of a fail-safe system with SIMATIC S7-1500

Fail-safe automation systems

Fail-safe automation systems (F-systems) are used in systems with higher safety requirements. F-systems control processes and ensure that they are in a safe state immediately after shutdown. In other words, F-systems control processes in which an immediate shutdown does not endanger persons or the environment.

Safety Integrated

Safety Integrated is the integrated safety concept for automation and drive technology from Siemens.

Proven technologies and systems from automation technology, such as SIMATIC S7-1500 in this case, are used for safety systems. Safety Integrated includes the complete safety sequence, ranging from sensor, actuator and fail-safe modules right through to the controller, including safety-related communication via standard fieldbuses. Drives and controllers handle safety tasks in addition to their actual functions.

SIMATIC Safety F-system with S7-1500 and ET 200MP

The figure below contains an example of an F-system SIMATIC Safety with S7-1500, ET 200MP and PROFINET IO.

You can combine fail-safe I/O modules and non-fail-safe I/O modules in a can be combined in a S7-1500/ET 200MPconfiguration.

The fail-safe IO controller (F-CPU) exchanges:

- Safety-related data with fail-safe modules.
- Non-safety-related data with non-fail-safe modules.

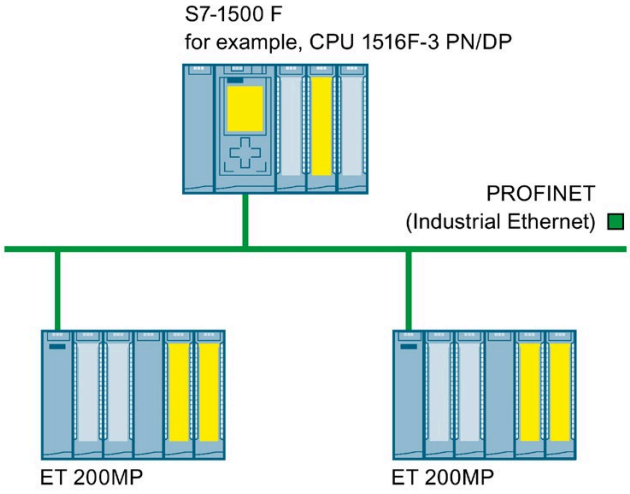

Figure 4-12 Fail-safe automation system SIMATIC Safety (example)

Fail-safe I/O modules S7-1500/ET 200MP

The following fail-safe I/O modules are available for S7-1500/ET 200MP:

- Fail-safe digital input modules detect the signal states of safety-related sensors and send the relevant safety frames to the F-CPU.
- Fail-safe digital output modules control actuators for safety-oriented tasks.

Configuration example of the ET 200MP with fail-safe I/O modules

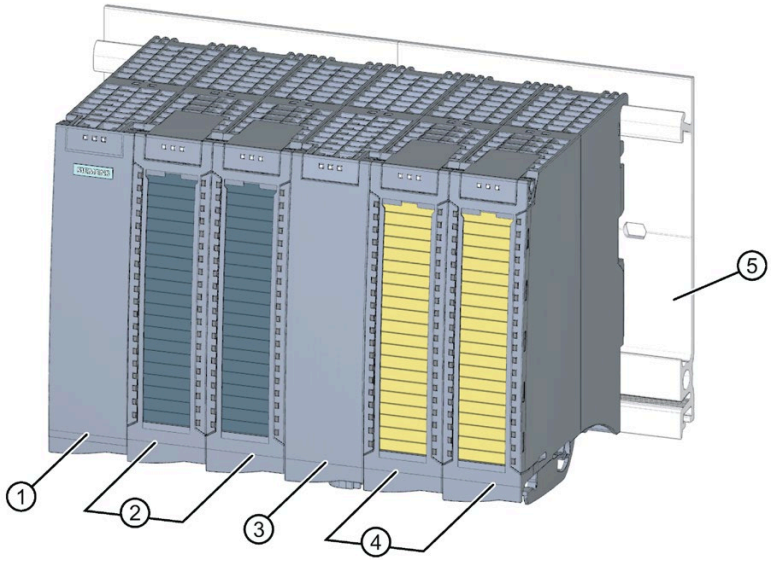

① Interface module
② I/O modules
③ Power supply (optional)
④ Fail-safe I/O modules
⑤ Mounting rail with integrated top-hat rail

Figure 4-13 Configuration example of the ET 200MP with fail-safe I/O modules

Hardware and software requirements

You use the S7-1500/ET 200MP fail-safe I/O modules:

- In S7-1500 with S7-1500 F-CPUs as of firmware version V1.7
- Distributed in ET 200MP with S7-1500 F-CPUs as of firmware version V1.5 and all F-CPUs that can be selected in the hardware catalog of the TIA Portal

Fail-safe I/O modules in ET 200MP require the following interface modules:

- IM 155-5 PN BA, as of firmware version V4.3
- IM 155-5 PN ST, as of firmware version V3.0.0
- IM 155-5 PN HF, as of firmware version V3.0.0
- IM 155-5 DP ST, as of firmware version V3.0.0

To configure and program fail-safe I/O modules S7-1500/ET 200MP , you need:

- STEP 7, V13 SP1 or higher
- The option package STEP 7 Safety Advanced as of V13 SP1 + HSP0086

Use in safety mode only

You can only use the S7-1500/ET 200MP fail-safe I/O modules in safety mode. They cannot be used in non-fail-safe mode, i.e. standard mode.

Achievable safety classes

Fail-safe I/O modules are equipped with integrated safety functions for safety mode.

You can achieve the safety classes of the table below:

- By corresponding parameter assignment of the safety functions in STEP 7
- With a specific combination of fail-safe and non-fail-safe I/O modules as well as
- With a special arrangement and wiring of the sensors and actuators

Table 4- 1 Safety classes that can be achieved with S7-1500/ET 200MP in safety mode

Safety class in safety mode		
According to IEC 61508:2010	**According to ISO 13849-1:2015**	
SIL3	Category 3	(PL) Performance Level d
SIL3	Category 4	(PL) Performance Level e

Additional information

An overview of the technical specifications of the fail-safe I/O modules can be found in section Fail-safe digital modules (Page 75).

The applications and wiring for the particular safety class are described in the manuals of the fail-safe I/O modules.

4.3 Components

Components of the S7-1500 automation system/ET 200MP distributed I/O system

Table 4- 2 Components S7-1500/ET 200MP

Components	Function	Diagram
Mounting rail	The mounting rail is the rack of the SIMATIC S7-1500/ET 200MP automation system. You can use the entire length of the mounting rail (marginless assembly). The mounting rails can be ordered as Accessories/spare parts (Page 363) accessories.	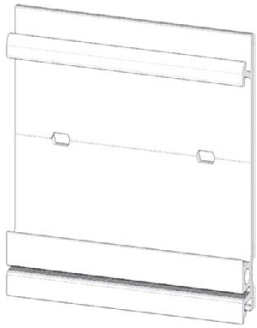
DIN rail adapter	The SIMATIC S7-1500/ET 200MP automation system is installed on a standard 35 mm DIN rail using the DIN rail adapter. The standard rail adapter can be ordered as accessories/spare parts (Page 363).	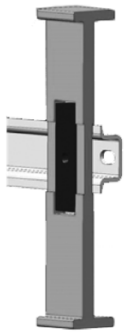
Active backplane bus	Properties of the active backplane bus: • Reaction-free pulling and plugging of I/O modules during operation • Reserve capacity for later use The active backplane bus can be used with the interface module IM 155-5 PN HF (6ES7155-5AA00-0AC0 as of firmware version V4.4). You can find more information on the active backplane bus (e.g. installing, configuring, technical specifications) in the Active backplane bus (https://support.industry.siemens.com/cs/de/de/view/109778694/en) manual. The active backplane bus can be ordered as accessory/spare part (Page 363).	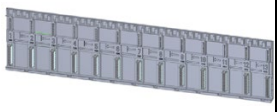
PE connection element for mounting rail	The set of screws is threaded into the mounting rail's T-profile groove, and is required for grounding the mounting rail. The set of screws is contained in the scope of delivery of the mounting rails in the standard lengths (160 to 830 mm) and can be ordered as Accessories/spare parts (Page 363).	

Components	Function	Diagram
CPU (standard, fail-safe, compact or technology CPU)	The CPU executes the user program. The integrated system power supply of the CPU supplies the modules used via the backplane bus. Further features and functions of the CPU: • Communication via Ethernet • Communication via PROFIBUS/PROFINET • HMI communication • Integrated web server • OPC UA server • OPC UA client • Integrated technology (e.g. motion control functions, trace functionality) • Integrated system diagnostics • Integrated protection functions (access, know-how and copy protection) • Safety mode (when using fail-safe CPUs)	 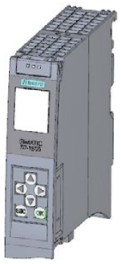
Interface module for PROFINET IO	The interface module: • Is used as an IO device on PROFINET IO. • Links the ET 200MP distributed I/O system with the IO controller. • Exchanges data with the I/O modules via the backplane bus.	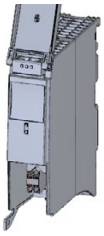
Interface module for PROFIBUS DP	The interface module: • Is used as a DP Device on PROFIBUS DP. • Links the ET 200MP distributed I/O system with the DP master. • Exchanges data with the I/O modules via the backplane bus.	
I/O module/ fail-safe I/O module	The I/O modules form the interface between the controller and the process. The controller detects the current process state via the connected sensors and actuators, and triggers the corresponding reactions. I/O modules are divided into the following module types: • Digital input (DI, F-DI) • Digital output (DQ, F-DQ) • Digital input/digital output (DI/DQ) • Analog input (AI) • Analog output (AQ) • Analog input/analog output (AI/AQ) • Technology module (TM) • Communication module (CM) • Communication processor (CP) A U connector is included in the scope of delivery for each I/O module. For fail-safe I/O modules, an additional electronic coding element for saving the PROFIsafe address is included in the scope of delivery and can be ordered as spare part Accessories/spare parts (Page 363).	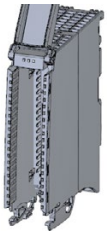

Components	Function	Diagram
U connector	The individual modules are connected to one another with the U connector. The U connector provides the mechanical and electrical connection between the modules. The U connector is included in the scope of delivery of all modules (exceptions: CPU, interface module) and can be ordered as Accessories/spare parts (Page 363).	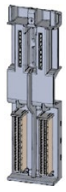
Front connectors	The front connectors are used to wire the I/O modules. The front connectors for technology and analog modules must be supplemented with a shielding bracket, power supply element, and shielding clamp. The components are included in the scope of delivery of the technology modules, analog modules and compact CPUs (for onboard I/O) and can be ordered as Accessories/spare parts (Page 363) accessories. There are front connectors with screw terminals and push-in terminals for 35 mm modules, and with push-in terminals for 25 mm modules. The front connectors for 25 mm modules are included in the scope of delivery of the I/O modules and compact CPUs (for onboard I/O). Four potential bridges and one cable tie are included in the scope of delivery of the front connectors for 35 mm modules. The front connectors for 25 mm modules have no potential bridges due to the compact module design.	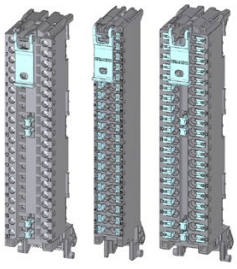
Potential bridges for front connector	You jumper two terminals with potential bridges. The potential bridges are included in the scope of delivery of the front connector and can be ordered as Accessories/spare parts (Page 363). The front connectors for 25 mm modules have no potential bridges. Therefore, you should also observe the information in the product manual for the respective digital or analog module.	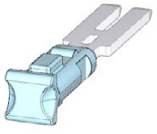
Shield bracket	The shield bracket is an insertable bracket for modules with EMC-critical signals (e.g. analog modules, technology modules), and (together with the shield clamp) permits the low impedance application of shielding with minimal installation times. The shield bracket is included in the scope of delivery of the analog modules, technology modules and compact CPUs (for onboard I/O) and can be ordered as Accessories/spare parts (Page 363).	
Shield clamp	The shield clamps are used to attach cable shielding to the shielding bracket. The shield clamp is included in the scope of delivery of the analog modules, technology modules and compact CPUs (for onboard I/O) and can be ordered as Accessories/spare parts (Page 363).	
Power supply element	The power supply element is inserted in the front cable connector, and serves to supply power to modules with EMC-critical signals (analog modules, technology modules). The power supply element (connection technology: screw terminal) is included in the scope of delivery of the analog and technology modules and can be ordered as Accessories/spare parts (Page 363).	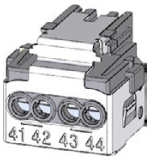

Components	Function	Diagram
Labeling strips for the exterior of the front cover of the I/O modules	The labeling strips are used to label the modules for specific plants. You can label the labeling strips using a machine. The labeling strips are available in various colors: • Al gray: Non-fail-safe modules • Yellow: Fail-safe modules The labeling strips are included in the scope of delivery of the I/O modules and compact CPUs (for onboard I/O). Additional labeling strips can be ordered as Accessories/spare parts (Page 363).	
4-pole connection plug for supply voltage of the CPU/interface module	The supply voltage is supplied by means of the 4-pole connection plug.	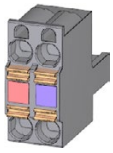
System power supply (PS)	The system power supply is a diagnostics-capable power supply module, that can be connected with the backplane bus using a U connector. A system power supply is required when the power fed from the CPU/interface module into the backplane bus is not sufficient to supply the connected modules with power. System power supplies are available in various models: • PS 25 W 24 V DC • PS 60 W 24/48/60 V DC • PS 60W 24/48/60V DC HF* • PS 60 W 120/230 V AC/DC A power cable connector with coding element and U connector is included in the scope of delivery of the system power supply and may be ordered as spare part.	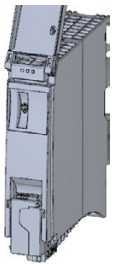
Load current supply (PM)	The load current supply (PM) supplies the system power (PS), central modules (CPU), interface module and input and output circuits of the I/O modules with 24 V DC. If you are using load current supplies, we recommend the devices from our SIMATIC series. These devices can be mounted on the mounting rail. Load current supplies are available in various models: • PM 70 W 120/230 V AC • PM 190 W 120/230 V AC As an alternative to the SIMATIC load current supplies (PM), you can also use SITOP smart power supplies. Use of a SITOP smart power supply is recommended in these cases, among others: • Higher power requirement • Redundancy • Uninterruptible power supply For more information on the SITOP modules, refer to an FAQ on the Internet (https://support.industry.siemens.com/cs/ww/en/view/96998532).	

* Additionally the PS 60W 24/48/60V DC HF keeps the complete work memory of the CPU retentive.

Reference

You can find more information on the different function classes (for example, basic, standard) of the interface and I/O modules in an FAQ on the Internet (https://support.industry.siemens.com/cs/de/de/view/109476914/en).

4.4 CPUs

Figure 4-14 Controller

SIMATIC S7-1500 controllers are characterized by maximum performance capability thanks to a high-performance backplane bus, very short terminal-to-terminal response time and extremely fast signal processing.

The controller (CPU) executes the user program. The integrated system power supply of the controller provides power to the modules used through the backplane bus.

A fail-safe version is available for each SIMATIC S7-1500 controller (except compact CPUs and the redundant CPU 1513R-1 PN and CPU 1515R-2 PN). To use the safety functions in the TIA Portal, you need the "STEP 7 Safety Advanced" option package.

During commissioning of the plant you can, for example, change the IP address of the CPU directly via the display, thus saving time and costs. In the event of a service call, the plant downtimes are minimized by quick access to diagnostics alarms.

For effective commissioning and fast optimization of drives and controls, the SIMATIC S7-1500 supports extensive trace functions for all CPU tags.

A SIMATIC S7-1500 controller also offers additional functions:

- Communication via Ethernet/PROFINET
- Communication via PROFIBUS
- HMI communication
- Communication via OPC UA
- Web server, technology functions, system diagnostics, protection functions integrated
- When using an F-CPU: Safety mode
- When using a S7-1500 R/H CPU: Redundancy
- When using a T-CPU: Extended motion control functions

4.4.1 What can you do with the CPU?

SIMATIC S7-1500 provides you with a variety of CPUs that can be integrated. You can expand each CPU with I/O, communications and technology modules. If the memory and performance of a CPU 1511-1 PN are sufficient for your application but you also require additional communication interfaces, then you have the option of extending the CPU with communication modules for Industrial Ethernet, PROFINET and PROFIBUS. Modules for serial communication are also available.

The CPU provides you with the following options:

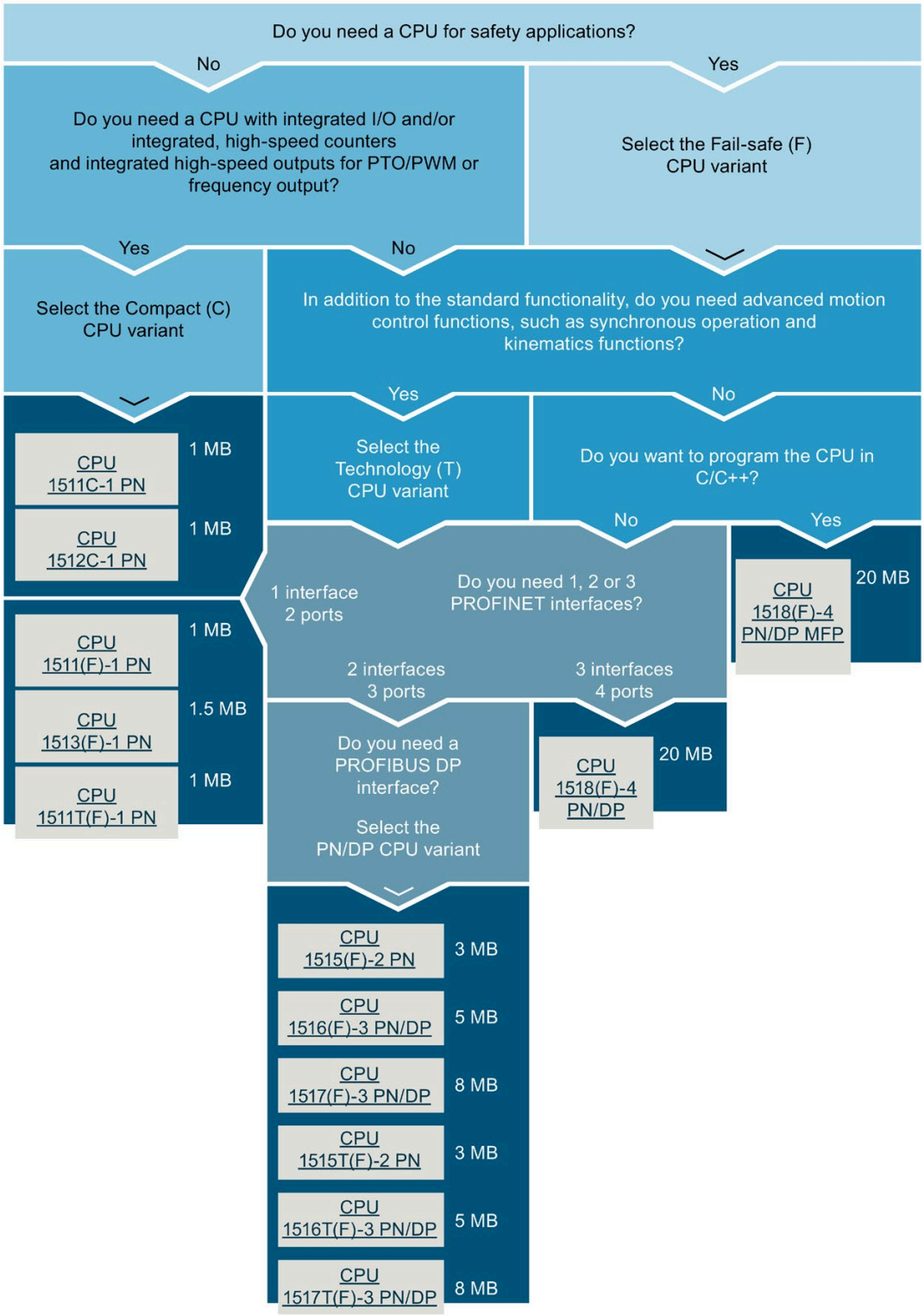

Figure 4-15 Selection guide for CPUs

4.4.2 Technical specifications of CPUs

Table 4- 3 Standard CPUs and F-CPUs

CPU	1511-1 PN 1511F-1 PN 1511T-1 PN 1511TF-1 PN	1513-1 PN 1513F-1 PN	1515-2 PN 1515F-2 PN 1515T-2 PN 1515TF-2 PN	1516-3 PN/DP 1516F-3 PN/DP 1516T-3 PN/DP 1516TF-3 PN/DP	1517-3 PN/DP 1517F-3 PN/DP 1517T-3 PN/DP 1517TF-3 PN/DP	1518-4 PN/DP 1518F-4 PN/DP 1518T-4 PN/DP 1518TF-4 PN/DP 1518-4 PN/DP MFP 1518F-4 PN/DP MFP
Article number						
Standard CPU:	6ES7 511-1AL03-0AB0	6ES7 513-1AM03-0AB0	6ES7 515-2AN03-0AB0	6ES7 516-3AP03-0AB0	6ES7517-3AP00-0AB0	6ES7518-4AP00-0AB0
F-CPU	6ES7 511-1FL03-0AB0	6ES7 513-1FM03-0AB0	6ES7 515-2FN03-0AB0	6ES7 516-3FP03-0AB0	6ES7517-3FP00-0AB0	6ES7518-4FP00-0AB0
T-CPU	6ES7511-1TL03-0AB0	---	6ES7515-2TN03-0AB0	6ES7516-3TN00-0AB0	6ES7517-3TP00-0AB0	6ES7518-4TP00-0AB0
TF-CPU	6ES7511-1UL03-0AB0	---	6ES7515-2UN03-0AB0	6ES7516-3UN00-0AB0	6ES7 517-3UP00-0AB0	6ES7518-4UP00-0AB0
CPU 1518 MFP	---	---	---	---	---	6ES7518-4AX00-1AB0
CPU 1518F MFP	---	---	---	---	---	6ES7518-4FX00-1AB0
Equipment Manual						
Standard CPU:	Link	Link	Link	Link	Link	Link
T-CPU	Link	---	Link	Link	Link	Link
CPU 1518 MFP	---	---	---	---	---	Link
F-CPU	Link					
Supply voltage, permissible range of all the CPUs 19.2 V DC ... 28.8 V DC						
Code work memory						
Standard CPU:	150 KB	600 KB	1 MB	2 MB	2 MB	6 MB
T-CPU	450 KB	---	1.5 MB	3 MB	3 MB	9 MB
F-CPU	225 KB	900 KB	1.5 MB	3 MB	3 MB	9 MB
TF-CPU	450 KB	---	1.5 MB	3 MB	3 MB	9 MB
MFP-CPU	---					6 MB
FMFP-CPU	---					9 MB
Data work memory	1.5 MB	2.5 MB	4.5 MB	7.5 MB	8 MB	60 MB
Processing times						
Bit operations	25 ns	25 ns	6 ns	6 ns	2 ns	1 ns
Word operations	32 ns	32 ns	7 ns	7 ns	3 ns	2 ns

CPU	1511-1 PN 1511F-1 PN 1511T-1 PN 1511TF-1 PN	1513-1 PN 1513F-1 PN	1515-2 PN 1515F-2 PN 1515T-2 PN 1515TF-2 PN	1516-3 PN/DP 1516F-3 PN/DP 1516T-3 PN/DP 1516TF-3 PN/DP	1517-3 PN/DP 1517F-3 PN/DP 1517T-3 PN/DP 1517TF-3 PN/DP	1518-4 PN/DP 1518F-4 PN/DP 1518T-4 PN/DP 1518TF-4 PN/DP 1518-4 PN/DP MFP 1518F-4 PN/DP MFP
Integrated interfaces						
PROFINET IO	1	1	2	2	2	2
PROFINET	---	---	---	---	---	1
Number of PROFINET ports	2	2	3	3	3	4
PROFIBUS DP	---	---	---	1	1	1
Technology						
Motion Control resources*	1120	1120	2400	2400 T(F)-CPU: 6400	10240	15360
Typical number of positioning axes (at 4 ms servo/IPO cycle)	5	5	7	7	70	128
Extended motion control resources (T-CPUs only)	90	---	120	192	256	512
Max. number of positioning axes	14	14	30	30	128	128
Additional functions						
Isochronous mode	Centralized and distributed	Centralized and distributed	Centralized and distributed	Centralized and distributed	Centralized and distributed	Centralized and distributed
Web server	X	X	X	X	X	X

* See section Motion Control (Page 86)

Table 4- 4 Compact CPUs

Controller	1511C-1 PN	1512C-1 PN
Article number	6ES7511-1CK01-0AB0	6ES7512-1CK01-0AB0
Equipment Manual	Link	Link
Supply voltage, permissible range	19.2 V DC to 28.8 V DC	19.2 V DC to 28.8 V DC
Code work memory	175 KB	250 KB
Data work memory	1 MB	1 MB
Processing time for bit operations	60 ns	48 ns
Processing time for Word operations	72 ns	58 ns
PROFINET interfaces	1	1
Number of PROFINET ports	2	2
Integrated analog inputs/outputs	5 inputs/2 outputs	5 inputs/2 outputs
Integrated digital inputs/outputs	16 inputs/16 outputs	32 inputs/32 outputs
Technology		
Motion Control resources*	800	800
Typical number of positioning axes (at 4 ms servo/IPO cycle)	5	5
Max. number of positioning axes	10	10
Isochronous mode	Distributed	Distributed
High-speed counters	6 (max. 100 kHz)	6 (max. 100 kHz)
Frequency meter	6 (max. 100 kHz)	6 (max. 100 kHz)
Period duration measurement	6 channels	6 channels
Pulse generators (pulse width modulation, Pulse Train Output, frequency output)	4	4
Web server	X	X

* See section Motion Control (Page 86)

Code work memory: Volatile memory that contains runtime-relevant parts of the program code.

Data work memory: Volatile memory that contains the runtime-relevant parts of the data blocks and technology objects.

4.4.3 Web server

The SIMATIC S7-1500 CPUs have an integrated web server.

You can display the CPU status without additional software installation via a web browser and control it to a limited extent. Graphically visualized process variables and user-defined websites facilitate information acquisition and diagnostics of plant states.

Figure 4-16 Home page web server

Example: Web server simplifies maintenance of treatment plants

Automation task:

Implementation of a user interface for fault management of a treatment plant.

Feature:

Treatment plants operate fully automatically, they are not manned. The operator optionally receives an SMS if a fault occurs. For diagnostics, the operator directly accesses the corresponding web sites.

Solution:

Creation of user sites for the web server of a SIMATIC S7-1500 CPU. The customer can make changes to the web sites himself, e.g. the mobile number for the SMS messages, settings in the CPU or the message texts.

Benefits

The web server provides you with the following advantages:

- Access via web browsers to a SIMATIC S7-1500 with plant-relevant operating data
- Display of service and diagnostics information over large distances
- Access restrictions for unauthorized users

Additional information

A detailed description of handling the web server can be found in the Function Manual "SIMATIC S7-1500 web server" SIMATIC S7-1500 Web server (https://support.industry.siemens.com/cs/de/en/view/59193560).

4.4.4 Safety

For fail-safe operation of your plant, program the F-CPUs of the SIMATIC S7-1500. Use the "STEP 7 Safety Advanced" option package of the TIA Portal for this purpose. In combination with the TIA Portal, the F-CPUs offer optimal integration of fail-safe systems into your engineering environment; one controller, one communication system and one engineering platform for standard and fail-safe automation:

- Integration of safety technology
- Instructions approved by German Technical Inspectorate for frequently required safety applications
- Integration of safety-related functions up to SIL 3 according to IEC 61508:2010 or PL e and category 4 according to ISO 13849-1:2015 or according to EN ISO 13849-1:2015
- Uniform engineering for standard and safety automation
- Simple documentation of safety-related changes via the F change history in STEP 7 Safety
- Support in the acceptance of the safety program and no renewed acceptance of the safety program after changes in the standard program

Example: Production cell with access protection

Automation task:

A laser scanner monitors access to a production area. The maintenance area is secured by a protective door. Entering the production area or opening the protective door, just like an emergency stop, results in the shutdown or stopping of the production cell.

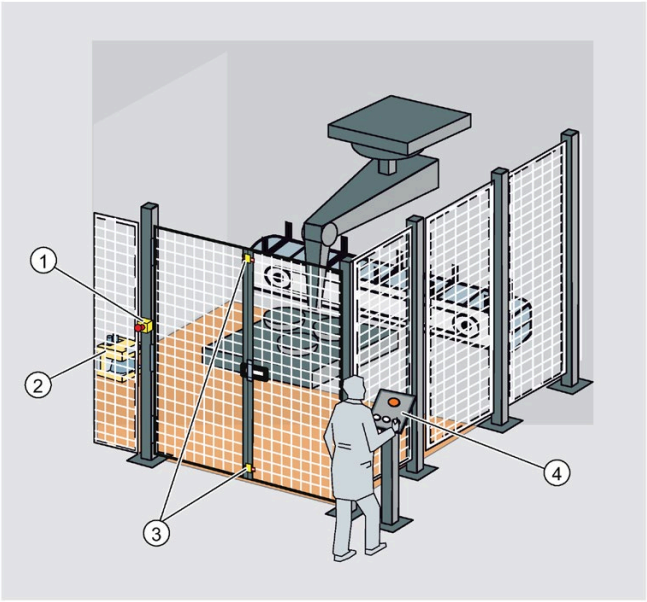

① Emergency stop
② Laser scanner
③ Protective door
④ Control panel with start and acknowledgment key

Figure 4-17 Production cell with access protection

Feature:

Start-up of the system is only possible with unlocked emergency stop, closed protective door and free protection area of the laser scanner. After activating the emergency stop, opening the protective door or addressing the protection area, a user acknowledgement is required to restart production operations again. Access protection to the F-CPU and the safety program is essential for productive operation.

Solution:

Use of a SIMATIC S7-1500 F-CPU with fail-safe modules in the distributed I/O system ET 200SP on the PROFINET IO.

The F modules ET 200SP take over the connections for emergency stop, monitoring of the protective door, monitoring of the access area, the motor and the user acknowledgment. Perform the relevant programming in STEP 7. The safety program runs in the CPU.

Benefits

SIMATIC Safety Integrated provides you with the following advantages:

- Engineering with SIMATIC STEP 7 Safety Advanced in the TIA Portal, same engineering and operating concept for standard and fail-safe automation task
- Use of instructions approved by the German Technical Inspectorate from the system library Safety in the safety program, e.g. for protective door, emergency stop, monitored feedback loop circuit and user acknowledgment, saves time and reduces the error rate
- Simple connections of PROFIsafe devices via PROFINET and PROFIBUS
- Additional password protection for F-CPU and safety program is set up for IT security.
- Integration in integrated system diagnostics

Additional information

A detailed description of the topic "Safety Integrated" is available in the programming and operating manual SIMATIC Safety - Configuring and Programming SIMATIC Safety - Configuration and Programming (https://support.industry.siemens.com/cs/ww/en/view/54110126).

4.4.5 Security

Security means protection of technical systems against sabotage, espionage and human error.

Protection functions

To set up secure networks, the SIMATIC S7-1500 automation system offers an integrated security concept:

Table 4- 5 Overview of protection functions

Protection function	Description
Protection of confidential configuration data	Protection of confidential CPU configuration data
Integrity protection	The CPUs come with an integrity protection function as standard. This helps to detect possible manipulations: • To the engineering data on the SIMATIC Memory Card • To the engineering data during data transfer between TIA Portal and CPU • To the engineering data during data transfer between HMI system and CPU • To the encrypted firmware
Know-how protection	Protection against unauthorized access and modifications to algorithms by means of password protection
Copy protection	Protection against duplication of programs by linking individual blocks with the serial number of the original memory card on the SIMATIC memory card
Access protection	Protection against unauthorized configuration changes using authorization levels
Locking the CPU	Protection against unauthorized access by locking the front cover with a seal or a lock

You can find more information about security mechanisms of the SIMATIC automation systems in the Security with SIMATIC S7 controllers (https://support.industry.siemens.com/cs/ww/en/view/77431846) document and in the Communication (https://support.industry.siemens.com/cs/ww/en/view/59192925) function manual.

Secure Communication

It is becoming increasingly necessary to transfer data to external computers in encrypted form via Intranet or public networks.

SIMATIC S7-1500 CPUs and ET 200 CPUs with firmware version 2.0 and higher support the Internet PKI (RFC 5280) with STEP 7 as of V14. This makes the configuration and the operation of Secure Communication possible, for example:

- Hypertext Transfer Protocol Secure (HTTPS)
- Secure Open User Communication
- Secure Communication with OPC UA

A public key infrastructure (PKI) can issue, distribute and check digital certificates. For S7-1500 CPUs, you create certificates for various applications in the CPU properties in STEP 7, for example: TLS certificates for Secure Open User Communication, Web server certificates, OPC UA certificates.

With STEP 7 and WinCC as of Version V17, SIMATIC S7-1500 CPUs and ET 200 CPUs from firmware version 2.9 support innovated and standardized secure PG/PC and HMI communication – referred to as Secure PG/HMI communication for short.

Communications processors with integrated security functions

For special requirements of your plant, use communications processors with integrated security functions, such as access protection using a firewall, protection against data manipulation using VPN, FTPS, HTTPS, SNMPv3 and secure NTP.

Advantages and customer benefits

The protection functions listed above protect your investments from unauthorized access and manipulation, helping to secure plant availability.

4.4.6 Diagnostics

Integrated diagnostics across all levels of the automation is incorporated in the SIMATIC S7-1500 automation system. All SIMATIC products have integrated diagnostic functions which you can use to analyze and localize faults and errors efficiently. This reduces the commissioning periods required and minimizes standstill times in production.

A uniform display concept ensures that error messages in the STEP 7, on the HMI, the Web server and in the display of the CPU are visualized identically as plain text information.

You can optionally configure machine and plant diagnostics. This means that the logic of these process diagnostic messages or monitoring depends directly on the state of the plant and is defined by you.

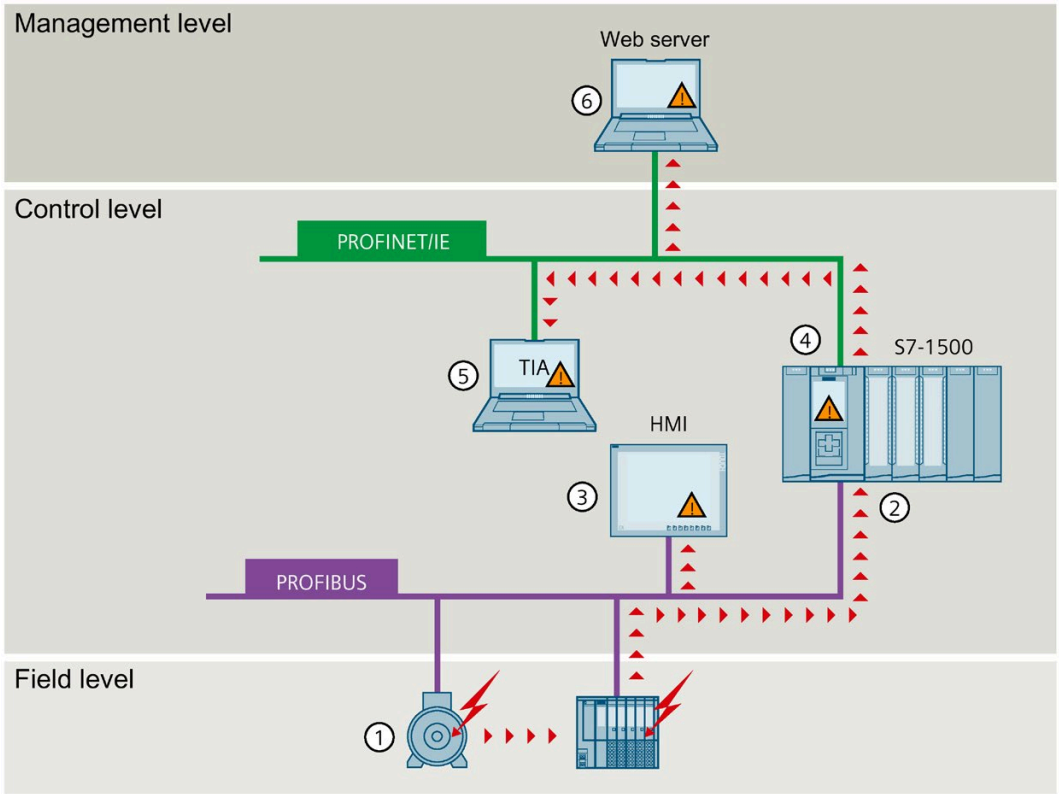

① Monitoring functions are integrated in the hardware as standard.
② Diagnostics is implemented system-wide across bus limits.
③ Output of the cause of the error in plain text, archiving and logging of alarms
④ Automatic localization of the error source
⑤ Configurability of alarms
⑥ Plant-wide, uniform display of system status

Figure 4-18 *Display of diagnostic information*

Faults in the plant are immediately detected and reported on the display devices, even in STOP mode. As a result, system diagnostics is always consistent with the actual state of the plant.

Advantages and customer benefits

Integrated system diagnostics offers the following advantages:

- Diagnostics is always consistent with the actual state of the plant. The system diagnostics also works in the STOP mode of the CPU.
- The uniform display concept enables efficient error analysis.
- The immediate identification of the error source in the event of an error speeds up commissioning and minimizes production downtimes.
- By configuring diagnostics events, you tailor the diagnostics to the requirements of your automation task.

4.4.7 Trace

for effective commissioning and optimization of drives and closed-loop controls, the SIMATIC S7-1500 CPUs feature integrated trace functionality. The trace function records the CPU tags, depending on the settable trigger conditions. Tags are, for example, drive parameters or system and user tags of a CPU. You can display and evaluate the saved recordings with STEP 7.

By visualizing the entire process with real-time trace, you identify, for example, sporadic events in the system during commissioning and service.

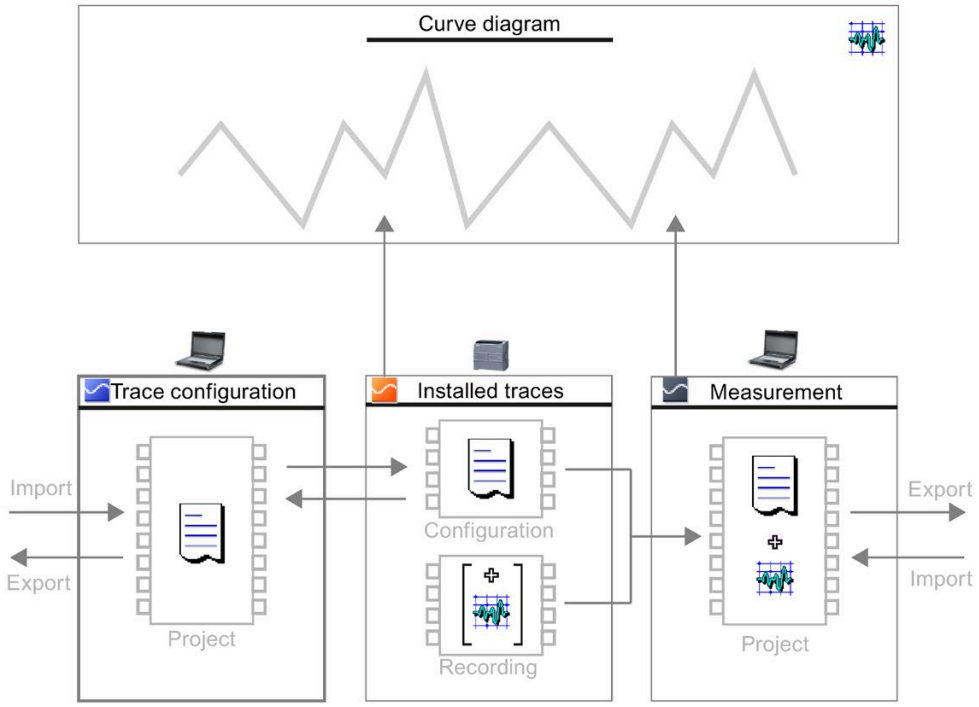

Figure 4-19 Schematic overview

Example: Trace optimizes the commissioning of packaging machines

Automation task:

At what speed does a plant reach its maximum productivity? How do you quickly determine the optimum settings?

The packaging machine ensures quick and reliable packaging of ECG electrodes on a rotary table which is loaded and unloaded by a conveyor belt.

Feature:

After filling is the correct time for further transport of the packaged electrodes. Light barriers trace the position of the electrodes for this.

Solution:

The Trace function of a SIMATIC S7-1500 CPU visualizes the exact sequence of selected signals over a short period of time. It supports the start-up engineer in finding the exact light barrier positions and the optimum speed for belts and the rotary table.

The trace recordings are supplied to the customer as part of the plant project. In the event of a fault, the customer recognizes whether changes to the basic settings have caused the fault.

In addition, the trace recordings are stored as a "measurement" on the SIMATIC memory card, up to 999 trace recordings are available for evaluation.

Advantages and customer benefits

The Trace function provides you with the following advantages:

- Cost-effective and easy evaluation as the signals are available in the CPU
- Monitoring of highly dynamic processes
- Up to 8 independent trace jobs simultaneously
- Recording for each cycle of up to 16 tag values for the precise optimization of controls and drives
- recording in separate CPU memory area for easy localization of sporadic errors
- Various trigger options
- Various zoom and cursor measuring functions
- Saving trace recordings on the SIMATIC memory card
- export of measurements, e.g. for user-specific processing

Project trace

A project trace includes trace configurations of multiple devices and records the signals across devices.

Synchronization takes place via a global trigger that can be triggered by any device. After receiving the global trigger, the devices with valid project trace configuration start the recording.

Additional information

You can find a detailed description of the "Trace" function in the Function Manual SIMATIC/SINAMICS Using the trace and logic analyzer function SIMATIC/SINAMICS Trace and logic analyzer function (https://support.industry.siemens.com/cs/ww/en/view/64897128).

4.5 Interface modules for SIMATIC S7-1500 I/O devices

An interface module connects the SIMATIC S7-1500 I/O devices as ET 200MP distributed I/O system via PROFINET or PROFIBUS with the controller. The interface module exchanges the data between the higher-level controller and the I/O modules.

Interface modules

Short designation	**IM 155-5 PN HF** **IM 155-5 PN ST**	**IM 155-5 PN BA**	**IM 155-5 DP ST**
Article number			
High Feature (HF)	6ES7155-5AA00-0AC0	---	---
Standard (ST)	6ES7155-5AA01-0AB0	---	6ES7155-5BA00-0AB0
Basic (BA)	---	6ES7155-5AA00-0AA0	---
Manual			
High Feature (HF)	Link	---	---
Standard (ST)	Link	---	Link
Basic (BA)	---	Link	---
Supply voltage	24 V DC	24 V DC	24 V DC
Number of IO modules	30	12	12
Interfaces	1 x PROFINET IO; integrated 2-port switch	1 x PROFINET IO; integrated 2-port switch	1 x PROFIBUS
Min. slave interval	---	---	100 µs
Isochronous real-time communication (IRT)	X	---	---
Isochronous mode	X (shortest cycle 250 µs)	---	---
Prioritized startup	X	---	---
Device replacement without programming device	X (LLDP; address assignment by a tool, for example, STEP 7)	X (LLDP; address assignment by a tool, for example, STEP 7)	---
Shared device	High Feature: 4 IO controllers Default: 2 IO controllers	2 IO controllers	---
Identification and maintenance data	I&M 0 to 3	I&M 0 to 3	I&M 0 to 3
Media redundancy (MRP)	X	X	---
Media redundancy with planned duplication (MRPD)	High Feature: X Default:	---	---
System redundancy on S7-400H	High Feature: With GSD file and STEP 7 V5.5 SP3 or higher Default:	---	---

Short designation	IM 155-5 PN HF IM 155-5 PN ST	IM 155-5 PN BA	IM 155-5 DP ST
System redundancy in S7-1500R/H	High Feature: X Default:	---	---
GSD file for ET 200MP	PROFINET	PROFINET	PROFIBUS

4.6 Input and output modules

The I/O modules form the interface between the controller and the process. The controller detects the current process state via the connected sensors and actuators, and triggers the corresponding reactions.

Digital and analog modules provide the inputs/outputs that are required for the respective task.

The input/output modules are divided into function classes.

Function classes of input/output modules

The table below shows selected properties and technical specifications of different function classes of input/output modules.

Function class		
High Speed (HS)	Special modules for extremely fast applications Shortest input delays Shortest conversion times Isochronous mode	
High Feature (HF)	Flexible use Even for complex applications Parameters for each channel Diagnostics for each channel Add-on functions	With analog modules • Highest accuracy (< 0.1%) • High common mode voltage (e. g. 60 V DC / 30 V AC), with single-channel electrical isolation if required
Standard (ST)	Medium price range Parameter per load group / module Diagnostics per load group / module	With analog modules • Universal modules • Accuracy ≥ 0.3% • Common-mode voltage approx. 10 V to 20 V
Basic (BA)	Inexpensive, simple modules No parameters No diagnostics	

4.6.1 Which I/O devices are the correct ones?

SIMATIC S7-1500 offers a wide range of I/O modules. Depending on the complexity of your plant and the technical and functional requirements, you perform your planning flexibly and in a modular manner with SIMATIC components.

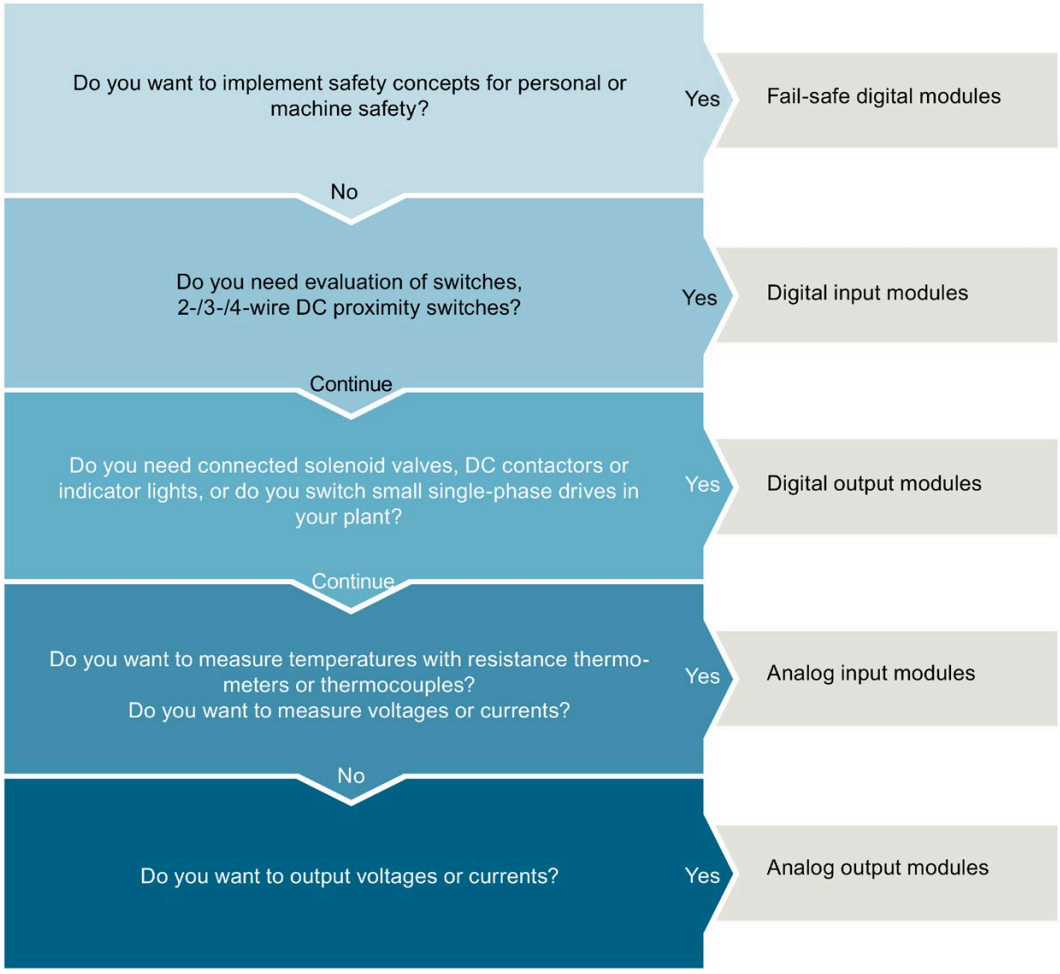

Figure 4-20 Selection guide for input/output modules

4.6.2 Digital input modules

Digital input modules

Short designation	DI 16x24VDC HF DI 16x24VDC BA	DI 32x24VDC HF DI 32x24VDC BA	DI 16x24VDC SRC BA	DI 16x24...125VUC HF
Article number				
High Feature (HF)	6ES7521-1BH00-0AB0	6ES7521-1BL00-0AB0	---	6ES7521-7EH00-0AB0
Basic (BA)	6ES7521-1BH10-0AA0	6ES7521-1BL10-0AA0	6ES7521-1BH50-0AA0	---
Equipment Manual				
High Feature (HF)	Link	Link	---	Link
Basic (BA)	Link	Link	Link	---
Width				
High Feature (HF)	35 mm	35 mm	---	35 mm
Basic (BA)	25 mm	25 mm	35 mm	---
Number of inputs	16	32	16	16
Electrical isolation between channels	---	X	---	X
Number of potential groups	1	2	1	1
Nominal input voltage	24 V DC	24 V DC	24 V DC	24 V UC to 125 V UC
Diagnostic interrupt	Only with HF	Only with HF	---	X
Hardware interrupt	Only with HF	Only with HF	---	X
Isochronous mode	Only with HF	Only with HF	---	---
Input delay				
High Feature (HF)	0.05 ms to 20 ms (configurable)		---	0.05 ms to 20 ms (configurable with DC) 20 ms (fixed at AC)
Basic (BA)	Typ. 3 ms (fixed)	Typ. 3 ms (fixed)	Typ. 3 ms (fixed)	---
Integrated counting function (Two channels can optionally be used as counter with 3 kHz)	Only with HF: Counting up to 3 kHz	Only with HF: Counting up to 1 kHz	---	---

Digital input modules

Short designation	DI 16x230VAC BA	DI 16xNAMUR HF	DI 16x24VDC HS
Article number			
High Feature (HF)	---	6ES7521-7TH00-0AB0	---
Basic (BA)	6ES7521-1FH00-0AA0	---	---
High Speed (HS)	---	---	6ES7521-7BH00-0AB0
Equipment Manual			
High Feature (HF)	---	Link	---
Basic (BA)	Link	---	---
High Speed (HS)	---	---	Link
Width			
High Feature (HF)	---	35 mm	---
Basic (BA)	35 mm	---	---
High Speed (HS)	---	---	35 mm
Number of inputs	16	16	16
Electrical isolation between channels	X	---	---
Number of potential groups	4	2	2
Nominal input voltage	120/230 V AC	24 V DC	24 V DC
Diagnostic interrupt	---	X	X
Hardware interrupt	---	X	X
Isochronous mode	---	X	X
Input delay			
High Feature (HF)	---	0.05 ms to 20 ms (configu-rable)	---
Basic (BA)	Typ. 25 ms (fixed)	---	---
High Speed (HS)	---	---	0.05 ms to 20 ms (configu-rable)
Integrated counting function (Two channels can optionally be used as counter with 3 kHz)	---	Counting up to 20 kHz	Counting up to 20 kHz

Digital input/output module

Short designation	DI 16x24VDC / DQ 16x24V/0.5A BA
Article number	
High Feature (HF)	---
Basic (BA)	6ES7523-1BL00-0AA0
Equipment Manual	
High Feature (HF)	---
Basic (BA)	Link
Width	
High Feature (HF)	---
Basic (BA)	25 mm
Number of inputs	16
Electrical isolation between channels	---
Number of potential groups	DI: 1 / DQ: 2
Nominal input voltage	24 V DC
Diagnostic interrupt	---
Hardware interrupt	---
Isochronous mode	---
Input delay	
High Feature (HF)	---
Basic (BA)	Typ. 3 ms (fixed)
Integrated counting function (Two channels can optionally be used as counter with 3 kHz)	---

Benefits

The digital input modules provide you with the following advantages:

- High channel density with low variety of parts, therefore less effort for ordering, logistics and storage of spare parts
- Modules in 25 mm size without parameter assignment and diagnostics, therefore simple commissioning
- Front connector in screw-type connection system or in push-in system (35 mm width) or push-in system for 25 mm modules
- Same mechanical design, same handling and same accessories for all modules
- Same pin assignment for wiring, which means that circuit diagrams and wiring plans can be universally used
- Any combination of narrow and wide modules
- Can be used centrally in SIMATIC S7-1500 and in the ET 200MP distributed I/O system
- Cost-effective implementation of simple counting tasks with two counter inputs each of the high-feature modules DI16x24VDC HF and DI 32x24V DC HF

4.6.3 Digital output modules

Digital output modules and digital input/output module (DC)

Short designation	DQ 8x24VDC/2A HF	DQ 32x24VDC/0.5A HF DQ 32x24VDC/ 0.5A BA	DQ 16x24VDC/0.5A HF DQ 16x24VDC/ 0.5A BA	DI 16x24VDC / DQ16x24V/0.5A BA
Article number				
High Feature (HF)	6ES7522-1BF00-0AB0	6ES7522-1BL01-0AB0	6ES7522-1BH01-0AB0 6ES7 522-1BL01-0AB0	---
Basic (BA)	---	6ES7522-1BL10-0AA0	6ES7522-1BH10-0AA0	6ES7523-1BL00-0AA0
Manual				
High Feature (HF)	Link	Link	Link	---
Basic (BA)	---	Link	Link	Link
Width				
High Feature (HF)	35 mm	35 mm	35 mm	---
Basic (BA)	---	25 mm	25 mm	25 mm
Number of outputs	8	32	16	16
Type	Transistor	Transistor	Transistor	Transistor
Electrical isolation between channels	X	Only with BA	Only with BA	X
Number of potential groups	2	4; only with BA	2; only with BA	DQ: 2 / DI: 1
Rated output voltage	24 V DC	24 V DC	24 V DC	24 V DC
Rated output current	2 A	0.5 A	0.5 A	0.5 A
Diagnostic interrupt	X	Only with HF	Only with HF	---
Hardware interrupt	---	---	---	---
Isochronous mode	---	Only with HF	Only with HF	---
Pulse-width modulation (PWM)	X	---	---	---
Switching cycle counter	X	---	Only with HF	---

Digital output modules (UC, AC)

Short designation	DQ 16x24 ...48VUC/ 125VDC/0.5A ST	DQ 8x230VAC/5A ST relay	DQ 16x230VAC/2A ST relay	DQ 8x230VAC/2A ST Triac	DQ 16x230VAC/1A ST Triac
Article number	6ES7522-5EH00-0AB0	6ES7522-5HF00-0AB0	6ES7522-5HH00-0AB0	6ES7522-5FF00-0AB0	6ES7522-5FH00-0AB0
Manual	Link	Link	Link	Link	Link
Width	35 mm	35 mm	35 mm	35 mm	35 mm
Number of outputs	16	8	16	8	16
Type	Transistor	Relay	Relay	Triac	Triac
Electrical isolation between channels	X	X	X	X	X
Number of potential groups	1	16	8	8	8
Relay coil supply voltage	---	24 V DC	24 V DC	---	---
Rated output voltage	24 V DC to 125 V DC / 24 V AC to 48 V AC	24 V DC to 120 V DC / 24 V AC to 230 V AC	24 V DC to 120 V DC / 24 V AC to 230 V AC	230 V AC	230 V AC
Rated output current	0.5 A	5 A	2 A	2 A	1 A
Diagnostic interrupt	---	X	X	---	---
Hardware interrupt	---	---	---	---	---

Benefits

The digital output modules provide you with the following advantages:

- High channel density with low variety of parts, therefore less effort for ordering, logistics and storage of spare parts
- Modules in 25 mm size without parameter assignment and diagnostics, therefore simple commissioning
- Front connector in screw-type connection system or in push-in system (35 mm width) or push-in system for 25 mm modules
- Same mechanical design, same handling and same accessories for all modules
- Same pin assignment for wiring, which means that circuit diagrams and wiring plans can be universally used
- Any combination of narrow and wide modules
- Can be used centrally in SIMATIC S7-1500 and in ET 200MP distributed I/O system
- High feature module DQ 8x24VDC/2A HF: You can use pulse width modulation (PWM) to easily generate periodic pulses with a constant rated voltage and a variable pulse duration.

  Typical use:
  - Control of proportional valves and way values (e.g. energy saving by reducing the holding current).
  - Heating control e.g. via an external additional power unit.

4.6.4 Fail-safe digital modules

Fail-safe digital modules

Fail-safe digital modules are available for implementing safety concepts in the area of equipment and personnel safety (for example, for emergency stop devices in the operation of processing machines).

The fail-safe modules ensure safe processing of field information (sensors: e.g., EMERGENCY OFF buttons, light barriers; actuators, e.g. motor control). You are provided with all the hardware and software components required for safe processing, according to the required safety class. The following table shows the available fail-safe modules.

Short designation	**F-DI 16x 24VDC PROFIsafe**	**F-DQ 8x24VDC/2A PPM**
Article number	6ES7526-1BH00-0AB0	6ES7526-2BF00-0AB0
Manual	Link	Link
Width	35 mm	35 mm
Number of inputs	16	---
Number of outputs	---	8
Type output	---	Transistor
Electrical isolation between channels	---	---
Rated input voltage	24 V DC	---
Rated output voltage	---	24 V DC
Rated output current	---	2 A
Maximum achievable safety class in safety mode	PLe/SIL 3	PLe/SIL 3
Low demand mode: PFD according to SIL3	< 5.00E-05	< 6.00E-05
High demand/continuous mode: PFH according to SIL3	< 1.00E-09 1/h	< 2.00E-09 1/h
Diagnostic interrupt	X	X
Hardware interrupt	---	---
Input delay	0.4 ms to 20 ms (configurable by channel)	---

Benefits

The fail-safe input and output modules S7-1500 provide you with the following advantages:

- High-channel, fail-safe inputs and outputs
- Can be used centrally in SIMATIC S7-1500 and in ET 200MP distributed I/O system
- processing of standard and safety programs
- Uniform engineering for standard and safety automation in the TIA Portal
- Integration of safety-related functions up to SIL 3 according to IEC 61508:2010 or PL e and category 4 according to ISO 13849-1:2015 or according to EN ISO 13849-1:2015

4.6.5 Analog input modules

Analog input modules and analog input/output module

Short designation	AI 8xU/I HF AI 8xU/I HS	AI 8xU/R/RTD/TC HF AI 8xU/I/RTD/TC ST	AI 4xU/I/RTD/TC ST AI 8xU/I/R/RTD BA	AI 4xU/I/RTD/TC / AQ 2xU/I ST
Article number				
High Feature (HF)	6ES7531-7NF00-0AB0	6ES7531-7PF00-0AB0	---	---
High Speed (HS)	6ES7531-7NF10-0AB0	---	---	---
Standard (ST)	---	6ES7531-7KF00-0AB0	6ES7531-7QD00-0AB0	6ES7534- 7QE00-0AB0
Basic (BA)	---	---	6ES7 531-7QF00-0AB0	---
Manual				
High Feature (HF)	Link	Link	---	---
High Speed (HS)	Link	---	---	---
Standard (ST)	---	Link	Link	Link
Basic (BA)	---	---	Link	---
Width	35 mm	35 mm	25 mm	25 mm
Number of inputs	8	8	4	4
Resolution	16 bits including sign	16 bits including sign	16 bits including sign	16 bits including sign
Measurement type	Voltage, current	Voltage, current, resistance, thermal resistor, thermocouple	Voltage, current, resistance, resistance thermometer, thermocouple	Voltage, current, resistance, thermal resistor, thermocouple
Electrical isolation between channels	Only with HF	Only with HF	---	---
Number of potential groups	1	1	---	---
Rated supply voltage	24 V DC	24 V DC	24 V DC	24 V DC
Permissible potential difference between inputs (UCM)	HF: 60 V DC / 30 V AC HS: 10 V DC	HF: 60 V DC / 30 V AC ST: 10 V DC	20 V DC	20 V DC
Diagnostic interrupt	X	X	X	X
Hardware interrupt	X Two high limits and two low limits in each case	X Two high limits and two low limits in each case	X Two high limits and two low limits in each case	X Two high limits and two low limits in each case
Isochronous mode	Only HS	---	---	---
Conversion time (per channel)	HF: Fast mode: 4/18/22/102 ms; Standard mode: 9/52/62/302 ms HS: 62.5 µs, per module, regardless of number of activated channels	HF: Fast mode: 4/18/22/102 ms; Standard mode: 9/52/62/302 ms ST: 9/23/27/107 ms	9/23/27/107 ms	9/23/27/107 ms
Calibration in RUN mode	Only with HF	Only with HF	X	X
Oversampling	Only with HS	---	---	---

Short designation	AI 8xU/I HF AI 8xU/I HS	AI 8xU/R/RTD/TC HF AI 8xU/I/RTD/TC ST	AI 4xU/I/RTD/TC ST AI 8xU/I/R/RTD BA	AI 4xU/I/RTD/TC / AQ 2xU/I ST
Measuring range adaptation	Only with HF	---	---	---
Scale measured values	Only with HF	---	---	---
Scale temperatures	---	Only with HF	---	---

Benefits

Analog input modules detect process signals, e.g. pressure or temperature and pass the process signals on in digitalized form (16 bit format) to the CPU. You use the analog input modules to measure current (2-wire and 4-wire transducer), voltages, resistances (resistance thermometer) and temperatures (thermoelements). The measurement types depend on the module used.

The analog input modules provide you with the following advantages:

- Front connector in screw-type connection system or in push-in system (35 mm width) or push-in system for 25 mm modules
- Same mechanical design, same handling and same accessories for all modules
- Components required for shielding are included in the scope of delivery and allow simple and quick installation without the use of tools
- Same pin assignment for wiring, which means that circuit diagrams and wiring plans can be universally used
- Any combination of narrow and wide modules
- Can be used centrally in SIMATIC S7-1500 and in ET 200MP distributed I/O system

Overview of functions

In the following you will find a brief overview of special functions of the modules. You can find a detailed description of the functions in the equipment manual of the module.

Measuring range adjustment of the analog input module AI 8xU/I HF

The function adjusts the measuring range to the sensor. You can increase the resolution for a configurable part of the measuring range in S7 format. The measured signal is resolved precisely to more decimal places around a specific operating point.

Scaling of the measured values of the analog input module AI 8xU/I HF

With measured value scaling, you display the user data of the module in REAL format (32-bit floating point) instead of S7 format. You can thus directly assign a technological variable to the analog value of the module. The conversion is made directly in the module, which saves power and cycle time in the CPU.

You can combine the measured value scaling with the measuring range adjustment. In this case, the measuring range is adjusted first and then the representation of the measured value is scaled.

Calibration in runtime

The following analog modules offer you the calibration function at runtime:

- AI 8xU/I/RTD/TC ST
- AI 8xU/I HS
- AI 4xU/I/RTD/TC ST
- AI 4xU/I/RTD/TC / AQ 2xU/I ST

The calibration compensates for influences on the measuring result by cables and/or temperature. A calibration checks the process values output by the analog input module, determines the deviation from the actual values and compensates for measuring errors.

Typical use:

- For plants in which sensors detect relatively small voltages or currents
- For applications which require regular calibration for all components in a measuring circuit.

Oversampling of the AI 8xU/I HS analog input module

Oversampling divides a PROFINET bus cycle into equidistant bus sub-cycles. This requires isochronous mode.

Oversampling acquires data with high time resolution but without using an extremely short PROFINET bus cycle and thus fast CPU cycles. Use for quality-monitoring measurements, for example when recording pressure trends during the blowing process of PET bottle production.

4.6.6 Analog output modules

Analog output modules and analog input/output module

Short designation	AQ 8xU/I HS	AQ 4xU/I HF AQ 4xU/I ST	AQ 2xU/I ST	AI 4xU/I/RTD/TC / AQ 2xU/I ST
Article number				
High Feature (HF)	---	6ES7532-5ND00-0AB0	---	---
High Speed (HS)	6ES7532-5HF00-0AB0	---	---	---
Standard (ST)	---	6ES7532-5HD00-0AB0	6ES7532-5NB00-0AB0	6ES7534-7QE00-0AB0
Manual				
High Feature (HF)	---	Link	---	---
High Speed (HS)	Link	---	---	---
Standard (ST)	---	Link	Link	Link
Width	35 mm	35 mm	25 mm	25 mm
Number of outputs	8	4	2	2
Resolution	16 bits including sign	16 bits including sign	16 bits including sign	16 bits including sign
Output type	Voltage/current	Voltage/current	Voltage/current	Voltage/current
Electrical isolation between channels	---	Only with HF	---	---
Number of potential groups	---	1	---	---
Rated supply voltage	24 V DC	24 V DC	24 V DC	24 V DC
Diagnostic interrupt	X	X	X	X
Isochronous mode	X	Only with HF	---	---
Conversion time (per channel)	50 µs, regardless of number of activated channels	HF: 125 µs, regardless of number of activated channels ST: 0.5 ms	0.5 ms	0.5 ms
Calibration in RUN mode	X	Only with ST	X	X
Oversampling	X	---	---	---

Benefits

Analog output modules convert a 16-bit digital value into current or voltage and output it at the process. With the analog output modules you control, for example, proportional valves or small servo drives.

The analog output modules provide you with the following advantages:

- Front connector in screw-type connection system or in push-in system (35 mm width) or push-in system for 25 mm modules
- Same mechanical design, same handling and same accessories for all modules
- Components required for shielding are included in the scope of delivery and allow simple and quick installation without the use of tools
- Same pin assignment for wiring, which means that circuit diagrams and wiring plans can be universally used
- Any combination of narrow and wide modules
- Can be used centrally in SIMATIC S7-1500 and in ET 200MP distributed I/O system

Overview of functions

In the following you will find a brief overview of special functions of the modules. A detailed description of the functions is available in the device manual of the module.

Calibration in runtime

The following analog modules offer you the calibration function at runtime:

- AQ 2xU/I ST
- AI 4xU/I/RTD/TC / AQ 2xU/I ST

The calibration compensates for influences on the measuring result by cables and/or temperature. A calibration checks the process values output by the analog output module, determines the deviation from the actual values and compensates for output errors.

Typical use:

- For plants in which sensors process relatively small voltages or currents.
- For applications which require regular calibration for all components in a measuring circuit.

Oversampling of the AQ 8xU/I HS analog output module

Oversampling divides a PROFINET bus cycle into equidistant bus sub-cycles. This requires isochronous mode.

Oversampling acquires data with high time resolution but without using an extremely short PROFINET bus cycle and thus fast CPU cycles. Used, for example, for controlling a feed valve, the output data is controlled exactly at the current position of the machine.

4.7 Communication

4.7.1 Interfaces for communications

Interfaces for communication via PROFINET and PROFIBUS DP (as of CPU 1516) are already integrated in the CPUs. Additional communication modules enhance the communication capabilities of the SIMATIC S7-1500 with additional functions or interfaces, e.g. 8xIO-Link. The following communications options are available for your automation task:

Communication options	PN/IE	DP	Serial
PG communication for commissioning, testing, diagnostics	X	X	---
HMI communication for operator control and monitoring	X	X	---
Data exchange with TCP/IP, UDP, ISO-on-TCP, ISO protocol	X	---	---
Data exchange via OPC UA as server	X	---	---
Data exchange via OPC UA as client	X	---	---
Direct data exchange between IO controllers	X	---	---
Communication via Modbus TCP	X	---	---
Communication via UDP Multicast	X	---	---
Sending process alarms via e-mail	X	---	---
File management and file access via FTP (File Transfer Protocol); CP may be the FTP client and FTP server	X	---	---
S7 communication	X	X	---
Serial point-to-point or multi-point connection Data exchange via point-to-point with Freeport, 3964 (R), USS or Modbus protocol	---	---	X
Web server Data exchange via HTTP(S), for example for diagnostics	X	---	---
SNMP (Simple Network Management Protocol)	X	---	---
Time synchronization	X	X	---

4.7.2 CM communication modules / CP communications processors

For special requirements of your plant, use communications processors (CPs) for security functions to secure Industrial Ethernet networks.

If your system requires additional interfaces, communication modules (CM) expand your S7-1500 CPU with other interfaces of an interface type such as PROFINET, PROFIBUS or point-to-point connection. The CMs for point-to-point connection allow, for example, Freeport or Modbus communication via their RS232, RS422 and RS485 interfaces.

Communication modules for PROFINET and Industrial Ethernet

Short designation	CM 1542-1	CP 1543-1	CP 1545-1
Article number	6GK7 542-1AX00-0XE0	6GK7543-1AX00-0XE0	6GK7545-1GX00-0XE0
Equipment Manual	Link	Link	Link
Bus system	PROFINET	Industrial Ethernet	Industrial Ethernet
Interface	RJ45	RJ45	RJ45
Data transmission rate	10/100 Mbps	10/100/1000 Mbps	10/100/1000 Mbps
Functionality and protocols	TCP/IP, ISO-on-TCP, UDP, Modbus TCP, S7 communication, IP Broadcast/Multicast, IP routing, SNMPv1	TCP/IP, ISO, UDP, Modbus TCP, S7 communication, IP Broadcast/Multicast, Security, Secure Open User Communication, SMTPS, diagnostics SNMPV1/V3, DHCP, FTP client/server e-mail, IPV4/IPV6	TCP/IP, ISO, UDP, Modbus TCP, S7 communication, IP Broadcast/Multicast, Security, Secure Open User Communication, SMTPS, diagnostics SNMPV1/V3, DHCP, FTP client/server e-mail, IPV4/IPV6
Diagnostic interrupt	X	X	X
Hardware interrupt	X	---	---
Isochronous mode	---	---	---
Link to cloud systems via MQTT	---	---	X
OPC UA PubSub via UDP	---	---	---

Communication modules for PROFIBUS

Short designation	CM 1542-5	CP 1542-5
Article number	6GK7542-5DX00-0XE0	6GK7542-5FX00-0XE0
Equipment Manual	Link	Link
Bus system	PROFIBUS	PROFIBUS
Interface	RS485	RS485
Data transmission rate	9600 bps to 12 Mbps	9600 bps to 12 Mbps
Functionality and protocols	DPV1 master/device S7 communication PG/OP communication Open User Communication	DPV1 master/device S7 communication PG/OP communication FDL
Diagnostic interrupt	X	X
Hardware interrupt	X	X
Isochronous mode	---	---

Communication modules for point-to-point connection

Short designation	CM PtP RS232 HF CM PtP RS232 BA	CM PtP RS422/485 HF CM PtP RS422/485 BA
Article number		
High Feature (HF)	6ES7541-1AD00-0AB0	6ES7541-1AB00-0AB0
Basic (BA)	6ES7540-1AD00-0AA0	6ES7540-1AB00-0AA0
Equipment Manual		
High Feature (HF)	Link	Link
Basic (BA)	Link	Link
Interface	RS232	RS422/485
Data transmission rate		
High Feature (HF)	300 to 115 200 bps	300 to 115 200 bps
Basic (BA)	300 to 19 200 bps	300 to 19 200 bps
Frame length, max.		
High Feature (HF)	4 KB	4 KB
Basic (BA)	1 KB	1 KB
Diagnostic interrupt	X	X
Hardware interrupt	---	---
Isochronous mode	---	---
Protocols		
High Feature (HF)	Freeport, 3964 (R), Modbus RTU master, Modbus RTU device	Freeport, 3964 (R), Modbus RTU master, Modbus RTU device
Basic (BA)	Freeport, 3964 (R)	Freeport, 3964 (R)

Benefits

The communication modules point-to-point connection S7-1500 provide you with the following advantages:

- Connection of legacy and external systems possible
- Connection of data readers or special sensors
- Can be used centrally in SIMATIC S7-1500 and in ET 200MP distributed I/O system
- Variety of physical interfaces, e.g. RS232 and RS422 or RS485
- Predefined protocols, e.g. 3964(R), Modbus RTU or USS
- Application-specific protocols based on Freeport (ASCII)
- Uniform programming interface for all modules
- Diagnostic interrupt for simple fault rectification

4.7.3 Communication module IO-Link Master

Communication module IO-Link Master

An 8 port IO-link master module CM 8xIO-link is available for the S7-1500 automation system / ET 200MP distributed I/O system.

IO-Link is a point-to-point connection between a master and a device. Both conventional and intelligent sensors/actuators can be used as devices at the IO-Link via unshielded standard cables using proven 3-wire technology.

You can use the 8-port IO-link master as follows:

- Central, directly behind a S7-1500 CPU (a total of 30 I/O modules, plug-in type)
- Distributed with ET 200MP to PROFINET and PROFIBUS

With the IO-link, you can easily change the parameters for the production and processing of different product variants and batches up to sensor/actuator level during CPU runtime. A considerably more detailed diagnostics up to sensor or actuator or a remote diagnostics is possible.

Table 4- 6 Communication module IO-Link Master

Short designation	**CM 8x IO-Link**
Article number	6ES7547-1JF00-0AB0
Equipment manual	Link
Bus system	IO-Link
Interface	8 ports
Data transmission rate	COM1 (4.8 kbaud), COM2 (38.4 kbaud), COM3 (230.4 kbaud)
Functionality and protocols	IO-Link Protocol 1.0 IO-Link Protocol 1.1
Diagnostics interrupt	X
Hardware interrupt	---
Isochronous mode	---

Benefits:

- Simplified and reduced wiring, engineering and commissioning
- Time savings
- Higher availability due to pre-assembled cable
- Avoidance of plant downtimes through preventive maintenance
- High diagnostics capability
- Configurable diagnostics can be set for each channel

4.7.4 Safety-related communication via fail-safe modules

The figure below provides an overview of the possibilities of safety-related communication via PROFINET IO in SIMATIC Safety fail-safe systems with S7-1500 F-CPUs.

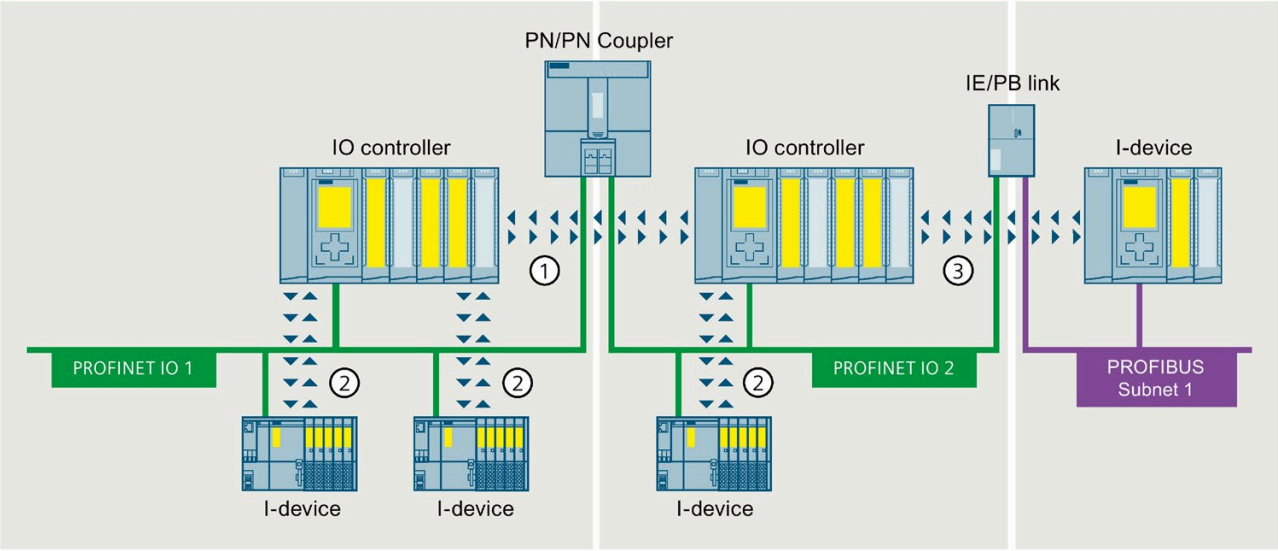

1. Safety-related IO controller - IO controller communication
2. Safety-related IO controller - I-device communication
3. Safety-related IO controller-I-device communication (via IE/PB link to PROFIBUS)

Figure 4-21 Example of safety-related communication

4.8 Technology functions

4.8.1 Motion control

You use the integrated Motion Control functionality of SIMATIC S7-1500 for positioning and moving axes. Depending on the CPU, the SIMATIC S7-1500 automation system supports different configuration limits for motion control technology objects.

With Motion Control instructions according to PLCopen, you control PROFIdrive-capable drives and drives with analog setpoint interface.

Motion control technology objects

The table below shows the technology objects that are supported by the SIMATIC S7-1500 and S7-1500T. * They occupy Motion Control resources or Extended Motion Control resources in the CPU.

Technology objects	SIMATIC S7-1500	SIMATIC S7-1500T	Resource requirements per technology object
Speed-controlled axis	X	X	40
Positioning axis	X	X	80
Synchronous axis	X	X	160
External encoder	X	X	80
Measuring input	X	X	40
Output cam	X	X	20
Cam track	X	X	160
Cam of type "TO_Cam"	---	X	2*
Cam of type "TO_Cam_10k"	---	X	20*
Kinematics	---	X	30*
Leading axis proxy	---	X	3*

* They occupy Extended Motion Control resources in the CPU.

Motion control technology functions

The table below shows the technology functions offered by both SIMATIC S7-1500 and S7-1500T and the extended Motion Control functions of the technology CPUs.

Technology functions	SIMATIC S7-1500	SIMATIC S7-1500T
Enable, disable technology objects	X	X
Acknowledge alarms, restart technology object	X	X
Reference technology objects, set reference point	X	X
Pause axis	X	X
Position axis absolutely	X	X
Position axis relatively	X	X
Move axis at set velocity/speed	X	X
Move axis in jog mode	X	X
Positioning axis overlapping	X	X
Set alternative encoder as operationally active encoder	---	X
Pause superimposed motions on the axis	X	X
Hold and disable axis	X	X
Activate/deactivate hardware limit switch	X	X
Controlling bits of control word 1 and 2	X	X
Save absolute encoder adjustment for device replacement	X	X
Start one-time measuring	X	X
Start cyclic measuring	X	X
Abort active measuring	X	X
Activate/deactivate output cam	X	X
Activate/deactivate cam track	X	X
Start gearing	X	X
Start gearing with specified synchronous positions	---	X
Start velocity synchronous operation	---	X
Absolute shift of master value on the following axis	---	X
Relative shift of master value on the following axis	---	X
Relative shift of following value on the following axis	---	X
Absolute shift of following value on the following axis	---	X
Start camming	---	X
Simulate synchronous operation	---	X
Desynchronize gearing	---	x
Desynchronize camming	---	x
Specify additive master value	---	X
Interpolate cam	---	X
Read out slave value of a cam	---	X
Read master value of a cam	---	X
Copy calculated cam elements	---	X
Specify motion setpoints	---	X
Specify superimposed motion setpoints	---	X
Activate and deactivate force/torque limiting / fixed stop detection	X	X
Specify additive torque	X	X
Specify upper and lower torque limits	X	X
Interrupt motion control of kinematics	---	X

Technology functions	SIMATIC S7-1500	SIMATIC S7-1500T
Continue motion control of kinematics	---	X
Stop motion of kinematics	---	X
Position kinematics with linear motion	---	X
Position kinematics relatively with linear motion	---	X
Position kinematics with circular motion	---	X
Position kinematics relatively with circular motion	---	X
Move kinematics with synchronous "point-to-point" motion, absolute	---	X
Move kinematics with synchronous "point-to-point" motion, relative	---	X
Start conveyor tracking	---	X
Set kinematics to simulation mode	---	X
Define workspace zones	---	X
Define kinematics zones	---	X
Activate workspace zones	---	X
Deactivate workspace zones	---	X
Activate kinematics zones	---	X
Deactivate kinematics zones	---	X
Re-define tool	---	X
Change active tool	---	X
Redefine object coordinates system	---	X
Transform axis coordinates into cartesian coordinates	---	X
Transforming Cartesian coordinates into axis coordinates	---	X

Motion Control configuration example

The SINAMICS Startdrive engineering tool is available in the TIA Portal for easy commissioning and optimization of SINAMICS drives. SINAMICS Startdrive enables efficient commissioning by means of the integrated axis control panel and extensive diagnostic functions.

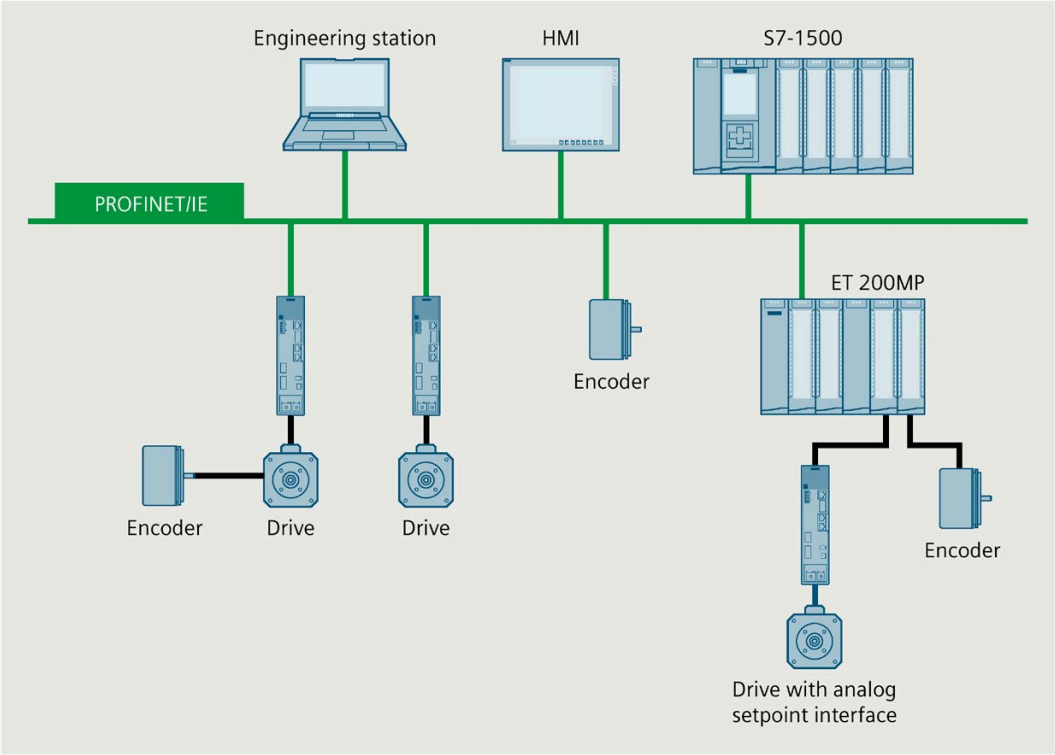

Figure 4-22 Example of a Motion Control configuration

SIMATIC S7-1500T CPUs

The Technology CPUs extend the Motion Control functions available in all SIMATIC S7-1500 controllers for demanding solutions to include gearing and camming and kinematics.

The S7-1500 T-CPU is also suitable for safety applications, so that you only need one CPU for standard, safety and comprehensive Motion-Control automation tasks.

Example: Quick and flexible packaging of luxury goods thanks to the CPU SIMATIC S7-1500T

Automation task:

Development of a modular, automatic packaging machine with a speed of up to 50 packages per minute.

Feature:

The packaging machine enables the outer packaging of individual products as well as containers at medium to high speeds (more than 40 products per minute). The possibility of quick changeover to new products is a condition. Scalability and cost efficiency is paramount in the automation solution.

Solution:

A SIMATIC S7-1500 TIME-CPU controls several axes in parallel with its technology functions gearing and camming.

The SINAMICS V90 drive communicates with the CPU via PROFINET IO with IRT. You assign parameters to the technology functions via technology objects with STEP 7.

Benefits

Motion Control with SIMATIC S7-1500T CPUs provide you with the following advantages:

- Rugged and stable motion control platform with easy extensibility to include additional axes
- Automatic alignment of the technological variables between controller and drive by means of technology objects; reduced engineering, commissioning and service times
- Simple setup and commissioning of the technology functions in the TIA Portal, no specialist knowledge required
- Inclusion in the integrated system diagnostics and trace function, thus reducing maintenance times and downtimes
- Numerous options for using synchronized axes in gearing with specification of the synchronous position, in camming and in velocity synchronous operation
- Configuration limits can be expanded through cross-PLC synchronous operation
- Graphical and tabular configuration and optimization and diagnostics of cams with integrated cam editor saves time and reduces the error rate
- Adaptation and calculation of the cam disks in the user program during operation, e.g. for quick product changeover
- Control of kinematics for handling tasks such as pick-and-place, assembly and palletizing

S7-1500 Motion Control KinPlus

The "S7-1500T Motion Control KinPlus" software extends the S7-1500T kinematics functions. The "S7-1500T Motion Control KinPlus" software enables control of kinematics with 5 or 6 interpolating axes.

More information

More information can be found in the function manuals S7-1500T Motion Control (https://support.industry.siemens.com/cs/ww/en/view/109751049)

4.8.2 PID Control

PID controllers are integrated as standard in all S7-1500 CPUs. PID controllers measure the actual value of a physical variable, for example, temperature or pressure, and compare the actual value with the setpoint. Based on the resulting system deviation, the controller calculates a manipulated variable that causes the actual value to reach the setpoint as quickly and stably as possible.

You can choose from three different PID technology objects:

PID technology object	Description
PID_Compact	The PID_Compact technology object provides a PID controller with integrated tuning for actuators with proportional action behavior. Different operating modes are possible with PID_Compact, such as: • Pretuning • Fine tuning • Automatic mode • Manual mode
PID_3Step	The PID_3Step technology object provides a PID controller with tuning for valves or actuators with integrating behavior. You can configure the following controllers: • Three-point stepping controller with position feedback • Three-point stepping controller without position feedback • Valve controller with analog output value
PID_Temp	The PID_Temp technology object provides a continuous PID controller with integrated tuning. PID_Temp is specially designed for temperature control and is suitable for heating or heating/cooling applications. Two outputs are available, one for heating and one for cooling. You can also use PID_Temp for other control tasks. PID_Temp can be cascaded. You can use PID_Temp in manual or automatic mode.

Example: PID Control optimizes the drying process

Automation task: Development of a temperature control for drying panes of glass in the production of mirrors**.**

Feature: The drying process is a critical phase in silvering mirrors. It is decisive for optimum product quality. During the silvering process, the glass panes are treated with chemical solutions and then dried in a pre-heated oven. Temperature control plays a key role in the drying process.

Solution: A PID controller controls the temperature in the drying oven. The filament of each infrared lamp in the oven is controlled separately and remotely. Control was previously only possible manually.

Benefits

The integrated controller PID Control of the SIMATIC S7-1500 CPUs offer you the following advantages:

- High-quality end product due to optimum control performance
- High flexibility in the drying oven (see example)
- Time savings thanks to automatic control parameter optimization for optimum control performance and simple commissioning

More information

A detailed description of PID Control in SIMATIC S7-1500 can be found in the Function Manual "SIMATIC S7-1200, S7-1500 PID Control" SIMATIC S7-1200, S7-1500 PID control (https://support.industry.siemens.com/cs/ww/en/view/108210036).

4.8.3 Technology functions of the compact CPUs

Technology functions are integrated into the SIMATIC S7-1500 compact CPUs.

Function	Value	Description
Six high-speed counters	Up to 100 kHz	For pulse and incremental encoders
Frequency measurement	0.04 Hz - 400 kHz	
Period duration measurement	2.5 µs - 25 s	
Velocity measurement		Dependent on measurement interval and signal evaluation Unit can be defined by user
Pulse width modulation (PWM output)	Max. 4 (up to 100 kHz)	Output of a signal with defined period duration and variable on-load factor at DQ
Pulse Train Output (PTO output)	Max. 4 (up to 100 kHz)	Output of position information, e. g. for activation of stepper motor drives or simulation of an incremental encoder
Frequency output	Up to 100 kHz	Precise assignment of a frequency value with high frequencies

Benefits

Compared with the other SIMATIC S7-1500 CPUs, the compact CPUs offer added value in a small space:

- The CPU with display and inputs/outputs in one enclosure
- Compact size with high performance
- Important technology functions such as counting, measuring and positioning are integrated
- Cost effective compared to modular systems with CPU and modules
- Space saving design
- Can be expanded by SIMATIC S7-1500 input and output modules

4.8.4 Technology modules for counting, measuring and position detection

For technological tasks, powerful technology modules are available that perform these tasks largely autonomously and reduce the load on the CPU. The table below shows the available technology modules for counting, measuring and position detection.

Short designation	**TM Count 2x24V**	**TM PosInput 2**
Article number	6ES7550-1AA00-0AB0	6ES7551-1AB00-0AB0
Manual	Link	Link
Connectable encoders	Incremental encoder for signals, 24 V asymmetrical, Pulse encoders with/without direction signal, Pulse encoders up/down	Incremental encoder for signals to RS422 (5 V differential signal), Pulse encoders with/without direction signal, Pulse encoders up/down, Absolute encoders (SSI)
Max. count frequency	200 kHz 800 kHz with four-fold pulse	1 MHz 4 MHz with four-fold pulse
Integrated DI	3 DIs per counter channel for • Start • Stop • Capture • Synchronization	2 DIs per counter channel for • Start • Stop • Capture • Synchronization
Integrated DQ	2 DQs for comparators and limit values	2 DQs for comparators and limit values
Counting functions	Comparator Adjustable counting range, Incremental position detection	Comparator Adjustable counting range, Incremental and absolute position detection
Measuring functions	Frequency Period duration Velocity	Frequency Period duration Velocity
Diagnostics interrupt	X	X
Hardware interrupt	X	X
Isochronous mode	X	X

Benefits

Technology modules for counting, measuring and position detection offer you the following advantages:

- Fast and timely detection of events with fine resolution for high productivity and product quality
- Hardware-level signal processing for rapid counting, measurement and position detection for a variety of transducers
- Simple setup and commissioning of the technology functions in STEP 7
- Can be used centrally in SIMATIC S7-1500 and in ET 200MP distributed I/O system
- Quick response thanks to different hardware interrupts

4.8.5 Technology module for time-based IO

Time-based IO modules enable you to achieve maximum precision and speed - regardless of the performance of the controller and the fieldbus. The time-based IO modules output signals with a precisely defined response time. The I/O signals are processed on a time basis.

The table below shows the main features of the technology module for time-based IO. In conjunction with the "Output cam" and "Cam track" technology objects, the TM Timer DIDQ 16x24V ensures highly accurate cam output. In conjunction with the "Measuring input" technology object, the TM Timer DIDQ 16x24V ensures highly accurate detection of passing products.

Short designation	**TM Timer DIDQ 16x24V**
Article number	6ES7552-1AA00-0AB0
Manual	Link
Connectable encoders	24 V incremental encoder with signals A and B 24 V pulse encoder with a signal
Max. count frequency	200 kHz with fourfold evaluation
Integrated DI	Up to 8 DIs with the following functions: • Up to 2 time stamps per cycle (resolution 1 µs) • 32x oversampling • Counting function up to 50 kHz • Incremental encoder acquisition with 2 phase-shifted tracks • Configurable input filter to suppress interference
Integrated DQ	Up to 16 DQs with the following functions: • Up to 2 time stamps per cycle (resolution 1 µs) • 32x oversampling • Pulse-width modulated output • Configurable substitute values per DQ
Diagnostic interrupt	X
Hardware interrupt	---
Isochronous mode	X (required for the time stamp and oversampling functions)

Benefits

The technology modules for time-based IO offers you the following advantages:

- Meets stringent requirements for precision and speed, independent of the CPU and fieldbus
- Signals are read in and output precisely, to within 1 microsecond
- Exact definition of response times, independent of the application cycle
- Typical use: cam control, length measurement, time measurement, as a probe, for dosing fluid quantities

4.8.6 Technology module for weighing technology

The technology modules SIWAREX WP521 and SIWAREX WP522 are used for the acquisition and processing of signals from weighing or force transducers. You can connect one scale (WP521) or two separate scales (WP522) respectively to the modules. The SIWAREX modules offer high accuracy.

The table below shows the main features of the technology modules for weighing technology.

Short designation	**TM electronic weighing system SIWAREX WP 521 ST**	**TM electronic weighing system SIWAREX WP 522 ST**
Article number	7MH4 980-1AA01	7MH4 980-2AA01
Manual	Link	
Weighing channel	1 channel	2 channels
Interfaces	RS 485 with Modbus RTU or for connecting the remote display (per channel) Ethernet interface with SIWATOOL protocol and Modbus TCP/IP (1 for both channels)	
Integrated digital inputs	DI 3x24VDC	
Integrated digital outputs	DQ 4x24VDC	
Load cell connection	DMS load cells in 6- or 4-wire technology (per channel), 1 to 4 mV/V	
Functions	• Adjust the scale with weights or automatically • 3 limits • Tare • Set to zero • Trace • Commission with SIWATOOL (service tool for PC)	
Diagnostic interrupt	---	
Hardware interrupt	X (configurable)	

Benefits

The weighing modules SIWAREX for SIMATIC S7-1500 offer you the following advantages:

- Seamless integration of simple weighing applications such as platform and hopper scales in SIMATIC S7-1500
- Use for level monitoring, e.g. silos and bunkers
- Can be used centrally in SIMATIC S7-1500 and in ET 200MP distributed I/O system
- SIWAREX WP521 ST for the setup of one scale
- SIWAREX WP522 ST for the setup of two separate scales, with the same space requirements as WP521 ST
- Free sample application on the Internet for the quick implementation of customer or industry-specific solutions

4.8.7 Technology Module TM NPU

Technology Module TM NPU

Applications based on artificial intelligence can be implemented using the TM NPU technology module. The technology module TM NPU is used in the S7-1500 automation system / ET 200MP distributed I/O system.

The integrated AI processor (AI - Artificial Intelligence) enables the processing of large amounts of data from connected sensors, as well as data from the user program of the CPU. Connect the sensor technology via the integrated USB interface of the TM NPU, e.g.: Cameras or microphones. For TM NPU with V1.0.0, use the USB camera from Intel, type RealSense D435.

The supplied data is processed at high speed in the TM NPU over neural networks. The TM NPU transmits the processing result via the backplane bus to the CP. The CPU then evaluates the data in the user program.

Typical areas of application:

- Visual quality check in production plants
- Pick-and-place applications
- Image-guided robotic systems

Table 4- 7 Technology Module TM NPU

Short designation	**TM NPU**
Article number	6ES7556-1AA00-0AB0
Manual	Link
Interfaces	Ethernet (1 port) USB 3.1 (1 Port) SD card slot
Interrupts/diagnostics/status information	
Status display	Yes
Interrupts	No
Diagnostic functions	Yes
Product function	
Artificial intelligence / Processing of neural networks	Yes

Benefits:

- Design of flexible and precise production processes
- Reduction of time required for configuration, programming and commissioning

4.9 Power supply

The power supply of an automation system to be dimensioned according to plant size. The SIMATIC S7-1500 CPUs are supplied via a load power supply or a system power supply. A system power supply that supplies the backplane bus is integrated in the CPUs. Depending on the system configuration, you can expand the integrated system power supply with up to two additional system power supply modules. If your plant has high power requirements, e.g. I/O load groups, you can connect additional load power supplies.

The table below shows the main differences between the two power supplies for the SIMATIC S7-1500 automation system:

Power supply	Description
Load current supply (PM)	Supplies 24 V DC to the S7-1500 system components such as CPU, system power supply (PS), input/output circuits of the I/O modules and any sensors and actuators. You can install the load power supply directly to the left of the CPU (without connection to the backplane bus). If you supply the voltage for the backplane bus via a system power supply, then the supply of the CPU or the interface module with DC 24 V is optional.
System power supply (PS)	Supplies only internally required system voltage. Supplies parts of the module electronics and the LEDs. Additionally the PS 60W 24/48/60V DC HF keeps the complete work memory of the CPU retentive.

Configuration example of a system with load power supply and system power supply

The following figure shows a system configuration with load power supply and additional system power supply.

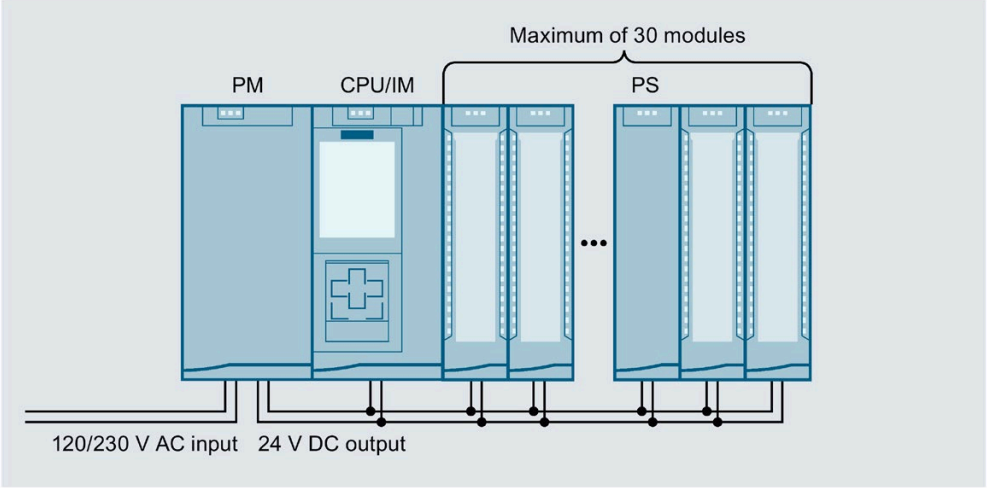

Figure 4-23 Overall configuration of power supply

In order to ensure the supply of the modules from the backplane bus, the incoming power is compared with the required power in the TIA Portal engineering system or in the TIA Selection Tool.

As early as in the planning stages, make sure that the power fed into the backplane bus is always greater than or equivalent to the power drawn.

System power supply modules

System power supplies supply the internal electronics of the S7-1500 modules with power via the backplane bus. The table below shows the available system power supply modules:

Short designation	**PS 25 W 24 V DC**	**PS 60 W 24/48/60 V DC**	**PS 60 W 24/48/60 V DC HF**	**PS 60 W 120/230 V AC/DC**
Article number	6ES7505-0KA00-0AB0	6ES7505-0RA00-0AB0	6ES7505-0RB00-0AB0	6ES7507-0RA00-0AB0
Manual	Link	Link	Link	Link
Rated input voltage	24 V DC	24 VDC, 48 VDC, 60 VDC	24 VDC, 48 VDC, 60 VDC	120 V AC, 230 V AC 120 V DC, 230 V DC
Output power	25 W	60 W	60 W	60 W
Electrical isolation from the backplane bus	X	X	X	X
Diagnostic interrupt	X	X	X	X
Energy buffering for data backup in the CPU	---	---	Up to 20 MB retentive	---

Load power supply modules

The load power supply modules with automatic range selection of the input voltage are optimally adapted in design and functionality to the SIMATIC S7-1500 controller. The table below shows the available load power supply modules:

Short designation	**PM 70 W 120/230 V AC**	**PM 190 W 120/230 V AC**
Article number	6EP1332-4BA00	6EP1333-4BA00
Manual	Link	Link
Rated input voltage	120/230 V AC, with automatic switchover	120/230 V AC with automatic switchover
Output voltage	24 V DC	24 V DC
Rated output current	3 A	8 A
Power consumption	84 W	213 W

Using a SITOP power supply as an alternative to a load power supply

Alternatively, an external 24 V power supply from the SITOP range (https://mall.industry.siemens.com/mall/en/WW/Catalog/Products/10008864) (SITOP smart or SITOP modular) can be used:

- For higher output currents and 1-phase or 3-phase infeed
- With redundant installation (https://support.industry.siemens.com/cs/ww/de/view/109768676/en) of the 24 V power supply as protection against failure of a power supply unit
- With buffering of the 24 V power supply (e.g. with DC UPS) as protection against power failure
- With selective monitoring of 24 V loads as protection against overload or short-circuit

4.10 Connection elements and system cabling

Front connector and shield contact

The front connectors are used to wire the I/O modules. For modules with EMC-critical signals, such as analog modules and technology modules, the front connectors also need a shield contact.

The front connectors are available for 35 mm modules optionally with screw terminals and push-in terminals and for 25 mm modules with push-in terminals. The front connectors for 25 mm modules are included in the scope of delivery of the I/O modules.

24 V DC is supplied, for example, via a plug-in infeed element for analog modules.

The shield contact consists of shield bracket and shield terminal. Together with the shield terminal, the shield bracket allows the low-impedance, module-level connection of cable shields with minimum installation times. The shielding takes place without tools.

The components (infeed element, shielding bracket and shield clamp) are included in the scope of delivery of the modules.

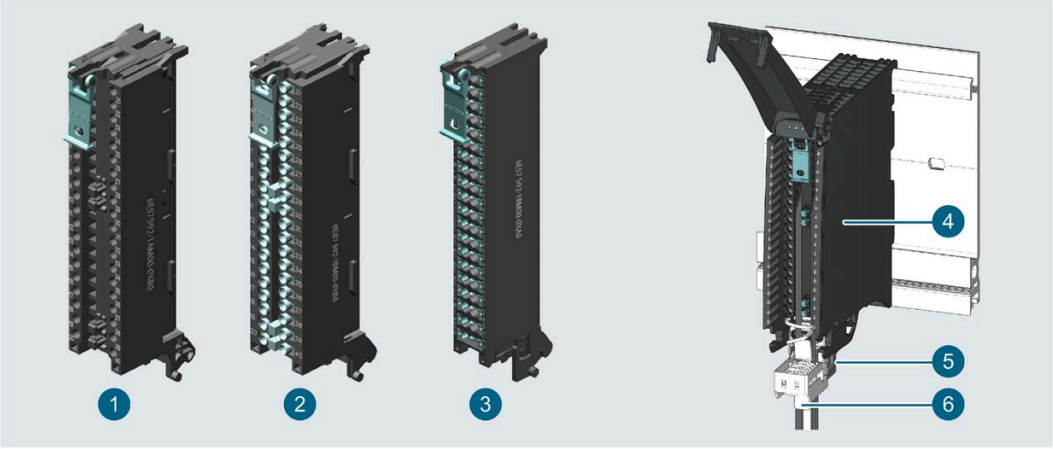

1. Front connector 35 mm with screw terminals
2. Front connector 35 mm with push-in terminals
3. Front connector 25 mm with push-in terminals
4. Front connector
5. Shield bracket
6. Shield clamp

Figure 4-24 Versions of the front connector with and without shield

U connector

The individual modules are connected to one another with the U connector. The U connector establishes the mechanical and electrical connection between the modules. The U connectors are included in the scope of delivery of the I/O modules.

System cabling SIMATIC TOP connect

Figure 4-25 Example: System cabling with SIMATIC TOP connect

For 35 mm modules, the system cabling SIMATIC TOP connect with prefabricated connection elements is available in two versions:

- Fully modular connection consisting of front connector module, connection cables and connection modules for connecting sensors and actuators from the field
- Flexible connection, consisting of front connector with single cores for wiring within the cabinet

You can find more information in the SIMATIC TOP connect for S7-1500 and ET 200MP (https://support.industry.siemens.com/cs/ww/en/view/95924607) manual.

4.11 Software

4.11.1 TIA Portal

The SIMATIC controllers are integrated into the Totally Integrated Automation Portal. Engineering with TIA Portal offers:

- Configuration and programming
- Shared data management
- A uniform operating concept for control, visualization and drives

The TIA Portal simplifies the integrated engineering in all configuration phases of a plant.

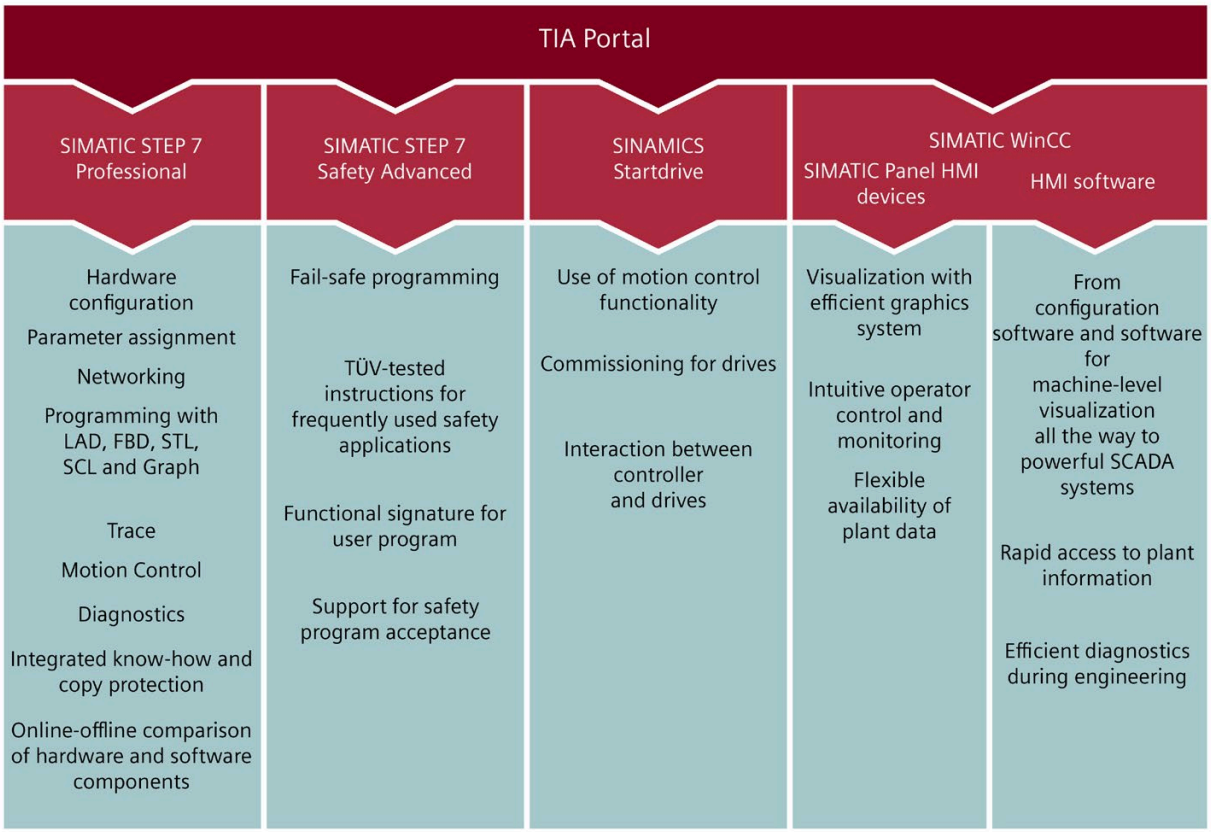

Figure 4-26 TIA Portal overview

4.11.2 TIA Selection Tool

TIA Selection Tool

With the TIA Selection Tool, you can select, configure and order devices for Totally Integrated Automation (TIA).
This tool is the successor of the SIMATIC Selection Tool and combines the known configurators for automation technology into one tool.
With the TIA Selection Tool, you can generate a complete order list from your product selection or product configuration.

You can find the TIA Selection Tool on the Internet (https://new.siemens.com/global/en/products/automation/topic-areas/tia/tia-selection-tool.html).

4.11.3 SIMATIC Automation Tool

You use the SIMATIC Automation Tool (https://support.industry.siemens.com/cs/ww/en/view/98161300) to perform commissioning and maintenance activities simultaneously on various SIMATIC S7 stations as a bulk operation independent of the TIA Portal. The SIMATIC Automation Tool provides you with a multitude of functions:

- Network browsing and creation of a table showing the accessible devices in the network.
- Flashing of device LEDs or HMI display to locate a device
- Downloading of addresses (IP, subnet, gateway) to a device
- Downloading the PROFINET name (station name) to a device
- Placing a CPU in RUN or STOP mode
- Setting the time in a CPU to the current time of your PG/PC
- Downloading a new program to a CPU or an HMI device
- Downloading from CPU, downloading to CPU or deleting recipe data from a CPU
- Downloading from CPU or deleting data log data from a CPU
- Backup/restore of data from/to a backup file for CPUs and HMI devices
- Downloading service data from a CPU
- Reading the diagnostics buffer of a CPU
- Performing a CPU memory reset
- Resetting devices to factory settings
- Downloading a firmware update to a device

- Documentation and backup of the configuration in
  - Standard .csv text file
  - Encrypted and password-protected .sat file
- Advanced functions:
  - Up to 10 concurrent connections
  - Scheduler for scheduling device operations at a time and frequency of your choosing
  - Ability to insert multiple devices in a single operation
  - Support for devices behind a NAT router
  - Archiving of SAT projects and related file data
  - Card browser for working with files and folders on SIMATIC Memory Cards in your CPUs

These functions can be executed as bulk operation, that is, simultaneously on various S7 stations and other devices.

The SIMATIC Automation Tool additionally has a Software Development Kit (SDK) version. With the SIMATIC Automation Tool SDK (Software Development Kit), you can create applications based on the SIMATIC Automation Tool API (Application Programming Interface). To deal with a large number of device automation tasks efficiently, these user-specific applications can be distributed to third parties including the API software. You do not need any license keys to use the user-specific applications.

4.11.4 SINETPLAN

SINETPLAN (https://new.siemens.com/global/en/products/automation/industrial-communication/profinet/sinetplan.html), the Siemens Network Planner, supports you in planning automation systems and networks based on PROFINET. The tool facilitates professional and predictive dimensioning of your PROFINET installation as early as in the planning stage. In addition, SINETPLAN supports you during network optimization and helps you to exploit network resources optimally and to plan reserves. Thus, you prevent problems in commissioning or failures during productive operation even in advance of a planned operation. This increases the availability of the production plant and helps improve operational safety.

The advantages at a glance

- Network optimization thanks to port-specific calculation of the network load
- Increased production availability thanks to online scan and verification of existing systems
- Transparency before commissioning through import and simulation of existing STEP7 projects
- Efficiency through securing existing investment in the long term and optimal exploitation of resources

4.11.5 PRONETA

With SIEMENS PRONETA (PROFINET network analysis), you analyze the plant network during commissioning. PRONETA features two core functions:

- The topology overview independently scans PROFINET and all connected components.
- The IO check is a fast test of the wiring and the module configuration of a plant.

SIEMENS PRONETA (https://support.industry.siemens.com/cs/ww/en/view/67460624) is available for free on the Internet.

4.11.6 SIMATIC S7 app

With the SIMATIC S7 app (https://new.siemens.com/global/en/produkte/software/mobile-apps/simatic2go.html) you can establish a secure connection via WLAN to SIMATIC S7-1500 and ET 200SP with, for example, the following functions:

- Detect up to 50 networked CPUs via HTTPS and establish a connection
- Change CPU operating mode (RUN/STOP)
- Read out CPU diagnostics information and send via e-mail
- Monitor and modify variables and tags
- High security through encrypted communication and encrypted profile data; password to start app and establish the connection

Application planning

5

5.1 Hardware configuration

Introduction

The S7-1500 automation system/ET 200MP distributed I/O system consists of a single-row configuration in which all modules are installed on one mounting rail. The modules are connected by means of U connectors, and thus form a self-assembling backplane bus.

You can configure the S7-1500 automation system/ET 200MP distributed I/O system with fail-safe and non-fail-safe modules.

5.1.1 Hardware configuration of the S7-1500 automation system

Maximum configuration

- The integrated system power supply of the CPU supplies 10 W or 12 W (depending on CPU type) to the backplane bus. The power budget calculation determines the exact number of modules (without optional PS) that can be operated with the CPU. The operating principle is described in section Power balance calculation (Page 121).
- A maximum of three system power supplies (PS) is possible. one system power supply (PS) can be inserted to the left of the CPU and two system power supplies (PS) can be inserted to the right of the CPU.
- If you use a system power supply (PS) left next to the CPU, a maximum configuration of 32 modules is possible. The modules occupy slots 0 to 31. If further system power supplies (PS) are required to the right of the CPU, they also occupy a slot.

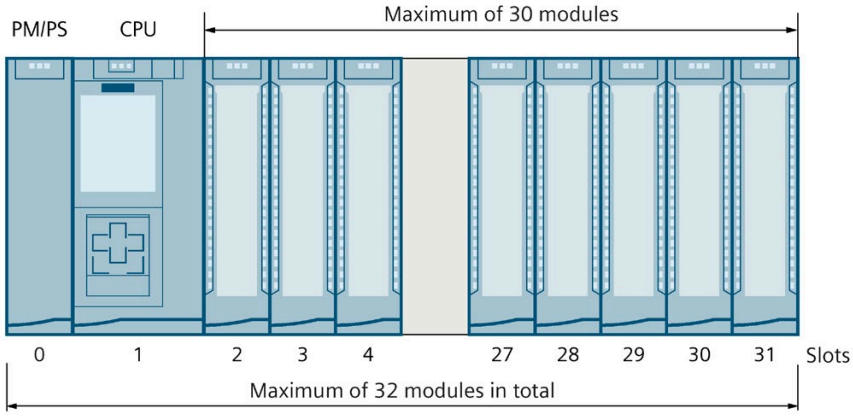

Figure 5-1 S7-1500 maximum configuration

Applicable modules

The following table shows which modules may be used in the various slots:

Table 5- 1 Assignment of slot numbers

Module type		Permissible slots	Maximum number of modules
Load current supply (PM)*		0**	Unlimited / only 1 PM can be configured in STEP 7
System power supply (PS)		0; 2 - 31	3
PS 60W 24/48/60VDC HF system power supply		0	1***
CPU		1	1
Analog and digital I/O modules		2 - 31	30
Communications modules			
• Point-to-point		2 - 31	30
• PROFINET/Ethernet, PROFIBUS			
	When using a CPU 1511-1(F) PN, CPU 1511C-1 PN, CPU 1511T-1 PN	2 - 31	4
	When using a CPU 1512C-1 PN	2-31	6
	When using a CPU 1513(F)-1 PN	2 - 31	6
	When using a CPU 1515(F)-2 PN, CPU 1515T-2 PN	2 - 31	6
	When using a CPU 1516(F)-3 PN/DP, CPU 1516T(F)-3 PN/DP	2 - 31	8
	When using a CPU 1517(F)-3 PN/DP, CPU 1517T(F)-3 PN/DP	2 - 31	8
	When using a CPU 1518(F)-4 PN/DP, CPU 1518T(F)-4 PN/DP, CPU 1518(F)-4 PN/DP MFP	2 - 31	8
Technology modules		2 - 31	30

* No connection to the backplane bus.

** When slot 0 is occupied by a load current supply (PM) in STEP 7, this slot can no longer be used for a system power supply (PS) in STEP 7. You do not have to configure a load current supply (PM) in STEP 7.

When you occupy slot "0" with the system power supply (PS), you can plug in a load current supply (PM) in the TIA Portal to the left of the PS in slot 100.

***The PS 60W 24/48/60VDC HF must only be inserted to the left of the CPU. Use a different system power supply (PS) for other power segments in the configuration to the right of the CPU.

5.1.2 Hardware configuration of the ET 200MP distributed I/O system with PROFINET interface module

Maximum configuration

- The integrated system power supply of the interface module feeds 14 W into the backplane bus. The power budget calculation determines the exact number of I/O modules that can be operated with the interface module (without optional PS). The operating principle is described in section Power balance calculation (Page 121).
- Use the integrated power supply for the IM 155-5 PN BA interface module. No 'additional system power supplies (PS) must be used. You can insert a maximum of 12 modules to the right of an interface module.
- The following applies for the interface modules IM 155-5 PN ST and IM 155-5 PN HF: A maximum of three system power supplies (PS) is possible. You can insert one system power supply (PS) to the left of the interface module and two system power supplies (PS) to the right of the interface module.
  If you insert a system power supply (PS) to the left of the interface module, this yields a possible maximum configuration of a total of 32 modules (up to 30 modules to the right of the interface module). If further system power supplies (PS) are required to the right of the interface module, they also occupy a slot.

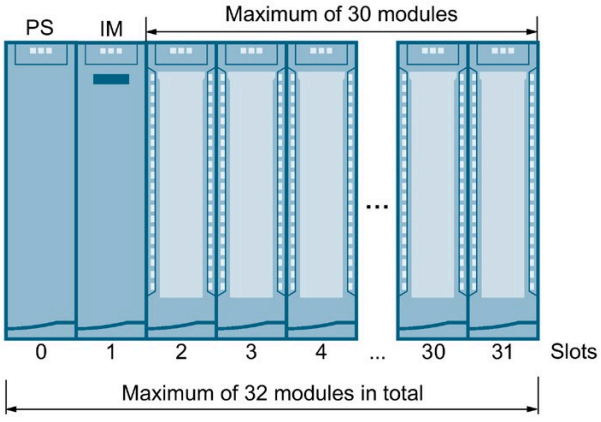

Figure 5-2 Maximum configuration ET 200MP with IM 155-5 PN ST or IM 155-5 PN HF

Applicable modules

The following table shows which modules may be used in the various slots:

Table 5- 2 Assignment of slot numbers

Module type	Permissible slots IM 155-5 PN BA	Permissible slots IM 155-5 PN ST, IM 155-5 PN HF	Maximum number of modules
Load current supply (PM)*	-	0**	Unlimited / only 1 PM can be configured in STEP 7
System power supply (PS)	-	0; 2 - 31	3
PS 60W 24/48/60VDC HF system power supply	-	0	1***
Interface module	1	1	1
Analog and digital I/O modules	2 - 13	2 - 31	12 or 30
Communications modules			
• Point-to-point	2 - 13	2 - 31	12 or 30
Technology modules	2 - 13	2 - 31	12 or 30

* No connection to the backplane bus.

** When slot 0 is occupied by a load current supply (PM) in STEP 7, this slot can no longer be used for a system power supply (PS) in STEP 7. You do not have to configure a load current supply (PM) in STEP 7.

***The PS 60W 24/48/60VDC HF must only be inserted to the left of the interface module. Use a different system power supply (PS) for other power segments in the configuration to the right of the interface module.

5.1.3 Hardware configuration of the ET 200MP distributed I/O system with PROFIBUS interface module

Maximum configuration

The integrated system power supply of the interface module feeds 14 W into the backplane bus. You can insert a maximum of 12 modules to the right of an interface module. The power budget calculation determines the exact number of I/O modules that can be operated with the interface module. The operating principle is described in section Power balance calculation (Page 121).

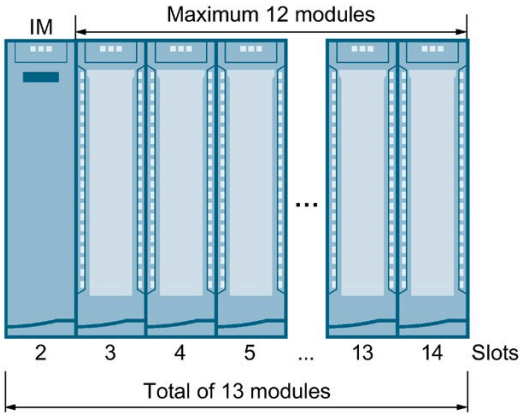

Figure 5-3 Maximum configuration ET 200MP with IM 155-5 DP

Applicable modules

The following table shows which modules may be used in the various slots:

Table 5- 3 Assignment of slot numbers

Module type	Permissible slots	Maximum number of modules
Interface module	2	1
Analog and digital I/O modules	3 - 14	12
Communications modules		
Point-to-point	3 - 14	12
Technology modules	3 - 14	12

5.2 System and load power supply

Types of power supplies

The S7-1500 automation system/ET 200MP distributed I/O system distinguishes between two types of power supply:

- System power supply (PS)
- Load current supply (PM)

System power supply (PS)

The system power supply has a connection to the backplane bus (U connector) and supplies solely the internally required system voltage. This system voltage supplies parts of the module electronics and the LEDs. A system power supply can also supply CPUs or interface modules if these are not connected to a 24 VDC load current supply.

Load current supply (PM)

The load current supply feeds the input/output circuits of the modules, as well as the sensors and actuators of the plant, if installed. If you supply the voltage for the backplane bus via a system power supply, then the supply of the CPU/interface module with 24 V DC is optional.

Special characteristic of the load current supply

Load current supplies are mounted on the "S7-1500 mounting rail" and do not have a connection to the backplane bus.

Total configuration with power supplies

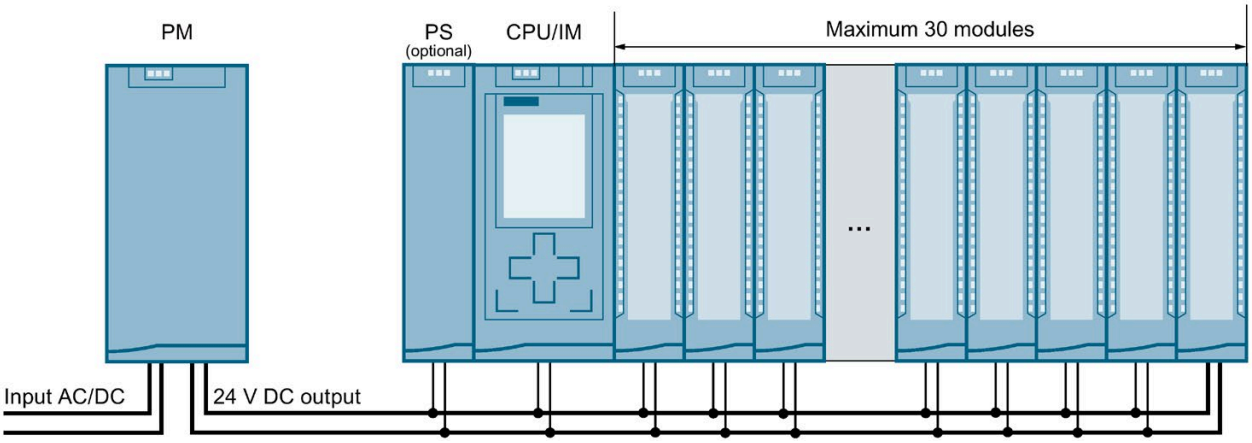

Figure 5-4 Total configuration with load current supply (PM) and system power supply (PS)

Optionally, you can insert up to two system power supplies (PS) in the slots to the right of the CPU/interface module.

The number of load current supplies is unlimited.

Observe the installation rules and specified installation distances in the manuals of the load current supplies.

System power supplies

- PS 25W 24VDC: Supply voltage with 24 V DC and infeed power to the backplane bus of 25 W
- PS 60W 24/48/60VDC: Supply voltage with 24/48/60 V DC and infeed power to the backplane bus of 60 W
- PS 60W 24/48/60VDC HF:
  - Supply voltage with 24/48/60 V DC and infeed power to the backplane bus of 60 W
  - Extended retentive memory for CPUs as of FW V2.1.0 (see section Special requirements when using a system power supply PS 60W 24/48/60VDC HF (Page 117)).
- PS 60W 120/230V AC/DC: Supply voltage with 120/230 V AC and infeed power to the backplane bus of 60 W

Load current supplies

The load current supplies listed below have been technically adapted especially to the S7-1500 automation system/ET 200MP distributed I/O system. Use of the listed load current supplies is not imperative because you can use a SITOP module, for example, as an alternative.

- PM 70W 120/230VAC: Supply voltage with 120/230 V AC
- PM 190W 120/230VAC: Supply voltage with 120/230 V AC

Also note the following FAQ on the Internet (https://support.industry.siemens.com/cs/ww/en/view/96998532) in connection with load current supply units.

5.2.1 Use of system power supplies

Introduction

You can use system power supplies with the CPUs and the interface modules IM 155-5 PN ST and IM 155-5 PN HF.

If the power fed from the CPU/interface module into the backplane bus is not sufficient to supply all connected modules with power, system power supplies (PS) are required.

Whether or not you need a system power supply depends on the power consumption of the modules used. The power supplied by the CPU/interface module and the system power supplies must be greater than the power required by the I/O modules.

During configuration, STEP 7 compares the supplied power and the power required by the modules. If the required power is too high, you receive a corresponding message from STEP 7.

In addition, the system power supply PS 60W 24/48/60V DC HF buffers the power in the event of power failures and therefore enables the retentivity of the data of a CPU – without a battery and therefore maintenance-free.

Slots for system power supplies

The following slots may be used for system power supplies:

- A system power supply in slot 0 to the left of the CPU/interface module
- Up to 2 system power supplies in the slots to the right of the CPU/interface module (power segments) A power segment consists of a power supply module and the modules supplied by it.

Note

The system power supply PS 60W 24/48/60V DC HF can only be inserted in slot 0.

Power segment

The following applies for the CPUs and interface modules M 155-5 PN ST and IM 155-5 PN HF: If you are using system power supplies to the right of the CPU/interface module, divide the configuration into power segments.

Configuration variant with power segments

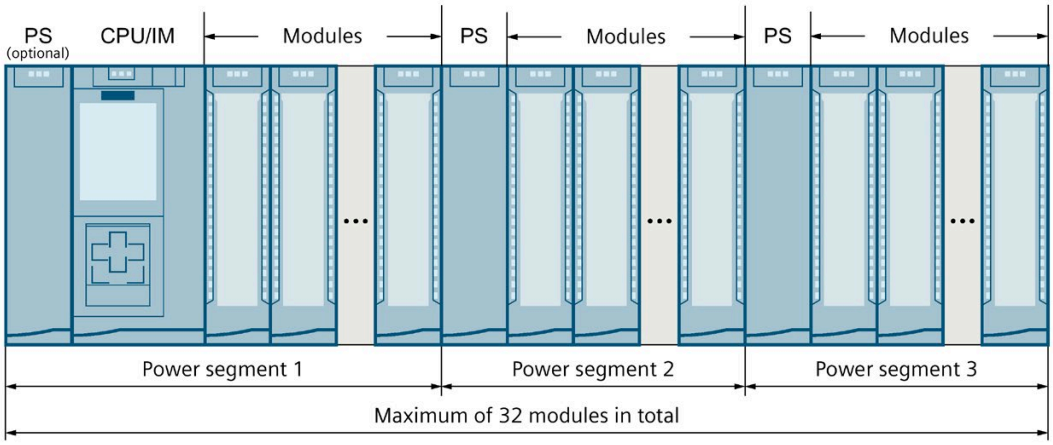

Figure 5-5 Configuration variants with 3 power segments

Note

When you configure with STEP 7, STEP 7 automatically checks configuration for consistency and tells you from which module you must open a new power segment.

Overload in the power segment

If an overload occurs in a power segment, the red SF LED flashes on the system power supply (PS). All I/O modules to the right of the PS in the power segment will be switched off.

Remedy:

1. Correct the configuration in the power segment of the overloaded PS.
2. Switch the supply voltage power off and on again via the on-off switch on the PS.
3. Switch the CPU from STOP to RUN mode.

Reference

Information about the required power is available in the section Power balance calculation (Page 121).

Additional information on the performance values (power feed, power consumption) of the CPU, interface module, system power supply, and I/O modules can be found in the manuals (https://support.automation.siemens.com/WW/view/en/57251228) of the respective modules.

5.2.2 Special considerations for the use of a system power supply in the first power segment

Infeed options

There are three options for the infeed of the required system voltage in the backplane bus:

- Infeed via CPU/interface module
- Infeed via CPU/interface module and system power supply
- Infeed only via system power supply in slot 0

Infeed via CPU/interface module

Infeed via the CPU/interface module generally suffices for small and medium hardware configurations. The power consumption of the connected modules must not exceed the power supplied by the CPU/interface module.

In this configuration variant, supply the CPU/interface module with 24 V DC from a load current supply.

Procedure

To set up the supply by means of the CPU/interface module, follow these steps:

1. Open the "Properties" tab of the CPU/interface module in STEP 7 and select the "System power supply" in the navigation.
2. Select the option "Connection to supply voltage L+".

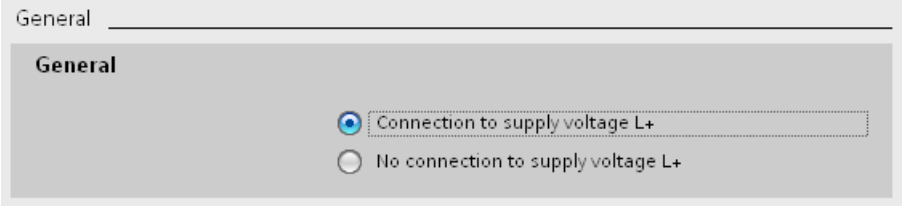

Figure 5-6 Supply voltage via CPU/interface module only

Infeed via CPU/interface module and system power supply

For larger hardware configurations, infeed into the backplane bus by the CPU/interface module alone no longer suffices. If the modules consume more power in total than the power supplied by the CPU/interface module, you must insert an additional system power supply.

Supply the system power supply with the permissible supply voltage and the CPU/interface module with 24 V DC.

Both the system power supply and the CPU/interface module feed current into the backplane bus. The supplied power is summed.

Power addition: "Infeed power of the system power supply" + "Infeed power of the CPU/interface module"

Procedure

To set up the supply by means of the CPU/interface module and system power supply, follow these steps:

1. Open the "Properties" tab of the CPU/interface module in STEP 7 and select the "System power supply" in the navigation.
2. Select the option "Connection to supply voltage L+".

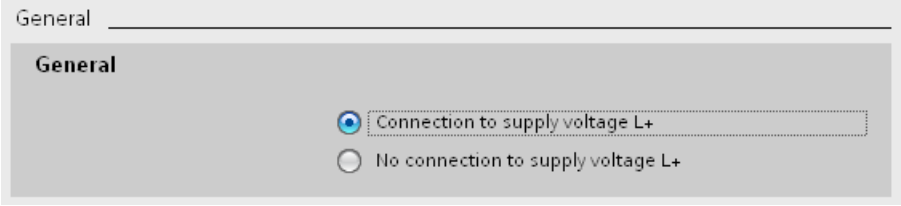

Figure 5-7 Supply voltage via the CPU/interface module and system power supply

Infeed via system power supply only

As a further possibility you can supply the required power to the backplane bus using only a system power supply (in slot 0). In this case, the CPU/interface module is not supplied with 24 V DC, and draws its supply from the backplane bus. The system power supply must be inserted to the left of the CPU/interface module for this.

In general, you can use system power supplies with AC or DC infeed for the configuration.

If no supply voltage with 24 V DC is present (and e.g. only CMs/CPs are inserted next to the CPU), you can use a system power supply with 230 V AC because the CMs/CPs are supplied via the backplane bus.

Procedure

To set up infeed only via the system power supply, follow these steps:

1. Open the "Properties" tab of the CPU/interface module in STEP 7 and select the "System power supply" in the navigation.
2. Select the option "No connection to supply voltage L+".

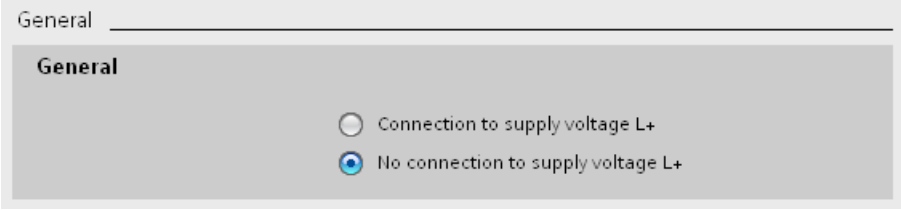

Figure 5-8 No infeed into the backplane bus by means of the CPU/interface module

5.2.3 Special requirements when using the power supply PS 60W 24/48/60VDC HF

S7-1500 - Extended retentive memory for CPUs as of FW V2.1.0

When you use the PS 60W 24/48/60VDC HF system power supply, the entire data area can be used as retentive memory for CPUs as of firmware version V2.1.0 and higher.

The PS 60W 24/48/60VDC HF supplies enough energy in case of a POWER OFF that the CPU can save the entire data area retentively.

Requirements

- STEP 7 V14 SP1 or higher
- PS 60W 24/48/60VDC HF system power supply
- CPU with firmware version as of V2.1.0, see table below

Applicable CPUs

The size of the retentive memory depends on the size of the work memory for data of the CPU used. The table below shows the applicable CPUs with the required hardware function versions.

CPU with firmware version V2.1.0 or higher	Hardware function version	Article number	Max. retentive memory
CPU 1511-1 PN	FS01 or higher	6ES7511-1AK01-0AB0 6ES7511-1AK02-0AB0	1 MB
		6ES7 511-1AL03-0AB0	1.5 MB
CPU 1511F-1 PN	FS01 or higher	6ES7511-1FK01-0AB0 6ES7 511-1FK02-0AB0 6ES7 511-1FL03-0AB0	1 MB
CPU 1511T-1 PN	FS01 or higher	6ES7511-1TK01-0AB0 6ES7 511-1TL03-0AB0	1 MB
CPU 1511TF-1 PN	FS01 or higher	6ES7511-1UK01-0AB0 6ES7 511-1UL03-0AB0	1 MB
CPU 1511C-1 PN	FS01 or higher	6ES7511-1CK00-0AB0 6ES7511-1CK01-0AB0	1 MB
CPU 1512C-1 PN	FS01 or higher	6ES7512-1CK00-0AB0 6ES7512-1CK01-0AB0	1 MB
CPU 1513-1 PN	FS01 or higher	6ES7513-1AL01-0AB0 6ES7513-1AL02-0AB0	1.5 MB
		6ES7 513-1AM03-0AB0	2.5 MB
CPU 1513F-1 PN	FS01 or higher	6ES7513-1FL01-0AB0 6ES7 513-1FL02-0AB0	1.5 MB
		6ES7 513-1FM03-0AB0	2.5 MB
CPU 1515-2 PN	FS01 or higher	6ES7515-2AM01-0AB0 6ES7 515-2AM02-0AB0	3 MB
		6ES7 515-2AN03-0AB0	4.5 MB
CPU 1515F-2 PN	FS01 or higher	6ES7515-2FM01-0AB0 6ES7 515-2FM02-0AB0	3 MB

CPU with firmware version V2.1.0 or higher	Hardware function version	Article number	Max. retentive memory
		6ES7 515-2FN03-0AB0	4.5 MB
CPU 1515T-2 PN	FS01 or higher	6ES7515-2TM01-0AB0	3 MB
		6ES7 515-2TN03-0AB0	4.5 MB
CPU 1515TF-2 PN	FS01 or higher	6ES7515-2UM01-0AB0	3 MB
		6ES7 515-2UN03-0AB0	4.5 MB
CPU 1516-3 PN/DP	FS01 or higher	6ES7516-3AN01-0AB0 6ES7 516-3AN02-0AB0	5 MB
		6ES7 516-3AP03-0AB0	7.5 MB
CPU 1516F-3 PN/DP	FS01 or higher	6ES7516-3FN01-0AB0 6ES7 516-3FN02-0AB0	5 MB
		6ES7 516-3AP03-0AB0	7.5 MB
CPU 1516T-3 PN/DP	FS01 or higher	6ES7516-3TN00-0AB0	5 MB
CPU 1516TF-3 PN/DP	FS01 or higher	6ES7516-3UN00-0AB0	5 MB
CPU 1517-3 PN/DP	FS03 or higher	6ES7517-3AP00-0AB0	8 MB
CPU 1517F-3 PN/DP	FS03 or higher	6ES7517-3FP00-0AB0	8 MB
CPU 1517T-3 PN/DP	FS01 or higher	6ES7517-3TP00-0AB0	8 MB
CPU 1517TF-3 PN/DP	FS01 or higher	6ES7517-3UP00-0AB0	8 MB
CPU 1518-4 PN/DP	FS03 or higher	6ES7518-4AP00-0AB0	20 MB
CPU 1518F-4 PN/DP	FS03 or higher	6ES7518-4FP00-0AB0	20 MB
CPU 1518T-4 PN/DP	FS01 or higher	6ES7518-4TP00-0AB0	20 MB
CPU 1518TF-4 PN/DP	FS01 or higher	6ES7518-4UP00-0AB0	20 MB
CPU 1518-4 PN/DP MFP	FS01 or higher	6ES7518-4AX00-1AB0	20 MB
CPU 1518F-4 PN/DP MFP	FS01 or higher	6ES7518-4FX00-1AB0	20 MB

Connection, structure and configuration of an S7-1500 with PS 60W 24/48/60VDC HF

- You must insert the system power supply PS 60W 24/48/60VDC HF in slot 0.

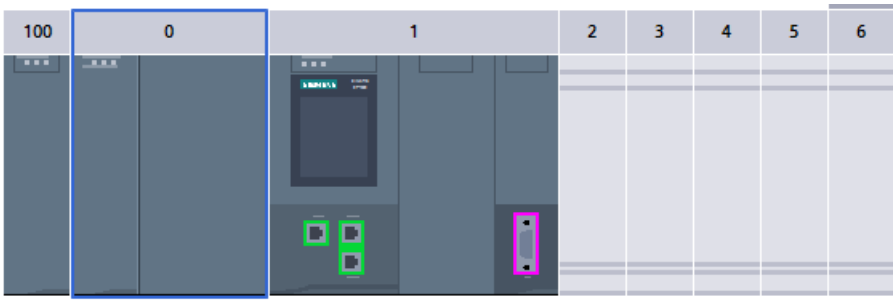

Figure 5-9 Slot PS 60W 24/48/60VDC HF

- If you are using the PS 60W 24/48/60VDC HF, the 24 V supply of the CPU is not taken into account in the power budget calculation.

Note

You may only connect the 24 V DC supply voltage directly to the system power supply and not to the CPU.

You must set the "System power supply" parameter to the option "No connection to supply voltage L+" during configuration of the CPU. STEP 7 checks the setting when compiling the configuration.

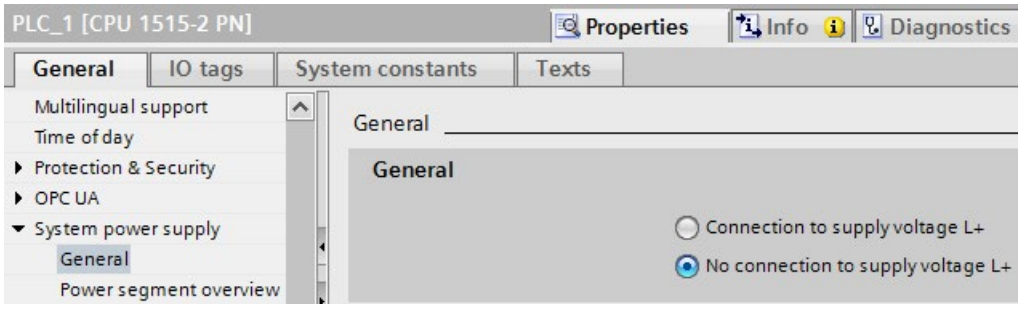

Figure 5-10 Connecting PS 60W 24/48/60VDC HF

- The parameter "Startup > Comparison preset to actual module" must be set to the value "Startup CPU only if compatible" during configuration of the PS 60W 24/48/60VDC HF. Reason: The retentivity of the entire CPU work memory (data) is only guaranteed when the PS 60W 24/48/60VDC HF is inserted.

  When you insert the PS 60W 24/48/60VDC HF, STEP 7 automatically sets the parameter.

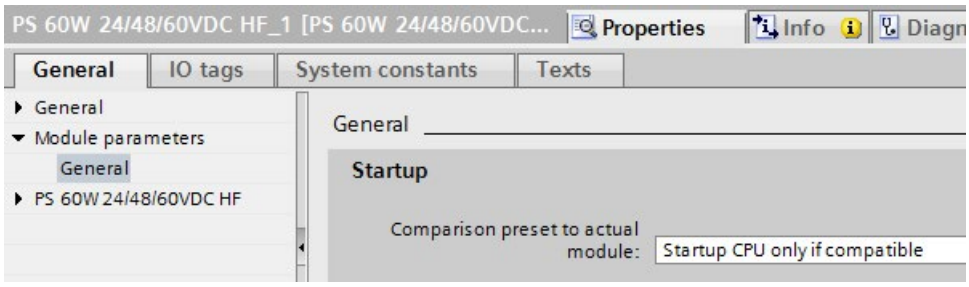

Figure 5-11 Startup of PS 60W 24/48/60VDC HF

Note

Other power segments in the configuration

The PS 60W 24/48/60VDC HF must only be inserted to the left of the CPU / interface module.

Use a different system power supply (PS) for other power segments in the configuration to the right of the CPU / interface module.

Missing diagnostics for the PS 60W 24/48/60VDC HF

In case of POWER OFF, saving the extended retentive data is most important. The CPU as of FW V2.1.0 and higher does **no longer** output the following diagnostics of the PS 60W 24/48/60VDC HF:

- Supply voltage fault
- Switch position Off

5.3 Power balance calculation

Principle of power balance calculation

In order to ensure the supply of the modules from the backplane bus, the power balance calculation compares the infed power with the required power for the modules. The supplied power of all system power supplies including the CPU/interface module must be greater than or equal to the power taken from the modules.

In order to operate the configuration with its used modules, the power balance must be positive for each power segment in use.

This means that the power fed into the power segment is greater than the power consumed by the modules.

Take care even during planning, that the power fed into the backplane bus is always greater than or equal to the power drawn. The TIA Selection Tool (https://new.siemens.com/global/en/products/automation/topic-areas/tia/tia-selection-tool.html) aids you during planning.

The power fed into the backplane bus by the CPU/interface module and system power supply is listed in the technical specifications of the CPU/interface module in the corresponding manuals.

The power consumed from the backplane bus by an I/O module or the CPU/interface module can be found in the technical specifications in the corresponding manuals.

The power balance calculation is performed:

- When configuring with STEP 7
- During operation by the CPU

Power balance calculation when configuring with STEP 7

STEP 7 checks compliance with the power balance during the configuration.

Proceed as follows to evaluate the power balance calculation:

1. Perform the configuration of the S7-1500/ET 200MP with all the required modules.
2. In the network view, select the CPU/interface module or the system power supply.
3. Open the "Properties" tab in the inspector window.
4. Select the "System power supply" entry in the area navigation.
5. Check the "Power segment overview" table, so see whether the power balance is positive. If the power balance is negative, STEP 7 marks the underpowered modules in red.

Power segment overview

Module	Slot	Power consumption
PS 25W 24VDC_1	0	25.00W
PLC_1	1	12.00W
DI 32x24VDC HF_1	2	-1.10W
DQ 8x230VAC/5A ST_1	3	-0.80W
AI 8xU/I/RTD/TC ST_1	4	-0.70W
AQ 4xU/I ST_1	5	-0.60W
	Summary	33.80W

Figure 5-12 Example of a power balance calculation with STEP 7

Power balance calculation check for overload by the CPU/interface module

The CPU / the interface module monitors compliance with a positive power balance:

- At every POWER ON
- At every change of the installed hardware

Causes for overload

An overload can still occur despite a positive power balance during planning. The cause for overload can be a hardware configuration that does not correspond to the configuration in STEP 7, for example:

- More I/O modules inserted in the actual configuration than in the STEP 7 project.
- A supply voltage L+ (24 V DC) that is necessary for operation is not connected when system voltage infeed via the CPU/interface module is specified during parameter assignment (see section Special considerations for the use of a system power supply in the first power segment (Page 115)).
- A system power supply that is necessary for operation is not inserted.
- A system power supply that is necessary for operation is not switched on (power connection plug or on/off switch).
- A system power supply that is necessary for operation has no U connector inserted.

Response of the CPU to negative power balance or failure of system power supplies

As soon as the CPU detects a negative power balance/overload, the following actions are executed:

- The CPU stores the retentive data.
- The CPU enters the event in the diagnostics buffer.
- The CPU carries out a restart and repeats this until the cause of the negative power balance is resolved.

Response of the interface module to negative power balance or failure of system power supplies

As a result of the overload, the interface module switches off all power segments. The I/O controller or DP master can no longer access the I/O modules. The interface module provides diagnostic information and periodically checks the connection to the backplane bus and re-establishes the connection.

Exception: In the case of a voltage drop or a hardware fault in power segment 2 or 3, the corresponding system power supply module switches off its power segment (and possibly the following segments), and generates a diagnostic alarm, if possible.

More information on the behavior of the system power supply (PS) in the event of a fault can be found in the manuals for the system power supplies.

5.4 Use of load power supplies

Introduction

The load current supply (PM) supplies the system power (PS), central modules (CPU), interface module and input and output circuits of the I/O modules with DC 24 V.

Load current supplies can be mounted on the mounting rail but do not have a connection to the backplane bus.

Observe the installation rules and specified installation distances in the manuals of the load current supplies.

Use of multiple load current supplies

Several load current supplies (PM) can be used as follows for higher output currents:

Every load current supply feeds independent 24 V DC load lines.

Alternatively you can use an external 24 V power supply, e.g. from the SITOP line.

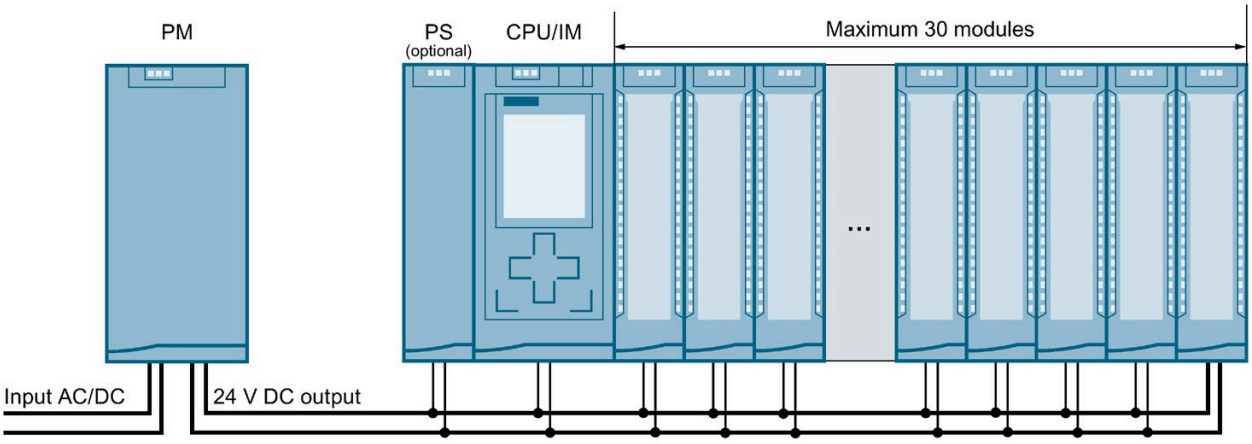

Figure 5-13 Supply of the modules from 24 V DC load current suppl

Note

Alternative 24 V supply of the modules from the control cabinet

If safe electrical separation (SELV/PELV according to IEC 61131-2 and IEC 61010-2-201) is guaranteed, you can alternatively supply the modules with 24 V DC from the control cabinet.

Reference

More information on load current supplies can be found on the Internet (https://mall.industry.siemens.com) in the online catalog and in the online ordering system.

Installation 6

6.1 Basics

Introduction

All modules of the S7-1500 automation system/ET 200MP distributed I/O system are open equipment. This means that you may only install this system in housings, cabinets or electrical operating rooms that are located indoors. The housings, cabinets and electrical operating rooms must guarantee protection against electric shock and spread of fire. The requirements for mechanical strength must also be met. The housings, cabinets, and electrical operating rooms must not be accessible without a key or tool. Personnel with access must have been trained or authorized.

Installation position

The S7-1500 automation system / ET 200MP distributed I/O system is designed for the following mounting positions:

- Horizontal mounting position for ambient temperatures up to 60° C
- Vertical mounting position (CPU is down) for ambient temperatures up to 40° C

More information can be found in chapter Mechanical and climatic ambient conditions (Page 350).

Mounting rail

You can mount the following components on the mounting rails alongside the S7-1500/ET 200MP modules:

- Modules from the S7-1200 and ET 200SP range
- Terminals
- Circuit breakers
- Small contactors
- Similar components

These components can influence the installation dimensions for the cable duct.

Modules can be mounted right to the outer edge of the mounting rail.

The mounting rails are available in various lengths. You order the mounting rails using the online catalog or the online ordering system. You can find the available lengths and article numbers in the section Accessories/spare parts (Page 363).

Minimum clearances

The modules can be mounted to the outer edge of the mounting rail. Maintain the following minimum clearances at the top and bottom when installing or removing the S7-1500 automation system / ET 200MP distributed I/O system:

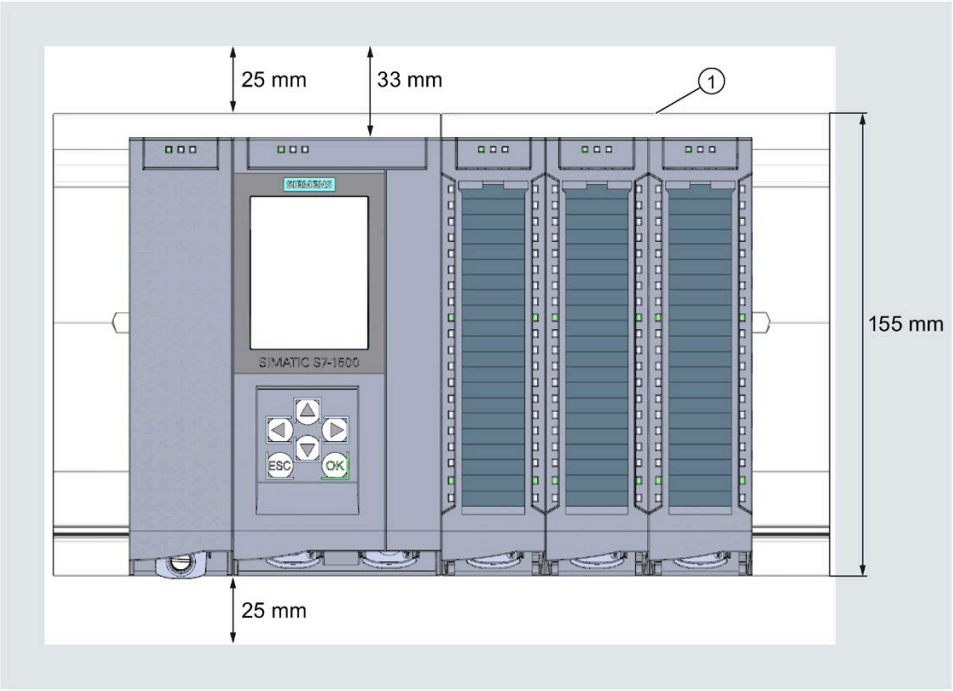

① Upper edge of the mounting rail

Figure 6-1 Minimum clearances in the control cabinet

Installation rules

- The installation starts on the left with a CPU/interface module or a system power supply/load current supply.
- You connect the modules to each other with U connectors.
- Note that no U connector protrudes from the first and last module.

Note

Only remove and insert modules when the power to the system is switched off.

WARNING

Protection from conductive contamination

Protect the devices against conductive contamination. At the same time, note the ambient conditions.

Protection from conductive contamination can, for example, be achieved by installing the devices in a control cabinet with the appropriate degree of protection.

6.2 Installing the mounting rail

Lengths and drill holes

The mounting rails are delivered in six lengths:

- 160 mm
- 245 mm
- 482.6 mm (19 inches)
- 530 mm
- 830 mm
- 2000 mm

You can find the article numbers in the appendix Accessories/spare parts (Page 363).

The mounting rails (from 160 to 830 mm) come with two drill holes for fixing screws. A set of screws for grounding the mounting rail is provided.

The 2000 mm mounting rail is designed for assemblies with special lengths and does not have holes for fixing screws. No set of screws for grounding is enclosed with the mounting rail (can be ordered as Accessories/spare parts (Page 363)).

The specifications of the maximum offsets between two drill holes can be found in the table, "Dimensions for the drill holes".

Tools required

- Commercially available hacksaw
- Drill ∅ 6.5 mm
- Screwdriver
- Size 10 adjustable screw-wrench or socket wrench for grounding cable connection
- Adjustable screw-wrench, matching the selected fixing screws
- Stripping tool and crimp tool for the grounding cable

Required accessories

Use the following screw types for fastening the mounting rails:

Table 6- 1 Required accessories

For ...	you can use ...	Explanation
• Outer fixing screws • Additional fixing screws (for mounting rails > 482.6 mm)	M6 socket cap screw	Choose a suitable screw length for your assembly. You also need washers for cylinder head screws with an internal diameter of 6.4 mm and an external diameter of 11 mm.
	M6 hex screw	

Dimensions for the drill holes

Table 6- 2 Dimensions for the drill holes

"Standard" mounting rails			"Longer" mounting rails
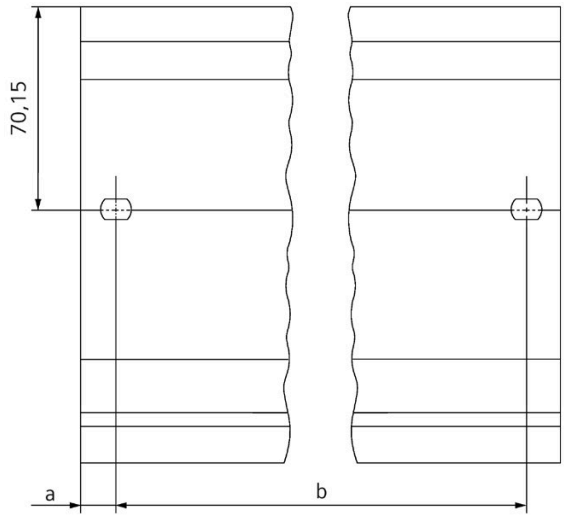			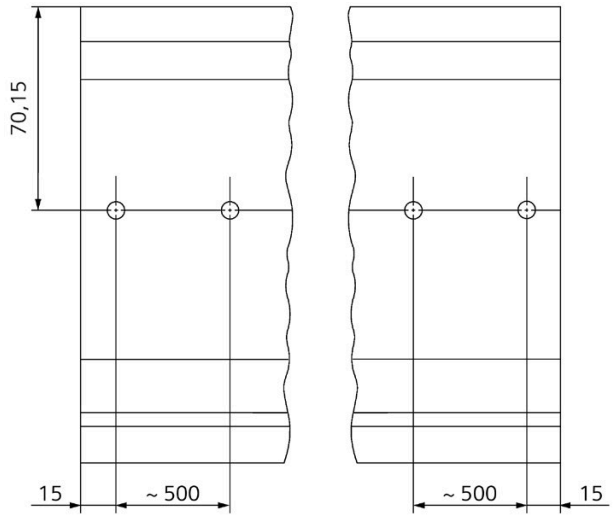
Length of the mounting rail	**Distance a**	**Distance b**	
160 mm	10 mm	140 mm	
245 mm	10 mm	225 mm	
482.6 mm	8.3 mm	466 mm	
530 mm	15 mm	500 mm	
830 mm	15 mm	800 mm	

Additional fixing screws (for mounting rails > 530 mm)

For mounting rails longer than 530 mm, we recommend using additional fixing screws at intervals of >482 mm on the identification groove.

Preparing the 2000 mm mounting rail for installation

To prepare the 2000 mm mounting rail for installation, proceed as follows:

1. Cut the 2000 mm mounting rail to the required length.
2. Mark the holes. The necessary dimensions can be found in the table "Dimensions for the drill holes":
   - Two drill holes at the beginning and end of the mounting rail
   - Additional drill holes at equal intervals of 500 mm maximum, along the identification groove
3. Drill the marked holes according to the selected type of fastening.
4. Ensure that there are no burrs or shavings on the mounting rail.

Note

To ensure secure installation of the modules, make sure you position the drill holes centered on the identification groove and only use screws of the maximum size.

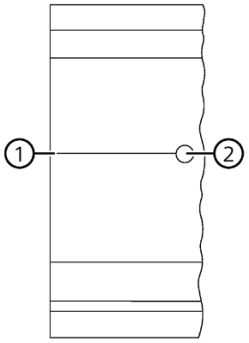

① Identification groove for additional drill holes

② Additional drill hole

Figure 6-2 Preparing the 2000 mm mounting rail for installation

Installing the mounting rail

Place the mounting rail such that sufficient space remains for installation of and heat dissipation from the modules. Note the figure Figure 6-1 Minimum clearances in the control cabinet (Page 126).

Screw the rail onto the mounting surface.

Attaching the protective conductor

The S7-1500 automation system/ ET 200MP distributed I/O system has to be connected to the protective conductor system of the electrical system to ensure electrical safety.

Proceed as follows to connect the protective conductor:

1. Strip the ground conductor with a minimum diameter of 10 mm^2. Attach a ring cable lug for M6 bolts with the crimping pliers.
2. Slide the enclosed bolt into the T profile groove.
3. Insert the spacer, ring terminal with the grounding connector, flat washer, and lock washer onto the bolt (in that order). Thread on the hexagon nut. Fasten the components in place with the nut (tightening torque 4 Nm).

4. Connect the opposite end of the grounding cable to the central grounding point/protective conductor busbar (PE).

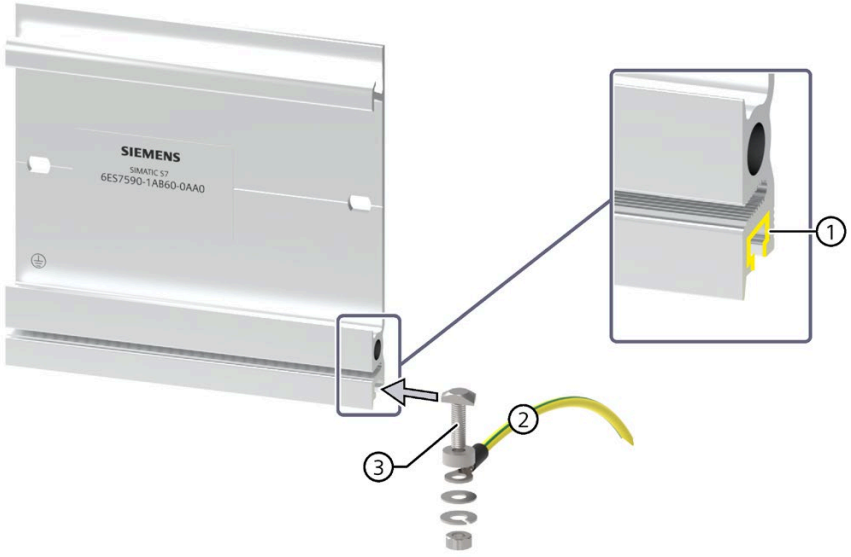

① T-profile groove
② Protective conductor (PE)
③ PE connection element for mounting rail

Figure 6-3 Attaching the protective conductor (protective earth)

Note

Alternative grounding of the mounting rail

Grounding with the grounding screw is not required if the following requirements are met:

The mounting rails must be permanently connected to the protective circuit using an equivalent fitting that complies with the applicable standards, for example by permanent attachment to a grounded control cabinet wall.

Note

You can find more information on the exact dimensions of the mounting rails in the appendix Dimension drawings of the mounting rails (Page 356).

6.3 Installing the standard rail adapter

Introduction

The DIN rail adapter allows you to mount the SIMATIC S7-1500/ET 200MP automation system on the standard 35 mm mounting rails.

You order the DIN rail adapter as separate accessories.

Note

Note the following reduced technical specifications regarding mechanical load when you install the S7-1500/ET 200MP modules on the 35 mm DIN rail using the DIN rail adapter:

Vibration test acc. to IEC 60068-2-6 (sinusoidal)

- 5 Hz ≤ f ≤ 8.4 Hz, constant amplitude **3.5 mm**
- 8.4 Hz ≤ f ≤ 150 Hz, constant acceleration **1 g**

Duration of vibration: 10 frequency sweeps per axis in each of three perpendicular axes

Shock, tested according to IEC 60068-2-27

- Type of shock: Half-sine
- Shock intensity: **150 m/s**^{2} peak value, **11 ms** duration
- Direction of shock: **3** shocks each in (+/-) direction, along each of the 3 mutually perpendicular axes

---

Article number

6ES7590-6AA00-0AA0

The scope of delivery consists of ten adapters, ten hexagon socket-head screws and ten washers.

View

The DIN rail adapter consists of a clamp, an adapter frame and a hexagon socket-head screw with washer.

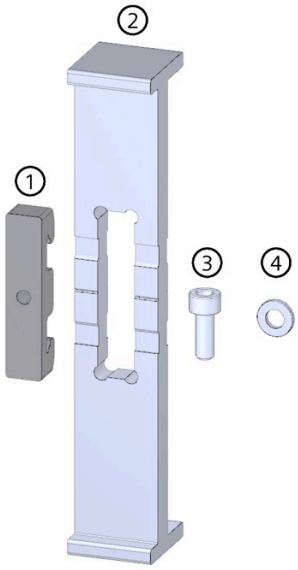

① Clamp
② Adapter frame
③ Hexagon socket-head screw
④ Washer

Figure 6-4 Parts of the DIN rail adapter

Dimensional drawing

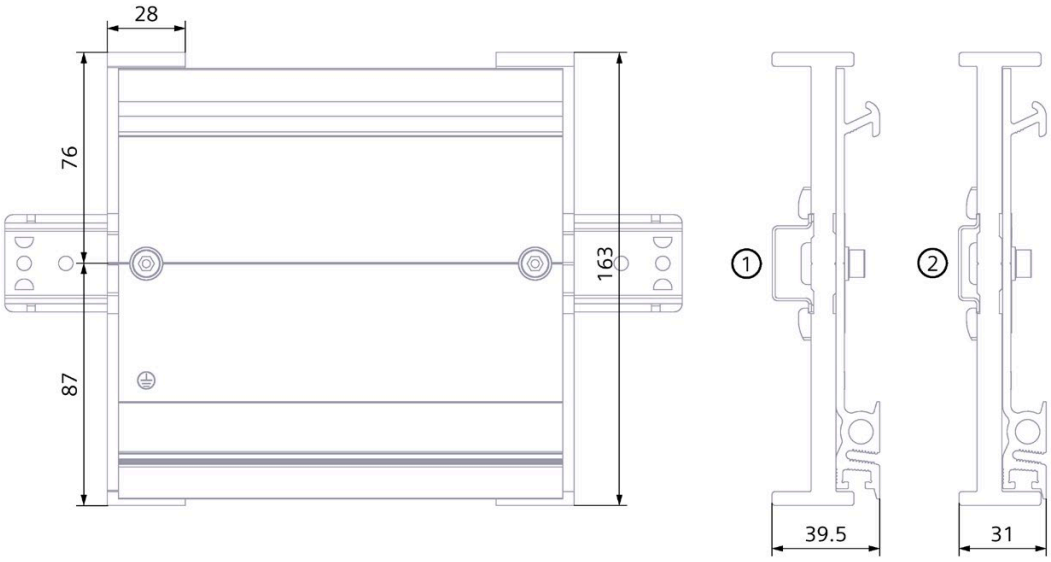

① Position of the adapter frame during mounting to the standard DIN rail 35 mm x 7.5 mm

② Position of the adapter frame during mounting to the standard DIN rail 35 mm x 15 mm

Figure 6-5 Dimensional drawing

Tools required

Wrench matching the hexagon socket head cap screw M6 according to EN ISO 4762 (DIN 912).

Properties

- The DIN rail adapter makes it possible to mount the S7-1500/ET 200MP mounting rail on standard 35 mm DIN rails.
- The DIN rail adapter allows for the use of prefabricated control cabinet and terminal box systems.
- The total length of the S7-1500/ET 200 MP mounting rail can be used again completely as before.
- To ensure optimal stability, the clearance between the two DIN rail adapters must be no more than 250 mm or less.

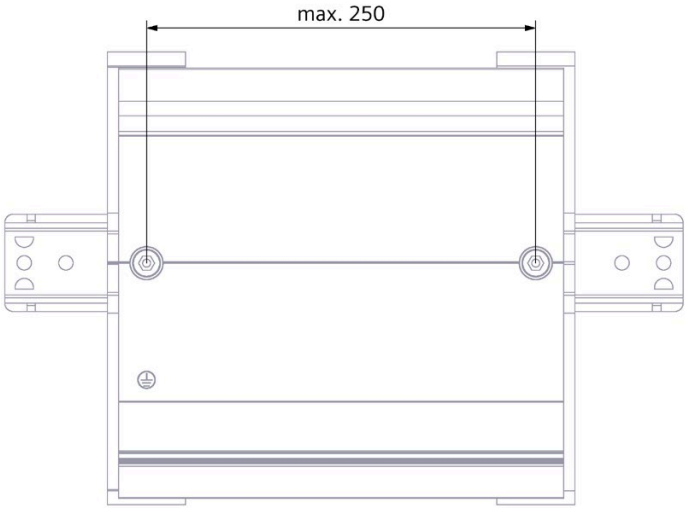

Figure 6-6 Distance between two DIN rail adapters

Note

Note that, depending on the mounting rail width, the mounting rail adapter can protrude up to 4 mm on each side due to the drill holes.
You can find an overview of the protrusion dimensions for the various DIN rails in the table below.

Table 6- 3 Additional lateral space required

Mounting rail	Article number	Additional space required with adapter
• 160.0 mm (with drill holes)	6ES7590-1AB60-0AA0	4 mm
• 245.0 mm (with drill holes)	6ES7590-1AC40-0AA0	4 mm
• 482.6 mm (with drill holes)	6ES7590-1AE80-0AA0	8 mm
• 530.0 mm	6ES7590-1AF30-0AA0	0 mm
• 830.0 mm (with drill holes)	6ES7590-1AJ30-0AA0	0 mm

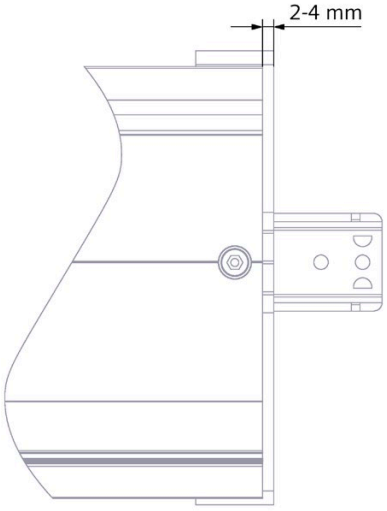

Figure 6-7 DIN rail adapter protrusion

Procedure

Mounting on the standard DIN rail 35 mm x 7.5 mm

To install DIN rail adapter on the standard DIN rail 35 mm x 7.5 mm, follow these steps:

1. Set the clamp onto the standard DIN rail.
2. The **shorter** transverse edge of the adapter frame points towards the cabinet or box wall (2).
3. Place the S7-1500/ET 200MP mounting rail on the adapter frame so that the groove in the S7-1500/ET 200MP mounting rail matches the groove in the adapter frame.
   Place the S7-1500/ET 200MP mounting rail with the adapter frame on the clamp (4).
4. Use screws to fasten the S7-1500/ET 200MP mounting rail to the DIN rail adapter and the standard mounting rail (tightening torque 5 Nm to 6 Nm).

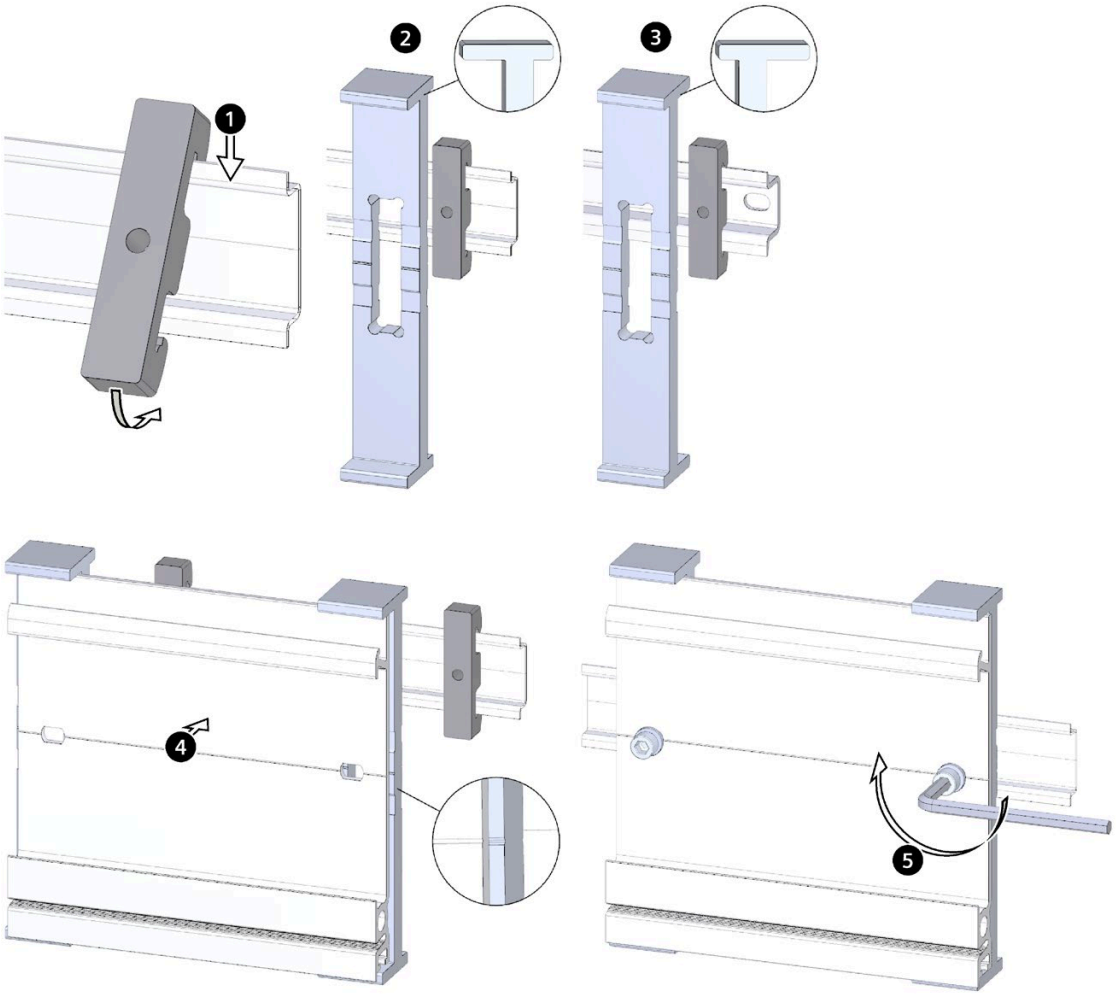

Figure 6-8 Mounting sequence of the DIN rail adapter to the DIN rail 35 mm x 7.5 mm or 35 mm x 15 mm

Mounting to the standard DIN rail 35 mm x 15 mm

To install DIN rail adapter on the standard DIN rail 35 mm x 15 mm, follow these steps:

1. Set the clamp onto the standard DIN rail.
2. The **longer** transverse edge of the adapter frame points toward the cabinet or box wall (3).
3. Place the S7-1500/ET 200MP mounting rail on the adapter frame so that the groove in the S7-1500/ET 200MP mounting rail matches the groove in the adapter frame.
   Place the S7-1500/ET 200MP mounting rail with the adapter frame onto the clamp (4).
4. Use screws to fasten the S7-1500/ET 200MP mounting rail to the DIN rail adapter and the standard mounting rail (tightening torque 5 Nm to 6 Nm).

6.4 Installing a system power supply

Introduction

The system power supply has a connection to the backplane bus and supplies the connected modules with the internal supply voltage.

Requirements

The mounting rail is installed.

Tools required

Screwdriver with 4.5 mm blade

Installing a system power supply

To install the system power supply, follow these steps:

1. Insert the U-connector into the back of the system power supply.
2. Hang the system power supply on the mounting rail.

3. Swivel the system power supply to the rear.

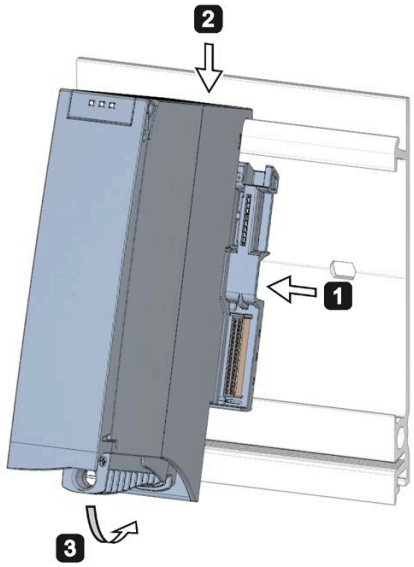

Figure 6-9 Installing a system power supply

4. Open the front cover.
5. Disconnect the power cable connector from the system power supply.
6. Screw the system power supply tight (tightening torque 1.5 Nm).
7. Insert the already wired-up power cable connector into the system power supply.

Information about wiring of the power cable connector is available in the section Connecting system power supply and load current supply (Page 168).

Uninstalling a system power supply

The system power supply is wired up.

To uninstall the system power supply, follow these steps:

1. Open the front cover.
2. Shut down the system power supply.
3. Switch off the supplied supply voltage.
4. Disconnect the power cable connector, and remove the connector from the system power supply.
5. Unscrew the fixing screw.
6. Swivel the system power supply out of the mounting rail.

Reference

Additional information can be found in the manuals for the system power supplies.

6.5 Installing a load current supply

Introduction

Load current supplies do not have a connection to the backplane bus of the S7-1500 automation systems/ET 200MP distributed I/O system and also do not occupy a slot on the backplane bus. The load current supply (PM) supplies the system power (PS), CPU, interface module and input and output circuits of the I/O modules with DC 24 V.

Requirements

The mounting rail is installed.

Tools required

Screwdriver with 4.5 mm blade

Installing a load current supply

Watch video sequence (https://support.industry.siemens.com/cs/ww/en/view/78027451)

To install a load current supply, follow these steps:

1. Hook the load current supply on the mounting rail.
2. Swivel the load current supply to the rear.

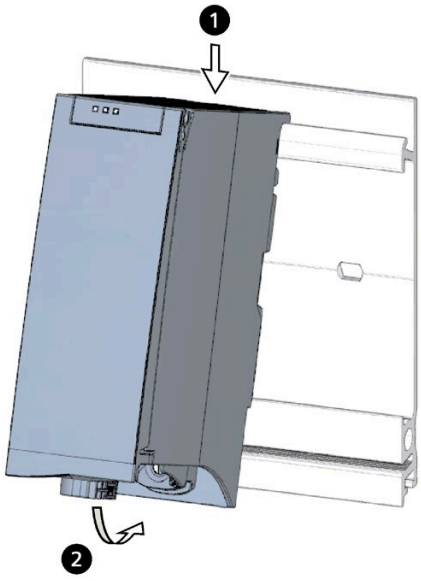

Figure 6-10 Installing a load current supply

3. Open the front cover.
4. Disconnect the power cable connector from the load current supply.

5. Screw the load power supply tight (tightening torque 1.5 Nm).
6. Insert the already wired-up power cable connector into the load current supply.

For a description on how to wire the power cable connector, refer to the section Connecting system power supply and load current supply (Page 168).

Note

Load current supplies can only be mounted on the left or right side outside the S7-1500 automation system/ET 200MP distributed I/O system. If you mount a load current supply on the right of the configured setup, the heat development of the load current supply may make a gap to the configured setup necessary. For additional information, refer to the relevant manuals. The number of load current supplies that can be used is unlimited.

Uninstalling the load current supply

The load current supply is wired up.

To uninstall a load current supply, follow these steps:

1. Open the front cover.
2. Shut down the load current supply.
3. Turn off the feed supply voltage.
4. Disconnect the power cable connector, and remove the connector from the load current supply.
5. Unscrew the fixing screw.
6. Swivel the load current supply out of the mounting rail.

Reference

Additional information can be found in the manuals for the load current supplies.

6.6 Installing the CPU

Introduction

The CPU executes the user program and supplies the electronics of the modules with power via the backplane bus.

Requirements

The mounting rail is installed.

In a system power supply located on the left next to the CPU, a U connector is inserted on the back right.

Note

Protective film

Please note that the CPU is supplied with a removable protective film on the display. You can remove the protective film as required.

Tools required

Screwdriver with 4.5 mm blade

Installing the CPU

Watch video sequence (https://support.industry.siemens.com/cs/ww/en/view/78027451)

To install a CPU, follow these steps:

1. Insert a U-connector into the back right on the CPU.
2. Install the CPU to the mounting rail. Also push the CPU to the left system power supply if necessary.

3. Ensure that the U-connector is inserted at the system power supply. Swivel the CPU in to the rear.
4. Screw the CPU tight (tightening torque 1.5 Nm).

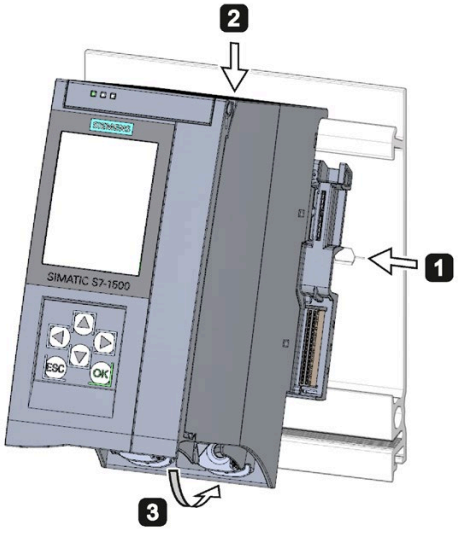

Figure 6-11 Installing the CPU

Uninstalling the CPU

The CPU is wired, and is followed by additional modules.

To uninstall a CPU, follow these steps:

1. Open the front cover.
2. Switch the CPU into STOP mode.
3. Turn off the feed supply voltage.
4. Pull off the connector for the supply voltage.
5. Loosen the bus connectors for PROFIBUS/PROFINET with the screwdriver.
6. Disconnect the bus connector from the CPU.
7. Undo the CPU fixing screws.
8. Pivot the CPU out of the mounting rail.

Device damage caused by electrical fields or electrostatic discharge

Electrostatic sensitive devices (ESD) are individual components, integrated circuits, modules or devices that can be damaged by electrostatic fields or electrostatic discharge.

NOTICE

Device damage caused by electrical fields or electrostatic discharge

Electrical fields or electrostatic discharge can cause function failures that result from damaged individual components, integrated circuits, modules or devices.

- Pack, store, transport and send electronic components, modules or devices only in the original product packaging or in other suitable materials, e.g. conducting foam rubber or aluminum foil.
- Only touch components, modules and devices when you have grounded yourself with one of the following measures:
  - Wear an ESD wrist strap
  - Wear ESD shoes or ESD grounding strips in ESD areas with a conducting floor
- Place electronic components, modules and devices only on conducting surfaces (table with ESD coating, conducting ESD plastic foam, ESD packing bag, ESD transport container).

6.7 Installing the interface module

Introduction

The interface module connects the ET 200MP with the PROFINET IO/PROFIBUS DP.

The interface module exchanges data between the higher-level controller and the I/O modules.

Requirements

The mounting rail is installed.

For a system power supply located to the left of the interface module, a U connector is inserted on the back left.

Tools required

Screwdriver with 4.5 mm blade

Installing the interface module

Watch video sequence (https://support.industry.siemens.com/cs/ww/en/view/67462859)

To install an interface module, proceed as follows:

1. Mount the U-connector on the back right-hand side of the interface module.
2. Hook the interface module on the rail.
3. Pivot the interface module towards the back.
4. Tighten the interface module (tightening torque 1.5 Nm).

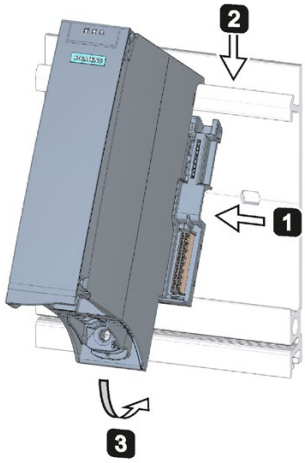

Figure 6-12 Installing the interface module

Uninstalling the interface module

The interface module is wired and is followed by additional modules.

To uninstall the interface module, follow these steps:

1. Switch off the supply voltage for the interface module.
2. Open the front cover.
3. Loosen the bus connector and the connector for the supply voltage with the screwdriver.
4. Remove the plug from the interface module.
5. Loosen the fixing screw of the interface module.
6. Pivot the interface module out of the mounting rail.

6.8 Installing I/O modules

Introduction

The I/O modules are then mounted to the right of the CPU/interface module. I/O modules form the interface between the controller and the process. The controller detects the current process state via the connected sensors and actuators, and triggers the corresponding reactions.

Requirements

The mounting rail is installed.

The CPU/interface module is installed.

In the module/CPU/interface module located to the left of the I/O module, a U-connector is inserted on the back right.

Tools required

Screwdriver with 4.5 mm blade

Installing I/O modules

Watch video sequence (https://support.industry.siemens.com/cs/ww/en/view/78027451)

Proceed as follows to install an I/O module:

1. Insert a U connector into the back right on the I/O module.
   Exception: the last I/O module in the assembly
2. Install the I/O module on the mounting rail. Push the I/O module up to the left module.

3. Pivot the I/O module towards the back.
4. Tighten the I/O module (tightening torque 1.5 Nm).

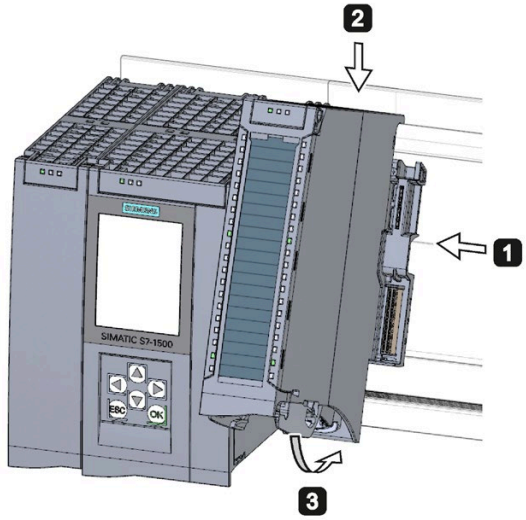

Figure 6-13 Installing I/O module

Uninstalling I/O modules

The I/O module is wired.

Proceed as follows to dismantle an I/O module:

1. Turn off all feed supply voltages.
2. Open the front cover.
3. For communications modules: Loosen and remove the connector from the module.
4. At I/O modules: Pull the front connector out of the I/O module using the unlocking strap. Swivel the front connector downward. Remove the front connector from the guide grooves.
5. Loosen the fixing screw of the I/O module.
6. Pivot the I/O module out of the mounting rail.

Wiring 7

7.1 Rules and regulations for operation

Introduction

The S7-1500 automation system / ET 200MP distributed I/O system is a component of plants or systems. Special rules and regulations must be adhered to in line with the area of application.

This section provides an overview of the most important rules that must be observed for the integration of the S7-1500 automation system/ ET 200MP distributed I/O system in a plant or system. Please follow these rules when connecting the S7-1500 automation system/ ET 200MP distributed I/O system.

Specific application

Observe the safety and accident prevention regulations that are applicable to specific applications (for example Machinery Directive).

EMERGENCY-STOP devices

EMERGENCY OFF equipment to IEC 60204 (corresponds to DIN VDE 0113) must remain effective in all operating modes of the plant or system.

Excluding hazardous plant states

Hazardous operating states must not occur when

- The plant restarts after a voltage dip or power failure.
- Bus communication is reestablished following a fault.

If a hazardous operating state occurs, force an EMERGENCY STOP.

After the EMERGENCY-STOP device has been unlocked, the S7-1500 automation system / ET 200MP distributed I/O system must not started uncontrolled or undefined.

External fuses/switches

Install the external fuses/switches in the proximity of the S7-1500 automation system/ET 200MP distributed I/O system.

Line voltage

The points to note for line voltage are set out below.

- For fixed plants or systems without multipole circuit breaker, a mains disconnection device (multipole) must be available in the building installation.
- For load current supplies, the configured rated voltage range must correspond to the local line voltage.
- For all power circuits of the S7-1500 automation system/ET 200MP distributed I/O system, the fluctuation/deviation of the line voltage from the rated value must be within the permitted tolerance.

You can find additional information in the section Information on insulation tests, protection class, degree of protection and rated voltage (Page 354).

24 V DC supply

The following describes what you must pay attention to in terms of the 24 V DC supply:

- Power supply units for the 24 V DC supply (SELV/PELV) must supply a safe extra-low voltage according to IEC 61131-2 or IEC 61010-2-201.
- To protect the S7-1500 automation system/ET 200MP distributed I/O system from lightning and overvoltages, use overvoltage arresters.

  Suitable components for the lightning and overvoltage protection are specified in the Defining interference-free controllers (https://support.automation.siemens.com/WW/view/en/59193566) function manual.

Requirements for power supplies in the event of voltage interruption

Note

To ensure adherence to IEC 61131-2, only use power packs/power supply units (e.g. 230/400 V AC → 24 V DC) with a mains buffering time of at least 10 ms. Observe the relevant requirements in your application (e.g. product standard for "burners" 30 ms according to EN 298 or 20 ms according to NAMUR recommendation NE 21) with respect to possible voltage interruptions. The latest up-to-date information on PS components is available on the Internet (https://mall.industry.siemens.com).

Of course, these requirements also apply to power packs/power supply units not constructed using S7-1500 or ET 200SP/S7-300-/S7-400 technology.

Protection against electrical shock

As protection against electric shock you must connect the mounting rail and if necessary, all other existing protective conductor connections of the S7-1500 automation system / ET 200MP distributed I/O system conductively with the protective conductor.

You may only use conductors in the colors yellow-green for connections to protective conductor connections.

Protection against external electrical influences

To protect against electrical effects or faults, observe the following rules:

- The system for discharging electromagnetic interference must be connected to a protective conductor with a sufficient cross-section for all plants with an S7-1500 automation system / ET 200MP distributed I/O system.
- You must ensure that all supply, signal and bus cables are correctly routed and installed.
- For signal and bus lines, a cable break, wire break or a cross circuit must not lead to undefined states in the plant or system.

Reference

Additional information can be found in the function manual, Designing interference-free controllers (https://support.automation.siemens.com/WW/view/en/59193566).

7.2 Additional rules and regulations for operation of the S7-1500/ET 200MP with fail-safe modules

7.2.1 Safety extra-low voltage (SELV, PELV) for failsafe modules

Key statement

WARNING

The failsafe modules must be operated with safety extra-low voltage (SELV, PELV).

You can find more information on safety extra-low voltage (SELV, PELV) in the data sheets of the applicable power supplies, for example.

The fail-safe modules operate at a rated voltage of 24 V DC. The tolerance range is 19.2 V DC to 28.8 V DC.

The fail-safe motor starters operate with the 24 V DC rated voltage. The tolerance range is 20.4 V DC to 28.8 V DC.

Within the overvoltage range from 32 V DC to 36 V DC, the F-modules react in a fail-safe manner and the inputs and outputs are passivated. For overvoltages greater than 36 V DC, the F-modules are permanently de-energized.

Use a power supply unit that does not exceed U_m = 36 V DC even in the event of a fault. For more on this, refer to the information in the data sheet on overvoltage protection in the case of an internal error. Or implement appropriate measures to limit the voltage, e.g., use of a surge protection device.

All system components that can supply electrical energy in any form whatsoever must fulfill this condition.

Each additional circuit (24 V DC) used in the system must have a safety extra low voltage (SELV, PELV). Refer to the relevant data sheets or contact the manufacturer.

Sensors and actuators with an external power supply can also be connected to F-modules. Make sure that power is supplied to these components from safety extra-low voltage (SELV, PELV) as well. The process signal of a 24 V DC digital module must not exceed a fault voltage U_m in the event of a fault.

WARNING

Even when a fault occurs, the permissible potential difference between the supply of the interface module (bus voltage) and the load voltage must not be exceeded.

An external direct electrical connection is one way to meet this requirement. This also prevents potential differences from causing voltage additions at the individual voltage sources, which could cause the fault voltage U_m to be exceeded.

7.2.2 Requirements of sensors and actuators for fail-safe modules

General requirements for sensors and actuators

Note the following important warning regarding safety-related use of sensors and actuators:

WARNING

Note that instrumentation with sensors and actuators bears a considerable **safety responsibility**. Also bear in mind that sensors and actuators generally do not have a service life of 20 years as defined in IEC 61508:2010 without considerable loss of safety.

The probability of hazardous faults and the rate of hazardous faults of safety functions must comply with an SIL-defined high limit. A listing of values achieved by F-modules in the technical specifications of the F-modules is available under "Fail-safe performance characteristics".

To achieve the respective safety class, suitably qualified sensors and actuators are necessary.

Additional sensor requirements

General rule: A single-channel sensor is sufficient to achieve SIL3/Cat.3/PLd. However, to achieve SIL3/Cat.3/PLd with a single-channel sensor, the sensor itself must be SIL3/Cat.3/PLd-capable. Otherwise you can only reach this security level through the two-channel connection of sensors.

To reach Cat.4, connect the sensors to two channels.

WARNING

In the case of fail-safe input modules, a "0" value is output to the F-CPU after detection of faults. You therefore need to make sure that the sensors are implemented in such a way as to ensure the reliable reaction of the safety program when the sensor is in the "0" state.

Example: In its safety program, an EMERGENCY-STOP sensor must achieve the shutdown of the respective actuator when it is in the "0" state (EMERGENCY-STOP button pressed).

Duration requirements for sensor signals

WARNING

Observe the following requirements for sensor signals:

- In order to ensure the correct detection of the sensor signals via fail-safe modules with inputs, you need to make sure that the sensor signals are output for a minimum duration.
- In order for pulses to be detected with certainty, the time between two signal changes (pulse duration) must be greater than the PROFIsafe monitoring time.

Safe detection of inputs through F-modules

The minimum duration of sensor signals for fail-safe modules with inputs is dependent:

- On the parameters assigned for input delay
- On the parameters of the short-circuit test of sensor supplies.
- On the configured discrepancy behavior with 1oo2 (2v2) evaluation.

The duration of the signal must be greater than the maximum response time of the configured application. Information on calculating the maximum response time can be found in section "Response times" of the respective F-module.

The maximum permitted switching frequency of the sensor signals results from the minimum duration.

Additional requirements for actuators

The fail-safe output modules test the outputs at regular intervals. The F-module briefly switches off the activated outputs and, if necessary, briefly switches on the deactivated outputs. You can assign the maximum duration of the test pulses (dark and light period) with parameters.

High-speed actuators may briefly drop out or be activated during this test. If your process does not tolerate this, set the pulse duration of the light or dark test correspondingly or use actuators that have sufficient lag.

WARNING

If the actuators switch voltages greater than 24 V DC (e.g. 230 V AC), the outputs of a fail-safe output module and the parts carrying a higher voltage must be electrically isolated (acc. to standard IEC 60664-1).

This is generally the case with relays and contactors and you must pay particular attention to this with semiconductor switching devices.

Technical specifications of sensors and actuators

Refer to the manuals of the fail-safe modules for technical specifications to assist you in selecting sensors and actuators.

7.2.3 Capacitive crosstalk of digital input/output signals

Readback errors may occur on the F-DQ modules if the fail-safe digital output signals and fail-safe digital input signals are routed through a single cable.

Cause: Capacitive crosstalk

During the bit pattern test of the outputs or the sensor supply of the inputs, the steep switching edge of the output drivers due to the coupling capacitance of the line may result in crosstalk to other non-activated output or input channels. This may then lead to a response of the readback circuit in these channels. The module detects a cross circuit/short circuit and performs a safety-related shutdown.

Solution:

- Separate cables for fail-safe DI modules and fail-safe DQ modules / non-fail-safe DQ modules
- Coupling relay or diodes in the outputs
- Disable the short-circuit test of the sensor supply if safety class requirements allow it.

Cause: magnetic crosstalk

Note that an inductive load connected to the F-DQ channels can induce coupling of a strong magnetic field.

Solution:

- Spatially disconnect the inductive loads or shield against the magnetic field.
- Configure the "Max. readback time dark test" to 50 ms or higher.

7.3 Operation on grounded infeed

Introduction

Information is provided below on the overall configuration of an S7-1500 automation system/ET 200MP distributed I/O system on a grounded infeed (TN-S system). The specific subjects discussed are:

- Shut-off devices, short circuit and overload protection in accordance with
  - IEC 60364, corresponds to DIN VDE 0100
  - IEC 60204, corresponds to DIN VDE 0113
- Load current supplies and load circuits

Grounded infeed

In the case of grounding incoming supplies (TN-S system) the neutral conductor (N) and the protective conductor (PE) are each grounded. Both conductors form a part of the overvoltage concept. When a plant is in operation, the current flows across the neutral conductor. When a fault occurs, for example a single ground fault between a live conductor and ground, the current flows through the protective conductor.

Safe electrical isolation (SELV in accordance with IEC 61131-2 or IEC 61010-2-201)

Load power supplies/system power supplies with a 24 V DC output voltage require safe electrical isolation and a voltage limit (extra low voltage). Load power supplies/system power supplies with a 24 V DC output voltage are not connected to the protective conductor.
In accordance with IEC 61131-2 / IEC 61010-2-201, this protection is referred to as SELV (Safety Extra Low Voltage).

Either the wiring of SELV circuits must be safely isolated from the wiring of other circuits that are not SELV, or the insulation of all wires must be dimensioned for the higher voltage.

Protective extra-low voltage (PELV in accordance with IEC 61131-2 or IEC 61010-2-201)

Load power supplies/system power supplies with a protective 24 V DC output voltage require a safe connection to the protective conductor and a voltage limit (extra low voltage).

In accordance with IEC 61131-2 / IEC 61010-2-201, this protection is referred to as PELV (Protective Extra Low Voltage).

Either the wiring of PELV circuits must be safely isolated from the wiring of other circuits that are not PELV, or the insulation of all wires must be dimensioned for the higher voltage.

Reference potential of the controller

The reference potential of the S7-1500 automation system/ ET 200MP distributed I/O system is connected with the mounting rail through a high-resistance RC combination in the CPU/interface module. In this way, high-frequency interference currents are conducted and electrostatic charges are avoided. Despite the grounded mounting rail, the reference potential of the S7-1500 automation system / ET 200MP distributed I/O system has to be considered as ungrounded due to the high-resistance connection.

If you want to configure the S7-1500 automation system/ET 200MP distributed I/O system with grounded reference potential, connect the M connection of the CPU/interface module galvanically with the protective conductor.

You can find a simplified representation of the potential relationships in section Electrical configuration (Page 158).

Short-circuit and overload protection

Various measures as protection against short-circuits and overloads are required for setting up a full installation. The nature of the components and the degree to which the required measures are binding depends on the IEC (DIN VDE) regulation applicable to your plant configuration. The table refers to the following figure and compares the IEC (DIN VDE) regulations.

Table 7- 1 Components and required measures

	Reference to following figure	**IEC 60364 (DIN VDE 0100)**	**IEC 60204 (DIN VDE 0113)**
Shut-off device for control system, sensors, and actuators	①	Main switch	Disconnector
Short-circuit and overload protection: In groups for sensors and actuators	② ③	Single-pole protection of circuits	• With grounded secondary circuit: fuse **unipolar** • Otherwise: fuse **all poles**
Load power supply for AC load circuits with more than five items of electromagnetic equipment	④	Galvanic isolation by transformer **recommended**	Galvanic isolation by transformer **recommended**

S7-1500/ET 200MP in the overall configuration

The figure below shows the overall configuration of the S7-1500/ET 200MP (load current supply and grounding concept) with infeed from a TN-S system.

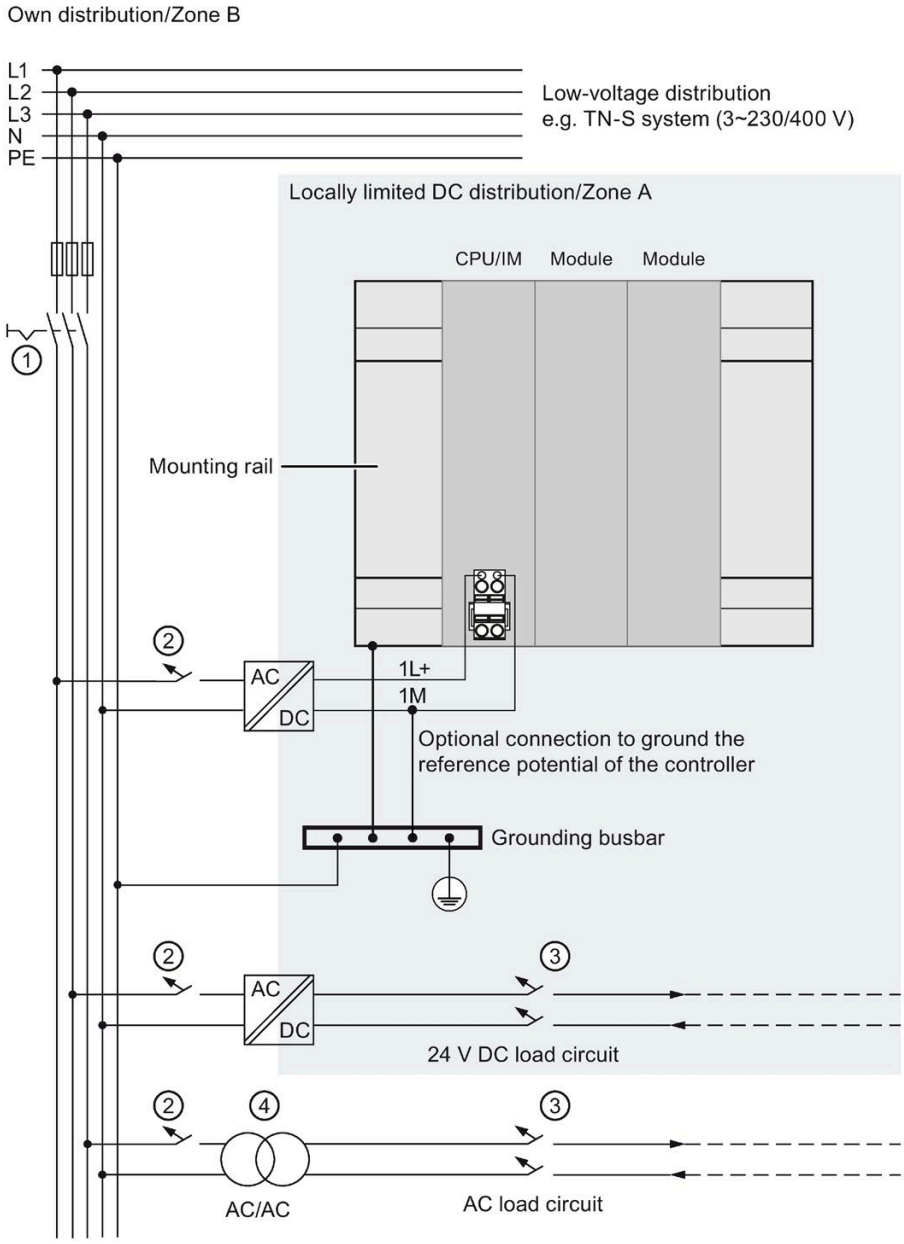

① Main switch
② Short-circuit and overload protection on the primary side
③ Short-circuit and overload protection on the secondary side
④ Optional for galvanic isolation

Figure 7-1 Operating the S7-1500/ET 200MP with grounded reference potential

Note

In general, you need to connect the DC I/O modules of the S7-1500 automation system/ ET 200MP distributed I/O system to your own distribution (or batteries) via an upstream, local power supply unit. If you connect the DC I/O modules directly to your own distribution, you need to provide additional protective measures against overvoltages.

7.4 Electrical configuration

Galvanic isolation

With the S7-1500 automation system/ET 200MP distributed I/O system, there is galvanic isolation between:

- The primary side of the system power supply (PS) and all other circuit components
- The (PROFIBUS/PROFINET) communication interfaces of the CPU/interface module and all other circuit components
- The load circuits/process electronics and all other circuit parts of the S7-1500/ET 200MP components

High-frequency interference currents are conducted and electrostatic charges are avoided through integrated RC combinations or integrated capacitors.

S7-1500 potential relationships

The following figure shows a simplified representation of the potential relationships of the S7-1500 automation system.

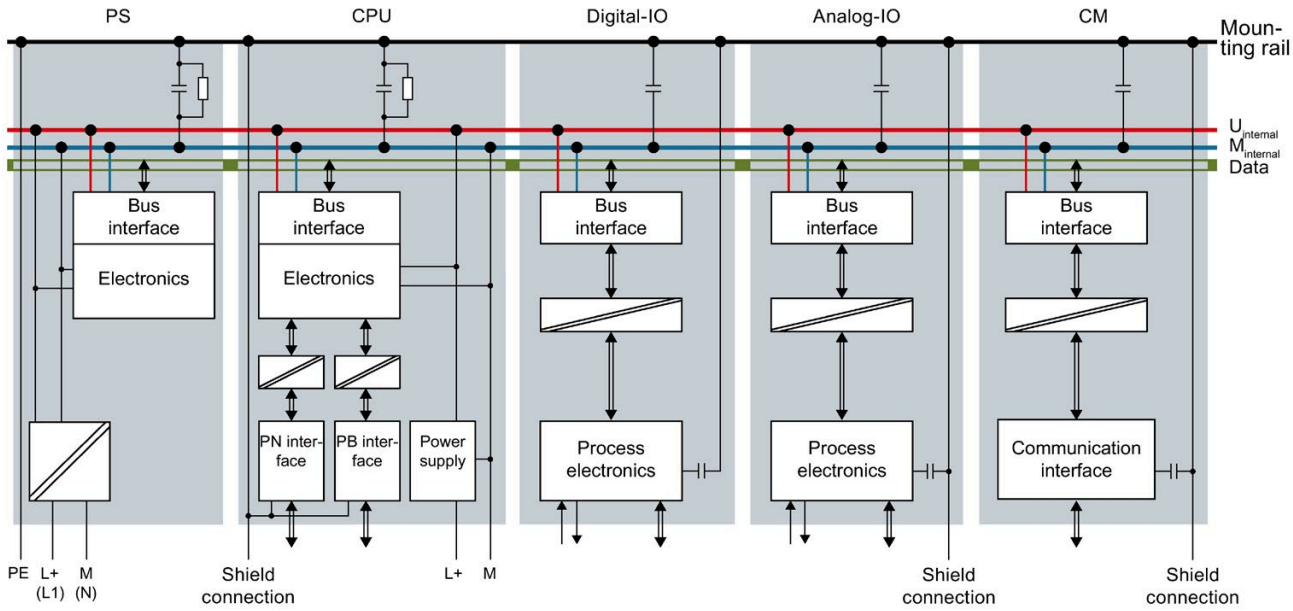

Figure 7-2 Potential relationships for S7-1500 using CPU 1516-3 PN/DP as an example

Potential relationships ET 200MP on PROFINET IO

The following figure shows a simplified representation of the potential relationships of the ET 200MP distributed I/O system on PROFINET IO.

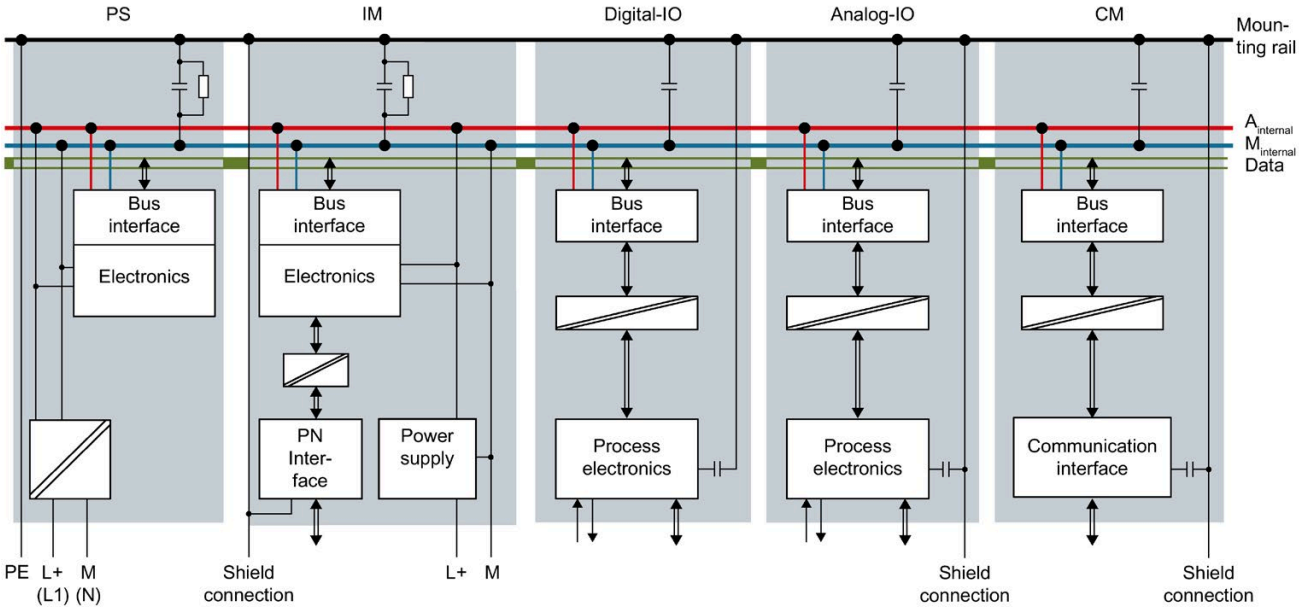

Figure 7-3 Potential relationships for ET 200MP using an IM 155-5 PN HF interface module as an example

Potential relationships ET 200MP on PROFIBUS DP

The following figure shows a simplified representation of the potential relationships of the ET 200MP distributed I/O system on PROFIBUS DP.

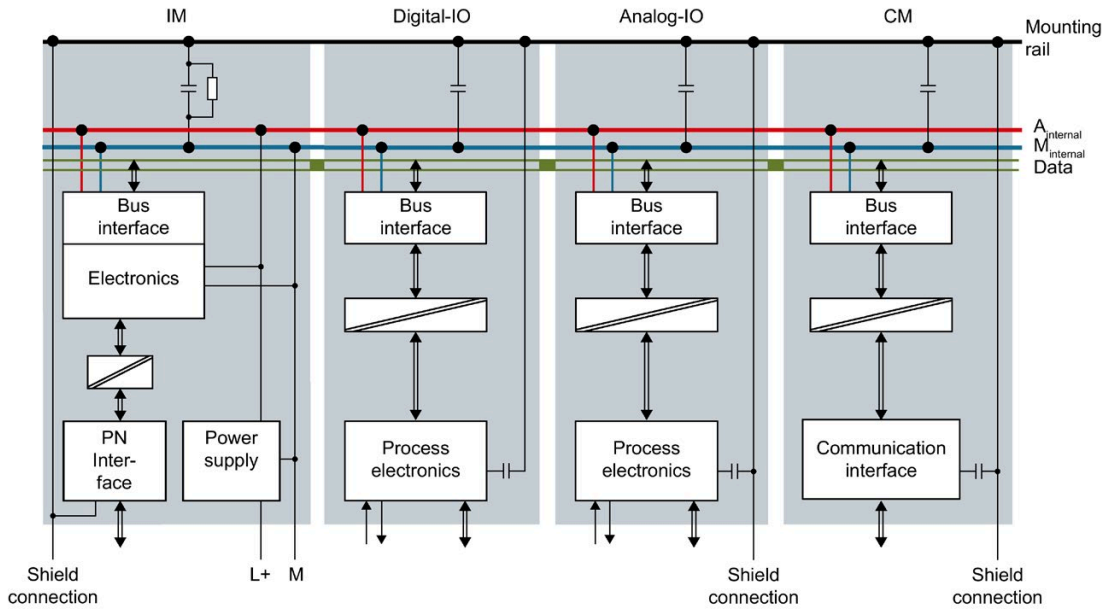

Figure 7-4 Potential relationships for ET 200MP using an IM 155-5 DP ST interface module as an example

7.5 Wiring rules

Introduction

Use suitable cables for connecting the S7-1500 automation system/ET 200MP distributed I/O system. Also select the cable insulation corresponding to the applied voltage. The following tables present the wiring rules for the CPU, interface module, system power supply, load current supply, front connector and power supply elements.

CPU, interface module, system power supply and load current supply

Table 7- 2 Wiring rules for CPU, interface module, system power supply and load current supply

Wiring rules for ...		CPU/interface module	System power and load current supply
Permitted cable cross-sections of solid cables (Cu)		-	-
		-	-
Permitted cable cross-sections of flexible cables (Cu)	Without wire end sleeve	0.25 to 2.5 mm^2	0.5 to 2.5 mm^2
		AWG*: 24 to 14	AWG*: 20 to 14
	With end sleeve	0.25 to 1.5 mm^2	0.5 to 1.5 mm^2
		AWG*: 24 to 16	AWG*: 20 to 16
Number of wires per connection		1	1
Stripped length of the wires		10 to 11 mm	7 to 8 mm
End sleeves according to DIN 46228	without plastic sleeve	Design A, 10 mm long	Design A, 7 mm long
	with plastic sleeve 0.25 to 1.5 mm^2	Design E, 10 mm long	Design A, 7 mm long
Sheath diameter		-	8.5 mm
Tool		3 to 3.5 mm screwdriver, conic design	3 to 3.5 mm screwdriver, conic design
Connection system		Push-in terminal	Screw terminal
Tightening torque		-	from 0.5 Nm to 0.6 Nm

* American Wire Gauge

Front connectors

Table 7- 3 Wiring rules for front connector

Wiring rules for ...		40-pin front connector (screw terminal, for 35 mm module)	40-pin front connector (push-in terminal, for 35 mm module)	40-pin front connector (push-in terminal, for 25 mm module)
Permitted cable cross-sections of solid cables (Cu)		up to 0.25 mm²	up to 0.25 mm²	up to 0.25 mm²
		AWG*: up to 24	AWG*: up to 24	AWG*: up to 24
Permitted cable cross-sections of flexible cables (Cu)	Without wire end sleeve	0.25 to 1.5 mm²	0.25 to 1.5 mm²	0.25 to 1.5 mm² (max. 40 x 0.75 mm²)
		AWG*: 24 to 16	AWG*: 24 to 16	AWG*: 24 to 16 mm² (max. 40 x 0.75 mm²)
	With end sleeve	0.25 to 1.5 mm²	0.25 to 1.5 mm²	0.25 to 1.5 mm² (max. 32 x 0.75 mm²; 8 x 1.5 mm²)
		AWG*: 24 to 16	AWG*: 24 to 16	AWG*: 24 to 16 (max. 32 x AWG 19; 8 x AWG 16)
Number of wires per connection		1 or combination of 2 wires up to 1.5 mm² (total) in the same end sleeve	1 or combination of 2 wires up to 1.5 mm² (total) in the same end sleeve	1 or combination of 2 wires up to 1.5 mm² (total) in the same end sleeve
Stripped length of the wires		8 mm up to max. 0.75 mm²(corresponding to length of end sleeve**: 8 mm) 10 to 12 mm for all cross-sections (corresponding to length of end sleeve**: 10 mm, 12 mm)	8 to 11 mm (corresponding to length of end sleeve**: 8 mm, 10 mm)	8 to 11 mm (corresponding to length of end sleeve**: 8 mm, 10 mm)
End sleeves according to DIN 46228	without plastic sleeve	Design A: 8 mm long up to max. 0.75 mm², 10 mm and 12 mm long for all cross-sections	Design A: 8 mm and10 mm long	Design A: 8 mm and10 mm long
	with plastic sleeve 0.25 to 1.5 mm²	Design E 8 mm long up to max. 0.75 mm², 10 mm and 12 mm long for all cross-sections	Design E 8 mm and10 mm long	Design E 8 mm and10 mm long
Sheath diameter		-	-	-
Tool		3 to 3.5 mm screwdriver, conic design	3 to 3.5 mm screwdriver, conic design	3 to 3.5 mm screwdriver, conic design
Connection system		Screw terminal	Push-in terminal	Push-in terminal
Tightening torque (screw terminal)		From 0.4 Nm to 0.7 Nm	-	-

Wiring rules for ...	40-pin front connector (screw terminal, for 35 mm module)	40-pin front connector (push-in terminal, for 35 mm module)	40-pin front connector (push-in terminal, for 25 mm module)
Max. actuating force for complete opening of the push-in terminal	-	40 N	40 N
Recommended crimp shape for end sleeve	-	Corresponding to crimping tool PZ 6/5 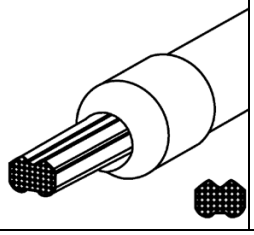	Corresponding to crimping tool PZ 6/5 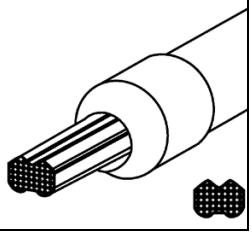

* American Wire Gauge

** End sleeve

Note

40-pin front connector (screw terminal, for 35 mm modules), article number 6ES7592-1AM00-0XB0

In case of a total current of more than 8 A, apply the supply voltage 24 V DC (terminals 19 and 39) and the ground (terminals 20 and 40) twice.

Power supply elements

Table 7- 4 Wiring rules for power supply elements (component of shield set)

Wiring rules for ...		Power supply element (screw terminal, for 35 mm module)	Power supply element (push-in terminal, for 25 mm module)
Permitted cable cross-sections of solid cables (Cu)		-	-
		-	-
Permitted cable cross-sections of flexible cables (Cu)	Without wire end sleeve	0.25 to 1.5 mm^2	0.25 to 1.5 mm^2
		AWG*: 24 to 16	AWG*: 24 to 16
	With end sleeve	0.25 to 1.5 mm^2	0.25 to 1.5 mm^2
		AWG*: 24 to 16	AWG*: 24 to 16
Number of wires per connection		1 or combination of 2 wires up to 1.5 mm^2 (total) in the same end sleeve	1 or combination of 2 wires up to 1.5 mm^2 (total) in the same end sleeve
Stripped length of the wires		8 mm up to max. 0.75 mm^2(corresponding to length of end sleeve**: 8 mm) 10 to 12 mm for all cross-sections (corresponding to length of end sleeve**: 10 mm, 12 mm)	8 to 11 mm (corresponding to length of end sleeve**: 8 mm, 10 mm)
End sleeves according to DIN 46228	without plastic sleeve	Design A: 8 mm long up to max. 0.75 mm^2, 10 mm and 12 mm long for all cross-sections	Design A: 8 mm and10 mm long
	with plastic sleeve 0.25 to 1.5 mm^2	Design E 8 mm long up to max. 0.75 mm^2, 10 mm and 12 mm long for all cross-sections	Design E 8 mm and10 mm long
Sheath diameter		-	-
Tool		3 to 3.5 mm screwdriver, conic design	3 to 3.5 mm screwdriver, conic design
Connection system		Screw terminal	Push-in terminal
Tightening torque (screw terminal)		From 0.4 Nm to 0.7 Nm	-

Wiring rules for ...	Power supply element (screw terminal, for 35 mm module)	Power supply element (push-in terminal, for 25 mm module)
Max. actuating force for complete opening of the push-in terminal	-	40 N
Recommended crimp shape for end sleeve	-	Corresponding to crimping tool PZ 6/5 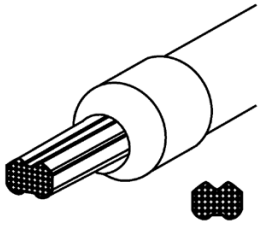

* American Wire Gauge

** End sleeve

Permissible cable temperature

Note

Permissible cable temperature

When choosing a cable, remember that the cable temperature in operation can be up to 30 °C higher than the ambient temperature of the S7-1500/ET 200MP system.

Example: If you use the system in a switchgear cabinet at an ambient temperature of 30 °C, you must use a connecting conductor with a temperature range of at least 60 °C.

With terminals that carry a current load of ≥ 8 A during operation, you must expect a cable temperature of up to 65 °C above the ambient temperature.

You can determine the required cable temperature more precisely for each application. To do so, measure the cable temperature in the system at a load corresponding to the maximum possible power and ambient temperature values.

You should specify other connection types and material requirements based on the electrical characteristics of the circuits you use and the installation environment.

7.6 Connecting the supply voltage

Introduction

The supply voltage of the CPU/interface module is supplied by means of a 4-pole connection plug, which is located on the front or below on the CPU / interface module.

Connection for supply voltage (X80)

The connections of the 4-pole connector have the following meaning:

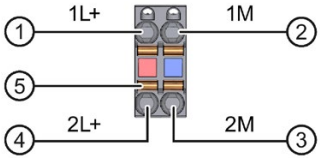

① +24 V DC of the supply voltage (current limited to 10 A)
② Ground of the supply voltage (current limited to 10 A)
③ Ground of the supply voltage for loop-through
④ +24 V DC of the supply voltage for loop-through
⑤ Spring opener (one spring opener per terminal)

Figure 7-5 Connection for supply voltage

The cable connector offers you the option of looping the supply voltage uninterrupted, even when it is unplugged.

For the maximum wire cross-sections, observe the information in the tables of the Wiring rules (Page 162).

Requirements

- Only wire the cable connector when the supply voltage is turned off.
- Observe the Wiring rules (Page 162).

Tools required

3 to 3.5 mm screwdriver

Tool-free connection of cables: multi-wire (stranded), with end sleeve or ultrasonic compressed

To connect a wire without tools, follow these steps:

1. Strip 8 to 11 mm of the wires.
2. Seal or crimp the wire with end sleeves.
3. Insert the wire into the push-in terminal as far as it will go.
4. Push the wired connector into the socket of the CPU/interface module.

Connection of wires: multi-wire (stranded), without end sleeve, unprocessed

To connect a wire without end sleeve, follow these steps:

1. Strip 8 to 11 mm of the wires.
2. Using a screwdriver, press the spring release and insert the wire into the push-in terminal as far as it will go.
3. Pull the screwdriver out of the spring release.
4. Push the wired connector into the socket of the CPU/interface module.

Loosening a wire

Push with the screwdriver as far as it will go into the spring release. Remove the wire from the push-in terminal.

Uninstalling the connection plug

To uninstall the connection plug, you need a screwdriver. With the screwdriver, pry the connection plug out of the CPU/interface module.

7.7 Connecting system power supply and load current supply

Introduction

In the delivery condition of the system power supplies/load current supplies, power connectors are inserted. The modules and the associated power connectors are coded. There are two parts to the coding element. One coding element is located in the module, and the other in the power connector. The system power supplies/load current supplies use identical power connectors for the voltage connection.

The coding element prevents the insertion of a power connector into a different type of system power supply/load current supply.

Tools required

3 to 3.5 mm screwdriver

Connecting the supply voltage to a system power supply/load current supply

Watch video sequence (https://support.industry.siemens.com/cs/ww/en/view/78027451)

To connect the supply voltage, follow these steps:

1. Swing the front cover of the module up until the front cover latches.
2. Press down the unlocking button of the power cable connector (Figure 1). Remove the power cable connector from the front of the module.
3. Loosen the screw on the front of the connector. This loosens the housing latch and the cable relief. With a tightened screw the connector's cover can't be removed (Figure 2).
4. Pry off the connector cover using a suitable tool (Figure 3).

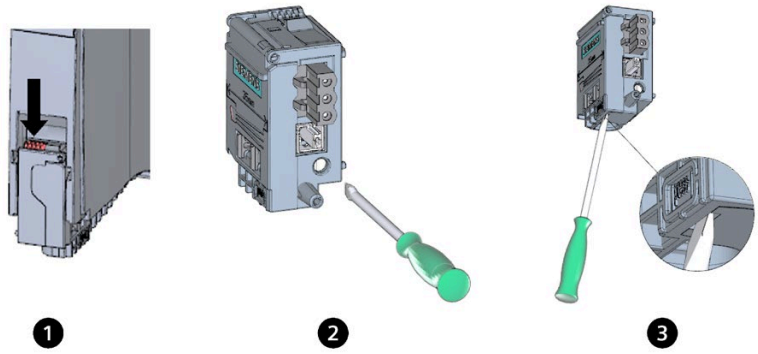

Figure 7-6 Connecting the supply voltage to a system power supply/load current supply (1)

5. Strip the cable jacket to a length of 35 mm and the conductors to a length of 7 to 8 mm. Attach the end sleeves.
6. Connect the wires in the connector according to the connection diagram (Figure 4).
7. Close the cover (Figure 5).
8. Retighten the screw (Figure 6). This effects a strain relief on the lines.

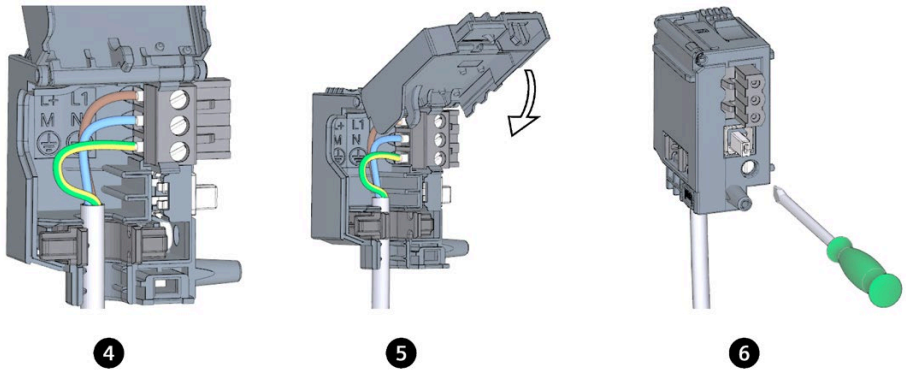

Figure 7-7 Connecting the supply voltage to a system power supply/load current supply (2)

9. Insert the power connector into the module, until the latch engages.

Reference

You can find more information on connecting the 24 V DC output voltage of the load power supply (PM) in the manuals for the relevant modules.

7.8 Connecting the CPU/interface module to the load current supply

Introduction

The load current supply is fitted with a plug-in 24 V DC output terminal (behind the front cover at the bottom). You connect the cables for the supply voltage to the CPU/interface module at this terminal.

Requirements

- Only wire the connection plug when the supply voltage is turned off.
- The connection plug for connecting the supply voltage to the CPU/interface module is already mounted.

You can find additional information in the section Connecting the supply voltage (Page 167).

Tools required

3 to 3.5 mm screwdriver

Connecting the CPU/interface module to a load current supply

Watch video sequence (https://support.industry.siemens.com/cs/ww/en/view/78027451)

To connect the supply voltage, follow these steps:

1. Open the front cover of the load power supply. Pull the 24 V DC output terminal downwards.
2. Connect the 24 V DC output terminal to the wires of the 4-pole connection plug of the CPU/interface module.

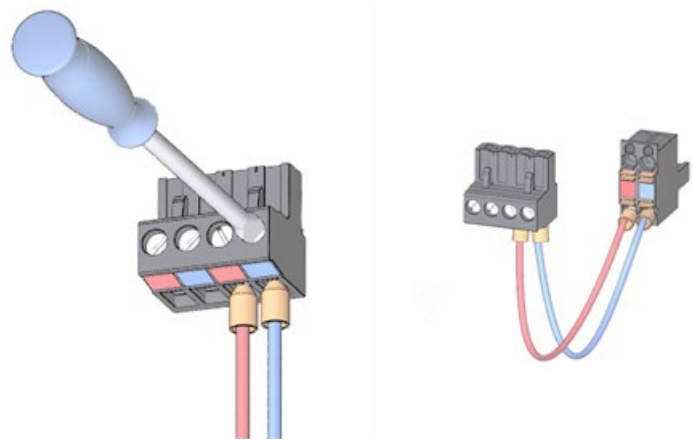

3. Connecting the load current supply to the CPU/interface module.

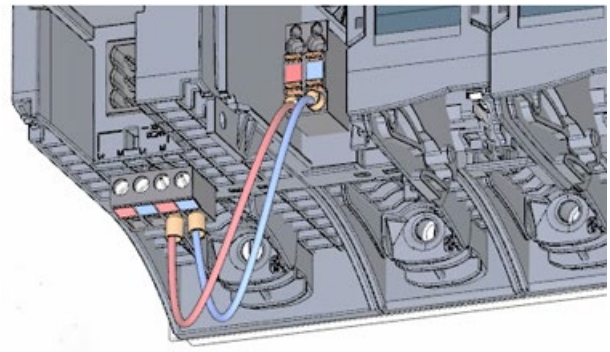

Note

Connection on the underside of the device

The connection socket for the 4-pole connection plug is located on the underside of the device for the following CPUs/interface modules:

- Standard, F-CPUs/compact CPUs from order number 6ES751x-xxx02-0AB0/6ES751x-1CK01-0AB0
- Interface modules IM 155-5 PN BA as of order number 6ES7155-5AA00-0AA0 and IM 155-5 PN ST as of order number 6ES7155-5AA01-0AB0

Additional information can be found in the associated manuals for the CPUs/interface modules.

7.9 Connecting interfaces for communication

Connecting interfaces for communication

Connect the communication interfaces of the CPU/interface module using standardized plug connectors.

Use prefabricated connecting cables for the connection. If you want to prepare communication cables yourself, the interface assignment is specified in the manuals of the corresponding modules. Observe the mounting instructions for the connectors.

Special consideration: Unlock connectors Industrial Ethernet FastConnect RJ45 plug 180 2x 2 or Industrial Ethernet FastConnect RJ45 plug 180 4x 2 and disconnect from PROFINET interface of CPU/IM

Tools required

- Industrial Ethernet FastConnect RJ45 Plug 180 2x 2 (6K1901-1BB10-2Ax0): **2.5 mm screwdriver**
- Industrial Ethernet FastConnect RJ45 Plug 180 4x 2 (6GK1901-1BB12-2Ax0): **3.0 mm screwdriver**

Procedure

1. Press the screwdriver parallel to the connector into the unlocking.
2. Disconnect the connector from the PROFINET interface.

Note

Do not unlock the connector under tension!

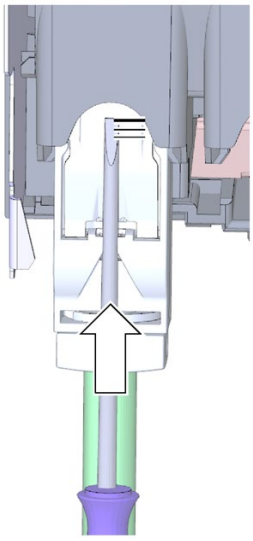

Figure 7-8 Unlocking the FastConnect connector

7.10 Front connector for the I/O modules

Introduction

The sensors and actuators of your plant are connected to the automation system by means of front connectors. Wire the sensors and actuators to the front connector. Plug the front connector with the wired sensors and actuators onto the I/O module.

You can wire the front connector as follows:

- In the "pre-wiring position", which allows a convenient wiring
- Completely, before you insert it into the I/O module.

You can remove the front connector easily from the I/O module with the wiring attached. This means it is not necessary to loosen the wiring when you replace the module.

Device versions of the front connector

① Front connector 35 mm with screw terminals
② Front connector 25 mm with push-in terminals
③ Front connector 35 mm with push-in terminals

Figure 7-9 Device versions of the front connector

Properties of the front connectors

The three different front connectors are characterized as follows:

- 40 clamping points each
- Connection system: Screw terminal (for 35 mm modules only) or push-in terminal
- Module width: 35 mm or 25 mm
- If you want to supply load groups with the same potential (non-isolated), use the potential bridges supplied for the front connector (with 35 mm width) for digital I/O modules. The bridges are used to connect the terminals 9 and 29, 10 and 30, 19 and 39 as well as 20 and 40 facing each other. Advantage: Reduction of the wiring effort.

  Note

  Use of potential bridges

  The use of potential bridges depends on the relevant module used.

  It is not permitted to use potential bridges for 230 V modules. Use the potential bridges only with a maximum supply voltage of 24 V DC. The current capacity per potential bridge is 8 A maximum.

  Because of the different assignment, you may not use the potential bridges with analog I/O modules.

  The front connectors for 25 mm modules have no potential bridges.

  Observe the instructions and wiring rules in the product manual of the respective I/O module when using potential bridges.

- In the delivery state a coding element is located in the module. When the front connector is first inserted into the I/O module, a part of the coding element clips onto the front connector. When the front connector is removed from the I/O module, one part of the coding element remains in the front connector, and the other part remains in the I/O module. The insertion of a front connector that is not suited to the module is thereby mechanically prevented. This ensures, for example, that the front connector with the coding element for a digital module cannot be inserted into an analog module.

Properties of the front connectors on fail-safe modules

In as-delivered condition, a fail-safe module not only has a mechanical coding element but also an electronic coding element. The electronic coding key is a rewritable memory for the PROFIsafe address. When the front connector is inserted in the F-module, the electronic coding element engages completely in the front connector. If you remove the front connector from the F-module, the memory with the PROFIsafe address of the fail-safe module remains in the front connector (see section Replacing a front connector (Page 307)).

Reference

You can find additional information on the coding element in the section Coding element on the I/O module and on the front connector (Page 303).

Additional information on the use of the potential bridges can be found in the product manual for the respective I/O module.

7.10.1 Wiring front connectors for I/O modules without shield contact element

Requirements

- The I/O modules are installed on the mounting rail.
- The supply voltages are turned off.
- The cables are prepared according to the clamping technology used; take the Wiring rules (Page 162) into account for this purpose.

Tools required

- Stripping tool
- 3 to 3.5 mm screwdriver

Preparing and wiring front connectors for I/O modules without shield contact element

Proceed as follows to wire the front connector:

1. Shut down the load current supply.
2. Place the included cable strain relief (cable tie) for the cable harness into the front connector (Figure 1).
3. Swing the front cover of the wired I/O module up until the front cover latches (Figure 2). Watch video sequence (https://support.industry.siemens.com/cs/ww/en/view/67462859)

4. Bring the front connector into the pre-wiring position. To do this, hook the front connector into the bottom of the I/O module and swivel the front connector upward until the front connector latches (Figure 3).

   Result: In this position, the front connector still protrudes from the I/O module (Figure 4). However, front connector and I/O module are not yet electrically connected. By means of the pre-wiring position, you can easily wire the front connector.

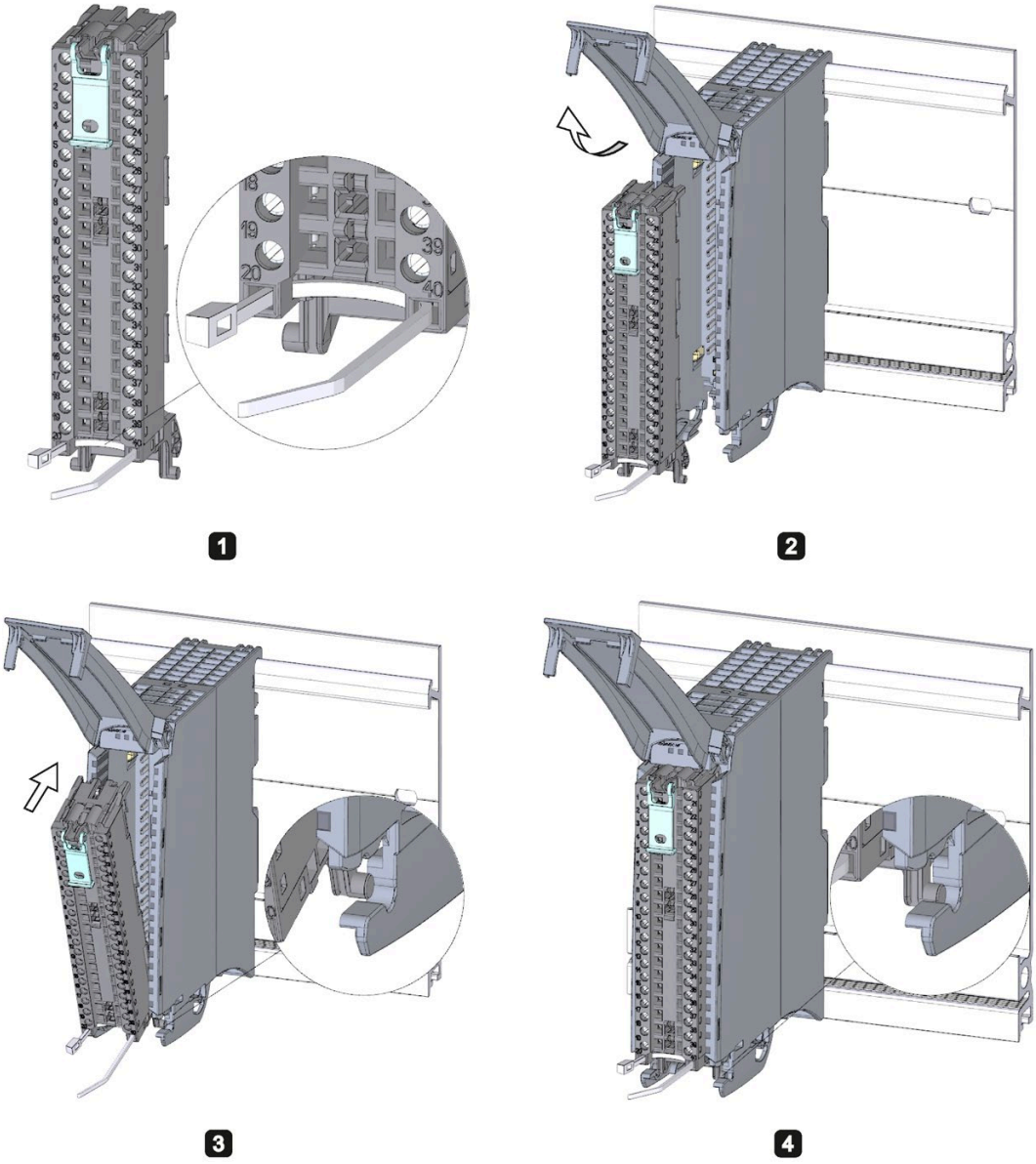

Figure 7-10 Wiring front connectors for I/O modules without shield contact element

5. Begin to completely wire the front connector.
6. Put the strain relief around the cable harness, and pull the strain relief for the cable harness tight.

Use of the potential bridges on 35 mm digital modules

With the delivered potential bridges, for digital modules with a maximum rated voltage of 24 V DC, you can bridge the terminals for the voltage supply and thus reduce the wiring effort. The bridges are used to connect the following pairs of opposing terminals: 9 and 29, 10 and 30, 19 and 39 as well as 20 and 40.

Reference

Additional information on wiring the inputs and outputs can be found in the manuals for the I/O modules.

7.10.2 Wiring front connectors for I/O modules with shield contact element

Requirements

- The I/O modules are installed on the mounting rail.
- The supply voltages are turned off.
- The wires are prepared according to the clamping technology used. To do this, follow the Wiring rules (Page 162).

Tools required

- Stripping tool
- 3 to 3.5 mm screwdriver
- Flat pliers

Details view

The shielding bracket, the power supply element, and the shielding clamp are included in the scope of delivery for the analog and technology modules.

The following figure shows the details view of a front connector with shield connection element:

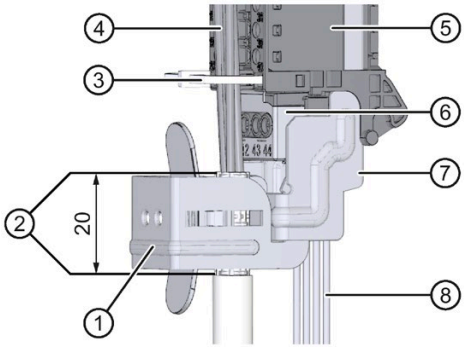

①	Shield clamp	⑥	Power supply element
②	Cable sheathing removed (approx. 20 mm)	⑦	Shielding bracket
③	Strain relief (cable tie)	⑧	Supply lines
④	Signal cables	①+⑦	Shield contact
⑤	Front connectors		

Figure 7-11 Details view for front connectors with shield connection elements

Preparing front connectors for I/O modules with shield contact element

Watch video sequence (https://support.industry.siemens.com/cs/ww/en/view/67462859)

To prepare the front connector for wiring, follow these steps:

1. Remove the connection separator from the lower part of the connector (Figure 1).
2. Insert the power supply element (Figure 2).
3. Insert the shielding bracket from below into the guiding groove of the front connector until the shielding bracket latches into place (Figure 3).

4. Place the included cable strain relief (cable tie) for the cable harness into the front connector (Figure 4).

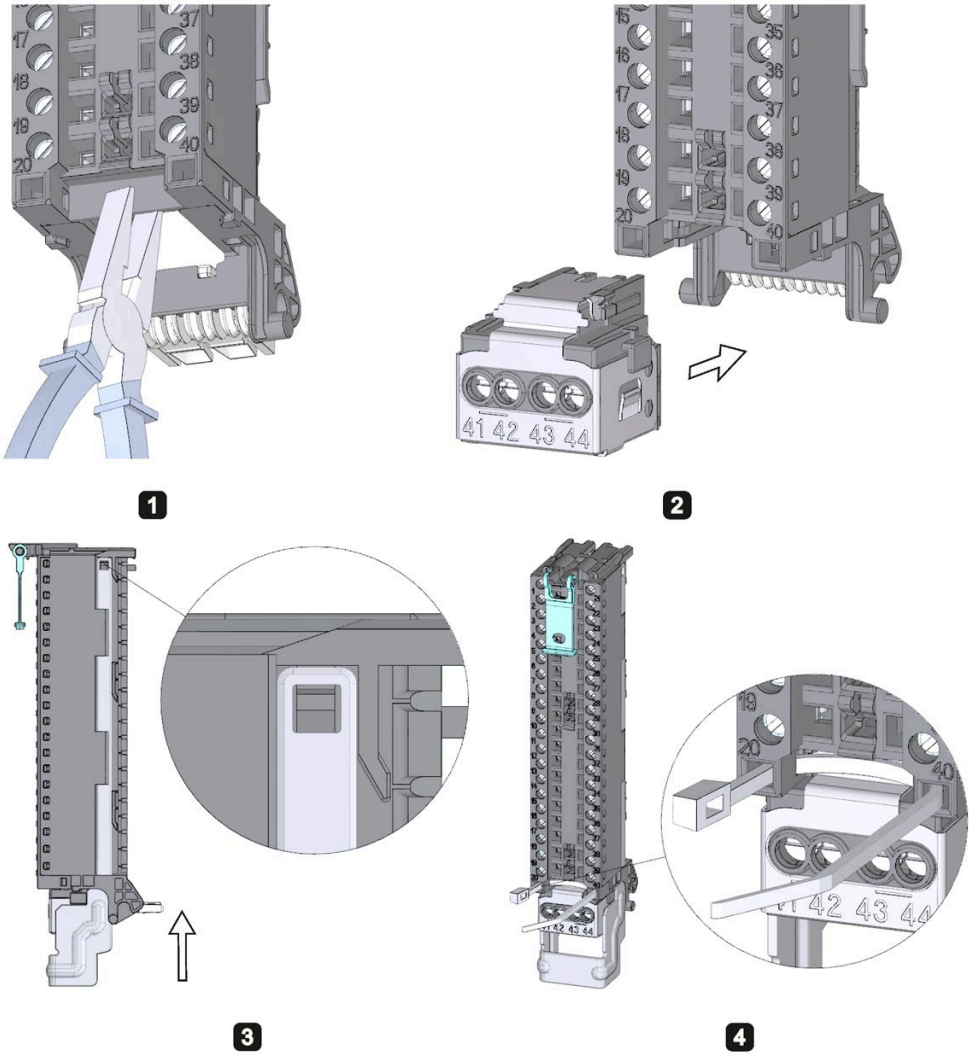

Figure 7-12 Preparing front connectors for I/O modules with shield contact element (1)

5. Swing the front cover up until the front cover latches (Figure 5).

6. Bring the front connector into the pre-wiring position. To do this, hook the front connector into the bottom of the I/O module and swivel it upwards until the front connector latches (Figure 6).

   Result: In this position, the front connector still protrudes from the I/O module (Figure 7). However, front connector and I/O module are not yet electrically connected.

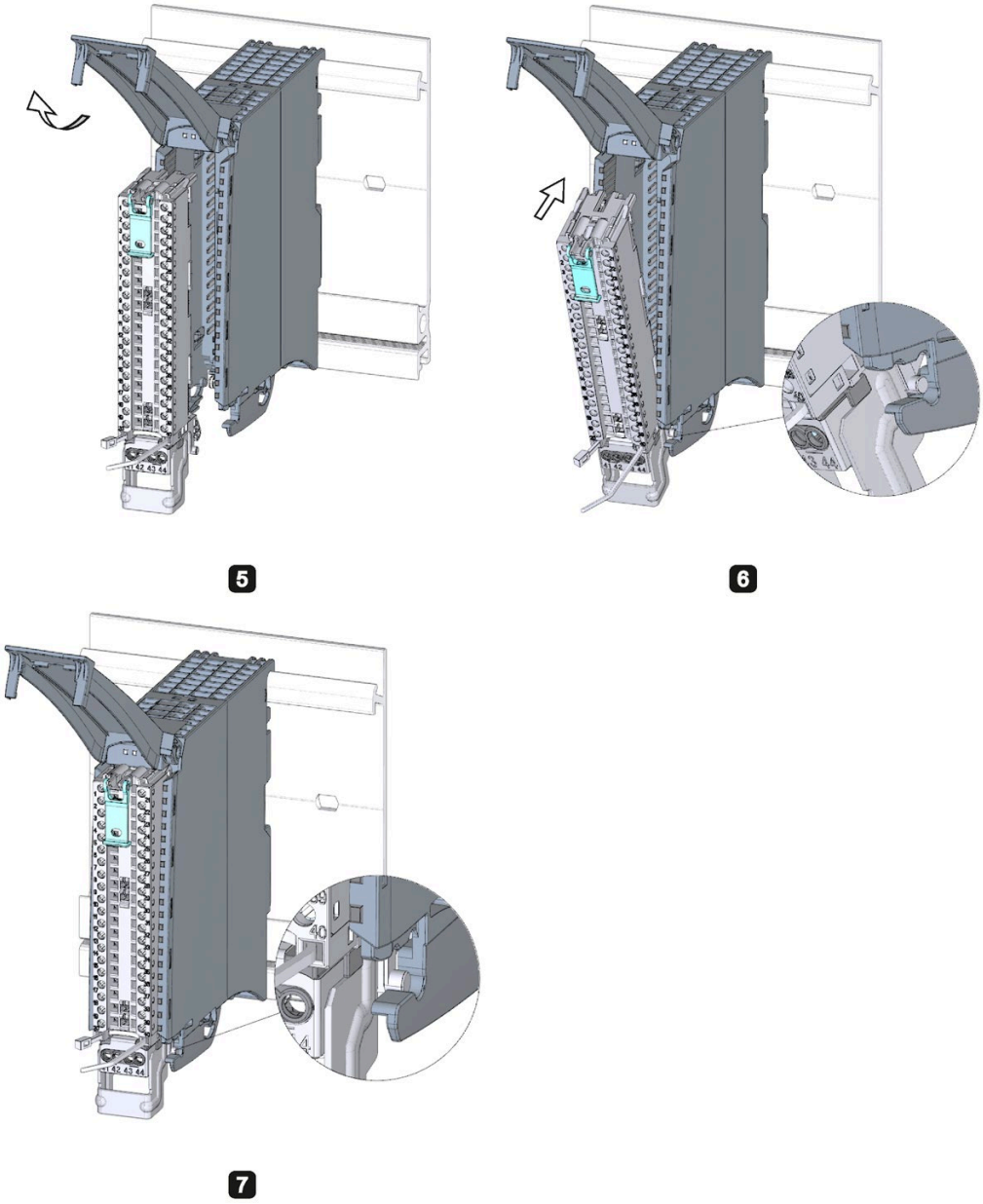

Figure 7-13 Preparing front connectors for I/O modules with shield contact element (2)

7. Wire the power supply element (Figure 8).
   Terminals 41/42 and 43/44 are galvanically connected to each other. If you connect the supply voltage to 41 (L+) and 44 (M), you can then loop-through the potential to the next module (max. 8 A) with terminals 42 (L+) and 43 (M).

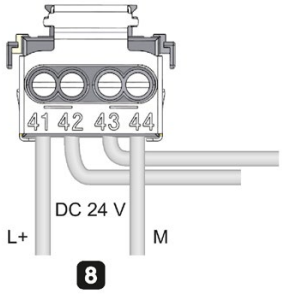

Figure 7-14 Preparing front connectors for I/O modules with shield connection element (3)

Wiring front connectors for I/O modules with shield contact element

To wire a front connector, follow these steps:

1. Strip the cable shielding.
2. Begin to completely wire the front connector (Figure 1).

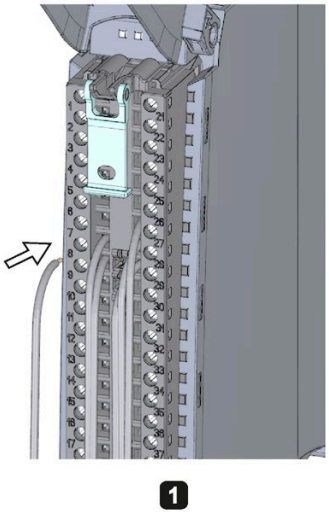

Figure 7-15 Wiring front connectors for I/O modules with shield connection element (1)

3. Put the strain relief (cable tie) around the cable harness, and pull the strain relief for the cable harness tight (Figure 2).

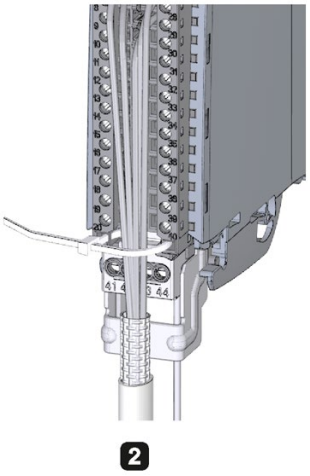

Figure 7-16 Wiring front connectors for I/O modules with shield connection element (2)

4. Insert the shield clamp from below into the shielding bracket in order to connect the cable shielding (Figure 3).

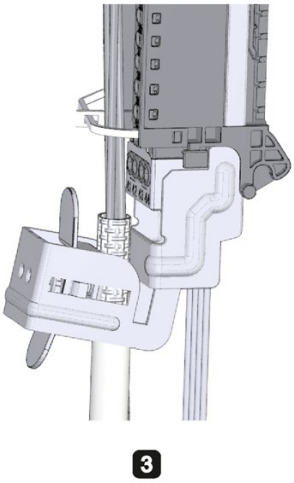

Figure 7-17 Wiring front connectors for I/O modules with shield connection element (3)

Functions of the shield contact

The shield contact:

- Is needed to apply cable shields (e.g., for analog modules)
- Interference currents on cable shields are diverted from the shield connection to ground via the mounting rail. The shielding connection is not required at cable entry into the switchboard.
- The shield support has a cable storage area of 18 mm x 15 mm.

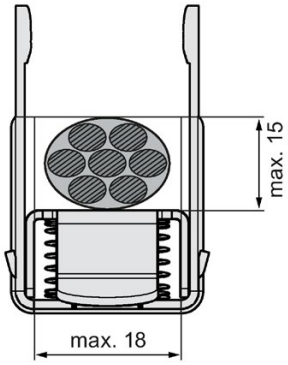

Figure 7-18 Shield clamp

Reference

Additional information on wiring the inputs and outputs can be found in the manuals for the I/O modules.

7.10.3 Bringing the front connector into final position

Bring the front connector from the pre-wiring position into final position

Proceed as follows to bring the front connector from the pre-wiring position into final position:

1. Grip the front connector by the unlocking strap.
2. Pull on the strap until the front connector is released from its latched position.
3. Tilt the top section of the front connector and raise it slightly. The front connector slides over the guide channel into its final position.

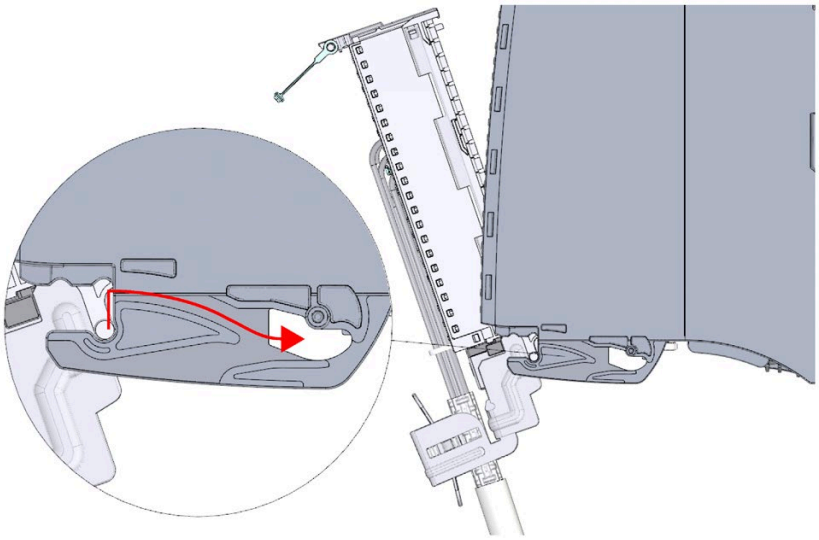

Figure 7-19 Bring the front connector from the pre-wiring position into final position

4. Push the front connector back into the I/O module until it latches. The front connector is now electrically connected with the I/O module.
5. Swivel the front cover down into place. Various latch positions are possible depending on the space requirement of the cable harness so that the required cable storage space can grow as needed.

Bringing the front connector directly into final position

Proceed as follows to bring the front connector directly into final position:

1. Grip the front connector by the unlocking strap.
2. Push the guide pin of the front connector into the guide channel that has been displaced downwards. The front connector slides over the guide channel into its final position.

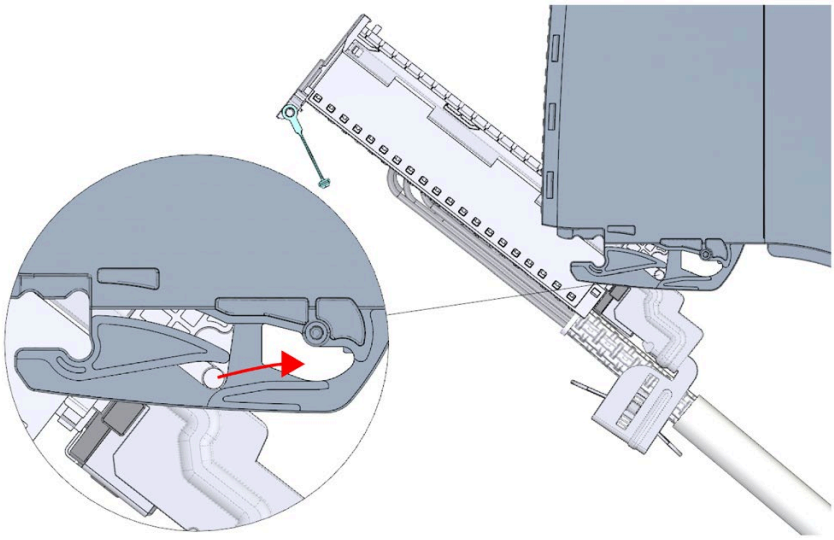

Figure 7-20 Bringing the front connector directly into final position

3. Tilt the front connector and press it into the I/O module until it latches. The front connector is now electrically connected with the I/O module.
4. Swivel the front cover down into place. Various latch positions are possible depending on the space requirement of the cable harness so that the required cable storage space can grow as needed.

7.11 Marking the I/O modules

7.11.1 Labeling strips

Introduction

Mark the pin assignment of the I/O modules using labeling strips. You can label the labeling strips as desired and slide them into the outside of the front cover.

The labeling strips are available in the following models:

- Pre-prepared strips that are included with the I/O module as delivered.
- DIN A4 sheets, pre-perforated strips for machine printing; see section Accessories/spare parts (Page 363)

Preparing and installing the labeling strip

Proceed as follows to prepare and install the labeling strips:

1. Label the labeling strip.

   You can print labeling strips for the modules in your project with STEP 7. The labeling strips are exported to Microsoft Word DOCX files and printed from the text editing program. You can find more information in the online help.
2. With a pre-perforated strip: Separate the labeling strip from the sheet.
3. Slide the labeling strip into the outside of the front cover.

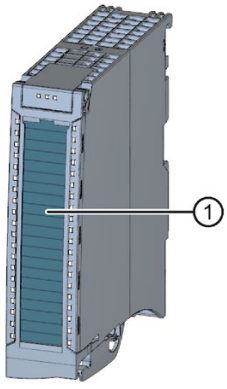

① Labeling strips

Figure 7-21 Marking with labeling strips

7.11.2 Optional marking

Introduction

The I/O modules have a free area on the front cover. You can label or mark the free area yourself.

Optional marking

The front cover provides about 30 mm x 10 mm of space in its lower part for an optional identifier label.

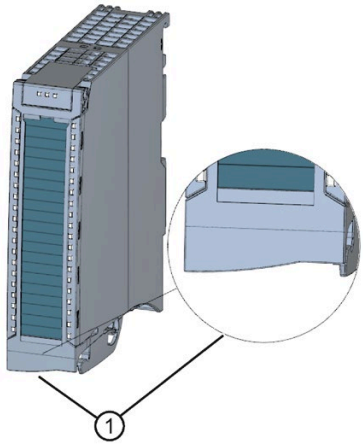

① Free space, for example for equipment identifiers

Figure 7-22 Optional marking

Configuring

8

Introduction

By configuring the individual hardware components, assigning their parameters, and connecting them, you communicate to the S7-1500 automation system/ET 200MP distributed I/O system its preset configuration and operating principle. You perform the work needed for this in the device and network views in STEP 7.

"**Configuring**" is understood to mean the arranging, setup and networking of devices and modules within the device view or network view of STEP 7. STEP 7 graphically represents modules and racks. Just like "real" module racks, the device view allows the insertion of a defined number of modules.

When the modules are inserted, STEP 7 automatically assigns the addresses and a unique hardware identifier (HW identifier). You can change the addresses later. The HW identifiers cannot be changed.

At startup, the system components compare the configured preset configuration with the actual configuration of the system. By means of parameter assignment, you can specify the response of the CPU to errors in the hardware configuration.

"**Assigning parameters**" is understood to mean setting the properties of the components used (CPU, modules).

STEP 7 compiles the hardware configuration (the result of "configuring" and "assigning parameters") and downloads it to the CPU. The CPU then connects to the configured components and transfers their configuration and parameters. Modules can be replaced very easily because when a new module is inserted, STEP 7 transfers its configuration and parameters again.

8.1 Configuring the CPU

Requirements for configuration of the CPU

Configuration software	Installation information
STEP 7 as of V12.0 [1)]	STEP 7 online help

[1)] The following CPUs can be configured as of V12: CPU 1511-1 PN, CPU 1513-1 PN, CPU 1516-3 PN/DP
Note that all other CPUs can be configured only as of a later version (e.g. V12 SP1). Refer to the manual for the CPU to find out whether the version of the CPU you are using is configurable in STEP 7.

Project compatibility of CPUs with firmware version V3.0

In order to download older projects to CPUs with firmware version V3.0, you must upgrade your project to CPUs with at least firmware version 1.8 and article numbers 6ES751x-xxx0**1**-0AB0.

Spare parts compatibility for CPUs with article numbers ≥ 6ES751x-xxx03-0AB0

The following applies to CPUs as of article numbers 6ES751x-xxx0**3**-0AB0:

For these CPUs, spare parts for CPUs with article numbers ≥ 6ES751x-xxx0**1**-0AB0 are compatible for use.

You cannot download STEP 7 projects having a hardware configuration with CPU article number 6ES751x-xxx0**0**-0AB0 to a CPU with article number 6ES751x-xxx0**3**-0AB0. Exception: CPUs S7-1500R, see above

Solution: When exchanging a CPU 6ES751x-xxx0**0**-0AB0 for a successor type 6ES751x-xxx0**3**-0AB0, you must upgrade the STEP 7 project to ≥ 6ES751x-xxx01-0AB0. For the upgrade, use SIMATIC STEP 7 ≥ V13 SP1 Update 3.

Configuring CPUs with article numbers < 6ES751x-xxx03-0AB0 in older STEP 7 versions

CPUs with article numbers ≥ 6ES751x-xxx0**3**-0AB0 are compatible with their predecessor version in terms of spare parts. Manipulation protection, particularly with respect to the SIMATIC Memory Card and RUN/STOP function, is retained.

When replacing a CPU (e.g. 6ES7515-2AM01-0AB0) with a compatible successor type (e.g. 6ES7515-2AM02-0AB0), the STEP 7 project does not have to be changed, nor is it necessary to upgrade the STEP 7 project.

You can still configure modules with new article numbers in STEP 7 as the predecessor version (e.g. 6ES7515-2AM01-0AB0). Because the new article number (e g 6ES7 515-2AN03-0AB0) is not yet contained in previous STEP 7 versions, you can also configure the CPU as predecessor version, i.e. with the previous article number (e.g. 6ES7515-2AM01-0AB0).

References

- If you want to configure new CPUs whose article numbers are not yet included in the hardware catalog of STEP 7, please refer to the following FAQ in the Internet (https://support.industry.siemens.com/cs/ww/en/view/109760846).
- If you want to load project data, but the firmware version installed in the CPU cannot be selected in STEP 7, refer to the following FAQ on the Internet (https://support.industry.siemens.com/cs/ww/en/view/109744163).
- If the supplied module has an article number different to the one which was ordered, refer to the following FAQ on the Internet (https://support.industry.siemens.com/cs/ww/de/view/109763472).
- You can find an overview of the most important documents and links to STEP 7 in the following FAQ on the Internet (https://support.industry.siemens.com/cs/de/de/view/65601780/en).

8.1.1 Reading out the configuration

Introduction

When there is a connection to an existing CPU that is being installed, you can load the configuration of this CPU, including centrally present modules, from the device into your project using the "Hardware detection" function. You do not need to manually configure the CPU and the centrally present modules, as the physical configuration is read out automatically.

If you have already configured a CPU and the centrally present modules and you want to load the current configuration and parameters in a new project, it is advisable to use the "Upload device as new station" function. For additional information about this function, refer to section Backing up and restoring the CPU configuration (Page 274).

Procedure for reading out an existing configuration

1. Create a new project and configure an "Unspecified CPU 1500".

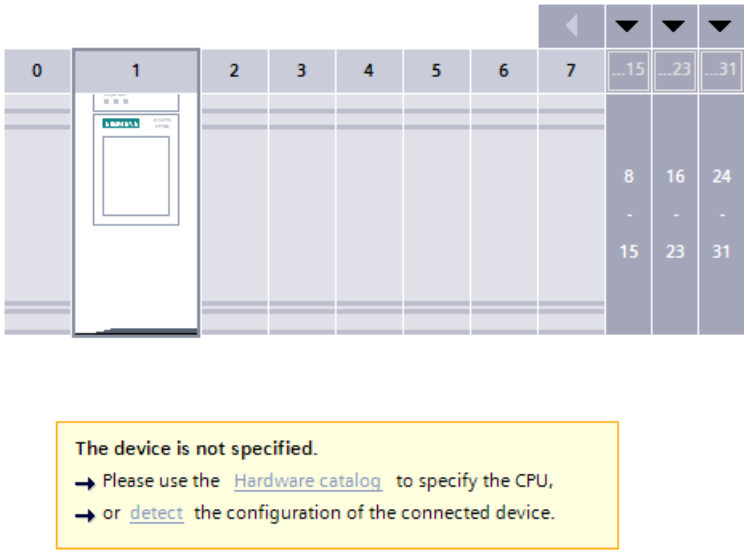

Figure 8-1 Unspecified S7-1500 CPU in the device view

Note

To open the "Hardware detection for PLC_x" dialog, click the "Detect" link. An example can be found in the following FAQ on the Internet (https://support.industry.siemens.com/cs/ww/de/view/41885693/en).

An alternative procedure is described in step 2 and step 3.

2. In the device view (or network view), select the "Hardware detection" command in the "Online" menu.

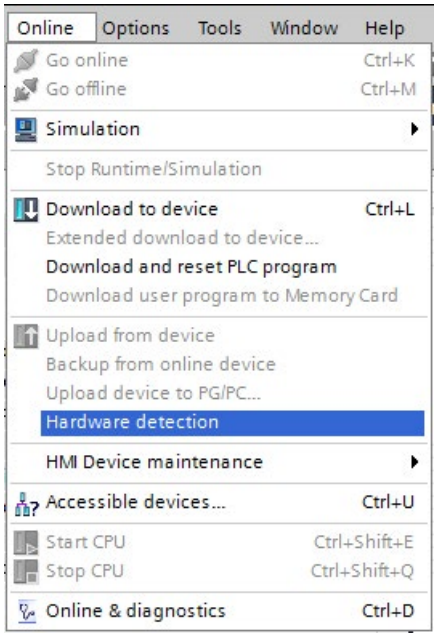

Figure 8-2 Hardware detection in the Online menu

STEP 7 opens the "Hardware detection for PLC_x" dialog box.

3. In the "Hardware detection for PLC_x" dialog, click "Refresh". Then, select the CPU and click "Detect".

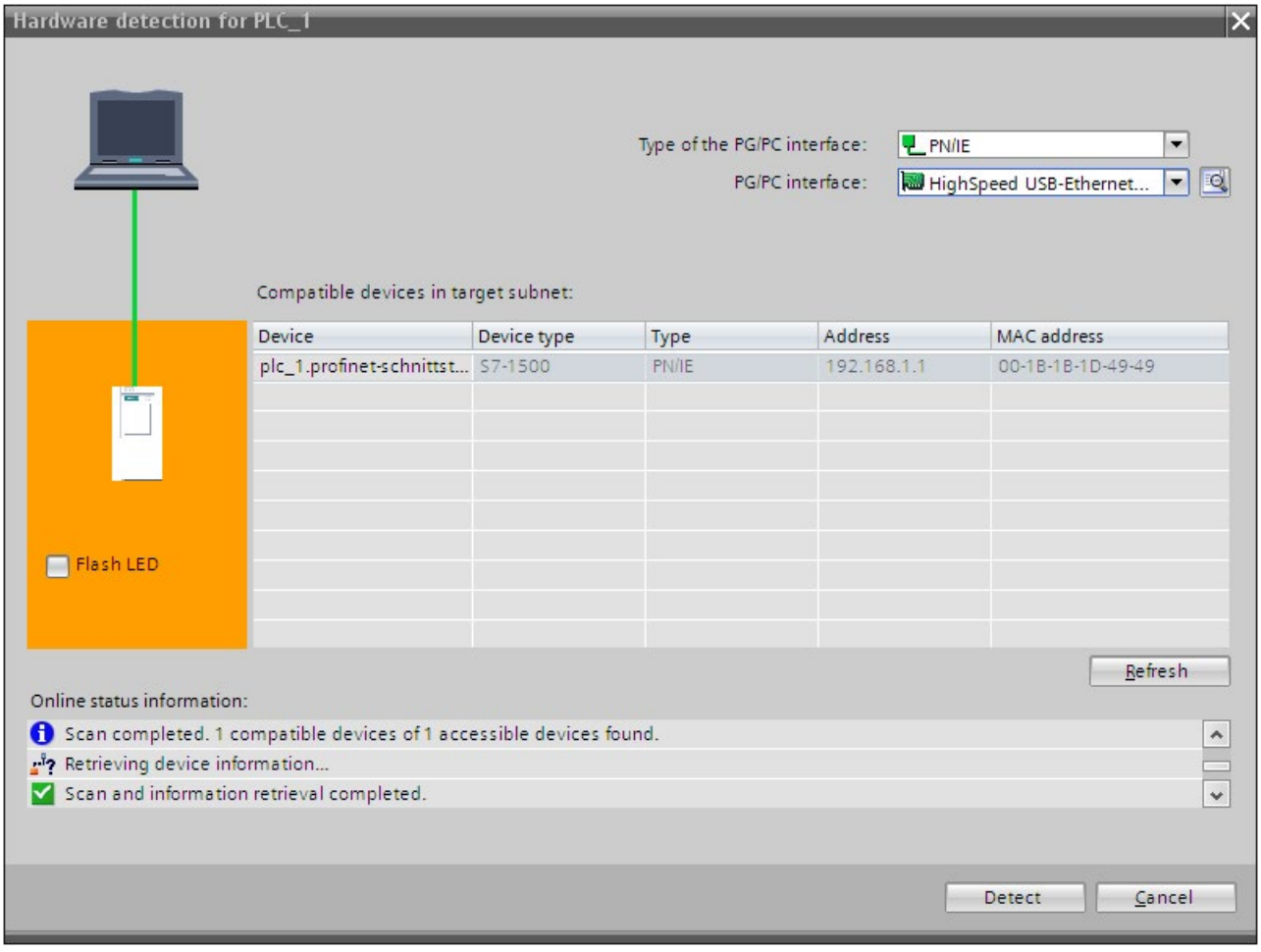

Figure 8-3 Hardware detection dialog box

Result of the hardware detection

STEP 7 has read out the hardware configuration and the modules and transferred them to your project. STEP 7 assigns a valid default parameter assignments for all modules. You can change the parameter assignment subsequently.

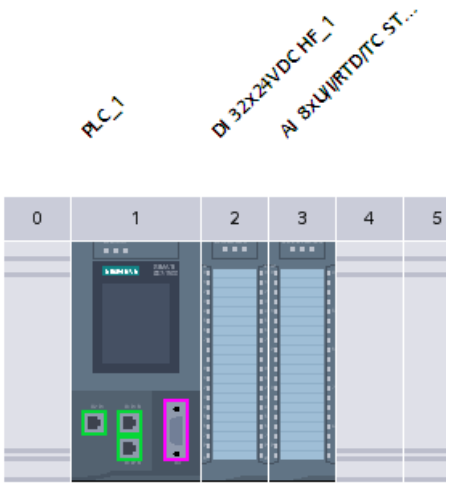

Figure 8-4 Result of the hardware detection in the device view

---

Note

If you want to go online after the hardware detection, you have to first download the detected configuration to the CPU; otherwise, an error may occur due to inconsistent configurations.

You can find an example of downloading a project to the CPU with STEP 7 in the following FAQ on the Internet (https://support.industry.siemens.com/cs/ww/de/view/42637263/en).

Properties of the CPUs

The properties of the CPUs have special significance for system behavior. For a CPU you can make the following settings in STEP 7, for example:

- Startup characteristics
- Parameter assignment of the interfaces, for example, IP address, subnet mask
- Web server, e.g., activation, user administration, and languages
- OPC UA server
- Global Security Certificate Manager
- Cycle times, e.g., maximum cycle time
- Properties for the operation of the display
- System and clock memory
- Protection level for access protection with assigned password parameter
- Time and day settings (daylight saving/standard). For additional information, refer to the following FAQ on the Internet (https://support.industry.siemens.com/cs/ww/de/view/43566349/en).

The properties that can be set and the corresponding value ranges are specified by STEP 7. Fields that cannot be edited are grayed out.

Reference

Information about the individual settings can be found in the STEP 7 online help and in the manuals of the relevant CPUs.

8.1.2 Address assignment

8.1.2.1 Addressing - overview

Introduction

In order to address the automation components or modules, they must have unique addresses. The following section explains the various address areas.

I/O address

I/O addresses (input/output addresses) are required in the user program to read inputs and set outputs.

STEP 7 automatically assigns input and output addresses when modules are configured. Each module uses a continuous range of input and/or output addresses corresponding to its volume of input and output data.

Module	Rack	Slot	I address	Q address	Type	Article no.
	0	100				
PS 25W 24VDC_1	0	0			PS 25W 24VDC	6ES7 505-0KA00-0AB0
▸ PLC_1	0	1			CPU 1518-4 PN/DP	6ES7 518-4AP00-0AB0
DI 32x24VDC HF_1	0	2	0...3		DI 32x24VDC HF	6ES7 521-1BL00-0AB0
DQ 8x230VAC/5A ST_1	0	3		0	DQ 8x230VAC/5A ST	6ES7 522-5HF00-0AB0
AI 8xU/I/RTD/TC ST_1	0	4	4...19		AI 8xU/I/RTD/TC ST	6ES7 531-7KF00-0AB0
AQ 4xU/I ST_1	0	5		1...8	AQ 4xU/I ST	6ES7 532-5HD00-0AB0

Figure 8-5 Example with input / output addresses from STEP 7

STEP 7 assigns the address areas of the modules by default to the process image partition 0 ("Automatic updating"). This process image partition is updated in the main cycle of the CPU.

Device address (e.g., Ethernet address)

Device addresses are addresses of modules with interfaces to a subnet (e.g., IP address or PROFIBUS address). They are required to address the various devices on a subnet, for example, to download a user program.

Hardware identifier

STEP 7 automatically assigns a hardware identifier (HW identifier) for identification and addressing of modules and submodules. The HW identifier is used, for example, for diagnostics alarms or for instructions, to identify the faulty module or the addressed module.

The "System constants" tab contains all hardware identifiers and their symbolic names (of HW identifier) for the selected module.

The HW identifiers and names of all modules of a device are also available in the default tag table on the "System constants" tab.

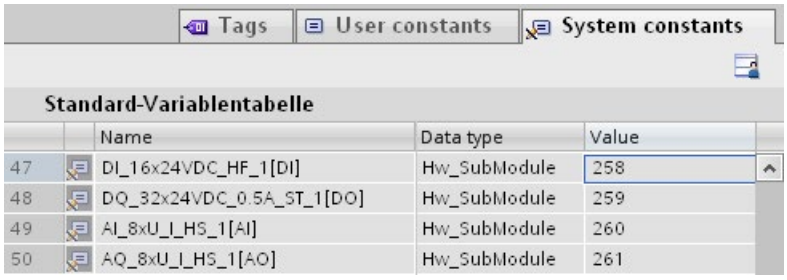

	Name	Data type	Value
47	DI_16x24VDC_HF_1[DI]	Hw_SubModule	258
48	DQ_32x24VDC_0.5A_ST_1[DO]	Hw_SubModule	259
49	AI_8xU_I_HS_1[AI]	Hw_SubModule	260
50	AQ_8xU_I_HS_1[AO]	Hw_SubModule	261

Figure 8-6 Example of a default tag table from STEP 7

8.1.2.2 Addressing digital modules

Introduction

The following section describes the addressing of the digital modules. In your user program, you require the addresses of the channels of the digital module.

Digital module addresses

The address of a digital module's input or output is composed of the byte address and the bit address. The channels of the digital module are assigned bit addresses.

Example: **I 1.2**

The example consists of:

I	Input	-
1	Byte address	The byte address depends on the module start address
2	Bit address	You read the bit address from the module

When you insert a digital module into a free slot, STEP 7 assigns a default address. You can change the proposed default address in STEP 7.

Example for the assignment of channel addresses (digital module)

The following figure shows how the addresses of the individual channels of the digital input module are determined.

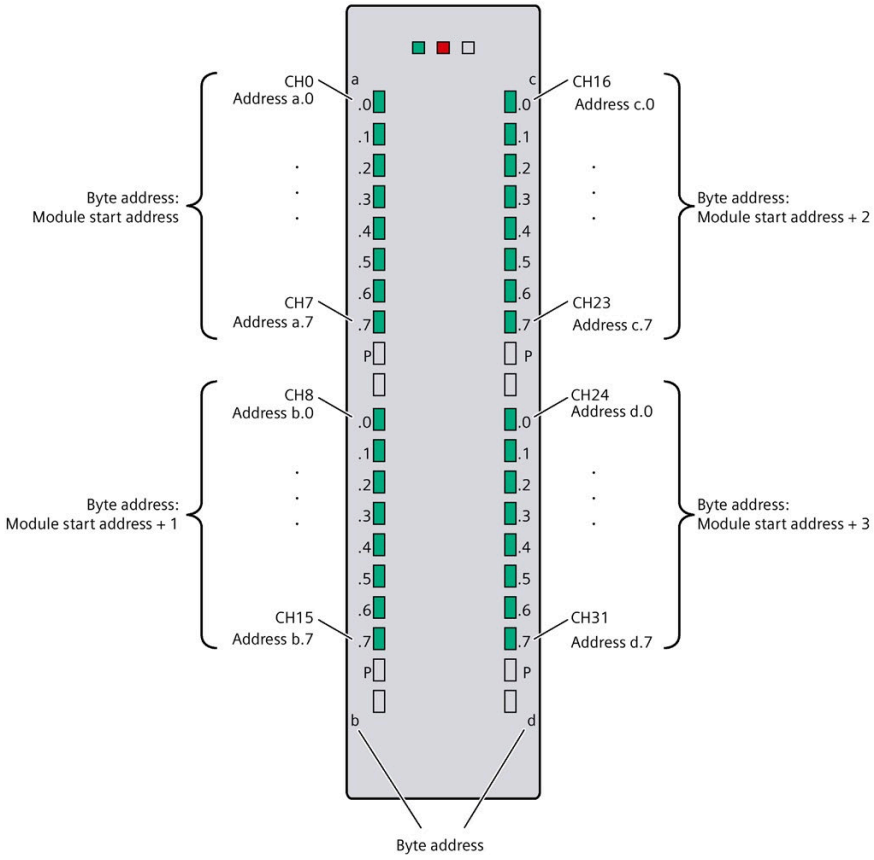

Figure 8-7 Example for the assignment of channel addresses (digital module)

Note

You can assign symbolic names to the addresses at the following locations in STEP 7:

- PLC tag table
- Properties of the module in the "IO Tags" tab.

Value status

The value status is additional binary information of a digital input or output signal. It is entered simultaneously with the process signal in the process image input and provides information about the validity of the input or output signal.

The value status of a module informs you whether the value of the corresponding channel can be read or output. You can respond to this information with simple binary operations in the user program without having to evaluate the diagnostics information of the module for this. Configured diagnostics in STEP 7 is not necessary for output of the value status.

If you enable the value status for a digital module, then additional bytes are allocated in the input address area. Each bit in the value status is assigned to a channel and provides information about the validity of the process value. You can find the assignment in the product manual for the respective I/O module.

The value status is influenced by all diagnostics that might falsify the process value, e.g. wire break, short-circuit.

- 1B: A valid process value is being output or read for the channel.
- 0B: A substitute value is being output for the channel, or the channel is deactivated, faulty or inaccessible.

You can find more information on evaluation and processing of the value status for fail-safe digital modules in the SIMATIC Safety – Configuring and Programming (https://support.automation.siemens.com/WW/view/en/54110126) manual.

Reference

More information on addressing and address allocation with value status can be found in the manuals of the digital modules, and in the online help for STEP 7. An example of the evaluation of the value status in the user program is available in the function manual Diagnostics (https://support.automation.siemens.com/WW/view/en/59192926).

8.1.2.3 Addressing analog modules

Introduction

The following section describes the addressing of the analog modules. In your user program, you require the addresses of the channels of the analog module.

Analog module addresses

The address of an analog channel is always a word address. The channel address depends on the module start address. STEP 7 automatically assigns the channel addresses during configuration. Based on the module start addresses, STEP 7 assigns the channel addresses in increasing sequence (in the following figure, the module start address is 256).

When you insert an analog module into a free slot, STEP 7 assigns a default address. You can change the assigned default address in STEP 7.

Example for the assignment of channel addresses (analog module)

The following figure shows how the addresses of the individual channels of an analog input module are determined when the module has the start address 256.

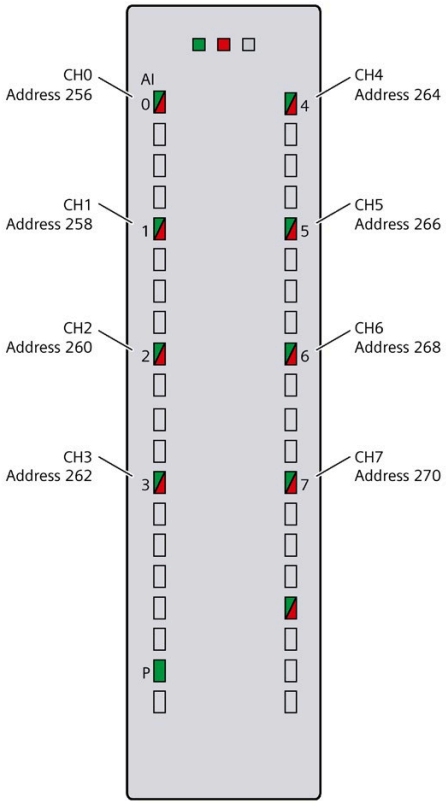

Figure 8-8 Example for the assignment of channel addresses (analog module)

Note

You can assign symbolic names to the addresses at the following locations in STEP 7:

- PLC tag table
- Properties of the module in the "IO Tags" tab.

Value status

The value status is additional binary information of an analog input or output value. It is entered simultaneously with the process value in the process image input and provides information about the validity of the analog value.

The value status of a module informs you whether the value of the corresponding channel can be read or output. You can respond to this information with simple binary operations in the user program without having to evaluate the diagnostics information of the module for this. Configured diagnostics in STEP 7 is not necessary for output of the value status.

If you enable the value status for an analog module, then additional bytes are allocated in the input address area. Each bit in the value status is assigned to a channel and provides information about the validity of the process value. You can find the assignment in the product manual for the respective I/O module.

The value status is influenced by all diagnostics that might falsify the process value, e.g. wire break, short-circuit.

- 1_B: A valid process value is being output or read for the channel.
- 0_B: A substitute value is being output for the channel, or the channel is deactivated, faulty or inaccessible.

Reference

More information on addressing and address allocation with value status can be found in the manuals of the analog modules, and in the online help for STEP 7. A detailed description of the value status for analog modules is available in the function manual Analog value processing (https://support.automation.siemens.com/WW/view/en/67989094). An example of the evaluation of the value status in the user program is available in the function manual Diagnostics (https://support.automation.siemens.com/WW/view/en/59192926).

8.1.3 Process images and process image partitions

8.1.3.1 Process image - overview

Process image of the inputs and outputs

The process image of the inputs and outputs is an image of the signal states. The CPU transfers the values from the input and output modules to the process image in this memory area. At the start of the cyclic program, the CPU transfers the process image output as a signal state to the output modules. The CPU then transfers the signal states of the input modules to the process image inputs.

Advantages of the process image

A process image accesses a consistent image of the process signals during cyclic program execution. If a signal state at an input module changes during program processing, the signal state is retained in the process image. The CPU does not update the process image until the next cycle.

Consistency of the process image

When the process image is updated, the S7-1500 accesses the data of each submodule as consistent data. The maximum data width that is accessed as consistent data for each submodule is dependent on the IO system. For PROFINET IO, for example, this data width is 1024 bytes.

32 process image partitions

By means of process image partitions, the CPU synchronizes the updated inputs/outputs of particular modules with defined user program sections.

In the S7-1500 automation system, the overall process image is subdivided into up to 32 process image partitions (PIP).

The CPU automatically updates PIP 0 (automatic update) in each program cycle and assigns it to OB 1.

You can assign the process image partitions PIP 1 to PIP 31 to the other OBs during configuration of the input/output modules.

The CPU always reads the process image partition of the inputs (PIPI) before processing the associated OB. The CPU outputs the process image of the outputs (PIPQ) at the end of the OB.

The figure below illustrates the updating of a process image partition.

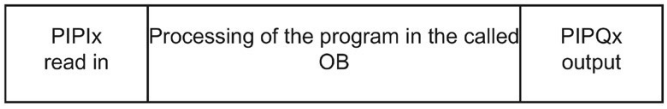

Figure 8-9 process image

8.1.3.2 Update process image partitions in the user program

Requirements

Alternatively, you can also use the following instructions to update process images:

- Instruction "UPDAT_PI"
- Instruction "UPDAT_PO"

You will find the instructions in STEP 7 in the "Instructions" task card under "Extended instructions". The instructions can be called from any point in the program.

Requirements for updating process image partitions with the "UPDAT_PI" and "UPDAT_PO" instructions:

- The process image partitions must not be assigned to any OB. This means the process image partitions are not automatically updated.

Note

Update of PPI 0

PIP 0 (automatic update) cannot be updated with the "UPDAT_PI" and "UPDAT_PO" instructions.

UPDAT_PI: Update process image partition of the inputs

With this instruction you read the signal states from the input modules into the process image partition of the inputs (PIPI).

UPDAT_PO: Update process image partition of the outputs

With this instruction you transmit the process image partition of the outputs to the output modules.

Isochronous mode interrupt OBs

In the isochronous mode interrupt OBs you use the instructions "SYNC_PI" and "SYNC_PO" to update the process image partitions. Additional information on isochronous mode interrupt OBs is available in the STEP 7 online help.

Direct I/O access to the inputs and outputs of the module

You also have direct read and write access to the I/O, as an alternative to access via the process image, should direct access be required for programming reasons. A direct (write) I/O access also writes the process image. This prevents the situation where a subsequent output of the process image overwrites the value written via direct access again.

Reference

Additional information on process image partitions is available found in the function manual, Cycle and response times (https://support.automation.siemens.com/WW/view/en/59193558).

8.2 Configuring ET 200MP distributed I/O system

Introduction

You configure and assign parameters to the ET 200MP (interface module and I/O modules) with STEP 7 or in the configuration software of another manufacturer.

Requirements

Table 8- 1 Requirements for installation

Configuration software	Requirements	Installation information
STEP 7 as of V13 [1]	• IM 155-5 PN ST and IM 155-5 DP ST: as of firmware version V2.0.0 • IM 155-5 PN HF: as of firmware version V1.0.0 • PROFINET: PROFINET GSD files (https://support.industry.siemens.com/cs/ww/de/view/68189683/en?dl=en) • PROFIBUS: PROFIBUS GSD files (https://support.industry.siemens.com/cs/de/de/view/80206700/en?dl=en)	• The TIA Portal supports the following GSDML specifications: – TIA Portal V11: V2.3 – TIA Portal V12SP1: V2.31 – TIA Portal V14: V2.32 – TIA Portal V15: V2.34 • The GSDML versions are largely downwards compatible. • The ET 200MP is already delivered with a GSD file based on specification V2.3. The GSD file can be installed and used in the TIA Portal. STEP 7 online help
STEP 7 V5.5 SP4 HF1 or higher	• PROFINET: PROFINET GSD files (https://support.automation.siemens.com/WW/view/en/19698639/130000) • PROFIBUS: PROFIBUS GSD files (https://support.automation.siemens.com/WW/view/en/10805317/133300)	STEP 7 online help
Software of another manufacturer		Manufacturer documentation

[1] STEP 7 does not support all the PROFINET features contained in the GSDML specifications. Non-supported features cannot be used with GSD devices.

Reference

You can find an overview of the most important documents and links to STEP 7 in the following FAQ on the Internet (https://support.industry.siemens.com/cs/de/de/view/65601780/en).

Configuring operation on PROFIBUS DP using a GSD file

If you want to configure the operation on the PROFIBUS DP with GSD file, you need to note the following additional requirements:

Table 8- 2 Requirements for PROFIBUS DP with GSD file

I/O modules	Required firmware version IM 155-5 DP ST as of ...	Required firmware version I/O modules as of ...
Input/output modules 35 mm	V1.0.0	V2.0
Input/output modules 25 mm	V2.0.0	V1.0
Technology modules (TM)	V2.0.0	V1.1
Communications modules CM PtP	V1.0.0	V1.0.1

8.3 Assigning PROFIsafe address to fail-safe modules with SIMATIC Safety

The PROFIsafe address is saved permanently on the electronic coding element of the S7-1500/ET 200MP fail-safe modules. You can find additional information on the electronic coding element in the section Replacing the coding element at the power connector of the system power supply and load current supply (Page 310).

Note

The supply voltage L+ must be applied to the F-module during the assignment of the PROFIsafe address (F-destination address together with F-source address).

For additional information on assigning the PROFIsafe address (F-destination address together with the F-source address), refer to the SIMATIC Safety - Configuring and Programming (https://support.automation.siemens.com/WW/view/en/54110126) programming and operating manual and the online help.

Basics of program execution 9

9.1 Events and OBs

Triggers

The table below gives an overview of the possible event sources for start events and their OBs.

Table 9- 1 Triggers

Event sources	Possible priorities (default priority)	Possible OB numbers	Default system reaction [1]	Number of OBs
Startup [2]	1	100, ≥ 123	Ignore	0 to 100
Cyclic program [2]	1	1, ≥ 123	Ignore	0 to 100
Time-of-day interrupt [2]	2 to 24 (2)	10 to 17, ≥ 123	Not applicable	0 to 20
Time-delay interrupt [2]	2 to 24 (3)	20 to 23, ≥ 123	Not applicable	0 to 20
Cyclic interrupt [2]	2 to 24 (8 to 17, frequency dependent)	30 to 38, ≥ 123	Not applicable	0 to 20
Hardware interrupt [2]	2 to 26 (16)	40 to 47, ≥ 123	Ignore	0 to 50
Status interrupt	2 to 24 (4)	55	Ignore	0 or 1
Update interrupt	2 to 24 (4)	56	Ignore	0 or 1
Manufacturer-specific or profile-specific interrupt	2 to 24 (4)	57	Ignore	0 or 1
Isochronous mode interrupt	16 to 26 (21)	61 to 64, ≥ 123	Ignore	0 to 2
Time error [3]	22	80	Ignore	0 or 1
Maximum cycle time exceeded once			STOP	
Diagnostic interrupt	2 to 26 (5)	82	Ignore	0 or 1
Removal/insertion of modules	2 to 26 (6)	83	Ignore	0 or 1
Rack error	2 to 26 (6)	86	Ignore	0 or 1
MC servo [4]	17 to 26 (26)	91	Not applicable	0 or 1
MC pre-servo [4]	corresponds to priority of the MC-Servo	67	Not applicable	0 or 1
MC post-servo [4]	corresponds to priority of the MC-Servo	95	Not applicable	0 or 1
MC interpolator [4]	16 to 26 (24)	92	Not applicable	0 or 1
MC pre-interpolator [4]	corresponds to priority of the MC interpolator	68	Not applicable	0 or 1
MC-LookAhead [4]	15 to 16 (15)	97	Not applicable	0 or 1
MC-Transformation [4]	17 to 25 (25)	98	Not applicable	0 or 1

Event sources	Possible priorities (default priority)	Possible OB numbers	Default system reaction [1]	Number of OBs
Programming error (only for global error handling)	2 to 26 (7)	121	STOP	0 or 1
I/O access error (only for global error handling)	2 to 26 (7)	122	Ignore	0 or 1

[1] If you have not configured the OB.

[2] For these event sources, apart from the permanently assigned OB numbers (see column: possible OB numbers), you can also assign OB numbers from the range ≥ 123 in STEP 7.

[3] If the maximum cycle time has been exceeded twice within a cycle, the CPU always switches to STOP regardless of whether you have configured OB80.

[4] You will find more information on these event sources and the starting behavior in the S7-1500/S7-1500T Motion Control function manual.

Response to start events

The occurrence of a start event results in the following reaction:

- If the event comes from an event source to which you have assigned an OB, this event triggers the execution of the assigned OB. The event enters the queue according to its priority.
- If the event comes from an event source to which you have not assigned an OB, the CPU executes the default system reaction.

Note

Some event sources, such as startup, pull/plug, exist even if you do not configure them.

Assignment between event source and OBs

The type of OB determines where you assign OB to event source:

- For hardware interrupts and isochronous mode interrupts: The assignment is made during the configuration of the hardware or when the OB is created.
- For MC-servo, MC-PreServo, MC-PostServo, MC-Interpolator and MC-PreInterpolator: automatic assignment of OBs 91/92 by STEP 7 as soon as you add a technology object.
- For all other OB types: Assignment when the OB is created, where applicable after you have configured the event source.

For hardware interrupts, you can change an assignment which has already been made during runtime with the instructions ATTACH and DETACH. In this case, only the actually effective assignment changes, and not the configured assignment. The configured assignment takes effect after loading, and upon each startup.

The CPU ignores hardware interrupts to which you did not assign an OB in your configuration or which occur after the DETACH instruction. The CPU does not check whether an OB is assigned to this event when an event arrives, but only prior to the actual processing of the hardware interrupt.

OB priority and runtime behavior

If you have assigned an OB to the event, the OB has the priority of the event. S7-1500 CPUs support the priority classes 1 (lowest) to 26 (highest). The following items are essential to the execution of an event:

- Call and execution of the assigned OB
- The update of the process image partition of the assigned OB

The user program processes the OBs exclusively on a priority basis. This means the program processes the OB with the highest priority first when multiple OB requests occur at the same time. If an event occurs that has a higher priority than the currently active OB, this OB is interrupted. The user program processes events of the same priority in order of occurrence.

Note

Communication

The communication (e.g. test functions with the PG) always works with priority 15. To avoid unnecessarily prolonging the program runtime in the case of time-critical applications, make sure that these OBs are not interrupted by communication. Assign a priority > 15 for these OBs.

Programming style guide

The programming guidelines described in the programming style guide help you to create a uniform program code. You can better maintain and reuse the uniform program code. This allows you to detect or avoid errors early on, for example, through compilers.

The programming style guide is available on the Internet (https://support.industry.siemens.com/cs/de/en/view/109478084).

Reference

More information on organization blocks is available in the STEP 7 online help.

9.2 Asynchronous instructions

Introduction

Program execution makes a distinction between synchronous and asynchronous instructions.

The "synchronous" and "asynchronous" properties relate to the temporal relationship between the call and execution of the instruction.

The following applies to synchronous instructions: When the call of a synchronous instruction is complete, execution of the instruction is also complete.

This is different in the case of asynchronous instructions: When the call of an asynchronous instruction is complete, execution of the asynchronous instruction is not necessarily complete yet. This means the execution of an asynchronous instruction can extend over multiple calls. The CPU processes asynchronous instructions in parallel with the cyclic user program. Asynchronous instructions generate jobs in the CPU for their processing.

Asynchronous instructions are usually instructions for transferring data, for example, data records for modules, communication data, diagnostics data.

Difference between synchronous/asynchronous instructions

The figure below shows the difference between the processing of an asynchronous instruction and a synchronous instruction. In this figure the CPU calls the asynchronous instruction five times before its execution is complete, e.g. a data record has been completely transferred.

In the case of a synchronous instruction, this is completely executed with each call.

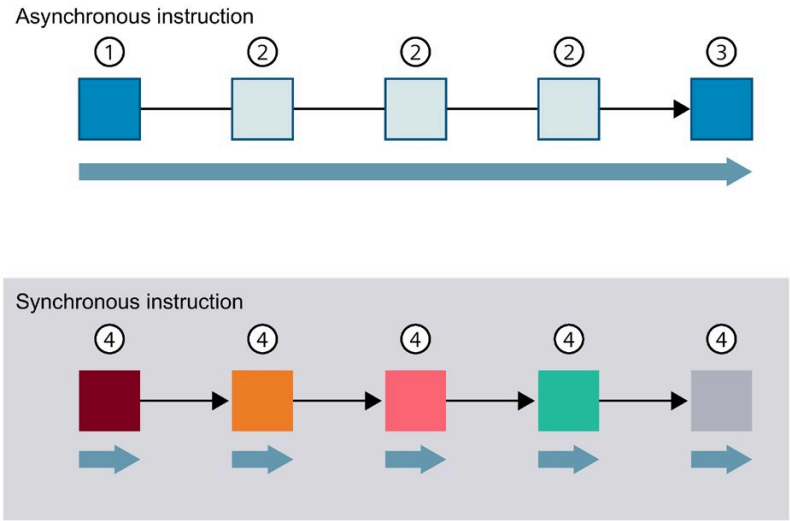

① First call of the asynchronous instruction, start of execution
② Intermediate call of the asynchronous instruction, execution continues
③ Last call of the asynchronous instruction, completion of execution
④ A job is fully processed by a synchronous instruction with each call.
➡ Duration of a fully processed job

Figure 9-1 Difference between asynchronous and synchronous instructions

Parallel processing of asynchronous instruction jobs

A CPU can process several asynchronous instruction jobs in parallel. The CPU processes the jobs in parallel under the following conditions:

- Jobs for an asynchronous instruction are started while other jobs for that instruction are still running.
- The maximum number of simultaneously running jobs for the instruction is not exceeded.

The figure below shows the parallel processing of two jobs of the WRREC instruction. The two instructions are executed simultaneously for a certain duration.

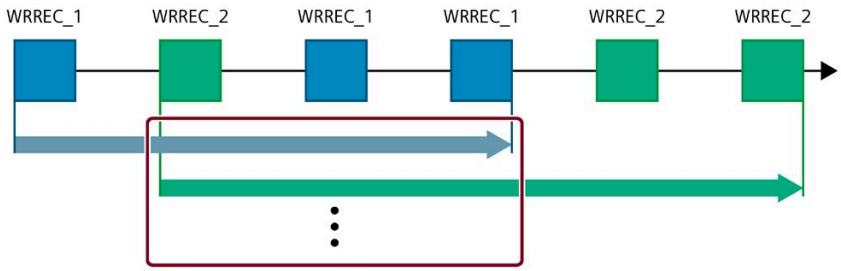

Figure 9-2 Parallel processing of the asynchronous instruction WRREC

Note

Dependencies between asynchronous instructions

The call order in the user program may differ from the order of execution of the asynchronous instructions. This may lead to problems with dependencies between asynchronous instructions.

Solution: To ensure the correct chronological execution, use the status outputs of the asynchronous instructions in a sequencer. The next asynchronous instruction should only when an asynchronous instruction is completed, and this is acknowledged via the parameter DONE.

Example: With the recipe phases RecipeImport and RecipeExport you need a CSV file for the recipe data. If you use the same CSV file for import and export, then the two asynchronous instructions are interdependent. In a sequencer, link the status of the DONE parameter of the RecipeImport instruction in the transition to the next step where the RecipeExport is executed. The link thus ensures the correct execution.

Assigning calls of an instruction to a job

To execute an instruction over multiple calls, the CPU must be able to uniquely relate a subsequent call to a running job of the instruction.

To relate a call to a job, the CPU uses one of the following two mechanisms, depending on the type of the instruction:

- Using the instance data block of the instruction (for "SFB" type)
- Using job-identifying input parameters of the instruction. These input parameters must match in each call during processing of the asynchronous instruction.
  Example: A job of the "Create_DB" instruction is identified by input parameters LOW_LIMIT, UP_LIMIT, COUNT, ATTRIB and SRCBLK.

  The following table shows which input parameters you use to identify which instruction.

Table 9- 2 Identifying input parameters for asynchronous instructions

Instruction	Job is identified by
DPSYC_FR	LADDR, GROUP, MODE
D_ACT_DP	LADDR
DPNRM_DG	LADDR
WR_DPARM	LADDR, RECNUM
WR_REC	LADDR, RECNUM
RD_REC	LADDR, RECNUM
CREATE_DB	LOW_LIMIT, UP_LIMIT, COUNT, ATTRIB, SRCBLK
READ_DBL	SRCBLK, DSTBLK
WRIT_DBL	SRCBLK, DSTBLK
RD_DPARA	LADDR, RECNUM
DP_TOPOL	DP_ID

Status of an asynchronous instruction

An asynchronous instruction shows its status via the block parameters STATUS/RET_VAL and BUSY. Many asynchronous instructions also use the block parameters DONE and ERROR.

The figure below shows the two asynchronous instructions WRREC and CREATE_DB.

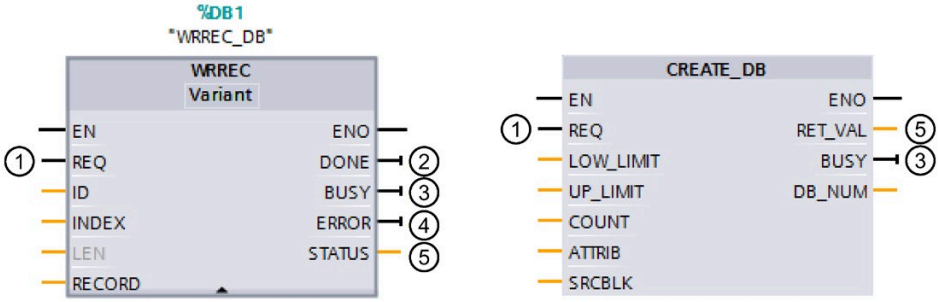

① The input parameter REQ starts the job to execute the asynchronous instruction.

② The output parameter DONE indicates that the job was completed without error.

③ The output parameter BUSY indicates whether the job is currently being executed. When BUSY =1, a resource is allocated for the asynchronous instruction. When BUSY = 0, the resource is free.

④ The output parameter ERROR indicates that an error has occurred.

⑤ The output parameter STATUS/RET_VAL provides information on the status of the job execution. The output parameter STATUS/RET_VAL receives the error information after the occurrence of an error.

Figure 9-3 Block parameters of asynchronous instructions using the instructions WRREC and CREATE_DB as examples.

Summary

The table below provides you with an overview of the relationships described above. It shows in particular the possible values of the output parameters if execution of the instruction is not complete after a call.

Note

You must evaluate the relevant output parameters in your program after each call

Table 9- 3 Relationship between REQ, STATUS/RET_VAL, BUSY and DONE during a "running" job.

Seq. no. of the call	Type of call	REQ	STATUS/RET_VAL	BUSY	DONE	ERROR
-	Idle	0	W#16#7000	0	0	0
1	First call	1	W#16#7001	1	0	0
			Error code (e.g. W#16#80C3 for lack of resources)	0	0	1
2 to (n - 1)	Intermediate call	Not relevant	W#16#7002	1	0	0
n	Last call	Not relevant	W#16#0000, if no errors have occurred.	0	1	0
			Error code if errors occurred.	0	0	1

Use of resources

Asynchronous instructions use resources in the CPU during their execution. The resources are limited depending on the type of CPU and instruction. The CPU can simultaneously process only a maximum number of asynchronous instruction jobs. The resources are available again after a job has been processed successfully or with errors.

Example: For the RDREC instruction, an S7-1500 CPU can process up to 20 jobs in parallel.

If the maximum number of concurrent jobs for an instruction is exceeded, the following occurs:

- The instruction returns the error code 80C3 (lack of resources) in the block parameter STATUS.
- The CPU stops execution of the job until a resource becomes free again.

Note

Lower-level asynchronous instructions

Some asynchronous instructions use one or more lower-level asynchronous instructions for their processing. This dependence is shown in the tables below.

Please note that each lower-level instruction typically occupies one resource in the instruction's resource pool.

Extended instructions: maximum number of simultaneously running jobs

Table 9- 4 Maximum number of simultaneous jobs for asynchronous extended instructions and lower-level instructions used

Extended instructions	1505SP (F) 1505SP T(F)	1511(F) 1511C 1511T(F)	1507S(F) 1512C 1513(F)	1515(F) 1515T(F)	1516(F) 1516T(F)	1517(F) 1517T(F)	1518(F) 1518T(F) 1518(F) MFP
Distributed I/O							
RDREC	20						
RD_REC	10						
WRREC	20						
WR_REC	10						
D_ACT_DP	8						
ReconfigIOSystem	uses RDREC, WRREC, D_ACT_DP,						
DPSYC_FR	2						
DPNRM_DG	8						
DP_TOPOL	1						
ASI_CTRL	uses RDREC, WRREC						
PROFIenergy							
PE_START_END	uses RDREC, WRREC						
PE_CMD	uses RDREC, WRREC						
PE_DS3_Write_ET200S	uses RDREC, WRREC						
PE_WOL	uses RDREC, WRREC, TUSEND, TURCV, TCON, TDISCON						
Module parameter assignment							
RD_DPAR	10						
RD_DPARA	10						
RD_DPARM	10						
WR_DPARM	10						
Diagnostics							
Get_IM_Data	10						
GetStationInfo	10						
Recipes and data logging							
RecipeExport	10						
RecipeImport	10						
DataLogCreate	10						
DataLogOpen	10						
DataLogWrite	10						
DataLogClear	10						
DataLogClose	10						
DataLogDelete	10						
DataLogNewFile	10						
Data block functions							
CREATE_DB	10						
READ_DBL	10						

Extended instructions	1505SP (F) 1505SP T(F)	1511(F) 1511C 1511T(F)	1507S(F) 1512C 1513(F)	1515(F) 1515T(F)	1516(F) 1516T(F)	1517(F) 1517T(F)	1518(F) 1518T(F) 1518(F) MFP
WRIT_DBL	10						
DELETE_DB	10						
File handling							
FileReadC	10						
FileWriteC	10						

Basic instructions: maximum number of simultaneously running jobs

Table 9- 5 Lower-level instructions used for asynchronous basic instructions

Basic instructions	1505SP (F) 1505SP T(F)	1511(F) 1511C 1511T(F)	1507S(F) 1512C 1513(F)	1515(F) 1515T(F)	1516(F) 1516T(F)	1517(F) 1517T(F)	1518(F) 1518T(F) 1518(F) MFP
Array DB							
ReadFromArrayDBL	uses READ_DBL (see Extended instructions)						
WriteToArrayDBL	uses READ_DBL, WRIT_DBL (see Extended instructions)						

Communication: maximum number of simultaneously running jobs

Table 9- 6 Maximum number of simultaneous jobs for asynchronous instructions and lower-level instructions used for Open User Communication

Open User Communication	1505SP (F) 1505SP T(F)	1511(F) 1511C 1511T(F)		1507S(F) 1512C 1513(F)	1515(F) 1515T(F)		1516(F) 1516T(F)	1517(F) 1517T(F)	1518(F) 1518T(F) 1518(F) MFP
		Up to V2.9x	V3.0 and higher		Up to V2.9x	V3.0 and higher			
TSEND TUSEND	88	96	128	128	192	256	256	320	384
TRCV TURCV	88	96	128	128	192	256	256	320	384
TCON	88	96	128	128	192	256	256	320	384
TDISCON	88	96	128	128	192	256	256	320	384
T_RESET	88	96	128	128	192	256	256	320	384
T_DIAG	88	96	128	128	192	256	256	320	384
T_CONFIG	1								
TSEND_C	Uses TSEND, TUSEND, TRCV, TCON, TDISCON								
TRCV_C	Uses TSEND, TUSEND, TRCV, TURCV, TCON, TDISCON								
TMAIL_C	Uses TSEND, TUSEND, TRCV, TURCV, TCON, TDISCON								

Table 9- 7 Lower-level instructions used for asynchronous instructions for MODBUS TCP

MODBUS TCP	1505SP (F) 1505SP T(F)	1511(F) 1511C 1511T(F)	1507S(F) 1512C 1513(F)	1515(F) 1515T(F)	1516(F) 1516T(F)	1517(F) 1517T(F)	1518(F) 1518T(F) 1518(F) MFP
MB_CLIENT	uses TSEND, TUSEND, TRCV, TURCV, TCON, TDISCON						
MB_SERVER	uses TSEND, TUSEND, TRCV, TURCV, TCON, TDISCON						

Table 9- 8 Maximum number of simultaneously running jobs for asynchronous instructions for S7 communication. The S7 communication instructions use a common pool of resources

S7 communication	1505SP (F) 1505SP T(F)	1511(F) 1511C 1511T(F)		1507S(F) 1512C 1513(F)	1515(F) 1515T(F)		1516(F) 1516T(F)	1517(F) 1517T(F)	1518(F) 1518T(F) 1518(F) MFP
		Up to V2.9x	V3.0 and higher		Up to V2.9x	V3.0 and higher			
PUT GET USEND URCV BSEND BRCV	264	288	384	384	576	768	768	960	1152

Table 9- 9 Lower-level instructions used for asynchronous instructions for communication processors

Communications processors	1505SP (F) 1505SP T(F)	1511(F) 1511C 1511T(F)	1507S(F) 1512C 1513(F)	1515(F) 1515T(F)	1516(F) 1516T(F)	1517(F) 1517T(F)	1518(F) 1518T(F) 1518(F) MFP
PtP communication							
Port_Config	uses RDDEC, WRREC						
Send_Config	uses RDDEC, WRREC						
Receive_Config	uses RDDEC, WRREC						
Send_P2P	uses RDDEC, WRREC						
Receive_P2P	uses RDDEC, WRREC						
Receive_Reset	uses RDDEC, WRREC						
Signal_Get	uses RDDEC, WRREC						
Signal_Set	uses RDDEC, WRREC						
Get_Features	uses RDDEC, WRREC						
Set_Features	uses RDDEC, WRREC						
USS communication							
USS_Port_Scan	uses RDDEC, WRREC						
MODBUS (RTU)							
Modbus_Comm_Load	uses RDDEC, WRREC						
ET 200S serial interface							
S_USSI	uses CREATE_DB						
SIMATIC NET CP							
FTP_CMD	uses TSEND, TRCV, TCON, TDISCON						

Table 9- 10 Maximum number of simultaneously running jobs for asynchronous instructions for OPC UA.

OPC UA instruction	**1511(C/F/T/TF)** **1512C** **1513(F)**	**1505(S/SP/SP F/SP T/SP TF)** **1515(F/T/TF)** **1515 SP PC (F/T/TF)** **1516(F/T/TF)**	**1507S(F)** **1517(F/T/TF)** **1518(F/T/TF//MFP)**
OPC_UA_Connect	4	10	40
OPC_UA_NamespaceGetIndexList	4*	10*	40*
OPC_UA_NodeGetHandleList	4*	10*	40*
OPC_UA_MethodGetHandleList	4*	10*	40*
OPC_UA_TranslatePathList	4*	10*	40*
OPC_UA_ReadList	20 in total (max. 5 per connection, see OPC_UA_Connect)	50 in total (max. 5 per connection, see OPC_UA_Connect)	200 in total (max. 5 per connection, see OPC_UA_Connect)
OPC_UA_WriteList	20 in total (max. 5 per connection, see OPC_UA_Connect)	50 in total (max. 5 per connection, see OPC_UA_Connect)	200 in total (max. 5 per connection, see OPC_UA_Connect)
OPC_UA_MethodCall	20 in total (max. 5 per connection, see OPC_UA_Connect)	50 in total (max. 5 per connection, see OPC_UA_Connect)	200 in total (max. 5 per connection, see OPC_UA_Connect)
OPC_UA_NodeReleaseHandleList	4*	10*	40*
OPC_UA_MethodReleaseHandleList	4*	10*	40*
OPC_UA_Disconnect	4*	10*	40*
OPC_UA_ConnectionGetStatus	4*	10*	40*

* maximum 1 per connection

Technology: maximum number of simultaneously running jobs

Table 9- 11 Maximum number of simultaneously running jobs for asynchronous instructions for technology. The instructions for technology use a common pool of resources.

Technology	1511(F) 1511C 1512C 1513(F)	1511T	1505SP (F)1515 (F) 1516(F)	1515T 1505SP T(F) 1516T(F)	1507S(F)	1517(F)	1517T(F)	1518(F) 1518(F) MFP	1518T(F)
S7-1500 Motion Control									
MC_Power MC_Reset MC_Home MC_Halt MC_MoveAbsolute MC_MoveRelative MC_MoveVelocity MC_MoveJog MC_MoveSuperimposed MC_Stop MC_WriteParameter MC_SetAxisSTW MC_SaveAbsoluteEncoderData MC_MeasuringInput MC_MeasuringInputCyclic MC_AbortMeasuringInput MC_OutputCam MC_CamTrack MC_GearIn MC_HaltSuperimposed MC_TorqueLimiting MC_TorqueAdditive MC_TorqueRange	300		1500		3000	4800		6400	

Technology	1511(F) 1511C 1512C 1513(F)	1511T	1505SP (F)1515 (F) 1516(F)	1515T 1505SP T(F) 1516T(F)	1507S(F)	1517(F)	1517T(F)	1518(F) 1518(F) MFP	1518T(F)
MC_SetSensor MC_GearInVelocity MC_GearInPos MC_PhasingRelative MC_PhasingAbsolute MC_OffsetRelative MC_OffsetAbsolute MC_CamIn MC_SynchronizedMotionSimulation MC_GearOut MC_CamOut MC_LeadingValueAdditive MC_InterpolateCam MC_GetCamFollowingValue MC_GetCamLeadingValue MC_CopyCamData MC_MotionInVelocity MC_MotionInPosition MC_MotionSuperimposed MC_GroupInterrupt MC_GroupContinue MC_GroupStop MC_MoveLinearAbsolute MC_MoveLinearRelative MC_MoveCircularAbsolute MC_MoveCircularRelative MC_MoveDirectAbsolute MC_MoveDirectRelative MC_TrackConveyorBelt MC_KinematicsMotionSimulation MC_DefineWorkspaceZone MC_DefineKinematicsZone MC_SetWorkspaceZoneActive MC_SetWorkspaceZoneInactive	-	300	-	1500	-	-	4800	-	6400

Technology	1511(F) 1511C 1512C 1513(F)	1511T	1505SP (F)1515 (F) 1516(F)	1515T 1505SP T(F) 1516T(F)	1507S(F)	1517(F)	1517T(F)	1518(F) 1518(F) MFP	1518T(F)
MC_SetKinematicsZoneActive MC_SetKinematicsZoneInactive MC_DefineTool MC_SetTool MC_SetOcsFrame MC_KinematicsTransformation MC_InverseKinematicsTransformation									

Reference

You can find more information on block parameter assignment in the STEP 7 online help.

Protection 10

10.1 Overview of the protection functions

Introduction

This section describes the following functions for protecting the S7-1500 automation system/ET 200MP distributed I/O system against unauthorized access:

Protection functions	S7-1500	ET 200MP
Protection of confidential configuration data	✓	---
Access protection	✓	---
Know-how protection	✓	---
Copy protection	✓	---
Protection by locking the CPU/interface module	✓	✓

Further measures for protecting the CPU

The following measures additionally increase the protection against unauthorized access to functions and data of the S7-1500 CPU from external sources and via the network:

- Deactivation of the Web server
- Deactivation of the OPC UA server (you can find additional information on the security mechanisms for OPC UA server in the Communication (https://support.industry.siemens.com/cs/de/de/view/59192925/en) Function Manual)
- Deactivation of the time synchronization via an NTP Server
- Deactivation of the PUT/GET communication

When you use the Web server, protect your S7-1500 automation system against unauthorized access:

- By setting password-protected access rights for specific users in the user administration.
- By using the pre-set option "Permit access only via HTTPS".
  The option allows access to the web server only with the secure hypertext transmission protocol HTTPS.

10.2 Protection of confidential configuration data

As of STEP 7 V17, you have the option of assigning a password for protecting confidential configuration data of the respective CPU. This refers to data such as private keys that are required for the proper functioning of certificate-based protocols.

You can find detailed information on protecting confidential configuration data in the Communication (https://support.industry.siemens.com/cs/ww/en/view/59192925) function manual.

10.3 Configuring access protection for the CPU

Introduction

The CPU provides you with various access levels to limit access to specific functions.

By setting up access levels and passwords, you limit the functions and memory areas that are accessible without a password. The individual access levels as well as their associated passwords are specified in the object properties of the CPU.

Rules for passwords

Ensure that passwords are sufficiently secure. Passwords must not follow a machine-recognizable pattern.

Apply the following rules:

- Assign a password that is at least 8 characters long.
- Use different cases and characters: uppercase/lowercase, numbers and special characters.

Access levels of the CPU

Table 10- 1 Access levels and access restrictions

Access levels	Access restrictions
Full access including fail-safe (no protection)	Users of STEP 7 and HMI applications have access to all standard and fail-safe functions. A password is not required.
Complete access (no protection)	Users of STEP 7 have access to standard functions. HMI applications can access all functions (fail-safe and standard). **Required password:** For additional access to the fail-safe functions, the user must enter the password for "Full access incl. fail-safe" in STEP 7.
Read access	In this access level, only read access to the hardware configuration and the blocks is possible without a password. HMI access and access to diagnostics data is also possible. Neither blocks nor the hardware configuration can be downloaded to the CPUs without the password. Additionally, the following is not possible without the password: Writing test functions and firmware update (online).
HMI access	The access restrictions that apply to read access also apply to HMI access. Additionally, the following is **not** possible without the password: Test functions, changing the operating mode (RUN/STOP), firmware update and display of online/offline comparison status.
No access (complete protection)	When the CPU has complete protection, no read or write access to the hardware configuration and the blocks is possible (without access authorization in the form of a password). HMI access is also not possible. The server function for PUT/GET communication is disabled in this access level (cannot be changed). Authentication with the password will again provide you full access to the CPU.

Reference

An enumeration of which functions are available in the different access levels is available in the "Setting options for the protection" entry in the STEP 7 online help.

Properties of the access levels

Each access level allows unrestricted access to certain functions without entering a password, e.g. identification using the "Accessible devices" function.

The default of the CPUs is "No access (complete protection)". In the default access level, the user may neither read nor change the hardware configuration and the blocks. To obtain access to the CPUs, use an alternative parameter assignment in the properties of the CPU:

- A password for the protection level "No access (complete protection)"
- A different protection level, e.g. "Full access (no protection)"

Communication between the CPUs (via the communication functions in the blocks) is not restricted by the access level of the CPU, unless PUT/GET communication is deactivated in the "No access" (complete protection) access level.

Entry of the right password allows access to all the functions that are allowed in the corresponding level.

Note

Configuring an access level does not replace know-how protection

Configuring access levels offers a high degree of protection against unauthorized changes on the CPU via network access. Access levels are used to restrict the rights to download the hardware and software configuration to the CPU. However, blocks on the SIMATIC Memory Card are not write-protected or read-protected. Use know-how protection to protect the code of blocks on the SIMATIC Memory Card.

Behavior of functions with different access levels

The STEP 7 online help contains a tabular list of the online functions that are possible in the various access levels.

Configuring access levels

To configure the access levels for an S7-1500 CPU, follow these steps:

1. Open the properties of the S7-1500 CPU in the Inspector window.
2. Open the "Protection & Security" entry in the area navigation.

   A table with the possible access levels appears in the Inspector window.

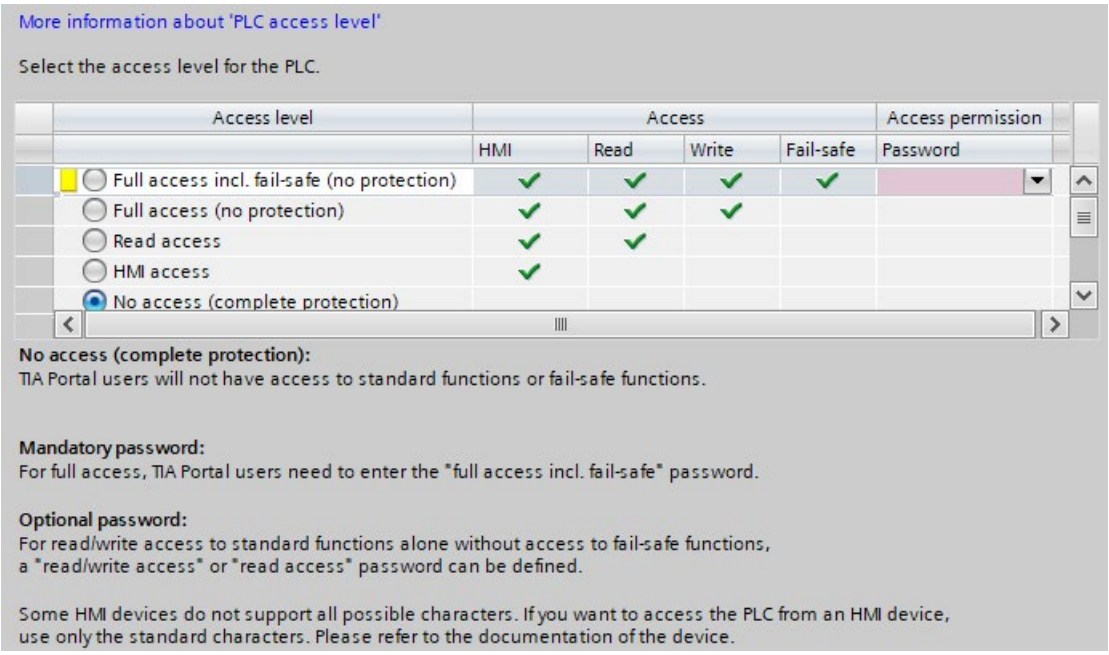

Figure 10-1 Possible access levels

3. Activate the desired protection level in the first column of the table. The green check marks in the columns to the right of the respective access level show you which operations are still available without entering the password. In the example (Figure: Possible access levels), read access and HMI access are still possible without a password.
4. In the "Enter password" column, specify a password for the access level "Full access" in the first row. In the "Confirm password" column, enter the selected password again to guard against incorrect entries.
5. Assign additional passwords as required for other access levels.
6. Download the hardware configuration for the access level to take effect.

The CPU logs the following actions with an entry in the diagnostic buffer:

- Input of the correct or, possibly, wrong password
- Changes to access level configuration

Behavior of a password-protected CPU during operation

The CPU protection takes effect for an online connection after you have downloaded the settings to the CPU. If you set a higher access level and download it to the CPU, all other online connections will be interrupted. You must then establish a new online connection.

Before an online function is executed, STEP 7 checks the necessary permission and, if necessary, prompts the user to enter a password. The functions protected by a password can only be executed by one programming device/PC at any one time. Another programming device/PC cannot log on.

Logon authorization to the protected data applies for the duration of the online connection or for as long as you have STEP 7 open. The menu command "Online > Delete access rights" cancels the access authorization.

You can limit access to a password-protected CPU in RUN locally on the display. This prevents access even with the password.

Access level for F-CPUs

For the fail-safe CPUs, there is an additional access level in addition to the four described access levels. For more information on this access level, refer to the description of the fail-safe system SIMATIC Safety Programming and Operating Manual SIMATIC Safety - Configuring and Programming (https://support.automation.siemens.com/WW/view/en/54110126).

10.4 Using the display to set additional password protection

Blocking access to a password-protected CPU

On the display of an S7-1500 CPU, you can block access to a password-protected CPU (local block of the password). If the mode selector is set to RUN, the block is effective.
The access block requires a configured protection level in STEP 7 and works independently of the password protection. This means that even if someone accesses the CPU via a connected programming device and has entered the correct password, access to the CPU remains disabled.
The access block can be set separately for each access level on the display. Then, for example, the read access is allowed locally, but the writing access is not allowed locally.

Procedure

If you want to block access to the CPU via the display, you need to configure an access level with a password in STEP 7.

When you set the local access protection for an S7-1500 CPU on the display, proceed as follows:

1. On the display, select Settings > Protection menu.
2. Confirm the selection using "OK", and configure for each access level, whether access at the RUN mode selector switch is allowed or not:
   - Allow: Access to the CPU is possible with the corresponding password in STEP 7.
   - Deactivated in RUN: If the mode selector is set to RUN, no additional logon to the CPU is possible with the rights of this access level. Access is denied despite the fact that the user knows the password. Access with the password is enabled again in the STOP operating state.

Access protection for the display

Configure a password for the display in STEP 7 in the properties of the CPU. This protects local access protection with a local password.

10.5 Using the user program to set additional access protection

Access protection by means of the user program

In addition to access protection via the display, you have another option. You can also restrict access to a password-protected CPU using the ENDIS_PW instruction in STEP 7.

You can find more information on this instruction in the STEP 7 online help under "ENDIS_PW: Limit and enable password legitimation ".

10.6 Know-how protection

Application

You can use know-how protection to protect one or more OB, FB or FC blocks as well as global data blocks in your program from unauthorized access. Enter a password to restrict access to a block. The password offers high-level protection against unauthorized reading or manipulation of the block. Know-how protection does not involve the CPU (offline access in STEP 7).

Password provider

As an alternative to manual password input, you can assign a password provider to STEP 7. When using a password provider, you select a password from a list of available passwords. When a protected block is opened, STEP 7 connects to the password provider and retrieves the corresponding password.

To connect a password provider you have to install and activate it. A settings file in which you define the use of a password provider is also required.

A password provider offers you the following advantages:

- The password provider defines and manages the passwords. When know-how protected blocks are opened, you work with symbolic names for passwords. For example, a password is marked with the symbolic name "Machine_1" n the password provider. The actual password behind "Machine1" remains hidden from you.
  A password provider therefore offers optimum block protection as the users do not know the password themselves.
- STEP 7 automatically opens know-how protected blocks without the direct entry of a password. This saves you time.

You can find more information on connecting a password provider in the STEP 7 online help.

Readable data

If a block is know-how protected, only the following data is readable without the correct password:

- Block title, comments and block properties
- Block parameters (INPUT, OUTPUT, IN, OUT, RETURN)
- Call structure of the program
- Global tags without information on the point of use

Further actions

Further actions that can be carried out with a know-how protected block:

- Copying and deleting
- Calling within a program
- Online/offline comparison
- Load

Global data blocks and array data blocks

You protect global data blocks (global DBs) from unauthorized access with know-how protection. If you do not have the valid password, you can read the global data block but not change it.

Know-how protection is not available for array data blocks (array DBs).

Setting up block know-how protection

To set up block know-how protection, follow these steps:

1. Open the properties of the respective block.
2. Select the "Protection" option under "General".

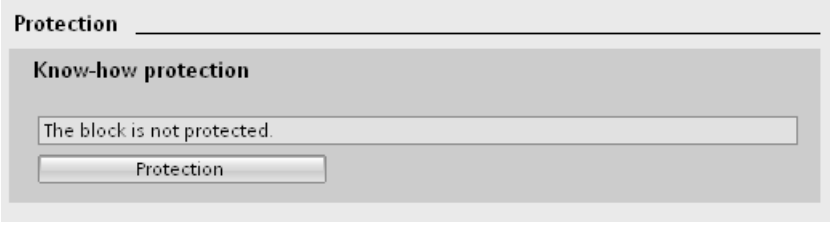

Figure 10-2 Setting up block know-how protection (1)

3. Click the "Protection" button to display the "Define protection" dialog.

Figure 10-3 Setting up block know-how protection (2)

4. Enter the new password in the "New password" field. Enter the same password in the "Confirm password" field.

5. Click "OK" to confirm your entry.
6. Close the "Know-how protection" dialog by clicking "OK".

Result: The blocks selected will be know-how-protected. Know-how protected blocks are marked with a lock symbol in the project tree. The password entered applies to all blocks selected.

Note

Password provider

Alternatively, you can set up know-how protection for blocks with a password provider.

Opening know-how protected blocks

To open a know-how protected block, follow these steps:

1. Double-click the block to open the "Access protection" dialog.
2. Enter the password for the know-how protected block.
3. Click "OK" to confirm your entry.

Result: The know-how-protected blockopens.

Once you have opened the block, you can edit the program code and the block interface of the block for as long as the block or STEP 7 is open. You need to enter the password again the next time you open the block. If you close the "Access protection" dialog with "Cancel", the block will open but the block code will not be displayed. You will not be able to edit the block.

If you copy the block or add it to a library, for example, this does not cancel the know-how protection of the block. The copies will also be know-how-protected.

Changing know-how protection for blocks

To change the know-how protection for blocks, follow these steps:

1. Select the block for which you want to change the know-how protection. The protected block must not be open in the program editor.
2. To open the "Change protection" dialog, select the "Know-how protection" command in the "Edit" menu.
3. To change the password for the know-how protection, enter the current password under "Old password".
4. Then enter a new password under "New password" and confirm the password under "Confirm password".
5. Click "OK" to confirm your entry.

Result: The password for the know-how protection of the selected block has been changed.

Removing know-how protection for blocks

To remove block know-how protection, follow these steps:

1. Select the block from which you want to remove know-how protection. The protected block must not be open in the program editor.
2. Select the "Know-how protection" command in the "Edit" menu.

Figure 10-4 Removing know-how protection for blocks

3. To remove the block protection, enter the current password under "Old password". Leave the fields for the new password empty.
4. Click "Remove" to confirm your entry.

Result: Know-how protection for the selected block has been canceled.

10.7 Copy protection

Application

The copy protection allows you to protect your program against unauthorized duplication. With copy protection you associate the blocks with a specific SIMATIC memory card or CPU. The link to the serial number means that you can only use the block in conjunction with the corresponding SIMATIC memory card or CPU.

Copy and know-how protection

Recommendation: To prevent an unauthorized reset of the copy protection, provide a copy-protected block with additional know-how protection. First set up the copy protection for the block and after this the know-how protection. You can find additional information on setting up know-how protection in the section Know-how protection (Page 230).

Setting up copy protection

To set up copy protection, follow these steps:

1. Open the properties of the respective block.
2. Select the "Protection" option under "General".

3. In the "Copy protection" area, select either the "Bind to serial number of the CPU" entry or the "Bind to serial number of the memory card" entry from the drop-down list.

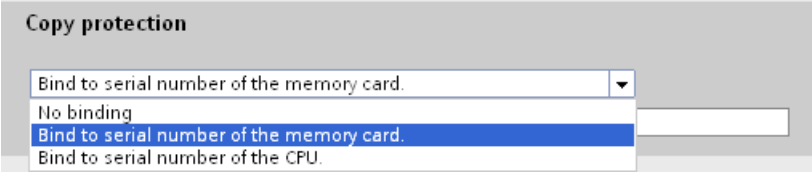

Figure 10-5 Setting up copy protection

4. Activate the option "Serial number is inserted when downloading to a device or a memory card" if STEP 7 is to automatically insert the serial number during the uploading process (dynamic binding). Assign a password using the "Define password" button to link the use of a block additionally to the input of a password.
   If you want to manually bind the serial number of the CPU or the SIMATIC memory card to a block (static binding), activate the "Enter serial number" option.
5. You can now set up the know-how protection for the block in the "Know-how protection" area.

Note

If you download a copy-protected block to a device that does not match the specified serial number, the entire download operation is not possible. This means that you also cannot download blocks without copy protection.

Removing copy protection

To remove copy protection, follow these steps:

1. Remove the Know-how protection (Page 230), if it is set.
2. Open the properties of the respective block.
3. Select the "Protection" option under "General".
4. In the "Copy protection" area, select the "No binding" entry from the drop-down list.

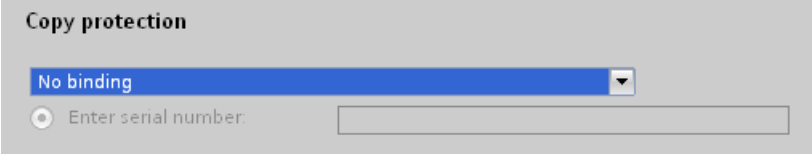

Figure 10-6 Removing copy protection

10.8 Protection by locking the CPU/interface module

Locking options

Provide additional protection for your CPU/Ihr interface module from unauthorized access (for example to the SIMATIC memory card) by using a secure front cover.

You have e.g. the following options:

- Attach a seal
- Secure the front cover with a lock (shackle diameter: 3 mm)

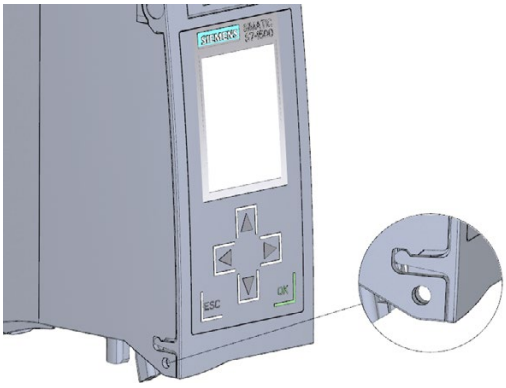

Figure 10-7 Locking latch on a CPU

Flexible automation concepts 11

11.1 Standard machine projects

Introduction

Standard machine projects are STEP 7 projects that use a set of innovative functions allowing simple configuration and commissioning of flexible automation solutions for standard machines or for machines with a modular structure.

A hardware configuration consisting of an S7-1500 CPU as the IO controller and any connected IO devices represents a "PROFINET IO system master". This master is configured with a maximum configuration based on which various options can be derived for different standard machines, for example with different configuration variants of the IO system.

Greater flexibility at all levels

Standard machine projects have the following central characteristics:

- From one project (IO system master) with an engineered maximum configuration, different variants of a standard machine can be loaded (IO system options). The standard machine project covers all variants (options) of the IO system.
- An IO system option can be integrated in an existing network locally using simple tools.

Flexibility is provided in more ways than one:

- With suitable configuration, adaptation of the IP address parameters of the IO controller is possible locally using simple tools. This allows a standard machine to be integrated in different plants with little effort or to be included in a network several times.
  IO systems with this property are known as **multiple use IO systems**.
- With suitable configuration and programming, different setups of IO system options can be operated locally that differ in terms of the selection of IO devices used or in terms of the arrangement of the IO devices.
  Since the specific configuration of the IO system is controlled by the user program, this is known as **configuration control for IO systems**.
- Independently of the functions described above, with suitable configuration and programming, you can use different station options of central devices or distributed I/O devices in one project. The devices can be different in terms of the selection and arrangement of the modules.
  Since the concrete configuration of the station is controlled by the user program, this is also known as **configuration control**.

Additional information

You can find additional information on configuration control in the section Configuration control (option handling) (Page 237).

You can find additional information on multiple-use IO systems and on configuration control for IO systems in the PROFINET with STEP 7 (https://support.automation.siemens.com/WW/view/en/49948856) function manual.

11.2 Configuration control (option handling)

Introduction

With configuration control (option handling), you handle various standard machine configuration levels in one project. You do not need to change the hardware configuration or the user program.

Operating principle of configuration control

Configuration control enables you to operate different configuration levels of a standard machine with a single configuration of the S7-1500 automation system/ET 200MP distributed I/O system.

- A station master (maximum configuration) is configured in a project. The station master comprises all modules needed for all possible equipment components of a modular standard machine.
- Provision is made in the user program of the project for various station options for the different configuration levels of the standard machine and for selection of a station option. A station option uses, for example, only some of the modules of the station master and these modules are not inserted in the configured order.
- Manufacturers of standard machines select a station option for a configuration level of the standard machine and does not have to change the project or load a changed configuration.

You use a control data record you have programmed to notify the CPU/interface module as to which modules are missing or located on different slots in a station option as compared to the station master. The configuration control has no effect on the parameter assignment of the modules.

The configuration control allows you to flexibly vary the centralized/distributed configuration. As a precondition for this, the station option must be able to be derived from the station master.

The following figure shows three configuration levels of a standard machine with the corresponding station options of the S7-1500 automation system.

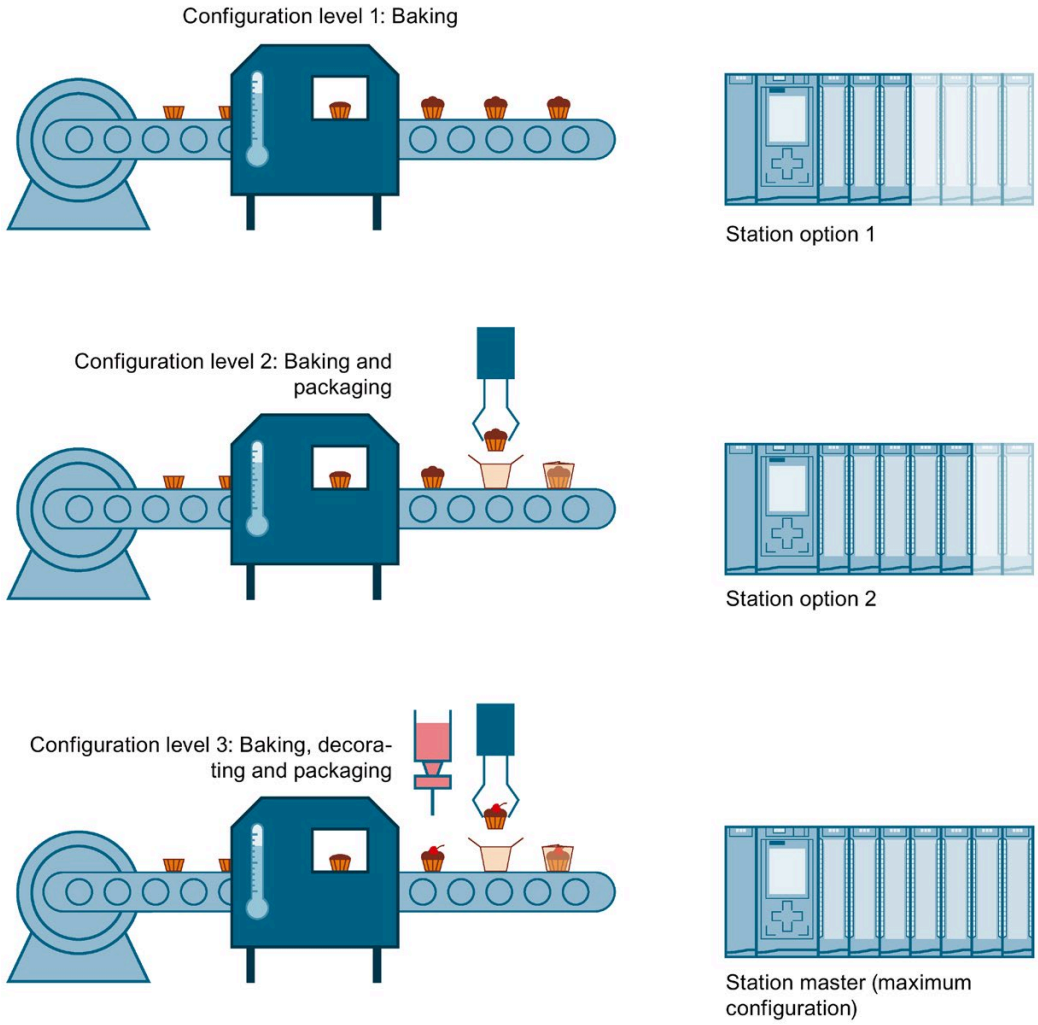

Figure 11-1 Various configuration levels of a standard machine with the corresponding station options of the S7-1500 automation system

Benefits

- Easy project handling and commissioning through use of a single STEP 7 project for all station options.
- Easy handling during maintenance, versioning and upgrades.
- Hardware savings: I/O modules are installed that are necessary for the current station option of the machine.
- Potential savings when building, commissioning and creating documentation for standard machines.

Procedure

To set up the configuration control, proceed as follows:

Table 11- 1 Procedure for commissioning the SIMATIC S7-1500

Step	Procedure	See...
1	Enable configuration control in STEP 7	Section Configuring (Page 239)
2	Create control data record	Section Creating the control data record (Page 241)
3	Transfer control data record	Section Transferring the control data record in the startup program of the CPU (Page 250)

Library for configuration control

A library for configuration control is available for download (https://support.industry.siemens.com/cs/ww/en/view/29430270) on the internet. The library contains data types with the structure of the control data records for the S7-1500/ET 200MP automation system. You can implement the configuration control for your flexible automation solution economically using these data types.

11.2.1 Configuring

Requirements

In the case of the S7-1500, configuration control is possible both with centrally inserted modules and with the ET 200MP distributed I/O system via PROFINET IO.

For S7-1500 automation system:

- STEP 7 Professional as of Version V13
- CPU S7-15XX as of firmware version V1.5
- The startup parameter "Comparison preset to actual configuration" is set to "Startup CPU even if mismatch" (default setting).
  You can find the "Comparison preset to actual configuration" parameter in the Inspector window of the CPU properties under "General">"Startup".

For ET 200MP distributed I/O system:

- STEP 7 Professional as of Version V13
- IM 155-5 PN ST/HF
- You have assigned the interface module to an IO controller/DP master in STEP 7
- The startup parameter "Comparison preset to actual module" is set to "Startup CPU even if mismatch" (default setting).
  You can find the "Comparison preset to actual module" parameter in the Inspector window of the interface module properties in the "Startup" field under "General">"Module parameters".

Required steps

Enable the "Allow to reconfigure the device via the user program" parameter when configuring the CPU/interface module.

- For an S7-1500 CPU, you can find the "Allow to reconfigure the device via the user program" parameter in the "Configuration control" area.
- For an IM 155-5 PN interface module, you can find the "Allow to reconfigure the device via the user program" parameter in the "Configuration control" field under "General">"Module parameters".

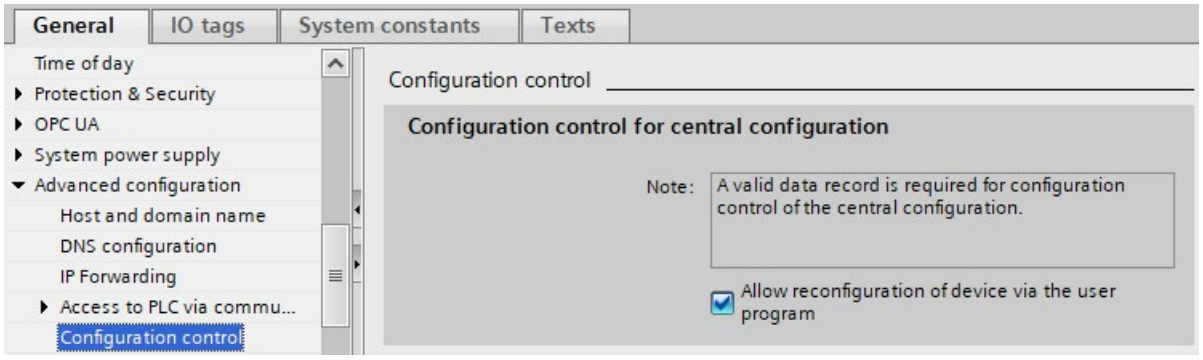

Figure 11-2 Enabling configuration control using an S7-1500 CPU as an example

11.2.2 Creating the control data record

Required steps

To create a control data record for the configuration control, follow these steps:

1. Create a PLC data type that contains the structure of the control data record.

   You can find the structure of the control data record:

   – For the S7-1500 automation system in section Control data record for the S7-1500 Automation System (Page 244).

   – For the ET 200MP distributed I/O system in section Control data record for the ET 200MP distributed I/O system (Page 245).

CTR_REC

	Name	Data type	Default value	A...	V...	S...	Comment
1	Block_Lenght	USInt	36	☑	☑	☐	4+number of slots
2	Block_ID	USInt	196	☑	☑	☐	
3	Version	USInt	4	☑	☑	☐	S7-1500
4	Subversion	USInt	0	☑	☑	☐	
5	Slot 0	USInt	0	☑	☑	☐	Slot 0 Power module
6	Slot 1	USInt	1	☑	☑	☐	Slot 1 CPU
7	Slot 2	USInt	2	☑	☑	☐	assigned "real" Slot
8	Slot 3	USInt	3	☑	☑	☐	assigned "real" Slot
9	Slot 4	USInt	4	☑	☑	☐	assigned "real" Slot
10	Slot 5	USInt	5	☑	☑	☐	assigned "real" Slot
11	Slot 6	USInt	6	☑	☑	☐	assigned "real" Slot
			7	☑	☑	☐	

Figure 11-3 Creating control data record 196 using an S7-1500 CPU as an example

2. Create a global data block.

3. Create an array of the data type of the above created PLC data type in the data block.

   The following figure shows a data block containing three control data records for an S7-1500 CPU.

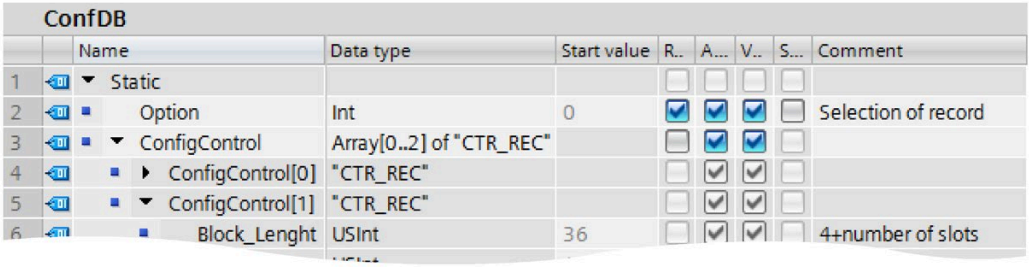

ConfDB

	Name	Data type	Start value	R..	A...	V..	S...	Comment
1	Static							
2	Option	Int	0	☑	☑	☑	☐	Selection of record
3	ConfigControl	Array[0..2] of "CTR_REC"		☐	☑	☑		
4	ConfigControl[0]	"CTR_REC"			☑	☑		
5	ConfigControl[1]	"CTR_REC"			☑	☑		
6	Block_Lenght	USInt	36		☑	☑		4+number of slots

Figure 11-4 Data block for configuration control

4. In the "Start value" column of the control data records, enter which module is located at which slot.

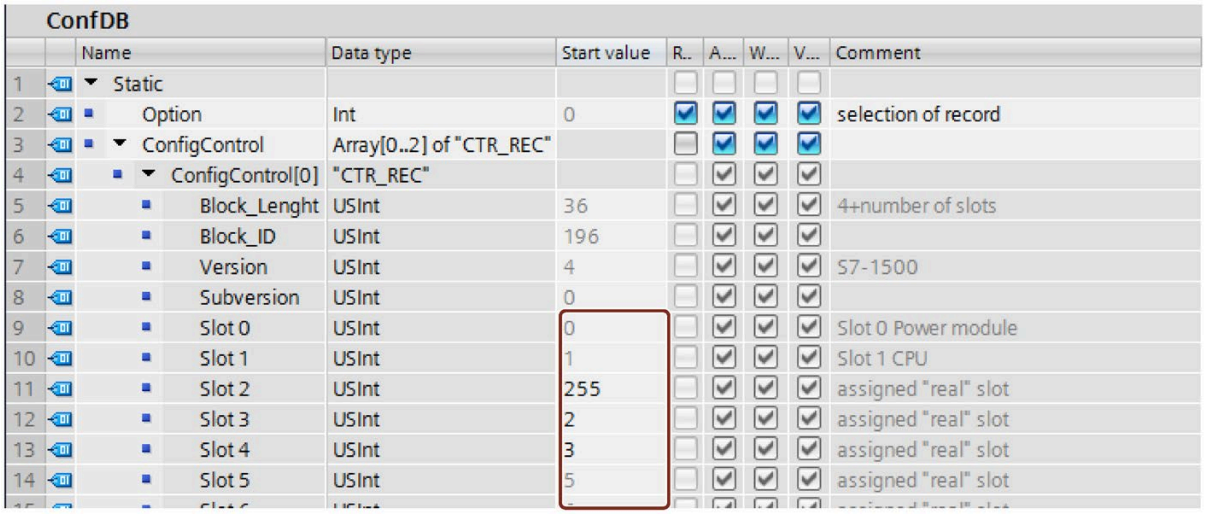

ConfDB

	Name	Data type	Start value	R..	A...	W...	V...	Comment
1	Static							
2	Option	Int	0	☑	☑	☑	☑	selection of record
3	ConfigControl	Array[0..2] of "CTR_REC"		☐	☑	☑	☑	
4	ConfigControl[0]	"CTR_REC"			☑	☑	☑	
5	Block_Lenght	USInt	36		☑	☑	☑	4+number of slots
6	Block_ID	USInt	196		☑	☑	☑	
7	Version	USInt	4		☑	☑	☑	S7-1500
8	Subversion	USInt	0		☑	☑	☑	
9	Slot 0	USInt	0		☑	☑	☑	Slot 0 Power module
10	Slot 1	USInt	1		☑	☑	☑	Slot 1 CPU
11	Slot 2	USInt	255		☑	☑	☑	assigned "real" slot
12	Slot 3	USInt	2		☑	☑	☑	assigned "real" slot
13	Slot 4	USInt	3		☑	☑	☑	assigned "real" slot
14	Slot 5	USInt	5		☑	☑	☑	assigned "real" slot

Figure 11-5 Assigning slots

Rules

Observe the following rules:

- The CPU/interface module ignores slot entries in the control data record outside the station master.
- The control data record must contain the entries up to the last slot of the station option.
- Each slot of a station option may only be present once in the control data record.
- Each slot of a station option may only be assigned to one slot in the station master.
- System power supplies (PS) can also be subject to configuration control.

Note

Configuration control for system power supplies

In the case of a configuration (station option) loaded using a data record, STEP 7 does not automatically check compliance with the power budget.

Ensure that the power supplied in each power segment of the station option is greater than or equal to the power drawn.

You can find more information in the section Power balance calculation (Page 121).

Using communication modules

- Point-to-point communication modules:
  Point-to-point communication modules can be used without any restrictions for the configuration control.
- PROFINET/Ethernet and PROFIBUS communication modules:
  CPUs as of firmware version V1.7 support configuration control when using PROFINET/Ethernet or PROFIBUS communication modules. If communication modules for PROFINET/Ethernet or PROFIBUS, such as a CM 1542-5 (DP master or DP slave), are inserted in the central configuration, these communication modules cannot be influenced by the configuration control. You must therefore leave these modules in the slots preassigned in the station master and enter the slot numbers from the station master in the control data record ("Station option slot = Station master slot"). In a station option, all slots up to the communication module furthest from the CPU must be present in the control data record. Maximum flexibility is achieved by inserting the communication modules directly to the right of the CPU.

11.2.2.1 Control data record for the S7-1500 Automation System

Slot assignment

The following table shows the slot assignment of the modules for the S7-1500 automation system:

Table 11- 2 Slot assignment

Slot	Modules	Comment
0	System power supply (optional)	Upstream of CPU
1	CPU	Slot 1 is always the CPU
2 - 31	I/O modules/system power supplies, depending on the station option	Downstream of CPU

Control data record

For configuration control of the S7-1500 automation system, you define a control data record 196 V4.0, which contains a slot assignment. The table below shows the structure of a control data record with explanations of the individual elements.

Table 11- 3 Configuration control: Structure of control data record 196

Byte	Element	Code	Explanation
0	Block length	4 + number of slots	Header
1	Block ID	196	
2	Version	4	
3	Version	0	
4	Slot 0 of the station master	Slot assignment in the station option	**Control element** Contains information on which module is inserted in which slot. The following rule determines which value you must enter in the respective byte: • If the module is included in the station option, enter the slot number of the module. • If the module is not included in the station option, enter 255.
5	Slot 1 of the station master	Slot assignment 1 in the station option (always 1, because the CPU is always in slot 1)	
6	Slot 2 of the station master	Slot assignment in the station option	
7	Slot 3 of the station master	Slot assignment in the station option	
:	:	:	
4 + (max. slot number)	Maximum slot of the station master	Slot assignment in the station option	

11.2.2.2 Control data record for the ET 200MP distributed I/O system

Slot assignment

The following table shows the slot assignment of the modules for the ET 200MP distributed I/O system:

Table 11- 4 Slot assignment

Slot	Modules	Comment
0	System power supply (optional)	Upstream from interface module
1	Interface module	Interface module (slot 1) is not an element of the configuration control, but instead controls the configuration control.
2 - 31	I/O modules/system power supplies, depending on the station option	Downstream from the interface module

Control data record

For configuration control of the ET 200MP distributed I/O system, you define a control data record 196 V3.0, which contains a slot assignment. The table below shows the structure of a control data record with explanations of the individual elements.

Table 11- 5 Configuration control: Structure of control data record 196

Byte	Element	Code	Explanation
0	Block length	4 + number of slots	Header
1	Block ID	196	
2	Version	3	
3	Version	0	
4	Slot 0 of the station master	Slot assignment in the station option	**Control element** Contains information on which module is inserted in which slot. The following rule determines which value you must enter in the respective byte: • If the module is included in the station option, enter the slot number of the module. • If the module is not included in the station option, enter 127.
5	Slot 2 of the station master	Slot assignment in the station option	
6	Slot 3 of the station master	Slot assignment in the station option	
:	:	:	
4 + (max. slot no. - 1)	Maximum slot of the station master	Slot assignment in the station option	

11.2.2.3 Feedback data record of the ET 200MP distributed I/O system

Operating principle

The feedback data record informs you about the accuracy of the module assignment and gives you the option of detecting assignment errors in the control data record. The feedback data record is mapped via a separate data record 197 V2.0.

Slot assignment

The feedback data record exists only when configuration control is configured and always refers to the maximum quantity framework **without interface module**, i.e., 31 slots.

The following table shows the slot assignment of the modules:

Table 11- 6 Slot assignment

Slot	Modules	Comment
0	System power supply (optional)	Upstream from interface module
2 - 31	I/O modules/system power supplies, depending on the station option	Downstream from the interface module

Partial reading of the feedback data record is possible.

Feedback data record

Table 11- 7 Feedback data record

Byte	Element	Code	Explanation
0	Block length	66	Header
1	Block ID	197	
2	Version	2	
3		0	
4	Status slot 0	0/1	Status = 1: • Module from station master is inserted in the station option • Slot is marked as not available in the control data record Status = 0: • Module pulled • Incorrect module inserted in the station option*
5	Reserved	0	
6	Status slot 2	0/1	
7	Reserved	0	
:	:	:	
64	Slot n status	Maximum slot	
65	Reserved	0	

* Not possible if the slot is marked as not available.

Note

The data in the feedback data record is always mapped for all modules. In a Shared Device configuration, it is therefore irrelevant which IO controller the respective modules are assigned to.

As long as no control data record was sent, a one-to-one module assignment is assumed for the compilation of data record 197 (station master → station option).

Error messages

In the case of an error when reading the feedback data record, the RDREC instruction returns the following error messages via the STATUS block parameter:

Table 11- 8 Error messages

Error code	Meaning
80B1H	Invalid length; the length information in data record 197 is not correct.
80B5H	Configuration control not configured
80B8H	Parameter error The following events cause a parameter error: • Incorrect block ID in the header (not equal to 197) • Invalid version identifier in the header • A reserved bit was set • Multiple slots in the station master are assigned to the same slot in the station option

11.2.2.4 Examples of configuration control

A station master consisting of a system power supply, CPU, and three I/O modules is configured in STEP 7 in the following section.

The module at slot 3 is not present in the station option 1 and is "hidden" by the configuration control.

In station option 2, the order of the modules in slots 3 and 4 is interchanged. The modified order of the modules is made known to the CPU by a modified control data record.

Station option 1 with module that is not present

The module that is located in slot 3 in the station master is not present in the station option 1. Slot 3 must be designated in the control data record accordingly with 255 (= not present).

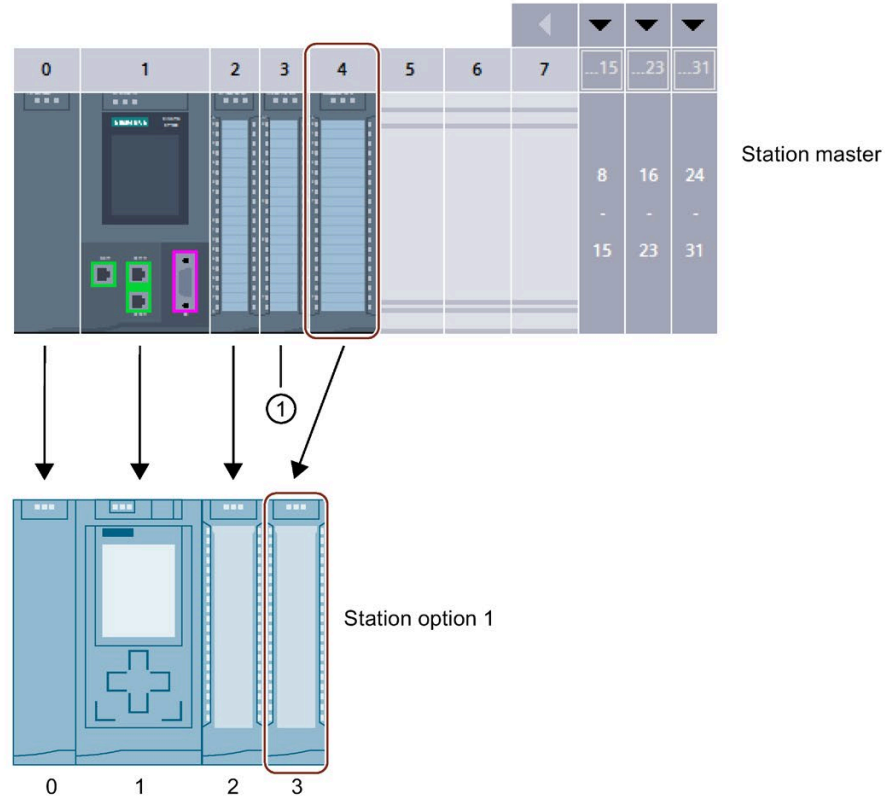

ConfDB

		Name	Data type	Start value	R..	A...	V..	S...	Comment
1		Static							
2		Option	Int	0	☑	☑	☑	☐	Selection of record
3		ConfigControl	Array[0..2] of "CTR_REC"		☐	☑	☑		
4		ConfigControl[0]	"CTR_REC"			☑	☑		
5		ConfigControl[1]	"CTR_REC"			☑	☑		
6		Block_Lenght	USInt	36		☑	☑		4+number of slots
7		Block_ID	USInt	196		☑	☑		
8		Version	USInt	4		☑	☑		S7-1500
9		Subversion	USInt	0		☑	☑		
10		Slot 0	USInt	0		☑	☑		Slot 0 Power module
11		Slot 1	USInt	1		☑	☑		Slot 1 CPU
12		Slot 2	USInt	2		☑	☑		assigned "real" Slot
13		Slot 3	USInt	255		☑	☑		assigned "real" Slot
14		Slot 4	USInt	3		☑	☑		assigned "real" Slot
15		Slot 5	USInt	5		☑	☑		assigned "real" Slot
16		Slot 6	USInt	6		☑	☑		assigned "real" Slot

① Module is not present in the station option 1.

Figure 11-6 Example: Hardware configuration of station option 1 with the associated control data record in STEP 7

Station option 2 with modified order of modules

The order of the modules in slot 3 and 4 is interchanged.

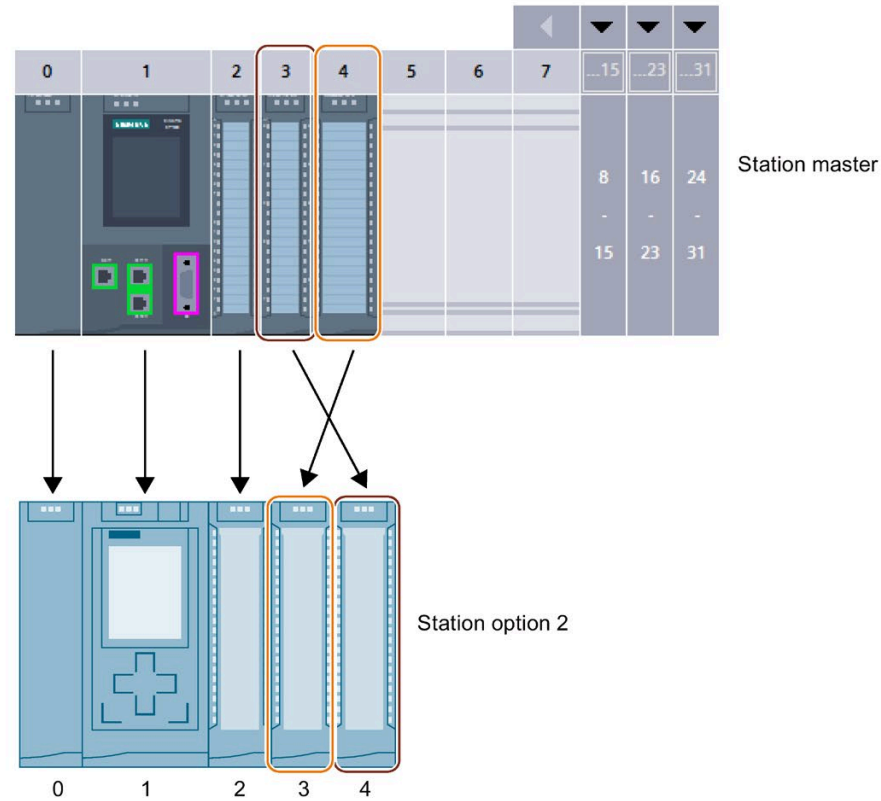

ConfDB

		Name	Data type	Start value	R..	A...	V..	S...	Comment
1		Static							
2		Option	Int	0	☑	☑	☑	☐	Selection of record
3		ConfigControl	Array[0..2] of "CTR_REC"		☐	☑	☑		
4		ConfigControl[0]	"CTR_REC"			☑	☑		
5		ConfigControl[1]	"CTR_REC"			☑	☑		
6		ConfigControl[2]	"CTR_REC"			☑	☑		
7		Block_Lenght	USInt	36		☑	☑		4+number of slots
8		Block_ID	USInt	196		☑	☑		
9		Version	USInt	4		☑	☑		S7-1500
10		Subversion	USInt	0		☑	☑		
11		Slot 0	USInt	0		☑	☑		Slot 0 Power module
12		Slot 1	USInt	1		☑	☑		Slot 1 CPU
13		Slot 2	USInt	2		☑	☑		assigned "real" Slot
14		Slot 3	USInt	4		☑	☑		assigned "real" Slot
15		Slot 4	USInt	3		☑	☑		assigned "real" Slot
16		Slot 5	USInt	5		☑	☑		assigned "real" Slot
17		Slot 6	USInt	6		☑	☑		assigned "real" Slot

Figure 11-7 Example: Hardware configuration of station option 2 with the associated control data record in STEP 7

Detailed application example

You can find a detailed application example for the configuration control in S7-1500 in here (https://support.industry.siemens.com/cs/ww/en/view/29430270) under "Application example for ET 200SP (PROFINET) and S7-1500 by using the library".

11.2.3 Transferring the control data record in the startup program of the CPU

Required steps

Transfer the created control data record 196 to the CPU/interface module using the WRREC (Write data record) instruction.

Parameters of the WRREC instruction

Below, you will find explanations of individual parameters of the WRREC instruction which you must supply with specific values in the configuration control context. You can find additional information on the WRREC instruction in the STEP 7 online help.

ID	Hardware identifier • For configuration control for centrally arranged modules, use the HW identifier for the CPU. If you have selected the CPU in the network view or device view, you can find the HW identifier on the **System constants** tab of the Inspector window. Use the value of the system constant "Local Configuration". • For configuration control for distributed I/O, use the HW identifier of the interface module. If you have selected the interface module in the network view or device view, you can find the HW identifier on the **System constants** tab of the Inspector window. Use the value of the system constant "<Name_of_interface_module> Head".
INDEX	Data record number: 196 (decimal)
RECORD	Control data record to be transferred. For the structure of the control data record, see section Creating the control data record (Page 241).

Error messages

In case of error, the WRREC instruction returns the following error messages via the STATUS block parameter:

Table 11- 9 Error messages

Error code	Meaning
80B1H	Invalid length; the length information in data record 196 is not correct.
80B5H	Configuration control parameters not assigned.
80E2H	Data record was transferred in the wrong OB context. The data record must be transferred in the startup program.
80B8H	Parameter error Reasons for a parameter error are: • Incorrect block ID in the header (not equal to 196) • Invalid version identifier in the header • A reserved bit was set • A station master slot was assigned an invalid slot in the station option • Multiple slots in the station master are assigned to the same slot in the station option • For shared device on submodule level: violation of defined restrictions

Special requirements relating to the transfer of the control data record to the CPU

- If you have enabled configuration control, the CPU is not ready for operation without a control data record. The CPU returns from startup to STOP if a valid control data record is not transferred in the startup OB (for example, OB 100). The central I/O is not initialized in this case. The cause for STOP mode is entered in the diagnostics buffer.

  Note

  If an incorrect control data record is transferred to the CPU in the startup OB, the startup of the CPU may be prevented.

  In this case, perform a reset to factory settings of the CPU and then transfer a correct control data record.

- The CPU processes the WRREC instruction for transferring the control data record asynchronously. For this reason, you must call WRREC in the startup OB (for example, OB 100) repeatedly in a loop until the output parameters "BUSY" and "DONE" indicate that the data record has been transferred.
  - Tip: To program the loop, use the SCL programming language with the REPEAT ... UNTIL instruction.

```
REPEAT
 "WRREC_DB"(REQ := "start_config_control",
            ID := "Local Configuration",
            INDEX := 196,
            LEN := "conf_LEN",
            DONE => "conf_DONE",
            BUSY => "conf_BUSY",
            RECORD := "ConfDB".ConfigControl["ConfDB".Option],
 //Selection of control data record*
            ERROR => "conf_ERROR",
            STATUS => "conf_STATUS");
UNTIL NOT "conf_BUSY"
END_REPEAT;
```

    *Selection of the station option in the user program: In order for the CPU to know which station option you want to operate, you must set up a possibility to select between the various control data records in the user program. You can implement the selection, for example, via an Int tag that references an array element. Please note that the variable used to select the control data record must be stored in the retentive memory area. If the tag is not retentive, it will be initialized during startup of the CPU and will thus be unavailable for selection of the station option.

  - In the graphical programming languages, you implement the loop using instructions for program control.

Example in FBD: Use the LABEL (jump label) and JMP (jump at RLO=1) instructions to program a loop.

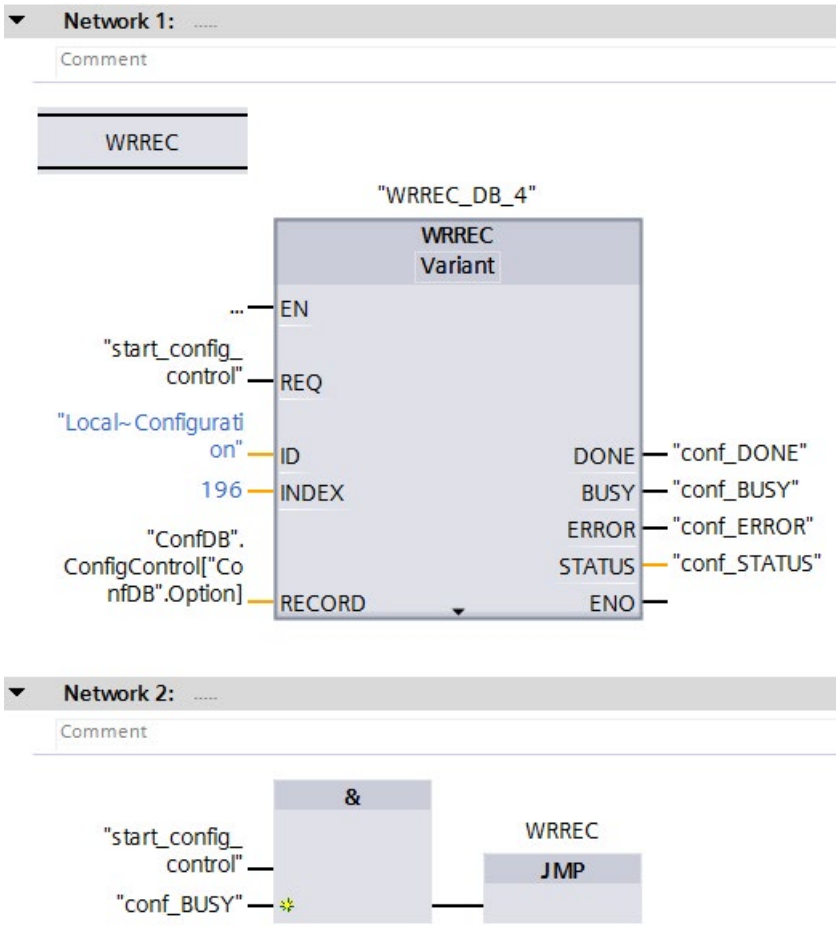

Figure 11-8 WRREC

- The control data record is stored retentively in the CPU. Note:
  - The retentivity of the control data record is independent of the retentivity settings in the STEP 7-memory area. The memory area in which the control data record is configured does then not have to be configured as retentive for this purpose.
  - If you write a control data record with modified configuration, the original data record 196 is deleted and the new data record 196 is saved retentively. The CPU will then restart with the modified configuration.

Special requirements relating to the transfer of the control data record to the interface module

- If you have enabled configuration control, the ET 200MP station is not ready for operation without a control data record. As long as no valid control data record has been transferred, the I/O modules are considered as failed by the CPU and exhibit substitute value behavior. The interface module continues to exchange data.
- The control data record is stored retentively in the interface module. Note:
  - If the configuration is unchanged, you do not have to rewrite the control data record 196 during restart.
  - If you write a control data record with modified configuration, this will result in a station failure in the distributed I/O system. The original data record196 is deleted and the new data record 196 is saved retentively. The station will then restart with the modified configuration.

11.2.4 Behavior during operation

Effect of discrepancy between station master and station option

For the online display and for the display in the diagnostics buffer (module OK or module faulty), the station master is always used and not the differing station option.

Example: A module outputs diagnostics data. This module is configured in slot 4 in the station master, but is inserted in slot 3 in the station option (missing module; see example in the next section). The online view (station master) shows an incorrect module in slot 4. In the real configuration, the module in slot 3 indicates an error via an LED display.

Response to modules that are not present

If modules are entered as not present in the control data record, the automation system behaves as follows:

- Modules designated as not present in the control data record do not supply diagnostics and their status is always OK. The value status is OK.
- Direct writing access to the outputs that are not present or writing access to the process image of outputs that are not present: Remains without effect; no access error is signaled.
- Direct reading access to the inputs that are not present or reading access to the process image of inputs that are not present: Value "0" is supplied; no access error is signaled.
- Write data record to module that is not present: Remains without effect; no error is signaled.
- Read data record from module that is not present: The output parameter STATUS of the instruction RDREC supplies the value $80A3_H$ "General CM error".

Commissioning 12

12.1 Overview

Introduction

This section includes information on the following topics:

- Check before powering on for the first time
- Procedure for commissioning the S7-1500 automation system
  - Removing/inserting the SIMATIC memory card
  - First power-on of the CPU
- Procedure for commissioning the S7-1500 distributed I/O system
  - First power-on of the ET 200MP on PROFINET IO
  - First power-on of the ET 200MP on PROFIBUS DP
- Operating modes of the CPU STARTUP, STOP, RUN and operating mode transitions
- CPU memory reset: Automatic and manual
- Backing up and restoring the CPU configuration
- Time synchronization
- Identification and maintenance data
- Shared commissioning of projects

Commissioning requirements

Note

Performing tests

You must ensure the safety of your plant. You therefore need to perform a complete functional test and the necessary safety checks before the final commissioning of a plant.

Also allow for any possible foreseeable errors in the tests. This avoids endangering persons or equipment during operation.

Note

Check coding element in the I/O module

Make sure that the coding element is present in the I/O module before you plug in the front connector for the first time. This reduces the risk of plugging a wired front connector into the wrong type of module when replacing a module.

Software tools for commissioning

The following software tools support you during commissioning:

- SIEMENS PRONETA in commissioning PROFINET systems.
- SIMATIC automation tool in commissioning the S7-1500 automation system / ET 200MP distributed I/O system.

You can find more information on SIEMENS PRONETA and the SIMATIC Automation Tool in the section Software (Page 102).

12.2 Check before powering on for the first time

Before the first power-on, check the installation and the wiring of the S7-1500 automation system/ET 200MP distributed I/O system.

Questions for the check

The following questions provide instructions for checking your system in the form of a checklist.

Racks

- Are the mounting rails firmly installed on the wall, in the framework, or in the cabinet?
- Are the cable ducts correctly installed?
- Have the minimum clearances been observed?

Grounding and chassis concept

- Is the mounting rail connected to the protective conductor?
- If applicable, are all further protective conductor connection points on the S7-1500 automation system / ET 200MP distributed I/O system connected to the protective conductor? Has the protective conductor been tested?
- Has the connection between reference ground and ground been correctly made on all mounting rails?
- Are the required equipotential bonding cables connected with low impedance to the affected plant units?

Module installation and wiring

- Are all the modules inserted / installed in accordance with the mounting plan and corresponding to the configuration with STEP 7 and screwed firmly to the mounting rail?
- Are the coding elements present in the I/O modules?
- Are all the front connectors wired according to the circuit diagram, in the final position, and inserted on the correct module?
- Are the correct modules installed and connected to each other with U connectors?
- Are U connectors projecting either at the left-hand or right-hand over the outer modules on the S7-1500 automation system/ET 200MP distributed I/O system?

System power supply or load current supply

- Are all system power supplies and load current supplies switched off?
- Is the power cable connector correctly wired?
- Has the connection to line voltage been made?

12.3 Procedure for commissioning the S7-1500 automation system

Requirements

- The CPU is in the "Factory settings" state or has been reset to factory settings. You can find more information in the section Resetting the CPU to factory settings (Page 319).
- The SIMATIC memory card is as delivered or has been formatted.

Commissioning procedure

For the first commissioning of an S7-1500 automation system, we recommend the following procedure:

Table 12- 1 Procedure for commissioning the SIMATIC S7-1500

Step	Procedure	See...
1	Configure hardware in STEP 7 and perform power balance calculation (see also "Requirements: CPU as bus device")	Section Power balance calculation (Page 121)
2	Create user program	STEP 7 online help
3	Insert required modules	Section Installation (Page 125)
4	Wiring and checking the assembly (system power supplies, front connectors, etc.)	Section Wiring (Page 148)
5	Insert SIMATIC memory card in the CPU	Section Removing/inserting a SIMATIC memory card on the CPU (Page 258)
6	Switch on the CPU and system power supply	Section First power-on of the CPU (Page 261)
7	Check LEDs	The meaning of the LEDs can be found in the manuals of the modules.
8	Evaluate information on the CPU's display	Section CPU display (Page 290)
9	Load hardware configuration and user program to the CPU	Online and diagnostics functions in STEP 7
10	Test inputs and outputs	The following functions are helpful: Monitoring and modifying tags, testing with program status, forcing, modifying the outputs in STOP mode. Section Test and service functions (Page 328)

Requirements: CPU as bus device

Note the following requirements for operation of a CPU as bus device:

- PROFIBUS interface
  - The integrated PROFIBUS interface of the CPU is configured using STEP 7 (device address and bus parameters configured).
  - The CPU is connected to the subnet.
  - The terminating resistors at the segment boundaries are switched on.

  You can find more information in the PROFIBUS function manual (https://support.industry.siemens.com/cs/ww/en/view/59193579)
- PROFINET interface
  - The integrated PROFINET interface of the CPU is configured using STEP 7 (IP address and device name configured).
  - The CPU is connected to the subnet.

  You can find more information in the PROFINET function manual (https://support.automation.siemens.com/WW/view/en/49948856)

Procedure for commissioning a SIMATIC Safety F-system

The procedure for commissioning an F-system is essentially the same as for commissioning a standard system. You use the Safety Administration Editor to commission SIMATIC Safety and activate the safety mode. The Safety Administration Editor is assigned to the fail-safe CPU in the STEP 7 project tree.

You can find more information on commissioning a SIMATIC Safety F-system and the Safety Administration Editor in the programming and operating manual SIMATIC Safety – Configuring and Programming (https://support.industry.siemens.com/cs/ww/en/view/54110126).

12.3.1 Removing/inserting a SIMATIC memory card on the CPU

Requirements

The CPU only supports pre-formatted SIMATIC memory cards. If applicable, delete all previously stored data before using the SIMATIC memory card. Additional information about deleting the contents of the SIMATIC memory card can be found in the function manual Structure and use of the CPU memory (https://support.industry.siemens.com/cs/ww/en/view/59193101).

In order to work with the SIMATIC memory card, first ensure that the SIMATIC memory card is not write-protected. For this purpose, slide the slider on the SIMATIC memory card out of the lock position.

If the inserted SIMATIC memory card is write-protected, the CPU display outputs the symbol ⚠ in the menu "Memory card" > "Overview". In addition, the display shows a message in the lower level of the menu.

Inserting the SIMATIC memory card

To insert a SIMATIC memory card, follow these steps:

1. Open the front cover of the CPU.
2. Ensure that the CPU is either switched off, or in the STOP mode.
3. Insert the SIMATIC memory card, as depicted on the CPU, into the slot for the SIMATIC memory card.

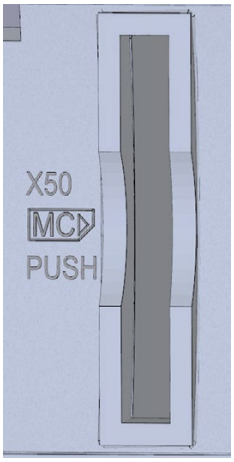

① Standard, F-CPUs / compact CPUs from article number 6ES751x-xxx02-0AB0/6ES751x-1CK01-0AB0: The slot for the SIMATIC memory card is located on the bottom of the CPU.

Figure 12-1 Slot for the SIMATIC memory card

4. Insert the SIMATIC memory card with light pressure into the CPU, until the SIMATIC memory card latches.

Removing the SIMATIC memory card

To remove a SIMATIC memory card, follow these steps:

1. Open the front cover.
2. Switch the CPU into STOP mode.
3. Press the SIMATIC memory card into the CPU with light pressure. Once it has clicked into place, remove the SIMATIC memory card.

Only remove the SIMATIC memory card in POWER OFF or STOP mode of the CPU. Ensure that:

- No writing functions are active in STOP . Writing functions are online functions with the PG/PC, for example loading/deleting a block and test functions.
- No writing functions were active before POWER OFF.

If you remove the SIMATIC memory card during a write process, the following problems can occur:

- The data content of a file is incomplete.
- The file is no longer readable, or no longer exists.
- The entire content of the card is corrupted.

Please also note the following FAQ on the Internet (https://support.industry.siemens.com/cs/ww/en/view/59457183) for removal of the SIMATIC memory card.

Reactions after removing/inserting the SIMATIC memory card

Inserting and removing the SIMATIC memory card in STOP mode triggers a re-evaluation of the SIMATIC memory card. The CPU hereby compares the content of the configuration on the SIMATIC memory card with the backed-up retentive data. If the backed-up retentive data matches the data of the configuration on the SIMATIC memory card, the retentive data is retained. If the data differs, the CPU automatically performs a memory reset. The retentive data is deleted and CPU then goes to STOP.

The CPU evaluates the SIMATIC memory card and indicates this by flashing the RUN/STOP LED.

Note

Using the SIMATIC memory card as a firmware update card

If you use the SIMATIC memory card as a firmware update card, removing and inserting the card will not result in the loss of retentive data.

Reference

You can find additional information on the SIMATIC memory card in the function manual Structure and use of the CPU memory (https://support.industry.siemens.com/cs/ww/en/view/59193101).

12.3.2 First power-on of the CPU

Requirements

- An S7-1500 automation system has been installed.
- The system has been wired.
- The SIMATIC Memory Card is inserted in the CPU.

Procedure

Proceed as follows to commission the CPU:

- Switch on the system power supply and load current supply.

Result:

- The CPU executes a flash test:
  - All LEDs flash at 2 Hz
  - RUN/STOP LED flashes alternately yellow/green
  - ERROR LED flashes red
  - MAINT LED flashes yellow
- The CPU performs the system initialization and evaluates the SIMATIC Memory Card:
  - RUN/STOP LED flashes yellow at 2 Hz
- After the system initialization has been completed, the CPU goes to STOP mode:
  - The RUN/STOP LED lights up yellow

12.4 Procedure for commissioning the ET 200MP distributed I/O system

12.4.1 Commissioning the ET 200MP for PROFINET IO

Introduction

The commissioning of your automation system depends on the plant configuration.

Commissioning procedure

To commission the ET 200MP as IO device for PROFINET IO, proceed as follows:

Table 12- 2 Procedure for commissioning the ET 200MP as an IO device for PROFINET IO

Step	Procedure	See...
1	Install ET 200MP	Section Installation (Page 125)
2	Connect ET 200MP • Supply voltages • PROFINET IO • Sensors and actuators	Section Wiring (Page 148)
4	Configure IO controller	CPU manual or documentation of the IO controller
5	Switch on supply voltages for the IO controller	CPU manual or documentation of the IO controller
6	Switch on supply voltages for IO devices	Interface module (https://support.automation.siemens.com/WW/view/en/67295970/133300) manual
7	Download configuration to the IO controller	STEP 7 online help
8	Switch IO controller to RUN mode	CPU manual or documentation of the IO controller
9	Check LEDs	Interface module (https://support.automation.siemens.com/WW/view/en/67295970/133300) manual
10	Test inputs and outputs	The following functions are helpful: Monitoring and modifying tags, testing with program status, forcing, modifying the outputs. See section Test and service functions (Page 328)

Note

The operating mode transitions for the IO controller from RUN to STOP or from STOP to RUN can take several milliseconds, until the mode transition for the inputs and outputs of all I/O modules for the ET 200MP station is completed. This delay also applies to isochronous mode.

12.4.2 Commissioning the ET 200MP for PROFIBUS DP

Introduction

The commissioning of your automation system depends on the plant configuration.

Commissioning procedure

To commission the ET 200MP as a DP device on PROFIBUS DP, follow these steps:

Step	Procedure	See...
1	Install the ET 200MP (with IM 155-5 DP ST)	Section Installation (Page 125)
2	Set the PROFIBUS address on the interface module	Manual for the interface module (https://support.automation.siemens.com/WW/view/en/77910801/133300)
3	Connect the ET 200MP • Supply voltages • PROFIBUS DP • Sensors and actuators	Section Wiring (Page 148)
4	Configure DP master (including PROFIBUS address)	Documentation of the DP master
5	Switch on supply voltages for DP master	Documentation of the DP master
6	Switch on supply voltages for DP devices	Interface module (https://support.automation.siemens.com/WW/view/en/77910801/133300) manual
7	Download configuration to the DP master	STEP 7 online help
8	Switch DP master to RUN	Documentation of the DP master
9	Check LEDs	Interface module (https://support.automation.siemens.com/WW/view/en/77910801/133300) manual
10	Test inputs and outputs	The following functions are helpful: Monitoring and modifying tags, testing with program status, forcing, modifying the outputs. Section Test and service functions (Page 328)

Note

During operating mode transitions of the DP master from RUN to STOP or from STOP to RUN, it can take several milliseconds until the mode transition is complete for the inputs and outputs of all the I/O modules of the ET 200MP.

12.5 Operating modes

Introduction

Operating states describe the behavior of the CPU at a specific time. The following operating states are possible via the mode selector:

- STARTUP
- RUN
- STOP

In these operating modes, the CPU can communicate, for example, via the PROFINET IO interface (X1).

The status LEDs on the front side of the CPU indicate the current operating mode.

12.5.1 STARTUP mode

Response

Before the CPU starts to execute the cyclic user program, a startup program is executed.

By suitably programming startup OBs, you can specify initialization tags for your cyclic program in the startup program. That is, you can set up one or several startup OBs in your program, or none at all.

Points to note

- All outputs are disabled or react according to the parameter settings for the respective module: They provide a substitute value as set in the parameters or retain the last value output and bring the controlled process to a safe operating mode.
- The process image is initialized.
- The process image is not updated.
  To read the current state of inputs during STARTUP, you can access inputs with direct I/O access.
  To initialize outputs during STARTUP, you can write values via the process image or with direct I/O access. The values are output at the outputs during the transition to the RUN mode.
- The CPU always starts up in a warm restart.
  - The non-retentive bit memories, timers and counters are initialized.
  - The non-retentive tags in data blocks are initialized.
- During startup, no cycle time monitoring is running yet.

- The CPU processes the startup OBs in the order of the startup OB numbers. The CPU processes all programmed startup OBs regardless of the selected startup mode. (Figure "Setting the startup behavior").
- If a corresponding event occurs, the CPU can start the following OBs in startup:
  - OB 82: Diagnostics interrupt
  - OB 83: Removal/insertion of modules
  - OB 86: Rack error
  - OB 121: Programming error (only for global error handling)
  - OB 122: Time-out (for global error handling only)
    You can find a description of how to use global and local error handling in the STEP 7 online help.

  The CPU does not start all other OBs until the transition to RUN mode.

Response when expected and actual configurations do not match

The configuration downloaded to the CPU represents the expected configuration. The actual configuration is the actual configuration of the automation system. If the expected configuration and actual configuration deviate from one another, the CPU's behavior is specified by the setting of the hardware compatibility. For additional information about the hardware compatibility, see the section Operating mode transitions (Page 268).

Cancellation of the startup

If errors occur during startup, the CPU cancels the startup and returns to STOP mode.

The CPU does not perform startup or interrupts the startup under the following conditions:

- You have not inserted a SIMATIC memory card or an invalid one is inserted.
- You have not downloaded a hardware configuration to the CPU.

Configuring startup behavior

You configure the behavior of the CPU in the Startup group of the CPU properties.

Setting the startup behavior

To set the startup behavior, follow these steps:

1. Select the CPU in the device view of the STEP 7 hardware network editor.
2. In the properties under "General" select the "Startup" area.

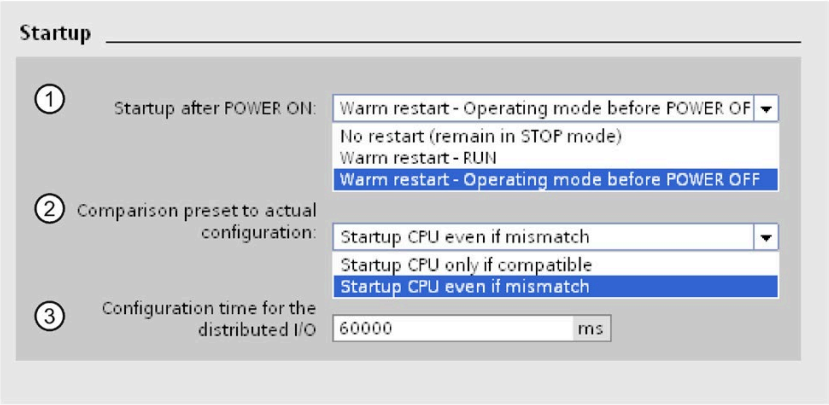

Figure 12-2 Setting the startup behavior

① Sets the startup type after POWER ON

② Defines the startup behavior for the case where a module in a slot does not correspond to the configured module. This parameter applies to the CPU and to all the modules for which no other setting was selected.

- Startup CPU only if compatible: In this setting a module on a configured slot has to be compatible with the configured module. Compatible means that the module matches the number of inputs and output and must match with respect to its electrical and functional properties.
- Startup CPU even if mismatch: At this setting the CPU starts up irrespective of the type of module plugged.

For locally used modules you can configure the hardware compatibility in the parameter "Comparison preset to actual module" individually for each slot. When you change the setting of the hardware compatibility for a module, the setting made at the CPU does not apply for this module.

③ Specifies a maximum period (default: 60000 ms) in which the central and distributed I/O must be ready for operation. The communications modules (CM/CP) are supplied with voltage and communication parameters during the CPU startup. This parameter assignment time grants a period within which the I/O modules connected to the communication module (CM/CP) must be operationally ready.
The CPU goes into RUN mode when the central and the distributed I/O is operationally ready within the parameter assignment time.

If the central and distributed I/O is not ready for operation within the configuration time, the startup characteristics of the CPU depends on the setting of the hardware compatibility.

Example for the "Comparison preset to actual configuration" parameter

"Startup CPU only if compatible"

The DI 32x24VDC HF input module with 32 digital inputs can be a compatible replacement for a DI 16x24VDC HF input module with 16 digital inputs. The pin assignment and all electrical and functional properties are identical.

"Startup CPU even if mismatch"

Instead of a configured digital input module, you insert an analog output module or no module is present in this slot and thus in all subsequent slots. Although the configured inputs cannot be accessed, the CPU starts up.

Note that the user program cannot function correctly in this case. Therefore, take appropriate measures!

12.5.2 STOP mode

Response

The CPU does not execute the user program in STOP mode.

All outputs are disabled or react according to the parameter settings for the respective module: They provide a substitute value as set in the parameters or retain the last value output and thus hold the controlled process in a safe operating mode.

12.5.3 RUN mode

Response

In "RUN" mode the cyclic, time-driven, and interrupt-driven program execution is performed. Addresses that are in the "Automatic Update" process image are automatically updated in each program cycle. For additional information, see section Process images and process image partitions (Page 203).

Execution of the user program

Once the CPU has written the outputs and read the inputs, it runs through the cyclic program from the first instruction to the last instruction. Events with higher priority, such as hardware interrupts, diagnostic interrupts and communication, can interrupt the cyclic program flow and prolong the cycle time.

If you have configured a minimum cycle time, the CPU will not end the cycle until this minimum cycle time has expired, even if the user program is completed sooner.

The operating system monitors the execution time of the cyclic program for a configurable upper limit known as the maximum cycle time. You can restart this time monitoring at any point in your program by calling the RE_TRIGR instruction.

If the cyclic program exceeds the maximum cycle time, the operating system starts the time error OB (OB 80). If the OB is not present, the CPU ignores that the maximum cycle time was exceeded. If the cycle monitoring time is exceeded a second time, e.g. while the time error OB is being processed, the CPU goes to STOP mode.

Reference

Additional information about cycle and response times is available in the Function Manual Cycle and response times (https://support.automation.siemens.com/WW/view/en/59193558).

12.5.4 Operating mode transitions

Operating modes and operating mode transitions

The following figure shows the operating modes and the operating mode transitions:

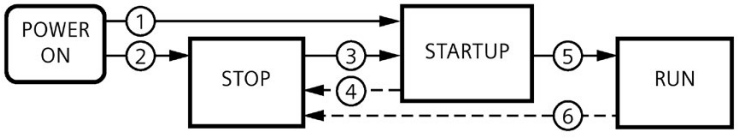

Figure 12-3 Operating modes and operating mode transitions

The table below shows the effects of the operating mode transitions:

Table 12- 3 Operating mode transitions

No.	Operating mode transitions		Effects
①	POWER ON → STARTUP	After switching on, the CPU switches to "STARTUP" mode if: • The hardware configuration and program blocks are consistent. • The preceding "POWER OFF" was triggered by an interruption in the power supply. • Startup type "Warm restart - RUN" is set. or • Startup type "Warm restart mode before POWER OFF" is set and the CPU was in RUN mode before POWER OFF.	The CPU clears the non-retentive memory, and resets the content of non-retentive DBs to the start values of the load memory. Retentive memory and retentive DB contents are retained. The 500 newest entries in the diagnostics buffer are retained.
②	POWER ON → STOP	After switching on, the CPU goes to "STOP" mode if: • The hardware configuration and program blocks are inconsistent. or • Startup type "No restart" is set. or • Startup type "Warm restart mode before POWER OFF" is set and the CPU was in STOP mode before POWER OFF.	The CPU clears the non-retentive memory, and resets the content of non-retentive DBs to the start values of the load memory. Retentive memory and retentive DB contents are retained. The 500 newest entries in the diagnostics buffer are retained.
③	STOP → STARTUP	The CPU switches to "STARTUP" mode if: • The hardware configuration and program blocks are consistent. • You set the CPU to "RUN" mode via the programming device or the display and the mode switch in is RUN position. or • You set the mode selector from STOP to RUN or press the operating mode button RUN.[1)]	The CPU clears the non-retentive memory, and resets the content of non-retentive DBs to the start values of the load memory. Retentive memory and retentive DB contents are retained. The 500 newest entries in the diagnostics buffer are retained.
④	STARTUP → STOP	In the following cases the CPU returns from "STARTUP" to "STOP" mode when: • The CPU detects an error during startup. • You set the CPU to "STOP" via the programming device, display or mode selector switch / keys.[1)] • The CPU executes a STOP command in the Startup OB.	These operating mode transitions have no effect on data.

No.	Operating mode transitions		Effects
⑤	STARTUP → RUN	In the following cases, the CPU goes from "STARTUP" to "RUN" mode when: • The CPU has initialized the PLC tags. • The CPU has executed the startup blocks successfully.	
⑥	RUN → STOP	In the following cases, the CPU goes from "RUN" mode back to "STOP" mode: • The CPU detects an error that prevents it from continuing to operate. • You have inserted CMs/CPs that have not yet been configured. • The CPU processes a STOP command in the user program. • You set the CPU to "STOP" via the programming device, display or mode selector switch / operating mode button.[1)]	

[1)] Standard, F-CPUs / compact CPUs from article number 6ES751x-xxx02-0AB0/6ES751x-1CK01-0AB0: You switch the mode using keys (RUN and STOP).

Note

RUN → STOP in configurations with centrally inserted communication modules (CM) and/or communications processors (CPs)

Centrally inserted communications modules (CMs) and/or communications processors (CPs) that have not yet been configured and downloaded to the CPU can cause a transition from "RUN" mode back to "STOP" mode.

Remove unconfigured CMs/CPs or configure and download the configuration of these CMs to the CPU before you set the CPU to "RUN" mode.

12.6 CPU memory reset

Basics of a memory reset

The CPU must be in STOP mode for a memory reset.

A memory reset returns the CPU to its "initial state".

Memory reset means:

- An existing online connection between your programming device/PC and the CPU is terminated.
- The content of the work memory and the retentive and non-retentive data are deleted (with manual memory reset).
- The diagnostics buffer, time of day, and IP address are retained.
- Subsequently the CPU is initialized with the loaded project data (hardware configuration, code and data blocks, force jobs). The CPU copies this data from the load memory to the work memory.

  Result:

  – If you set an IP address in the hardware configuration ("Set IP address in the project" option) and a SIMATIC memory card with the project is in the CPU, this IP address is valid after the memory reset.

  – Data blocks no longer have current values but rather their configured start values.

  – Force jobs remain active.

Detecting a CPU memory reset

The RUN/STOP LED flashes yellow at 2 Hz. After completion, the CPU switches to STOP. The RUN/STOP LED is on (constant yellow light).

Result after memory reset

The following table provides an overview of the contents of the memory objects after memory reset.

Table 12- 4 Memory objects after memory reset

Memory object	Contents
Actual values of the data blocks, instance data blocks	Initialized
Bit memories, timers and counters	Initialized
Retentive tags of technology objects (e.g. adjustment values of absolute encoders)	Retained
Diagnostics buffer entries	Retained
IP address	Retained
Device name	Retained
Counter readings of the runtime meters	Retained
Time of day	Retained
CPU operating state: RUN/STOP [1)]	The CPUs retain the RUN or STOP state.

[1)] Only with standard, F-CPUs/compact CPUs as of article number 6ES751x-xxx02-0AB0/6ES751x-1CK01-0AB0

Note

Password for protection of confidential configuration data

The password for protection of confidential configuration data is retained after a memory reset of the CPU. The password is only deleted when the "Delete password for protection of confidential PLC configuration data" option is set.

You can find additional information on the password for protection of confidential configuration data in the Communication (https://support.industry.siemens.com/cs/ww/de/view/59192925/en) function manual.

12.6.1 Automatic memory reset

Possible causes of automatic memory reset

The CPU executes an automatic memory reset if an error occurs that prevents normal further processing.

Examples of such errors:

- User program is too large and cannot be loaded to the work memory in full.
- The project data on the SIMATIC memory card are damaged, for example because a file was deleted.
- You remove or insert the SIMATIC memory card. The backed-up retentive data differs in structure from the data in the configuration on the SIMATIC memory card.

12.6.2 Manual memory reset

Reason for manual memory reset

Memory reset is required to reset the CPU to the "original state".

CPU memory reset

Three options are available for performing a CPU memory reset:

- Using the mode selector switch / mode selector keys
- Using the display
- Using STEP 7

Procedure using the mode selector

Note

Memory reset ↔ Reset to factory settings

The procedure described below also corresponds to the procedure for resetting to factory settings:

- Selector operation with inserted SIMATIC memory card: CPU executes a memory reset
- Selector operation without inserted SIMATIC memory card: CPU executes reset to factory settings

To perform a memory reset of the CPU using the mode selector, follow these steps:

1. Set the mode selector to the STOP position.

   Result: The RUN/STOP LED lights up yellow.

2. Set the mode selector to the MRES position. Hold the switch in this position until the RUN/STOP LED lights up for the second time and remains continuously lit after three seconds. After this, release the selector.

3. Within the next three seconds, switch the mode selector back to the MRES position, and then back to STOP again.

Result: The CPU executes memory reset.

For information on resetting the CPU to factory settings, refer to the section Resetting the CPU to factory settings (Page 319).

Procedure using the mode selector keys (standard, F-CPUs / compact CPUs from article number 6ES751x-xxx02-0AB0/6ES751x-1CK01-0AB0)

Note

Memory reset ↔ Reset to factory settings

The procedure described below also corresponds to the procedure for resetting to factory settings:

- Key operation with inserted SIMATIC memory card: CPU executes a memory reset
- Key operation without inserted SIMATIC memory card: CPU executes reset to factory settings

To perform a memory reset of the CPU using the mode selector keys, follow these steps:

1. Press the STOP mode selector key.

   Result: The STOP ACTIVE and RUN/STOP LED light up yellow.

2. Press the STOP operating mode button until the RUN/STOP LED lights up for the 2nd time and remains continuously lit after 3 seconds. After this, release the key.

3. Press the STOP mode selector key again within the next three seconds.

Result: The CPU executes memory reset.

For information on resetting the CPU to factory settings, refer to the section Reset CPU to factory settings (Page 319).

Procedure using the display

To navigate to the desired "Memory reset" menu command, select the following sequence of menu commands and confirm after each selection with "OK".

- Settings → Reset → Memory reset

Result: The CPU executes memory reset.

Procedure using STEP 7

To perform a memory reset of the CPU via STEP 7, follow these steps:

1. Open the "Online Tools" task card of the CPU.
2. Click the "MRES" button in the "CPU control panel" pane.
3. Click "OK" in response to the confirmation prompt.

Result: The CPU is set to STOP mode and performs memory reset.

12.7 Backing up and restoring the CPU configuration

Backup from online device

You may make changes in the operation of your plant. For example, you may add new devices, replace existing ones or adapt the user program. If these changes result in undesirable behavior, you can restore the plant to an earlier state. Before you download a changed configuration to the CPU, first use the option "Backup from online device" to create a complete backup of the current device state. If you have assigned a password to protect confidential PLC configuration data, then this password is not saved. You can find more information on passwords in the section Protection of confidential configuration data (Page 224).

Upload from device (software)

With the option "Upload from device (software)", you load the software project data from the CPU to an existing CPU in the project.

Upload device as new station

If you are operating a new PG/PC in the plant, the STEP 7 project that was used to create the plant configuration might not be available. In this case, you can use the option "Upload device as new station" to load the data to a project in your PG/PC.

Snapshot of the monitor values

To allow you to restore the actual values at a later date, back up the actual values of the data blocks using the option "Snapshot of the observed values".

Overview of backup types

The table below shows the backup of CPU data depending on the selected type of backup and its specific characteristics:

Table 12- 5 Types of backup

	Backup from online device	Upload from device (software)	Upload device as new station	Snapshot of the monitor values
Current values of all DBs (global and instance data blocks) [1]	✓	✓	✓	✓
Blocks of the type OB, FC, FB and DB	✓	✓	✓	--
PLC tags (tag names and constant names)	✓	✓	✓	--
Technology objects	✓	✓	✓	--
Hardware configuration	✓	--	✓	--
Actual values (bit memories, timers and counters)[1]	✓	--	--	--
Content of the SIMATIC memory card	✓	--	✓[2]	--
Archives, recipes	✓	--	--	--
Entries in the diagnostics buffer	--	--	--	--
Current time	--	--	--	--
Properties of the type of backup				
Backup possible for fail-safe CPUs	✓	✓	✓	✓
Backup can be edited	--	✓	✓	✓
Backup possible in operating mode	STOP	RUN, STOP	RUN, STOP	RUN, STOP

[1] Only the values of the tags that are set as retentive are saved.

[2] Contents of the DataLogs, Recipes and UserFiles folders

Example: Backup from online device

The following example shows how to carry out a complete backup of the current device state of the CPU in STEP 7. The S7-1500 automation system is in RUN mode. Before the backup, the CPU goes into STOP mode.

To start the backup, proceed as follows:

1. Right-click to select the CPU in the project tree.
2. Select the "Backup from online device" command from the shortcut menu.
   The "Upload preview" dialog window sets out the key information on the backup process to be run. For a backup you have to switch the CPU to the STOP mode.
3. In the "Action" column, select the "Stop module" command from the drop-down menu.
4. Click "Upload from device". The CPU changes to STOP mode. The backup of the CPU data starts. The backup is saved in the project tree in the folder of the CPU under "Online backups".

Example: Restoring a backup of an online device

If you have saved the CPU data beforehand, you can transfer the backup back to the device. The saved backup is then restored to the CPU.

The S7-1500 automation system is in RUN mode. Before the restoration, the CPU goes into STOP mode.

To start the backup restore, proceed as follows:

1. Open the CPU's folder in the project navigator. The lower-level objects are displayed.
2. Open the "Online backups" folder.
3. Select the backup you want to restore.
4. In the "Online" menu, select the "Download to device" command.
5. The "Load preview" dialog window sets out the key information on the restore process to be run. For a restoration you have to switch the CPU to the STOP mode.
6. In the "Action" column, select the "Overwrite" command from the drop-down menu.
7. Click "Download". The CPU changes to STOP mode. The backup is transferred to the CPU and restored. The "Load results" dialog then opens. In this dialog, you can check whether or not the loading operation was successful and take any further action that may be necessary (no action, start modules).
8. Click "Finish".

Reference

You can find additional information on the different backup methods in the STEP 7 online help.

Emergency address (Emergency IP)

The emergency address (emergency IP address) of a CPU is intended for diagnostic and download functions, e.g. when the CPU is no longer accessible via the IP protocol after a wrong project is downloaded. For information on the emergency address, please refer to the Communication (https://support.industry.siemens.com/cs/ww/de/view/59192925/en) function manual.

Storage of multilingual project texts

When you configure a CPU, texts of different categories result, e.g.

- Object names (names of blocks, modules, tags, etc.)
- Comments (for blocks, networks, watch tables, etc.)
- Messages and diagnostic texts

Texts are provided by the system, for example texts in the diagnostics buffer, or they are created during configuration, for example, messages.

Texts exist in the project in one language or, after a translation process, in multiple languages. You can maintain project texts in all languages available to you in the project tree (Languages & resources > Project texts). The texts produced when configuring can be downloaded to the CPU.

The following texts are downloaded in the selected languages with the project data to the CPU and are also used by the Web server/CPU display:

- Diagnostics buffer texts (cannot be changed)
- Status texts for the module status (cannot be changed)
- Message texts with associated text lists
- Tag comments and step comments for S7 GRAPH and PLC Code Viewer
- Comments in watch tables

The following texts are also downloaded in the selected languages with the project languages to the CPU but are not used by the Web server/CPU display:

- Comments in tag tables (for tags and constants)
- Comments in global data blocks
- Comments of elements in block interfaces of FBs, FCs, DBs and UDTs
- Network titles in blocks written in LAD, FBD or STL
- Block comments
- Network comments
- Comments of LAD and FBD elements

The S7-1500 CPUs support the storage of multilingual project texts in up to three different project languages. If the project texts for a project language nevertheless exceed the memory space reserved for them, the project cannot be downloaded to the CPU. The download is aborted with a notice that not enough memory space is available. In such a case, take measures to reduce the required storage space, for example by shortening comments.

You will find information on parameterization of multilingual project texts in STEP 7 in the STEP 7 online help.

Size of files and size of the SIMATIC memory card

Note

SIMATIC memory card

Make sure that there is enough available storage space on your SIMATIC memory card for downloading projects.

To download and back up projects, the project size and the size of the files on the SIMATIC memory card must be less than 2 GB.

Do not manipulate any contents in the OMSSTORE directory on the SIMATIC memory card.

You can find information on reading out the memory usage of the CPU and the SIMATIC memory card in the Structure and Use of the CPU Memory (https://support.industry.siemens.com/cs/de/de/view/59193101/en) Function Manual.

12.8 Time synchronization

Introduction

All CPUs are equipped with an internal clock. The clock shows:

- The time of day with a resolution of 1 millisecond
- The date and the day of the week

The CPU take into account the time change caused by daylight saving time.

You can synchronize the time of the CPUs with an NTP server in NTP mode.

Principle of operation

In NTP mode, the device sends time queries at regular intervals (in client mode) to the NTP server in the subnet (LAN). Based on the replies from the server, the most reliable and most accurate time is calculated and the time of day on the CPU is synchronized. The advantage of this mode is that it allows the time to be synchronized across subnets. You can synchronize the time of day of up to a maximum of four NTP servers. You address a communications processor or an HMI device, for example, as sources for time synchronization via the IP addresses.

The update interval defines the interval between the time queries (in seconds). The value of the interval ranges between 10 seconds and one day. In NTP mode, it is generally UTC (Universal Time Coordinated) that is transferred. UTC corresponds to GMT (Greenwich Mean Time).

NTP server for the CPU S7-1500

You can assign up to 4 NTP servers to a CPU S7-1500.

You have the following options to reset the IP addresses of the NTP servers:

- Configure IP addresses of the NTP servers in STEP 7.
- Set IP addresses of the NTP servers with the "T_CONFIG" instruction.
- Obtain IP addresses of the NTP servers via DHCP.
  As of firmware version V2.9, the CPU can also obtain the NTP servers via DHCP. You can find more information on the procedure and the DHCP communication protocol in the Communication (https://support.industry.siemens.com/cs/ww/de/view/59192925/en) function manual.

Configuring IP addresses of the NTP servers in STEP 7

To configure the IP addresses of the NTP servers in STEP 7, follow these steps:

1. Select the S7-1500 CPU in STEP 7.
2. Configure the time synchronization in the "Properties > General > Time" parameter group.
3. Set the "Set NTP server in the project" value at the "Time synchronization" parameter.
4. Enter the IP addresses of up to four NTP servers for "NTP Server 1" to "NTP Server 4".
5. Set the time interval of time queries for "Update interval". Set the update interval to between 10 s and 86400 s.

Setting the IP addresses of the NTP servers with the "T_CONFIG" instruction

Requirement:

- You selected the option "Set NTP server directly on the device (e.g. PLC program, display)" in the "Time synchronization" drop-down list in STEP 7.

Proceed as follows to set the IP addresses of the NTP servers with the T_CONFIG instruction:

1. Enter the IP addresses of up to four NTP servers in a tag of the data type IF_CONF_NTP.
2. Connect the tag of the data type IF_CONF_NTP to the block parameter CONF_DATA of the instruction T_CONFIG.
3. Call the T_CONFIG instruction in the user program.

Result: The CPU adopts the addresses of the NTP servers from the T_CONFIG instruction.

If necessary, you can change the addresses of the NTP servers several times with T_CONFIG.

Reference

For more information on time-of-day synchronization - time synchronization in automation, refer to the following FAQ on the Internet (https://support.industry.siemens.com/cs/de/en/view/86535497).

12.8.1 Example: Configuring the IP address of the NTP server in STEP 7 or setting it in the user program

Automation task

You are using your own NTP server in your network with the IP address 192.168.1.15. Your own server provides you with the following advantages:

- Protection against unauthorized accesses from outside
- Every device that you synchronize with your own NTP server uses the same time.

You want to synchronize the S7-1500 CPU with this NTP server.

The following sections describe how to configure the IP address of the NTP server in STEP 7 or set it in the user program.

Configuring the IP address of the NTP server in STEP 7

Procedure

1. Select the S7-1500 CPU in STEP 7.
2. Configure the time synchronization in the "Properties > General > Time" parameter group.
3. Set the "Set NTP server in the project" value at the "Time synchronization" parameter.
4. For "NTP Server 1", enter the IP address of the NTP server: 192.168.1.15.
5. Download the hardware configuration to the CPU.

Result

The S7-1500 synchronizes the time with the NTP server 192.168.1.15.

Set IP addresses of the NTP server with the "T_CONFIG" instruction

Requirement:

- You selected the option "Set NTP server directly on the device (e.g. PLC program, display)" in the "Time synchronization" drop-down list in STEP 7.

To set the IP address for the NTP server, use the following block parameters of the "T_CONFIG" instruction:

- Req: A positive edge at the block parameter "Req" starts a job of the "T_CONFIG" instruction.
- Interface: Enter the HW ID of the PROFINET interface 1 of the CPU at the block parameter "Interface". In this example, the HW ID is "64".
- Conf_Data: Area in which you save the IP addresses of the NTP server. Use the data type "IF_CONF_NTP" for this purpose.

Procedure

Proceed as follows to set the IP address of the NTP server in the user program to "192.168.1.15":

1. Create a global data block in the project tree under "Program blocks > Add new block". Name the global data block "NTP".
2. Create an "NTP_Server" tag of the data type "IF_CONF_NTP" in the global data block "NTP".

NTP

	Name	Data type	Start value	Comment
1	Static			
2	NTP_Server	IF_CONF_NTP		
3	Id	UInt	17	
4	Length	UInt	22	
5	Mode	UInt	0	
6	NTP_IP	Array[1..4] of IP_V4		
7	NTP_IP[1]	IP_V4		
8	ADDR	Array[1..4] of Byte		IPv4 address
9	ADDR[1]	Byte	192	IPv4 address
10	ADDR[2]	Byte	168	IPv4 address
11	ADDR[3]	Byte	1	IPv4 address
12	ADDR[4]	Byte	10	IPv4 address
13	NTP_IP[2]	IP_V4		
14	NTP_IP[3]	IP_V4		
15	NTP_IP[4]	IP_V4		
16	change_NTP-Server	Bool	false	
17	done	Bool	false	
18	busy	Bool	false	
19	error	Bool	false	
20	status	DWord	16#0	
21	err_loc	DWord	16#0	

Figure 12-4 Example data block with IF_CONF_NTP

3. Create a "T_CONFIG" instruction in the user program.
4. Connect the "T_CONFIG" instruction as follows.

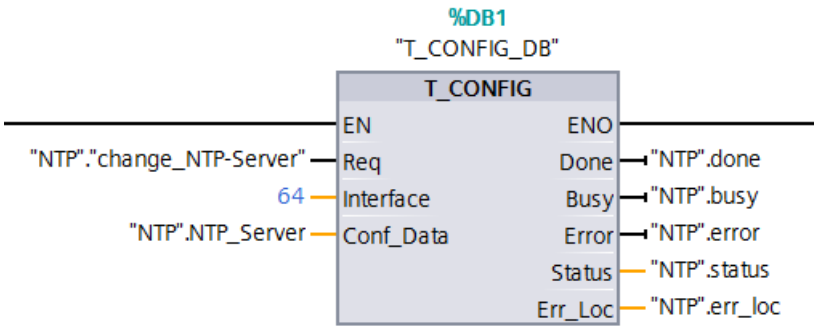

Figure 12-5 Example T_CONFIG: Setting the NTP server

5. In the user program, assign the IP address 192.168.1.15 to the data type "IF_CONF_NTP":
```
"NTP".NTP_Server.NTP_IP[1].ADDR[1] := 192;
"NTP".NTP_Server.NTP_IP[1].ADDR[2] := 168;
"NTP".NTP_Server.NTP_IP[1].ADDR[3] := 1;
"NTP".NTP_Server.NTP_IP[1].ADDR[4] := 15;
```
6. Generate a positive edge for the tag "change_NTP-Server" in the user program:
```
"NTP"."change_NTP-Server" := true;
```

Result

The S7-1500 synchronizes the time with the NTP server 192.168.1.15.

12.9 Identification and maintenance data

12.9.1 Reading out and entering I&M data

I&M data

Identification and maintenance data (I&M data) is information saved on the module. The data is:

- Read-only (I data) or
- Readable/writable (M data)

Identification data (I&M0): Manufacturer information about the module that can only be read. Some identification data is also printed on the housing of the module, for example article number and serial number.
Maintenance data (I&M1, 2, 3): Plant-specific information, for example installation location. Maintenance data for the S7-1500/ET 200MP is created during configuration and downloaded to the automation system/distributed I/O system.

All modules of the S7-1500/ET 200MP support identification data I&M0 through I&M3.

The I&M identification data supports you in the following activities:

- Checking the plant configuration
- Locating hardware changes in a plant
- Correcting errors in a plant

Modules can be clearly identified online using the I&M identification data.

Options for reading out I&M data

- Via the user program
- Using the display of the CPU
- Via STEP 7 or HMI devices
- Via the CPU web server

Reading I&M data via the user program

You have the following options for reading module I&M data in the user program:

- Using the RDREC instruction

  The data record structure for centrally inserted modules as well as for distributed modules that are accessible via PROFINET IO/PROFIBUS DP is described in the section Record structure for I&M data (Page 285).
- Using the Get_IM_Data instruction

Reference

The description of the instructions can be found in the STEP 7 online help.

Reading I&M data from displays

To read the I&M data "Plant designation" or "Location identifier" of the CPU via the display, follow these steps:

1. Navigate to the "Overview/PLC" menu on the display of the CPU.
2. Select "Plant designation" or "Location identifier" and confirm with "OK".

To read the I&M data "Plant designation" or "Location identifier" of a centrally used module, follow these steps:

1. Navigate to the "Modules" menu on the display of the CPU.
2. Select the menu command "Local modules" and confirm with "OK".
3. Select the slot of the module (e.g., slot 3: DI 32 x 24VDC HF) and confirm with "OK".
4. Select the "Status" and confirm with OK.
5. Select "Plant designation" or "Location identifier" and confirm with "OK".

To read the I&M data "Plant designation" or "Location identifier" of a module used in distributed mode, follow these steps:

1. Navigate to the "Modules" menu on the display of the CPU.
2. Select the corresponding distributed I/O system (for example PROFINET IO system) and confirm with "OK".
3. Select the corresponding device (for example ET 200SP-Station_1) and confirm with "OK".
4. Select the slot of the module (e.g., slot 1: DI 16 x DC24V ST_1) and confirm with "OK".
5. Select the "Status" and confirm with OK.
6. Select "Plant designation" or "Location identifier" and confirm with "OK".

Reading I&M data via STEP 7

Requirement: There must be an online connection to the CPU/interface module.

To read I&M data using STEP 7, follow these steps:

1. In the project tree, select the CPU/the interface module.
2. Go to "Online & diagnostics".
3. In the "Diagnostics" folder, select the "General" area.

Enter maintenance data via STEP 7

STEP 7 assigns a default module name. You can enter the following information:

- Plant designation (I&M 1)
- Location identifier (I&M 1)
- Installation date (I&M 2)
- Additional information (I&M 3)

To enter maintenance data via STEP 7, follow these steps:

1. In the device view of STEP 7, select the CPU/interface module or a module.
2. Go to properties, "General", and select the "Identification & Maintenance" area
3. Enter the data.

During the loading of the hardware configuration, the maintenance data (I&M 1, 2, 3) are also loaded.

Procedure for reading I&M data via the Web server

The procedure is described in detail in the Web server Function Manual (https://support.automation.siemens.com/WW/view/en/59193560).

12.9.2 Record structure for I&M data

Reading I&M records via user program (centrally and distributed via PROFINET IO)

Use **Read data record** ("RDREC" instruction) to access specific identification data. Under the associated record index you obtain the corresponding part of the identification data.

The records are structured as follows:

Table 12- 6 Basic structure of data records with I&M identification data

Contents	Length (bytes)	Coding (hex)
Header information		
BlockType	2	I&M0: 0020_H I&M1: 0021_H I&M2: 0022_H I&M3: 0023_H
BlockLength	2	I&M0: 0038_H I&M1: 0038_H I&M2: 0012_H I&M3: 0038_H
BlockVersionHigh	1	01
BlockVersionLow	1	00
Identification data		
Identification data (see table below)	I&M0/Index $AFF0_H$: 54 I&M1/Index $AFF1_H$: 54 I&M2/Index $AFF2_H$: 16 I&M3/Index $AFF3_H$: 54	- - - -

Table 12- 7 Record structure for I&M identification data

Identification data	Access	Example	Explanation
Identification data 0: (record index $AFF0_H$)			
VendorIDHigh	read (1 bytes)	0000_H	Vendor name ($002A_H$ = SIEMENS AG)
VendorIDLow	read (1 bytes)	$002A_H$	
Order_ID	read (20 bytes)	6ES7516-3AN00-0AB0	Article number of the module (e.g. CPU 1516-3 PN/DP)
IM_SERIAL_NUMBER	read (16 bytes)	-	Serial number (device-specific)
IM_HARDWARE_REVISION	read (2 bytes)	1	corresponds to hardware version (e.g. 1)
IM_SOFTWARE_REVISION	read	Firmware version	Provides information about the firmware version of the module (e.g. V1.0.0)
• SWRevisionPrefix	(1 byte)	V	
• IM_SWRevision_Functional_Enhancement	(1 byte)	0000_H - $00FF_H$	
• IM_SWRevision_Bug_Fix	(1 byte)	0000_H - $00FF_H$	
• IM_SWRevision_Internal_Change	(1 byte)	0000_H - $00FF_H$	

Identification data	Access	Example	Explanation
IM_REVISION_COUNTER	read (2 bytes)	0000H	Provides information about parameter changes on the module (not used)
IM_PROFILE_ID	read (2 bytes)	0000 H	Generic Device
IM_PROFILE_SPECIFIC_TYPE	read (2 bytes)	0001H	CPU
		0003H	I/O modules
IM_VERSION	read	0101H	Provides information on the ID data version (0101H = Version 1.1)
• IM_Version_Major	(1 byte)		
• IM_Version_Minor	(1 byte)		
IM_SUPPORTED	read (2 bytes)	000EH	provides information about the available identification and maintenance data (I&M1 to I&M3)
Maintenance data 1: (Record index AFF1H)			
IM_TAG_FUNCTION	read/write (32 bytes)	-	Enter an identifier for the module here, that is unique plant-wide.
IM_TAG_LOCATION	read/write (22 bytes)	-	Enter the installation location of the module here.
Maintenance data 2: (Record index AFF2H)			
IM_DATE	read/write (16 bytes)	YYYY-MM-DD HH:MM	Enter the installation date of the module here.
Maintenance data 3: (Record index AFF3H)			
IM_DESCRIPTOR	read/write (54 bytes)	-	Enter a comment about the module here.

Reading I&M records with record 255 (distributed configuration via PROFIBUS)

Use **Read data record** ("RDREC" instruction) to access specific identification data.

The modules support standardized access to identification data using DR 255 (index 65000 to 65003). For more information on the DR 255 data structure, refer to the specifications of the Profile Guidelines Part 1: Identification & Maintenance Functions - Order no.: 3.502, Version 1.2, October 2009.

The specifications are available, for example, on the PROFIBUS & PROFINET International (PI) website on the Internet (https://www.profibus.com/).

12.9.3 Example: Read out firmware version of the CPU with Get_IM_Data

Automation task

You want to check whether the modules in your automation system have the current firmware. The firmware version of the modules can be found in the I&M0 data. The I&M0 data is the basic information for a device. The I&M0 data contains information, for example:

- Manufacturer ID
- Article number and serial number
- Hardware and firmware version.

To read out the I&M0 data, use the "Get_IM_Data" instruction. You read the I&M0 data of all modules in the user program of the CPU with "Get_IM_Data" instructions and store the I&M data in a data block.

Conditions and parameters

To read out the I&M data of the CPU, use the following block parameters of the "Get_IM_Data" instruction:

- LADDR: Enter the HW ID of the module at the block parameter "LADDR".
- IM_TYPE: Enter the I&M data number (e.g. "0" for I&M 0 data) at the block parameter "IM_TYPE".
- DATA: Area for storing the read I&M data (for example. in a global data block). Store the I&M 0 data in an area of the data type "IM0_Data".

This example shows how to read out the I&M 0 data of a CPU 1511-1 PN. To read out the I&M 0 data of a different module, simply use the HW ID of the module at the parameter LADDR.

Solution

To read out the I&M 0 data of the CPU, follow these steps:

1. Create a global data block to store the I&M 0 data.
2. Create a structure of the data type "IM0_Data" in the global data block. You can assign any name to the structure ("imData") in this case.

SLI_gDB_Get_IM_Data

	Name	Data type	Start value
1	Static		
2	imData	IM0_Data	
3	done	Bool	false
4	busy	Bool	false
5	error	Bool	false
6	status	Word	16#0

Figure 12-6 Example: Data block for I&M data

3. Create the Insert the "Get_IM_Data" instruction in the user program, e.g. in OB 1.

4. Connect the "Get_IM_Data" instruction as follows:

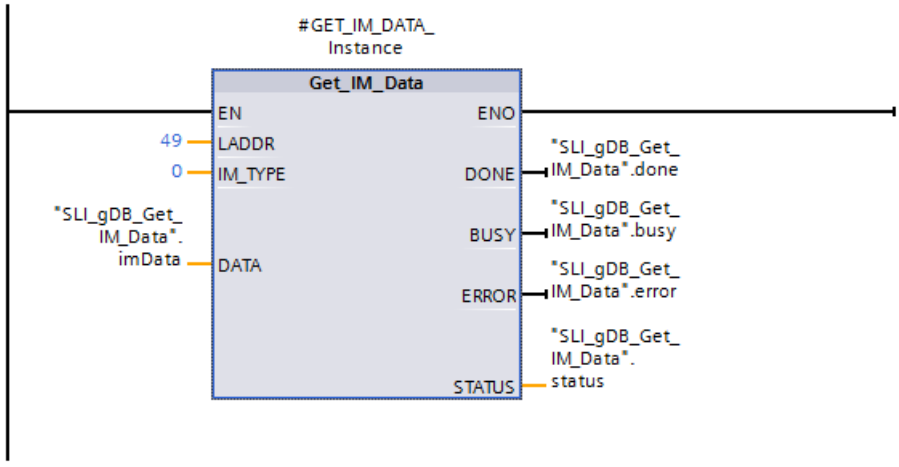

Figure 12-7 Example: Reading out I&M0 data

5. Call the "Get_IM_Data" instruction in the user program.

Result

The "Get_IM_Data" instruction has stored the I&M0 data in the data block.

You can view the I&M0-Daten online in STEP 7, for example, in the data block with the "Monitor all" button. The CPU in the example is a CPU 1511-1 PN (6ES7511-...) with firmware version V1.5.

SLI_gDB_Get_IM_Data

	Name	Data type	Start value	Monitor value
1	Static			
2	imData	IM0_Data		
3	Manufacturer_ID	UInt	0	42
4	Order_ID	String[20]	''	'6ES7 511-...'
5	Serial_Number	String[16]	''	'S C-DOS710132013'
6	Hardware_Revision	UInt	0	3
7	Software_Revision	IM0_Version		
8	Type	Char	' '	'V'
9	Functional	USInt	0	1
10	Bugfix	USInt	0	5
11	Internal	USInt	0	0
12	Revision_Counter	UInt	0	0
13	Profile_ID	UInt	0	0
14	Profile_Specific_Ty...	UInt	0	0
15	IM_Version	Word	16#0	16#0101
16	IM_Supported	Word	16#0	16#001E
17	done	Bool	false	TRUE
18	busy	Bool	false	FALSE
19	error	Bool	false	FALSE
20	status	Word	16#0	16#0000

Figure 12-8 Example: I&M0 data of an S7-1500 CPU

12.10 Shared commissioning of projects

Team Engineering

In Team Engineering, several users from various engineering systems work on a project at the same time and access one S7-1500 CPU.

The users can edit separate parts of a master project independently of one another at the same time. The CPU show the changes of the other editors in a synchronization dialog during the loading of the configuration into the CPU and synchronizes the changes automatically, if possible.

Certain online functions can also be executed in parallel from several engineering systems on a shared CPU, such as:

- Monitoring blocks on the CPU
- Modifying blocks on the CPU
- Trace functions

You can find detailed information on the topic of Team Engineering in the STEP 7 online help.

CPU display

13

Introduction

The section below gives an overview of the mode of operation of the CPU display. Detailed information on the individual options, a training course and a simulation of the selectable menu items is available in the SIMATIC S7-1500 Display Simulator (https://support.industry.siemens.com/cs/ww/en/view/109761758).

Display

The S7-1500 CPU has a display and operating keys. The display of the CPU shows you the control and status information in different menus. You use operating keys to navigate through the menus and make a variety of settings in the process.

Benefits

The display of the CPU offers the following advantages:

- Reduced downtimes through diagnostic messages in plain text
- Time savings during commissioning, maintenance and downtime of the plant by changing the interface settings (e.g. IP address) of CPU and connected CMs/CPs. No programming device is required.
- Shorter downtimes due to read/write access to force tables and read/write access to watch tables.
  This allows the current values of the individual tags of a user program or a CPU to be monitored and changed by the monitoring and force tables. You can find more information on the watch and force tables in section Test functions and fault correction (Page 328) and in the STEP 7 online help.
- On site, an image (backup copy) of the functioning plant can be
  - Backed up on the SIMATIC Memory Card of the CPU
  - Restored from the SIMATIC Memory Card of the CPU

  You do not require an additional PG/PC.
- For F-CPUs: Overview of status of safety mode and of F-parameters of F-CPU and F-I/O.

Password protection for the display

In the properties of the CPU, configure a password in STEP 7 for the display operation. Local access protection is thus protected via a local password.

Operating temperature for the display

To increase the service life of the display, the display switches off when the permitted operating temperature is exceeded. When the display has cooled down again, it switches on automatically again. When the display is switched off, the LEDs continue to show the status of the CPU.

Information about the temperatures at which the display switches off and back on again is available in the technical data of the manuals of the CPUs.

Note

The S7-1500 CPU has no internal temperature measurement. Reading out the internal temperature of the S7-1500 CPU is not supported.

Display

The following figures show an example of a CPU with large display (left: for example, CPU 1516-3 PN/DP) and a CPU with small display (right: for example, CPU 1511-1 PN).

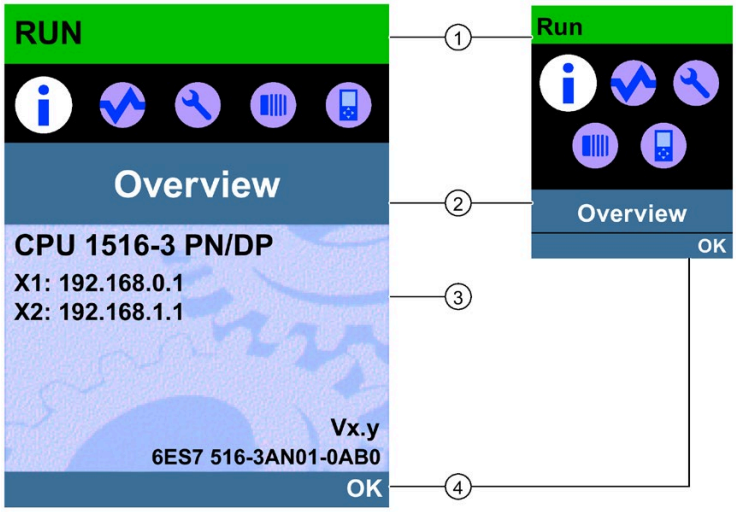

① CPU status information
② Names of the menus
③ Data display field
④ Navigation aid, e.g. OK/ESC or the page number

Figure 13-1 Example views of the displays

Regarding ①: CPU status information

The following table shows the CPU status information that can be retrieved via the display.

Table 13- 1 CPU status information

Color and icons for the status data	Meaning
Green	RUN
Orange	• STOP • STOP - firmware update
Red	FAULT
White	• Connection established between CPU and display.
	Protection level configured.
	• At least one interrupt is active in the CPU. • No SIMATIC Memory Card inserted in the CPU. • The serial number to which a know-how-protected block is bound does not match the serial number of the CPU or the SIMATIC Memory Card. • No user program loaded.
	Force job is active in the CPU.
	F-capability activated. Safety operation active (for fail-safe CPUs) The symbol is grayed out when safety mode is deactivated.
	Fail-safe CPU (for fail-safe CPUs).

Regarding ②: Names of the menus

The following table shows the available menus of the display.

Table 13- 2 Names of the menus

Main menu items	Meaning	Description
	Overview	The "Overview" menu contains information about: • The properties of the CPU • The properties of the inserted SIMATIC Memory Card • Whether a know-how protection or a linking of the serial number exists. The following information is displayed for F-CPUs: • The status of the safety mode • The collective signature • The date of the last changes
	Diagnostics	The "Diagnostics" menu includes: • The display of diagnostic messages. • Read/write access to force and watch tables. • Display of cycle time. • Display of CPU memory utilization. • Display of interrupts.
	Settings	In the "Settings" menu you: • Assign the IP addresses and the PROFINET device name of the CPU. • Set the network properties of each CPU interface. • Set the date, time, time zones, operating modes (RUN/STOP) and protection levels. • Disable/enable display with display password • Perform a CPU memory reset. • Perform a reset to factory settings. • Format the SIMATIC Memory Card. • Delete the user program. • Back up/restore the CPU configuration to/from the SIMATIC Memory Card. • View the status of the firmware update. • Convert the SIMATIC Memory Card to a program card
	Modules	The "Modules" menu contains information about the central and distributed modules that are used in your configuration. Peripherally deployed modules are connected to the CPU via PROFINET and/or PROFIBUS. You can set the IP addresses for the CPU or a CP/CM here. Fail-safe parameters are displayed for F-modules.
	Display	In the "Display" menu you can configure settings related to the display, such as language setting, brightness and energy-saving mode. The energy-saving mode dims the display. The standby mode selectors the display off.

Menu icons

The following table shows the icons that are displayed in the menus.

Table 13- 3 Menu icons

Icon	Meaning
	Editable menu item.
	Select the desired language here.
	A message is available in the next lower level page.
	There is an error in the next lower level page.
	The marked module is not accessible.
	Navigate to the next lower level page.
	In edit mode you make the selection using two arrow keys: • Down/up: jumps to the selection or is used to select the desired digits/options.
	In edit mode you make the selection using four arrow keys: • Down/up: jumps to the selection or is used to select the desired digits. • Left/right: jumps one spot forward or backward.
	The alarm is not yet acknowledged.
	The alarm is acknowledged.

Control keys

You operate the display using the following keys:

- Four arrow keys: "up", "down", "left", "right"
  If you press and hold an arrow key for 2 seconds, this generates an automatic scroll function.
- One ESC key
- One OK key

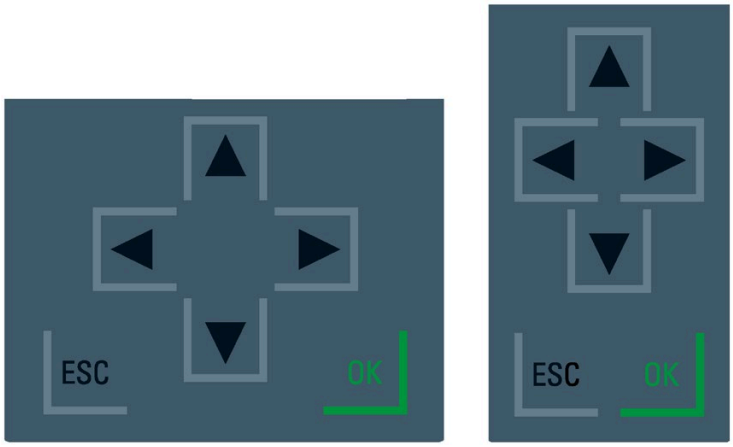

Figure 13-2 Control keys

Note

If the display is in energy-saving mode or in standby mode, you can exit this mode by pressing any key.

Functions of the "OK" and "ESC" keys

- For menu commands in which an entry can be made:
  - OK → valid access to the menu command, confirmation of input, and exit from the edit mode
  - ESC → Restore original content (changes are not saved) and exit edit mode
- For menu commands in which no entry can be made:
  - OK → to next submenu command
  - ESC → back to previous menu command

Hold ESC for about 3 seconds on any screen of the display. Result: You automatically return to the home page.

Tooltips

Some of the values shown on the display can exceed the available display width. The values in question include:

- Station name
- Plant designation
- Location identifier
- PROFINET device name

The available display width is frequently exceeded on CPUs with small displays.

If you focus on the relevant value on the display and press the "Left" arrow key, a tooltip appears. The tooltip shows the name of the value in complete length. To hide the tooltip again, press the "Left" arrow key again or the "ESC" key.

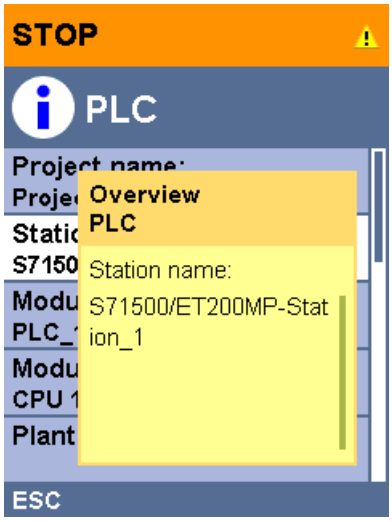

Figure 13-3 Tooltip function

Uploading image to the display via STEP 7

In the STEP 7 device view, you download an image from your file system to the CPU display with the "Display > User-defined logo" function.

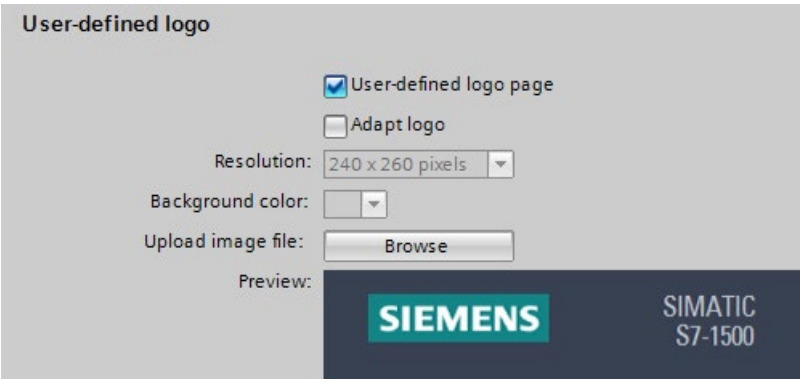

Figure 13-4 Uploading image to CPU

To display the uploaded image in the correct aspect ratio, use images with the following dimensions depending on the CPU.

Table 13- 4 Dimensions

CPU	Dimensions	Supported formats
CPU 1511(F)-1 PN CPU 1511C-1 PN CPU 1511T(F)-1 PN	128 x 120 pixels	Bitmap, JPEG, GIF, PNG
CPU 1512C-1 PN	128 x 120 pixels	Bitmap, JPEG, GIF, PNG
CPU 1513(F)-1 PN	128 x 120 pixels	Bitmap, JPEG, GIF, PNG
CPU 1515(F)-2 PN CPU 1515T(F)-2 PN	240 x 260 pixels	Bitmap, JPEG, GIF, PNG
CPU 1516(F)-3 PN/DP CPU 1516T(F)-3 PN/DP	240 x 260 pixels	Bitmap, JPEG, GIF, PNG
CPU 1517(F)-3 PN/DP CPU 1517T(F)-3 PN/DP	240 x 260 pixels	Bitmap, JPEG, GIF, PNG
CPU 1518(F)-4 PN/DP CPU 1518T(F)-4 PN/DP CPU 1518(F)-4 PN/DP MFP	240 x 260 pixels	Bitmap, JPEG, GIF, PNG

If the uploaded image exceeds the specified dimensions, the display shows only part of the image. The "Adapt logo" option in STEP 7 allows you to reduce the image to the specified dimensions. However, note that the original aspect ratio of the image is not retained in such cases.

Displaying image on the display

To display the uploaded image on the display of the CPU, press the ESC key in the main screen of the display. When you upload an image and are in the main screen, the display automatically shows the image after 60 seconds. To hide the image again, press any key on the display.

Available language settings

You can set the following languages separately for menu and message texts:

- Chinese
- German
- English
- French
- Italian
- Japanese
- Korean
- Portuguese (Brazil)
- Russian
- Spanish
- Turkish

You select the required language directly on the display in the "Display" menu or in STEP 7 in the hardware configuration of the CPU under "User interface languages".

To display message texts on the display, follow these steps:

1. Download the message texts to the CPU as a software component.
   - To do so, select the "Consistent download" option under "Text libraries" in the "Load preview" dialog.
2. You set the project language you would like to be displayed as the interface language by means of parameter assignment.
   - To do so, select a CPU and navigate to the "Multiple languages" area ("Properties > General > Multilingual support") in the Inspector window.
   - Assign the required project languages to the interface languages.

Reference

Important information/special requirements for the display of F-CPUs can be found in Product Information F-CPUs S7-1500 (https://support.industry.siemens.com/cs/ww/de/view/109478599/en)

Maintenance 14

14.1 Removing and inserting I/O modules

Requirement

Remove or insert front connectors and I/O modules only when the voltage is switched off.

NOTICE
Physical damage can occur If you install or uninstall front connectors and/or I/O modules with switched-on voltage, this can lead to undefined conditions in your plant. The S7-1500 automation system/ET 200MP distributed I/O system may be damaged as a result. Therefore only install/uninstall front connectors and/or I/O modules with switched-off voltage. Therefore during the planning of a plant always make sure to comply with the necessary, pertinent standards and safety guidelines.

Replacement part scenario

Replacing the CPU in a replacement part scenario has an impact on the password for protection of confidential configuration data. When you replace the CPU, observe the rules for the replacement part scenario in the Communication function manual (https://support.industry.siemens.com/cs/ww/en/view/59192925).

14.2 Replacing the display/front cover

Replace display (Standard, F-CPUs / Compact CPUs from article number 6ES751x-xxx02-0AB0/6ES751x-1CK01-0AB0)

The display is pluggable. You can remove or replace the display during operation (RUN). Removing or replacing of the display does not have any influence on the running CPU.

To remove the display from the CPU, follow these steps:

1. Flip the front cover up.
2. Press with a 3.5 mm screwdriver from the front into the unlatching mechanism of the display. This is found in the middle directly above the display.
3. Press the screwdriver lightly from above and lever out the display from the support.
4. Remove the display in an upward direction.
5. You have removed the display.
6. Place the new display in the CPU and press the display firmly in the top area until it audibly engages.
7. Flip the front cover down into place.

The figure below shows an example of the operation at the CPU 1511-1 PN.

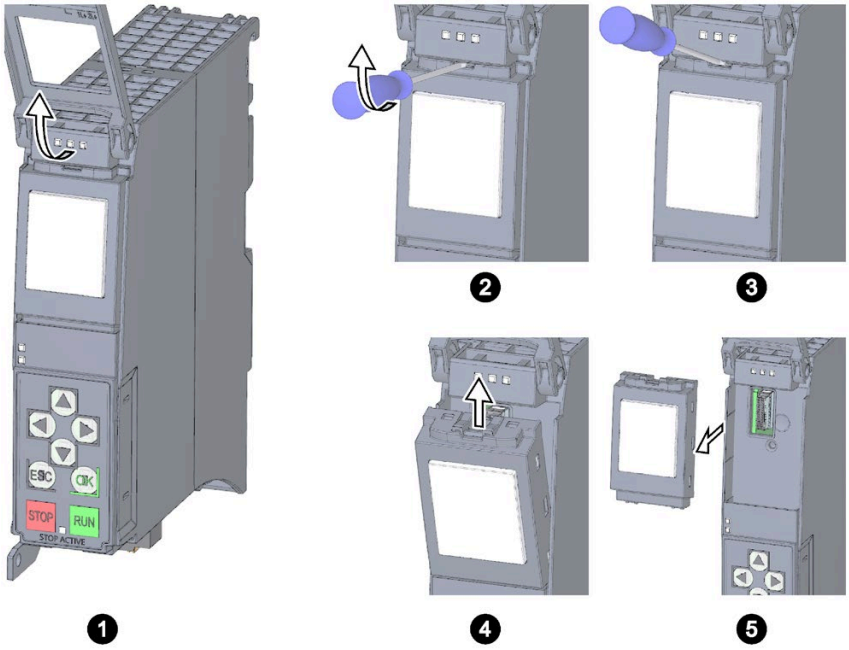

Figure 14-1 Remove display

WARNING

Personal injury or material damage can occur in zone 2 hazardous areas

Personal injury or material damage can occur in hazardous are zone 2 if you remove or fit the display while the S7-1500 automation system is running.

Before you remove or fit the display, always switch off the power supply to the S7-1500 automation system in hazardous area zone 2.

Exchanging the front cover

The front cover is pluggable. If necessary, you can take off the front cover or replace the front cover during runtime (RUN). Removing or replacing the front cover does not affect the CPU in operation.

To remove the front cover from the CPU, follow these steps:

1. Flip up the front cover until the front cover stands at a 90° angle to the front of the module.
2. In the top section of the front cover, press on the anchor(s). At the same time, pull the front cover toward you and off.
3. Insert the new front panel (at a 90° angle to the module) from the front into the anchor(s) until they audibly engage.
4. Flip the front cover down into place.

The figure below shows an exemplary view of the CPU 1516-3 PN/DP.

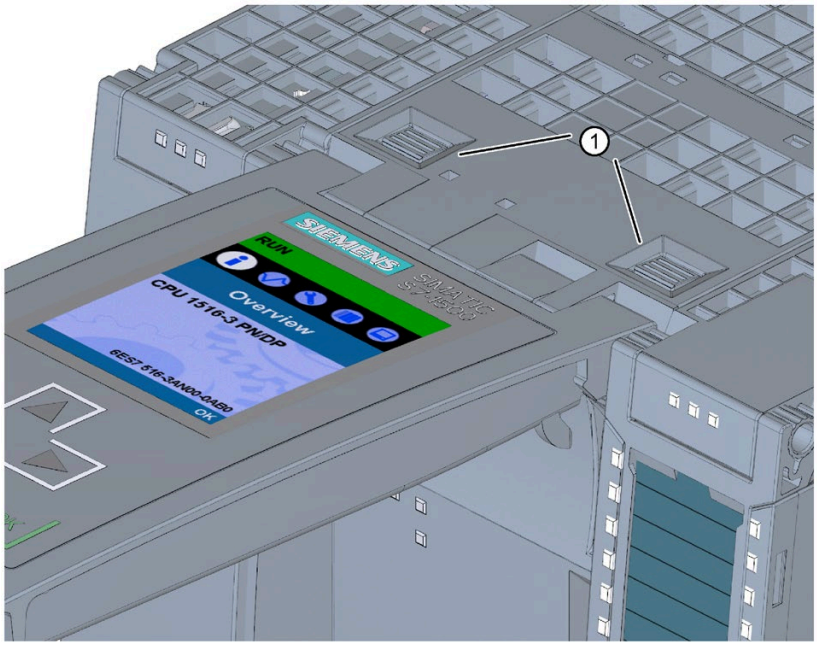

① Fasteners for removing and fitting the front panel

Figure 14-2 Removing and fitting the front panel

WARNING

Personal injury or material damage can occur in zone 2 hazardous areas

Personal injury or material damage can occur in hazardous are zone 2 if you remove or fit the front panel while the S7-1500 automation system is running.

Before you remove or fit the front panel, always switch off the power supply to the S7-1500 automation system in hazardous area zone 2.

14.3 Replacement of I/O modules and front connectors

14.3.1 Coding element on the I/O module and on the front connector

Function

All front connectors for the I/O modules of the S7-1500 automation system/ET 200MP distributed I/O system are identical. The coding element prevents a front connector from being inserted on a module with a different electrical pin assignment.

Delivery state of the I/O module

In the delivery state, the coding element is located in the I/O module.

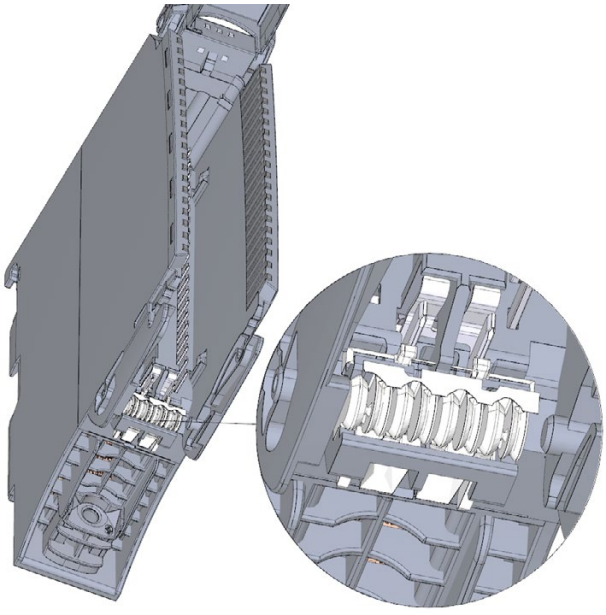

Figure 14-3 Coding element in the I/O module (delivery condition)

Coding element in the front connector

When the front connector is inserted into the I/O module for the first time, one half of the coding element latches into the front connector. When you remove the front connector from the I/O module, this half of the coding element remains in the front connector, while the other half remains in the I/O module.

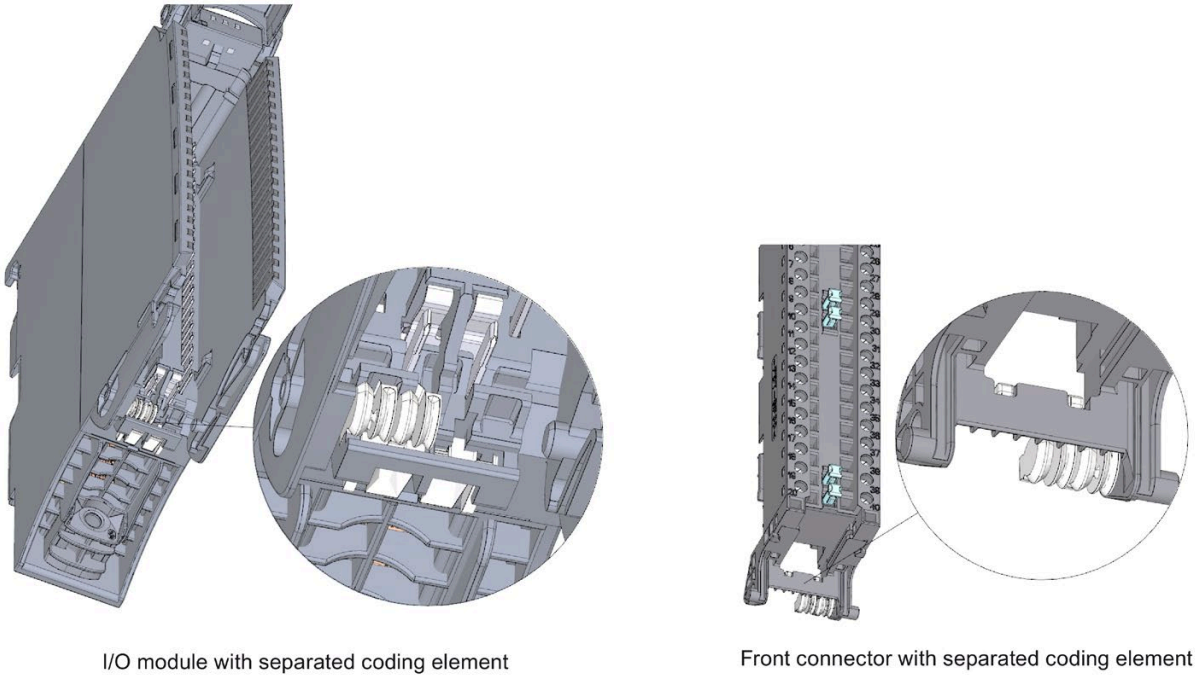

Figure 14-4 Coding element in the I/O module/front connector

You can insert a coded front connector on modules with the same electrical pin assignment.

Refer to section Application planning (Page 106).

NOTICE
Physical damage can occur If the coding element is changed or removed, it will be possible to insert the front connector on modules in which the electrical connection is not properly wired. This can destroy the module and/or the connected sensors and actuators. Even hazardous plant states are possible. Do not change the coding element unless you want to use the front connector on a different module and you change the process wiring accordingly.

Use cases for replacing the coding element

- Replacing an I/O module, for example, due to a defect or incorrect configuration
- Replacing a front connector

Additional electronic coding element for fail-safe modules

In as-delivered condition, a fail-safe module not only has a mechanical coding element but also an electronic rewritable memory for the PROFIsafe address.

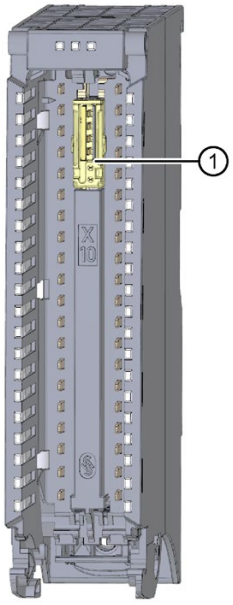

① Electronic coding element

Figure 14-5 F-module with electronic coding element (as delivered)

When the front connector is inserted in the F-module, the electronic coding element engages completely in the front connector. If you remove the front connector from the F-module, the memory with the PROFIsafe address of the fail-safe module remains in the front connector.

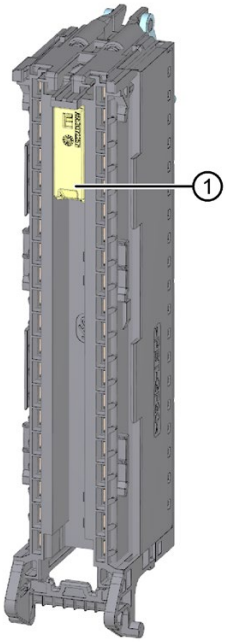

① Electronic coding element

Figure 14-6 Front connector with electronic coding element

14.3.2 Replacing an I/O module

Introduction

- When the front connector is first inserted into the I/O module, a part of the coding element clips onto the front connector.
- In the case of fail-safe modules, the electronic coding element with the PROFIsafe address of the F-module also engages completely in the front connector.

When you replace an I/O module with the same type of module, the correct coding element or coding elements in the case of F-modules are already present in the front connector.

Result: Before inserting the previous front connector, you must remove the coding element or coding elements from the new I/O module.

Procedure

To replace the I/O module, follow these steps:

The I/O module to be replaced is uninstalled.
You can find information on removing the I/O module in section Installing I/O modules (Page 146).

1. For a new I/O module, use a screwdriver to break out the half of the mechanical coding element that is designated for the front connector.

   Note

   The arrangement of the mechanical coding element depends on the module type: First, check the position of the coding element on the front connector before you break out the matching half from the I/O module.

   For a new fail-safe module you must also remove the electronic coding element from the F-module.

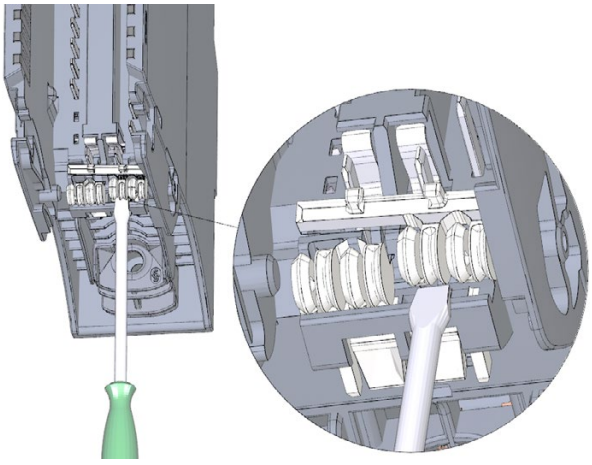

Figure 14-7 Breaking the coding element out of the I/O module

2. Insert the existing front connector into the new I/O module (same module type) until your hear it click into place.

14.3.3 Replacing a front connector

Introduction

- When the front connector is first inserted into the I/O module, a part of the mechanical coding element engages on the front connector.
- In the case of fail-safe modules, the electronic coding element with the PROFIsafe address of the F-module also engages completely in the front connector.

When you replace a defective front connector with a new front connector, you must transfer the coding element(s) to the new front connector.

Procedure

You have already removed the front connector from the module and loosened the wiring. If you are using the front connector for an analog module, you also need to remove the power supply element and shield element. Proceed as follows to replace the front connector:

1. Carefully remove the mechanical coding element from the front connector. Take care not to damage the coding element.

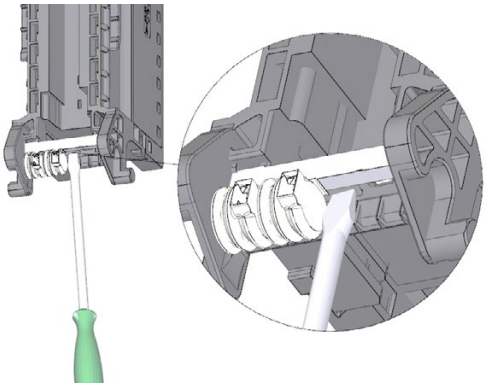

Figure 14-8 Removing the mechanical coding element from the front connector

Note

The coding elements are dependent on the module type.

2. Insert the removed mechanical coding element into the new front connector.

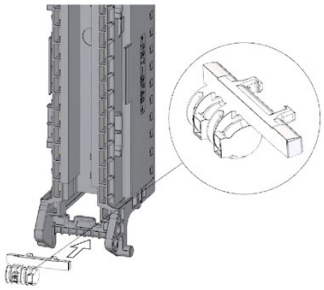

Figure 14-9 Inserting the mechanical coding element into a new front connector

3. Additionally for F-modules:
   - Carefully remove the electronic coding element from the front connector. Take care not to damage the coding element.
   - Insert the removed electronic coding element into the new front connector.

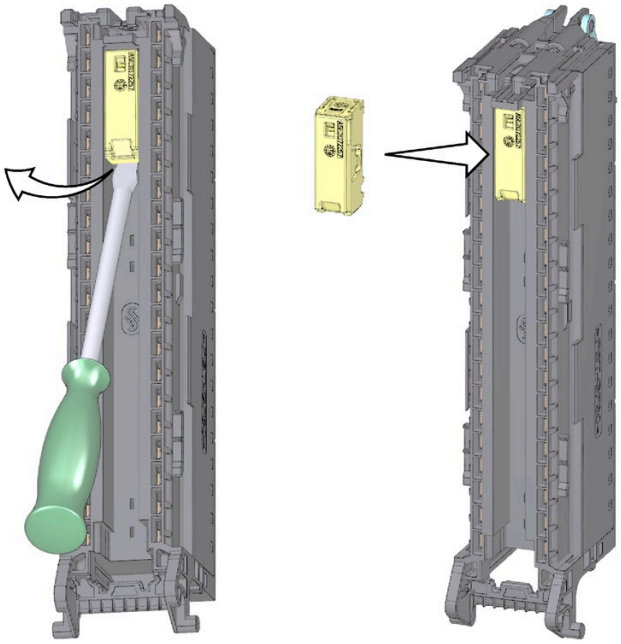

Figure 14-10 Removing the electronic coding element from the front connector and inserting it into a new front connector

4. Insert the new front connector into the existing I/O module, until your hear it click into place.
5. Wire the new front connector.

14.4 Replacing the coding element at the power connector of the system power supply and load current supply

Introduction

The coding consists of a 2-part coding element.

Ex factory a part of the coding element is inserted into the back side of the power connector. The other part is firmly inserted in the system power supply or load power supply.

This prevents the insertion of a power connector of a system power supply or load power supply into a module of a different type.

DANGER

Do not manipulate the coding element, or leave it off

- Changing or replacing the coding element can result in dangerous system states.
- To avoid damage, do not change or replace the coding element.
- You must not remove the coding element.

Replacement parts scenario

Insertion of the coding element into a new power connector in the case of a replacement part.

DANGER

Dangerous voltage

When installing the coding element, you must take into account the supply voltage of the system power supply and load power supply: 24 V DC, 24/48/60 V DC or 120/230 V AC/DC

Only install the coding element with switched-off voltage.

You must insert the coding element in such a way that the power connector matches the power supply module in terms of voltage.

Procedure

To replace the coding element on the power connector of the system power supply and load current supply, follow these steps:

1. Orient yourself using the labeling on the power cable connection.

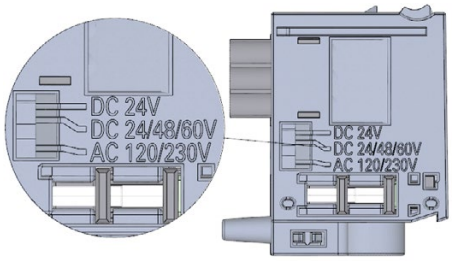

Figure 14-11 Labeling on the power connector

2. Orient yourself using the red marking on the coding element.
3. The coding element has 3 red markings. Turn the coding element in such a way that one of the 3 red markings corresponds to the voltage indicated on the connector.
4. Insert the coding element into the back side of the power cable connector, until you hear it click into place. The figure below shows you how to insert a coding element into a power cable connector for 24 V DC.

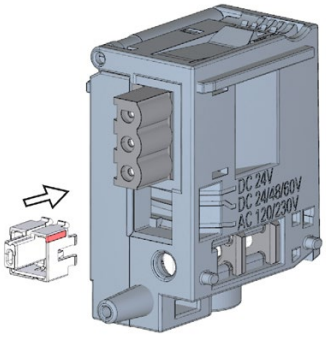

Figure 14-12 Inserting a coding element into a power connector

14.5 Firmware update

Introduction

Update the firmware of the CPU/interface module, display and the I/O modules using firmware files. The retentive data is retained after the execution of the firmware update.

We recommend that you always update to the latest firmware version available for the respective article number. The previous versions of the firmware are only intended as a backup to enable you to downgrade to the original version.

A firmware update has no effects on the user program of the CPU on which the update was performed. However, a downgrade can have effects on the user program if you use new functions in the user program which were not yet supported by the firmware of the CPU.

Note

Possible older firmware versions for CPU with firmware version V3.0

You can load a CPU with firmware version V3.0 with a STEP 7 project based on an earlier firmware version:

- For CPUs with article numbers 6ES751x-xxx03-0AB0: Firmware versions V2.9 to V1.8
- For CPUs with article number 6ES751x-xRx03-0AB0: Firmware versions V2.9 to V2.6
- For all other article numbers of the CPUs: Firmware versions V2.9 to V1.5

The CPU with firmware version V3.0 then responds like the CPU with the previous firmware version and supports only the functionality of this earlier version. This also applies to the configuration limits.

The following entry (https://support.industry.siemens.com/cs/de/en/view/109478459) lists all firmware versions for the S7-1500 CPUs including displays. You will also find a description of the new functions of the respective firmware versions.

Requirement

- You have downloaded the data/files for the firmware update from Siemens Industry Online Support (https://support.industry.siemens.com/cs/ww/en/ps).

  On this web site, select:

  – For the S7-1500 automation system: Automation Technology > Automation Systems > Industrial Automation Systems SIMATIC > Controllers > SIMATIC S7 Advanced Controller > SIMATIC S7-1500.

  – For the ET 200MP distributed I/O system: Automation Technology > Automation Systems > Industrial Automation Systems SIMATIC > SIMATIC ET 200 I/O systems > ET 200 systems for the cabinet > ET 200MP.

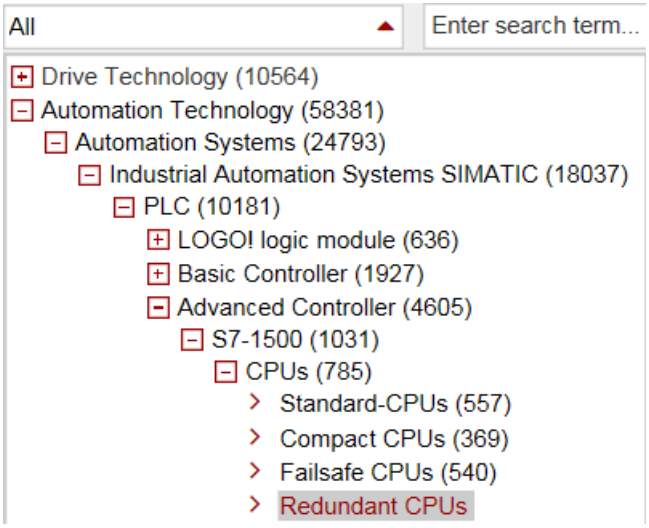

Figure 14-13 Product tree using the S7-1500 as an example:

From this position, navigate to the specific type of module that you want to update. To continue, click on the "Software downloads" link under "Support". Save the desired firmware update files.

Before installing the firmware update, make sure that the modules are not being used.

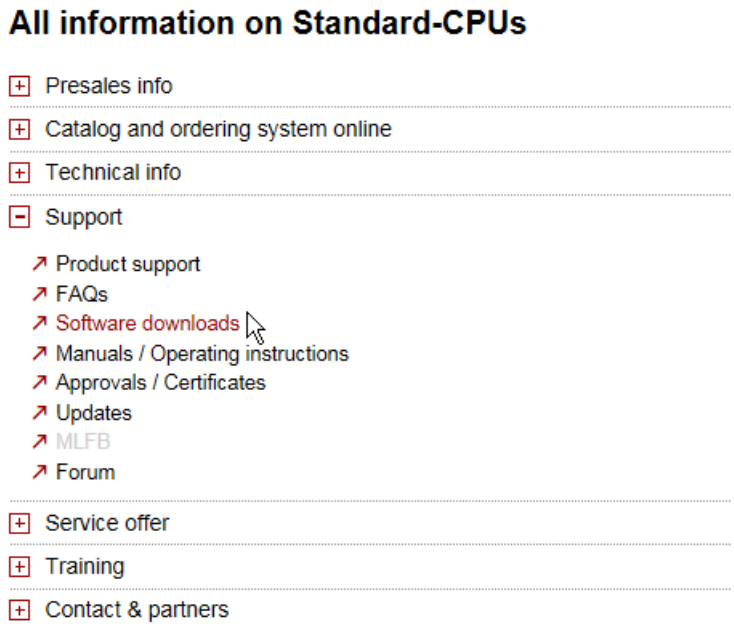

Figure 14-14 Selecting the software downloads

Additional requirement for fail-safe modules

WARNING

Check the firmware version for F-approval

When using a new firmware version, always check that the version is approved for use in the respective module.

The attachments of the certificate (https://support.automation.siemens.com/WW/view/en/49368678/134200) for SIMATIC Safety specify which firmware version is approved.

Special feature when updating the firmware of CPUs with Linux-based operating system

For the 1518(F)-4 PN/DP MFP CPUs, also observe the procedure for firmware updates from the CPU 1518-4 PN/DP MFP (https://support.industry.siemens.com/cs/ww/en/view/109749061) manual.

Options for the firmware update

There are the following options for performing a firmware update:

- Online in STEP 7 via Online & Diagnostics
- Online in STEP 7 via accessible devices (PROFINET)
- Via SIMATIC memory card: for CPU, display, and all centrally inserted modules
- Via the integrated Web server
- Online via the SIMATIC Automation Tool

The table below gives an overview of the various options for a firmware update.

Table 14- 1 Overview of firmware update options

Firmware update	CPU	Central I/O module	Interface module	Distributed I/O module
STEP 7 (V12 or higher)	✓	✓	✓	✓
Accessible devices	✓	✓	✓	✓
SIMATIC memory card	✓	✓	--	--
Web server of the CPU	✓	✓	✓	✓
SIMATIC Automation Tool	✓	✓	✓	✓

Installation of the firmware update

WARNING

Impermissible plant states possible

The CPU switches to STOP mode or the interface module to "station failure" as a result of the firmware update being installed. STOP or station failure can have an adverse effect on the operation of an online process or a machine.

Unexpected operation of a process or a machine can lead to fatal or severe injuries and/or to material damages.

Ensure before installing the firmware update that the CPU is not controlling any active process.

Procedure: online in STEP 7 via Online & diagnostics

Requirement: There is an online connection between the CPU/module and PG/PC.

Proceed as follows to perform an online firmware update via STEP 7:

1. Select the module in the device view.
2. Select the "Online & diagnostics" menu command from the shortcut menu.
3. In the "Functions" folder, select the "Firmware update" group.
   For a CPU, you can select whether you want to update the CPU or the CPU's display.
4. Click the "Browse" button to select the firmware update files in the "Firmware update" area.
5. Select the matching firmware file. The table in the firmware update area lists all modules for which an update is possible with the selected firmware file.
6. Click the "Run update" button. If the module can interpret the selected file, the file is downloaded to the module. If you must change the CPU mode, STEP 7 prompts you to do so with dialogs.

Updating the firmware

The "Run firmware after update" check box is always selected.

After a successful loading process the CPU includes imports the firmware and subsequently operates with the new firmware.

Note

If a firmware update is interrupted, you need to remove and insert the module before starting the firmware update again.

Procedure: online in STEP 7 via accessible devices

To perform a firmware update online via accessible devices, follow these steps:

1. From the "Online" menu, select the "Accessible devices" menu item.
2. In the Accessible devices dialog, search for the accessible devices for the selected PROFINET interface.
3. To go to a device in the project tree, select the desired device from the list of accessible devices and click the "Show" button.
4. In the project tree, select the "Online & diagnostics" option of the relevant device and perform the firmware update under the category Functions/Firmware Update (CPU, Display, Local modules).

You can find information on how to perform a firmware update when your project has no connection to a CPU in the following FAQ on the Internet (https://support.industry.siemens.com/cs/ww/en/view/109779881).

Procedure via the SIMATIC memory card

Proceed as follows perform a firmware update via the SIMATIC memory card:

1. Insert a SIMATIC memory card into the SD card reader of your PG/PC.
2. To store the update file on the SIMATIC Memory Card, select the SIMATIC Memory Card in the "Card Reader/USB memory" folder in the project tree.
3. Select the "Card Reader/USB memory > Create firmware update memory card" command in the "Project" menu.
4. Use a file selection dialog to navigate to the firmware update file. In a further step you can decide whether you are deleting the content of the SIMATIC memory card or adding the firmware update files to the SIMATIC memory card.
5. Insert the SIMATIC memory card with the firmware update files into the CPU.

   The firmware update begins shortly after the SIMATIC memory card has been plugged.

   The display indicates that the CPU is in STOP mode, and that a firmware update is being executed: "STOP - FW UPDATE". The display shows the progress of the firmware update. The CPU shows any errors that occur during the firmware update on the display.

   The display shows a results screen after the completion of the firmware update.
6. Remove the SIMATIC Memory Card after the firmware update is complete.
   The RUN LED on the CPU lights up in yellow and the MAINT LED flashes yellow.
   If you subsequently wish to use the SIMATIC Memory Card as a program card, leave the SIMATIC Memory Card in the CPU. To do so, after completion of the firmware update, select the "Convert memory card" menu item on the display.

   Alternatively, you can convert the SIMATIC memory card to a program card via STEP 7.

Note

If your hardware configuration contains several modules, the CPU updates all affected module in the slot sequence, i.e. in ascending order of the module position in the STEP 7. device configuration.

Note

Memory size of the SIMATIC memory card

If you perform a firmware update via the SIMATIC memory card, you must use a large enough card based on the CPU used and the associated I/O modules.

Check the specified file sizes of the update files when downloading them from Siemens Industry Online Support. The file size information is especially important when you perform the firmware update not only for the CPU but also, e.g., for the associated I/O modules, communication modules. The total size of the update files must not exceed the available memory size of your SIMATIC memory card.

You can find more information on the capacity of SIMATIC Memory Cards in the section Accessories/spare parts (Page 363) and in the function manual Structure and use of the CPU memory (https://support.industry.siemens.com/cs/de/en/view/59193101).

Procedure: via the integrated Web server

The procedure is described in the Web server (https://support.automation.siemens.com/WW/view/en/59193560) Function Manual.

Procedure: online via the SIMATIC Automation Tool

The procedure is described in the SIMATIC Automation Tool (https://support.industry.siemens.com/cs/ww/en/view/98161300) manual (included in the SIMATIC Automation Tool).

Special feature at a firmware update of analog modules

When you carry out a firmware update for analog modules, you have to supply 24 V DC load supply to the module through the infeed element.

Behavior after the firmware update

After the firmware update, check the firmware version of the updated module.

Reference

For more information on the topic of firmware update, refer to the STEP 7 online help and the following FAQ on the Internet (https://support.industry.siemens.com/cs/ww/en/view/89257657).

14.6 Reset to factory settings

14.6.1 Resetting the CPU to factory settings

Introduction

"Reset to factory settings" restores the CPU to its delivery state. The function deletes all information that was stored internally on the CPU.

Recommendation:

Switch the CPU to its as-delivered condition if:

- You remove a CPU and use it elsewhere with a different program.
- You store the CPU.

Note

Standard, F-CPUs/compact CPUs with article number 6ES751x-xxx02-0AB0/6ES751x-1CK01-0AB0

"Reset to factory settings" restores the status of the operating mode button to the factory setting, i.e. the CPU remains in STOP mode. To set the CPU to RUN mode, local operation via the RUN button is required.

It does not matter here whether you perform the "Reset to factory settings" via the operating mode button, the display or STEP 7.

Options for resetting a CPU to factory settings

To reset the CPU to its delivery state, follow these steps:

- Using the mode selector switch / mode selector keys
- Using the display
- Using STEP 7
- Using the SIMATIC Automation Tool

Procedure using the mode selector

Make sure that the CPU is in STOP operating state: The CPU display indicates the STOP operating mode. The RUN/STOP LED lights up yellow.

Note

Reset to factory settings ↔ Memory reset

The procedure described below corresponds to the procedure for a memory reset:

- Selector operation with inserted SIMATIC memory card: CPU executes a memory reset
- Selector operation without inserted SIMATIC memory card: CPU executes reset to factory settings

Restore the factory settings of the CPU as follows:

1. Set the mode selector to the STOP position.

   Result: The RUN/STOP LED lights up yellow.
2. Remove the SIMATIC memory card from the CPU. Wait until the RUN/STOP LED stops flashing.
3. Set the mode selector to the MRES position. Hold the mode selector in this position until the RUN/STOP LED lights up for the second time and remains lit (this takes three seconds). After this, release the selector.
4. Within the next three seconds, switch the mode selector back to the MRES position, and then back to STOP again.

Result: The CPU executes a "Reset to factory settings", during which time the RUN/STOP LED flashes yellow. When the RUN/STOP LED lights up yellow, then the CPU has been reset to factory settings, and is in the STOP mode. The "Reset to factory settings" event is entered into the diagnostics buffer.

Note

The IP address of the CPU is also deleted when the CPU is reset to the factory settings through the mode selector.

Procedure using the mode selector keys (standard, F-CPUs / compact CPUs from article number 6ES751x-xxx02-0AB0/6ES751x-1CK01-0AB0)

Make sure that the CPU is in STOP mode (the CPU display shows STOP mode or RUN/STOP LED lights up yellow).

Note

Reset to factory settings ↔ Memory reset

The procedure described below also corresponds to the procedure for a memory reset:

- Key operation with inserted SIMATIC memory card: CPU executes a memory reset
- Key operation without inserted SIMATIC memory card: CPU executes reset to factory settings

Perform a reset to factory settings as follows:

1. Press the STOP mode selector key.

   Result: The STOP-ACTIVE and RUN/STOP LED light up yellow.

2. Press the STOP operating mode button until the RUN/STOP LED lights up for the 2nd time and remains continuously lit (this takes three seconds). After this, release the key.
3. Press the STOP mode selector key again within the next three seconds.

Result: The CPU executes a "Reset to factory settings", during which time the RUN/STOP LED flashes yellow. When the STOP-ACTIVE and RUN/STOP LED light up yellow, then the CPU has been reset to factory settings, and is in the STOP mode. The "Reset to factory settings" event is entered into the diagnostics buffer.

Note

The IP address of the CPU is also deleted when the CPU is reset to the factory settings using the mode selector keys.

Procedure using the display

Make sure that the CPU is in STOP operating state: The CPU indicates STOP mode. The RUN/STOP LED lights up yellow.

To reach the desired menu command, "Factory setting", select the following sequence of menu commands. Confirm with "OK" after each selection.

- Settings → Reset → Factory settings

Result: The CPU executes a "Reset to factory settings", during which time the RUN/STOP LED flashes yellow. When the RUN/STOP LED lights up yellow, then the CPU has been reset to factory settings, and is in the STOP mode. The "Reset to factory settings" event is entered into the diagnostics buffer.

Note

The IP address of the CPU is also deleted when the CPU is reset to the factory settings through the display.

Procedure using STEP 7

To reset a CPU to factory settings via STEP 7, follow these steps:

Make sure that there is an online connection to the CPU.

1. Open the Online and Diagnostics view of the CPU.
2. In the "Functions" folder, select the "Reset to factory settings" group.
3. If you want to keep the IP address, select the "Keep IP address" option button. If you want to delete the IP address, select the "Delete IP address" option button.

   Note

   "Delete IP address" deletes all IP addresses, regardless of how you established the online connection.

   If a SIMATIC Memory Card is inserted, selecting the "Delete IP address" option has the following effect:

   - The IP addresses are deleted and the CPU is reset to factory settings.
   - The existing configuration (including IP address) on the SIMATIC Memory Card is then loaded into the CPU. If no configuration is stored (e.g. after the SIMATIC Memory Card has been erased or formatted), no new IP address is assigned.

4. Click the "Reset" button.
5. Click "OK" in response to the confirmation prompts.

Result: The CPU executes a "Reset to factory settings", during which time the RUN/STOP LED flashes yellow. When the RUN/STOP LED lights up in yellow, the CPU has been reset to factory settings and is in the STOP operating state. The "Reset to factory settings" event is entered into the diagnostics buffer.

Procedure using the SIMATIC Automation Tool

The procedure is described in the SIMATIC Automation Tool (https://support.industry.siemens.com/cs/ww/en/view/98161300) manual (included in the SIMATIC Automation Tool).

Result after resetting to factory settings

The following table provides an overview of the contents of the memory objects after the reset to factory settings.

Table 14- 2 Result after resetting to factory settings

Memory object	Contents
Actual values of the data blocks, instance data blocks	Initialized
Bit memories, timers and counters	Initialized
Retentive tags of technology objects (e.g. adjustment values of absolute encoders)	Initialized
Entries in the diagnostics buffer	Initialized
IP address	Depends on the procedure: • Using mode switch: is deleted • Using display: is deleted • Using STEP 7: Depending on the setting of the "Keep IP address"/"Delete IP address" option buttons
Device name	Set to "CPU"
Counter readings of the runtime meters	Initialized
Time of day	Is set to "00:00:00, 01.01.2012"
CPU operating state: RUN and STOP [1]	The CPUs are set to STOP; the "STOP Active" LED is activated.

[1] Only for standard, F-CPUs/compact CPUs with article number 6ES751x-xxx02-0AB0/6ES751x-1CK01-0AB0

If there was a SIMATIC Memory Card inserted in the CPU prior to the reset to factory settings, the CPU loads the configuration contained on the SIMATIC Memory Card (hardware and software):

- A configured IP address is then valid again.
- If you have backed up adjustment values of absolute encoders on the SIMATIC Memory Card with the "MC_SaveAbsoluteEncoderData" instruction, these become valid after the reset to factory settings with SIMATIC Memory Card inserted in the CPU.

Note

Password for protection of confidential configuration data

The password for protection of confidential configuration data is retained after the CPU is reset to factory settings. The password is only deleted when the "Delete password for protection of confidential PLC configuration data" option is set.

You can find more information on the password for protection of confidential configuration data in the Communication (https://support.industry.siemens.com/cs/ww/de/view/59192925/en) function manual.

Reference

More information on "Reset to factory settings" can be found in the Function Manual Structure and use of the CPU memory (https://support.automation.siemens.com/WW/view/en/59193101) in the section on memory areas and retentivity, and in the online help for STEP 7. For information on the memory reset of the CPU, refer to the section CPU memory reset (Page 271).

14.6.2 Resetting interface module (PROFINET IO) to factory settings

Introduction

The interface module can be reset to its factory state using "Reset to factory settings".

Method of resetting an interface module to factory settings

- Via STEP 7 (online via PROFINET IO)

Procedure using STEP 7

To reset an interface module to factory settings via STEP 7, follow these steps:

Make sure that an online connection to the interface module exists.

1. Open the online and diagnostics view of the interface module.
2. In the "Functions" folder, select the "Reset to factory settings" group.
3. Click the "Reset" button.
4. Click "OK" in response to the confirmation prompts.

Result: The interface module then performs a "Reset to factory settings".

Result after resetting to factory settings

Table 14- 3 Properties of the interface module when shipped

Properties	Value
Parameter	Default setting
IP address	Not present
Device name	Not present
MAC address	Present
I&M data	Identification data (I&M0) present Maintenance data (I&M1, 2, 3) reset
Firmware version	Present

Note

Failure of downstream stations is possible

Stations downstream from the interface module can fail when the factory settings are restored on an interface module.

Note

Substitute value behavior of the installed I/O modules during reset to factory settings

The I/O modules in the station do not have the configured status after a "reset to factory settings". The interface module does not acquire any input data and does not output any output data.

Reference

You will find more information on the procedure in the STEP 7 online help.

14.7 Fault reactions with fail-safe modules

Safe state (safety concept)

The basic principle behind the safety concept is the existence of a safe state for all process variables.

Note

For fail-safe input and output modules, this safe state is the value "0".

Fault reactions and startup of the F-system

The safety function requires that substitute values (safe state) be output instead of process values for a fail-safe module (**passivation of the fail-safe module**) in the following cases:

- When the F-system is started up
- If errors are detected during safety-related communication between the F-CPU and the F-module via the PROFIsafe safety protocol (communication error)
- If fail-safe I/O faults or channel faults are detected (e.g., wire break, discrepancy error)

Detected faults are written to the diagnostic buffer of the F-CPU and communicated to the safety program in the F-CPU.

F-modules cannot save errors as retentive data. When the system is powered down and then restarted, any faults still existing are detected again during startup. However, you have the option of saving faults in your safety program.

WARNING

Channel faults do not trigger any diagnostic reactions or error handling for channels that have been set to "deactivated" in STEP 7, even if this channel is affected indirectly by a channel group fault (channel parameter "activated/deactivated").

Remedying faults in the F-system

To remedy faults in your F-system, follow the procedure described in IEC 61508-1:2010 section 7.15.2.4 and IEC 61508-2:2010 section 7.6.2.1 e.

The following steps must be performed:

1. Diagnostic and repair of the fault
2. Revalidation of the safety function
3. Recording in the service report

Fail-safe value output for F-modules

In the case of F-modules with inputs, if there is passivation, the F-system provides substitute values (0) for the safety program instead of the process data pending at the fail-safe inputs.

In the case of F-modules with outputs, if there is passivation, the F-system transfers substitute values (0) to the fail-safe outputs instead of the output values provided by the safety program. The output channels are de-energized. This also applies when the F-CPU goes into STOP mode. The parameter assignment of fail-safe values is not possible.

Substitute values are used either for the relevant channel only or for all channels of the relevant fail-safe module, depending on:

- The F-system used
- The type of fault that occurred (fail-safe I/O fault, channel fault or communication error)
- The parameter assignment of the F-module

Reintegration of a fail-safe module

The system changes from fail-safe to process values (reintegration of an F-module) either automatically or only after user acknowledgment in the safety program. If channel faults occur, it may be necessary to remove and reinsert the F-module. A detailed listing of faults requiring removal and insertion of the F-module can be found in the section Diagnostic messages of the respective F-module.

After reintegration, the following occurs:

- In the case of an F-module with inputs, the process data pending at the fail-safe inputs is made available to the safety program again
- In the case of an F-module with outputs, the output values provided in the safety program are transferred to the fail-safe outputs again

Additional information on passivation and reintegration

For additional information on passivation and reintegration of F-I/O, refer to the SIMATIC Safety, Configuring and Programming (https://support.automation.siemens.com/WW/view/en/54110126) manual.

Reaction of the F-module with inputs to communication errors

F-modules with inputs respond differently to communication errors compared to other errors.

If a communication error is detected, the current process values remain set at the inputs of the F-module. There is no passivation of the channels. The current process values are passivated in the F-CPU.

14.8 Maintenance and repair

The components of the S7-1500 automation system/ET 200MP distributed I/O system are maintenance-free.

Note

Repairs to the components of the S7-1500 automation system/ET 200MP distributed I/O system may only be carried out by the manufacturer.

Test and service functions 15

15.1 Test functions

Introduction

You can test the operation of your user program on the CPU. You monitor signal states and values of tags, and preassign tags with values so that you can simulate specific situations for program execution.

Note

Using test functions

Using test functions affects the program execution time and thus the cycle and response times of the controller to a slight extent (a few milliseconds).

Requirements

- There is an online connection to the relevant CPU.
- An executable user program is available in the CPU.

Test options

- Testing with program status
- Testing with breakpoints
- Testing with a watch table
- Testing with a force table
- Testing with a PLC tag table
- Testing with a data block editor
- Testing with the LED flash test
- Testing with a trace function

Testing with program status

The program status allows you to monitor the execution of the program. You can hereby display the values of operands and the results of logic operations (RLO). This allows you to detect and fix logical errors in your program.

Note

Restrictions with the "Program status" function

Monitoring loops can significantly increase the cycle time. The increase in cycle time depends on the following factors:

- The number of tags to be monitored
- The actual numbers of loops run through

WARNING

Testing with program status

A test with the "Program status" function can cause serious damage to property or injury to persons if there are functional disturbances or program errors.

Make sure that you take appropriate measures to exclude the risk of hazardous conditions occurring before running a test with the "Program status" function!

Testing with breakpoints

With this test option, you set breakpoints in your program, establish an online connection, and enable the breakpoints on the CPU. You then execute a program from one breakpoint to another.

Requirements:

- Setting breakpoints is possible in the programming language SCL or STL.

Testing with breakpoints provides you with the following advantages:

- Localization of logic errors step by step
- Simple and quick analysis of complex programs prior to actual commissioning
- Recording of current values within individual executed loops
- Use of breakpoints for program validation also possible in SCL/STL networks within LAD/FBD blocks

Note

Restriction during testing with breakpoints

- When you test with breakpoints, there is a risk of overwriting the cycle time of the CPU.
- If you are using technology objects and test them with breakpoints, the CPU switches to STOP mode.

Note

F-System SIMATIC Safety

Setting breakpoints in the standard user program results in errors in the safety program:

- Sequence of F cycle time monitoring
- Error in communication with the fail-safe I/O
- Error during safety-oriented CPU-CPU communication
- Internal CPU error

If you nevertheless want to use breakpoints for testing, you must disable safety mode. This will result in the following errors:

- Error in communication with the fail-safe I/O
- Error during safety-oriented CPU-CPU communication

Testing with watch tables

The following functions are available in the watch table:

- Monitoring of tags

  You can use the watch tables to monitor the current values of the individual tags of a user program or a CPU on the programming device/PC, on the display of the CPU, and on the web server. A symbolic name for the tags must be specified in the "Name" column of the watch table to allow the display of the CPU and the web server to show the value of the tags.

  You monitor the following operand areas:

  – Inputs and outputs (process image) and bit memory
  – Contents of data blocks
  – Peripheral inputs and peripheral outputs
  – Timers and counters

- Modifying tags

  Use this function to assign fixed values to the individual tags of a user program or CPU on the PG/PC. Modifying is also possible with Test with program status.

  The following operand areas are modifiable:

  – Inputs and outputs (process image) and bit memory
  – Contents of data blocks
  – Peripheral inputs and peripheral outputs (for example, %I0.0:P, %Q0.0:P)
  – Timers and counters

- "Enable peripheral outputs" and "Modify now"

  These two functions enable you to assign fixed values to individual peripheral outputs of a CPU in the STOP mode. You can also use them to check your wiring.

Testing with a force table

The following functions are available in the force table:

- Monitoring of tags

  Force tables are used to monitor the actual values of the individual tags of a CPU user program or a CPU

  - On the PG/PC
  - On the display of the CPU
  - On the Web server

  You monitor the table with or without a trigger condition.

  A symbolic name for the tags must be specified in the "Name" column of the force table in order that the display of the CPU and the web server can display the value of the tags.

  You monitor the following tags:

  - Bit memory
  - Contents of data blocks
  - Peripheral inputs
- Modifying tags

  You use this function to assign fixed values to individual tags of a user program or a CPU on the programming device/PC or on the display of the CPU. Modifying is also possible with Test with program status.

  The following tags are modifiable:

  - Bit memory
  - Contents of data blocks
  - Peripheral inputs (e.g. %I0.0:P)
- Forcing of peripheral inputs and peripheral outputs

  You can force individual peripheral inputs or peripheral outputs.

  - Peripheral inputs: Forcing of peripheral inputs (for example %I0.0:P) is a "bypassing" of sensors / inputs by the specification of fixed values to the program. The program receives the force value instead of the actual input value (via process image or via direct access).
  - Peripheral outputs: Forcing of peripheral outputs (for example %Q0.0:P) is a "bypassing" of the complete program by the specification of fixed values to the actuators.

With the force table you can simulate different test environments and also overwrite tags in the CPU with a fixed value. This enables you to intervene in the running process in a regulating way.

Difference between modifying and forcing

The fundamental difference between the modifying and forcing functions consists in the storage behavior:

- Modifying: Modifying of tags is an online function and is not stored in the CPU. You can end modifying of tags in the watch table or force table or by terminating the online connection.
- Forcing: A force job is written to the SIMATIC memory card and is retained after a POWER OFF. The S7-1500 CPU displays an active force job with a corresponding symbol. You can only end the forcing of peripheral inputs and peripheral outputs in the force table.

Testing with a PLC tag table

You can monitor the current data values of tags in the CPU directly in the PLC tag table. To do so, open the PLC tag table and start the monitoring.

You also have the option of copying PLC tags to a watch table or force table so that you can monitor, control or force them in the table.

Testing with a data block editor

The data block editor offers different options for monitoring and modifying tags. These functions directly access the actual values of the tags in the online program. Actual values are the current values of tags in the CPU work memory at any moment during program execution. The following functions for monitoring and modifying are available in the database editor.

- Monitor tags online
- Modify individual actual values
- Create a snapshot of the actual values
- Overwrite actual values with a snapshot

Note

Setting data values during commissioning

During plant commissioning, you often need to adjust data values to adapt the program to local conditions.

To this end, the declaration table offers a few functions for data blocks.

Testing with the LED flash test

In many online dialogs, you can perform an LED flash test. This feature is useful if you are not sure which device in the hardware configuration corresponds to the device currently selected in the software.

If you click on the "Flash LED" button in STEP 7 under Online & diagnostics (online access), an LED flashes on the device currently selected. The RUN/STOP, ERROR, and MAINT LEDs flash on the CPU. The LEDs flash until you cancel the flash test.

Testing with a trace function

The trace function is used to record the CPU tags, depending on the settable trigger conditions. Tags are, for example, drive parameters or system and user tags of a CPU. The CPU saves the recordings. If necessary, you can display the recordings with STEP 7 and evaluate them.

Procedure: The trace function can be called from the CPU's folder in the project tree, under the name "Traces".

In connection with trace functions, please also note the following FAQ on the Internet (https://support.industry.siemens.com/cs/ww/en/view/102781176).

Simulation

With STEP 7 you can run and test the hardware and software of the project in a simulated environment. Start the simulation using the menu command "Online" > "Simulation" > "Start".

Reference

Additional information on the test functions can be found in the STEP 7 online help.

Additional information about testing with trace functions is available in the Function Manual Using the trace and logic analyzer function (https://support.automation.siemens.com/WW/view/en/64897128).

15.2 Reading out/saving service data

Service data

In addition to the contents of the diagnostics buffer, the service data contains a great deal more information about the internal status of the CPU. If a problem occurs with the CPU that you cannot resolve with other methods, send the service data to the Siemens Service & Support. The service data allow Service & Support to analyze problems that have occurred rapidly.

Note

While reading out the service data of the CPU, you cannot simultaneously execute a download to the device.

Methods of reading service data

You can read service data with:

- the web server
- STEP 7
- the SIMATIC memory card

Procedure using the Web server

To read service data using the Web server, follow these steps:

1. Open a web browser that is suitable for communication with the CPU.
2. Enter the following address in the address bar of the web browser:
   https://<CPU IP address>/save_service_data, e.g. https://172.23.15.3/save_service_data
3. The service data page will appear on your screen, with a button for saving the service data.

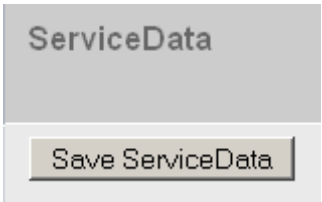

Figure 15-1 Saving service data via the Web server

4. Save the service data locally on your PC/programming device, by clicking "Save ServiceData".

Result: The data is saved in a .dmp file with the following naming convention: "<Article number> <Serial number> <Time stamp>.dmp". You can change the file name.

Note

If you have defined your user page as the home page of the Web server, direct access to the service data by inputting the IP address of the CPU is not possible. For more information on reading out service data via a user-defined page, refer to the Web server (https://support.automation.siemens.com/WW/view/en/59193560) function manual.

Procedure using STEP 7

You can find more information on saving service data with the keyword "Saving service data" in the STEP 7 online help.

Procedure via the SIMATIC memory card

If no communication with the CPU is possible via Ethernet, use the SIMATIC memory card to read out the service data. In all other cases, read and back up the service data via the web server or STEP 7.
The procedure via the SIMATIC memory card is more complex than the other options. You must also ensure before backing up that there is sufficient memory space on the SIMATIC memory card.

To back up service data using the SIMATIC memory card, follow these steps:

1. Insert the SIMATIC memory card into the card reader of your PC / programming device.
2. Open the job file S7_JOB.S7S in an editor.
3. Overwrite the entry PROGRAM with the string DUMP in the editor.
   To ensure that the file size is exactly 4 bytes, do not use any spaces/line breaks/quotation marks.

4. Save the file under the existing file name.
5. Ensure that the SIMATIC Memory Card is not write-protected and insert the SIMATIC Memory Card in the card slot of the CPU. Up to CPU 1516 you need a card ≥ 32 MB and from CPU 1517 a card ≥ 2 GB.

Result: The CPU writes the service data file DUMP.S7S to the SIMATIC memory card and remains in STOP mode.

Service data transfer is complete when the STOP LED stops flashing and is lit continuously. If service data transfer has been successful, only the STOP LED lights up.

In the event of errors in transfer, the STOP LED is lit continuously and the ERROR LED flashes. In addition, the CPU creates a text file containing information about the error in the DUMP.S7S folder.

Technical specifications 16

Introduction

This chapter lists the technical specifications of the system:

- The standards and test values which the modules of the S7-1500 automation system/ET 200MP distributed I/O system comply with and fulfill.
- The test criteria according to which the S7-1500 automation system/ET 200MP distributed I/O system was tested.

Technical specifications for the modules

The technical specifications of the individual modules can be found in the manuals of the modules themselves. In the event of deviations between the statements in this document and the manuals, the statements in the manuals take priority.

16.1 Standards, approvals and safety instructions

Currently valid markings and authorizations

Note

Details on the components of the S7-1500 automation system/ET 200MP distributed I/O system

The currently valid markings and approvals are printed on the components of the S7-1500 automation system/ET 200MP distributed I/O system.

Safety information

WARNING

Personal injury and damage to property may occur

In hazardous areas, injury to persons and material damage may occur if you disconnect plug-in connections during operation of an S7-1500 automation system/ET 200MP distributed I/O system.

Always switch off the power to the S7-1500 automation system/ET 200MP distributed I/O system when disconnecting plug-in connections in hazardous atmospheres.

WARNING

Explosion hazard

If you replace components, compliance with Class I, DIV 2 may become invalid.

WARNING

Deployment requirements

This device is only suitable for use in Class I, Div. 2, Group A, B, C, D, or in non-hazardous areas.

Safety of the plant or the system

NOTICE

Safety is the responsibility of the assembler

The safety of any plant or system incorporating the equipment is the responsibility of the assembler of the plant or system.

Five safety rules for working in and on electrical installations

A set of rules, which are summarized in DIN VDE 0105 as the "five safety rules", are defined for work in or on electrical installations as a preventative measure against electrical accidents:

1. Disconnect
2. Secure to prevent reconnection
3. Verify that the equipment is not live
4. Ground and short-circuit
5. Erect barriers around or cover adjacent live parts

These five safety rules must be applied in the above order prior to starting work on an electrical system. After completing the work, proceed in the reverse order.

It is assumed that every electrician is familiar with these rules.

CE mark

The S7-1500 automation system/ET 200MP distributed I/O system complies with the harmonized European standards (EN) for programmable logic controllers published in the official journals of the European Union. The S7-1500 automation system/ET 200MP distributed I/O system meets the requirements and protection targets of the following directives:

- 2014/35/EU "Electrical equipment designed for use within certain voltage limits" (Low-Voltage Directive)
- 2014/30/EU "Electromagnetic Compatibility" (EMC Directive)
- 2014/34/EU "Equipment and protective systems intended for use in potentially explosive atmospheres" (Explosion Protection Directive)
- 2011/65/EU "Restriction of the use of certain hazardous substances in electrical and electronic equipment" (RoHS Directive)
- 2006/42/EC "Machinery Directive" for S7-1500/ET 200MP F-modules

EU declarations of conformity for the respective authorities are available from:

Siemens AG
Digital Industries
Factory Automation
DI FA TI COS TT
P.O. Box 1963
D-92209 Amberg

The EU declarations of conformity are also available for download from the Siemens Industry Online Support website, under the keyword "Declaration of Conformity".

UKCA marking

The S7-1500 automation system / ET 200MP distributed I/O system complies with the designated British standards (BS) for programmable logic controllers published in the official consolidated list of the British Government. The S7-1500 automation system / ET 200MP distributed I/O system meets the requirements and protection targets of the following regulations and related amendments:

- Electrical Equipment (Safety) Regulations 2016 (Low Voltage)
- Electromagnetic Compatibility Regulations 2016 (EMC)
- Equipment and Protective Systems Intended for Use in Potentially Explosive Atmospheres Regulations 2016 (Explosion Protection)
- Restriction of the Use of Certain Hazardous Substances in Electrical and Electronic Equipment Regulations 2012 (RoHS)
- Supply of Machinery (Safety) Regulations 2008 for S7-1500/ET 200MP safety components (fail-safe modules)

UK Declarations of Conformity for the respective authorities are available from:

Siemens AG
Digital Industries
Factory Automation
DI FA TI COS TT
P.O. Box 1963
D-92209 Amberg

The UK Declaration of Conformity is also available for download from the Siemens Industry Online Support website under the keyword "Declaration of Conformity".

cULus approval

Underwriters Laboratories Inc. in accordance with

- UL 508 (Industrial Control Equipment) **OR** UL 61010-1 and UL 61010-2-201
- CAN/C22.2 No. 142 (Process Control Equipment) **OR** CAN/CSA. C22.2 No. 61010-1 and CAN/CSA C22.2 No. 61010-2 201

OR

cULus HAZ. LOC. approval

Underwriters Laboratories Inc. in accordance with

- UL 508 (Industrial Control Equipment) **OR** UL 61010-1 and UL 61010-2-201
- CANCSA C22.2 No. 142 (Process Control Equipment) **OR** CAN/CSA. C22.2 No. 61010-1 and CAN/CSA C22.2 No. 61010-2 201
- ANSI/ISA 12.12.01
- CAN/CSA C22.2 No. 213 (Hazardous Location)

APPROVED for use in
Class I, Division 2, Group A, B, C, D T4;
Class I, Zone 2, Group IIC T4

Installation Instructions for cULus haz.loc.

- WARNING - Explosion Hazard - Do not disconnect while circuit is live unless area is known to be non-hazardous.
- WARNING - Explosion Hazard - Substitution of components may impair suitability for Class I, Division 2 or Zone 2.
- This equipment is suitable for use in Class I, Division 2, Groups A, B, C, D; Class I, Zone 2, Group IIC; or non-hazardous locations.
- These products need to be connected by means of the front connector Cat. No. 6ES7592-1AM00-0XB0

WARNING: EXPOSURE TO SOME CHEMICALS MAY DEGRADE THE SEALING PROPERTIES OF MATERIALS USED IN THE RELAYS.

FM approval

Factory Mutual Research (FM) according to

- Approval Standard Class Number 3611, 3600, 3810
- ANSI/UL 121201
- ANSI/UL 61010-1
- CAN/CSA C22.2 No. 213
- CAN/CSA C22.2 No. 61010-1
- CAN/CSA C22.2 No. 0-10

APPROVED for use in Class I, Division 2, Group A, B, C, D T4;
Class I, Zone 2, Group IIC T4

Installation Instructions for FM

- WARNING - Explosion Hazard - Do not disconnect while circuit is live unless area is known to be non-hazardous.
- WARNING - Explosion Hazard - Substitution of components may impair suitability for Class I, Division 2 or Zone 2.
- This equipment is suitable for use in Class I, Division 2, Groups A, B, C, D; Class I, Zone 2, Group IIC; or non-hazardous locations.
- These products need to be connected by means of the front connector Cat. No. 6ES7592-1AM00-0XB0

WARNING: EXPOSURE TO SOME CHEMICALS MAY DEGRADE THE SEALING PROPERTIES OF MATERIALS USED IN THE RELAYS.

ATEX approval

According to EN 60079-15 (Electrical apparatus for potentially explosive atmospheres - Part 15: Type of protection "n") and EN IEC 60079-0 (Electrical apparatus for potentially explosive gas atmospheres - Part 0: General requirements).

II 3 G Ex nA IIC T4 Gc

DEKRA 12ATEX0004 X

OR

According to EN IEC 60079-7 (Electrical apparatus for potentially explosive atmospheres - Part 7: Increased safety "e") and EN IEC 60079-0 (Electrical apparatus for potentially explosive gas atmospheres - Part 0: General requirements).

II 3 G Ex ec IIC T4 Gc

DEKRA 20ATEX0003 X

T-CPUs:

According to EN 60079-15 (Electrical apparatus for potentially explosive atmospheres - Part 15: Type of protection "n") and EN IEC 60079-0 (Electrical apparatus for potentially explosive gas atmospheres - Part 0: General requirements).

II 3 G Ex nA IIC T4 Gc

DEKRA 16ATEX0092 X

OR

According to EN IEC 60079-7 (Electrical apparatus for potentially explosive atmospheres - Part 7: Increased safety "e") and EN IEC 60079-0 (Electrical apparatus for potentially explosive gas atmospheres - Part 0: General requirements).

II 3 G Ex ec IIC T4 Gc

DEKRA 21ATEX0046 X

Special conditions in hazardous areas:

- The equipment shall only be used in an area of not more than degree of pollution 2, as defined in EN 60664-1.
- The equipment shall be installed in a suitable enclosure providing a degree of protection not less than IP54 in accordance with EN IEC 60079-0. The ambient conditions must be taken into consideration for use.
- Provisions shall be made to prevent the nominal voltage from being exceeded by transient disturbances of more than 119 V.

UKEX approval

According to EN IEC 60079-7 (Explosive atmospheres – Part 7: Equipment protection by increased safety "e") and EN IEC 60079-0 (Explosive atmospheres - Part 0: Equipment - General requirements).

II 3 G Ex ec IIC T4 Gc

DEKRA 21UKEX0008 X

T-CPUs:

According to EN IEC 60079-7 (Explosive atmospheres - Part 7: Equipment protection by increased safety "e") and EN IEC 60079-0 (Explosive atmospheres - Part 0: Equipment - General requirements).

II 3 G Ex ecnA IIC T4 Gc

DEKRA 21UKEX0007 X

Special conditions in explosive atmospheres:

- The equipment shall only be used in an area of not more than degree of pollution 2, as defined in EN 60664-1.
- The equipment shall be installed in a suitable enclosure providing a degree of protection not less than IP54 in accordance with EN IEC 60079-0. The ambient conditions must be taken into consideration for use.
- Provisions shall be made to prevent the rated voltage from being exceeded by transient disturbances of more than 119 V.

IECEx approval

According to IEC 60079-15 (Explosive atmospheres - Part 15: Equipment protection by type of protection "n") and IEC 60079-0 (Explosive atmospheres - Part 0: Equipment - General requirements).

II 3 G Ex nA IIC T4 Gc

IECEx DEK 13.0010 X

OR

According to IEC 60079-7 (Explosive atmospheres - Part 7: Equipment protection by increased safety "e") and IEC 60079-0 (Explosive atmospheres - Part 0: Equipment - General requirements).

II 3 G Ex ec IIC T4 Gc

IECEx DEK 19.0087 X

T-CPUs

According to IEC 60079-15 (Explosive atmospheres - Part 15: Equipment protection by type of protection "n") and IEC 60079-0 (Explosive atmospheres - Part 0: Equipment - General requirements).

II 3 G Ex nA IIC T4 Gc

IECEx DEK 16.0045 X

OR

According to IEC 60079-7 (Explosive atmospheres - Part 7: Equipment protection by increased safety "e") and IEC 60079-0 (Explosive atmospheres - Part 0: Equipment - General requirements).

II 3 G Ex ec IIC T4 Gc

IECEx DEK 21.0028 X

Special conditions in hazardous areas:

- The equipment shall only be used in an area of not more than pollution degree 2, as defined in IEC 60664-1.
- The device must be installed in a suitable housing that ensures at least IP54 degree of protection according to IEC 60079-0. The ambient conditions must be taken into consideration for use.
- Provisions shall be made to prevent the nominal voltage from being exceeded by transient disturbances of more than 119 V.

CCCEx approval

According to GB/T 3836.3 (Explosive atmospheres - Part 83: Equipment protection by type of protection "e"), GB/T 3836.1 (Explosive atmospheres - Part 1: Equipment - General requirements).

Ex ec IIC T4 Gc

Special conditions in hazardous areas:

- The equipment shall only be used in an area of not more than degree of pollution 2, as defined in GB/T 16935.1.
- The equipment shall be installed in a suitable enclosure providing a degree of protection not less than IP54 in accordance with GB/T 3836.1. The ambient conditions must be taken into consideration for use.
- Provisions shall be made to prevent the nominal voltage from being exceeded by transient disturbances of more than 119 V.

RCM Declaration of conformity for Australia/New Zealand

The S7-1500 automation system/ET 200MP distributed I/O system fulfills the requirements of the standard IEC 61000-6-4.

Korea Certification

Please note that this device corresponds to limit value class A in terms of the emission of radio frequency interference. This device can be used in all areas, except residential areas.

이 기기는 업무용(A급) 전자파 적합기기로서 판매자 또는 사용자는 이 점을 주의하시기 바라며 가정 외의 지역에서 사용하는 것을 목적으로 합니다.

Marking for the Eurasian Customs Union

EAC (Eurasian Conformity)

Customs Union of Russia, Belarus and Kazakhstan

Declaration of conformity with the technical requirements of the Customs Union (TR CU).

EN 61131-2

The S7-1500 automation system/ET 200MP distributed I/O system meets the requirements and criteria of EN 61131-2

(Programmable logic controllers, Part 2: Equipment requirements and tests).

IEC 61010-2-201

The S7-1500 automation system/ET 200MP distributed I/O system meets the requirements and criteria of the standard IEC 61010-2-201

(Safety regulations for electrical equipment for measurement, control, and laboratory use Part 2-201: Particular requirements for control equipment).

PROFINET standard

The PROFINET interfaces of the S7-1500 automation system/ET 200MP distributed I/O system are based on the standard IEC 61158 Type 10.

PROFIBUS standard

The PROFIBUS interfaces of the S7-1500 automation system/ET 200MP distributed I/O system are based on the standard IEC 61158 Type 3.

Marine approval

Classification societies:

- ABS (American Bureau of Shipping)
- BV (Bureau Veritas)
- DNV-GL (Det Norske Veritas - Germanischer Lloyd)
- LRS (Lloyds Register of Shipping)
- Class NK (Nippon Kaiji Kyokai)
- KR (Korean Register of Shipping)
- CCS (China Classification Society)
- RINA (Registro Italiano Navale)

Industrial use

The S7-1500 automation system ET 200MP / distributed I/O system is designed for the industrial field. It meets the following standards for this type of use:

- Requirements on interference emission EN 61000-6-4: 2007 + A1: 2011
- Requirements on immunity EN 61000-6-2: 2019

Use in mixed areas

Under certain conditions you can use the S7-1500 automation system ET 200MP / distributed I/O system in a mixed area. A mixed area is used for residential purposes and for commercial operations that do not significantly impact the residential purpose.

If you use the S7-1500 automation system / ET 200MP distributed I/O system in a mixed area, you must comply with the radio frequency interference limits of the generic standard EN 61000-6-3. Suitable measures for observing these limits for use in a mixed area are, for example:

- Installation of the S7-1500 automation system / ET 200MP I/O system in grounded control cabinets
- Use of noise filters in the supply lines

An additional individual acceptance test is also required.

Use in residential areas

Note

S7-1500 automation system / ET 200MP I/O system not intended for use in residential areas

The S7-1500 automation system ET 200MP / distributed I/O system is not intended for use in residential areas. If you use the S7-1500 automation system / ET 200MP distributed I/O system in residential areas, this may have an impact on radio/TV reception.

Reference

The certificates for the identifiers and approvals can be found in Siemens Industry Online Support on the Internet (https://www.siemens.com/automation/service&support).

16.2 Electromagnetic compatibility

Definition

Electromagnetic compatibility (EMC) is the ability of an electrical installation to function satisfactorily in its electromagnetic environment without interfering with that environment.

The S7-1500 automation system/ET 200MP distributed I/O system also meets the requirements of the EMC legislation for the European single market. The prerequisite for this is that the S7-1500/ET 200MP system complies with the requirements and guidelines relating to electrical equipment.

EMC in accordance with NE21

The S7-1500 automation system/ET 200MP distributed I/O system meets the EMC specifications of the NAMUR guideline NE21.

Pulse-shaped disturbances

The following table shows the electromagnetic compatibility of the S7-1500 automation system/ET 200MP distributed I/O system with regard to pulse-shaped disturbances.

Table 16- 1 Pulse-shaped disturbances

Pulse-shaped disturbance	Tested with	Corresponds to degree of severity
Electrostatic discharge in accordance with IEC 61000-4-2.	Air discharge: ±8 kV Contact discharge: ±6 kV	3 3
Burst pulses (high-speed transient disturbances) in accordance with IEC 61000-4-4.	±2 kV (power supply cable) ±2 kV (signal cable >30 m) ±1 kV (signal cable <30 m)	3 4 3
High-energy single pulse (surge) in accordance with IEC 61000-4-5 External protective circuit required (not for 230 V modules) (Defining interference-free controllers (https://support.automation.siemens.com/WW/view/en/59193566) Function Manual)		3
• Asymmetric coupling	±2 kV (power supply lines) DC with protective elements ±2 kV (signal/data line only > 30 m), with protective elements	
• Symmetric coupling	±1 kV (power supply lines) DC with protective elements ±1 kV (signal/data line only > 30 m), with protective elements	

Sinusoidal disturbances

The following table shows the electromagnetic compatibility of the S7-1500 automation system/ET 200MP distributed I/O system with regard to sinusoidal disturbances (RF radiation).

Table 16- 2 Sinusoidal disturbances with RF radiation

RF radiation in accordance with IEC 61000-4-3/NAMUR 21 **Electromagnetic RF field, amplitude-modulated**		**Corresponds to degree of severity**
80 GHz to 2.7 GHz	10 V/m	3
2.7 GHz to 6 GHz	3 V/m	2
80 % AM (1 kHz)		

The following table shows the electromagnetic compatibility of the S7-1500 automation system/ET 200MP distributed I/O system with regard to sinusoidal disturbances (RF coupling).

Table 16- 3 Sinusoidal disturbances with RF coupling

RF coupling in accordance with IEC 61000-4-6	**Corresponds to degree of severity**
from 10 kHz	3
10 V_{rms}	
80 % AM (1 kHz)	
150 Ω source impedance	

Emission of radio interference

Interference emission of electromagnetic fields in accordance with EN 55016.

Table 16- 4 Interference emission of electromagnetic fields

Frequency	**Interference emission**	**Measuring distance**
30 MHz to 230 MHz	< 40 dB (µV/m) QP	10 m
230 MHz to 1000 MHz	< 47 dB (µV/m) QP	10 m
from 1 to 3 GHz	< 76 dB (µV/m) P	3 m
from 3 to 6 GHz	< 80 dB (µV/m) P	3 m

Interference emission via the AC power supply according to EN 55016.

Table 16- 5 Interference emission via the AC power supply

Frequency	**Interference emission**
0.15 MHz to 0.5 MHz	< 79 dB (µV/m)Q < 66 dB (µV/m) M
0.5 MHz to 30 MHz	< 73 dB (µV/m)Q < 60 dB (µV/m) M

16.3 Electromagnetic compatibility of fail-safe modules

Pulse-shaped interference

The fail-safe I/O modules S7-1500/ET 200MP **without** external protective circuit meet the severity level 2 for the high-energy individual pulse (surge) according to IEC 61000-4-5:2014.

Protecting S7-1500/ET 200MP against overvoltages with fail-safe modules

If your equipment requires protection from overvoltage, we recommend that you use an external protective circuit (surge filter) between the load voltage power supply and the load voltage input of the fail-safe modules to ensure surge immunity for the S7-1500 automation system/ET 200MP distributed I/O system with fail-safe modules.

Note

Lightning protection measures always require a case-by-case examination of the entire system. An almost complete protection from overvoltages, however, can only be achieved if the entire building surroundings have been designed for overvoltage protection. In particular, this involves structural measures in the building design phase.

If you want detailed information regarding overvoltage protection, we recommend that you contact your Siemens representative or a company specializing in lightning protection.

You can find more information on protection from overvoltage in the Designing interference-free controllers (http://support.automation.siemens.com/WW/view/en/59193566) function manual.

16.4 Shipping and storage conditions

Introduction

The S7-1500 automation system / ET 200MP I/O system meet the specifications regarding transport and storage conditions pursuant to IEC 61131-2. The following information applies to modules that are shipped and/or stored in their original packaging.

Shipping and storage conditions for modules

Table 16- 6 Shipping and storage conditions

Type of condition	Permissible range
Free fall (in shipping package)	≤ 1 m
Temperature	from -40 °C to +70 °C
Barometric pressure	From 1140 to 540 hPa (corresponds to an altitude of -1000 to 5000 m)
Relative humidity	5% to 95%, without condensation
Sinusoidal vibrations in accordance with IEC 60068-2-6	5 - 9 Hz: 3.5 mm 9 - 500 Hz: 9.8 m/s^2
Shock in accordance with IEC 60068-2-27	250 m/s^2, 6 ms, 1000 shocks

16.5 Mechanical and climatic ambient conditions

Operating conditions

The S7-1500 automation system/ET 200MP distributed I/O system is suitable for use in weather-proof, fixed locations. The operating conditions are based on the requirements of IEC 61131-2:2017.

- OTH4 (S7-1500 CPUs: For the minimum ambient temperature, see the Climatic ambient temperatures table)
- STH4 (S7-1500 CPUs: Minimum ambient temperature -40 °C, minimum relative humidity 5%)
- TTH4 (S7-1500 CPUs: Minimum relative humidity 5%)

Test of mechanical ambient conditions

The table below provides important information with respect to the type and scope of the test of ambient mechanical conditions.

Table 16- 7 Test of mechanical ambient conditions

Condition tested	Test Standard	Comment
Vibration	Vibration test according to IEC 60068-2-6 (Sinus)	Type of oscillation: Frequency sweeps with a rate of change of 1 octave/minute. 5 Hz ≤ f ≤ 8.4 Hz, constant amplitude 7 mm 8.4 Hz ≤ f ≤ 150 Hz, constant acceleration 2 g Duration of vibration: 10 frequency sweeps per axis, along each of the 3 mutually perpendicular axes
Shock	Shock, tested according to IEC 60068-2-27	Type of shock: Half-sine Shock intensity: 15 g max., duration 11 ms Direction of shock: 3 shocks each in (+/-) direction, along each of the 3 mutually perpendicular axes
Continuous shock	Shock, tested according to IEC 60068-2-27	Type of shock: Half-sine Shock intensity: 250 m/s^2 peak value, 6 ms duration Direction of shock: 1000 shocks each in (+/-) direction, along each of the 3 mutually perpendicular axes

Reduction of vibrations

If your S7-1500 automation system/ET 200MP distributed I/O system is exposed to severe shock or vibration, take appropriate measures to reduce the acceleration or the amplitude.

We recommend the installation of the S7-1500 automation system/ET 200MP distributed I/O system on damping materials (for example, rubber-bonded metal mounting).

Climatic ambient conditions

The following table shows the permissible climatic ambient conditions for the S7-1500 automation system/ET 200MP distributed I/O system during operation.

Table 16- 8 Climatic ambient conditions

Ambient conditions	Permissible range	Comments
Temperature: Horizontal and vertical mounting	See product data sheets for the respective module on the Internet (https://support.industry.siemens.com/cs/ww/en/ps/td)	The lower permissible ambient temperature was extended for the S7-1500 automation system/ET 200MP distributed I/O system to -30 °C. Differences may exist for specific modules and depending on the mounting position and, if applicable, load. You must check the lower permissible ambient temperature for each module in the product data sheets. The product data sheets with daily updated technical specifications can be found on the Internet (https://support.industry.siemens.com/cs/ww/en/ps/td) at Industry Online Support. Enter the article number or the short description of the desired module on the website.
		To increase the service life of the display, the display switches off when the permitted operating temperature is exceeded. At certain temperatures, the display switches off an on again. You can find more information in the technical specifications in the CPU manuals.
Temperature variation	10 K/h	-
Relative humidity	from 10 % to 95 %	Without condensation
Barometric pressure	from 1140 to 795 hPa	Corresponds to an altitude of -1000 m to 2000 m. See the following section "Using the S7-1500 automation system/ET 200MP distributed I/O system over 2000 m above sea level".
Pollutant concentration	ANSI/ISA-71.04 severity level G1; G2; G3	-

Using the S7-1500 automation system/ET 200MP distributed I/O system over 2000 m above sea level.

Table 16- 9 S7-1500 (F) CPUs for maximum installation altitude 5000 m or 3000 m

CPU designation	Article number	Version	Max. installation altitude
S7-1500			
CPU 1511-1 PN	6ES7511-1AK01-0AB0	FS03 or higher	5000 m
CPU 1511-1 PN	6ES7511-1AK02-0AB0	FS01 or higher	
CPU 1511-1 PN	6ES7 511-1AL03-0AB0	FS01 or higher	
CPU 1511C-1 PN	6ES7511-1CK00-0AB0	FS03 or higher	
CPU 1511C-1 PN	6ES7511-1CK01-0AB0	FS01 or higher	
CPU 1511T-1 PN	6ES7 511-1TK01-0AB0	FS03 or higher	
CPU 1511T-1 PN	6ES7 511-1TL03-0AB0	FS01 or higher	
CPU 1512C-1 PN	6ES7512-1CK00-0AB0	FS03 or higher	
CPU 1512C-1 PN	6ES7512-1CK01-0AB0	FS01 or higher	
CPU 1513-1 PN	6ES7513-1AL01-0AB0	FS03 or higher	
CPU 1513-1 PN	6ES7513-1AL02-0AB0	FS01 or higher	

CPU 1513-1 PN	6ES7 513-1AM03-0AB0	FS01 or higher	
CPU 1515-2 PN	6ES7515-2AM01-0AB0	FS03 or higher	
CPU 1515-2 PN	6ES7515-2AM02-0AB0	FS01 or higher	
CPU 1515-2 PN	6ES7 515-2AN03-0AB0	FS01 or higher	
CPU 1515T-2 PN	6ES7515-2TM01-0AB0	FS03 or higher	
CPU 1515T-2 PN	6ES7 515-2TN03-0AB0	FS01 or higher	
CPU 1516-3 PN/DP	6ES7516-3AN01-0AB0	FS03 or higher	
CPU 1516-3 PN/DP	6ES7516-3AN02-0AB0	FS01 or higher	
CPU 1516-3 PN/DP	6ES7 516-3AP03-0AB0	FS01 or higher	
CPU 1516T-3 PN/DP	6ES7516-3TN00-0AB0	FS05 or higher	
CPU 1517-3 PN/DP	6ES7517-3AP00-0AB0	FS05 or higher	
CPU 1517T-3 PN/DP	6ES7517-3TP00-0AB0	FS05 or higher	
CPU 1518-4 PN/DP	6ES7518-4AP00-0AB0	FS05 or higher	
CPU 1518T-4 PN/DP	6ES7518-4TP00-0AB0	FS01 or higher	
CPU 1518-4 PN/DP ODK	6ES7518-4AP00-3AB0	FS05 or higher	
CPU 1518-4 PN/DP MFP	6ES7518-4AX00-1AB0	FS01 or higher	
S7-1500 F			
CPU 1511F-1 PN	6ES7511-1FK01-0AB0	FS03 or higher	5000 m
CPU 1511F-1 PN	6ES7511-1FK02-0AB0	FS01 or higher	
CPU 1511F-1 PN	6ES7 511-1FL03-0AB0	FS01 or higher	
CPU 1511TF-1 PN	6ES7511-1UK01-0AB0	FS03 or higher	
CPU 1511TF-1 PN	6ES7 511-1UL03-0AB0	FS01 or higher	
CPU 1513F-1 PN	6ES7513-1FL01-0AB0	FS03 or higher	
CPU 1513F-1 PN	6ES7513-1FL02-0AB0	FS01 or higher	
CPU 1513F-1 PN	6ES7 513-1FM03-0AB0	FS01 or higher	
CPU 1515F-2 PN	6ES7515-2FM01-0AB0	FS03 or higher	
CPU 1515F-2 PN	6ES7515-2FM02-0AB0	FS01 or higher	
CPU 1515F-2 PN	6ES7 515-2FN03-0AB0	FS01 or higher	
CPU 1515TF-2 PN	6ES7515-2UM01-0AB0	FS03 or higher	
CPU 1515TF-2 PN	6ES7 515-2UN03-0AB0	FS01 or higher	
CPU 1516F-3 PN/DP	6ES7516-3FN01-0AB0	FS03 or higher	
CPU 1516F-3 PN/DP	6ES7516-3FN02-0AB0	FS01 or higher	
CPU 1516F-3 PN/DP	6ES7 516-3FP03-0AB0	FS01 or higher	
S7-1500 F			
CPU 1516TF-3 PN/DP	6ES7516-3UN00-0AB0	FS05 or higher	3,000 m
CPU 1517F-3 PN/DP	6ES7517-3FP00-0AB0	FS05 or higher	
CPU 1517TF-3 PN/DP	6ES7517-3UP00-0AB0	FS05 or higher	
CPU 1518F-4 PN/DP	6ES7518-4FP00-0AB0	FS05 or higher	
CPU 1518TF-4 PN/DP	6ES7518-4UP00-0AB0	FS01 or higher	
CPU 1518F-4 PN/DP ODK	6ES7518-4FP00-3AB0	FS05 or higher	
CPU 1518F-4 PN/DP MFP	6ES7518-4FX00-1AB0	FS01 or higher	

The maximum "operating elevation in relation to sea level" depends on the module and is described in the technical specifications of the respective module. The product data sheets with daily updated technical specifications can be found on the Internet (https://support.industry.siemens.com/cs/ww/en/ps/td) at Industry Online Support. Enter the article number or the short description of the desired module on the website.

For altitudes > 2000 m the following constraints apply for the maximum specified ambient temperature:

Restrictions of the maximum ambient temperature specified with regard to the installation altitude

Installation altitude	Derating factor for ambient temperature [1]
-1000 m to 2000 m	1.0
2000 m to 3000 m	0.9
3000 m to 4000 m	0.8
4000 m to 5000 m	0.7

[1] Base value for application of the derating factor is the maximum permissible ambient temperature in °C for 2000 m.

Note

- Linear interpolation between altitudes is permissible.
- The derating factors compensate for the decreasing cooling effect of air in higher altitudes due to lower density.
- Note the mounting position of the respective module in the technical specifications. The basis is the standard IEC 61131-2:2017.
- Make sure that the power supplies you use are rated for altitudes > 2000 m.
- The displays of the S7-1500-CPUs are designed for an altitude of ≤ 3,000 m. When operating the device at altitudes > 3,000 m, you may experience problems with the CPU display in rare cases; however, these do not affect operation of the CPU.

Effects on the availability of modules

The higher cosmic radiation present during operation at altitudes above 2000 m will also start to have an effect on the failure rate of electronic components (the so-called soft error rate). In rare cases this can result in a transition of the module into the safe state, especially for safety modules. However, the functional safety of the module is fully retained.

Note

The F-CPUs are certified for operation in safety mode up to the maximum altitude listed in the product data sheet. All other markings and certifications are currently based on an altitude of up to 2000 m.

Information on PFDavg, PFH values for S7-1500 F

PFDavg and PFH values for F-CPUs at operating altitudes up to 3,000 m or 5,000 m. Below you will find the probability of failure values (PFDavg and PFH values) for the F-CPUs with a service life of 20 years and with a repair time of 100 hours:

Operation in low demand mode low demand mode **According to IEC 61508:2010:** **PFDavg = Average probability of dangerous failure on demand**	**Operation in high demand or continuous mode** high demand/continuous mode **According to IEC 61508:2010:** **PFH = Average frequency of a dangerous failure [h^{-1}]**
< 2E-05	< 1E-09

16.6 Information on insulation tests, protection class, degree of protection and rated voltage

Insulation

The insulation is designed in accordance with the requirements of EN 61010-2-201.

Note

In the case of modules with 24 V DC (SELV/PELV) supply voltage, galvanic isolations are tested with 707 V DC (type test).

Pollution degree/overvoltage category in accordance with EN 61131-2: 2007 and IEC 61010-2-201

- Pollution degree 2
- Overvoltage category: II

Protection class according to IEC 61131-2: 2007 and IEC 61010-2-201

The S7-1500 automation system/ET 200MP distributed I/O system meets protection class I and contains parts of protection classes II and III.

Degree of protection IP20

Degree of protection IP20 in accordance with IEC 60529 for all modules of the S7-1500 automation system/ET 200MP distributed I/O system:

- Protection against contact with standard test fingers
- Protection against foreign objects with diameters in excess of 12.5 mm
- No protection against water

Rated voltage for operation

The S7-1500 automation system/ET 200MP distributed I/O system works with the rated voltages and corresponding tolerances listed in the following table.

Note the supply voltage of each module when selecting the rated voltage.

Table 16- 10 Rated voltage of all modules of the S7-1500 automation system/ET 200MP distributed I/O system for operation

rated voltage	Tolerance range
24 V DC	19.2 V DC to 28.8 V DC [1]
48 V DC	40.8 to 57.6 V DC
60 V DC	51.0 to 72.0 V DC
120 V AC	93 V AC to 132 V AC
230 V AC	187 V AC to 264 V AC

[1] Static value: Generation as protective extra-low voltage with safe electrical isolation in accordance with IEC 61131-2 or IEC 61010-2-201.

16.7 Use of the S7-1500/ET 200MP in zone 2 hazardous areas

Reference

You can find more information in the product information Use of modules in a Zone 2 Hazardous Area (https://support.automation.siemens.com/WW/view/en/19692172).

Dimension drawings

A

A.1 Dimension drawings of the mounting rails

Mounting rail 160 mm

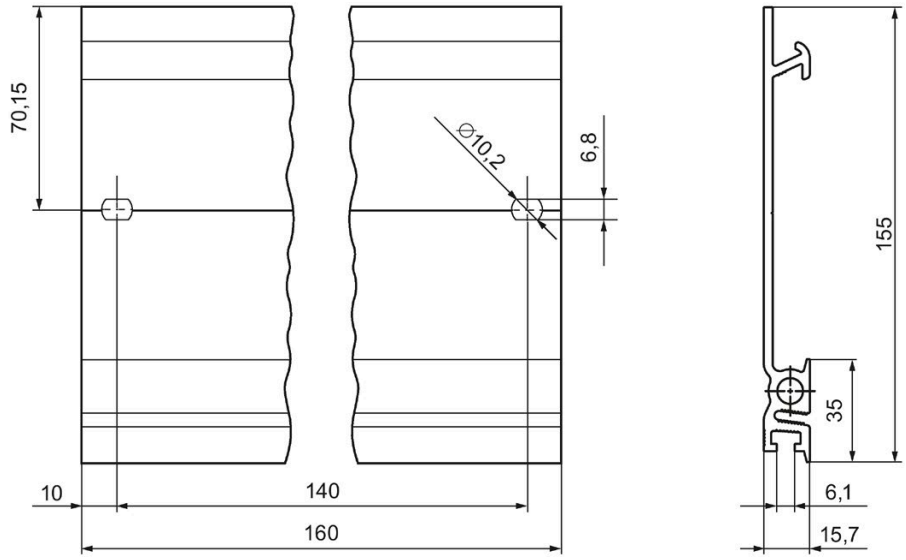

Figure A-1 Mounting rail 160 mm

Mounting rail 245 mm

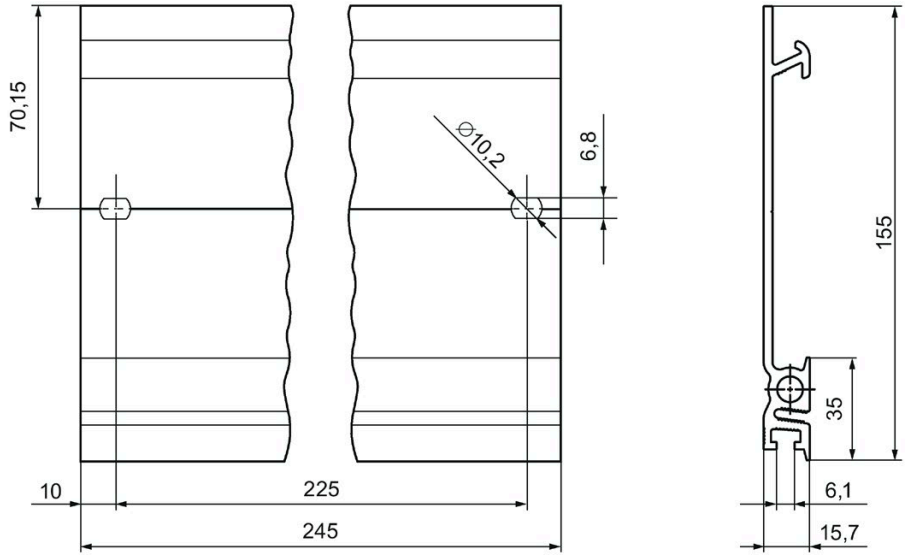

Figure A-2 Mounting rail 245 mm

Mounting rail 482.6 mm

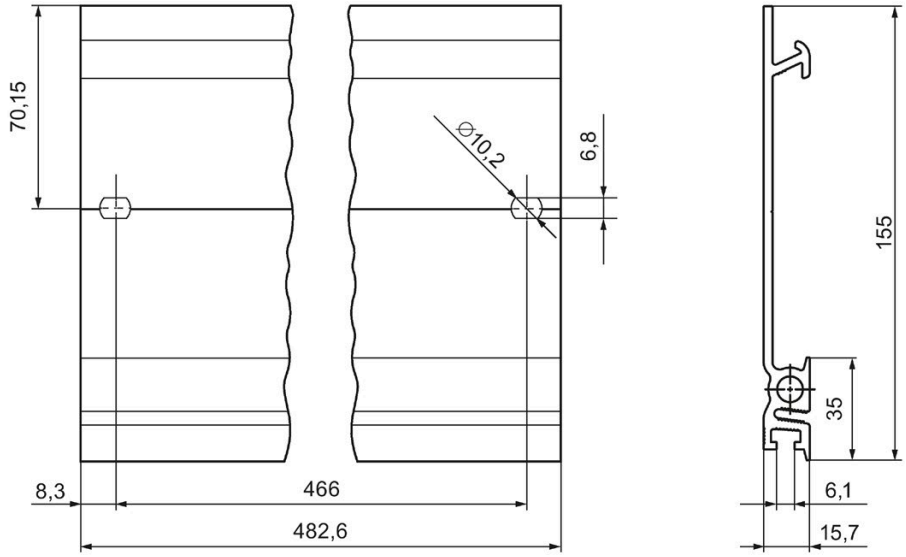

Figure A-3 Mounting rail 482.6 mm

Mounting rail 530 mm

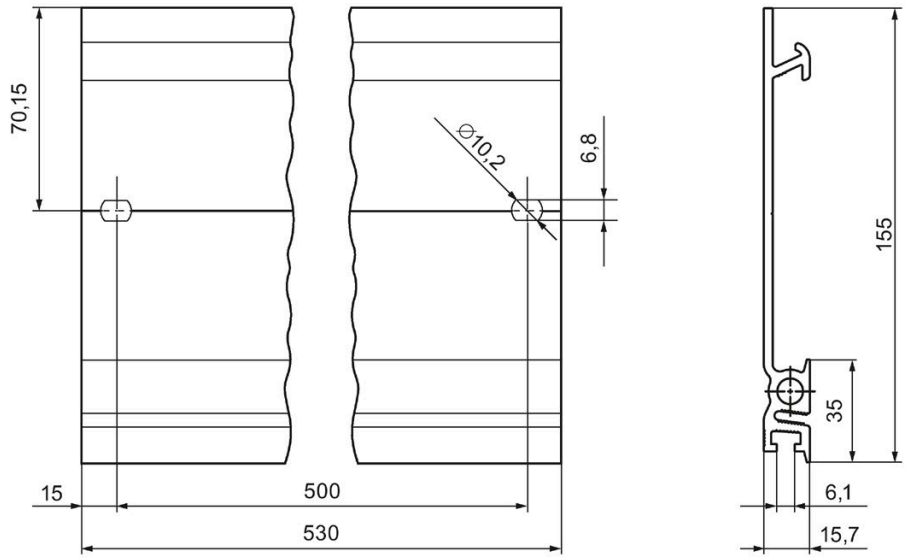

Figure A-4 Mounting rail 530 mm

Mounting rail 830 mm

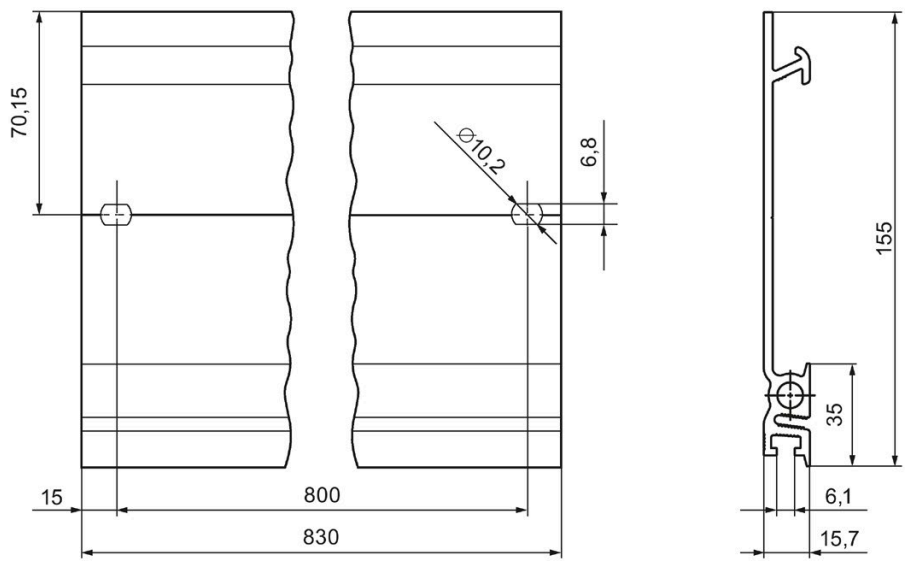

Figure A-5 Mounting rail 830 mm

Mounting rail 2000 mm

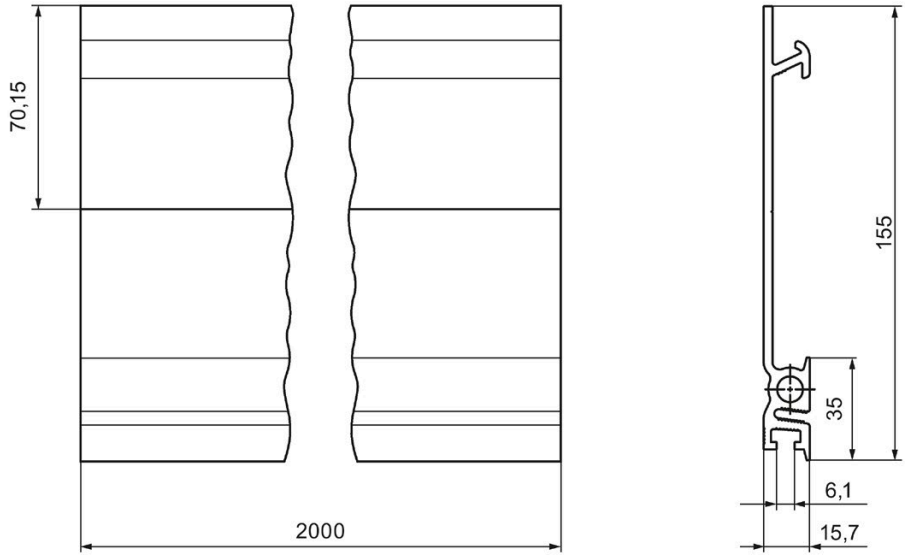

Figure A-6 Mounting rail 2000 mm

A.2 Dimension drawing of shielding bracket for 35 mm modules

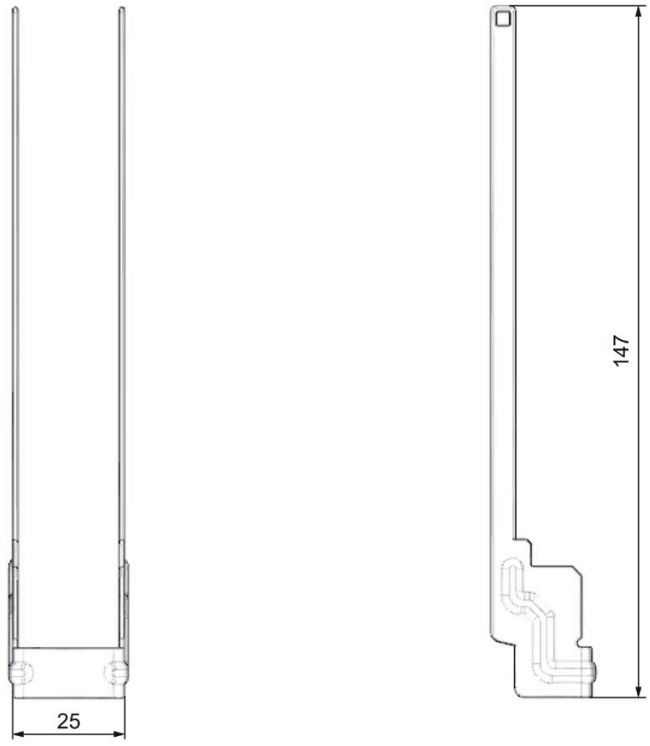

Figure A-7 Dimension drawing of shielding bracket for 35 mm modules

A.3 Dimension drawing of shielding bracket for 25 mm modules

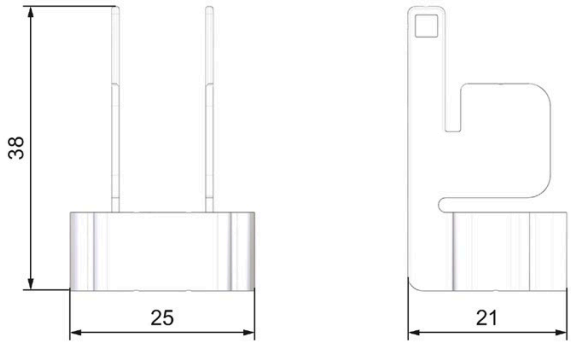

Figure A-8 Dimension drawing of shielding bracket for 25 mm modules

A.4 Dimension drawing of shielding bracket for 35 mm modules

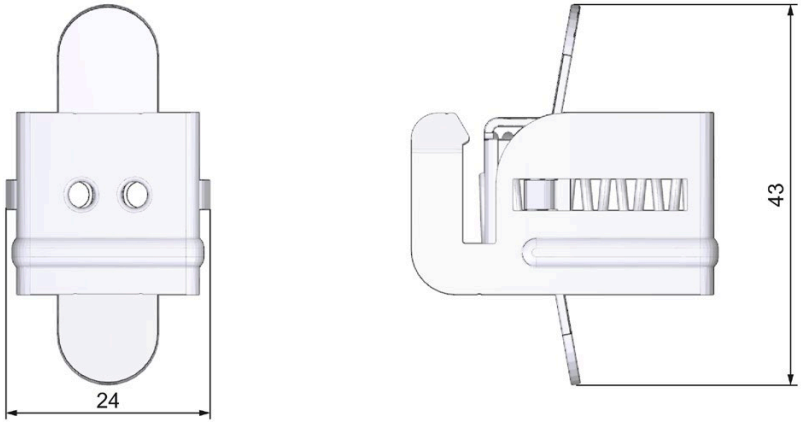

Figure A-9 Dimension drawing of shielding bracket for 35 mm modules

A.5 Dimension drawing of shielding bracket for 25 mm modules

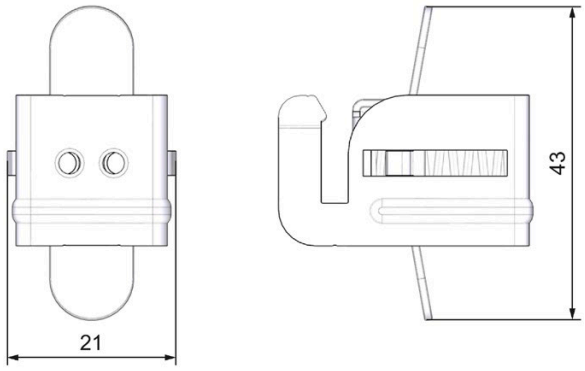

Figure A-10 Dimension drawing of shielding bracket for 25 mm modules

A.6 Dimension drawing of infeed element for 35 mm modules

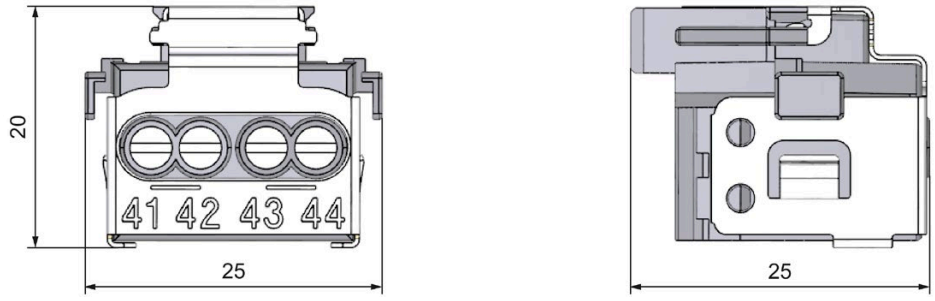

Figure A-11 Dimension drawing of infeed element for 35 mm modules

A.7 Dimension drawing of infeed element for 25 mm modules

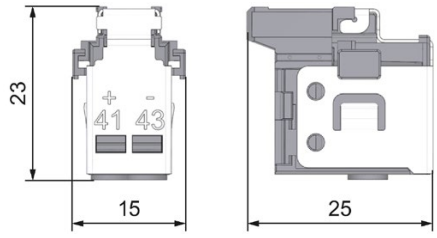

Figure A-12 Dimension drawing of infeed element for 25 mm modules

A.8 Dimension drawings of the labeling strips

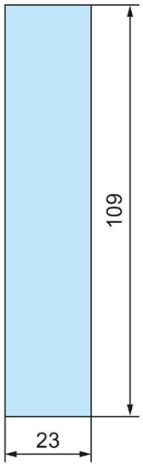

Figure A-13 Dimension drawing of labeling strips for 35 mm modules

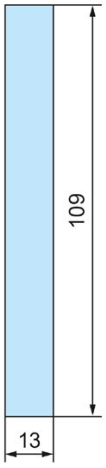

Figure A-14 Dimension drawing of labeling strips for 25 mm modules

A.9 Dimension drawing of test probe for measurement tap

To perform measurements on the front connector of the S7-1500/ET 200MP automation system, you need a test probe with the following properties:

- Maximum diameter at measuring tip: 1 mm
- Length of measuring tip: ≥ 10 mm

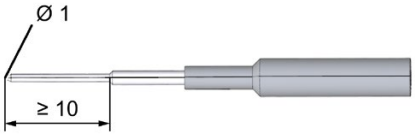

Figure A-15 Dimension drawing of test probe for measurement tap

Corresponding test probes are available from electrical retailers.

Accessories/spare parts

B

Accessories for the S7-1500 automation system/ET 200MP distributed I/O system

Table B- 1 General accessories

Designation	Article number
Mounting rail	
• Mounting rail, 160 mm (with drill holes)	6ES7590-1AB60-0AA0
• Mounting rail, 245 mm (with drill holes)	6ES7590-1AC40-0AA0
• Mounting rail, 482 mm (with drill holes)	6ES7590-1AE80-0AA0
• Mounting rail, 530 mm (with drill holes)	6ES7590-1AF30-0AA0
• Mounting rail, 830 mm (with drill holes)	6ES7590-1AJ30-0AA0
• Mounting rail, 2000 mm (without drill holes) for cutting to length	6ES7590-1BC00-0AA0
Standard rail adapter, 10 adapters, 10 hexagon socket screws and 10 washers	6ES7590-6AA00-0AA0
Active backplane bus	
• For one interface module and 12 I/O modules (ST 1+12)	6ES7590-0BL00-0AA0
• For one interface module and 8 I/O modules (ST 1+8)	6ES7590-0BH00-0AA0
• For one interface module and 4 I/O modules (ST 1+4)	6ES7590-0BD00-0AA0
PE connection element for mounting rail, 2000 mm (spare part), 20 units	6ES7590-5AA00-0AA0
Front connector (incl. four potential bridges, cable tie, and individual labeling strip) for 35 mm modules	
• Screw-type terminals, 40-pin	6ES7592-1AM00-0XB0
Front connector (incl. four potential bridges, cable tie, and individual labeling strip) for 35 mm modules	
• Push-in terminal (40-pin)	6ES7592-1BM00-0XB0
Front connector (incl. cable tie and individual labeling strip) for 25 mm modules	
• Push-in terminal (40-pin)	6ES7592-1BM00-0XA0
4-pole connection plug for supply voltage (spare part), 10 units	6ES7193-4JB00-0AA0
DIN A4 labeling sheet (10 x for labeling the 35 mm I/O modules)	
• Pre-perforated, AI gray	6ES7592-2AX00-0AA0
DIN A4 labeling sheet (10 x for labeling the 25 mm I/O modules)	
• Pre-perforated, AI gray	6ES7592-1AX00-0AA0
U connector (spare part), 5 units	6ES7590-0AA00-0AA0
I/O shielding set for 35 mm modules (consists of: power supply element, shielding bracket, and shield clamp), (spare part), 5 units	6ES7590-5CA00-0AA0

Designation	Article number
I/O shielding set for 25 mm modules (consists of: power supply element, shielding bracket, and shield clamp), (spare part), 4 units	6ES7590-5CA10-0XA0
Shield clamp (spare part), 10 units	6ES7590-5BA00-0AA0
Display module 70 mm (spare part) for the following CPUs: • CPU 1515(F)-2 PN • CPU 1515T(F)-2 PN • CPU 1516(F)-3 PN/DP • CPU 1516T(F)-3 PN/DP • CPU 1517(F)-3 PN/DP • CPU 1517T(F)-3 PN/DP • CPU 1518(F)-4 PN/DP • CPU 1518T(F)-4 PN/DP • CPU 1518(F)-4 PN/DP MFP	6ES7591-1BA02-0AA0
Display module 35 mm (spare part) for the following CPUs: • CPU 1511(F)-1 PN • CPU 1511C-1 PN • CPU 1511T(F)-1 PN • CPU 1512C-1 PN • CPU 1513(F)-1 PN	6ES7591-1AA01-0AA0
Display module 35 mm (spare part) for standard, F-CPUs / compact CPUs from article number 6ES751x-xxx02-0AB0/6ES751x-1CK01-0AB0	6ES7591-1AB00-0AA0
Protective cover 35 mm (spare part) with cutout for display and display keys for standard, F-CPUs / compact CPUs from article number 6ES751x-xxx02-0AB0/6ES751x-1CK01-0AB0, 5 units	6ES7591-4AB00-0AA0
Display 70 mm (spare part) for standard, F-CPUs from article number 6ES751x-xxx02-0AB0	6ES7591-1BB00-0AA0
Protective cover 70 mm (spare part) with cutout for display and display keys for standard, F-CPUs / compact CPUs from article number 6ES751x-xxx02-0AB0, 5 units	6ES7591-4BB00-0AA0
Power cable connector with coding element for power supplies (spare part), 10 units	6ES7590-8AA00-0AA0
Potential bridge for front connector (spare part), 20 units	6ES7592-3AA00-0AA0
Universal front cover for 35 mm I/O modules (spare part), 5 units	6ES7528-0AA00-7AA0 Consists of: • 5 x front cover • 5 x front labeling strip (per module - article number) • 5 x wiring diagram (per module article number)
Universal front cover for 25 mm I/O modules (spare part), 5 units	6ES7528-0AA00-0AA0 Consists of: • 5 x front cover • 5 x front labeling strip (per module - article number) • 5 x wiring diagram (per module article number)

Designation	Article number
Universal front cover for interface module (spare part), 5 units	6ES7528-0AA70-7AA0 Consists of: • 5 x front cover
Industrial Ethernet FastConnect RJ45 plug 180 degrees, 1 unit	6GK1901-1BB10-2AA0
Industrial Ethernet FastConnect RJ45 plug 180 degrees, 10 units	6GK1901-1BB10-2AB0
Industrial Ethernet FastConnect RJ45 plug 90 degrees, 1 unit	6GK1901-1BB20-2AA0
Industrial Ethernet FastConnect RJ45 plug 90 degrees, 10 units	6GK1901-1BB20-2AB0
PROFIBUS-FastConnect bus connector without programming device socket, up to 12 MBaud, 1 unit	6ES7972-0BA70-0XA0
PROFIBUS FastConnect bus connector with programming device socket, up to 12 MBaud, 1 unit *	6ES7972-0BB70-0XA0
PROFIBUS FastConnect bus connector without programming device socket, up to 12 MBaud, 1 unit	6ES7972-0BA52-0XA0
PROFIBUS FastConnect bus connector with programming device socket, up to 12 MBaud, 1 unit	6ES7972-0BB52-0XA0

'* The PROFIBUS FastConnect bus connector 0BB70 is supplied with the IM 155-5 DP ST interface module and can also be ordered as a spare part.

SIMATIC Memory Cards

Article number	Capacity
6ES7954-8LCxx-0AA0	4 MB
6ES7954-8LExx-0AA0	12 MB
6ES7954-8LFxx-0AA0	24 MB
6ES7954-8LL02-0AA0	256 MB
6ES7954-8LPxx-0AA0	2 GB
6ES7954-8LT02-0AA0	32 GB

SIMATIC Memory Cards for S7-1500 Motion Control KinPlus

Article number	Capacity
6ES7 954-8LP80-0AA0	2 GB
6ES7 954-8LT80-0AA0	32 GB

Online catalog

Additional article numbers for the S7-1500 automation system/ET 200MP distributed I/O system can be found on the Internet (https://mall.industry.siemens.com) in the online catalog and online ordering system.

Accessories for S7 1500/ET 200MP fail-safe modules

Table B- 2 Accessories for fail-safe modules

Designation	Article number
Electronic coding element with rewritable memory for fail-safe modules (spare part), 5 units	6ES7592-6EF00-1AA0
Front cover for 35 mm F-I/O modules (spare part), 5 units	6ES7528-0AA10-7AA0 Consists of: • 5 x front cover • 5 x front labeling strip (per module - article number) • 5 x wiring diagram (per module article number)
DIN A4 labeling sheet (10 x for labeling the fail-safe I/O modules), pre-perforated, yellow	6ES7592-2CX00-0AA0

Decommissioning

C

C.1 Introduction

In the following section, you will find information on how to properly decommission individual components of your S7-1500 automation system. Decommissioning is necessary when the component has reached the end of its service life.

Decommissioning includes environmentally sound disposal and secure removal of all digital data of electronic components with storage medium.

C.2 Securely removing data

Before disposing of components of your automation system, you must securely delete all data from the storage media of these components.

NOTICE
Data misuse resulting from non-secure deletion of data Incomplete or non-secure deletion of data from data memories can result in data misuse by third parties. For this reason, ensure secure deletion of data from all storage media before disposing of the product.

To delete all data from the data memories of the S7-1500 modules to be disposed of (CPU, interface module, analog modules), reset the corresponding modules to their factory settings. The "Reset to factory settings" function returns the module to its delivery state. The function deletes all information that was saved internally on the module.

Deleting data

For secure deletion of data from the CPU, IM, analog modules and the SIMATIC Memory Card, follow these steps in the order given:

1. Reset analog modules inserted centrally and distributed in your TIA Portal project back to their factory-stored calibration values.

   You can find detailed information on the steps required to reset the calibration values to factory settings in the function manual Analog Value Processing (https://support.industry.siemens.com/cs/ww/en/view/67989094).

2. Format the SIMATIC Memory Card.

   The format operation deletes all contents from the SIMATIC Memory Card.

   Formatting with STEP 7:

   – Establish an online connection.
   – Open the online and diagnostics view of the CPU (either from the project context or via "Accessible devices").
   – In the dialog window, select "Functions > Format memory card" and then click the "Format" button.

   Formatting using the display of a CPU

   – In the display of the CPU, select the menu "Settings" > "Card functions" > "Format card" and confirm with OK.

3. Reset the CPU/interface module to factory settings.

   We recommend resetting the CPU/interface module in STEP 7. When you reset a CPU to factory settings, select the options shown in the figure before the reset.

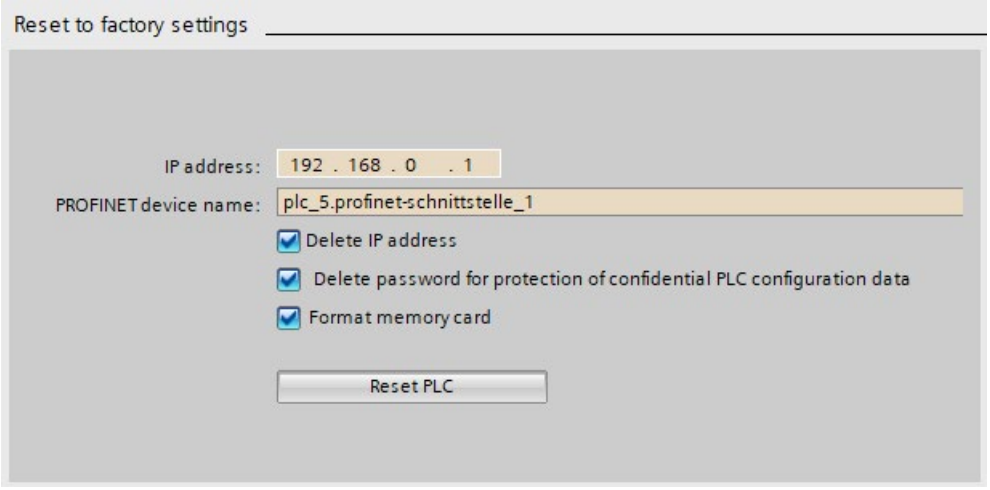

Figure C-1 Resetting the CPU to factory settings

Note

If you reset the CPU using STEP 7 and you have selected the "Format memory card" option, you can skip step 2 of the described sequence of steps.

When you reset an interface module to factory settings, select the options shown in the figure before the reset.

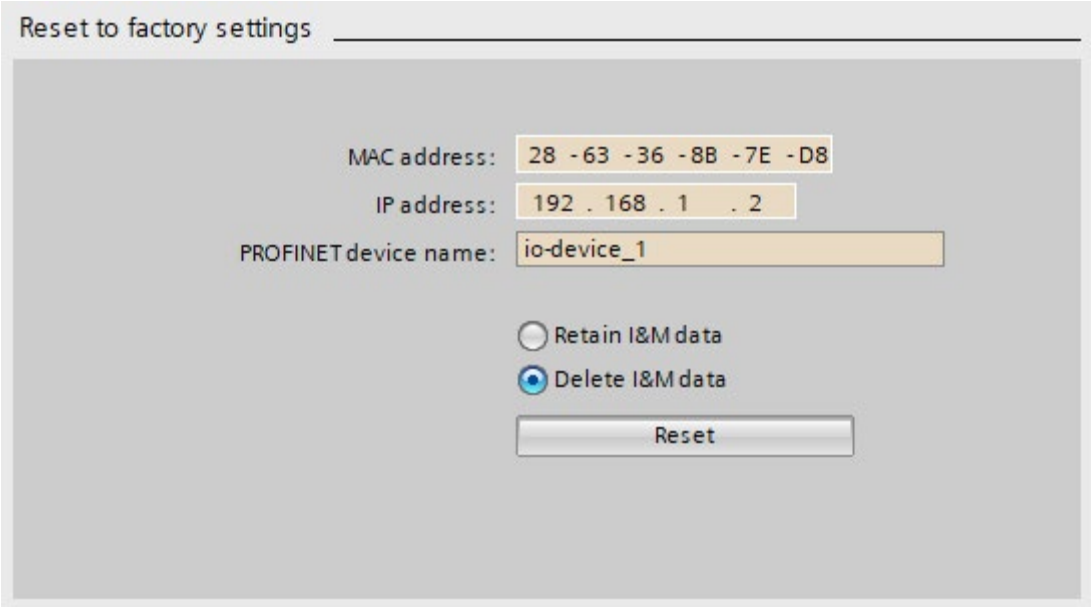

Figure C-2 Resetting interface module to factory settings

Detailed information on resetting to factory settings can be found in section Resetting to factory settings (Page 319).

Result: All data that was still contained in the data memories of the modules and the SIMATIC Memory Card has been deleted. You can now dispose of the components.

Note

If you no longer plan to use the SIMATIC Memory Card after formatting it, destroy it before disposing of it.

A secure destruction method is to shred the card to such a degree that it cannot be reconstructed. For this, you can also use a waste disposal service that specializes in data storage medium destruction.

C.3 Recycling and disposal

For environmentally sustainable recycling and disposal of your old equipment, contact a certified electronic waste disposal service and dispose of the equipment according to the applicable regulations in your country.

Glossary

Automation system

Programmable logic controller for the open-loop and closed-loop control of process chains in the process engineering industry and in manufacturing technology. The automation system consists of different components and integrated system functions according to the automation task.

Baud rate

Data transmission rate indicates the number of bits transmitted per second (baud rate = bit rate).

Bit memory

Bit memory is a component of the system memory of the CPU for saving intermediate results. It can be accessed in bit, byte, word or double word mode.

Bus

Joint transmission path to which all nodes of a fieldbus system are connected; has two defined ends.

Bus cable connector

Physical connection between the bus node and the bus cable.

Bus, self-assembling

The modules are lined up on the mounting rail, and are mechanically and electrically connected to each other with a U connector as they are swiveled into position. In this way the bus is extended with each module.

Code block

In SIMATIC S7, a code block is a block that contains a section of the STEP 7 user program. (in contrast to a data block, which contains only data)

Configuration

Systematic arrangement of the individual modules (configuration).

Connection plug

The connection plug provides the physical connection between devices and the cable, for example.

Consistent data

Data whose content belongs together and must not be separated is known as consistent data.

Counter

Counters are components of the system memory of the CPU. You can modify the content of the "counter cells" using STEP 7 instructions (e.g. count up/down).

CPU

The CPU uses the integrated system power supply to supply the electronics of the modules via the backplane bus. The CPU contains the operating system and executes the user program. The user program is located on the SIMATIC Memory Card and is processed in the work memory of the CPU. The PROFINET interfaces on the CPU allow simultaneous communication with PROFINET devices, PROFINET controllers, HMI devices, programming devices, other controllers and other systems. The S7-1500 CPUs support operation as an IO controller and I-device. Similarly to the PROFINET interface, the PROFIBUS interface available on some of the S7-1500 CPUs allows communication with other devices. When the interface is used as PROFIBUS DP interface, the CPU on the PROFIBUS DP also assumes the role of a DP master.

Crimping

Procedure whereby two components joined together, e.g. wire end sleeve and cable, are connected with one another through plastic strain.

Cycle control point

The cycle control point marks the end of a cycle and the start of the next cycle. The cycle time statistics and monitoring of the configured maximum cycle time start at the cycle control point.

Once the cycle control point has been reached, the CPU writes the process image output to the output modules, reads the state of the inputs to the input modules and then executes the first cyclic OB.

Cycle time

The cycle time represents the time a CPU requires to execute the user program once.

Cyclic interrupt

You can find relevant information under the entry "Interrupt, Cyclic "

Data block

Data blocks (DBs) are data areas in the user program that contain user data. There are global data blocks, which can be accessed from all code blocks, and instance data blocks, which are assigned to a specific FB call.

Device

A device can send, receive or amplify data via the bus, e.g. IO device via PROFINET IO.

Device names

Before an IO device can be addressed by an IO controller, it must have a device name. This approach was chosen for PROFINET because names are easier to administer than complex IP addresses.

In its delivery state, an IO device has no device name. An IO device be addressed by an IO controller only after a device name has been assigned using the PG/PC, e.g. for the transmission of configuring data (including the IP address) during start-up or for the exchange of useful data in cyclic mode.

Device station

A device may only exchange data with a master after being requested to do so by the master.

Diagnostic buffer

The diagnostic buffer is a battery-backed memory area in the CPU where diagnostic events are stored in their order of occurrence.

Diagnostic interrupt

You can find relevant information under the entry "Interrupt, Diagnostics"

Diagnostics

Monitoring functions for the detection, localization, classification, display, and further evaluation of errors, faults, and alarms. They run automatically while the system is in operation. This increases the availability of systems by reducing commissioning times and downtimes.

Distributed I/O system

System with I/O modules that are configured on a distributed basis, at a large distance from the CPU controlling them.

DP

Distributed I/O

Equipotential bonding

Electrical connection (potential equalization conductor) that brings the bodies of electrical equipment and other conductive bodies to the same or almost the same potential, in order to prevent disruptive or dangerous voltages between these bodies.

Firmware of the CPU

In SIMATIC, a distinction is made between the firmware of the CPU and user programs.

The firmware is a software embedded in electronic devices. The firmware is permanently connected to the hardware in functional terms. It is usually saved in a flash memory, such as EPROM, EEPROM or ROM, and cannot be replaced by the user or only with special tools or functions.

User program: You will find more information in the glossary entry "User program"

Firmware update

Upgrade of firmware for CPU and the modules (interface modules, I/O modules etc.), e.g. after function extensions, to the most recent firmware version (update).

Function

A function (FC) is a code block with no static data. A function allows you to pass parameters in the user program. Functions are thus suited for programming frequently recurring complex functions, such as calculations.

Function block

A function block (FB) is a code block with static data. An FB allows you to pass parameters in the user program. Function blocks are thus suited for programming frequently recurring complex functions, such as closed-loop controls or operating mode selection.

Functional ground

The functional ground is a low-impedance current path between electric circuits and ground. It is not intended as a protective measure but rather, for example, for improvement of interference immunity.

Ground

Conductive ground whose electrical potential can be set equal to zero at any point.

All interconnected, inactive parts of a piece of equipment that cannot accept any dangerous contact voltage, even in the event of a fault.

Ground

Conductive ground whose electrical potential can be set equal to zero at any point.

All interconnected, inactive parts of a piece of equipment that cannot accept any dangerous contact voltage, even in the event of a fault.

Grounding

Grounding means connecting an electrically conductive part to a grounding electrode by means of a grounding system.

GSD file

The Generic Station Description file contains all properties of a PROFINET or PROFIBUS device that are necessary for its configuration.

Hardware interrupt

You can find relevant information under the entry "Interrupt, Hardware "

I/O modules

All modules that can be operated with a CPU or an interface module.

Identification data

Information that is saved in modules, and that supports the user in reviewing the system configuration and locating hardware changes.

Instance data block

Each call of a function block in the STEP 7 user program is assigned a data block, which is automatically generated. Values of the input, output and in/out parameters, as well as local block data, are stored in the instance data block.

Interface module

Module in the distributed I/O system. The interface module connects the distributed I/O system to the CPU (IO controller) via a fieldbus, and prepares the data for and from I/O modules.

Interrupt

The operating system of the CPU distinguishes between various priority classes that control the execution of the user program. These priority class processes include, for example, hardware interrupts. When an interrupt occurs, the operating system automatically calls an assigned organization block. The user can program the desired reaction in the organization block, e.g. in a FB.

Interrupt, cyclic

The CPU generates a cyclic interrupt periodically within a parameterizable time grid and then processes the corresponding organization block.

Interrupt, hardware

A hardware interrupt is triggered by interrupt-triggering modules due to a certain event in the process. The hardware interrupt is signaled to the CPU. The CPU then processes the assigned organization block according to the priority of this interrupt.

Interrupt, time-delay

The time-delay interrupt is one of the program execution priority classes of SIMATIC S7. The time-delay interrupt is generated upon expiration of a timer started in the user program. The CPU then processes the corresponding organization block.

Interrupt, time-of-day

The time-of-day interrupt is one of the program execution priority classes of SIMATIC S7.. The time-of-day interrupt is generated based on a defined date (or daily) and time (e.g. 9:50 or every hour, every minute). The CPU then processes the corresponding organization block.

Interrupt, update

When it receives an update interrupt, the operating system calls the update interrupt OB. This may happen if you changed a parameter on a slot of a device.

IP address

The IP address is made up of four decimal numbers with a range of values from 0 through 255. The decimal numbers are separated by a dot (for example 192.162.0.0).

The IP address consists of the following:

- Address of the network
- Address of the device (PROFINET interface of the IO controller/IO device)

Isolated modules

In the case of isolated input/output modules, the reference potentials of the control and load circuits are galvanically isolated, e.g. by means of optical isolators, relays or transformers. Input/output circuits can be connected to common potential.

Load current supply

Supply of the module's input and output electric circuits.

MAC address

Every PROFINET device is assigned a worldwide unique device identification before it leaves the factory. This 6-byte long device identification is the MAC address.

The MAC address is divided into:

- 3-byte manufacturer identification
- 3-byte device identification (consecutive number)

The MAC address is generally shown on the front of the device.
Example: 08-00-06-6B-80-C0

Non-isolated modules

In the case of non-isolated input and output modules, the reference potentials of the control and load circuits are electrically connected.

NTP

The Network Time Protocol (NTP) is a standard for synchronizing clocks in automation systems via Industrial Ethernet. NTP uses the UDP connectionless network protocol.

Operating modes

Operating states describe the behavior of a single CPU at a specific time.

Organization block

Organization blocks (OBs) form the interface between the operating system of the CPU and the user program. The organization blocks determine the order in which the user program is executed.

Parameter

- Tag of a STEP 7 code block:
- Tag for setting the behavior of a module (one or more per module). In as-delivered state, every module has an appropriate basic setting, which you can change by configuring in STEP 7. There are static and dynamic parameters

Parameters, dynamic

In contrast to static parameters, you can change dynamic parameters of modules during operation by calling an SFC in the user program, e.g. limit values of an analog input module.

Parameters, static

In contrast to dynamic parameters, you cannot change static parameters of modules with the user program but only by configuring in STEP 7, e.g. input delay of a digital input module.

PELV

Protective **E**xtra **L**ow **V**oltage = safety extra low voltage connected to protective earth

Pre-wiring

Wiring of the electrical system on the front connector before the front connector is used on the I/O module.

Process image (I/O)

The CPU transfers the values from the input and output modules to this memory area. At the start of the cyclic program the signal states of the input modules are transmitted to the process image of the inputs. At the end of the cyclic program the process image of the outputs is transmitted as signal state to the output modules.

Product version (PV) = Function version (FV)

The product version or function version provides information on the hardware version of the module.

PROFIBUS

PROcess FIeld BUS, process and fieldbus standard that is specified in IEC 61158 Type 3. It specifies functional, electrical and mechanical characteristics for a bit-serial field bus system.

PROFIBUS supports the protocols DP (= Distributed I/O), FMS (= Fieldbus Message Specification), PA (= Process Automation), or TF (= Technological Functions).

PROFINET

PROcess FIeld NETwork, open Industrial Ethernet standard which further develops PROFIBUS and Industrial Ethernet. A cross-manufacturer communication, automation, and engineering model defined by PROFIBUS International e.V. as an automation standard.

PROFINET IO

Communication concept for the realization of modular, distributed applications within the scope of PROFINET.

PROFINET IO controller

Device used to address connected I/O devices (e.g. distributed I/O systems). This means that: The IO controller exchanges input and output signals with assigned IO devices. Often, the IO controller is the CPU on which the automation program runs.

PROFINET IO device

Distributed field device that can be assigned to one or more IO controllers (e.g. distributed I/O system, valve terminals, frequency converters, switches).

Push-in terminal

Terminal for the tool-free connection of wires.

Reference potential

Potential from which the voltages of the circuits involved are observed and/or measured.

Restart

During a warm restart, all non-retentive bit memory is deleted and non-retentive DB contents are reset to the initial values from load memory. Retentive bit memory and retentive DB contents are retained. Program execution begins at the call of the first startup OB.

Retentivity

A memory area whose content is retained after power failure and after a STOP to RUN transition is retentive. The non-retentive area bit memory area, timers and counters are reset after a power failure and after a STOP to RUN transition. The non-retentive content of data blocks is reset to the initial values.

Row

All the modules attached to a mounting rail.

Runtime error

Error that occurs during execution of the user program in the automation system (thus not in the process).

SELV

Safety **E**xtra **L**ow **V**oltage = Safety extra-low voltage

SNMP

SNMP (Simple Network Management Protocol) is the standardized protocol for performing diagnostics on and assigning parameters to the Ethernet network infrastructure.

In the office setting and in automation engineering, devices from a wide range of vendors on the Ethernet support SNMP.

SNMP-based applications can be operated on the same network in parallel to applications with PROFINET.

The scope of supported functions varies depending on the device type. For example a switch has more functions than a CP 1616.

Switch

PROFIBUS is a linear network. The communication nodes are linked by means of a passive cable - the bus.

By contrast, Industrial Ethernet consists of point-to-point connections: Each communication node is directly connected to exactly one communication node.

If a communication node is linked to several communication nodes, this communication node is connected to the port of an active network component - the switch. Additional communication nodes (including switches) can now be connected to the other ports of the switch. The connection between a communication node and the switch remains a point-to-point connection.

A switch thus has the task of regenerating and distributing received signals. The switch "learns" the Ethernet address(es) of a connected PROFINET device or additional switches and only forwards those signals that are intended for the connected PROFINET device or switch.

A switch has a specific number of connections (ports). You connect at most one PROFINET device or additional switch to each port.

System power supply

Consists of the integrated system power supply of the CPU/interface module and additional power supplies (PS), if necessary. The system power supply serves exclusively to supply the I/O modules via the backplane bus.

Technology object

A technology object supports you in the configuration and commissioning of a technological function.

The properties of real objects are represented by technology objects in the controller. Real objects can be, for example, controlled systems or drives.

The technology object contains all data of the real object required for its open-loop or closed-loop control, and it signals back status information.

TIA Portal

Totally Integrated Automation Portal

The TIA Portal is the key to the full performance capability of Totally Integrated Automation. The software optimizes operating, machine and process sequences.

Time-delay interrupt

You can find relevant information under the entry "Interrupt, time-delay"

Time-of-day interrupt

You can find relevant information under the entry "Interrupt, Time-of-day"

Timer

Timers are components of the system memory of the CPU. The operating system automatically updates the content of the "timer cells" asynchronously to the user program. STEP 7 instructions define the precise function of the timer cell (for example on-delay) and trigger its execution.

Update interrupt

You can find relevant information under the entry "Interrupt, Update "

User program

SIMATIC differentiates between the operating system of the CPU and user programs. The user program contains all the instructions, declarations and data for signal processing that control a plant or process. The user program is assigned to a programmable module, a CPU, for example. Structuring into smaller unit is supported.

Value status

The value status is additional binary information of a digital input or output signal. The value status is entered simultaneously with the process signal in the process image input and provides information about the validity of the signal.

Warm restart

You can find relevant information under the entry "Restart"

Index

2

24 V DC supply, 149

A

Accessible devices
  Firmware update, 316
Accessories, 363
Active backplane bus, 49
Addressing, 197
  Analog modules, 200
  Basics, 197
  Digital modules, 198
Ambient condition
  Climatic, 351
  Mechanical, 350
  Operating conditions, 350
Analog modules
  Addressing, 200
Application
  in industrial environments, 346
  in mixed areas, 346
  in residential areas, 346
  Power segment
Approvals, 336
  CE, 338
  cULus, 339
  FM, 341
  IEC 61010, 345
  IEC 61131, 345
ATEX approval, 341

C

CE approval, 338
Climatic ambient conditions, 351
Coding element, 168, 303
  Basics, 303
  Front connectors, 308
  Power connector, 310
  Replace module, 307
Commissioning, 255, 285
  Check before power-on, 256
  First power-on, 261
  First power-on, requirements, 261
  Identification data, 282, 285
  Identification data - record structure, 285
  Procedure, 257
  Removing/inserting SIMATIC memory card, 258
  Reset to factory settings, 324
Components
  Overview of the ET 200MP, 49
Configuration, 155
  Basics, 192
  Electrical, 158
  ET 200MP, 44
  On grounded reference potential, 154
Configuration control, 236, 237
Configuration control for IO systems, 236
Configuring, 205
  Properties of the CPUs, 196
Connection plug
  4-pole, 52
Control data record
  S7-1500, 244
CPU, 50
  Accessories, 363
  Backup/restore contents, 275
  Display, 290
  Installing, uninstalling, 142
  Memory reset, 271
  Reading out service data, 333
  Reset to factory settings, 320
  Supply voltage, 167
  Wiring rules, 162
cULus approval, 339

D

Degree of protection IP20, 354
Digital modules
  Addressing, 198
Dimension drawing, 359
  Infeed element, 361, 361
  Labeling strips, 362
  Mounting rail, 356
  Shield clamp, 360, 361
  Shielding bracket, 360
DIN rail adapter, 49
Display, 290
  Basics, 290
  Control buttons, 295
  Languages, 298

E

Electromagnetic compatibility (EMC), 347
Electrostatic discharge, 347
EMC (Electromagnetic compatibility), 347
    Disturbances, 347
    Radio interference, 348
EMERGENCY-STOP devices, 148
ET 200MP, 42
    Accessories, 363
    Area of application, 36
    Components, 49
    Configuration example, 47
    Configuring, 205
    Examples of configurations, 44
Example
    Configuration of ET 200MP, 47
Examples of configurations, 44

F

Factory settings, 320, 324
Fail-safe I/O modules
    Coding element, 50
FAQ
    Emergency address, 276
FAQs
    Firmware update, 318
    Labeling strips, 187
    Load current supplies, 112
    Removing a SIMATIC memory card, 260
Firmware update, 312
FM approval, 341
Front connectors, 51
    Final position, 185
    General information, 174
    Potential bridge, 174
    replacing, 308
    Shield contact, 184
    Wiring, 176, 178, 179, 182
    Wiring of analog modules, 178
    Wiring rules, 162

G

Galvanic isolation, 158
Grounded infeed, 154
Grounding, 131
    Configuration on grounded reference potential, 154
    Overview of the CPU, 157

H

Hardware configuration ET 200MP DP
    Slots, 110
Hardware configuration ET 200MP PN
    Slots, 109

I

I/O module, 50
    Front connectors, 174
    Inserting or removing, 299
    Installing, uninstalling, 146
    Marking, 187
    replacing, 307
Identification data, 282
    Record structure, 285
IEC 60204, 148
IEC 61010, 345
IEC 61131, 345
IECEx approval, 343
Infeed, 154
Infeed element, 361, 361
Infeed, grounded, 154
Installation
    Basics, 125
    CPU, 142
    I/O modules, 146
    Interface module, 144
    Load current supply, 140
    Mounting rail, 127, 130
    Power supply, 138
Installation position, 125
Installation rules, 127
Insulation, 354
Interface module, 50
    Installation rules, 127
    Installing, uninstalling, 144
    Reset to factory settings, 324
    Supply voltage, 167
    Wiring rules, 162

K

Know-how protection, 230
Know-how protection for blocks
    Changing, 232
    Removing, 233
    Setting up, 231

L

Labeling strips, 52, 187, 187
    Dimension drawing, 362
Languages
    Display, 298
Lightning protection, 149
Line voltage, 149
Load current supply, 52, 111
    Definition, 111
    Installing, uninstalling, 140
    Wiring rules, 162

M

Main entry, 36
Maintenance
    Coding element, 303
    Firmware update, 312
    Reading out service data, 333
    Removal and insertion, 299
    Replace module, 307
    Replacing a front connector, 308
    Reset to factory settings, 320
    Test functions, 328
Marking, 187, 188
    Labeling strips, 187
    optional, 188
Maximum configuration
    with PROFIBUS interface module, 110
    with PROFINET interface module, 108
Maximum cycle time, (Cycle monitoring time), (Cycle monitoring time)
Memory reset
    Automatic, 272
    Basics, 271
    Manual, 273, 273
Minimum clearances, 126
Module swapping, (See Replacing)
Mounting rail, 49, 125, 127
    Attaching the protective conductor, 130
    Dimension drawing, 356
    Drill holes, 129
    Fastening, 129
    installation, 130
    Length, 129
Multiple use IO systems, 236

N

NTP mode, 278
NTP server, 278

O

OBs, 208
    Event source, 208
    Priorities, 208
    Priorities and runtime behavior, 209
    Queue, 208
    Triggers, 208
Open Source Software, 20
    Use, 20
Opening know-how protected blocks, 232
Operating mode
    Setting the startup behavior, 266
Operating modes
    Basics, 264
    Operating mode transitions, 268
    RUN, 267
    STARTUP, 264
    STOP, 267
Option handling, (Configuration control)
Overall configuration, 157
Overload, 122
Overview
    Components of an S7-1500, 49
    Grounding the CPU, 157
Overview, graphic
    Examples of configurations, 44

P

Password provider, 230
PE connection element, 49
PELV, 155, 155
PID Control, 91
PID controller, 91
Pollution degree, 354
Potential bridge, 51
    Front connectors, 174
Power balance calculation, 121
    Overload, 122
Power segment
    Application, 115
Power supply, 138
Power supply element, 51
Process image
    Inputs and outputs, 203
Process image partition, 203
    updating in the user program, 204
Protection, 224, 231, 233, 235
    Access levels, 225
    Behavior of a password-protected CPU, 228
    Copy protection, 233

Know-how protection, 231
mechanical locking, 235
Protection against electrical shock, 149
Protection against external electrical influences, 150
Protection class, 354

R

Radio interference, 346, 348
rated voltage, 355
Reading out service data, 333
Reference potential of the controller, 155
Removal and insertion of modules, 299
Replacing
Front connectors, 308
I/O module, 307

S

S7-1500
Area of application, 36
Configuration, 43
Configuration example, 43
Overview of components, 49
S7-1500 CPU/ET 200MP interface module
Rules and regulations for operation, 148
S7-1500 hardware configuration
Slots, 107
Safe electrical isolation, 155, 155
Safety rules, 337
Shield bracket, 51
Shield clamp, 51, 360, 361
Shielding bracket, 359, 359, 360
Shipping conditions, 349
Short-circuit and overload protection, 156
Software, 102
Spare parts, 363
Specific application, 148
Standard machine project, 236
Standards, 336
Storage conditions, 349
Supply voltage
CPU, 167
Interface module, 167
Swapping, (See Replacing)
System power supply, 52, 111
Application, 113, 115
Configuration variants, 114
Definition, 111
Installing, uninstalling, 138
Power segment, 113
Wiring rules, 162

T

Technical specifications
Climatic ambient conditions, 351
Electromagnetic compatibility (EMC), 347
Shipping and storage conditions, 349
Standards and Approvals, 336
Test functions, 328
Test voltage, 354
TIA Portal, 102
Time synchronization, 278
type-coded, 303

U

U connector, 51
Uninstalling
CPU, 143
I/O module, 147
Load current supply, 141
System power supply, 139

W

Wiring, 148
Front connectors, (Analog modules), 179
General rules for the S7-1500 CPU/the ET 200MP interface module, 148
Front connectors
Front connectors
Load current supply, 168
Sensors and actuators, 174
Supply voltage to the CPU, 167
System power supply, 168
Without tools, 167
Wiring actuators, 174
Wiring rules
CPU, 162
Front connectors, 162
Load current supply, 162
System power supply, 162
Wiring sensors, 174

Z

Zone 2 hazardous atmosphere, 355

SIEMENS

SIMATIC

S7-1500

Getting Started

Welcome

Automation task 1

Hardware section 2

Software section 3

Security 4

S7-1500 Motion Control 5

SIMATIC Safety V17 6

10/2021

A5E03981761-AD

Legal information

Warning notice system

This manual contains notices you have to observe in order to ensure your personal safety, as well as to prevent damage to property. The notices referring to your personal safety are highlighted in the manual by a safety alert symbol, notices referring only to property damage have no safety alert symbol. These notices shown below are graded according to the degree of danger.

⚠ DANGER
indicates that death or severe personal injury **will** result if proper precautions are not taken.

⚠ WARNING
indicates that death or severe personal injury **may** result if proper precautions are not taken.

⚠ CAUTION
indicates that minor personal injury can result if proper precautions are not taken.

NOTICE
indicates that property damage can result if proper precautions are not taken.

If more than one degree of danger is present, the warning notice representing the highest degree of danger will be used. A notice warning of injury to persons with a safety alert symbol may also include a warning relating to property damage.

Qualified Personnel

The product/system described in this documentation may be operated only by **personnel qualified** for the specific task in accordance with the relevant documentation, in particular its warning notices and safety instructions. Qualified personnel are those who, based on their training and experience, are capable of identifying risks and avoiding potential hazards when working with these products/systems.

Proper use of Siemens products

Note the following:

⚠ WARNING
Siemens products may only be used for the applications described in the catalog and in the relevant technical documentation. If products and components from other manufacturers are used, these must be recommended or approved by Siemens. Proper transport, storage, installation, assembly, commissioning, operation and maintenance are required to ensure that the products operate safely and without any problems. The permissible ambient conditions must be complied with. The information in the relevant documentation must be observed.

Trademarks

All names identified by ® are registered trademarks of Siemens AG. The remaining trademarks in this publication may be trademarks whose use by third parties for their own purposes could violate the rights of the owner.

Disclaimer of Liability

We have reviewed the contents of this publication to ensure consistency with the hardware and software described. Since variance cannot be precluded entirely, we cannot guarantee full consistency. However, the information in this publication is reviewed regularly and any necessary corrections are included in subsequent editions.

Siemens AG
Digital Industries
Postfach 48 48
90026 NÜRNBERG
GERMANY

A5E03981761-AD
Ⓟ 10/2021 Subject to change

Copyright © Siemens AG 2013 - 2021.
All rights reserved

Welcome

Welcome

Welcome to the Getting Started "TIA Portal V17".

In this Getting Started, we show you an example of how to use the CPU SIMATIC S7-1500 with the TIA Portal to create an automation solution for a "color mixing plant". Video clips will illustrate the approach for creating a solution for the automation task.

In the first part, you assemble the hardware and prepare your configuration PC.

In the second part, you configure the CPU and HMI visualization using the example of a color mixing plant.

In addition, you can find options and extensions for your automation solutions.

Security information

Siemens provides products and solutions with industrial security functions that support the secure operation of plants, systems, machines and networks.

In order to protect plants, systems, machines and networks against cyber threats, it is necessary to implement – and continuously maintain – a holistic, state-of-the-art industrial security concept. Siemens' products and solutions constitute one element of such a concept.

Customers are responsible for preventing unauthorized access to their plants, systems, machines and networks. Such systems, machines and components should only be connected to an enterprise network or the internet if and to the extent such a connection is necessary and only when appropriate security measures (e.g. firewalls and/or network segmentation) are in place.

For additional information on industrial security measures that may be implemented, please visit (https://www.siemens.com/industrialsecurity).

Siemens' products and solutions undergo continuous development to make them more secure. Siemens strongly recommends that product updates are applied as soon as they are available and that the latest product versions are used. Use of product versions that are no longer supported, and failure to apply the latest updates may increase customers' exposure to cyber threats.

To stay informed about product updates, subscribe to the Siemens Industrial Security RSS Feed visit (https://www.siemens.com/industrialsecurity).

Table of contents

Welcome **3**

1 Automation task **11**

1.1 Introduction 11

1.2 Application 12

1.3 Hardware configuration 13

1.4 Sample project 14
1.4.1 Selecting the recipe 15
1.4.2 Displaying the CMYK and RGB values 16
1.4.3 Filling the recipe 17
1.4.4 Starting the mixing process 18
1.4.5 Filling the color mixture 19
1.4.6 Resetting the fill level 20

2 Hardware section **21**

2.1 Introduction 21
2.1.1 Requirements 21
2.1.2 Additional information 23

2.2 Installing the assembly 23
2.2.1 Overview 23
2.2.2 Installing the assembly 24

2.3 Wiring 28
2.3.1 Overview 28
2.3.2 Wiring rules 29
2.3.3 Wiring the mains connection plug 30
2.3.4 Wiring the load current supply (PM) to the CPU 32
2.3.5 Potential bridge circuits 33
2.3.6 Wiring the digital input module 34
2.3.7 Wiring the digital output module 36
2.3.8 Wiring front connectors 38

2.4 Power on 40
2.4.1 Overview 40
2.4.2 Power on 41
2.4.3 Assign IP address via the display 43

3 Software section ... 45

3.1 Creating the project and hardware ... 45
3.1.1 Introduction to the TIA Portal ... 45
3.1.2 Creating a project ... 46
3.1.3 Creating an S7-1500 CPU ... 49
3.1.4 Running the hardware detection ... 52
3.1.5 Creating ET 200 interface modules ... 54
3.1.6 Networking ET 200 interface modules ... 56
3.1.7 Creating input and output modules and a server module for ET 200SP ... 57
3.1.8 Creating input and output modules for ET 200MP ... 59
3.1.9 Assigning names for ET 200 ... 60

3.2 Creating the program ... 61
3.2.1 Loading the block library ... 61
3.2.2 Deleting program block Main [OB1] ... 64
3.2.3 Copying program blocks ... 66
3.2.4 Cyclic interrupt OB ... 67
3.2.4.1 Cyclic interrupt OB – Cycle time and phase ... 67
3.2.4.2 Changing the cycle time ... 68
3.2.5 Copying tag tables ... 69
3.2.6 Compiling a project ... 70
3.2.7 Load project into the CPU ... 72
3.2.8 Optimized block access ... 74
3.2.8.1 Introduction ... 74
3.2.8.2 Expanding and reloading the optimized "Filling" data block ... 75
3.2.9 Versioning a block ... 79
3.2.10 Setting retentivity ... 82
3.2.11 Activating the EN/ENO mechanism ... 85
3.2.12 Using the comment function ... 87
3.2.13 Local error handling ... 88
3.2.13.1 Handle errors within block ... 88
3.2.13.2 Loading blocks for local error handling ... 90
3.2.13.3 Generating errors without local error handling ... 92
3.2.13.4 Generating errors with local error handling ... 93

3.3 Configure visualization ... 95
3.3.1 Present sample project ... 95
3.3.2 HMI configuration ... 95
3.3.2.1 Overview ... 95
3.3.2.2 SIMATIC HMI Comfort Panels ... 96
3.3.2.3 HMI screens ... 97
3.3.2.4 Additional control elements ... 98
3.3.2.5 Recipes ... 99
3.3.2.6 Archives ... 100
3.3.2.7 User-defined functions ... 101
3.3.2.8 User Management ... 103
3.3.2.9 Multilingualism ... 105
3.3.2.10 Reports ... 107

3.3.3 Insert HMI device from libraries ... 109
3.3.3.1 Insert HMI device from library ... 109
3.3.4 Configuring HMI connection ... 110
3.3.4.1 Communication between devices ... 110
3.3.4.2 Configuring HMI connection ... 111
3.3.4.3 Connecting HMI tags ... 113
3.3.5 Configuring system diagnostics ... 115
3.3.5.1 System diagnostics basics ... 115
3.3.5.2 System diagnostics views ... 116
3.3.5.3 Configuring the system diagnostic view ... 119
3.3.6 Simulating an HMI device ... 122
3.3.6.1 Simulation basics ... 122
3.3.6.2 Operating the panel in simulation ... 123

3.4 Loading the project into the programming device ... 127
3.4.1 Load CPU to project ... 127

3.5 Team engineering via Inter Project Engineering ... 129
3.5.1 Basics of "Inter Project Engineering" ... 129
3.5.2 Creating an IPE file ... 130
3.5.3 Importing an IPE file ... 131

4 Security ... 135

4.1 Overview of the protective functions of the CPU ... 135

4.2 Using the display to configure additional access protection ... 136

4.3 Know-how protection ... 137

4.4 Copy protection ... 140

4.5 Protection by locking the CPU ... 141

4.6 Configuring access protection for the CPU ... 142

4.7 Configuring protection of the HMI connection ... 145

5 S7-1500 Motion Control ... 147

5.1 Introduction ... 147

5.2 Preparations ... 148
5.2.1 Requirements ... 148
5.2.2 Basic procedure ... 150
5.2.3 Opening a project ... 150
5.2.4 Swapping the start screen ... 151
5.2.5 Pasting blocks ... 154

5.3 Configuring drives ... 155
5.3.1 Configuring SINAMICS S120 ... 155
5.3.2 Configuring SINAMICS G120 ... 163
5.3.3 Using prepared drives ... 166

5.4 Creating technology objects ... 168
5.4.1 Configuring the positioning axis ... 168
5.4.2 Configuring a speed axis ... 172
5.4.3 Using prepared technology objects ... 175

5.5 Programming the PLC ... 176
5.5.1 Structure of the user program ... 176
5.5.2 Adding Motion Control instructions ... 176
5.5.2.1 Adding Motion Control instructions for a positioning axis ... 176
5.5.2.2 Adding Motion Control instructions for a speed axis ... 181
5.5.2.3 Using prepared function blocks ... 185
5.5.3 Integrating Motion Control instructions in the cyclic user program ... 186
5.5.3.1 Integrating Motion Control instructions for a positioning axis ... 186
5.5.3.2 Integrating Motion Control instructions for a speed axis ... 191
5.5.3.3 Using the prepared OB35 ... 195
5.5.4 Compiling and loading the project ... 196

5.6 Testing a function ... 196
5.6.1 "Positioning axis" axis control panel ... 196
5.6.2 "Speed axis" axis control panel ... 205
5.6.3 Testing the function in the start screen ... 208

5.7 Additional information ... 210

6 SIMATIC Safety V17 ... 211

0 Preface ... 211

6.2 Introduction to example ... 212
6.2.1 Example Structure and Task Definition ... 212
6.2.2 Procedure ... 214
6.2.3 Requirements for configuring and programming ... 217
6.2.4 Additional information ... 218

6.3 Configuring ... 219
6.3.1 Introduction ... 219
6.3.2 Step 1: Configuring the CPU 1516F-3 PN/DP ... 220
6.3.3 Step 2: Configuring an ET 200SP distributed I/O system on a PROFINET subnet ... 222
6.3.4 Step 3: Configuring an F-DI module for connecting an emergency stop switch, position switches, and the laser scanner ... 223
6.3.5 Step 4: Configuring an F-DQ module for connecting a motor ... 227
6.3.6 Step 5: Configuring an F-DI module for user acknowledgement, feedback circuit and start ... 228
6.3.7 Step 6: Download hardware configuration ... 231
6.3.8 Step 7: Assign device name ... 232
6.3.9 Step 8: Assign PROFIsafe addresses ... 234
6.3.10 Summary: Configuring the Hardware ... 236

6.4 Programming ... 237
6.4.1 Introduction ... 237
6.4.2 The structure of the safety program ... 237
6.4.3 The Safety Administration Editor ... 239
6.4.4 Step 9: Specifying the centralized settings for the safety program ... 240
6.4.5 Step 10: Create PLC tag table ... 241
6.4.6 Step 11: Creating an F-FB ... 242
6.4.7 Step 12: Programming the safety door function ... 243
6.4.8 Step 13: Programming the emergency stop function ... 244
6.4.9 Step 14: Programming the feedback monitoring ... 245
6.4.10 Step 15: Programming the User Acknowledgment for Reintegration of the F-I/O ... 246
6.4.11 Step 16: Programming of the main safety block ... 247
6.4.12 Step 17: Compiling the safety program ... 248
6.4.13 Step 18: Download the safety program to the F-CPU ... 249

6.5 Setting up access protection ... 251

6.6 Typical configuring and programming errors and their causes ... 253

Index ... 255

Automation task 1

1.1 Introduction

Introduction

In the following section, you will become familiar with the automation task.

You can find out more about the application example, the hardware configuration and the components of the sample project.

Multimedia-based Getting Started

This is the link (https://support.industry.siemens.com/cs/ww/en/view/78027451) to find the Getting Started in multimedia form. Descriptive videos will familiarize you, through an automation task, with the engineering, programming and visualization of the S7-1500 with the TIA Portal.

See also

Application (Page 12)

Hardware configuration (Page 13)

Sample project (Page 14)

1.2 Application

Application example

The application example for this Getting Started is a color mixing plant for mixing and filling a previously selected color recipe.

There are four color components for the recipe, cyan, magenta, yellow and black, which means the colors of the CMYK color space.

Filling takes place in four steps.

- Selection of the color mixture using the HMI recipe function.
- Filling the recipe components or the four basic colors by opening the respective tank valves.
- Mixing the colors.
- Filling the finished color mixture into tins and transportation by a conveyor belt.

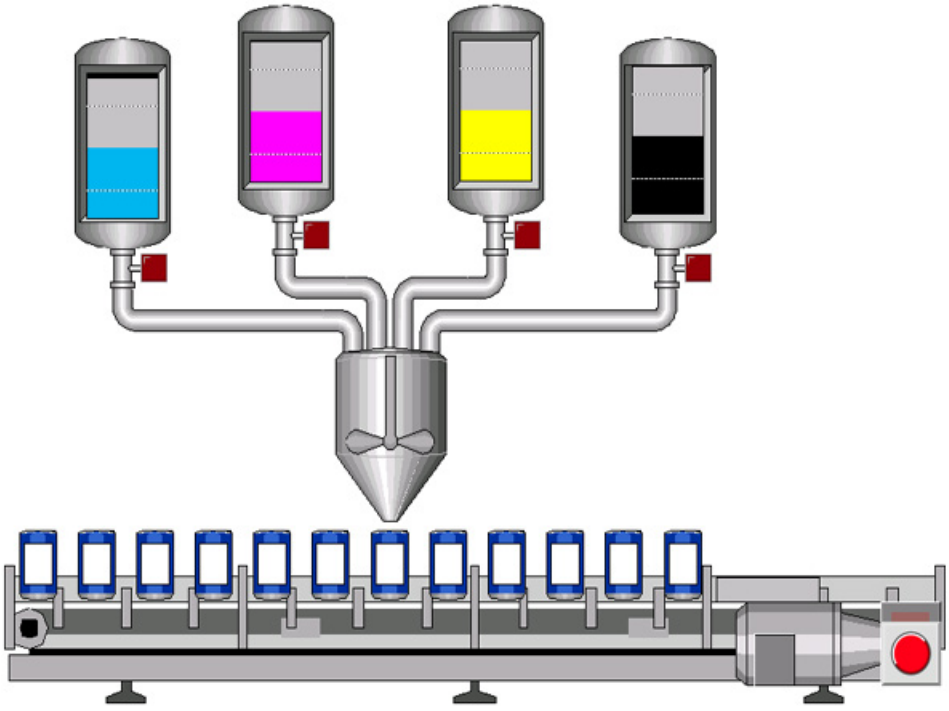

1.3 Hardware configuration

Design of the hardware configuration

The hardware configuration consists of the following devices:

- The CPU 1511-1 PN with an S7-1500 load current supply, a digital input module and a digital output module.
- HMI Panel TP1200 Comfort that can also be simulated with the TIA Portal.
- Distributed ET 200MP I/O system with IM 155-5 PN ST interface module and digital input and digital output modules.
- Distributed ET 200SP I/O system with IM 155-6 PN ST interface module, digital input modules, digital output modules and server module.

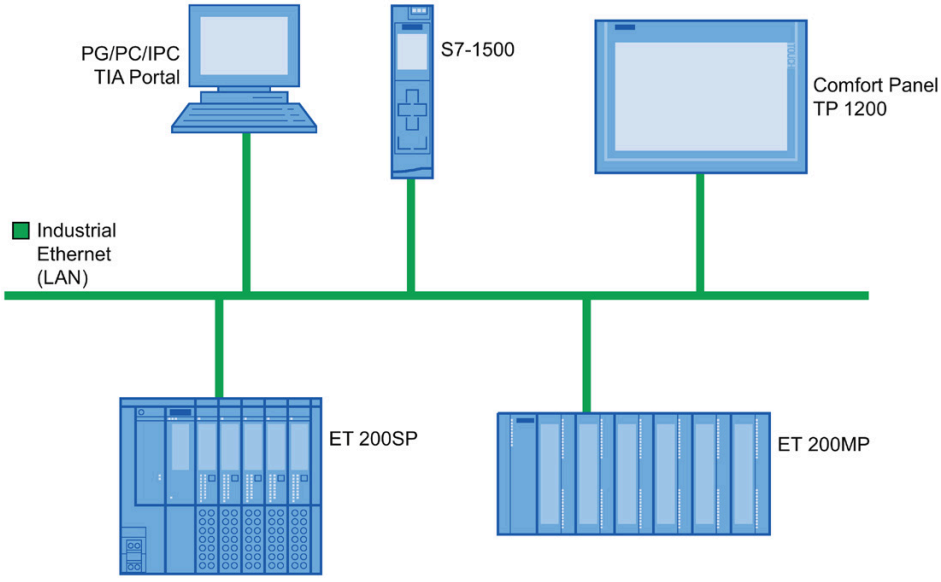

1.4 Sample project

Sample project for the application

To configure the color mixing system with the TIA Portal, create the sample project "Color_Filling_Station".

The following project components already exist for the sample project:

- The program blocks of the CPU
- The visualization of the HMI on a Comfort Panel

In this section, we will explain the relationships between the individual project components of the sample project.

You will carry out the necessary configuration steps yourself at a later point in time.

See also

Selecting the recipe (Page 15)

Displaying the CMYK and RGB values (Page 16)

Filling the recipe (Page 17)

Starting the mixing process (Page 18)

Filling the color mixture (Page 19)

Resetting the fill level (Page 20)

1.4.1 Selecting the recipe

Selecting the recipe

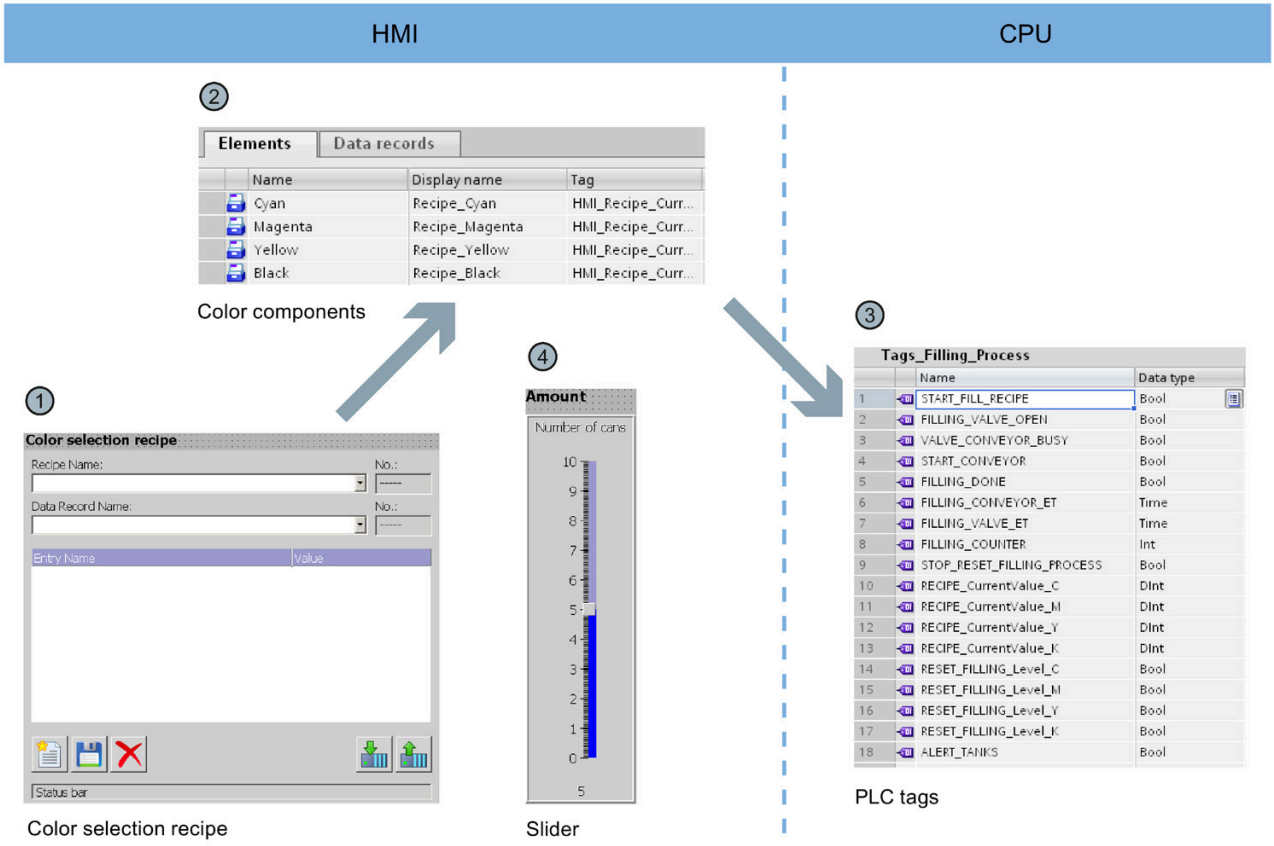

① The HMI screen "Recipes" includes the "Color selection recipe". This is a prefabricated object from the library of the TIA Portal. You can use this object to select data records and to create new data records.

② The data records (color mixtures) and elements (color components) are stored in the "Recipes" HMI editor. Each color mixture consists of the four color components cyan (C), magenta (M), yellow (Y), black (K). The proportion of each of the four color components in a color mixture is stored in the "Recipes" editor.

③ The values for the respective color components are written in PLC tags when you load a color mixture. The PLC tags are stored in the "Tags_Filling_Process" tag table of the CPU.

④ The HMI screen "Recipes" also includes a slider. You use this slider to specify the number of tins to be filled.

1.4.2 Displaying the CMYK and RGB values

Displaying the CMYK and RGB values

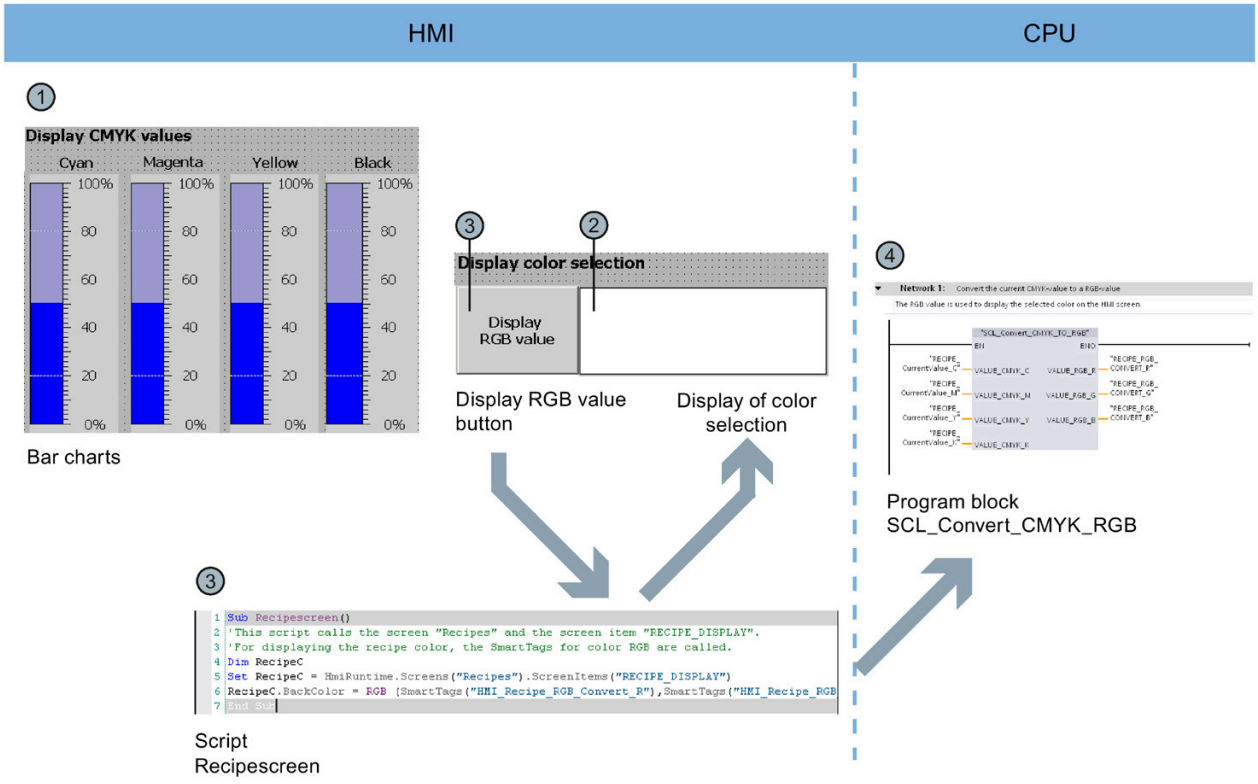

① When the required color mixture is selected in the HMI screen "Recipes", the values are displayed in the CMYK color space by means of a bar diagram.

② The color mixture can be shown with an additional display. This requires the "Recipescreen" script to be run.

③ You run the "Recipescreen" script by clicking the "Display RGB Value" button. The script assigns the RGB value assigned to the CMYK value to the display, because CMYK values cannot be output directly on screens.

④ The required RGB value is calculated by the "SCL_Convert_CMYK_TO_RGB" program block.

1.4.3 Filling the recipe

Filling the recipe

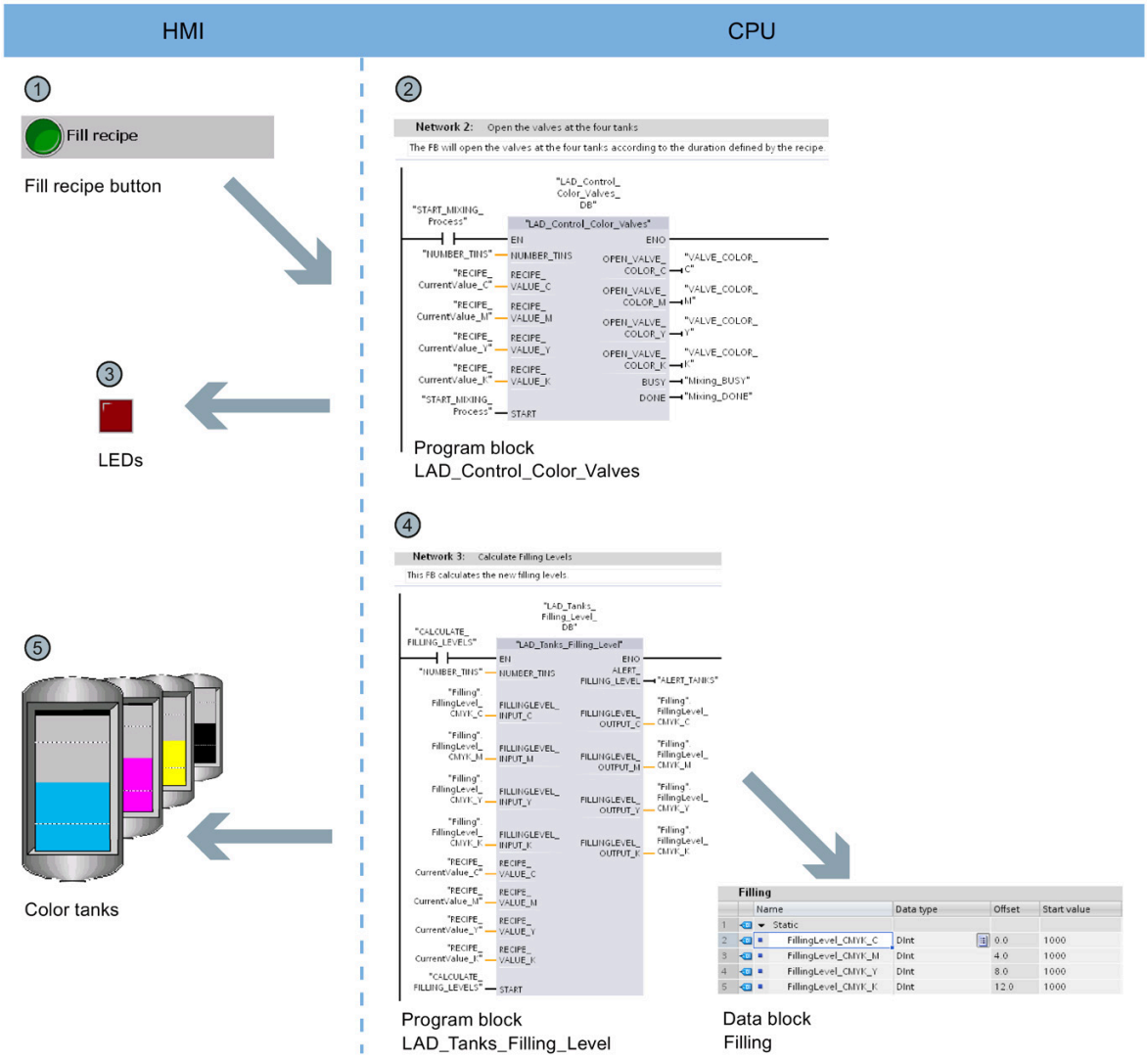

① The "Fill recipe" button starts the filling of the color components in the HMI screen "Start screen". The button activates the "LAD_Control_Color_Valves" program block.

② The program block calculates how long each of the four valves needs to stay open for the color mixture based on the specified recipe and the number of tins that have to be filled.

③ LEDs below the tanks indicate that the valves are opened.

④ The "LAD_Tanks_Filling_Level" program block is executed at the same time as the filling. The program block calculates the quantity remaining in the tank for the tank fill level. The fill levels of the tanks are stored in the global data block "Filling".

⑤ The fill level indicators in the HMI screen are directly linked with the global data block and are updated with each runtime acquisition cycle.

1.4.4 Starting the mixing process

Starting the mixing process

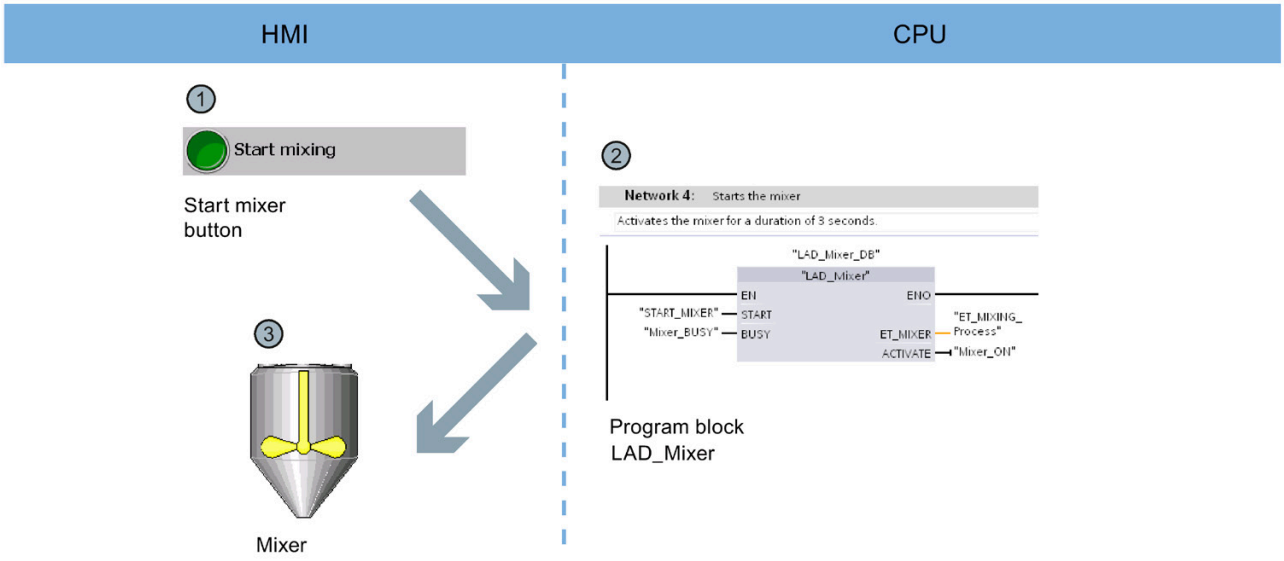

① The "Start mixing process" button starts the mixer of the color mixing plant in the HMI screen "Start screen".

② The "LAD_Mixer" program block is called for this purpose at the CPU end. It activates the mixer for three seconds.

③ The activation of the mixer is indicated by flashing in the HMI screen.

1.4.5 Filling the color mixture

Filling the color mixture

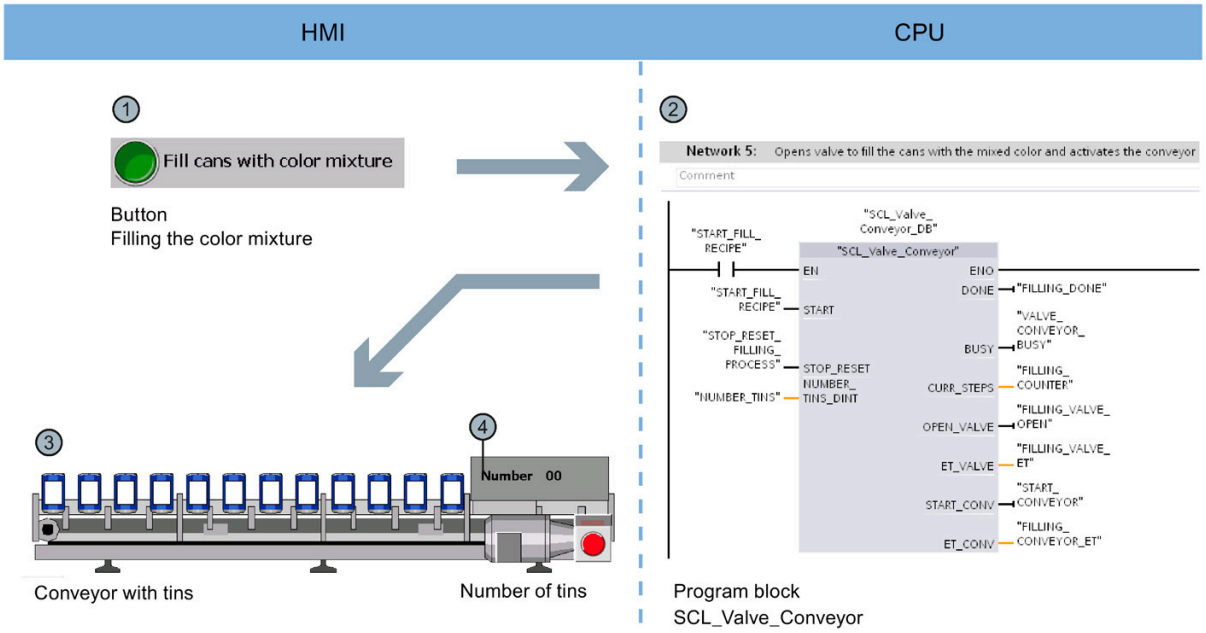

① The "Fill Color Mixture" button starts the filling of the tins in the HMI screen "Start screen".

② The "SCL_Valve_Conveyor" program block is activated for this purpose at the CPU end; it controls the valves and the conveyor belt.

③ The tins are animated according to the movement of the conveyor belt in the HMI screen.

④ A counter indicates the number of tins that have already been filled.

1.4.6 Resetting the fill level

Resetting the fill level

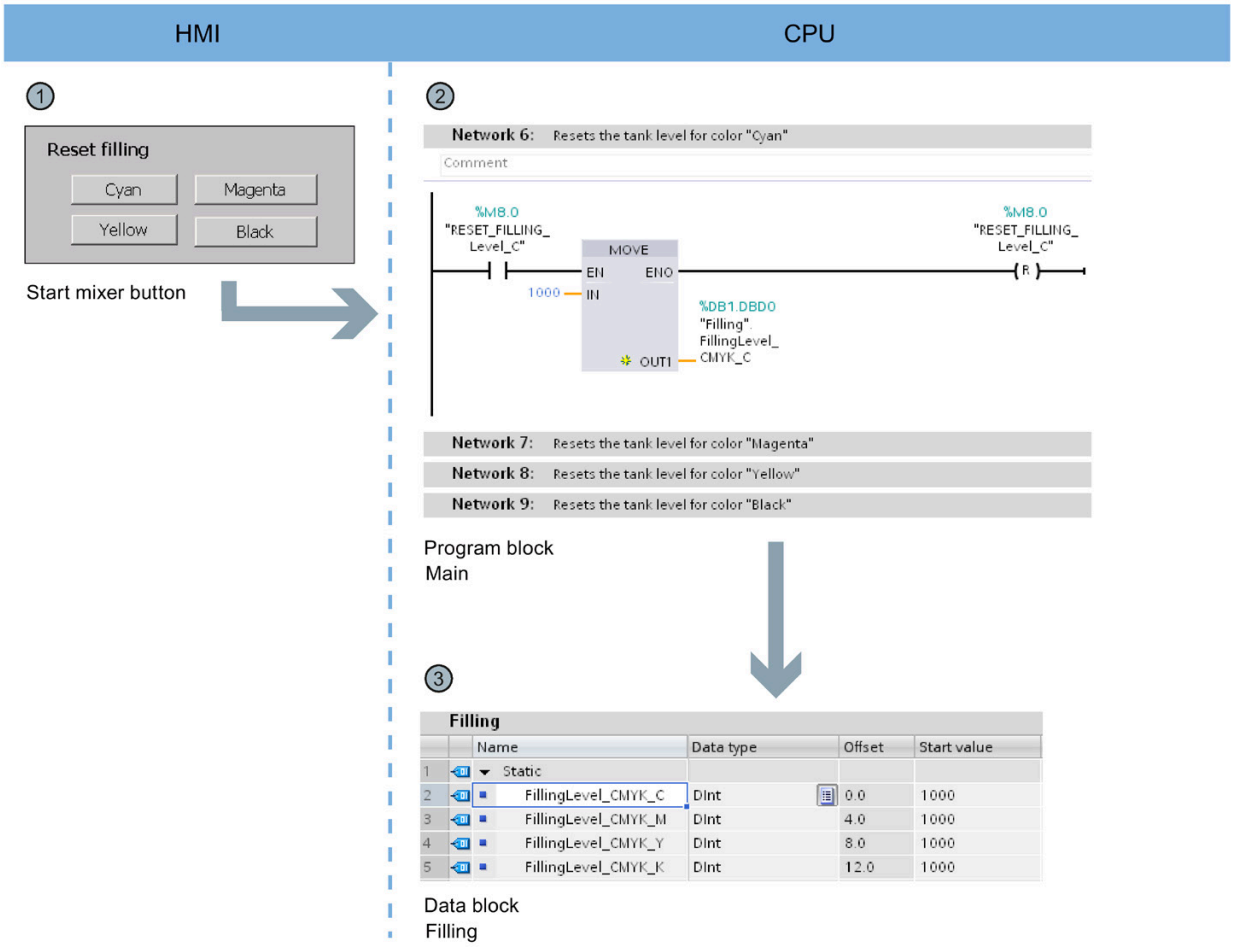

① There is a button to reset the fill level of each of the four color tanks in the HMI screen "Start screen".

② The reset of the respective fill level has been implemented in the "Main" program block in networks 6 to 9.

③ Networks 6 to 9 reset the values to the Start value in the global data block "Filling".

Hardware section 2

2.1 Introduction

The controller family SIMATIC S7-1500 with the Totally Integrated Automation Portal (TIA Portal) offers you numerous options to increase the productivity of your machines and to make the engineering process even more efficient. Explore the options in this Getting Started.

In the first basic steps, you will get to know the hardware better. We will also show you how to configure and program the SIMATIC S7-1500 with SIMATIC STEP 7 V17 (TIA Portal). The connection of a SIMATIC HMI Comfort Panel with SIMATIC WinCC Advanced V17 (TIA Portal) or SIMATIC WinCC Professional V17 (TIA Portal) completes the basic steps.

2.1.1 Requirements

Hardware requirements

To implement the hardware section of this Getting Started, you will need:

- 1 × CPU 1511-1 PN (6ES7511-1AK02-0AB0)
- 1 × S7-1500 load current supply PM 70W 120/230VAC (6EP1332-4BA00)
- 1 × Mounting rail (6ES7590-1AB60-0AA0)
- 1 × digital input module DI 16x24VDC SRC BA (6ES7521-1BH50-0AA0)
- 1 × digital output module DQ 16x24V DC/0.5A HF (6ES7522-1BH01-0AB0)
- 2 × Front connectors (6ES7592-1AM00-0XB0)
- 1 × SIMATIC Memory Card with at least 4 MB (e.g. 6ES7954-8LC03-0AA0)
- 1 × Ethernet cable

Software requirements

To implement the software section of the Getting Started, you will need:

- SIMATIC STEP 7 Professional V17
- SIMATIC WinCC Advanced V17 or SIMATIC WinCC Professional V17

WARNING

Severe personal injury may result

The S7-1500 automation system in plants or systems is governed by specific standards and regulations, based on the relevant field of application. Observe the applicable safety and accident prevention regulations such as IEC 60204-1 (general machine safety requirements).

Failure to observe these regulations can result in serious injuries and damages to machinery and facilities.

2.1.2 Additional information

Detailed information on the hardware used is available here:

- CPU 1511-1 PN (6ES7511-1AK02-0AB0) (https://support.industry.siemens.com/cs/ww/en/view/109752841)
- S7-1500 load current supply PM 70W 120/230VAC (6EP1332-4BA00) (https://support.industry.siemens.com/cs/ww/en/view/68036174)
- Digital input module DI 16x24VDC SRC BA (6ES7521-1BH50-0AA0) (https://support.industry.siemens.com/cs/ww/en/view/59191844)
- Digital output module DQ 16x24V DC/0.5A HF (6ES7522-1BH01-0AB0) (https://support.industry.siemens.com/cs/ww/en/view/109480717)

2.2 Installing the assembly

2.2.1 Overview

Mounting the assembly

You mount the structure in this section.

See also

Installing the assembly (Page 24)

2.2.2 Installing the assembly

Procedure

1. Mount the load current supply (PM) on the mounting rail.

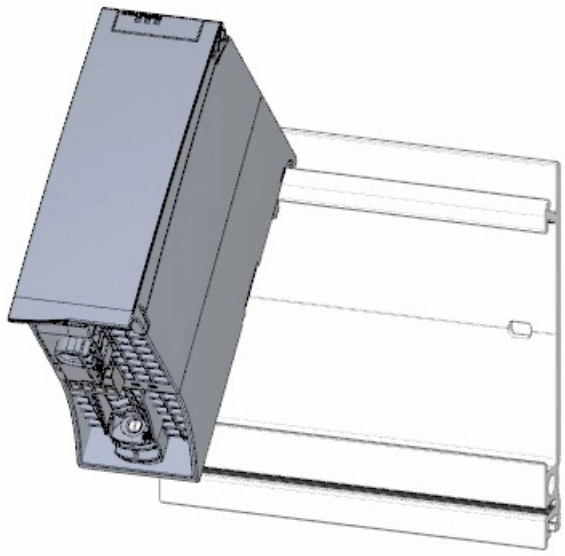

2. Open the front cover and pull out the mains connection plug.

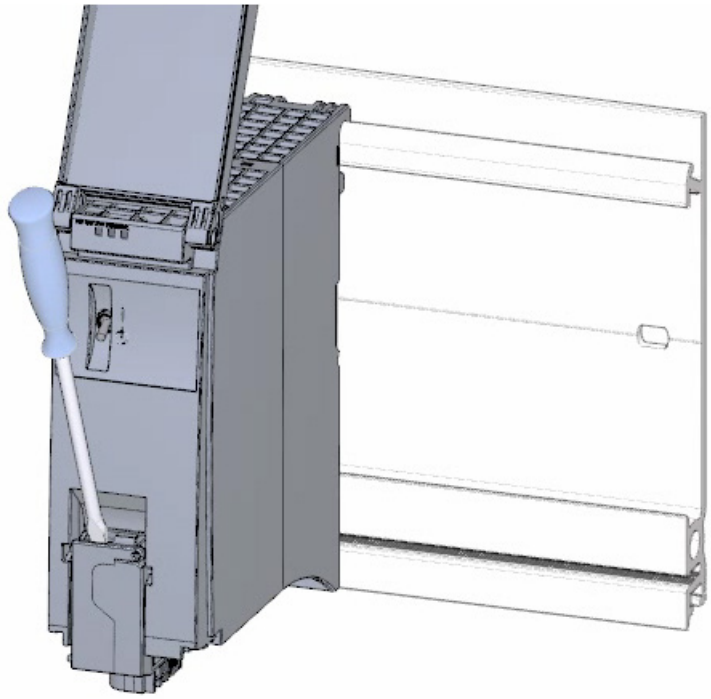

3. Remove the 4-pole connection plug and screw the load current supply (PM) tight.

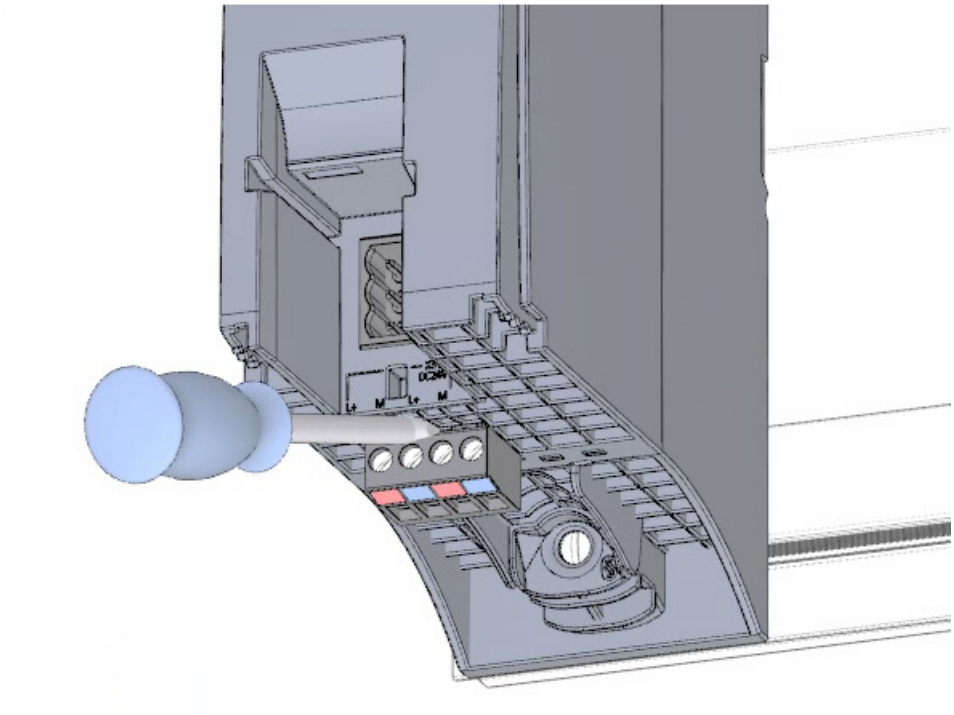

4. Insert the U-connector into the back of the CPU.

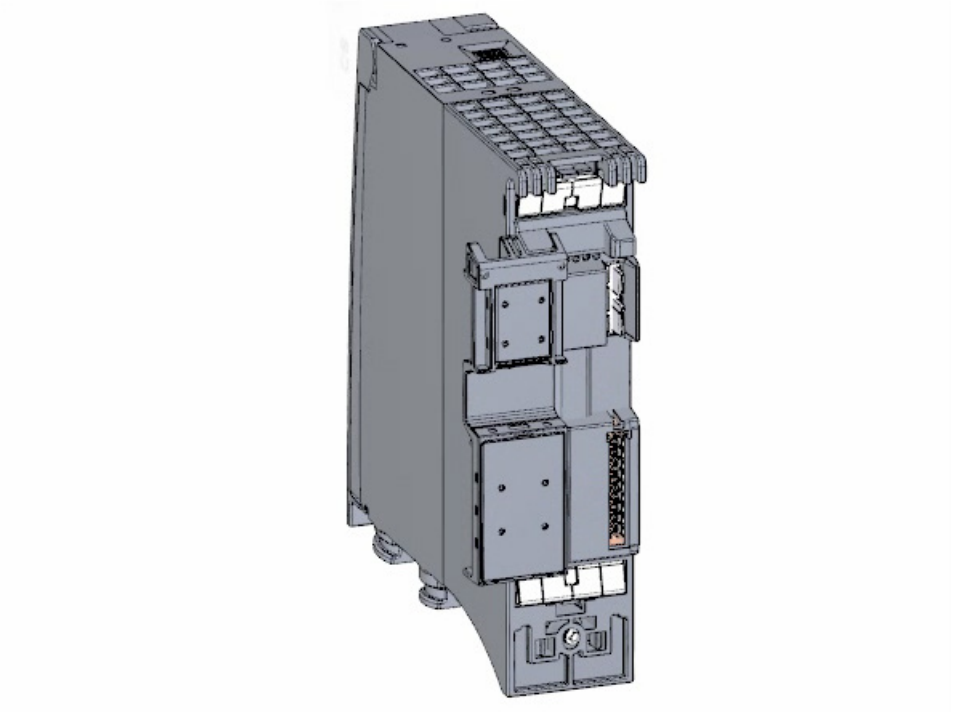

5. Mount the CPU on the mounting rail and screw tight.

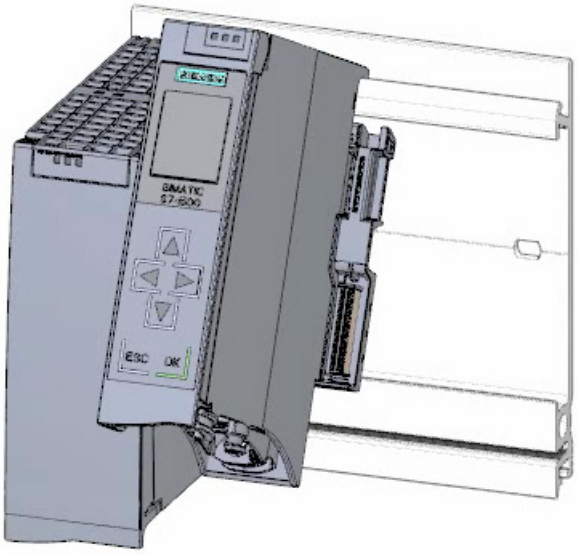

6. Insert the U-connector into the back of the digital input module.

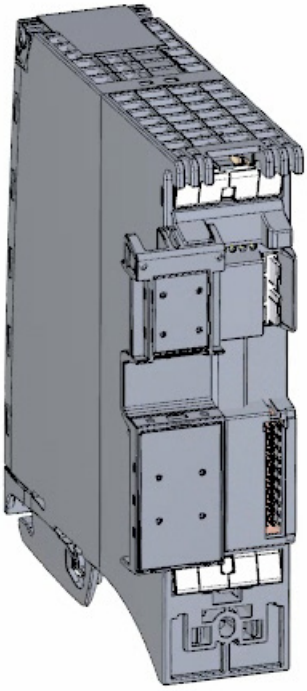

7. Attach the digital input module to the mounting rail and screw tight.

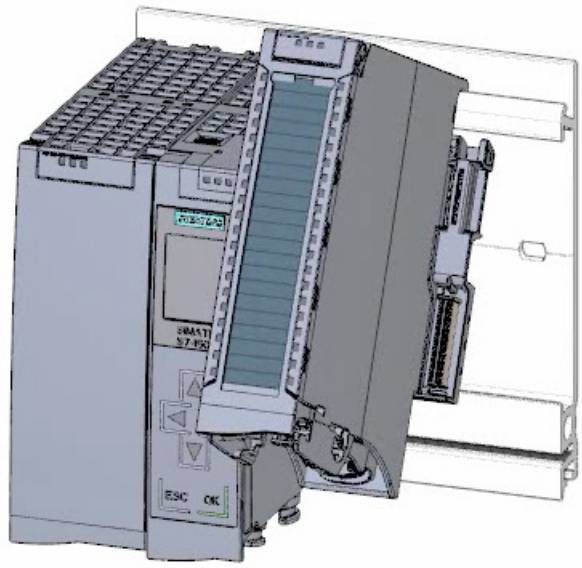

8. Attach the digital output module to the mounting rail and screw tight.

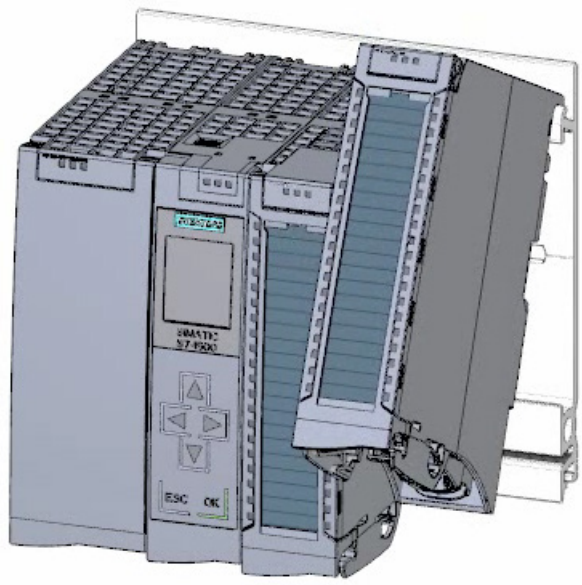

Result

The assembly has been mounted.

2.3 Wiring

2.3.1 Overview

Wiring the assembly

You mount the assembly in this section.

DANGER

The mains cable for the load current supply must not be connected to the power supply during wiring.

2.3.2 Wiring rules

Operation of an S7-1500 CPU in plants or systems is defined by special set of rules and regulations, based on the relevant field of application.

You can find the general rules and regulations for operating the S7-1500 in the S7-1500 system description (https://support.industry.siemens.com/cs/ww/en/view/59191792).

Wiring rules for the CPU

Wiring rules...		CPU	40-pin front connector (screw-type connection)	Load power supply
Connectible wire cross-sections for solid wires		—	up to 0.25 mm^2	—
		—	AWG*: 24	—
Connectible wire cross-sections for stranded wires	Without wire end ferrule	0.25 to 2.5 mm^2	0.25 to 1.5 mm^2	1.5 mm^2
		AWG*: 24 to 16	AWG*: 24 to 16	AWG*: 16
	With wire end ferrule	0.25 to 2.5 mm^2	0.25 to 1.5 mm^2	1.5 mm^2
		AWG*: 24 to 16	AWG*: 24 to 16	AWG*: 16
Number of wires per connection		1	1 or a combination of 2 cables up to 1.5 mm^2 (total) in the same wire end ferrule	1
Length of stripped wires		10 to 11 mm	10 to 11 mm	7 to 8 mm
End sleeves according to DIN 46228	without plastic sleeve	Design A, 10 mm long	Design A, 10 mm and 12 mm long	Design A, 7 mm long
	with plastic sleeve 0.25 to 1.5 mm^2	Design E, 10 mm long	Design E, 10 mm and 12 mm long	Design A, 7 mm long
Sheath diameter		—	—	8.5 mm
Tool		3 to 3.5 mm Phillips screwdriver, conic design	3 to 3.5 mm Phillips screwdriver, conic design	3 to 3.5 mm Phillips screwdriver, conic design
Connection system		Push-in terminal	Screw terminal	Screw terminal
Tightening torque		—	from 0.4 Nm to 0.7 Nm	from 0.5 Nm to 0.6 Nm

* AWG: American Wire Gauge

2.3.3 Wiring the mains connection plug

Procedure

1. Pry off the connector cover using a suitable tool.

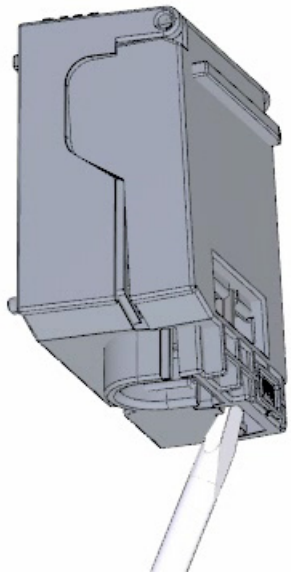

2. Connect the mains cable in the plug according to the connection diagram.
   You will find information on which voltage the plug is approved for on the side of the plug.
   You select the voltage by inserting the coding element accordingly on the back of the plug.

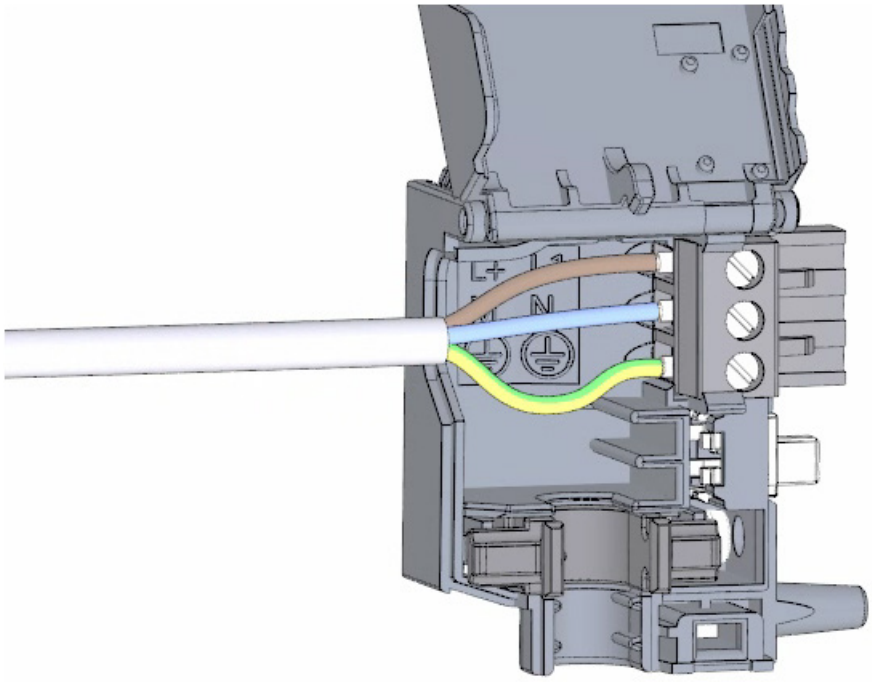

3. Close the cover.

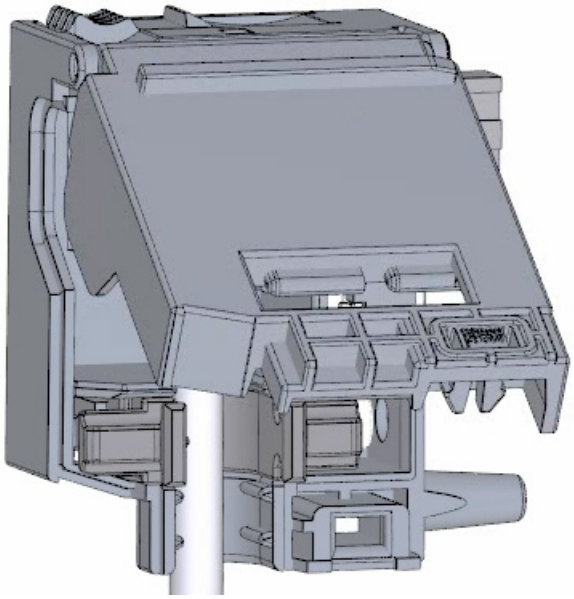

4. Tighten the screw on the front of the mains connection plug.

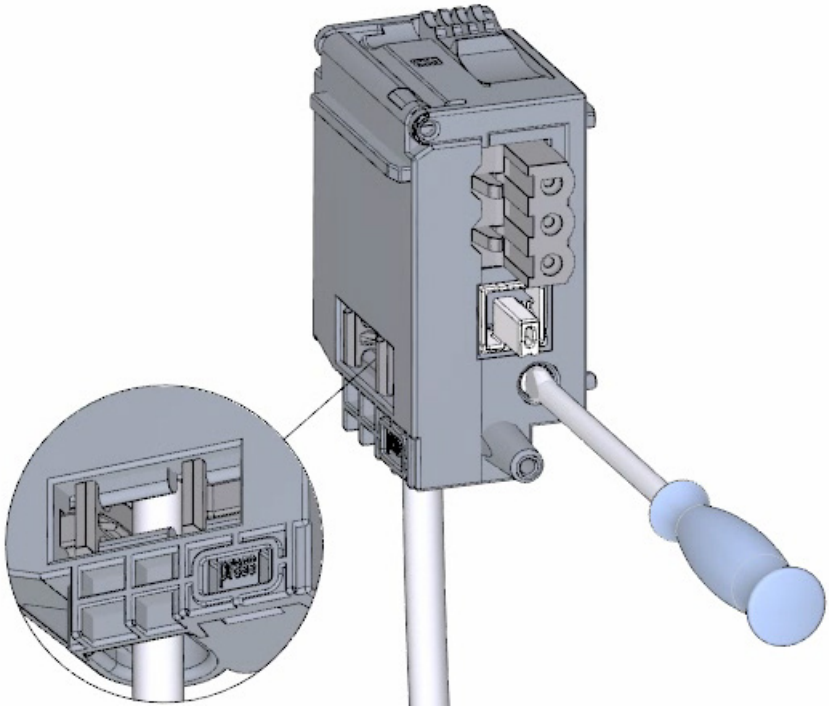

Result

The mains connection plug is now wired.

2.3.4 Wiring the load current supply (PM) to the CPU

Procedure

1. Wire the 4-pin connector plug of the load current supply (PM).

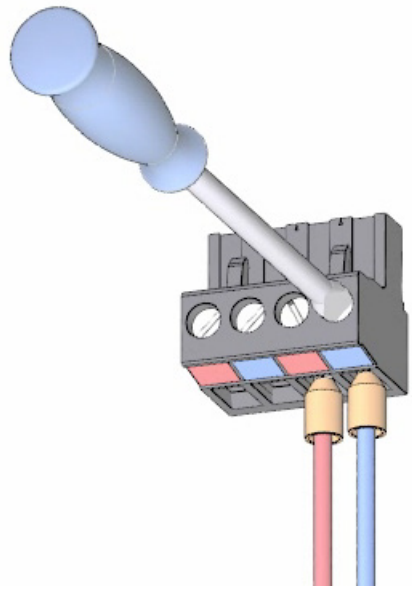

2. Wire the 4-pin connector plug with the 4-pin mains connection plug of the CPU.

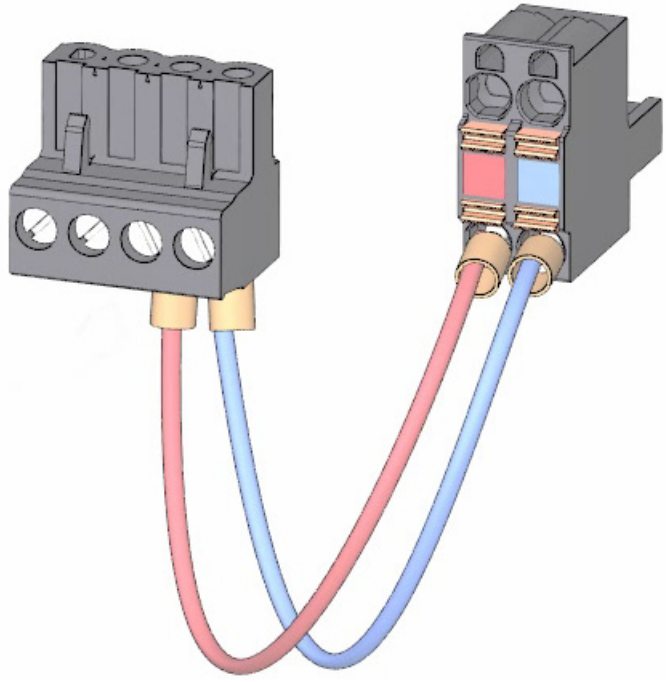

3. Connect the load current supply (PM) to the CPU.

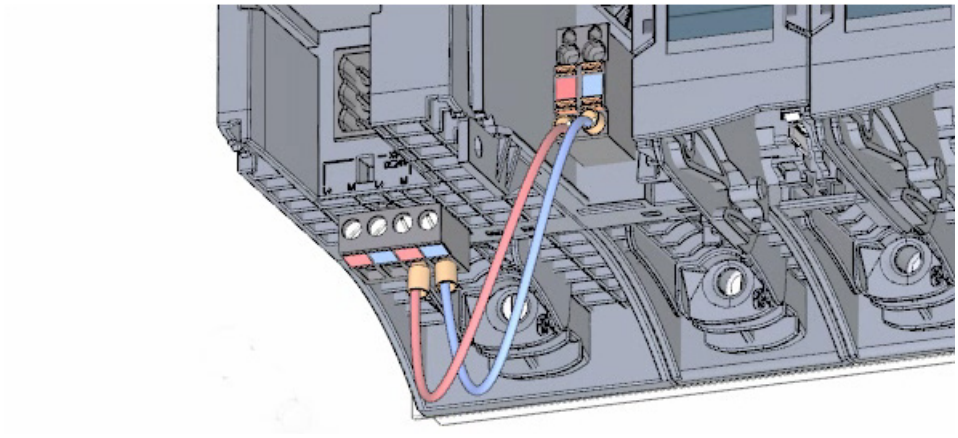

Result

The load current supply is now wired to the CPU.

2.3.5 Potential bridge circuits

Application of the potential bridge circuits

If you want to supply the load groups with the same potential (non-isolated), use the potential circuit bridges supplied for the front connector. This means that you avoid having to wire a clamping unit with two wires.

Tip

Use the terminals 40 (M) and 39 (L+) on the front connector to loop the potential to the next module.

2.3.6 Wiring the digital input module

Procedure

1. Insert the front connector into the pre-wiring position. There is no electrical connection between the front connector and the module in the pre-wiring position.

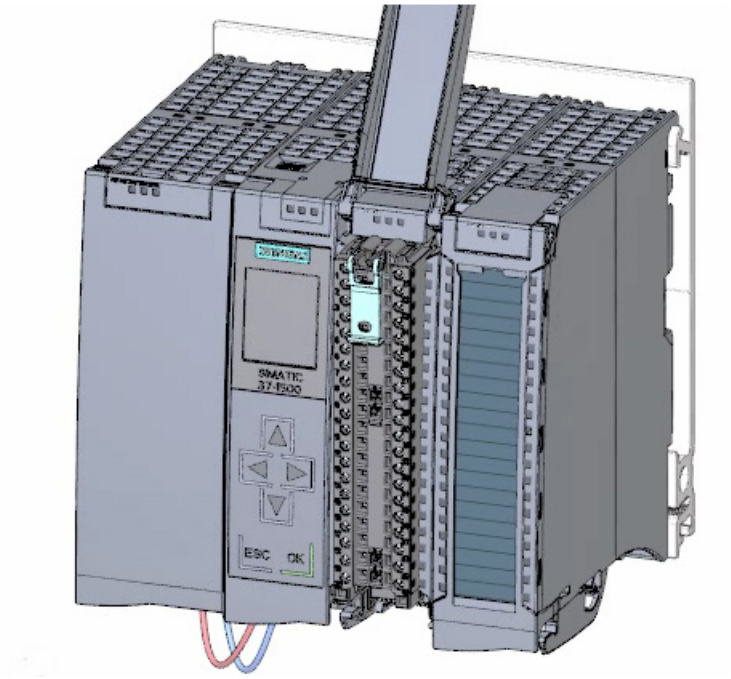

2. Thread in the cable tie.

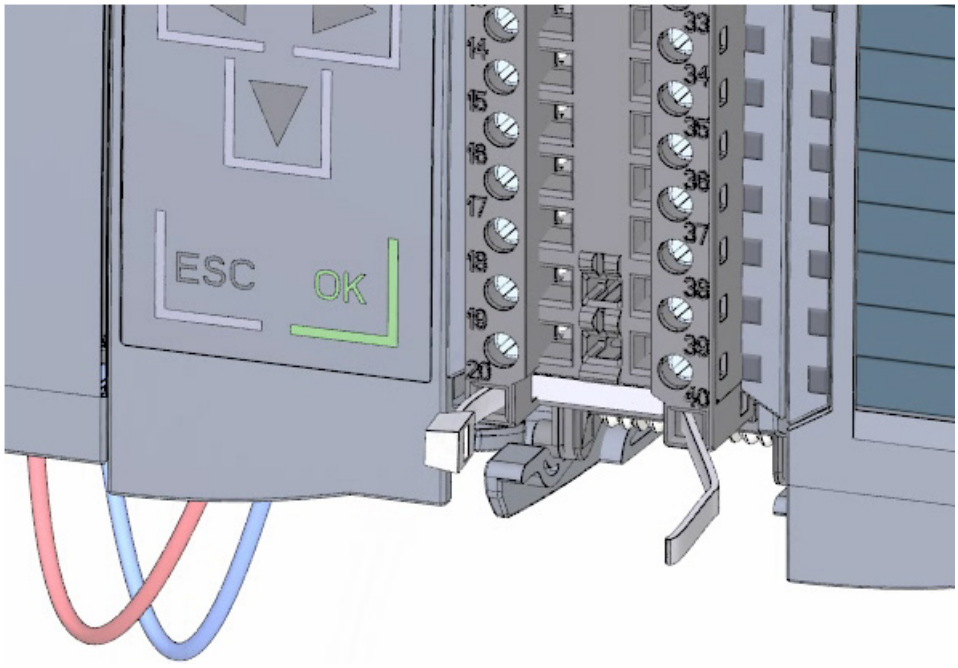

3. Connect the supply voltage 24 V DC to the terminals 20 (M) and 19 (L+).

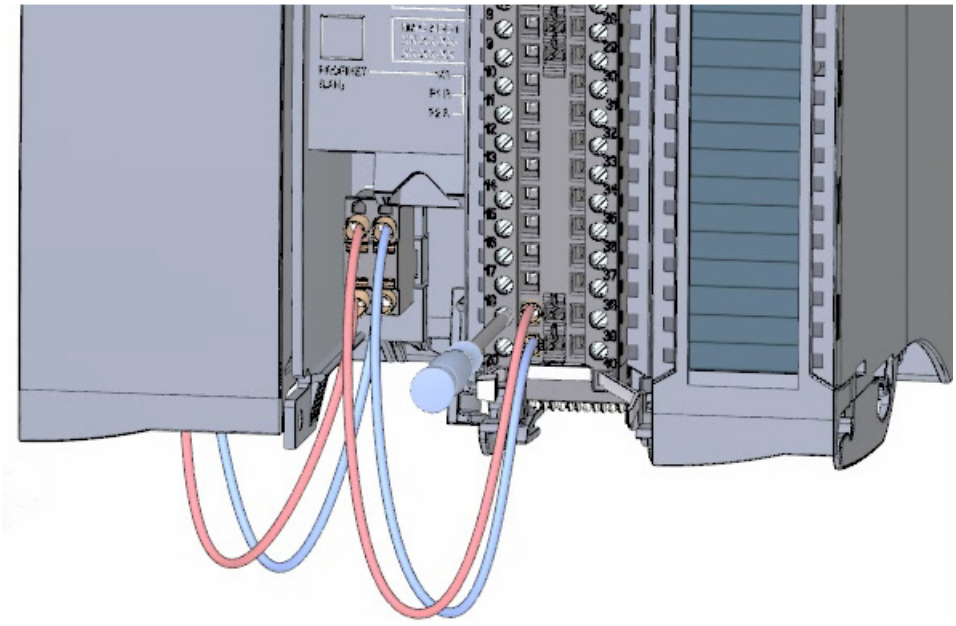

4. Insert the potential circuit bridges between the two bottom terminals.

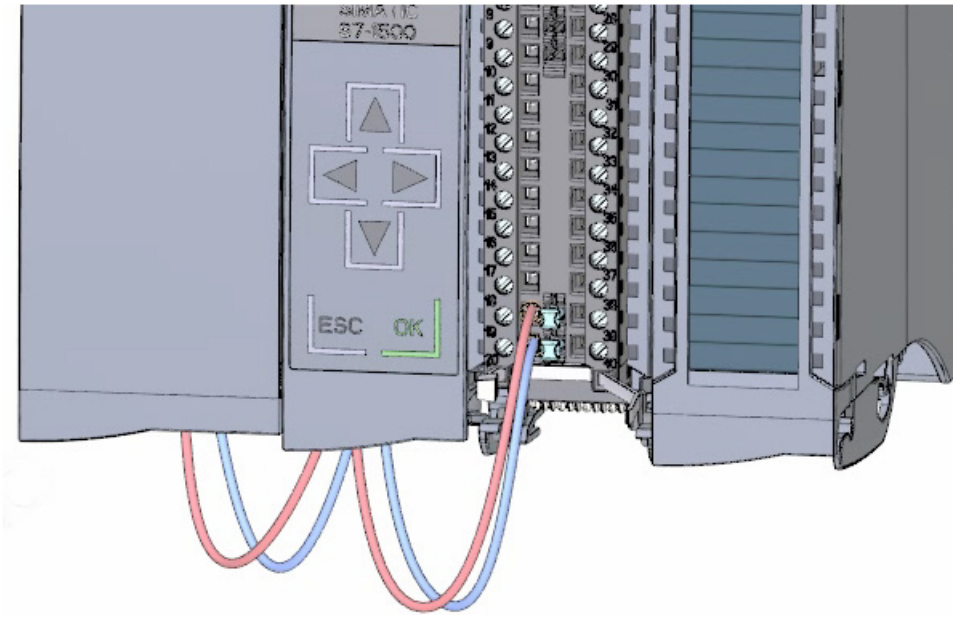

Result

The digital input module is now wired.

2.3.7 Wiring the digital output module

Procedure

1. Insert the front connector into the pre-wiring position.

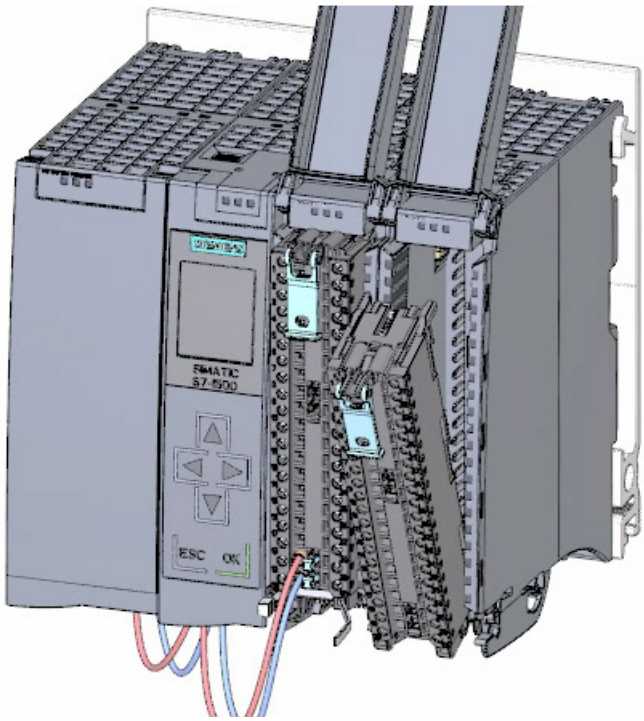

2. Use terminals 40 (M) and 39 (L+) from the digital input module to feed the supply voltage DC 24 V from the digital input module to terminals 20 (M) and 19 (L+).

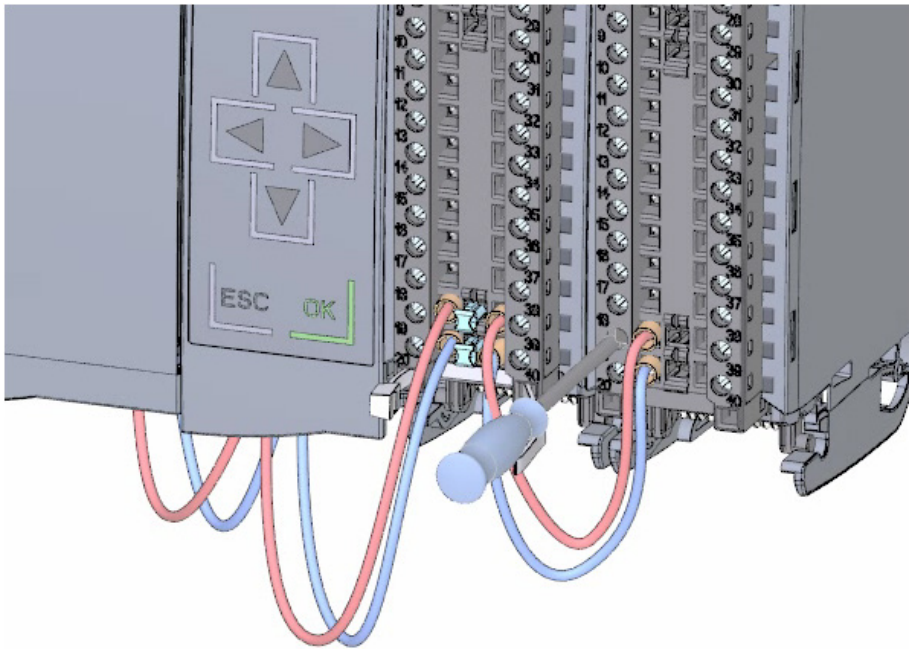

3. Connect the four potential circuit bridges.

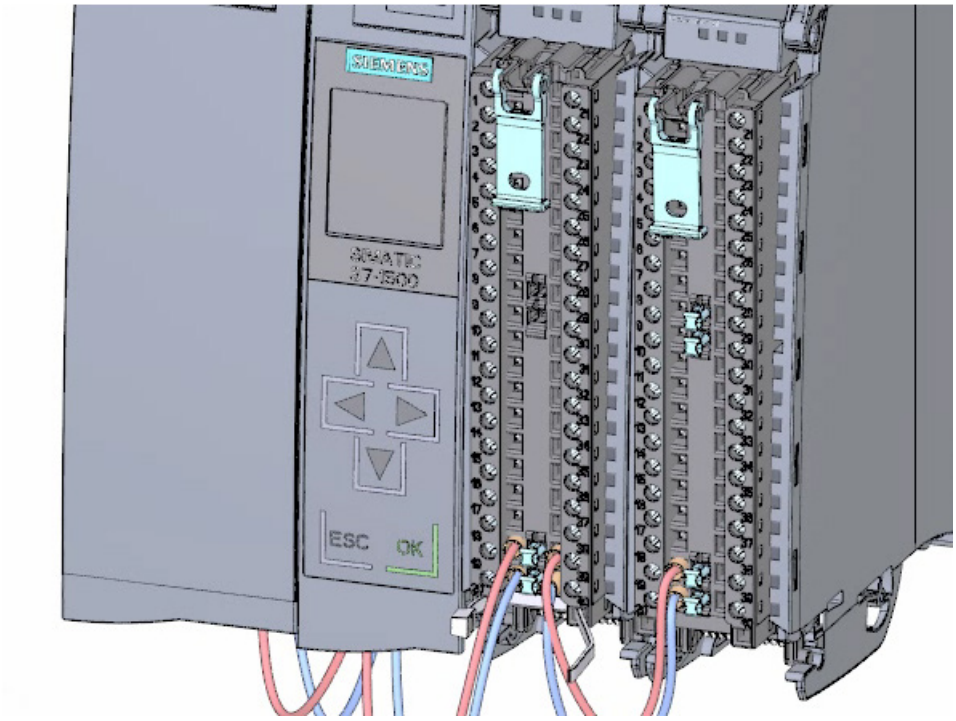

4. Connect the terminals 30 and 40, as well as 29 and 39 to each other.

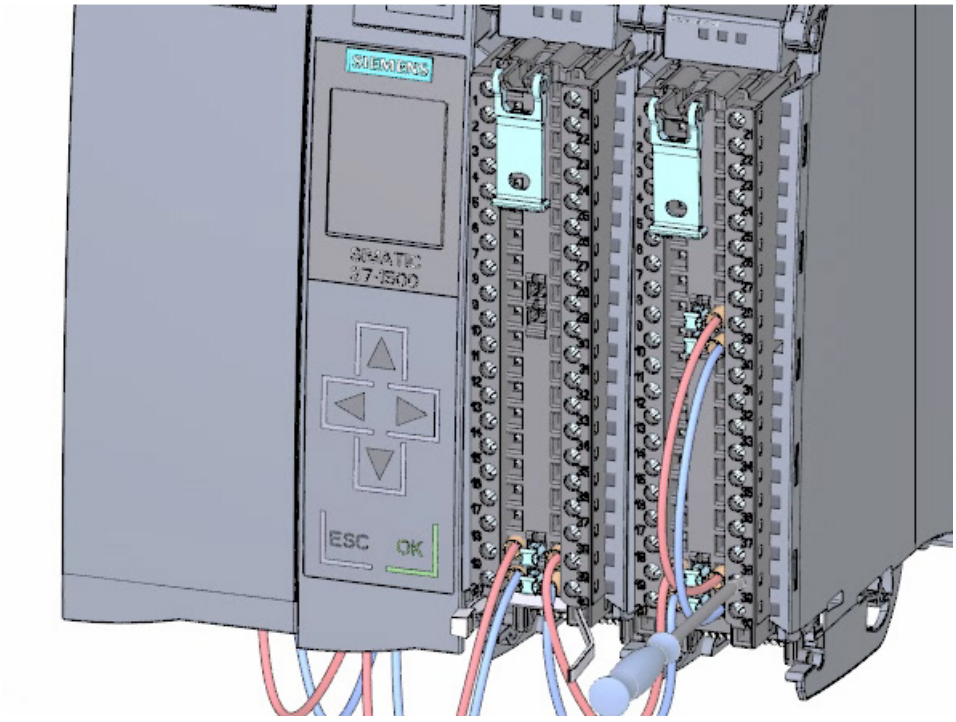

Result

The digital output module is now wired.

2.3.8 Wiring front connectors

Procedure

1. Connect the individual wires according to the connection diagram on the inner side of the front cover in the terminal and screw tight.

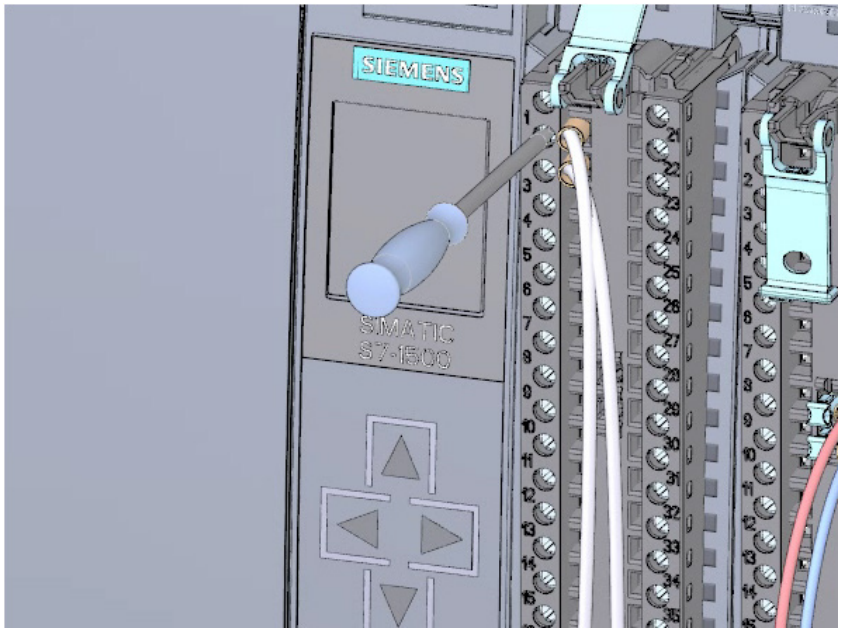

2. For strain relief, run the cable tie around the cable harness and pull tight.

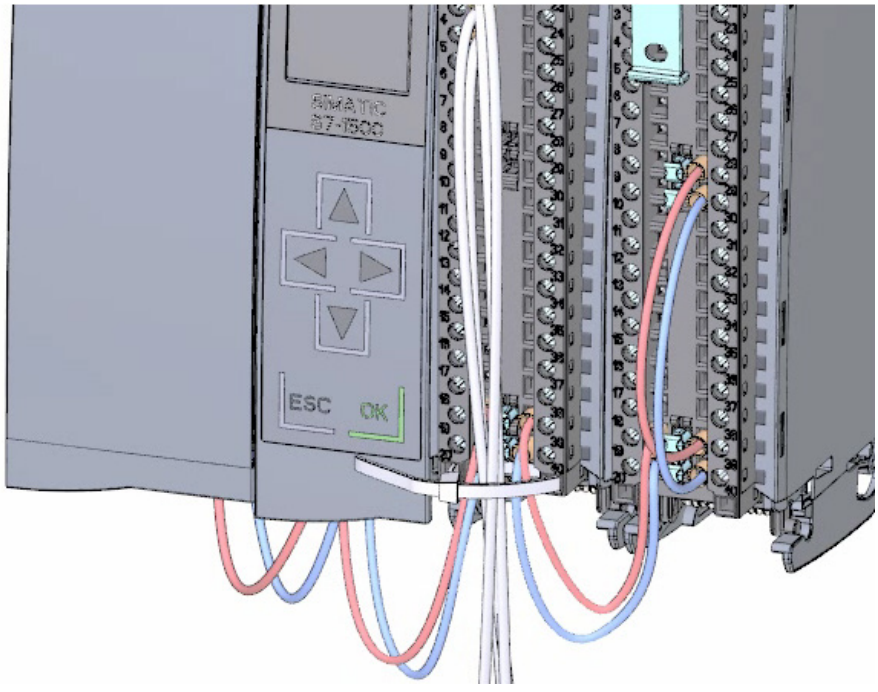

3. Move the front connector from the pre-wiring position to its final position. By doing this, you create an electrical connection between the front connector and the module.

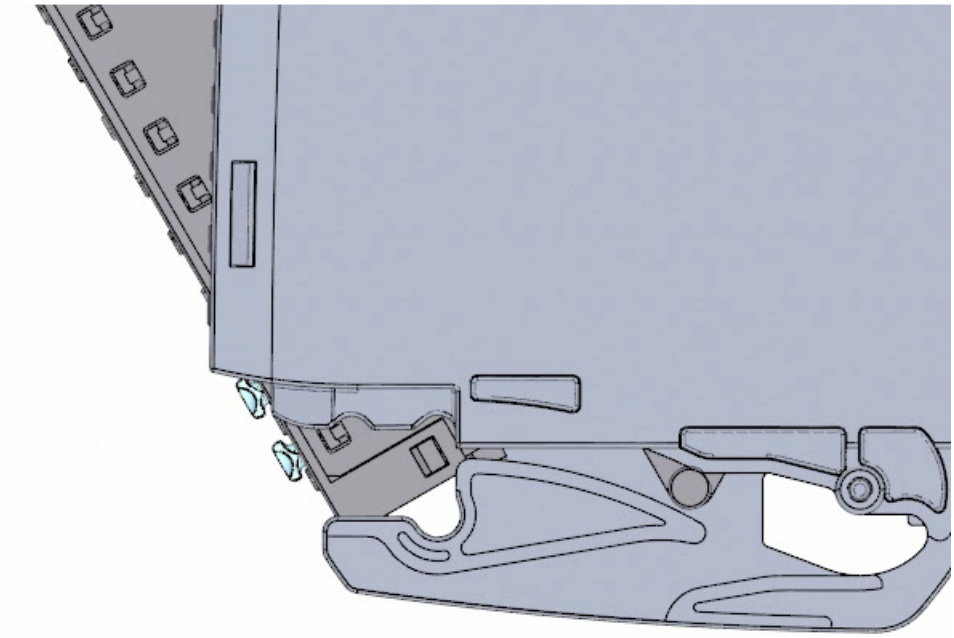

4. **Tip:** Pre-wired front connectors, e.g. for replacing modules, can be inserted directly.

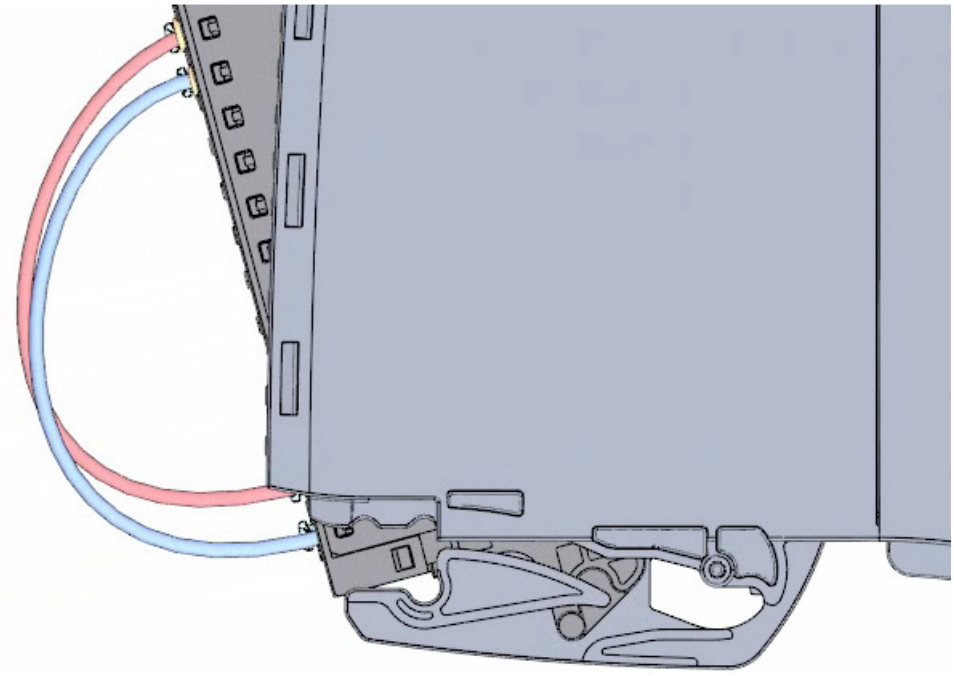

Result

The front connectors are now wired.

2.4 Power on

2.4.1 Overview

Turning on the CPU for the first time

You turn on the CPU for the first time in this section.

See also

Power on (Page 41)

2.4.2 Power on

Procedure

1. Insert mains connection plug of the load current supply (PM).

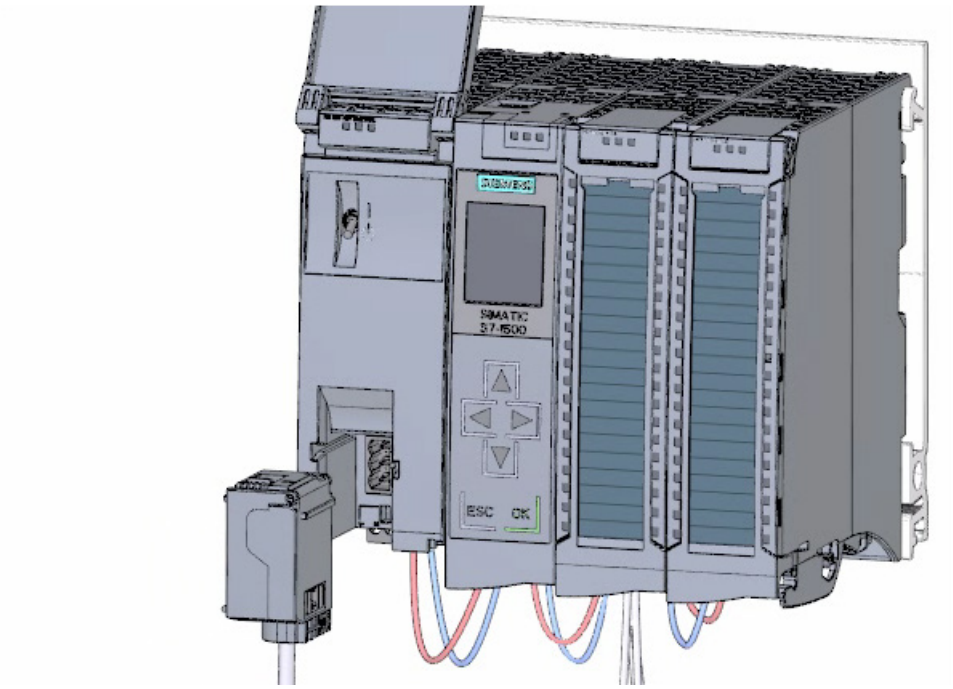

2. Connect the mains connection plug to the power supply.

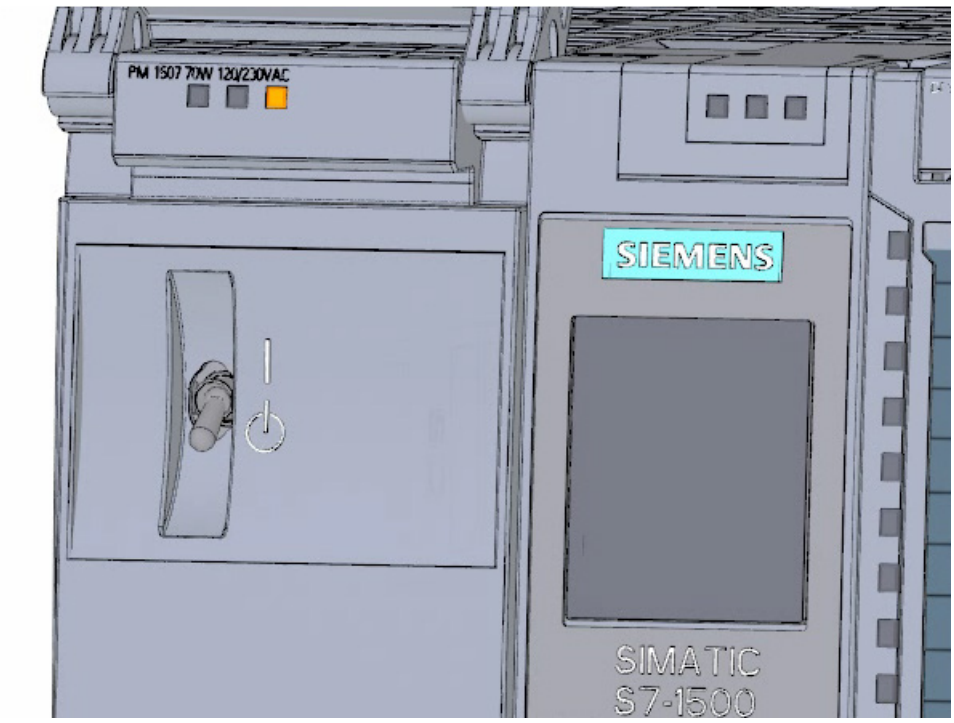

3. Insert a blank SIMATIC memory card into the CPU.

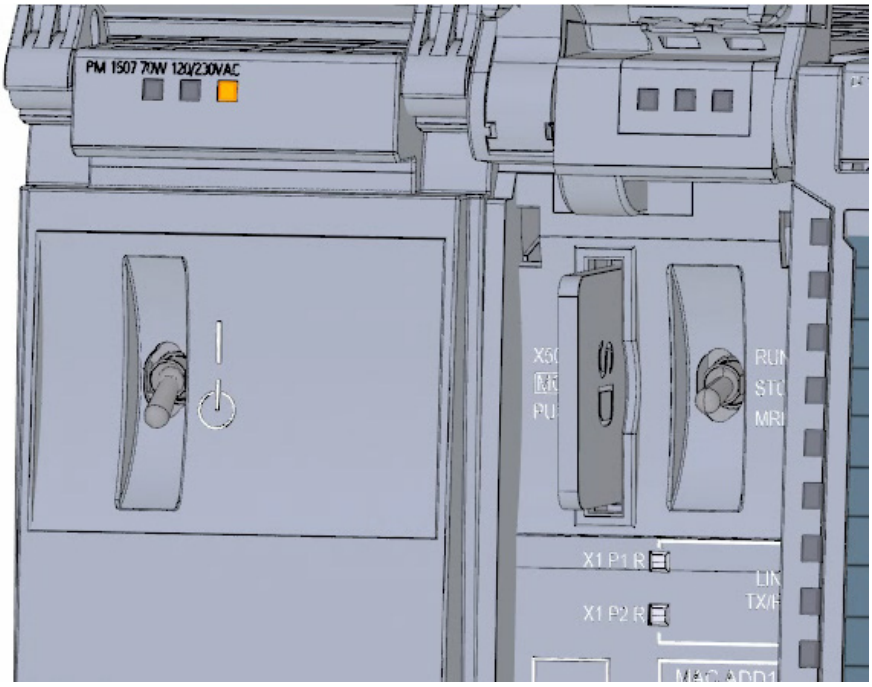

4. Move the switch for the load current supply (PM) to the position RUN.

   The CPU starts up.

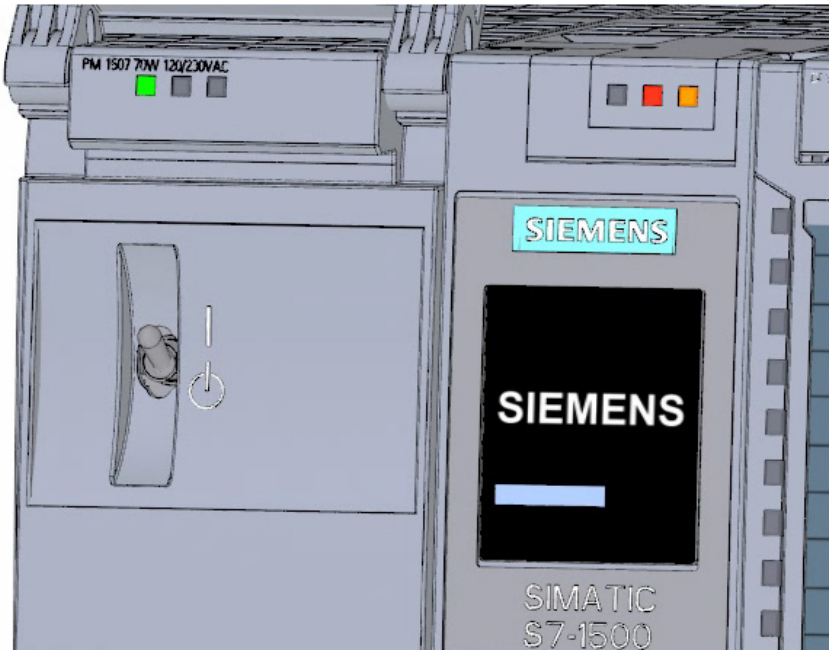

Result

The CPU starts up and is in STOP mode.

2.4.3 Assign IP address via the display

In this step you set the IP address and the subnet mask for the CPU.

Procedure

1. Navigate to "Settings".
2. Select "Addresses".
3. Select the interface "X1 (IE/PN)".
4. Select the menu item "IP Addresses".
5. Set the IP address 192.168.0.10.
6. Press the "right" arrow key on the module.
7. Set the subnet mask 255.255.255.0.
8. Press the "down" arrow key on the module to select the menu item "Apply" and confirm the setting with "OK"

Result

You have now assigned an IP address and the subnet mask for the interface "X1 (IE/PN)".

Software section

3

3.1 Creating the project and hardware

3.1.1 Introduction to the TIA Portal

Introduction

The Totally Integrated Automation Portal, referred to as TIA Portal in the following, offers all the functions you need for implementing your automation task assembled in a single, cross-software platform.

The TIA Portal is the first shared working environment for integrated engineering with the various SIMATIC systems made available within a single framework. The TIA Portal therefore also enables reliable, convenient cross-system collaboration for the first time.

All required software packages, from hardware configuration and programming to visualization of the process are integrated in a comprehensive engineering framework.

Advantages of working with the TIA Portal

The following features provide efficient support during the realization of your automation solution when working with the TIA Portal:

- **Integrated engineering with a uniform operating concept**

  Process automation and process visualization go "hand-in-hand".

- **Consistent, centralized data management with powerful editors and universal symbols**

  Data created once is available in all editors. Changes and corrections are automatically applied and updated within the entire project.

- **Comprehensive library concept**

  Use the ready-made instructions and pre-existing parts of the project again and again.

- **Multiple programming languages**

  Five different programming languages are available for implementing your automation task.

3.1.2 Creating a project

Introduction

In the following step, you will create a new project.

All data which is generated during the creation of an automation solution is saved in the project file. The data is stored in the form of objects. Within the project, the objects are arranged in a tree structure (project hierarchy).

The project hierarchy is based on the devices and stations along with the configuration data and programs belonging to them.

Requirement

You need the following hardware and software equipment to create the project:

- Hardware:
  - The CPU 1511-1 PN that was installed and wired in the hardware section of the Getting Started.
  - An Ethernet connection to your programming device/PC.
- Software:
  The following software packages must be installed and executable on your programming device/PC:
  - SIMATIC STEP 7 Professional V17
  - SIMATIC WinCC Advanced V17 or SIMATIC WinCC Professional V17

Creating a new project

To create a new project, follow these steps:

1. Click "Create new project".
2. Enter a name for your project.

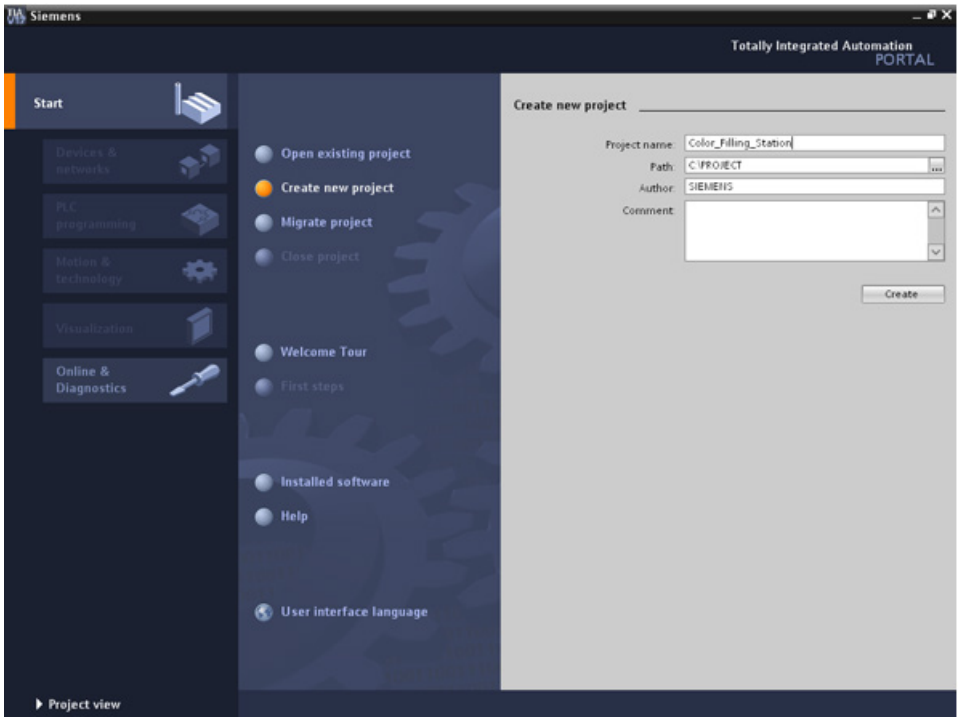

3. Click "Create" to create the new project.

Result

The project has been created. All data, such as the hardware configuration, the CPU programming and the visualization in HMI, is saved in the project.

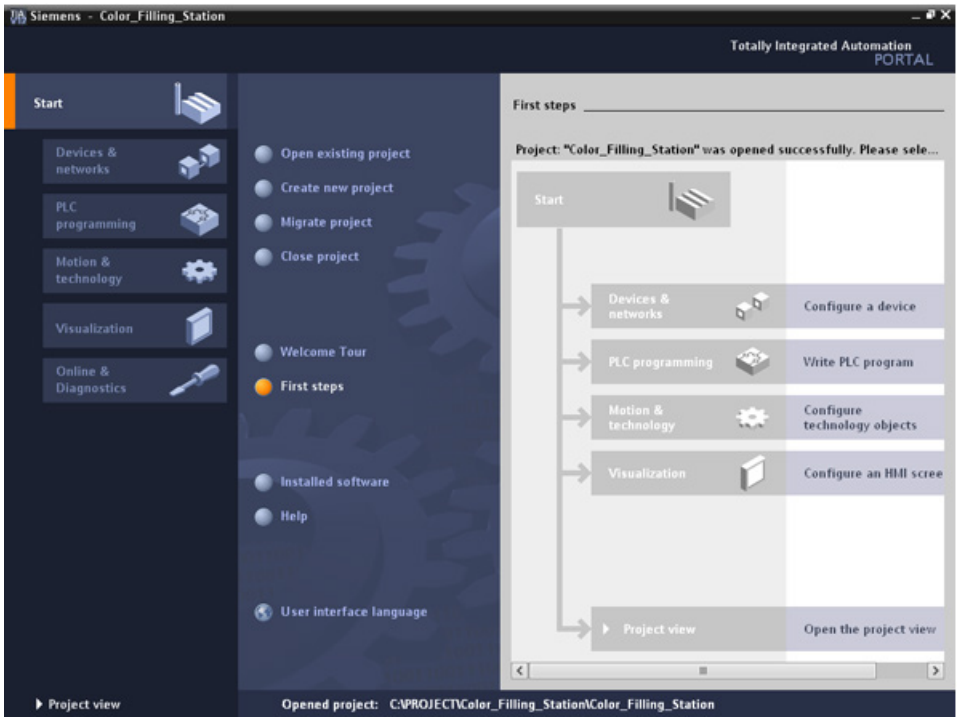

3.1.3 Creating an S7-1500 CPU

Introduction

In the following step, you will create an unspecified CPU. Unspecified CPUs are placeholders for specific CPUs from the hardware catalog which will be defined later.

Procedure

1. Open the "Devices & Networks" portal.
2. Insert a new device.
3. Enter "Color_Mixing_CPU" as the name for the CPU.

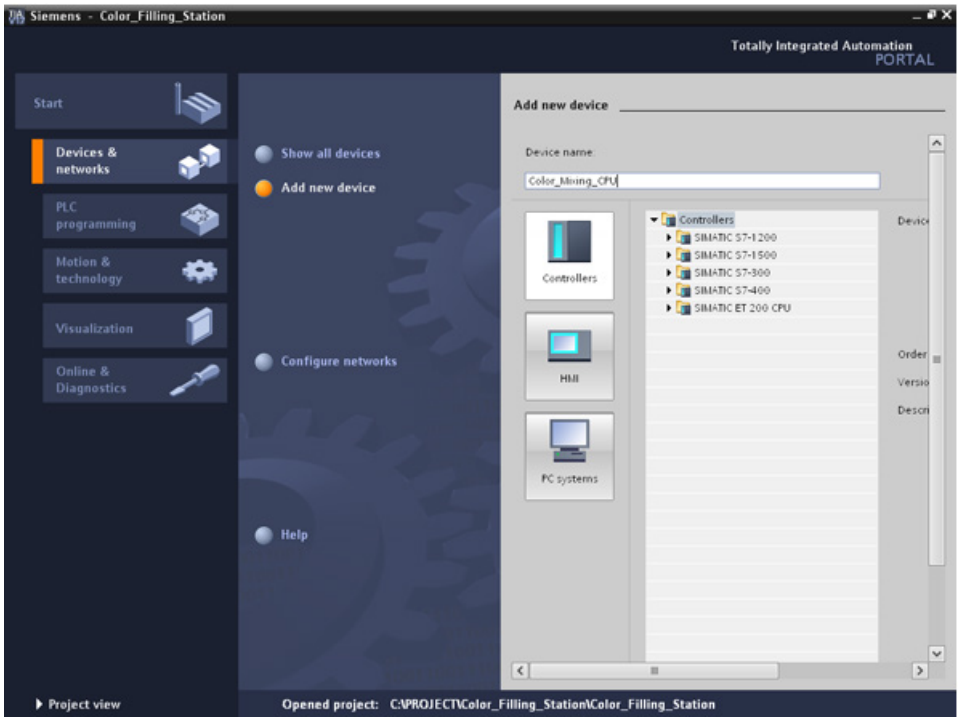

4. Open the "SIMATIC S7-1500" folder.

5. Select the CPU which has not yet been specified.

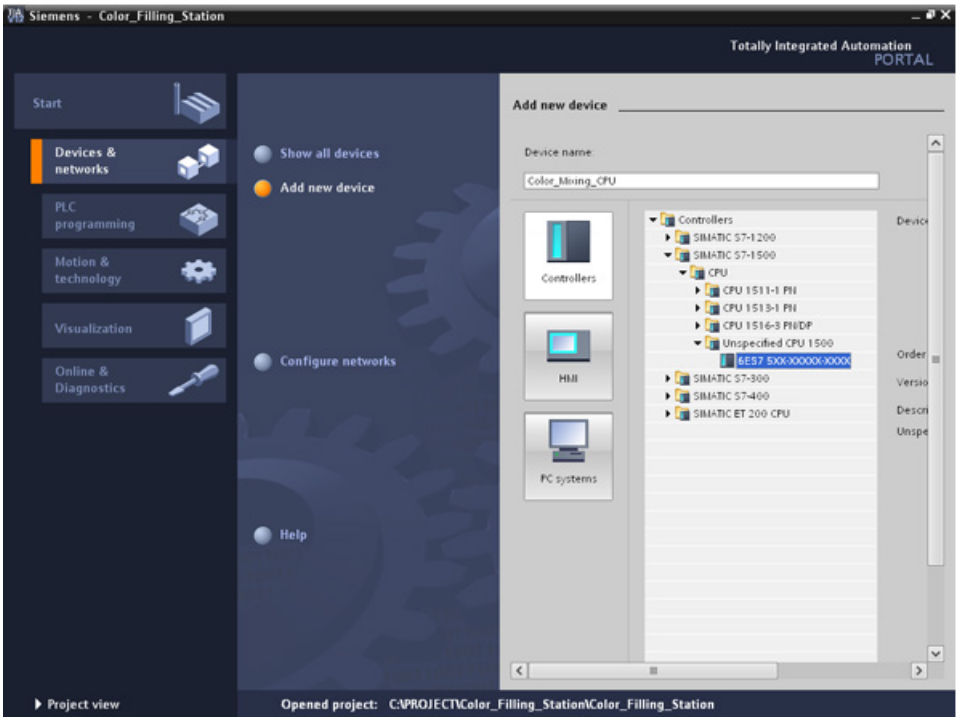

6. Create the CPU with a double-click.

Result

The unspecified CPU is created in the project file. Contents of the user program can already be created at this point for this CPU.

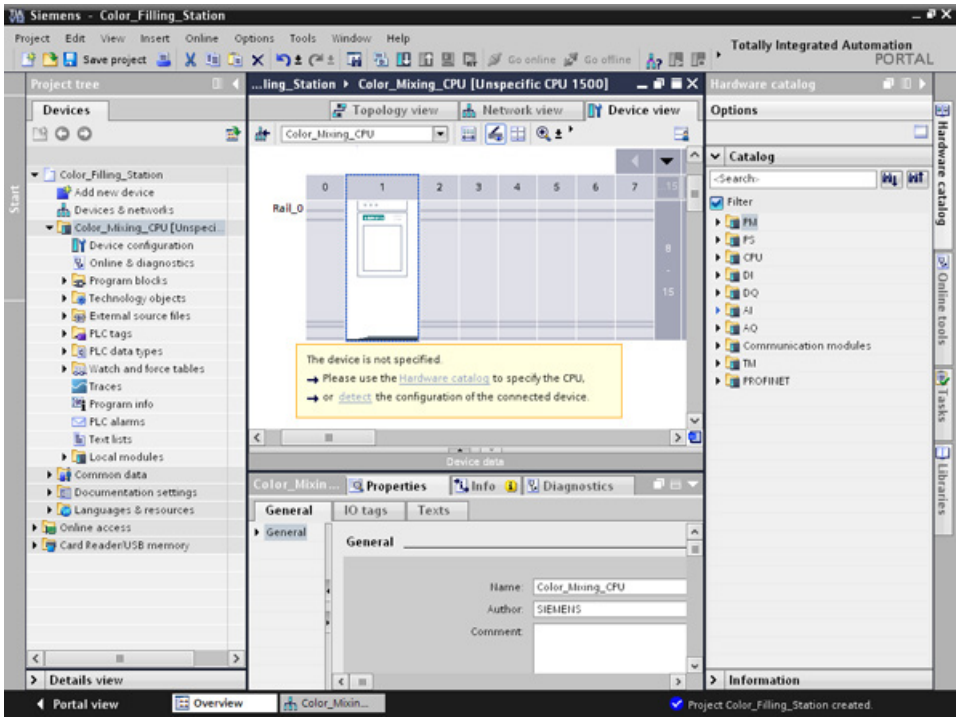

3.1.4 Running the hardware detection

Introduction

In the following section, you will use the hardware detection function to read the CPU type.

Run an LED flashing test during hardware detection. The LED flashing test activates the LEDs on a detected device. You may also use this function to verify that the correct device was selected in a hardware configuration consisting of several devices.

Procedure

1. Select the unspecified CPU in the project tree.
2. Select the "Hardware detection" function from the "Online" menu.

   Option 2: Click on the yellow framed alarm in the device view.
3. Select the "PN/IE" entry as the type of PG/PC interface.
4. Select the PG/PC interface.
5. Click the "Show all compatible devices" option.
6. Select the CPU from the compatible devices in the subnet.
7. Select the "Flash LED" check box to run a flashing test.
8. Click "Detect" to replace the unspecified CPU with the necessary CPU type.

Result

The CPU type is read out. The correct device name is appended in brackets to your CPU name in the project tree.

The CPU and modules used are displayed in the hardware configuration.

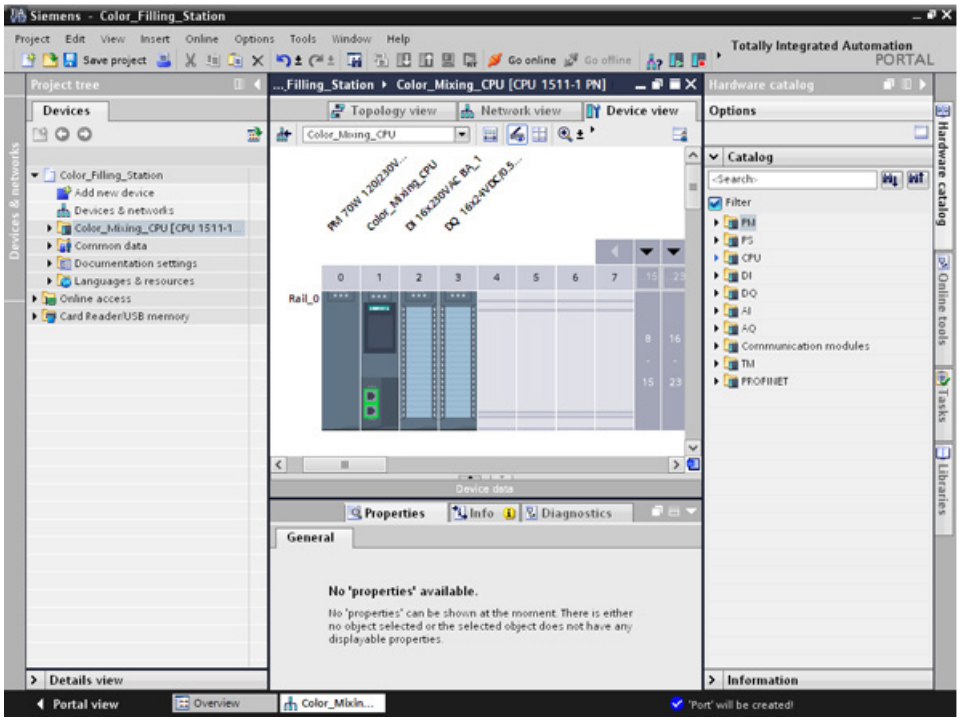

3.1.5 Creating ET 200 interface modules

Introduction

In the following section, you will create two distributed I/O systems in the hardware configuration:

- An ET 200SP distributed I/O system, which basically consists of the following components:
  - An interface module for communication with the CPU.
  - Up to 32 modules that can be inserted in any combination.
  - A server module that completes the configuration.
- An ET 200MP distributed I/O system, which consists of the following components:
  - The interface module for communication with the CPU.
  - Up to 30 modules, each one providing up to 32 channels.

Procedure

1. Open the "Hardware catalog".
2. Change to the "Network view".
3. Open the "Distributed I/O" and "ET 200SP" folders.
4. Open the "IM 155-6 PN ST" folder.
5. Drag-and-drop the "6ES7155-6AU01-0BN0" interface module to the network view.
6. Open the "ET 200MP" folder.
7. Open the "IM 155-5 PN ST" folder.
8. Drag-and-drop the "6ES7155-5AA01-0AB0" interface module to the network view.

Result

The I/O systems have been created in the hardware configuration, but not yet assigned to the CPU 1511-1 PN. They are both displayed under "Unassigned devices" in the project view.

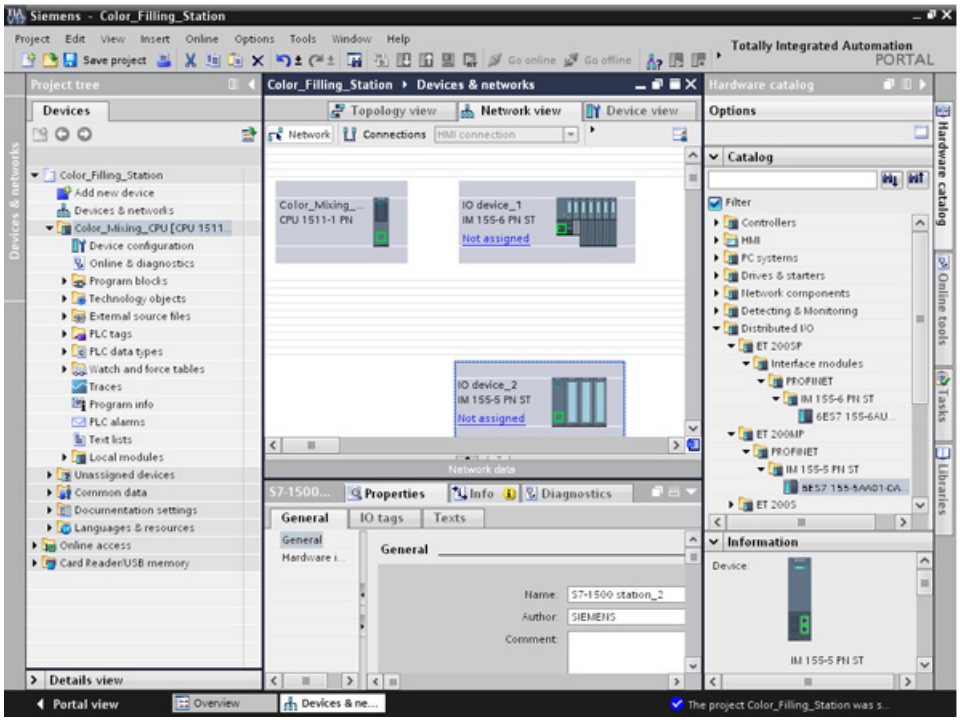

Additional information

The SIMATIC ET 200 product family offers different scalable I/O systems to suit your specific application.

You will find more information about the SIMATIC ET 200 distributed I/O on the Internet at (https://new.siemens.com/global/en/products/automation/systems/industrial/io-systems.html).

3.1.6 Networking ET 200 interface modules

Introduction

In the following section, you will create a PROFINET I/O system.

A PROFINET I/O system consists of the PROFINET IO controller and its assigned PROFINET IO devices:

- The CPU 1511-1 PN you already created is used as PROFINET IO controller.
- The two distributed I/O systems are used as PROFINET IO devices.

Procedure

1. Drag-and-drop a connection from the interface of the IM 155-5 PN ST interface module to the CPU interface.
2. Create a second connection between the IM 155-6 PN ST interface module and the CPU.

Result

The interface modules are assigned to the CPU as IO devices. The two distributed I/O systems are displayed in the project navigation in the "Distributed I/O" folder under the CPU.

A PROFINET I/O system was created automatically in the networking process and its properties are displayed in the network view.

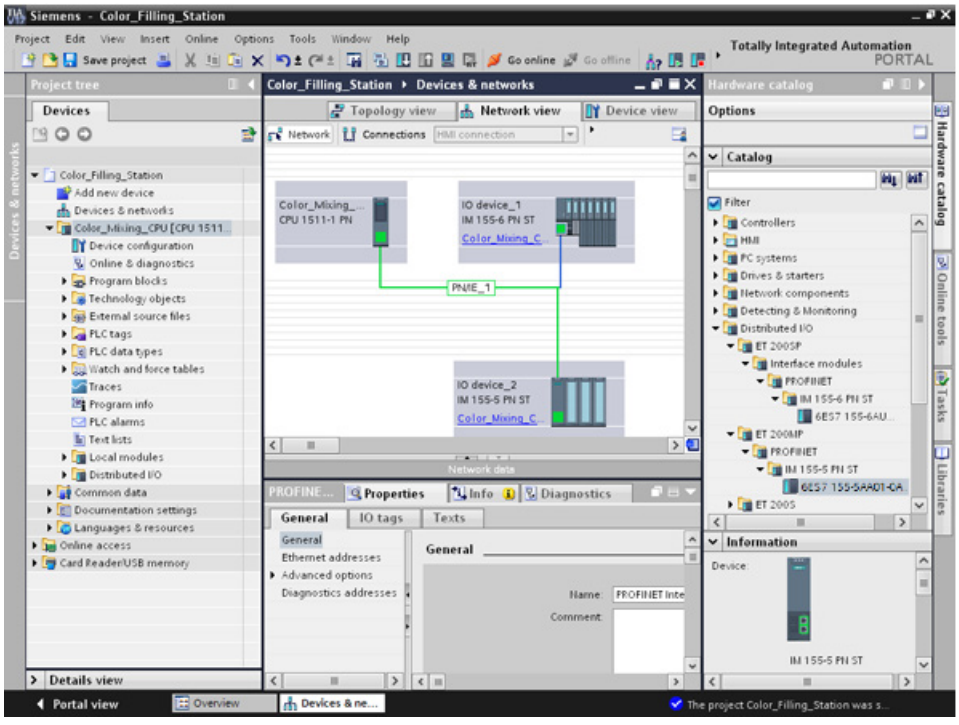

3.1.7 Creating input and output modules and a server module for ET 200SP

Introduction

In the following section, you will create input and output modules for the ET 200SP.

Note

You need the server module to operate the input and output modules. These modules will fail if the server module is missing.

Maximum configuration per potential group

The number of I/O modules that can be used per potential group depends on the following factors:

1. Total power requirement of all I/O modules operated on this potential group
2. Total power requirement of all loads connected externally to this potential group

The sum of the total current calculated according to 1 and 2 must not exceed the current carrying capacity of the BaseUnit that is used and the load current supply.

Set the "Potential group" parameter for a module as follows:

Parameters	Value range	Usage
Potential group	Use potential group of the left module (default setting)	if the total power consumption of all modules from the left + power consumption of the module is less than the current carrying capacity of the BaseUnit
	Enable new potential group	if the total power consumption of all modules from the left + power consumption of the module is greater than the current carrying capacity of the BaseUnit

You can find additional information on potential groups in the module manuals such as SIMATIC ET 200SP DI 8x24VDC HF digital input module (https://support.industry.siemens.com/cs/de/en/view/66912542).

Procedure

1. Open the device view of ET 200SP.
2. Open the "DI" and "DI 16x24VDC ST" folders in the hardware catalog.
3. Drag-and-drop the input module "6ES7131-6BH01-0BA0" to slot 1 of the mounting rail.
4. Open the "DQ" and "DQ 16x24V DC/0,5A ST" folders.
5. Drag-and-drop the output module "6ES7132-6BH01-0BA0" to slot 2 of the mounting rail.
6. Open the "Server modules" folder.
7. Drag-and-drop the server module "6ES7 193-6PA00-0AA0" to slot 3 of the rail.

Result

You have created the input and output modules and the server module.

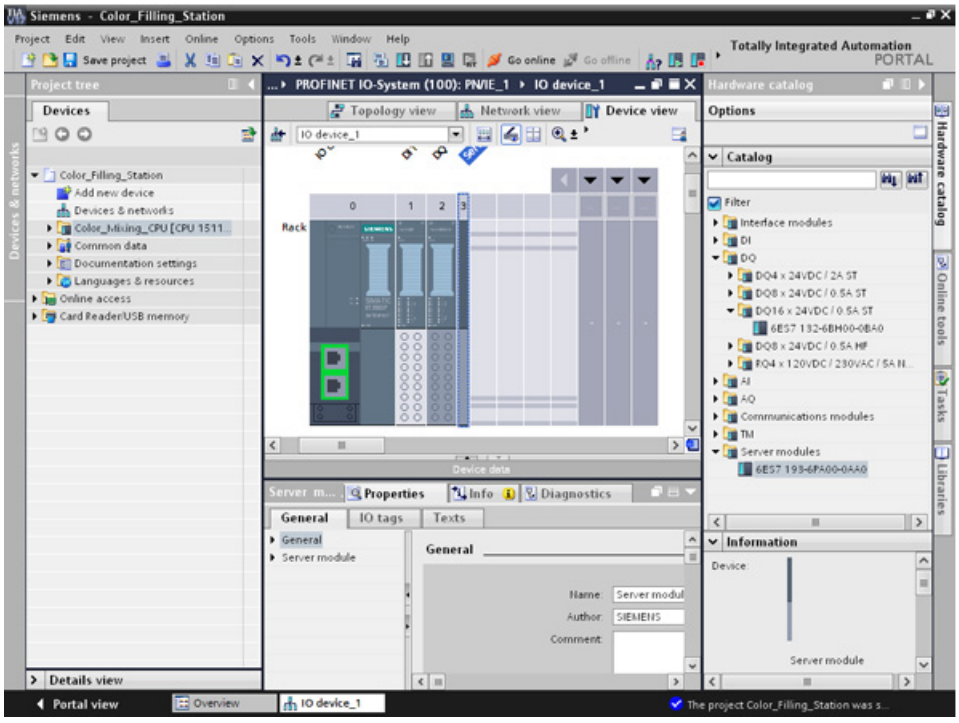

3.1.8 Creating input and output modules for ET 200MP

Introduction

In the following section, you will create the input and output modules for ET 200MP.

Procedure

1. Open the device view of ET 200MP.
2. Open the "DI" and "DI 16x24VDC HF" folders in the hardware catalog.
3. Drag-and-drop input module "6ES7 521-1BH00-0AB0" to slot 2 of the rail.
4. Open the "DQ" and "DQ 16x24VDC/0.5A HF" folders.
5. Drag-and-drop the output module "6ES7522-1BH01-0AB0" to slot 3 of the mounting rail.

Result

You have created the input and output modules.

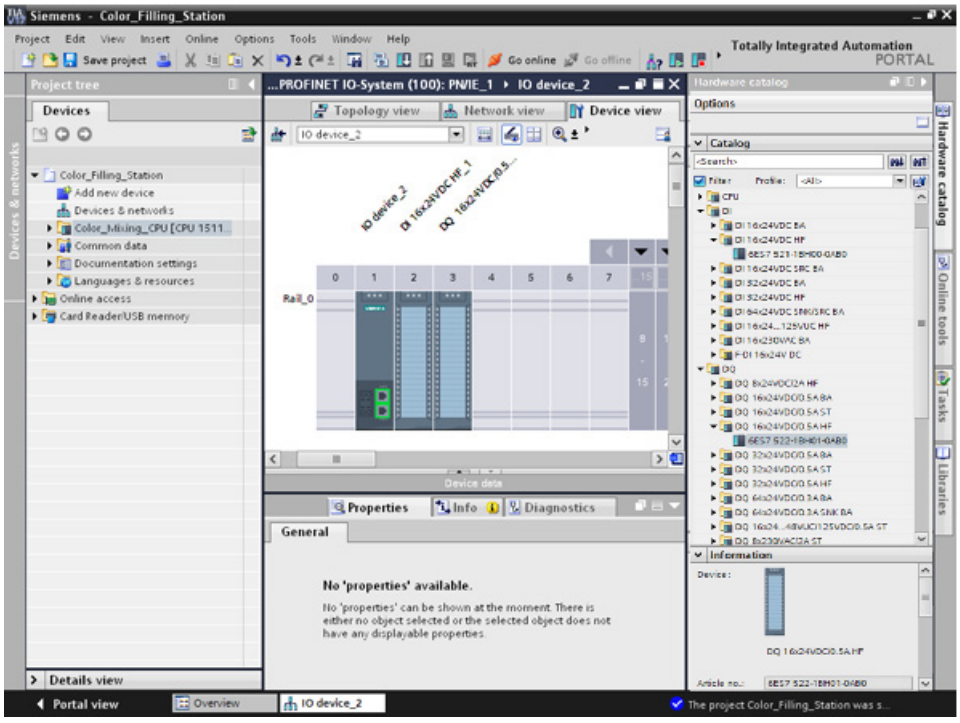

3.1.9 Assigning names for ET 200

Introduction

In the following section, you will assign project-specific names to the distributed I/O.

Procedure

1. Select ET 200SP.
2. Under **Properties > General** in the inspector window, enter the name "Valve_Control_Unit" in the "Name" field.
3. Select ET 200MP and enter the new name "Mixer_Conveyor_Control_Unit".

Result

You have assigned the project-specific names.

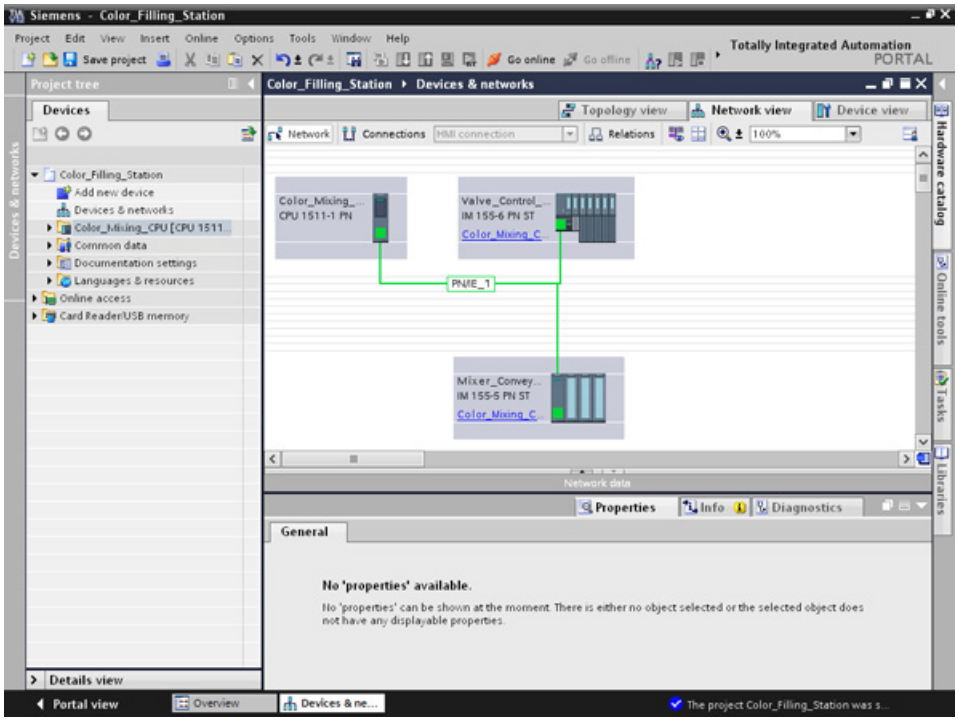

3.2 Creating the program

3.2.1 Loading the block library

Introduction

In the following section, you will load the global library "ProgLib_ColorFillingStation". This library contains the blocks and tag tables that you need for the example project. You can find the library as a ZIP file on the Internet (https://support.industry.siemens.com/cs/ww/en/view/78027451) in the section "Before you start ..." > "You can find the project for STEP 7 and WinCC here" > "Download". You need to unzip this library before you import it to your project.

Global libraries

Global libraries are used to store elements that you want to reuse in other projects. You must create global libraries explicitly.

The following libraries are provided in the standard package:

- "Buttons and Switches"

  They offer a large selection of switches and buttons. The folders organize switches and buttons into categories. You can find the "System diagnostics indicator" object in the "DiagnosticsButtons" folder, for example. You use the "System diagnostics indicator" object for system diagnostics in your plant.

- "Monitoring and Control objects"

  This provides complex operator control and display objects in several designs as well as suitable control lights, buttons and switches.

Note

Library is write-protected

The "Open read-only" option is activated by default in the "Open global library" dialog. Click in the check box to open the library without write protection.

Procedure

1. Click on the "Libraries" tab.
2. Click "Open global library".
3. Select the "ProgLib_ColorFillingStation" file from the directory that contains the unzipped library folder and click "Open".

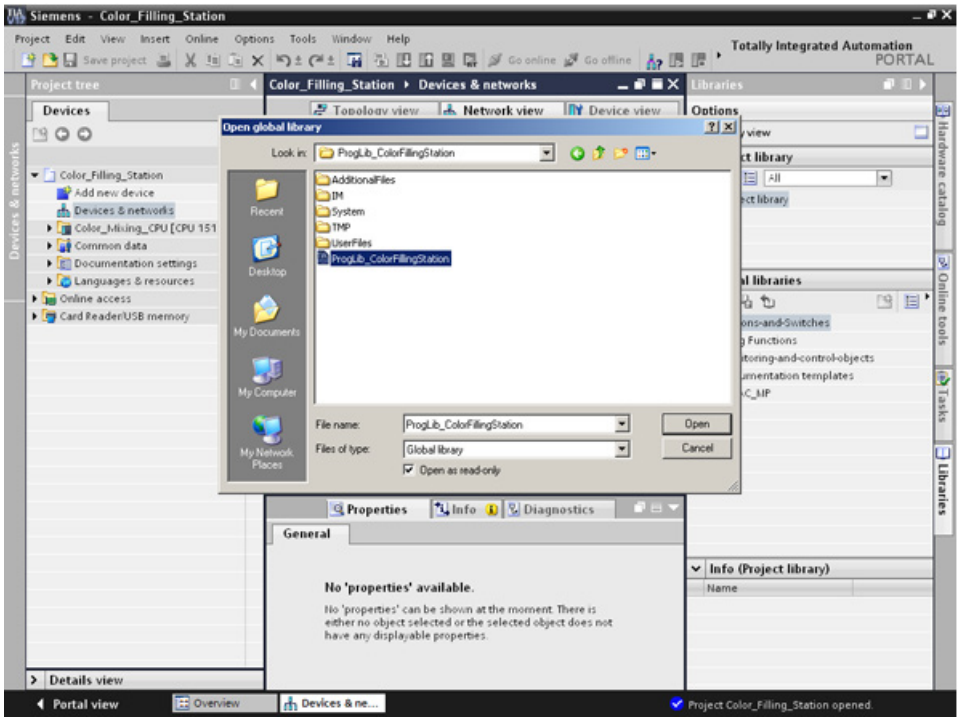

Result

The "ProgLib_ColorFillingStation" global library is open.

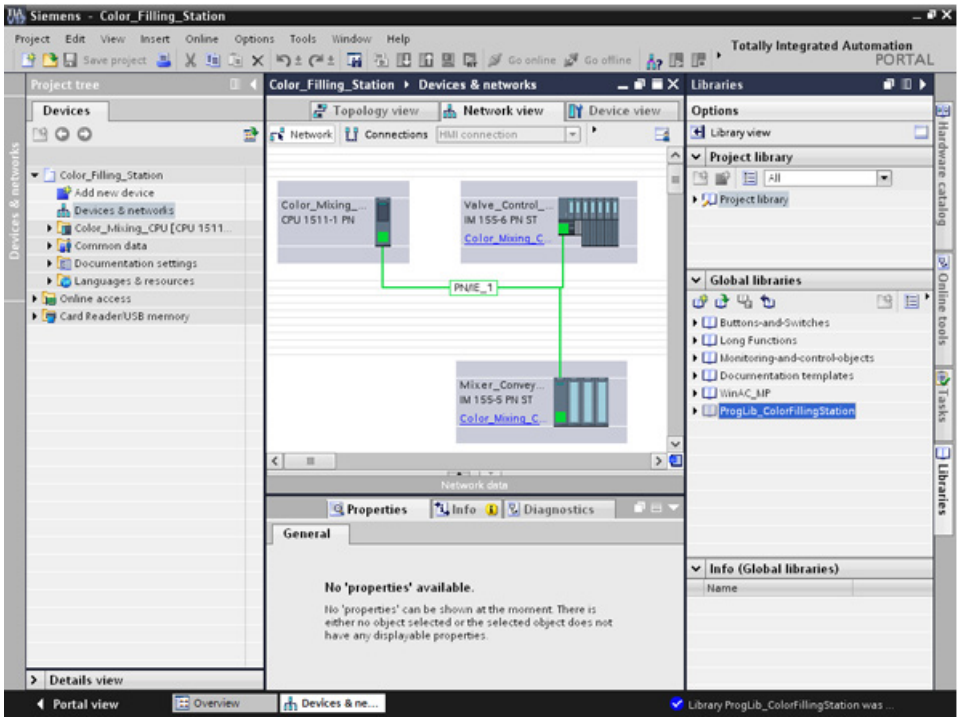

3.2.2 Deleting program block Main [OB1]

Introduction

In the following section, you will delete the automatically generated "Main [OB1]" program block from the project folder. A "Main [OB1]" program block is included in the program blocks of the example project.

Organization blocks (OBs) form the interface between the CPU operating system and the user program. These blocks are called by the operating system. At least one cycle OB must be available in an automation project.

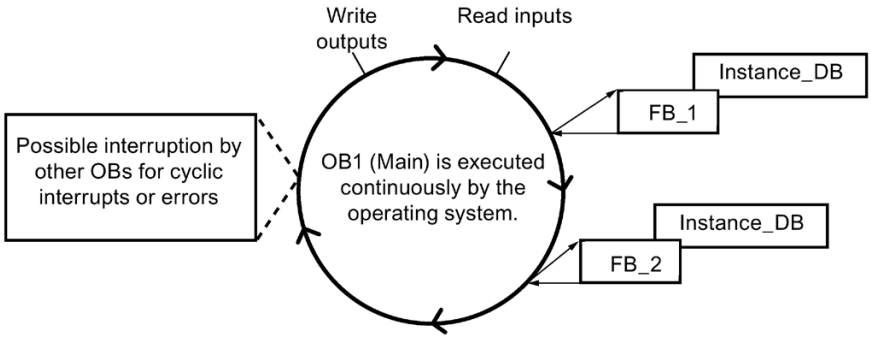

Procedure

1. Open the "Program blocks" folder in the project tree and then click the "Main [OB1]" program block.
2. Right-click to open the shortcut menu and then click "Delete".
3. Click "Yes" to confirm deletion of the block.

Result

The automatically generated "Main [OB1]" program block is deleted.

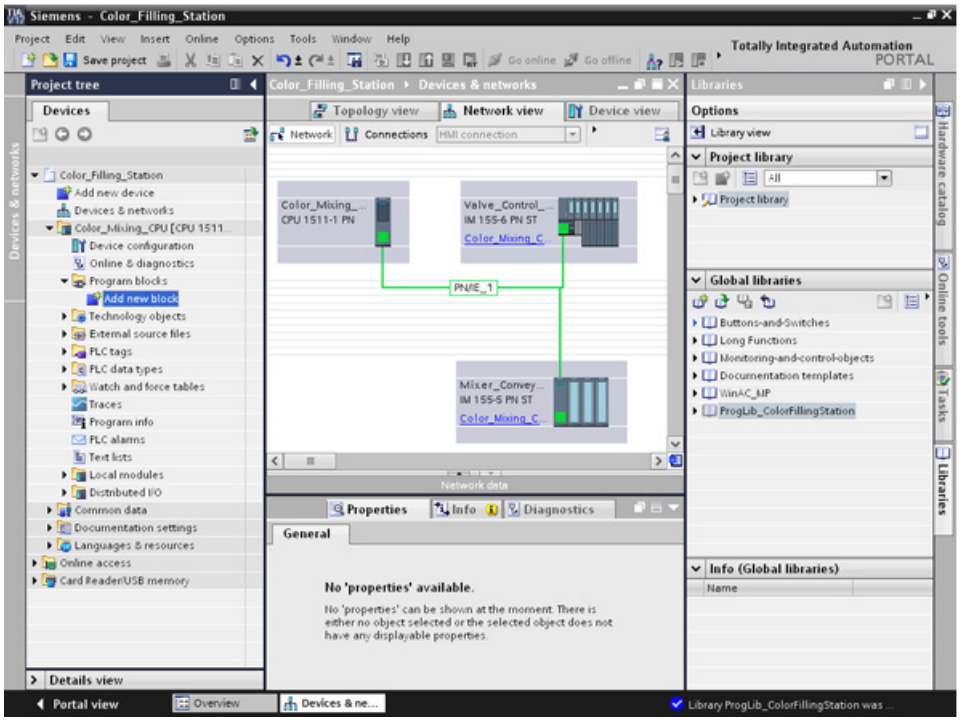

3.2.3 Copying program blocks

Introduction

In the following section, you will insert the program blocks from the "ProgLib_ColorFillingStation" global library into your project.

Procedure

1. Click on global library "ProgLib_ColorFillingStation".
2. Click the "Master copies" folder and then on "Programm_blocks".
3. Drag-and-drop the program block to be imported from the global library to the "Program blocks" folder.
4. Proceed as described in steps 2 and 3 for the other blocks.

Result

The program blocks are inserted in the project folder of the same name.

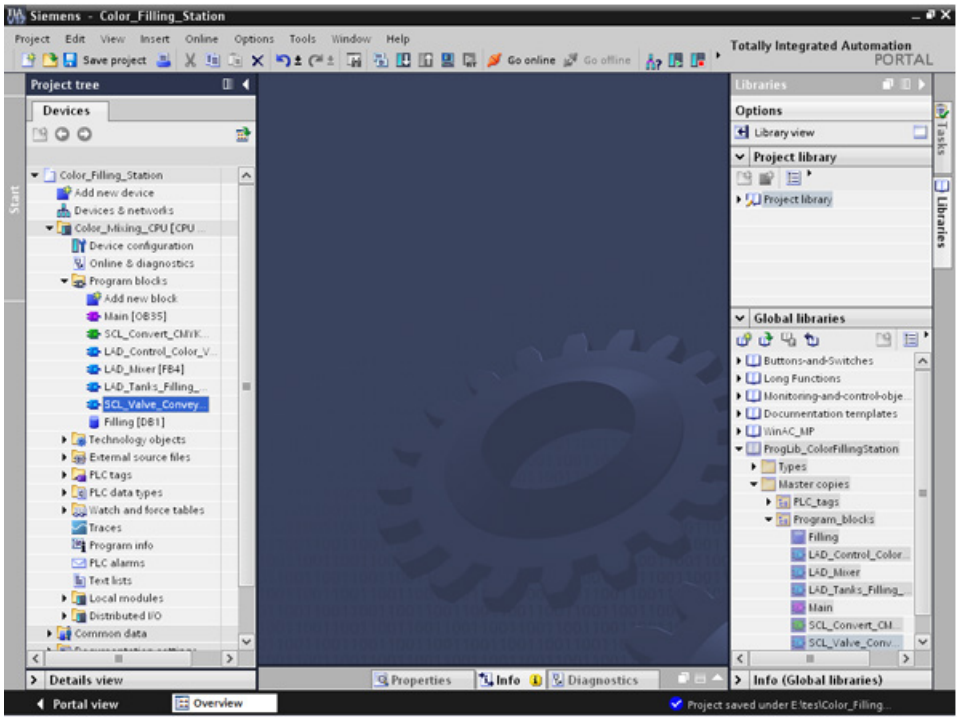

3.2.4 Cyclic interrupt OB

3.2.4.1 Cyclic interrupt OB – Cycle time and phase

Cycle time and phase offset can be changed

Main [OB35] is located below the program blocks inserted into the project. Main [OB35] is a cyclic interrupt organization block (cyclic interrupt OB). Cyclic interrupt OBs serve to start programs in periodic time intervals independently of the cyclic program execution. The start times of a cyclic interrupt OB are specified using the cycle time and the phase offset.

Cycle time

The cycle time determines the interval at which an OB is called. The cyclic interrupt OB has a cycle time of 100000 µs by default.

Phase offset

The phase offset is used to increase the accuracy of the processing intervals of cyclic interrupt programs. If an OB has the same or a common multiple clock pulse of another OB, both can be operated at a precise interval by a phase offset.

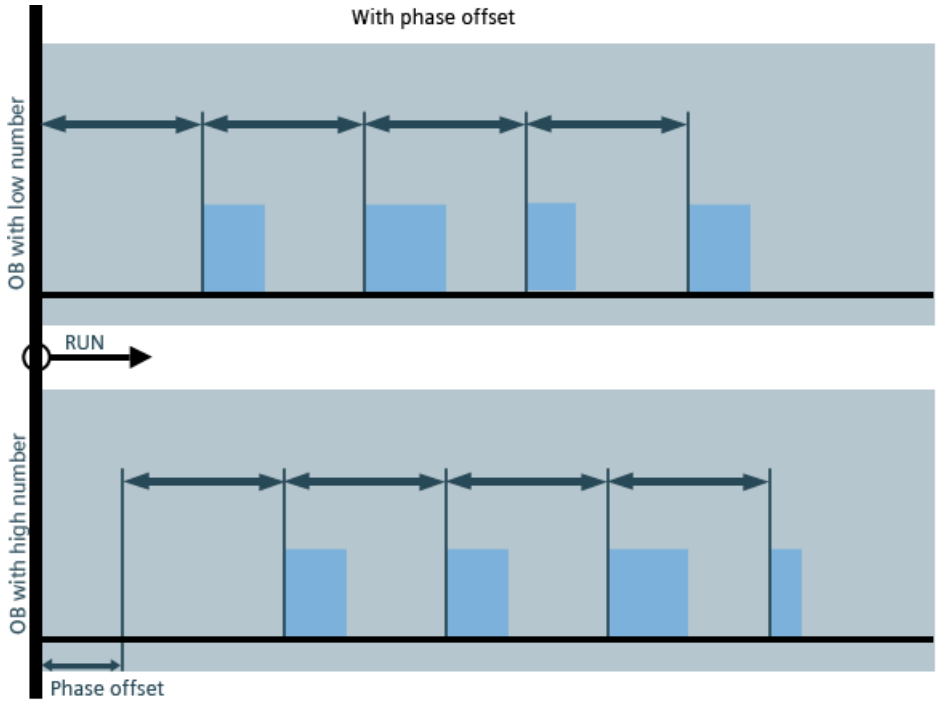

3.2.4.2 Changing the cycle time

Introduction

In the following section, you will change the cycle time for the "Main" program block.

Requirement

- The program block "Main" [OB35] is contained in the library
- The FB/FC calls exist

Procedure

1. Open the properties of the "Main" program block.
2. Select the "Cyclic interrupt" option under "General".
3. Enter the new value for the "Cycle time" and click "OK".

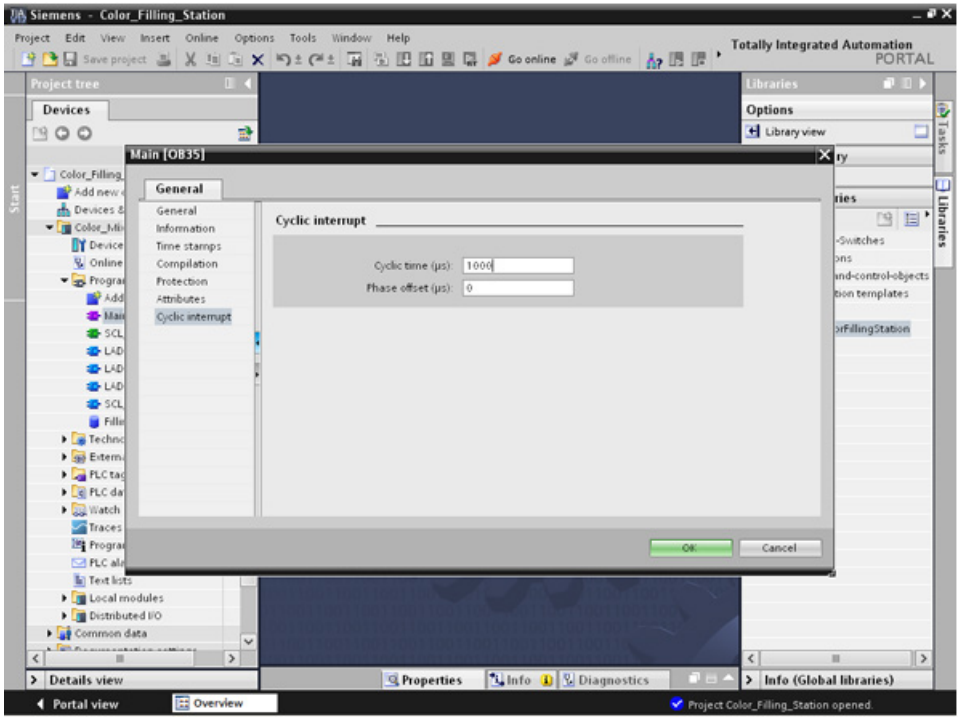

Result

The cycle time is changed.

3.2.5 Copying tag tables

Introduction

In the following section, you will insert the tag tables from the "ProgLib_ColorFillingStation" global library into your project.

Procedure

1. Open the "PLC tags" folder in the project navigation.
2. Open the "PLC_tags" folder.
3. Drag-and-drop the tag table to be imported from the global library to the "PLC tags" folder.
4. Proceed as described in step 3 for the other tag tables.

Result

The tag tables are inserted in the project folder of the same name.

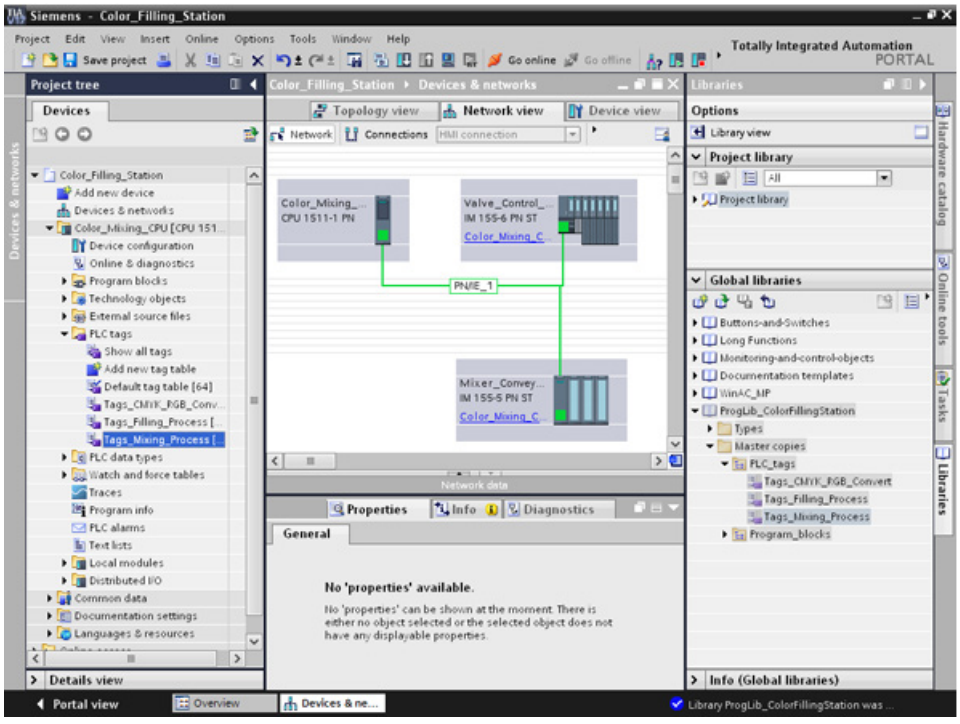

3.2.6 Compiling a project

Introduction

In the next section, you will compile the "Color_Filling_Station" project.

Procedure

1. Select the "Color_Mixing_CPU" CPU in the project tree.
2. Right-click to open the shortcut menu and then select "Compile" > "Hardware and software (only changes)".

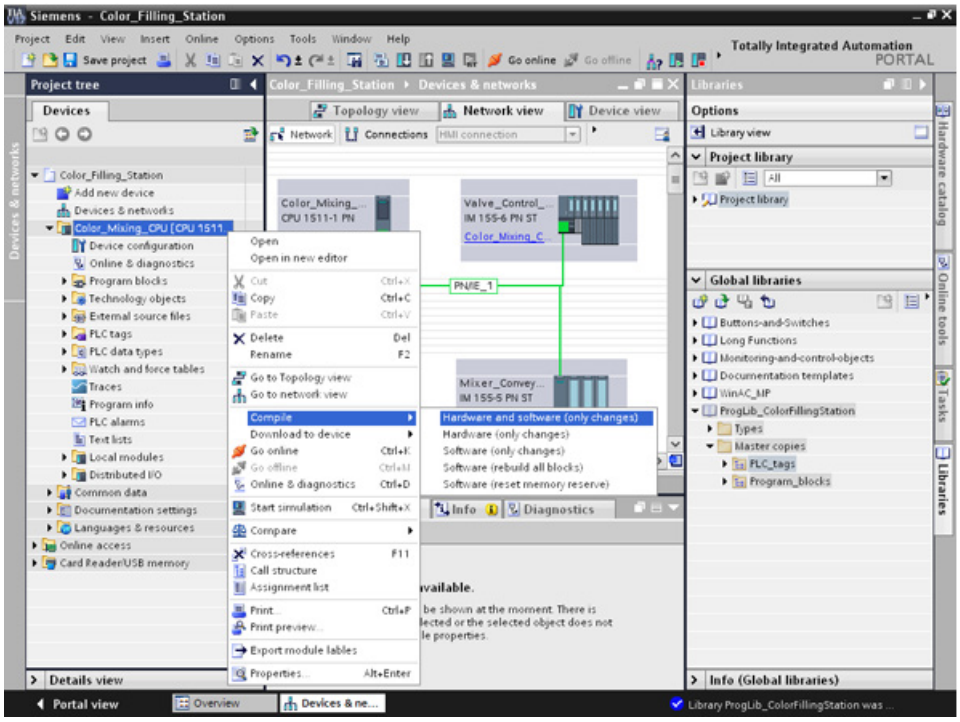

Result

The project is compiled and ready for downloading.

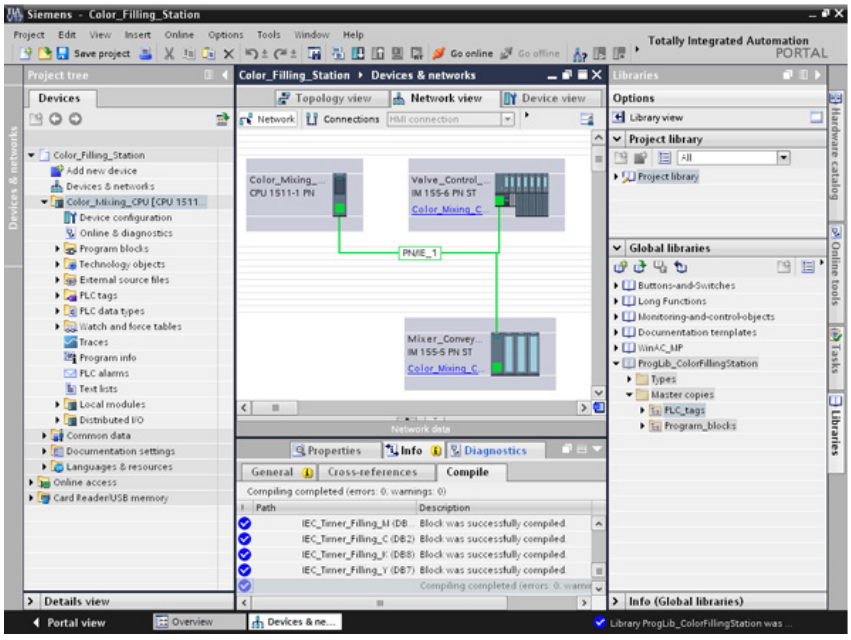

Note

"Main" program block is updated

Open the "Main" program block after compilation. All instance data blocks have been created and the data blocks are updated.

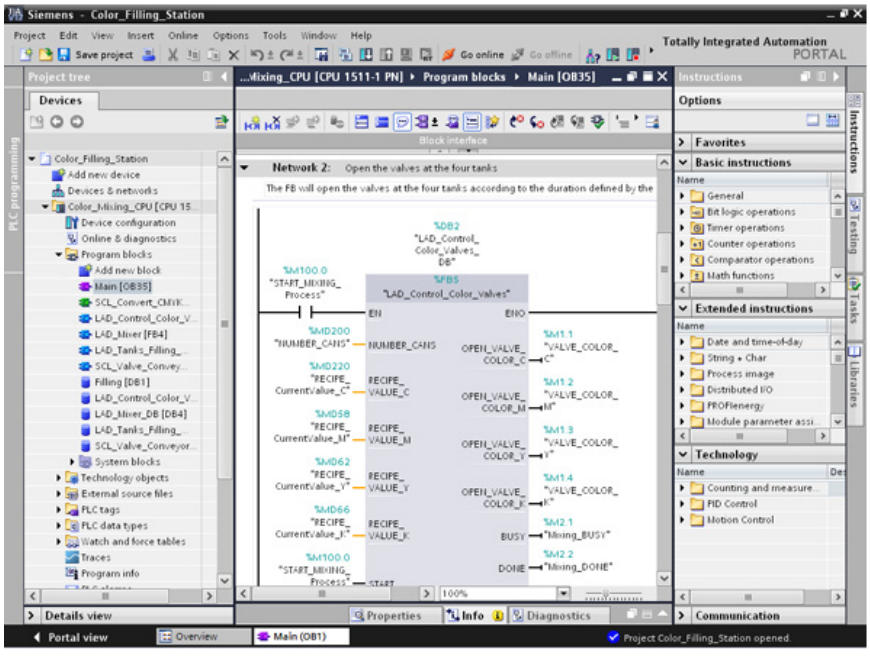

3.2.7 Load project into the CPU

Introduction

In the next section, you will download the "Color_Filling_Station" project to the CPU.

Note

Displaying all compatible devices

If the desired CPU is not displayed after you have made the settings in the "Extended Download" dialog, click the option "Show all compatible devices".

Procedure

1. Open the CPU shortcut menu and select "Download to device" > "Hardware and software (only changes)".
2. From the drop-down lists, select the PG/PC interface type, the interface and the connection with the subnet.
3. Select the CPU from the compatible devices in the subnet and click "Load".

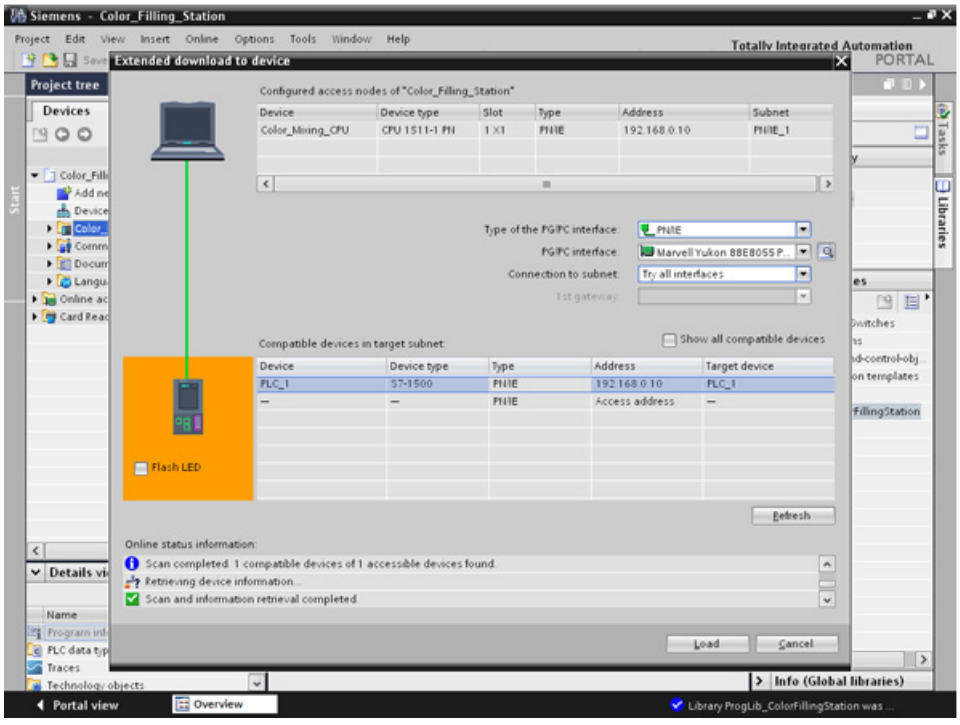

4. Confirm the two "Assign IP address" dialogs with "Yes" and "OK".
5. In the "Load preview" dialog, select the alternative entry for all entries set to "No action" in the drop-down list and confirm open options.
6. Click "Load".
7. Confirm the "Start all" option and click "Finish".

Result

The project is downloaded to the CPU.

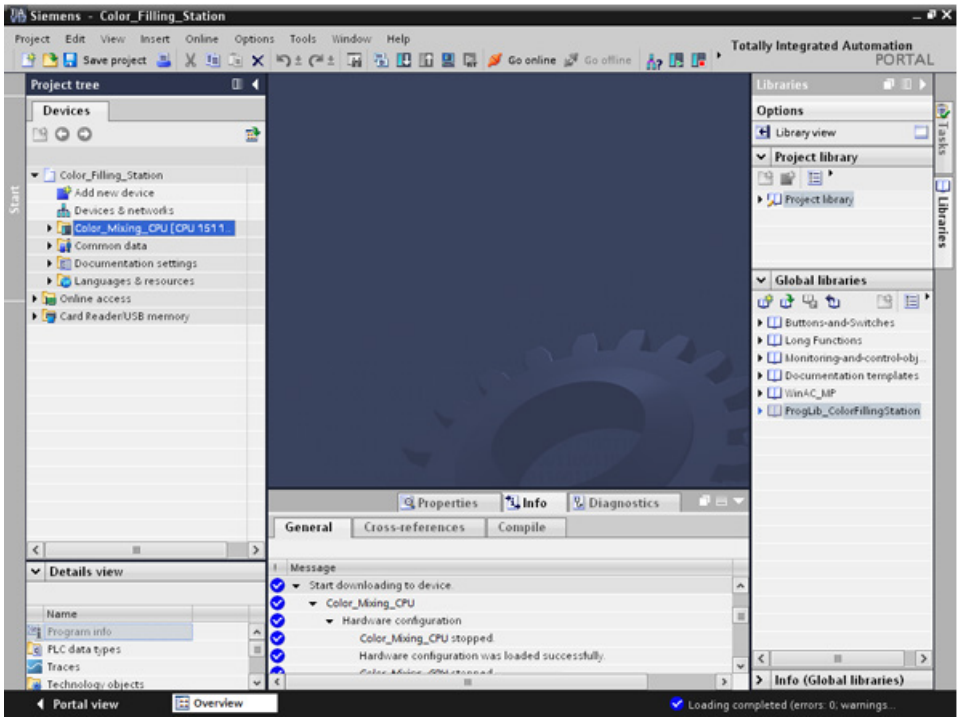

3.2.8 Optimized block access

3.2.8.1 Introduction

Operating principle

The "optimized data blocks" of the CPUs of the S7-1500 series are optimized for performance and are only programmed symbolically. By using the optimized data blocks, you make your program more efficient, because the declared tags are given symbolic names and no longer a fixed address.

You can create data blocks with any structure without paying attention to the physical arrangement of the individual tags. Quick access to the optimized data is always available because the data storage is optimized and managed by the system.

Changing data types increases the risk of error in the standard block. In the optimized block, changes lead to a reorganization of the data storage. Addressing remains unique.

To enable the subsequent editing of user programs that are already running in a CPU, the S7-1500 CPUs support the option of extending the interfaces of function or data blocks during runtime. You can download the modified blocks without setting the CPU to STOP and without affecting the actual values of tags already loaded.

In addition: You can define in the data block itself, which the values in the CPU are read-only for an HMI device ("Visible in HMI") or which can be written ("Accessible from HMI").

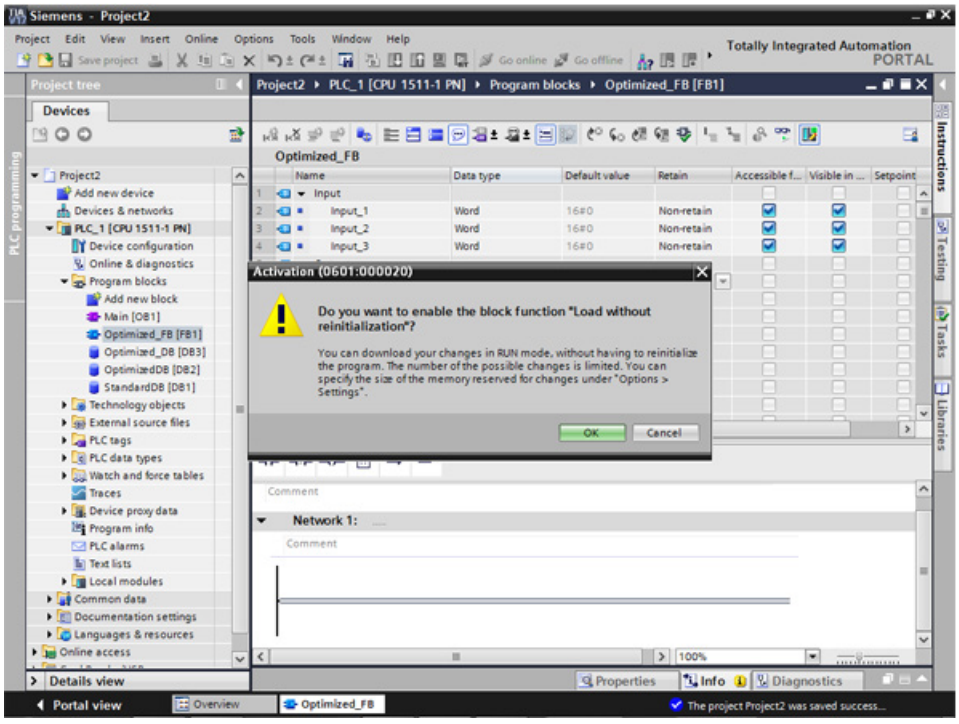

3.2.8.2 Expanding and reloading the optimized "Filling" data block

Introduction

In the following section, you will supplement the "Filling" data block with the date and time of the last filling and reload the data block. To do this, create a block for recording the date and time and enable the function "Download without reinitialization".

Note: The "Download without reinitialization" function protects the actual parameters of the data block from being overwritten during download to the CPU.

Advantages of symbolic addressing: The use of universally applied and meaningful symbols in the entire project makes the program code easier to read and understand. This gives you the following advantages:

- You do not have to write detailed comments.
- Data access is faster.
- No errors occur when accessing data.
- You no longer have to work with absolute addresses.
- The assignment of the symbol to the memory address is monitored by STEP 7, which means that all points of use are automatically updated when the name or the address of a tag changes.

Requirement

- The library has been loaded
- The project has been compiled and loaded into the CPU

Procedure

1. Open the "Filling" data block and the "Main" program block.
2. Enable the "Monitoring on/off" function for the "Main" program block.
3. In the "Main" program block, open the shortcut menu of the "'FILLING' FillingLevel_CMYK_C" I/O in the 3 network with a right-click and select "Modify > Modify operand".
4. Enter a new value and click "OK".
5. Enable the "Download without reinitialization" function and the "Monitor all" function in the "Filling" data block.

6. Create a new parameter named "DT_Loc-T_Last_Filling" and select "Date_And_Time" as the data type.

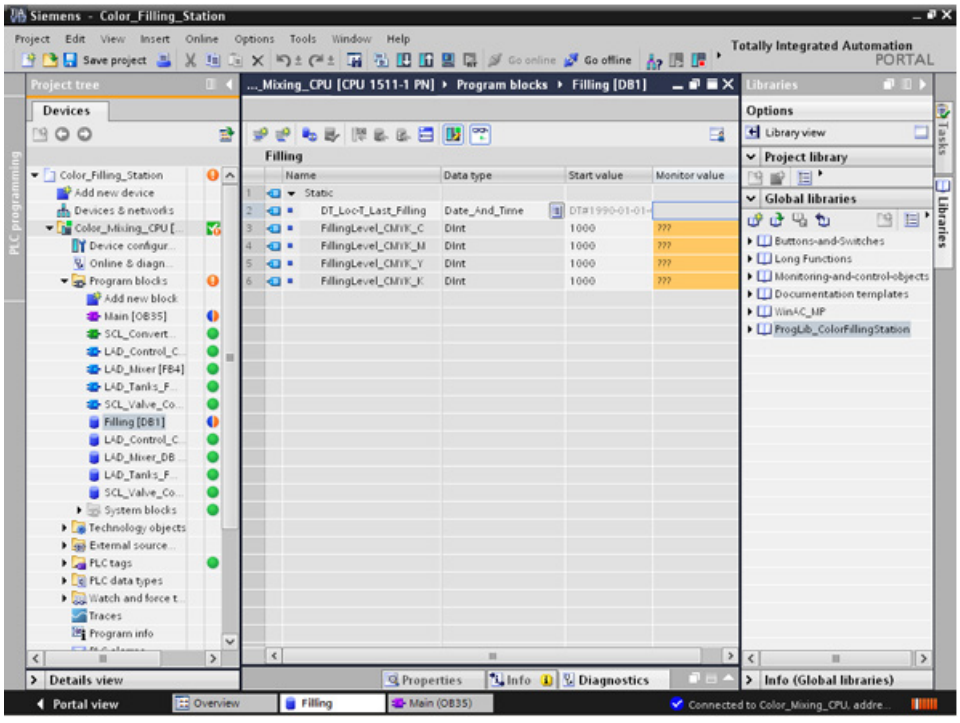

7. Insert a normally closed contact into the "Main" program block in the 5 network, and interconnect it with the "FILLING_DONE" parameter.

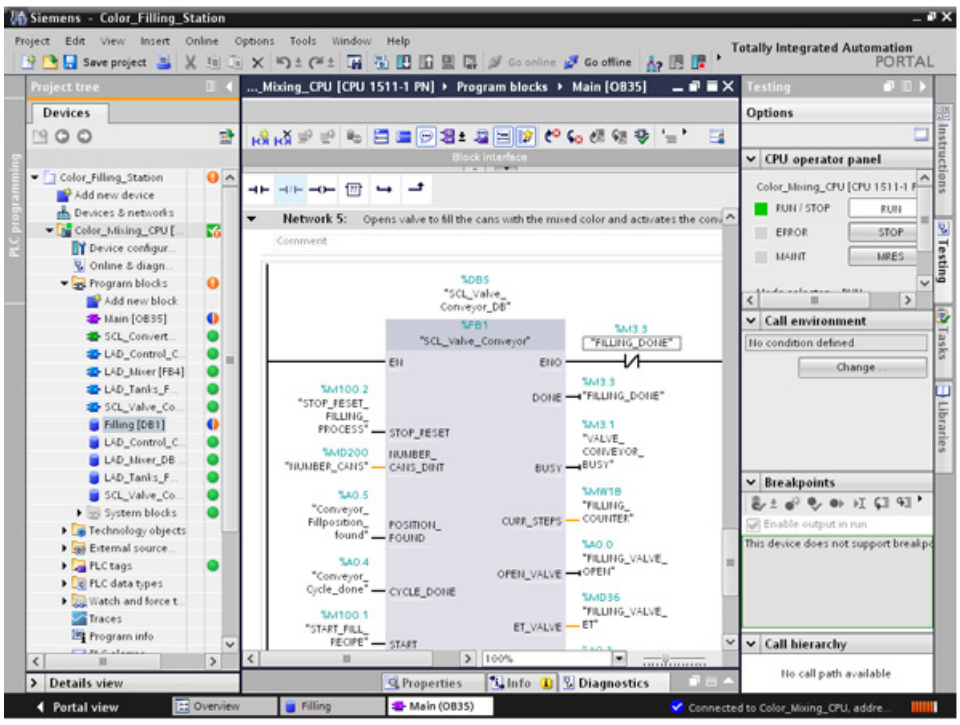

8. Open the "Date & time" folder from the "Instructions" tab and insert the "RD_Loc_T" block in the "Main" program block.

9. Interconnect the "OUT" output with the "DT_Loc-T_Last_Filling" parameter and the "RED_VAL" output with the newly created "RED_VAL_Loc-T" parameter. Use the "LAD_Tanks_Filling_Process" data block as the storage location for the "RED_VAL_Loc-T" parameter.

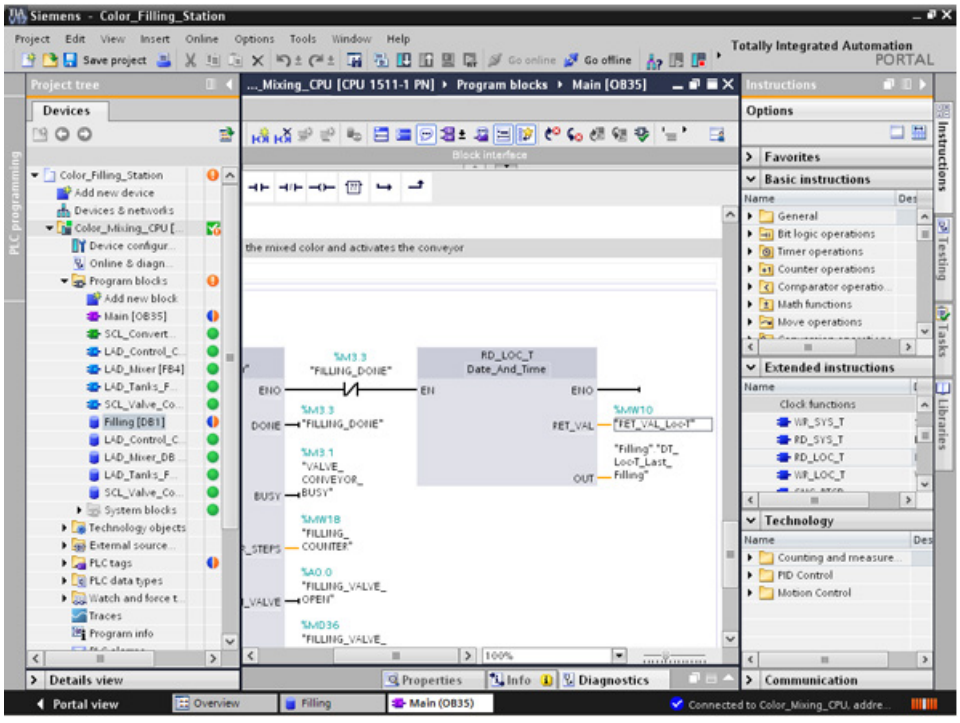

10. Compile and download the project.

Result

The date and time of the last filling are reloaded. The actual parameters of the "Filling" data block are not overwritten.

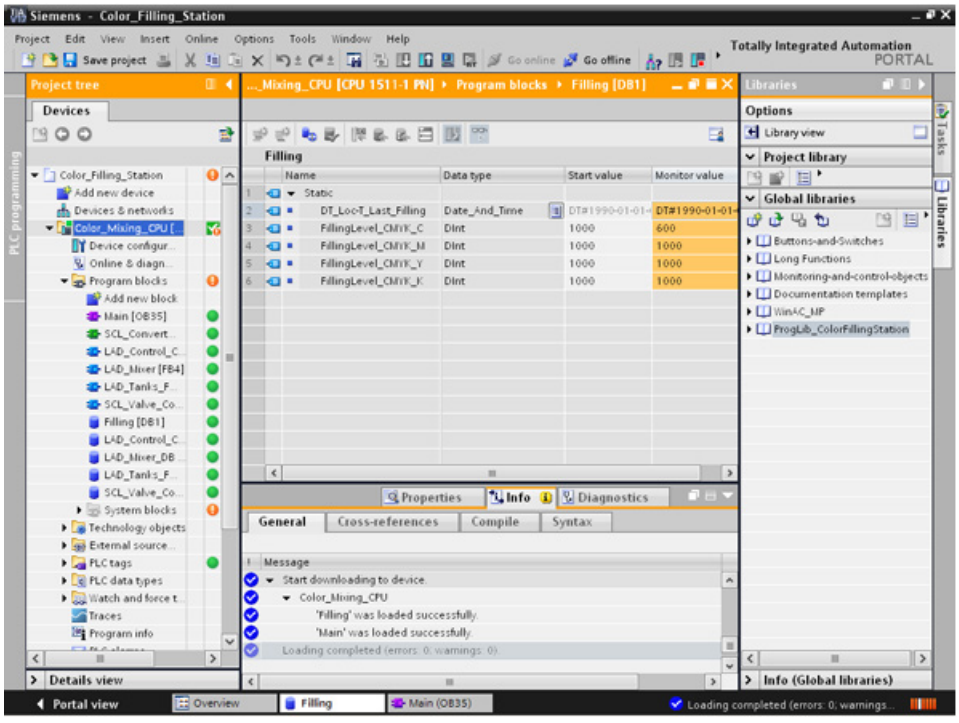

3.2.9 Versioning a block

Introduction

The use of block types ensures a high degree of standardization in your projects. You can easily integrate function extensions to the block type into existing projects. Change tracking is ensured by versioning. In this example, you create a "LAD_Tanks_Filling" block as a type in the project library. As a function extension, replace the three instructions for the level calculation with CalculateBox, which performs all arithmetic functions. This optimization means that fewer temporary tags are required and that the switch between blocks with various programming languages is no longer necessary.

Procedure

1. Compile the "LAD_Tanks_Filling" block and then insert it in the project library under "Types".
2. Create a new block version with "Edit type".

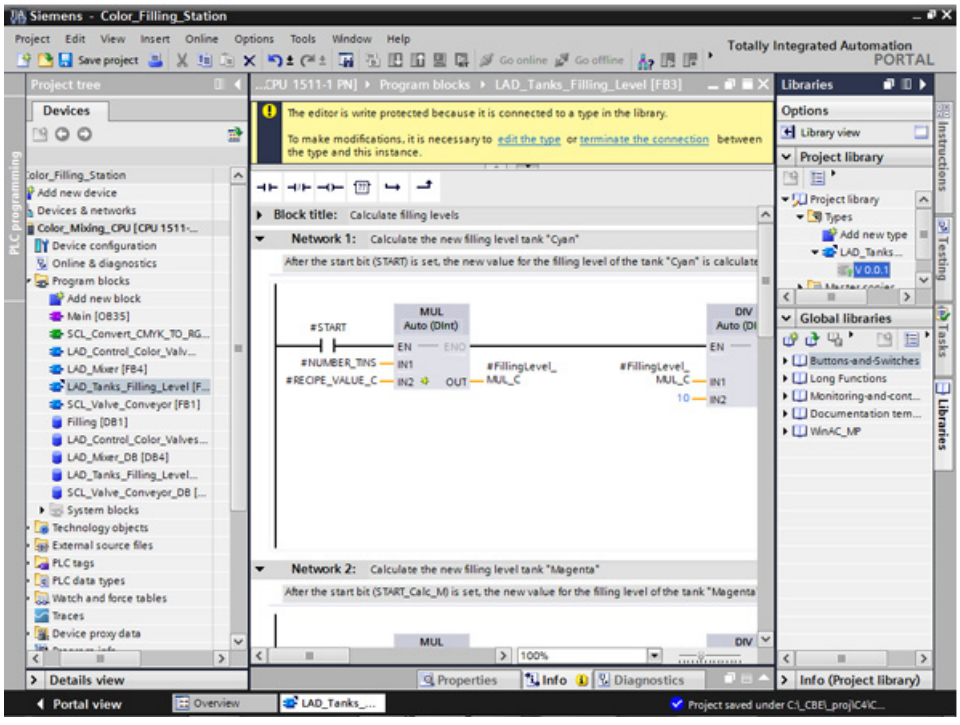

3. Insert the CALCULATE instruction from the "Basic instructions > Mathematical functions" library.
4. Delete the MUL, DIV and SUB instructions from the block.

5. Insert two inputs into the CALCULATE instruction and interconnect the inputs.

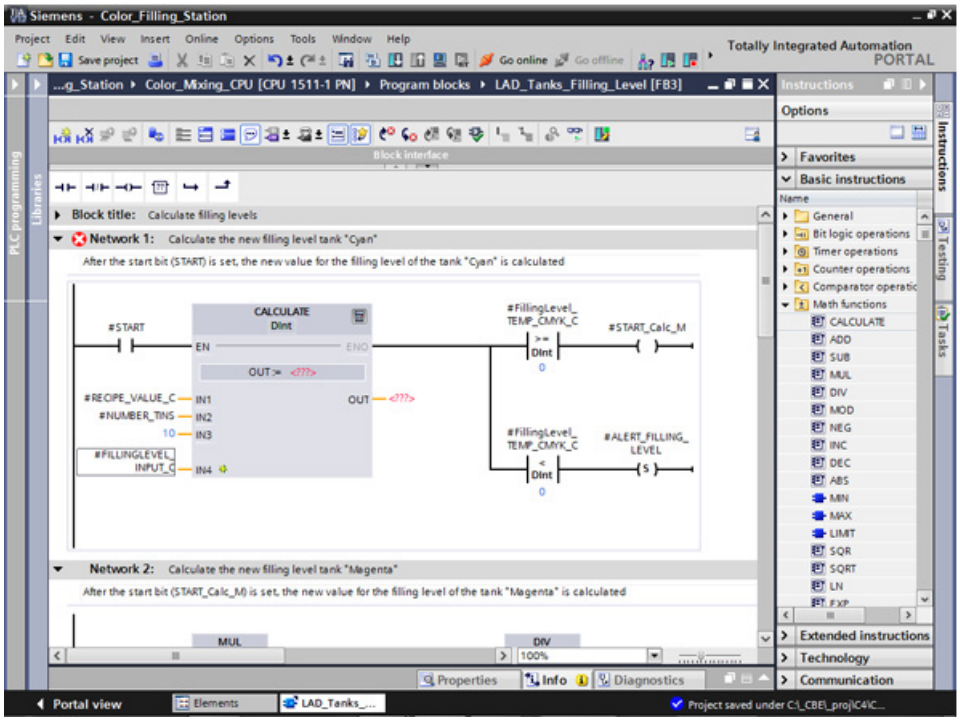

6. Define the calculation formula and then interconnect the output.

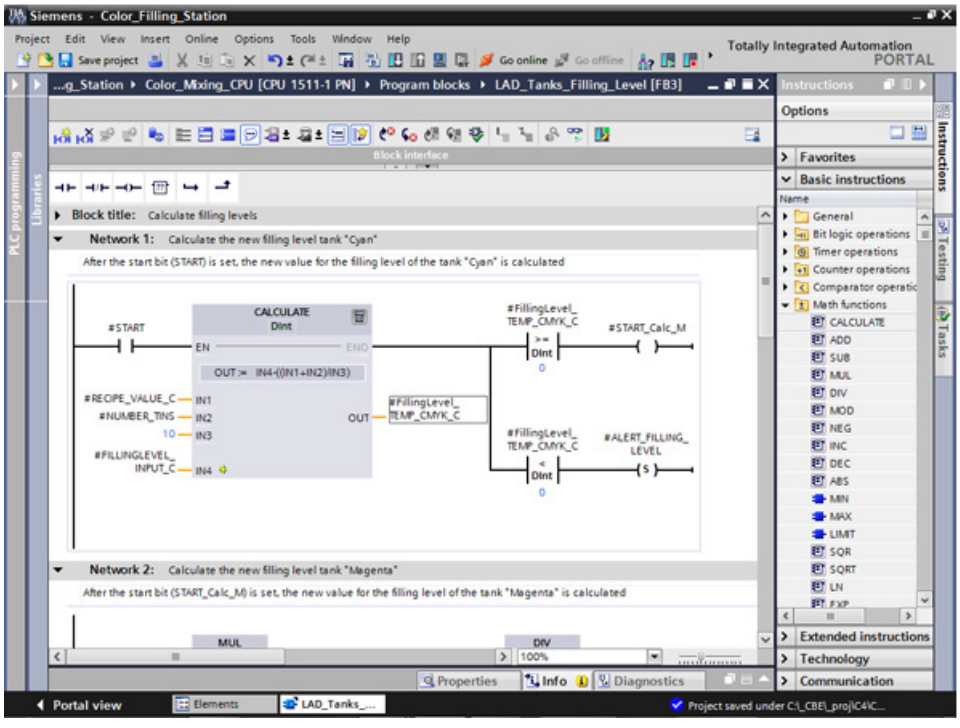

7. Release the block version.

Result

The revised version of the block type is saved in the library with a new version number.

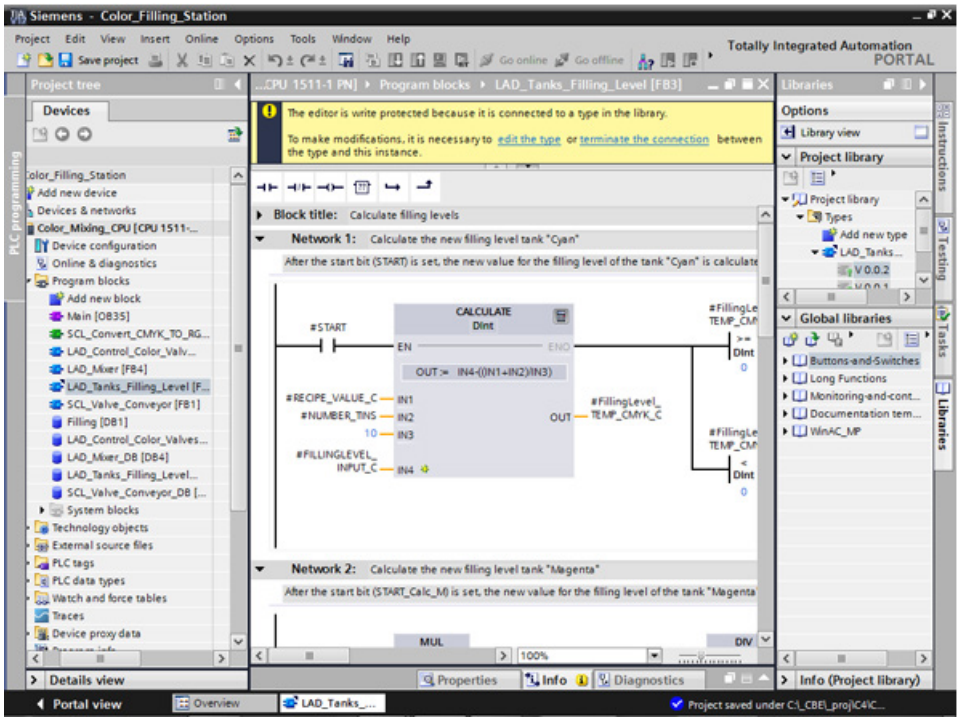

3.2.10 Setting retentivity

Introduction

All tags are initialized with their configured start values during CPU startup, for example, after a power failure. The most recent values the tags had immediately before the interruption are overwritten with the initial values. To prevent this, define the tag as retentive. Retentive tags retain their values even after a restart.

In this example, the levels of paint storage tanks are backed up in the retentive memory area of the CPU.

Procedure

1. Connect to the CPU online.
2. Enable the retentivity for the "Cyan" entry in the "Filling" data block.

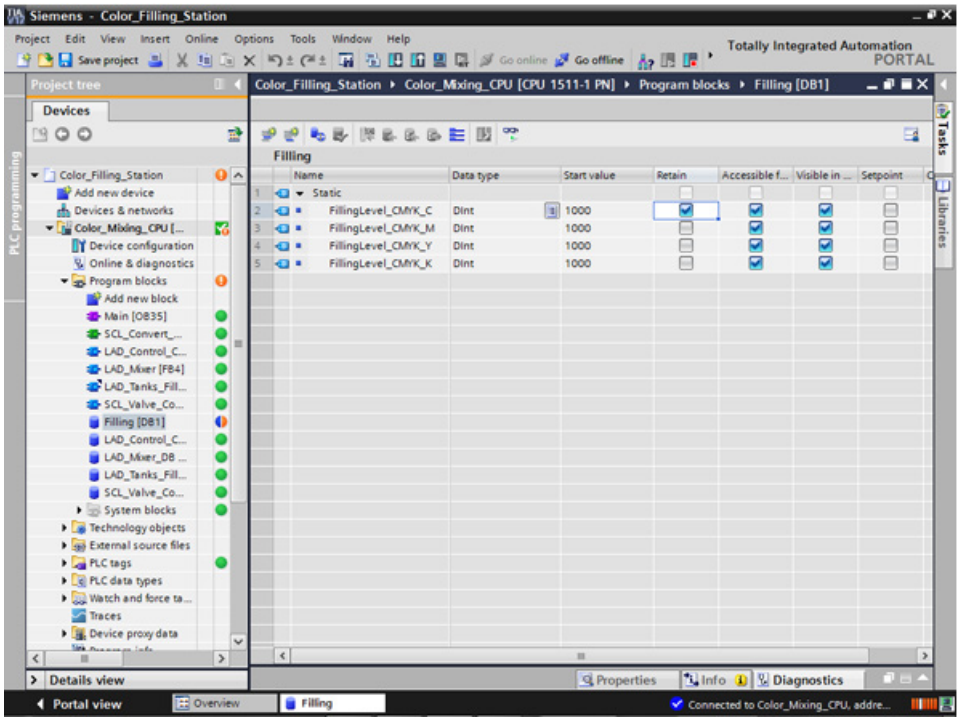

3. Load the change to the CPU.
4. Drag the "Watchtable" object from the library into the project. This object contains the fill level tags included a control value.

5. Transfer the control values to the CPU with "Modify now".

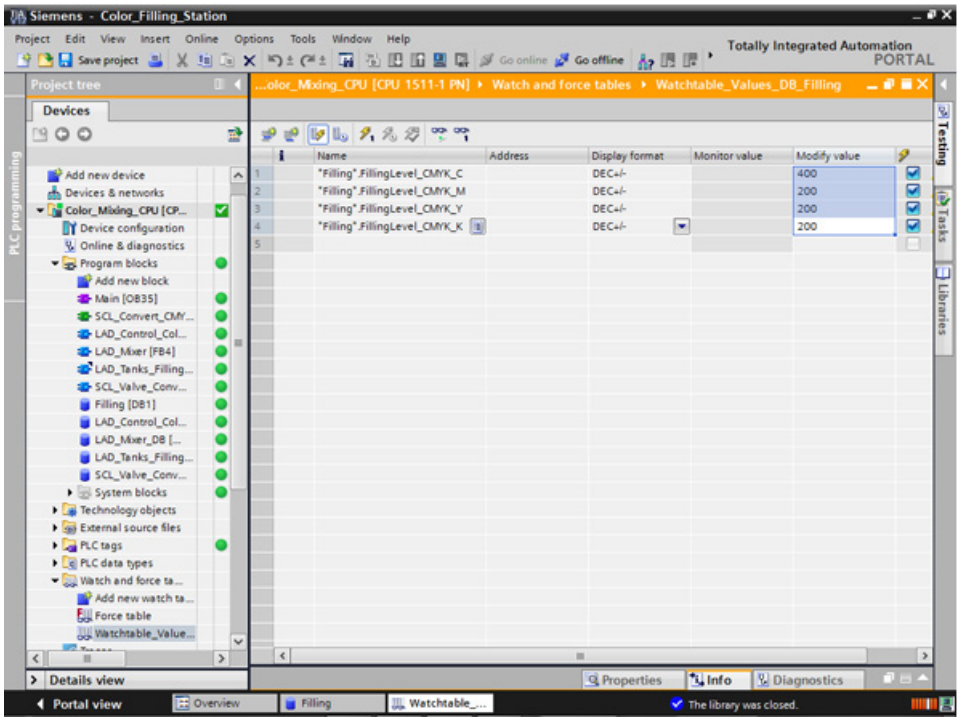

6. Close the online connection to the CPU. To simulate a power failure, disconnect the power supply to the CPU.

7. Reconnect the power supply and go online to the CPU. Enable "Monitor all" for the "Filling" DB.

Result

The fill level for "Cyan" is read from the retentive memory area. All other fill levels are re-initialized with their start value.

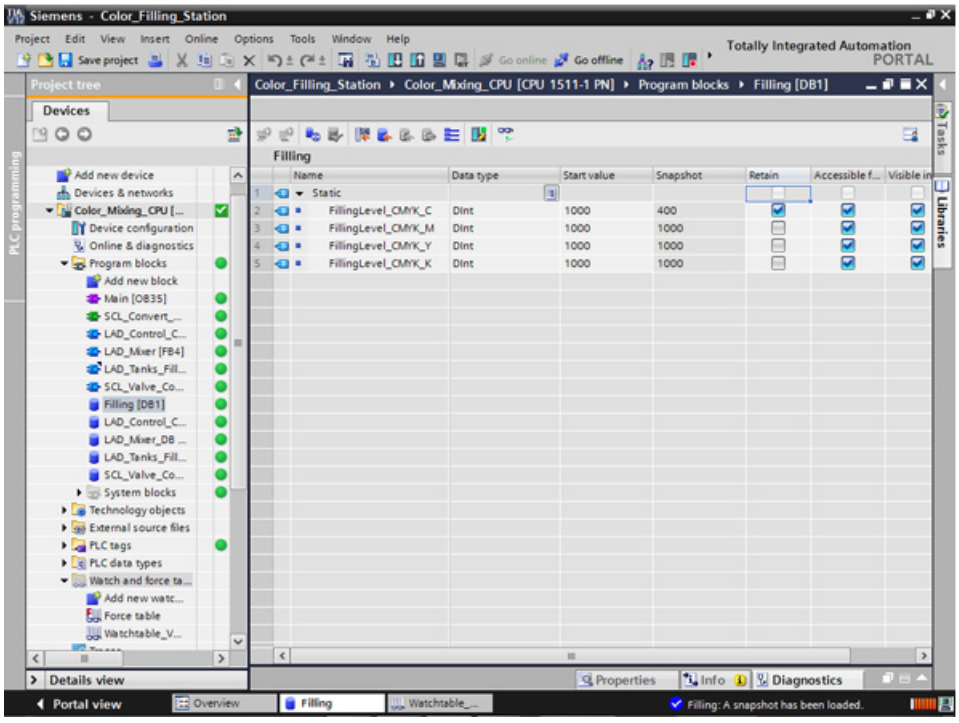

3.2.11 Activating the EN/ENO mechanism

Introduction

The EN/ENO mechanism in various instructions enables you to detect runtime errors and avoid a program crash. Newly inserted ENO instructions are disabled by default. You can then activate the ENO enable output. You can use this in a new network that has the fill level of all paint storage tanks reset to the start value (1000) at the same time.

Procedure

1. Open the Main[OB35] program block and insert the MOVE instruction into network 10.
2. Expand the instruction to a total of four outputs.
3. Insert a normally open contact before the MOVE instruction.
4. Insert a reset coil after the MOVE instruction.
5. Interconnect the inputs and outputs of the MOVE instruction.

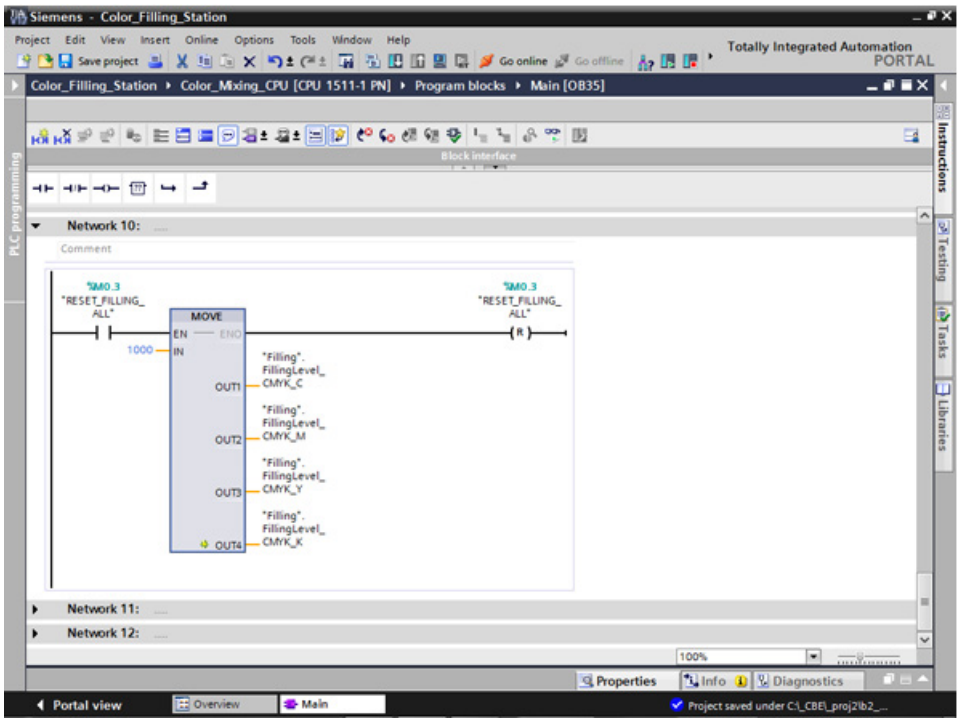

6. Generate the instruction with the ENO shortcut menu.

Result

The EN/ENO mechanism is interconnected for this block. If there are no errors during execution, the ENO enable output has the signal state "1". If there are errors during execution, the ENO enable output has the signal state "0".

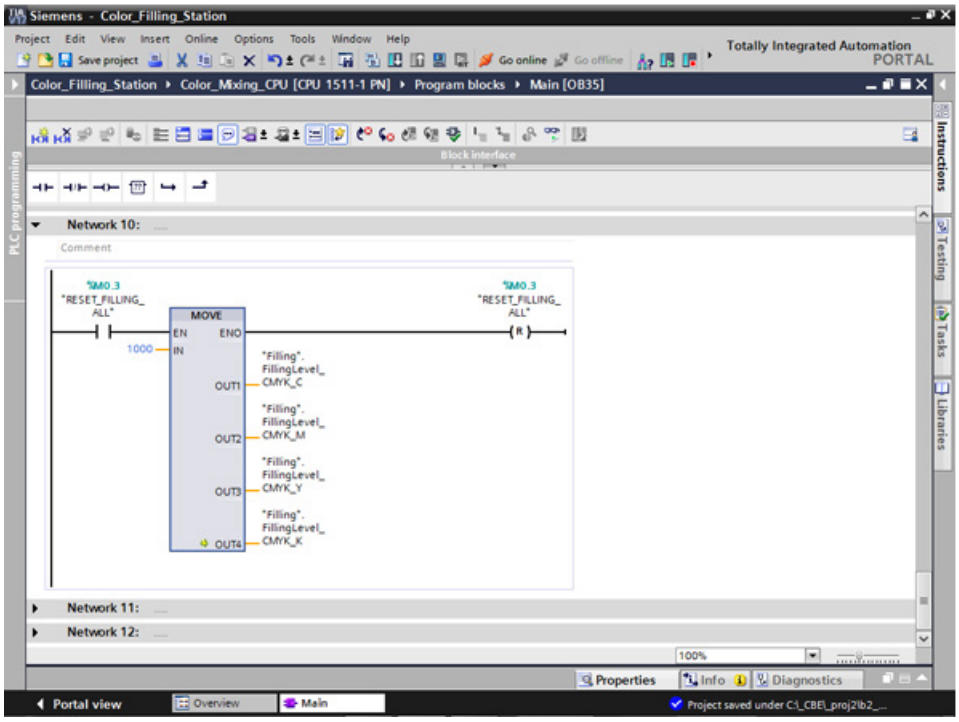

3.2.12 Using the comment function

Introduction

The MOVE and Reset instructions should be expanded with detailed commentary.

Procedure

1. Insert a comment using the shortcut menu.
2. Enter the comment text.

Result

The comments for the instruction and the coil are entered.

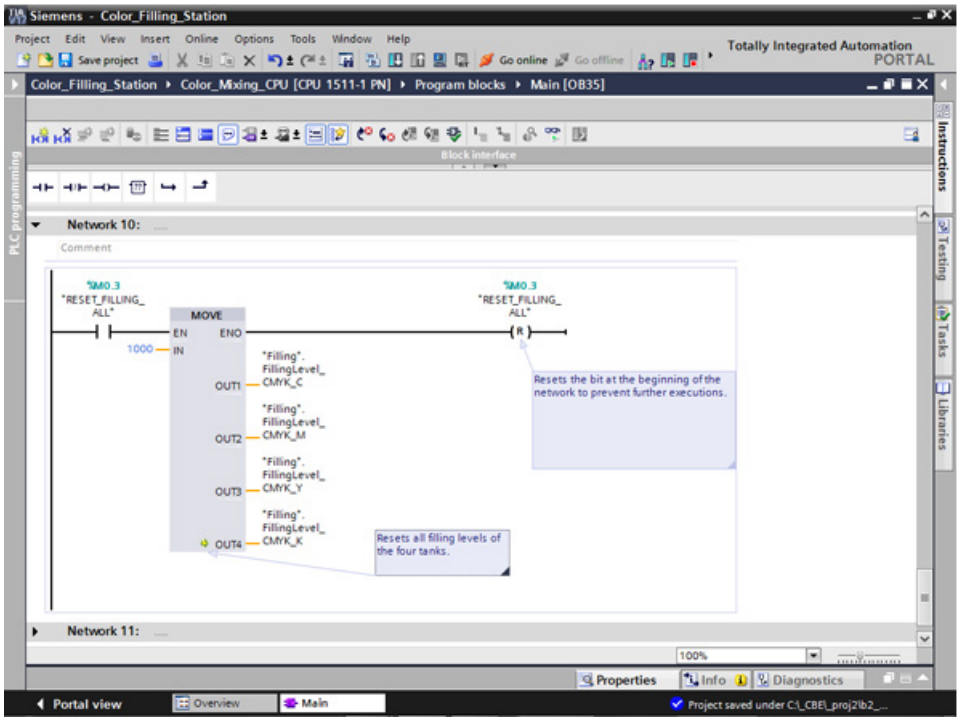

3.2.13 Local error handling

3.2.13.1 Handle errors within block

Procedure

Unlike the CPUs of the S7-300/400, CPUs of the S7-1500 go to STOP with errors much less often. If an error occurs, it is entered in the diagnostics buffer of the CPU. You avoid the CPU STOP by using local error handling at each block. You should preferably enable local error handling during development of the user program.

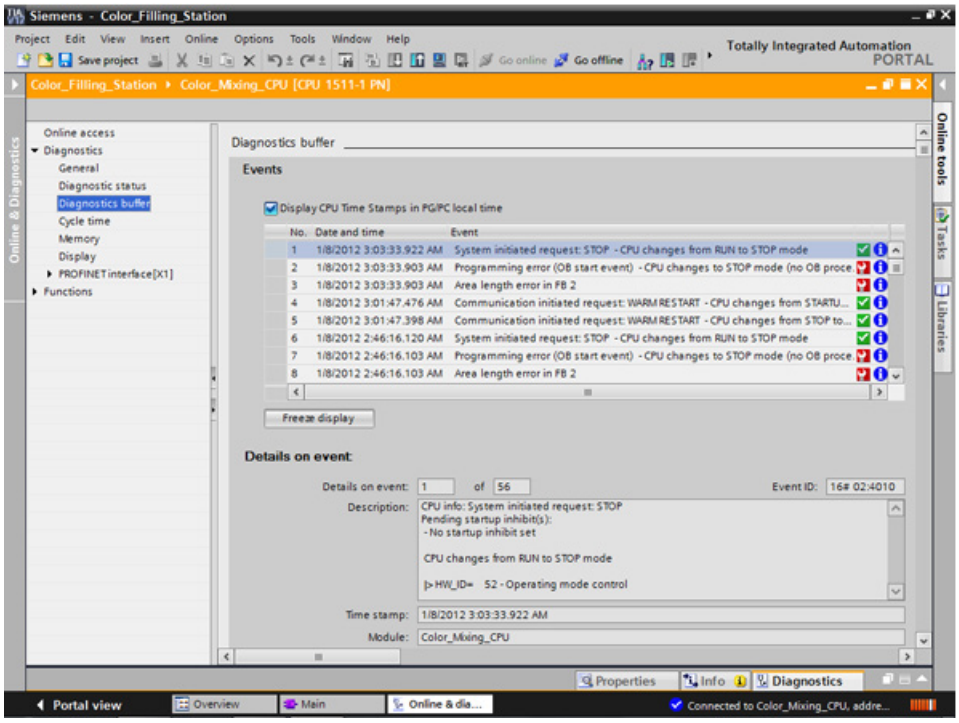

You can precisely evaluate the information and, for example, program the error handling in the block with STL/FBD/LAD and SCL programs. The block generates an error ID that is evaluated by the "GET_ERROR_ID" instruction. You can call the "GET_ERROR_ID" instruction in both the MAIN block and in the function blocks. The CPU remains in RUN mode.

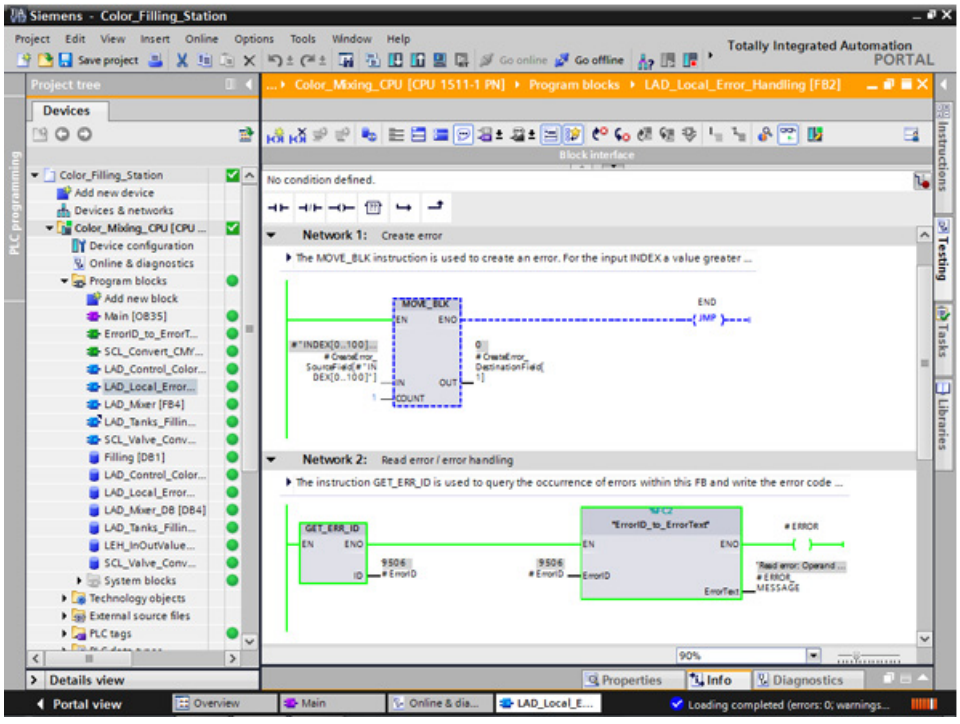

3.2.13.2 Loading blocks for local error handling

Introduction

To illustrate the local error handling, load the blocks of the "ProgLib_LEH" library in the project. The blocks are used only to demonstrate the local error handling and are otherwise not used in the project.

Procedure

1. Open the global library, "ProgLib_LEH".
2. Copy the blocks from the master copies into the project.

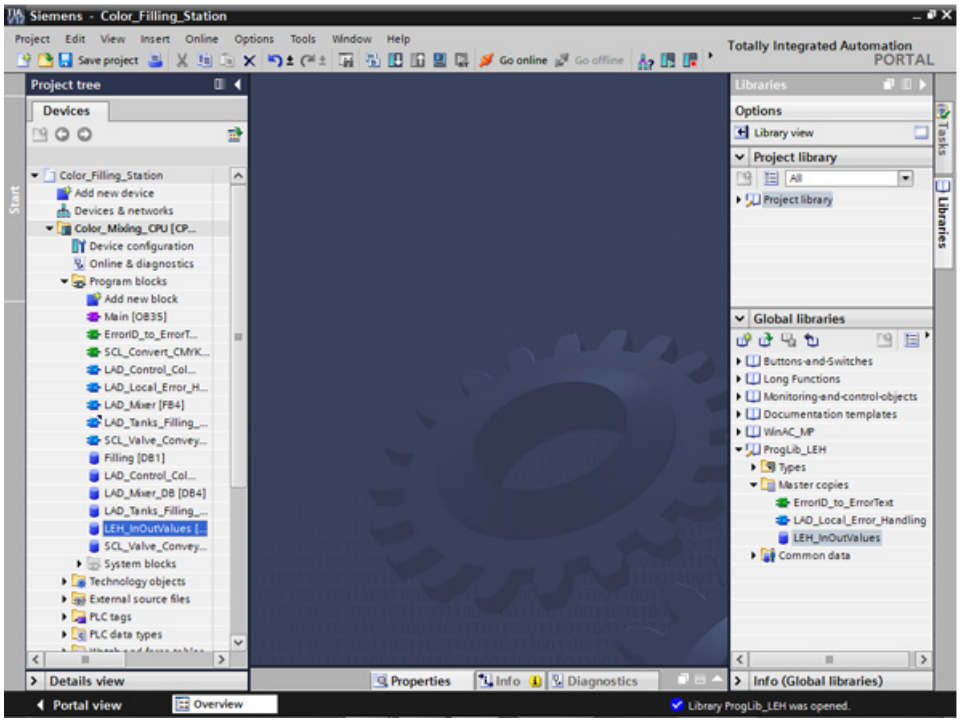

3. Call the "LAD_Local_Error_Handling" function block in an empty network of the "Main" block.

4. Interconnect the parameters of the "LAD_Local_Error_Handling" function block with tags of the "LEH_InOutValues" data block.

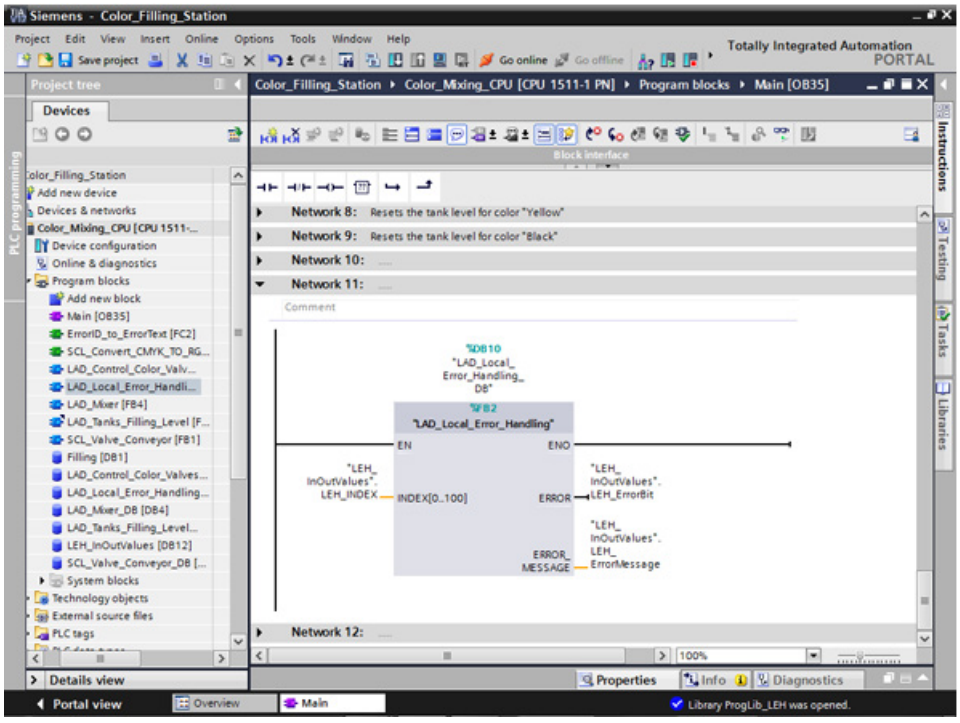

5. Connect to the CPU online.
6. Compile and load the changes to the CPU.

Result

Use the "LEH_INDEX" tag at the "INDEX[0..100]" input parameter to trigger a programming error in the following. For example, if you set the input parameter to "101", an error at the output parameters is reported.

3.2.13.3 Generating errors without local error handling

Introduction

Perform the following steps to trigger a programming error without using the local error handling or creating a corresponding OB.

Procedure

1. Activate the "Monitor" function.
2. Set the value of the "LEH_INDEX" tag to an invalid value, for example, "101". In the Testing dialog, the ERROR LED flashes briefly and the CPU goes from RUN to STOP.

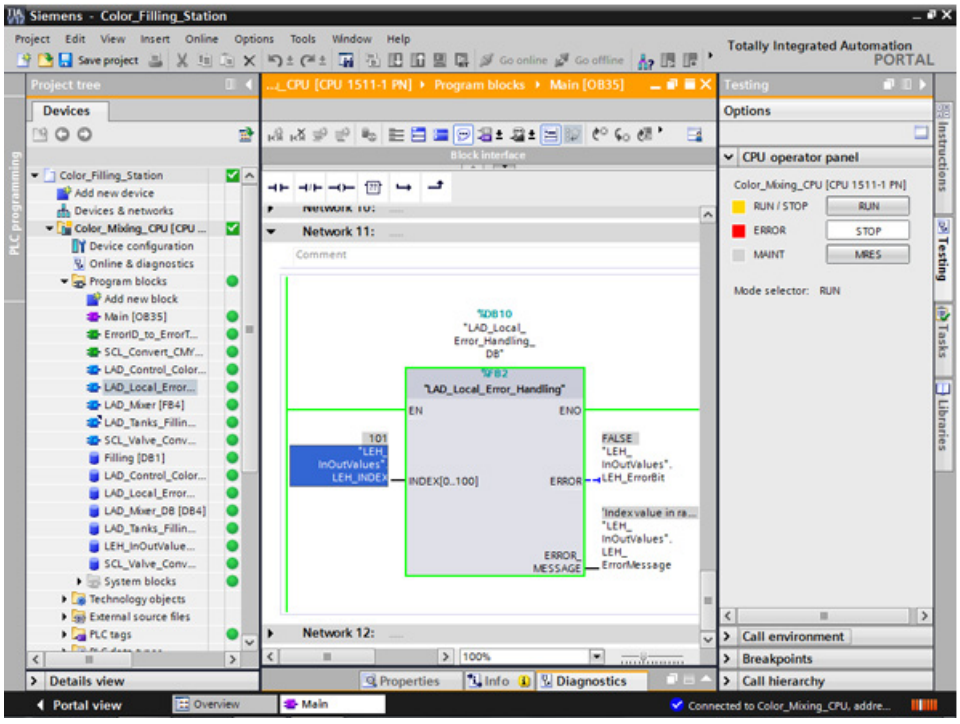

3. Switch to the diagnostics buffer. The error and the error response is displayed in the diagnostics buffer.
4. Set the CPU back to RUN.

Result

The transition from STOP in RUN resets the "LEH_INDEX" tag to the start value "0". This automatically solves the problem.

3.2.13.4 Generating errors with local error handling

Introduction

Perform the following steps to use "GET_ERR_ID" instruction and its ENO bit for the local error handling to respond to the error with an error message. This means the CPU remains in RUN mode.

Procedure

1. Open the "LAD_Local_Error_Handling" function block.
2. Insert the "GET_ERR_ID" instruction in the second network and interconnect the "ID" output.

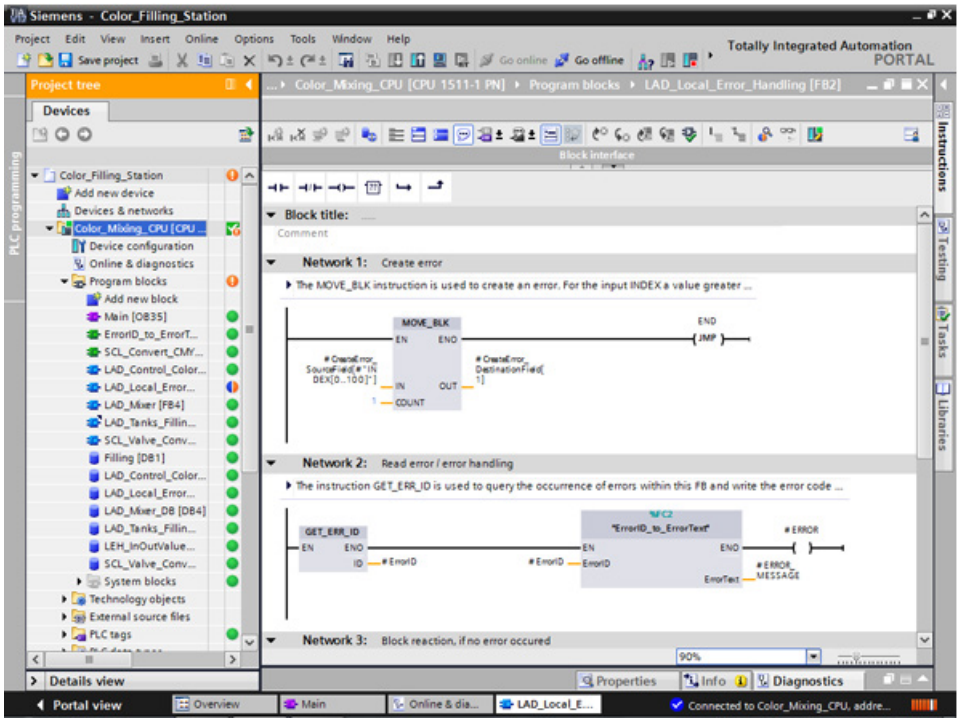

3. Call the "ErrorID_to_ErrorText" function from the project tree.
4. Interconnect the parameters of the "ErrorID_to_ErrorText" function so that they can convert the error code into an error message.
5. Load the changes to the CPU.
6. Trigger an error in the "Main" organization block by entering an invalid value, for example, "101". An error message is output at the "ERROR_MESSAGE" parameter.

Result

The error message is output as long as the error is not corrected. To correct the error, assign the "LEH_INDEX" tag a valid value or restart the CPU.

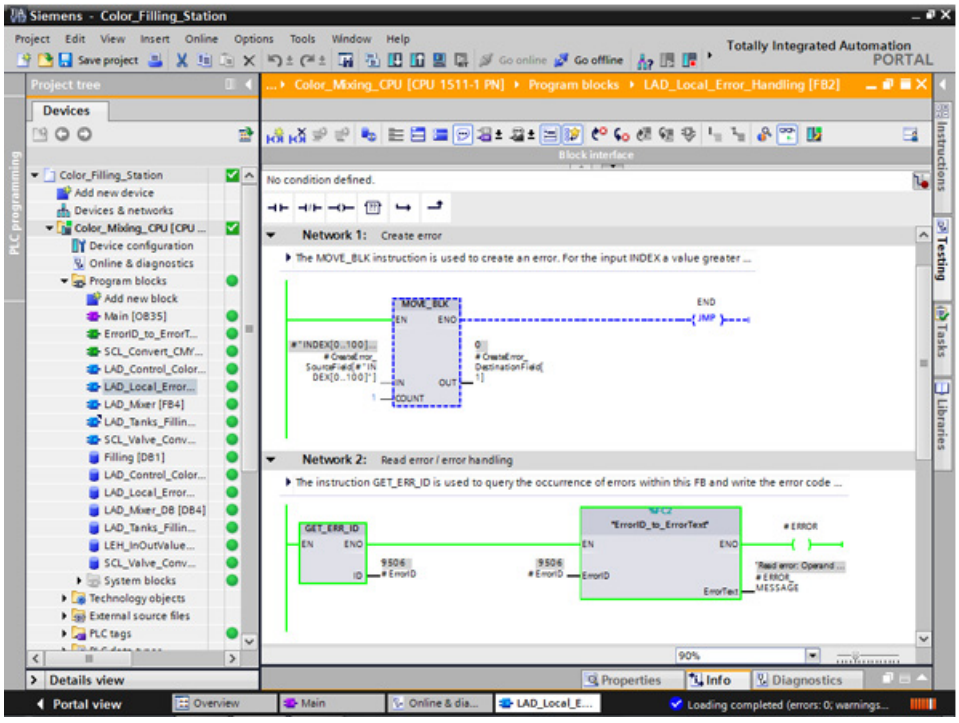

3.3 Configure visualization

3.3.1 Present sample project

Sample project for the application

To configure the color mixing system with the TIA Portal, create the sample project "Color_Filling_Station". The following project components already exist for the sample project: The program blocks and tag tables of the CPU user program and a configured Comfort Panel with the necessary HMI screens, HMI tags and scripts.

In this section, we will explain the relationships between the individual project components of the sample project. You will carry out the necessary configuration steps yourself at a later point in time.

3.3.2 HMI configuration

3.3.2.1 Overview

Introduction of HMI configuration

The supplied project includes the programmed CPU and the preconfigured HMI device in the "global library".

HMI configuration

In this section, we will introduce the HMI device and HMI configuration.

Additional information

You can find detailed instructions on the HMI configuration on the Internet (https://support.industry.siemens.com/cs/ww/en/ps/14678/man); for this, search for "Getting Started".

3.3.2.2 SIMATIC HMI Comfort Panels

SIMATIC HMI Comfort Panels

The TP1200 Comfort HMI device from the Comfort Panel series is used to operate the color mixing system.

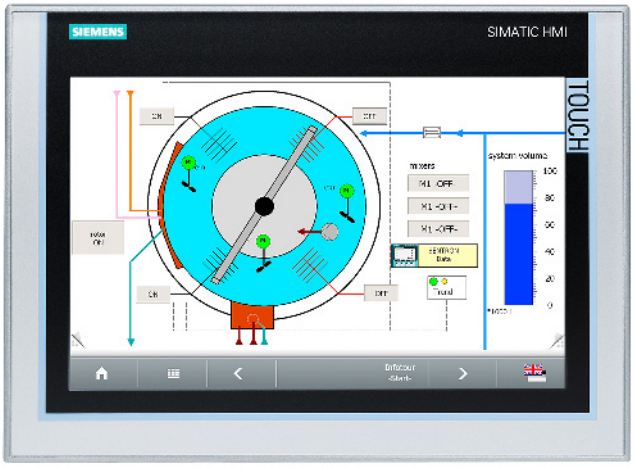

Comfort Panels are particularly suitable for challenging HMI tasks in PROFINET and PROFIBUS environments and are characterized by the following features:

- High-quality housing and numerous interfaces
- Industrial widescreen displays with large visualization area, optimum viewing angle stability and maximum brightness
- Installation either in horizontal or vertical format
- Exact diagnostics with system diagnostics viewer

3.3.2.3 HMI screens

HMI screens

You use the screens loaded onto the respective HMI device to operate and monitor machines and plants in runtime.

You manage the screens in WinCC under "Screens" in the project navigation.

The start screen of the HMI device is used to visualize the color mixing system as well as the most important status information and key figures.

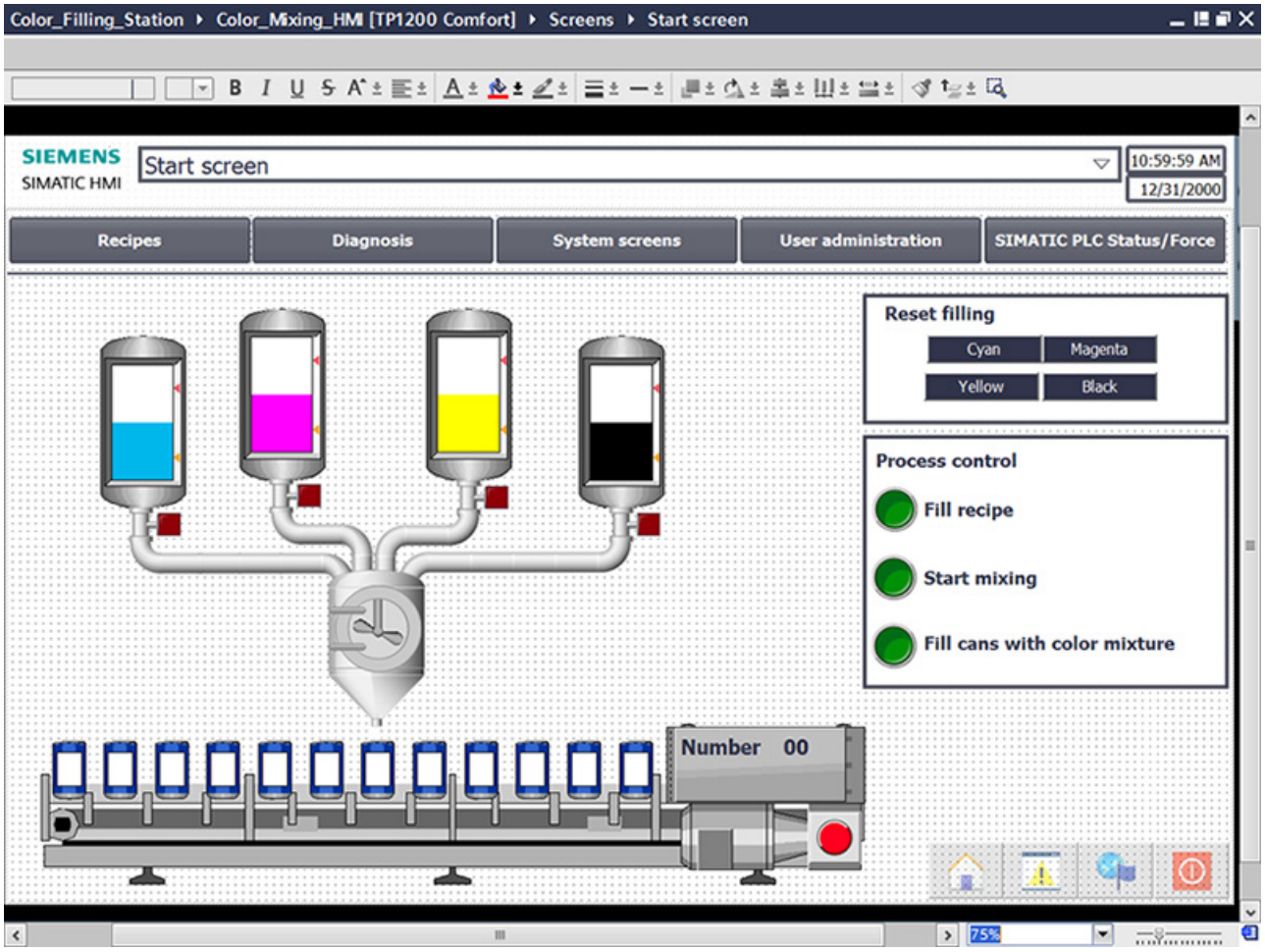

The color mixing system includes the following elements:

- A color reservoir for each print color with fill level display
- Mixer
- Feeder pipes to the mixer
- Conveyor belt with emergency stop switch

3.3.2.4 Additional control elements

Additional control elements

The process steps "Mixing color" and "Filling color" are to be displayed as animations with dynamic visualization objects.

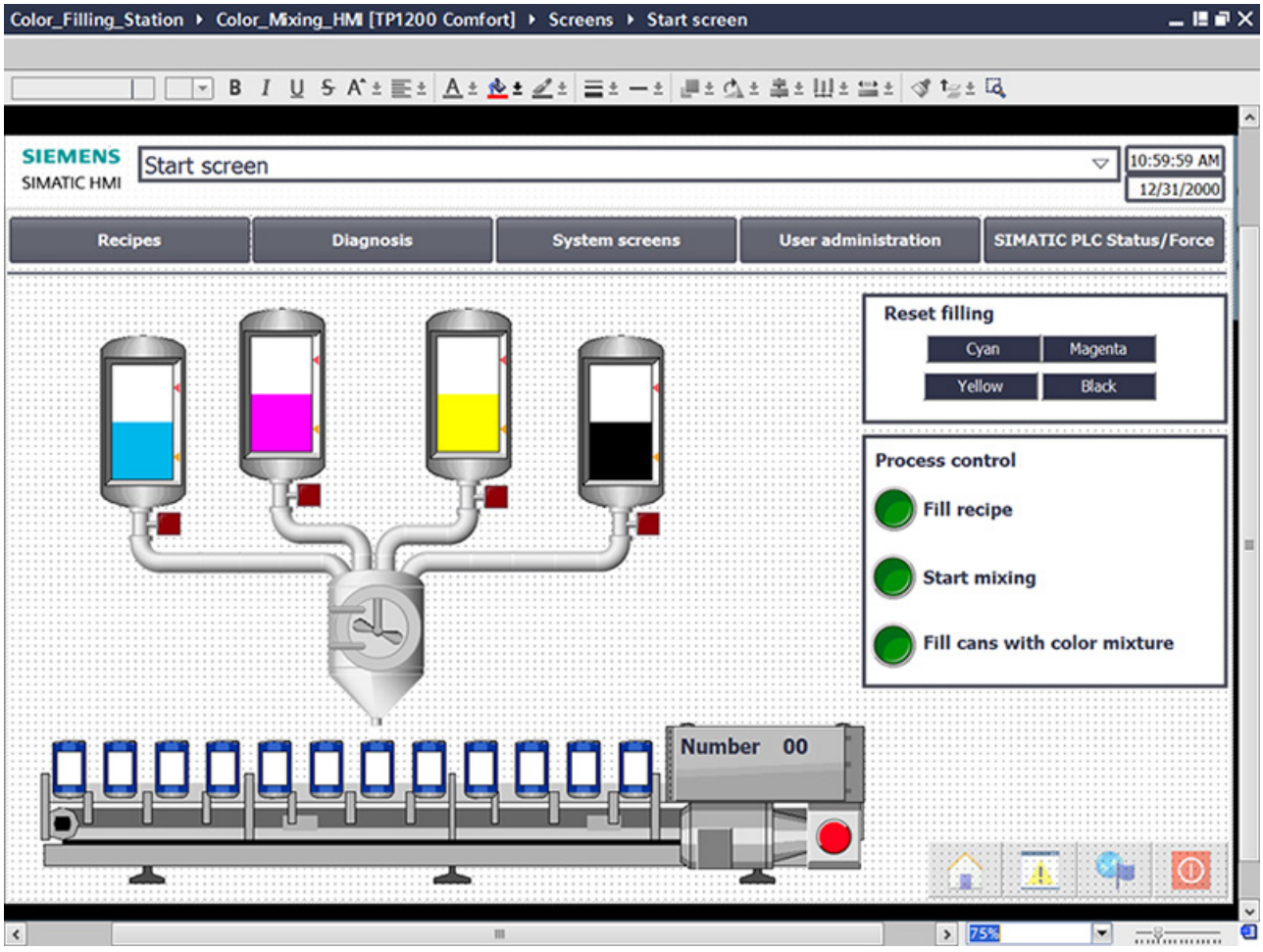

The start screen of the example project includes additional control objects:

- Buttons for screen changes
- Buttons to reset the fill levels
- Buttons for operating and monitoring the system: Fill recipe, start mixing process, fill color mixture

3.3.2.5 Recipes

Recipes

A recipe contains related production parameters, such as mixing ratios.

The required mixing ratio can be transferred from the HMI device to the color mixing system in a single step, for example, to switch production from dark orange to signal yellow.

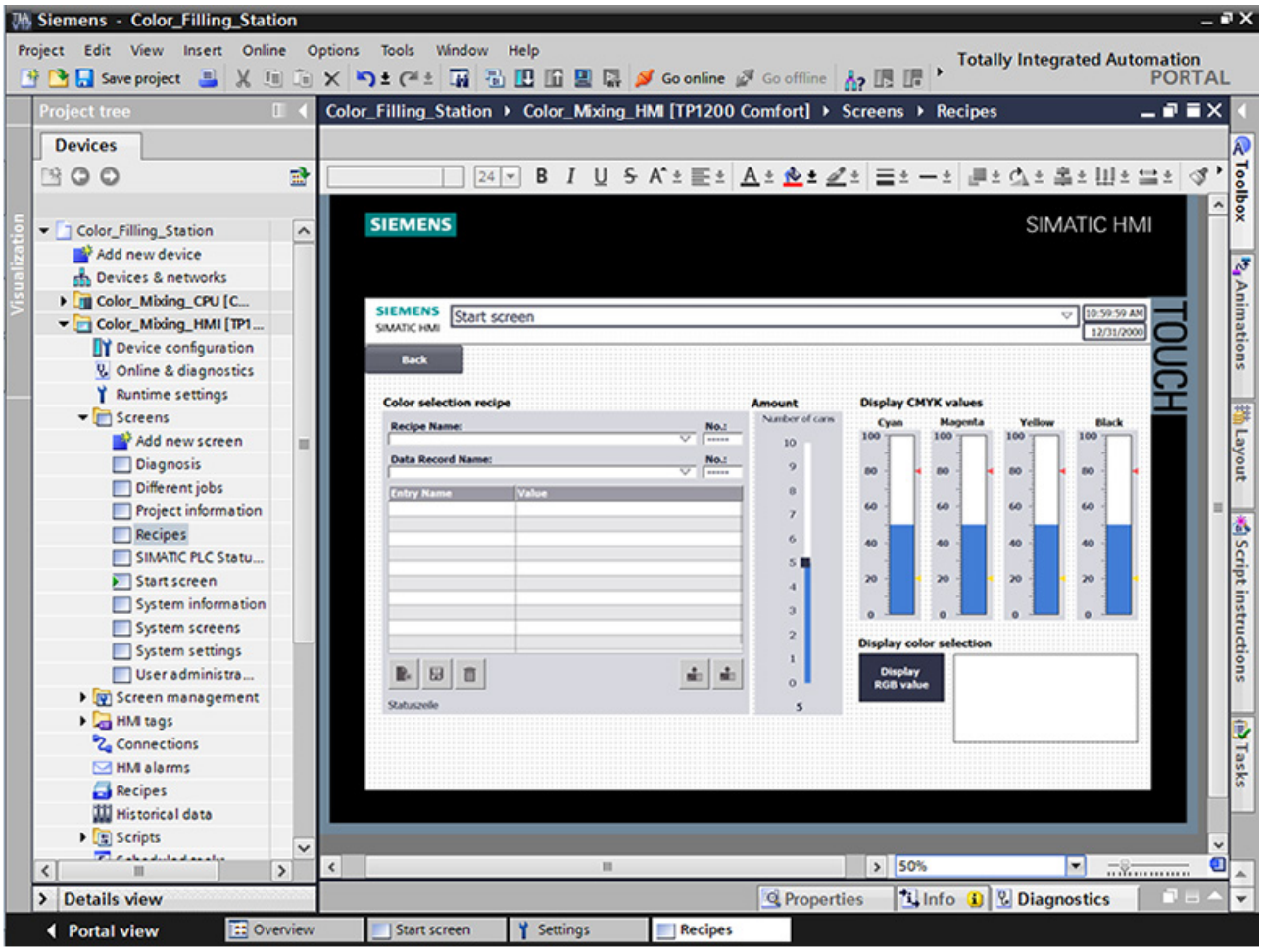

The color mixing system can produce the mixed colors "Orange", "Amber", "Green" and "Red".

A recipe data record is created for each color. The recipe data record includes the percentage of basic colors which result in the respective mixed color.

The recipe consists of relevant parameters and the recipe data records in which the mixing ratios for the individual shades of color are stored.

3.3.2.6 Archives

Archives

To record operational events of a system, the alarms and process values generated during production are saved to logs.

You can then evaluate the alarms and process data logs.

The fill levels of the color reservoirs are to be documented for the color mixing system.

You have configured the alarm log "Tank_Level" for this purpose.

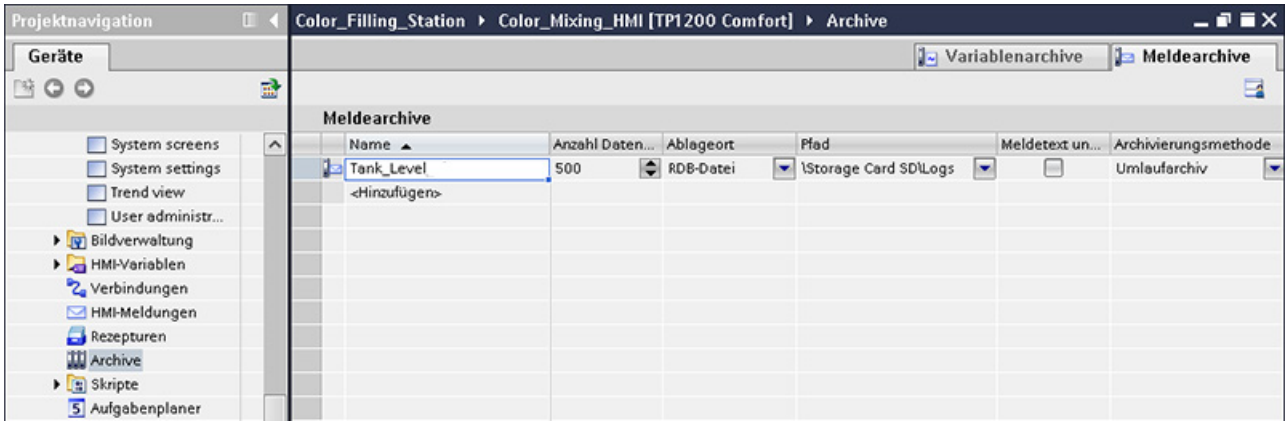

This log stores alarms for fill levels that were too low and fill levels that were too high during a shift.

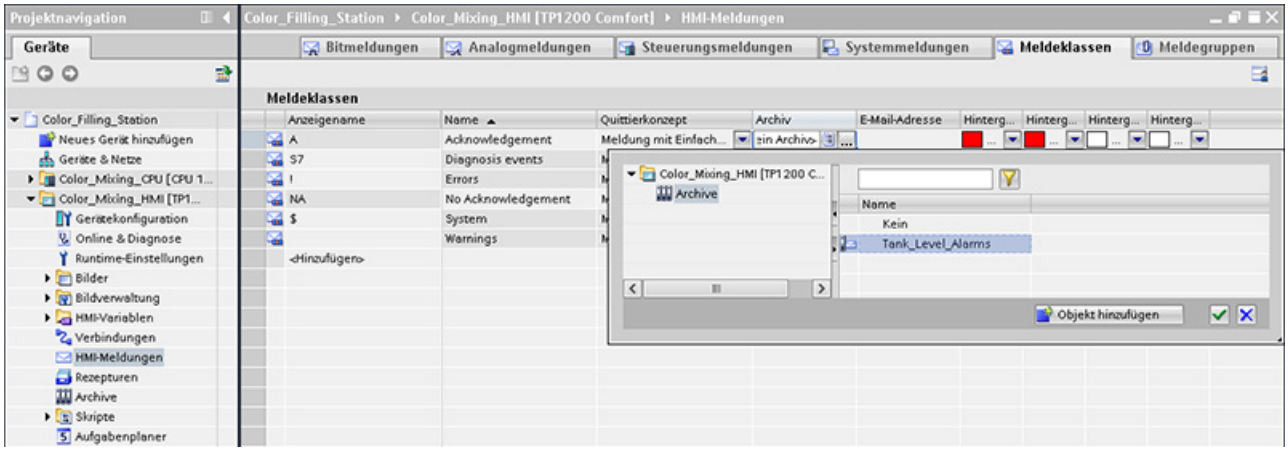

3.3.2.7 User-defined functions

Scripts

You use the user-defined functions to program additional functionality for the HMI device.

WinCC offers a VBS programming interface to create user-defined functions.

The example project uses two user-defined functions to display the mixed print color on the monitor in different screens.

- "Recipescreen" displays a rectangle in the selected color in the "Recipes" screen.

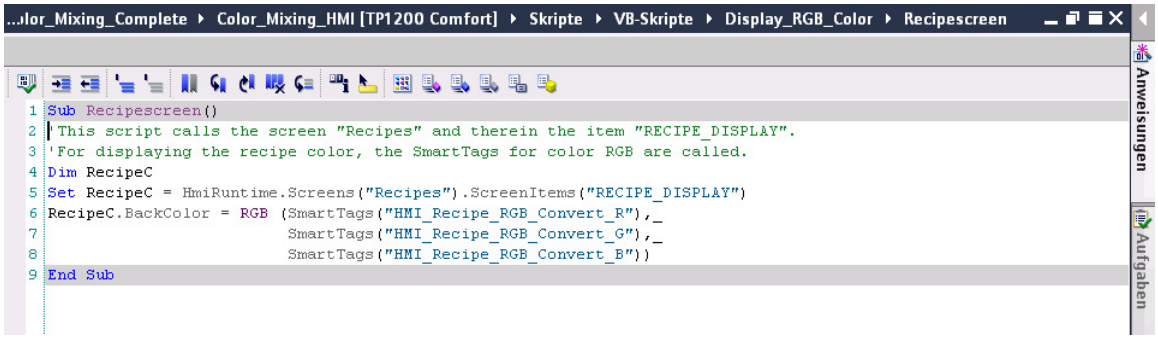

- "Startscreen" displays the label of the filled cans in the currently mixed color in the system overview of the start screen.

The example project uses two user-defined functions to display the mixed print color on the monitor in different screens.

- "Recipescreen" displays a rectangle in the selected color in the "Recipes" screen.

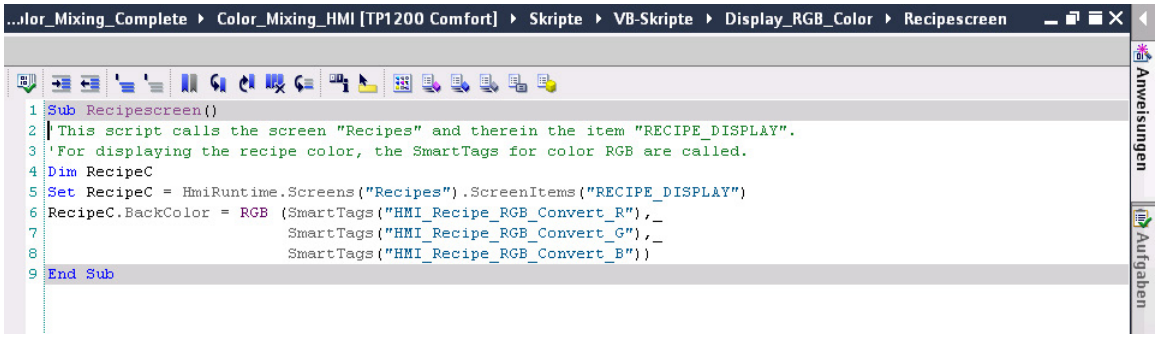

- "Startscreen" displays the label of the filled cans in the currently mixed color in the system overview of the start screen.

...Color_Mixing_Complete ▸ Color_Mixing_HMI [TP1200 Comfort] ▸ Skripte ▸ VB-Skripte ▸ Display_RGB_Color ▸ Startscreen

```
Sub Startscreen()
'This Script calls screens and their items.
'For displaying the recipe color, the SmartTags for color RGB are called.

Dim Label_0
Set Label_0 = HmiRuntime.Screens("Start screen").ScreenItems("Filling")
Label_0.BackColor = RGB (SmartTags("HMI_Recipe_RGB_Convert_R"),SmartTags("HMI_Recipe_RGB_Convert_G"),SmartTags

Dim Label_7
Set Label_7 = HmiRuntime.Screens("Start screen").ScreenItems("TIN_LABEL_25")
Label_7.BackColor = RGB (SmartTags("HMI_Recipe_RGB_Convert_R"),SmartTags("HMI_Recipe_RGB_Convert_G"),SmartTags

Dim Label_8
Set Label_8 = HmiRuntime.Screens("Start screen").ScreenItems("TIN_LABEL_27")
Label_8.BackColor = RGB (SmartTags("HMI_Recipe_RGB_Convert_R"),SmartTags("HMI_Recipe_RGB_Convert_G"),SmartTags

Dim Label_9
Set Label_9 = HmiRuntime.Screens("Start screen").ScreenItems("TIN_LABEL_29")
Label_9.BackColor = RGB (SmartTags("HMI_Recipe_RGB_Convert_R"),SmartTags("HMI_Recipe_RGB_Convert_G"),SmartTags

Dim Label_10
Set Label_10 = HmiRuntime.Screens("Start screen").ScreenItems("TIN_LABEL_31")
Label_10.BackColor = RGB (SmartTags("HMI_Recipe_RGB_Convert_R"),SmartTags("HMI_Recipe_RGB_Convert_G"),SmartTag

Dim Label_11
Set Label_11 = HmiRuntime.Screens("Start screen").ScreenItems("TIN_LABEL_33")
Label_11.BackColor = RGB (SmartTags("HMI_Recipe_RGB_Convert_R"),SmartTags("HMI_Recipe_RGB_Convert_G"),SmartTag

Dim Label_12
Set Label_12 = HmiRuntime.Screens("Start screen").ScreenItems("TIN_LABEL_35")
Label_12.BackColor = RGB (SmartTags("HMI_Recipe_RGB_Convert_R"),SmartTags("HMI_Recipe_RGB_Convert_G"),SmartTag

Dim Label_19
Set Label_19 = HmiRuntime.Screens("Start screen").ScreenItems("TIN_LABEL_24")
Label_19.BackColor = RGB (SmartTags("HMI_Recipe_RGB_Convert_R"),SmartTags("HMI_Recipe_RGB_Convert_G"),SmartTag

Dim Label_20
Set Label_20 = HmiRuntime.Screens("Start screen").ScreenItems("TIN_LABEL_26")
Label_20.BackColor = RGB (SmartTags("HMI_Recipe_RGB_Convert_R"),SmartTags("HMI_Recipe_RGB_Convert_G"),SmartTag

Dim Label_21
Set Label_21 = HmiRuntime.Screens("Start screen").ScreenItems("TIN_LABEL_28")
Label_21.BackColor = RGB (SmartTags("HMI_Recipe_RGB_Convert_R"),SmartTags("HMI_Recipe_RGB_Convert_G"),SmartTag

Dim Label_22
```

3.3.2.8 User Management

User Management

WinCC gives you the option to restrict safety-related operations to special user groups and thus protect data and functions from unauthorized access in Runtime.

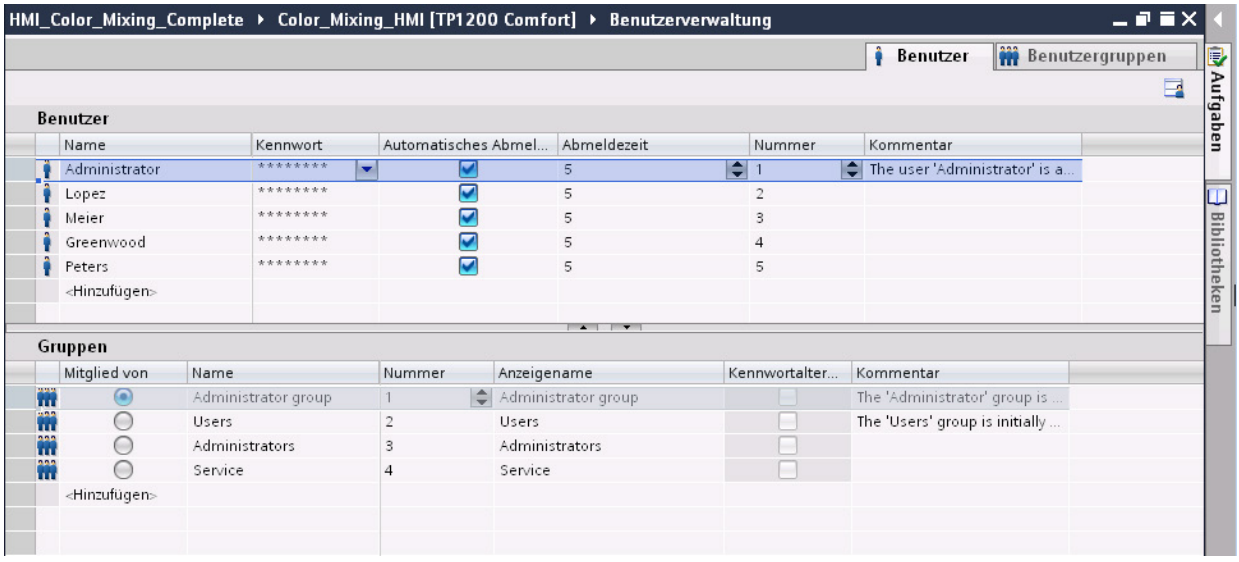

The "User view" object offers management of users and passwords on the HMI device.

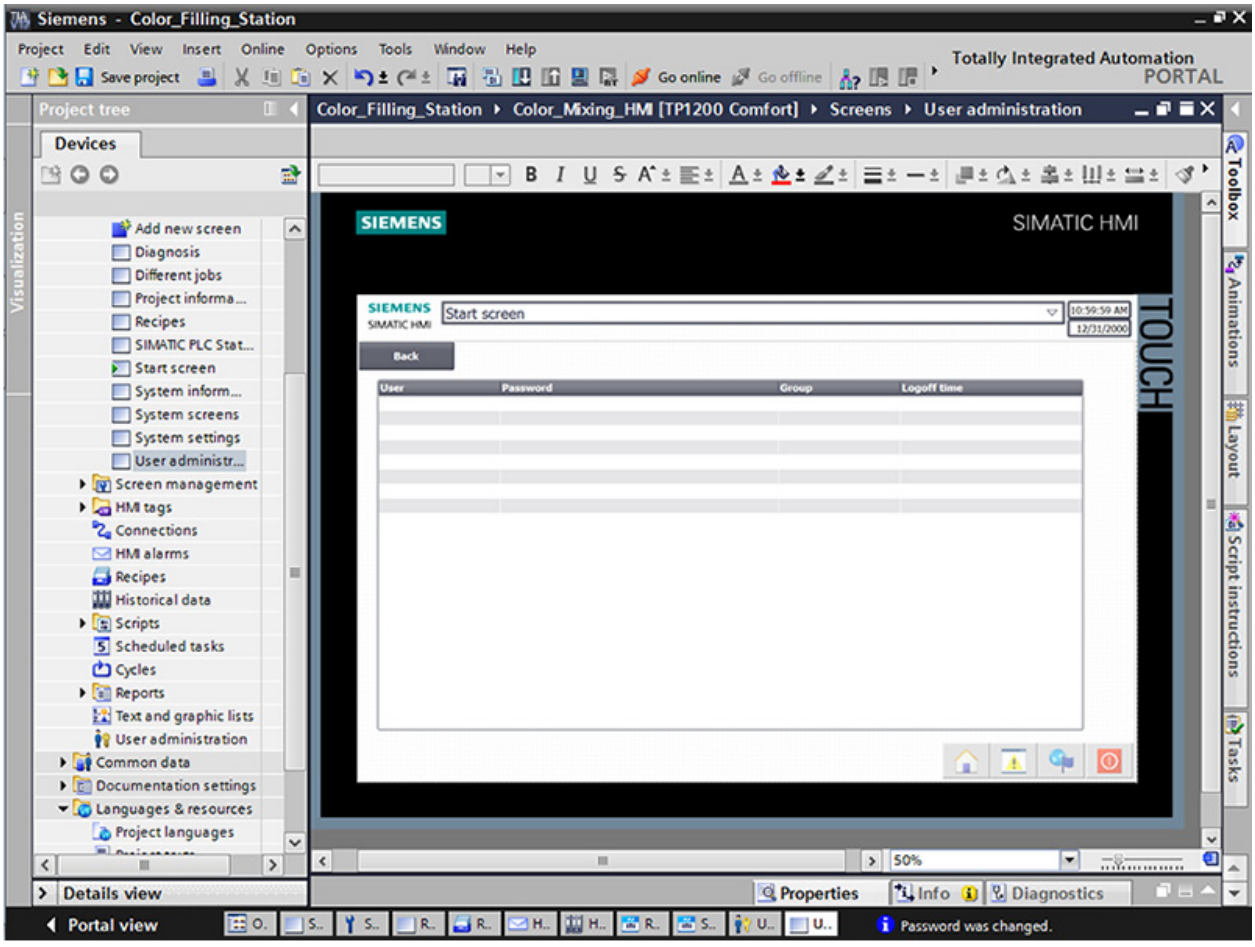

Users with user management authorization have access to the full range of functions in the user view.

They can create and delete users and change their own password or that of other users.

3.3.2.9 Multilingualism

Multilingualism

WinCC supports multilingual user interfaces.

The color mixing system is operated in a new subsidiary in Russia.

A Russian user interface is required for maintenance and service technicians.

The example project has been expanded by another language for this purpose.

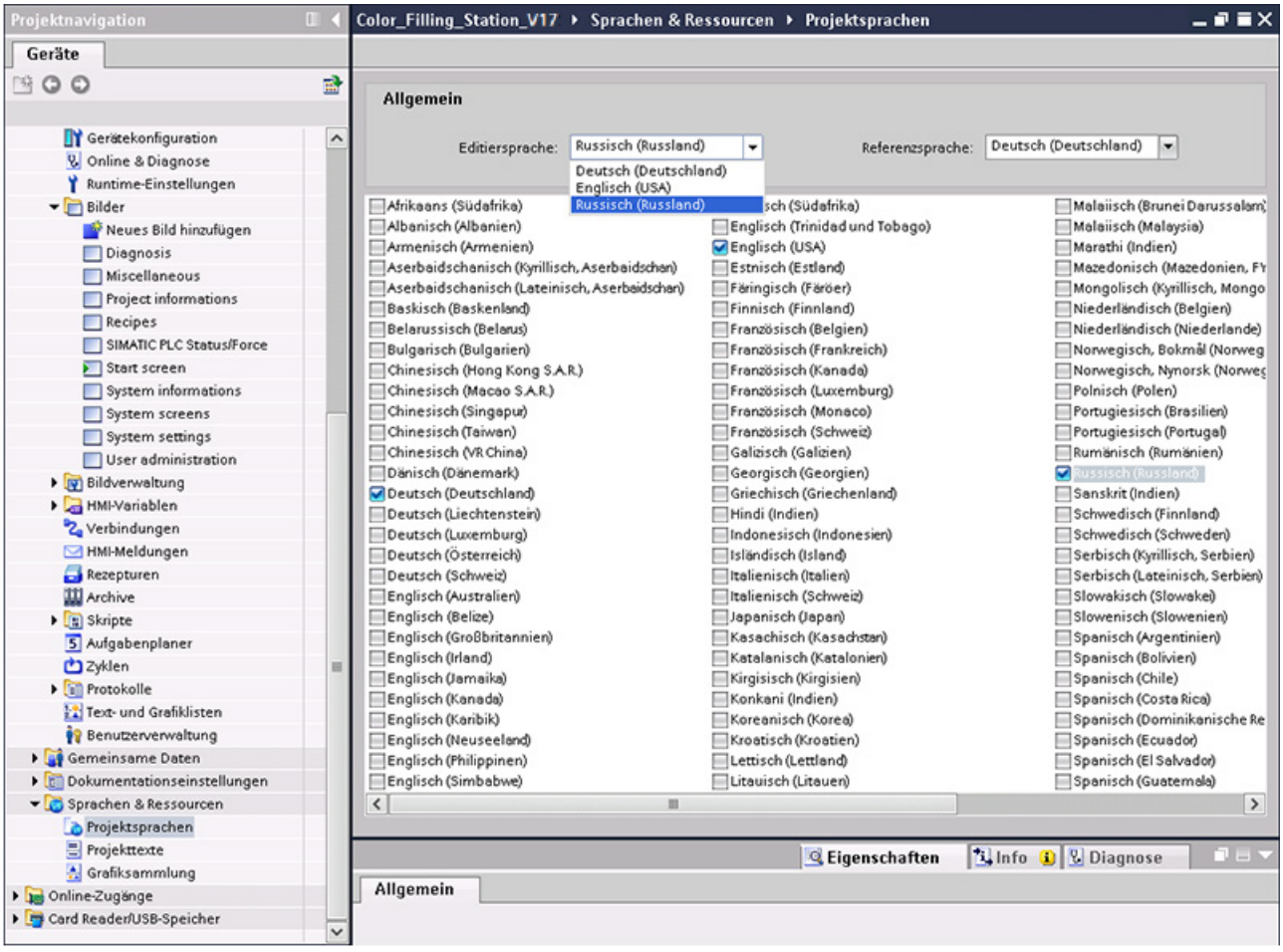

The texts are imported again after they have been exported and translated into Russian.

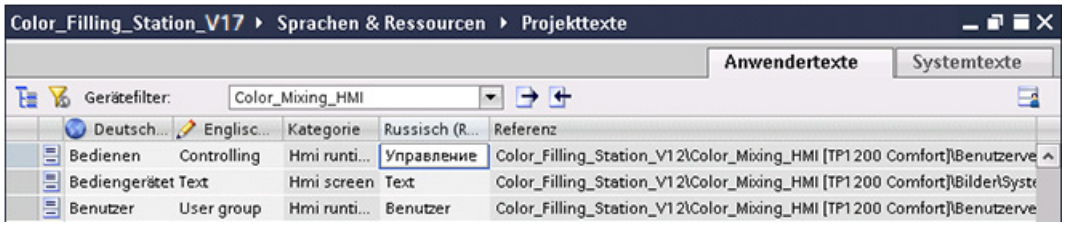

The Russian texts are displayed in Runtime in case of a language selection.

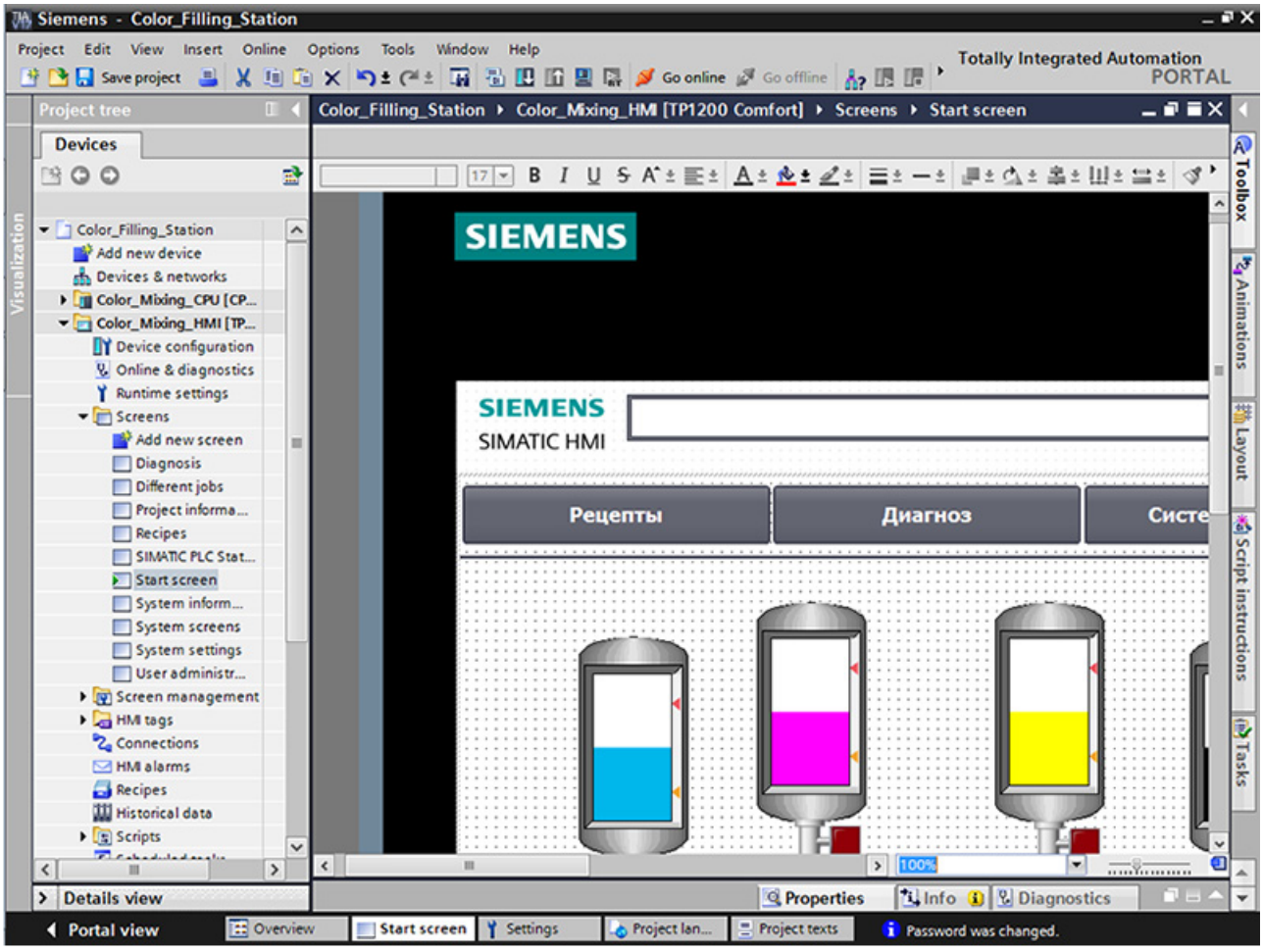

3.3.2.10 Reports

Reports

Reports are used to record events in a production process as a basis for product testing and quality control. Alarms and recipe data are output at regular intervals in the form of shift reports for this purpose.

A report has been created in WinCC for the "Tank_Level" log with alarms for the fill level.

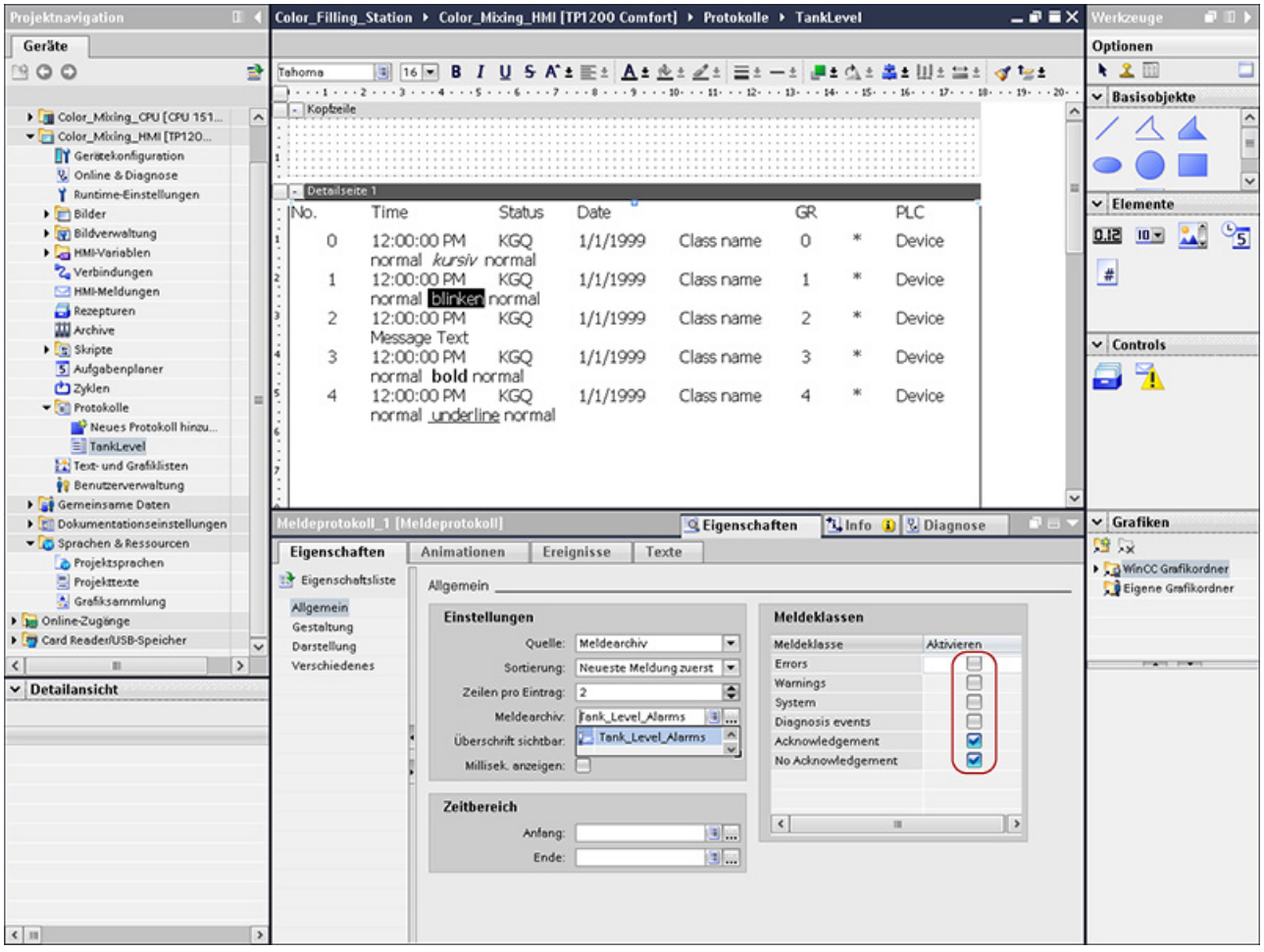

Furthermore, a report for recipes has been created in this project.

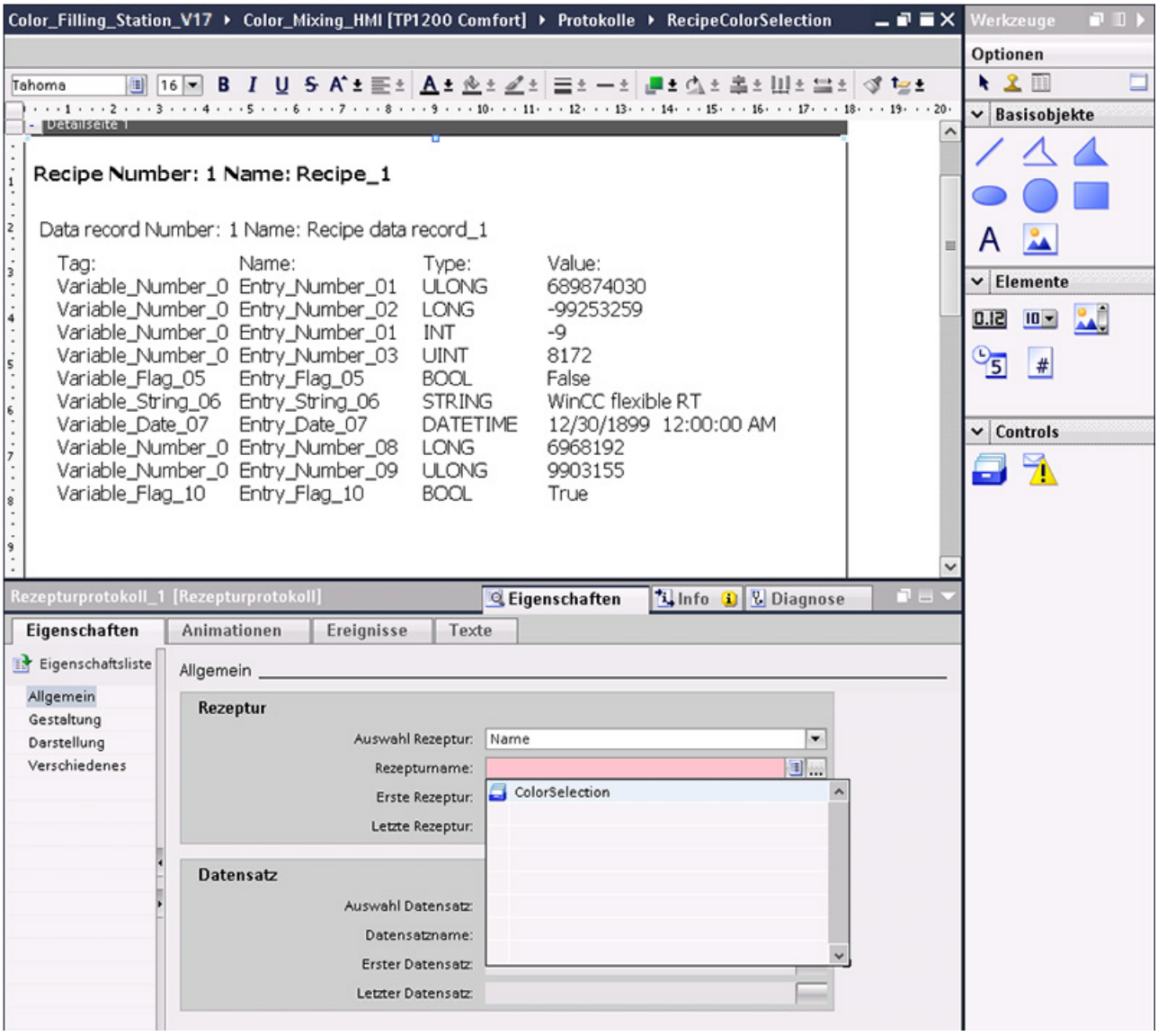

The reports should be output on a daily basis to a printer which is connected to the HMI device.

The cyclical output was created with the help of the Scheduler.

3.3.3 Insert HMI device from libraries

3.3.3.1 Insert HMI device from library

Introduction

The global library includes a preconfigured HMI device.

Procedure

1. Open the global library.
2. Drag-and-drop the HMI device "Color_Mixing_HMI" into the "Devices & Networks" editor.

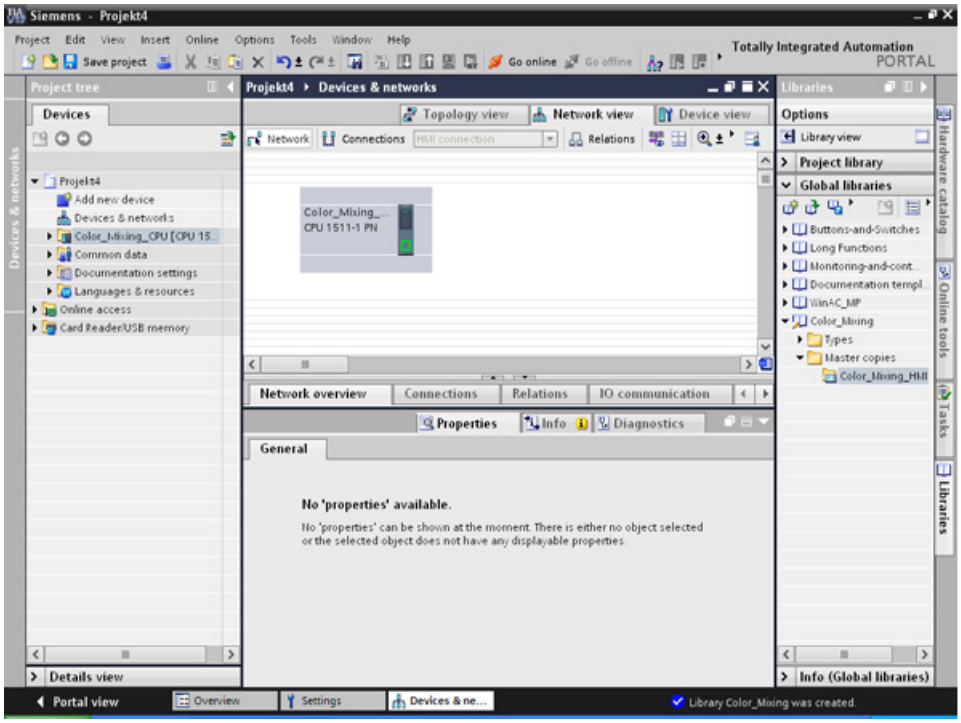

3. The mouse pointer changes into a crosshair with an object symbol attached.

Result

The preconfigured HMI device is created and can be connected to the CPU.

3.3.4 Configuring HMI connection

3.3.4.1 Communication between devices

Communication

The data exchange between devices is referred to as communication.

The devices can be interconnected directly or via a network.

The interconnected devices in communication are referred to as communication partners.

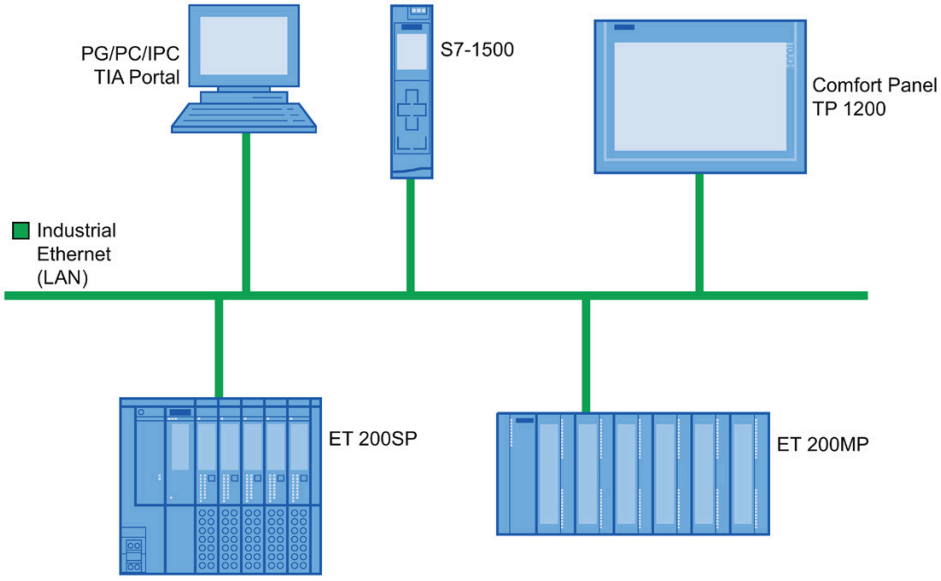

Data transferred between the communication partners may serve different purposes:

- Display processes
- Operate processes
- Output alarms
- Archive process values and alarms
- Document process values and alarms
- Administer process parameters and machine parameters

Basic information for all communication

The basis for all types of communication is a network configuration. In a network configuration, you specify the connection that exists between the configured devices.

With the network configuration, you also ensure the necessary prerequisites for communication, in other words:

- Every device in a network is assigned a unique address.
- The devices carry out communication with consistent transmission characteristics.

3.3.4.2 Configuring HMI connection

Introduction

You configure an HMI connection between the Comfort Panel TP1200 and the CPU via PROFINET in the "Devices & Networks" editor.

The available communication partners in the project are displayed graphically in the network view.

CAUTION

Communication via Ethernet

In Ethernet-based communication, the end user is responsible for the security of his data network.

Targeted attacks can overload the device and interfere with proper functioning.

Requirements

The following communication partners are created in the "Devices & Networks" editor:

- HMI device: SIMATIC Comfort Panel
- CPU: SIMATIC S7-1500

Procedure

1. Click the "Connections" button and select "HMI connection" for the connection type.

   The devices available for connection are highlighted in color.

2. Click the PROFINET interface of the CPU and drag-and-drop a connection to the PROFINET interface of the HMI device.

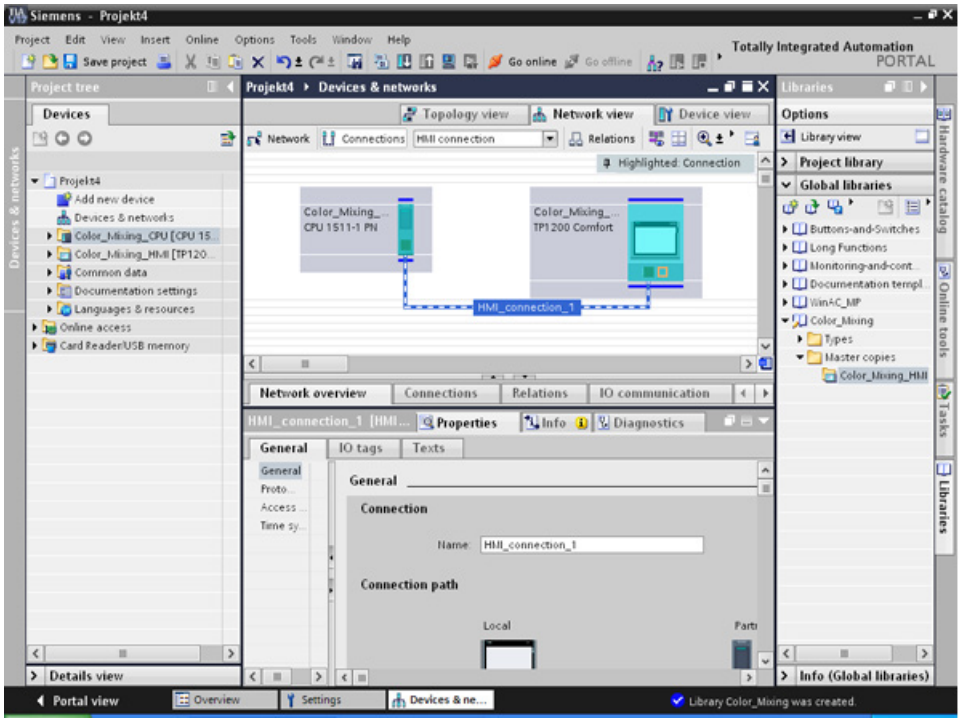

3. Click the communication partners in the "Network view" and change the PROFINET parameters in the Inspector window according to the requirements of your project.

Note

The created HMI connection is also shown in the tabular area of the editor in the "Connections" tab. You check the connection parameters in the table.

You can change the local name for the connection only in the table.

Result

You have created a connection between an HMI device and the CPU.

3.3.4.3 Connecting HMI tags

Introduction

Once you have created the connection of CPU and HMI device, connect the tags of the two devices.

Procedure

1. Open the HMI tag editor.

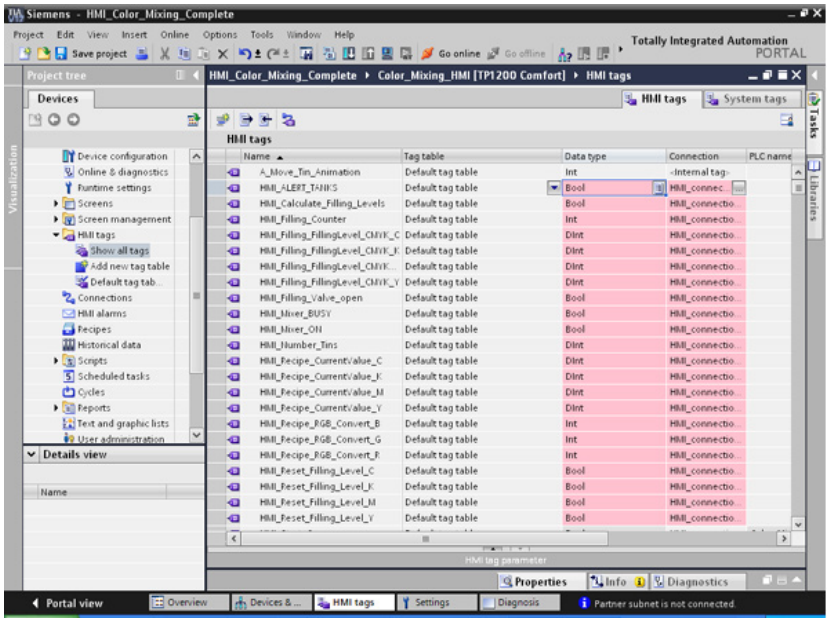

2. Select the HMI connection you have just configured in the "Connections" column.
3. Repeat this procedure for all entries highlighted in red.

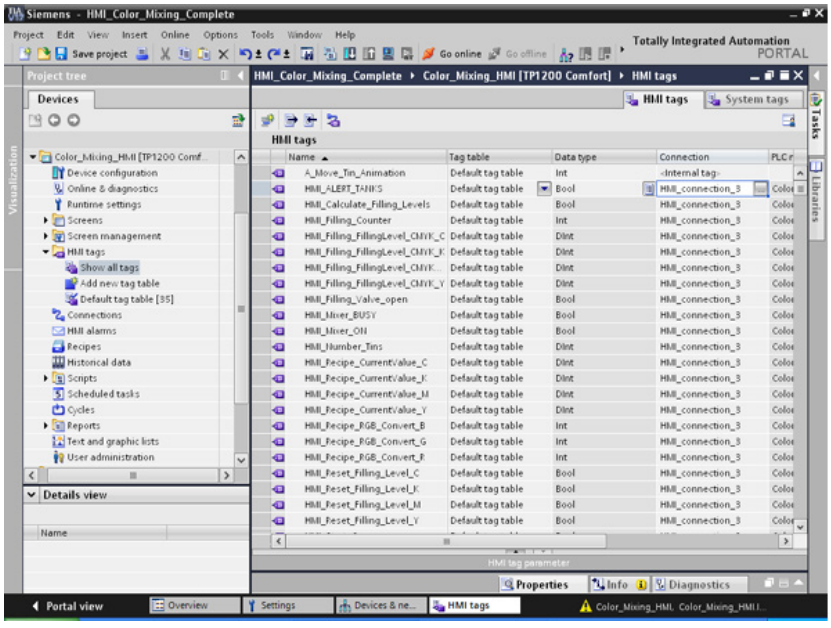

Result

An HMI connection had already been created for tags already configured in the CPU and HMI device.

You have restored this HMI connection.

3.3.5 Configuring system diagnostics

3.3.5.1 System diagnostics basics

Introduction

You use system diagnostics to detect problems and errors in any part of your plant. WinCC has two display and operating elements for quick error localization.

System diagnostics view

The alarm view shows the status of a CPU while the system diagnostics view gives you an overview of all devices available in your system: You navigate directly to the cause of the error and to the relevant device. You have access to all devices supporting diagnostics you have configured in the "Devices & networks" editor.

System diagnostics window

The system diagnostics window is an operating and display element that you can only use in the global screen.

The functions of the system diagnostics window are no different than those of the system diagnostics view. Because the system diagnostics window is configured in the global screen, you can, for example, also specify if the object is closable in Runtime.

3.3.5.2 System diagnostics views

Introduction

There are four different views available in the system diagnostics display and the system diagnostics window.

- Device view
- Diagnostic buffer view
- Detail view
- Matrix view (for master systems, PROFIBUS, PROFINET only)

Device view

The device view shows all the available devices of a layer in a table. Double-clicking on a device opens either the child devices or the detail view. Symbols in the first column provide information about the current status of the device.

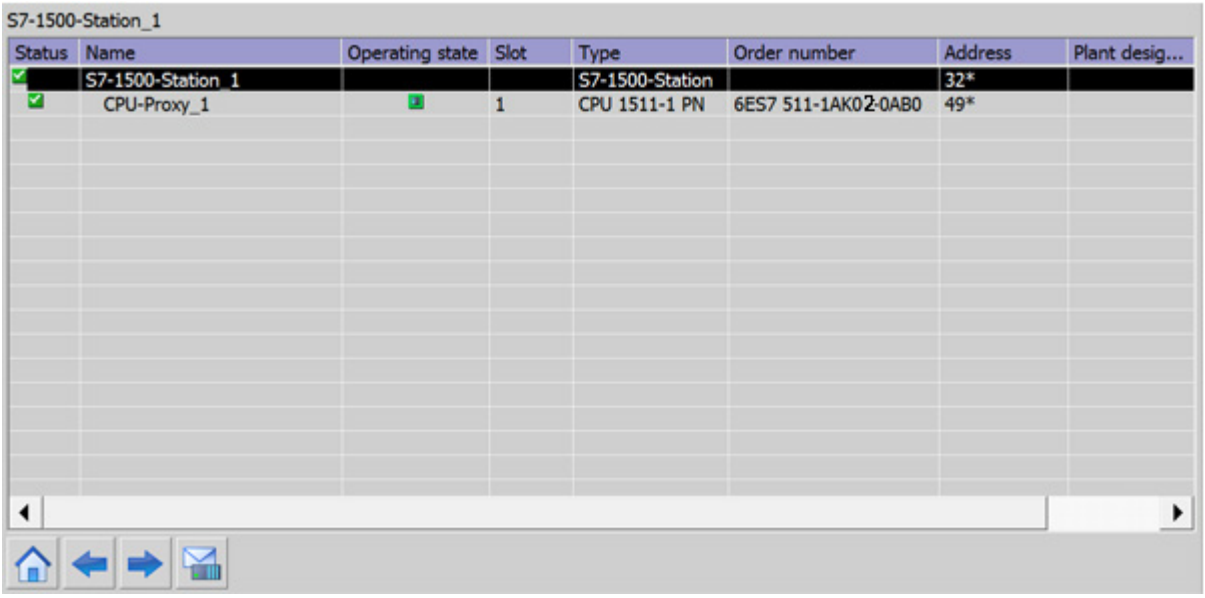

Diagnostic buffer view

The current data from the diagnostic buffer are shown in the diagnostic buffer view.

S7-1500-Station_1 \ CPU-Proxy_1 \ Diagnostic buffer view

N.	Date	Time	Event
1	1/11/2012	10:49:59 PM	Communication initiated request: WARM RESTART - CPU changes from STARTUP to RUN ...
2	1/11/2012	10:49:59 PM	Communication initiated request: WARM RESTART - CPU changes from STOP to STARTUP...
3	1/11/2012	10:49:56 PM	Communication initiated request: STOP - CPU changes from RUN to STOP mode
4	1/11/2012	7:32:36 AM	Communication initiated request: WARM RESTART - CPU changes from STARTUP to RUN ...
5	1/11/2012	7:32:36 AM	Communication initiated request: WARM RESTART - CPU changes from STOP to STARTUP...
6	1/11/2012	7:32:34 AM	Communication initiated request: STOP - CPU changes from RUN to STOP mode
7	1/11/2012	7:30:53 AM	Communication initiated request: WARM RESTART - CPU changes from STARTUP to RUN ...
8	1/11/2012	7:30:53 AM	Communication initiated request: WARM RESTART - CPU changes from STOP to STARTUP...
9	1/11/2012	7:21:03 AM	Communication initiated request: STOP - CPU changes from RUN to STOP mode
...	1/11/2012	4:33:55 AM	Communication initiated request: WARM RESTART - CPU changes from STARTUP to RUN ...
...	1/11/2012	4:33:55 AM	Communication initiated request: WARM RESTART - CPU changes from STOP to STARTUP...
...	1/11/2012	4:22:31 AM	Follow-on operating mode change - CPU changes from STOP (initialization) to STOP mode
...	1/11/2012	4:22:31 AM	Power on - CPU changes from NO POWER to STOP (initialization) mode
...	1/11/2012	4:21:59 AM	Power off - CPU changes from STOP to NO POWER mode
...	1/11/2012	4:19:51 AM	System initiated request: STOP - CPU changes from STOP (firmware update) to STOP mode
...	1/11/2012	4:19:51 AM	Device firmware update finished - CPU changes to STOP mode, new startup inhibit set: .
...	1/11/2012	4:19:51 AM	CPU firmware update: Completed successfully - Device firmware update sequence contin...
...	1/11/2012	4:19:03 AM	System initiated request: Firmware update - CPU changes from STOP (initialization) to ST...

Detail view

The detail view gives detailed information about the selected device and any pending errors. Check whether the data is correct in the detail view. You can cannot sort error texts in the detail view.

S7-1500 station_1 \ DI32

Status	
Name	DI32
Betriebszustand	
Baugruppenträger	0
Steckplatz	3
Typ	DI32
Bestellnummer	6ES7 521-1BL00-0AB0
Adresse	259*
Anlagenbezeichnung	
Positionskennung	
Hersteller ID	SIEMENS AG
Hardware Version	97
Profil ID	
spezifische Profildaten	0003
I&M Datenversion	1.1
Fehlertext	Drahtbruch
	Hilfe: Kontrollieren Sie den Zustand der Verbindungsleitungen.

Matrix view

The matrix view is only available for master systems. The matrix view shows the status of the subdevices of the master system.

- In PROFIBUS, the numbers assigned by Profibus are used as identification (DP station number).
- The IO devices are numbered consecutively from 1 in PROFINET.

Navigation buttons

Button	Function
	Opens the child devices or the detail view if there are no child devices.
	Opens the parent device or the device view if there is no parent device.
	Opens the device view.
	Opens the diagnostic buffer view. Only visible in the device view.
	Refreshes the view. Configured softkey, for example F2

3.3.5.3 Configuring the system diagnostic view

Introduction

You add a system diagnostics view to your project to get an overview of all devices available in your plant.

Requirements

- CPU has been created.
- The Inspector window is open.

Procedure

1. Double-click the "Diagnostics" HMI screen.

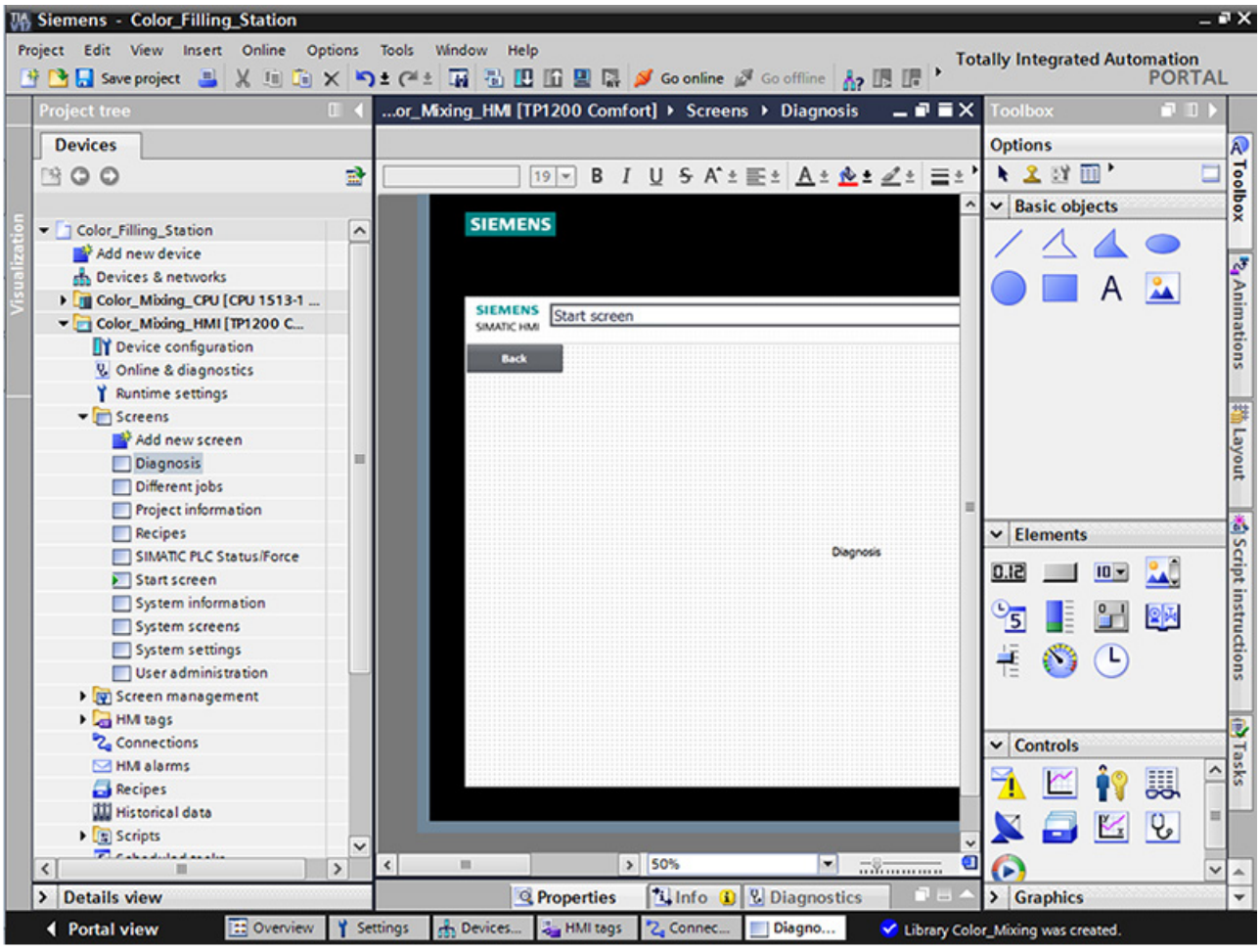

2. Double-click the "System diagnostics view" object in the "Tools" task card. The object is added to the screen.

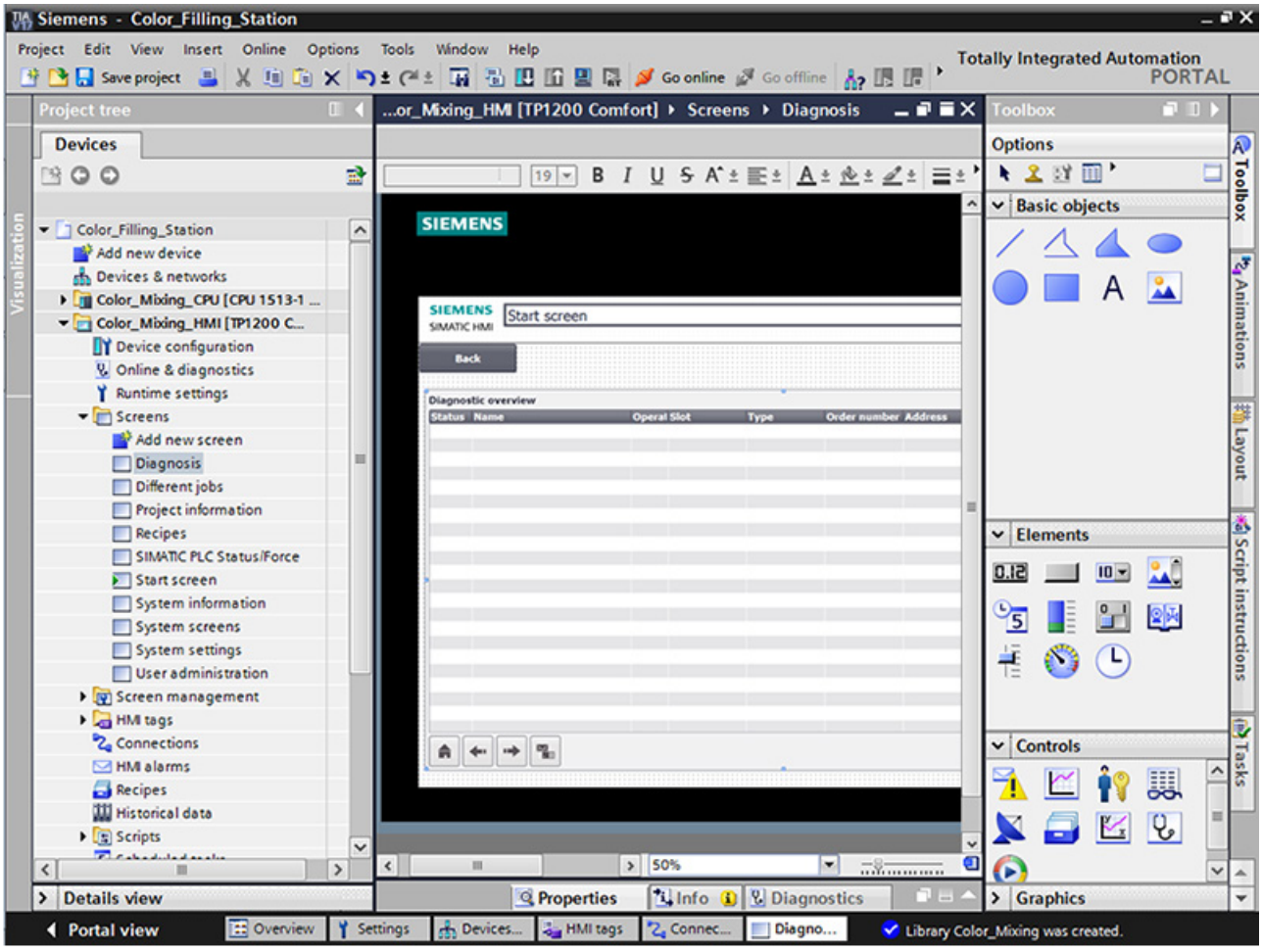

3. Select "Properties > Properties > Columns > Devices/Detail view" in the Inspector window.
4. Enable the columns that you require in the device view for Runtime, for example, State, Name, Slot.
5. Enable the columns that you require in the detail view for Runtime, for example, State, Name, Higher level designation.
6. Select the columns that you require in the diagnostic buffer view, e.g. Status, Name, Rack.
7. If necessary, adapt the headers to the columns.
8. Enable "Properties > Properties > Layout > Column settings > Columns moveable" to move the columns in Runtime.
9. You can change the column headers under "Properties > Properties > Column headers", if necessary.

Result

The system diagnostics view has been added to the "Diagnostics" screen.

Error messages for the entire plant are now displayed in the system diagnostics view in Runtime.

3.3.6 Simulating an HMI device

3.3.6.1 Simulation basics

Introduction

You can use the simulator to test the performance of your configuration on the configuration PC. This allows you to quickly locate any logical configuration errors before productive operation.

You can start the simulator as follows:

- In the shortcut menu of the HMI device or in a screen: "Start simulation"
- Menu command "Online > Simulation > [Start|With tag simulator|With script debugger]"
- Under "Visualization > Simulate device" in the portal view.

Requirement

The simulation/runtime component is installed on the configuration PC.

Field of application

You can use the simulator to test the following functions of the HMI system, for example:

- Checking limit levels and alarm outputs
- Consistency of interrupts
- Configured interrupt simulation
- Configured warnings
- Configured error messages
- Check of status displays

3.3.6.2 Operating the panel in simulation

Introduction

You simulate the HMI project on your computer.

Procedure

1. Start the simulation of the HMI device.

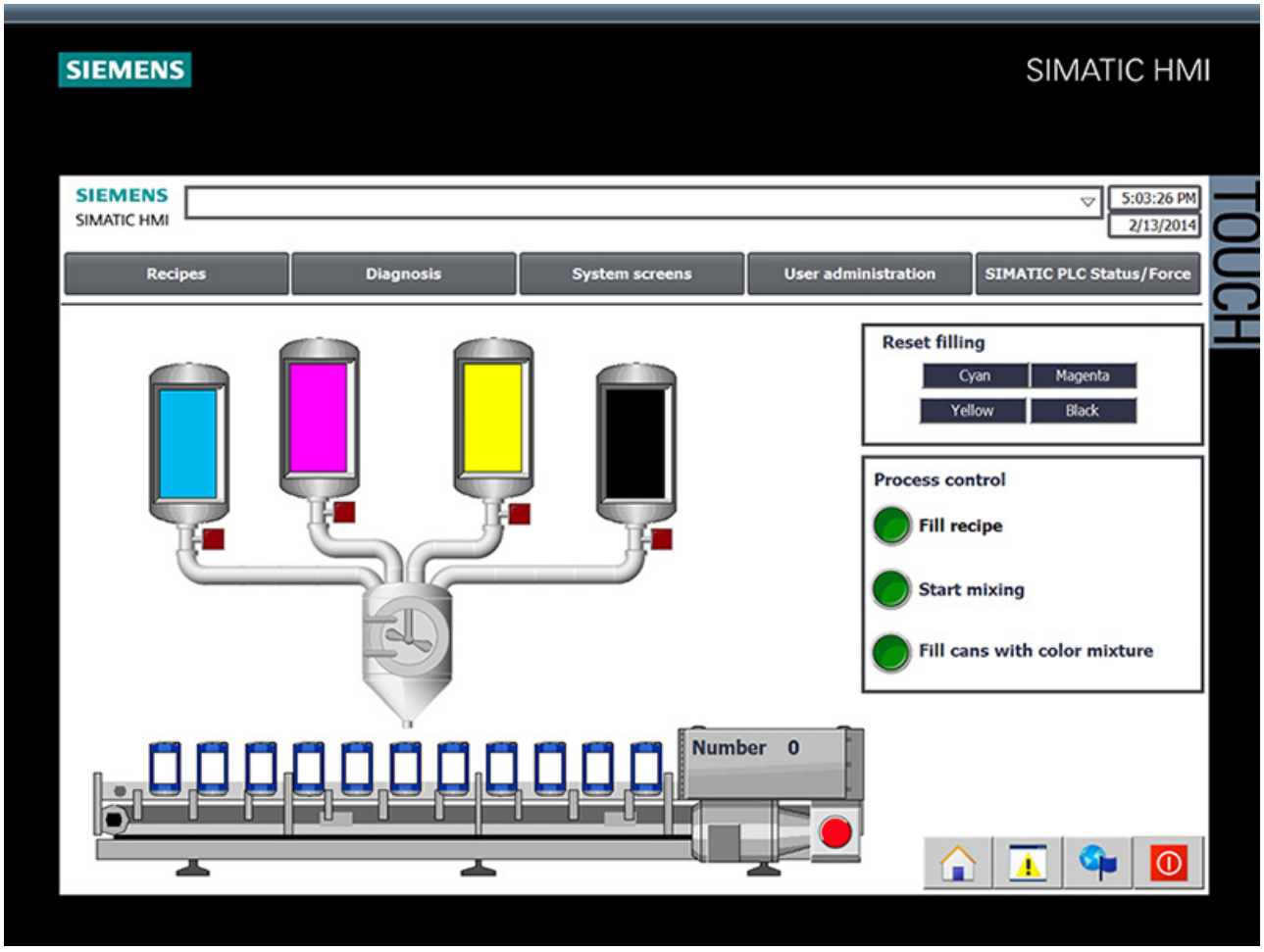

A connection to the CPU is established and the color mixing system is displayed in the simulation.

2. Open the "Recipes" screen and select a color.

3. Specify the number of cans and view the selected color.

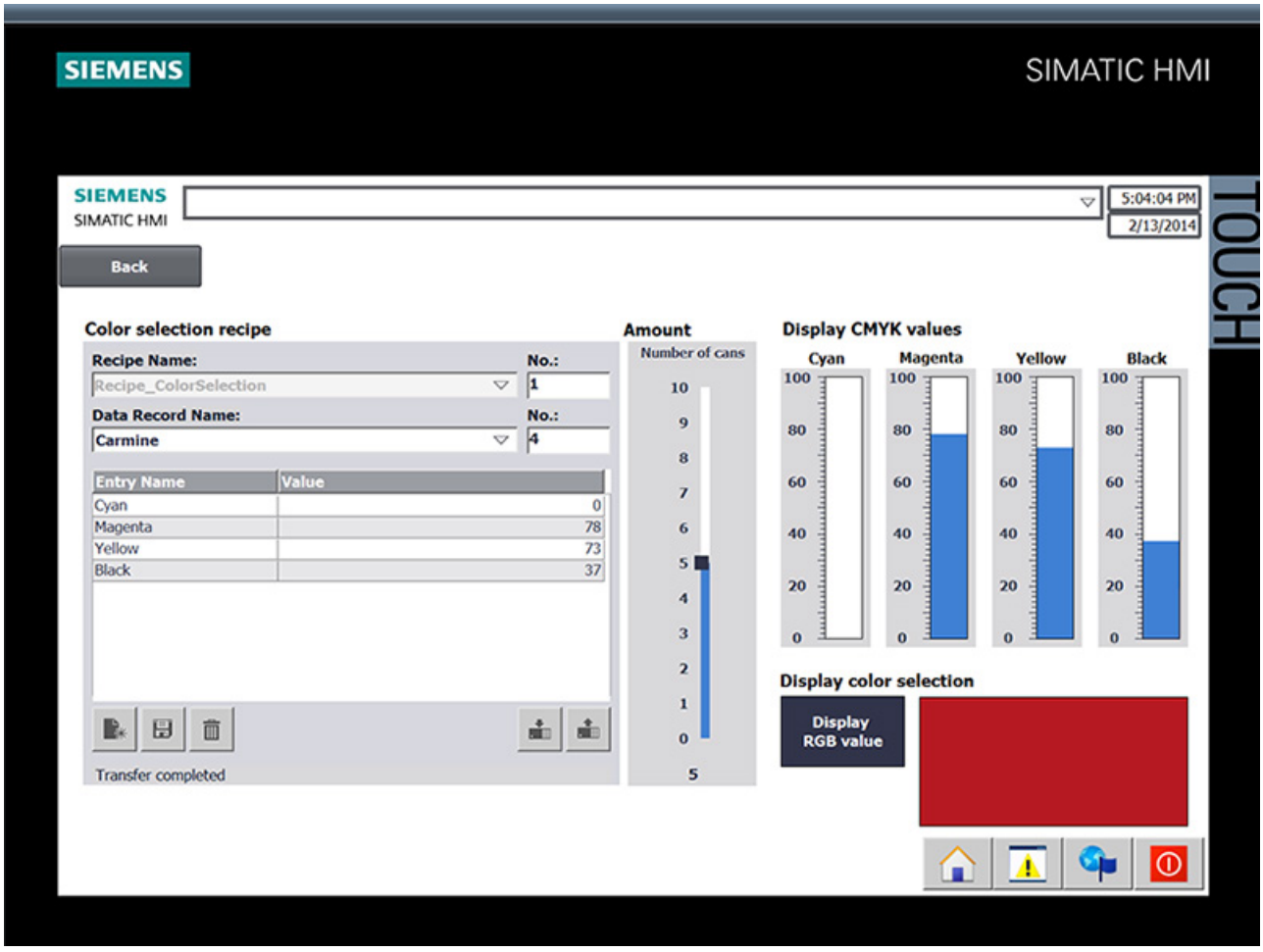

4. Go back to the start screen and start production.

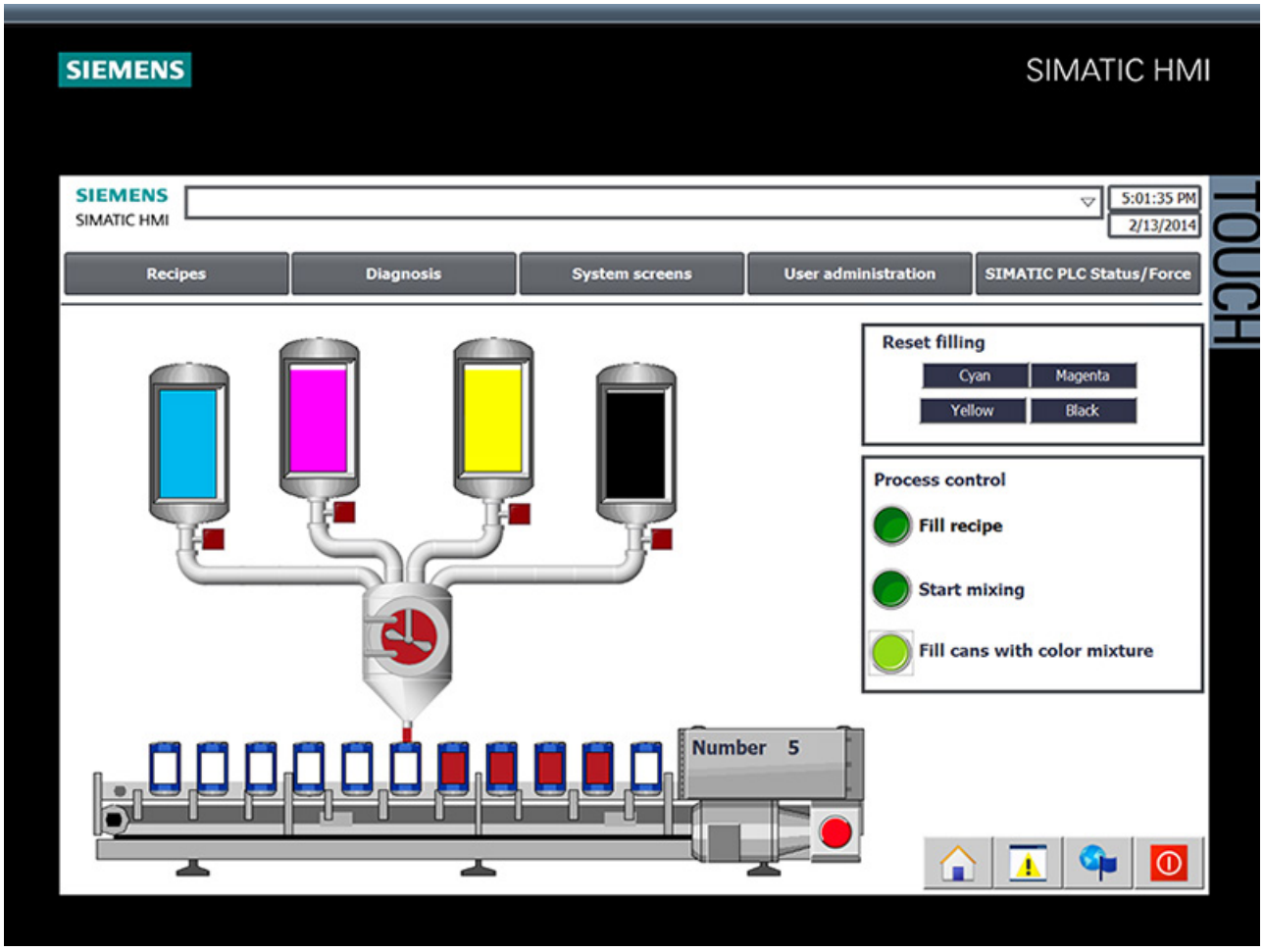

5. You can query the current CPU status in the "Diagnostics" screen.

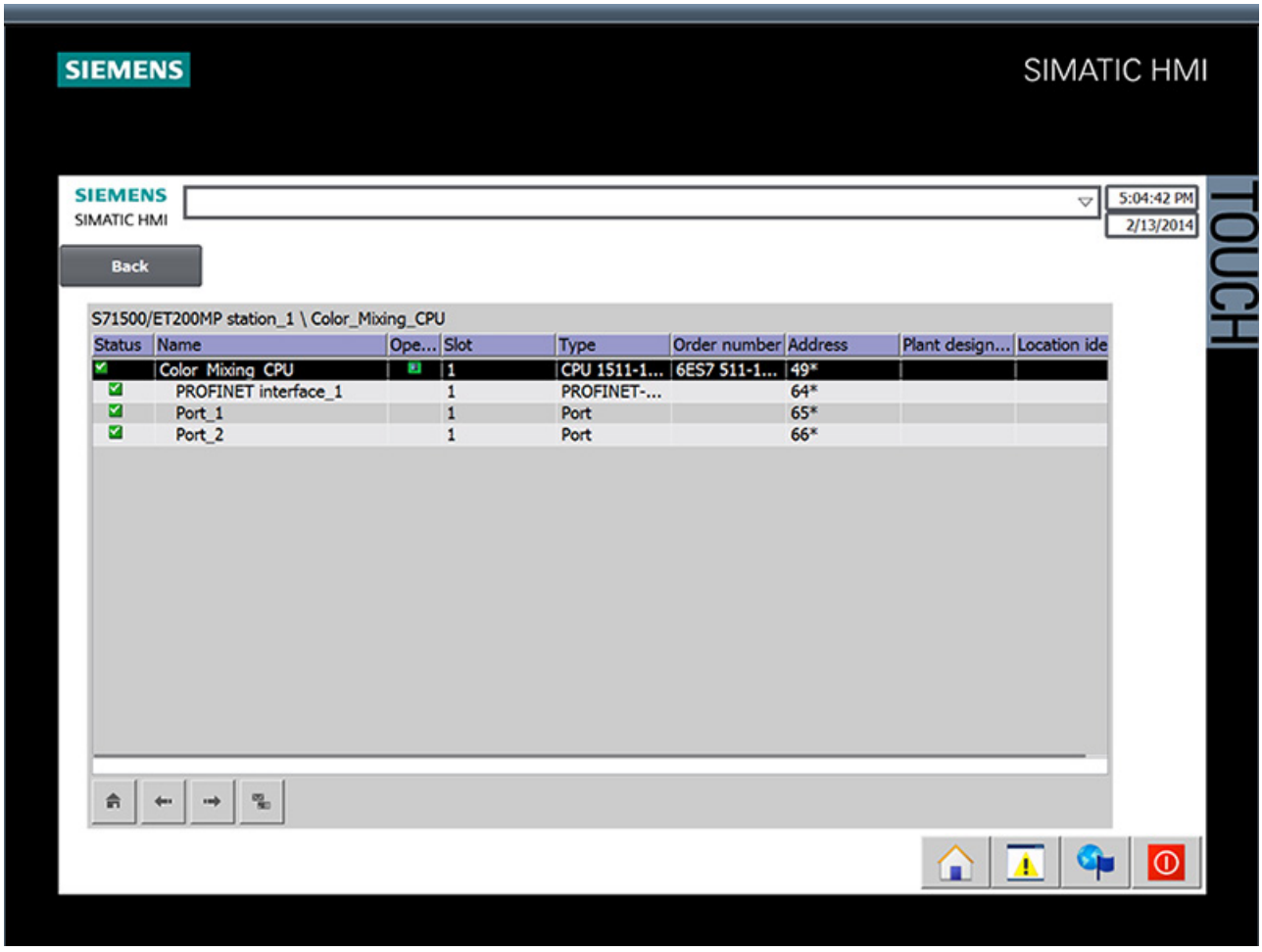
SIEMENS
SIMATIC HMI
SIEMENS
SIMATIC HMI
5:04:42 PM
2/13/2014
TOUCH
Back
S71500/ET200MP station_1 \ Color_Mixing_CPU
Status Name Ope... Slot Type Order number Address Plant design... Location ide
Color_Mixing_CPU 1 CPU 1511-1... 6ES7 511-1... 49*
PROFINET interface_1 1 PROFINET-... 64*
Port_1 1 Port 65*
Port_2 1 Port 66*

3.4 Loading the project into the programming device

3.4.1 Load CPU to project

Introduction

You can create a new station including the actual values from the hardware configuration and the user program.

Procedure

1. Open the dialog for loading from the CPU.

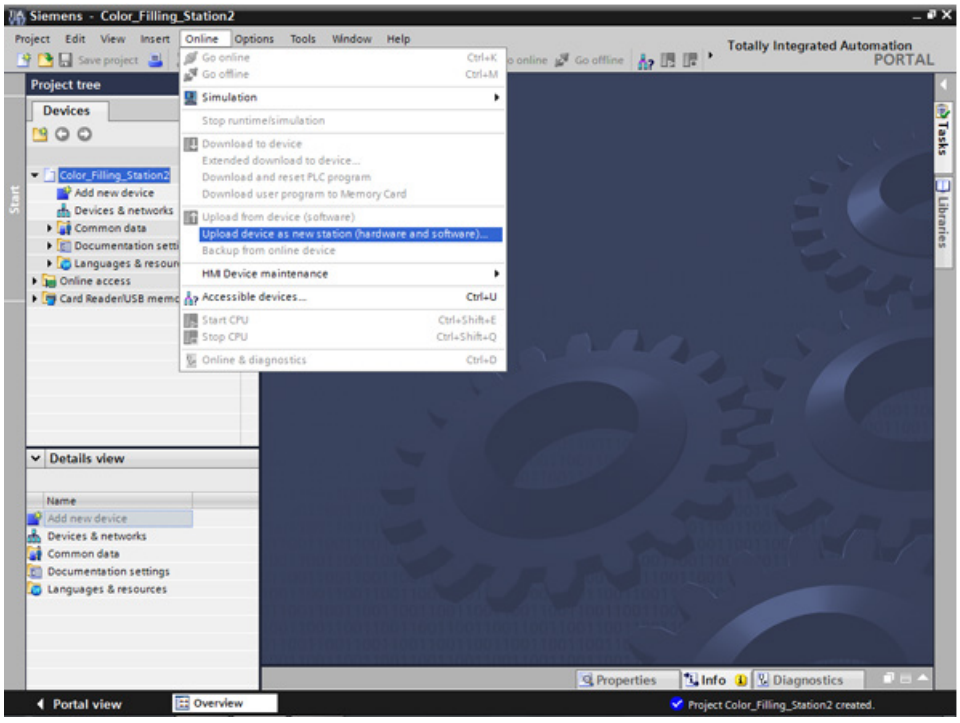

2. Select the interface with which the programming device is connected to the CPU. The search for accessible nodes starts automatically.
3. Load the CPU in the project.

Result

The hardware and software configuration of the CPU are loaded into the project. The project now contains, for example, program blocks and tags.

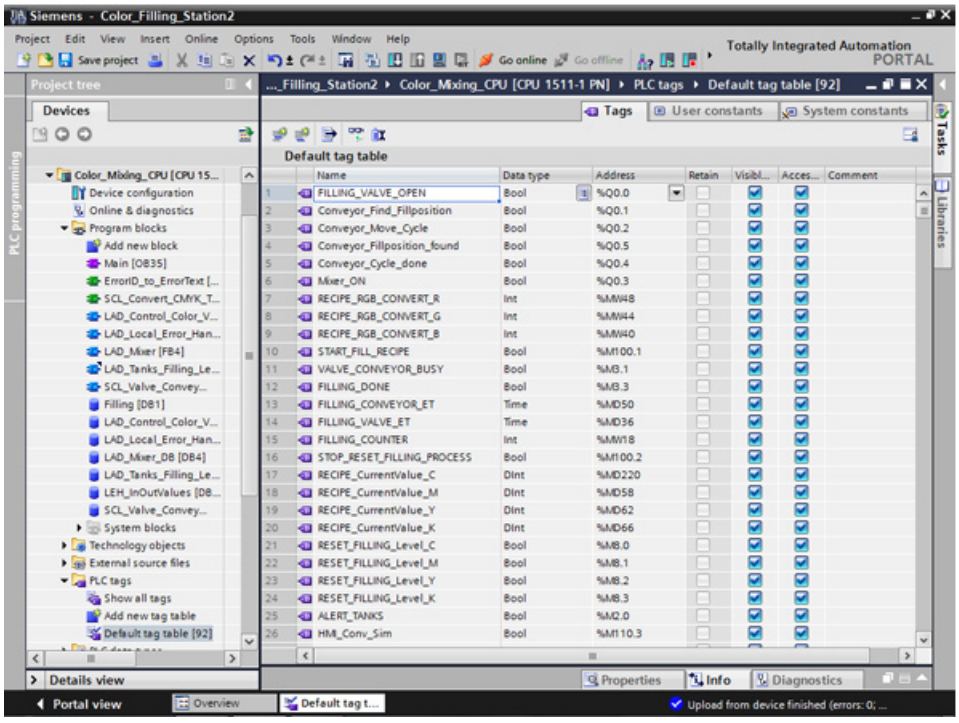

3.5 Team engineering via Inter Project Engineering

3.5.1 Basics of "Inter Project Engineering"

Introduction

In this section, you will learn about the benefits of team engineering and how to create the required CPU data for an HMI project engineer. As an HMI project engineer, you will learn how to use this CPU data in your project.

Distributed configuration

You can use "Inter Project Engineering" to develop the user program and user interface in parallel at different locations. The HMI project engineer requires no CPU user program. There is no need for a STEP 7 installation.

Only tags, blocks, messages and address information of the CPU interfaces are ultimately relevant for the connection of an HMI device to a CPU. The programmer can conveniently export this data to an IPE file, which is imported into the project by the HMI developer. Updates are possible at any time by transferring a new IPE file.

The data are consistent after loading to the CPU and HMI device. The connections to the CPU created in the HMI configuration remain up-to-date.

Note

You can integrate the new Basic Panels 2nd Generation and Comfort Panels to STEP 7 projects as of V5.4 SP3 with an import into the TIA Portal.

3.5.2 Creating an IPE file

Introduction

You want to use a compact HMI device to display of fill levels directly at the paint mixing plant. You hire an engineering firm for the visualization and the provide the required CPU data as an IPE file.

Procedure

1. Add new proxy data for the CPU.
2. Enter a name and select the required CPU data.

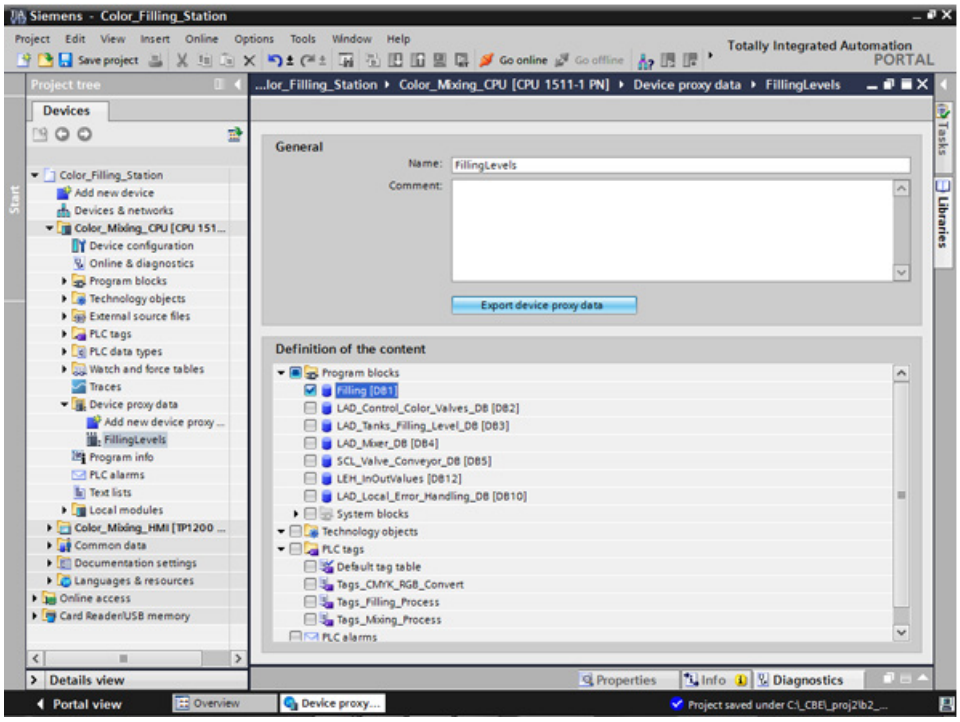

3. Export the proxy data.

Result

The IPE file is created. You can send the IPE file, for example, as e-mail to the engineering firm.

3.5.3 Importing an IPE file

Introduction

In the engineering office, the project engineer creates a device proxy in a new project and initializes it with the CPU data from the IPE file. The project engineer repeats the initialization for each update of the IPE file.

Procedure

1. Create the device proxy for the CPU in a new project and initialize it.

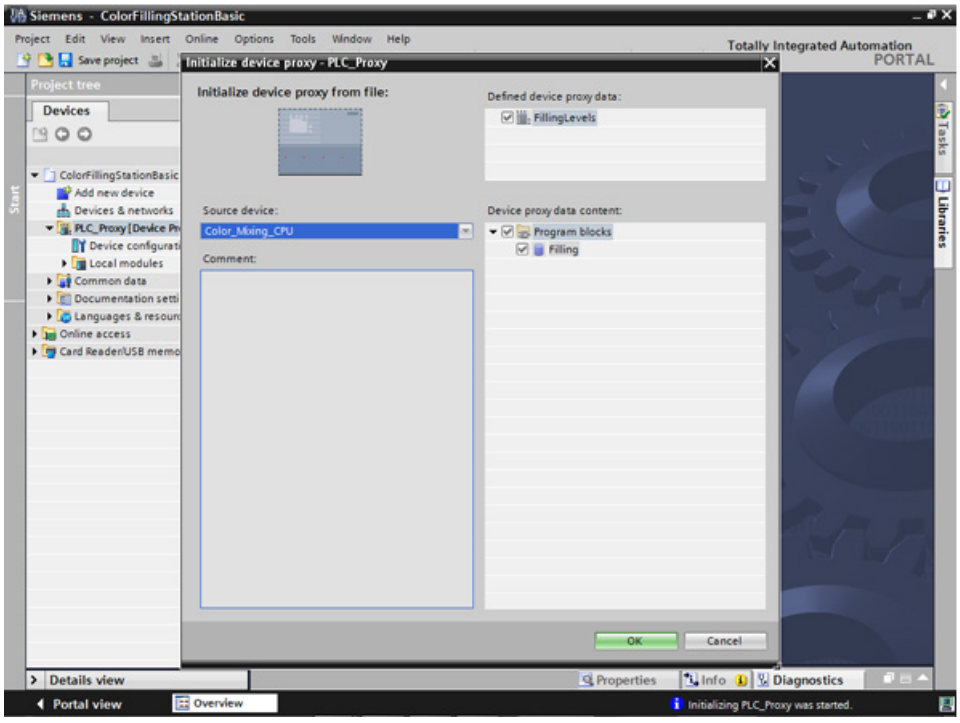

2. Use the Device Wizard to insert a Basic Panel.
3. Create the HMI tag for the fill level of the "Cyan" color and select the PLC tag.

4. Create the other HMI tags in the same way.

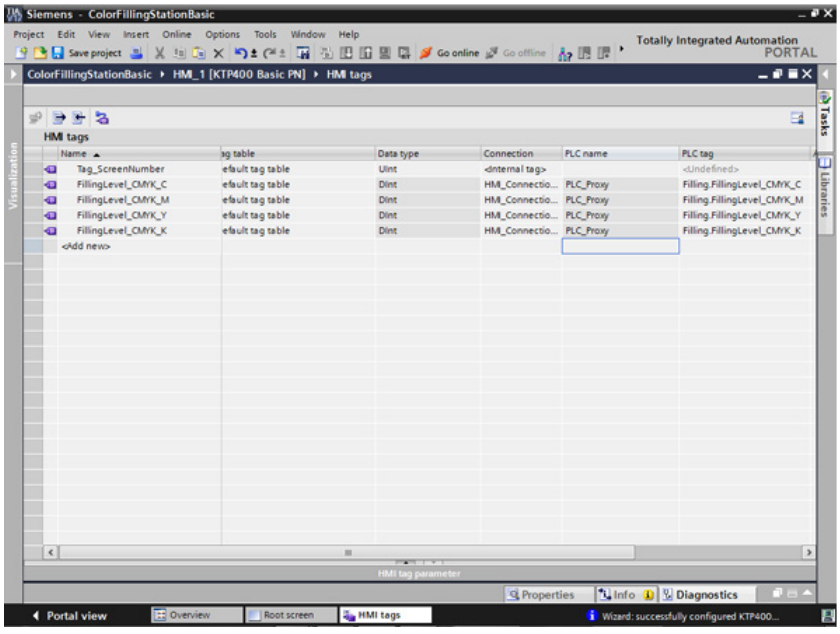

5. Configure a bar graph to display the fill level of the "Cyan" color.
6. Create a bar graph for the other fill levels in the same way.

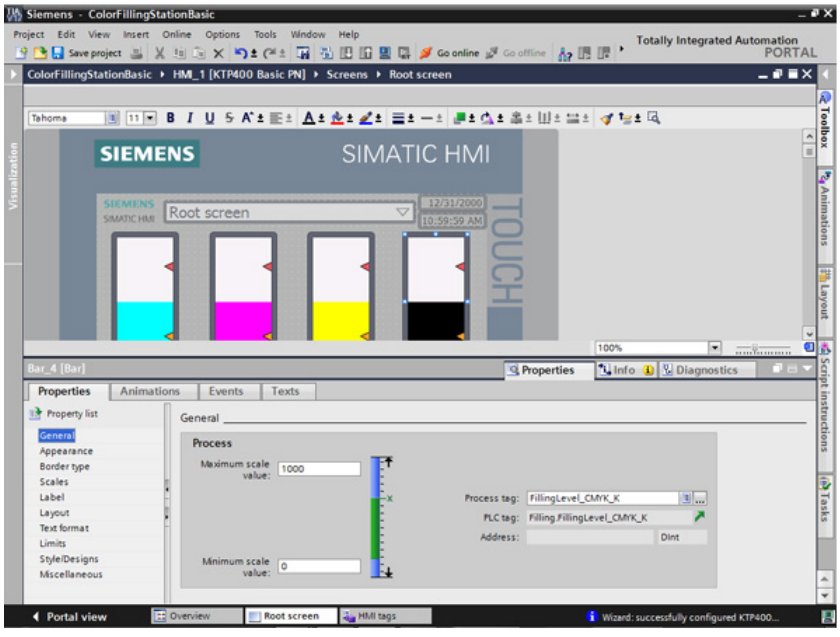

7. Compile the project.

Result

The project can now be loaded to the HMI device from the commissioning engineer. The communication with the CPU is up-to-date thanks to the CPU data from the IPE file.

Security

4

4.1 Overview of the protective functions of the CPU

Introduction

This chapter describes the following functions for protecting the S7-1500 automation system against unauthorized access:

- Access protection
- Know-how protection
- Copy protection
- Protection by locking the CPU

Further measures for protecting the CPU

The following measures additionally increase the protection against unauthorized accesses to functions and data of the S7-1500 CPU from external sources and via the network:

- Deactivation of the Web server
- Deactivation of the time synchronization via an NTP Server
- Deactivation of the PUT/GET communication

When the Web server is used, you protect your S7-1500 automation system against unauthorized access by setting password-protected access rights for specific users in the user management.

4.2 Using the display to configure additional access protection

Introduction

On the display of an S7-1500, you can block access to a password-protected CPU (local lock). The access lock is only in effect, when the operating mode switch is in the RUN position.
The access lock applies independently of password protection, i.e. if someone accesses the CPU via a connected programming device and has entered the correct password, access to the CPU is still blocked.
The access block can be set separately for each access level on the display, so that, for example, read access is allowed locally, but write access is not allowed locally.

Procedure

If an access level with a password is configured in STEP 7, access can be blocked using the display.

Proceed as follows to set the local access protection for an S7-1500 CPU on the display:

1. On the display, select Settings > Protection menu.
2. Confirm the selection using "OK", and configure for each access level, whether access at the RUN mode selector is allowed or not:

   Allow: Access to the CPU is possible, provided the corresponding password in STEP 7 is entered.

   Disabled in RUN: When the operating mode switch is in the RUN position, no more users with privileges for this access level can log in to the CPU, even if they know the password. In STOP mode, access is possible with password entry.

Access protection for the display

A password can be configured for the display in STEP 7 in the properties of the CPU so that the local access protection is protected by a local password.

4.3 Know-how protection

You can use know-how protection to protect one or more blocks of the OB, FB, FC type and global data blocks in your program from unauthorized access. You can enter a password in order to restrict access to a block. The password protection prevents the block from being read or changed without authorization.

Without the password only the following data concerning the block can be read:

- Block title, comments and block properties
- Block parameters (INPUT, OUTPUT, IN, OUT, RETURN)
- Call structure of the program
- Global tags without information on the point of use

Further actions that can be carried out with a know-how protected block:

- Copying and deleting
- Calling in a program
- Online/offline comparison
- Load

Setting up block know-how protection

1. Open the properties of the respective block.
2. Select the "Protection" option under "General".

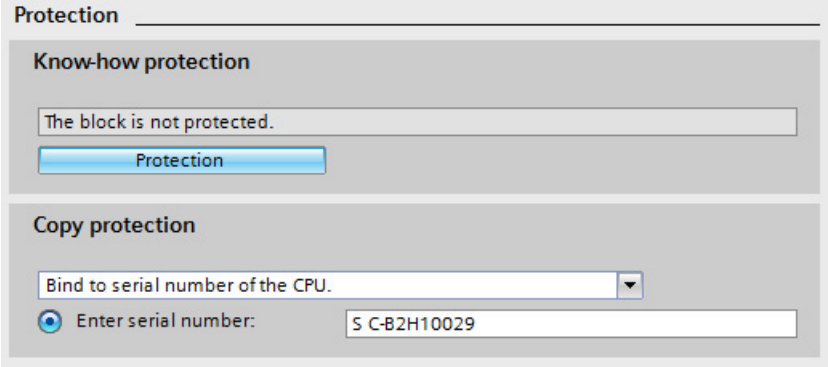

3. Click the "Protection" button to display the "Know-how protection" dialog.

4. Click the "Define" button to open the "Define password" dialog.

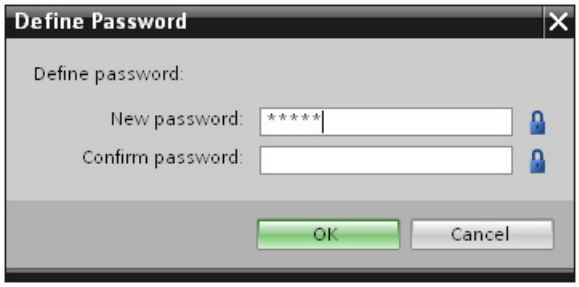

5. Enter the new password in the "New password" field. Enter the same password in the "Confirm password" field.
6. Click "OK" to confirm your entry.
7. Close the "Know-how protection" dialog by clicking "OK".

Result: The blocks selected will be know-how-protected. Know-how protected blocks are marked with a lock in the project tree. The password entered applies to all blocks selected.

Opening know-how protected blocks

1. Double-click the block to open the "Access protection" dialog.
2. Enter the password for the know-how protected block.
3. Click "OK" to confirm your entry.

Result: The know-how-protected block will open.

Once you have opened the block, you can edit the program code and the block interface of the block till you close the block or the TIA Portal. The password must be entered again the next time the block is opened. If you close the "Access protection" dialog with "Cancel", the block will open but the block code will not be displayed and you will not be able to edit the block.

The know-how protection of the block is not removed if, for example, you copy the block or add it to a library. The copies will also be know-how-protected.

Removing block know-how protection

1. Select the block from which you want to remove know-how protection. The protected block may not be open in the program editor.
2. In the "Edit" menu, select the "Know-how protection" command to open the "Know-how protection" dialog.
3. Deactivate the "Hide code (Know-how protection)" check box.

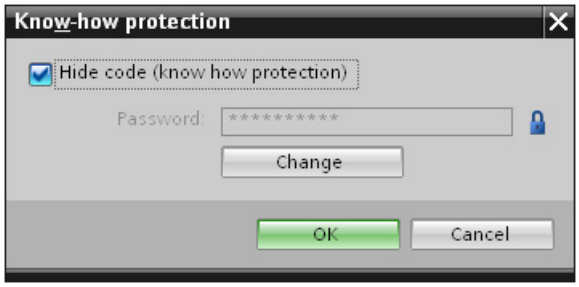

4. Enter the password.

5. Click "OK" to confirm your entry.

Result: Know-how protection will be removed from the block selected.

4.4 Copy protection

Copy protection allows you to bind the program or the blocks to a specific SIMATIC memory card or CPU. Through the linking of the serial number of a SIMATIC memory card or of a CPU the use of this program or of this block is only possible in combination with a specific SIMATIC memory card or CPU. With this function a program or block can be sent electronically (e.g. by e-mail) or by shipping a memory module.

When you set up such a copy protection for a block, also assign know-how-protection to this block. Without know-how protection, anyone can reset the copy protection. You must, however, set up copy protection first as the copy protection settings are read-only if the block is already know-how-protected.

Setting up copy protection

1. Open the properties of the respective block.
2. Select the "Protection" option under "General".

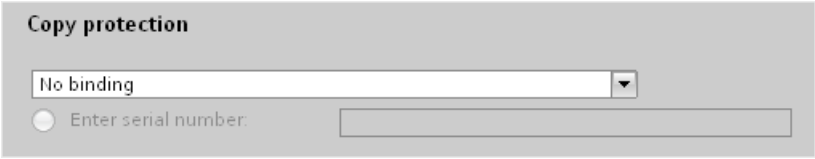

3. In the "Copy protection" area, select either the "Bind to serial number of the CPU" entry or the "Bind to serial number of the memory card" entry from the drop-down list.

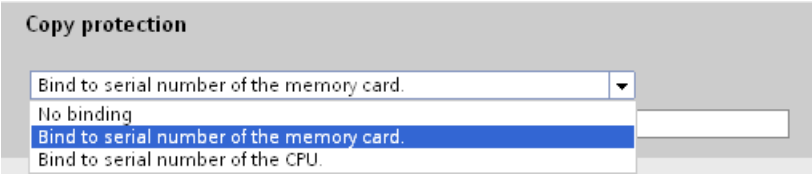

4. Enter the serial number of the CPU or the SIMATIC memory card.

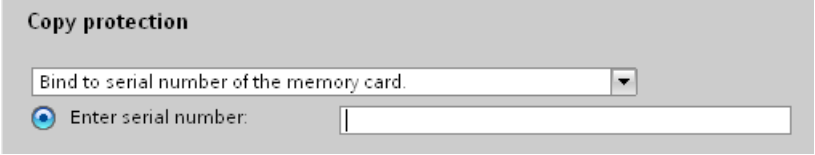

5. You can now set up the know-how protection for the block in the "Know-how protection" area.

Note

If you download a copy protected block to a device that does not match the specified serial number, the entire download operation will be rejected. This means that blocks without copy protection will also not be downloaded.

Removing copy protection

1. Remove any existing know-how protection.
2. Open the properties of the respective block.
3. Select the "Protection" option under "General".
4. In the "Copy protection" area, select the "No binding" entry from the drop-down list.

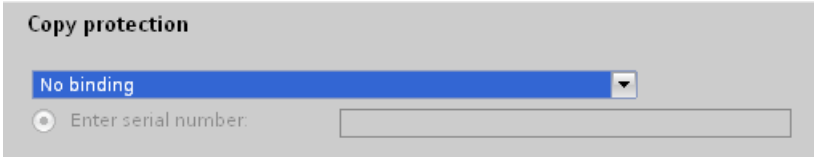

4.5 Protection by locking the CPU

Protect your CPU from unauthorized access using a sufficiently secured front cover.

Using the latch on the CPU cover, you have the following options:

- Affix a seal
- Secure the front cover with a lock (shackle diameter: 3 mm)

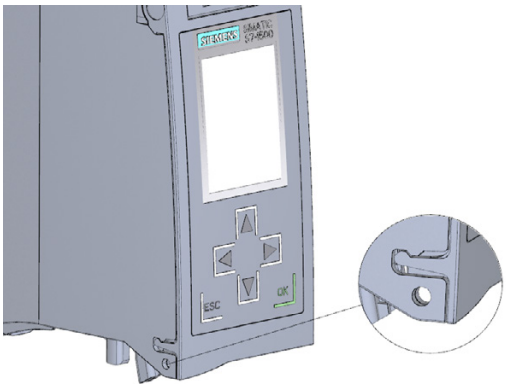

4.6 Configuring access protection for the CPU

Introduction

The CPU offers four access levels, in order to limit access to specific functions.

By setting up the access levels and the passwords for a CPU, you limit the functions and memory areas that are accessible without entering a password. The individual access levels as well as the entry of their associated passwords are specified in the object properties of the CPU.

Access levels of the CPU

Access levels	Access restrictions
Complete access (no protection)	The hardware configuration and the blocks can be read and changed by all users.
Read access	With this access level, read-only access to the hardware configuration and the blocks is possible without entering a password, which means you can download hardware configuration and blocks to the programming device. In addition, HMI access and access to diagnostics data is possible. Without entering the password, you cannot load any blocks or hardware configuration into the CPU. Additionally, the following are **not** possible without the password: Test functions which write, changing the operating mode (RUN/STOP), and firmware update (online).
HMI access	With this access level only HMI access and access to diagnostics data is possible without entering the password. Without entering the password, you can neither load blocks and hardware configuration into the CPU, nor load blocks and hardware configuration from the CPU into the programming device. Additionally, the following are **not** possible without the password: Test functions which write, changing the operating mode (RUN/STOP), and firmware update (online).
No access (complete protection)	When the CPU is completely protected, no read or write access to the hardware configuration and the blocks is possible. HMI access is also not possible. The server function for PUT/GET communication is disabled in this access level (cannot be changed). Authentication with the password will again provide you full access to the CPU.

Each access level allows unrestricted access to certain functions without entering a password, e.g. identification using the "Accessible devices" function.

The CPU's default setting is "No restriction" and "No password protection". In order to protect access to a CPU, you must edit the properties of the CPU and set up a password.

Communication between the CPUs (via the communication functions in the blocks) is not restricted by the protection level of the CPU, unless PUT/GET communication is deactivated.

Entry of the right password allows access to all the functions that are allowed in the corresponding level.

Note

Configuring an access level does not replace know-how protection

Configuring access levels prevents unauthorized changes to the CPU, by restricting download privileges. However, blocks on the SIMATIC memory card are not write- or read-protected. Use know-how protection to protect the code of blocks on the SIMATIC memory card.

Parameterizing the procedure at access levels

To configure the access levels of an S7-1500 CPU, follow these steps:

1. Open the properties of the S7-1500 CPU in the Inspector window.
2. Open the "Protection" entry in the area navigation.

   A table with the possible access levels appears in the Inspector window.

Protection level	Access			Access permission	
Protection	HMI	Read	Write	Password	Confirmation
Full access (no protection)	✓	✓	✓		
Read access	✓	✓			
HMI access	✓				
No access (complete protection)					

3. Activate the desired protection level in the first column of the table. The green checkmarks in the columns to the right of the respective access level show you which operations are still available without entering the password.
4. In the "Password" column, specify a password for the selected access level. In the "Confirmation" column, enter the selected password again to protect against incorrect entries.

   Ensure that the password is sufficiently secure, in other words, that is does not follow a pattern that can be recognized by a machine!

   You must enter a password in the first row ("Full access" access level). This enables unrestricted access to the CPU for those who know the password, regardless of the selected protection level.
5. Assign additional passwords as needed to other access levels if the selected access level allows you to do so.
6. Download the hardware configuration to the CPU, so that the access level will take effect.

Behavior of a password-protected CPU during operation

The CPU protection takes effect after the settings are downloaded in the CPU.

Before an online function is executed, the necessary permission is checked and, if necessary, the user is prompted to enter a password. The functions protected by a password can only be executed by one programming device/PC at any one time. Another programming device/PC cannot log on.

Access authorization to the protected data is in effect for the duration of the online connection, or until the access authorization is manually rescinded with "Online > Delete access rights".

Access to a password-protected CPU in the RUN mode can be limited locally in the display so that access with a password is also not possible.

4.7 Configuring protection of the HMI connection

Introduction

If the protection level "Complete protection" was set for the CPU, the HMI device can only access the CPU with the password stored there.

This function is only available with HMI devices from SIEMENS.

Procedure

1. Open the "Connections" editor in the project tree.
2. Select the integrated connection.
3. Enter the password for the CPU in the "Password" area.

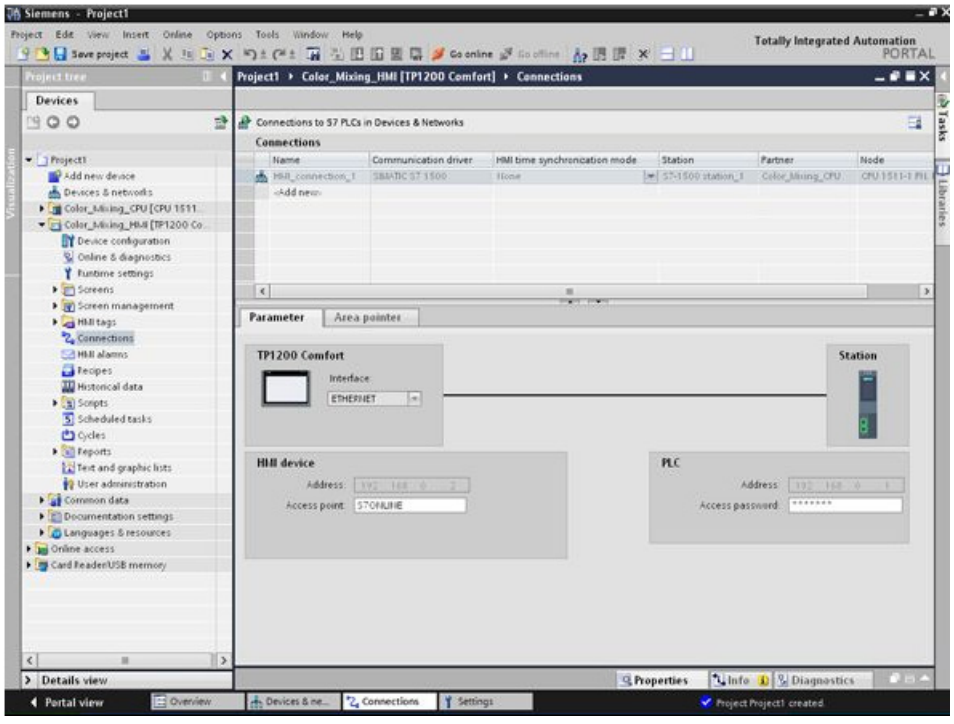

Result

The HMI device can now communicate and exchange data with the CPU.

S7-1500 Motion Control

5

5.1 Introduction

The Getting Started S7-1500 Motion Control guides you through the implementation of the motor-supported parts of the "Color mixing station" automation task. It will familiarize you with the basic functions of S7-1500 Motion Control. You configure the drive interfaces with general station description files (GSD), create technology objects and program these using instructions in your user program.

This Getting Started is based on the Getting Started S7-1500. A corresponding sample project is included.

The supplied sample project includes blocks and objects that have already been prepared. You can amend and edit these blocks and objects according to the specifications of this Getting Started for practice. You can also copy the prepared blocks and objects from the global library into the project and use them.

The Getting Started includes both comprehensive step-by-step instructions and the faster procedure of copying the objects from the library.

Task

The agitator and the conveyor of a color mixing station are to be operated with S7-1500 Motion Control.

The "Color_Filling_Station" project is to be expanded by the axes "Conveyor" (conveyor belt) and "Mixer" (agitator) for this purpose. The basic control logic for the axes is already available in the user program. The axes are integrated into the existing user program by two interface blocks. These blocks are to execute the instructions for the respective axes and provide feedback to the user program.

5.2 Preparations

5.2.1 Requirements

Hardware requirements

You need the following hardware components to run the Getting Started:

- 1 × CPU 1511-1 PN (6ES7511-1AK02-0AB0)
- 1 × S7-1500 load current supply PM 70W 120/230VAC (6EP1332-4BA00)
- 1 × mounting rail (6ES7590-1AB60-0AA0)
- 1 × digital input module DI 16x24VDC SRC BA (6ES7521-1BH50-0AA0)
- 1 × digital output module DQ 16x24V DC/0.5A HF (6ES7522-1BH01-0AB0)
- 2 × front connectors (6ES7592-1AM00-0XB0)
- 1 × SIMATIC Memory Card with at least 4 MB (e.g. 6ES7954-8LC03-0AA0)
- 1 × Ethernet cable

You can configure and program the Getting Started without any additional hardware.

To commission the configured Motion Control-specific system parts, however, you need two drives in addition to the hardware requirements listed above. The drives must be configured and commissioned beforehand.

The drives must each support one of the following PROFIdrive frames:

- PROFIdrive frame 3 for positioning of the conveyor
- PROFIdrive frame 1 for speed control of the agitator

The following drives were selected for the Getting Started as an example:

- 1 × SINAMICS S120 CU310-2 PN V4.5 drive (6SL3 040-1LA01-0AA0)
- 1 × drive SINAMICS G120 CU240E-2 PN(-F) V4.5 (6SL3244-0BB13-1FA0)

Software requirements

You need the following software components to run the Getting Started:

- SIMATIC STEP 7 Professional V17
- SIMATIC WinCC Advanced V17 oder SIMATIC WinCC Professional V17

Sample project

To run the Getting Started, you need the following project files which you can download as zip file from the Siemens website (https://support.industry.siemens.com/cs/ww/en/view/78027451), chapter "S7-1500 Motion Control" > "Project download":

- Sample project "Color_Filling_Station"
- Library "MotionLib_Color_Filling_Station"

See also

Link to the Getting Started contents overview (https://support.industry.siemens.com/cs/ww/en/view/78027451)

5.2.2 Basic procedure

Starting with the sample project "Color_Filling_Station", configure the drives and technology objects with the TIA Portal. Then you create a STEP 7 user program that allows you to control the movement of the drives.

The procedure is divided into the following basic steps:

- Configuring drives
- Creating technology objects
- Programming the PLC
- Testing a function

5.2.3 Opening a project

The included sample project "Color_Filling_Station" is the starting point for further action. Open the project in the project view.

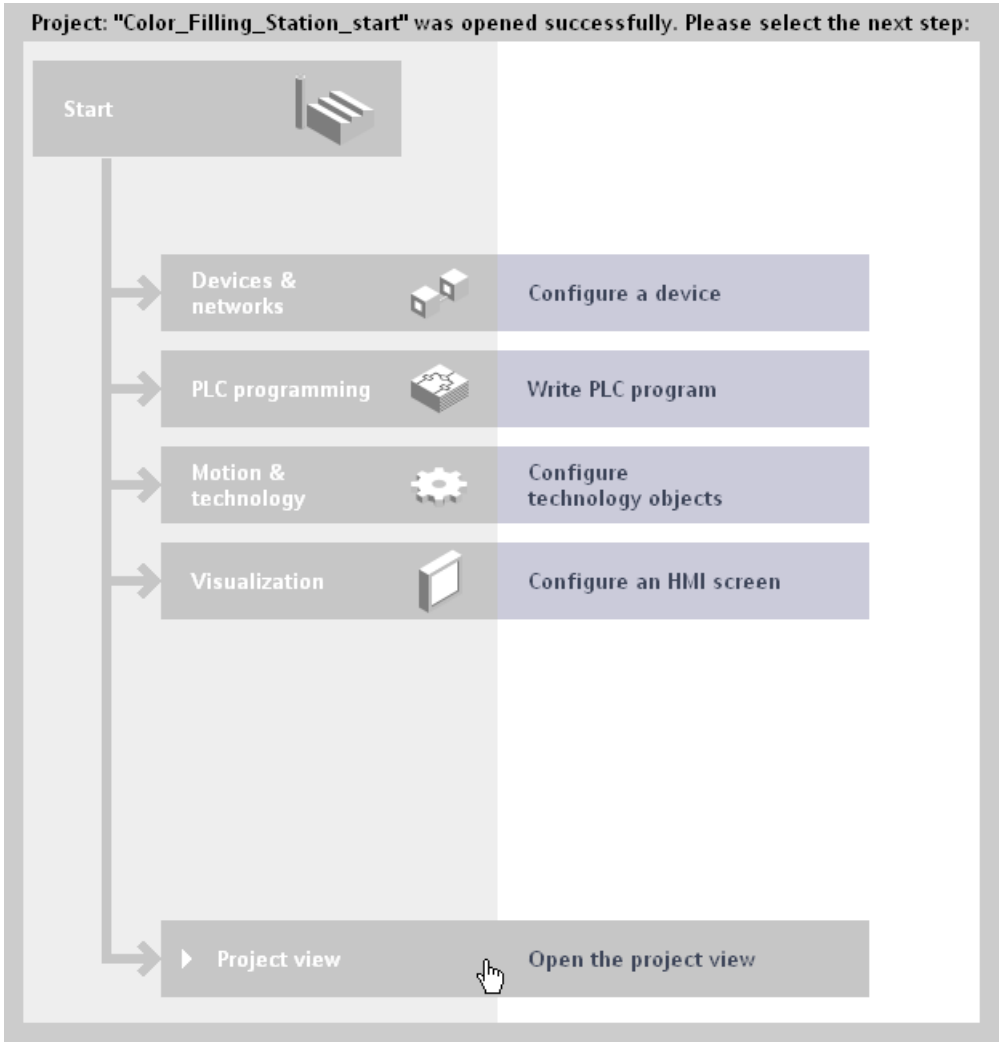

5.2.4 Swapping the start screen

The visualization of the project has been expanded for the Getting Started S7-1500 Motion Control. To use this expansion, you simply need to swap the start screen of the visualization.

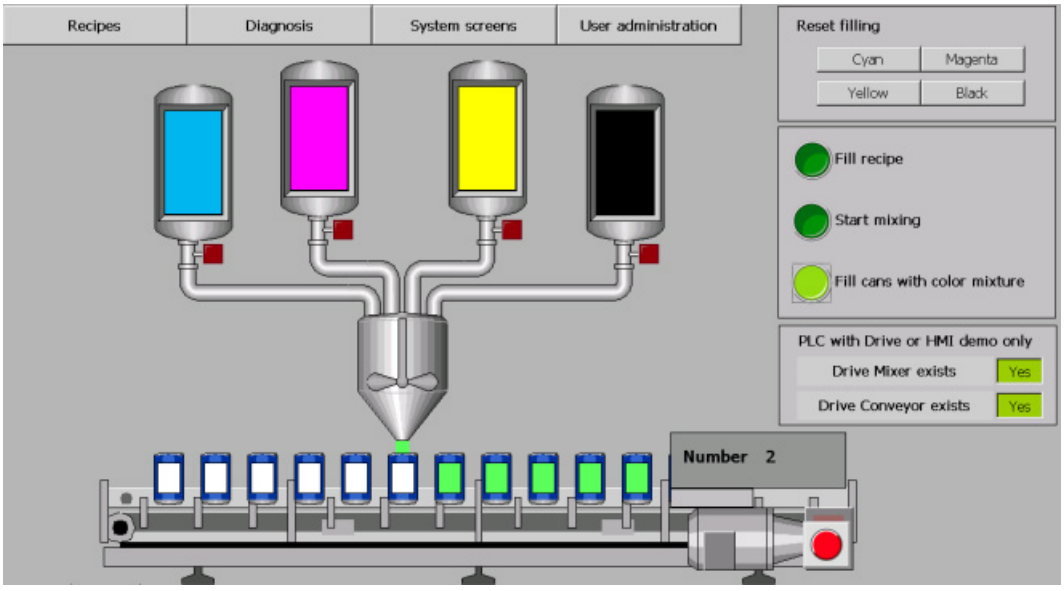

Procedure

To swap the start screen of the visualization, follow these steps:

1. Open the global library "MotionLib_Color_Filling_Station".
2. Open the folder "Master copies > Start" in the "MotionLib_Color_Filling_Station" global library.

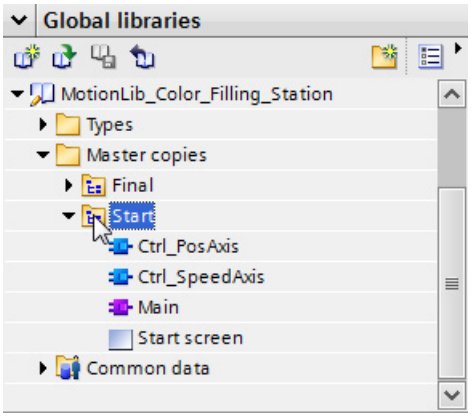

3. Drag the "Start screen" to the respective screen in the "Color_Mixing_HMI > Screens" folder.

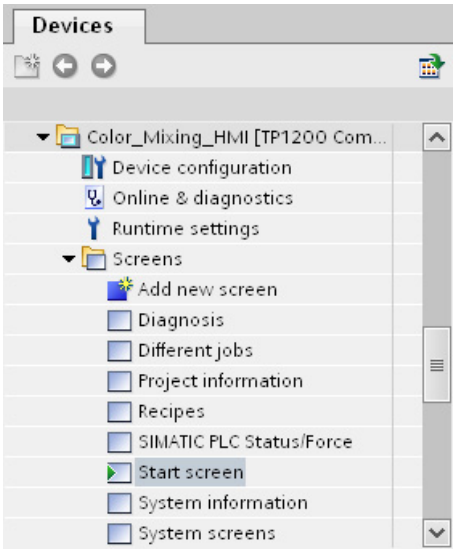

The "Paste" dialog opens.

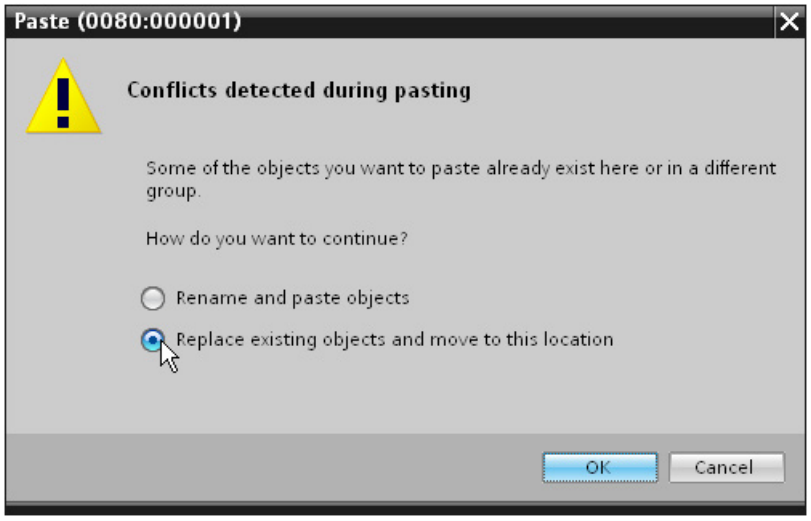

4. Select the option "Replace existing objects and move to this location".
5. Click "OK" to confirm.

Expanding the start screen

The start screen has been expanded by the area "PLC with drive or HMI demo only" with the following buttons:

- **Drive Mixer exists: Yes/No**
- **Drive Conveyor exists: Yes/No**

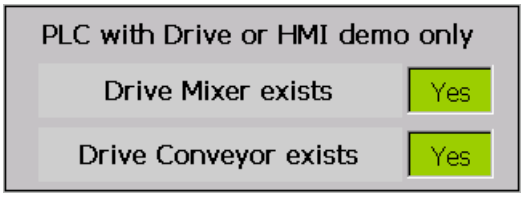

If you want to test the color mixing station with the drives, switch the buttons to "Yes". The program is switched to use of the actual drives. The program uses the position of the drive for positioning the cans.

If you want to test the color mixing station without the drives, switch the buttons to "No". The program uses a calculated position for positioning the cans.

If an error occurs at the drive or the technology object, the display text is changed and highlighted in red.

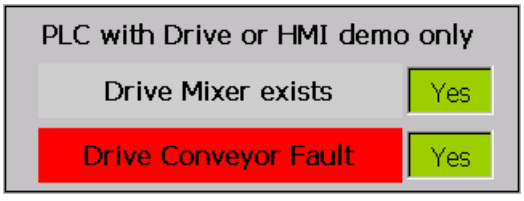

You acknowledge errors with the following stop/reset button after the cause of the error has been removed:

5.2.5 Pasting blocks

The following program blocks have been prepared to simplify the step sequences and avoid repetitions:

- Organization block "Main"
- Function block "Ctrl_PosAxis"
- Function block "Ctrl_SpeedAxis"

You only have to copy these program blocks from the global library into the project.

Procedure

To copy the program blocks into the project, follow these steps:

1. Open the "Color_Mixing_CPU > Program blocks" folder in the project tree.
2. Open the folder "Master copies > Start" in the "MotionLib_Color_Filling_Station" global library.
3. Drag-and-drop the "Main" organization block to the corresponding block in the "Program blocks" folder.

   The "Paste" dialog opens.
4. Select the option "Replace existing objects and move to this location".
5. Click "OK" to confirm.
6. Drag-and-drop the "Ctrl_PosAxis" and "Ctrl_SpeedAxis" function blocks to the "Program blocks" folder.

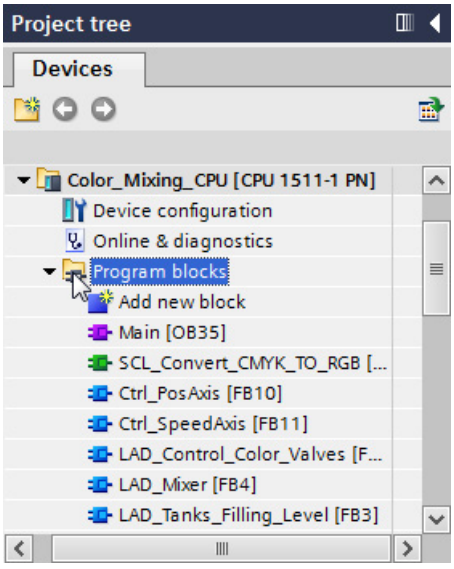

7. Compile the CPU software.

5.3 Configuring drives

5.3.1 Configuring SINAMICS S120

The SINAMICS S120 drive is used in the color mixing station for moving the conveyor. The drive is integrated via a general station description file (GSD).

In the following example, the IRT communication is also prepared with a send clock of 2 ms. IRT is isochronous real-time communication between the CPU and the drive.

Creating a drive

To create the drive in the network view, follow these steps:

1. Open the network view of TIA Portal.
2. In the "Hardware catalog" task card, open the folder "Other field devices > PROFINET IO > Drives > Siemens AG > SINAMICS".

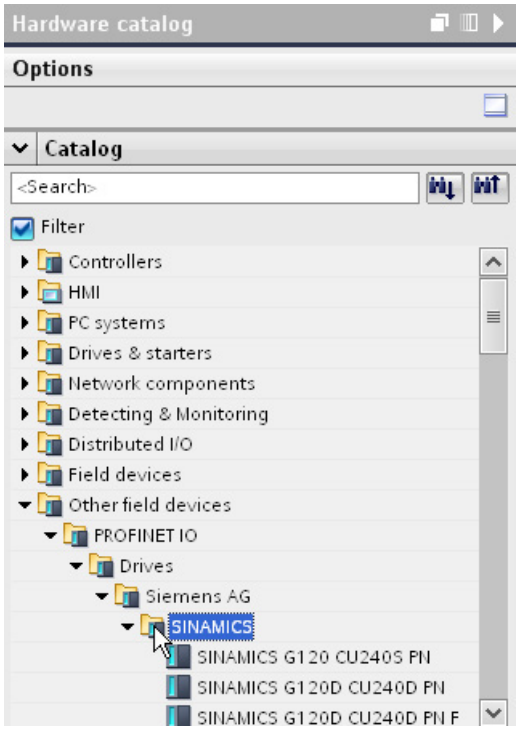

3. Select the drive "SINAMICS S120 CU310-2 PN V4.5".

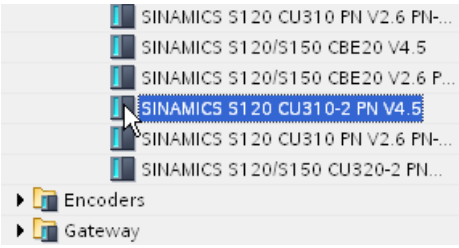

4. Drag-and-drop the drive into the network view.

   The drive is inserted in the network view.

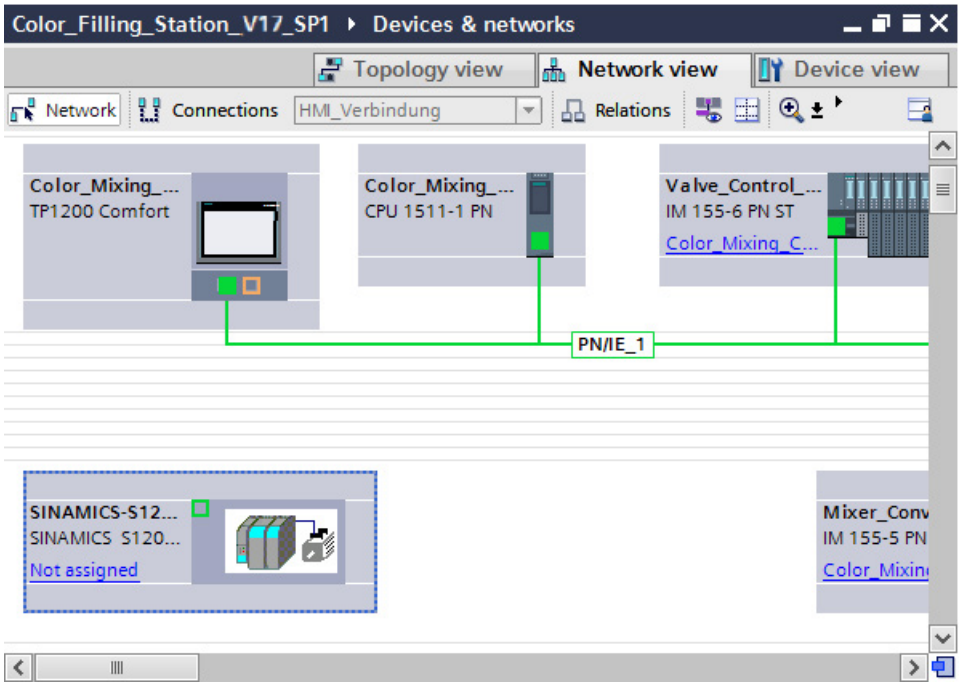

Connecting the drive

To connect the drive to the CPU, follow these steps:

1. Select the PROFINET interface of the CPU.

2. In the Inspector window, open the tab "Properties > General > Advanced options > Real-time settings".
3. Select the value 2 ms in the "IO communication" area of the "Send clock" drop-down list.

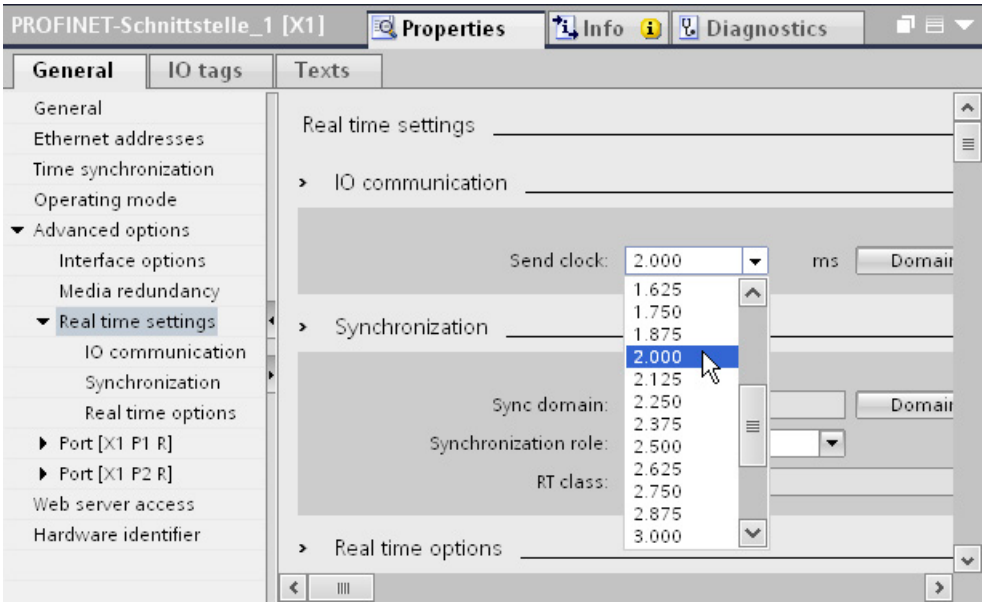

4. Select "Sync master" in the "Synchronization" area of the "Synchronization role" drop-down list.

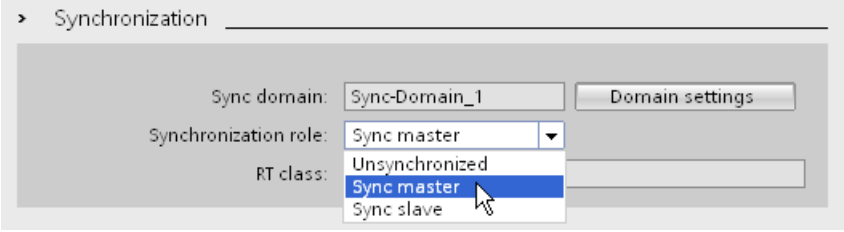

5. Assign the CPU as IO controller to the drive.

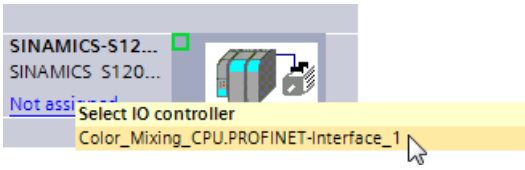

A PROFINET IO system is automatically created.

The drive is assigned to the PROFINET IO system as an IO device. The CPU is assigned to the drive as an IO controller.

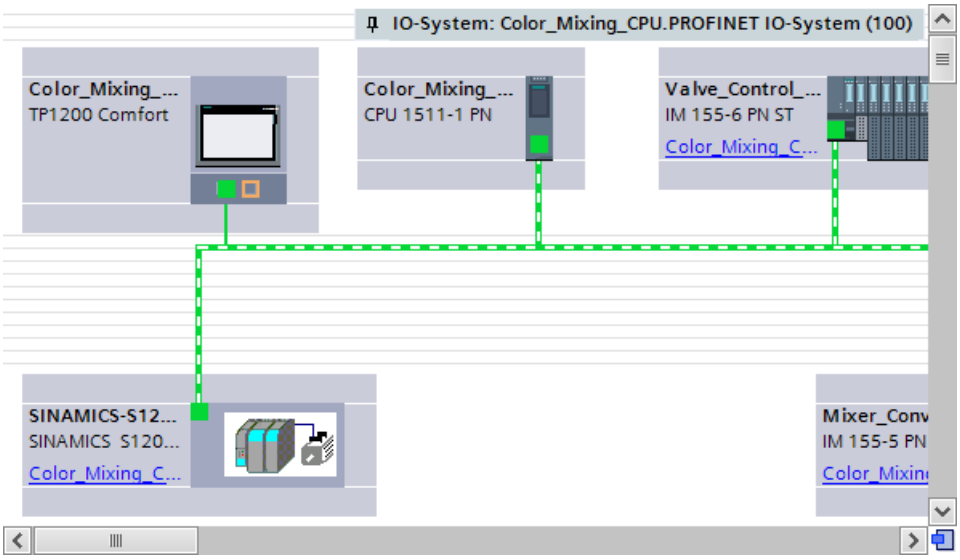

6. Open the topology view.
7. Hold down the mouse button and draw a connection between a PROFINET port of the drive and a PROFINET port of the CPU.

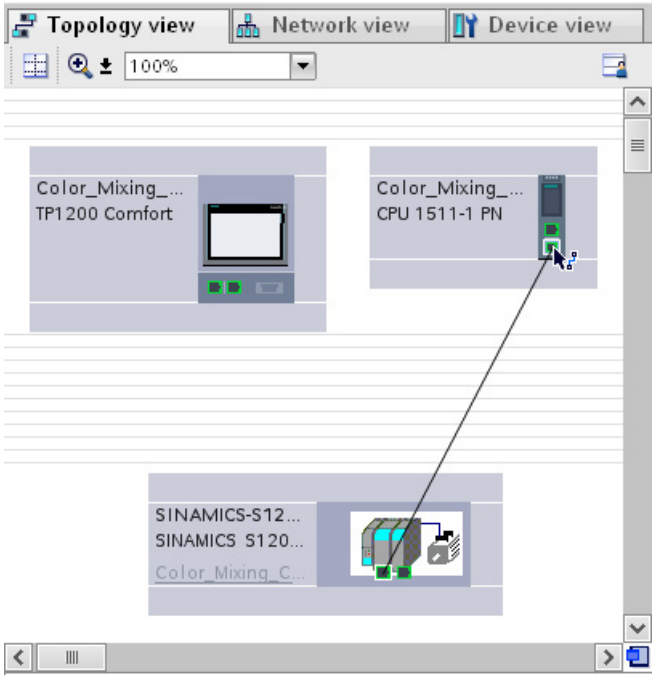

The ports of the PROFINET interfaces are interconnected. The port interconnection is necessary to use IRT when communicating with the drive. The bandwidth required for IRT communication can be more precisely determined with the port interconnection. This usually leads to better performance.

Assigning a standard frame

To assign a standard frame to the drive, proceed as follows:

1. Double-click on the SINAMICS S120 drive in the topology view.

   The device view of the drive opens.

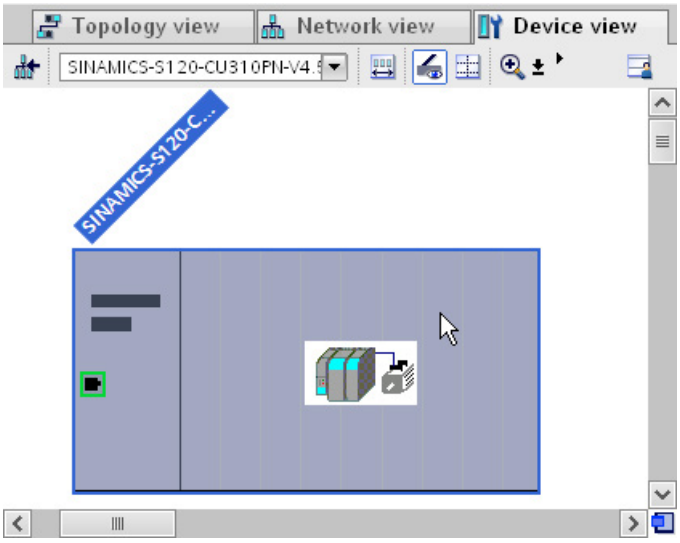

2. In the hardware catalog, select the drive object "DO Servo".

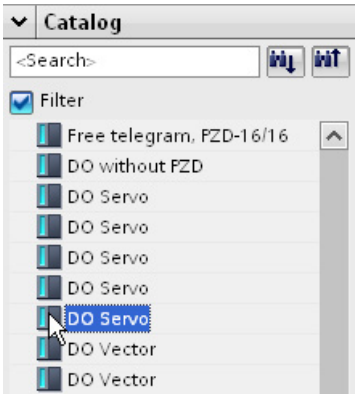

The TIA Portal automatically checks whether you can add the selected object. If you can assign the object to the drive, a blue marker is shown in the device view.

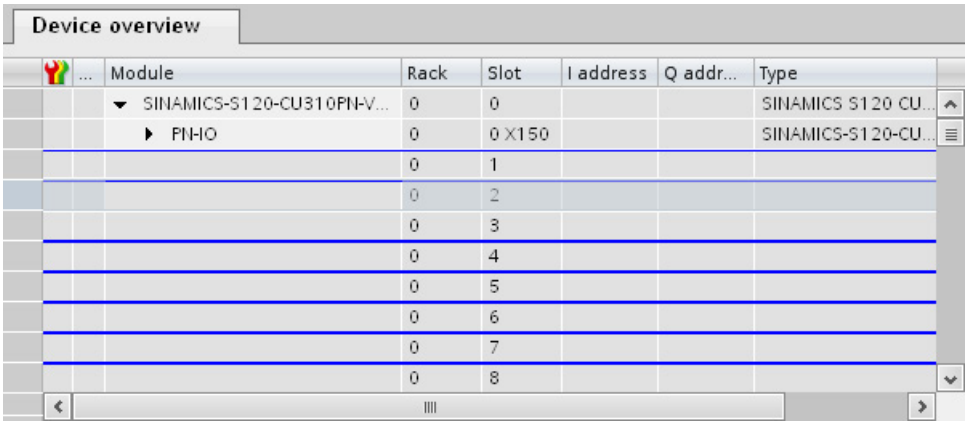

3. Double-click the selected drive object.

   The "DO Servo" drive object is assigned to the drive and appears in the device overview.

4. Assign "Drive_Conveyor" as the name of the drive object in the drive overview.

   A unique name makes it easier to assign the drive object to the technology object later.

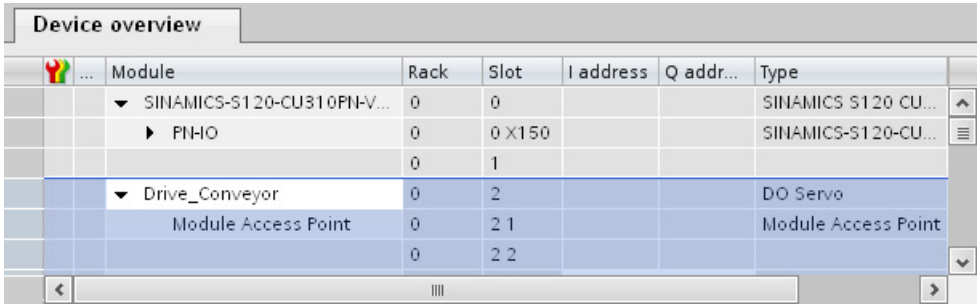

5. In the hardware catalog, double-click on the "Standard telegram 3, PZD-5/9" for PROFIdrive.

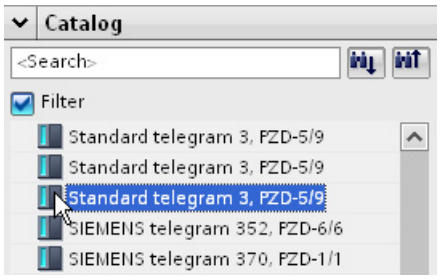

   Frame 3 is assigned to the "DO Servo" drive object and appears in the device overview.

6. Select the drive in the device view.

7. In the Inspector window, open the tab "Properties > PROFINET Interface [X1] > Advanced options > Isochronous mode".

8. Select the "Isochronous mode" check box.

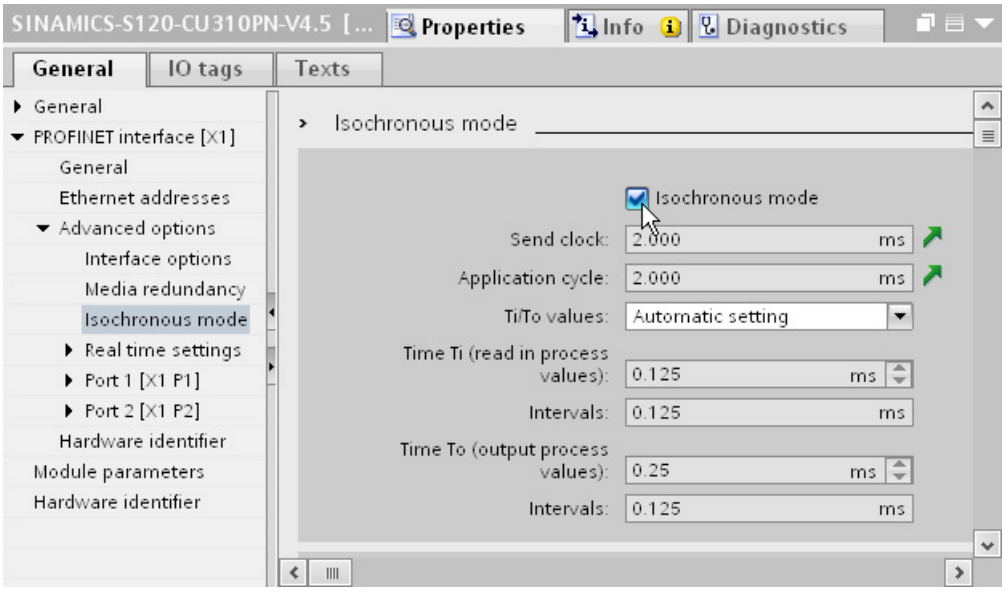

9. In the "Detail overview" list, select the "Isochronous mode" check box for the list item "GSD_Device_1/Standard frame 3".

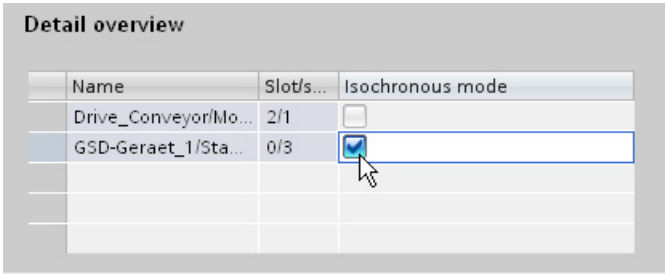

The bus times are automatically calculated and displayed with the settings for isochronous mode.

5.3.2 Configuring SINAMICS G120

The SINAMICS G120 drive is used in the color mixing station for the speed control of the agitator.

The drive is integrated via a general station description file (GSD). The SINAMICS G120 is also part of the commissioning software SINAMICS Startdrive.

In the following example, the drive is added to the existing PROFINET IO system. Simple cyclical communication between the CPU and the drive is sufficient for this application. IRT communication is not required.

Creating a drive

To create the drive in the network view, follow these steps:

1. Open the network view of TIA Portal.
2. In the "Hardware catalog" task card, open the folder "Other field devices > PROFINET IO > Drives > Siemens > SINAMICS".
3. Select the drive "SINAMICS G120 CU240E-2 PN(-F) V4.5".

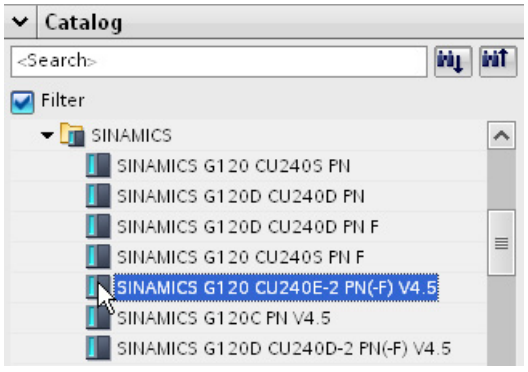

4. Drag-and-drop the drive into the network view.

   The drive is inserted in the network view.

Connecting the drive to the network

To connect the drive to the CPU, follow these steps:

1. Assign the CPU as IO controller to the drive.

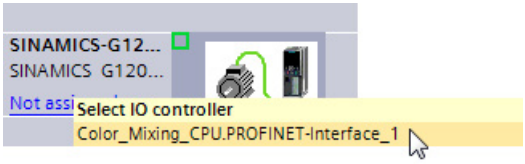

The drive is assigned to the PROFINET IO system as an IO device. The CPU is assigned to the drive as an IO controller.

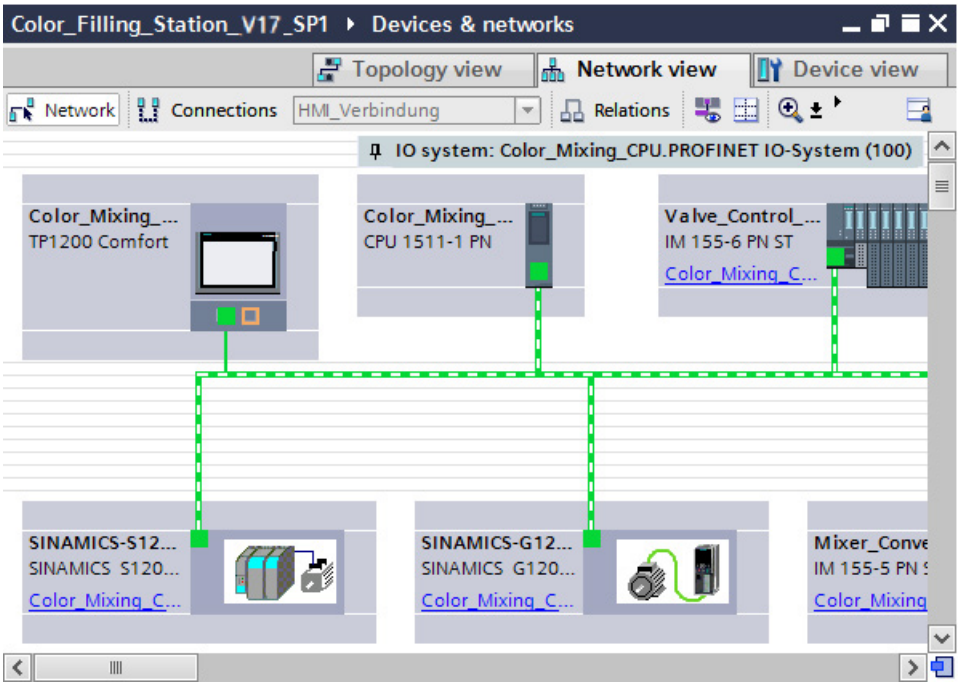

Inserting a standard frame

To assign a standard frame to the drive, proceed as follows:

1. Double-click on the SINAMICS G120 drive in the network view.
   The device view of the drive opens.
2. Assign "Drive_Mixer" as the name of the drive object in the device overview.

   A unique name makes it easier to assign the drive object to the technology object later.
3. In the hardware catalog, double-click on the "Standard telegram 1, PZD-2/2".

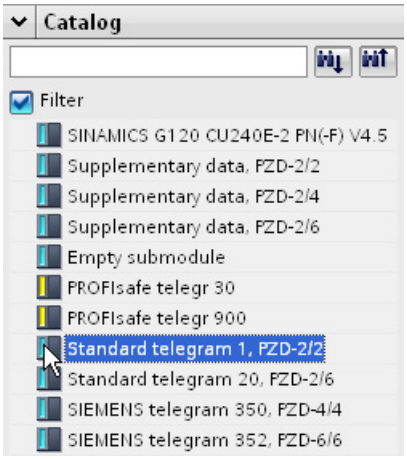

Standard frame 1 is assigned to the drive and appears in the device overview.

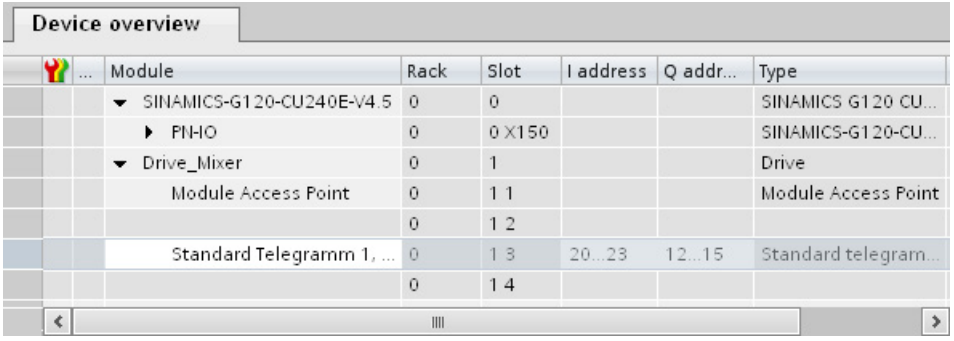

5.3.3 Using prepared drives

You can shorten the described procedure by inserting the drives from the global library into the project by means of the prepared device description files and connecting them accordingly.

Inserting drives

To insert the drives from the global library into the project, follow these steps:

1. Open the network view of TIA Portal.
2. Open the folder "Master copies > Final" in the "MotionLib_Color_Filling_Station" global library.

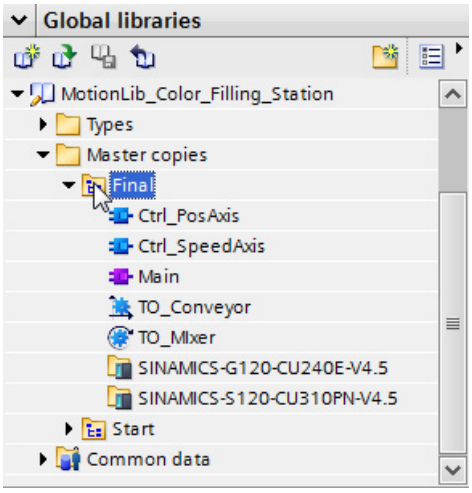

3. Drag-and-drop the drives "SINAMICS-S120-CU310PN-V4.5" and "SINAMICS-G120-CU240E-V4.5" into the network view.

Connecting drives

To connect the drives to the CPU, follow these steps:

1. Select the PROFINET interface of the CPU.
2. In the Inspector window, open the tab "Properties > General > Advanced options > Real-time settings".
3. Select the value 2 ms in the "IO communication" area of the "Send clock" drop-down list.
4. Select "Sync master" from the "Synchronization role" drop-down list.
5. Assign the CPU as IO-Controller to the drives.
6. Open the topology view.
7. Hold down the mouse button and draw a connection between a PROFINET port of the SINAMICS S120 drive and a PROFINET-Port of the CPU.
8. Select the drive in the topology view.
9. In the Inspector window, open the tab "Properties > PROFINET Interface [X1] > Advanced options > Isochronous mode".
10. Select the "Isochronous mode" check box.
11. In the "Detail overview" list, select the "Isochronous mode" check box for the list item "GSD_Device_1/Standard frame 3".

5.4 Creating technology objects

5.4.1 Configuring the positioning axis

The positioning axis technology object enables the position-controlled positioning of a drive. You can assign positioning jobs for the conveyor with Motion Control instructions in your user program.

In the following example, you create a positioning axis technology object and assign it to the previously configured SINAMICS S120 drive. You assign the drive interface with PROFIdrive frame 3. The properties of the drive interface are set automatically with this step.

The organization blocks "MC-Servo" and "MC-Interpolator" are automatically created in the project when you create the technology object.

Creating a positioning axis

To create the positioning axis, follow these steps:

1. Open the "Color_Mixing_CPU > Technology objects" folder in the project tree.
2. Double-click the "Add new object" command.

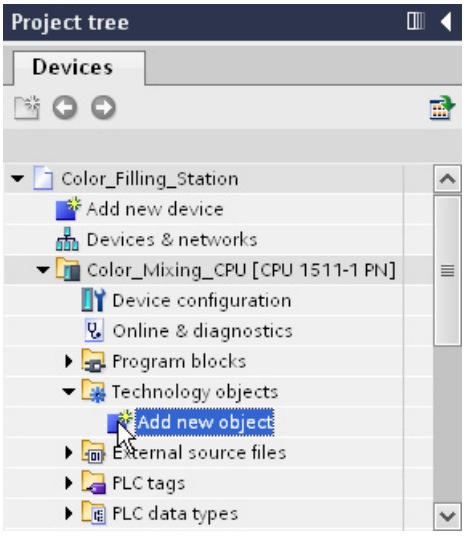

The "Add new object" dialog box opens.

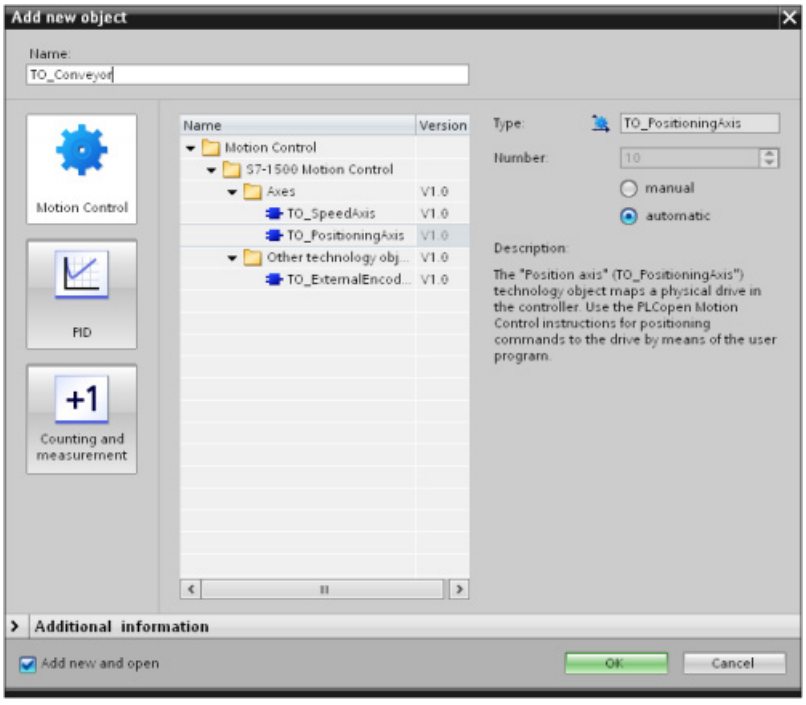

3. Select the "TO_PositioningAxis" object.
4. Enter "TO_Conveyor" as the name of the technology object.
5. Confirm your entry with "OK".

   The technology object is created and opened in the project view.

Assigning a drive

To assign a drive to the positioning axis and configure the necessary parameters, proceed as follows:

1. Open the configuration window "Hardware interface > Drive".

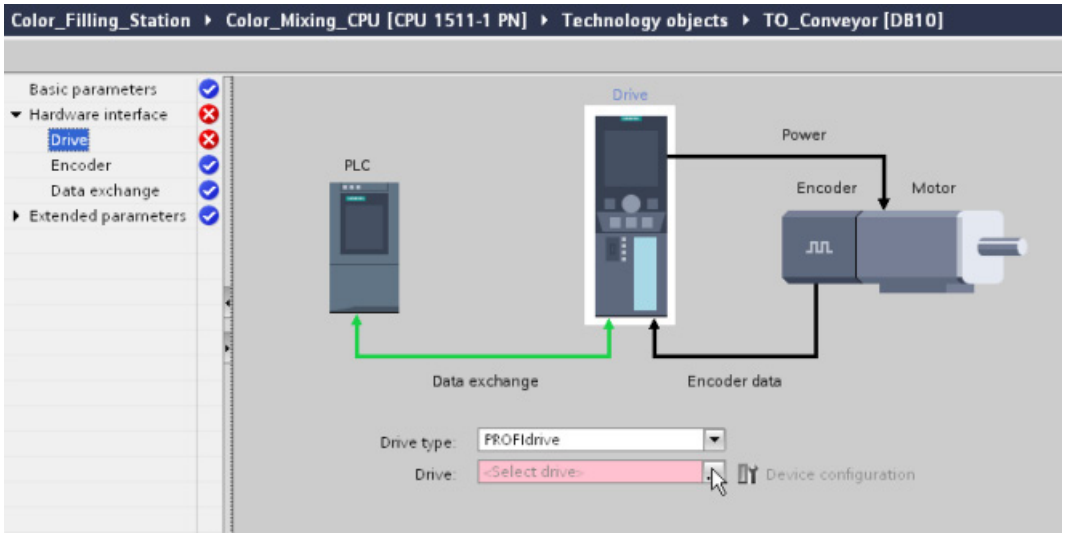

2. In the "Drive" list, select the entry "Drive_Conveyor" of the PROFINET drive SINAMICS S120.

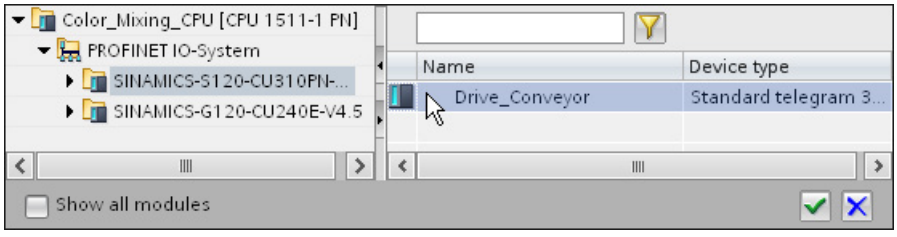

The positioning axis is connected to the drive. The process image of the drive is assigned to the process image partition "TPA OB Servo".

3. Open the configuration window "Hardware interface > Data exchange".
4. Check the settings for the data exchange. If necessary, adapt the settings to match those of the drive and the encoder.

Configuring Modulo

To configure the Modulo settings, follow these steps:

1. Open the configuration window "Basic parameters".
2. Select the "Enable Modulo" check box.
3. Enter the value 0.0 mm in the "Start value" box.
4. Enter the value 54.0 mm in the "Modulo length" box.

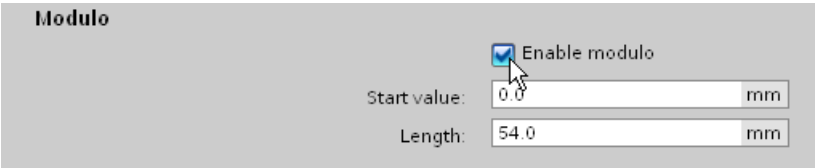

You can use the default values for the extended parameters in this example.

5.4.2 Configuring a speed axis

The speed axis technology object enables you to specify the speed for a drive. You can assign motion jobs for the agitator with Motion Control instructions in your user program.

In the following example, you create a speed axis technology object and assign it to the previously configured SINAMICS G120 drive. You assign the drive interface with PROFIdrive frame 1. The properties of the drive interface are set automatically with this step.

The organization blocks "MC-Servo" and "MC-Interpolator" were already created when you created the positioning axis.

Creating a speed axis

To create the speed axis, follow these steps:

1. Open the "Color_Mixing_CPU > Technology objects" folder in the project tree.
2. Double-click the "Add new object" command.

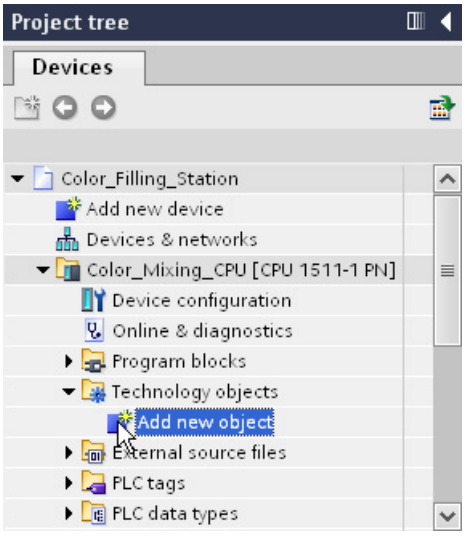

The "Add new object" dialog box opens.

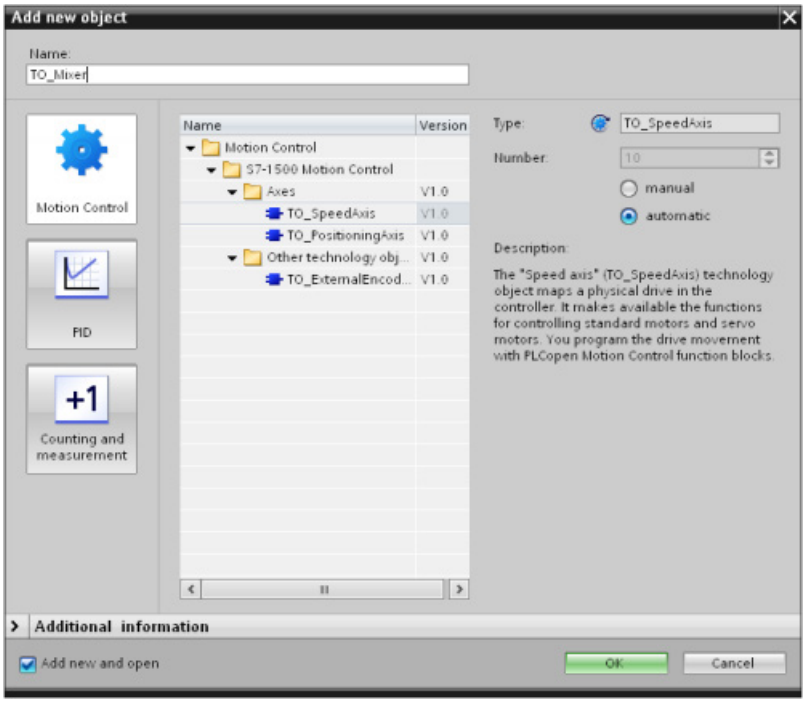

3. Select the "TO_SpeedAxis" object.
4. Enter "TO_Mixer" as the name of the technology object.
5. Confirm your entry with "OK".

   The technology object is created and opened in the project view.

Assigning a drive

For this example, you can use the default values of the configuration. You only need to assign the corresponding drive to the speed axis.

To assign a drive to the speed axis, proceed as follows:

1. Open the configuration window "Hardware interface > Drive".

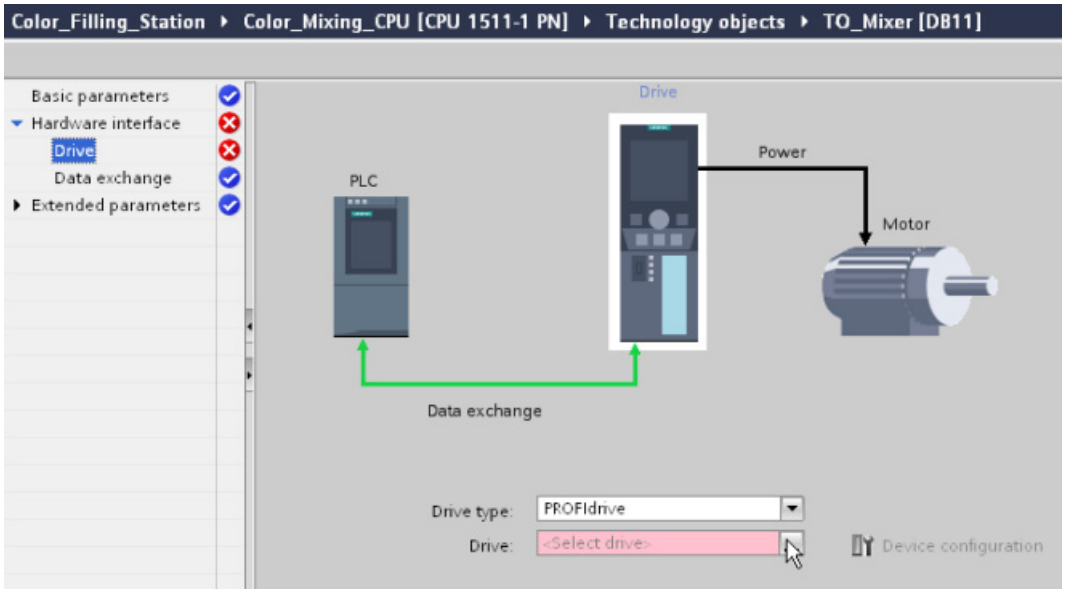

2. In the "Drive" list, select the entry "Drive_Mixer" of the PROFINET drive SINAMICS G120.

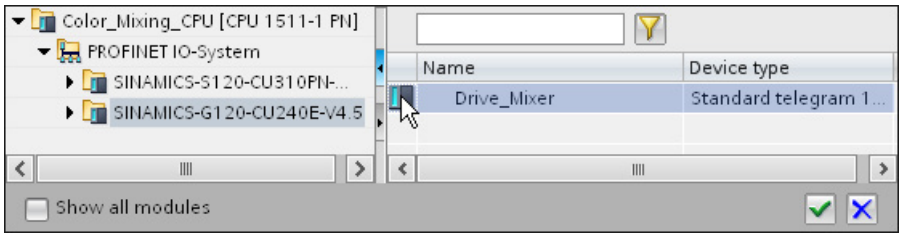

The speed axis is connected to the drive. The process image of the drive is assigned to the process image partition "TPA OB Servo".

3. Open the configuration window "Hardware interface > Data exchange".
4. Check the reference speed. If necessary, adapt the reference speed to match the drive setting.

Compiling a project

Compile the project to check the configuration. The compilation should take place without errors.

5.4.3 Using prepared technology objects

You can shorten the described procedure by inserting the prepared technology objects from the global library into the project and assigning the corresponding drives.

Inserting technology objects

To insert the technology objects from the global library into the project, follow these steps:

1. Open the folder "Master copies > Final" in the "MotionLib_Color_Filling_Station" global library.

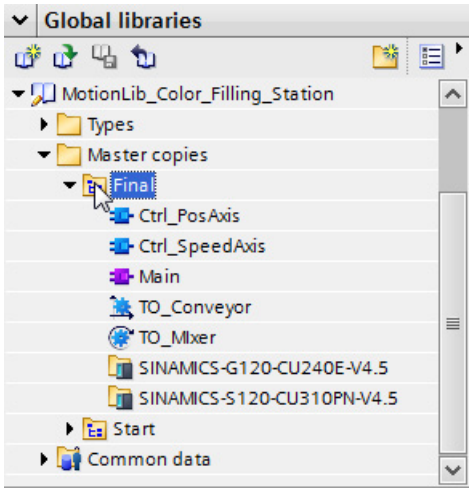

2. Drag-and-drop the "TO_Mixer" and "TO_Conveyor" technology objects to the "Color_Mixing_CPU > Technology objects" folder.
3. Open the configuration window "Hardware interface > Drive" for each technology object.
4. In the "Drive" list, select the entry "Drive_Conveyor" of the PROFINET drive SINAMICS S120 for the positioning axis.
5. In the "Drive" list, select the entry "Drive_Mixer" of the PROFINET drive SINAMICS G120 for the speed axis.
6. Check the settings for the data exchange. If necessary, adapt the settings to match those of the drives.
7. Compile the project to check the configuration.

   The compilation should take place without errors.

5.5 Programming the PLC

5.5.1 Structure of the user program

In this example, the user program of the corresponding axis is created in a separate function block.

The required Motion Control instructions are inserted as instances into the function blocks. The function blocks are then called in the cyclic user program.

5.5.2 Adding Motion Control instructions

5.5.2.1 Adding Motion Control instructions for a positioning axis

Insert the following Motion Control instructions in the "Ctrl_PosAxis" function block for the user program to control the positioning axis:

- MC_Power
- MC_Reset

The following Motion Control instructions have already been inserted and interconnected with the corresponding tags:

- MC_Home
- MC_MoveRelative
- MC_MoveAbsolute

A network for transfer of error messages is also already in place.

Opening function blocks

To open the function block, follow these steps:

1. Open the "Color_Mixing_CPU > Program blocks" folder in the project tree.

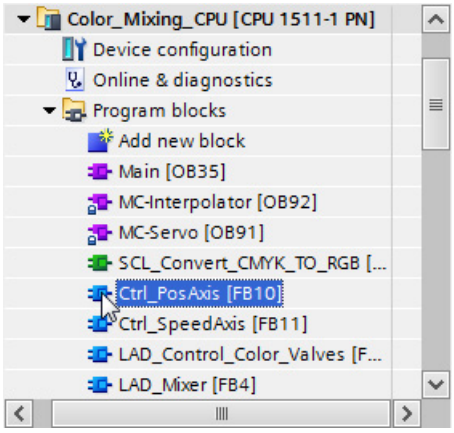

2. Double-click the function block "Ctrl_PosAxis".

   The function block opens.

The following tags have been created in the "Interface" area:

- "Axis" - transfer variable for the technology object when the function block is called in the cyclic user program
- "Turn_On_Drive" - for switching on the drive with the "MC_Power" instruction
- "Move_Can_Cycle" - for starting the axis movement with the "MC_MoveRelative" instruction
- "Goto_Fillpos" - for starting the axis movement with the "MC_MoveAbsolute" instruction
- "Reset" - for error acknowledgment
- "Can_Cycle_Done" - feedback of the "MC_Relative" instruction
- "Fillpos_Reached" - feedback of the "MC_MoveAbsolute" instruction
- "Error" - error message
- "temp_Status_power" - further interconnection of the feedback of the "MC_Power" instruction to the "MC_Home" instruction
- "temp_Position" - reading out the actual position to use for visualization

Inserting MC_Power

To insert the Motion Control instruction "MC_Power" in the function block, follow these steps:

1. In the "Instructions" task card, open the "Technology > Motion Control > S7-1500 Motion Control" folder.

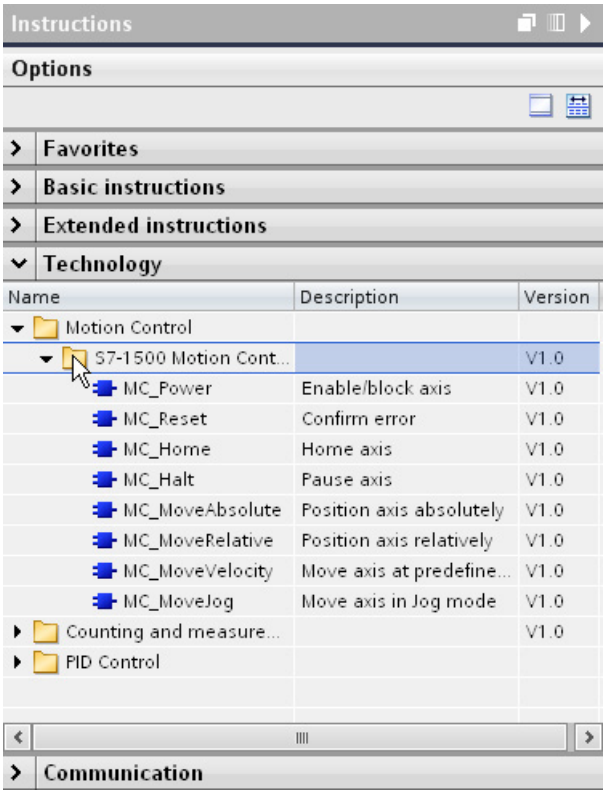

2. Insert the Motion Control instruction "MC_Power" into network 1 using drag-and-drop.

   The "Call options" dialog opens.

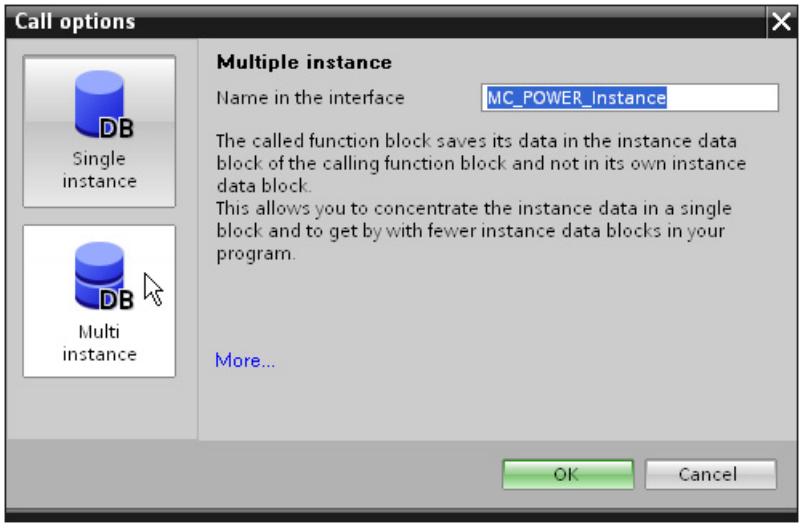

3. Click the "Multi instance" button.

4. Confirm your entry with "OK".

   The Motion Control instruction "MC_Power" is added to network 1.

5. Drag-and-drop the "Axis" tag from the "Interface" area to the "Axis" parameter of the Motion Control instruction.

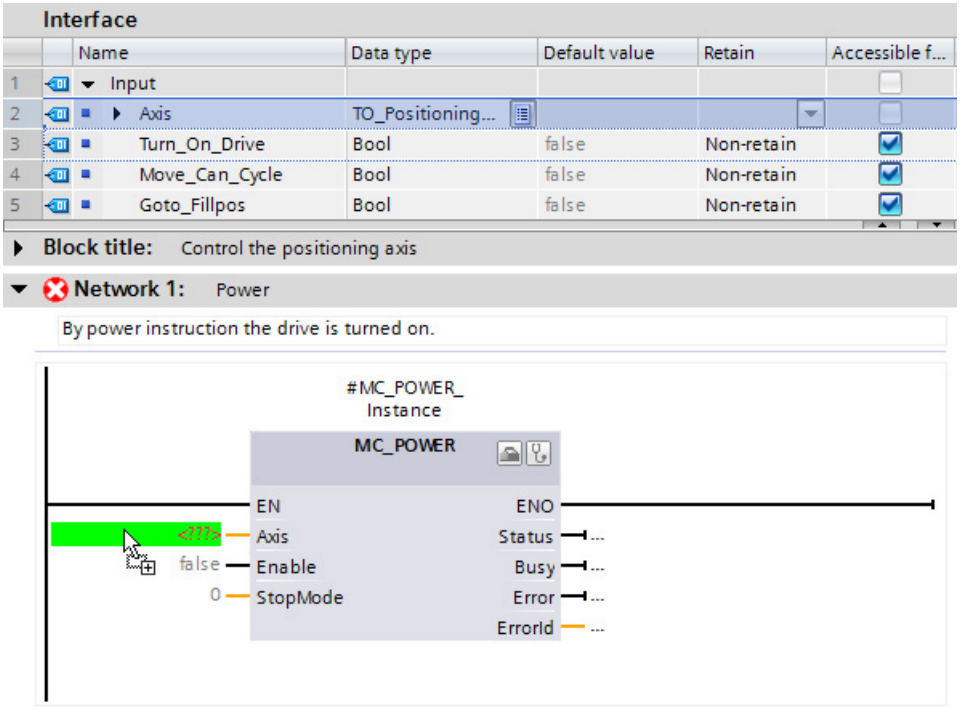

6. Drag-and-drop the "Turn_On_Drive" tag to the "Enable" parameter of the Motion Control instruction.

7. Drag-and-drop the "temp_Status_power" tag to the "Status" parameter of the Motion Control instruction.

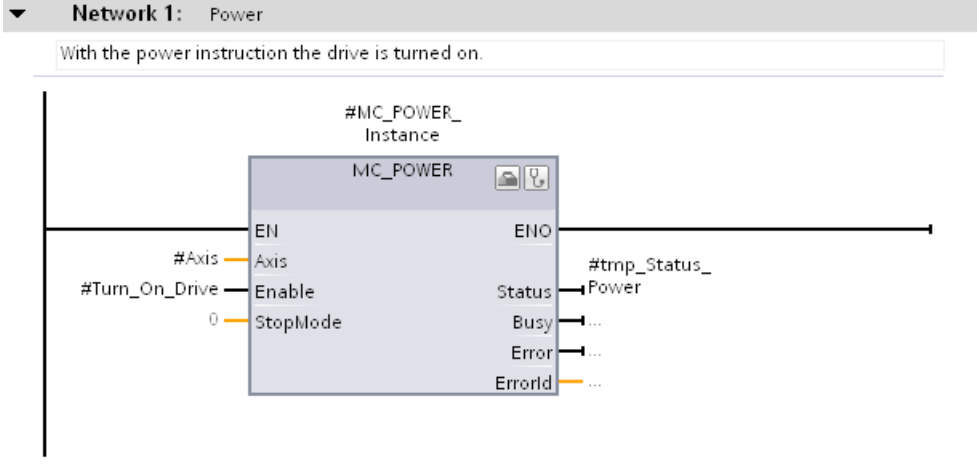

Inserting MC_Reset

To insert the Motion Control instruction "MC_Reset" in the function block, follow these steps:

1. Insert the Motion Control instruction "MC_Reset" into an empty network according to steps 1 to 5 of the operating instruction "Insert MC_Power".
2. Drag-and-drop the "Reset" tag to the "Execute" parameter of the Motion Control instruction.

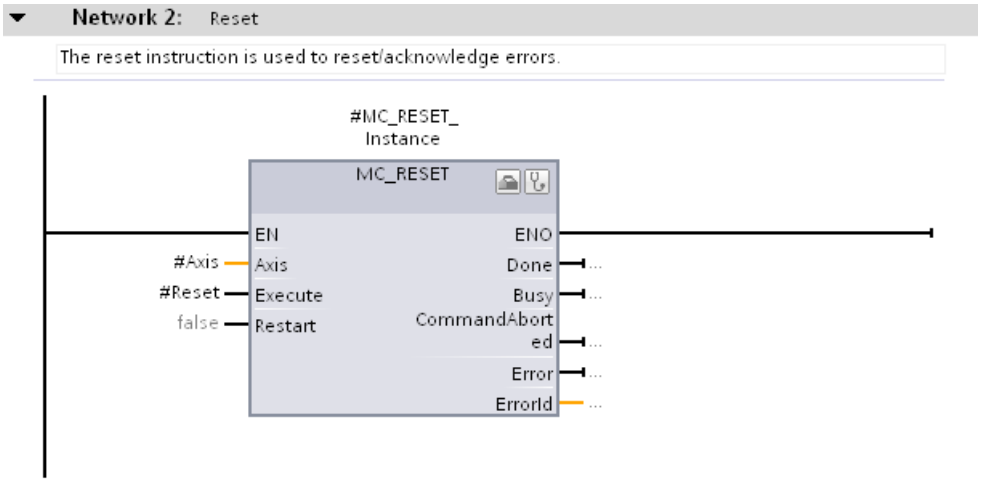

5.5.2.2 Adding Motion Control instructions for a speed axis

Insert the following Motion Control instruction in the "Ctrl_SpeedAxis" function block for the user program to control the speed axis:

- MC_Power
- MC_Reset

The Motion Control instruction "MC_MoveVelocity" has already been inserted and linked with the corresponding tags.

A network for transfer of error messages is also already in place.

Opening function blocks

To open the function block, follow these steps:

1. Open the "Color_Mixing_CPU > Program blocks" folder in the project tree.

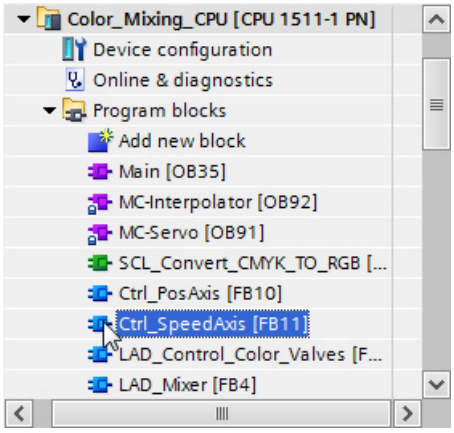

2. Double-click the function block "Ctrl_SpeedAxis".

   The function block opens.

The following tags have been created in the "Interface" area:

- "Axis" - transfer variable for the technology object when the function block is called in the cyclic user program
- "Start_Mixing" - for switching on the drive with the "MC_Power" instruction
- "Reset" - for error acknowledgment
- "Error" - error message
- "temp_Status_power" - further interconnection of the feedback of the "MC_Power" instruction to the "MC_MoveVelocity" instruction

Inserting MC_Power

To insert the Motion Control instruction "MC_Power" in the function block, follow these steps:

1. In the "Instructions" task card, open the "Technology > Motion Control > S7-1500 Motion Control" folder.

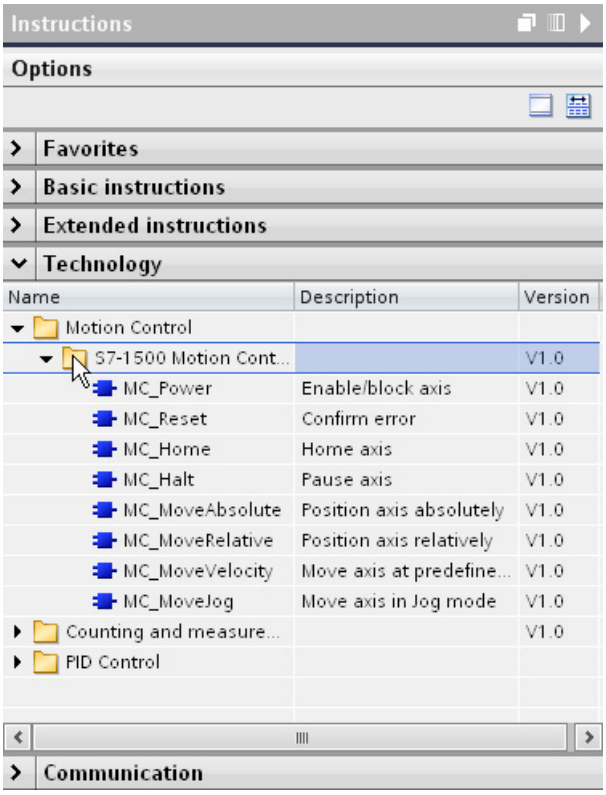

2. Insert the Motion Control instruction "MC_Power" into network 1 using drag-and-drop.

   The "Call options" dialog opens.

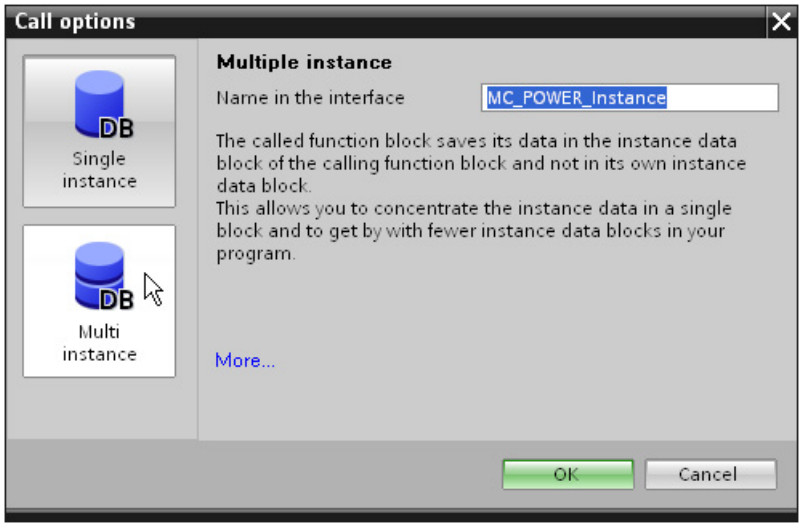

3. Click the "Multi instance" button.

4. Confirm your entry with "OK".

   The Motion Control instruction "MC_Power" is added to network 1.

5. Drag-and-drop the "Axis" tag from the "Interface" area to the "Axis" parameter of the Motion Control instruction.

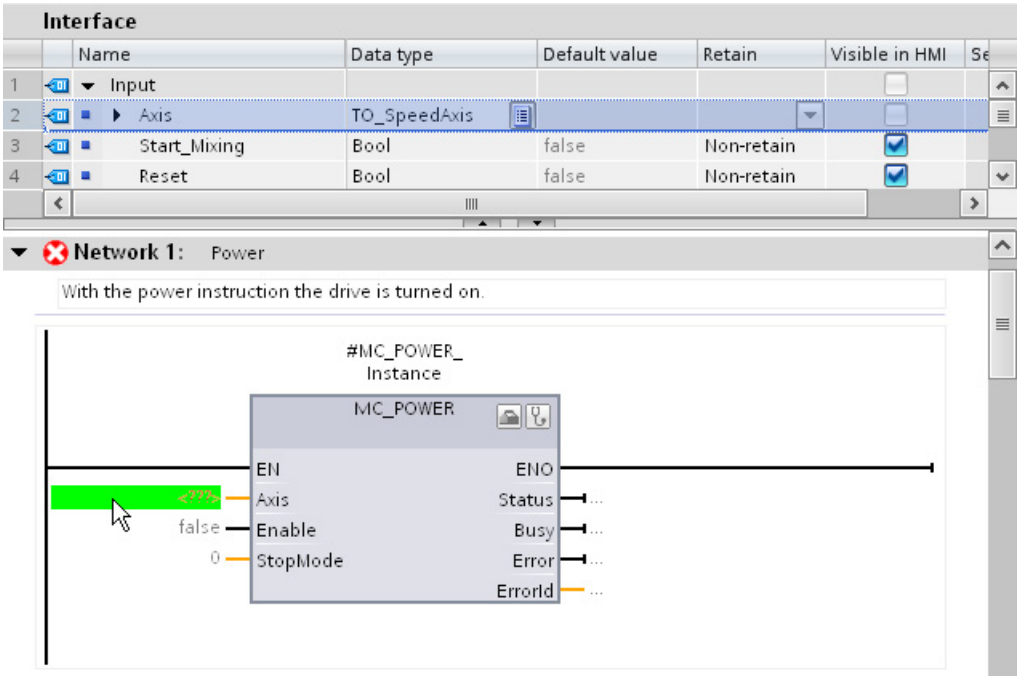

6. Drag-and-drop the "Start_Mixing" tag to the "Enable" parameter of the Motion Control instruction.

7. Drag-and-drop the "temp_Status_power" tag to the "Status" parameter of the Motion Control instruction.

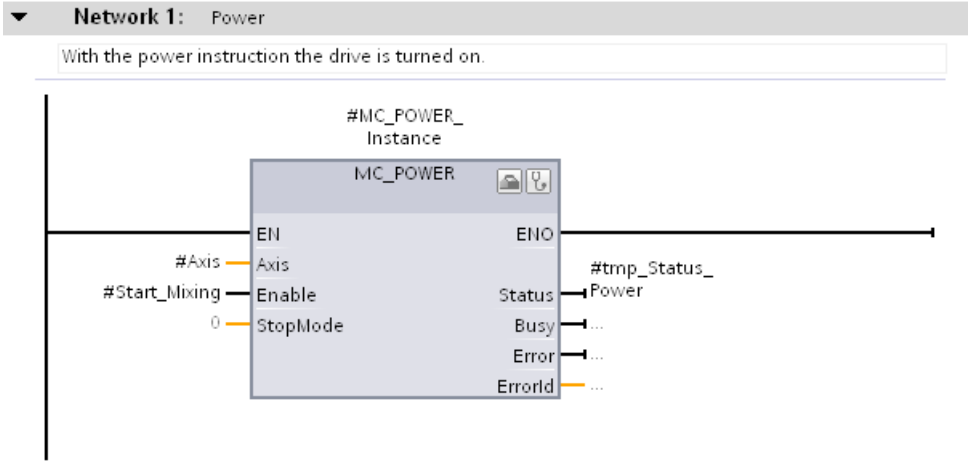

Inserting MC_Reset

To insert the Motion Control instruction "MC_Reset" in the function block, follow these steps:

1. Insert the Motion Control instruction "MC_Reset" into an empty network according to steps 1 to 5 of the operating instruction "Insert MC_Power".
2. Drag-and-drop the "Reset" tag to the "Execute" parameter of the Motion Control instruction.

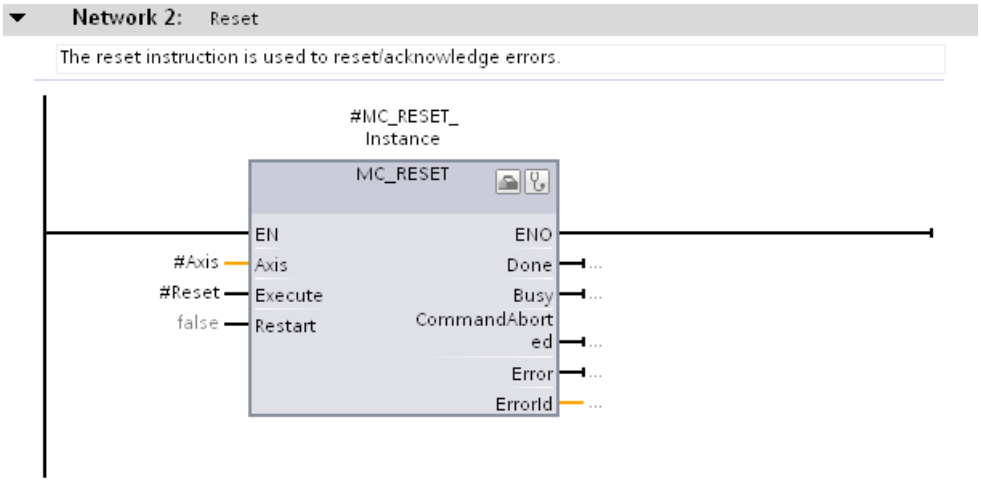

5.5.2.3 Using prepared function blocks

You can shorten the described procedure by inserting the prepared function blocks from the global library into the project and interconnecting the corresponding tags.

Inserting function blocks

To insert the function blocks from the global library into the project, follow these steps:

1. Open the folder "Master copies > Final" in the "MotionLib_Color_Filling_Station" global library.

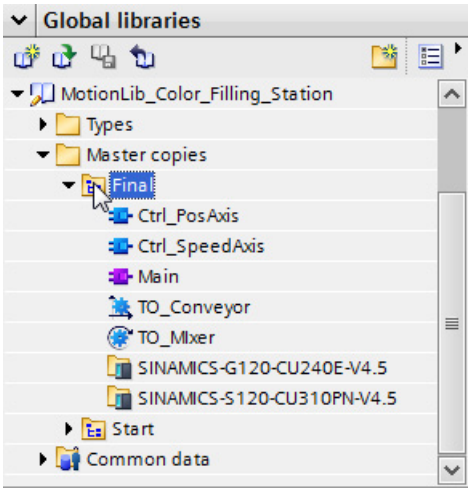

2. Drag-and-drop both the "Ctrl_SpeedAxis" and "Ctrl_PosAxis" function blocks to the function blocks with the same name in the "Color_Mixing_CPU > Program blocks" folder.

   The "Paste" dialog opens.

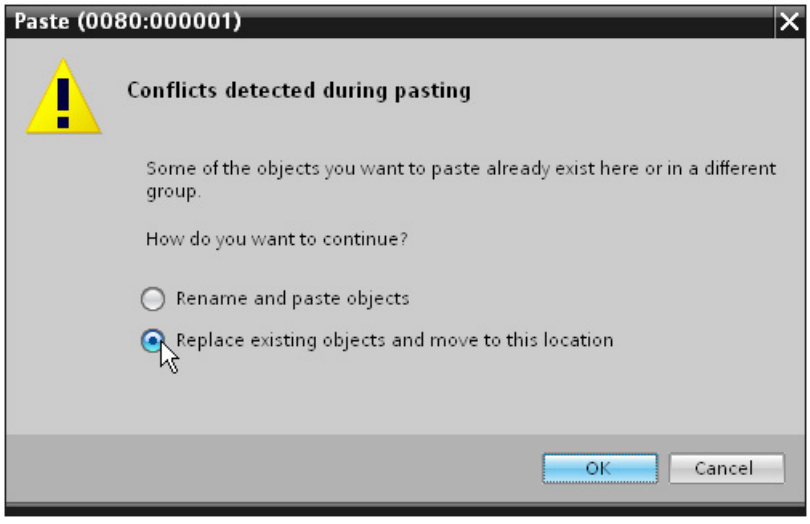

3. Select the option "Replace existing objects and move to this location".
4. Click "OK" to confirm.

5.5.3 Integrating Motion Control instructions in the cyclic user program

5.5.3.1 Integrating Motion Control instructions for a positioning axis

The Motion Control instructions created to control the positioning axis are integrated in the cyclic user program through the corresponding function block. The function block is inserted into the "Main [OB35]" organization block and interconnected to the appropriate parameters.

Inserting a function block

To insert the function block in the cyclic user program, follow these steps:

5. Open the "Color_Mixing_CPU > Program blocks" folder in the project tree.

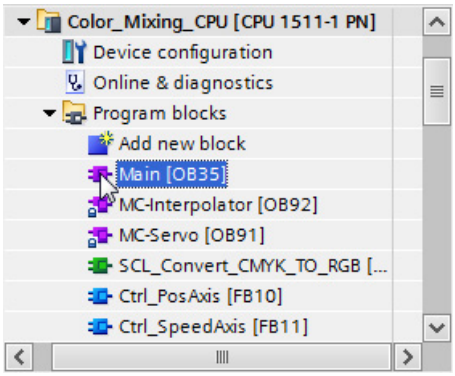

1. Open the organization block "Main [OB35]".

   The control logic of the conveyor is located in network 5 (SCL_Valve_Conveyor).

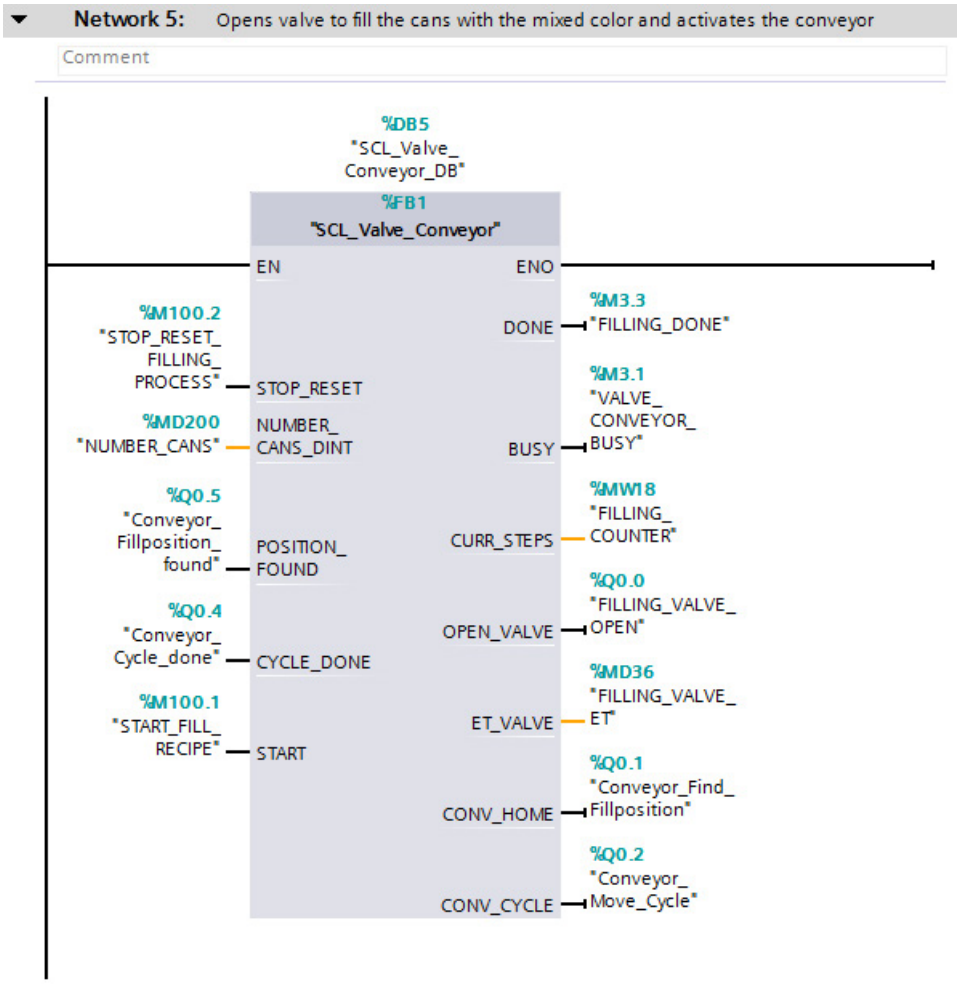

2. Drag-and-drop the "Ctrl_PosAxis" function block from the project tree into network 11 "Motion Control - Positioning Axis (Conveyor)".

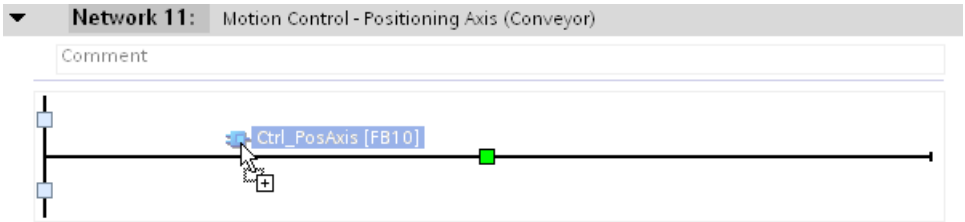

The "Call options" dialog opens.

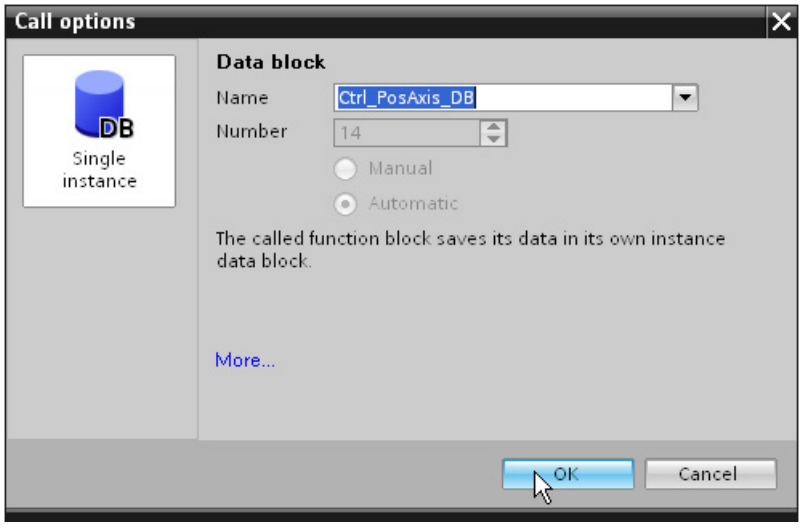

3. Click "OK" to confirm.

Interconnecting the function block

To interconnect the function block with the appropriate parameters, follow these steps:

1. Open the "Color_Mixing_CPU > Technology objects" folder in the project tree.

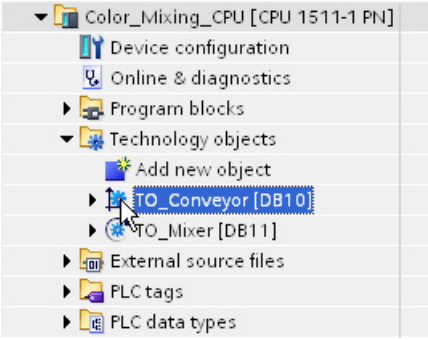

2. Drag-and-drop the technology object "TO_Conveyor" to the "Axis_Name" parameter in the project tree .

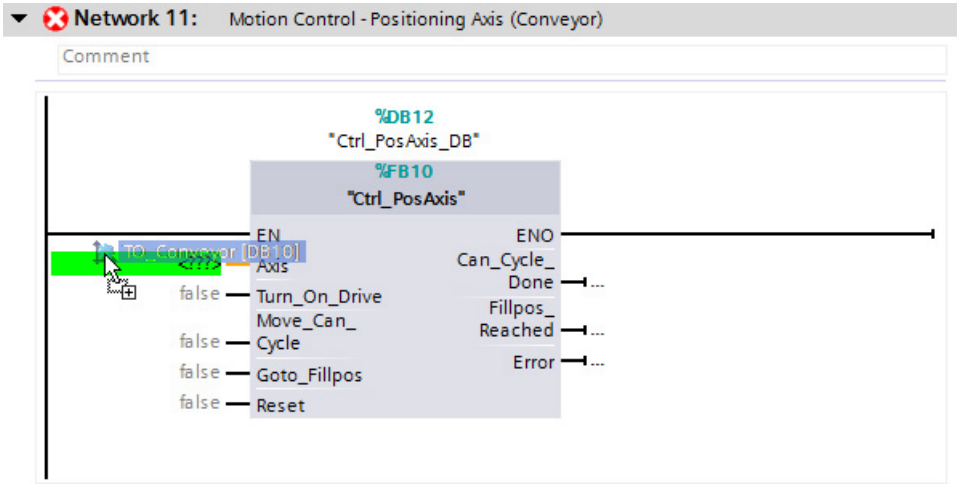

3. At the "Turn_On_Drive" parameter, select the "HMI_Conv_Sim" tag.
4. Keep the <Ctrl> key pressed and drag-and-drop the "Conveyor_Move_Cycle" tag (network 5) to the "Move_Can_Cycle" parameter.
5. Keep the <Ctrl> key pressed and drag-and-drop the "Conveyor_Find_Fillposition" tag (network 5) to the "Goto_Fillpos" parameter.
6. Keep the <Ctrl> key pressed and drag-and-drop the "STOP_RESET_Filling_Process" tag (network 5) to the "Reset" parameter.
7. Keep the <Ctrl> key pressed and drag-and-drop the "Conveyor_Cycle_Done" tag (network 5) to the "Can_Cycle_Done" parameter.

8. Keep the <Ctrl> key pressed and drag-and-drop the "Conveyor_Fillposition_found" tag (network 5) to the "Fillpos_Reached" parameter.
9. At the "Error" parameter, select the "ERROR_Conveyor" tag.

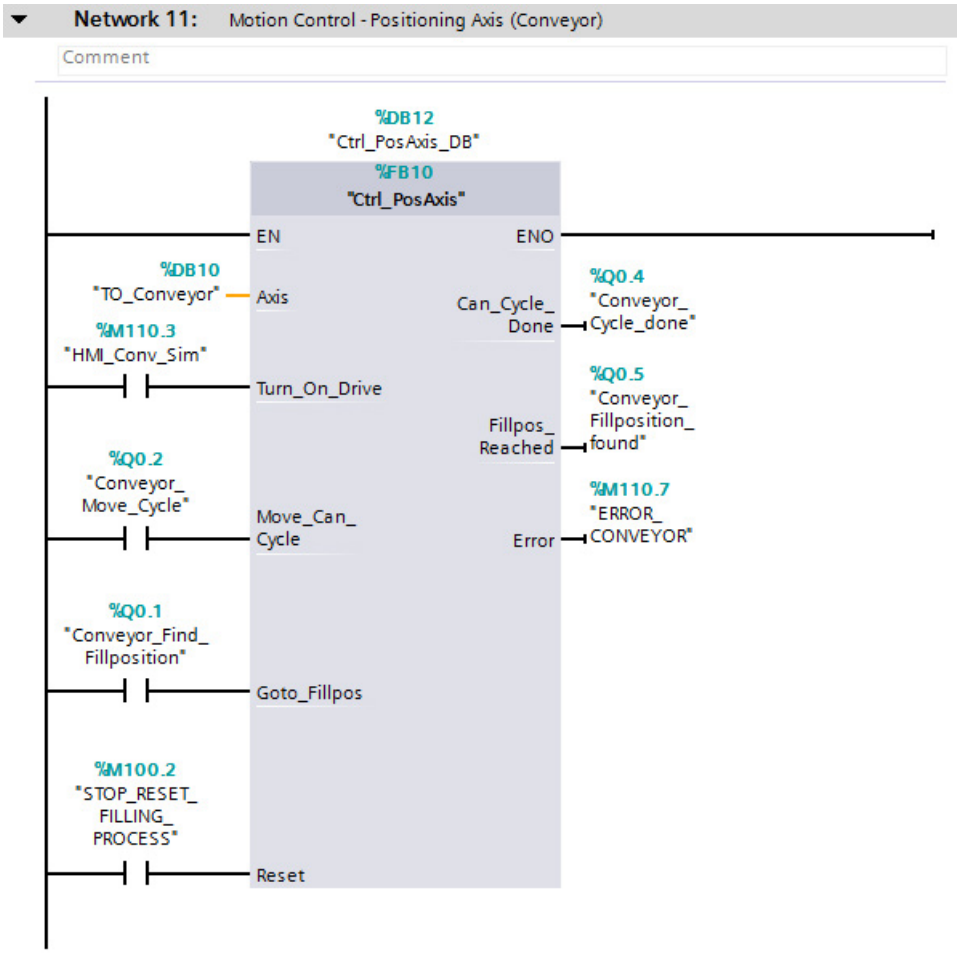

5.5.3.2 Integrating Motion Control instructions for a speed axis

The Motion Control instructions used to control the speed axis are integrated in the cyclic user program through the corresponding function block. The function block is inserted into the "Main [OB35]" organization block and interconnected to the appropriate parameters.

Inserting a function block

To insert the function block in the cyclic user program, follow these steps:

1. Open the "Color_Mixing_CPU > Program blocks" folder in the project tree.

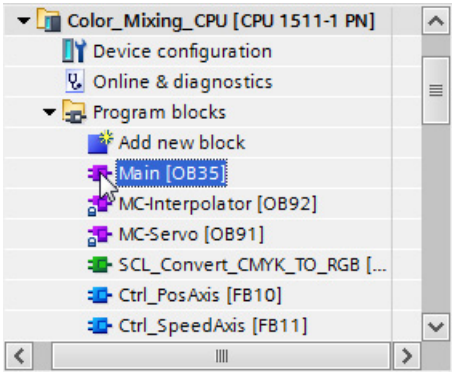

2. Open the organization block "Main [OB35]".

   The control logic of the agitator (LAD_Mixer) is located in network 4.

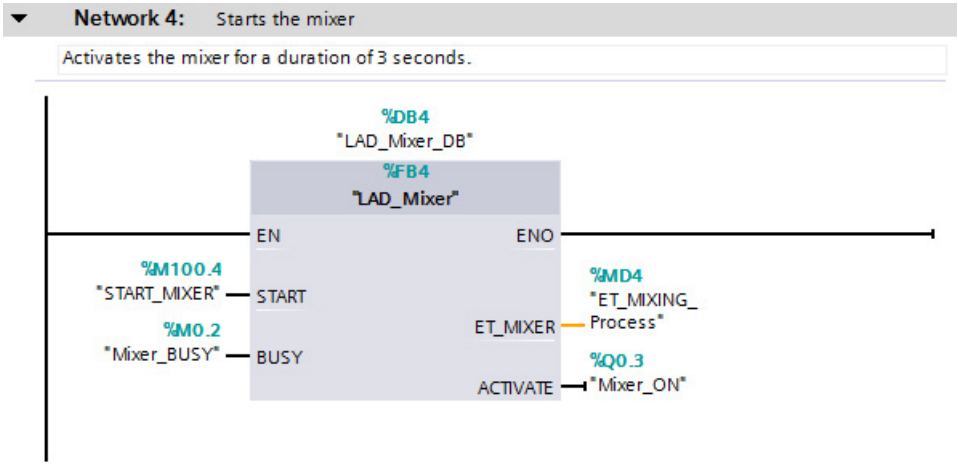

3. Drag-and-drop the "Ctrl_SpeedAxis" function block from the project tree into network 10 "Motion Control Speed Axis (Mixer)".

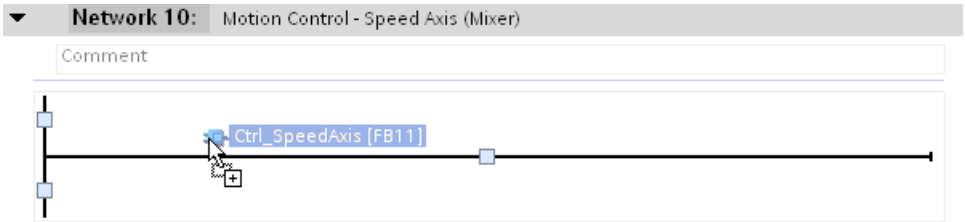

The "Call options" dialog opens.

4. Click "OK" to confirm.

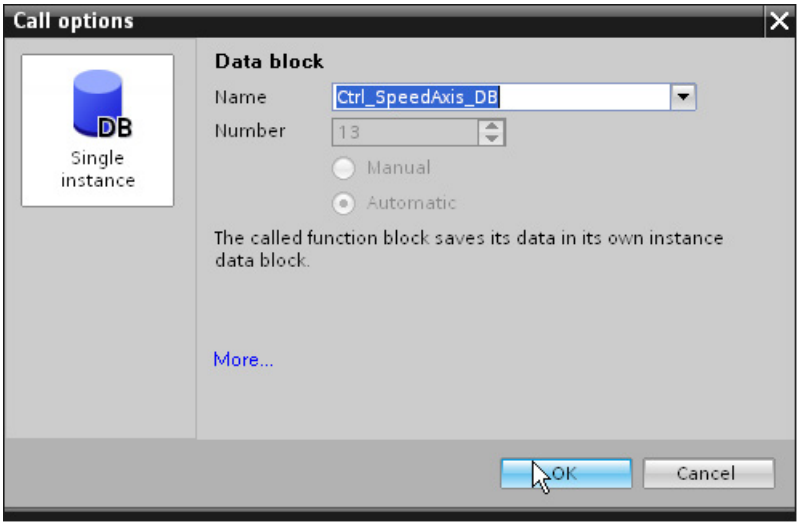

Interconnecting the function block

To interconnect the function block with the appropriate parameters, follow these steps:

1. Open the "Color_Mixing_CPU > Technology objects" folder in the project tree.

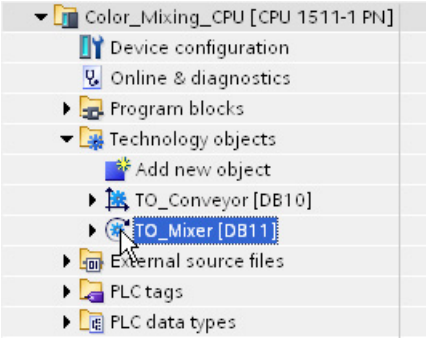

2. Drag-and-drop the technology object "TO_Mixer" to the "Axis_Name" parameter in the project tree .

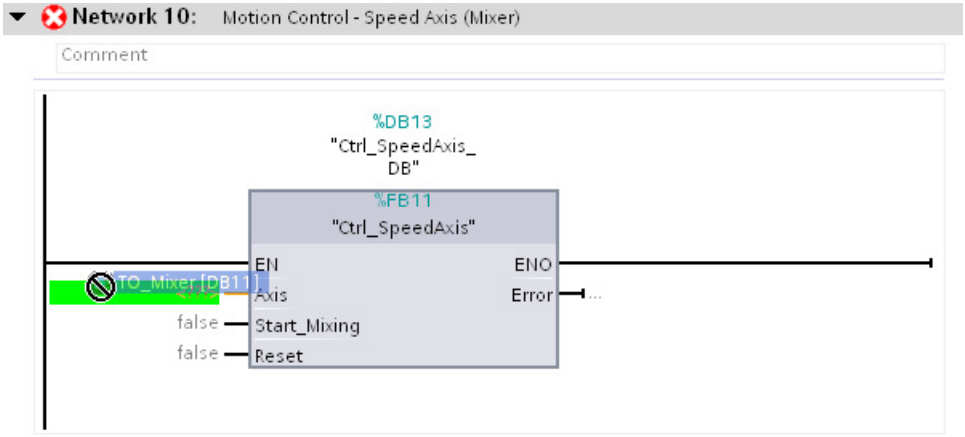

3. Keep the <Ctrl> key pressed and drag-and-drop the "Mixer_ON" tag (network 4) to the "Start_Mixing" parameter.
4. Add an AND logic operation with the "HMI_Mix_Sim" tag to the "Mixer_ON" tag at the "Start_Mixing" parameter.

5. Keep the <Ctrl> key pressed and drag-and-drop the "STOP_RESET_Filling_Process" tag (network 5) to the "Reset" parameter.

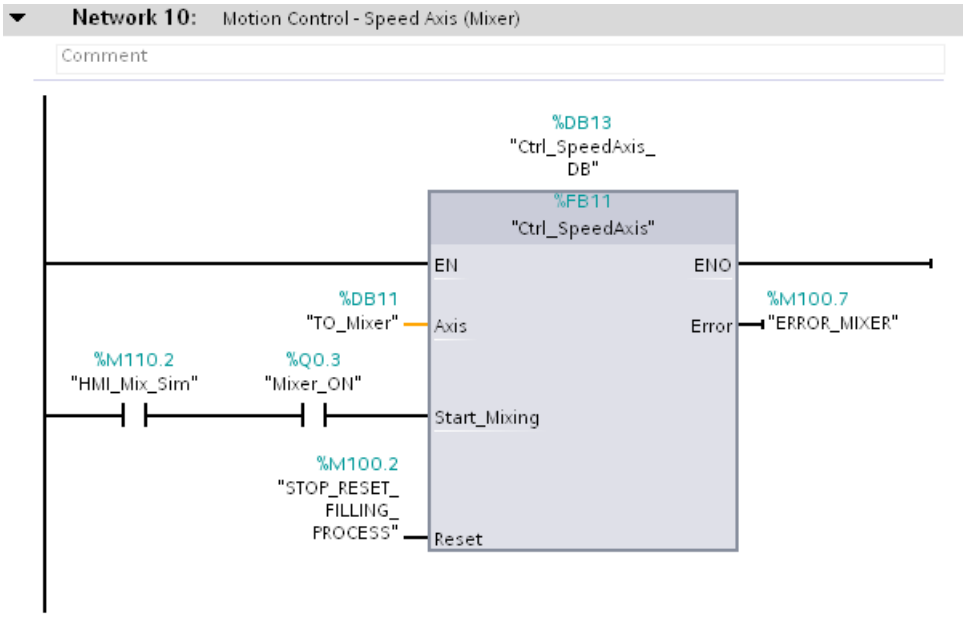

6. At the "Error" parameter, select the "ERROR_MIXER" tag.

5.5.3.3 Using the prepared OB35

You can shorten the described procedure by inserting the prepared "Main [OB35]" organization block from the global library into the project.

"Inserting "Main [OB35]"

To insert the "Main [OB35]" organization block from the global library into the project, follow these steps:

1. Open the folder "Master copies > Final" in the "MotionLib_Color_Filling_Station" global library.

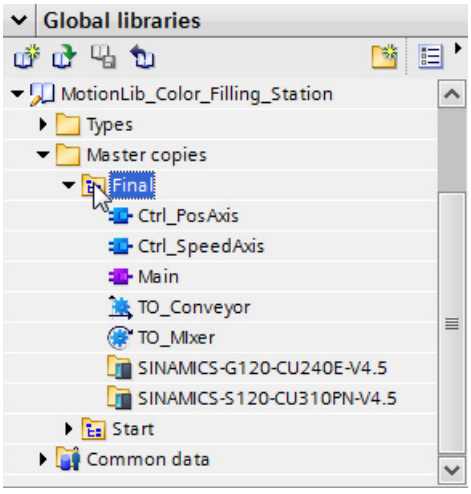

2. Drag-and-drop the "Main" organization block to the corresponding organization block in the "Color_Mixing_CPU > Program blocks" folder.

   The "Paste" dialog opens.

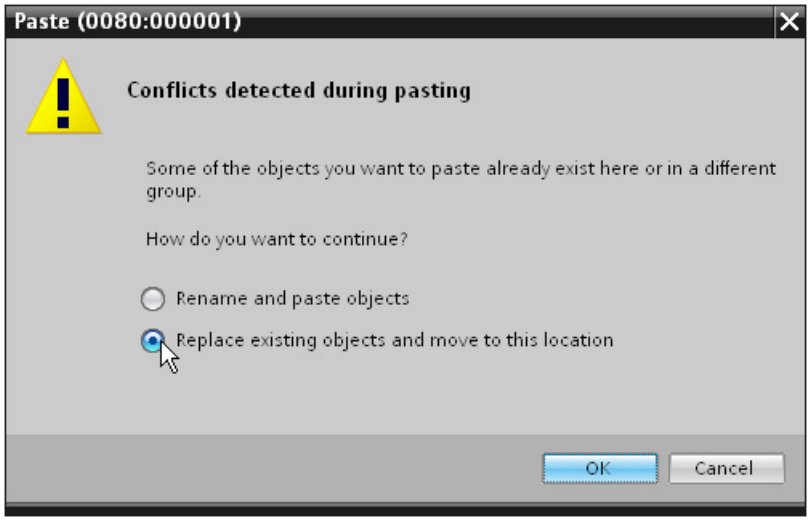

3. Select the option "Replace existing objects and move to this location".
4. Click "OK" to confirm.

5.5.4 Compiling and loading the project

Compile the project and download it to the CPU to test the functions of the axes in the next step.

Procedure

To compile the project, follow these steps:

1. Compile the hardware and software of all devices in the project.
2. Load all devices.

5.6 Testing a function

5.6.1 "Positioning axis" axis control panel

You use the axis control panel and tuning for the function test and commissioning of the positioning axis to position the conveyor belt.

The procedure is divided into the following actions:

- Enabling the technology object
- Checking the direction of rotation
- Checking the distance evaluation
- Checking the velocity evaluation
- Optimizing gain
- Applying gain to project
- Evaluating errors

Requirement

- The drive has been commissioned and is ready for operation.
- The drive has been assigned a PROFINET device name.

Enabling the technology object

To enable the positioning axis with the axis control panel, follow these steps:

1. Open the "Color_Mixing_CPU > Technology objects" folder in the project tree.
2. Open the commissioning window "Configuration > Extended parameters > Control loop" of the technology object "TO_Conveyor".
3. Enter the value 0.0 in the "Gain (Kv factor)" box.

   You can compare the actual value and the setpoint of the velocity directly with each other if there is no gain of the control loop. Optimize the gain once you have checked the velocity evaluation and apply it to your project.
4. Compile the CPU software.
5. Load the CPU.
6. Open the commissioning window of the technology object "TO_Conveyor".

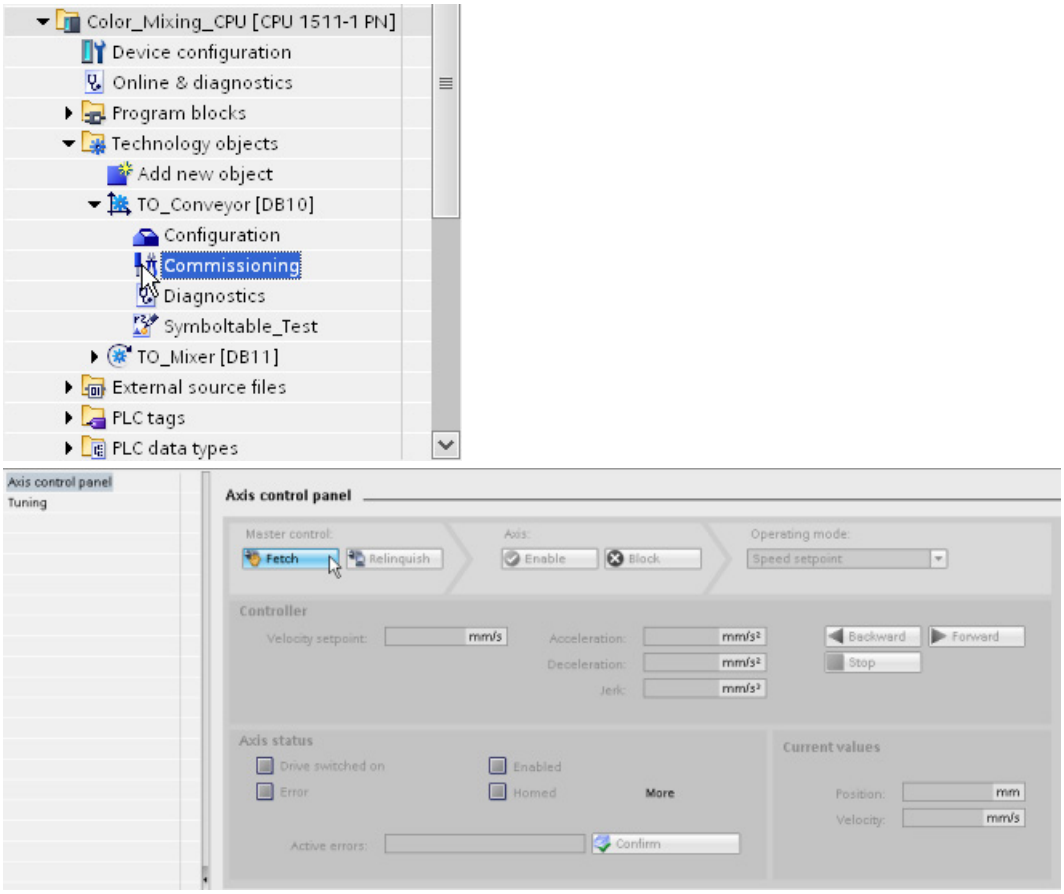

7. To create an online connection and take over the master control of the technology object, click the "Fetch" button.

   A warning message is displayed.

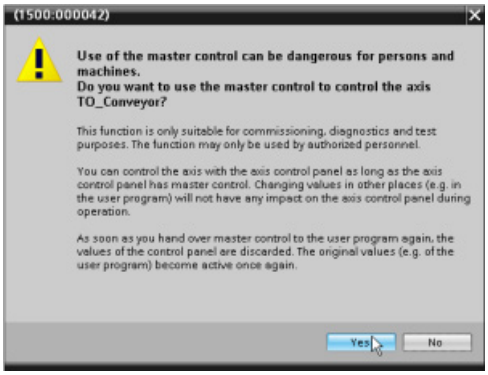

8. Confirm with "Yes".
9. To enable the technology object, click the "Enable" button.

   The drive is turned on and the speed setpoint zero is output.

Checking the direction of rotation

To move the axis with the axis control panel and check the direction of rotation, follow these steps:

1. Select the "Jog" mode in the axis control panel.

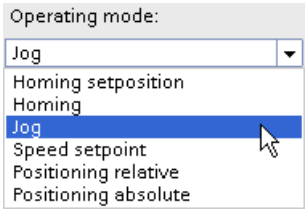

2. Enter a velocity setpoint as well as the required values for acceleration, deceleration and jerk.

3. Click the "Forward" or "Backward" button to execute a movement in the positive or negative direction.

   The motion is executed as long as you press the mouse button.

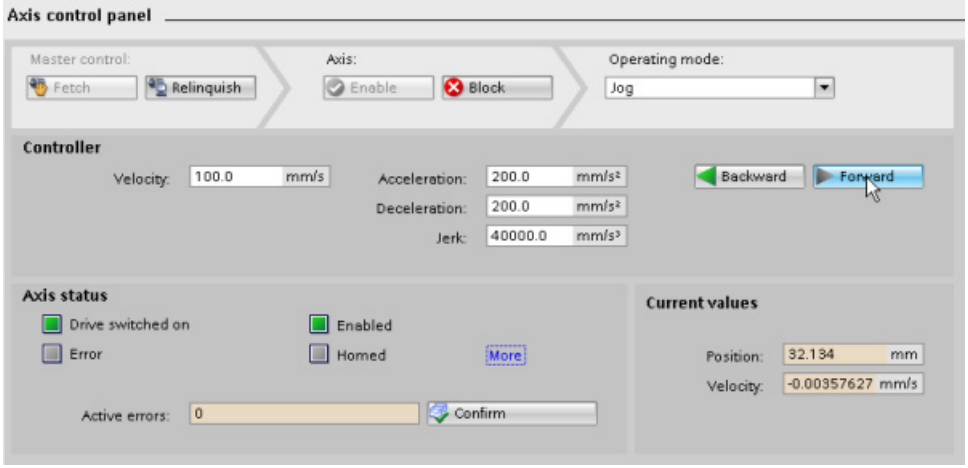

4. Check whether the actual direction of rotation is the same as the specified direction of rotation.

   If necessary, you can invert the direction of rotation under "Technology object > Configuration > Hardware interface > Data exchange".

5. Check the actual speed in the drive or use an external tachometer to measure the speed directly at the motor shaft.

   If the actual speed deviates significantly from the specified setpoint, check the reference speed and the parameter assignment of the encoder.

Checking the distance evaluation

To move the axis with the axis control panel and check the distance evaluation, follow these steps:

1. Mark the current mechanical position of the axis.
2. Select the "Homing setposition" mode in the axis control panel.
3. Enter a defined value (e.g. 0.0 mm) in the "Position" box.
4. Click the "Position setpoint" button to set the actual position to the value specified in "Position".
5. Select "Positioning relative" mode.
6. Enter only small values for the distance and the velocity (e.g. 10 mm and 100 mm/s).
7. To move the axis in the positive direction, click the "Forward" button.

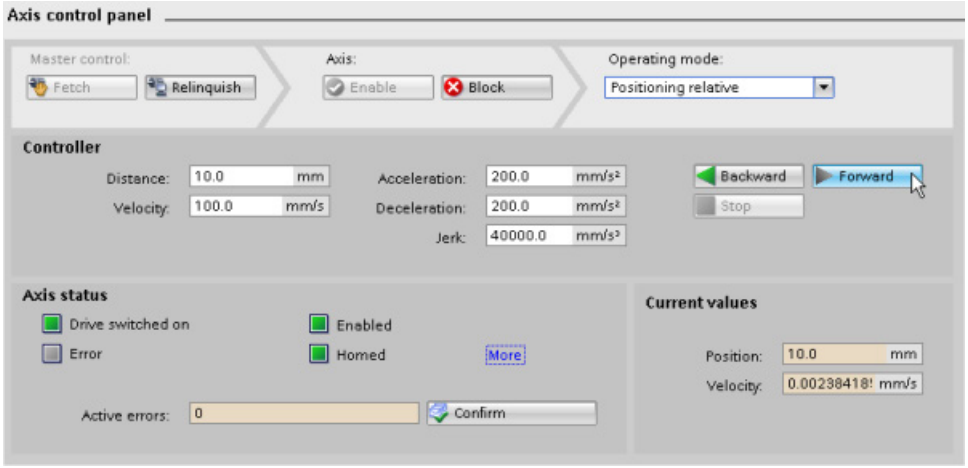

8. Use the selection on the axis to check whether the current position displayed matches the actually traveled distance.

   If the displayed current position deviates from the actually traveled distance, check the configuration of the encoder and the gearbox ("Technology object > Configuration > Extended parameters > Mechanics").

Checking the velocity evaluation

To move the axis with the axis control panel and check the velocity, follow these steps:

1. Select the "Speed setpoint" mode in the axis control panel.
2. Enter a small value (e.g. 100 mm/s) for the velocity setpoint.
3. To move the axis in the positive direction, click the "Forward" button.
4. Check whether the displayed current velocity matches the velocity setpoint.

   If the displayed current velocity deviates significantly from the velocity setpoint, adjust the reference speed (Technology object > Hardware interface > Data exchange).
5. Click the "Stop" button to stop the movement.

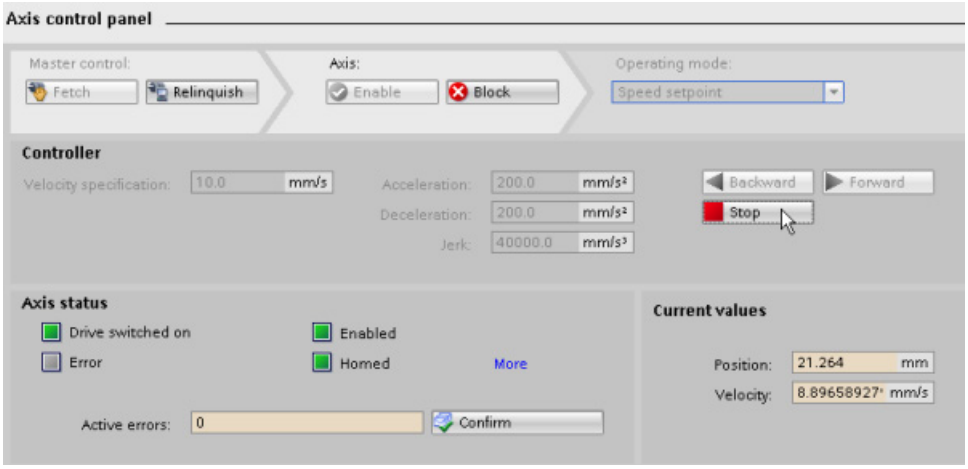

Optimizing gain

The "Tuning" function supports you in determining the optimum gain (Kv factor) for the position control of the axis. For this purpose, the axis velocity profile is recorded by means of the Trace function for the duration of a configurable positioning movement. Then you can evaluate the recording and adapt the gain accordingly.

To determine the gain factor with the tuning, follow these steps:

1. Open the tuning in the commissioning window.

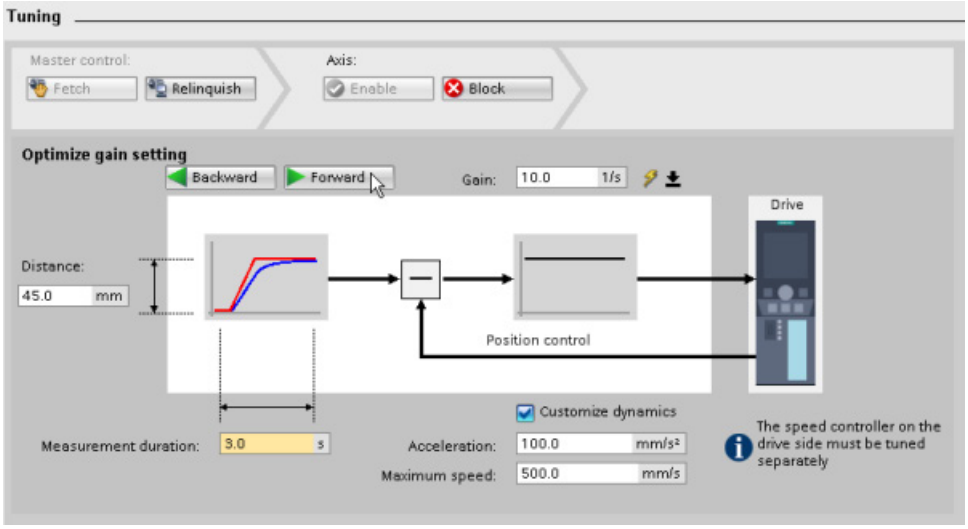

2. If necessary, configure values for the distance, duration, and dynamics of a test step.
3. Enter a start value for the gain. Start with a low value.

4. Click the "Forward" or "Backward" button to start a test step for the tuning in positive or negative direction.

   A setpoint is output for the specified duration according to the specified distance. The axis moves by the specified distance. A trace recording of the motion (setpoint and actual values) is created automatically.

5. Evaluate the curve of the trace recording. Adapt the gain incrementally. Click the "Forward" or "Backward" button after each value that you input. This applies the value and starts a new movement and trace recording each time.

   When adjusting the gain, pay attention to the following properties of the curve:

   – The curve shows a brief compensation time.
   – The curve does not show any motion reversal of the actual value.
   – When approaching the setpoint, no overshoot occurs.
   – The curve shows stable overall behavior (oscillation-free curve).

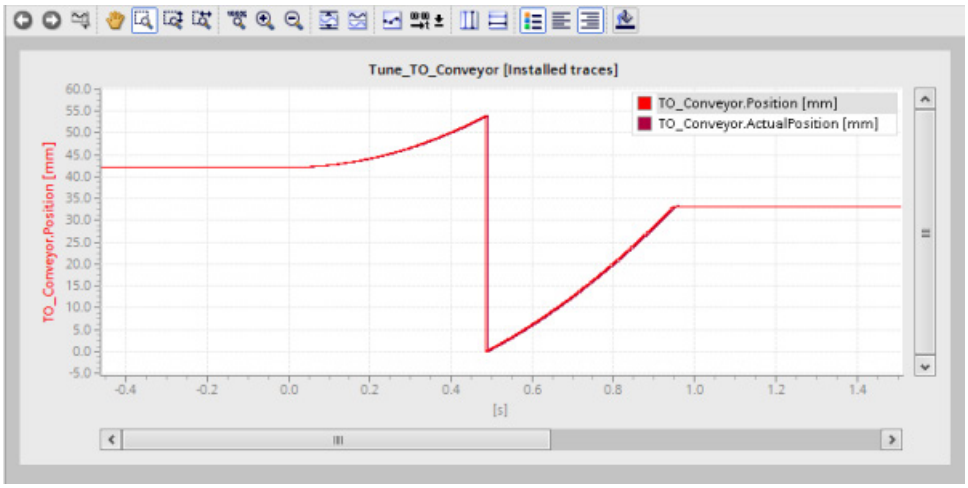

Applying gain to project

To apply the determined gain (Kv) to your project, follow these steps:

1. Click on the icon next to the "Gain" box.

   A drop-down list is displayed.

2. Enter the value of the determined gain in the "Project start value" box of the drop-down list.
3. To disable the technology object, click the "Block" button.
4. Click the "Relinquish" button to return master control to your user program.
5. Compile the CPU software.
6. Load the CPU.

Evaluating errors

If an error occurs during control of the technology object with the axis control panel, this is indicated by the "Error" status.

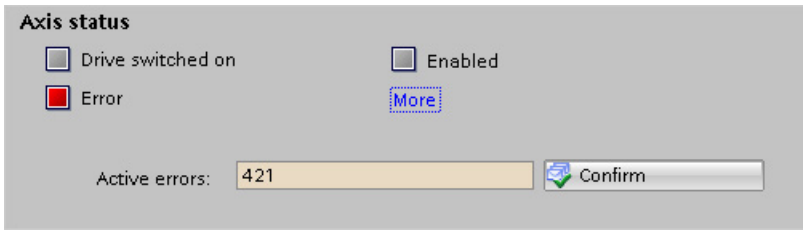

To evaluate an error, follow these steps:

1. Select the "Receive alarms" check box in the shortcut menu of the CPU to display the error messages in the alarm display.

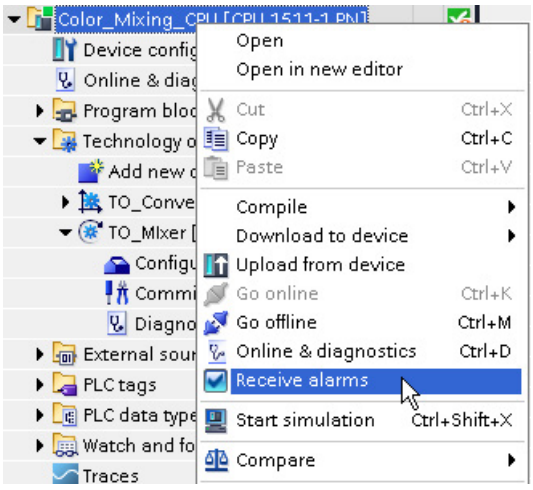

2. To display the error bits of the technology object, click the "More" button.
3. Evaluate any pending errors and remove the cause of the error.
4. Click the "Confirm" button in the axis control panel to acknowledge an error.

Note

Adapt following error limits

If error messages are repeatedly displayed from following error monitoring, temporarily adapt the following error limits.

5.6.2 "Speed axis" axis control panel

You use the axis control panel for the function test and commissioning of the speed axis to control the agitator.

The procedure is divided into the following actions:

- Enabling the technology object
- Moving and checking the axis
- Evaluating errors

Requirement

- The drive has been commissioned and is ready for operation.
- The drive has been assigned a PROFINET device name.

Enabling the technology object

To enable the speed axis with the axis control panel, follow these steps:

1. Open the "Color_Mixing_CPU > Technology objects" folder in the project tree.
2. Open the commissioning window of the technology object "TO_Mixer".

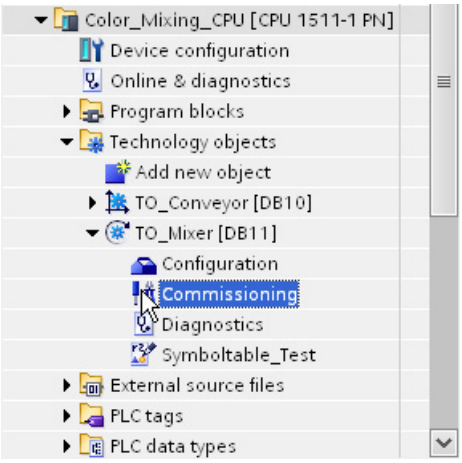

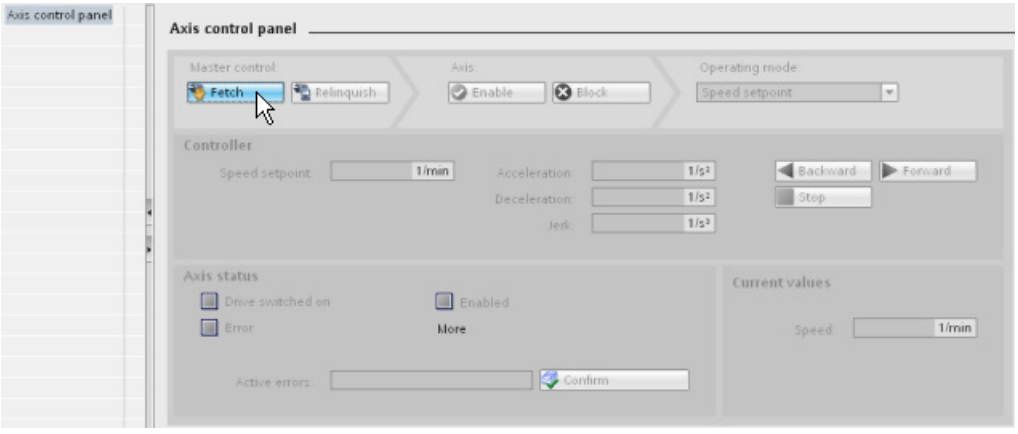

3. To create an online connection and take over the master control of the technology object, click the "Fetch" button.

   A warning message is displayed.

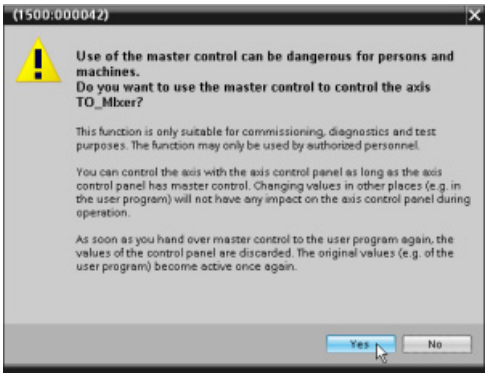

4. Confirm with "Yes".
5. To enable the technology object, click the "Enable" button.

   The drive is turned on and the speed setpoint zero is output.

Moving and checking the axis

To move the axis with the axis control panel and to control the movement, follow these steps:

1. Select the "Jog" mode in the axis control panel.
2. Enter a speed setpoint as well as the required values for acceleration, deceleration and jerk.
3. Click the "Forward" or "Backward" button to execute a movement in the positive or negative direction.

   The motion is executed as long as you press the mouse button.

4. Check whether the actual direction of rotation is the same as the specified direction of rotation.

   If necessary, you can invert the direction of rotation under "Technology object > Configuration > Hardware interface > Data exchange".

5. Check the actual speed in the drive or use an external tachometer to measure the speed directly at the motor shaft.

   If the actual speed deviates significantly from the specified setpoint, check the reference speed and the parameter assignment of the encoder.

6. To disable the technology object, click the "Block" button.
7. Click the "Relinquish" button to return master control to your user program.

Evaluating errors

If an error occurs during control of the technology object with the axis control panel, this is indicated by the "Error" status.

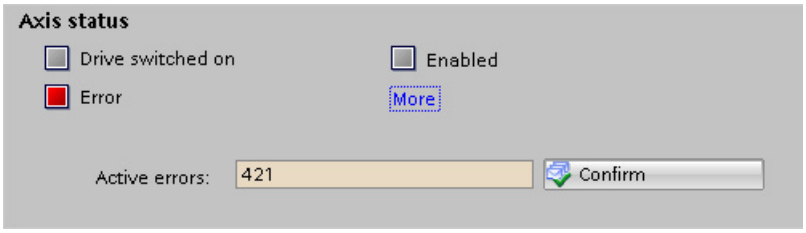

To evaluate an error, follow these steps:

1. Select the "Receive alarms" check box in the shortcut menu of the CPU to display the error messages in the alarm display.

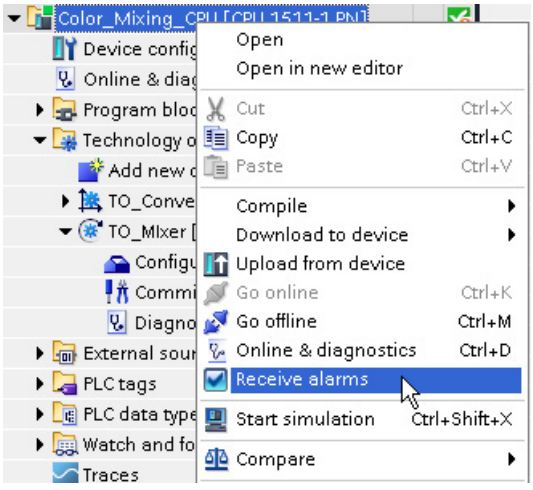

2. To display the error bits of the technology object, click the "More" button.
3. Evaluate any pending errors and remove the cause of the error.
4. Click the "Confirm" button in the axis control panel to acknowledge an error.

5.6.3 Testing the function in the start screen

You test the function of your user program by using the start screen of the visualization.

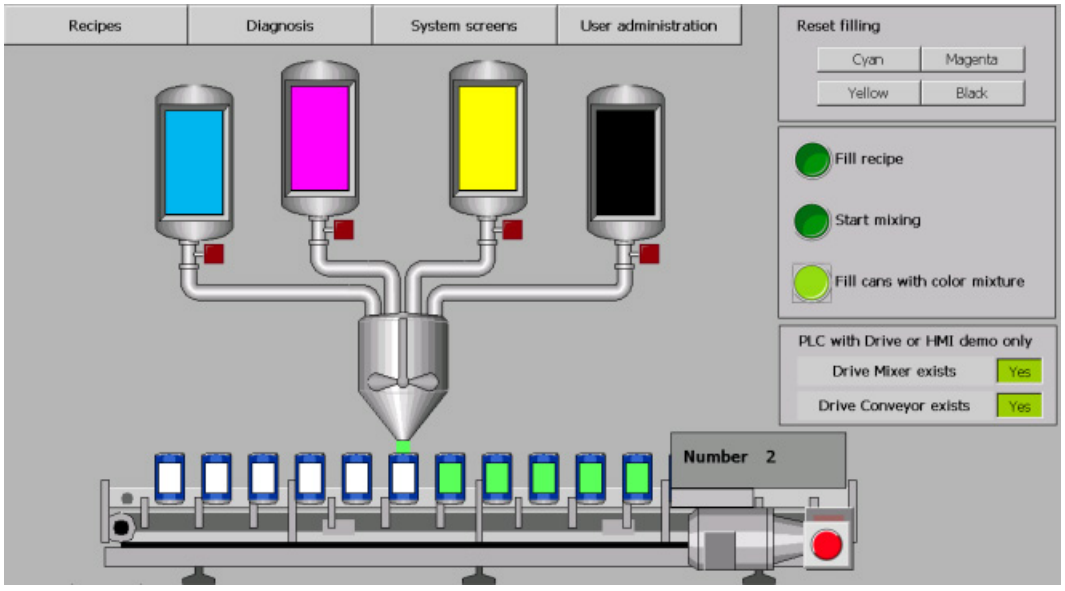

Procedure

To test the function of your user program, follow these steps:

1. Save the project.
2. Download the program to the CPU.
3. Start the CPU.
4. Press the "Drive Mixer exists" button in the start screen of the project.
5. Press the "Start mixing" button in the start screen of the project.

   The drive of the agitator is switched on by the Motion Control instruction "MC_Power".

   When the technology object is enabled ("MC_Power.Status" = TRUE), a job is triggered with the Motion Control instruction "MC_MoveVelocity". The "MC_MoveVelocity" instruction specifies the configured speed (100 rpm). The technology object calculates speed setpoints and sends them to the drive. The drive executes the received setpoints and turns the agitator.

   The release by the control program is revoked after 3 seconds. The drive is stopped and switched off.

   You can change the speed by defining the "Velocity" parameter at the "MC_MoveVelocity" instruction. You can also adjust the dynamics in the configuration of the technology object under "Extended parameters > Dynamic default values".

6. Press the "Drive Conveyor exists" button in the start screen of the project.

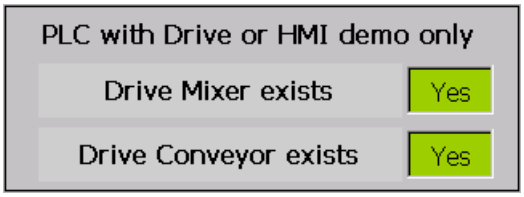

The drive of the conveyor is switched on by the Motion Control instruction "MC_Power".

With the enable "MC_Power.Status" = TRUE , a job is triggered with the Motion Control instruction "MC_Home". The current position value is applied as valid position. This references the technology object.

7. Press the "Fill cans with color mixture" button in the start screen of the project.

The can below the fill nozzle is filled and then moved forward by one can. This procedure is repeated until the set number of cans has been filled (see figure "Recipes").

5.7 Additional information

Diagnostics/troubleshooting

Incorrect operation, incorrect wiring or inconsistent parameter assignment can cause errors.

The S7-1500 Motion Control function manual includes descriptions of how to diagnose such errors and alarms.

Service & Support on the Internet

In addition to our range of documentation, you can also make use of our comprehensive online knowledge base on the Internet (https://support.industry.siemens.com/cs/de/en/).

There you will find:

- The newsletter that provides you with latest information relating to your products.
- The right documents for you, using the Service & Support search engine.
- A forum in which users and specialists worldwide exchange their know-how.
- Your local contact partner for Automation & Drives, using our contact partner database.
- Information about on-site services, repairs, spare parts.

SIMATIC Safety V17

6

Preface

6.1.1 Security information

Siemens provides products and solutions with industrial security functions that support the secure operation of plants, systems, machines and networks.

In order to protect plants, systems, machines and networks against cyber threats, it is necessary to implement – and continuously maintain – a holistic, state-of-the-art industrial security concept. Siemens' products and solutions constitute one element of such a concept.

Customers are responsible for preventing unauthorized access to their plants, systems, machines and networks. Such systems, machines and components should only be connected to an enterprise network or the internet if and to the extent such a connection is necessary and only when appropriate security measures (e.g. firewalls and/or network segmentation) are in place.

For additional information on industrial security measures that may be implemented, please visit (https://www.siemens.com/industrialsecurity).

Siemens' products and solutions undergo continuous development to make them more secure. Siemens strongly recommends that product updates are applied as soon as they are available and that the latest product versions are used. Use of product versions that are no longer supported, and failure to apply the latest updates may increase customers' exposure to cyber threats.

To stay informed about product updates, subscribe to the Siemens Industrial Security RSS Feed visit (https://www.siemens.com/industrialsecurity).

6.2 Introduction to example

6.2.1 Example Structure and Task Definition

Introduction

These instructions will guide you step-by-step through a specific example for configuring and programming with *STEP 7 Safety Advanced V17*.

You will become acquainted with the basic functions and special features of *STEP 7 Safety Advanced V17*. It should take one or two hours to work through this example, depending on your experience.

In order to understand these Getting Started instructions, you need general knowledge of automation engineering. You also need to be familiar with *STEP 7 Professional V17*.

WARNING

There is a risk of personal injury or damage to property.

As a component in plants and systems, the S7-1500 is subject to specific standards and regulations depending on the area of application. Please note the applicable safety and accident prevention regulations, e.g. IEC 602041 (General Requirements for Safety of Machinery).

The example in these Getting Started instructions serves as an introduction to configuring and programming *STEP 7 Safety Advanced V17*. It does not lead to actual live operation in every case. Before you do this, we strongly recommended that you read the latest version of the "SIMATIC Safety - Configuring and Programming (https://support.industry.siemens.com/cs/ww/en/view/54110126)" manual and the manuals of the F-modules in use. The warnings and other notices contained in these manuals must be heeded at all times even if they are not repeated in this Getting Started.

Serious injury and damage to machines and equipment may result if these regulations are ignored.

Production cell with access protection

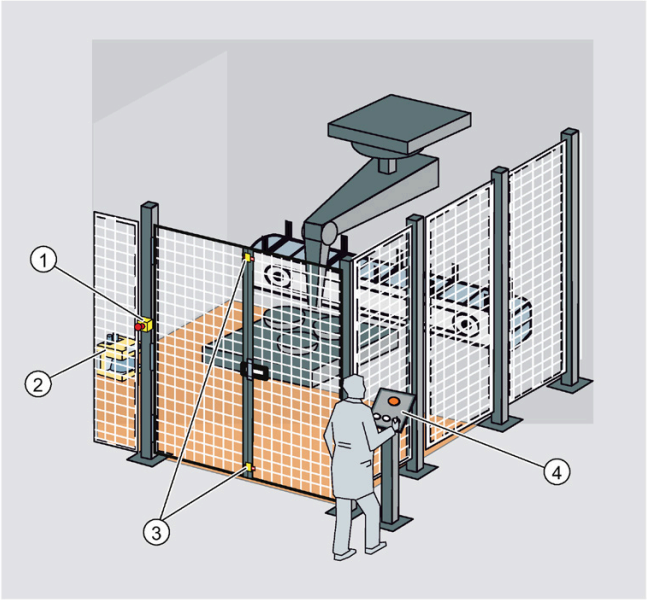

① Emergency stop
② Laser scanner
③ Safety door
④ Control panel with start and acknowledgement pushbuttons

The entry to the production area is monitored with a laser scanner. The service area is secured by a safety door.

Entering the production area or opening the safety door results in a stop or shutdown of the production cell similar to an emergency stop.

The system can only be started when the emergency stop is cancelled, the safety door is closed, and the laser scanner detects no one in the protected area. On-site user acknowledgment is required to restart production after the emergency stop has been activated, the safety door has been opened or the protected area has reacted.

6.2.2 Procedure

The example in these Getting Started instructions consists of the following chapters:

Configuring

You configure:

- An ET 200SP fail-safe digital input module for connecting an emergency stop switch, the connection of the position switches for monitoring a safety door, and the connection of the laser scanner for monitoring the entry area.
- An ET 200SP fail-safe digital output module for connecting a motor.
- An ET 200SP fail-safe digital input module for user acknowledgment, feedback circuit, and start.

The configuration is described in the section "Configuring (Page 219)".

Programming

Once the configuration is successfully completed, you can program your safety program.

In the Getting Started, a fail-safe block is programmed with an emergency stop, a safety door function, a feedback circuit (as restart protection when there is an incorrect contactor), and a user acknowledgment for reintegration. On completion, the safety program is compiled and downloaded to the F-CPU.

The programming is described in the section "Programming (Page 237)".

Installation on PROFINET IO

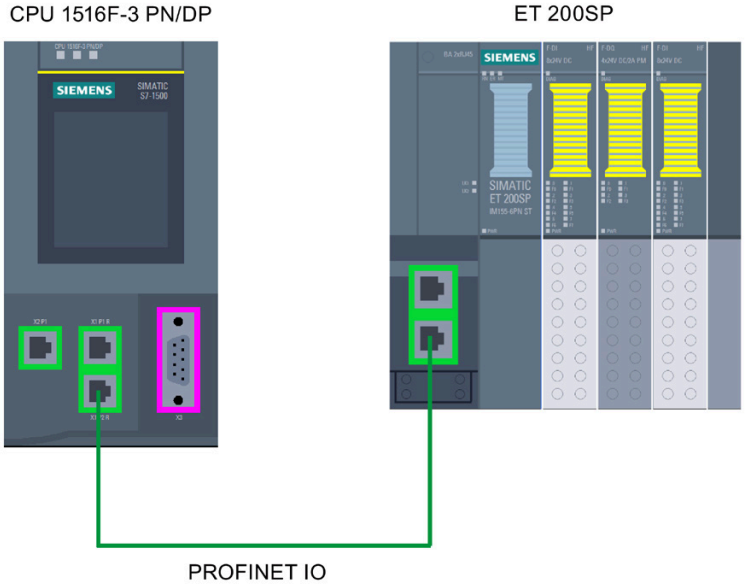

Wiring overview for ET 200SP

The Getting Started is based on the following wiring:

The laser scanner is connected to an external sensor supply.

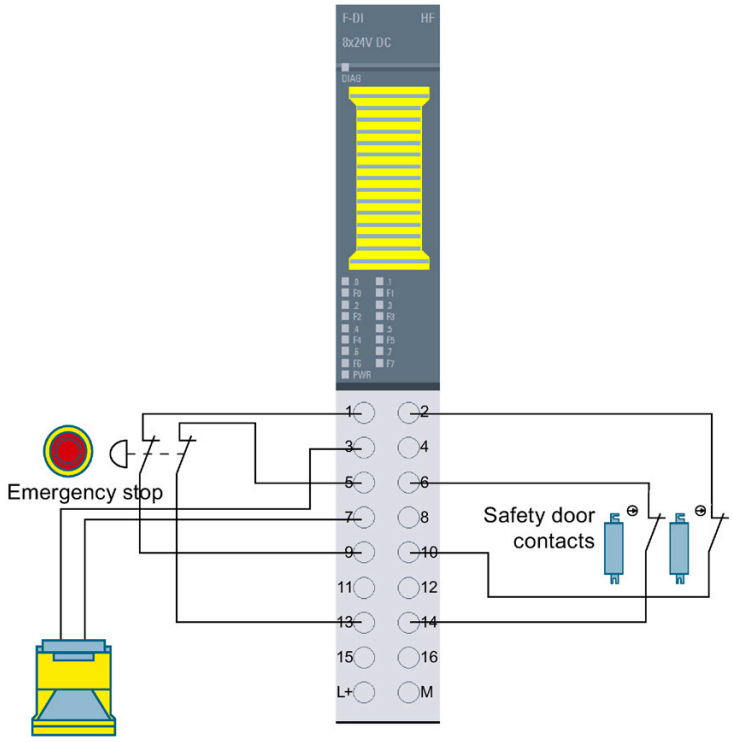

Figure 6-1 Wiring of the F-DI 8x24V DC HF

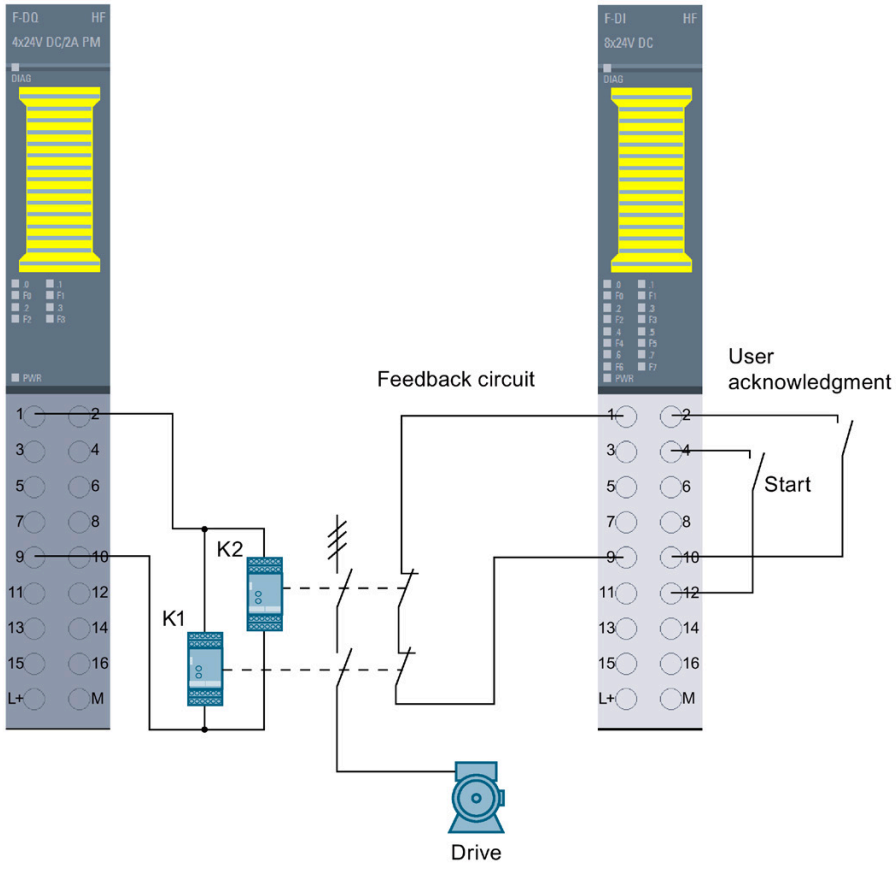

Figure 6-2 Wiring of the F-DQ 4x24V DC/2A PM HF and the F-DI 8x24V DC HF

6.2.3 Requirements for configuring and programming

Requirements for the example

You need the following hardware for the Getting Started:

- CPU 1516F-3 PN/DP (6ES7516-3FN02-0AB0)
- SIMATIC Memory Card with at least 4 MB (e.g. 6ES7954-8LC03-0AA0)
- S7-1500 load current supply PM 70W 120/230VAC (6EP1332-4BA00)
- An ET 200SP distributed I/O system consisting of:
  - Interface module IM 155-6 PN ST incl. server module (6ES7155-6AU01-0BN0)
  - 1 BaseUnit BU15-P16+A0+2D (6ES7193-6BP00-0DA0)
  - 2 BaseUnits BU15-P16+A0+2B (6ES7193-6BP00-0BA0)
  - 2 fail-safe digital input modules F-DI 8x24VDC HF (6ES7136-6BA00-0CA0)
  - Fail-safe digital output module F-DQ 4x24VDC/2A PM HF (6ES7136-6DB00-0CA0)
- Emergency stop
- Position switch for monitoring a safety door
- Laser scanner
- 2 contactors which control a drive

The following software packages must be installed on your programming device/PC:

- *STEP 7 Professional V17*
- *STEP 7 Safety Advanced V17*

The programming device or PC must be connected to the F-CPU via the PROFINET interface.

Information on installation and wiring is available in the system manuals ET 200SP distributed I/O system (https://support.industry.siemens.com/cs/ww/en/view/58649293) and S7-1500 Automation System (https://support.industry.siemens.com/cs/ww/en/view/59191792).

6.2.4 Additional information

Detailed information on the hardware in use is available at:

- CPU 1516F-3 PN/DP
  - SIMATIC S7-1500 CPU 1516-3 PN/DP (https://support.industry.siemens.com/cs/de/en/view/109767407)
  - SIMATIC S7-1200/S7-1500 F-CPUs (https://support.industry.siemens.com/cs/de/en/view/109478599)
- S7-1500 load current supply PM 70W 120/230VAC (https://support.industry.siemens.com/cs/ww/en/view/68036174)
- Interface module IM 155-6 PN ST (https://support.industry.siemens.com/cs/ww/en/view/59768173)
- BaseUnits (https://support.industry.siemens.com/cs/ww/en/view/59753521)
- fail-safe digital input module F-DI 8x24VDC HF (https://support.industry.siemens.com/cs/ww/en/view/78589499)
- fail-safe digital output module F-DQ 4x24VDC/2A PM HF (https://support.industry.siemens.com/cs/ww/en/view/78645789)
- Server module (https://support.industry.siemens.com/cs/ww/en/view/63257531)

6.3 Configuring

6.3.1 Introduction

Introduction

WARNING

There is a risk of personal injury or damage to property.

You may come into contact with live electrical wires connected to the mains power supply.

Only wire the S7-1500 and ET 200SP when they are disconnected from the mains power supply.

The installation and wiring of the CPU 1516F-3 PN/DP is described in the System Manual S7-1500 Automation System (https://support.industry.siemens.com/cs/ww/en/view/59191792) manual.

A detailed Getting Started which explains the installation of a CPU S7-1500 is available on the Internet (https://support.industry.siemens.com/cs/de/en/view/78027451).

Configuring the Hardware

You configure in *STEP 7 Professional V17* with *STEP 7 Safety V17*:

- A CPU 1516F-3 PN/DP
- An ET 200SP distributed I/O system consisting of:
  - One interface module IM155-6 PN ST as of firmware V1.1
  - Two ET 200SP fail-safe digital input modules for connecting an emergency stop switch, position switches for monitoring a safety door, the laser scanner, the user acknowledgment, the feedback circuit and start
  - One ET 200SP fail-safe digital output module for connecting a motor

6.3.2 Step 1: Configuring the CPU 1516F-3 PN/DP

Introduction

In this step, you create a new project, add an F-CPU, and assign parameters for it.

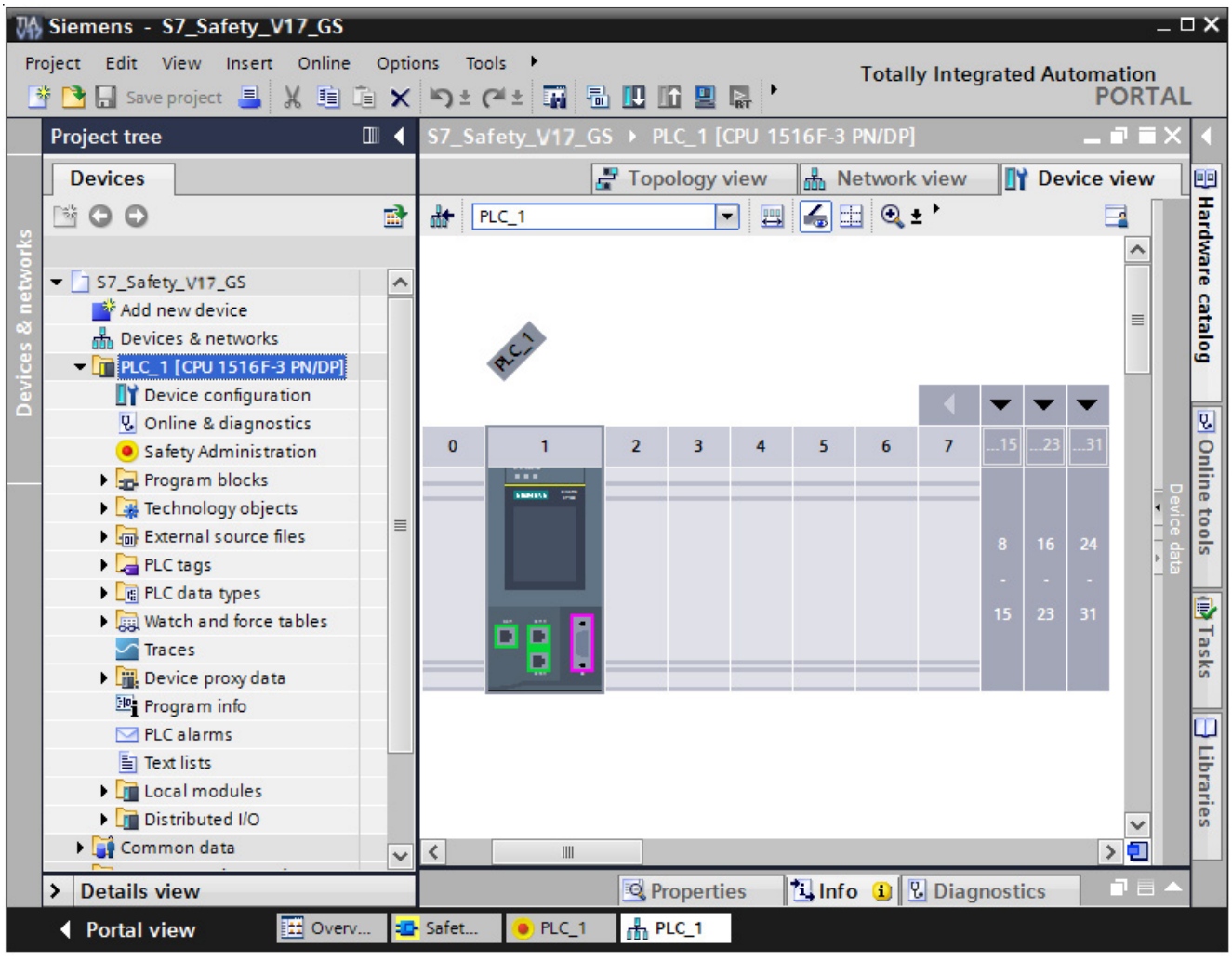

Procedure

1. In the portal view of *STEP 7 Professional V17*, create a new project with the name "S7_Safety_V17_GS"
2. Add a CPU 1516F-3 PN/DP in the "Devices & networks" portal with "Add new device".

   Result: The device view with the CPU 1516F-3 PN/DP opens.
3. In the "Properties" of the F-CPU change to the "Fail-Safe" area.

   Here, you can change the following parameters or accept the default setting:
   - "Basis for PROFIsafe addresses"
   - "Default F-monitoring time for F-I/O of this interface"
4. Leave the default values unchanged for this example.

Result

The new project has been created and the F-CPU has been configured.

6.3.3 Step 2: Configuring an ET 200SP distributed I/O system on a PROFINET subnet

Introduction

In this step, you configure the interface module for the ET 200SP distributed I/O system and a PROFINET subnet.

Procedure

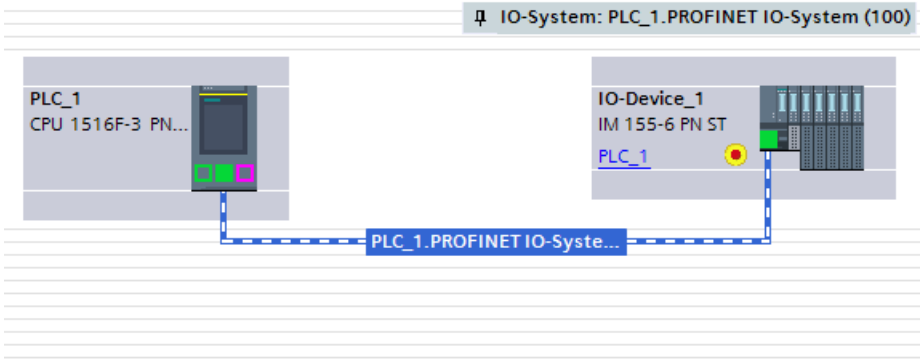

1. In the project view, click the "Network view" tab.
2. In the hardware catalog, enter "IM155-6 PN" in the search field, and start the search with [Enter].
3. In the search results, click an interface module with article number 6ES7155-6AU01-0BN0
4. In the "Information" palette select the firmware version which matches the interface module in the "Version" drop-down list.
5. Drag the interface module with article number 6ES7155-6AU01-0BN0 from the "Catalog" pane to the graphic area of the network view.
6. Starting at the PROFINET interface of the IM155-6 PN ST hold down the mouse button and drag a PROFINET connection to the green PROFINET interface of the F-CPU on the right.

   Result: A PROFINET subnet between the F-CPU and the IM155-6 PN ST is created automatically. The IP addresses and the PROFINET device names are also assigned automatically.

Result

The configuration of the interface module for the ET 200SP distributed I/O system and the PROFINET subnet is now complete.

6.3.4 Step 3: Configuring an F-DI module for connecting an emergency stop switch, position switches, and the laser scanner

Introduction

In this step, you configure a fail-safe digital input module for connecting the emergency stop, the position switches for monitoring the safety door, and the laser scanner for monitoring the entry area.

You will find detailed information on the parameters in the online help.

Procedure

1. In the graphic area of the network view, double-click on the IM155-6 PN ST.

   Result: The IM155-6 PN ST is opened in the device view.
2. In the device view of the ET 200SP, add an F-DI 8x24VDC HF fail-safe digital input module by dragging it from the hardware catalog to slot 1.
3. Select the "I/O addresses" area in the "Properties" tab.

   Leave the "Start address" parameter set to 0 for this example.
4. Change to the "F-parameter" area. Here, you can change the following parameters, if necessary, or apply the default settings:
   - "F-monitoring time"
   - "F-destination address"
   - "Behavior after channel fault"
   - "F-I/O DB-number"

   Leave the settings unchanged for the F-parameters for this example.
5. Switch to the "DI parameter" area.

   Disable the "Short-circuit test" parameter of the sensor supply for channels 2 and 6.

6. In this example, a two-channel emergency stop is to be connected to channels 0 and 4.

   Make the settings under "Channel parameter" as shown in the figure below. The equivalent 1oo2 evaluation then takes place in the F-module.

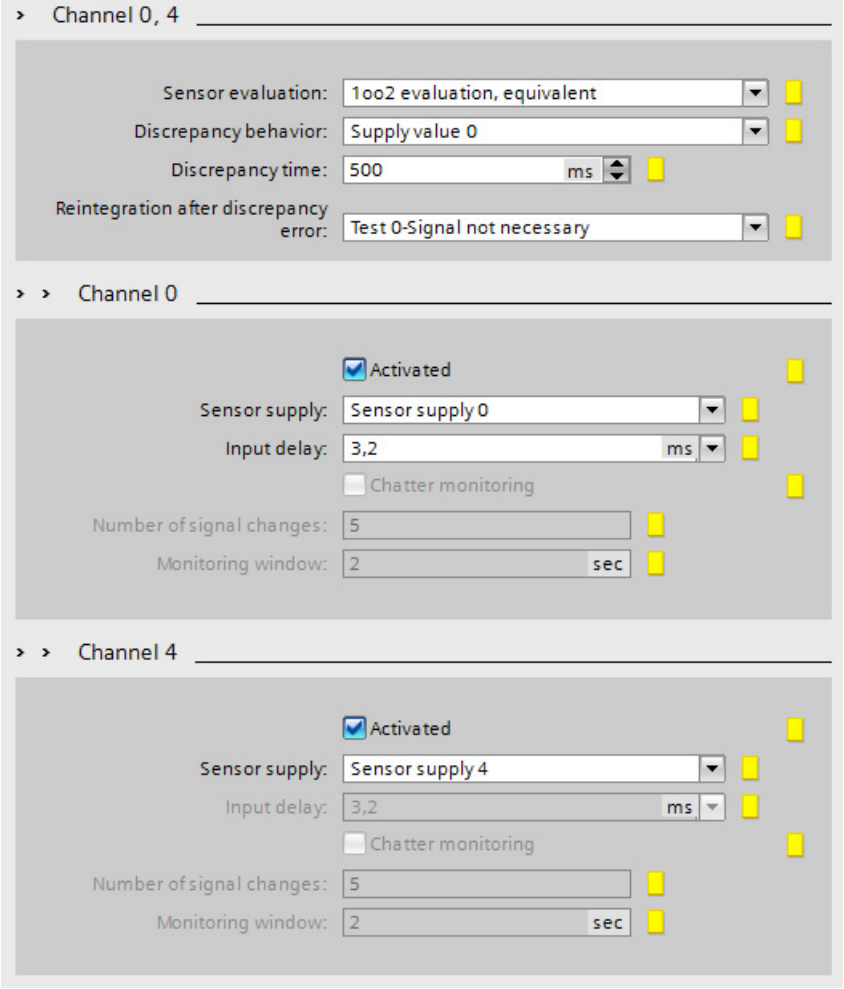

7. In this example, the position switches for monitoring a two-channel safety door will be connected to channels 1 and 5.

   Make the settings under "Channel parameter" as shown in the figure below.

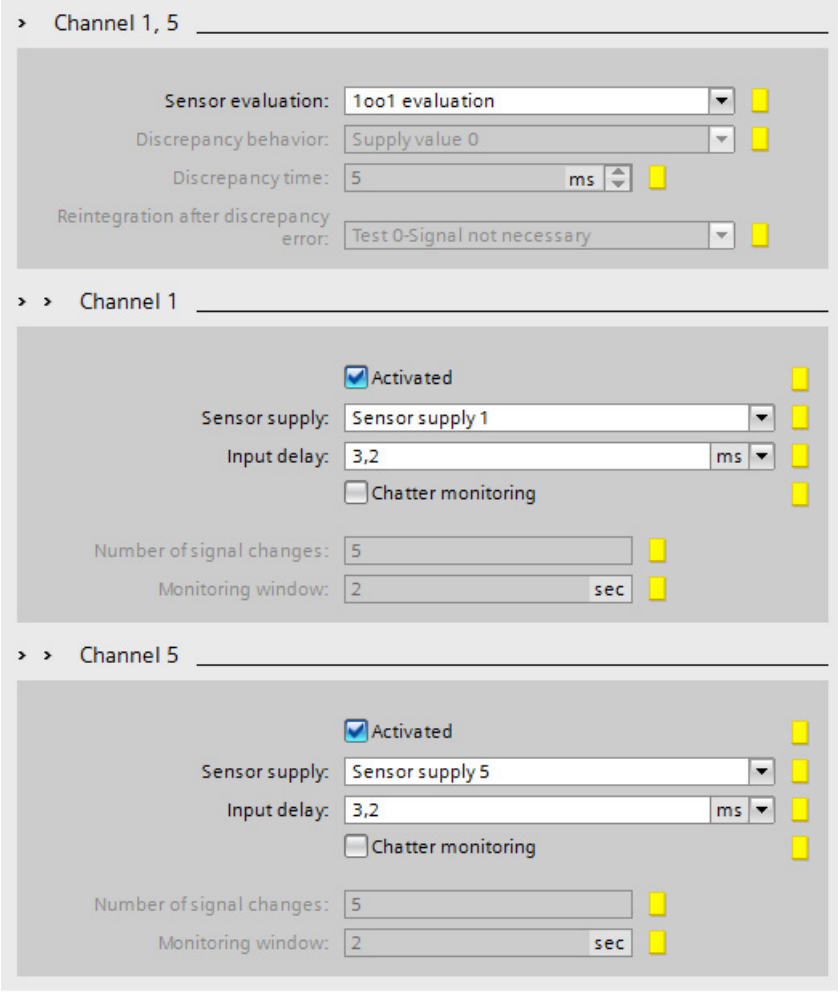

8. In this example, the laser scanner for monitoring the accessible entry area is to be connected to channels 2 and 6.

   Make the settings under "Channel parameter" as shown in the figure below.

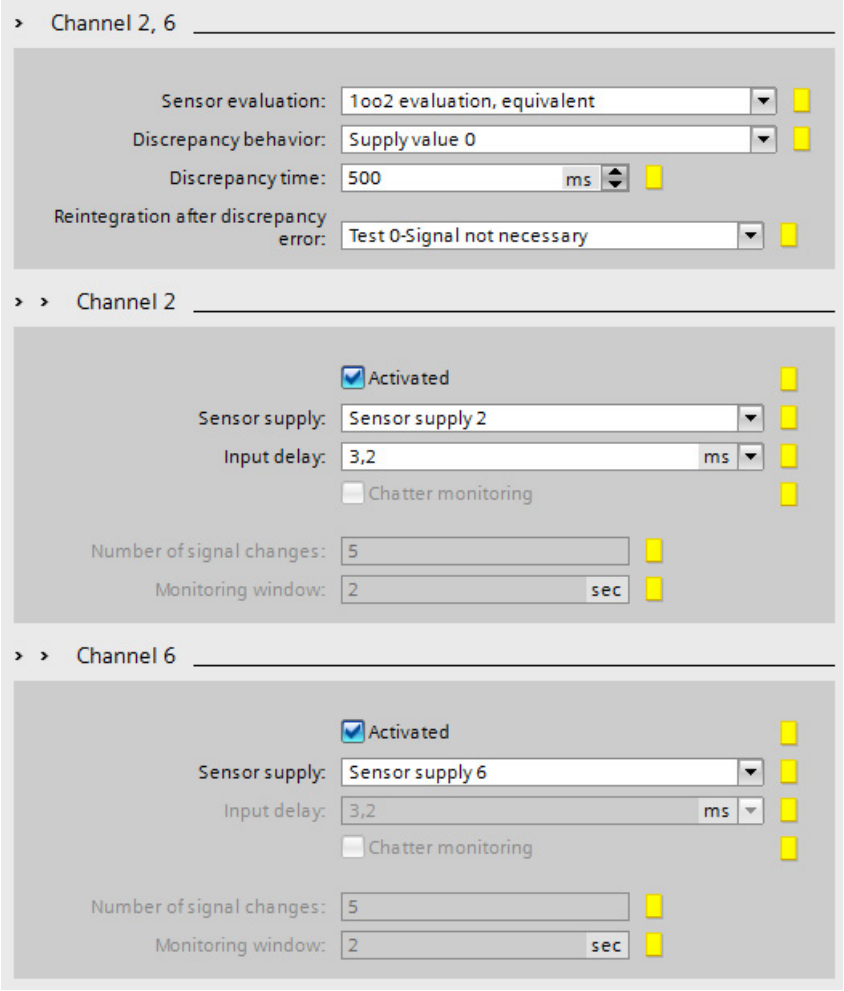

9. Disable the unused DI channels 3 and 7 by clearing the "Activated" check box.

Result

The configuration of the fail-safe DI module is now complete.

6.3.5 Step 4: Configuring an F-DQ module for connecting a motor

Introduction

In this step, you configure a fail-safe digital output module for indirect connection of a motor to channel 0 via two contactors.

You will find detailed information on the parameters in the online help.

Procedure

1. In the device view of the ET 200SP, add an F-DQ 4x24VDC/2A PM HF fail-safe digital output module by dragging it from the hardware catalog to slot 2.
2. Select the "I/O addresses" area in the "Properties" tab.

   Leave the "Start address" parameter set to 6 for this example.
3. Change to the "F-parameter" area. Here, you can change the following parameters or accept the default settings:
   - "F-destination address"
   - "F-monitoring time"
   - "Behavior after channel fault"
   - "F-I/O DB-number"

   Leave the settings unchanged for the F-parameters for this example.
4. Change to the "DO parameter" area.

   Make the settings under "Channel parameter" as shown in the figure below.

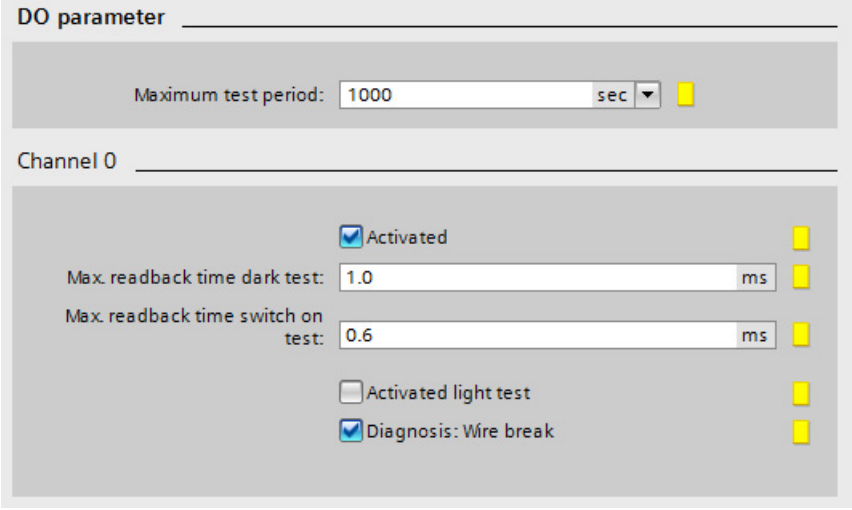

5. Disable the unused DQ channels 1, 2 and 3 by clearing the "Activated" check box.

Result

The configuration of the fail-safe DQ module is now complete.

6.3.6 Step 5: Configuring an F-DI module for user acknowledgement, feedback circuit and start

Introduction

In this step, you configure a fail-safe digital input module for connection of a user acknowledgment, a feedback circuit and start.

You will find detailed information on the parameters in the online help.

Procedure

1. In the device view of the ET 200SP, add an F-DI 8x24VDC HF fail-safe digital input module by dragging it from the hardware catalog to slot 3.
2. Select the "I/O addresses" area in the "Properties" tab.

   Leave the "Start address" parameter set to 11 for this example.
3. Change to the "F-parameter" area. Here, you can change the following parameters, if necessary, or apply the default settings:
   - "F-monitoring time"
   - "F-destination address"
   - "Behavior after channel fault"
   - "F-I/O DB-number"

   Leave the settings unchanged for the F-parameters for this example.
4. Switch to the "DI parameter" area.

   Disable the "Short-circuit test" parameter of the sensor supply for channels 3 and 7.

5. In this example, a feedback circuit is to be connected to channel 0.

   Make the settings under "Channel parameter" as shown in the figure below.

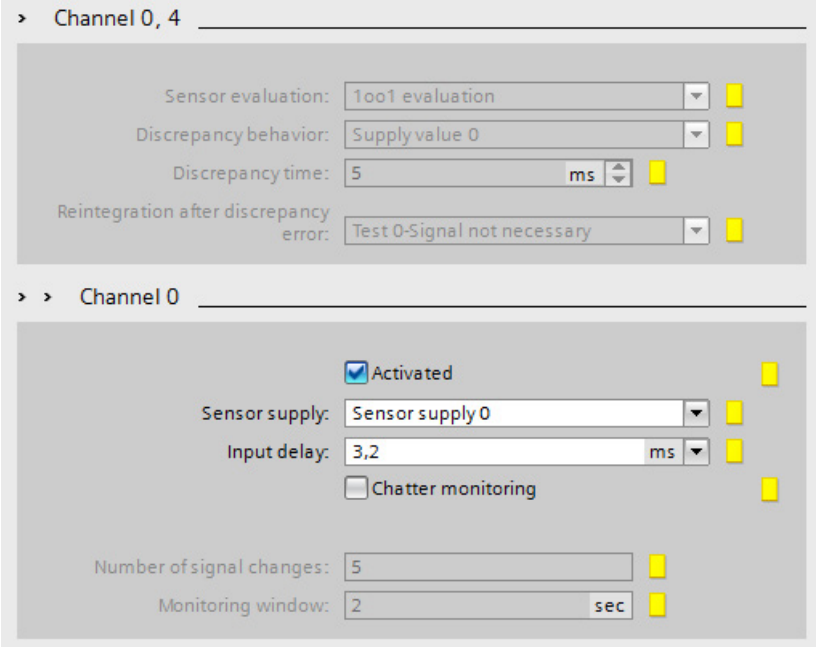

   Disable channel 4 by clearing the "Activated" check box.

6. In this example, the user acknowledgment is to be connected to channel 1.

   Make the settings under "Channel parameter" as shown in the figure below.

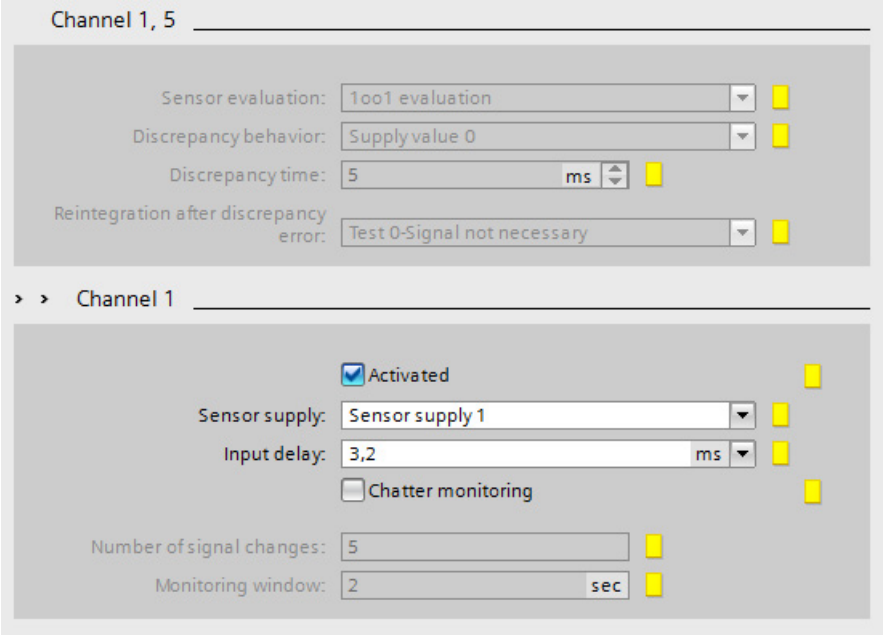

   Disable channel 5 by clearing the "Activated" check box.

7. In this example, start is to be connected to channel 3.

   Make the settings under "Channel parameter" as shown in the figure below.

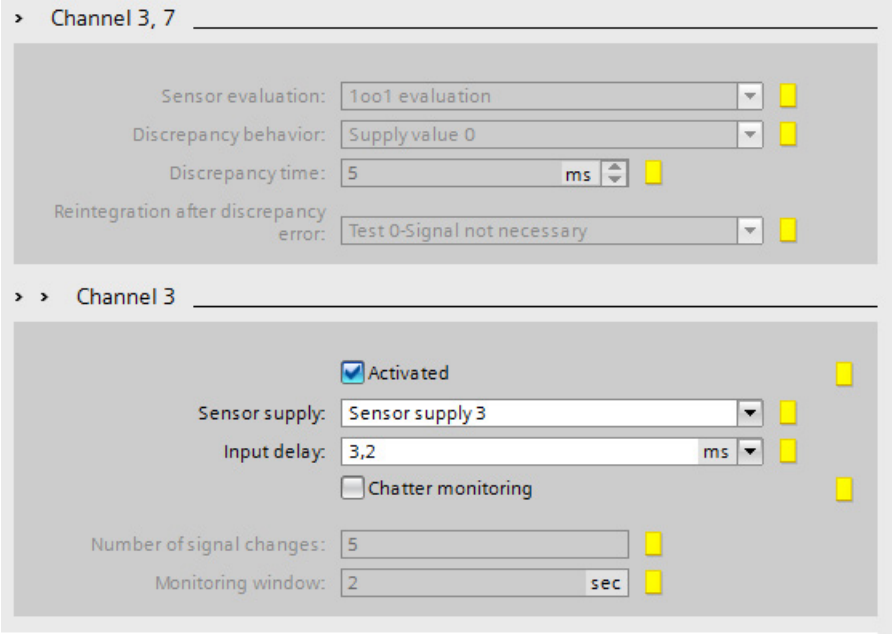

   Disable channel 7 by clearing the "Activated" check box.

8. Disable the unused DI channels 2 and 6 by clearing the "Activated" check box.
9. Add a server module by dragging it from the hardware catalog to slot 4.

Result

The configuration of the fail-safe DI module and the ET 200SP is now complete.

6.3.7 Step 6: Download hardware configuration

Introduction

In this step, you download the hardware configuration to the F-CPU.

Procedure

1. Select the F-CPU in the project tree.
2. In the shortcut menu for the F-CPU, select "Download to device > Hardware configuration". If an online connection to the F-CPU does not yet exist, you are prompted to establish this connection.

   Result: The hardware configuration is compiled. The "Load preview" dialog is displayed afterward.
3. Click the "Load" button.

   Result: The hardware configuration is downloaded.
4. The "Load results" dialog is then displayed, if applicable. Next click the "Finish" button.

6.3.8 Step 7: Assign device name

Introduction

In this step, you assign a valid PROFINET device name to the interface module. The device name of the F-CPU has already been assigned during the download of the hardware configuration.

The PROFINET device names are created automatically by *STEP 7 Professional V17*; you only need to assign them.

For additional information on PROFINET IO, refer to the "PROFINET with STEP 7 V17 (https://support.industry.siemens.com/cs/ww/en/view/49948856)" function manual.

You will find additional information on configuring PROFINET IO in the online help for *STEP 7 Professional V17* under "Configurations for PROFINET IO".

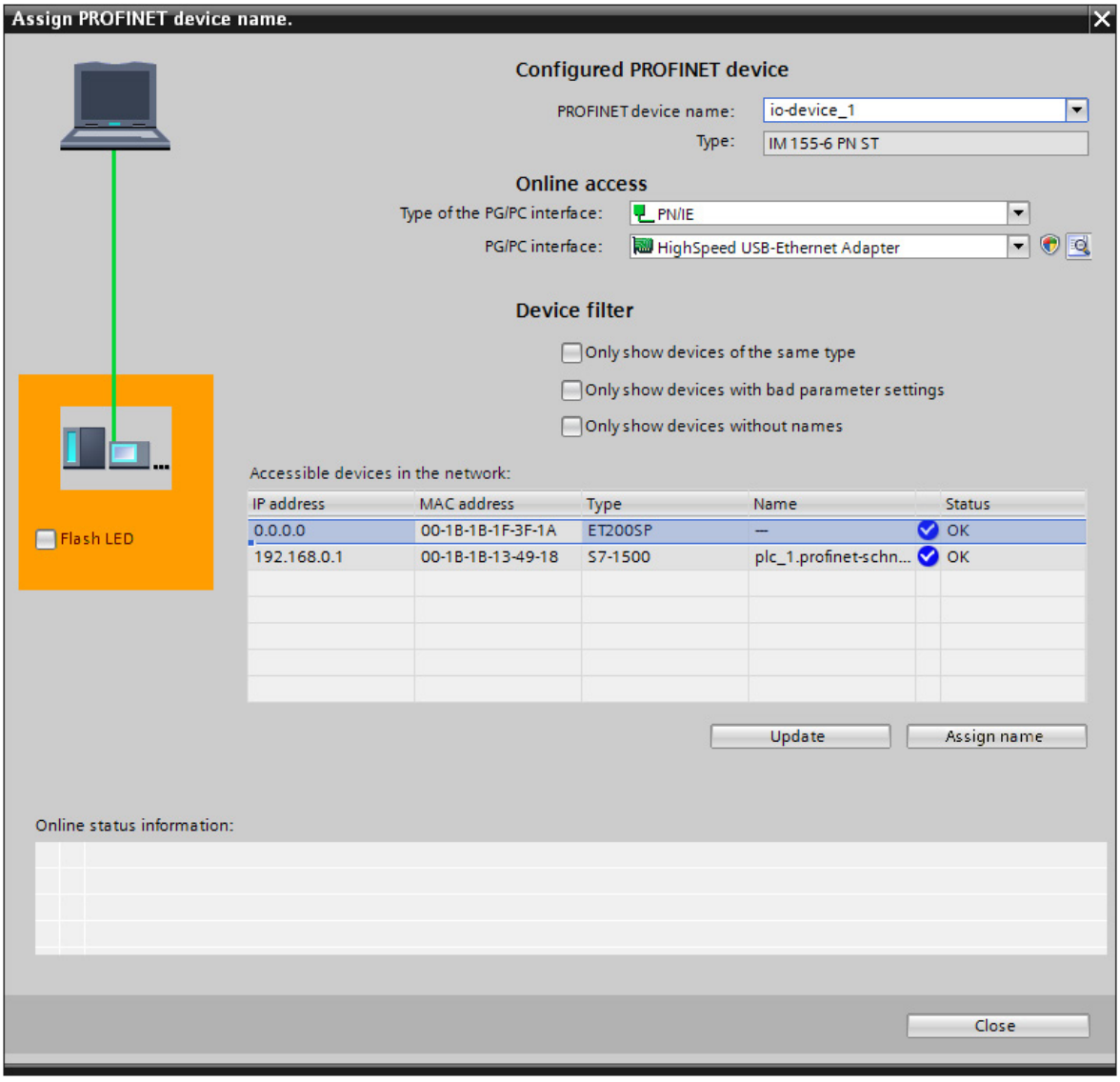

Procedure

1. Change to the Network view.
2. Select "PN/IE_1" subnet in the network view.
3. Select "Assign device name" from the shortcut menu.

   Result: The "Assign PROFINET device name" dialog opens.
4. Select "io_device_1" for the ET200SP in the "PROFINET device name" drop-down list.
5. Select the entry with the type "ET 200SP" in the "Accessible participants in the network" table.
6. You can use the "Flash LED" button to identify the device.
7. Click the "Assign name" button.

Result

You have successfully assigned the device name of the IM155-6 PN ST.

6.3.9 Step 8: Assign PROFIsafe addresses

Introduction

Each F-I/O is uniquely addressed by its PROFIsafe address. The PROFIsafe address consists of an F-source address and an F-destination address.

The uniqueness of the PROFIsafe address is ensured by the combination of F-source address and F-destination address.

The PROFIsafe address must be unique network-wide and CPU-wide (system-wide) for each ET 200SP F-module. This is the case if the following two conditions are met:

- The F-source address ("Basis for PROFIsafe addresses" parameter) of the F-CPU is unique network-wide.
- The F-destination address of the F-module is unique CPU-wide.

Detailed information on PROFIsafe addresses is available in the manual "SIMATIC Safety - Configuring and Programming (https://support.industry.siemens.com/cs/ww/en/view/54110126)" in the section "Configuring".

Detailed information on the assignment of PROFIsafe addresses is available in the manual "SIMATIC Safety - Configuring and Programming (https://support.industry.siemens.com/cs/ww/en/view/54110126)" in the section "Assigning the F-destination address for ET 200SP fail-safe modules".

Rules for address assignment

The ET200SP is an F-module of the PROFIsafe address type 2. Keep to the following rules when assigning the PROFIsafe addresses:

WARNING

F-I/O of PROFIsafe address type 2 is uniquely addressed using a combination of F-source address ("Basis for PROFIsafe addresses of the assigned F-CPU" parameter) and F-destination address.

The combination of F-source address and F-destination address for each F-I/O must be unique network-wide* and CPU-wide** (system-wide). In addition, the F-destination address must not be occupied by F-I/O of PROFIsafe address type 1.

To ensure that addresses are unique across F-CPUs for supported configurations, you need to ensure that the "Basis for PROFIsafe addresses" parameter of all F-CPUs is unique network-wide*. This is achieved by having different settings for the "Basis for PROFIsafe addresses" parameter of the F-CPUs.

* A network consists of one or more subnets. "Network-wide" means beyond the boundaries of the subnet(s). In PROFIBUS, a network includes all nodes accessible via PROFIBUS DP. In PROFINET IO, a network includes all nodes accessible via RT_Class_1/2/3 (Ethernet/WLAN/Bluetooth, Layer 2) and if applicable RT_Class_UDP (IP, Layer 3).

** "CPU-wide" means all F-I/Os assigned to an F-CPU: central F-I/O of this F-CPU as well as F-I/Os for which the F-CPU is DP master/IO controller. An F-I/O that is addressed using I-slave-slave communication is assigned to the F-CPU of the I-slave and not to the F-CPU of the DP master / IO controller.

Procedure

For this example, leave the PROFIsafe addresses assigned automatically by the F-system. The module is ready for the assignment of the F-destination address when all LEDs are lit red. Assign the PROFIsafe addresses as follows:

1. Select the ET 200SP in the network view.
2. Select "Assign F-destination address" from the shortcut menu.
3. Under "Identification", select the method to be used for identifying the F-modules.
   - "by LED flashing"

     This is the default setting. During identification, the STATUS LEDs of the F-modules to be identified flash.
   - "by serial number"

     If you cannot see the F-modules clearly, you can identify them by the serial number of the interface module.

     Note

     The displayed serial number may have a year number added to it compared with the serial number printed on the interface module. The serial numbers are nevertheless identical.
4. In the "Assign" column, select all the F-modules to which you want to assign the F-destination address.

   If you select the interface module in the "Assign" column, all F-modules of the station are selected.
5. Click the "Identification" button. Check whether the status LEDs for the F-modules whose F-destination address you want to assign are flashing green.

   If you identify using the serial number, compare the displayed serial number with the serial number of the interface module.
6. Confirm successfully identified F-modules in the "Confirm" column of the table.
7. Use the "Assign F-destination" button to assign the F-destination addresses to the F-modules.

   You must confirm the "Confirm Assignment" dialog within 60 seconds.
8. Close the dialog.

Result

You have successfully assigned the PROFIsafe addresses.

6.3.10 Summary: Configuring the Hardware

Summary

So far, you have configured the following according to the task definition for the example:

- An F-CPU 1516F-3 PN/DP
- An ET 200SP with:
  - Interface module IM 155-6 PN ST
  - An ET 200SP fail-safe digital input module for connecting an emergency stop, position switches for monitoring a safety door, and the laser scanner for monitoring the accessible production area.

    - Start addresses of the input and output addresses: both 0
    - Channels 0 and 4 for emergency stop
    - Channels 1 and 5 for safety door position switch
    - Channels 2 and 6 for the laser scanner
  - One ET 200SP fail-safe digital output module for connecting a motor

    - Start addresses of the input and output addresses: both 6
    - Channel 0 for indirect switching of motor via two contactors
  - An ET 200SP fail-safe digital input module for user acknowledgment, feedback circuit and start.

    - Start addresses of the input and output addresses: both 11

    - Channel 0 for feedback circuit

    - Channel 1 for user acknowledgment

    - Channel 3 for start
  - Server module

You can now continue with programming the safety program.

6.4 Programming

6.4.1 Introduction

Introduction

In this example, you create a fail-safe block (F-FB). In F-FB you program:

- the safety door function,
- the emergency stop function (safety circuit for shutdown with emergency stop, if the safety door is open, or the protected area monitored by the laser scanner is entered),
- a feedback monitoring circuit (as automatic restart protection in case of a faulty contactor)
- the user acknowledgment for reintegration

You then compile the safety program and download it to the F-CPU.

6.4.2 The structure of the safety program

Introduction

When you insert the F-CPU, an F-runtime group and the associated F-OB with main safety block (F-FB with instance DB) are created by default.

The first step in programming your safety program is the main safety block. When this block is compiled, additional instructions are added that call the remaining F-blocks of the safety program.

The structure of a safety program

For structuring purposes, a safety program consists of one or two F-runtime groups.

The main safety block is called in the F-CPU by the F-OB assigned to the F-runtime group.

From the main safety block you can call additional F-FBs and F-FCs with safety functions.

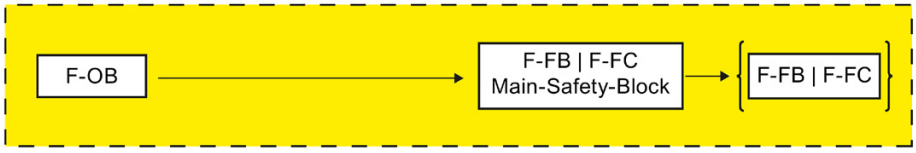

Figure 6-3 F-runtime group

This example consists of one F-runtime group. The F-FB "Safety_Interlock" is called from the main safety block of the F-runtime group.

Detailed information on F-runtime groups is available in the manual "SIMATIC Safety - Configuring and Programming (https://support.industry.siemens.com/cs/ww/en/view/54110126)" in the section "Defining F-Runtime Groups".

Detailed information on the safety program is available in the manual "SIMATIC Safety - Configuring and Programming (https://support.industry.siemens.com/cs/ww/en/view/54110126)" in the section "Program structure of the safety program (S7-1500)".

Programming

A safety program consists of F-blocks that you create using the FBD or LAD programming language and F-blocks that are automatically added.

In this example, you program using the FBD programming language. Note the following differences compared to programming a standard user program:

- Preconnection of the enable input EN or evaluation of the enable output ENO is not possible.
- Limitations in the instructions
- Limitations in the used data types and operand areas
- Fail-safe signals are shown in yellow in the *LAD/FBD Editor*.

(refer to the manual "SIMATIC Safety - Configuring and Programming (https://support.industry.siemens.com/cs/ww/en/view/54110126)" in the section "Overview of Programming").

6.4.3 The Safety Administration Editor

The *Safety Administration Editor* supports you in the following tasks:

- Displaying the status of the safety program
- Displaying the F-collective signature
- Displaying the status of the safety mode
- Creating/organizing F-runtime groups
- Displaying information on the F-blocks
- Displaying information about F-compliant PLC data types
- Specifying/changing access protection
- Specifying/changing general settings for the safety program

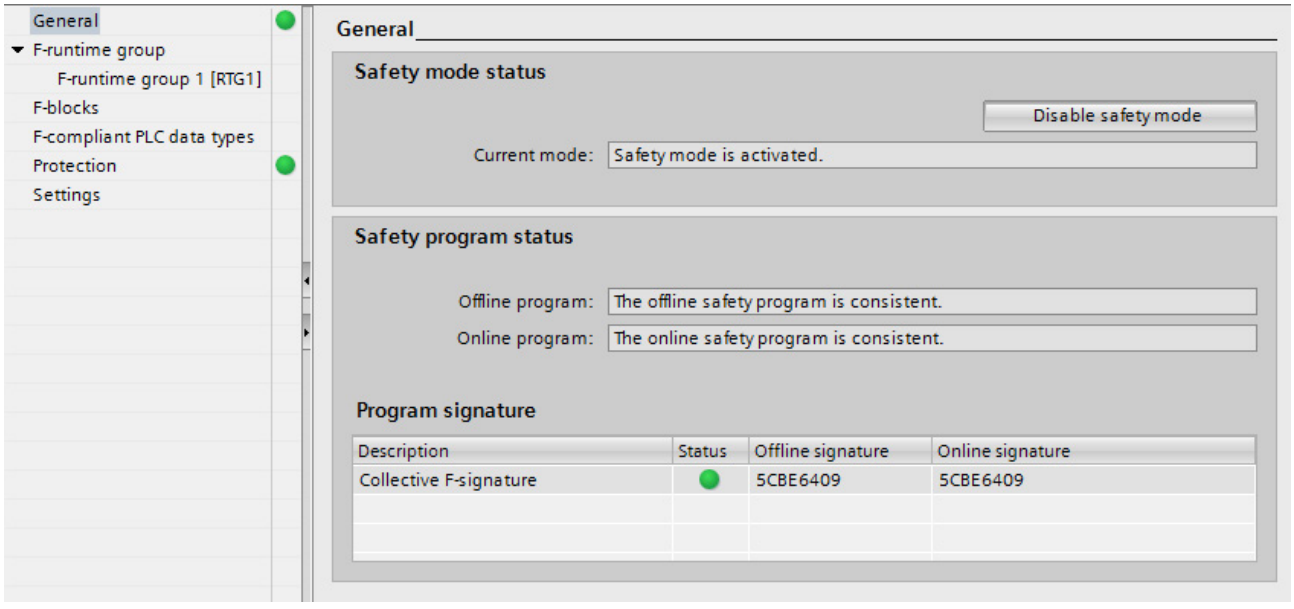

Detailed information on the Safety Administration Editor is available in the manual "SIMATIC Safety - Configuring and Programming (https://support.industry.siemens.com/cs/ww/en/view/54110126)".

6.4.4 Step 9: Specifying the centralized settings for the safety program

Introduction

In this step, you learn how to call the *Safety Administration Editor*.

Opening the *Safety Administration Editor*

1. In the project tree of the F-CPU, double-click on "Safety Administration".

   Result: The *Safety Administration Editor* opens.

   You make central settings for the safety program in the *Safety Administration Editor*.

2. In the area navigation of the *Safety Administration Editors*, switch to "F-runtime group".

   The automatically created F-runtime group and the F-OB with the associated main safety block are displayed when you create the F-CPU.

   Leave the preset blocks for this example.

3. In the area navigation of the *Safety Administration Editor*, switch to "Settings".

   Here you can make the settings for the safety program.

   Keep the preassigned settings for this example.

For additional information on the *Safety Administration Editor*, refer to the "SIMATIC Safety - Configuring and Programming (https://support.industry.siemens.com/cs/ww/en/view/54110126)" manual in the section "Safety Administration Editor".

6.4.5 Step 10: Create PLC tag table

Introduction

You create symbolic names for each input and output of the F-I/O in the PLC tag table.

		Name	Data type	Address
1		ESTOP	Bool	%I0.0
2		Safety_Door_SW1	Bool	%I0.1
3		Laserscanner	Bool	%I0.2
4		Safety_Door_SW2	Bool	%I0.5
5		Safety_Door_SW1_VS	Bool	%I1.1
6		Safety_Door_SW2_VS	Bool	%I1.5
7		Motor_VS	Bool	%I6.0
8		Feedback	Bool	%I11.0
9		Quit	Bool	%I11.1
10		START	Bool	%I11.3
11		Motor	Bool	%Q6.0

Specifying inputs and outputs for the safety program

1. Create a new PLC tag table in the F-CPU project navigation under "PLC tags" with "Add new tag table".
2. Rename the new PLC tag table with the [F2] key as "Safety Program".
3. Double-click the PLC tag table to open it.
4. Assign symbolic names for the inputs and outputs as shown in the figure above.

Result

In the next steps of the Getting Started, you can now assign symbolic names to the inputs and outputs of the instructions simply using drag-and-drop from the detail view of the "Safety Program" PLC tag table.

6.4.6 Step 11: Creating an F-FB

Introduction

In this step, you create an F-FB in which you program the safety functions for this example in the next steps.

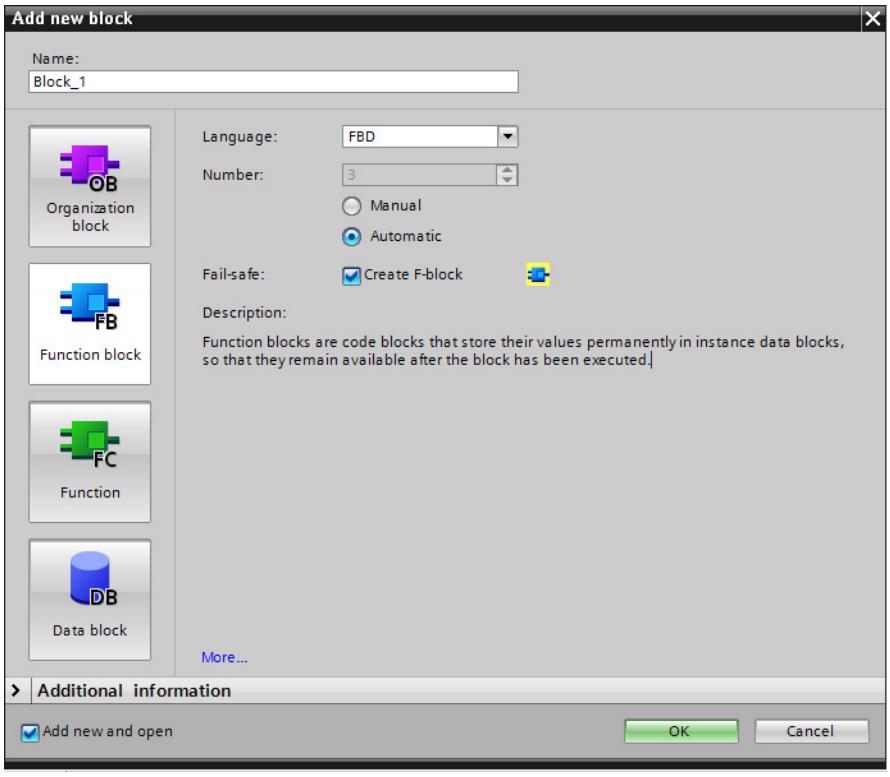

Procedure

1. Go to the "Program blocks" folder of the F-CPU and double-click "Add new block".

   Result: The "Add new block" dialog opens.
2. Under "Name" enter "Safety_Interlock" for the name of the F-FB.
3. Click the "Function block" button on the left.
4. Select the "Create F-block" option.
5. Choose "FBD" as the language for the F-FB.
6. Close the dialog box with "OK".

Result

The F-FB "Safety_Interlock" is created in the "Program blocks" folder and opens automatically in the *LAD/FBD Editor*.

You can now continue with programming the safety functions in the next step.

6.4.7 Step 12: Programming the safety door function

Introduction

In this step, you program the safety door function for this example.

You will find detailed information on the "SFDOOR" instruction in the online help.

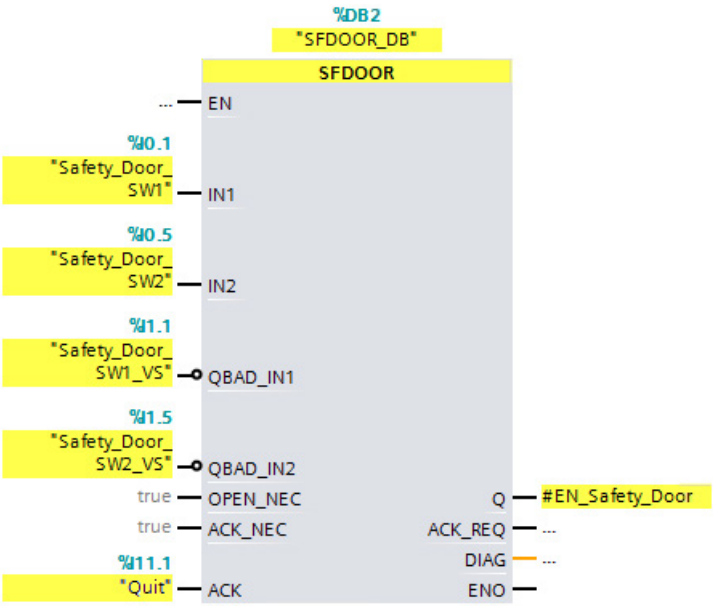

Procedure

1. Create the following static tag of data type BOOL in the interface of the "Safety_Interlock" F-FB:

	Name	Data type
	EN_Safety_Door	Bool

2. Insert the "SFDOOR" instruction from the "Safety functions" subfolder of the "Instructions" task card into network 1.
3. Click "OK" to confirm the "Call options" dialog.
4. Supply the inputs and outputs as shown in the figure above.
5. Insert one "Invert RLO" each at the inputs QBAD_IN1" and "QBAD_IN2" from the "Instructions" task card.

Result

The programming of the safety door function is now complete.

6.4.8 Step 13: Programming the emergency stop function

Introduction

In this step, you program the emergency stop function for this example.

An emergency stop is executed:

- when the emergency stop is activated
- when the safety doors open
- when the protected area of the laser scanner is entered

You will find detailed information on the "ESTOP1" instruction in the online help.

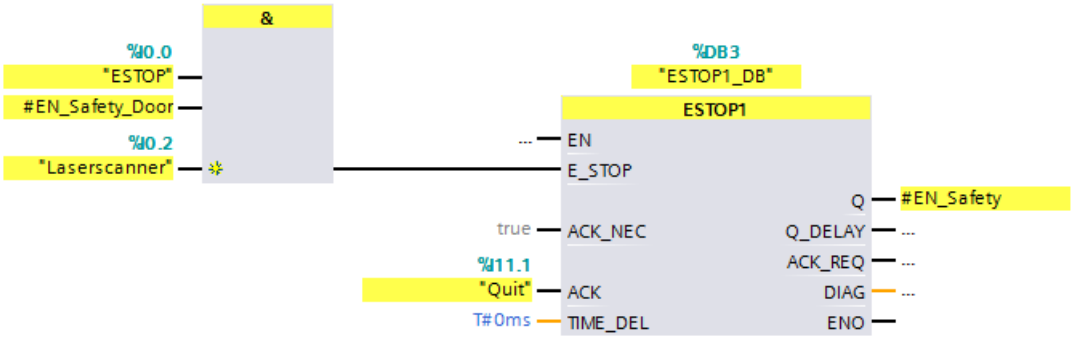

Procedure

1. Create the following static tag of data type BOOL in the interface of the "Safety_Interlock" F-FB:

Name	Data type
EN_Safety	Bool

2. Insert the "AND logic operation" instruction from the "Bit logic operations" subfolder of the "Instructions" task card in network 2.
3. Insert a third input at the "AND logic operation" instruction by clicking on the yellow star.
4. Supply the inputs of the instruction as shown in the figure above.
5. Insert the "ESTOP1" instruction from the "Safety functions" subfolder of the "Instructions" task card into network 2.
6. Click "OK" to confirm the "Call options" dialog.
7. Supply the inputs and outputs of the instruction as shown in the figure above.
8. Connect the output of the "AND logic operation" instruction to the "E_STOP" input of the "ESTOP1" instruction.

Result

The programming of the emergency stop function is now complete.

6.4.9 Step 14: Programming the feedback monitoring

Introduction

In this step, you program the feedback circuit monitoring for this example.

You will find detailed information on the "FDBACK" instruction in the online help.

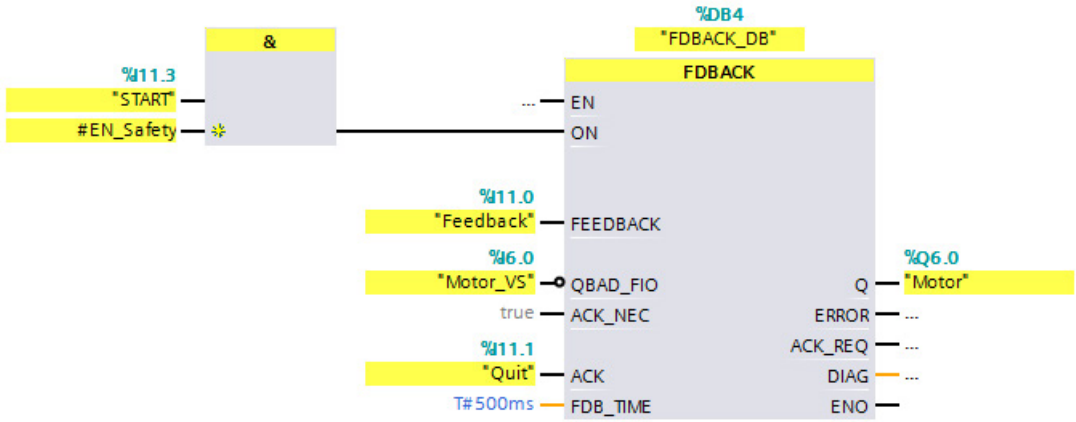

Procedure

1. Insert the "AND logic operation" instruction from the "Bit logic operations" subfolder of the "Instructions" task card in network 3.
2. Supply the inputs of the instruction as shown in the figure above.
3. Insert the "FDBACK" instruction from the "Safety functions" subfolder of the "Instructions" task card into network 3.
4. Click "OK" to confirm the "Call options" dialog.
5. Supply the inputs and outputs of the instruction as shown in the figure above.
6. Insert a "Negate RLO" at the "QBAD_FIO" input from the "Instructions" task card.
7. Connect the output of the "AND logic operation" instruction to the "ON" input of the "FDBACK" instruction.

Result

The programming of the feedback monitoring is now complete.

6.4.10 Step 15: Programming the User Acknowledgment for Reintegration of the F-I/O

Introduction

In this step, you program the user acknowledgement for reintegration of the F-I/O for this example.

In your safety program, you must provide a user acknowledgment for the reintegration for the F-I/O. In this example, this is the "Quit" input.

You can use the ACK_GL instruction to reintegrate all F-I/O of an F-runtime group.

Note

A user acknowledgment with a positive edge at the ACK_GL instruction is required for a reintegration of the F-I/O (i.e., for switching from fail-safe values (0) to process data) after a fault is corrected:

- After every communication error
- After F-I/O faults or channel faults when parameter ACK_NEC = true in the F-I/O DBs

---

You will find detailed information on the "ACK_GL" instruction in the online help.

If you use the option of user acknowledgment by means of an acknowledgment key and there is a communication error / F-I/O fault / channel fault on the F-module to which the acknowledgment key is connected (F-DI 8x24VDC HF on slot 3), acknowledgment for reintegration of this F-module is not possible.

This "block" can only be removed by a STOP/RUN transition of the F-CPU.

Consequently, it is recommended that you also provide for an acknowledgment by means of an HMI system in order to acknowledge reintegration of the F-module to which the acknowledgment key is connected. You can find more information on this in the manual "SIMATIC Safety - Configuring and Programming (https://support.industry.siemens.com/cs/ww/en/view/54110126)", section "Implementing User Acknowledgment in the Safety Program of the F-CPU of a DP Master or IO Controller").

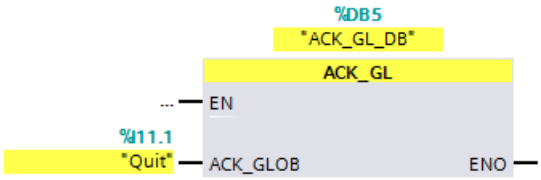

Procedure

1. Insert the "ACK_GL" instruction from the "Safety functions" subfolder of the "Instructions" task card into network 4.
2. Click "OK" to confirm the "Call options" dialog.
3. Supply the input as shown in the figure above.

Result

The programming of the user acknowledgment is now complete.

6.4.11 Step 16: Programming of the main safety block

Introduction

In this step, you program the main safety block for this example. The main safety block was created automatically when the F-CPU was created.

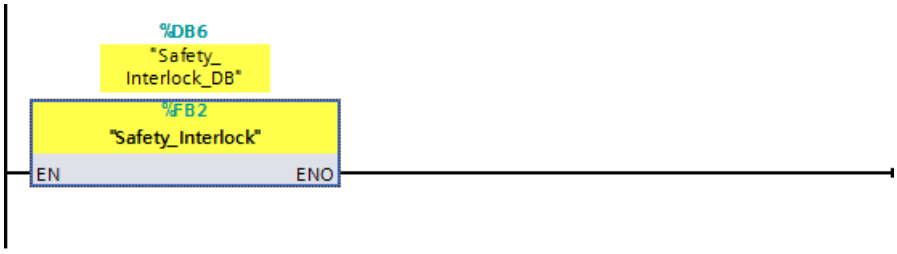

Procedure

1. Double-click in the project navigation to open the main safety block "Main_Safety".
2. Use drag-and-drop to insert the F-FB "Safety_Interlock" into network 1 of the main safety block.
3. Click "OK" to confirm the "Call options" dialog.

Result

The F-FB "Safety_Interlock" is now called cyclically in the main safety block.

You have now programmed the functionality according to the task definition of the example. You can now proceed with the next steps to compile the safety program and then download the safety program along with the hardware configuration to the F-CPU.

6.4.12 Step 17: Compiling the safety program

Introduction

In this step, you compile the safety program.

A consistency check is performed on the execution-relevant F-blocks when the safety program is compiled, that is, the safety program is checked for errors. Any error messages are output in the "Compile" tab. After a successful consistency check, the additionally required F-system blocks are generated automatically and added to the F-runtime group to generate an executable safety program.

Procedure

1. Select the F-CPU in the project tree.
2. In the shortcut menu for the F-CPU, select "Compile > Software (only changes)".

   Result: The safety program is compiled.

Result

After successful compilation, you always have a consistent safety program that is ready for approval.

6.4.13 Step 18: Download the safety program to the F-CPU

Introduction

In this step, you download the safety program to the F-CPU.

Procedure

1. Select the F-CPU in the project tree.
2. In the shortcut menu for the F-CPU, select "Download to device > Software (only changes)". If an online connection to the F-CPU does not yet exist, you are prompted to establish this connection.

   Result: The "Load preview" dialog is displayed.
3. Click the "Load" button.

   Note

   To download the entire safety program, the F-CPU must be in STOP mode.

   Result: The safety program is downloaded and the "Load results" dialog is displayed.

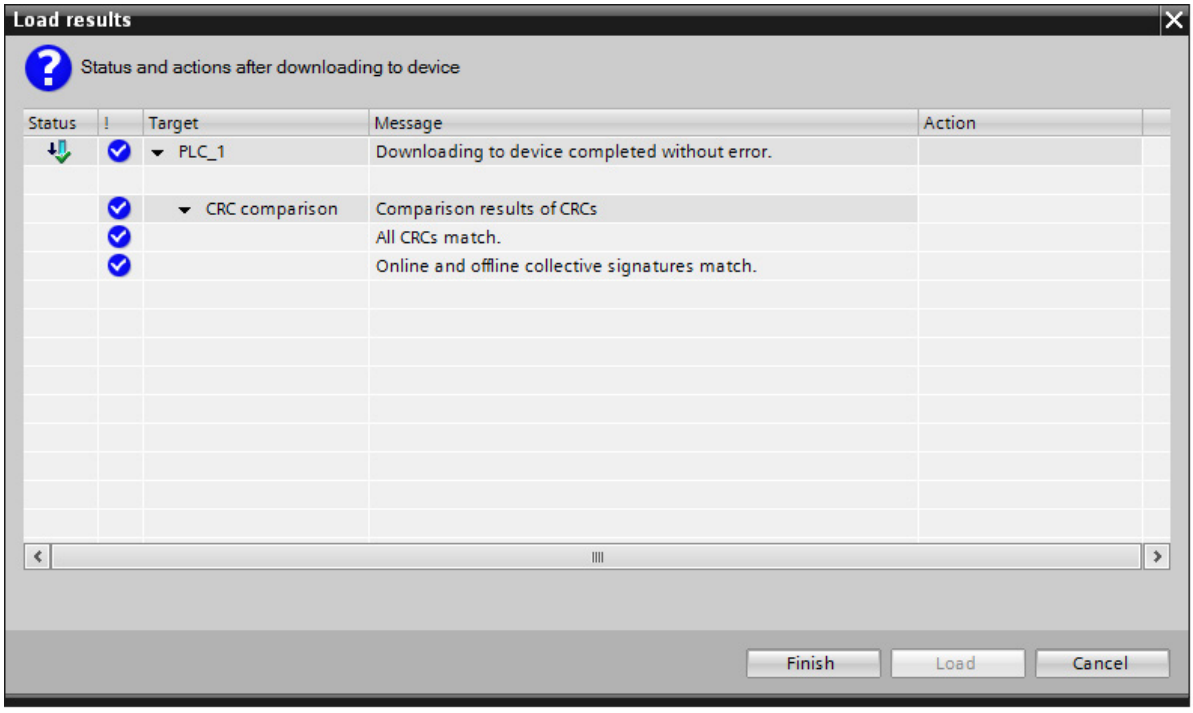

4. Check in the dialog if the F-collective signatures are identical online and offline.

   If so, the download operation was successful. If not, repeat the download operation.

5. Click the "Finish" button.
6. Switch the F-CPU from STOP to RUN mode.

   The display of the F-CPU shows you the current status of the safety mode in the "Overview > Fail-safe" menu item.

Note

Once a safety program has been created, you need to perform a full function test according to your automation task (see SIMATIC Safety - Configuring and Programming (https://support.industry.siemens.com/cs/ww/en/view/54110126) manual).

Result

You have now finished creating the safety program according to the task definition of the example.

In the following appendix, we show you how easy it is to set up access protection for your safety program and the F-CPU.

6.5 Setting up access protection

Introduction

It is essential to provide access protection in production mode for the access to the SIMATIC Safety F-system.

No access protection is initially necessary for test purposes, commissioning, etc. This means you can execute all offline and online actions without access protection, that is, without password prompt.

In this step, you set up access protection for the safety program and the F-CPU.

For additional information, refer to the "Access protection" chapter in the SIMATIC Safety - Configuring and Programming (https://support.industry.siemens.com/cs/ww/en/view/54110126) manual.

Procedure

To set up access protection for productive operation, follow these steps:

1. In the area navigation of the *Safety Administration Editors*, switch to "Access protection".
2. Under "Offline safety program protection" click "Set up". Enter the password in the dialog that appears, and enter it again to confirm.
3. Close the dialog with "OK".

   Result: You have set up access protection for the safety program.
4. Under "F-CPU access protection", click the link "Go to the "Protection" area of the F-CPU".

   Result: You switch to the device view of the F-CPU.
5. Under "Protection", select the "Full access (no protection)" option. Under "Access permission", enter a password. Then enter the password again to confirm.

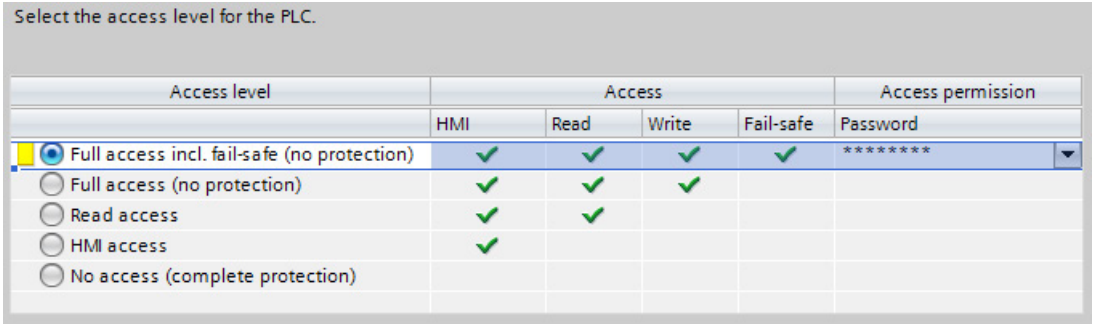

6. Select the F-CPU in the project tree.
7. In the shortcut menu for the F-CPU, select "Download to device > Hardware and software (only changes)".

   Result: You have set up access protection for the F-CPU and the safety program.

Result

You can only make changes to the safety program offline on your programming device/PC if you enter the password from Step 2.

You cannot overwrite the safety program in the F-CPU until you enter the password from Step 4.

As the next step, acceptance testing of the system may be necessary for productive operation. For additional information regarding acceptance testing, refer to the "System Acceptance Test" chapter in the "SIMATIC Safety - Configuring and Programming (https://support.industry.siemens.com/cs/ww/en/view/54110126)" manual.

6.6 Typical configuring and programming errors and their causes

Errors, causes and remedy measures

Type	Error	Possible causes
Configuration error	F-blocks cannot be downloaded to the F-CPU.	F-CPU parameter "F-activation" is not activated in the "Fail-Safe" area.
Configuration error	DIAG-LED flashes red and all channel error LEDs on the F-module are lit	The PROFIsafe address does not match the PROFIsafe address in the hardware configuration.
Configuration error	The DIAG-LED on the F-module flashes red and TIMEOUT error in the DIAG byte of the F-I/O DB	Monitoring time of the F-module ≤ max. cycle time of the F-runtime group.
Configuration error	The DIAG-LED on the F-module flashes red and CRC error in the DIAG byte of the F-I/O DB	• Loaded safety program is not consistent with the loaded hardware configuration. • Safety program is inconsistent. • PIQ/PII of the F-module is being overwritten by the standard user program.
Configuration error	The DIAG-LED on the F-DI module flashes red, channel error LED is lit and F-module signals discrepancy	Sensor connection does not match parameter assignment, for example: • Only one switching contact is connected to a channel with 1oo2 evaluation • A sensor with nonequivalent contacts is connected to a channel set to "two-channel equivalent".
Programming error	F-CPU changes to STOP	• Main safety block is being called more than once in the cyclic program. • Operands of F-DBs are being written to in the standard user program. • Undeclared TEMP variables are being used in the safety program. • Bit memory that is modified during processing of the main safety block, e.g., clock memory, is being read-accessed in the safety program. • Overflow with mathematical functions. • F-monitoring time set too low. The F-monitoring time must be greater than the max. runtime (see section "Monitoring and response times" in the manual "SIMATIC Safety - Configuring and Programming (https://support.industry.siemens.com/cs/ww/en/view/54110126)").

Index

P

Protection, 137, 140, 141, 142
    Behavior of a password-protected CPU, 144
    Copy protection, 140
    Know-how protection, 137
    mechanical locking, 141

S

System diagnostics, 115
    Detail view, 116
    Device view, 116
    Diagnostic buffer view, 116
    Matrix view, 118
    System diagnostics view, 115
    System diagnostics window, 115
System diagnostics view, 115
System diagnostics window, 115

SIEMENS

SIMATIC
S7-1500/ET 200MP, S7-1500R/H
Product Information on documentation S7-1500/ET 200MP, S7-1500R/H

Product Information

Introduction

Scope of validity of the product information

This product information supplements the documentation for SIMATIC S7-1500/ET 200MP, S7-1500R/H and takes precedence over our system manuals, function manuals and equipment manuals.

You can find additional information on the S7-1500 fail-safe CPUs in the Product Information for F-CPUs on the Internet (https://support.industry.siemens.com/cs/de/en/view/109478599).

You can find additional information on SIMATIC S7-1500 Motion Control in the corresponding product information on the Internet (https://support.industry.siemens.com/cs/de/en/view/109794046).

Security information

Siemens provides products and solutions with industrial security functions that support the secure operation of plants, systems, machines and networks.

In order to protect plants, systems, machines and networks against cyber threats, it is necessary to implement – and continuously maintain – a holistic, state-of-the-art industrial security concept. Siemens' products and solutions constitute one element of such a concept.

Customers are responsible for preventing unauthorized access to their plants, systems, machines and networks. Such systems, machines and components should only be connected to an enterprise network or the internet if and to the extent such a connection is necessary and only when appropriate security measures (e.g. firewalls and/or network segmentation) are in place.

For additional information on industrial security measures that may be implemented, please visit (https://www.siemens.com/industrialsecurity).

Siemens' products and solutions undergo continuous development to make them more secure. Siemens strongly recommends that product updates are applied as soon as they are available and that the latest product versions are used. Use of product versions that are no longer supported, and failure to apply the latest updates may increase customers' exposure to cyber threats.

To stay informed about product updates, subscribe to the Siemens Industrial Security RSS Feed visit (https://www.siemens.com/cert).

© Siemens AG 2013 - 2022. All rights reserved
A5E31876033-BB, 11/2022

Amendments to documentation S7-1500/ET 200MP

Integrity protection

Equipment Manuals S7-1500 CPUs (Standard, Fail-safe, Compact, Technology):

Section Product overview, properties or

Section Product overview, firmware functions or

Section Product overview, hardware properties and firmware functions, firmware functions of the CPU section

Integrity protection

The CPUs feature an integrity protection function by default. This helps to detect any manipulation of the engineering data on the SIMATIC Memory Card or during data transfer between the TIA Portal and the CPU, and to check communication from a SIMATIC HMI system to the CPU for possible manipulation of engineering data. The user receives a corresponding message about manipulations of engineering data that are detected by the integrity protection.

Function Manual Communication, Edition 11/2022

OPC UA - Global Discovery Push (GDS Push) function: Update problem with downloaded certificates

Under certain conditions, the CPU does not register a downloaded certificate (e.g. a new OPC UA server certificate, or an updated web server certificate). A certificate error may be signaled during a connection attempt in this case.

The update problem occurs only when the CPU still manages certificates that were provided during runtime (GDS Push) and when certificates are then transferred by loading the hardware configuration to the CPU. The certificates loaded via the hardware configuration are not registered by the CPU under these conditions.

Examples:

- You have initially enabled the GDS Push function and selected the option "... use certificates provided during runtime" for the certificate settings and loaded this configuration. The required server certificate as well as the trust lists/CRLs are provided exclusively via GDS Push methods in this case.
- You then change the hardware configuration by adding new certificates or changing existing certificates (e.g. web server certificates or certificates for secure PG/HMI communication). During loading, you have **not** deleted existing certificates provided during runtime so that you can use them later.
  Result: The newly loaded server certificates (e.g. web server certificates or certificates for secure PG/HMI communication) are not registered by the CPU.
- The problem also occurs when you have disabled the GDS Push function and selected the option "... use configured and downloaded certificates" for the certificate settings and loaded this configuration. During loading, you have **not** deleted existing certificates provided during runtime so that you can use them later.
  Result: The newly loaded OPC UA server certificate is not registered by the CPU.

Solution: When the CPU still has certificates that were provided during runtime and you want to transfer new/changed certificates by loading the hardware configuration to the CPU, proceed as outlined below:

- After loading the configuration, perform a "Memory reset" or restart the CPU (POWER OFF > POWER ON). After performing these measures, the CPU reorganizes the loaded configuration and uses the current certificates.

OPC UA server: Change in behavior when using multi-dimensional arrays in a UDT

From firmware version V2.9.4 onwards, S7-1500 CPUs code multi-dimensional arrays within structures according to OPC UA specification V1.04. CPUs with older firmware versions code the corresponding structures in another form. If you have used multi-dimensional arrays in structures for CPUs with older firmware versions and are upgrading to the latest firmware version, then you must modify your client programs accordingly.

The loads of the digital onboard I/O X11 and X12 connected at the outputs have a connection to ground 2M/3M and 5M/6M.

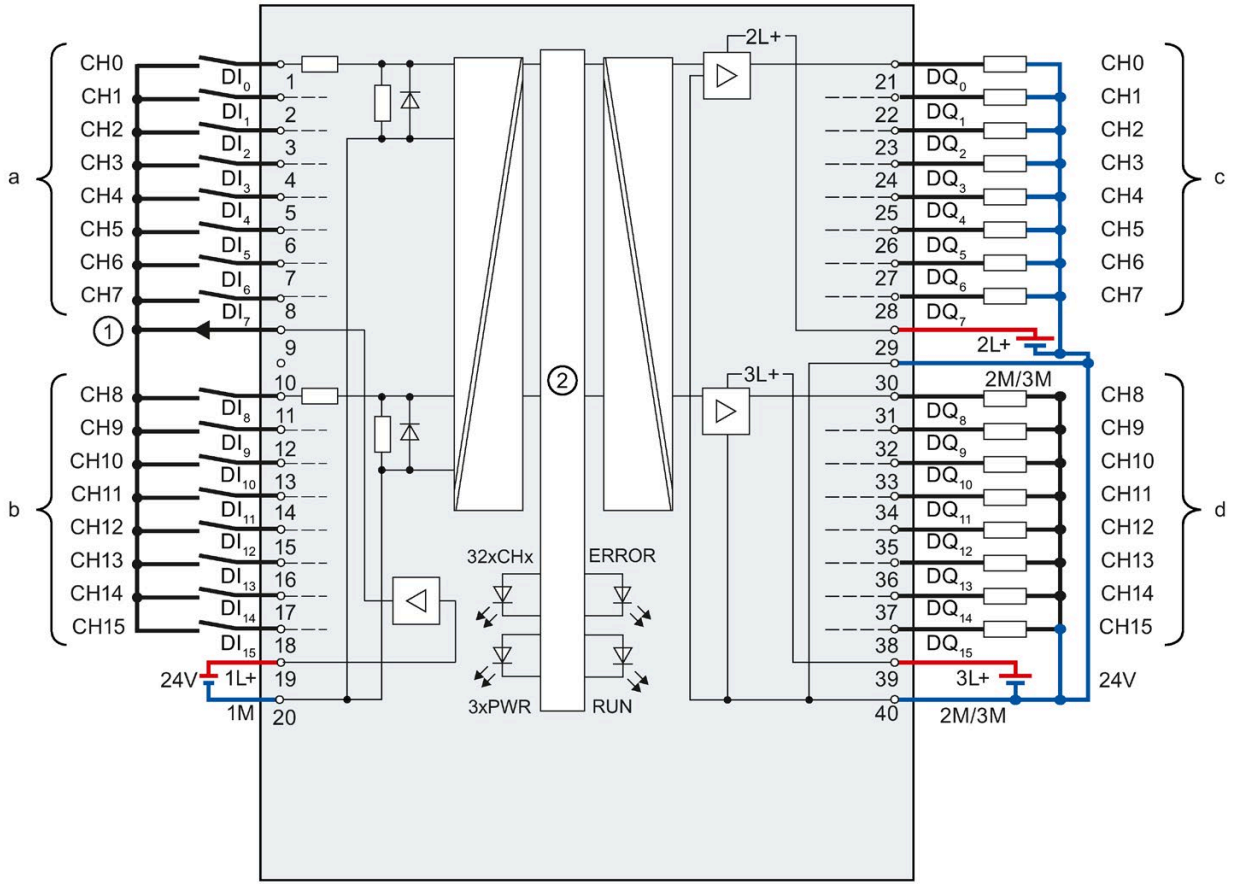

①	Encoder supply for the digital inputs
②	CPU interface module
xL+	Connection for 24 V DC supply voltage
xM	Connection for ground
CHx	Channel or channel status LED (green)
RUN	Status display LED (green)
ERROR	Error display LED (red)
PWR	POWER supply voltage LED (green)

Figure 1 Block diagram and pin assignment X11 of CPU 1511C-1 PN and CPU 1512C-1 PN

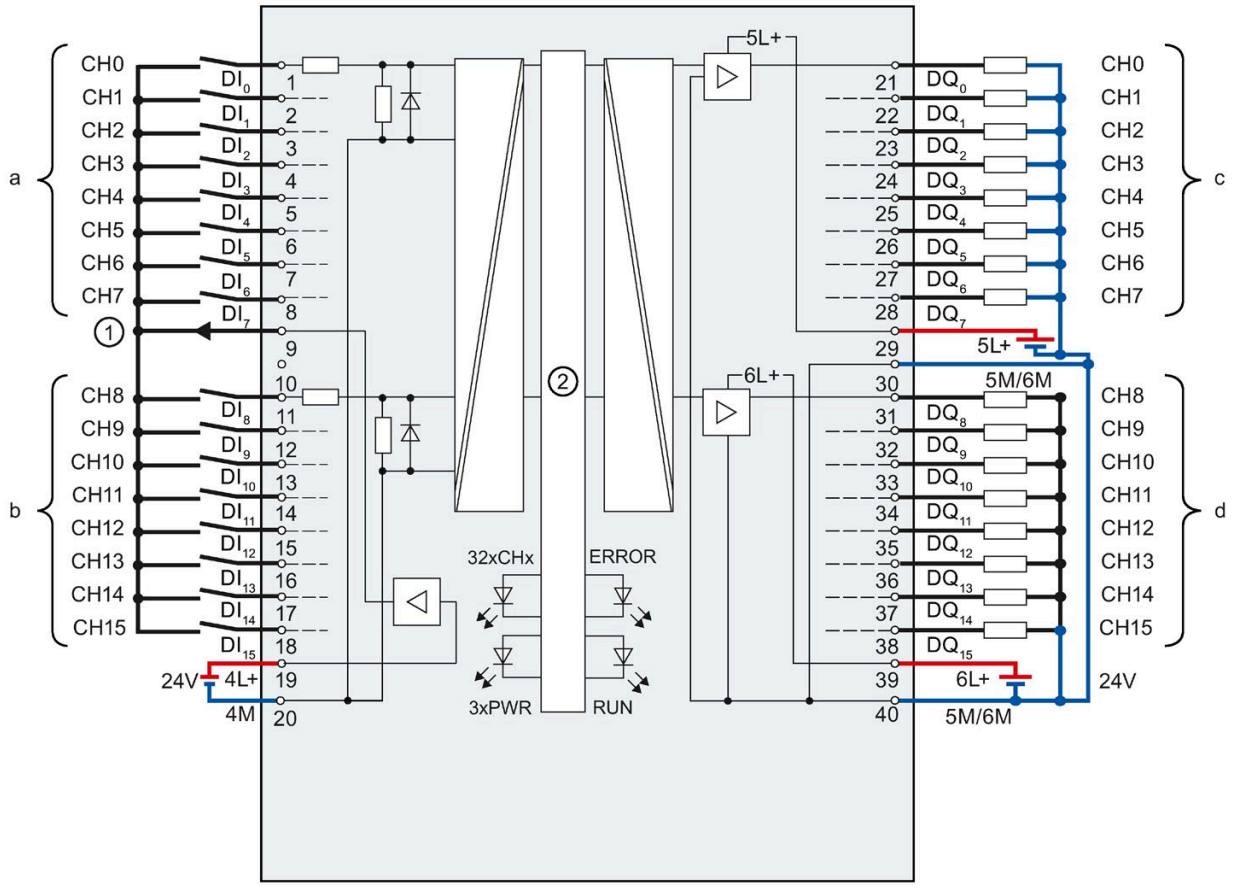

①	Encoder supply for the digital inputs
②	CPU interface module
xL+	Connection for 24 V DC supply voltage
xM	Connection for ground
CHx	Channel or channel status LED (green)
RUN	Status display LED (green)
ERROR	Error display LED (red)
PWR	POWER supply voltage LED (green)

Figure 2 Block diagram and pin assignment X12 of CPU 1512C-1 PN

ET 200MP with IM 155-5 PN ST - Channel diagnostics, MSI/MSO

Manual IM 155-5 PN ST interface module, edition 11/2017

Channel diagnostics

In contrast to the order specified in the manual, the User Structure Identifiers (USI) are structured as follows:

- USI data block
- Reserved bytes
- Manufacturer-specific diagnostics

ET 200MP with IM 155-5 DP ST – Operation on a WIN AC RTX

When operating the ET 200MP (PROFIBUS) on a WIN AC RTX, configuration is only possible via GSD file (selection in the hardware catalog under "Additional field devices"). Configuration on the basis of a support package is not supported in the TIA Portal for this device arrangement.

ET 200MP with IM 155-5 DP ST - operation on Y-Link, interrupts, technical specifications

Manual Interface module IM 155-5 DP ST, edition 08/2013

Operation on Y-Link

As of firmware version V2.0.0, the IM 155-5 DP ST interface module can be operated as DP slave after the Y-Link.

Interrupts

The bytes x+8 to x+19 of the diagnostic interrupt are assigned as follows:

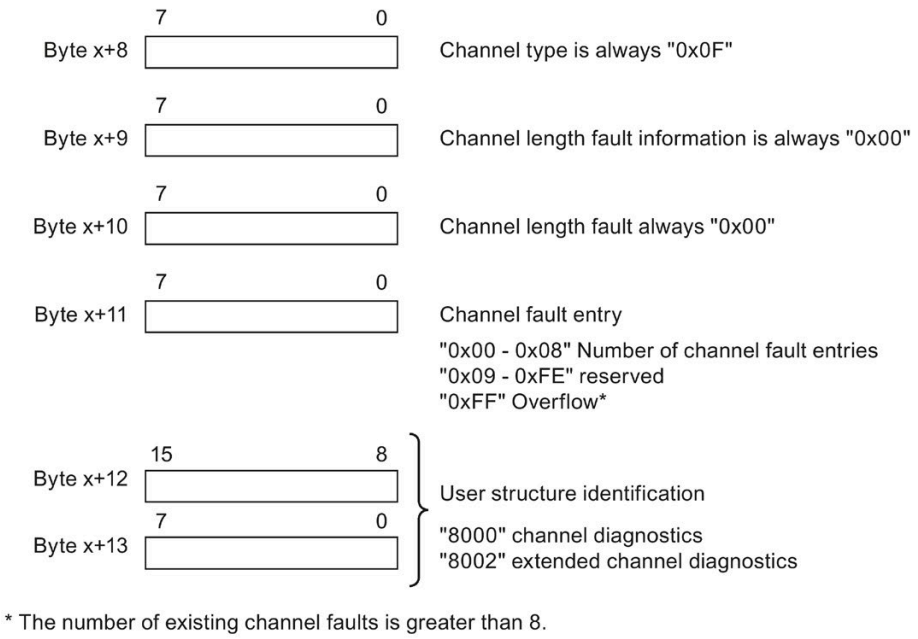

* The number of existing channel faults is greater than 8.

Figure 3 Structure starting at byte x+8

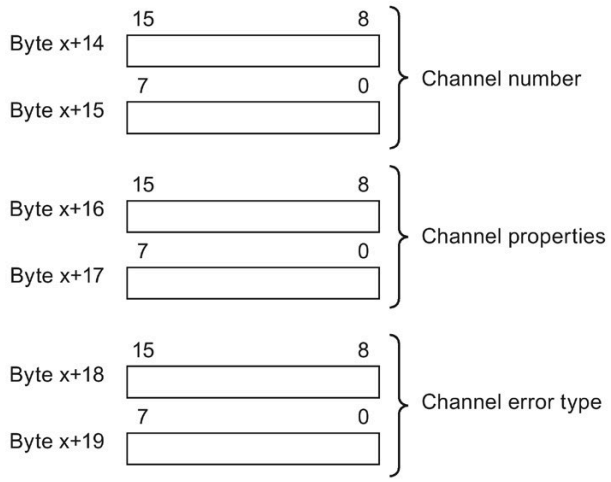

Figure 4 Structure starting at byte x+14

Technical specifications

For the IM 155-5 DP ST, the address space of each module can be assigned a maximum of 64 bytes of inputs and a maximum of 64 bytes of outputs.

S7-1500/ET 200MP - Substitute value behavior in shared device mode

Observe the following special characteristics for substitute value behavior in shared device mode with the modules/configurations in the following table:

Note

Substitute value behavior in shared device mode

If the system is in shared device mode and one of the IO controllers involved goes into STOP or fails due to a communication breakdown, for example, all submodules of the output module perform the configured substitute value reaction (e.g. shutdown).

This means that even when only one IO controller fails, that the other IO controllers associated with the shared device no longer control the assigned submodule of the output module.

Module/module name	Configuration	Article no.:
DQ 32x24VDC/0.5A BA	4 x 8-channel without value status	6ES7522-1BL10-0AA0
DQ 16x24VDC/0.5A BA	2 x 8-channel without value status	6ES7522-1BH10-0AA0

S7-1500/ET 200MP - Modules with isochronous mode

The following configurations rule out isochronous mode of the module:

- Module-internal shared input (MSI)
- Module-internal shared output (MSO)
- Submodules for shared device

S7-1500/ET 200MP - Calibration of analog modules

Requirements: The module is integrated in the hardware catalog of STEP 7 (TIA Portal) (no GSD file).

The "Calibration" function (calibration in RUN) is only possible with the following configurations.

Module/module name	Configuration	Article no.:
AI 8xU/I/RTD/TC ST QI	1 x 8-channel with value status	6ES7531-7KF00-0AB0
AI 8xU/I/RTD/TC ST	1 x 8-channel without value status	
AI 8xU/I HS QI	1 x 8-channel with value status	6ES7531-7NF10-0AB0
AI 8xU/I HS	1 x 8-channel without value status	
AQ 8xU/I HS QI	1 x 8-channel with value status	6ES7532-5HF00-0AB0
AQ 8xU/I HS	1 x 8-channel without value status	
AQ 4xU/I ST QI	1 x 4-channel with value status	6ES7532-5HD00-0AB0
AQ 4xU/I ST	1 x 4-channel without value status	
AQ 4xU/I HF QI	1 x 4-channel with value status	6ES7532-5ND00-0AB0
AQ 4xU/I HF	1 x 4-channel without value status	
AI 4xU/I/RTD/TC/ AQ 2xU/I ST QI	1 x 6-channel with value status	6ES7534-7QE00-0AB0
AI 4xU/I/RTD/TC/ AQ 2xU/I ST	1 x 6-channel without value status	
AI 4xU/I/RTD/TC ST QI	1 x 4-channel with value status	6ES7531-7QD00-0AB0
AI 4xU/I/RTD/TC ST	1 x 4-channel without value status	
AQ 2xU/I ST QI	1 x 2-channel with value status	6ES7532-5NB00-0AB0
AQ 2xU/I ST	1 x 2-channel without value status	

S7-1500/ET 200MP - Technical specifications

Equipment Manual AI 8xU/I HS (6ES7531-7NF10-0AB0), Edition 12/2016

Equipment Manual AI 4xU/I/RTD/TC ST (6ES7531-7QD00-0AB0), Edition 09/2016

Equipment Manual AI 4xU/I/RTD/TC / AQ 2xU/I ST (6ES7534-7QE00-0AB0), Edition 09/2016

Contrary to the information given in the manuals, the following statements apply:

24 V encoder supply	
Short-circuit protection	Yes
Output current, max.	20 mA; max. 47 mA per channel for a duration < 10 s

The "encoder supply" depends on the module and is described in the technical specifications of the respective device manual. You can find the data sheet including daily updated technical specifications on the Internet (https://support.industry.siemens.com/cs/ww/en/ps/td). Enter the article number or the short designation of the desired module on the website.

S7-1500/ET 200MP Analog Output Module AQ 8xU/I HS

AQ 8xU/I HS (6ES7532-5HF00-0AB0) Equipment Manual, 09/2016 Edition, Technical specifications section

Derating depending on mounting position, ambient temperature and output type (per module):

Deviating from the information in the equipment manual, the following statement applies:

The trends illustrated in the equipment manual show the number of channels (CHx) that can be **simultaneously activated** in horizontal and vertical installation of the S7-1500 automation system / ET 200MP distributed I/O system depending on the ambient temperature.

Shared device

Shared device is not possible with the HSP0318 in the combination of active backplane bus and S7-300/400 CPUs as IO controller.

This combination is possible with GSD file (in STEP 7 as of V5.5 and in STEP 7 (TIA Portal)).

Shared device with active backplane bus and S7-1500 CPUs as IO controller is possible with the HSP0318 and with GSD file.

S7-1500/ET 200MP - Digital Input Module DI 16xNAMUR HF

Equipment Manual DI 16xNAMUR HF (6ES7521-7TH00-0AB0), 07/2021 Edition, chapter Technical Specifications

Tolerances of the programmable input delay

Deviating from the tolerance range for input delay 0.05 ms specified in the Equipment Manual, the following values apply:

Input delay	Tolerance range
0.05 ms	14 µs to 22 µs

This modified tolerance range applies to all operating modes of the module.

The deviating tolerance range compared to other S7-1500 digital input modules is caused by the extended counting frequency up to 20k Hz of the module.

Integrated counting functions

You can optionally parameterize up to 4 inputs as counters with 2 x 20 kHz and 2 x 10 kHz or 4 x 10 kHz.

S7-1500/ET 200MP - Digital output module DQ 8x230VAC/2A ST Triac

Equipment Manual DQ 8x230VAC/2A ST Triac (6ES7522-5FF00-0AB0), Edition 12/2021, Section Address space

Table 1 Configuration options

Configuration	Short designation / module name in the GSD file	Configuration software, e.g., STEP 7 (TIA Portal)	
		Integrated in hardware catalog STEP 7 (TIA Portal)	GSD file in STEP 7 (TIA Portal) V12 or higher or STEP 7 V5.5 SP3 or higher
1 x 8-channel without value status	DQ 8x230VAC/2A ST	X	X
1 x 8-channel with value status for module-internal Shared Output with up to 4 submodules	DQ 8x230VAC/2A ST MSO	V13 Update 3 or higher (PROFINET IO only)	X (PROFINET IO only)
1 x 8-channel with value status	DQ 8x230VAC/2A ST QI		

S7-1500/ET 200MP - Digital output module DQ 16x230VAC/1A ST Triac

Equipment Manual DQ 16x230VAC/1A ST Triac (6ES7522-5FH00-0AB0), Edition 12/2021, Section Address space

Table 2 Configuration options

Configuration	Short designation / module name in the GSD file	Configuration software, e.g., STEP 7	
		Integrated in hardware catalog STEP 7 V13, SP1 or higher with HSP 0119	GSD file in STEP 7 V12 or higher or STEP 7 V5.5 SP3 or higher
1 x 16-channel without value status	DQ 16x230VAC/1A ST	X	X
2 x 8-channel without value status	DQ 16x230VAC/1A ST S	X (PROFINET IO only)	X (PROFINET IO only)
1 x 16-channel with value status for module-internal Shared Output with up to 4 submodules	DQ 16x230VAC/1A ST MSO		
1 x 16-channel with value status	DQ 16x230VAC/1A ST QI		
2 x 8-channel with value status	DQ 16x230VAC/1A ST S QI		

S7-1500/ET 200MP - Digital output module DQ 8x24VDC/2A HF

Equipment Manual DQ 8x24VDC/2A HF (6ES7522-1BF00-0AB0), Edition 06/2018

Minimum pulse duration

The minimum pulse duration of 300 µs applies for a duty cycle > 0.

The following table shows the duty cycles and the values actually output for a duty cycle of 2 ms:

Duty cycle as a %	Pulse duration
0	0 µs
0.1	300 µs
10.0	300 µs
15.0	300 µs
15.1	302 µs
20.0	400 µs

Example for energy saving by reducing the holding current

The variable `PWM_Out` applies for the outputs QB x+2/3 for Channel 0 or QB x+4/5 for Channel 4.

The following special points apply for the duty cycle and the minimum pulse duration:

- At a duty cycle of 0 no PWM output is active
- At an on-load factor < 300 µs no signal is output

Address space operating mode pulse width modulation

If you have set "Pulse width modulation" mode for Channel 0 and Channel 4 in the operating mode parameter, Bit 0 and Bit 4 are not evaluated. Actuation of the PWM channels is effected via the duty cycle (QB x+2/3 and/or QB x+4/5).

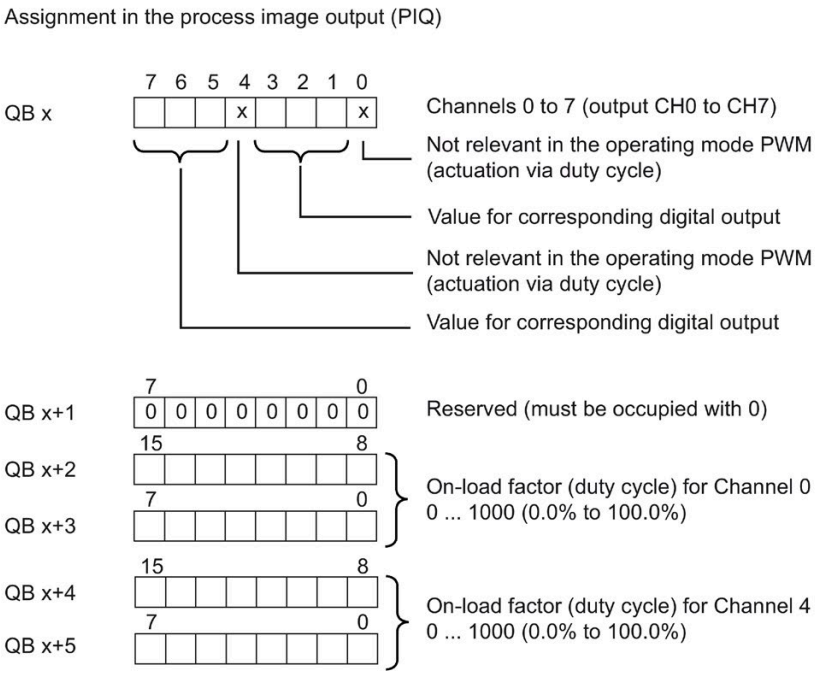

Figure 5 Allocation in the process image output

Amendments to SIMATIC S7-1500R/H documentation

Instruction WRIT_DBL (write to data block in the load memory)

System Manual SIMATIC S7-1500R/H, Edition 11/2022

If you use the instruction WRIT_DBL (SFC84) to write data structures greater than 64 kByte into the load memory, the response times in the user program of an R/H-CPU can increase.

Recommendation: Supply data structures with a maximum size of 64 kBytes to the formal parameter SRCBLK of the instruction WRIT_DBL. Split larger data structures into several smaller substructures during writing.

Display of the source address in multicast packages

Function Manual Communication, Edition 11/2022

If an S7-1500 R/H CPU sends UDP multicast messages via the system IP address, the device IP address of the CPU is entered as the source address in the multicast packages instead of the system IP address. Take this behavior into consideration for filters and firewalls.

In case of a reply to the multicast sender, use the system IP address.

Siemens AG
Digital Industries
Postfach 48 48
90026 NÜRNBERG
GERMANY

Product Information on documentation S7-1500/ET 200MP, S7-1500R/H
A5E31876033-BB, 11/2022

SIEMENS

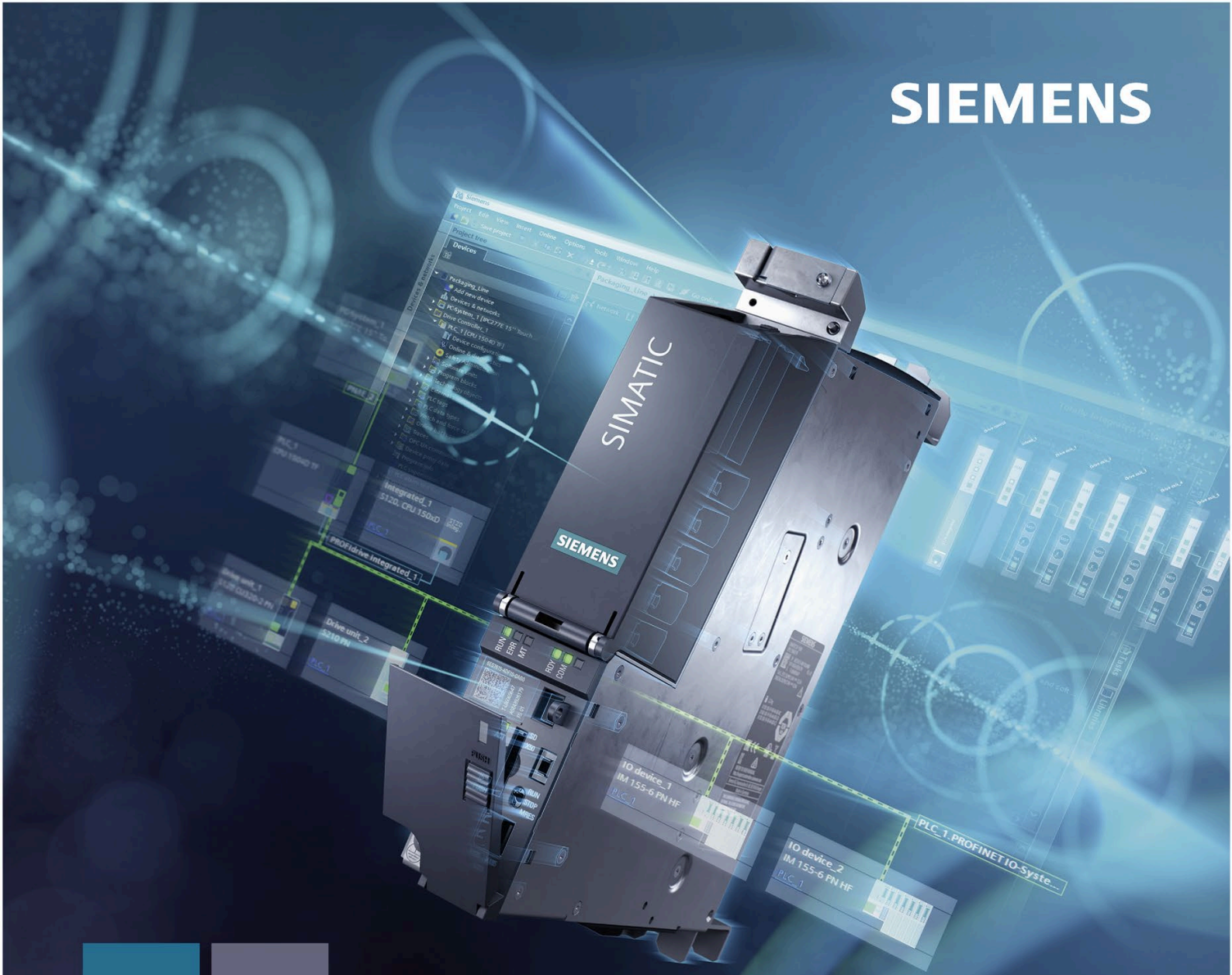

Edition 11/2022

SYSTEM MANUAL

SIMATIC

S7-1500

SIMATIC Drive Controller

support.industry.siemens.com

SIEMENS

SIMATIC

SIMATIC Drive Controller

System Manual

Introduction 1

Safety information 2

New properties/functions 3

System overview 4

Application planning 5

Installation 6

Connecting 7

Configuring 8

Basics of program execution 9

Protection 10

Flexible automation concepts 11

Commissioning 12

SIMATIC memory card 13

Maintenance 14

Test and service functions 15

Technical data 16

Information for users changing from SIMOTION D4x5-2 A

Accessories/spare parts B

Decommissioning C

11/2022

A5E46600094-AC

Legal information

Warning notice system

This manual contains notices you have to observe in order to ensure your personal safety, as well as to prevent damage to property. The notices referring to your personal safety are highlighted in the manual by a safety alert symbol, notices referring only to property damage have no safety alert symbol. These notices shown below are graded according to the degree of danger.

⚠ DANGER
indicates that death or severe personal injury **will** result if proper precautions are not taken.

⚠ WARNING
indicates that death or severe personal injury **may** result if proper precautions are not taken.

⚠ CAUTION
indicates that minor personal injury can result if proper precautions are not taken.

NOTICE
indicates that property damage can result if proper precautions are not taken.

If more than one degree of danger is present, the warning notice representing the highest degree of danger will be used. A notice warning of injury to persons with a safety alert symbol may also include a warning relating to property damage.

Qualified Personnel

The product/system described in this documentation may be operated only by **personnel qualified** for the specific task in accordance with the relevant documentation, in particular its warning notices and safety instructions. Qualified personnel are those who, based on their training and experience, are capable of identifying risks and avoiding potential hazards when working with these products/systems.

Proper use of Siemens products

Note the following:

⚠ WARNING
Siemens products may only be used for the applications described in the catalog and in the relevant technical documentation. If products and components from other manufacturers are used, these must be recommended or approved by Siemens. Proper transport, storage, installation, assembly, commissioning, operation and maintenance are required to ensure that the products operate safely and without any problems. The permissible ambient conditions must be complied with. The information in the relevant documentation must be observed.

Trademarks

All names identified by ® are registered trademarks of Siemens AG. The remaining trademarks in this publication may be trademarks whose use by third parties for their own purposes could violate the rights of the owner.

Disclaimer of Liability

We have reviewed the contents of this publication to ensure consistency with the hardware and software described. Since variance cannot be precluded entirely, we cannot guarantee full consistency. However, the information in this publication is reviewed regularly and any necessary corrections are included in subsequent editions.

Siemens AG
Digital Industries
Postfach 48 48
90026 NÜRNBERG
GERMANY

A5E46600094-AC
Ⓟ 10/2022 Subject to change

Copyright © Siemens AG 2019 - 2022.
All rights reserved

Table of contents

1 Introduction ... 8

1.1 SIMATIC Drive Controller documentation guide ... 11
1.1.1 Information classes SIMATIC Drive Controller ... 11
1.1.2 SIMATIC Technical Documentation ... 13

2 Safety information ... 15

2.1 General safety information ... 15
2.1.1 Safety-relevant symbols ... 18
2.2 Residual risks of power drive systems ... 19
2.3 Security information ... 20
2.4 Unsafe operating states due to manipulation of software ... 20

3 New properties/functions ... 21

4 System overview ... 24

4.1 What is the SIMATIC Drive Controller? ... 24
4.1.1 Comparison of SIMATIC Drive Controller versions ... 25
4.1.2 Areas of application ... 27
4.1.3 Plant components and automation levels ... 31
4.1.4 Scalability ... 33
4.1.5 Overview of features ... 37
4.2 Configuration ... 38
4.3 SIMATIC Drive Controller functions ... 40
4.3.1 Safety ... 40
4.3.2 Security ... 44
4.3.3 Web server ... 47
4.3.4 Trace ... 48
4.3.5 Technology functions of the CPU ... 51
4.3.6 SINAMICS Integrated functions ... 57
4.4 Integrated interfaces for communication ... 60
4.5 DRIVE-CLiQ ... 61
4.6 Power supply ... 61
4.7 Software ... 62
4.7.1 TIA Portal ... 62
4.7.2 SINETPLAN ... 63
4.7.3 PRONETA ... 63
4.7.4 TIA Selection Tool ... 63
4.7.5 SIMATIC Automation Tool ... 64
4.7.6 SIMATIC S7 app ... 65
4.7.7 Industry Online Support app ... 65

5 Application planning ... 66

5.1 Installation location ... 66

5.2 Hardware and software requirements ... 68

5.3 Drive Controller-specific properties ... 69
5.3.1 Drive Controller-specific hardware properties ... 69
5.3.2 Drive Controller-specific properties of the CPU ... 70
5.3.3 Drive Controller-specific properties of SINAMICS Integrated ... 71

5.4 Hardware configuration ... 73

5.5 Power supply ... 75

6 Installation ... 76

6.1 Installation notes ... 76

6.2 Mounting the SIMATIC Drive Controller ... 78

7 Connecting ... 80

7.1 Rules and regulations for operation ... 80

7.2 Additional rules and regulations for operation ... 83
7.2.1 Safety extra-low-voltage (SELV, PELV) for failsafe modules ... 83
7.2.2 Requirements of sensors and actuators for fail-safe modules ... 84
7.2.3 Capacitive crosstalk of digital input/output signals ... 86

7.3 Electrical configuration ... 87

7.4 Wiring rules ... 87

7.5 Connecting the supply voltage ... 88

7.6 PROFINET and PROFIBUS DP ... 90

7.7 Digital inputs and digital inputs/outputs X122, X132 and X142 ... 90

7.8 DRIVE-CLiQ interfaces X100 to X103 ... 93

7.9 Protective conductor and potential equalization, functional ground ... 94

7.10 Connecting cable shields ... 97

8 Configuring ... 99

8.1 Overview ... 99

8.2 Hardware/software requirements ... 100

8.3 Configuration procedure ... 101

8.4 Display in the TIA Portal ... 108

8.5 Configuration information ... 110
8.5.1 Notes on configuration software ... 110
8.5.2 Mixed operation of control modes for SINAMICS Integrated ... 111
8.5.3 Changing the current controller cycle time for SINAMICS Integrated ... 113
8.5.4 Determining the SINAMICS Integrated version ... 114

8.6 Address assignment ... 115
8.6.1 Addressing ... 115

8.7 Address space ... 117
8.7.1 Address space of the digital inputs and digital inputs/outputs ... 117

8.8 Process images and process image partitions ... 119
8.8.1 Process image - overview ... 119
8.8.2 Updating process image partitions in the user program ... 120

8.9 Configuration of digital inputs/outputs (X142) ... 121
8.9.1 Configuring the DI operating mode ... 124
8.9.2 Configuring the DQ operating mode ... 126
8.9.3 Configuring Timer DI operating mode ... 127
8.9.4 Configuring Timer DQ operating mode ... 131
8.9.5 Configuring Oversampling DI operating mode ... 138
8.9.6 Configuring Oversampling DQ operating mode ... 140
8.9.7 Configuring event/period measurement operating mode ... 142
8.9.8 Configuring Pulse width modulation (PWM) operating mode ... 149
8.9.9 Assignment of the control interface ... 152
8.9.10 Assignment of the feedback interface ... 153
8.9.11 Programming example ... 155

8.10 Configuring the digital inputs and digital inputs/outputs (X122/X132) ... 156

8.11 Configuring the clock system ... 158
8.11.1 Overview of isochronous mode ... 158
8.11.2 Configuring drives with SINAMICS Integrated isochronously ... 160
8.11.3 Configuring technology I/Os (X142) as isochronous ... 165
8.11.4 Configuring additional drives on PROFINET (X150) as isochronous ... 169
8.11.5 Configuring the PROFIBUS interface as isochronous ... 171
8.11.6 Setting the clock system ... 171

8.12 Configuring fail-safe technology CPU ... 178

9 Basics of program execution ... 183

9.1 Programming the CPU ... 183

9.2 Events and OBs ... 183

9.3 Asynchronous instructions ... 186

10 Protection ... 197

10.1 Overview of the protection functions ... 197

10.2 Protection of confidential configuration data ... 197

10.3 Configuring access protection for the CPU ... 198

10.4 Using the user program to set additional access protection ... 201

10.5 Know-how protection ... 202

10.6 Copy protection ... 205

10.7 Protection by locking the CPU ... 207

11 Flexible automation concepts ... 208

11.1 Standard machine projects ... 208

11.2 Configuration control (option handling) ... 212

11.3 TIA Portal Openness ... 214

12 Commissioning ... 215

12.1 Overview ... 215

12.2 Check before powering on for the first time ... 217

12.3 Commissioning procedure ... 217
12.3.1 Removing/plugging in a SIMATIC memory card ... 217
12.3.2 First power-on ... 221
12.3.3 Downloading a project to the device ... 222

12.4 Operating states of the CPU ... 223
12.4.1 Overview of operating modes: Startup, STOP, RUN ... 223
12.4.2 STARTUP operating state ... 224
12.4.3 STOP operating state ... 226
12.4.4 RUN operating state ... 226
12.4.5 Operating state transitions ... 227

12.5 SINAMICS Integrated operating states ... 228

12.6 Runtime licensing ... 229

12.7 CPU memory reset ... 233
12.7.1 Automatic memory reset ... 234
12.7.2 Manual memory reset ... 235

12.8 Configuring SIMATIC Drive Controller backup and restore ... 236
12.8.1 Backing up and restoring the CPU configuration ... 237
12.8.2 Backing up, restoring and deleting SINAMICS Integrated NVRAM data ... 240

12.9 Time synchronization ... 242
12.9.1 Time-of-day synchronization of the CPU ... 242
12.9.2 Time-of-day synchronization of SINAMICS drives ... 244

12.10 Identification and maintenance data ... 248
12.10.1 Reading out and entering I&M data ... 248
12.10.2 Record structure for I&M data ... 250
12.10.3 Example: Read out firmware version of the CPU with Get_IM_Data ... 252

12.11 Shared commissioning of projects ... 254

13 SIMATIC memory card ... 255

13.1 SIMATIC memory card – Overview ... 255

13.2 Setting the card type ... 262

13.3 Data transfer with SIMATIC memory cards ... 266

13.4 Service life of the SIMATIC memory card ... 268

14 Maintenance ... 269

14.1 Replacing system components ... 269
14.1.1 Replacing a defective SIMATIC Drive Controller ... 269
14.1.2 Replacing a defective SIMATIC memory card ... 271
14.1.3 Replacing a DRIVE-CLiQ component ... 271

14.2 SIMATIC Drive Controller firmware update ... 272

14.3 DRIVE-CLiQ component firmware update ... 280

14.4 System update SIMATIC Drive Controller ... 281

14.5 CPU reset to factory settings 282
14.6 SINAMICS Integrated reset to factory settings 285
14.7 Fault reactions with failsafe components 286
14.8 Temperature monitoring 288
14.9 Maintenance and repair 289
15 Test and service functions 290
15.1 Test functions 290
15.2 Reading/saving service data 296
16 Technical data 301
16.1 Introduction 301
16.2 Standards and Approvals 301
16.3 Electromagnetic compatibility 303
16.4 Shipping and storage conditions 304
16.5 Mechanical and climatic ambient conditions 305
16.6 Information on insulation tests, protection class, degree of protection and rated voltage 307
A Information for users changing from SIMOTION D4x5-2 309
A.1 Information for users changing from SIMOTION D4x5-2 309
B Accessories/spare parts 312
C Decommissioning 315
C.1 Introduction 315
C.2 Securely removing data 315
C.3 Recycling and disposal 317
Glossary 318
Index 333

Introduction 1

Purpose of the documentation

This documentation provides an overview of the SIMATIC Drive Controller family and important information on configuring, installing, wiring and commissioning.

Basic knowledge required

A basic knowledge of automation technology is required to understand the documentation.

Scope of the documentation

This documentation applies to all products from the SIMATIC Drive Controller product family.

Conventions

STEP 7: In this documentation, "STEP 7" is used as a synonym for all versions of the configuration and programming software "STEP 7 (TIA Portal)".

Please also observe notes marked as follows:

Note

A note contains important information on the product described in the documentation, on the handling of the product or on the section of the documentation to which particular attention should be paid.

Special information

Note

Important note for maintaining the operational safety of your plant

Plants with safety-related features are subject to special operational safety requirements on the part of the operator. The supplier is also obliged to comply with special product monitoring measures. For this reason, we inform you in personal notifications about product developments and features that are (or could be) relevant to the operation of plants from a safety perspective.

By subscribing to the corresponding notifications, you will ensure that you are always up-to-date and able to make changes to your system when necessary.

Log onto Industry Online Support. Follow the links below, and right-click on "email on update":

SIMATIC S7-1500/SIMATIC S7-1500F (https://support.industry.siemens.com/en/ww/de/ps/13716)

Distributed I/O (https://support.industry.siemens.com/cs/ww/en/ps/14029)

STEP 7 (TIA Portal) (https://support.industry.siemens.com/cs/ww/en/ps/14667)

SINAMICS S120 (https://support.industry.siemens.com/cs/ww/en/ps/13231)

SINAMICS Startdrive (https://support.industry.siemens.com/cs/ww/en/ps/13438)

Operator control and monitoring systems (https://support.industry.siemens.com/cs/ww/en/ps/14729)

Industrial communication (https://support.industry.siemens.com/cs/ww/en/ps/15247)

Safety systems – Safety Integrated (https://support.industry.siemens.com/cs/ww/en/ps/19902)

Note

When using F-CPUs in safety mode and fail-safe modules, note the description of the fail-safe system in the Programming and Operating Manual SIMATIC Safety - Configuring and Programming (https://support.industry.siemens.com/cs/ww/en/view/54110126).

Industry Mall

The Industry Mall is the catalog and order system of Siemens AG for automation and drive solutions on the basis of Totally Integrated Automation (TIA) and Totally Integrated Power (TIP).

You can find catalogs for all automation and drive products on the Internet (https://mall.industry.siemens.com).

Open-source software

Open-source software is used in the firmware of the SIMATIC Drive Controllers. The open-source software is provided free of charge. Siemens AG is liable for the product described, including the open-source software contained in it, pursuant to the conditions applicable to the product. Any and all liability is excluded:

- for use of the open-source software beyond the program sequence intended for the product by Siemens
- for defects caused by changes to the software

For legal reasons, Siemens AG is obliged to publish the original text of the license conditions and copyright notices. You can find it on the Internet in the FW downloads (https://support.industry.siemens.com/cs/de/en/view/109773914) and in the scope of supply of the SIMATIC Drive Controller for the firmware version that has been supplied (see the note on the type plate at the side).

Note

Management of the license conditions and copyright notices of firmware updates

The license conditions and copyright notices in the scope of delivery can change as a result of firmware updates. In order to avoid license violations by the reseller and the buyer, if there are firmware updates, you must pass on the license conditions and copyright notices of the firmware update to the buyer (for example, by saving them to the SIMATIC Memory Card).

1.1 SIMATIC Drive Controller documentation guide

1.1.1 Information classes SIMATIC Drive Controller

The documentation for the SIMATIC Drive Controller is divided into three areas.

This arrangement enables you to access the specific content you require.

You can download the documentation free of charge from the Internet (https://support.industry.siemens.com/cs/ww/en/view/109742691).

Basic information

The System Manual describes in detail the configuration, installation, wiring and commissioning of the SIMATIC Drive Controllers.

The STEP 7 online help supports you in the configuration and programming.

Examples:

- SIMATIC Drive Controller System Manual
- Online help TIA Portal

Device information

Equipment manuals contain a compact description of the module-specific information, such as properties, wiring diagrams, characteristics and technical specifications.

Examples:

- SIMATIC Drive Controller CPU 1504D TF
- SIMATIC Drive Controller CPU 1507D TF

General information

The function manuals contain detailed descriptions on general topics relating to the SIMATIC Drive Controller and the S7-1500 automation system.

Examples:

- Function Manual Diagnostics
- Function Manual Communication
- Function Manual Motion Control
- Function Manual Web Server
- Function Manual Cycle and Response Times
- PROFINET Function Manual
- PROFIBUS Function Manual

Product Information on the SIMATIC Drive Controller

The Product Information contains changes and supplements to the SIMATIC Drive Controllers documentation. The Product Information takes precedence over the device and system manuals. You can find the latest Product Information on the SIMATIC Drive Controller on the Internet (https://support.industry.siemens.com/cs/ww/en/view/109772684).

Manual Collection S7-1500/ET 200MP

The Manual Collection contains the complete documentation on the SIMATIC S7-1500 automation system and the SIMATIC Drive Controller distributed I/O system ET 200MP gathered together in one file.

You can find the Manual Collection on the Internet.
(https://support.industry.siemens.com/cs/ww/en/view/86140384)

SIMATIC S7-1500 comparison list for programming languages

The comparison list contains an overview of which instructions and functions you can use for which controller families.

You can find the comparison list on the Internet.
(https://support.industry.siemens.com/cs/ww/en/view/86630375)

SINAMICS documentation

The SINAMICS documentation contains detailed descriptions of the SINAMICS S120 drive control and SINAMICS S210 servo drive systems.

You can find the documentation by entering the manual title in the search box on the Internet (https://support.industry.siemens.com/cs/ww/en/ps/13229/man).

The SINAMICS Technical Documentation
(https://support.industry.siemens.com/cs/ww/en/view/108993276) web page provides information on the following topics:

- Documentation overview
- Additional links for downloading documents
- Using documentation online (find and browse manual/information)

1.1.2 SIMATIC Technical Documentation

Additional SIMATIC documents will complete your information. You can find these documents and their use at the following links and QR codes.

The Industry Online Support gives you the option to get information on all topics. Application examples support you in solving your automation tasks.

Overview of the SIMATIC Technical Documentation

Here you will find an overview of the SIMATIC documentation available in Siemens Industry Online Support:

Industry Online Support International (https://support.industry.siemens.com/cs/ww/en/view/109742705)

Watch this short video to find out where you can find the overview directly in Siemens Industry Online Support and how to use Siemens Industry Online Support on your mobile device:

Quick introduction to the technical documentation of automation products per video (https://support.industry.siemens.com/cs/us/en/view/109780491)

YouTube video: Siemens Automation Products - Technical Documentation at a Glance (https://youtu.be/TwLSxxRQQsA)

mySupport

With "mySupport" you can get the most out of your Industry Online Support.

Registration	You must register once to use the full functionality of "mySupport". After registration, you can create filters, favorites and tabs in your personal workspace.
Support requests	Your data is already filled out in support requests, and you can get an overview of your current requests at any time.
Documentation	In the Documentation area you can build your personal library.
Favorites	You can use the "Add to mySupport favorites" to flag especially interesting or frequently needed content. Under "Favorites", you will find a list of your flagged entries.
Recently viewed articles	The most recently viewed pages in mySupport are available under "Recently viewed articles".
CAx data	The CAx data area gives you access to the latest product data for your CAx or CAe system. You configure your own download package with a few clicks: • Product images, 2D dimension drawings, 3D models, internal circuit diagrams, EPLAN macro files • Manuals, characteristics, operating manuals, certificates • Product master data

You can find "mySupport" on the Internet. (https://support.industry.siemens.com/My/ww/en)

Application examples

The application examples support you with various tools and examples for solving your automation tasks. Solutions are shown in interplay with multiple components in the system - separated from the focus on individual products.

You can find the application examples on the Internet.
(https://support.industry.siemens.com/cs/ww/en/ps/ae)

Safety information 2

2.1 General safety information

WARNING

Electric shock and danger to life from other energy sources

Touching live parts can result in death or serious injury.

- Only work on electrical devices when you are qualified for this job.
- Always observe the country-specific safety rules.

Follow the steps below to ensure safety:

1. Prepare for shutdown. Notify all those who will be affected by the procedure.
2. Disconnect the drive system and ensure it cannot be switched back on.
3. Wait until the discharge time specified on the warning labels has elapsed.
4. Check there is no voltage between any power connections or between power connections and the protective conductor connection.
5. Check whether the existing auxiliary supply circuits are de-energized.
6. Ensure that the motors cannot move.
7. Identify all other hazardous energy sources, for example, compressed air, hydraulic systems, or water. Put all energy sources in a safe state.
8. Check that the correct drive system is completely locked.

After you have completed the work, restore the operational readiness in the inverse sequence.

WARNING

Electric shock with damaged devices

Improper handling of devices can result in damage.

For damaged devices, hazardous voltages can be present at the enclosure or at exposed components; if touched, this can result in death or severe injury.

- Observe the limit values specified in the technical specifications during transport, storage, and operation.
- Do not use damaged devices.

WARNING

Unexpected movement of machines due to inactive safety functions

Safety functions that are inactive or that have not been adjusted accordingly can cause operational faults on machines that could lead to serious injury or death.

- Observe the information in the appropriate product documentation before commissioning.
- Carry out a safety inspection for functions relevant to safety on the entire system, including all safety-related components.
- Ensure that the safety functions used in your drives and automation tasks are adjusted and activated through appropriate parameterizing.
- Perform a function test.
- Only put your plant into live operation once you have guaranteed that the functions relevant to safety are running correctly.

WARNING

Unexpected movement of machines caused by radio devices or cell phones

Using wireless devices or cell phones in the immediate vicinity of the components can cause the devices to malfunction. Malfunctions may impair the functional safety of machines and can therefore endanger people or lead to material damage.

- If you come closer than approx. 2 m to such components, switch off any radio devices or cell phones.
- Use the "SIEMENS Industry Online Support App" only on equipment that has been switched off.

WARNING

Interference from pacemakers and implants from electromagnetic fields (EMF)

Electromagnetic fields (EMF) are generated by the operation of electrical power equipment such as transformers, converters or motors.

People with pacemakers or implants are at a special risk in the immediate vicinity of these devices/systems.

- Ensure that the persons involved are the necessary distance away (minimum 2 m).

Electrostatic sensitive devices (ESD) are individual components, integrated circuits, modules or devices that may be damaged by either electric fields or electrostatic discharge.

NOTICE

Device damage caused by electrical fields or electrostatic discharge

Electric fields or electrostatic discharge can cause malfunctions through damaged individual components, integrated circuits, modules or devices.

- Only pack, store, transport and send electronic components, modules or devices in their original packaging or in other suitable materials, e.g conductive foam rubber of aluminum foil.
- Only touch components, modules and devices when you are grounded by one of the following methods:
  - Wearing an ESD wrist strap
  - Wearing ESD shoes or ESD grounding straps in ESD areas with conductive flooring
- Only place electronic components, modules or devices on conductive surfaces (table with ESD surface, conductive ESD foam, ESD packaging, ESD transport container).

2.1.1 Safety-relevant symbols

The following table contains an explanation of the symbols located in your SIMATIC device, its packaging or the accompanying documentation.

Symbol	Meaning
	General warning sign **Caution/Notice** You must read the product documentation. The product documentation contains information about the potential risks and enable you to recognize risks and implement countermeasures.
	ESD symbol: Identifies electrostatic-sensitive devices (ESD)
	Read the information provided by the product documentation. ISO 7010 M002
	Ensure the device is only installed by electrically skilled person. IEC 60417 No. 6182
CABLE SPEC.	Note that connected mains lines must be designed according to the expected minimum and maximum ambient temperature.
EMC	Note that the device must be constructed and connected in accordance with EMC regulations.
230V MODULES	Note that a 230 V device can be exposed to electrical voltages which can be dangerous. ANSI Z535.2
III 24V MODULES	Note that a device of Protection Class III may only be supplied with a protective low voltage according to the standard SELV/PELV. IEC 60417-1-5180 "Class III equipment"
INDOOR USE ONLY INDUSTRIAL USE ONLY	Be aware that the device is only approved for the industrial field and only for indoor use.
	Note that an enclosure is required for installing the device. Enclosures are considered: • Standing control cabinet • Serial control cabinet • Terminal boxes • Wall enclosure

2.2 Residual risks of power drive systems

When performing the risk assessment for a machine or plant in accordance with the respective local regulations (e.g. EC Machinery Directive), the machine manufacturer or plant constructor must take into account the following residual risks associated with the control and drive components of a drive system:

1. Unintentional movements of driven machine or system components during commissioning, operation, maintenance and repairs caused by, for example:
   - Hardware and/or software errors in the sensors, control system, actuators, and cables and connections
   - Response times of the control system and of the drive
   - Operation and/or environmental conditions outside the specification
   - Condensation/conductive contamination
   - Parameterization, programming, cabling, and installation errors
   - Use of wireless devices / mobile phones in the immediate vicinity of electronic components
   - External influences/damage
   - X-rays, ionizing radiation and cosmic radiation
2. Unusually high temperatures, including open flames, as well as emissions of light, noise, particles, gases, etc., can occur inside and outside the components under fault conditions caused by, for example:
   - Component failure
   - Software errors
   - Operation and/or environmental conditions outside the specification
   - External influences/damage
3. Hazardous shock voltages caused by, for example:
   - Component failure
   - Influence during electrostatic charging
   - Induction of voltages in moving motors
   - Operation and/or environmental conditions outside the specification
   - Condensation/conductive contamination
   - External influences/damage
4. Electrical, magnetic and electromagnetic fields generated in operation that can pose a risk to people with a pacemaker, implants or metal replacement joints, etc., if they are too close
5. Release of environmental pollutants or emissions as a result of improper operation of the system and/or failure to dispose of components safely and correctly

For more information about the residual risks of the drive system components, see the relevant sections in the technical user documentation.

2.3 Security information

Siemens provides products and solutions with industrial security functions that support the secure operation of plants, systems, machines and networks.

In order to protect plants, systems, machines and networks against cyber threats, it is necessary to implement – and continuously maintain – a holistic, state-of-the-art industrial security concept. Siemens' products and solutions constitute one element of such a concept.

Customers are responsible for preventing unauthorized access to their plants, systems, machines and networks. Such systems, machines and components should only be connected to an enterprise network or the internet if and to the extent such a connection is necessary and only when appropriate security measures (e.g. firewalls and/or network segmentation) are in place.

For additional information on industrial security measures that may be implemented, please visit (https://www.siemens.com/industrialsecurity).

Siemens' products and solutions undergo continuous development to make them more secure. Siemens strongly recommends that product updates are applied as soon as they are available and that the latest product versions are used. Use of product versions that are no longer supported, and failure to apply the latest updates may increase customers' exposure to cyber threats.

To stay informed about product updates, subscribe to the Siemens Industrial Security RSS Feed visit (https://www.siemens.com/cert).

2.4 Unsafe operating states due to manipulation of software

WARNING

Unsafe operating states due to software manipulation

Software manipulation, for example viruses, Trojans, and malware, can cause unsafe operating states in your plant which may result in death, serious injury, and material damage.

- Keep the software up-to-date.
- Integrate the automation and drive components into a holistic, state-of-the-art Industrial Security concept for the plant or machine.
- Consider all of the products used in your holistic Industrial Security concept.
- Use suitable protective measures such as virus scanners to protect the files on removable media from malware.
- Check all security settings when completing commissioning.
- Set up access protection for the CPU.
- Set up know-how protection for blocks (OB, FB, FC, global data blocks).
- Protect the drive from unauthorized changes by enabling the "Know-how protection" converter function.

New properties/functions

3

What's new in the SIMATIC Drive Controller System Manual, Edition 11/2022 compared to Edition 05/2021?

What's new?		What are the customer benefits?	Where can I find information?
New contents	Support for TIA Portal option package Safe Kinematics with CPU 1507D TF (retroactively approved with Safe Kinematics from V17 and CPU firmware from V2.9 onwards)	Monitoring whether kinematics zones exit the active work zone or enter the protection or signal zones. Functions of SIMATIC Safe Kinematics: • Safe velocity monitoring • Safe zone monitoring • Safe orientation monitoring	SIMATIC Safe Kinematics Function Manual (https://support.industry.siemens.com/cs/en/en/view/109801883)
	Support for the supplementary software S7-1500T Motion Control KinPlus (only for CPU 1507D TF)	With S7-1500T Motion Control KinPlus, you can control Kinematics with up to 6 interpolating axes. • New pre-defined kinematics: – Cartesian portal 3D with 2 orientations – Delta picker 3D with 2 orientations – 6-axis articulated arm with central hand • User-defined kinematics 3D with 3 orientations	S7-1500T Kinematics Functions V7.0 Function Manual (https://support.industry.siemens.com/cs/ww/en/view/109812058)
	Firmware update SINAMICS Integrated via Web server of the CPU	Firmware updates possible via remote access; enables remote maintenance.	Section Firmware update SIMATIC Drive Controller, under Procedure via the integrated Web server (Page 272)
	The following SINAMICS functions are supported in addition for SINAMICS Integrated: • Technology Extension RAILCTRL (Rail Control, under development) • Technology Extension DCDCCONV (DC-DC converter)	Extended areas of application: • Multi-carrier systems (MCS). Multi-carrier systems are transport systems with linear motors, which are used, for example, in packaging machines and assembly applications. • With the SINAMICS Technology Extension DCDCCONV, a Motor Module can be employed as a chopper converter.	Section Runtime licensing (Page 229)
	Achilles Level 2 Certification for Communication Robustness	Greater safety of industrial plants	See Industry Online Support (https://support.industry.siemens.com/cs/de/en/ps/25714/cert)

What's new?		What are the customer benefits?	Where can I find information?
Changed contents	Larger code and data memory • CPU 1504D TF: Code memory from 2 to 4 MB and data memory from 4 to 6 MB • CPU 1507D TF: Code memory from 6 to 15 MB and data memory from 20 to 40 MB	Extended areas of application	Section Comparison of the SIMATIC Drive Controller variants (Page 25)
	Increased configuration limits for motion control technologies for CPU 1504D TF: • Motion control resources increased from 2,400 to 3,200 • Motion control resources increased from 120 to 160 • Typical number of positioning axes at 4 ms servo/IPO cycle and 35% CPU load through motion control increased from 10 to 12 axes	Extended areas of application	Section Comparison of the SIMATIC Drive Controller variants (Page 25)
	Extended version display in the TIA Portal, Web server und diagnostic buffer export (for example, SINAMICS Integrated version)	The firmware version of the SINAMICS Integrated can also be determined without SINAMICS Startdrive. Thus, the SINAMICS Integrated version can also be determined if it is not possible to go online with SINAMICS Startdrive, for example because the configured firmware version is different from the firmware version of the device[1)]	Section Determining the SINAMICS Integrated version (Page 114)
	X142 technology I/Os, event/cycle duration measurement: additional measurement method "Multiple periods"	This method provides a more accurate measurement for short periods. In addition, measurement value variations are evened out.	Section Configuring event/cycle duration measurement operating mode (Page 142)
	New SINAMICS Integrated firmware (new hotfix based on V5.2 SP3)	Optimizations and extended module spectrum (for example, SINAMICS S220 Smart Line Modules in mixed mode operation with SINAMICS S120 Motor Modules)	See Product announcements for SINAMICS S120 drive system (https://support.industry.siemens.com/cs/de/en/ps/13229/pm)

What's new?		What are the customer benefits?	Where can I find information?
	Information in the Product Information on the SIMATIC Drive Controller, edition 02/2022, was integrated into the System Manual and Equipment Manual.	Information in the documentation has been updated and is available centrally.	Various places in the SIMATIC Drive Controller System Manual and Equipment Manual

1) Firmware versions must match

SINAMICS Startdrive can only establish an online connection to the SINAMICS Integrated or to a SINAMICS S120 CU when the configured firmware version matches the firmware version of the device.

System overview

4

4.1 What is the SIMATIC Drive Controller?

SIMATIC Drive Controller

The SIMATIC Drive Controller is a drive-based controller in the SIMATIC S7-1500 range.

A SIMATIC Drive Controller combines the following functionalities in a SINAMICS S120 Booksize Compact enclosure:

- Failsafe SIMATIC S7-1500 technology CPU with integrated technology I/Os
- SINAMICS S120 automatic speed control

The two components are termed "CPU" and "SINAMICS Integrated" in this documentation.

The integrated SINAMICS S120 automatic speed control is based on a CU320-2 control unit and can control:

- A max. of 6 servo drives; or
- A max. of 6 drives with vector control; or
- A max. of 12 drives with U/f control

Two failsafe technology CPUs with graded performance are available. Safety Integrated at the CPU and drive end allow use in failsafe applications.

The SIMATIC Drive Controller supports communication over PROFINET and PROFIBUS DP.

4.1.1 Comparison of SIMATIC Drive Controller versions

SIMATIC Drive Controller performance classes

The SIMATIC Drive Controller contains a failsafe CPU from the SIMATIC S7-1500 family and SINAMICS S120 automatic speed control. Two performance classes are available.

Table 4- 1 Overview of performance classes

Performance class	SIMATIC Drive Controller	Article number
Small to mid-range applications	CPU 1504D TF	6ES7615-4DF10-0AB0
High-performance applications	CPU 1507D TF	6ES7615-7DF10-0AB0

Performance features of the CPUs

The SIMATIC Drive Controller s differ in terms of the integrated CPU. The CPUs can be used for lower and mid-range applications all the way to the high-end range of machine and plant automation. The following table shows key performance features of the SIMATIC Drive Controller.

Table 4- 2 Overview of SIMATIC Drive Controller performance features

Feature	1504D TF	1507D TF
Code work memory, max.	4 MB	15 MB
Data work memory, max.	6 MB	40 MB
Retentive data area (including timers, counters, bit memories)	768 KB	768 KB
Load memory/mass storage, max.	32 GB (with SIMATIC Memory Card)	32 GB (with SIMATIC Memory Card)
I/O address area, max.	32/32 KB	32/32 KB
Integrated interfaces	1 x PROFINET IO IRT (3-port switch) 1 x PROFINET IO RT 1 x PROFINET basic services (1000 Mbps) 1 x PROFIBUS DP 2 x USB 3.0[1] 4 x DRIVE-CLiQ	1 x PROFINET IO IRT (3-port switch) 1 x PROFINET IO RT 1 x PROFINET basic services (1000 Mbps) 1 x PROFIBUS DP 2 x USB 3.0[1] 4 x DRIVE-CLiQ
SINAMICS Integrated	on basis of CU320-2	on basis of CU320-2
Integrated inputs and outputs (onboard I/O)	CPU: 8 DI/DQ SINAMICS Integrated: 12 DI, 8 DI/DQ	CPU: 8 DI/DQ SINAMICS Integrated: 12 DI, 8 DI/DQ
Configuration control	X	X
CPU Web server	X	X
Isochronous mode[3]	PROFINET IO with IRT (X150) PROFIBUS DP (X126) SINAMICS Integrated Technology I/Os (X142)	PROFINET IO with IRT (X150) PROFIBUS DP (X126) SINAMICS Integrated Technology I/Os (X142)
Minimum cycle[5)]	500 µs	250 µs

Feature	1504D TF	1507D TF
Technology Integrated	CPU: • Motion control • PID control Onboard I/O: • Event/period duration measurement • Pulse width modulation (PWM) • Timer DI/DQ • Oversampling DI/DQ	CPU: • Motion control • PID control Onboard I/O: • Event/period duration measurement • Pulse width modulation (PWM) • Timer DI/DQ • Oversampling DI/DQ
Number of positioning axes	Typical[2]: 12 Maximum: 40	Typical[2]: 55 Maximum: 160
Motion Control resources[4]	3,200	12 800
Extended Motion Control resources[4]	160	420
Security Integrated	X	X
Integrated system diagnostics	X	X
Integrated safety functionality	X	X
Degree of protection	IP 20	IP 20

[1] Non-functional, no connection permitted

[2] With 4 ms servo/IPO cycle and 35% CPU load from motion control

[3] Besides the MC-Servo, only PROFINET interface X150 can also be operated isochronously with the clock system of SINAMICS Integrated and the X142 technology I/Os.
Isochronous coupling of PROFIBUS interface X126 with other clock systems is not possible. Additional drive systems must therefore be connected over the PROFINET interface (for details, see section Setting the clock system (Page 171)).

[4] For information on technology object resource requirements, see Technology functions of the CPU (Page 51) and S7-1500T Motion Control function manuals. (https://support.industry.siemens.com/cs/ww/en/view/109751049)

[5] Minimum supported cycle for PROFINET, SINAMICS Integrated, Technology I/Os (X142) and Servo/IPO. The use of clock pulses < 500 µs is only possible for CPU 1507D TF and is subject to restrictions (for details see section Setting the clock system (Page 171)).

4.1.2 Areas of application

The scalability of the SIMATIC Drive Controllers through several performance classes offers the required flexibility and scalability for a wide range of Motion Control applications in machine and plant engineering.

The SIMATIC Drive Controller have a wide range of communication interfaces, for example for implementing modular machine concepts and connecting HMI and I/O systems.

As the communication interfaces are available in all performance classes, you select the SIMATIC Drive Controller on the basis of CPU and Motion Control performance only.

The integrated technology CPU provides additional functions to the standard Motion Control and technology functions in the S7-1500 CPUs, such as:

- Extended synchronous operation and cam functionalities
- Kinematics functions
- Cross-PLC synchronous operation

The digital onboard I/O offer additional integrated technology functions, for example:

- Measuring inputs for fast, accurate and event-dependent acquisition of actual positions
- Outputs for output cams and cam tracks for position-dependent generation of switching signals

The failsafe design of the integrated technology CPU allows you to implement applications for safety systems. This enables seamless integration of machine safety into the SIMATIC Drive Controller. You use one system for both your standard and failsafe automation at the same time. This offers:

- Economics benefits
- Reliability
- Potential savings for hardware, engineering tasks and storage costs

You can expand the drive configuration limits of the SIMATIC Drive Controller over PROFINET, for example with SINAMICS S120 control unit CU320-2.

Applications and areas of application

The integration of an S7-1500TF CPU and automatic speed control (SINAMICS Integrated) into a device makes a small, compact design possible. With graded performance and interface configuration, SIMATIC Drive Controller are optimized for production machines and plants with Motion Control.

SIMATIC Drive Controller are used in applications with the SINAMICS S120 drive family, for example, because:

- A highly dynamic, flexible multi-drive system is required:
  - Broad performance range
  - Comprehensive range of motors (including linear drive, external drives, etc.)
  - Comprehensive range of control processes (servo, vector, U/f)
  - SINAMICS Technology Extensions
- Controlled supply/regeneration is required:
  - To avoid unwanted line harmonics
  - For a high level of ruggedness in the context of network fluctuations
  - For energy recovery in brake mode

SIMATIC Drive Controller are also used where:

- Safety solutions for the protection of people and machines are necessary
- A compact, space-saving design is required
- High performance for Motion Control and rapid I/O is required
- Modular machine concepts with rapid isochronous mode are required

Typical areas of application:

- Multi-axis machines (for example printing and paper machines)
- High-performance applications with short machine clocks (for example packaging machinery and handling applications)
- Compact machines in which there is limited room for the controller and drive system (for example control cabinets in the machine base)
- Distributed control and drive concepts
- Synchronization of multiple SIMATIC Drive Controller with cross-PLC synchronous operation
- Safe monitoring of motion

Example 1: Fast and flexible packaging

Automation task:

Development of a horizontal bagging machine with a speed of up to 120 packages per minute.

Feature:

The bagging machine allows the continuous packaging of individual solid products such as foodstuffs and commercial products. A quick changeover to new products must be possible. Scalability and cost efficiency is paramount in the automation solution.

Solution:

A SIMATIC Drive Controller uses the technology functions to control gear and cam synchronous operation for multiple axes. Necessary input and output signals such as print mark correction, slip compensation, distance detection and product detection are controlled by the integrated technology I/Os of the SIMATIC Drive Controller. Other inputs and outputs, for example for temperature acquisition, are available over the ET 200SP distributed I/O system.

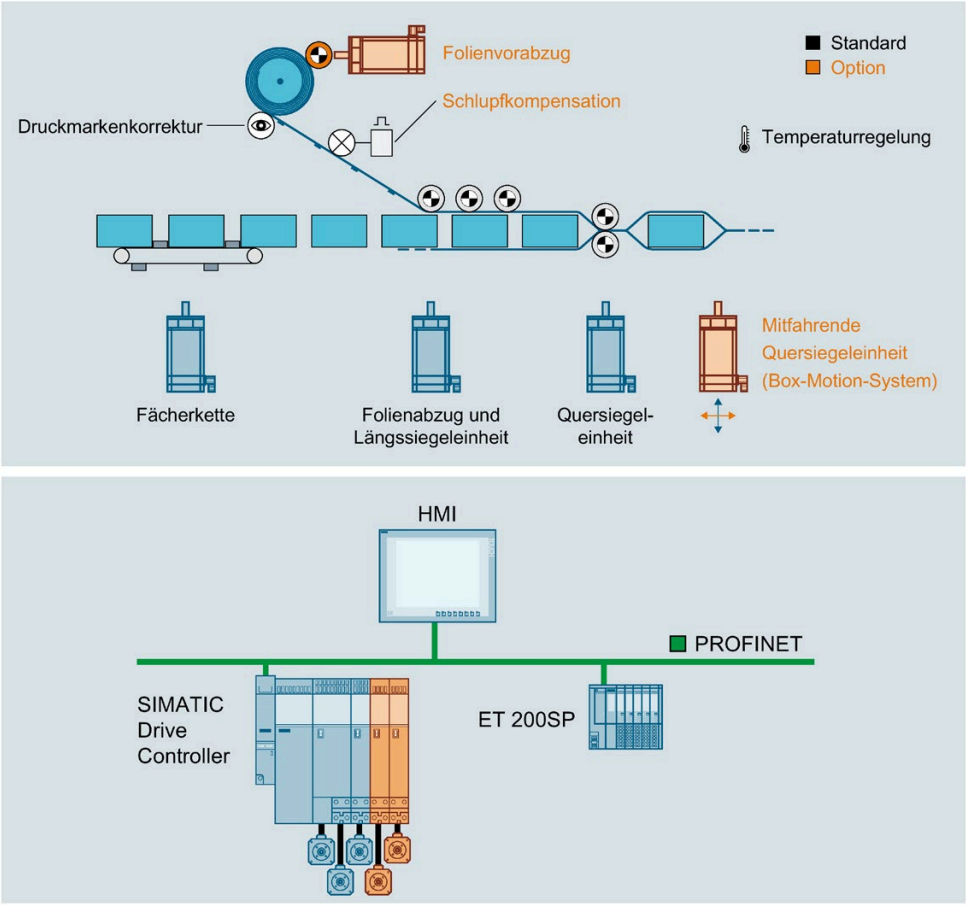

Figure 4-1 Example: Packaging machine with optional modules

Benefits

- High-performance solution for optimal product quality and high machine throughput
- Compact, scalable solution
- Format change at the touch of a button

Example 2: Printing machine

Automation task:

Development of a modular, fully automated printing machine with scalable performance to continue to ensure efficient production and cover a wide range of products in future.

Feature:

Modular solution, for example for winder/feed, printing mechanisms and drying. The individual machine modules are synchronized over a virtual leading axis.

Solution:

The modular solution is based on multiple machine modules, each of which is implemented with a SIMATIC Drive Controller and if necessary additional SINAMICS S120 CU320-2. Cross-PLC synchronous operation on the basis of PROFINET IO with IRT is used for synchronization of the axes.

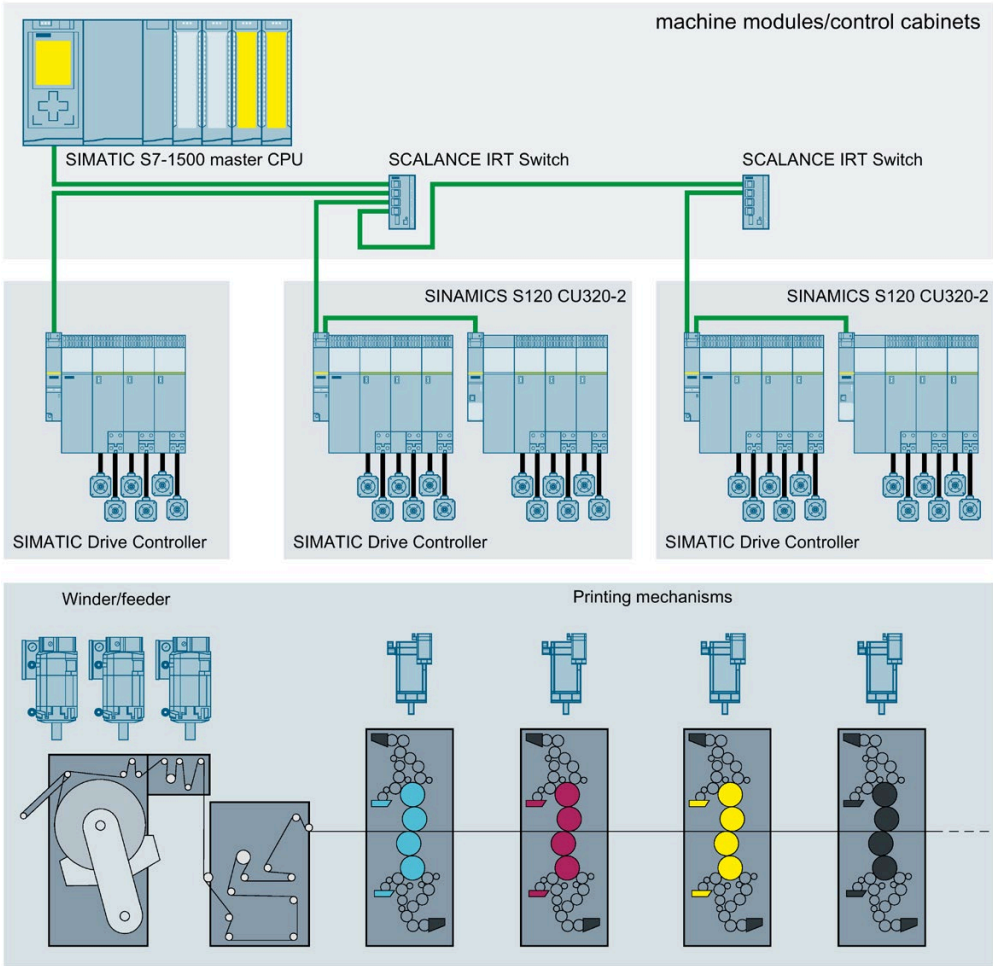

Figure 4-2 Example: Printing machine

Benefits

- Short machine setup times
- Scalable solution covers a wide performance range
- Perfect synchronous operation across modules ensures the best possible product quality high throughput

Advantages and customer benefits

The use of SIMATIC Drive Controllers offers the following advantages:

- Only one device for standard, safety and comprehensive Motion Control automation including automatic speed control
- Comprehensive range of interfaces, integrated bottom to top performance range
- Onboard technology I/Os save on additional hardware
- Eight digital outputs configurable as high-speed outputs; for ultra-short output delays and maximum switching accuracy
- Simple handling with lower cabling and installation costs
- Simple configuration in the STEP 7 hardware configuration
- Simple and efficient commissioning and optimization of drives using the engineering tool SINAMICS Startdrive in the TIA Portal
- Automatic alignment of the technological variables via the technology objects between controller and drive; reduced engineering, commissioning and service times
- Central data management with a memory card (SIMATIC Memory Card) for controller and drive
- Central license handling in the TIA Portal for CPU and SINAMICS Integrated

4.1.3 Plant components and automation levels

Plant components and automation levels

SIMATIC Drive Controller are used in particular in production automation and Motion Control applications for smaller to high-end machines. The combination of SIMATIC S7-1500 CPU and integrated SINAMICS S120 automatic speed control offers powerful and flexible automation solutions that cover all ranges of Motion Control applications:

- The process signals are connected to the central master computer via fieldbus.
- The SIMATIC Drive Controller is integrated consistently in the various automation levels through communication standards.
- The SIMATIC Drive Controller controls SINAMICS Integrated over the integrated drive and the axis group over the comprehensive range of SINAMICS S120 power units (Line Modules and Motor Modules).
- Motors with a DRIVE-CLiQ interface facilitate commissioning and diagnostics.
- You connect motors without a DRIVE-CLiQ interface, for example external motors or motors for retrofit applications, over Sensor Modules Cabinet-Mounted (SMC) or Sensor Modules External (SME). Terminal Modules (TM) are terminal expansions over DRIVE-CLiQ – for example for drive digital or analog inputs and outputs.
- The F-CPU integrated in the SIMATIC Drive Controller ensure failsafe processes.

- Technology I/Os are already integrated in the SIMATIC Drive Controller . If required, you can expand the SIMATIC Drive Controller with technology modules in the ET 200MP and ET 200SP distributed I/O systems.
- SIMATIC Drive Controller are intended for installation in a control cabinet with IP20 degree of protection

The schematic diagram below shows the key components of a system with SIMATIC Drive Controller from the management level to the control level and field level.

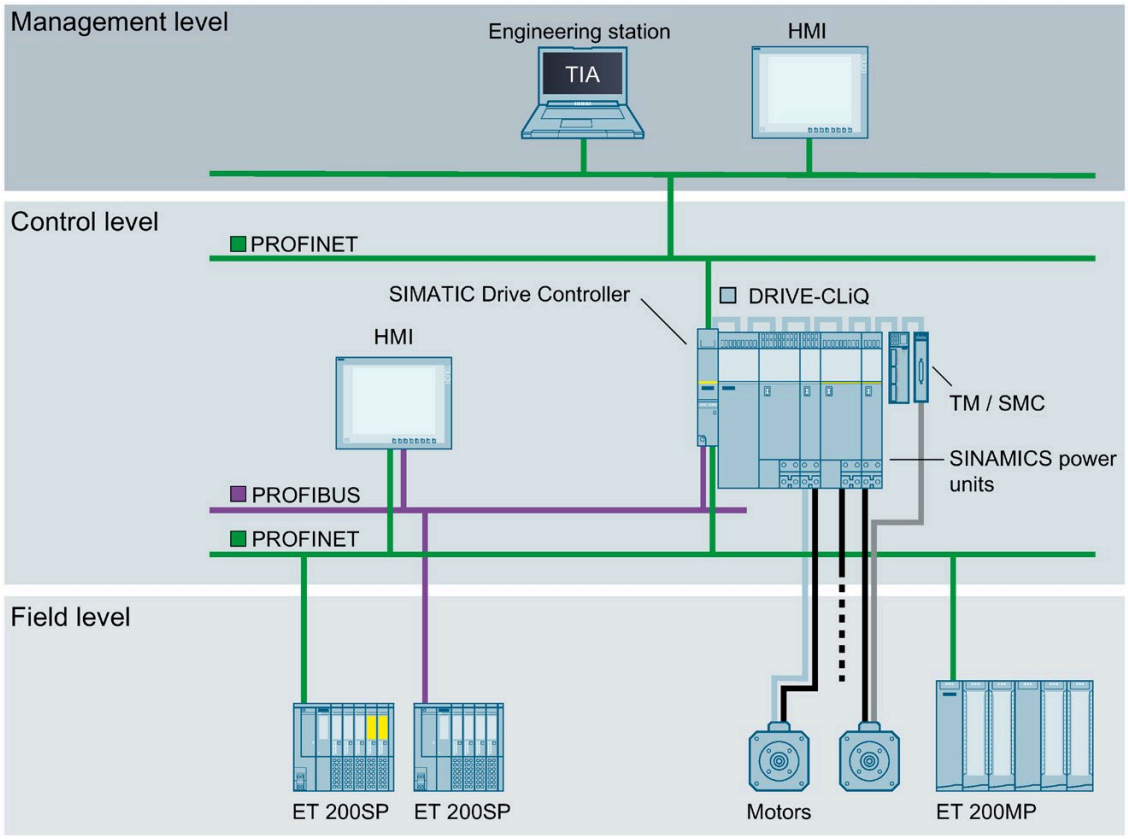

Figure 4-3 Example: SIMATIC Drive Controller at management, control and field level

4.1.4 Scalability

SIMATIC Drive Controller offer the required flexibility and performance for a wide range of controller applications in machine and plant engineering.

Scaling with performance class

To meet your machine and plant planning requirements, the SIMATIC Drive Controller can be scaled in terms of CPU and Motion Control performance and configuration limits (program and data memory and Motion Control resources).

The comprehensive networking options over PROFINET and PROFIBUS DP are the same for all versions. This means that you can scale simply by CPU performance – without affecting the available interfaces and thus your machine and plant topology.

Scaling with drive configuration limits

SINAMICS S120 automatic speed control is integrated in all versions of the SIMATIC Drive Controller. It can control.

- A max. of 6 servo drives; or
- A max. of 6 drives with vector control; or
- A max. of 12 drives with U/f control

You can expand the drive configuration limits of a SIMATIC Drive Controller, for example with SINAMICS S120 (CU320-2) or SINAMICS S210 (for example for individual drives). In this case, the CPU axis technology objects execute the Motion Control functions for the SINAMICS Integrated drives and drives connected externally. The maximum axis configuration limits are limited at the CPU side by the available Motion Control resources.

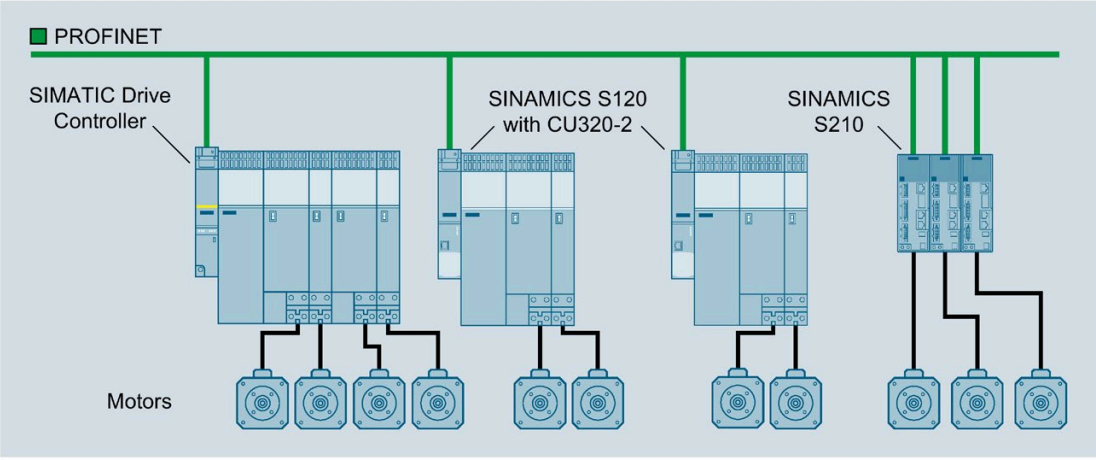

Figure 4-4 Example: Plant configuration with SIMATIC Drive Controller, SINAMICS S120 and SINAMICS S210

In principle, you can connect any drives that:

- Support the standardized profile for PROFIdrive drive technology
- Support the PROFIdrive frames possible with SIMATIC S7-1500

You can find additional information in the S7-1500T Motion Control function manuals (https://support.industry.siemens.com/cs/ww/en/view/109751049).

Note

Computing performance at the drive cannot be increased with a SIMOTION CX32-2 Controller Extension as with SIMOTION D4x5-2.

Scaling with modularization

Modular machine concepts offer many advantages, such as standardization, flexibility and scalability. A production line that consists of multiple machine modules each with a controller and drives requires synchronization of the drives.

SIMATIC Drive Controller have the cross-PLC synchronous operation functionality. Cross-PLC synchronous operation allows you to implement synchronous operation across devices. This enables you to:

- Implement more axes by distributing them across multiple controllers
- Implement modular machine concepts

In modular machine concepts, you can distribute the functionality between multiple machine modules, each with its own controller. You can distribute the master value source and synchronous axes between the various controllers. Coupling between the master axis/an external encoder and the following axis is isochronous via PROFINET IO with IRT. Control cycles for the axes are synchronized.

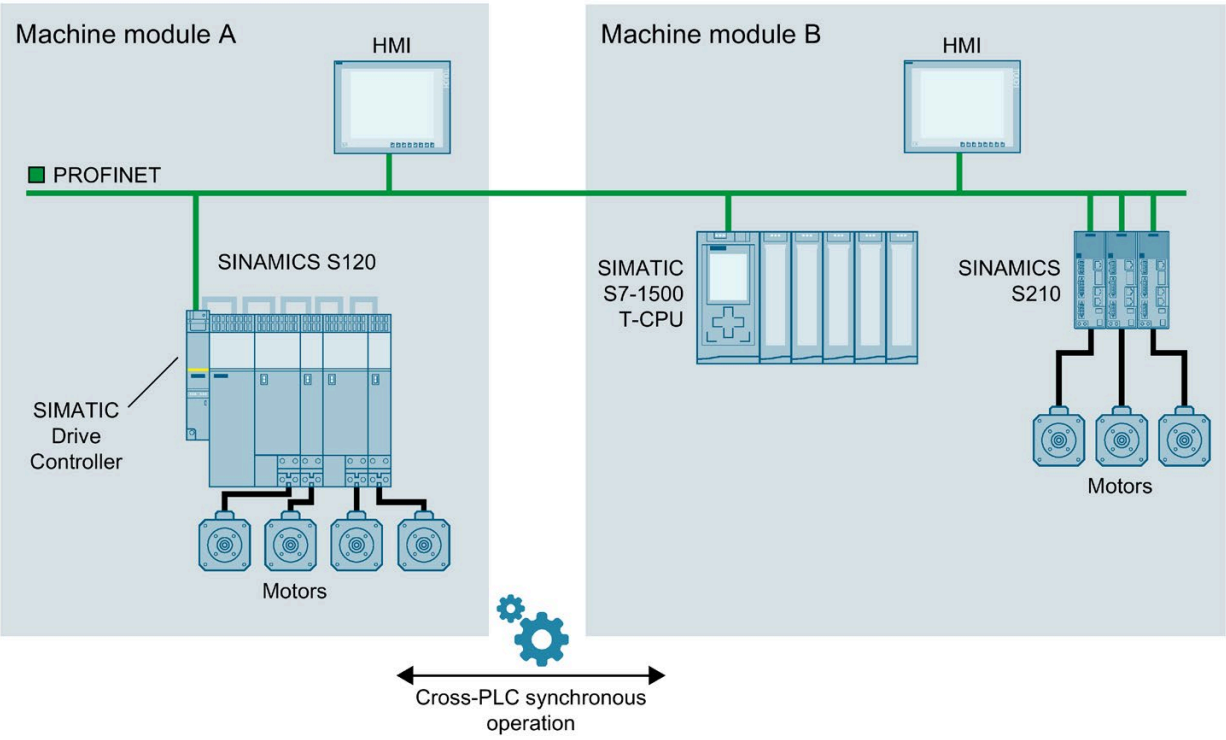

Figure 4-5 Example: Modular machine concept with SIMATIC Drive Controller and cross-PLC synchronous operation

Scaling with technology I/Os and technology modules

The integrated eight digital input/outputs (interface X142) provide configurable technology I/Os.

Of the integrated eight digital input/outputs of the SINAMICS Integrated (interface X122/132), you can also use eight digital inputs as measuring inputs.

To expand the integrated technology I/Os high-performance technology modules in the ET 200MP and ET 200SP distributed I/O systems, for example for additional measuring inputs and output cam outputs.

Information on technology objects for measurement sensing inputs and output cam outputs can be found in the section Technology functions of the CPU (Page 51).

4.1.5 Overview of features

SIMATIC Drive Controller

The SIMATIC Drive Controller combines a failsafe SIMATIC S7-1500 technology CPU with integrated technology I/Os and SINAMICS S120 automatic speed control in one compact enclosure. Performance grading, a range of interfaces, and technology functions are optimized for production machines and plants with Motion Control.

Important properties and functions

Optimized for production machinery

- Performance grading optimized for the demands of production machines and plants with Motion Control
- Comprehensive range of interfaces, integrated fieldbus interfaces from bottom to top performance range
- Technology I/Os onboard
- Eight digital outputs configurable as high-speed outputs; for ultra-short output delays and maximum switching accuracy

Communication standards

- PROFINET IO
- PROFIBUS DP
- DRIVE-CLiQ

Efficient engineering

- All features of a SIMATIC Drive Controller can be configured in TIA Portal
- Configuration of drive functions over SINAMICS Startdrive

Compact design

- Motion Control CPU and Drive control (SINAMICS Integrated)
- Compact size

Safety Integrated

- An F-CPU for failsafe and non-failsafe applications
- All F-parameters set in software

Simple handling

- Central data management with a memory card for control and drive
- Central license management

Technology Integrated

- Motion Control functionality supports the connection of drives with PROFIdrive capability
- Technology CPU with extended Motion Control functions
- Simple programming of motion processes with PLCopen Motion Control blocks
- Temperature controller
- PID control for continuous and discrete closed-loop control processes with Autotuning for easy commissioning and optimum control performance
- Seamless integration into TIA Portal for synchronous configuration and uniform operating concept
- TRACE support for effective commissioning, diagnostics and rapid optimization of drives and closed loop control

Figure 4-6 Overview of SIMATIC Drive Controller properties and functions

4.2 Configuration

Configuration

A system with SIMATIC Drive Controller comprises the following components:

- Power supply for SIMATIC Drive Controller and DRIVE-CLiQ components
- SIMATIC Drive Controller
- SINAMICS S120 power units:
  - Line Module
  - Motor Modules
- Sensor Modules (SMx)
- Terminal Modules (TM)
- Motors with/without DRIVE-CLiQ

Note

Use of SINAMICS S220 power units

From SINAMICS firmware V5.2 SP3 HF10 onwards, the use of SINAMICS S220 power units at the integrated SINAMICS S120 drive control of the SIMATIC Drive Controller is also possible. For more information on the currently available module range as well as compatibility information for use with SINAMICS S120 drive controls, see the publications on the SINAMICS S120/S220 drive system, for example (https://support.industry.siemens.com/cs/ww/en/view/109806050)

WARNING

Danger to life due to unsuitable firmware version

Operation of the SINAMICS S220 Booksize component with an unsuitable firmware version can lead to unsafe operational states, for example, overheating of converter components, unexpected acceleration of a motor or malfunctioning of the safety functions.
Use firmware V5.2 SP3 HF10 or later.

Configuration example

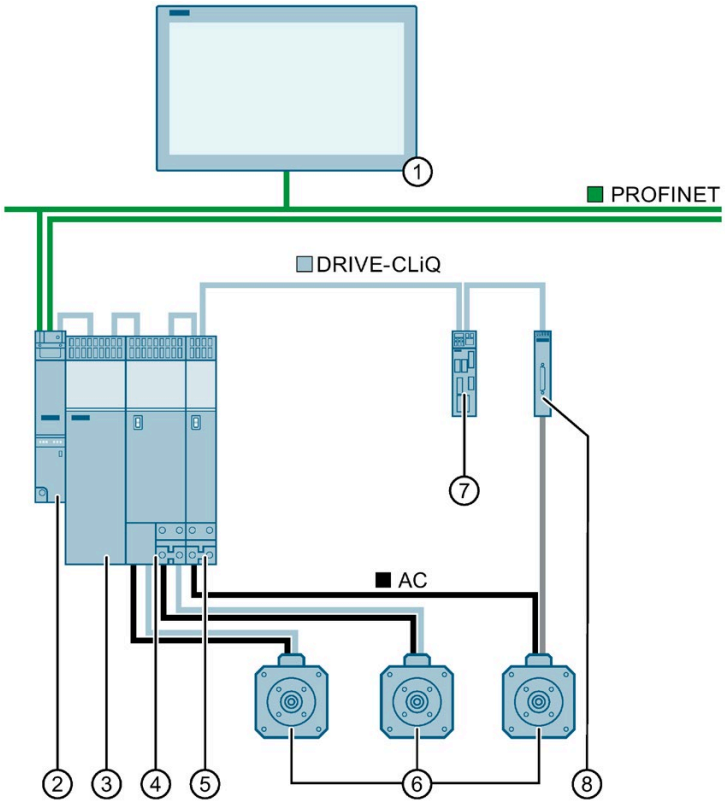

① HMI device
② SIMATIC Drive Controller
③ Line Module
④ SINAMICS S120 Double Motor Module
⑤ SINAMICS S120 Single Motor Module
⑥ SIMOTICS S servo motor
⑦ SINAMICS Terminal Module
⑧ SINAMICS Sensor Module Cabinet-Mounted

Figure 4-7 Example: SIMATIC Drive Controller installation in a plant

4.3 SIMATIC Drive Controller functions

4.3.1 Safety

SIMATIC Safety Integrated of the integrated F-CPU

For failsafe operation of your plant, program the F-CPUs of the SIMATIC Drive Controller. Use the "STEP 7 Safety Advanced" of the TIA Portal for this purpose. In combination with the TIA Portal, the F-CPU offers optimal integration of failsafe systems into your engineering environment; one controller, one communication system and one engineering platform for standard and failsafe automation:

- Integration of safety technology
- Instructions approved by German Technical Inspectorate for frequently required safety applications
- Integration of safety functions up to SIL 3 in accordance with IEC 61508, SILCL 3 in accordance with IEC 62061 and/or PL e and Category 4 in accordance with ISO 13849-1
- Uniform engineering for standard and safety automation
- Simple documentation of safety-related changes via the F change history in STEP 7 Safety
- Support in the acceptance of the safety program and no renewed acceptance of the safety program after changes in the standard program

Advantages

SIMATIC Safety Integrated provides you with the following advantages:

- Engineering with SIMATIC STEP 7 Safety Advanced in the TIA Portal, same engineering and operating concept for standard and failsafe automation task
- Use of instructions approved by the German Technical Inspectorate from the system library Safety in the safety program, for example for protective door, emergency stop, monitored feedback loop circuit and user acknowledgment; saves time and reduces the error rate
- Simple connection of PROFIsafe devices via PROFINET and PROFIBUS
- Convenient configuration of the drive-side safety technology with SINAMICS Startdrive (with Startdrive Advanced including integrated safety acceptance test to facilitate the necessary documentation)
- Additional password protection for F-CPU and safety program for IT security
- Integration in integrated system diagnostics

SINAMICS Integrated safety functionality

SINAMICS Integrated of the SIMATIC Drive Controller supports the same Safety Integrated functions as SINAMICS S120 CU320-2:

- Safety Integrated Basic Functions
- Safety Integrated Extended Functions
- Safety Integrated Advanced Functions

One license is required for each axis to be operated with Safety Integrated Extended/Advanced Functions. You can find more information in Runtime licensing (Page 229).

The safety functions correspond to the functions pursuant to EN 61800-5-2 (if and to the extent that they are defined therein).

The maximum achievable safety class of the SINAMICS Integrated safety functions is SIL 2 according to IEC 61508 or PL d according to ISO 13849-1.

SIMATIC Safe Kinematics

The movement of predefined Kinematics with up to 12 interpolating axes in a multi-dimensional space can be securely monitored with SIMATIC Safe Kinematics. The following monitoring functions are available for this purpose:

- Safe velocity monitoring
- Safe zone monitoring
- Safe orientation monitoring

SIMATIC Safe Kinematics is a TIA Portal option package and is post-installed as Setup in TIA Portal.

Hardware requirements:

SIMATIC Drive Controller CPU 1507D TF from firmware version V2.9 onwards

Engineering requirements:

- SIMATIC STEP 7 Professional V17 or higher
- STEP 7 Safety Advanced from V17 or higher

Runtime requirements:

- SINAMICS Safety Integrated Advanced Functions for every monitored axis: from firmware V5.2 onwards (SINAMICS Integrated); from firmware V5.1 onwards (for connected Control Units).
- SIMATIC Safe Kinematics from V17 onwards

Safe Kinematics protects the machine operator by providing functionally safe monitoring of the movement of multi-axis kinematics equipment, for example:

- Industrial robots
- Handling systems for production machines and machine tools
- Cranes

With SIMATIC Safe Kinematics, you can program safe monitoring functions for kinematics in the framework of SIMATIC Safety Integrated. You can program the user-defined, fail-safe reactions when monitored limits are violated depending on the application, for example, a safe stop reaction.

Example: Production cell with safe zone monitoring

In a production cell, injuries to the machine operator must be prevented through the kinematic movement. To that end, areas are defined in the workspace (workspace zones), which are monitored for collision with all the moving parts of an industrial robot (kinematic zones). As long as a sufficient distance can be maintained between the machine operator and the robot, the robot may continue to move. Only when the machine operator reaches into the transfer zone (transgression of light curtain) and the robot is in the zone immediately before the transfer zone at the same time does this zone become the protected zone. The robot stops its movements.

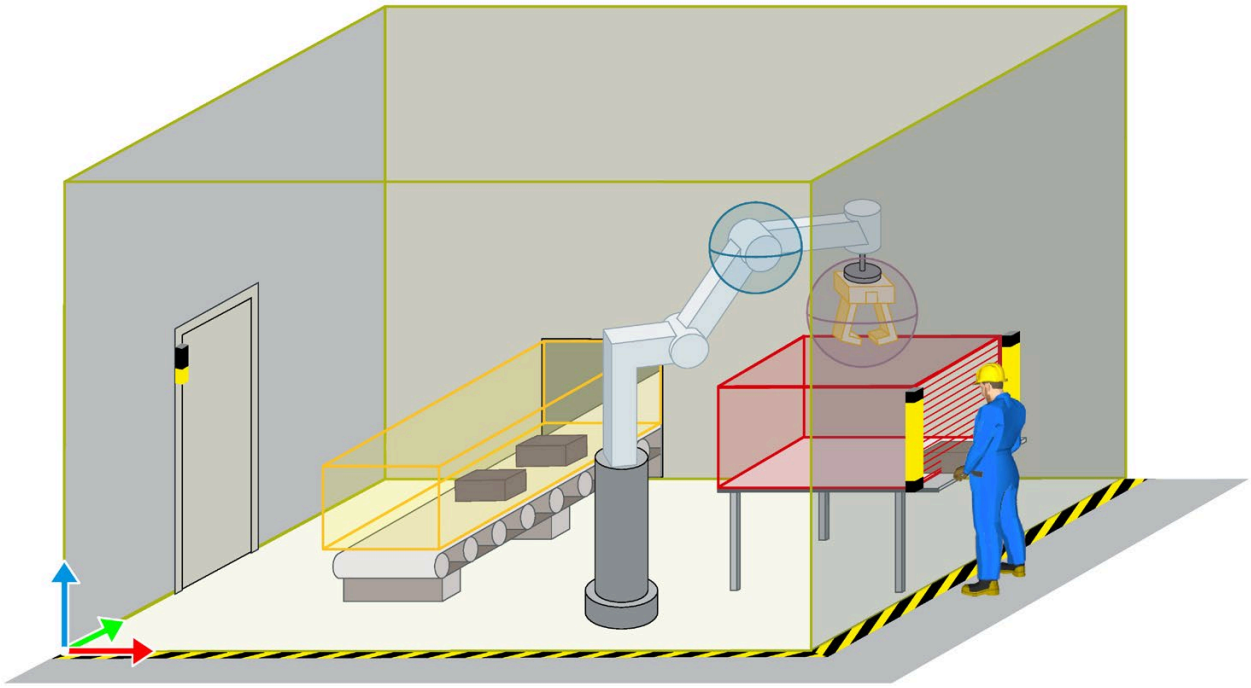

Workspace zones:

- Work zone
- Signal zone
- Protection zone

Kinematics zones:

- Segment zone
- Tool zone

Figure 4-8 Example: Production cell with safe zone monitoring from SIMATIC Safe Kinematics

Feature:

The simple geometric forms cuboid and sphere, as well as point, represent zones in the workspace. The fixed workspace zones describe the environment of a kinematics system. The movable kinematics zones surround parts of a kinematics system. Safe zone monitoring checks all activated workspace zones (work zones, signal zones, protection zones) for collision with all activated kinematics zones (segment zones, tool zones).

Solution:

Use of a SIMATIC Drive Controller with SINAMICS S120 and fail-safe modules in the distributed I/O system ET 200SP on the PROFINET IO.

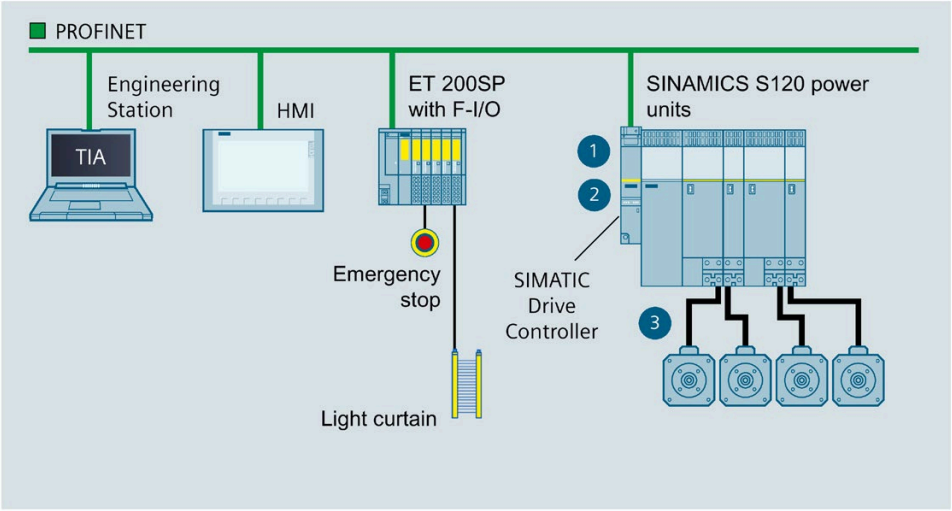

① Handling/robot application

② Safety program with Safe Kinematics blocks for monitoring kinematics

③ Reliable control commands for the drives and reliable state information
Safe position values from the drives

The ET 200SP F-modules provide the connections for emergency stop and monitoring the light curtain at the transfer area. A handling and robot application and a safety program with Safe Kinematics blocks (F-FBs) run in the CPU of the SIMATIC Drive Controller. Programming is done in the TIA Portal. SINAMICS Integrated determines the safe positions of the individual axes of the robot. The safe positions are sent to the CPU of the SIMATIC Drive Controller over PROFIsafe. SIMATIC Safe Kinematics calculates the velocities and positions in the workspace. If a limit is violated, the programmed stop reaction is triggered and transferred to the axes over PROFIsafe.

Additional information

You can find a detailed description of F-CPU configuration and programming in the SIMATIC Safety – Configuring and Programming (https://support.industry.siemens.com/cs/ww/en/view/54110126) programming and operating manual.

You can find a detailed description of the SINAMICS S120 Safety Integrated functions in the SINAMICS S120 Drive Functions (https://support.industry.siemens.com/cs/us/en/view/109763287) function manual and the SINAMICS S120 Safety Integrated (https://support.industry.siemens.com/cs/ww/en/view/109763292) function manual.

More information on SIMATIC Safe Kinematics is available

- in the S7-1500 Safe Kinematics (https://support.industry.siemens.com/cs/ww/en/view/109801883) Function Manual
- on the SIMATIC Safe Kinematics overview page (https://support.industry.siemens.com/cs/ww/en/view/109793052)

4.3.2 Security

Security means the protection of technical systems against sabotage, espionage and human error.

Protection functions of the integrated TF-CPU

For the setup of secure networks, the SIMATIC Drive Controller provides an integrated security concept:

Table 4- 3 Overview of the protection functions of the integrated TF-CPU

Protection function	Description
Protection of confidential configuration data	Protection of confidential CPU configuration data
Integrity protection	The CPUs come with an integrity protection function as standard. This helps detect any manipulations: • At the engineering data on the SIMATIC Memory Card • At the engineering data during data transfer between TIA Portal and CPU • At the engineering data during data transfer between HMI system and CPU • At the encrypted firmware
Access protection	Protection against unauthorized configuration changes through four authorization levels and an integrated firewall
Know-how protection	Protection against unauthorized access and modifications to algorithms by means of pass-word protection
Copy protection	Protection against duplication of programs by linking individual blocks to the serial number of the original memory card on the SIMATIC Memory Card
CPU lock	Protection against unauthorized access by locking the bottom cover with a seal or a lock

Access protection example

You can choose from four different access levels in the TIA Portal to restrict user access to functions and memory areas.

Access level	Access				Access per...
	HMI	Read	Write	Fail-safe	Password
Full access incl. fail-safe (no protection)	✓	✓	✓	✓	
Full access (no protection)	✓	✓	✓		
Read access	✓	✓			
HMI access	✓				
No access (complete protection)					

Figure 4-9 Access protection

If you only want to allow users access over HMI, for example, select the access level "HMI access" in the TIA Portal. Only HMI access and access to diagnostics data is then possible without entering a password.

Users can read and write tags over an HMI device with this access level.

Users **cannot**:

- Download blocks or the hardware configuration to the CPU
- Upload blocks or the hardware configuration from the CPU to the PG/PC
- Run writing test functions
- Change the operating state from the PG/PC
- Run CPU firmware updates

Advantages and customer benefits of protection functions

The protection functions listed above protect your investments from unauthorized access and manipulation, helping to secure plant availability.

Secure Communication

There is an increasing need to transfer data to external computers in encrypted form via Intranet or public networks.

SIMATIC Drive Controller support the Internet PKI (RFC 5280) with STEP 7. This allows the configuration and operation of Secure Communication, for example:

- Hypertext Transfer Protocol Secure (HTTPS)
- Secure Open User Communication
- Secure Communication with OPC UA

A public key infrastructure (PKI) can issue, distribute and check digital certificates. For SIMATIC Drive Controller , you create certificates for various applications in the CPU properties in STEP 7, for example: TLS certificates for Secure Open User Communication, Web server certificates, and OPC UA certificates.

SIMATIC Drive Controller as of CPU firmware version V2.9 with STEP 7 and WinCC as of version V17 support innovative and standardized secure PG/PC and HMI communication - Secure PG/HMI communication for short.

Additional information

You can find further information on the protection functions described in Protection (Page 197) and in the STEP 7 online help.

Siemens products and solutions are only one element of a comprehensive industrial security concept. Please note the additional information on Industrial Security (https://www.siemens.com/industrialsecurity).

Note

Please also note the security information in the SINAMICS S120 documentation (https://support.industry.siemens.com/cs/ww/en/ps/13231/man).

4.3.3 Web server

The SIMATIC Drive Controller have an integrated Web server.

You can display the CPU status via a Web browser without installing additional software and to a limited extent control it. Graphic displays of process variables and user-defined websites facilitate information acquisition and the diagnosis of plant states.

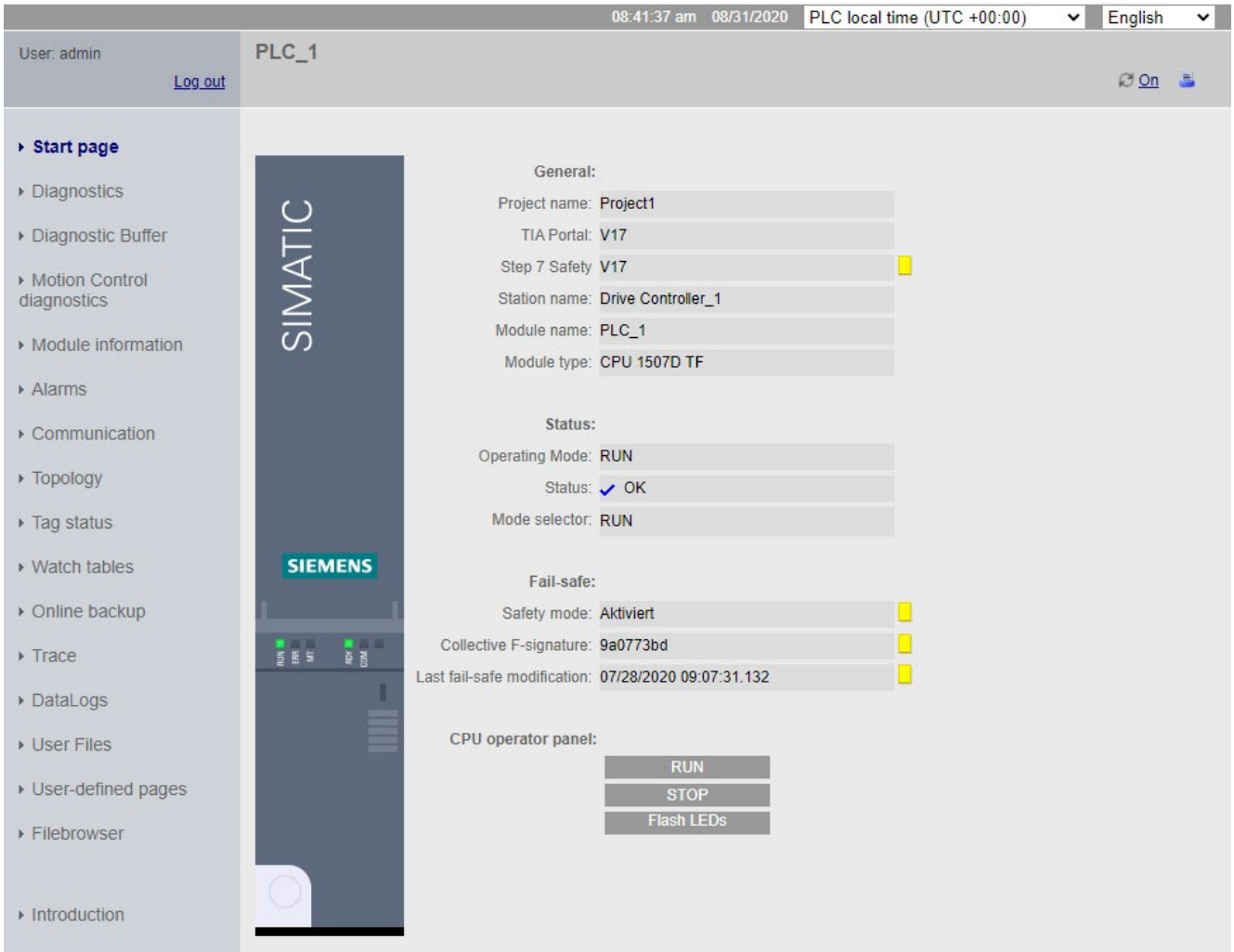

Figure 4-10 Home page web server

Note

SINAMICS Integrated of the SIMATIC Drive Controller does not have its own Web server.

Example: Web server facilitates commissioning and local diagnostics for standard machines

Automation task:

Implementation of a user interface for commissioning and calibrating test benches.

Feature:

When standard machines are commissioned, parameters often need to be set once for setup, for example in line with the place of installation or purpose. Examples of such parameters include machine runtime program parameters in the CPU.

The operator also requires easy access to the SIMATIC Drive Controller for rapid local diagnostics in the event of an error.

Solution:

Creation of user sites for the Web server of a SIMATIC Drive Controller. The customer can make the machine settings themselves over these websites without PG/PC, for example adjust the calibration parameters or change the formats.

In the event of an error, rapid initial diagnostics is possible over the integrated Web pages of the SIMATIC Drive Controller without the need for the engineering project.

Advantages and customer benefits

The Web server provides the following advantages:

- Access via Web browsers to a SIMATIC Drive Controller with plant-related operating data
- Display of service and diagnostics information over large distances
- Access restrictions for unauthorized users
- Firmware update of CPU and SINAMICS Integrated via remote access; see the section: Firmware update SIMATIC Drive Controller, under Procedure via the integrated Web server (Page 272)

Additional information

A detailed description of handling the Web server can be found in the SIMATIC S7-1500 Web Server Function Manual (https://support.industry.siemens.com/cs/ww/en/view/59193560).

4.3.4 Trace

The SIMATIC Drive Controller has an integrated Trace functionality for the effective commissioning and optimization of drives and controllers. The Trace function is available for the integrated CPU and SINAMICS Integrated.

The trace function records the following in line with the adjustable trigger conditions:

- CPU tags in the CPU Trace
- Drive parameters in the SINAMICS Integrated Trace

By visualizing the entire process with real-time Trace, you can identify sporadic events in the system during commissioning and service, for example.

Example: Signal response analysis

To analyze a specific signal response, you define the recording and trigger conditions for the signals for recording.

① The Trace function can be called in the project tree in the "Traces" folder:

- For the CPU, under the CPU of the SIMATIC Drive Controller
- For the SINAMICS Integrated, under the drive unit of the SIMATIC Drive Controller

The trend diagram ② displays the selected signals of a recording. Digital signals are displayed as bit track in the lower diagram.

The signal table ③ lists the signals of the selected measurement and provides setting options for specific properties.

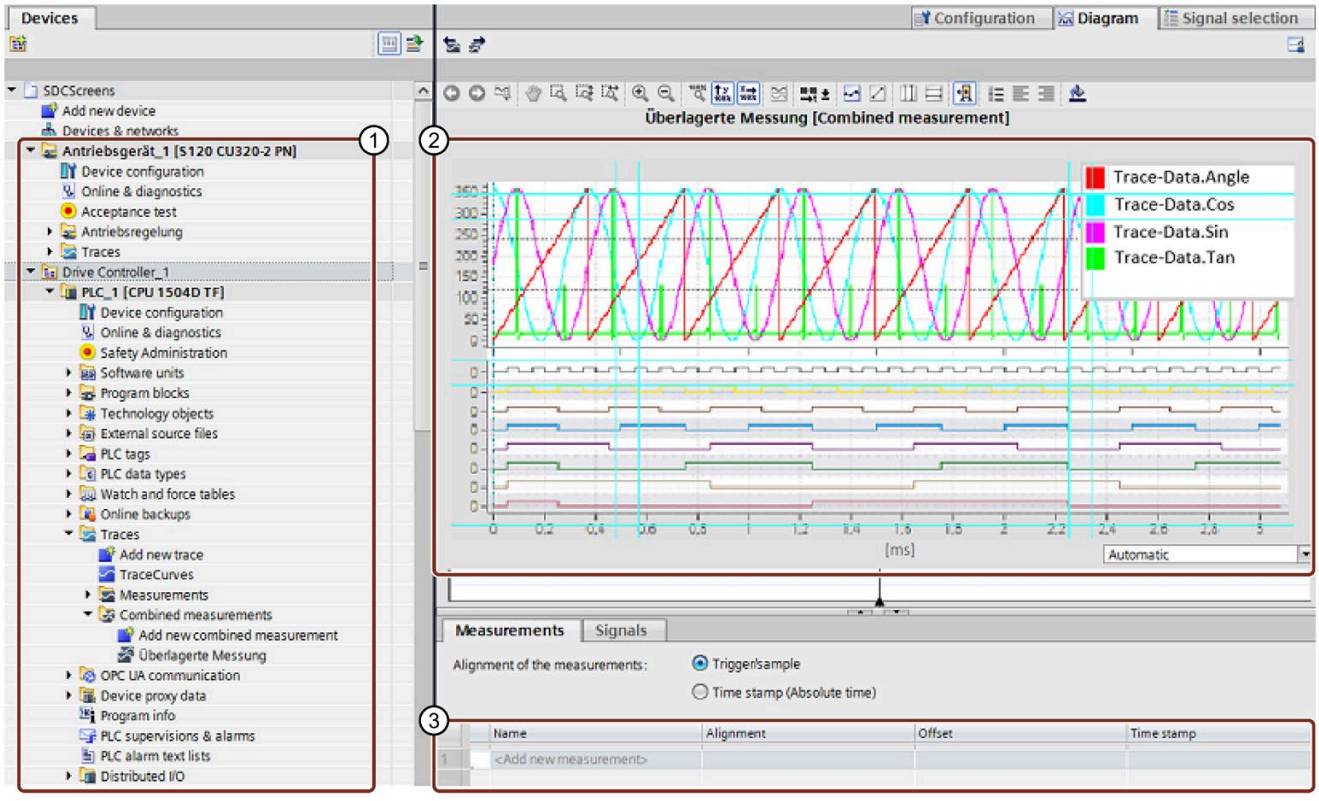

① Trace recordings in the project tree

② Trend diagram

③ Signal table

Figure 4-11 Trace recording for the CPU

Example: Trace optimizes the commissioning of packaging machines

Automation task:

At what speed does a plant reach its maximum productivity? How do you quickly determine the optimum settings?

The packaging machine ensures quick and reliable packaging of ECG electrodes on a rotary table which is loaded and unloaded by a conveyor belt.

Feature:

After filling, the issue is the correct time for further transport of the packages electrodes. To this end, light barriers trace the position of the electrodes.

Solution:

The Trace function of a SIMATIC Drive Controller shows the exact sequence of selected signals over a short period of time. It helps the start-up engineer find the exact light barrier positions and the optimum speed for belts and the rotary table.

The trace recordings are supplied to the customer as part of the plant project. In the event of a fault, the customer can see whether changes to the basic settings have caused the fault.

The trace recordings in the CPU trace can also be stored as a "measurement" on the SIMATIC Memory Card; up to 999 trace recordings are available for evaluation.

Advantages

The Trace function provides the following advantages:

- A uniform standard for tag analysis that allows even sporadic errors to be located rapidly
- Cost-effective and easy evaluation as the signals are available in the CPU
- Monitoring of highly dynamic processes
- Cycle-by-cycle recording:
  - Of up to 16 different signals and up to 8 separate trace jobs in the CPU trace simultaneously
  - Of up to 8 different signals and up to 2 separate trace jobs in the SINAMICS Integrated trace simultaneously
- Storage of the CPU trace recordings in a separate memory area for easy localization of sporadic errors
- Various trigger options
- Various zoom and cursor measuring functions
- Storage of CPU trace recordings on the SIMATIC Memory Card
- Trace recordings can be evaluated on the SIMATIC Memory Card over SIMATIC Drive Controller Web servers
- Export of trace recordings, for example for user-specific processing

Project Trace

A project trace contains trace configurations of multiple CPUs. A project trace records the signals across CPUs if the CPUs are connected to each other via PROFINET.

A global trigger that can be activated by each CPU is used for synchronization. After receiving the global trigger, the CPUs with a valid project trace configuration start recording.

Additional information

You can find information on how to save trace recordings for the CPU without the TIA Portal in the section Data transfer with SIMATIC Memory Cards (Page 266).

A detailed description of the "Trace" function is available in the SIMATIC/SINAMICS Using the Trace and Logic Analyzer Function function manual (https://support.industry.siemens.com/cs/ww/en/view/64897128) and in the SINAMICS S120 with Startdrive commissioning manual (https://support.industry.siemens.com/cs/ww/en/view/109763294).

4.3.5 Technology functions of the CPU

The CPU of the SIMATIC Drive Controller has Motion Control technology objects and a modular S7-1500T CPU.

You can control PROFIdrive-capable drives with Motion Control instructions in accordance with PLCopen.

Motion Control technology objects

The following table shows the technology objects that support the SIMATIC Drive Controller. They occupy Motion Control resources or Extended Motion Control resources in the CPU.

Table 4- 4 Technology objects

Technology objects	Resource requirements per technology object
Speed axis	40
Positioning axis	80
Synchronous axis	160
External encoder	80
Measuring input	40
Output cam	20
Cam track	160
Cams (1000 points and 50 segments)	2*
Cams (10000 points and 50 segments)	20*
Kinematics	30*
Leading axis substitute	3*

*They occupy Extended Motion Control resources in the CPU

Motion Control technology functions

The following table shows the technology functions supported by SIMATIC Drive Controller .

Table 4- 5 Motion Control technology functions

SIMATIC Drive Controller technology functions
Enable, disable technology objects
Acknowledge alarms, restart technology object
Reference technology objects, set reference point
Halt axis
Position axis absolutely
Position axis relatively
Move axis at set velocity/speed
Move axis in jog mode
Position axis overlapping
Set alternative encoder as operationally active encoder
Halt and disable axis
Enable/disable hardware limit switch
Control bits of control word 1 and 2
Start one-time measuring
Start cyclic measuring
Abort active measuring
Enable/disable output cam
Enable/disable cam track
Start gearing
Start gearing with specified synchronous positions
Absolute shift of master value on the following axis
Relative shift of master value on the following axis
Absolute shift of following value on the following axis
Relative shift of following value on the following axis
Start camming
Simulate synchronous operation
Desynchronize gearing
Desynchronize camming
Specify additive master value
Interpolate cam
Read out slave value of a cam
Read master value of a cam
Copy calculated cam elements
Specify motion setpoints
Enable and disable force/torque limit / fixed stop detection
Specify additive torque
Specify upper and lower torque limits
Interrupt Motion Control of kinematics
Continue Motion Control of kinematics
Stop motion of kinematics
Position kinematics with linear path motion

SIMATIC Drive Controller technology functions
Relative positioning of kinematics with linear path motion
Position kinematics with circular path motion
Relative positioning of kinematics with circular path motion
Absolute travel of kinematics with synchronous "point-to-point" movement
Relative travel of kinematics with synchronous "point-to-point" movement
Start belt monitoring
Set kinematics to simulation mode
Define workspace zones
Define kinematics zones
Activate workspace zones
Deactivate workspace zones
Activate kinematics zones
Deactivate kinematics zones
Re-define tool
Change active tool
Redefine object coordinate systems
Transform axis coordinates to Cartesian coordinates
Transform Cartesian coordinates to axis coordinates

PID control

PID compact controllers are integrated as standard in all S7-1500 CPUs. In your application, the PID controller adjusts a physical setpoint and stabilizes it against interferences at the same time. You can use different PID controllers depending on your application. All controllers support the following functions:

- Manageable configuration screens
- Automatic determination of the controller parameters
- Commissioning screens with integrated Trace

Table 4- 6 PID controller versions

PID controller	Description
PID Compact	Continuous PID controller
PID 3step	Step controller for integrating actuators
PID Temp	Temperature controller for heating and cooling with two separate actuators

Technology function of the onboard I/O

The eight digital input/outputs of the SIMATIC Drive Controller provide the following technology function at the X142 interface:

Table 4- 7 Technology I/Os of the CPU at interface X142

Operating mode	Function	Application
DI	Digital input optional: Hardware interrupt upon rising and/or falling edge	Used as hardware limit switch, for example
DQ	Digital output	Used to control an indicator light, for example
Timer DI	Acquisition of the switching time of a digital input signal with up to two edges per cycle (OB91/OB6x)	Used as the input of a measuring input, for example
Timer DQ	Precise output of a digital output signal with up to two edges per cycle (OB91/OB6x)	Used as an output cam output, for example
Oversampling DI	Acquisition of 32 states of a digital input signal at equal intervals per cycle (OB91/OB6x)	Detection of short signal levels that are shorter than the position control cycle or isochronous mode interrupts. Used, for example, to detect a fast-traveling product with a proximity switch or light barrier
Oversampling DQ	Output of 32 states for a digital output signal at equal intervals per cycle (OB91/OB6x)	Output of short signal levels that are shorter than the position control cycle or isochronous mode interrupts. Used, for example, to control the output of short pulses or pulse trains, for example to control a glue valve for applying dots of glue.
Event/period duration measurement	Measurement of number of edges and period max. counting frequency 32 kHz	Simple speed measurement with shadow mask and light barrier: • Period measurement • Counter (rising edges)
Pulse width modulation (PWM)	Output of a selectable pulse-pause ratio with a configurable base frequency of: 1 kHz, 2 kHz, 4 kHz, 8 kHz, 16 kHz	Output of a signal with a defined period and variable on-load factor Used, for example, to control proportional valves and directional valves (energy savings through reduction in holding current).

High-speed outputs

For short pulses and maximum output accuracy, configure the digital outputs at interface X142 as high-speed outputs.

The digital outputs are then operated as rapid push/pull switches, which are switched alternately to 24 V DC and ground. This enables very steep edges and extremely short output delays.

Digital outputs as high-speed outputs are particularly suited to the operating modes timer DQ, oversampling DQ and pulse width modulation (PWM).

Note

Notes on interconnection

When you use the digital outputs at the X142 interface as high-speed outputs, the current-carrying capacity is reduced from 0.5 A to 0 4 A.
Please note also the information on input interconnection for high-speed outputs in the SIMATIC Drive Controller manual
(https://support.industry.siemens.com/cs/ww/en/view/109766666).

Expansion of technology functions with technology modules

For solving technological tasks, powerful distributed technology modules are also available that operate largely autonomously and reduce the load on the CPU.

Table 4- 8 Technology modules ET 200SP and ET 200MP

Technology module	Article number	Description	Manual
ET 200SP Distributed I/O System			
TM Count 1x24 V	6ES7138- 6AA01-0BA0	Counter module 1 channel for 24 V incremental or pulse encoder, 3 DI, 2 DQ	ET 200SP TM Count 1x24V
TM PosInput 1	6ES7138-6BA01-0BA0	Module for count and position acquisition for RS-422 incremental encoder or SSI absolute encoder, 2 DI, 2 DQ	ET 200SP TM PosInput 1
TM Timer DIDQ 10x24 V	6ES7138-6CG00-0BA0	Time-controlled digital inputs and digital outputs, 4 DI and 6 DQ with time stamp, count function, pulse width modulation, oversampling	ET 200SP TM Timer DIDQ 10x24 V
TM Pulse 2x24 V	6ES7138-6DB00-0BB1	Pulse width modulation and pulse output, 2 channels 2 A for proportional valves and DC motors	ET 200SP TM Pulse 2x24V
TM PTO 2x24V	6ES7138-6EB00-0BA0	Interface module for stepper drives, 2 channels pulse train output (PTO): 24 V, 2 DI and 1 DQ 24 V DC per channel	ET 200SP TM PTO 2x24V
SIWAREX WP321 ST	7MH4138-6AA00-0BA0	Weighing electronics 1 channel Acquisition and processing of signals from weighing or force sensors with high precision	SIWAREX WP321 ST

Technology module	Article number	Description	Manual
SIWAREX WP351 HF	7MH4138-6BA00-0CU0	Weighing electronics 1 channel Calibration-capable weighing module for automatic dosing, filling, control and totalizing weighing scales	SIWAREX WP351 HF
Additional technology modules	See (https://mall.industry.siemens.com/mall/en/WW/Catalog/Products/10225175)		
ET 200MP Distributed I/O System			
TM Count 2x24V	6ES7550-1AA00-0AB0	Counter module 2 channels for 24 V incremental or pulse encoder, 3 DI and 2 DQ per channel	S7-1500 TM Count 2x24 V
TM PosInput 2	6ES7551-1AB00-0AB0	Module for count and position acquisition for RS-422 incremental encoder or SSI absolute encoder, 2 channels, 2 DI and 2 DQ per channel	S7-1500 TM PosInput 2
TM Timer DIDQ 16x24 V	6ES7552-1AA00-0AB0	Time-controlled digital inputs and digital outputs, max. 8 DI, 16 DQ, of which max. 16 with time stamp, count function, pulse width modulation, oversampling	ET 200MP/S7-1500 TM Timer DIDQ 16x24 V
TM PTO 4	6ES7553-1AA00-0AB0	Interface module for stepper drives, 4 channels, pulse train output (PTO): 24 V, 2 DI and 1 DQ 24 V DC per channel	S7-1500/ET 200MP TM PTO 4
SIWAREX WP521 ST SIWAREX WP522 ST	7MH4 980-1AA01 7MH4 980-2AA01	Weighing electronics 1 channel (WP521 ST) or 2 channels (WP522 ST) Acquisition and processing of signals from weighing or force sensors with high precision	SIWAREX WP521/WP522
Additional technology modules	See (https://mall.industry.siemens.com/mall/en/WW/Catalog/Products/10204242)		

Additional information

You can find additional information on the technology functions of the CPU in the S7-1500T Motion Control function manuals (https://support.industry.siemens.com/cs/ww/en/view/109751049).

4.3.6 SINAMICS Integrated functions

The automatic speed control integrated in SIMATIC Drive Controller is based on the automatic speed control of the SINAMICS S120 Control Unit CU320-2 (firmware version V5.x).

SINAMICS Integrated provides a functional subset of the SINAMICS S120 CU320-2 drive functions. You can find details at the end of the section under "Unsupported functions and components".

The integrated drive control supports the following:

- Servo control, for maximum dynamic response
- Vector control, for maximum torque accuracy
- U/f control

You can expand the drive configuration limits of the SIMATIC Drive Controllers via PROFINET IO IRT, for example with SINAMICS S120 Control Unit CU320-2.

Safety functionality of SINAMICS Integrated

SINAMICS Integrated of the SIMATIC Drive Controller supports the same Safety Integrated functions as SINAMICS S120 CU320-2:

- Safety Integrated Basic Functions
- Safety Integrated Extended Functions
- Safety Integrated Advanced Functions

The safety functions correspond to the functions pursuant to EN 61800-5-2 (if and to the extent that they are defined therein).

Supported SINAMICS functions requiring a license

SINAMICS Integrated only supports the following licensed functions and Technology Extensions (TEC) of a SINAMICS S120 CU320-2:

- Safety Integrated Extended Functions
- Safety Integrated Advanced Functions
- Detent torque compensation
- Advanced Position Control (APC)
- Technology Extension VIBX (Vibration Extinction)
- Technology Extension SERVCOUP (Servo Coupling)
- DCB Extension Library
- Technology Extension DCDCCONV (DC-DC converter)
- Technology Extension RAILCTRL (Rail Control, under development)
- Advanced Synchronous Reluctance Control
- Controller Parameter Adaption
- Dynamic network support
- Line droop control

PROFIdrive Integrated

Cyclic communication between CPU and SINAMICS Integrated is based on PROFIdrive mechanisms.

The communications services used for this are based on PROFIBUS DP and are processed over an internal, high-performance interface.

Unsupported functions and components

SINAMICS Integrated provides a functional subset of the SINAMICS S120 CU320-2 drive functions. The following functions/components are not supported by the integrated drive control of the SIMATIC Drive Controller:

- Free function blocks (FBLOCKS)
- SINAMICS Web server
- SIMOTION-specific or SINUMERIK-specific DRIVE-CLiQ components (for example Terminal Module TM17, Hydraulic Drive HLA, Controller Extension CX32-2, Numeric Control Extensions NX10.3/NX15.3)
- Expansion boards, e.g. TB30, CBE20, CBE30-2
- Hardware and functions not supported by SINAMICS Startdrive, see (https://support.industry.siemens.com/cs/ww/en/view/109761180)

In addition, not all licensed functions and Technology Extensions (TEC) of a SINAMICS S120 CU320-2 are available to the SINAMICS Integrated. The High Output Frequency function, for example, is not available for high output frequencies > 550 Hz.

Note

Use of SINAMICS S120 CU320-2 Control Units

Additional CU320-2 Control Units on the SIMATIC Drive Controller offer the full range of functions, unlike SINAMICS Integrated.

Note

Use of SINAMICS S220 power units

From SINAMICS firmware V5.2 SP3 HF10 onwards, the use of SINAMICS S220 power units at the integrated SINAMICS S120 drive control of the SIMATIC Drive Controller is also possible. For more information on the currently available module range as well as compatibility information for use with SINAMICS S120 drive controls, see the publications on the SINAMICS S120/S220 drive system, for example (https://support.industry.siemens.com/cs/ww/en/view/109806050)

WARNING

Danger to life due to unsuitable firmware version

Operation of the SINAMICS S220 Booksize component with an unsuitable firmware version can lead to unsafe operational states, for example, overheating of converter components, unexpected acceleration of a motor or malfunctioning of the safety functions.
Use firmware V5.2 SP3 HF10 or later.

Use of "older" DRIVE-CLiQ components

Some "older" DRIVE-CLiQ components cannot be used with the SIMATIC Drive Controller or with SINAMICS S120 CU320-2.

Table 4- 9 DRIVE-CLiQ components that cannot be used with SIMATIC Drive Controller and SINAMICS S120 CU320-2

DRIVE-CLiQ components	Notes	Ending of the article no.
Single Motor Modules (SMM) Double Motor Modules (DMM)	6SL31* (all Motor Modules Booksize Compact 6SL34* can be used)	< 3
Line Modules (ALM/SLM)	6SL313* can generally be used: • All BLMs (6SL313*) • SLM (6SL313*) 5 and 10 kW	< 3
Chassis power units (Line Modules, Motor Modules, Power Modules)	• Line Modules: 6SL333* • Motor Modules: 6SL332* • Power Modules: 6SL331*	< 3
Sensor Modules Cabinet SMC30	-	< 2
Terminal Modules TM31/TM41	-	< 1
Sensor Module External SME20/25	-	< 3
Control Unit Adapter CUA31	-	< 1

If you use invalid components, then a topology error is reported, **F01360 Topology: Actual topology invalid**.

Additional information

You can find a description of the CPU and SINAMICS Integrated functions that require a license in the section Runtime licensing (Page 229).

You can find a detailed description of the functions of SINAMICS S120 CU320-2 in the SINAMICS S120 Drive Functions (https://support.industry.siemens.com/cs/us/en/view/109763287) function manual.

4.4 Integrated interfaces for communication

Interfaces for communication over PROFINET and PROFIBUS DP are integrated in the SIMATIC Drive Controller. The following communications options are available for your automation task:

Table 4- 10 SIMATIC Drive Controller communication options

Communication option	PN	DP
PG communication for commissioning, testing and diagnostics	X	X
HMI communication for operator control and monitoring	X	X
Data exchange with TCP/IP, UDP, ISO-on-TCP, ISO protocol	X	-
Data exchange via OPC UA as server	X	-
Data exchange via OPC UA as client	X	-
Direct data exchange between IO controllers	X	-
Communication via Modbus TCP	X	-
Communication via UDP Multicast	X	-
Sending process alarms via e-mail	X	-
S7 communication	X	X
S7 routing	X	X
Web server of the CPU Data exchange via HTTP(S), for example for diagnostics	X	-
SNMP (Simple Network Management Protocol)	X	-
Time-of-day synchronization	X	X
Connection to the clock system of the technology I/Os X142 and to the SINAMICS Integrated	X	-

The SIMATIC Drive Controller also has two USB 3.0 ports (non-functional, no connection permitted).

Further information

You can find more information on communication options in the Communication Function Manual (https://support.industry.siemens.com/cs/ww/en/view/59192925).

4.5 DRIVE-CLiQ

SINAMICS Integrated has 4 DRIVE-CLiQ interfaces. For the 24 V DC supply of encoders and measuring systems, 450 mA are available for each DRIVE-CLiQ interface.

You can connect all components of SINAMICS Integrated including the motors and encoders over the common DRIVE-CLiQ interface.

DRIVE-CLiQ implements a high-performance point-to-point connection for internal drive communication between the various drive components.

The DRIVE-CLiQ interfaces of the SIMATIC Drive Controller are, for example, used for:

- Connecting the power units (Line Module, Motor Modules) to the automatic speed control of SINAMICS Integrated
- Connecting motors with DRIVE-CLiQ interface to the Motor Modules
- Connecting encoder systems over Sensor Modules Cabinet-Mounted (SMC) or Sensor Modules External (SME)
- Addition of drive I/Os using Terminal Modules (TM)

Over the DRIVE-CLiQ interface, SINAMICS Integrated detects all connected drive components after switch-on. During operation, cyclical drive-related data is exchanged with the drive components on an isochronous basis, for example parameters and diagnostics data.

Advantages and customer benefits

DRIVE-CLiQ provides the following advantages:

- Automatic detection of the connected components reduces commissioning work
- Standardized cables and connectors reduce the variety of different parts and cut storage costs.
- Consistent diagnostics through to the drive components
- Encoder evaluations for converting standard encoder signals to DRIVE-CLiQ are available for third-party motors or retrofit applications.

4.6 Power supply

SIMATIC Drive Controller supply

For the SIMATIC Drive Controller, use an external 24 V DC power supply, for example, from the SITOP range (https://mall.industry.siemens.com/mall/en/WW/Catalog/Products/10008864) (SITOP smart or SITOP modular).

Supply of the SINAMICS S120 drive modules

The SINAMICS S120 drive components are supplied over a SINAMICS Line Module. Line Modules generate direct voltage from the line voltage and supply energy to the Motor Modules through the DC link.

Optionally, Line Modules with controlled supply/regeneration ensure a constant DC-link voltage and high grid compatibility.

Motor Modules supply the motors with power from the DC link.

4.7 Software

4.7.1 TIA Portal

The SIMATIC Drive Controller are integrated in the Totally Integrated Automation portal. Engineering with TIA Portal offers:

- Configuration and programming
- Shared data management
- A uniform operating concept for control, visualization and drives

The TIA Portal simplifies integrated engineering in all configuration phases of a plant.

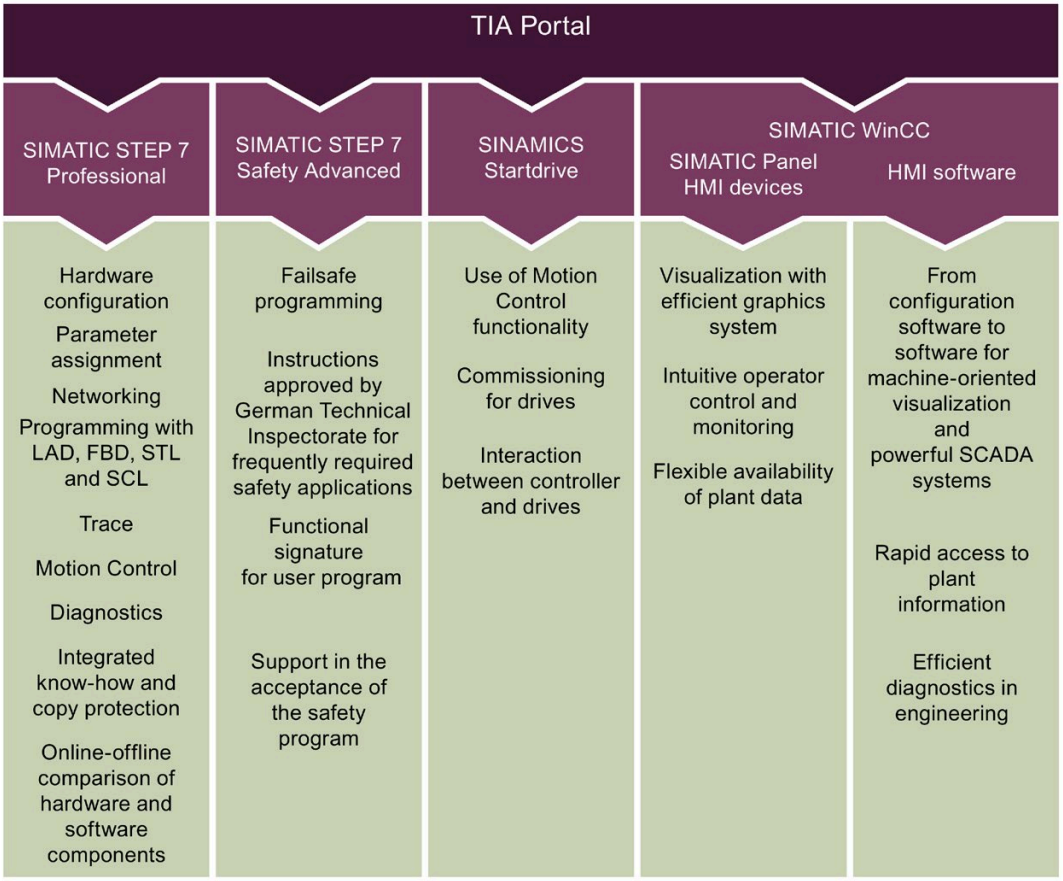

Figure 4-12 TIA Portal overview

4.7.2 SINETPLAN

SINETPLAN (https://www.siemens.com/sinetplan), the Siemens Network Planner, helps you plan automation systems and networks based on PROFINET. The tool facilitates the professional and predictive dimensioning of your PROFINET system right from the planning stage. SINETPLAN also assists with network optimization and helps you to make the best possible use of network resources and to plan for reserves. This allows you to avoid problems in commissioning and failures during productive operation even before planned use. This increases the availability of the production plant and helps improve operational safety.

The advantages at a glance:

- Network optimization thanks to port-specific calculation of the network load
- Increased production availability thanks to online scan and verification of existing systems
- Transparency before commissioning with the import and simulation of existing STEP 7 projects
- Efficiency through securing existing investments in the long term and the optimal use of resources

4.7.3 PRONETA

Siemens PRONETA (PROFINET network analysis) allows you to analyze the plant network during commissioning. PRONETA features two core functions:

- The topology overview independently scans PROFINET and all connected components.
- The IO check is a rapid test of the wiring and the module configuration of a plant.

Siemens PRONETA (https://support.industry.siemens.com/cs/ww/en/view/67460624) is available for free on the Internet.

4.7.4 TIA Selection Tool

The TIA Selection Tool allows you to select, configure and order devices for Totally Integrated Automation (TIA).
The TIA Selection Tool helps you select the right SIMATIC Drive Controller in line with:

- Axis quantity frameworks
- Axis technologies
- Control performance

With the TIA Selection Tool , you can generate a complete order list from your product selection or product configuration.

You can find the TIA Selection Tool on the Internet (https://www.siemens.com/tia-selection-tool).

4.7.5 SIMATIC Automation Tool

You use the SIMATIC Automation Tool (https://support.industry.siemens.com/cs/ww/en/view/98161300) to perform commissioning and maintenance activities simultaneously on various SIMATIC S7 stations as a bulk operation independent of the TIA Portal. The SIMATIC Automation Tool offers a wide range of functions:

- Browsing the network and creating a table showing the accessible devices in the network
- Flashing of device LEDs or HMI display to locate a device
- Loading addresses (IP, subnet, gateway) to a device
- Loading the PROFINET name (station name) to a device
- Switching a CPU to RUN or STOP mode
- Setting the time in a CPU to the current time of your PG/PC
- Downloading a new program to a CPU or an HMI device
- Downloading from CPU, downloading to CPU or deleting recipe data from a CPU
- Downloading from CPU or deleting data log data from a CPU
- Backup/restore of data in/from a backup file for CPUs and HMI devices
- Downloading service data from a CPU
- Reading the diagnostics buffer of a CPU
- CPU memory reset
- Resetting devices to factory settings
- Downloading a firmware update to the CPU

Note

When saving/restoring data to/from a backup file, the configuration of the SINAMICS Integrated is also saved/restored from the SIMATIC Memory Card.
NVRAM data must have been previously backed up to the SIMATIC Memory Card.
More information can be found in the section Configuring SIMATIC Drive Controller backup and restore (Page 236)

4.7.6 SIMATIC S7 app

With the SIMATIC S7 app, you can establish a secure connection via WLAN to SIMATIC S7-1500 and ET 200SP with, for example, the following functions:

- Detect up to 50 networked CPUs via HTTPS and establish a connection
- Change CPU operating mode (RUN/STOP)
- Read out CPU diagnostics information and send via e-mail
- Monitor and modify variables and tags
- High security through encrypted communication and encrypted profile data; password to start app and establish the connection

You can find more information about the SIMATIC S7 app on the Internet (https://new.siemens.com/global/en/produkte/software/mobile-apps/simatic2go.html).

4.7.7 Industry Online Support app

With the Industry Online Support app, you get access to documents and contributions for Siemens Industry products, for example

- FAQs
- Application examples
- Manuals
- Certificates
- Product announcements

Core functions of the app

- Scanning of product codes and EAN codes to directly display all the technical and graphical data (for example, CAx data) of the Siemens Industry product.
- Sending product information or entries via email so that the information can be further processed at the workstation.
- Sending Technical Support requests. Detailed information can be conveniently completed with the scan or photo function.
- Offline cache function to save favorites on the device. This will facilitate access to these contributions, products and conferences even without Internet access.
- Transferring PDF documents to an external library.

Download the Industry Online Support app (https://support.industry.siemens.com/sc/de/en/sc/2067)

Application planning 5

5.1 Installation location

Operating conditions

The SIMATIC Drive Controller is intended for installation in a control cabinet or in a device connection box.

- In these cases, the LEDs on the front of the device will remain visible and usable only during commissioning. Please take this into consideration for subsequent operation of the device.
- It is important to note that installation in a control cabinet or device connection box is essential for compliance with UL regulations.
- Protect the components from conductive contamination, for example by installing them in a control cabinet with degree of protection IP54 pursuant to IEC 60529 or NEMA 12.
  If the occurrence of conductive contamination can be ruled out, a correspondingly lower degree of protection for the control cabinet is permitted.
- The control cabinet or device connection box must satisfy the regulations regarding fire-protection housing.
- Ensure that all cables and leads that protrude externally are equipped with adequate strain relief.

Prohibition on use

The SIMATIC Drive Controller must not be used in the following environments without additional measures:

- In locations with a high degree of ionizing radiation
- In aggressive environments caused, for example, by
  - Dust formation
  - Corrosive vapors or gases
- In systems requiring special monitoring, for example
  - Elevators
  - Electrical equipment in particularly hazardous areas

An example of an additional measure for use of the SIMATIC Drive Controller is installation in enclosures.

Electromagnetic compatibility (EMC)

Electromagnetic compatibility (EMC) means that devices can operate satisfactorily without interfering with other devices and without interference from other devices. The EMC requirements for variable-speed drive systems (Power Drive System, PDS) are detailed in product standard IEC/EN 61800-3. A variable-speed drive system consists of SIMATIC Drive Controller, Line Module and Motor Module and the corresponding electric motors and encoders, including connecting cables. The machine powered is not part of the drive system.

Note

The same installation information regarding EMC applies to the SIMATIC Drive Controller as to SINAMICS S120 control units CU320-2.

The SINAMICS S120 power units are designed for use in the Second Environment. The Second Environment is understood as all non-residential locations. The main Second Environment locations are industrial zones supplied by the medium voltage network via their own transformers.

For compliance with the interference emission and immunity levels, follow the installation information in the SINAMICS S120 manuals.

You can find further information on this topic in the SINAMICS S120 Function Manuals (https://support.industry.siemens.com/cs/ww/en/ps/13231/man).

Use of wireless devices or mobile phones

Using wireless devices or cell phones in the immediate vicinity of the components can cause the devices to malfunction. The malfunctions can affect the functional safety of machinery and can therefore pose a risk to people or cause material damage.

- If you come closer to the components than c. 2 m, you switch off the wireless devices or mobile phones.
- Only use the "SIEMENS Industry Online Support App" on the device that is off.

Overvoltage protection

Please note the following information regarding overvoltage protection:

NOTICE
Damage to the device Inadequately dimensioned overvoltage protection can result in severe damage to the device. You should therefore ensure that the overvoltage protection is adequate.

Further information

You can find further information on the selection of the installation location, ambient conditions for operation, minimum spacing, etc. can be found in Installation (Page 76).

5.2 Hardware and software requirements

Introduction

Please note the following requirements for use of the SIMATIC Drive Controller in a SINAMICS drive system.

Hardware requirements

Table 5- 1 Hardware requirements

Component	Property/requirement
SIMATIC Drive Controller	The SIMATIC Drive Controller is available in various performance classes. • CPU 1504D TF (small to mid-range applications) • CPU 1507D TF (high-performance applications) What performance class you require depends on your specific automation and Motion Control solution requirements. You can find a summary of the main performance features of the Drive Controller in Comparison of SIMATIC Drive Controller versions (Page 25).
PROFINET PROFIBUS	Note the following requirements for operation of a SIMATIC Drive Controller as a bus device: **PROFINET** • The integrated PROFINET interface of the CPU is configured using STEP 7 (IP address and device name configured). • The CPU is connected to the subnet. See the PROFINET Function Manual (https://support.industry.siemens.com/cs/ww/en/view/49948856) For the rapid exchange of control data between the SIMATIC Drive Controller and drive components connected over PROFINET (for example SINAMICS S120, SINAMICS S210), the PROFINET IO network must be configured as isochronous. **PROFIBUS DP** • The integrated PROFIBUS interface of the CPU is configured using STEP 7 (node address and bus parameters configured). • The CPU is connected to the subnet. • The terminating resistors at the segment boundaries are on. See the PROFIBUS Function Manual (https://support.industry.siemens.com/cs/ww/en/view/59193579)
24 V DC power supply	Electronics power supply for the SIMATIC Drive Controller. Power supply units for the 24 V DC supply must supply safety extra-low voltage in accordance with IEC 61131-2 or IEC 61010-2-201. Devices from the SITOP family, for example, can be used. You can find information on the 24 V power supply specifications in Power supply (Page 75).
SINAMICS S120 system components	Please note the installation information in the SINAMICS S120 manuals and the "Rules for wiring with DRIVE-CLiQ" in the SINAMICS S120 Function Manual (https://support.industry.siemens.com/cs/ww/en/view/109763287).

Software requirements

Table 5- 2 Software requirements

Configuration in the TIA Portal	Requirement
Integrated SIMATIC S7-1500 CPU	SIMATIC STEP 7 Professional V16 or higher
	For programming the safety program of the F-CPU "STEP 7 Safety Advanced" from V16 onwards
SINAMICS Integrated	SINAMICS Startdrive Basic or Startdrive Advanced, V16 or higher Startdrive Advanced has additional engineering functions compared to Startdrive Basic such as a safety acceptance test. Note: It is not possible to configure SINAMICS Integrated with the STARTER configuration tool.

Information on the hardware and functions supported by SINAMICS Startdrive can be found at (https://support.industry.siemens.com/cs/ww/en/view/109761180)

Note

Licensing

The S7 controller and SINAMICS Integrated are licensed in the TIA Portal via STEP 7 Professional or Startdrive.

5.3 Drive Controller-specific properties

5.3.1 Drive Controller-specific hardware properties

The SIMATIC Drive Controller is part of the SINAMICS S120 drive system and the same installation conditions and installation rules as for SINAMICS S120 therefore apply.

The assembly conditions and assembly rules are available in the SINAMICS S120 manuals and in the EMC Installation Guideline (https://support.industry.siemens.com/cs/ww/en/view/60612658).

5.3.2 Drive Controller-specific properties of the CPU

The SIMATIC Drive Controller is optimized for automation solutions with Motion Control in which SINAMICS S120 high-performance converters are used.

With its extensive field bus interfaces, the SIMATIC Drive Controller is ideal for modular machine concepts.

Service functions

The SIMATIC Drive Controller does not have an integrated display. You can alternatively run service functions over the integrated Web server, for example. Using the FUNCT button, you can:

- Save service data on the SIMATIC Memory Card
- Set whether the SIMATIC Memory Card is to work as a program card (PROGRAM) or as a firmware update card (FWUPDATE)

S7-1500 I/O

The SIMATIC Drive Controller has no S7-1500 backplane bus. You can connect S7-1500 I/O modules over the distributed I/O system ET 200MP. Please note that CM/CP communication modules for PROFINET/PROFIBUS in particular cannot be used in the distributed I/O system ET 200MP, but only the communication modules for point-to-point connection (CM PtP). Alternatively, other I/O systems for the control cabinet (for example ET 200SP) or cabinet-free installation (for example ET 200pro, ET 200AL and ET 200eco PN) are available.

Time-based IO

The function blocks for the use of time-based IO (TIO instructions) are not supported by the digital input/outputs of the X142 interface.

Recommendation: For the timer DI/DQ, use the technology objects measuring input, output cam or cam track.

Device replacement

The SIMATIC Drive Controller supports a device replacement between SIMATIC Drive Controller CPUs of different performance classes and firmware versions as well as the device replacement with modular SIMATIC S7-1500 CPUs.

Device replacement with controllers of other designs (for example ET 200SP, ET 200pro) is not possible.

5.3.3 Drive Controller-specific properties of SINAMICS Integrated

Supported functions

The automatic speed control integrated in the SIMATIC Drive Controller supports only a functional subset of the SINAMICS S120 CU320-2 drive functions. Free function blocks (FBLOCKS), for example, are not supported by SINAMICS Integrated. For details, see SINAMICS Integrated functions (Page 57).

Online functions with SINAMICS Integrated

SINAMICS Integrated is connected to the CPU over an internal PROFIdrive subnet. From the point of view of an external PROFINET/PROFIBUS interface, SINAMICS Integrated is connected to a lower-level network. Please therefore note the following aspects:

- Online functions with SINAMICS Integrated are only possible if the SIMATIC Drive Controller (CPU and SINAMICS Integrated) are configured in the TIA Portal and the network configuration has first been loaded to the CPU.
- If only Startdrive is installed (and not STEP 7 Professional), SINAMICS Integrated can be configured offline. Online functions are not possible. STEP 7 Professional and Startdrive need to be installed for this purpose.
- A subnet needs to be configured for the interface to which you are connecting the programming device. Routing to the SINAMICS Integrated is only possible if a subnet is configured.

In addition, it must be kept in mind that SINAMICS Startdrive can only establish an online connection to the SINAMICS Integrated or a SINAMICS S120 CU when the configured firmware version matches the firmware version of the device.

Device replacement

Device swapping is not possible, either between different firmware versions or with other SINAMICS S120 CUs.

Individual drive objects can only be copied and pasted:

- Between SINAMICS Integrated with the same firmware versions
- Between SINAMICS S120 CU320-2 with the same firmware versions
- Between SINAMICS S120 CU310-2 with the same firmware versions

SINAMICS Drive Control Chart (DCC)

SINAMICS Drive Control Chart (DCC) extends the functionality of SINAMICS Integrated by means of freely available control, calculation and logic blocks. SINAMICS DCC offers you the possibility to configure your own technological functions in the drive system using graphic configuration.

Requirements:

- SINAMICS DCC as of V17 (add-on package for Startdrive)
- CPU firmware version as of V2.9
- SINAMICS Integrated firmware version as of V5.2 SP3

To define the open-loop and closed-loop control functionality, you select multi-instance-capable Drive Control Blocks (DCB) from a library (DCB library) and graphically link them using drag-and-drop. The DCB libraries are divided into DCB Standard and DCB Extension.

The DCB standard library, which is included in the scope of delivery of SINAMICS DCC, comprises approx. 140 block types for the configuration of logic and technology functions. These can be calculated at different SINAMICS sampling times starting at 1 ms.

Additions to the DCB standard library can be made via DCB Extension libraries. A runtime license is required to use the blocks from DCB Extension libraries. For more information about the licenses, refer to the Runtime licensing (Page 229) section.

Note

Due to the system, the startup, download and RAM to ROM times are longer for the SINAMICS Integrated than for a SINAMICS S120 CU320-2.

Recommendation to minimize these times:

- Reduce the number of DCC charts to a minimum (e.g. use only for different sampling times).
- Use sub-charts.

Diagnostics

To evaluate diagnostics information of the SINAMICS Integrated, you can use, for example, the function block FB LAcycCom_ReadDriveMessagesDateTime (FB 30518) of the LAcycCom library.

With this function block, you can read active messages (alarms, errors and SI messages) from a drive object (DO) sorted by time (latest first). The information provided comprises the code, info, date and time of occurrence of the message. Additional information on the LAcycCom library is available here (https://support.industry.siemens.com/cs/ww/en/view/109479553).

The diagnostic information cannot be evaluated over the system diagnostics integrated in the SIMATIC S7-1500.

Restrictions

The following functions are not supported by SINAMICS Integrated:

- Upload to an empty project
- Reset via parameter p0972 (parameter does not exist)

  A warm restart (p0009 = 30, p0976 = 2, 3) is possible.

5.4 Hardware configuration

The SIMATIC Drive Controller controls SINAMICS Integrated over the integrated drive and the drive group over the comprehensive range of SINAMICS S120 power units (Line Modules and Motor Modules).

Hardware components

The basic configuration of a system with the SIMATIC Drive Controller comprises the following components:

- SIMATIC Drive Controller
  This includes the SIMATIC S7-1500 TF CPU and SINAMICS Integrated.
  The SIMATIC Drive Controller can alternatively control:
  - A max. of 6 servo drives; or
  - A max. of 6 drives with vector control; or
  - A max. of 12 drives with U/f control
- SINAMICS Line Module
  The Line Module generates the DC link from the network.
- SINAMICS Motor Modules
  Motor Modules are powered by the DC link and supply the connected motors.
- DRIVE-CLiQ components
  In SINAMICS S120, the individual components of the drive system communicate with each other over DRIVE-CLiQ. The SIMATIC Drive Controller has 4 DRIVE-CLiQ interfaces. Alongside the power components, encoder systems and special DRIVE-CLiQ I/O devices can also be connected over DRIVE-CLiQ.

Hardware configuration

You can expand the drive configuration limits of a SIMATIC Drive Controller, for example with SINAMICS S120 Control Units (CU320-2) or SINAMICS S210 (for example for individual drives). Additional SINAMICS drive systems must be connected over PROFINET if they are operated isochronously with the servo clock with SINAMICS Integrated.

Computing performance at the drive cannot be increased with a SIMOTION CX32-2 Controller Extension as with SIMOTION D4x5-2.

Note

The PROFIBUS interface cannot be connected to other clock systems. If you expand the drive configuration limits with distributed drive systems, those systems must be connected over the PROFINET IO interface X150. Only PROFINET interface X150 can be connected to the clock system of SINAMICS Integrated and the X142 technology I/Os.

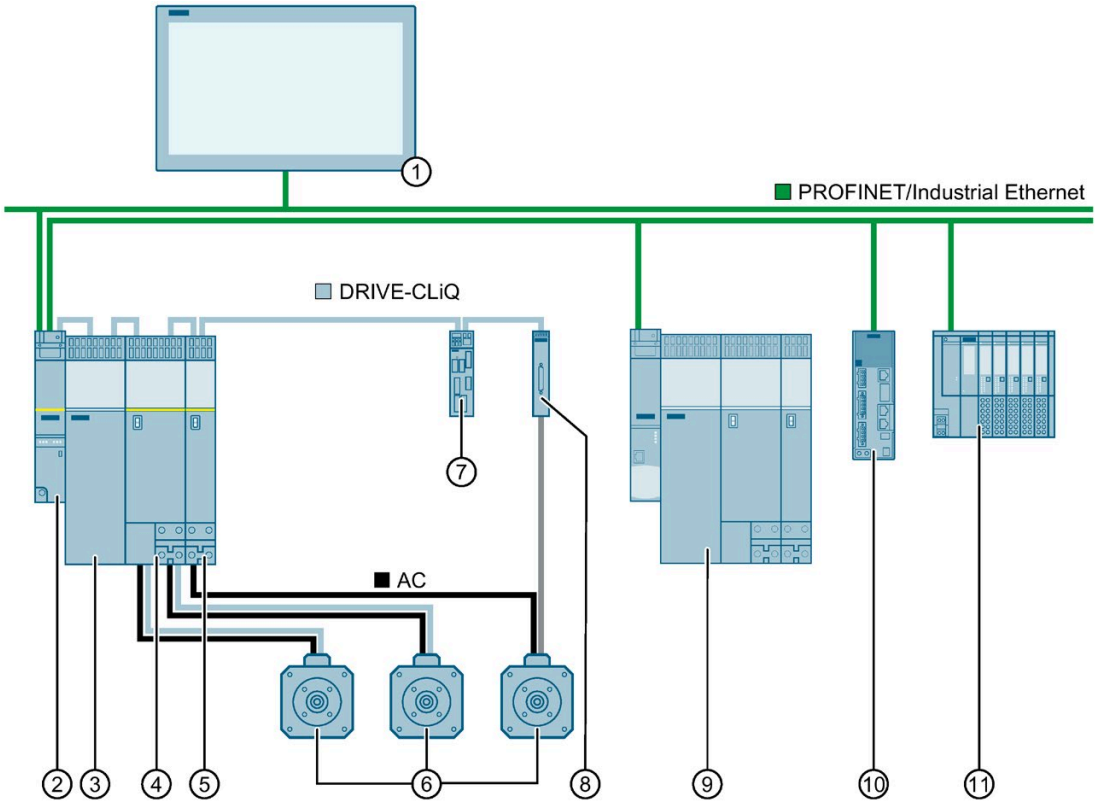

① HMI device
② SIMATIC Drive Controller
③ Line Module
④ SINAMICS S120 Double Motor Module
⑤ SINAMICS S120 Single Motor Module
⑥ SIMOTICS S servo motor
⑦ SINAMICS Terminal Module
⑧ SINAMICS Sensor Module SMC
⑨ SINAMICS S120 for up to six drives
⑩ SINAMICS S210 single-axis servo drive
⑪ ET 200SP I/O

Figure 5-1 Example: SIMATIC Drive Controller hardware configuration in a plant

See also

SINAMICS S120 Drive Functions function manual
(https://support.industry.siemens.com/cs/us/en/view/109763287)

5.5 Power supply

24 V power supply design

The SIMATIC Drive Controller is powered by an external 24 V supply (for example SITOP power supply).

The current consumption of the SIMATIC Drive Controller is:

- Without supply to interfaces and I/Os: Maximum 1.7 A
- With supply to interfaces and I/Os: Maximum 13.1 A

Table 5- 3 Permissible current load for SIMATIC Drive Controller interfaces

Interface	24 V
4 x DRIVE-CLiQ	4 x 450 mA
16 x digital output (permanent short-circuit proof)	16 x 500 mA

You can find an overview of the current consumption of SINAMICS components and recommendations for the selection of SITOP Power power supply units in the SINAMICS S120 Booksize Power Units manual.

Note

No electrical isolation

As ground potential and enclosure (PE) are connected over a low-impedance internal connection, please note the following:

- Suitably dimensioned equipotential bonding cables are required between the 24 V power supply and all grounded, physically separate devices.
- Insulation monitors are not permitted in the 24 V power supply.

Please also note the information in Connecting the supply voltage (Page 88).

Installation 6

6.1 Installation notes

Open components

These modules are open components. This means they may only be installed in housings, cabinets, or in electrical equipment rooms that can only be entered or accessed with a key or tool. Housings, cabinets, or electrical equipment rooms may only be accessed by trained or authorized personnel. An external fire-protection housing is required.

DANGER

Danger to life from energized parts

Death or serious injury will result if energized parts are touched.

Turn off and lock out all power supplying this device before working on this device.

Protection from conductive contamination

The components must be protected from conductive contamination, for example by installing them in a control cabinet with degree of protection IP54 pursuant to IEC 60529 or NEMA 12.

If the occurrence of conductive contamination can be ruled out, a correspondingly lower degree of protection for the control cabinet is permitted.

Permitted mounting positions

The SIMATIC Drive Controller must be mounted vertically.

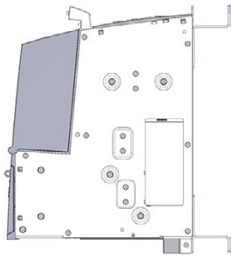

SIMATIC Drive Controller: Vertical mounting position

WARNING

Fire hazard due to overheating in the event of incorrect mounting position

Incorrect mounting positions cause overheating with a risk for personnel through smoke development and fire. This can also result in increased downtime and reduced service lives for devices / systems.

Install the SIMATIC Drive Controller only in vertical mounting position.

Distance for heat dissipation

The top and bottom of the SIMATIC Drive Controller must be at least the following distances from the enclosure wall:

80 mm

WARNING

Inadequate ventilation clearances pose risk of fire as a result of overheating

Inadequate ventilation clearances cause overheating with a risk for personnel through smoke development and fire. This can also result in increased downtime and reduced service lives for devices / systems.

Maintain a ventilation clearance of 80 mm above and below the SIMATIC Drive Controller.

EMC guidelines

The same installation information regarding EMC applies to the SIMATIC Drive Controller as to SINAMICS S120 control units CU320-2.
For further information, see SINAMICS S120 manuals and the EMC design guidelines (https://support.industry.siemens.com/cs/ww/en/view/60612658).

6.2 Mounting the SIMATIC Drive Controller

Requirement

The SIMATIC Drive Controller is fitted in a control cabinet together with the SINAMICS components.

Requirements for installing a SIMATIC Drive Controller:

- The control cabinet has been installed and wired.
- The SINAMICS components have been installed and wired.
- The components and tools required for installation are to hand.
- T10 screwdriver for the M3 screws in the spacer are to hand.
- For installation on the control cabinet wall: Tool for M6 screws

Designs

The SIMATIC Drive Controller is fitted to the wall of the control cabinet in one of the following ways:

- Installation with spacer
- Installation without spacer

The SIMATIC Drive Controller is supplied with a spacer fitted.

The spacers increase the depth of the SIMATIC Drive Controller to 270 mm and allow flush installation with 270 mm-deep power units.

Installing SIMATIC Drive Controller with spacers

Proceed as follows:

1	Attach the SIMATIC Drive Controller to the control cabinet wall with one M6 screw each at ① and ②. Tightening torque: 6 Nm (53.1 lbf in)	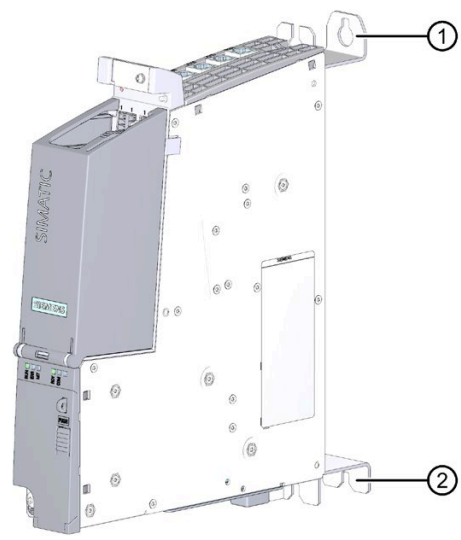

Installing SIMATIC Drive Controller without spacers

Proceed as follows:

1	Uninstalling the spacer: • Unscrew the M3 screws ① and remove the space. • Tighten the M3 screws ① again.	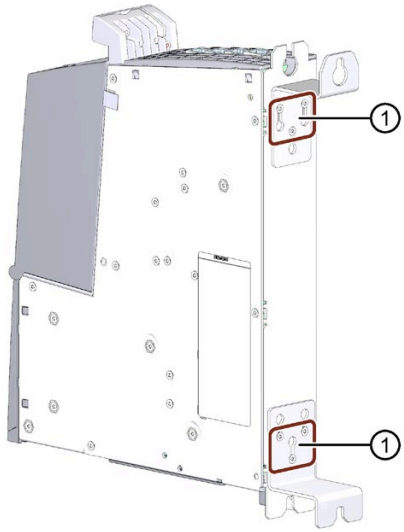
2	Attach the SIMATIC Drive Controller to the control cabinet wall with one M6 screw each at ① and ②. Tightening torque: 6 Nm (53.1 lbf in)	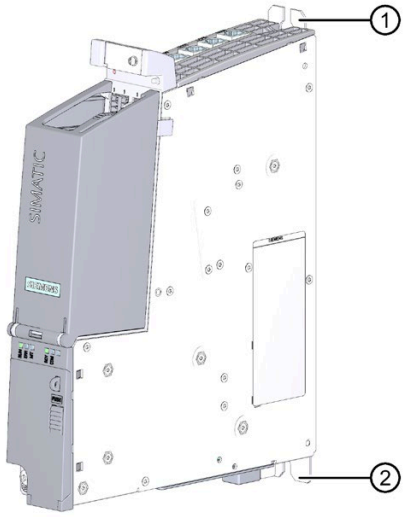

Note

If you install multiple SIMATIC Drive Controllers or SINAMICS S120 CU320-2 next to one another, use a grid size of 50 mm for the drilled holes horizontally to compensate for tolerances. A dimension drawing of the SIMATIC Drive Controller is available in the SIMATIC Drive Controller manual (https://support.industry.siemens.com/cs/ww/en/view/109766666).

Connecting 7

7.1 Rules and regulations for operation

General safety information

WARNING

Electric shock and danger to life from other energy sources

Touching live parts can result in death or serious injury.

- Work on electrical devices only if you are qualified for this job.
- Always observe the country-specific safety rules. Follow the steps below to ensure safety:

1. Prepare for shutdown. Notify all those who will be affected by the procedure.
2. Disconnect the drive system and ensure it cannot be switched back on.
3. Wait until the discharge time specified on the warning labels has elapsed.
4. Check there is no voltage between any power connections or between power connections and the protective conductor connection.
5. Check whether any auxiliary supply circuits are de-energized.
6. Ensure that the motors cannot move.
7. Identify all other hazardous energy sources, for example compressed air, hydraulic systems, or water. Put all energy sources in a safe state.
8. Check that the correct drive system is completely locked.

After you have completed the work, carry out the procedure in reverse to restore readiness for operation.

WARNING

Electric shock with damaged devices

Incorrect handling can damage devices. Hazardous voltages can be created at the housing or at exposed components if devices are damaged, and can cause death or serious injury if parts are touched.

- Ensure compliance with the limits specified in the technical data during transport, storage and operation.
- Never use damaged devices.

Specific application

Observe the safety and accident prevention regulations that are applicable to specific applications (for example the Machinery Directive).

EMERGENCY STOP devices

EMERGENCY STOP devices pursuant to IEC 60204 (corresponds to DIN VDE 0113) must remain effective in all operating modes of the plant or system.

Closed-loop control for secure operation

The following measures are also to be taken and adapted to your conditions for the secure operation of your plant:

- An EMERGENCY STOP concept in accordance with applicable engineering practice (for example European standards EN 60204, EN 418 and related standards).
- Additional measures for limiting axis limits (for example hardware limit switches).
- Devices and measures for protecting motors and power electronics in line with the SINAMICS design guidelines.

  We also recommend conducting a risk assessment in accordance with the essential safety requirements / Annex 1 to the EC Machinery Directive to identify hazards for the plant as a whole.

Excluding hazardous plant states

Hazardous operating states must not occur in the following situations:

- The plant restarts after a voltage dip or power failure.
- Bus communication is reestablished following a fault.
- An undefined system state occurs.

If a hazardous operating state occurs, force an EMERGENCY STOP.

An uncontrolled or undefined system startup must not occur after the EMERGENCY STOP device is unlocked.

External fuses/switches

Install the external fuses/switches in the proximity of the SIMATIC Drive Controller.

If fuses/switches are installed in the same control cabinet as the SIMATIC Drive Controller, for example, a unique assignment between fuses/switches and SIMATIC Drive Controller becomes a lot easier.

Line voltage

The points to note for line voltage are set out below:

- For fixed plants or systems without an all-pole mains disconnect switch, the building technology must include a mains disconnect device (all-pole).
- For load power supplies and power modules, the configured rated voltage range must correspond to the local line voltage.
- For all power circuits of the system, the fluctuation/deviation of line voltage from the rated value must be within the permitted tolerance.

You can find more information in the section Specifications for insulation tests, protection class, degree of protection, and rated voltage (Page 307).

24 V DC supply

The points to note for a 24 V DC supply are set out below:

- Power supply units for the 24 V DC supply must supply safety extra-low voltage (SELV or PELV) in accordance with IEC 61131-2 or IEC 61010-2-201.

Disconnecting 24 V plug-in connections

Note the safety information for use of the SIMATIC Drive Controller:

WARNING

Personal injury and damage to property can occur

Personal injury and property damage can occur if 24 V plug-in connections are disconnected under voltage.

Disconnection of 24 V plug-in connections is only permitted when the power is off.

Protection from external electrical effects

Below are the points to note for protection from electrical effects or faults:

- The system for discharging electromagnetic interference must be connected to a protective conductor with a sufficient cross-section for all plants with the SIMATIC Drive Controller.
- You must ensure that all supply, signal and bus cables are correctly laid and installed.
- For signal and bus lines, a cable break, wire break or a cross-circuit must not lead to undefined states in the plant or system.

Additional references

- For the configuration of a plant with SIMATIC ET 200 I/O (for example ET 200SP, ET 200MP, etc.), please see the ET 200 I/O systems (https://support.industry.siemens.com/cs/ww/en/ps/14029/man) manuals.
- We also recommend the EMC design guidelines / Basic system requirements (https://support.industry.siemens.com/cs/ww/en/view/60612658) configuration manual as a source of further information on EMC.

7.2 Additional rules and regulations for operation

7.2.1 Safety extra-low-voltage (SELV, PELV) for failsafe modules

Please note the following if you use distributed I/O (for example ET200SP) with failsafe modules:

WARNING

The failsafe components/modules must be operated with safety extra-low voltage (SELV, PELV).

You can find more information on safety extra-low voltage (SELV, PELV) in the data sheets of the applicable power supplies, for example.

The failsafe modules operate with the 24 V DC rated voltage. The tolerance range is 19.2 V DC to 28.8 V DC.

The failsafe motor starters operate with the 24 V DC rated voltage. The tolerance range is 20.4 V DC to 28.8 V DC.

Within the overvoltage range of 32 V DC to 36 V DC, the F-modules react in a failsafe manner and the inputs and outputs are passivated. For overvoltages greater than 36 V DC, the F-modules are permanently de-energized.

Use a power supply unit that does not exceed U_m = 36 V DC even in the event of a fault. For more on this, refer to the information in the data sheet on overvoltage protection in the case of an internal error, or implement appropriate measures to limit the voltage, for example use of an overvoltage protector.

All system components that can supply electrical energy in any form whatsoever must fulfill this condition.

Each additional circuit (24 V DC) used in the system must have safety extra-low voltage (SELV, PELV). Refer to the relevant data sheets or contact the manufacturer.

Please also note that sensors and actuators with an external power supply can also be connected to F-modules. Make sure that power is supplied to these components from safety extra-low voltage (SELV, PELV) as well. The process signal of a 24 V DC digital module may not exceed a fault voltage U_m even in the event of a fault.

WARNING

Even when a fault occurs, the permissible potential difference between the supply of the interface module (bus voltage) and the load voltage must not be exceeded.

An external direct electrical connection is one way to meet this requirement. This also prevents potential differences from causing voltage additions at the individual voltage sources, which could cause the fault voltage U_m to be exceeded.

Requirements for power supplies in the event of voltage interruption

Note

To ensure adherence to IEC 61131-2, only use power packs/power supply units (24 V DC) with a mains buffering time of at least 20 ms.

Please also note the requirements of the applicable standards regarding mains buffering time.

You can find information on the power supply components on the Internet.

7.2.2 Requirements of sensors and actuators for fail-safe modules

General requirements for sensors and actuators

Note the following important warning regarding safety-related use of sensors and actuators:

WARNING

Note that instrumentation with sensors and actuators bears a considerable **safety responsibility**. Also bear in mind that sensors and actuators generally do not have a service life of 20 years as defined in IEC 61508:2010 without considerable loss of safety.

The probability of hazardous faults and the rate of hazardous faults of safety functions must comply with an SIL-defined high limit. A listing of values achieved by F-modules in the technical specifications of the F-modules is available under "Fail-safe performance characteristics".

To achieve the respective safety class, suitably qualified sensors and actuators are necessary.

Additional sensor requirements

General rule: A single-channel sensor is sufficient to achieve SIL3/Cat.3/PLd. However, to achieve SIL3/Cat.3/PLd with a single-channel sensor, the sensor itself must be SIL3/Cat.3/PLd-capable; otherwise, the sensor must be connected via two channels to achieve this safety level.

To achieve Cat.4, sensors must be connected via two channels.

WARNING

In the case of fail-safe input modules, a "0" value is output to the F-CPU after detection of faults. You therefore need to make sure that the sensors are implemented in such a way as to ensure the reliable reaction of the safety program when the sensor is in the "0" state.

Example: In its safety program, an EMERGENCY-STOP sensor must achieve the shutdown of the respective actuator when it is in the "0" state (EMERGENCY-STOP button pressed).

Duration requirements for sensor signals

WARNING

Observe the following requirements for sensor signals:

- In order to ensure the correct detection of the sensor signals via fail-safe modules with inputs, you need to make sure that the sensor signals are output for a minimum duration.
- In order for pulses to be detected with certainty, the time between two signal changes (pulse duration) must be greater than the PROFIsafe monitoring time.

Safe detection of inputs through F-modules

The minimum duration of sensor signals for F-modules with inputs depends on the configured input delay, the parameters of the short circuit test of the sensor supplies, and the configured discrepancy behavior for 1oo2 evaluation. The duration of the signal must be greater than the maximum response time of the configured application. Information on calculating the maximum response time can be found in section "Response times" of the respective F-module.

The maximum permitted switching frequency of the sensor signals results from the minimum duration.

Additional requirements for actuators

The fail-safe output modules test the outputs at regular intervals. The F-module briefly switches off the activated outputs and, if necessary, switches on the deactivated outputs. You can assign the maximum duration of the test pulses (dark and light period) with parameters.

High-speed actuators may briefly drop out or be activated during this test. If your process does not tolerate this, set the pulse duration of the light or dark test correspondingly or use actuators that have sufficient lag.

WARNING

If the actuators switch voltages greater than 24 V DC (e.g. 230 V AC), the outputs of a fail-safe output module and the parts carrying a higher voltage must be electrically isolated (in accordance with IEC 60664-1).

This is generally the case for relays and contactors; particular attention must be paid to this requirement for semiconductor switching devices.

Technical specifications of sensors and actuators

Refer to the manuals of the fail-safe modules for technical specifications to assist you in selecting sensors and actuators.

7.2.3 Capacitive crosstalk of digital input/output signals

Readback errors may occur on the F-DQ modules if the fail-safe digital output signals and fail-safe digital input signals are routed through a single cable.

Cause: Capacitive crosstalk

During the bit pattern test of the outputs or the sensor supply of the inputs, the steep switching edge of the output drivers caused by the coupling capacitance of the line may result in crosstalk to other non-activated output or input channels. This may then lead to a response of the readback circuit in these channels. The module detects a cross circuit/short circuit and performs a safety-related shutdown.
Remedy:

- Separate cables for fail-safe DI modules and fail-safe DQ modules / non-fail-safe DQ modules
- Coupling relay or diodes in the outputs
- Disable the short-circuit test of the sensor supply if safety class requirements allow it.

Cause: magnetic crosstalk

Note that an inductive load connected to the F-DQ channels can induce coupling of a strong magnetic field.

Solution:

- Spatially disconnect the inductive loads or shield against the magnetic field.
- Configure the "Max. readback time dark test" to 50 ms or higher.

7.3 Electrical configuration

A system with the SIMATIC Drive Controller consists of several individual components. For a system configured with these components to meet the EMC and safety standards, certain design guidelines must be followed.

Grounding concept and radio interference suppression measures

The individual system components are attached to a metal cabinet panel.

In addition to the protective grounding of system components, special precautions must be taken to guarantee safe, error-free operation of the system. These measure include:

- Shielded signal lines
- Special equipotential bonding connections
- Isolation and shielding measures

Design guidelines

Take the following measures to achieve the best possible noise immunity for the complete system (controller, power unit and machine):

- Ensure a minimum distance of 200 mm between the signal lines and power cables.
- If necessary, signal and power cables may cross one another (if possible at an angle of 90°), but must never be laid close or parallel to one another.
- Only use cables approved by Siemens for the signal lines from and to the SIMATIC Drive Controller.
- Signal lines must not be routed close to strong external magnetic fields (for example motors or transformers).
- If signal lines cannot be routed a sufficient distance away, they must be installed in grounded (metal) cable ducts.

You can find further information on interference suppression measures and the connection of shielded cables in the EMC Design Guidelines configuration manual (https://support.industry.siemens.com/cs/ww/en/view/60612658).

See also

Protective conductor and potential equalization, functional ground (Page 94)

7.4 Wiring rules

Use suitable cables to connect a system to the SIMATIC Drive Controller . You can find wiring rules for the SIMATIC Drive Controller in "Wiring (Page 80)" under the relevant interface descriptions.

You can find the wiring rules and information on connection technology for SINAMICS components in the manuals of the SINAMICS components in question.

7.5 Connecting the supply voltage

24 V DC power supply

The SIMATIC Drive Controller is powered by an external 24 V DC power supply. Power supply units from the SITOP family, for example, can be used.

WARNING

Connection of an unsuitable power supply poses a danger to life from hazardous voltage

Configure the 24 V direct voltage as protective extra-low voltage.

A 24 V DC power supply to be connected to the interfaces must meet the requirements for a protective extra-low voltage (PELV) pursuant to UL 61010. A backup fuse that trips within 120 seconds in the event of a short-circuit at an ambient temperature of 0 °C must also be used.

When the power supply used comes primarily from OVC III circuits up to 600 V AC (line to neutral voltage), the contact distance for the fuse or circuit with single-fault safety must be 3.0 mm pursuant to UL 61010.

If using an external power supply, make sure that the shutdown rating of the fuse corresponds to the max. possible short-time short-circuit current of the power supply used.

Note

The ground potential and enclosure (PE) are connected over a low-impedance internal connection. Therefore, please note the following:

- Insulation monitors are not permitted in the 24 V power supply.
- If you are using external power supplies (for example SITOP), you must connect the ground potential to the protective conductor terminal (PELV).
- Suitably dimensioned potential equalization connections are required between the 24 V power supply and all grounded, physically separate devices. You can find information on potential equalization in Protective conductor and potential equalization, functional ground (Page 94).

Connecting the power supply

The supply voltage is supplied over a 4-pin connector at the front of the SIMATIC Drive Controller (behind the top cover).

Use rigid or flexible cables with a conductor cross-section as specified in the SIMATIC Drive Controller manual (https://support.industry.siemens.com/cs/ww/en/view/109766666) for wiring the power supply.

Tighten the connector using a flat-blade screwdriver.

The following special requirements apply to the connecting cables:

- The 24 V DC line must be approved for temperatures up to at least 75 °C.
- Select the permissible conductor cross-section according to the national regulations (NEC, VDE, etc.). The basis for this can be the output current of the 24 V DC supply or the overcurrent protection device used in the 24 V circuit. If the short-circuit current of the utilized 24 V power supply unit is greater than 50 A, an appropriate overcurrent protection device that limits the short-circuit current to this value must be used upstream of the product.
- The protective conductor connection must be designed with a minimum cross-section in accordance with EN 60204-1.
- Strip 7 mm from the cables for the connection to the 24 V DC connector.
- Adhere to the permissible bending radius of the cables.
- Lay all cables in such a way that no cables are crushed.
- Lay all cables so that they do not touch any abrasive edges.

Note

If power supplies with primary side supplies up to 600 V AC (voltage conductor to neutral conductor) are to be used, the transient voltages on the primary side of the power supply must be limited to 4000 V. Only connect the device to a 24 V DC power supply that meets the requirements of a safe extra-low voltage (PELV) according to UL 61010.

7.6 PROFINET and PROFIBUS DP

Connecting interfaces for communication

Connect the communication interfaces of the SIMATIC Drive Controller using standardized plug connectors.

Use preassembled connecting cables for the connection.

If you want to assemble the communication cables yourself, we recommend cables and RJ45 plug connectors from the Siemens FastConnect system.

Note

The X130 interface of the SIMATIC Drive Controller supports 10, 100 and 1000 Mbps.

For 1000 Mbps, you need 8-wire cables (4x2) and the 1000 Mbit version of the 180° FastConnect connector.

The 145° FastConnect connectors can only be used for Ethernet interface X130 with a max. of 100 Mbps.

7.7 Digital inputs and digital inputs/outputs X122, X132 and X142

The digital inputs and digital inputs/outputs at interfaces X122, X132 and X142 are designed for the connection of sensors and actuators.

The digital inputs and digital inputs/outputs at X122 and X132 interfaces are assigned to SINAMICS Integrated. Through configuration (frames 39x), you can also use the digital inputs and digital outputs (X122/X132) for the CPU.

The digital input/outputs at interface X142 are assigned to the CPU of the SIMATIC Drive Controller and that assignment is fixed.

Using the digital inputs and digital outputs

Digital inputs/digital outputs come in the following types:

- Digital inputs (DI)
- Bidirectional digital inputs/outputs (DI/DQ)

Bidirectional digital input/outputs can be configured channel-by-channel as digital input or digital output.

Assignment of the input/outputs to functions is freely configurable. Technology functions (for example measuring input and output cam) can also be assigned to the inputs/outputs.

Table 7- 1 Use

	X122, X132		**X142**
	DI0 to DI7, DI17, DI18, DI20, DI21	**DI/DQ 8 to 15**	**DI/DQ 0 to 7**
Electrical isolation	Isolated (ground reference M1 or M2)	Non-isolated (ground reference M)	Non-isolated (ground reference M)
Use as:			
Inputs/outputs assigned to the CPU	Yes[1)]	Yes[1)]	Yes
Inputs/outputs assigned to SINAMICS Integrated	Yes	Yes	No
Inputs of measuring input	No	Yes Measuring using central measuring input Measurement using PROFIdrive telegram	Yes Measuring using Timer DI
Cam outputs	No	Yes[1)] DQ can be used as cam output	Yes Timer DQ can be used as high-precision cam output
Oversampling DI	No	No	Yes
Oversampling DQ	No	No	Yes
Event/period duration measurement	No	No	Yes
Pulse width modulation PWM	No	No	Yes
Configuration:			
Assignment	Configurable channel-by-channel on the drive	Configurable channel-by-channel on the drive	Configurable channel-by-channel on the CPU

[1)] You can assign the inputs/outputs with frame 39x of the CPU (see also section Configuration of the digital inputs and digital inputs/outputs (X122/X132) (Page 156)).

Note

Shielded cables are required to ensure the best possible immunity of the digital inputs if they are being used as measuring inputs.

Power supply for X142 digital inputs/outputs

If you use the X142 digital inputs/outputs partly as inputs and partly as outputs (mixed operation), you need to supply the digital inputs over the same power supply as the SIMATIC Drive Controller (X124 module supply).

This restriction does not apply if you operate the X142 digital inputs/outputs exclusively as inputs or as outputs.

The X122/X132 digital inputs/outputs are not affected by this restriction.

Connection cables for digital inputs and digital outputs

Use rigid or flexible cables with a conductor cross-section as specified in the SIMATIC Drive Controller manual for wiring the inputs/outputs.

Note

Maximum permissible cable length

The maximum permissible cable length for the connection cable is 30 m.

Inductive loads

When you use the digital inputs in combination with inductive loads, you must ensure that the permissible voltage range of the digital inputs from -30 V to +30 V is not exceeded by the switching overvoltage of inductive loads.

You best avoid the overload by using auxiliary contacts at the contactor/relay for the digital inputs. If no auxiliary contacts are available, you must integrate an overvoltage protection. Protective wiring with overvoltage protection diode, or a diode combination with Zener diode are possible as overvoltage protection. RC elements and varistors are not suitable due to the residual voltages.

Overvoltage protection for signal lines

Overvoltage protection devices are required for lines of > 30 m. You are advised to use the following snubber to protect the 24 V signal lines from overvoltage:

Table 7- 2 Recommendations for overvoltage protection

Line	Overvoltage protection device
24 V signal lines	Manufacturer: Weidmüller article: MCZ OVP TAZ Article number: 844915 0000

Snubbers must always be positioned at the edge of the area to be protected, for example at the entry to the cabinet. All 24 V lines leaving the protected area must run through a snubber. You can find additional information on overvoltage protection in the SINAMICS S120 manual "Booksize Power Units (https://support.industry.siemens.com/cs/ww/en/view/109754297)".

Additional information

Additional information on the pin assignment of interfaces X122, X132, X142 can be found in the SIMATIC Drive Controller manual (https://support.industry.siemens.com/cs/ww/en/view/109766666).

7.8 DRIVE-CLiQ interfaces X100 to X103

Properties of the DRIVE-CLiQ interfaces

The SIMATIC Drive Controller has four DRIVE-CLiQ interfaces. The components of the SINAMICS S120 drive system including the motors and encoders are connected over the common DRIVE-CLiQ interface.

DRIVE-CLiQ has the following properties:

- Automatic recognition of the components by the SIMATIC Drive Controller
- Uniform interfaces on all components
- Consistent diagnostics down to the components
- Consistent service down to the components
- Each DRIVE-CLiQ interface has 24 V/450 mA for connecting encoders and measuring systems.

Note

The DRIVE-CLiQ cable with its 24 V supply is only used for the components that require it (for example motors with DRIVE-CLiQ interface).

Rules for DRIVE-CLiQ wiring

Rules apply for wiring components with DRIVE-CLiQ. A distinction is made between mandatory DRIVE-CLiQ rules that must be observed and recommended rules.

Further information

You can find further information on DRIVE-CLiQ wiring in the following manuals:

- SIMATIC Drive Controller (https://support.industry.siemens.com/cs/ww/en/view/109766666) manual
- SINAMICS S120 function manual (https://support.industry.siemens.com/cs/ww/en/view/109763287); section on Rules for wiring with DRIVE-CLiQ
- SINAMICS S120 Control Units and Supplementary System Components manual (https://support.industry.siemens.com/cs/ww/en/view/109763286)

7.9 Protective conductor and potential equalization, functional ground

Requirement

You have installed the SIMATIC Drive Controller in the control cabinet.

Please note the following safety instructions:

DANGER

Danger to life from live parts

Touching live parts can result in death or serious injury.

Always disconnect the plant and device from the power supply before commencing work.

Note

Compliance with machine and system functional safety, reliability and EMC requirements is only guaranteed with original SIEMENS cables.

Protective conductor connection

The SIMATIC Drive Controller and the SINAMICS S120 drive system are designed for use in control cabinets with protective conductor connections.

A connection for the protective conductor is available on the SIMATIC Drive Controller :

- Screw M5, Torx T25
- Tightening torque: 3 Nm (26.6 lbf in)

This connection is also used for the equipotential bonding conductor.

All plant and machine components are to be included in the protection concept. The drive line-up is to be installed on a common bare metal mounting plate ⑧ to ensure compliance with EMC limits. The connection provides a low-impedance connection to the mounting plate.

The mounting plate must be connected to the protective conductor connection of the control cabinet. This is done by establishing a connection ⑩ to the protective conductor bar ⑪. Connect the protective conductor bar ⑪ to the protective conductor ⑯.

The protective connection (PE connection) of the motors used must be over the motor cable ⑫.

For EMC reasons, the shield of the motor cable should be connected over a large surface area both at the Motor Module and at the motor.

Components that are **not** connected over a low-impedance connection, for example, control cabinet door ⑭ connected with hinges, also require a protective connection ⑬.

Example: Booksize axis group, consisting of SIMATIC Drive Controller, Line Module and Motor Modules.

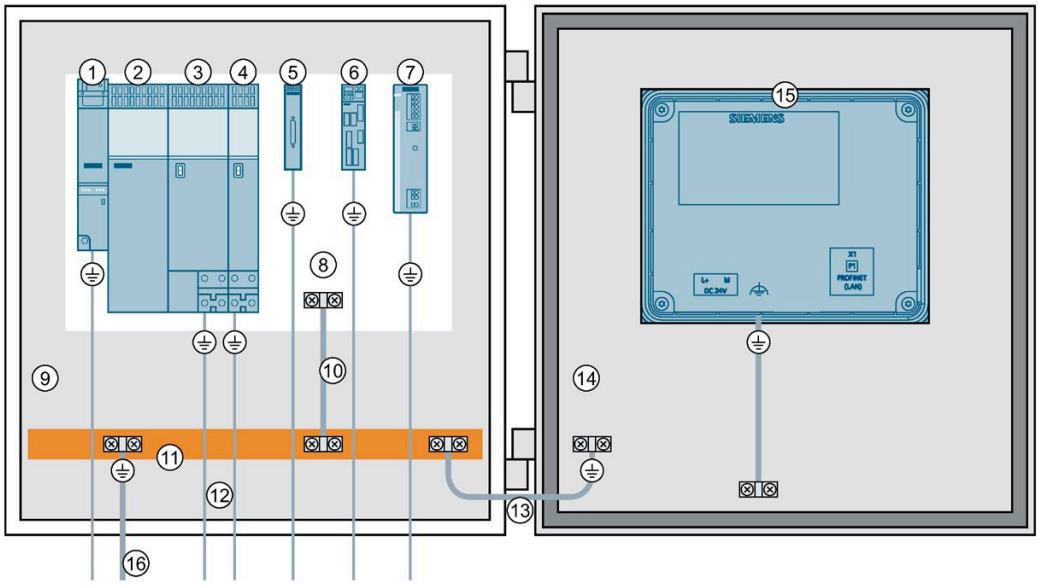

① SIMATIC Drive Controller
② SINAMICS S120 Line Module
③ SINAMICS S120 Double Motor Module
④ SINAMICS S120 Single Motor Module
⑤ SINAMICS Sensor Module Cabinet-Mounted (SMC)
⑥ SINAMICS Terminal Module (TM)
⑦ Power supply, for example, SITOP
⑧ Mounting plate, metallic bright
⑨ Control cabinet
⑩ Protective conductor connection
⑪ Protective conductor bar
⑫ Motor cable
⑬ Flexible protective conductor
⑭ Control cabinet door
⑮ HMI device
⑯ Protective conductor

A mounting plate also acts as potential equalization surface. No additional equipotential bonding is therefore required within the drive line-up.

Dimension the protective conductor as follows:

Table 7- 3 Cable cross-section for copper protective conductor

Cross-section of mains supply conductor	Cross-section of protective conductor
≤ 16 mm²	As mains supply conductor cross-section
> 16 mm² to ≤ 35 mm²	16 mm²
> 35 mm²	0.5 × mains supply conductor cross-section

For other materials, the cross-section of the protective conductor is to be increased so that it has at least the same conductance as copper.

Potential equalization

If there is no common bare metal mounting plate, you need different potential equalization that comes as close as possible to a cross-section in accordance with the "Cable cross-section for copper protective conductors" table, or at least with the same conductance.

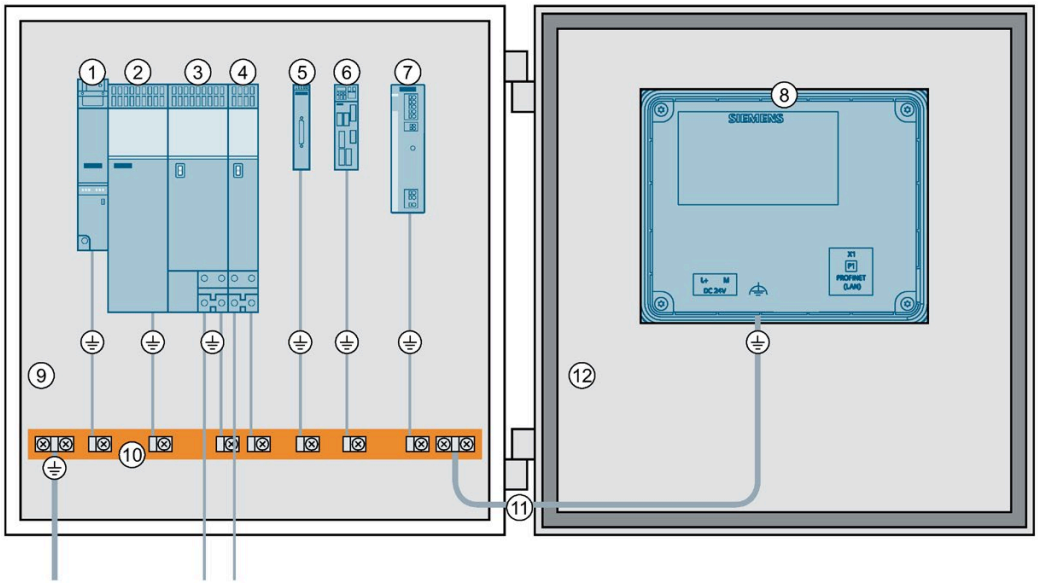

① SIMATIC Drive Controller
② SINAMICS S120 Line Module
③ SINAMICS S120 Double Motor Module
④ SINAMICS S120 Single Motor Module
⑤ SINAMICS Sensor Module Cabinet-Mounted (SMC)
⑥ SINAMICS Terminal Module (TM)
⑦ Power supply, for example, SITOP
⑧ HMI device
⑨ Control cabinet
⑩ Functional ground bar
⑪ Flexible protective conductor
⑫ Control cabinet door

Note

The ground potential and enclosure (PE) for the SIMATIC Drive Controller are connected over a low-impedance internal connection.

WARNING

Electric shock without grounding

If there is no protective conductor connection or the connection is incorrectly implemented for devices with protection class I, high voltages can be present at open, exposed parts, which can result in death or serious injury if the parts are touched.

- Ground the device in compliance with the applicable regulations.

Communication connections

Equipotential-bonding cables are not required for fieldbus components within a control cabinet if they are configured as detailed above.

For communication connections between separate parts of a plant (for example devices in different control cabinets) and between buildings or parts of buildings, you must ensure potential equalization.

If data lines (PROFINET, PROFIBUS or DRIVE-CLiQ), for example, run through more than one control cabinet, potential equalization with a potential equalization conductor is required. Lay the equipotential bonding conductor together with the data line.

The following minimum cross-sections are required pursuant to IEC 60364-5-54:

- At least 6 mm^2 for copper
- At least 16 mm^2 for aluminum
- At least 50 mm^2 for steel

NOTICE
Disruption to data connection or device defect in the absence of equipotential bonding Considerable leakage current can flow over the data line if no potential equalization is set up. Disruption to data connection or device defects are possible. Lay an equipotential bonding conductor together with the data line.

Due to the maximum length of 100 m for PROFIBUS copper cables at 12 Mbps or for PROFINET copper cables, and aspects of electrical isolation, EMC protection and equipotential bonding, we recommend using fiber-optic cables for connections between buildings.

7.10 Connecting cable shields

Using shielded cables

The following options are available for the shield connection when using shielded cables:

- A shield connection using a shielding bus supplied separately
- Shield contact with shield contact element at the top of the SIMATIC Drive Controller enclosure.

Using a shielding bus

Proceed as follows to use a shield bus:

1. Strip the cable shielding.
2. Attach the shield to a grounded shield bus after the point where the cable enters the cabinet.
3. Run the shielded cable as far as the module but do not establish a connection to the shield there.

Using a shield contact on the SIMATIC Drive Controller

1. Loosen the shield contact bracket ① far enough to create space under the bracket (M3 screw, Torx T10).
2. Strip the cable shielding and insert the cable.
3. Attach the retaining bracket so that the cable shield and cable ② are pressed against the shield support by the retaining bracket (tightening torque 0.8 Nm or 7.1 lbf in).

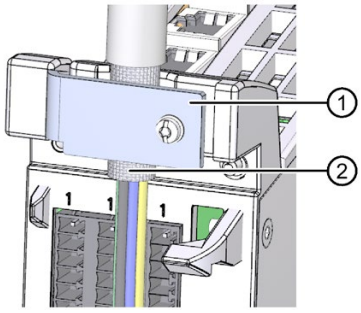

① Shield contact bracket

② Cable shield

Figure 7-1 Shield contact at the SIMATIC Drive Controller

WARNING

Unconnected cable shields cause electric shock

Hazardous touch voltages can occur through capacitive cross-coupling due to unconnected cable shields.

- Connect at least one end of cable shields and unused conductors of cables to the grounded enclosure potential.

Configuring 8

8.1 Overview

Overview

"**Configuring**" refers to all steps (configuration, parameter assignment and programming) required for creating an executable project in the TIA Portal.

You transfer the configuration (preset configuration) and mode of operation of the CPU and integrated automatic speed control SINAMICS Integrated to the SIMATIC Drive Controller by configuring, assigning the parameters of and connecting the individual hardware components. You perform the steps needed for this in the device and network views in the TIA Portal and in SINAMICS Startdrive (SINAMICS Integrated).

"**Configuring**" refers to arranging and networking devices and modules within the device or network view of the TIA Portal. The TIA Portal provides a graphic display of hardware components. It also shows the module racks, for example, for ET 200SP and ET 200MP I/O systems, and the drive line-up of SINAMICS Integrated.

During startup, the configured preset configuration is compared with the actual configuration of the system. Using parameter assignment, you can specify the response of the CPU to errors in the hardware configuration.

"**Parameter assignment**" means setting the properties of the components used (CPU, SINAMICS Integrated, I/O modules, etc.).

The TIA Portal compiles the hardware configuration (result of "configuring" and "parameter assignment") and loads it to the components.

"**Programming**" means creating the user programs. The TIA Portal provides high-performance programming editors for efficient engineering. You can, for example, create programs in structured control language (SCL), ladder logic (LAD), function block diagram (FBD) or statement list (STL).

8.2 Hardware/software requirements

Hardware requirements

The following requirements must be met for commissioning the SIMATIC Drive Controller:

- Your plant has been installed and wired.
- Your PG/PC has been connected to the SIMATIC Drive Controller over the PROFINET or PROFIBUS interface.

Software requirements

Table 8- 1 Required configuration software

Configuration in the TIA Portal	Requirement
Integrated SIMATIC S7-1500 CPU	SIMATIC STEP 7 Professional, V16 or higher
	For programming the safety program of the F-CPU "STEP 7 Safety Advanced" from V16 onwards
SINAMICS Integrated	SINAMICS Startdrive Basic or Startdrive Advanced, V16 or higher

Additional information

You can find an overview of the most important documents and links for the TIA Portal on the Internet (https://support.industry.siemens.com/cs/en/en/view/65601780).

You can find manuals, application examples and FAQs on Motion Control (https://support.industry.siemens.com/cs/ww/en/view/109751049) on the following topic page.

Note

Configuration without STEP 7/SINAMICS Startdrive

If you want to open projects that already contain a SIMATIC Drive Controller and a SINAMICS drive, you need STEP 7 **and** SINAMICS Startdrive.

Note

Connecting SINAMICS Integrated online

To connect SINAMICS Integrated online:

- You need STEP 7 Professional and SINAMICS Startdrive (V16 or higher).
- The hardware configuration must have been loaded to the SIMATIC Drive Controller.
- A subnet must be configured at the interface to which you are connecting your PC/PC.
- The configured SINAMICS firmware version must match the firmware version of the device.

For information on how to determine the firmware version of the device without SINAMICS Startdrive, refer to the section Determining the SINAMICS Integrated version (Page 114).

You can only configure the drive offline with SINAMICS Startdrive without STEP 7 Professional.

8.3 Configuration procedure

Proceed as follows to create a new project in the TIA Portal and add a SIMATIC Drive Controller:

Creating a project

1. Start TIA Portal.
2. Select the action "Start" > "Create new project" in the portal view.
3. Assign a name for the new project under "Project name".
4. Set the storage location with the "..." button.
5. If required, enter comments in the Comment field.
6. Click the "Create" button to create the project.

You have created the project and are currently in the portal view. To continue with the configuration, switch to the project view.

Adding a SIMATIC Drive Controller to the project

1. Select "Add new device" in the project tree.
2. In the "Add new device" dialog, select the device version you are using under "Controller" > "SIMATIC Drive Controller" and the firmware version of the device under "Version".
3. You use the "Open device view" checkbox to specify whether the hardware configuration view is to be opened once the device has been created. Keep the checkbox selected if you want to configure the CPU next.
4. Click OK to confirm the new device.

You have added the SIMATIC Drive Controller to the project and can now continue with configuration, parameter assignment and programming.

Display of the SIMATIC Drive Controller

When you add a SIMATIC Drive Controller to the project, by default:

- A "Drive Controller_n" group is generated
- Two devices are added to the group, for example:
  - PLC_n [CPU 1504D TF] and
  - Integrated_n [S120, CPU 150xD]

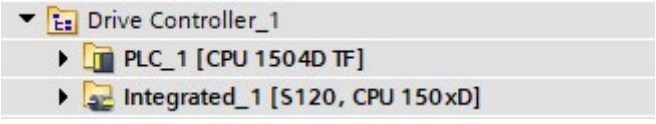

Figure 8-1 SIMATIC Drive Controller in the project tree, device collapsed

SINAMICS Integrated is only created if the following conditions are met:

- Startdrive is installed
- The option "Create including SINAMICS Integrated (Requirement: Startdrive is installed)" is activated, in the "Options" menu under "Settings" > "Hardware configuration" > "Device-specific settings".

Both devices are networked via the PROFIdrive Integrated_n subnet.

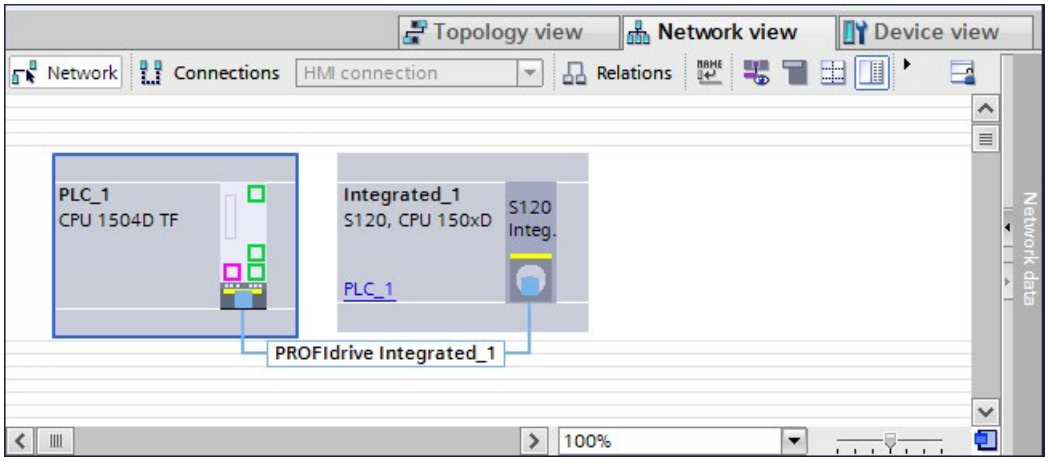

Figure 8-2 SIMATIC Drive Controller network view

When a new SIMATIC Drive Controller is created, all objects are assigned a uniform instance number (n).

CPU PLC_n and integrated automatic speed control Integrated_n are modeled as separate devices. You can also move the devices as required to other groups and delete the "Drive Controller" group. You can also add other devices to the "Drive Controller" group, for example a CU320-2 PN, if you require more than six servo drives.

Note

Adding SIMATIC Drive Controller directly to group

You can add the SIMATIC Drive Controller directly to a group folder in the project tree even if the group folder is a subfolder:

1. Select the required group.
2. Go to the menu bar or shortcut menu and select "Add" > "Device".

Creation options

The CPU and SINAMICS Integrated are by default created in a shared group folder in the project tree.

To change this behavior, activate or deactivate the relevant options for the SIMATIC Drive Controller in the "Options" menu under "Settings" -> "Hardware configuration" -> "Device-specific settings".

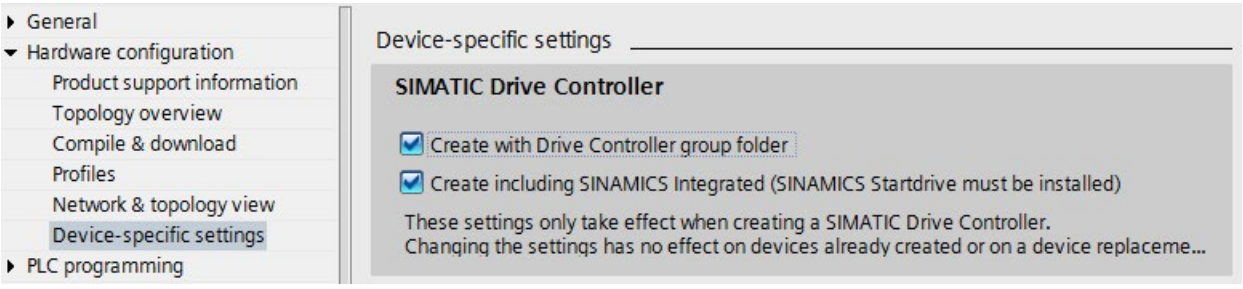

Figure 8-3 Creation options for creating a SIMATIC Drive Controller

The table below sets out the benefits of configuration with or without grouping.

Table 8- 2 Guide to grouping

With "Drive Controller" grouping	Without grouping or user-specific grouping
• Actions apply to all devices in a group, for example – Go online – Load to/from device – Copy • You can add additional devices to the group as required, for example – with CU320-2 – with I/O system	• Greater flexibility in project structure in the project tree, for example – by machine/plant modules – by CPUs and drives, in separate groups

If you want to create the SIMATIC Drive Controller **without the integrated drive**, deselect the "Including SINAMICS Integrated" option.

Deselecting this option can, for example, be useful in the following cases:

- You are copying a previously configured SINAMICS Integrated drive control from another project.
- The project is to be processed by another user without SINAMICS Startdrive.
- SINAMICS Integrated is not to be configured until later.
- SINAMICS Integrated is not being used, for example, because another drive system is being used.

"Drive Controller" group

For the "Drive Controller" group, you have a range of functions to choose from in the menu bar, toolbar and shortcut menu. With "Go online", for example, you can go online with all devices in the group.

The functionality supported by a given device depends on the device and state. For example, the function "Download to device" is supported by the SINAMICS Integrated but not by the CPU when there is an active online connection. The "Load preview" dialog provides relevant information and suggestions for actions for loading.

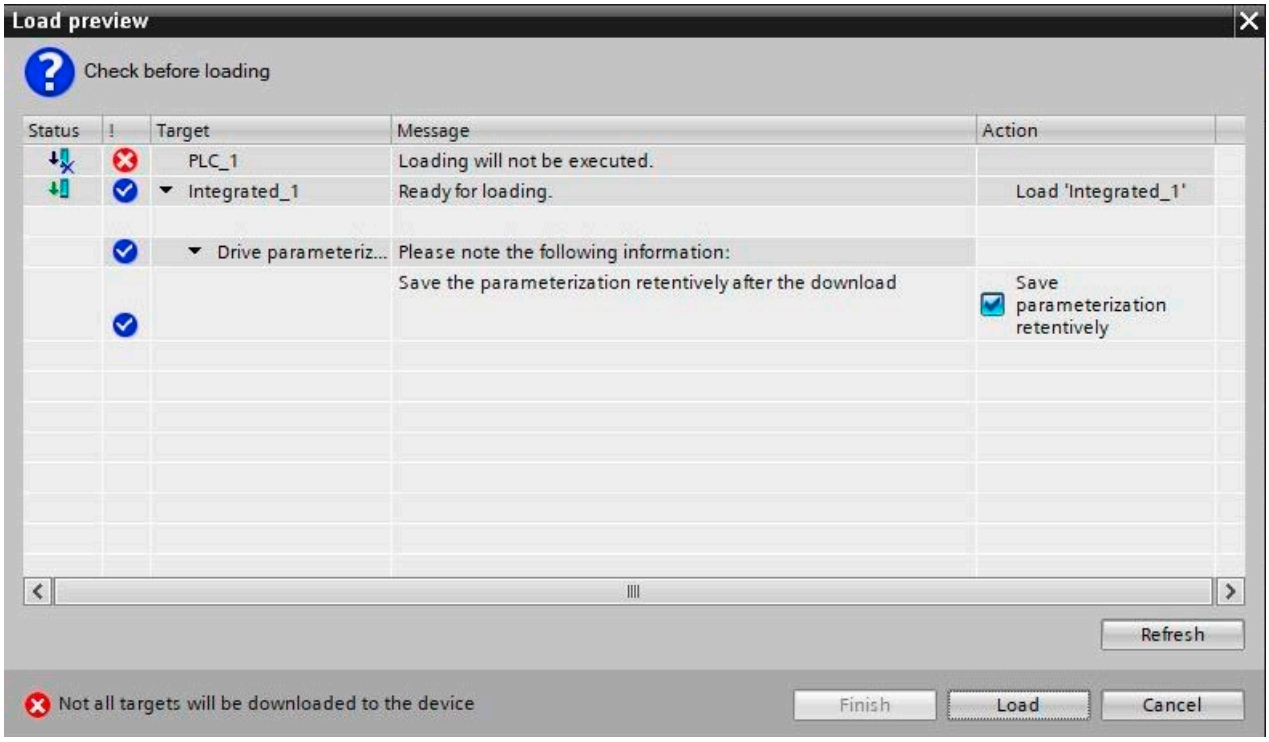

Figure 8-4 Load preview

Subsequently configuring SINAMICS Integrated

Requirements: STEP 7 Professional and SINAMICS Startdrive are installed.

Proceed as follows if your project only contains the CPU of a SIMATIC Drive Controller and you want to configure the missing SINAMICS Integrated.

1. Select "Add new device" in the project tree.
2. In the "Add new device" dialog, go to "Drives" > "Drives & starters" > "SINAMICS drives" > "SINAMICS S120 Integrated for SIMATIC" and select SINAMICS Integrated, and select the firmware version of the device under "Version".
3. Click OK to confirm.

Result: SINAMICS Integrated has been added to the project tree and can be networked with the CPU.

Subsequently configuring a CPU

Requirements: STEP 7 Professional and SINAMICS Startdrive are installed.

Proceed as follows if your project only contains a SINAMICS Integrated of a SIMATIC Drive Controller and you want to configure the missing CPU.

1. To ensure that only the CPU (without SINAMICS Integrated) is created, deselect the "Including SINAMICS Integrated" option under "Settings" > "Hardware configuration" > "Device-specific settings" in the "Options" menu. Also deselect the "Create Drive Controller with group folder" option if you do not want a group folder to be created. Alternatively, you will need to delete the components you do not require.
2. Select "Add new device" in the project tree.
3. In the "Add new device" dialog, select the relevant device version under "Controller" > "SIMATIC Drive Controller" and the firmware version of the device under "Version".
4. Click OK to confirm.

Result: The CPU has been added to the project tree and can be connected to the SINAMICS Integrated .

Replacing devices in STEP 7

The following section explains how to replace a SIMATIC S7-1500 CPU with a SIMATIC Drive Controller in an existing project or vice versa.

1. Select the device to be replaced in the project tree and right-click to open the shortcut menu.
2. Select the "Replace device..." option
3. Select the module you want to use in the right-hand column. The "Compatibility information" section indicates whether the devices to be replaced are compatible and whether or not and, if so, which configurations will be lost in the process.
4. Click "OK" to confirm.

When replacing devices, remember that the SIMATIC Drive Controller consists of two networked devices – a CPU and a SINAMICS Integrated.

Replacing a modular SIMATIC S7-1500 CPU with a SIMATIC Drive Controller (CPU)

If you replace a modular SIMATIC S7-1500 CPU with a SIMATIC Drive Controller, the configurations at the integrated PROFINET interfaces and at the integrated PROFIBUS interface are retained. In other words, the interfaces are mapped to an interface of the same type.

Configurations of the onboard I/O of S7-1500 compact CPUs are not applied. Please also note the compatibility information in the device replacement dialog.

Examples of alarms:

Message	**Explanation** **(Difference compared to modular SIMATIC S7-1500 CPUs)**
The 'CPU display' object is not supported in the new configuration and is removed.	Drive Controller has no display
The 'Virtual communication interface' object is not supported in the new configuration and is removed.	Drive Controller has no backplane bus, and communications processors (e.g. CP 1543-1) can therefore not be used. The communication interface required for this is removed.
'DI/DQ 8x24VDC' is created	Drive Controller has technology I/Os
'Port' is created	The PROFINET IO IRT interface for the Drive Controller has an additional third port
'PROFIdrive interface' is created	Drive Controller has a SINAMICS Integrated. The communication with the PLC takes place via a 'PROFIdrive interface'

The centralized I/O in the S7-1500 automation system is moved to the "unplugged modules" area. If required, copy the I/O to a distributed I/O ET 200MP system before device replacement.

A connected SINAMICS S120 CU320-2 remains connected – it is not swapped out for a SINAMICS Integrated. If you require a SINAMICS Integrated, you need to create it manually.

Replacing a SIMATIC Drive Controller (CPU) with a modular SIMATIC S7-1500 CPU

For the device replacement, PROFIdrive Integrated is removed and SINAMICS Integrated remains as a non-networked device in the project. You can connect SINAMICS Integrated to a SIMATIC Drive Controller CPU again at a later time.

If you no longer need SINAMICS Integrated, manually delete it from the configuration.

Configurations at interface X142 are not applied.

Note

Device replacement with other CPU classes (for example ET 200SP CPUs or ET 200pro CPUs) is not possible.

Replacing SINAMICS Integrated with SINAMICS S120 CU320-2 and vice versa

Device replacement is currently not supported

Changing the firmware version of the CPU

You change the firmware version of the SIMATIC Drive Controller CPU by replacing the device. Replace the CPU with a CPU with the preferred firmware version.

Changing the firmware version of the SINAMICS Integrated

You can only change the firmware version of the SINAMICS Integrated by deleting and reconfiguring the SINAMICS Integrated (see also paragraph above "Subsequently configuring SINAMICS Integrated ").

For additional information, refer to the following FAQ on the Internet (https://support.industry.siemens.com/cs/ww/en/view/109782271).

If you want to change the firmware version of connected SINAMICS S120 CUs, you must also start a new configuration with SINAMICS Startdrive .

Note

Firmware versions must match

SINAMICS Startdrive can only establish an online connection to SINAMICS Integrated or a SINAMICS S120 CU when the configured firmware version matches the firmware version of the device.

For information on how to determine the firmware version of the device, refer to the section Determining the SINAMICS Integrated version (Page 114).

8.4 Display in the TIA Portal

Project tree

In the project tree, STEP 7 creates the project tree for the SIMATIC Drive Controller . The project tree contains all elements and editors of the project.

Table 8- 3 Structure of the project tree

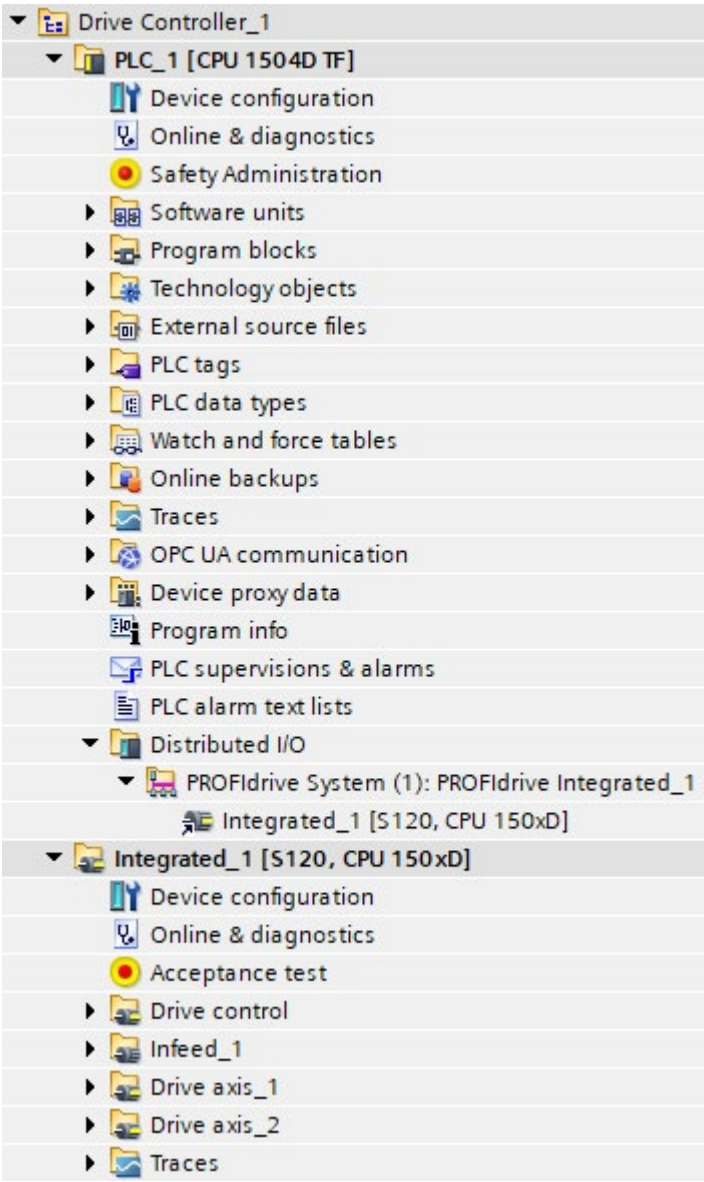

Under the "Drive Controller" group folder, you will find both the CPU and SINAMICS Integrated.

Under the "PLC" entry, you will find the device configuration and diagnostic options for the CPU, for example. You configure, assign parameters for and program the CPU with STEP 7 Professional.

Under the "Integrated" entry, you will find the device configuration and diagnostic options for integrated automatic speed control, for example. You configure and assign parameters for the SINAMICS Integrated with SINAMICS Startdrive.

Note

If there is no entry for SINAMICS Integrated, check whether SINAMICS Startdrive is correctly installed and whether the "Including SINAMICS Integrated" option is selected in the settings.

Finding associated device in the project tree

You can also assign the CPU and the associated SINAMICS Integrated in the project to other random groups.

To find the respective associated device, follow these steps in the project tree:

1. Below the CPU, for example, "PLC_1 [CPU 1504D TF]", select the "SINAMICS Integrated" (e.g. "Integrated_1 [S120, CPU 150xD]) under "Distributed I/O" > "PROFIdrive system".
2. Use the "Go to device" shortcut menu of the CPU to navigate to the associated SINAMICS Integrated.
3. To navigate from the SINAMICS Integrated to the associated CPU, select the SINAMICS Integrated , for example, "Integrated_1 [S120, CPU 150xD]".
4. Use the shortcut menu "Go to master I/O system" to return to the PROFIdrive system and thus to the associated CPU.

Network view

The network view displays the two components of the SIMATIC Drive Controller, for example:

- PLC_1 [CPU 1504D TF] and
- Integrated_1 [S120, CPU 150xD]

Different content is shown in the Inspector window depending on the selection in the network view:

- Select an interface ① to configure it
- Select the CPU ② to make CPU settings
- Select the SINAMICS Integrated ③ to make SINAMICS Integrated settings (for example frame settings)
- Select the PROFIdrive Integrated subnet ④ to set the bus cycle time (and thus indirectly the MC Servo clock) or couple the SINAMICS Integrated with another clock system (X142 technology I/Os or PROFINET interface X150).

You can copy/add/delete the components of the SIMATIC Drive Controller individually or together. If you subsequently configure a SINAMICS Integrated, you need to assign the SINAMICS Integrated manually to the master system to establish the PROFIdrive Integrated connection.

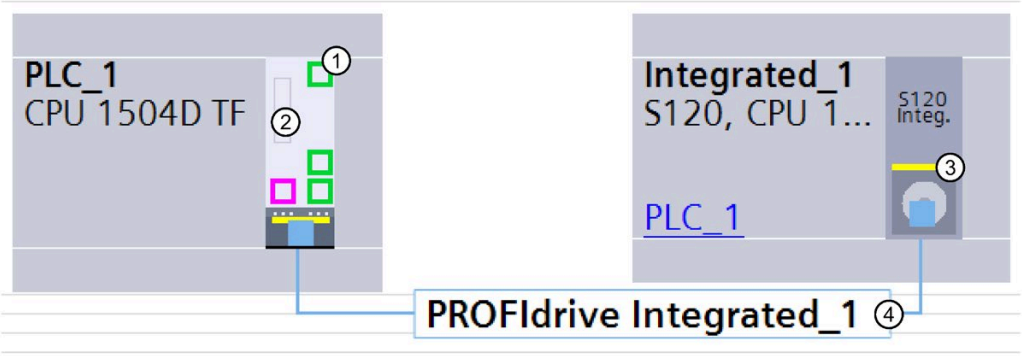

Figure 8-5 Display in the TIA Portal – network view

Topology view

As the topology view is irrelevant for the SINAMICS Integrated, only the CPU of the SIMATIC Drive Controller is displayed.

Device view

There is a separate device view for each of the two components of the SIMATIC Drive Controller.

- CPU device view: Parameter assignment of the CPU including communication interfaces
- SINAMICS Integrated device: Configuration of the SINAMICS S120 drive components (Line Modules, Motor Modules, motors, etc.), drive frames, etc.

You can switch between the two views simply and easily with a link.

As in the network view, different content is shown in the Inspector window depending on the selection in the device view.

8.5 Configuration information

8.5.1 Notes on configuration software

Routing

The PROFIdrive Integrated represents a lower-level network. A programming device connected over PROFINET/PROFIBUS uses routing to access the SINAMICS Integrated .

The following requirements must be met in order for you to set up an online connection with the SINAMICS Integrated:

- A subnet needs to be configured for the interface to which you are connecting the programming device. Routing to the SINAMICS Integrated is only possible if a subnet is configured.
- The configuration must be loaded to the CPU for CPU routing information to be available.

Accessible devices

As the SINAMICS Integrated is assigned to a lower-level network, you can only access the higher-level CPU – and not the SINAMICS Integrated – via "Accessible devices".

IP address of the PROFINET interfaces

With the SIMATIC Drive Controller, the IP addresses 192.168.215.240 to 192.168.215.255 are reserved for internal communication (subnet mask 255.255.255.240). When configuring the PROFINET interfaces (X150, X160, X130), you must ensure that the internal addresses are not located in their network. With IP, the network is defined by an AND connection of IP address and subnet mask.

Startdrive installation without STEP 7 Professional

If only Startdrive is installed, you can configure a SINAMICS Integrated "offline". Online functions are not possible because routing information is not available.

STARTER configuration tool

It is not possible to configure SINAMICS Integrated with the STARTER configuration tool.

Upload as new station

The SIMATIC Drive Controller can be uploaded as a new station. Only the CPU is loaded. Requirement: You have only configured the CPU and not the SINAMICS Integrated.

An upload of the SINAMICS Integrated is not currently supported.

8.5.2 Mixed operation of control modes for SINAMICS Integrated

Mixed operation of control modes for SINAMICS Integrated

The mixed operation of servo control, vector control and U/f control is possible but is subject to restrictions.

Permissible:

- The mixed operation of servo control and U/f control
- The mixed operation of vector control and U/f control

Not permitted:

- The mixed operation of servo control and vector control

Note the following permissible drive quantities for mixed operation.

Mixed operation of servo control and U/f control

In mixed operation of servo control and U/f control, a drive takes up exactly as much computing power in servo control at 125 µs as two drives in U/f control at 500 µs. In combination with the servo control, a maximum of 11 drives is permitted (1 servo control plus 10 U/f controls).

Table 8- 4 Number of drives with mixed operation servo control

Number of drives in servo control at 125 µs and 62.5 µs current controller cycle times				Number of drives in U/f control at 500 µs current controller cycle time	
6	125 µs	3	62.5 µs	0	-
5	125 µs	-	-	2	500 µs
4	125 µs	2	62.5 µs	4	500 µs
3	125 µs	-	-	6	500 µs
2	125 µs	1	62.5 µs	8	500 µs
1	125 µs	-	-	10	500 µs
0	-	0	-	12	500 µs

Mixed operation of vector control and U/f control

In mixed operation of vector control and U/f control, a drive takes up exactly as much computing power in vector control at 250 µs as two drives in U/f control at 500 µs. In combination with the vector control, a maximum of 11 drives is permitted (1 vector control plus 10 U/f controls).

Table 8- 5 Number of drives with mixed operation vector control

Number of drives in vector control at 250 µs and 500 µs current controller cycle times				Number of drives in U/f control at 500 µs current controller cycle time	
6	500 µs	3	250 µs	0	-
5	500 µs	-	-	2	500 µs
4	500 µs	-	-	4	500 µs
3	500 µs	-	-	6	500 µs
2	500 µs	-	-	8	500 µs
1	500 µs	-	-	10	500 µs
0	-	0	-	12	500 µs

Note

In mixed operation of vector control and U/f control, the following drive constellations and current controller cycle times are **not** possible:

- 1 drive (vector control, 250 µs) and 8 drives (U/f control, 500 µs)
- 2 drives (vector control, 250 µs) and 4 drives (U/f control, 500 µs)

Additional information

For more information on the control types and on the system rules and possible sampling times, refer to the SINAMICS S120 Drive Functions function manual (https://support.industry.siemens.com/cs/de/en/view/109763287).

8.5.3 Changing the current controller cycle time for SINAMICS Integrated

Backlash on motion control functions

A change of the current controller cycle time p0115[0] ≠ 125 µs results in a re-initialization of the clock system.
Afterwards, the execution of Motion Control instructions and access to Motion DBs can result in programming errors that will put the CPU into the STOP operating state by default.

Solution:

You can prevent STOP of the CPU by configuring the programming error OB (OB 121).
You can then acknowledge any Motion Control alarms that occur with the Motion Control instruction "MC_Reset" ("Restart" parameter = TRUE).

Recommendations for action

Servo drives with current controller cycle time = 125 µs

It is best to use the standard sampling times p0112 = 3 (factory setting).
With this setting, the drives are operated with a current controller cycle time p0115[0] = 125 µs.

Servo drives with current controller cycle time ≠ 125 µs or vector drives

When current controller cycle times ≠ 125 µs are required for servo drives or when you are using vector drives, the Motion Control instructions and Motion DB access operations may only take place after a re-initialization of the clock system.
You can implement this behavior, for example, by programming a wait time in the startup OB (OB 100).
This is not possible with a delta download. In this case, configure OB 121 and use the MC_Reset instruction (parameter "Restart" = TRUE) to acknowledge any motion control alarms that occur.

Specifying the bus clock cycle

To prevent sign-of-life failures at the drives, the bus clock cycle must be an integer multiple of the current controller cycle time p0115[0].

8.5.4 Determining the SINAMICS Integrated version

The firmware version of the SINAMICS Integrated is displayed in SINAMICS Startdrive using the option "Online & diagnostics" followed by the secondary option "Diagnostics > General". If an online connection to SINAMICS Integrated is not possible with Startdrive (in this context, also see the section Hardware-/software requirements (Page 100)), then you have the following alternatives for determining the SINAMICS Integrated firmware version on the device (from PLC firmware V3.0 onwards):

- in the TIA Portal in the CPU diagnostics using the option "Online & Diagnostics" and the secondary option "Diagnostics > General" under "Drive Controller information"
- in the CPU Web server on the web page "Diagnostics" in the "Identification" tab under "Drive Controller Info"
- in the exported diagnostic buffer of the CPU

8.6 Address assignment

8.6.1 Addressing

Introduction

The automation components and onboard I/O must have unique addresses so that they can be addressed. The following section explains the various address areas.

I/O address

I/O addresses (input/output addresses) are required in the user program to read inputs and set outputs.

STEP 7 automatically assigns input and output addresses when modules are configured. Each module uses a continuous range of input and/or output addresses corresponding to its volume of input and output data.

The same applies for the onboard I/O of the SIMATIC Drive Controller.

Module	Rack	Slot	I address	Q address	Type
PLC_1	0	1			CPU 1504D TF
DI/DQ 8x24VDC_1	0	1 X142	0...75	0...41	DI/DQ 8x24VDC
PROFINET Interface_1	0	1 X150			PROFINET interface
Port_1	0	1 X150 P1R			Port
Port_2	0	1 X150 P2R			Port
Port_3	0	1 X150 P3			Port
PROFINET Interface_2	0	1 X160			PROFINET interface
Port_1	0	1 X160 P1			Port
PROFINET Interface GBIT_3	0	1 X130			PROFINET interface GBIT
Port_1	0	1 X130 P1			Port
DP Interface_1	0	1 X126			DP interface
PROFIdrive Interface_1	0	1 PCIe			PROFIdrive interface

Figure 8-6 Automatic assignment of input/output addresses of interface X142 by STEP 7

STEP 7 assigns the address areas of the modules by default to the process image partition 0 ("Automatic updating"). This process image partition is updated in the main cycle of the CPU.

Note

If you have interconnected the X142 digital input/outputs with the technology object measuring input, output cam or cam track, isochronous mode and assignment to the process image partition OB servo are essential.

The setting is made automatically as soon as you interconnect a digital input or digital output with a corresponding technology object.

Device address (e.g., Ethernet address)

Device addresses are addresses of modules with interfaces to a subnet (e.g., IP address or PROFIBUS address). They are required to address the various devices on a subnet, for example, to download a user program.

Hardware identifier

STEP 7 automatically assigns a hardware identifier (HW identifier) for identification and addressing of modules and submodules. The HW identifier is used, for example, for diagnostics alarms or for instructions, to identify the faulty module or the addressed module.

In the "System constants" tab of the Inspector window, you will find all hardware identifiers and their symbolic names (of the hardware identifier) for the selected module.

Local~DP_Interface_1	Hw_Interface	60	PLC_1
Local~PROFIdrive_Interface_1	Hw_Interface	61	PLC_1
Local~PROFINET_Interface_1	Hw_Interface	64	PLC_1
Local~PROFINET_Interface_2	Hw_Interface	72	PLC_1
Local~PROFINET_Interface_GBIT_3	Hw_Interface	120	PLC_1
Local~DI_DQ_8x24VDC_1	Hw_SubModule	257	PLC_1
Local~PROFINET_Interface_1~Port_1	Hw_Interface	65	PLC_1
Local~PROFINET_Interface_1~Port_2	Hw_Interface	66	PLC_1
Local~PROFINET_Interface_1~Port_3	Hw_Interface	67	PLC_1
Local~PROFINET_Interface_2~Port_1	Hw_Interface	73	PLC_1
Local~PROFINET_Interface_GBIT_3~Port_1	Hw_Interface	121	PLC_1

Figure 8-7 Automatic identification and addressing of modules and submodules in STEP 7

8.7 Address space

8.7.1 Address space of the digital inputs and digital inputs/outputs

Address space of the digital inputs and digital inputs/outputs

The assignment of address space depends on which digital inputs and digital inputs/outputs are used:

- 8 DI/DQ at interface X142 (I/Os are assigned to the CPU)
- 12 DI, 8 DI/DQ at interface X122/X132 (I/Os are by default assigned to the SINAMICS Integrated)

Interface X142 (CPU)

The digital input/outputs of interface X142 are permanently assigned to the CPU.

Table 8- 6 Scope of the input/output data of the digital input/outputs of interface X142

I	76 bytes
Q	42 bytes

STEP 7 assigns the addresses automatically. You can change the addresses in the hardware configuration of STEP 7, that is, freely assign the start address. The addresses of the channels are derived from the start address.

You can find the addresses in the device view of the CPU under Device overview and in the Inspector window, on the General tab under I/O addresses.

You can find a description of the control and feedback interface of the digital input/outputs at interface X142 in Parameter assignment of digital input/outputs (X142) (Page 121).

Interfaces X122/X132 (SINAMICS Integrated)

The digital inputs and digital inputs/outputs are by default assigned to the drive (CU DO1). You can use frame interconnection so that these digital inputs and digital inputs/outputs can also be used by the CPU. To do so, you configure a frame 39x for automatic speed control.

Note

Telegram 393 is set by default during configuration of the SINAMICS Integrated.

Table 8- 7 Scope of input/output data of the digital inputs and digital inputs/outputs X122/X132

Frame	Inputs	Outputs	Use of Integrated/CU320-2
390	4 bytes	4 bytes	No measuring input; DI0 to DI7; DI/DQ8 to DI/DQ15
391	14 bytes	6 bytes	Two measuring inputs; DI0 to DI7; DI/DQ8 to DI/DQ15
392	30 bytes	6 bytes	Six measuring inputs; DI0 to DI7; DI/DQ8 to DI/DQ15
393	42 bytes	8 bytes	8 measuring inputs; DI0 to DI7; DI16, DI17, DI20, DI21, DI/DQ8 to DI/DQ15 (for CU310-2 also: DI18, DI19, DI22, DO16, AI0)
394	6 bytes	6 bytes	No measuring inputs; DI0 to DI7; DI16, DI17, DI20, DI21, DI/DQ8 to DI/DQ15 (for CU310-2 also: DI18, DI19, DI22, DO16, AI0)

You can find a description of the control and feedback interface of the frames in the SINAMICS S120/S150 List Manual (https://support.industry.siemens.com/cs/de/de/view/109763271/en), function diagram 2422 and 2495 to 2500. There, you will also find a description of other selectable telegrams that are not the focus with the SIMATIC Drive Controller (for example, telegram 395).

See also SINAMICS G/S FAQ: Configuration of standard frames in the TIA Portal (https://support.industry.siemens.com/cs/ww/en/view/82841762)

STEP 7 assigns the addresses automatically. You can change the addresses in the hardware configuration of STEP 7, that is, freely assign the start address. The addresses of the channels are derived from the start address.

You can, for example, find the assigned addresses:

- In the device view of the SINAMICS Integrated, in the Inspector window, on the General tag under frame configuration
- In the network view when you select the network; the addresses are then displayed under Address overview in the Inspector window

Programming example

You can find a programming example in the following FAQ on the Internet (https://support.industry.siemens.com/cs/ww/en/view/109782269).

8.8 Process images and process image partitions

8.8.1 Process image - overview

Process image input and process image output

The process image input and output is an image of the signal states. The CPU transfers the values from the input and output modules to the process image input and output. At the start of the cyclic program, the CPU transfers the process image output as a signal state to the output modules. The CPU then transfers the signal states of the input modules to the process image inputs.

Advantages of the process image

A process image accesses a consistent image of the process signals during cyclic program execution. If a signal state at an input module changes during program execution, the signal state is retained in the process image. The CPU does not update the process image until the next cycle.

Consistency of the process image

When the process image is updated, the SIMATIC Drive Controller accesses the data of each submodule as consistent data. This behavior is identical to the modular SIMATIC S7-1500 CPUs.

The maximum data width that is accessed as consistent data for each submodule depends on the IO system. For PROFINET IO, for example, this data width is 1024 bytes.

32 process image partitions

The CPU uses process image partitions to synchronize the updated inputs/outputs of specific modules with specific parts of the user program.

With the SIMATIC Drive Controller, the overall process image is subdivided into up to 32 process image partitions (PIP).

The CPU automatically updates PIP 0 (automatic update) in each program cycle and assigns it to OB 1.

You can assign other OBs to process image partitions PIP 1 to PIP 31 during configuration of the IO devices.

Before the start of the OB, the CPU writes the outputs of the assigned process image partition (PIPQ) straight to the peripheral outputs of the IO devices. The CPU then updates the assigned process image partition for inputs (PIPI) and reads in the process signals.

The figure below illustrates the updating of a process image partition.

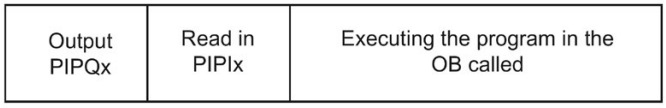

Figure 8-8 Updating a process image partition

Isochronous processing of the technology I/Os of interface X142

The operating modes timer DI, timer DQ, oversampling DI, oversampling DQ and event/period measurement require isochronous processing in OB91 (MC Servo) or OB6x (isochronous mode interrupt OBs). If you have configured one of those operating modes and have not set isochronous processing, this will result in an error when compiling the hardware configuration.

If you interconnect the technology I/Os with the technology object measuring input, output cam or cam track, isochronous mode and assignment to the process image partition OB servo are essential. The setting is made automatically as soon as you interconnect a technology I/O with a corresponding technology object.

8.8.2 Updating process image partitions in the user program

Requirements

Alternatively, you can also use the following instructions to update process images:

- "UPDAT_PI" instruction
- "UPDAT_PO" instruction

You will find the instructions in STEP 7 in the "Instructions" task card under "Extended instructions" in the "Process image" folder. You can call the instructions from any point in the user program.

Requirements for updating process image partitions with the "UPDAT_PI" and "UPDAT_PO" instructions:

- The process image partitions must not be assigned to any OB. This means the process image partitions are not automatically updated.

Note

Update of PIP 0

PIP 0 (automatic update) cannot be updated with the "UPDAT_PI" and "UPDAT_PO" instructions.

UPDAT_PI: Updates the process image partition of the inputs

With this instruction, you read the signal states from the input modules of the IO devices to the process image partition of the inputs (PIPI).

UPDAT_PO: Updates the process image partition of the outputs

With this instruction, you transfer the process image partition of the outputs of the IO devices to the output modules.

Direct I/O access to the inputs and outputs of the IO devices

You also have direct read and write access to the I/O as an alternative to access via the process image, should direct access be required for programming reasons. Direct (write) I/O access also writes to the process image. This prevents a subsequent output of the process image from again overwriting the value written by direct access.

Additional information

You can find more information on process image partitions in the Cycle and response times (https://support.industry.siemens.com/cs/ww/en/view/59193558) function manual.

8.9 Configuration of digital inputs/outputs (X142)

You configure the required digital input/outputs and operating modes over interface X142.

Overview of supported operating modes

You can configure the following operating modes for the individual channels of the X142 interface:

Table 8- 8 Overview of operating modes

Operating mode of X142 I/Os (8 channels)	Functionality	Use with technology objects (TOs)	Use via I/O area (without TO)	Isochronous mode
DI	Digital input • Input delay (1 µs/125 µs) • Hardware interrupt (optional) Hardware interrupt at rising and/or falling edge	• Hardware limit switch for positioning and synchronous axes • Reference mark • ...	No OB restrictions	Optional
DQ	Digital output	• Output cam • Cam track • ...	No OB restrictions	Optional
Timer DI	Acquisition of the switching time of a digital input signal with up to two edges per application cycle (e.g. for use as measurement sensing input)	Measuring input (OB 91 required)	OB 91/OB 6x required	Required
Timer DQ	Precisely timed output of a digital output signal with up to two edges per application cycle (e.g. for use as an output cam output)	• Output cam (OB 91 required) • Cam track (OB 91 required)	OB 91/OB 6x required	Required
Oversampling DI	Acquisition of 32 states of a digital input signal at equal intervals per application cycle	---	OB 91/OB 6x required	Required

Operating mode of X142 I/Os (8 channels)	Functionality	Use with technology objects (TOs)	Use via I/O area (without TO)	Isochronous mode
Oversampling DQ	Output of 32 states of a digital output signal at equal intervals per application cycle	---	OB 91/OB 6x required	Required
Event/period duration measurement	Measurement of number of edges and period duration (e.g. for simple speed measurement with hole mask and light barrier)	---	OB 91/OB 6x required	Required
Pulse width modulation PWM	Output of a configurable pulse-pause ratio with a configurable frequency	---	No OB restrictions	Optional

Procedure

1. Select the Device configuration entry in the project tree under the CPU. The device view opens.
2. In the device view, click the DI/DQ 8x24VDC [X142] interface. You can now edit the configurable properties under Properties in the Inspector window.

Under Channel parameters, you can find an overview of all channels and your selected settings.

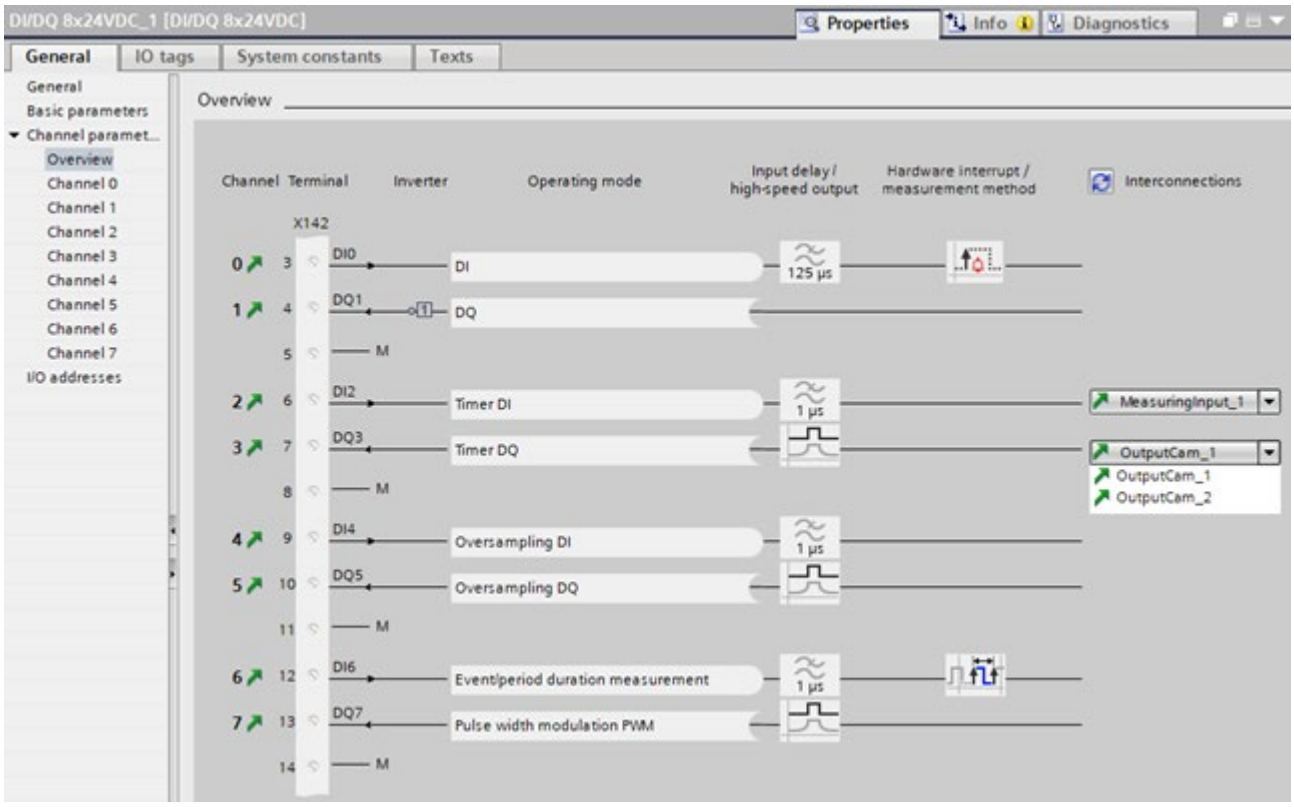

Figure 8-9 Channel parameters

Via links (arrow symbols) you will get to the parameter assignment of the respective channel or to the interconnected technology object.

Note

Multi-links

If you have linked a channel to several technology objects, you can select the link of the required technology object via the drop-down list.

You update the drop-down lists via the Refresh button next to "Interconnections". Updating may be required, for example, if changes were made to technology objects elsewhere in the project while the channel configuration was open.

8.9.1 Configuring the DI operating mode

DI operating mode

1. Select the operating mode DI for the required channel at interface X142.

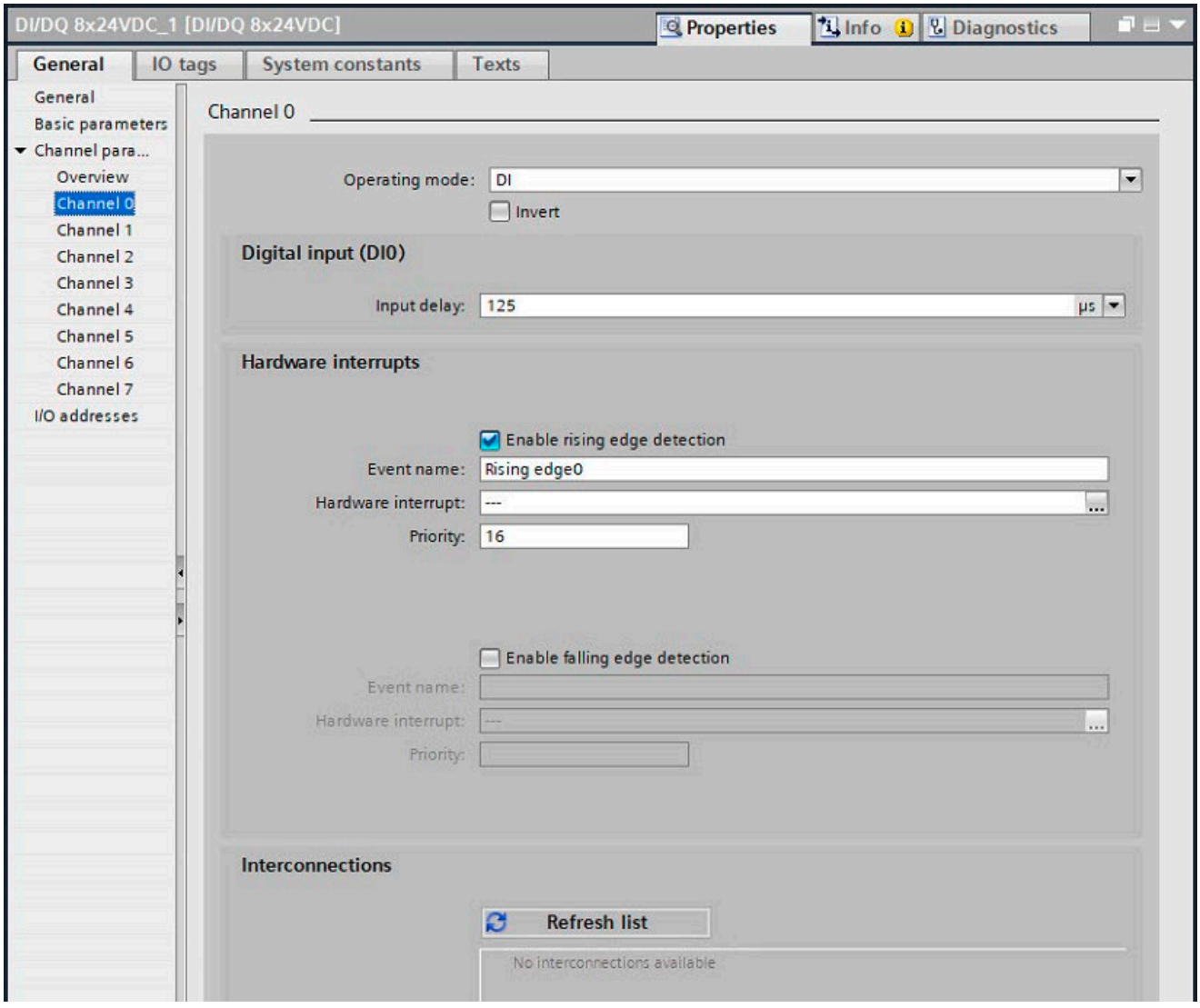

Figure 8-10 DI operating mode

Inversion

You can invert the 24 V signal to adjust it to your process. By default, the signal is not inverted.

Input delay

To suppress faults, you can set an input delay of 1 µs or 125 µs for the input filter of the digital inputs. Changes to the signal are only detected if they are constantly pending for longer than the set input delay time. When an input delay of 1 µs is set, the use of shielded cables is recommended for optimum interference immunity.

Hardware interrupts

In the Hardware interrupts section, you can assign a hardware interrupt to a rising and/or falling edge.

Interconnections

The technology objects that are interconnected with the channel are listed in the Interconnections area.

If technology objects are interconnected, you can reach the respective technology object through links (arrow icons).

Use the corresponding button to update the selection list. Updating may be required, for example, if changes have been made to technology objects elsewhere in the project while the channel configuration is open.

Further information

You can find more information on the DI operating mode in Assignment of the control interface (Page 152) and Assignment of the feedback interface (Page 153).

8.9.2 Configuring the DQ operating mode

DQ operating mode

1. Select the DQ operating mode for the required channel at interface X142.

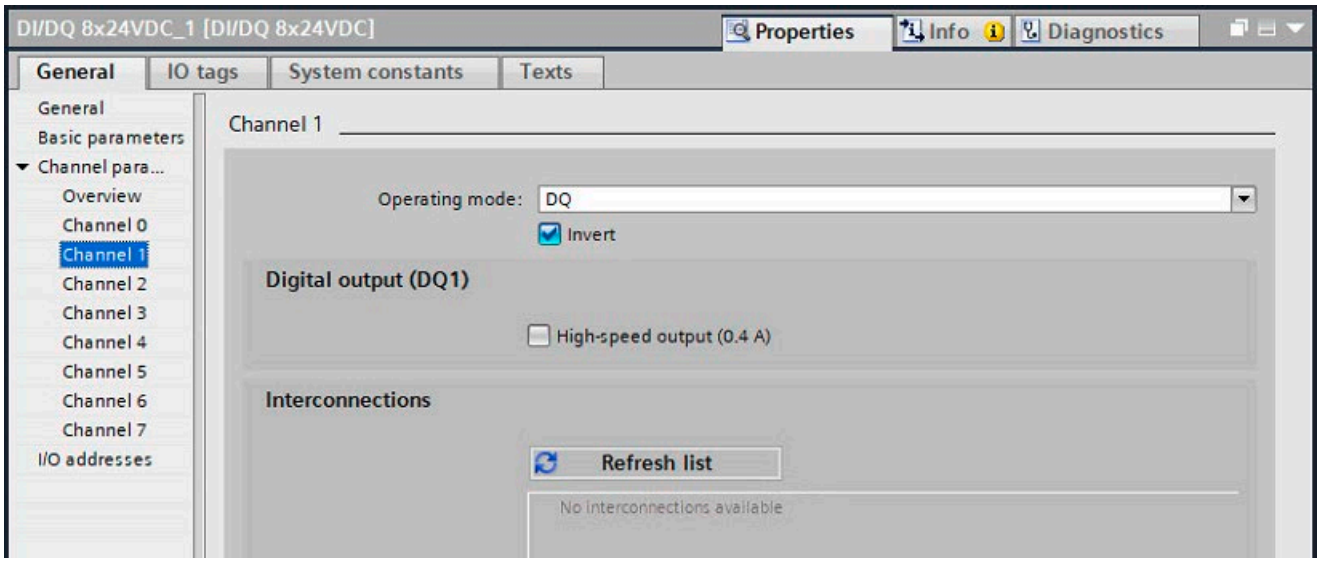

Figure 8-11 DQ operating mode

Inversion

You can invert the 24 V signal to adjust it to your process. By default, the signal is not inverted.

High-speed output (0.4 A)

If you select the high-speed output option, the digital output is switched alternately to 24 V DC and ground. Allows for extremely steep edges (output delay in the 1 µs range).

The rated load is reduced from 0.5 A to 0.4 A with this operating mode.

Interconnections

The technology objects that are interconnected with the channel are listed in the Interconnections area.

If technology objects are interconnected, you can reach the respective technology object through links (arrow icons).

Use the corresponding button to update the selection list. Updating may be required, for example, if changes have been made to technology objects elsewhere in the project while the channel configuration is open.

Further information

You can find more information on the DQ operating mode in Assignment of the control interface (Page 152) and Assignment of the feedback interface (Page 153).

8.9.3 Configuring Timer DI operating mode

Timer DI

Timer DI operating mode allows you to acquire the switching time of up to two edges per application cycle (for example OB 91, OB 6x), for example for use as a measuring output.

- Select the Timer DI operating mode for the required channel.

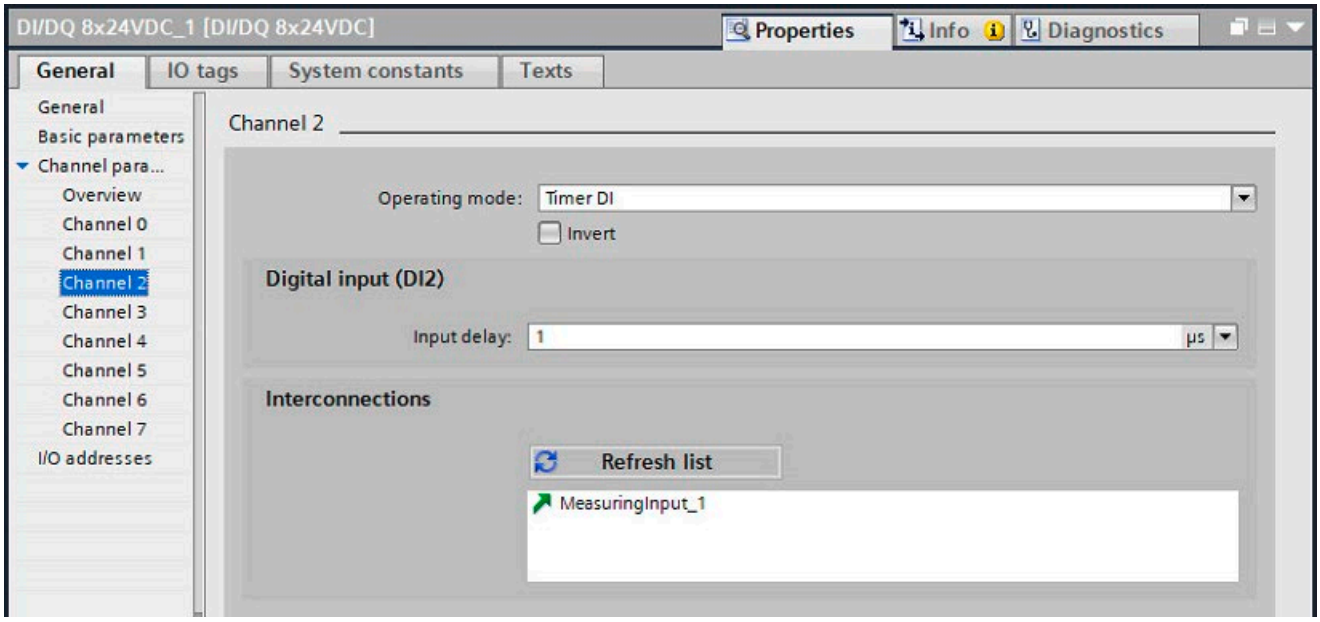

Figure 8-12 Operating mode: Timer DI

Inversion

You can invert the 24 V signal to adjust it to your process. By default, the signal is not inverted.

Input delay

To suppress faults, you can set an input delay of 1 µs or 125 µs for the input filter of the digital inputs. Changes to the signal are only detected if they are constantly pending for longer than the set input delay time.

To allow signals pending very briefly to be detected with timer DI (for example level of 100 µs), set an input delay of 1 µs.

When an input delay of 1 µs is set, the use of shielded cables is recommended for optimum interference immunity.

Interconnections

The technology objects that are interconnected with the channel are listed in the Interconnections area.

If technology objects are interconnected, you can reach the respective technology object through links (arrow icons).

Use the corresponding button to update the selection list. Updating may be required, for example, if changes have been made to technology objects elsewhere in the project while the channel configuration is open.

Assigning the measuring input technology object

The measuring input technology object must always be assigned to another technology object whose position is evaluated by the measuring input.

You can assign the measuring input technology object to the following technology objects:

- Synchronous axis
- Positioning axis
- External encoder

You can assign the measuring input technology object precisely one axis or one external encoder.

You can assign multiple measuring input technology objects to one axis or one external encoder.

Configuring the measuring input technology object

- Select the configuration of the measuring input in the Technology objects folder in the project tree.
- Configure the basic properties of the technology object in the Basic parameters configuration window.

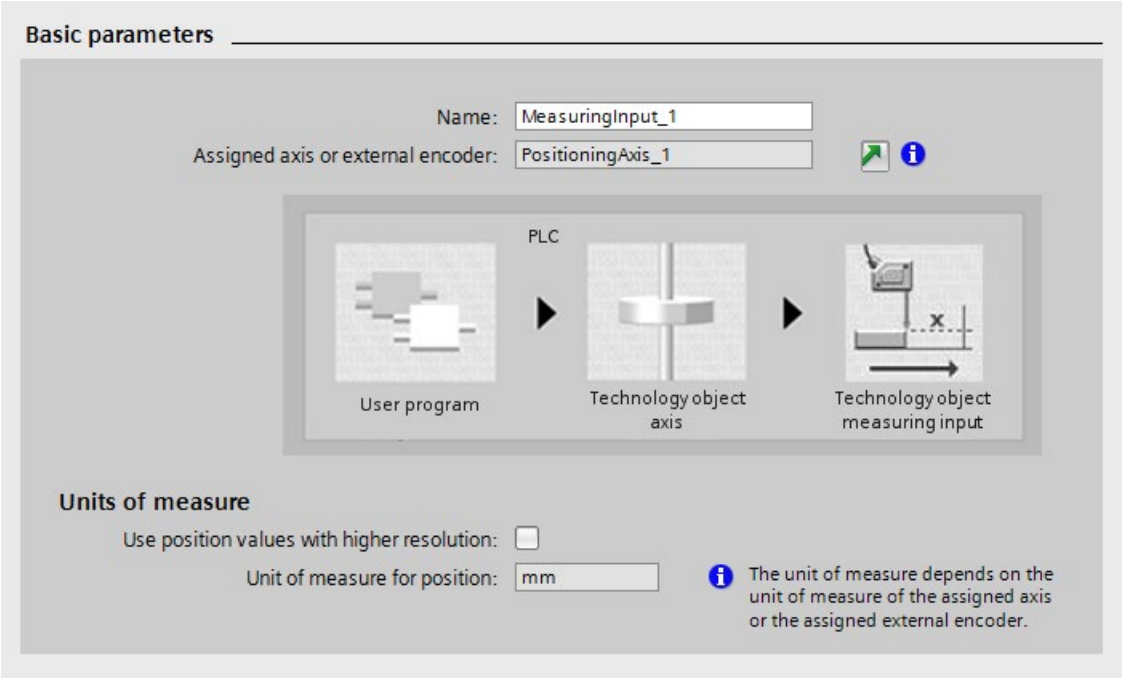

Figure 8-13 Basic parameters

Name

- Define the name of the measuring input in this field. The technology object is listed under this name in the project tree. The tags of the measuring input can be used in the user program under this name.

Assigned axis or external encoder

STEP 7 displays the axis or external encoder assigned to the measuring input. You can use the link to directly access the basic parameters of the higher-level technology object.

Unit of measurement

The unit of measure shown for the position of the measuring input corresponds to the unit of measure of the higher-level technology object.

Hardware interface

- In the Hardware interface configuration window, assign the Timer DI measuring input type and the selected channel to the technology object.

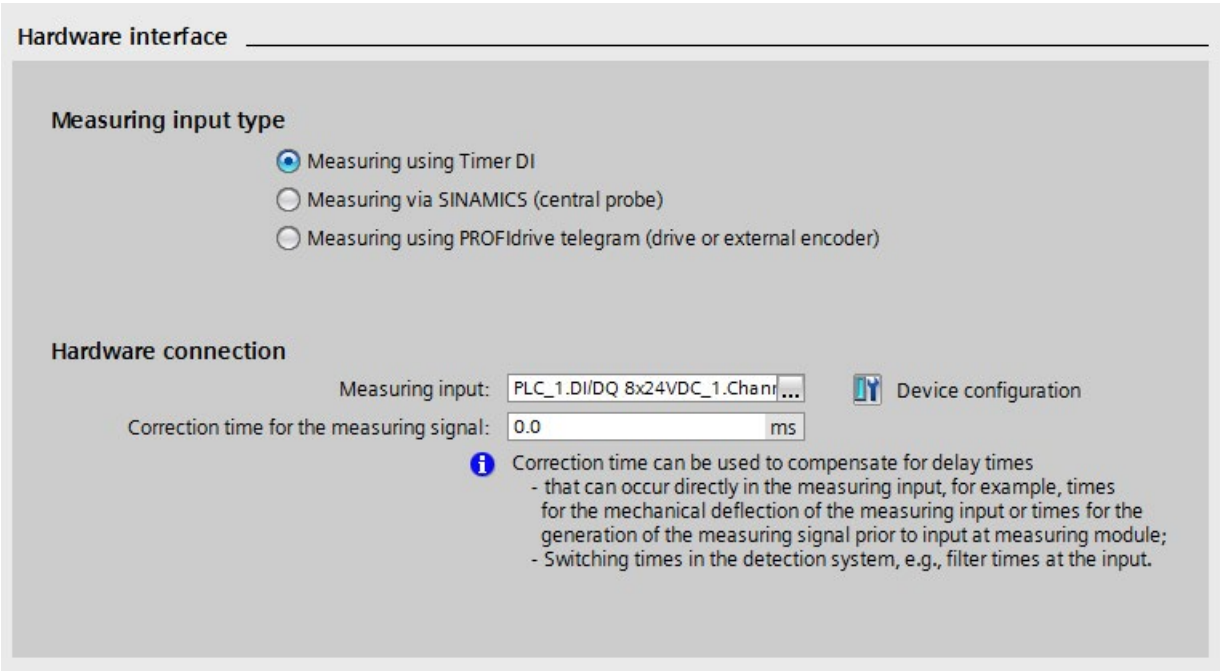

Figure 8-14 Hardware interface

Measuring input type: Measuring using Timer DI

- Select a measurement input for a measurement using a Timer DI. The selection box displays all channels that have been configured correctly.

Note

Extending the configuration limits

A maximum of eight timer DI can be configured at the X142 interface. If the timer DI at X142 are not sufficient for your needs, you can configure a further eight measuring inputs at interface X122/X132. You can also extend the configuration limits using time-based I/O modules:

- ET 200SP distributed I/O system: TM Timer DIDQ 10x24V (https://support.industry.siemens.com/cs/ww/en/view/95153951)
- ET 200MP distributed I/O system: TM Timer DIDQ 16x24V (https://support.industry.siemens.com/cs/ww/en/view/95153313)

Note

Unsupported instructions for X142

The function blocks for the use of time-based IO (TIO instructions) are not supported by the X142 interface.

Recommendation: Use the measuring input technology object for timer DI.

Adjustment for measuring range activation time

- To adjust the activation time defined in the system, enter an additional activation time in the Extended parameters configuration window.

Lost Edge Counter (LEC)

Timer DI support Lost Edge Counter. If more than two edges to be detected occur within one position control cycle, a measured value cannot be evaluated for the other edges to be detected. The LEC records the number of edges lost.

Which lost edges are recorded in the LEC depends on the mode set in the Motion Control instruction. For example, if you only want to measure rising edges, the LEC only records the rising edges not measured. The LEC can count and display a maximum of seven lost edges. The number of lost edges is displayed in the function block and in the technology data block.

Further information

You can find additional information on the following topics in the S7-1500T Motion Control function manuals (https://support.industry.siemens.com/cs/ww/en/view/109751049):

- Measuring input type: Timer DI
- Measuring input type: SINAMICS (central measuring input)
- Measuring input type: PROFIdrive telegram (drive or external encoder)
- Lost Edge Counter (LEC)

8.9.4 Configuring Timer DQ operating mode

Timer DQ

Timer DQ operating mode allows you to output up to two edges per application cycle (for example OB 91, OB 6x) at a specific time, for example, for use as a cam output.

1. Select the Timer DQ operating mode for the required channel.

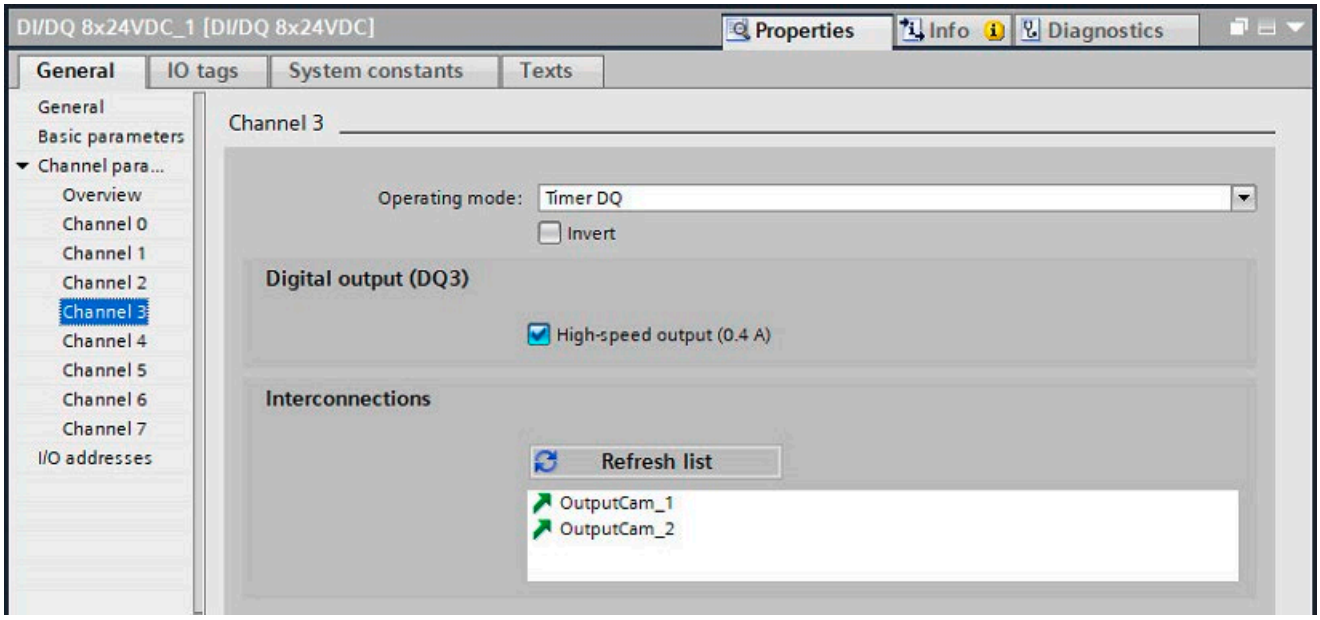

Figure 8-15 Mode of operation: Timer DQ

Inversion

You can invert the 24 V signal to adjust it to your process. By default, the signal is not inverted.

High-speed output (0.4 A)

If you select the high-speed output option, the digital output is switched alternately to 24 V DC and ground.

Advantages of the high-speed output:

- Extremely steep edges (output delay in the 1 µs range)
- Extremely high switching frequencies
- Maximum switching precision, for example, for use as a cam output

The rated load is reduced from 0.5 A to 0.4 A with this operating mode.

Interconnections

The technology objects that are interconnected with the channel are listed in the Interconnections area.

If technology objects are interconnected, you can reach the respective technology object through links (arrow icons).

Use the corresponding button to update the selection list. Updating may be required, for example, if changes have been made to technology objects elsewhere in the project while the channel configuration is open.

Assigning the output cam technology object

The output cam technology object must always be assigned to another technology object whose position is evaluated.

You can assign the output cam technology object to the following technology objects:

- Synchronous axis
- Positioning axis
- External encoder

You can assign exactly one axis or one external encoder to the output cam.

You can assign multiple output cams to one axis or one external encoder.

Configuring the output cam technology object

1. Select the configuration of the output cam in the Technology objects folder in the project tree.
2. Configure the basic properties of the technology object in the Basic parameters configuration window.

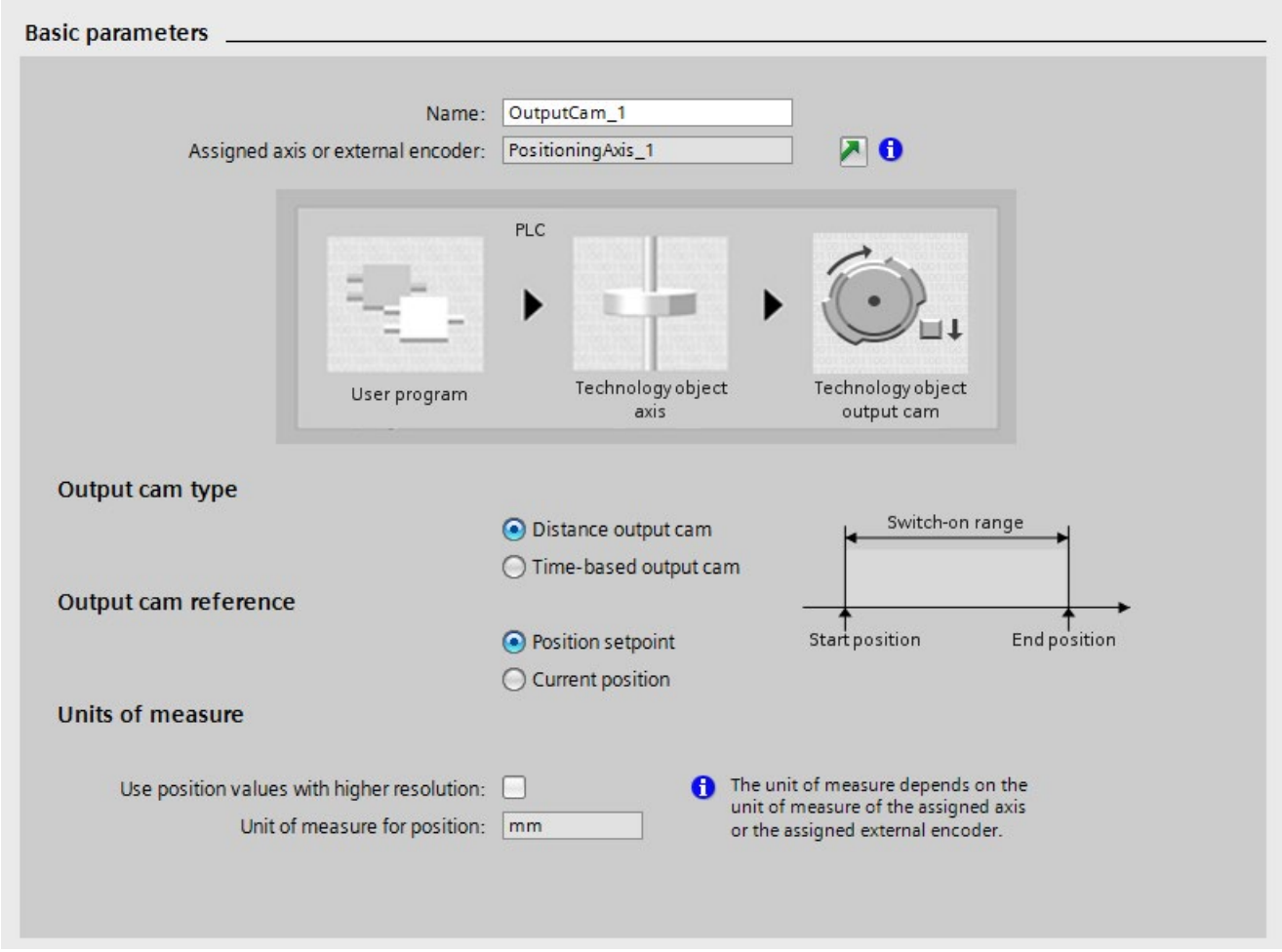

Figure 8-16 Basic parameters

Name

1. Define the name of the output cam in this field. The technology object is listed under this name in the project tree. The tags of the output cam can be used in the user program under this name.

Assigned axis or external encoder

STEP 7 displays the axis or external encoder assigned to the output cam. You can use the link to directly access the basic parameters of the higher-level technology object.

Output cam type

1. Select an output cam type on the basis of the required switching behavior:

- Position-based cam (position-dependent switch-on/switch-off)
- Time-based cam (position-dependent switch-on and position-independent or time-dependent switch-off)

Output cam reference

1. In this selection, configure whether the switching points of the output cams are to reference the actual position or the position setpoint.

Unit of measurement

The unit of measurement shown for the position of the output cam corresponds to the unit of measurement of the higher-level technology object.

When a time-based cam is selected as the output cam type, the unit of measurement for the switch-on duration and other times is also indicated. The unit of measurement for output cams is always ms.

Hardware interface

Select the type of cam output in the Hardware interface configuration window.

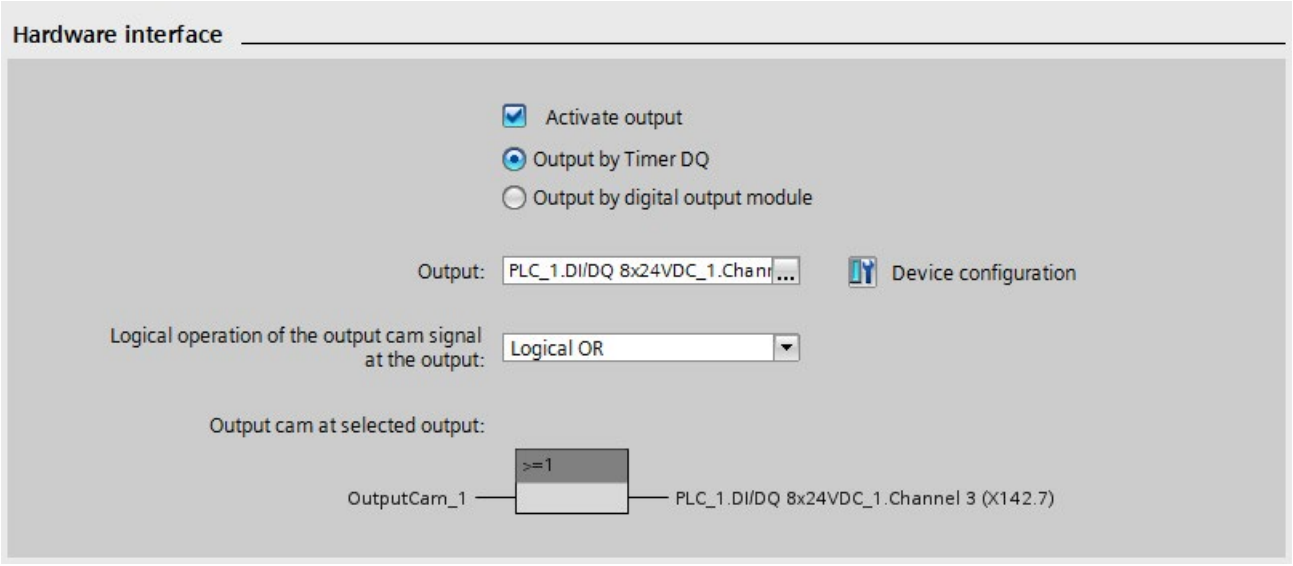

Figure 8-17 Hardware interface

1. Select whether you want to output the switching signals generated at the digital output.

- Activate output

  Select one of the following two output options for outputting the cam track:

  – Output via Timer DQ

    For output by Timer DQ, select a cam output in the Output field. The selection box displays all channels that have been configured correctly.

    Note

    Extending the configuration limits

    A maximum of eight timer DQ can be configured at the X142 interface. If the Timer DQ at X142 are not sufficient for your needs, you can increase the configuration limits with time-based IO modules:

    - ET 200SP distributed I/O system: TM Timer DIDQ 10x24V (https://support.industry.siemens.com/cs/ww/en/view/95153951)
    - ET 200MP distributed I/O system: TM Timer DIDQ 16x24V (https://support.industry.siemens.com/cs/ww/en/view/95153313)

    Note

    Unsupported instructions for the X142 interface

    The function blocks for the use of time-based IO (TIO instructions) are not supported by the X142 interface.

    Recommendation: For the timer DQ, use the output cam or cam track technology object.

  – Output by digital output module

    For output by a digital output module, select a digital output in the Output field. Only the digital outputs with previously defined PLC tags are displayed for selection.

    Note

    Output via the X122, X132 or X142 interface

    Also use the "Output by digital output module" setting in the following cases:

    - The output occurs at the X142 interface by a DQ instead of a Timer DQ.
    - The output occurs by a digital output of the X122 or X132 interface (configured telegram 39x required)

    In both cases you must define a PLC tag for the respective I/O address.

  You can assign several output cam technology objects to an output, linking the cam signal with a logical AND or logical OR at the output.

- Output deactivated
  When output is deactivated, the cam track is evaluated only in the software.

Extended parameters > Activation time

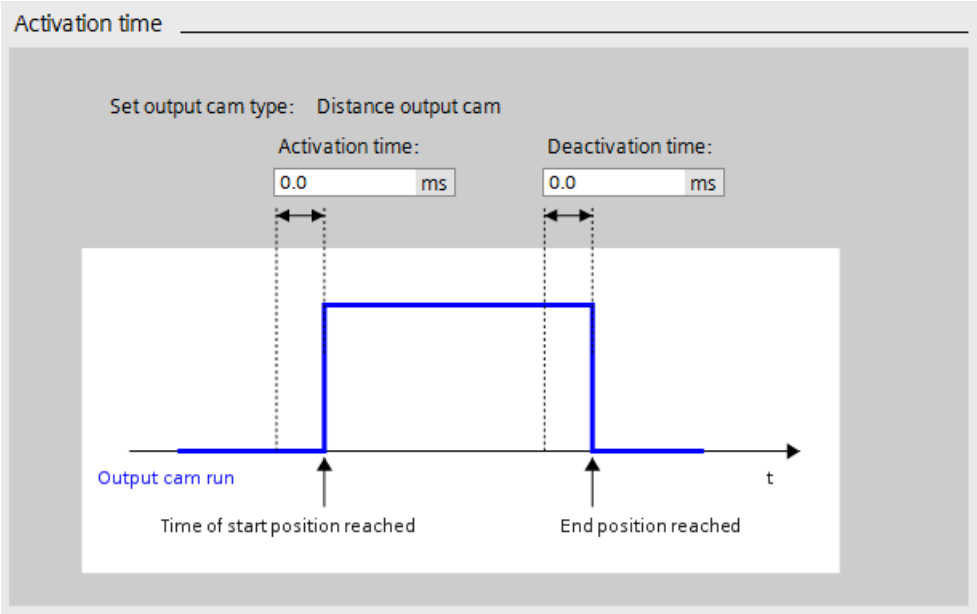

Figure 8-18 Activation time

The specified output cam type is indicated at the top of the Activation time configuration window.

1. For a time shift of the switch-on and switch-off times of the output cams, enter an activation time and a deactivation time.

Extended parameters Parameter > Hysteresis

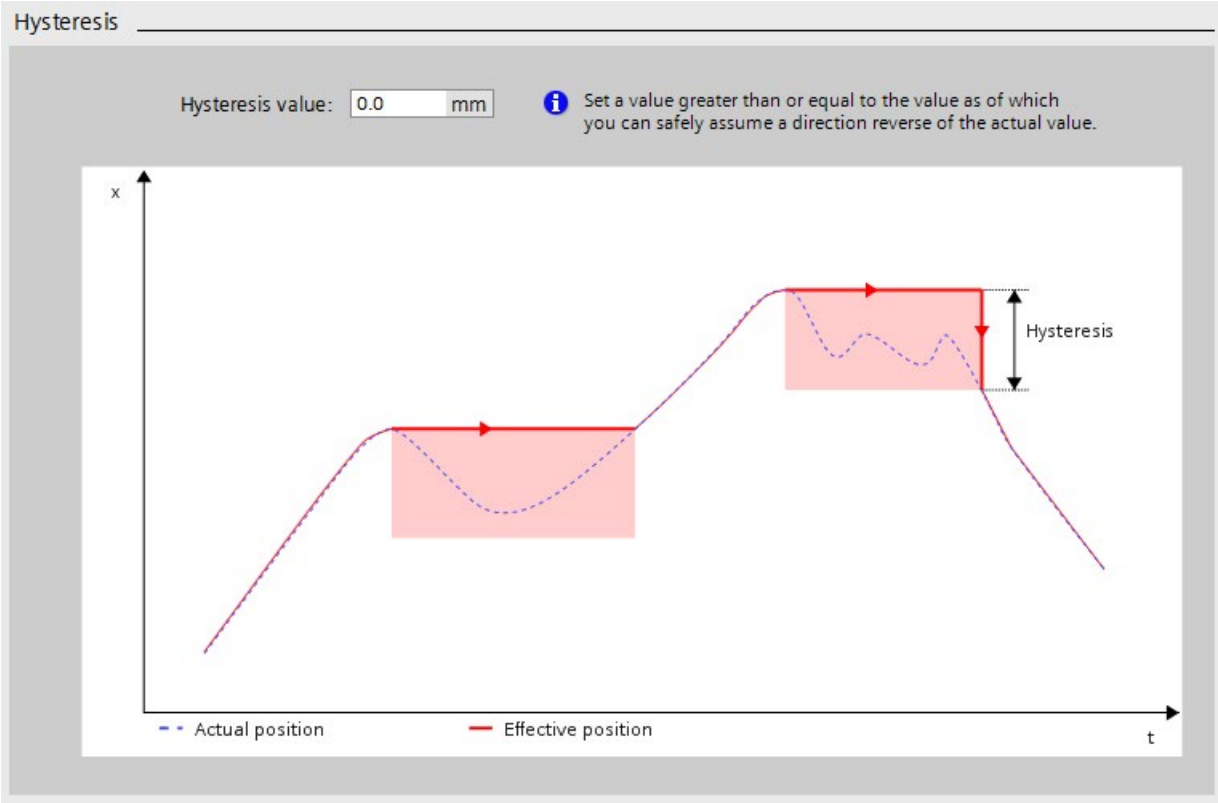

Figure 8-19 Hysteresis

1. To prevent unwanted changes in the switching state of the output cams of a cam track, enter a hysteresis value.

When using output cams that reference the actual position, it is advisable to enter a hysteresis value (> 0.0).

Cam track technology object

In addition to the output cam technology object already described, the cam track technology object is also available.

You can find a detailed description of how to configure the cam track technology object in the S7-1500T Motion Control function manuals (https://support.industry.siemens.com/cs/ww/en/view/109751049).

8.9.5 Configuring Oversampling DI operating mode

Oversampling DI

The Oversampling DI function detects 32 signal states of a given digital input at equal intervals per application cycle (for example OB 91, OB 6x). The 32 states are returned together as a 32-bit value in the feedback interface. The value is read in synchronously to Ti (actual value acquisition).

Note

Isochronous mode

Oversampling requires isochronous mode.

The figure below shows an example of Oversampling DI4:

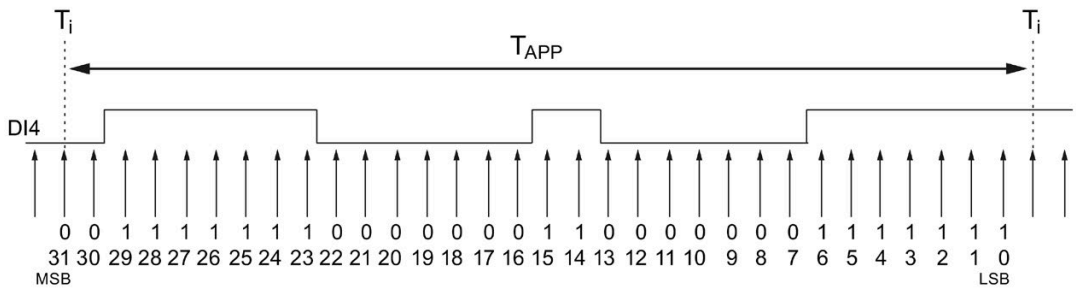

T_{APP}	Application cycle
MSB	Most significant bit
LSB	Least significant bit

Figure 8-20 Oversampling DI

Configuring Oversampling DI

1. Select the Oversampling DI operating mode for the required channel.

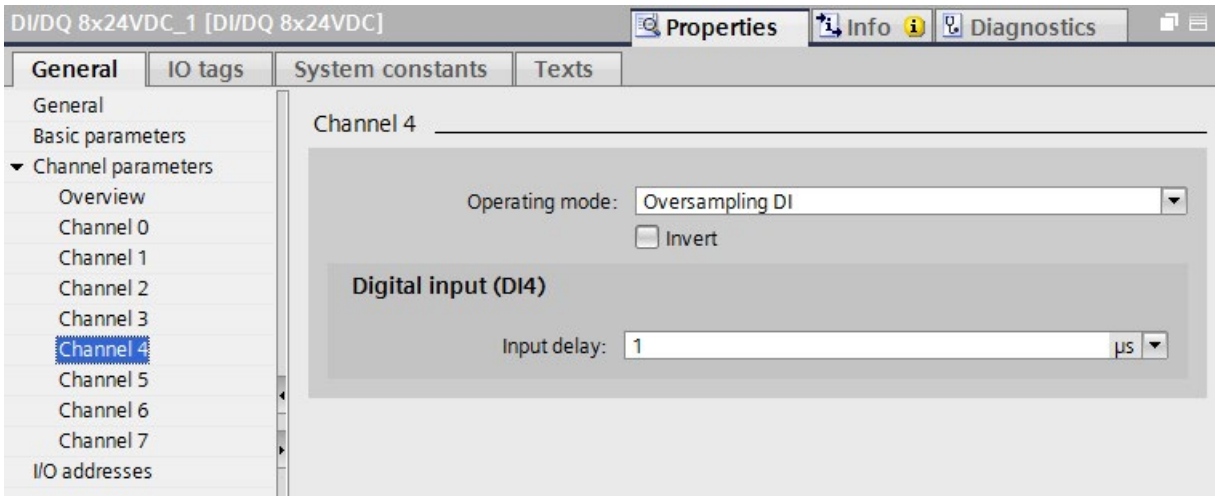

Figure 8-21 Oversampling DI

Note

Extending the configuration limits

A maximum of eight oversampling DI can be configured at the X142 interface. If the Oversampling DI at X142 are not sufficient for your needs, you can increase the configuration limits with time-based IO modules, for example:

- ET 200SP distributed I/O system: TM Timer DIDQ 10x24V (https://support.industry.siemens.com/cs/ww/en/view/95153951)
- ET 200MP distributed I/O system: TM Timer DIDQ 16x24V (https://support.industry.siemens.com/cs/ww/en/view/95153313)

Inversion

You can invert the 24 V signal to adjust it to your process. By default, the signal is not inverted.

Input delay

To suppress faults, you can set an input delay of 1 µs or 125 µs for the input filter of the digital inputs. Changes to the signal are only detected if they are constantly pending for longer than the set input delay time.

To allow signals pending very briefly to be detected by oversampling DI (for example level of 100 µs), set an input delay of 1 µs.

When an input delay of 1 µs is set, the use of shielded cables is recommended for optimum interference immunity.

Further information

You can find more information on the Oversampling DI operating mode in Assignment of the control interface (Page 152) and Assignment of the feedback interface (Page 153).

8.9.6 Configuring Oversampling DQ operating mode

Oversampling DQ

The Oversampling DQ function outputs 32 signal states at equal intervals per application cycle (for example OB 91, OB 6x). Up to 32 edges are therefore possible per application cycle at a given digital output. The 32 states are set over the control interface. The output occurs synchronously with time T_O (setpoint transfer).

Note

Isochronous mode

Oversampling requires isochronous mode.

The image below is an example of oversampling of DQ5:

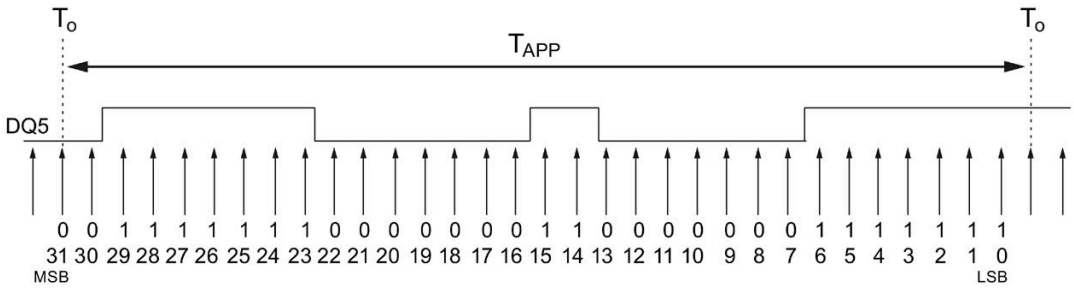

T_{APP}	Application cycle
MSB	Most significant bit
LSB	Least significant bit

Figure 8-22 Oversampling DQ

Note

Output frequency with the Oversampling function

The combination of application cycle and the 32-bit string output must not result in an output frequency that exceeds the maximum switching frequency for the digital outputs.

Configuring an oversampling DQ

1. Select the operating mode Oversampling DQ for the required channel.

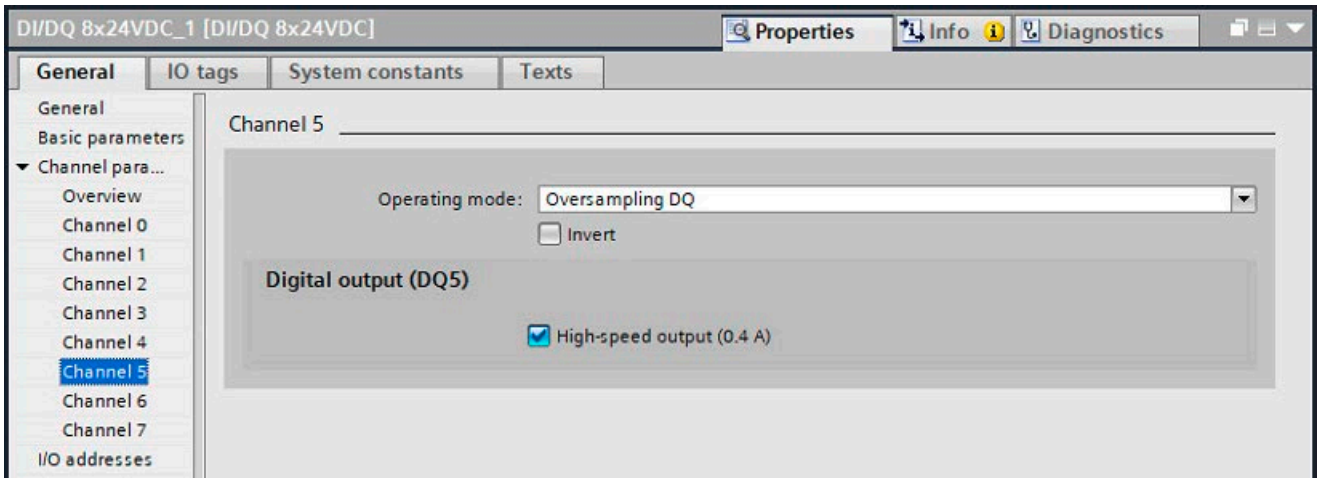

Figure 8-23 Oversampling DQ

Note

Extending the configuration limits

A maximum of eight oversampling DQ can be configured at the inputs/outputs of the X142 interface. If the oversampling DQ at X142 are not sufficient for your needs, you can increase the configuration limits with time-based IO modules, for example:

- ET 200SP distributed I/O system: TM Timer DIDQ 10x24V (https://support.industry.siemens.com/cs/ww/en/view/95153951)
- ET 200MP distributed I/O system: TM Timer DIDQ 16x24V (https://support.industry.siemens.com/cs/ww/en/view/95153313)

Inversion

You can invert the 24 V signal to adjust it to the process. By default, the signal is not inverted.

High-speed output (0.4 A)

If you select the high-speed output option, the digital output is switched alternately to 24 V DC and ground. Allows for extremely steep edges (output delay in the 1 µs range).

To allow signals pending very briefly to be output by oversampling DQ (for example level of 0.1 ms), you must operate the output as a high-speed output.

The rated load is reduced from 0.5 A to 0.4 A with this operating mode.

Further information

You can find more information on the Oversampling DQ operating mode in Assignment of the control interface (Page 152) and Assignment of the feedback interface (Page 153).

8.9.7 Configuring event/period measurement operating mode

Event/period duration measurement

In isochronous mode, you can use the event/period duration measurement operating mode to acquire the number of rising edges at the digital input and at the same time determine the period duration.

Note

Isochronous mode

The event/period duration measurement requires isochronous mode.

Event counter

With the event measurement, you count the number of rising edges at the digital input. The current count (16-bit value) is updated on the feedback interface with each application cycle (e.g. servo clock).

- The event counter is a rotary counter.
- An event counter overflow is not displayed.
- To determine the number of rising edges per application cycle, the difference between the current count and the previous count must be calculated by the application, taking into account any overflow.

Period duration measurement

Two methods are available for the period duration measurement.

- "Single period" measurement method

  The period duration is determined based on the last period in a measuring cycle. This method provides the most current value.

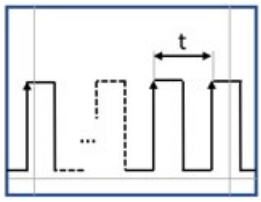

- "Multiple periods" measurement method

  The period duration is determined based on all periods in a measuring cycle, whereby the measuring cycle length corresponds to one application cycle (e.g. servo clock). This method provides a more accurate measurement for short periods.

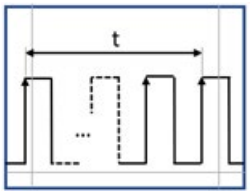

"Single period" measurement method

With this measurement method, you determine the period duration by counting the number of 41.67 ns increments between the last two incoming rising edges in the measuring cycle. The current count (32-bit value) is updated on the feedback interface with each application cycle (e.g. servo clock).

Period duration = 41.67 ns • N_{INC}

N_{INC}: Number of increments of 41.67 ns each (41.67 ns = 1/24 MHz)

Note

Always use the exact (not rounded) value for your calculations.

Since the last two incoming rising edges in the measuring cycle are used for the measurement, the "Single period" measurement method provides the most current value.

"Multiple periods" measurement method

Requirement:

- CPU firmware version V3.0 or higher
- Hardware function version FS 11 or higher

In this measurement method, the period duration is determined based on all periods in a measuring cycle, whereby the measuring cycle length corresponds to one application cycle (e.g. servo clock).

The number of 41.67 ns increments between the last rising edge of the last measuring cycle and the last rising edge of the current measuring cycle is counted.
The current count (32-bit value) is updated on the feedback interface with each application cycle (e.g. servo clock).

- The event counter and the period duration counter are circular counters.
- A counter overflow is not displayed.
- To determine the count, the difference between the current count and the previous count must be calculated by the application, taking into account any overflow.

$$\text{Periodendauer} = 41{,}67\ \text{ns} \bullet \frac{\left(N_{P(new)} - N_{P(old)}\right)}{\left(N_{E(new)} - N_{E(old)}\right)}$$

$N_{P(new)}$: Period duration counter, current (new) count

$N_{P(old)}$: Period duration counter, previous (old) count

$N_{E(new)}$: Event counter, current (new) count

$N_{E(old)}$: Event counter, previous (old) count

If current count < old count is true for the counters, then an overflow has occurred. In this case, the value 2^{16} must be added to the new count for the event counter, and the value 2^{32} must be added to the new count for the period duration counter. A maximum of one overflow is possible.

The "Multiple periods" measurement method yields a more accurate measurement.

- For short periods (i.e. a few 41.67 ns increments per period), in particular, the sampling jitter (1 increment) has less effect because the period duration is determined over many periods.
- Measured value fluctuations are averaged. For example, if rotational speeds are acquired using a slotted disk and fork light barrier, the tolerances of individual slots have less of an effect because the measurement is not based on a single period (of an individual slot).

Example 1: "Single period" measurement method

For an injection molding machine, the rotational speed of the extruder screw is to be determined using a simple encoder based on a rotating slotted disk.

The pulses are to be acquired on the SIMATIC Drive Controller using a digital input/output (X142) in the event/period duration measurement operating mode.

The rotational speed of the screw is determined from the time interval between 2 pulses.

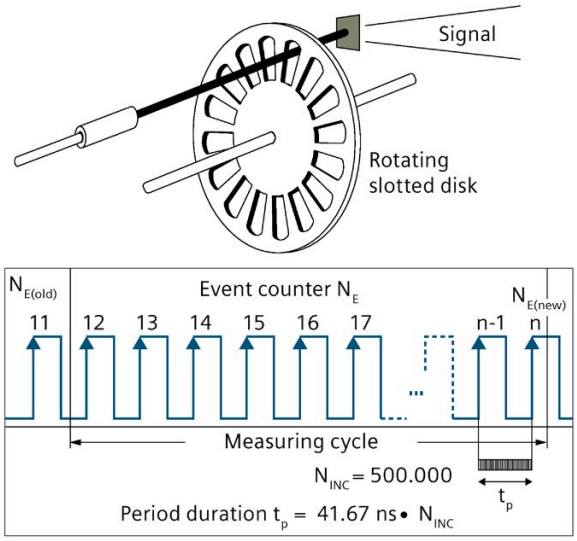

Figure 8-24 Simple encoder on a shaft, single period measurement method

In the "Single period" measurement method, the period duration is determined by counting the number of 41.67 ns increments between the last two incoming rising edges in the measuring cycle. The number of rising edges is additionally counted (circular counter).

Period duration t_P = 41.67 ns • N_{Inc}

If you know the number of pulses that the encoder generates per revolution of the extruder screw, you can calculate the speed at which the extruder screw turns.

Calculation example

NS = 16 pulses are generated per revolution of the extruder screw (NS is also referred to as the pulse-per-revolution count of the encoder).

The distance between 2 pulses is N_{Inc} = 500,000 counted 41.67 ns increments.
Thus, the rotational speed of the extruder screw is calculated as follows:

Period duration t_P = 41.67 ns • N_{Inc}

$$v = \frac{1}{t_P \bullet N_S} = \frac{1}{41{,}67\ \text{ns} \bullet 500.000 \bullet 16} = 3\frac{1}{s} = 180\frac{U}{min}$$

The period duration counter provides a 32-bit count value. As a result, values up to FFFFFFFF (232 = 4,294,967,296 decimal) can be represented. For a time base of 41.67 ns for NS = 1, this yields the minimum measurable speed:

$$v = \frac{1}{t_P \bullet N_S} = \frac{1}{41.67\ \text{ns} \bullet 4{,}294{,}967{,}296 \bullet 1} = 0.00558\ \frac{1}{s} = 0.335\ \frac{U}{min}$$

The maximum measurable speed for encoders with passive deactivation (encoder output is open in inactive state) is the result of the maximum frequency of the input signals at the counter inputs of 32 kHz.

$$\text{Max. speed (when } N_S = 1) = \frac{\text{Max. frequency}}{N_S} = 32{,}000\ \frac{1}{s} = 1{,}920{,}000\ \frac{U}{min}$$

If the encoder generates 1 pulse per revolution (NS = 1), this yields a maximum speed of 1,920,000 rpm.

If you use encoders that generate multiple pulses per revolution, you must reconsider the limit frequencies.

The table below shows a few examples.

Table 8- 9 Limits for various pulse-per-revolution counts NS with a time base of 41.67 ns. (Encoder with
passive deactivation)

N	Lower limit	Upper limit
1	0.3352 rpm	1,920,000 rpm
4	0.0838 rpm	960,000 rpm
8	0.0419 rpm	480,000 rpm
16	0.0209 rpm	120,000 rpm

Example 2: "Multiple periods" measurement method

For a winding head of a textile machine, the spindle speed is to be determined using a simple encoder based on a rotating slotted disk.

The pulses are to be acquired on the SIMATIC Drive Controller using a digital input/output (X142) in the event/period duration measurement operating mode.

Due to the accuracy requirements and the high speed, the spindle speed is determined over multiple periods.

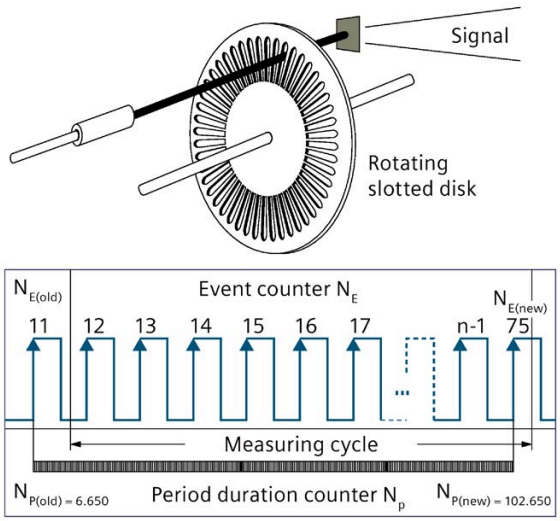

Figure 8-25 Simple encoder on a shaft, multiple periods measurement method

In the "Multiple periods" measurement method, the period duration is determined by counting the number of 41.67 ns increments between the last rising edge of the last measuring cycle and the last rising edge of the current measuring cycle with the period duration counter NP.
In addition, the number of rising edges NE for the same time period is determined.
The period duration is calculated based on the count values, taking into account counter overflows, as follows:

$$\text{Period duration } t_p = 41.67 \text{ ns} \bullet \frac{(N_{P(new)} - N_{P(old)})}{(N_{E(new)} - N_{E(old)})}$$

If you know the number of pulses that the encoder generates per spindle revolution, you can calculate the speed at which the spindle turns.

Calculation example

NS = 48 pulses are generated per revolution of the spindle (NS is also referred to as the pulse-per-revolution count of the encoder).

$$\text{Period duration} = 41.67 \text{ ns} \bullet \frac{(102{,}650 - 6{,}650)}{(75 - 11)} = 62.5 \text{ us}$$

Thus, the rotational speed of the spindle is calculated as follows:

$$v = \frac{1}{t_P \bullet N_S} = \frac{1}{62{,}5 \text{ us} \bullet 48} = 333{,}333 \frac{1}{s} = 20.000 \frac{U}{min}$$

Configuring event/period duration measurement

1. Select the required channel for the Event/period duration measurement operating mode.

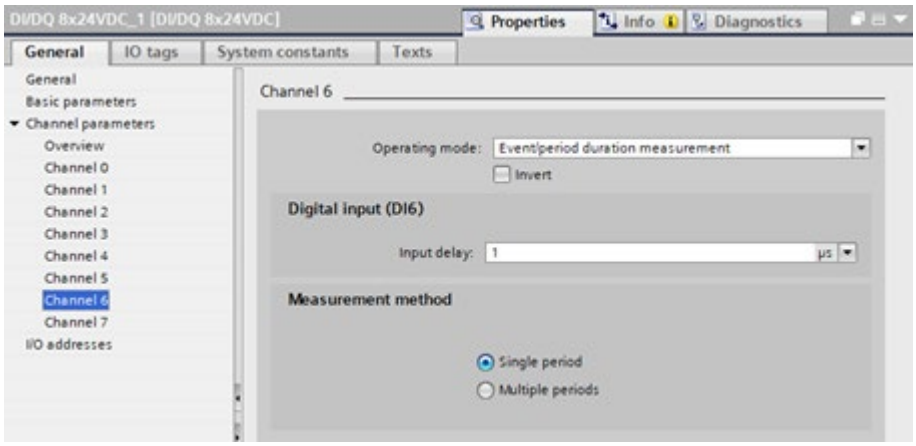

Figure 8-26 Event/period duration measurement

Inversion

You can invert the 24 V signal to adjust it to your process. By default, the signal is not inverted.

Input delay

To suppress faults, you can set an input delay of 1 µs or 125 µs for the input filter of the digital inputs. Changes to the signal are only detected if they are constantly pending for longer than the set input delay time.

To allow signals pending very briefly to be detected at high counting frequencies, you need to set an input delay of 1 µs.

When an input delay of 1 µs is set, the use of shielded cables is recommended for optimum interference immunity.

Measurement method

Depending on the selected measurement method, the period duration is determined based on the "last period" or "all periods" in a measuring cycle.

Note

"Multiple periods" measurement method when using unsupported hardware

If a SIMATIC Drive Controller does not meet the hardware function version (FS 11 or higher) requirement, the CPU remains in startup inhibit state.

Additional information

You can find more information on the Event/period duration measurement operating mode in Assignment of the control interface (Page 152) and Assignment of the feedback interface (Page 153).

8.9.8 Configuring Pulse width modulation (PWM) operating mode

Areas of application

You can use pulse width modulation (PWM) to generate periodic pulses with a constant rated voltage and a variable pulse duration.

Possible applications for pulse width modulation (PWM):

- Control of proportional valves and directional valves
  - Energy savings as a result of a reduction in holding current or for controlling the valve position
- Heating control, for example, via an external additional power unit

Principle of operation

With pulse width modulation, a signal with defined time period and variable pulse duration is output at the digital output. You use pulse width modulation to vary the mean value of the output voltage. This allows you to control the load current or the power in line with the connected load. The pulse duration can be between 0 (no pulse, always off) and full-scale deflection (no pulse, always on).

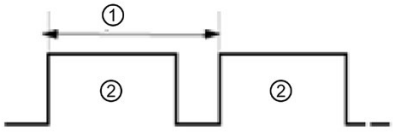

① Period
② Pulse duration

Pulse width modulation (PWM) is based on the specification of a base frequency of 1, 2, 4, 8 or 16 kHz. You can alter the base frequency in terms of period and pulse-pause ratio over the control interface (32-bit value). The bit pattern is shown in each base period. The base period is defined on the basis of the base frequency. A "0" is LOW and a "1" is HIGH.

Examples

Base frequency: 1 kHz → Base period: 1 ms

1111 0000 0000 0000 1111 0000 0000 0000

Time period: 500 µs; 375 µs LOW; 125 µs HIGH

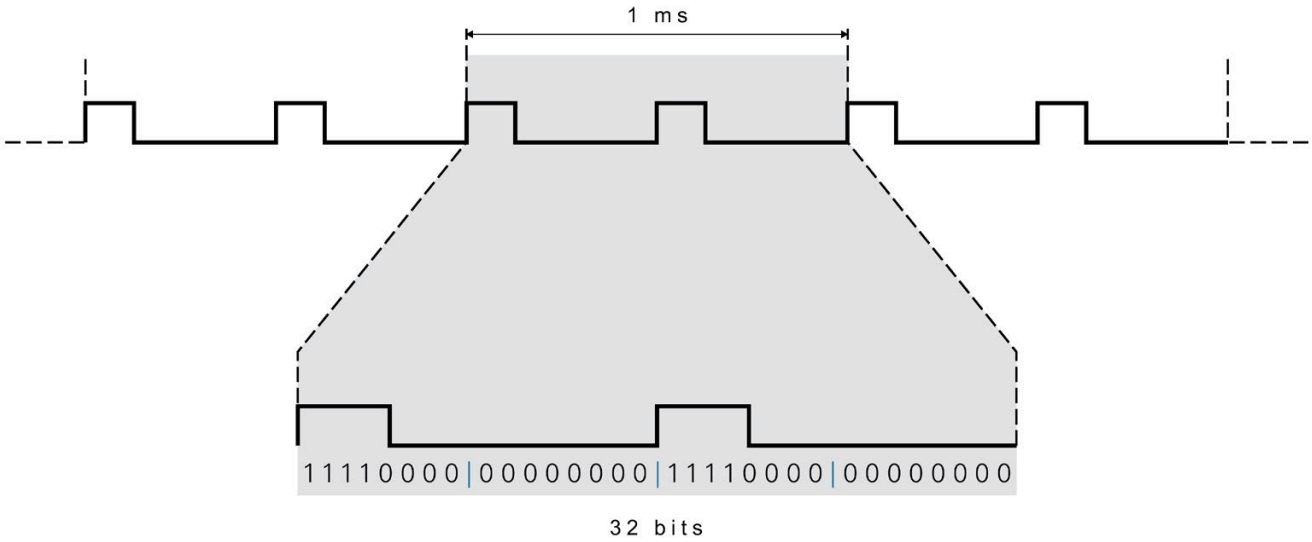

Figure 8-27 Pulse width modulation

Base frequency: 1 kHz

1111 1111 1111 1111 0000 0000 0000 0000

Time period: 1 ms; 500 µs LOW; 500 µs HIGH

1111 1111 0000 0000 0000 0000 0000 0000

Time period: 1 ms; 750 µs LOW; 250 µs HIGH

1111 0000 1111 0000 1111 0000 1111 0000

Time period: 250 µs; 125 µs LOW; 125 µs HIGH

Base frequency: 2 kHz

1010 1010 1010 1010 1010 1010 1010 1010

Time period: 31.25 µs; 15.625 µs LOW; 15.625 µs HIGH

Configuring Pulse width modulation PWM

To configure PWM operating mode, first define the required base frequency of pulse width modulation. You can configure the base frequency as 1, 2, 4, 8 or 16 kHz. The selected base frequency then applies to all channels of interface X142.

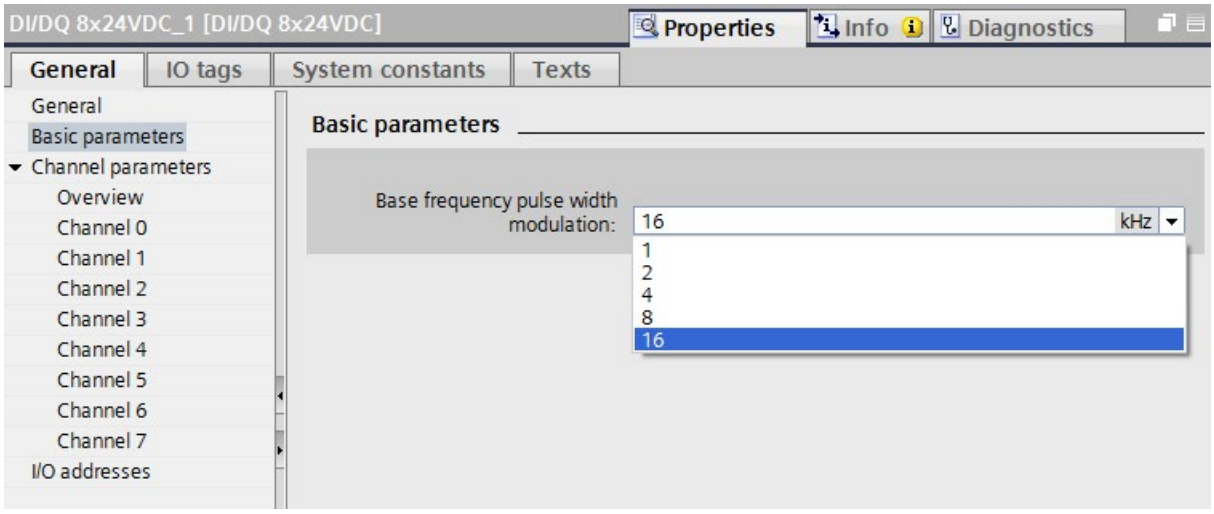

Figure 8-28 Base frequency of pulse width modulation

Now select the channels for PWM operating mode. If you want to configure very short pulses, enable the high-speed output function.

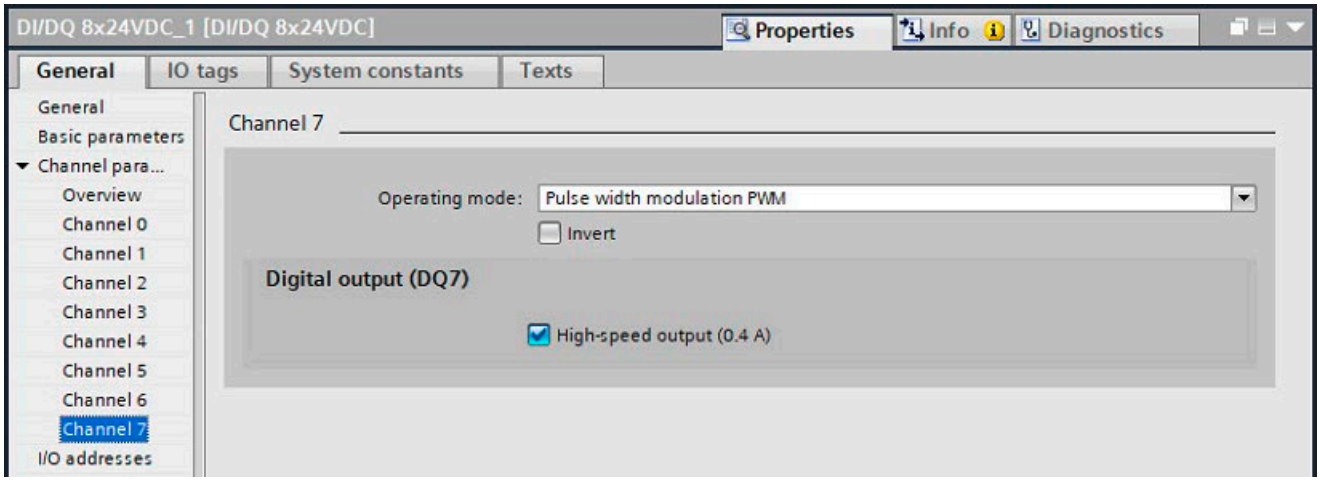

Figure 8-29 Pulse width modulation channel

The selected digital output is switched with the selected base frequency and the switching pattern from the control interface.

Inversion

You can invert the 24 V signal to adjust it to your process. By default, the signal is not inverted.

High-speed output (0.4 A)

If you select the high-speed output option, the digital output is switched alternately to 24 V DC and ground. Allows for extremely steep edges (output delay in the 1 µs range).

To allow signals pending very briefly to be output with pulse width modulation (for example, level duration of 0.1 ms), you must operate the output as a high-speed output.

The rated load is reduced from 0.5 A to 0.4 A with this operating mode.

Further information

You can find more information on the pulse width modulation operating mode in the sections Assignment of the control interface (Page 152) and Assignment of the feedback interface (Page 153).

8.9.9 Assignment of the control interface

Control interface

The user program uses the control interface to influence the behavior of the technology inputs and technology outputs at interface X142.

The following table shows the control interface assignment:

Table 8- 10 Assignment of the control interface

Offset from start address	Parameter	Meaning
Byte 0	SET_DQ (DQ0 to DQ7)	Set DQ (DQ0 to DQ7)
Byte 1 to 3	Reserved	Must not be used
Byte 4 to 7	TEC_OUT (DQ0)	Timer DQ: Byte 0, 1: OFF TIME (output time stamp for DQ reset) Byte 2, 3: ON TIME (output time stamp for setting DQ)
		Oversampling DQ: Byte 0 to 3: 32 states for oversampling
		Pulse width modulation (PWM): Byte 0 to 3: PWM bit pattern
Byte 8 to 11	TEC_OUT (DQ1)	See Byte 4 to 7
Byte 12 to 15	TEC_OUT (DQ2)	
Byte 16 to 19	TEC_OUT (DQ3)	
Byte 20 to 23	TEC_OUT (DQ4)	
Byte 24 to 27	TEC_OUT (DQ5)	
Byte 28 to 31	TEC_OUT (DQ6)	
Byte 32 to 35	TEC_OUT (DQ7)	

Offset from start address	Parameter		Meaning	
Byte 36	SEL (DI0, DI1)		SEL DI1	Bit 5 to 7: Edge selection for time stamp acquisition DI1 001 Rising edges only 010 Falling edges only 011 Rising and falling edges (in order of occurrence) 101 First rising, then falling edge 110 First falling, then rising edge 000, 100, 111 reserved
				Bit 4: Cyclical time stamp acquisition for DI1
			SEL DI0	Bit 0 to 3: see SEL DI1
Byte 37	SEL (DI2, DI3)		See byte 36	
Byte 38	SEL (DI4, DI5)			
Byte 39	SEL (DI6, DI7)			
Byte 40, 41	STW	MSL	Bit 12 to 15: Sign of life counter (master sign of life)	
		---	Bit 1 to 11: Reserved; bits must be set to 0	
		SYN	Bit 0: Synchronization of X142 interface with the user program	

8.9.10 Assignment of the feedback interface

Feedback interface

The user program receives current values and status information from the X142 interface technology I/Os over the feedback interface.

The following table shows the feedback interface assignment:

Table 8- 11 Assignment of the feedback interface

Offset from start address	Parameter	Meaning	
Byte 0	STS_DI (DI0 to DI7)	State DI (DI0 to DI7)	
Byte 1 to 3	Reserved	Must not be used	
Byte 4 to 7	TEC_IN (DI0)	Timer DI: Byte 0, 1: 2nd TIME/OFF TIME (second input time stamp) Byte 2, 3: 1st TIME/ON TIME (first input time stamp)	
		Oversampling DI: Byte 0 to 3: Oversampling value	
		Event/period duration measurement	Event measurement: Byte 0, 1: Reserved Byte 2, 3: Counter value
Byte 8 to 11	TEC_IN_EXT (DI0)		Time period measurement: Byte 0 to 3: Measured time period
Byte 12 to 15	TEC_IN (DI1)	See byte 4 to 11	
Byte 16 to 19	TEC_IN_EXT (DI1)		

Offset from start address	Parameter		Meaning
Byte 20 to 23	TEC_IN (DI2)		
Byte 24 to 27	TEC_IN_EXT (DI2)		
Byte 28 to 31	TEC_IN (DI3)		
Byte 32 to 35	TEC_IN_EXT (DI3)		
Byte 36 to 39	TEC_IN (DI4)		
Byte 40 to 43	TEC_IN_EXT (DI4)		
Byte 44 to 47	TEC_IN (DI5)		
Byte 48 to 51	TEC_IN_EXT (DI5)		
Byte 52 to 55	TEC_IN (DI6)		
Byte 56 to 59	TEC_IN_EXT (DI6)		
Byte 60 to 63	TEC_IN (DI7)		
Byte 64 to 67	TEC_IN_EXT (DI7)		
Byte 68	LEC (DI0, DI1)		Bit 4 to 6: Lost Edge Counter for DI1 Bit 0 to 2: Lost Edge Counter for DI0 Bit 3, 7: Reserved (must not be used)
Byte 69	LEC (DI2, DI3)		Bit 4 to 6: Lost Edge Counter for DI3 Bit 0 to 2: Lost Edge Counter for DI2 Bit 3, 7: Reserved (must not be used)
Byte 70	LEC (DI4, DI5)		Bit 4 to 6: Lost Edge Counter for DI5 Bit 0 to 2: Lost Edge Counter for DI4 Bit 3, 7: Reserved (must not be used)
Byte 71	LEC (DI6, DI6)		Bit 4 to 6: Lost Edge Counter for DI7 Bit 0 to 2: Lost Edge Counter for DI6 Bit 3, 7: Reserved (must not be used)
Byte 72	Reserved		Must not be used
Byte 73	Layout property		Specific value
Byte 74, 75	ZSW	SSL	Bit 12 to 15: Sign of life counter (slave sign of life)
		---	Bit 10, 11: Reserved (must not be used)
		SYNC	Bit 8: X142 interface is synchronized with user program
		Channel address	Bit 4 to 7 and 9: Number of the respective DI or DQ
		Channel mode	Bit 0 to 3: Operating mode of the respective DI or DQ

Substitute value behavior

If the CPU is in STOP, the digital outputs (irrespective of any inversion set) return "0" (LOW level) as a substitute value.

Reading back the terminal state

STS_DI (offset byte 0 of the feedback interface) represents the logical channel status, taking account of any inversion configured.

Digital inputs

With digital inputs (DI, Timer DI, oversampling DI, event/period measurement), the value corresponds to the logical state of the digital input.

Digital outputs

With digital outputs (DQ, Timer DQ, oversampling DQ, pulse width modulation PWM), the value corresponds to the actual terminal state of the digital output. If the terminal state deviates from the controlled state, there may be an output driver short-circuit or defect.

Note

STS_DI

Signals are only reliably acquired over STS_DI if the level is significantly longer than the input delay + acquisition cycle of the digital inputs/outputs (X142).

Example: If you operate the digital inputs/outputs (X142) as isochronous to the MC Servo in a cycle of 2 ms and a set input delay of 125 µs, the level duration must be > 2.125 ms.

8.9.11 Programming example

You can find a programming example for the use of the integrated digital inputs/outputs in the following FAQ on the Internet (https://support.industry.siemens.com/cs/ww/en/view/109782269).

8.10 Configuring the digital inputs and digital inputs/outputs (X122/X132)

The digital inputs and digital inputs/outputs (X122/X132) are assigned to SINAMICS Integrated. Through configuration (frames 39x), you can, however, also use the digital inputs and digital inputs/outputs (X122/X132) for the CPU. The following applies:

- A digital output is always only available exclusively to SINAMICS Integrated or to the CPU.
- If you use a digital input for the CPU, you can also interconnect the digital input at the drive end.

You can configure the digital inputs and digital inputs/outputs (X122/X132) channel by channel. To do so, go to the function view in the project tree under "Automatic speed control" > "Parameter assignment" and set the configuration under "Inputs/outputs".

Bidirectional inputs/outputs are configured in the following configuration mask.

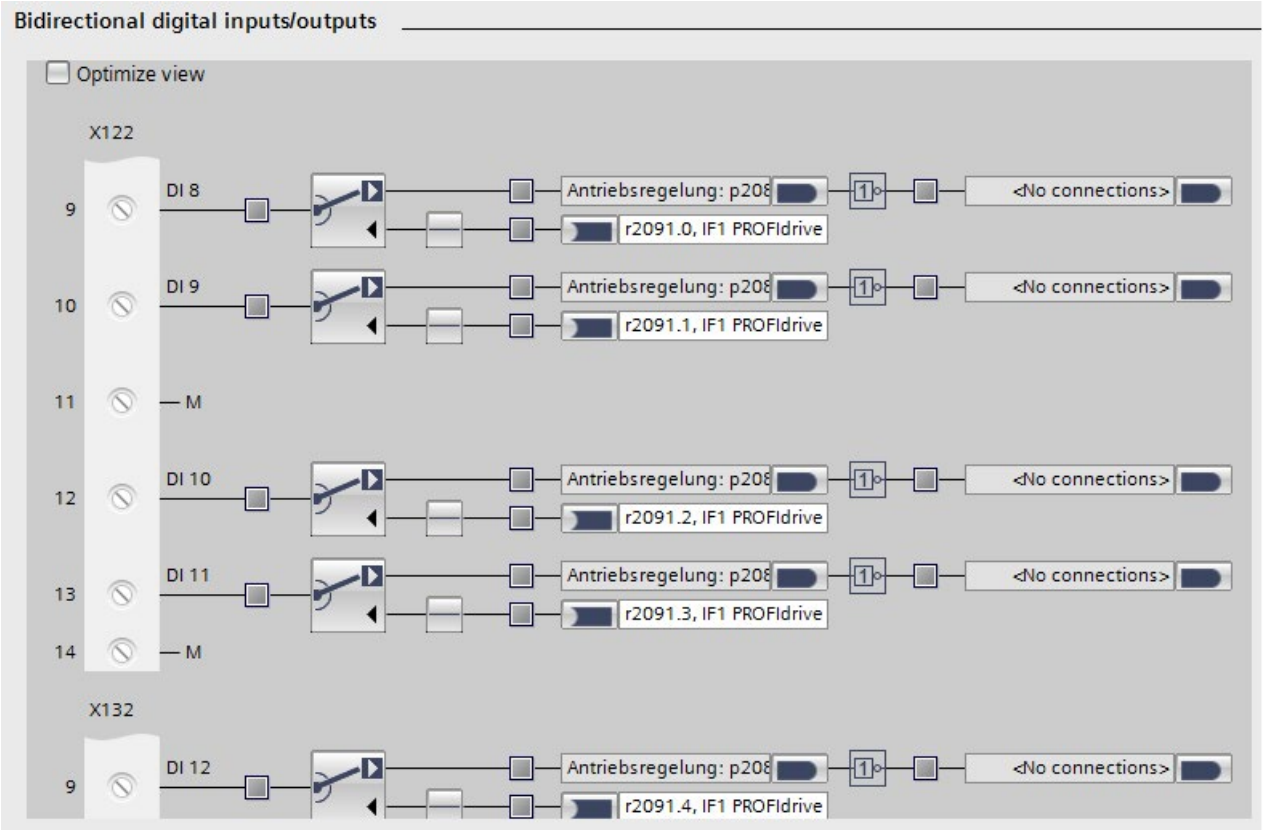

Figure 8-30 Bidirectional inputs/outputs

You can assign the SINAMICS digital inputs and digital inputs/outputs (X122/X132) using frame 39x of the PU. The status information of the digital inputs and digital outputs is then transferred at the PROFIdrive PZD sampling rate (p2048). The inputs/outputs are also sampled in the configured sampling time for the digital inputs and digital inputs/outputs (p0799). The application of the output values and return of the input values are therefore subject to dead times and jitter.

Note

Telegram 393 is set by default during configuration of the SINAMICS Integrated.

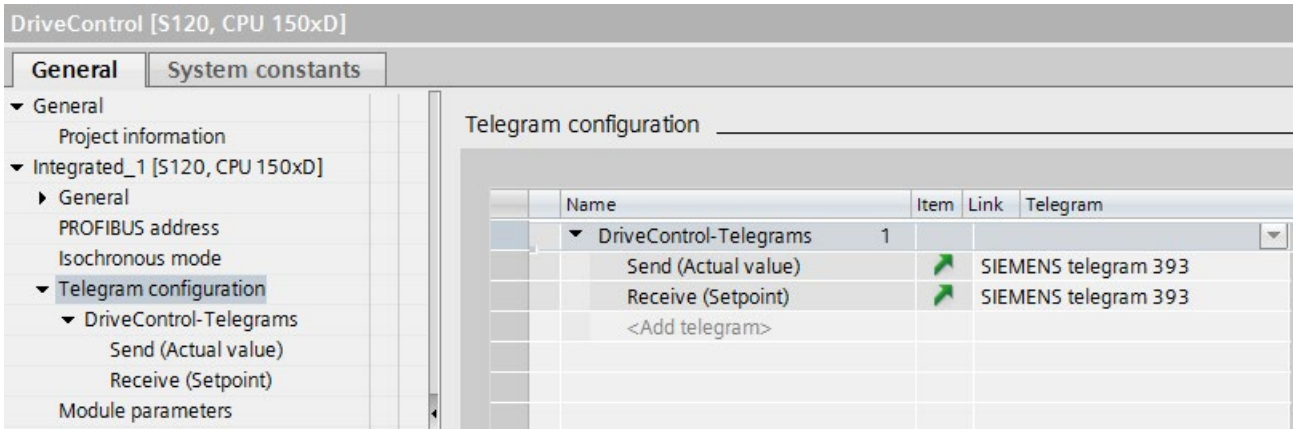

Figure 8-31 Configuration of frame 393 for automatic speed control

You can find further information on the various different frame types in Address space (Page 117).

Note

Interface X142

If you have particularly strict requirements for the digital input/outputs, use the digital input/outputs at interface X142. The digital inputs/outputs can be operated in isochronous mode and allow very short response times.

Programming example

You can find a programming example in the following FAQ on the Internet (https://support.industry.siemens.com/cs/ww/en/view/109782269).

8.11 Configuring the clock system

8.11.1 Overview of isochronous mode

Introduction

The SIMATIC Drive Controller supports isochronous mode for the following clock systems:

- PROFINET IO interface X150
- PROFIBUS DP interface X126
- Technology I/Os X142
- SINAMICS Integrated with PROFIdrive Integrated (always isochronous)

You can operate the clock systems separately or coupled on an isochronous basis.

Exception: Isochronous coupling of the PROFIBUS DP interface is not possible.

Independent isochronous mode

If you want to operate the clock systems separately in isochronous mode, configure a cycle time for each clock system and assign the clock systems to different process images, for example:

- SINAMICS Integrated → PIP OB Servo [OB 91]
- PROFIBUS DP interface X126 → PIP 1 of isochronous mode interrupt OB [OB 6x]

The clock systems are in this case not isochronous **to each other**.

Note

You cannot operate the X142 technology I/Os in isochronous mode separately from SINAMICS Integrated.

If you want to operate technology I/Os X142 and SINAMICS Integrated isochronously at the same time, the coupled isochronous mode must be set.

Coupled isochronous mode

In coupled isochronous mode, the relevant clock systems use a shared system clock.

The leading clock system provides its own system clock to the other clock systems.

The following table shows the possible combinations for coupled isochronous mode on the SIMATIC Drive Controller. The leading clock system for each combination is indicated.

Table 8- 12 Possible combinations for coupled isochronous mode

PROFINET IO interface X150	Technology I/Os X142 (local send clock)	SINAMICS Integrated (PROFIdrive Integrated)	PROFIBUS DP interface X126
X (leading)	X	X	-
X (leading)	-	X	-
X (leading)	X	-[1]	-
-	**X (leading)**	X	-

[1] SINAMICS Integrated is not configured.

You configure coupled isochronous mode in STEP 7; see Setting the clock system (Page 171).

Note

Isochronous coupling of the PROFIBUS interface with other clock systems is not possible.

If you want to expand the drive configuration limits with distributed drive systems, connect those distributed drive systems over the PROFINET IO interface X150. Only the PROFINET IO interface X150 can be connected isochronously alongside the MC Servo to the clock system of SINAMICS Integrated and the X142 technology I/Os.

8.11.2 Configuring drives with SINAMICS Integrated isochronously

Requirements

- STEP 7 , V16 or higher
- SINAMICS Startdrive , V16 or higher

Procedure

1. Add a SIMATIC Drive Controller to your project.
   The network view displays the components of a SIMATIC Drive Controller: SIMATIC S7-1500 CPU and SINAMICS Integrated, networked through PROFIdrive Integrated.

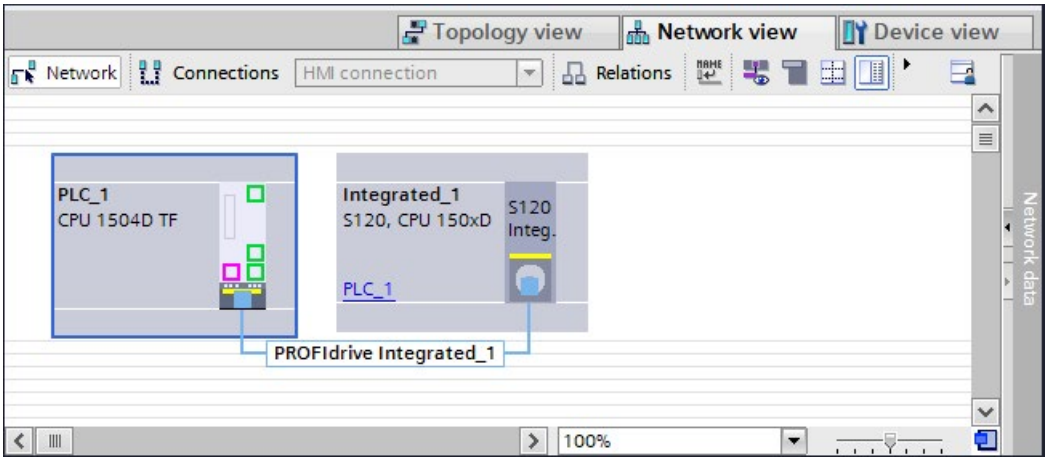

Figure 8-32 SIMATIC Drive Controller in the network view

2. Open the device view of SINAMICS Integrated. Configure the SINAMICS S120 drive system with its drive objects.
   You can find the relevant details in the SINAMICS S120 with Startdrive commissioning manual (https://support.industry.siemens.com/cs/ww/en/view/109763294).

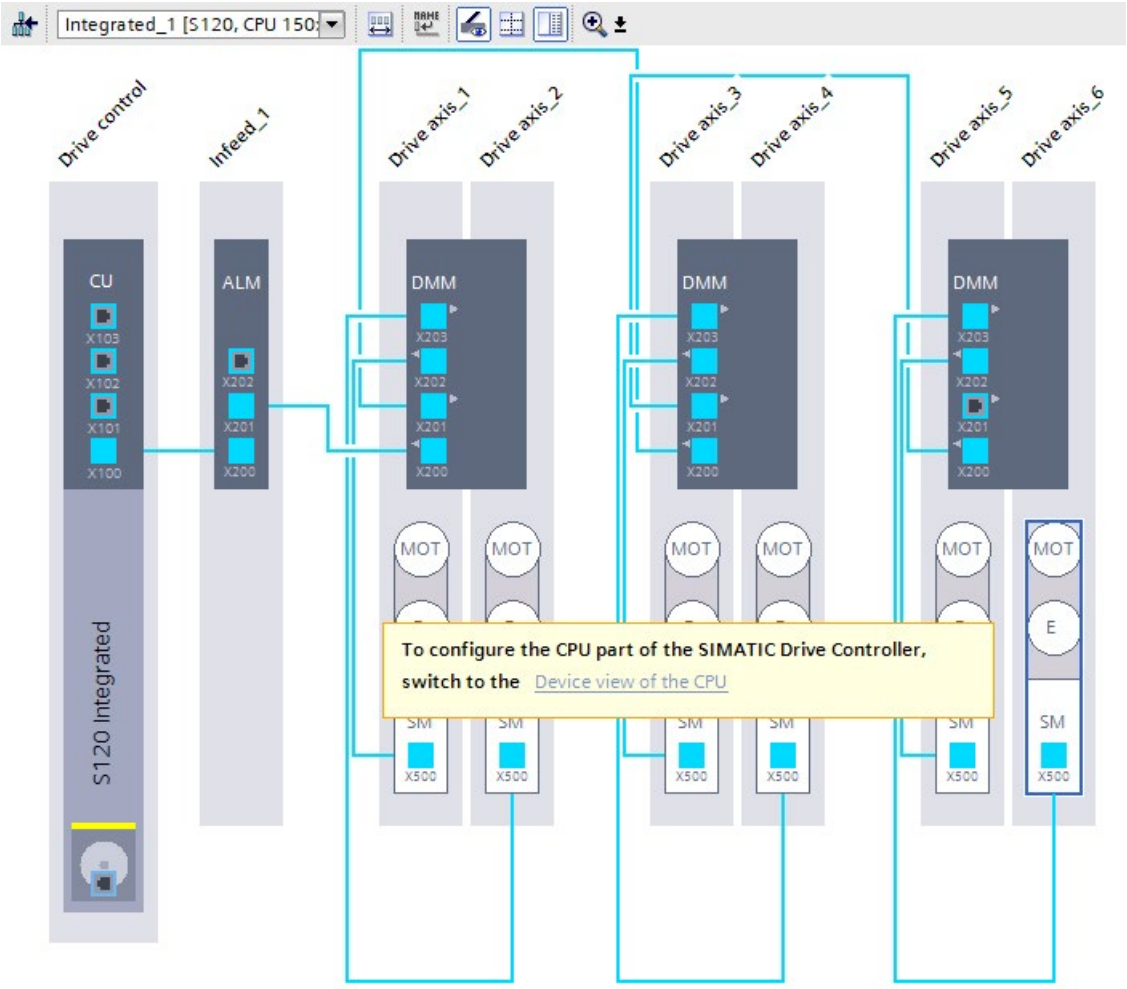

Figure 8-33 Configuring the SINAMICS S120 drive system

3. Select the drive control in the SINAMICS Integrated device view.
   Check the default PROFIdrive telegrams In the properties, under "Integrated_1" > "Telegram configuration" in the "General" tab. Make changes if required.
   The following default settings are made automatically:
   - Automatic speed control: Frame 393
   - Supply: Frame 370
   - Drive axes: Frame 105

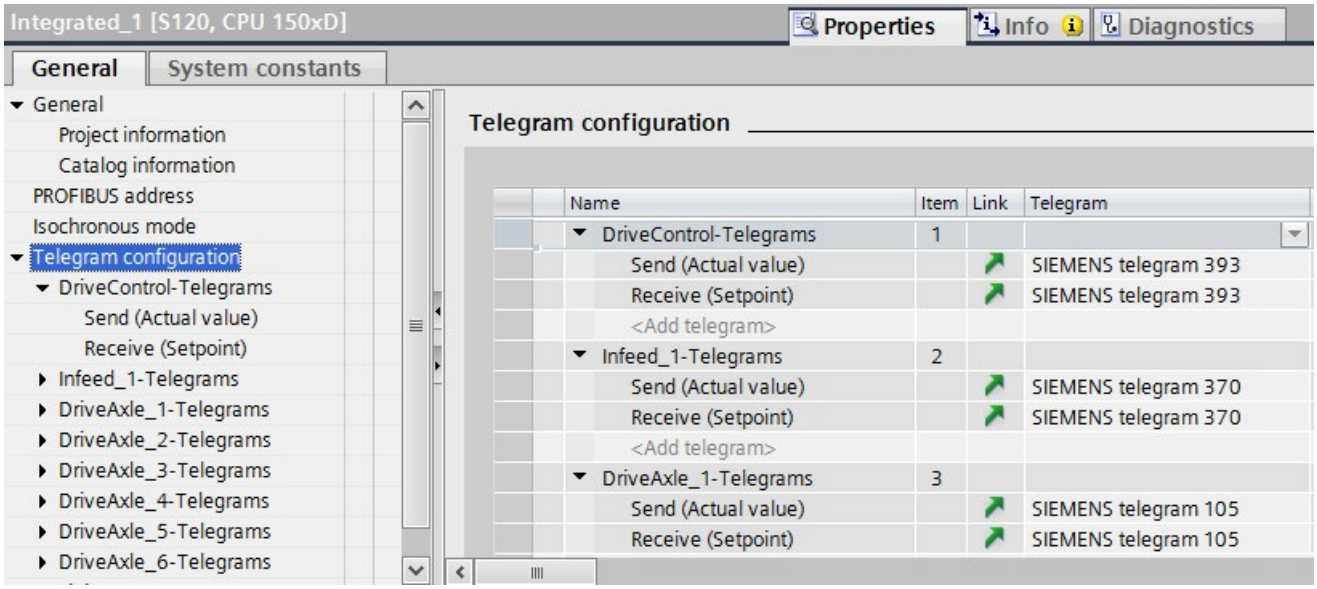

Figure 8-34 Configuring PROFIdrive frames

4. Create the axis technology objects. You create the axis technology objects under "Technology objects > Add new object" in the project tree.

5. Assign the configured drives to the axis technology objects.
   - Open the configuration of the technology object.
   - Navigate to "Hardware interface" > "Drive".
   - Select the "PROFIdrive" entry from the "Drive type" drop-down list.
   - Select the "Drive" entry from the "Data connection" drop-down list.
   - Select a SINAMICS Integrated drive axis from the "Drive" list.

   Only drives for which a suitable PROFIdrive frame has been configured are available for selection in the "Drive" list. You can find which PROFIdrive frames are supported by the SINAMICS Integrated in the S7-1500T Motion Control function manuals (https://support.industry.siemens.com/cs/ww/en/view/109751049).

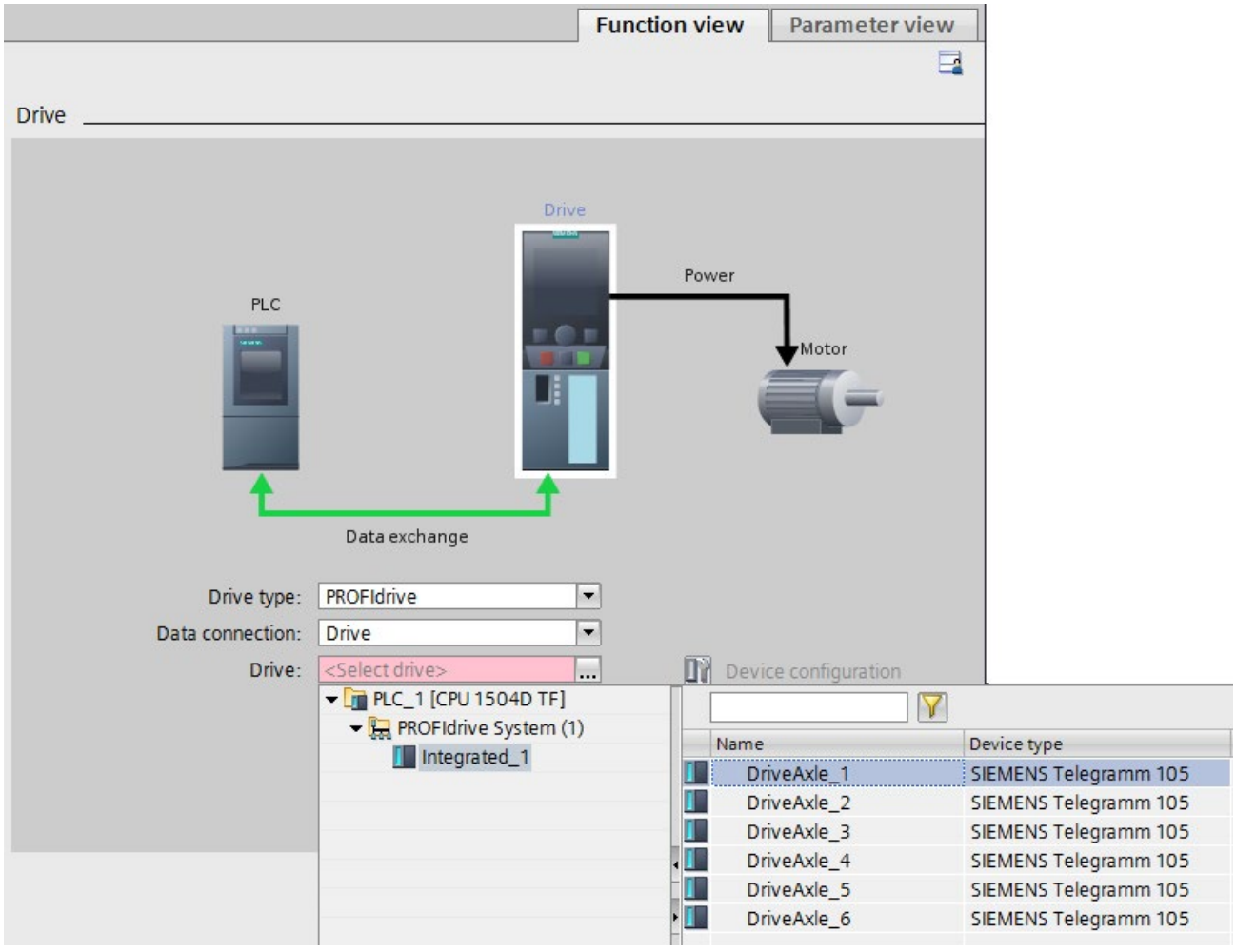

Figure 8-35 Assigning drives to the technology objects

The technology object is connected to the drive. When the drives are assigned to the axis technology objects, the following takes place:

- MC-Servo is created (if not already present)
- The TPA OB Servo is entered as the process image for all PROFIdrive telegrams

6. Once you have configured all axis technology objects, switch back to the drive configuration if necessary. You can use the "Device configuration" button.

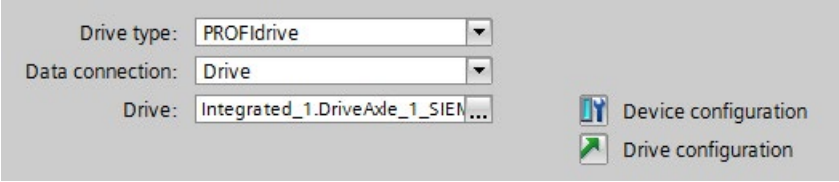

Figure 8-36 "Device configuration" button

Note

With SINAMICS Integrated, all frames must be operated in isochronous mode on OB Servo (OB 91) or isochronous mode interrupt OB (OB 6x). STEP 7 checks compliance with this rule when compiling the SIMATIC Drive Controller.

Exception: If you insert a SIMATIC Drive Controller in your project from the module catalog, "--- (none)" is entered as the organization block for the drive control. If you do not configure any other drive objects, you can also compile and download to the device without isochronous mode.

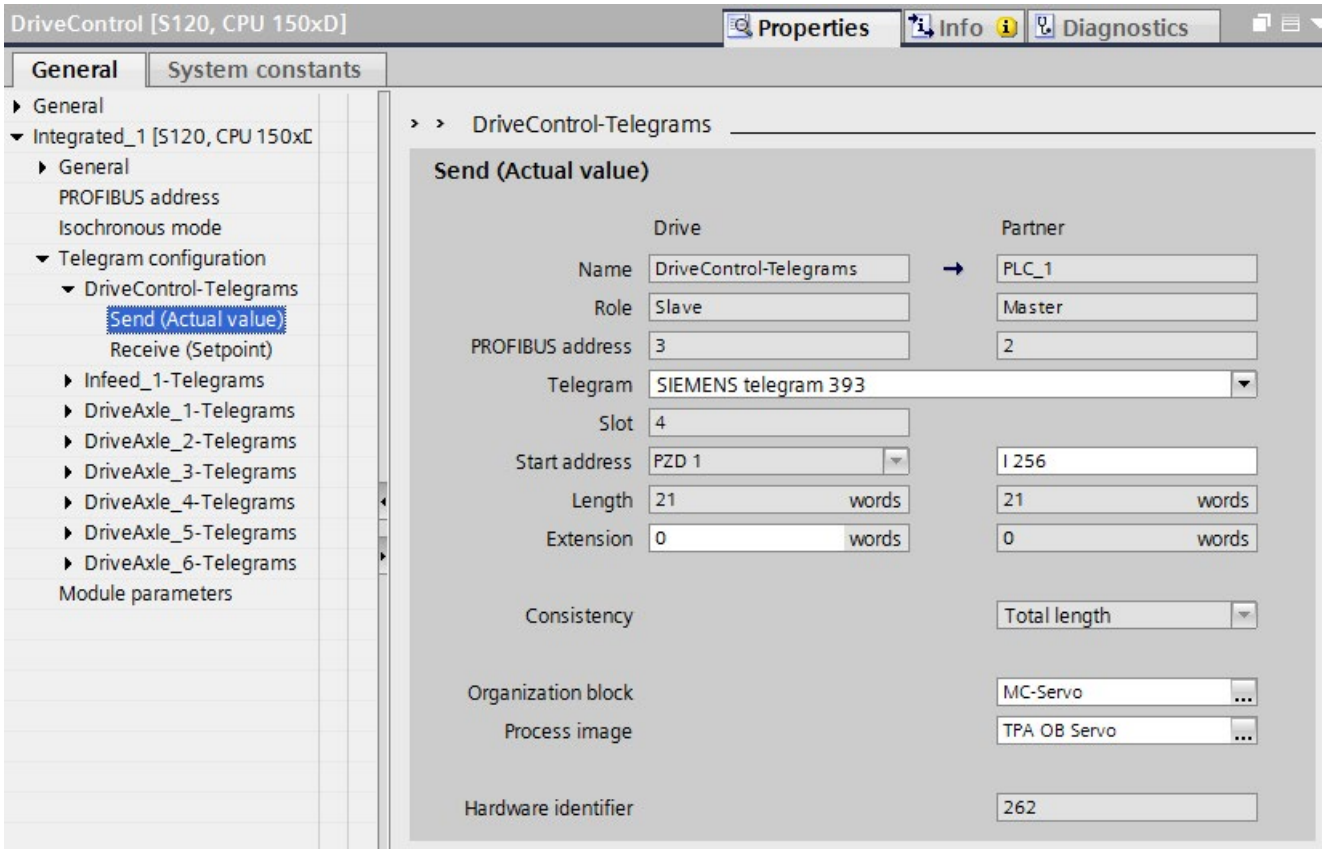

Figure 8-37 Configuring telegrams as isochronous

Setting the clock system for independent and coupled isochronous mode

You have configured SINAMICS Integrated as isochronous. Next, set the clock system.

Make the following settings in accordance with whether you are operating SINAMICS Integrated in independent or coupled isochronous mode:

- For independent isochronous mode:
  - Set the required cycle time.
  - Assign the "MC Servo" OB the clock system of SINAMICS Integrated.
- For coupled isochronous mode:
  - Assign the clock system of SINAMICS Integrated the leading clock system.
    You can find details of how to assign the leading clock system in Setting the clock system (Page 171).

8.11.3 Configuring technology I/Os (X142) as isochronous

Requirements

- STEP 7, V16 or higher
- SIMATIC Drive Controller has been configured.
- At least one axis technology object has been created at the CPU of the SIMATIC Drive Controller.
  See for example Configuring drives with SINAMICS Integrated isochronously (Page 160).

Procedure

1. Open the device view of the CPU.
2. Configure the operating modes of the technology I/Os in the CPU properties under "General" > "DI/DQ 8x24VDC[X142]" > "Channel parameters", for example, a timer DQ for later use as a cam output for channel 3.

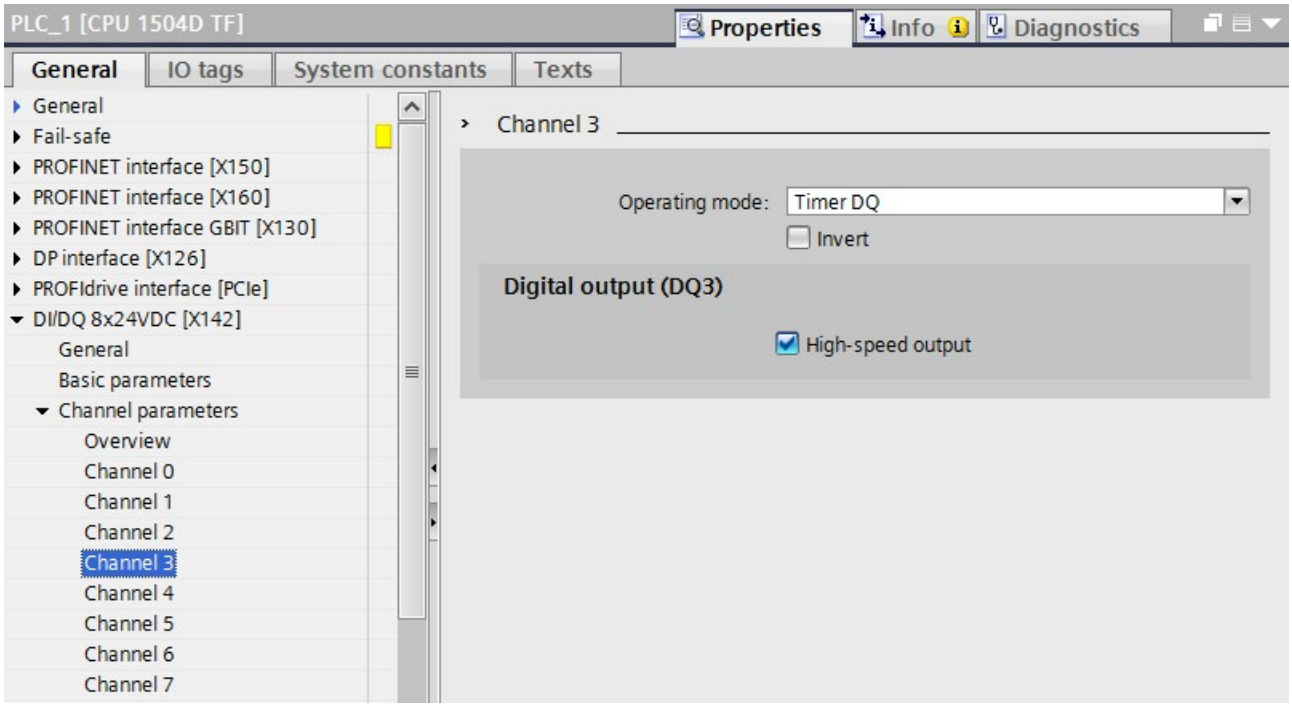

Figure 8-38 Setting the operating mode for technology I/O X142

3. In the project tree under the axis technology object, add an output cam technology object under "Output cam" > "Add new output cam".
4. Open the configuration of the output cam.
5. Under "Hardware interface", select the "Activate output" checkbox and the option "Output over Timer DQ".

6. Assign the configured output under "Output".

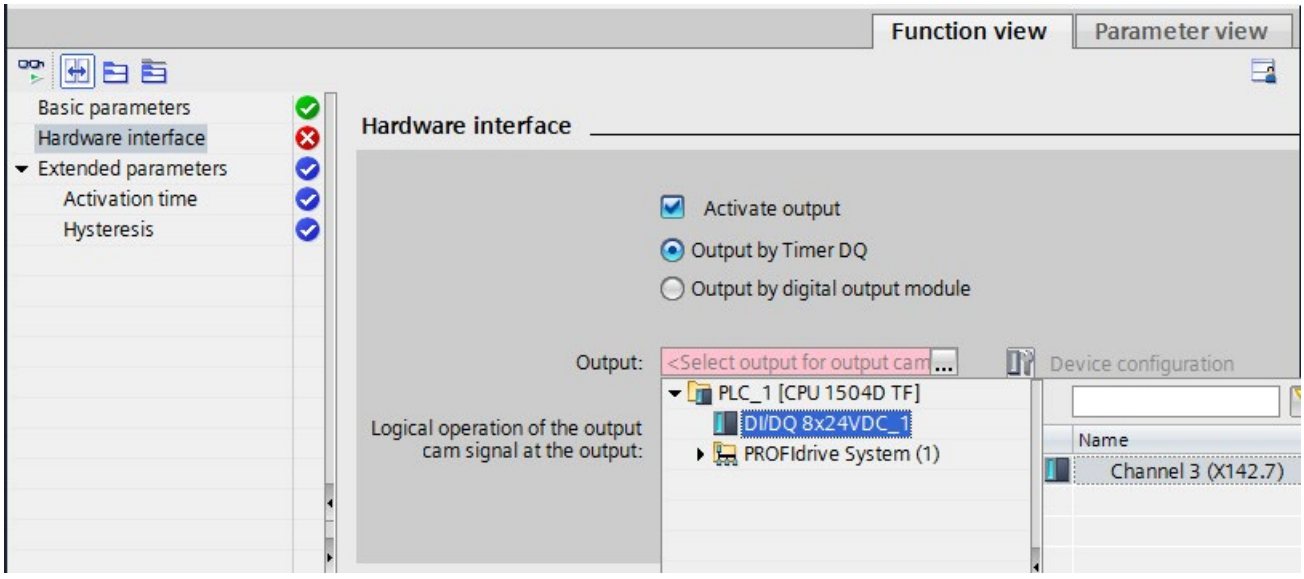

Figure 8-39 Assigning a channel to the output cam

7. Use the "Device configuration" button to switch back to the CPU settings and check the settings under "DI/DQ 8x24VDC [X142]" > "I/O addresses".

   The following settings must be configured for the input and output addresses:

   – "Isochronous mode" is enabled.
   – The organization block "MC Servo" is selected.
   – The process image "OB Servo PIP" is selected.

Automatic settings

Isochronous mode is mandatory for certain operating modes of the X142 technology I/O channels.

As soon as you set one of the following operating modes for a technology I/O channel, STEP 7 automatically selects the option "isochronous mode".

- Timer DI
- Timer DQ
- Oversampling DI
- Oversampling DQ
- Event/period measurement

If you assign an output cam, cam track or measuring input technology object to an X142 I/O, STEP 7 automatically sets the process image "OB Servo PIP".

In all other cases, you set the process image manually. If isochronous mode is mandatory for at least one technology I/O, you must set the process image of the "MC Servo" OB (OB91) or an isochronous mode interrupt OB (OB6x).

Setting the clock system

You have configured the technology I/Os as isochronous. Next, set the clock system.

Make the following settings in accordance with whether you are operating the X142 technology I/Os in independent or coupled isochronous mode:

- For independent isochronous mode or if the X142 technology I/Os are the leading clock system
  - Set the required cycle time.
  - Assign the "MC Servo" OB the clock system of the technology I/Os.

  Note

  You cannot operate the X142 technology I/Os in isochronous mode separately from SINAMICS Integrated. If you want to operate technology I/Os X142 and SINAMICS Integrated isochronously at the same time, the coupled isochronous mode must be set.

- For coupled isochronous mode:
  - Assign the leading clock system to the clock system of the technology I/Os.
    You can find details of how to assign the leading clock system in Setting the clock system (Page 171).

8.11.4 Configuring additional drives on PROFINET (X150) as isochronous

Requirement

- STEP 7, V16 or higher
- SINAMICS Startdrive, V16 or higher

You can import drives that are not integrated in the TIA Portal via Startdrive using GSD files (generic station description). To do so, install the drive in the "Options" menu as a device description file (GSD).

Adding a drive and frame to the device configuration

1. Add the required drive system in the network view, for example, SINAMICS S120 CU320-2 PN.
2. Open the device view of the drive system and configure the drive objects.
   You can find the relevant details in the SINAMICS S120 with Startdrive commissioning manual (https://support.industry.siemens.com/cs/ww/en/view/109763294).
3. Open the network view. Assign the drive system to the PROFINET interface [X150] of the CPU.
4. Open the topology view. Interconnect the port of the drive system as in the real configuration with the port of the CPU.
5. Configure the PROFIdrive frames for the drive axes, for example, frame 105.

Note

If you use a PROFINET IO drive system other than SINAMICS S120, adding and configuring may differ from the description in certain respects. The frame is automatically preassigned in line with the drive system.

Activating isochronous mode in the device configuration

You can operate PROFINET drives in isochronous or non-isochronous mode. Isochronous mode, however, increases the quality of the position control of the drive and is therefore recommended for drives such as SINAMICS S120.

Proceed as follows to activate isochronous mode for the drive:

1. Select the device view of the drive system.
2. In the properties window, select the tab "PROFINET Interface [X150]" > "Advanced options" > "Isochronous mode".
3. Select the "Isochronous mode" check box.
4. In the properties window, select the tab "PROFINET Interface [150]" > "Advanced options" > "Real-time settings" > "Synchronization".
5. Select "IRT" as the RT class.

Note

If you have configured a PROFIdrive frame at the drive that requires isochronous mode, STEP 7 automatically sets "Isochronous mode" and the RT class "IRT".

Configuring the CPU as sync master and setting the send clock

1. Select the device view of the CPU.
2. In the properties window, select the tab "PROFINET interface [X150]" > "Advanced options" > "Real-time settings" > "Synchronization".
3. Select "IRT" as the RT class if it has not already been set automatically.
4. Select "Sync master" from the "Synchronization role" drop-down list.
5. Click the "Domain settings" button.
6. Set the required send clock.

Selecting the drive in the configuration of the technology object

1. Add a new axis technology object.
2. Open the configuration "Hardware interface" > "Drive".
3. Select the "PROFIdrive" entry from the "Drive type" drop-down list.
4. Select a drive axis of the PROFINET drive unit from the "Drive" list.
   Only drives for which you have configured a suitable PROFIdrive frame are available for selection. You can find out which PROFIdrive frames are supported by the SIMATIC Drive Controller in the S7-1500T Motion Control function manuals (https://support.industry.siemens.com/cs/ww/en/view/109751049).

   Using the "Device configuration" button, you can switch to the drive device view, for example, to configure drives or set other PROFIdrive frames (for example 39x frame for the X122/X132 IOs of a CU320-2).

Setting the clock system

You have configured an external drive as isochronous on PROFINET using the example of the SINAMICS S120 CU320-2 PN. Next, set the clock system.

- Choose between independent and coupled isochronous mode.
- Set the required send clock.
- Assign the "MC Servo" OB the clock system of the PROFINET interface X150.

You can find more information in Setting the clock system (Page 171).

8.11.5 Configuring the PROFIBUS interface as isochronous

You can find out how to configure isochronous mode for distributed I/O on the PROFIBUS DP in the Isochronous Mode (https://support.industry.siemens.com/cs/ww/en/view/109755401) function manual.

Note

Isochronous coupling of the PROFIBUS interface with other clock systems is not possible.

If you want to expand the drive configuration limits with distributed drive systems, connect those distributed drive systems over the PROFINET IO interface X150. Only the PROFINET IO interface X150 can be connected isochronously alongside the MC Servo to the clock system of SINAMICS Integrated and the X142 technology I/Os.

8.11.6 Setting the clock system

The SIMATIC Drive Controller supports isochronous mode for the following clock systems:

- PROFINET IO interface X150
- PROFIBUS DP interface X126
- Technology I/Os X142
- SINAMICS Integrated with PROFIdrive Integrated (always isochronous)

You can operate the clock systems separately or coupled on an isochronous basis. Exception: Isochronous coupling of the PROFIBUS DP interface is not possible. You can find information on the combinations in which you can couple the clock systems in Overview of isochronous mode (Page 158).

You make the required settings in the relevant clock systems.

Once you have set and, if necessary, coupled the clock systems, you need to couple the OB servo with the clock system in which you wish to operate the drives / that is the leading clock system. Depending on the configuration, these settings are made by the system.

Use of clock cycles < 500 µs

You can only use clock cycles < 500 µs in the CPU 1507D TF with the following restrictions:

- Limited quantities are available.
- The vulnerability for level overflows increases, for example, with MC Servo [OB91] and MC Interpolator [OB92]. This may result in an involuntary STOP of the CPU, especially in case of additional loads caused by the user program, traces and large watch tables.
- A down-scaling from the application cycle of the MC-Servo [OB91] to the selected clock system, results in an additional load and should be avoided with small clocks.

You should, therefore, only use clock cycles < 500 µs in exceptional cases and test your application very intensely.

For small position controller clock cycles, you can also use the position controller in the drive (Dynamic Servo Control function, DSC). This allows for position controller clock cycles of 125 µs, for example.

Dynamic Servo Control (DSC)

In drives that support Dynamic Servo Control (DSC), you can optionally use the position controller in the drive.

If you use telegrams that support DSC, DSC is automatically enabled (setting "Position control in the drive (DSC enabled)" is enabled at the axis TO under control loop / Dynamic Servo Control (DSC)). The position controller in the drive is usually implemented with a rapid speed-control cycle. This improves the control quality of the drive.

For drives on the SINAMICS Integrated, the Siemens telegram 105 is sent with DSC by default.

Note

Isochronous mode is essential on the controller and on the drive side for the operation of DSC.

You can find further information in the S7-1500T Motion Control function manuals (https://support.industry.siemens.com/cs/ww/en/view/109751049).

SINAMICS Integrated clock system

Proceed as follows to set the clock system of the SINAMICS Integrated:

1. Switch to the network view.
2. Click on PROFIdrive Integrated in the network view.
3. Make the settings for the SINAMICS Integrated under "Constant bus cycle time". The SINAMICS Integrated is always isochronous (option is always selected).

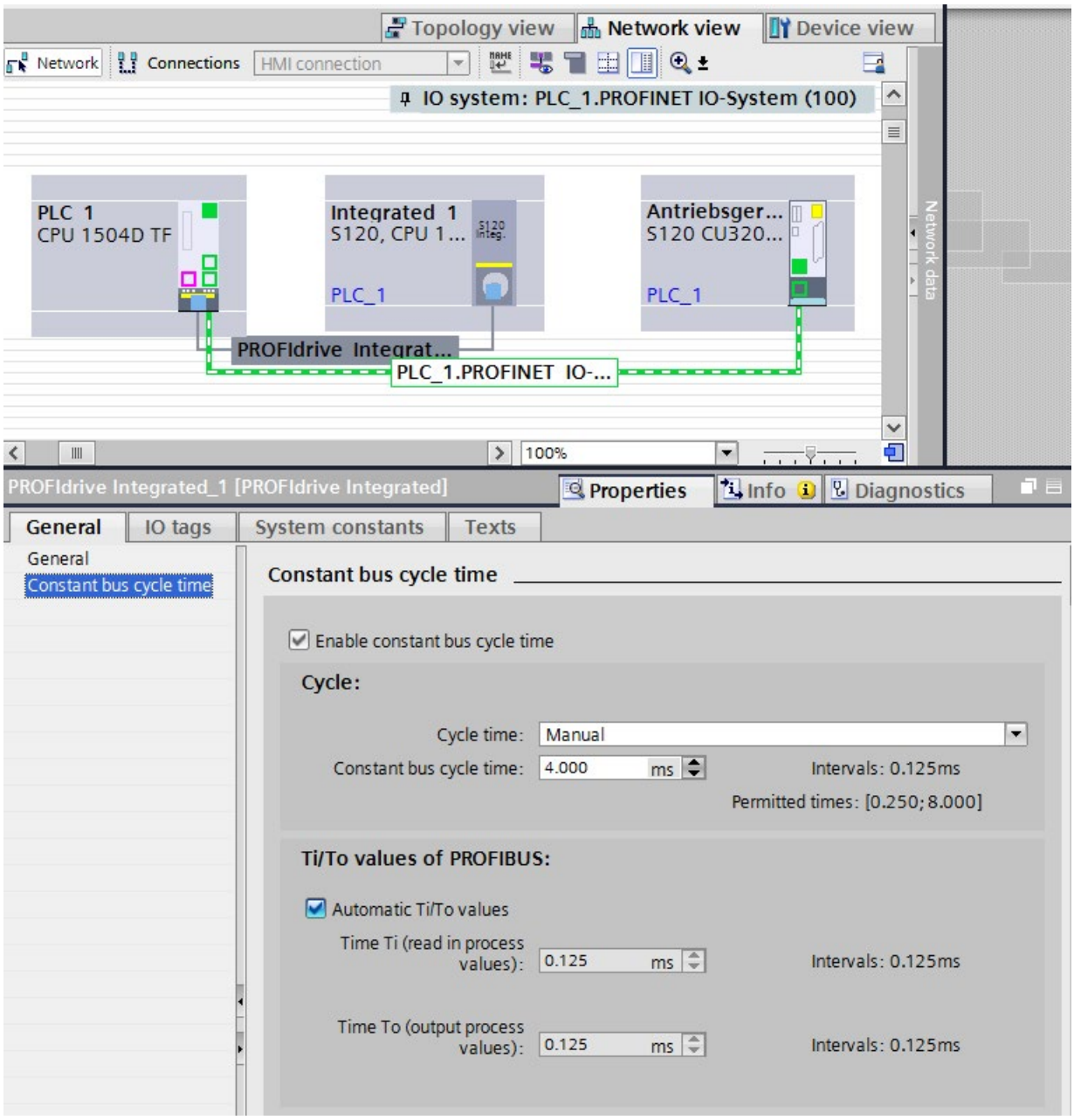

Figure 8-40 SINAMICS Integrated (PROFIdrive Integrated) clock system

Adjust other settings if required – for example times Ti/To for reading in/outputting data in isochronous mode.

Table 8- 13 Setting options for "Cycle time" in the SINAMICS Integrated clock system

Setting options	Note
Manual	With these settings, you operate the SINAMICS Integrated as an independent clock system.
Automatic minimum	
Use local send clock [X142]	With this setting, you operate the SINAMICS Integrated in isochronous mode coupled with the clock system of the X142 technology I/Os. Use this setting if you want to use the technology I/Os isochronously with the OB servo, for example, for measuring input or output cam applications. Please note the following: • You cannot operate the X142 technology I/Os in isochronous mode separately from SINAMICS Integrated. • If you want to operate technology I/Os X142 and SINAMICS Integrated isochronously at the same time, the coupled isochronous mode must be set. Consistency checks ensure that the setting is correct.
Using the send clock of the PROFINET interface [X150]	With this setting, you operate SINAMICS Integrated in isochronous mode coupled with PROFINET interface X150. SINAMICS Integrated uses the system clock of PROFINET interface X150. Use this setting if you need to operate the SIMATIC Drive Controller in isochronous mode at PROFINET IO interface X150, for example, for the connection of drives or for synchronous operation across PLC.

X142 technology I/Os clock system

Proceed as follows to set the clock system of the X142 technology I/Os:

1. In the device view of STEP 7, select the CPU of the SIMATIC Drive Controller.
2. Navigate to "Advanced configuration" > "Isochronous mode" in the properties of the CPU.
3. Select the required settings from the "Source of send clock" drop-down list in the "Isochronous mode for local modules" section.

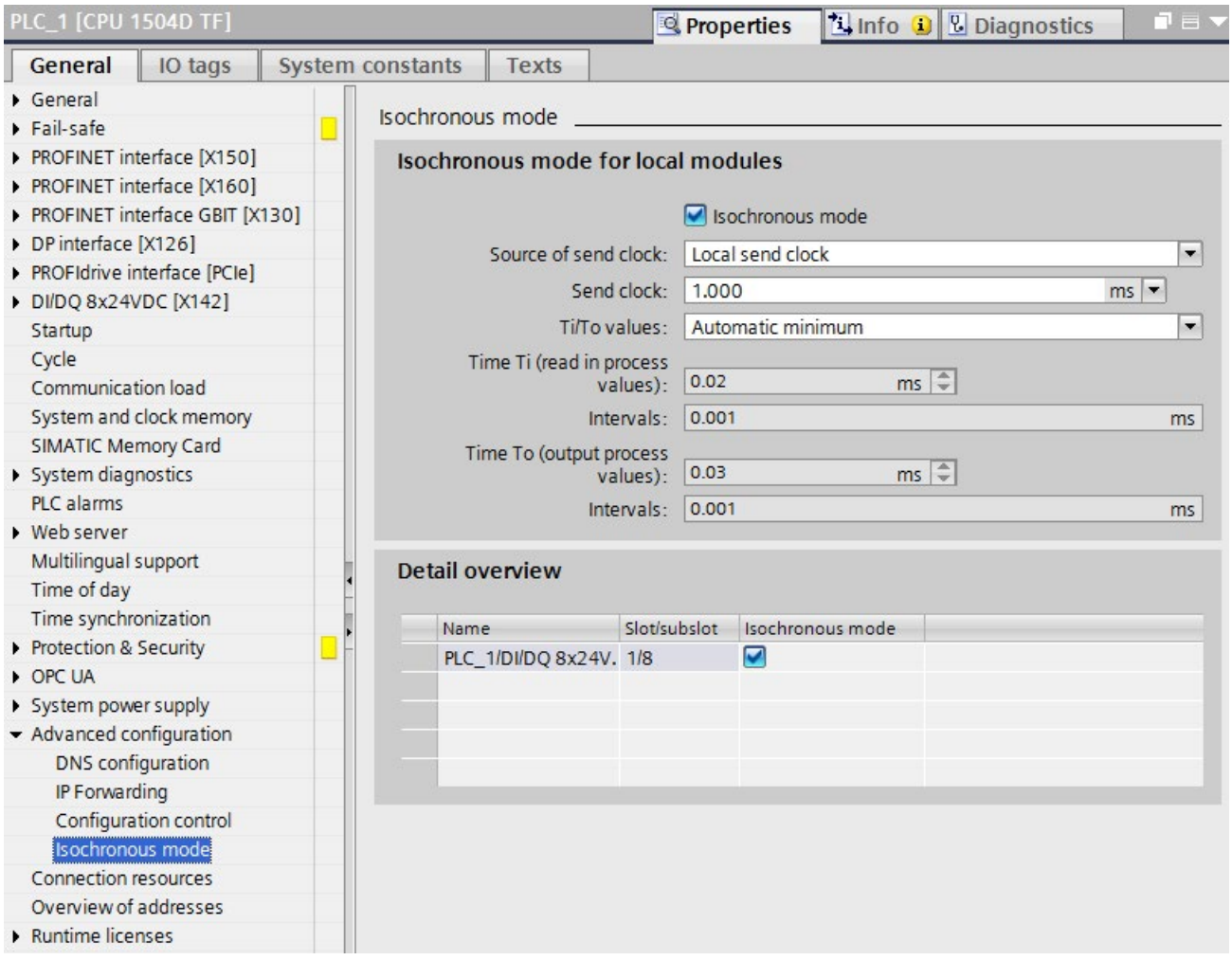

Figure 8-41 Technology I/O clock system

Table 8- 14 Setting options for "Source of send clock" in the clock system of the technology I/Os

Setting options	Note
Local send clock	With this setting, you operate the X142 technology I/Os as an independent clock system, or as the leading clock system if you couple the clock system of the SINAMICS Integrated.
Using the send clock of the PROFINET interface [X150]	With this setting, you operate X142 technology I/Os in isochronous mode coupled with PROFINET interface X150. The X142 technology I/Os use the system clock of PROFINET interface X150.

PROFINET IO interface X150 clock system

Proceed as follows to set the clock system of PROFINET interface X150:

1. Select the PROFINET IO system in the network view of STEP 7.
2. Make the settings for the send clock, etc. under "PROFINET subnet" > "Domain management" > "Sync domains".

In coupled isochronous mode with other clock systems, the clock system of the PROFINET interface is always leading.

You can find additional information on configuring isochronous mode on PROFINET IO in the Isochronous mode (https://support.industry.siemens.com/cs/ww/en/view/109755401) function manual.

PROFIBUS interface X126 clock system

You must follow the rules below during configuration if you want to operate the PROFIBUS DP interface in isochronous mode:

Table 8- 15 Rules for configuring isochronous mode for PROFIBUS DP interface

If ...	The configured cycle time of the PROFIBUS DP interface must...
A SINAMICS Integrated is configured	Be equal to or an integer multiple of the configured cycle time of the SINAMICS Integrated (PROFIdrive Integrated)
The X142 technology I/Os are operated in isochronous mode	Be equal to or an integer multiple of the configured cycle time of the X142 technology I/Os
The clock system of the PROFINET IO interface is coupled with one of the two clock systems.	Be equal to or an integer multiple of the configured cycle time of the PROFINET IO interface

Consistency checks ensure that the setting is correct.

Proceed as follows to set the clock system of the PROFIBUS interface:

1. Select the DP master system in the network view of STEP 7.
2. Make the settings for the DP cycle under "Constant bus cycle time".

Note

Isochronous coupling of the PROFIBUS interface with other clock systems is not possible.

If you want to expand the drive configuration limits with distributed drive systems, connect those distributed drive systems over the PROFINET IO interface X150. Only the PROFINET IO interface X150 can be connected isochronously alongside the MC Servo to the clock system of SINAMICS Integrated and the X142 technology I/Os.

Synchronizing MC Servo with clock system

Proceed as follows to synchronize the MC Servo with a clock system:

1. Open the "Program blocks" folder in the project tree.
2. Select the "MC Servo" organization block.
3. Select the "Properties" command in the shortcut menu.
4. Select the "Cycle time" entry in the area navigation.
5. The option "Synchronous to the bus" must be selected in the dialog box.
6. In the "Source of send clock" drop-down list, select the clock system to be synchronized with the OB MC-Servo.

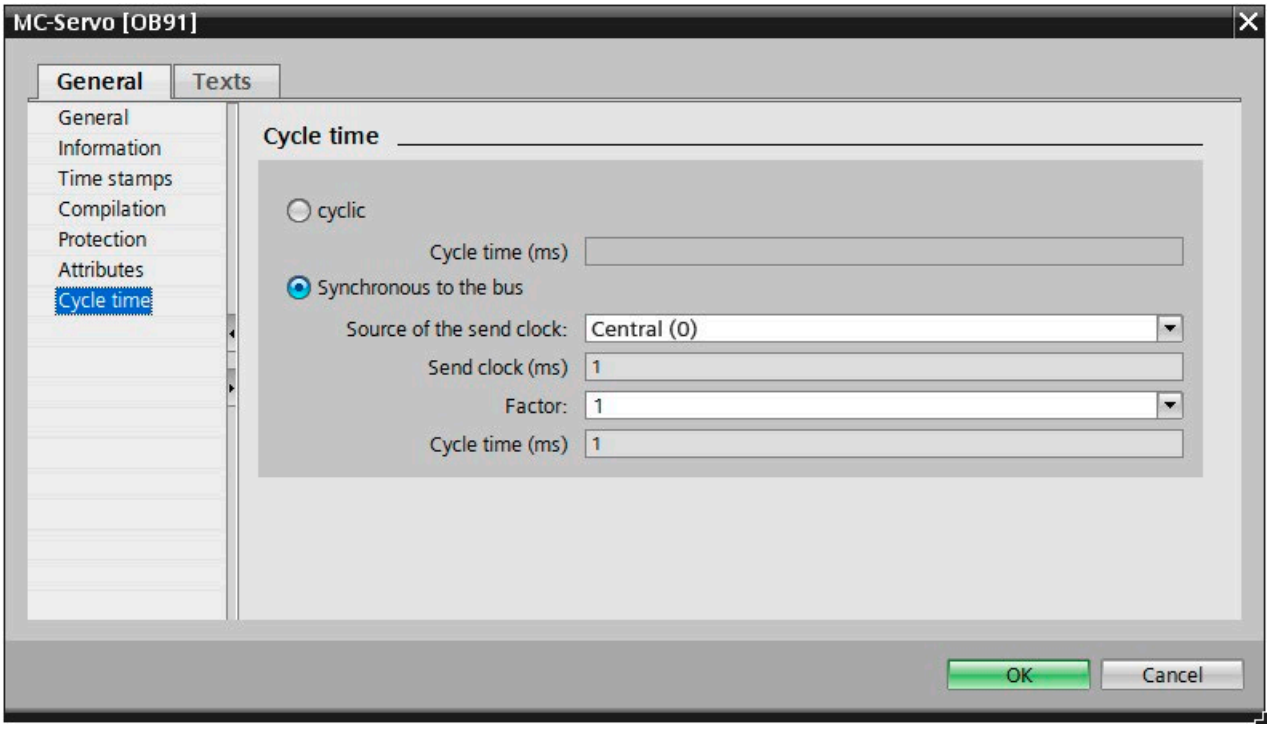

Figure 8-42 Synchronizing MC Servo with clock system

Table 8- 16 Setting options for synchronization with a clock system

Setting options[1)]	Note
PROFIdrive system (1)	With this setting, you synchronize MC Servo with the clock system of SINAMICS Integrated.
PROFINET IO system (100)	With this setting, you synchronize MC Servo with PROFINET interface X150.
Central (0)	With this setting, you synchronize MC Servo with the clock system of technology I/Os X142.
DP master system (2)	With this setting, you synchronize MC Servo with PROFIBUS interface X126.

1) The designations may vary depending on the names assigned.

For coupled isochronous mode, the leading clock system must always be selected.

If the leading clock system is not set as the source of the send clock in the case of a coupled clock system, then the leading clock system is automatically set when compiling the project data and a corresponding note is displayed.

Setting the application cycle

The application cycle of MC Servo is derived from the send clock and a configurable factor. The adjustable factors depend on the coupled clock system.

8.12 Configuring fail-safe technology CPU

The SIMATIC Drive Controller contains a fail-safe SIMATIC S7-1500 technology CPU with integrated technology I/Os.

Note the following information when you use the SIMATIC Drive Controller as fail-safe technology CPU.

Safety and standard mode

The fail-safe design of the integrated technology CPU allows you to implement applications for safety systems, for example, safety solutions for the protection of machines and people. This enables seamless integration of machine safety into the SIMATIC Drive Controller. You use one system for both your standard and fail-safe automation at the same time.

You can program the F-CPU of the SIMATIC Drive Controller for safety mode or standard mode.

For safety mode, a license for STEP 7 Safety needs to be installed. If no license for STEP 7 Safety is installed, you can only use the SIMATIC Drive Controller in standard mode.

Enabling/disabling the F-capability in STEP 7

By default, the F-capability is enabled for the SIMATIC Drive Controller in STEP 7.

If you wish to change the setting of the F-capability, follow these steps:

1. Highlight the F-CPU in the device view or network view and select the "Properties" tab in the Inspector window.
2. Select "Fail-safety" in the area navigation.
3. Enable/disable the F-capability using the corresponding button.
4. If you want to disable the F-capability, confirm the "Turning off the F-activation" dialog with "Yes".

Disabling F-capability with existing safety program

When you disable the F-capability for an F-CPU because you want to use the F-CPU as a standard CPU even though a safety program is installed, you must note the following:

- You need the password if a password was assigned to the safety program.
- The Safety Administration editor is deleted from the project tree.
- The F-OBs are deleted.
- All F-blocks are deleted.
- You can no longer use the F-I/O in safety mode with this F-CPU.
- For SINAMICS Integrated, you can no longer control the Safety Integrated functions via PROFIsafe but only via terminals.

Note

The routing of the PROFIsafe telegrams of a higher-level F-CPU (e.g. CPU 1518F-4 PN/DP) to the SINAMICS Integrated is not supported.

Support of PROFIsafe V2

The PROFINET IO interfaces X150 and X160 support PROFIsafe V2.

Network disconnector according to IEC61784-3-3 (PROFIsafe standard)

CPU 1504D TF and CPU 1507D TF provide network disconnection between the X150, X160 and X130 interfaces according to IEC61784-3-3.

The following behavior applies to these F-CPUs with regard to communication network disconnectors:

- There is an absolute network disconnection between the interfaces X150, X160 and X130 when no bridging is implemented on communication level 2.
- There is no network disconnection if the connection is established via ports of the same interface (with X150 interface: P1R, P2R and P3 ports).

Even when using a communication network disconnector according to IEC 61784-3-3-3 (PROFIsafe standard), you must still ensure that the individual disconnected networks are not connected by other standard components.

You can find more information in this FAQ (https://support.industry.siemens.com/cs/ww/en/view/109740240).

Standard CPUs are generally not network disconnectors according to IEC61784-3-3-3 (PROFIsafe standard).

PFD_{avg}, PFH values for F-CPUs

You can find the probability of failure values (PFD_{avg}, PFH values) for the SIMATIC Drive Controller in the SIMATIC Drive Controller manual (https://support.industry.siemens.com/cs/ww/en/view/109766666), section "Technical Specifications".

For more information and examples on the overall determination of the PFH value of control and drive systems, see also (https://support.industry.siemens.com/cs/ww/en/view/76254308)

Effects of the installation altitude on the availability

Observe the maximum installation altitude of the components used. Additional information can be found in the section Mechanical and climatic environmental conditions (Page 305).

The higher cosmic radiation present during operation at altitudes above 2000 m will also start to have an effect on the failure rate of electronic components (the so-called soft error rate). In rare cases, this may result in particular in a transition of the F-CPU into the safe state. However, the functional safety of the F-CPU remains fully intact.

Requirements for power supplies in the event of voltage interruption

Note the following information regarding the use of power supplies in safety mode.

Note

To ensure adherence to IEC 61131-2 and NAMUR Recommendation NE 21, only use power packs/power supply units (230 V AC → 24 V DC) with mains buffering times of at least 20 ms. Observe the relevant requirements in your product standards (e.g. 30 ms for "burners" pursuant to EN 298) as regards possible voltage interruptions. The latest up-to-date information on PS components is available on the Internet (https://mall.industry.siemens.com).

Note

Observe any application-specific requirements, for example, on mains buffering for power supply units/power packs.

Restrictions and special features for safety mode

Note the following restrictions and special features for safety mode:

Restriction with "CREAT_DB" and "DELETE_DB" instructions:

F-DBs can neither be created nor deleted.

Restriction with "READ_DBL" and "WRIT_DBL" instructions:

The destination address must not point to an F-DB.

Restriction when configuring the retentive behavior of F-data blocks:

The configuration of the retentive behavior of data blocks is not supported for F-DBs. This means that the actual values of the F-DBs are not retentive in the event of Power OFF/ON and Restart (STOP-RUN) of the F-CPU. The F-DBs receive the initial values from the load memory.

The "Retain" check box is grayed out for all tags in F-DBs.

Use of isochronous mode interrupt (F-)OBs:

If the sum of the isochronous mode interrupt OBs and the isochronous mode interrupt F-OBs used exceeds the number specified in the technical specifications of the SIMATIC Drive Controller, it is no longer possible to load the standard user program in RUN.

Safety-related shutdown of standard modules

The function "Safety-related shutdown of standard modules", as described in the FAQ (https://support.industry.siemens.com/cs/it/en/view/39198632), is only released up to a maximum installation altitude of 2000 m.

Web server

The following is displayed for the F-CPU on the start page of the Web server:

- Version of STEP 7 Safety with which the safety program was compiled.
- Safety mode activated/deactivated
- Collective F-signature
- Last fail-safe change

The "Fail-safe" tab on the "Diagnostics" Web page provides information about the F-runtime groups:

- Name of F-runtime group
- F-runtime groups signature
- Current cycle time
- Max. cycle time
- Current runtime
- Max. runtime

The following is displayed for each F-I/O on the "Module information" Web page in the "Safety" tab:

- F-parameter signature (with addresses)
- Safety mode
- F-monitoring time
- F-source address
- F-destination address

Write access to F-blocks is not permitted.

Note

Controlling fail-safe inputs/outputs can result in an F-CPU STOP.

Additional information

Information on the use of the SIMATIC Drive Controller in safety mode is available in the Programming and operating manual SIMATIC Safety - Configuring and Programming (https://support.industry.siemens.com/cs/ww/en/view/54110126).

Information on the interaction between the Safety functions in the drive and the S7-1500T CPU is available in the Function Manual S7-1500/S7-1500T Axis functions on the Motion Control topic page (https://support.industry.siemens.com/cs/ww/en/view/109751049).

Basics of program execution 9

9.1 Programming the CPU

Hardware and software requirements

Your PG/PC is connected to the SIMATIC Drive Controller over the PROFIBUS or PROFINET interface.

To configure and program the SIMATIC Drive Controller, you require:

- SIMATIC STEP 7 Professional, V16 or higher
- For programming the safety program of the F-CPU "STEP 7 Safety Advanced" as of V16
- For the configuration of the SINAMICS Integrated , the SINAMICS Startdrive option package as of V16 in the Basic or Advanced version. Startdrive Advanced has additional engineering functions compared to Startdrive Basic, such as a safety acceptance test.

Points to note

The function blocks for the use of time-based IO (TIO instructions) are not supported by the X142 interface. We therefore recommend using the technology objects measuring input, output cam or cam track for the timer DI/DQ.

9.2 Events and OBs

Response to triggers

The occurrence of a trigger results in the following reaction:

- If the event comes from an event source to which you have assigned an OB, this event triggers the execution of the assigned OB. The event enters the queue according to its priority.
- If the event comes from an event source to which you have not assigned an OB, the default system reaction is executed.

Note

Some event sources, such as startup, pull/plug, exist even if you do not configure them.

Triggers

The table below provides an overview of:

- possible event sources
- possible values for the OB priority
- possible OB numbers
- default system reaction
- Number of OBs

Table 9- 1 Triggers

Types of event sources	Possible priorities (default priority)	Possible OB numbers	Default system reaction [1]	Number of OBs
Startup [2]	1	100, ≥ 123	Ignore	0 to 100
Cyclic program [2]	1	1, ≥ 123	Ignore	0 to 100
Time-of-day interrupt [2]	2 to 24 (2)	10 to 17, ≥ 123	Not applicable	0 to 20
Time-delay interrupt [2]	2 to 24 (3)	20 to 23, ≥ 123	Not applicable	0 to 20
Cyclic interrupt [2]	2 to 24 (8 to 17, frequency dependent)	30 to 38, ≥ 123	Not applicable	0 to 20
Hardware interrupt [2]	2 to 26 (18)	40 to 47, ≥ 123	Ignore	0 to 50
Status interrupt	2 to 24 (4)	55	Ignore	0 or 1
Update interrupt	2 to 24 (4)	56	Ignore	0 or 1
Manufacturer-specific or profile-specific interrupt	2 to 24 (4)	57	Ignore	0 or 1
Isochronous mode interrupt	16 to 26 (21)	61 to 64, ≥ 123	Ignore	0 to 2
Time error [3]	22	80	Ignore	0 or 1
Maximum cycle time exceeded once			STOP	
Diagnostics interrupt	2 to 26 (5)	82	Ignore	0 or 1
Removal/insertion of modules	2 to 26 (6)	83	Ignore	0 or 1
Rack error	2 to 26 (6)	86	Ignore	0 or 1
MC servo [4]	17 to 26 (26)	91	Not applicable	0 or 1
MC pre-servo [4]	Corresponds to MC Servo priority	67	Not applicable	0 or 1
MC post-servo [4]	Corresponds to MC Servo priority	95	Not applicable	0 or 1
MC interpolator [4]	16 to 25 (24)	92	Not applicable	0 or 1
MC PreInterpolator [4]	Corresponds to MC Interpolator priority	68	Not applicable	0 or 1
MC LookAhead [4]	15 to 16 (15)	97	Not applicable	0 or 1
MC Transformation [4]	17 to 25 (25)	98	Not applicable	0 or 1
Programming error (only for global error handling)	2 to 26 (7)	121	STOP	0 or 1
I/O access error (only for global error handling)	2 to 26 (7)	122	Ignore	0 or 1

[1] If you have not configured the OB.

[2] For these event sources, apart from the permanently assigned OB numbers (see column: possible OB numbers), you can also assign OB numbers from the range ≥ 123 in STEP 7.

[3] If the maximum cycle time has been exceeded twice within a cycle, the CPU always switches to STOP regardless of whether you have configured OB80.

[4] You can find more information on these event sources and the startup behavior in the S7-1500 Motion Control function manuals.

Assignment between event source and OBs

The type of OB determines where you make the assignment between OB and event source:

- With hardware interrupts and isochronous mode interrupts, the assignment is made during the configuration of the hardware or when the OB is created.
- For MC Servo, MC PreServo, MC PostServo, MC Interpolator and MC PreInterpolator, STEP 7 automatically assigns OBs 91/92 as soon as you add a technology object.
- For all other types of OB, the assignment is made when the OB is created, where applicable after you have configured the event source.

For hardware interrupts, you can change an assignment which has already been made during runtime with the instructions ATTACH and DETACH. In this case, only the actually effective assignment changes, and not the configured assignment. The configured assignment takes effect after loading, and upon each startup.

The CPU ignores hardware interrupts to which you did not assign an OB in your configuration or which occur after the DETACH instruction. The CPU does not check whether an OB is assigned to this event when an event arrives, but only prior to the actual processing of the hardware interrupt.

OB priority and runtime behavior

If you have assigned an OB to the event, the OB has the priority of the event. The CPUs of the SIMATIC Drive Controller support priorities 1 (lowest) to 26 (highest). The following items are essential to the execution of an event:

- Call and execution of the assigned OB
- The update of the process image partition of the assigned OB

The user program processes the OBs exclusively on a priority basis. This means the program processes the OB with the highest priority first when multiple OB requests occur at the same time. If an event occurs that has a higher priority than the currently active OB, this OB is interrupted. The user program processes events of the same priority in order of occurrence.

Note

Communication

The communication (e.g. test functions with the PG) always works with priority 15. To prevent extending the program runtime unnecessarily in time-critical applications, these OBs should not be interrupted by communication. Assign a priority > 15 for these OBs.

Additional information

Additional information on organization blocks is available in the STEP 7 online help.

9.3 Asynchronous instructions

Introduction

Program execution makes a distinction between synchronous and asynchronous instructions.

The "synchronous" and "asynchronous" properties relate to the temporal relationship between the call and execution of the instruction.

The following applies to synchronous instructions: When the call of a synchronous instruction is complete, execution of the instruction is also complete.

This is different in the case of asynchronous instructions: When the call of an asynchronous instruction is complete, execution of the asynchronous instruction is not necessarily complete yet. This means the execution of an asynchronous instruction can extend over multiple calls. The CPU processes asynchronous instructions in parallel with the cyclic user program. Asynchronous instructions generate jobs in the CPU for their processing.

Asynchronous instructions are usually Motion Control instructions or instructions for transferring data, e.g. data records for modules, communication data, or diagnostics data.

Difference between synchronous/asynchronous instructions

The figure below shows the difference between the processing of an asynchronous instruction and a synchronous instruction. In this figure the CPU calls the asynchronous instruction five times before its execution is complete, e.g. a data record has been completely transferred.

With a synchronous instruction, execution is completed upon each call.

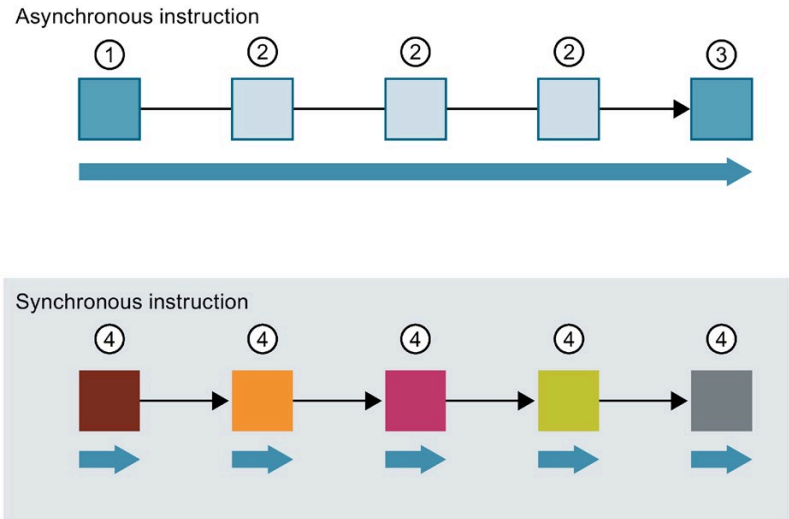

① First call of the asynchronous instruction, start of execution
② Intermediate call of the asynchronous instruction, execution continues
③ Last call of the asynchronous instruction, completion of execution
④ The synchronous instruction is completely executed at each call
➡ Duration of complete execution

Figure 9-1 Difference between asynchronous and synchronous instructions

Parallel processing of asynchronous instruction jobs

A CPU can process several asynchronous instruction jobs in parallel. The CPU processes the jobs in parallel under the following conditions:

- Several asynchronous instruction jobs are called at the same time.
- The maximum number of simultaneously running jobs for the instruction is not exceeded.

The figure below shows the parallel processing of two jobs of the WRREC instruction. The two instructions are executed simultaneously for a certain duration.

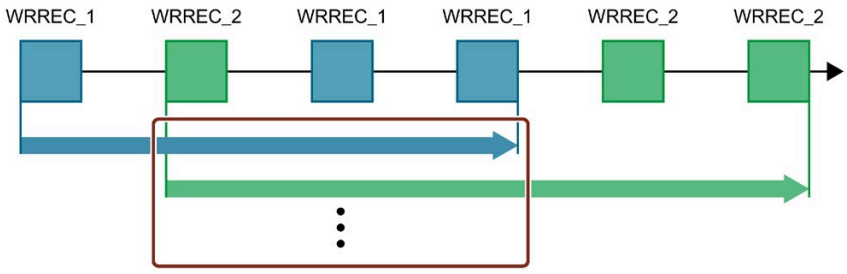

Figure 9-2 Parallel processing of the asynchronous instruction WRREC

Note

Dependencies between asynchronous instructions

The call sequence in the user program may differ from the processing sequence of the asynchronous instructions. This can lead to problems with dependencies between asynchronous instructions.

Remedy: To ensure correct timing of processing, use the status outputs of the asynchronous instructions in a sequencer. If an asynchronous instruction is finished and this is acknowledged via the parameter DONE, then only the next asynchronous instruction should start.

Example: For the RecipeImport and RecipeExport recipe functions, you need a CSV file for the recipe data. If you use the same CSV file for import and export, then the two asynchronous instructions are dependent on each other. In a sequencer, link the status of the DONE parameter of the RecipeImport instruction to the next step, where the RecipeExport will be executed. The link thus ensures correct processing.

Assignment of call to job of the instruction

To execute an instruction over multiple calls, the CPU must be able to uniquely relate a subsequent call to a running job of the instruction.

To relate a call to a job, the CPU uses one of the following two mechanisms, depending on the type of the instruction:

- Using the instance data block of the instruction (for "SFB" type)
- Using job-identifying input parameters of the instruction. These input parameters must match in each call during processing of the asynchronous instruction.
  Example: A job of the "Create_DB" instruction is identified by input parameters LOW_LIMIT, UP_LIMIT, COUNT, ATTRIB and SRCBLK.

The following table shows which input parameters you use to identify which instruction.

Table 9- 2 Asynchronous instructions Call to job assignment

Instruction	Job is identified by
DPSYC_FR	LADDR, GROUP, MODE
D_ACT_DP	LADDR
DPNRM_DG	LADDR
WR_DPARM	LADDR, RECNUM
WR_REC	LADDR, RECNUM
RD_REC	LADDR, RECNUM
CREATE_DB	LOW_LIMIT, UP_LIMIT, COUNT, ATTRIB, SRCBLK
READ_DBL	SRCBLK, DSTBLK
WRIT_DBL	SRCBLK, DSTBLK
RD_DPARA	LADDR, RECNUM
DP_TOPOL	DP_ID

Status of an asynchronous instruction

An asynchronous instruction shows its status via the block parameters STATUS/RET_VAL and BUSY. Many asynchronous instructions also use the block parameters DONE and ERROR.

The figure below shows the two asynchronous instructions WRREC and CREATE_DB.

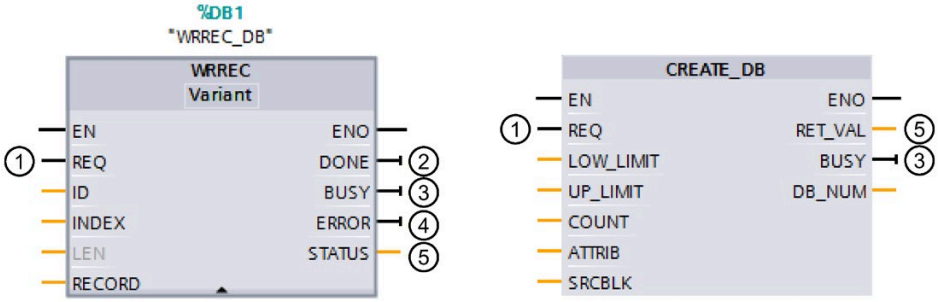

① The input parameter REQ starts the job to execute the asynchronous instruction.

② The output parameter DONE indicates that the job was completed without error.

③ The output parameter BUSY indicates whether the job is currently being executed. When BUSY =1, a resource is allocated for the asynchronous instruction. When BUSY = 0, the resource is free.

④ The output parameter ERROR indicates that an error has occurred.

⑤ The output parameter STATUS/RET_VAL provides information on the status of the job execution. The output parameter STATUS/RET_VAL receives the error information after the occurrence of an error.

Figure 9-3 Block parameters of asynchronous instructions using the instructions WRREC and CREATE_DB as examples.

Summary

The table below provides you with an overview of the relationships described above. It shows in particular the possible values of the output parameters if execution of the instruction is not complete after a call.

Note

You must evaluate the relevant output parameters in your program after each call

Table 9- 3 Relationship between REQ, STATUS/RET_VAL, BUSY and DONE during a "running" job.

Seq. no. of the call	Type of call	REQ	STATUS/RET_VAL	BUSY	DONE	ERROR
1	First call	1	W#16#7001	1	0	0
			Error code (e.g. W#16#80C3 for lack of resources)	0	0	1
2 to (n - 1)	Intermediate call	Not relevant	W#16#7002	1	0	0
n	Last call	Not relevant	W#16#0000, if no errors have occurred.	0	1	0
			Error code if errors occurred.	0	0	1

Use of resources

Asynchronous instructions use resources in the CPU during their execution. The resources are limited depending on the type of CPU and instruction. The CPU can simultaneously process only a maximum number of asynchronous instruction jobs. The resources are available again after a job has been processed successfully or with errors.

Example: For the RDREC instruction, a CPU can process up to 20 jobs in parallel.

If the maximum number of simultaneously running jobs for an instruction is exceeded, the instruction returns error code 80C3 (lack of resources) in the STATUS block parameter. The CPU stops execution of the job until a resource becomes free again.

Note

Lower-level asynchronous instructions

Some asynchronous instructions use one or more lower-level asynchronous instructions for their processing. This dependence is shown in the tables below.

Please note that with multiple lower-level instructions, only one lower-level resource is typically allocated at a time.

Extended instructions: maximum number of simultaneously running jobs

The following table shows the maximum number of simultaneously running jobs for asynchronous extended instructions.

Table 9- 4 Extended instructions

Extended instructions	CPU 1504D TF	CPU 1507D TF
Distributed I/O		
RDREC	20	
RD_REC	10	
WRREC	20	
WR_REC	10	
D_ACT_DP	8	
ReconfigIOSystem	Uses RDREC, WRREC, D_ACT_DP	
DPSYC_FR	2	
DPNRM_DG	8	
DP_TOPOL	1	
ASI_CTRL	Uses RDREC, WRREC	
PROFIenergy		
PE_START_END	Uses RDREC, WRREC	
PE_CMD	Uses RDREC, WRREC	
PE_DS3_Write_ET200S	Uses RDREC, WRREC	
PE_WOL	Uses RDREC, WRREC, TUSEND, TURCV, TCON, TDISCON	
Module parameter assignment		
RD_DPAR	10	
RD_DPARA	10	
RD_DPARM	10	
WR_DPARM	10	
Diagnostics		
Get_IM_Data	10	
GetStationInfo	10	
Recipes and data logging		
RecipeExport	10	
RecipeImport	10	
DataLogCreate	10	
DataLogOpen	10	
DataLogWrite	10	
DataLogClear	10	
DataLogClose	10	
DataLogDelete	10	
DataLogNewFile	10	
Data block functions		
CREATE_DB	10	
READ_DBL	10	
WRIT_DBL	10	
DELETE_DB	10	
File handling		
FileReadC	10	
FileWriteC	10	

LAcycCom libraries enable collision-free coordination of communication resources in the CPU for acyclic communication. Additional information on the LAcycCom library is available on the Internet (https://support.industry.siemens.com/cs/ww/en/view/109479553).

Basic instructions: maximum number of simultaneously running jobs

The following table shows the maximum number of simultaneously running jobs for asynchronous basic instructions.

Table 9- 5 Basic instructions

Basic instructions	CPU 1504D TF	CPU 1507D TF
Array DB		
ReadFromArrayDBL	Uses READ_DBL (see Extended instructions)	
WriteToArrayDBL	Uses READ_DBL, WRIT_DBL (see Extended instructions)	

Communication: maximum number of simultaneously running jobs

Table 9- 6 Maximum number of simultaneous jobs for asynchronous instructions and lower-level instructions used for Open User Communication

Open User Communication	CPU 1504D TF	CPU 1507D TF
TSEND TUSEND	384	
TRCV TURCV	384	
TCON	384	
TDISCON	384	
T_RESET	384	
T_DIAG	384	
T_CONFIG	1	
TSEND_C	Uses TSEND, TUSEND, TRCV, TCON, TDISCON	
TRCV_C	Uses TSEND, TUSEND, TRCV, TURCV, TCON, TDISCON	
TMAIL_C	Uses TSEND, TUSEND, TRCV, TURCV, TCON, TDISCON	

Table 9- 7 Lower-level instructions used for asynchronous instructions for MODBUS TCP

MODBUS TCP	CPU 1504D TF	CPU 1507D TF
MB_CLIENT	Uses TSEND, TUSEND, TRCV, TURCV, TCON, TDISCON	
MB_SERVER	Uses TSEND, TUSEND, TRCV, TURCV, TCON, TDISCON	

Table 9- 8 Maximum number of simultaneous jobs for asynchronous instructions for S7 communication. The S7 communication instructions use a common pool of resources.

S7 communication	CPU 1504D TF	CPU 1507D TF
PUT GET USEND URCV BSEND BRCV	1152	

Table 9- 9 Lower-level instructions used for asynchronous instructions for communication processors

Communications processors	CPU 1504D TF	CPU 1507D TF
PtP communication		
Port_Config	Uses RDDEC, WRREC	
Send_Config	Uses RDDEC, WRREC	
Receive_Config	Uses RDDEC, WRREC	
Send_P2P	Uses RDDEC, WRREC	
Receive_P2P	Uses RDDEC, WRREC	
Receive_Reset	Uses RDDEC, WRREC	
Signal_Get	Uses RDDEC, WRREC	
Signal_Set	Uses RDDEC, WRREC	
Get_Features	Uses RDDEC, WRREC	
Set_Features	Uses RDDEC, WRREC	
USS communication		
USS_Port_Scan	Uses RDDEC, WRREC	
MODBUS (RTU)		
Modbus_Comm_Load	Uses RDDEC, WRREC	
ET 200S serial interface		
S_USSI	Uses CREATE_DB	
SIMATIC NET CP (cannot be used with SIMATIC Drive Controller; SIMATIC NET CPs cannot be used in distributed I/O stations)		
FTP_CMD	Uses TSEND, TRCV, TCON, TDISCON	

Table 9- 10 Maximum number of simultaneous jobs – OPC UA

OPC_UA	CPU 1504D TF	CPU 1507D TF
OPC_UA_Connect	10	
OPC_UA_Disconnect	10	
OPC_UA_NamespaceGetIndexList	10	
OPC_UA_NodeGetHandleList	10	
OPC_UA_NodeReleaseHandleList	10	
OPC_UA_TranslatePathList	10	
OPC_UA_Browse	10	
OPC_UA_ReadList	10	
OPC_UA_WriteList	10	
OPC_UA_MethodGetHandleList	10	
OPC_UA_MethodReleaseHandleList	10	
OPC_UA_MethodCall	10	
OPC_UA_ServerMethodPre	10	
OPC_UA_ServerMethodPost	10	
OPC_UA_ConnectionGetStatus	10	

Technology: maximum number of simultaneously running jobs

Table 9- 11 Maximum number of simultaneous jobs for asynchronous instructions for technology. The instructions for technology use a common pool of resources.

Technology	CPU 1504D TF	CPU 1507D TF
S7-1500 Motion Control		
MC_Power MC_Reset MC_Home MC_Halt MC_MoveAbsolute MC_MoveRelative MC_MoveVelocity MC_MoveJog MC_MoveSuperimposed MC_SetSensor MC_Stop MC_WriteParameter MC_SetAxisSTW MC_MeasuringInput MC_MeasuringInputCyclic MC_AbortMeasuringInput MC_OutputCam MC_CamTrack MC_CopyCamData MC_GearIn MC_GearInPos MC_PhasingRelative MC_PhasingAbsolute MC_OffsetRelative MC_OffsetAbsolute MC_CamIn MC_SynchronizedMotionSimulation MC_GearOut MC_CamOut MC_LeadingValueAdditive MC_InterpolateCam MC_GetCamFollowingValue MC_GetCamLeadingValue MC_MotionInVelocity MC_MotionInPosition MC_TorqueLimiting MC_TorqueAdditive MC_TorqueRange	6400	

Technology	CPU 1504D TF	CPU 1507D TF
MC_GroupInterrupt MC_GroupContinue MC_GroupStop MC_MoveLinearAbsolute MC_MoveLinearRelative MC_MoveCircularAbsolute MC_MoveCircularRelative MC_MoveDirectAbsolute MC_MoveDirectRelative MC_TrackConveyorBelt MC_KinematicsMotionSimulation MC_DefineWorkspaceZone MC_DefineKinematicsZone MC_SetWorkspaceZoneActive MC_SetWorkspaceZoneInactive MC_SetKinematicsZoneActive MC_SetKinematicsZoneInactive MC_DefineTool MC_SetTool MC_SetOcsFrame MC_KinematicsTransformation MC_InverseKinematicsTransformation		

Additional information

You can find additional information on block parameter assignment in the STEP 7 online help.

Protection 10

10.1 Overview of the protection functions

Introduction

This section describes the functions for protection from unauthorized access:

- Protection of confidential configuration data
- Access protection
- Know-how protection
- Protection by locking the CPUs

Other CPU protective measures

The following measures provide extra protection against unauthorized access from external sources and through the network:

- Do not activate time-of-day synchronization over NTP servers.
- Do not activate PUT/GET communication.

10.2 Protection of confidential configuration data

As of STEP 7 V17, you have the option of assigning a password for protecting confidential configuration data of the respective CPU. This refers to data such as private keys that are required for the proper functioning of certificate-based protocols.

You can find detailed information on protecting confidential configuration data in the Communication function manual (https://support.industry.siemens.com/cs/ww/en/view/59192925).

10.3 Configuring access protection for the CPU

Introduction

The SIMATIC Drive Controller has four different access levels to limit access to specific functions.

By setting up access levels and passwords, you limit the functions and memory areas that are accessible without a password. The individual access levels and corresponding passwords are specified in the object properties of the CPUs.

Rules for passwords

Ensure that passwords are sufficiently secure.
Apply the following rules:

- Assign a password that is at least 8 characters long.
- Use different cases and characters: uppercase/lowercase, numbers and special characters.

Access levels for the CPUs

Table 10- 1 Access levels and access restrictions

Access levels	Access restrictions
Full access including failsafe (no protection)	Users of the TIA Portal and HMI applications will have access to all standard and failsafe functions. A password is not required.
Full access (no protection)	Users of the TIA Portal will have access to standard functions. HMI applications can access all functions (failsafe and standard). **Required password:** For additional access to failsafe functions, the TIA Portal user must enter the password for "Full access including failsafe".
Read access	In this access level, only read access to the hardware configuration and the blocks is possible without a password. HMI access and access to diagnostics data is also possible. Neither blocks nor the hardware configuration can be downloaded to the CPUs without the password. The following actions are **not** possible without the password either: Writing test functions and firmware updates (online).
HMI access	The same access restrictions apply to HMI access as to read access. The following actions are **not** possible without the password either: Change of operating state (RUN/STOP) and display of online/offline comparison status.
No access (complete protection)	When the CPUs have complete protection, no read or write access to the hardware configuration or blocks is possible (without access authorization in the form of a password). HMI access is not possible either. Authentication with the correct password provides full access to the CPUs again.

Additional information

You can find a list of which functions are possible in the various protection levels in the STEP 7 online help under "Setting options for protection".

Properties of the access levels

Each access level allows unrestricted access to certain functions without a password, for example identification using the "Accessible devices" function.

The default of the CPUs is "No access (complete protection)". In the default access level, the user is not allowed to read or modify the hardware configuration or the blocks. To get access to the CPUs, assign parameters alternatively in the properties of the CPU:

- A password for the "No access (complete protection)" level of protection
- Another level of protection, e.g. "Full access (no protection)"

Communication between the CPUs via the communication functions in the blocks is not restricted by the access level of the CPUs.

Entering the correct password enables access to all the functions that are allowed in the given level.

Note

Configuring an access level does not replace know-how protection

Configuring access levels offers a high degree of protection against unauthorized changes to the CPU through network access. Access levels restrict the rights to download the hardware and software configuration to the CPUs. However, blocks on the SIMATIC Memory Card are not write-protected or read-protected. Use know-how protection to protect the code of blocks on the SIMATIC Memory Card.

Behavior of functions in different access levels

The STEP 7 online help includes a table listing the online functions available in the various access levels.

Configuring access levels

Proceed as follows to configure the access levels for the CPUs:

1. Open the properties of the CPUs in the Inspector window.
2. Open "Protection & Security" in the area navigation.

   A table with the possible access levels appears in the Inspector window.

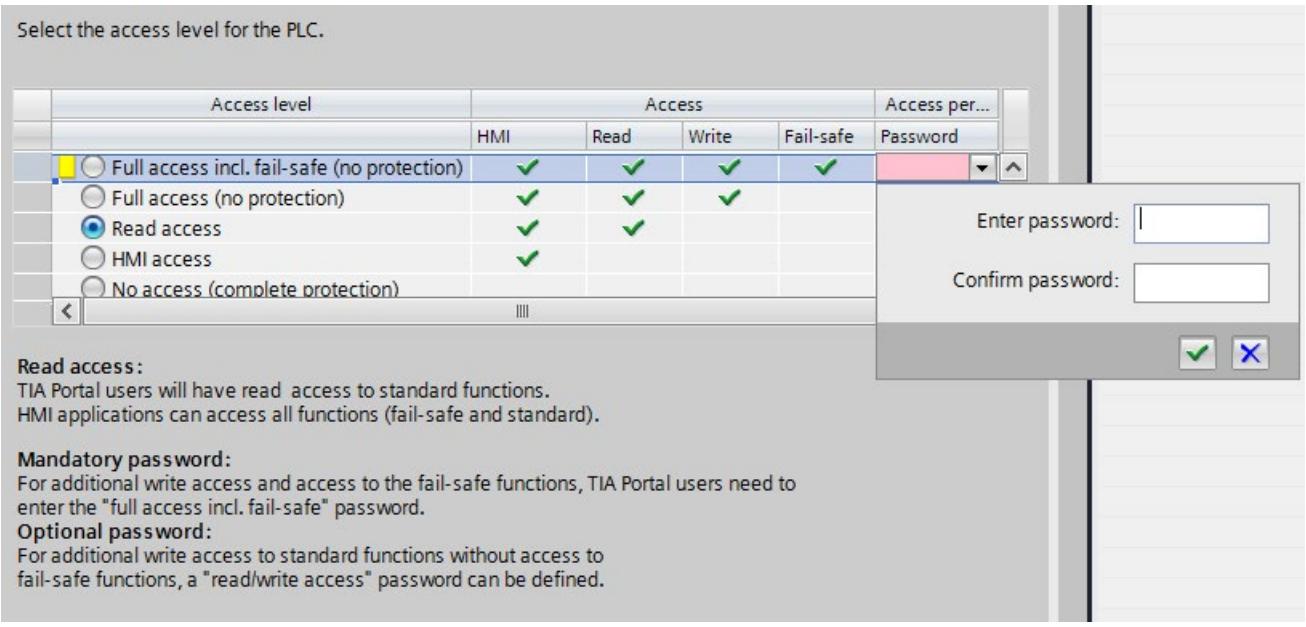

Figure 10-1 Possible access levels

3. Activate the required protection level in the first column of the table. The green check marks in the columns to the right of the access level show which operations are still possible without entering the password. In the example (Figure: Possible access levels), read access and HMI access are still possible without a password.
4. In the "Enter password" column, specify a password for the access level "Full access including failsafe" in the first row. In the "Confirm password" column, enter the selected password again to avoid incorrect entries.
5. Assign additional passwords as required for other access levels.
6. Download the hardware configuration for the access level to take effect.

The CPUs log the following actions with an entry in the diagnostics buffer:

- Input of the correct or incorrect password
- Changes to access level configuration

Behavior of a password-protected CPU during operation

CPU protection takes effect for an online connection once settings have been loaded to the CPUs. If you set a higher access level and download it to the CPU, all other online connections will be interrupted. You will then need to establish a new online connection.

Before an online function is executed, the necessary permission is checked and, if necessary, the user is prompted to enter a password. The password only provides access to protected functions for the local PG/PC on which the password is entered.

Access authorization to the protected data applies for the duration of the online connection or for as long as you have STEP 7 open. The menu command "Online > Clear access rights" cancels the access authorization.

Access levels for F-CPUs

You can find additional information on the access level "Full access including failsafe (no protection)" in the description of the F-system SIMATIC Safety programming and operating manual SIMATIC Safety – Configuring and Programming (https://support.industry.siemens.com/cs/ww/en/view/54110126).

Restricting access to SINAMICS Integrated

Note

For information on how to limit access to specific functions on SINAMICS Integrated, please see the SINAMICS S120 documentation (https://support.industry.siemens.com/cs/ww/en/ps/13231/man).

10.4 Using the user program to set additional access protection

Access protection with the user program

You can also restrict access to a password-protected CPU using the ENDIS_PW instruction in STEP 7.

You can find more information on this instruction in the STEP 7 online help under "ENDIS_PW: Limit and enable password legitimation".

10.5 Know-how protection

Application

You can use know-how protection to protect one or more OB, FB or FC blocks as well as global data blocks in your program from unauthorized access. Enter a password to restrict access to a block. The password offers high-level protection against unauthorized reading and manipulation of the block. Know-how protection does not involve the CPU (offline access in STEP 7).

Note

Please see the SINAMIC S120 documentation (https://support.industry.siemens.com/cs/ww/en/ps/13231/man) for information on how to prevent strictly confidential company expertise on configuration and parameter assignment being read by unauthorized parties with SINAMICS Integrated.

Password provider

As an alternative to manual password input, you can assign a password provider to STEP 7. When using a password provider, you select a password from a list of available passwords. When a protected block is opened, STEP 7 connects to the password provider and retrieves the corresponding password.

You need to install and activate a password provider before you can connect it. A settings file in which you define the use of a password provider is also required.

A password provider offers the following advantages:

- The password provider defines and manages the passwords. When know-how protected blocks are opened, you work with symbolic names for passwords. For example, a password is marked with the symbolic name "Machine_1" n the password provider. The actual password behind "Machine1" is disclosed to you.
  A password provider therefore offers optimum block protection as the users do not know the password themselves.
- STEP 7 automatically opens know-how protected blocks without the direct entry of a password. This saves you time.

You can find more information on connecting a password provider in the STEP 7 online help.

Readable data

If a block is know-how protected, only the following data is readable without the correct password:

- Block title, comments and block properties
- Block parameters (INPUT, OUTPUT, IN, OUT, RETURN)
- Call structure of the program
- Global tags without information on the point of use
- Static tags

Further actions

Further actions that can be carried out with a know-how protected block:

- Copying and deleting
- Calling in a program
- Online/offline comparison
- Loading

Global data blocks and array data blocks

You protect global data blocks (global DBs) from unauthorized access with know-how protection. If you do not have the valid password, you can read the global data block but not change it.

Know-how protection is not available for array data blocks (array DBs).

Setting up block know-how protection

Proceed as follows to set up block know-how protection:

1. Open the properties of the block in question.
2. Select the "Protection" option under "General".

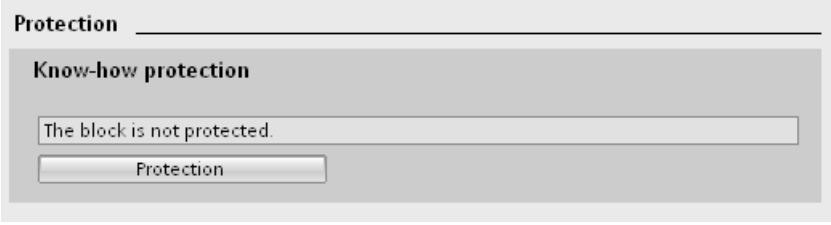

Figure 10-2 Setting up block know-how protection

3. Click the "Protection" button to display the "Define password" dialog.

Figure 10-3 Select password

4. Enter the new password in the "New password" box. Enter the same password in the "Confirm password" box.

5. Click "OK" to confirm your entry.
6. Close the "Know-how protection" dialog by clicking "OK".

Result: The blocks selected are know-how-protected. Know-how protected blocks are marked with a padlock in the project tree. The password entered applies to all blocks selected.

Note

Password provider

Alternatively, you can set up know-how protection for blocks with a password provider.

Opening know-how protected blocks

Proceed as follows to open a know-how protected block:

1. Double-click on the block to open the "Access protection" dialog.
2. Enter the password for the know-how protected block.
3. Click "OK" to confirm your entry.

Result: The know-how-protected block opens.

After opening the block you can edit the program code and the block interface of the block until you close the block or STEP 7. You need to enter the password again the next time you open the block. If you close the "Access protection" dialog with "Cancel", the block will open but the block code will not be displayed. You will not be able to edit the block.

If you copy the block or add it to a library, for example, this does not cancel the know-how protection of the block. The copies will also be know-how-protected.

Changing block know-how protection

Proceed as follows to change block know-how protection:

1. Select the block for which you want to change know-how protection. The protected block must not be open in the program editor.
2. In the "Edit" menu, select the "Know-how protection" command to open the "Change protection" dialog.
3. To change the password for know-how protection, enter the current password under "Old password".
4. Now enter a new password under "New password" and confirm the password under "Confirm password".
5. Click "OK" to confirm your entry.

Result: The password for know-how protection of the selected block has been changed.

Removing block know-how protection

Proceed as follows to remove block know-how protection:

1. Select the block from which you want to remove know-how protection. The protected block must not be open in the program editor.
2. In the "Edit" menu, select the "Know-how protection" command to open the "Change protection" dialog.

Figure 10-4 Removing know-how protection

3. To remove block protection, enter the current password under "Old password". Leave the fields for the new password blank.
4. Click "Remove" to confirm your entry.

Result: Know-how protection for the selected block has been canceled.

10.6 Copy protection

Application

The copy protection allows you to protect your program against unauthorized duplication. With copy protection, you link a block to the serial number of the SIMATIC Memory Card or the SIMATIC Drive Controller. The link to the serial number means that you can only use the block in conjunction with the corresponding SIMATIC Memory Card or the corresponding SIMATIC Drive Controller.

Note

For information on how to protect your drive unit settings from unauthorized reproduction on SINAMICS Integrated, please see the SINAMIC S120 documentation.

Copy and know-how protection

Recommendation: To prevent an unauthorized reset of the copy protection, provide a copy-protected block with additional know-how protection. First set up the copy protection for the block and after this the know-how protection. You can find additional information on setting up know-how protection in Know-how protection (Page 202).

Setting up copy protection

To set up copy protection, follow these steps:

1. Open the properties of the respective block.
2. Select the "Protection" option under "General".
3. In the "Copy protection" area, select either the "Bind to serial number of the CPU" entry or the "Bind to serial number of the memory card" entry from the drop-down list.

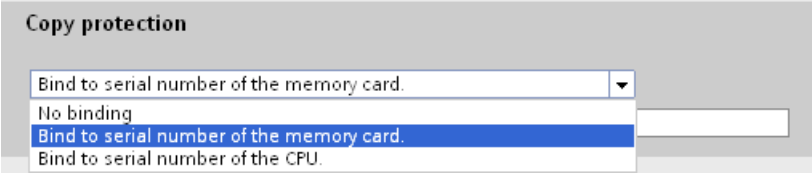

Figure 10-5 Setting up copy protection

4. Activate the option "Serial number is inserted when downloading to a device or a memory card" if STEP 7 is to automatically insert the serial number during the loading process (dynamic binding). Assign a password using the "Define password" button to link the use of a block additionally to the input of a password.
   If you want to manually bind the serial number of the SIMATIC Drive Controller or the SIMATIC Memory Card to a block (static binding), activate the "Enter serial number" option.
5. You can now set up know-how protection for the block in the "Know-how protection" area.

Note

If you download a copy-protected block to a device that does not match the specified serial number, the entire download operation is not possible. This means that you cannot download blocks without copy protection either.

Removing copy protection

To remove copy protection, follow these steps:

1. Remove any know-how protection.
2. Open the properties of the respective block.
3. Select the "Protection" option under "General".
4. In the "Copy protection" area, select the "No binding" entry from the drop-down list.

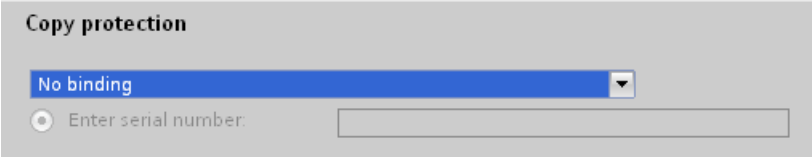

Figure 10-6 Removing copy protection

10.7 Protection by locking the CPU

Locking options

Provide additional protection for your CPUs from unauthorized access (for example to the SIMATIC Memory Card) by using a secure cover.

You have the following options, for example:

- Attach a seal
- Secure the cover with a lock (shackle diameter: 3 mm)

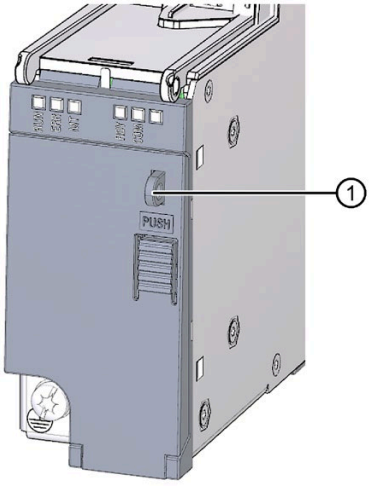

① Eye for seal or padlock

Note

Protection with a seal or padlock only prevents "easy" access to the SIMATIC memory card and operator controls. It does not provide protection from targeted tampering; this must be ensured with other measures (for example through the control cabinet).

Flexible automation concepts 11

11.1 Standard machine projects

Introduction

Standard machine projects are STEP 7 projects that use innovative functions. You can easily configure and commission flexible automation solutions for standard machines or for machines with a modular structure.

In the hardware configuration of a standard machine, the SIMATIC Drive Controller is an IO controller to which any number of IO devices are connected. The SIMATIC Drive Controller therefore represents a PROFINET IO system master. This master is configured with a maximum configuration that can be used as a basis from which to derive various different standard machines using options. Alongside a range of software functionalities, each option therefore also has a range of IO system configuration variants.

Greater flexibility at all levels

Standard machine projects have central features:

- From exactly one project (IO system master) with configured maximum configuration, you can load different versions of a standard machine (IO system options). The standard machine project covers all variants (options) of the IO system.
- An IO system option can be integrated into an existing network locally using simple tools.

Flexibility is provided in more ways than one:

- With a suitable configuration, you can adapt the IP address parameters of the IO controller locally using simple tools. This allows you to integrate a standard machine in different plants with little effort or to connect multiple machine modules of the same type in a network.
  IO systems with this property are known as **multiple use IO systems**.
- With suitable configuration and programming, you can operate different setups of IO system options locally. The IO system options differ in terms of the selection of IO devices used or in terms of the arrangement of the IO devices.
  The user program controls the specific configuration of the IO system. The function is therefore called **Configuration control for IO systems**.
- Independently of the functions described above, you can use different station options of distributed I/O devices in one project through suitable configuration and programming. The devices can be different in terms of selection and arrangement of the modules.
  The user program controls the specific configuration of the station. The function is therefore called **Configuration control**.

Modular machines with SINAMICS drives

The modular machine concept is based on a maximum target topology created in the commissioning tool "offline". A maximum configuration is the maximum configuration of a specific machine type. All machine components used in that machine type are preconfigured in the target topology. You remove parts of the maximum configuration by deactivating/removing drive objects (p0105 = 2).

Activating and deactivating SINAMICS components

The SINAMICS S120 drive components, including the control instances, are described in a parameter object model. You can enable/disable drives including their closed loop control or individual components using the following parameters:

- Enable/disable drive objects (including on Terminal Modules):
  - Adjustable parameter p0105 (Enable/disable drive object)
  - Display parameter r0106 (Drive object enabled/disabled)
- Enable/disable power units:
  - Adjustable parameter p0125 (Enable/disable power unit component)
  - Display parameter r0126 (Power unit components enabled/disabled)
- Enable/disable encoders (on Motor Modules):
  - Adjustable parameter p0145 (Enable/disable encoder interface)
  - Display parameter r0146 (Encoder interface enabled/disabled)
- Enable/disable Voltage Sensing Module (on Line Modules)
  - Adjustable parameter p0145 (Enable/disable Voltage Sensing Module)
  - Display parameter r0146 (Voltage Sensing Module enabled/disabled)

Note

Please check the description and the constraints for the individual parameters in the SINAMICS S120/S150 list manual (https://support.industry.siemens.com/cs/ww/en/view/109763271).

Example of partial topology with SINAMICS components

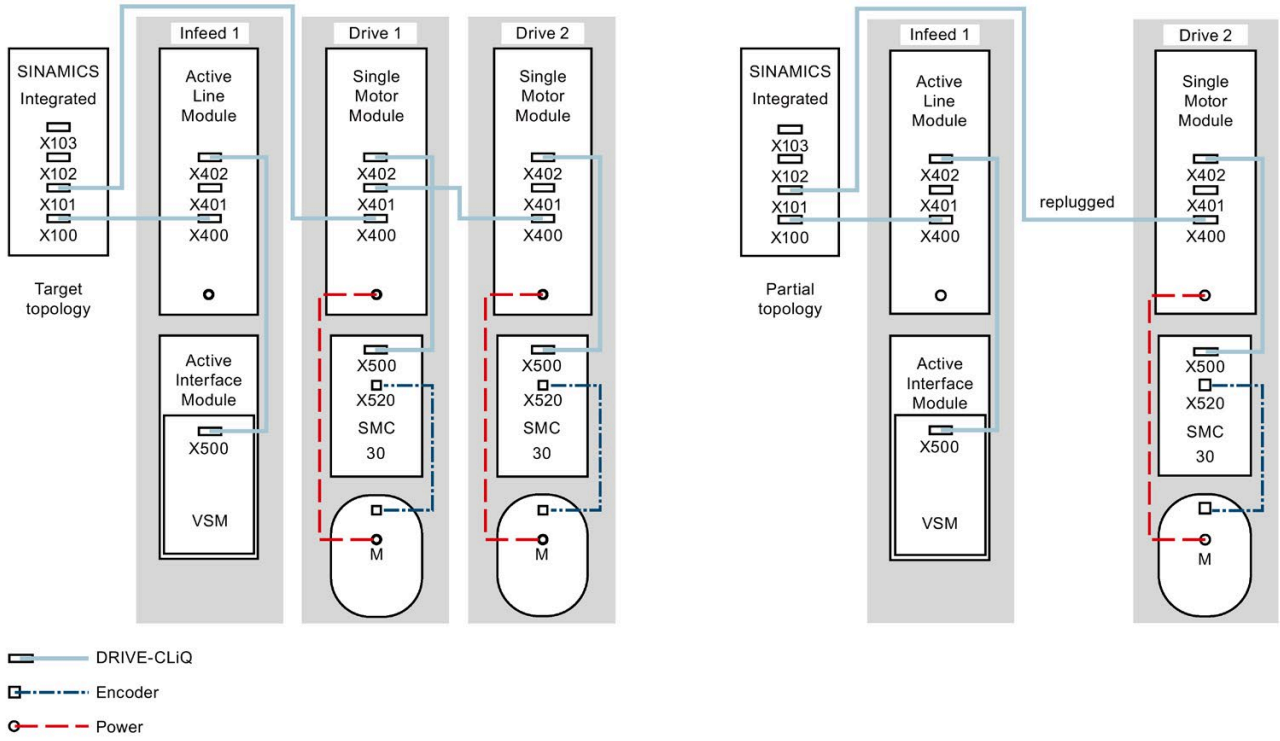

Figure 11-1 Example: Partial topology with SINAMICS components

A machine has been configured for one Active Line Module and two Motor Modules. The configuration has been saved on the SIMATIC Memory Card (target topology).

- While the machine is off, "Drive 1" is removed and the DRIVE-CLiQ cable is unplugged from the SIMATIC Drive Controller and connected directly to "Drive 2" (partial topology, actual topology).
- During power up, SINAMICS Integrated detects a difference between the target and actual topology.
- The user program executes the following actions:
  - Set drive object (DO) "Drive 1" to "deactivate and not available". For this action, the user program must set the p0105 = 2 parameter in this DO.
  - Save all parameters to non-volatile memory on the SIMATIC Memory Card. For this action, the user program must set parameter p0977 = 1.

This saves the actual topology as the target topology. An error will not be triggered in the next power up.

Note

Errors in Safety Integrated status display

If a drive that was grouped for a Safety Integrated line-up is disabled with p0105, the parameter r9774 will not be correctly output. The signals of a disabled drive are not updated.

Overview of key parameters for SINAMICS components

Table 11- 1 Key parameters for activating/deactivating SINAMICS components

Parameter	Meaning
p0105	p0105 Activate/deactivate drive object
r0106	Drive object active/inactive
p0125[0...n]	Activate/deactivate power unit component
r0126[0...n]	Power unit component active/inactive
p0145[0...n]	Activate/deactivate encoder interface
r0146[0...n]	Encoder interface active/inactive
p9495	BICO response when drive objects are deactivated
p9496	BICO response when drive objects are activated
r9498[0 ... 29]	BICO BI/CI parameter when drive objects are deactivated
r9499[0 ... 29]	BICO BO/CO parameter when drive objects are deactivated

LSINATopo library

In addition to enabling and disabling SINAMICS components, the LSINATopo library offers the following functions for SINAMICS S120, among others:

- Replacing large motor/small motor
- Replacing double-axis module with two single-axis modules (and vice versa)
- Enable/disable motor brake
- Replacing Active Line Module
- Replacing when Safety is activated

With these functions, you can temporarily or permanently change the configuration (target topology) of a SINAMICS drive saved on the storage medium.

For example, you can replace motors in a replacement part scenario without using the Engineering System.

You can use components in the machine that deviate from the configured components. This is necessary for handling variance and extensions in modular machines.

Additional information

You can find additional information on configuration control in Configuration control (option handling) (Page 212).

You can find additional information on multiple use IO systems and on configuration control for IO systems in the PROFINET function manual (https://support.industry.siemens.com/cs/ww/en/view/49948856).

You can find additional information on activating/deactivating SINAMICS components with parameters in the SINAMICS S120/S150 list manual (https://support.industry.siemens.com/cs/ww/en/view/109763271).

You can find additional information on modular machine concepts with Safety Integrated in the SINAMICS S120 Safety Integrated function manual (https://support.industry.siemens.com/cs/ww/en/view/109763292).

You can find additional information about the LSINATopo library on the Internet (https://support.industry.siemens.com/cs/ww/en/view/109770003).

11.2 Configuration control (option handling)

Introduction

Configuration control (option handling) is used to operate various standard machine configuration levels in one project without changing the configuration and the user program.

Operating principle of configuration control

You can use configuration control to operate different standard machine configurations with a single configuration of the ET 200SP or ET 200MP distributed I/O system.

- A station master (maximum configuration) is configured in a project. The station master comprises all modules needed for all possible sections of a modular machine.
- Provision is made in the user program of the project for various station options for the different configuration levels of the standard machine and for selection of a station option. A station option uses, for example, only some of the configured modules of the station master and these modules are inserted in the slots in a different order.
- During commissioning, manufacturers of standard machines select a station option for a configuration level of the standard machine. A change to the project is not required and a modified configuration therefore does not need to be loaded.
- You program a control data record. The control data record notifies the CPU/interface module as to:
  - which modules are missing in a station option as compared to the station master

    or
  - which modules are in a different slot
- The configuration control has no effect on the parameter assignment of the modules.

You can flexibly vary the distributed configuration with configuration control. As a precondition for this, it must be possible to derive the station option from the station master.

The following figure shows three configuration levels of a standard machine with the corresponding station options of the ET 200SP distributed I/O system.

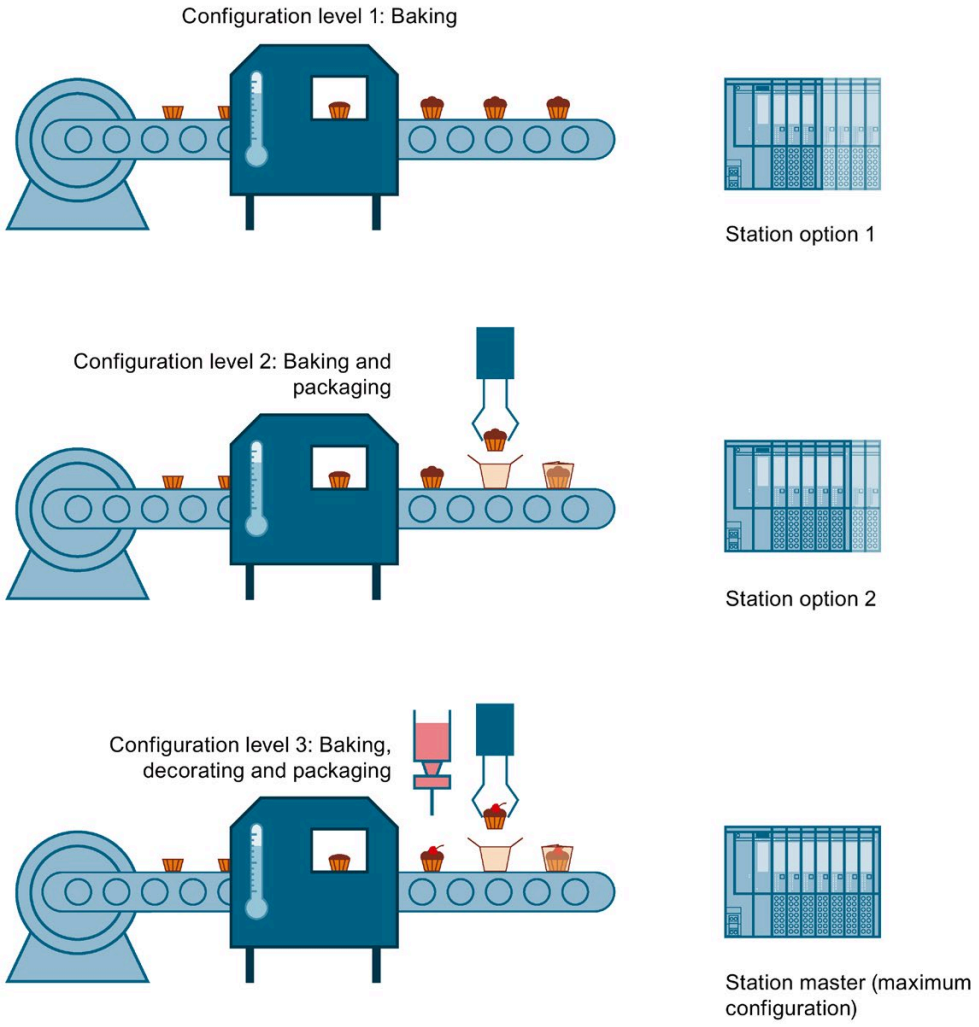

Figure 11-2 Various configuration levels of a standard machine with the corresponding station options of the ET 200SP distributed I/O system

Advantages

- Simple project execution and commissioning by using a STEP 7 project for all station options.
- Easy handling during maintenance, versioning and upgrades.
- Hardware savings: You only install the I/O modules needed for the current station option of the machine.
- Potential savings when building, commissioning and creating documentation for standard machines

Additional information

You can find information on configuration, programming and the response during operation with configuration control:

- in the S7-1500, ET 200MP Distributed I/O System system manual (https://support.industry.siemens.com/cs/ww/en/view/59191792) for configuration control in in ET 200MP.
- in the ET 200SP Distributed I/O System system manual (https://support.industry.siemens.com/cs/ww/en/view/58649293) for configuration control in ET 200SP.

11.3 TIA Portal Openness

TIA Portal Openness describes open interfaces for engineering with the TIA Portal.

You automate engineering with TIA Portal Openness by controlling the TIA Portal externally using a program that you created yourself. You can use Openness, for example, to implement modular machine concepts on the engineering level.

With TIA Portal Openness, you can implement actions including the following:

- Create project data
- Change projects and project data
- Delete project data
- Read in project data
- Make projects and project data available to other applications

Openness with SIMATIC Drive Controller

The SIMATIC Drive Controller supports Openness - including the specific SIMATIC Drive Controller properties, such as X142 technology I/Os and PROFIdrive Integrated. The Openness functionality available for SINAMICS Integrated is based on the currently available range of functions for SINAMICS S120.

Additional information

You can find additional information on the topic of Openness in the system manual SIMATIC Openness: Automating creation of projects (https://support.industry.siemens.com/cs/de/de/view/109477163/en).

Commissioning 12

12.1 Overview

Introduction

This section includes information on the following topics:

- Check before powering on for the first time
- Removing/inserting the SIMATIC memory card
- First power-on of the SIMATIC Drive Controller
- Downloading a project to the device
- Operating states of the SIMATIC Drive Controller
- Operating states of the SINAMICS Integrated
- Runtime licensing
- CPU memory reset: automatic and manual
- Backing up and restoring the CPU configuration
- Backup/restore of SINAMICS NVRAM data
- Time-of-day synchronization
- Identification and maintenance data
- Shared commissioning of projects

Commissioning requirements

You must ensure the safety of your plant. You therefore need to perform a complete functional test and the necessary safety checks before the final commissioning of a plant.

Also allow for any possible foreseeable errors in the tests. This avoids endangering persons or equipment during operation.

WARNING

Unexpected movement of machines due to inactive safety functions

Safety functions that are inactive or have not been adjusted accordingly can cause unexpected machine movements that can lead to serious injury or death.

- Note the information in the relevant product documentation before commissioning.
- Carry out a safety inspection for safety-related functions throughout the entire system, including all safety-related components.
- Ensure that the safety functions used in your drives and automation tasks are adjusted and activated through suitable parameter assignment.
- Run a function test. Only put your plant into live operation once you have ensured that the safety-related functions are running correctly.

Note

Important safety instructions for Safety Integrated functions

If you want to use Safety Integrated functions, follow the safety instructions in the Safety Integrated manuals.

Commissioning a drive

For detailed information on drive configuration, parameter assignment and commissioning, see the SINAMICS S120 with Startdrive commissioning manual (https://support.industry.siemens.com/cs/ww/en/view/109763294).

You can find an example of commissioning a simple SINAMICS S120 drive in Getting Started with Startdrive (https://support.industry.siemens.com/cs/ww/en/view/109763293).

Software tools for commissioning

The following free software tools support you in commissioning:

- SIEMENS PRONETA (https://support.industry.siemens.com/cs/ww/en/view/67460624) when commissioning PROFINET systems
- SIMATIC Automation Tool (https://support.industry.siemens.com/cs/de/en/view/98161300) when commissioning the SIMATIC Drive Controller.

12.2 Check before powering on for the first time

Check before powering on for the first time

Before the first power-on, check that the SIMATIC Drive Controller and the SINAMICS components are correctly installed and wired.

Installation and wiring

- Have the required minimum clearances for heat dissipation been provided?
- Are all front connectors wired according to the circuit diagram and inserted in the correct connection?

Grounding and chassis concept

- Is the protective conductor terminal on the SIMATIC Drive Controller connected to the protective conductor?
- Have all cable shields been applied?
- Are the required equipotential bonding cables connected with low impedance to the affected plant units?

Further information

You can find information on assembly/installation and commissioning of SINAMICS S120 components in the SINAMICS S120 manuals and in the EMC Installation Guide. (https://support.industry.siemens.com/cs/ww/en/view/60612658)

12.3 Commissioning procedure

12.3.1 Removing/plugging in a SIMATIC memory card

Requirements

The SIMATIC Drive Controller only supports pre-formatted SIMATIC memory cards. If applicable, delete all previously stored data before using the SIMATIC memory card.

In order to work with the SIMATIC memory card, first ensure that the SIMATIC memory card is not write-protected. For this purpose, slide the slider on the SIMATIC memory card out of the lock position.

Inserting the SIMATIC memory card

To insert a SIMATIC memory card, follow these steps:

1. You use the "PUSH" ① button to open the bottom cover on the SIMATIC Drive Controller.

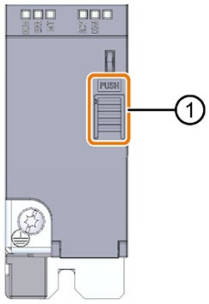

① "PUSH" button

2. Ensure that either the SIMATIC Drive Controller is switched off or that the CPU is in STOP.

3. Insert the SIMATIC memory card, as depicted on the SIMATIC Drive Controller, into the slot for the SIMATIC memory card.

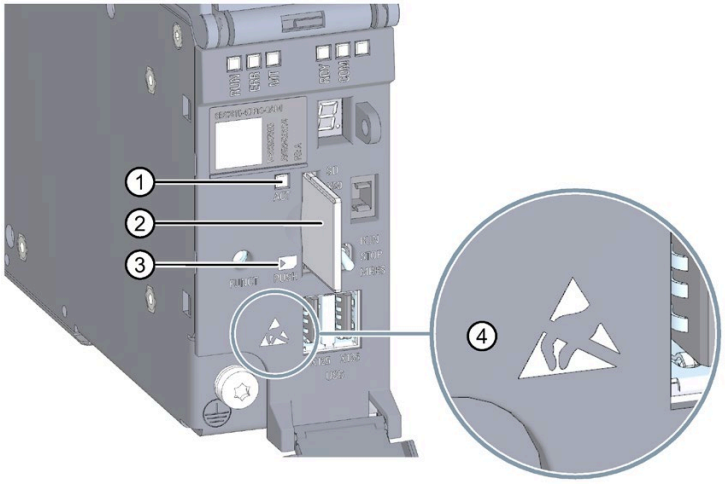

① ACT LED
② SIMATIC memory card
③ Symbol shows correct position of the SIMATIC memory card
④ ESD symbol: Identifies electrostatic-sensitive devices

4. Carefully push the SIMATIC memory card into the slot until the SIMATIC memory card clicks into place.

NOTICE
Possible damage of electronic components (ESD) Electrostatic discharges can damage electronic components in the device. Only open the cover when you have grounded yourself with one of the following measures: • Ground yourself at the control cabinet or the ground terminal. • Wear an ESD wrist strap. • Wear ESD shoes or ESD grounding strips in ESD areas with a conducting floor.

Removing the SIMATIC memory card

To remove a SIMATIC memory card, follow these steps:

1. You use the "PUSH" button to open the bottom cover.
2. Switch the CPU into STOP mode.
3. Carefully push the SIMATIC memory card into the slot. After audible unlatching of the SIMATIC memory card, remove it.

Only remove the SIMATIC memory card in POWER OFF or STOP mode of the CPU. Ensure that no writing functions (online functions with the programming device, e.g. loading/deleting a block, test functions) are active in STOP mode or were active before POWER OFF. Do not remove the SIMATIC memory card while the ACT LED is signaling write/read access.

NOTICE
Possible data loss If you remove the SIMATIC memory card during a write process, the following problems can occur: • The data content of a file is incomplete. • The file is no longer readable, or no longer exists. • The entire content of the card is corrupted.

Also note the following FAQ on the Internet (https://support.industry.siemens.com/cs/ww/en/view/59457183) in connection with the removal of the SIMATIC memory card.

Reactions after removing/inserting the SIMATIC memory card

Inserting and removing the SIMATIC memory card in STOP mode triggers a re-evaluation of the SIMATIC memory card. The CPU hereby compares the content of the configuration on the SIMATIC memory card with the backed-up retentive data. If the backed-up retentive data matches the data of the configuration on the SIMATIC memory card, the retentive data is retained. If the data differs, the CPU automatically performs a memory reset (which means the retentive data is deleted) and then switches to STOP.

The CPU evaluates the SIMATIC memory card and indicates this by flashing the RUN/STOP LED.

12.3.2 First power-on

Requirements

- The SIMATIC Drive Controller and the SINAMICS components have been installed and wired.
- The SIMATIC Memory Card is in the SIMATIC Drive Controller.

Procedure

Proceed as follows to commission the SIMATIC Drive Controller:

Switch on the 24 V power supply to the SIMATIC Drive Controller.

Startup characteristics of the CPU

Startup begins once the power supply has been switched on:

RUN/STOP	ERR	MAINT	Description
Alternately flashes yellow/green	Flashes red	Flashes yellow	The CPU executes a flash test. All LEDs flash at 2 Hz
Flashes yellow at 2 Hz	-	-	The CPU runs system initialization and evaluates the SIMATIC Memory Card
On and yellow	-	-	After system initialization has been completed, the CPU switches to STOP

Startup behavior of SINAMICS Integrated

SINAMICS Integrated power up begins once the power supply has been switched on. The SINAMICS Integrated state after successful power up depends on the configuration state of the SINAMICS Integrated and whether SINAMICS components are running a firmware update.

If booting up fails (for example because of a firmware update with errors), this is indicated by the RDY LED (2 Hz) flashing red.

You can find detailed information on the various LED states in the SIMATIC Drive Controller manual (https://support.industry.siemens.com/cs/ww/en/view/109766666).

12.3.3 Downloading a project to the device

Requirements

- The plant has been installed and wired.
- The SIMATIC Drive Controller is on and is in STOP.
- The TIA Portal with integrated Startdrive has been installed and has started up on the PG/PC.
- You have created a project in the TIA Portal, added a SIMATIC Drive Controller with SINAMICS Integrated to the project and configured it.

Loading the CPU project

1. To load the project, select the CPU (PLC) in the project tree and click on the "Download to device" icon in the toolbar.

   If necessary, the project data is compiled.

   – If you had previously established an online connection, the "Load preview" dialog opens. This dialog displays alarms and recommends actions needed for the loading operation.

   – If you have not already established an online connection, the "Extended download to device" dialog opens, and you must first select the interfaces via which you want to establish the online connection to the device.

2. Check the alarms in the "Load preview" dialog, and select the actions in the "Action" column if necessary. As soon as downloading becomes possible, the "Load" button is enabled.
3. Click "Load". The load operation is performed.

   If there is a need for synchronization, the system automatically displays the "Synchronization" dialog. This dialog displays alarms and suggests actions that are needed for synchronization. You have the option of performing these actions or forcing the download without synchronization by clicking "Force download to device". If you have performed the suggested actions, you are asked whether you want to continue with the download. The "Load results" dialog then opens. In this dialog, you can check whether or not the load operation was successful and take any further actions that may be necessary.

4. Click "Finish".

Loading the drive configuration

Requirements

For online functions such as "Download to device", "Upload from device" and "Go online" to be possible in SINAMICS Integrated, the following requirements must be met:

- The firmware version configured for SINAMICS Integrated corresponds to the firmware version of the device hardware.
- You have downloaded the hardware configuration to the CPU (see "Loading the CPU project").
- You must have configured a subnet for the interface to which you are connecting your programming device.

Procedure

1. To load the drive configuration, select the SINAMICS Integrated in the project tree.
2. In the toolbar, click on the "Download to device" icon.

You can find further information on downloading the drive configuration in the SINAMICS S120 Startdrive commissioning manual (https://support.industry.siemens.com/cs/ww/en/view/109763294).

12.4 Operating states of the CPU

12.4.1 Overview of operating modes: Startup, STOP, RUN

Introduction

Operating states describe the state of the CPU. The following operating states are possible with the mode selector:

- STARTUP
- RUN
- STOP

In these operating states, the CPU can communicate, for example, over the PROFINET IO interface.

The status LEDs on the front of the SIMATIC Drive Controller indicate the current operating state.

12.4.2 STARTUP operating state

Response

Before the CPU starts to execute the cyclic user program, a startup routine is executed.

By programming startup OBs, you can specify initialization tags for your cyclic program in the startup routine. You can program one or more startup OBs, or none at all.

Points to note

- All outputs are disabled or react according to the parameter settings for the relevant module: They provide a configured substitute value or retain the last value output and switch the controlled process to a safe operating state.
- The process image is initialized.
- The process image is not updated.
  To read the current state of inputs during STARTUP, you can access inputs with direct I/O access.
  To initialize outputs during STARTUP, you can write the values via the process image or via direct I/O access. The values are output at the outputs during the transition to RUN.
- The CPU always starts up in a warm restart.
  - The non-retentive bit memories, timers and counters are initialized.
  - The non-retentive tags in data blocks are initialized.
- Cycle time monitoring is not yet running during startup.
- The CPU processes the startup OBs in the order of the startup OB numbers. The CPU processes all programmed startup OBs regardless of the selected startup type (see "Setting the startup behavior" figure below).
- If a relevant event occurs, the CPU can start the following OBs in startup:
  - OB 82: Diagnostics interrupt
  - OB 83: Removal/insertion of modules
  - OB 86: Rack error
  - OB 121: Programming error (only for global error handling)
  - OB 122: I/O access error (for global error handling only)
    You can find a description of how to use global and local error handling in the STEP 7 online help.

  The CPU cannot start any other OBs until after the transition to RUN.

Response when preset configuration does not match actual configuration

The configuration downloaded to the CPU represents the preset configuration. The actual configuration is the actual configuration of the automation system. If the preset configuration and actual configuration differ, the hardware compatibility setting defines the behavior of the CPU. For additional information on hardware compatibility, see the section Operating mode transitions (Page 227).

Cancellation of startup

If errors occur during startup, the CPU cancels startup and returns to STOP.

The CPU does not perform startup or interrupts startup under the following conditions:

- You have not inserted a SIMATIC Memory Card or have inserted an invalid one.
- You have not downloaded a hardware configuration to the CPU.

Configuring startup behavior

You configure the behavior of the CPU in the Startup group in the CPU properties.

Setting startup behavior

Proceed as follows to set the startup behavior:

1. Select the CPU in the device view of the STEP 7 hardware network editor.
2. Select the "Startup" area in the properties under "General".

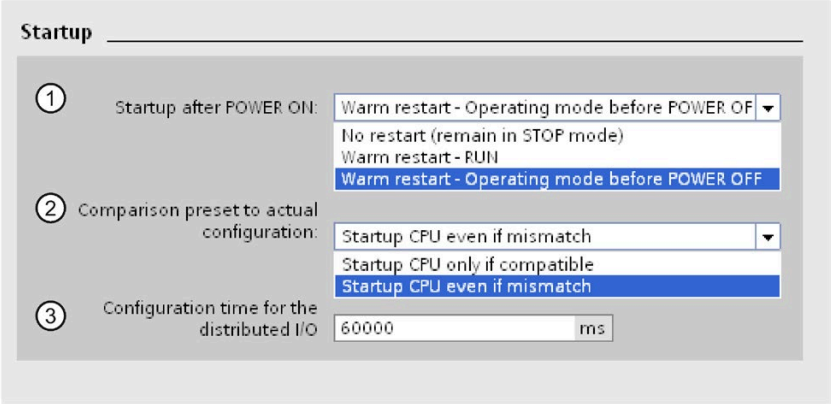

Figure 12-1 Setting startup behavior

① Sets the startup type after POWER ON

② Defines the startup behavior for the event that a (distributed I/O) module in a slot does not correspond to the configured module. This parameter applies to the CPU and to all the modules for which no other setting has been selected.

- Startup CPU only if compatible: With this setting, a module in a configured slot must be compatible with the configured module. Compatible means that the module has the relevant number of inputs and outputs and the electrical and functional properties correspond.
- Startup CPU even if mismatch: With this setting, the CPU starts up irrespective of the type of module plugged.

③ Specifies a maximum period (default: 60 000 ms) in which the distributed I/O must be ready for operation.
If the distributed I/O is ready for operation within the configuration time, the CPU switches to RUN.

If the distributed I/O is not ready for operation within the configuration time, the startup behavior of the CPU depends on the hardware compatibility setting.

12.4.3 STOP operating state

Response

The CPU does not execute the user program in STOP.

All outputs are disabled or react according to the parameter settings for the relevant module: They provide a configured substitute value or retain the last value output and thus keep the controlled process in a safe operating state.

Points to note

The STOP operating state results in a frame failure at the drive with a corresponding response at the drive end (for example, OFF3 fast stop, depends on parameter assignment). You can find additional information in the SINAMICS S120 Communication function manual (https://support.industry.siemens.com/cs/ww/de/view/109763284/en).

12.4.4 RUN operating state

Response

Cyclic, time-driven, and interrupt-driven program execution are performed in RUN. Addresses in the "Automatic update" process image are automatically updated in each program cycle. You can also find more information in Process images and process image partitions (Page 119).

Execution of the user program

Once the CPU has written the outputs and read the inputs, it executes the cyclic program from the first instruction to the last instruction. Events with a higher priority, such as hardware interrupts, diagnostic interrupts, Motion Control functions and communication, can interrupt the cyclic program flow and prolong the cycle time.

If you have configured a minimum cycle time, the CPU will not end the cycle until this minimum cycle time has expired, even if the user program is completed sooner.

The operating system monitors the execution time of the cyclic program for a configurable upper limit known as the maximum cycle time. You can restart this time monitoring at any point in your program by calling the RE_TRIGR instruction.

If the cyclic program exceeds the maximum cycle time, the operating system will attempt to start the time error OB (OB 80). If the OB does not exist, the CPU ignores the maximum cycle time overshoot. If the cycle monitoring time is exceeded for a second time, for example while the time error OB is being processed, the CPU switches to STOP.

Additional information

You can find additional information on cycle and response times in the Cycle and Response Times (https://support.industry.siemens.com/cs/ww/en/view/59193558) function manual.

12.4.5 Operating state transitions

Operating states and operating state transitions

The figure below shows the operating state and operating state transitions:

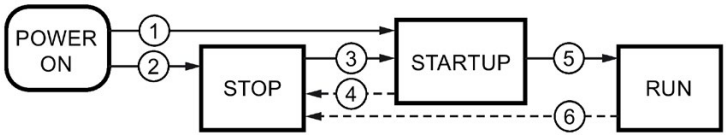

Figure 12-2 Operating states and operating state transitions

The table below shows the effects of operating state transitions:

Table 12- 1 Operating state transitions

No.	Operating state transitions		Effects
①	POWER ON → STARTUP	After switching on, the CPU switches to "STARTUP" if: • The hardware configuration and program blocks are consistent. • The preceding “POWER OFF" was triggered by an interruption in the power supply. • Startup type "Warm restart - RUN" is set. or • Startup type "Warm restart mode before POWER OFF" is set and the CPU was in RUN mode before POWER OFF.	The CPU clears the non-retentive memory, and resets the content of non-retentive DBs to the start values of the load memory. Retentive memory and retentive DB content are retained. The 500 most recent entries are retained in the diagnostics buffer.
②	POWER ON → STOP	After switching on, the CPU switches to "STOP" if: • The hardware configuration and program blocks are inconsistent. or • Startup type "No restart" is set. or • Startup type "Warm restart mode before POWER OFF" is set and the CPU was in STOP mode before POWER OFF.	The CPU clears the non-retentive memory, and resets the content of non-retentive DBs to the start values of the load memory. Retentive memory and retentive DB content are retained. The 500 most recent entries are retained in the diagnostics buffer.

No.	Operating state transitions		Effects
③	STOP → STARTUP	The CPU switches to "STARTUP" mode if: • The hardware configuration and program blocks are consistent. • You set the CPU to "RUN" via the programming device and the mode switch in is the RUN position. or • You move the mode switch from STOP to RUN.	The CPU clears the non-retentive memory, and resets the content of non-retentive DBs to the start values of the load memory. Retentive memory and retentive DB content are retained. The 500 most recent entries are retained in the diagnostics buffer.
④	STARTUP → STOP	The CPU returns to "STOP" in the following cases of "STARTUP": • The CPU detects an error during startup. • You set the CPU to "STOP" via the programming device or mode switch. • The CPU executes a STOP command in the Startup OB.	These operating mode transitions have no effect on data.
⑤	STARTUP → RUN	The CPU switches to "RUN" in the following cases of "STARTUP": • The CPU has initialized the PLC tags. • The CPU has executed the startup blocks successfully.	
⑥	RUN → STOP	The CPU returns to "STOP" in the following cases of "RUN": • The CPU detects an error which prevents further work. • The CPU executes a STOP command in the user program. • You set the CPU to "STOP" via the programming device or mode switch.	

Additional information

You can find information on the behavior of the axes in the different operating states in the S7-1500T Motion Control function manuals (https://support.industry.siemens.com/cs/ww/en/view/109751049).

12.5 SINAMICS Integrated operating states

SINAMICS Integrated operating states

SINAMICS Integrated has various different operating states. SINAMICS Integrated indicates the operating states with status LEDs. You can find further information in the SIMATIC Drive Controller (https://support.industry.siemens.com/cs/ww/en/view/109766666) manual.

12.6 Runtime licensing

A number of runtime options requiring licensing are available at the CPU and drive end for the SIMATIC Drive Controller.

Licenses for the CPU

CPU applications that require a runtime license include:

- OPC UA
- ProDiag
- Energy Suite

Proceed as follows to license the CPU:

1. Double-click the device configuration of the CPU in the project tree. The device configuration is opened in the device view.
2. Select the subordinate tab "General" in the "Properties" Inspector window.
3. Click the arrow next to the "Runtime licenses" section. The Runtime functions available for licensing and their license requirements are displayed.
4. Confirm the purchase of the required licenses.

Note

Licenses must be purchased to use the functions in question. For details, see the licensing terms for the given product.

If the CPU is sub-licensed, compilation of the CPU ends with license errors.

Licenses for the SINAMICS Integrated and S120 Control Units

Certain functionalities with the SINAMICS S120 drive system require licensing. The licensing procedure for SINAMICS Integrated differs from the licensing procedure for SINAMICS S120 Control Units.

SINAMICS Integrated (in a process similar to that for runtime licenses for the CPU) is licensed by Engineering by confirming the purchase of the licenses. SINAMICS S120 Control Units, on the other hand, are licensed over the memory card. The memory card is generally ordered pre-licensed for this purpose.

In the order, specify the type and number of licenses you wish in additional information (Z options). Alternatively, you can also license the memory card with single licenses.

Note

Please note the product phase-out of SINAMICS licenses in the delivery form "CoL in paper form" and only use the delivery form "CoL in electronic form".
For more details, see (https://support.industry.siemens.com/cs/ch/en/view/109798678)

Licenses for functions/Technology Extensions (TEC)	Licensing	Article number of the single license to be purchased for the SINAMICS Integrated or for SINAMICS S120 Control Units, CoL in electronic form	Z option for pre-licensing CF cards with SINAMICS S120 Control Units
Safety Integrated Extended Functions	Per axis	6SL3074-0AA10-0AH0	Fxx (xx = number of licenses)
Safety Integrated Advanced Functions	Per axis	6SL3074-0AA20-0AH0	Axx (xx = number of licenses)
Detent torque compensation	Per axis	6SL3074-0AA15-0AH0	Z option: -
Advanced Position Control (APC) including Active Vibration Suppression	Per axis	6SL3074-0AA05-0AH0	Z option: -
Dynamic network support	Per SINAMICS /CU Integrated/CU	Booksize: 6SL3074-0AA07-1AH0 Chassis: 6SL3074-0AA07-0AH0	S01

Licenses for functions/Technology Extensions (TEC)	Licensing	Article number of the single license to be purchased for the SINAMICS Integrated or for SINAMICS S120 Control Units, CoL in electronic form	Z option for pre-licensing CF cards with SINAMICS S120 Control Units
Line droop control	Per SINAMICS /CU Integrated/CU	Up to 2000 kW: 6SL3074-0AA08-0AH0 Up to 1600 kW: 6SL3074-0AA08-1AH0 Up to 1250 kW: 6SL3074-0AA08-2AH0 Up to 950 kW: 6SL3074-0AA08-3AH0 Up to 650 kW: 6SL3074-0AA08-4AH0 Up to 350 kW: 6SL3074-0AA08-5AH0 Up to 200 kW: 6SL3074-0AA08-6AH0 Up to 100 kW: 6SL3074-0AA08-7AH0 Up to 50 kW: 6SL3074-0AA08-8AH0	S02
Advanced Synchronous Reluctance Control	Per axis	6SL3074-0AA06-0AH0	Z option: -
Controller Parameter Adaption	Per axis	6SL3074-0AA17-0AH0	Z option: -
Technology Extension VIBX (Vibration Extinction)	Per SINAMICS /CU Integrated/CU	6SL3077-0AA00-5AH0	U03
Technology Extension SERVCOUP (Servo Coupling)	Per SINAMICS /CU Integrated/CU	6SL3077-0AA00-8AH0	Z option: -
Technology Extension DCDCCONV (DC-DC-Converter)	Per SINAMICS Integrated/CU	6SL3077-0AA02-0AH0	Z option: -
Technology Extension RAILCTRL (Rail Control) 1)	Per SINAMICS Integrated/CU	6SL3077-0AA01-8AH0	U02
DCB Extension Library	Per SINAMICS /CU Integrated/CU	6SL3077-0AA00-0AH0	U01
SINAMICS Integrated only supports the licensed functions and Technology Extensions (TEC) listed. For Technology Extensions that were approved after the copy deadline of this documentation, you will find the approval information in the respective Product Information for the SINAMICS Technology Extension. Additional licensed functions and Technology Extensions (TEC) are available for SINAMICS S120 Control Units.			

1) Support for the RAILCTRL (Rail Control) Technology Extension for SINAMICS Integrated is under development.
For more information, refer to the publications for SINAMICS Technology Extension RAILCTRL (Rail Control)

Proceed as follows to license SINAMICS Integrated :

1. In the SINAMICS Integrated project tree, double-click on "Parameter assignment" under "Automatic speed control".
2. The runtime functions available for licensing and license requirements are displayed in the function view.
3. Confirm the purchase of the required licenses.

Note

The SINAMICS Technology Extension licenses are only displayed when the corresponding Technology Extension was installed in Startdrive.

Note

Licenses must be purchased to use the function in question. For details, see the licensing terms for the given product.

If the SINAMICS Integrated is sub-licensed, this is indicated in the project tree and in the Startdrive working area.

The number of licenses purchased is saved in the project. There is no sub-licensing response at the drive end.

Note

SINAMICS S120 CU320-2 connected to the SIMATIC Drive Controller are licensed with the CF card of CU320-2. With sub-licensing, there is a sub-licensing response on the CU320-2.

12.7 CPU memory reset

Basics of a memory reset

A memory reset on the CPU is possible only in the STOP mode.

During memory reset, the CPU is changed to a so-called "initial status".

This means that:

- An existing online connection between your programming device/PC and the CPU is terminated.
- The content of the work memory and the retentive and non-retentive data (applies only to manual memory reset by the user) are deleted.
- The diagnostics buffer, time of day, and IP address are retained.
- Subsequently the CPU is initialized with the loaded project data (hardware configuration, code and data blocks, force jobs). The CPU copies this data from the load memory to the work memory.

  Result:

  - If you set an IP address in the hardware configuration ("Set IP address in the project" option) and a SIMATIC Memory Card with the project is in the CPU, this IP address is valid after the memory reset.
  - Data blocks no longer have current values but rather their configured start values.
  - Force jobs remain active.

How can I tell if the CPU is performing a memory reset?

The RUN/STOP LED flashes yellow at 2 Hz. After completion the CPU goes into STOP mode, and the RUN/STOP LED is switched on (unchanging yellow).

Result after memory reset

The following table provides an overview of the contents of the memory objects after memory reset.

Table 12- 2 Memory objects after memory reset

Memory object	Contents
Actual values of the data blocks, instance data blocks, technology objects (except for retentive tags of the TOs)	Initialized
Bit memories, timers and counters	Initialized
Retentive tags of technology objects (e.g. adjustment values of absolute encoders)	Retained
Diagnostics buffer entries	Retained
IP addresses	Retained
Device name	Retained
Counter readings of the runtime meters	Retained
Time of day	Retained

Note

Password for protection of confidential configuration data

The password for protection of confidential configuration data is retained after a memory reset of the CPU. The password is only deleted when the "Delete password for protection of confidential PLC configuration data" option is set in STEP 7.

You can find additional information on the password for protection of confidential configuration data in the Communication function manual (https://support.industry.siemens.com/cs/ww/en/view/59192925).

12.7.1 Automatic memory reset

Possible cause of automatic memory reset

The CPU executes an automatic memory reset if an error occurs that prevents normal further processing.

Causes for such errors can be:

- User program is too large, and can't be completely loaded into work memory.
- The project data on the SIMATIC memory card are damaged, for example because a file was deleted.
- If you remove or insert the SIMATIC memory card and the backed-up retentive data differs in structure from that of the configuration on the SIMATIC memory card.

12.7.2 Manual memory reset

Reason for manual memory reset

CPU memory reset is required to reset the CPU to its "original state".

CPU memory reset

CPU memory reset is possible:

- Using the mode selector
- Using STEP 7

Procedure using the mode selector

Note

Memory reset ↔ Reset to factory settings

The procedure described below also corresponds to the procedure for resetting to factory settings:

- Selector operation with inserted SIMATIC memory card: CPU executes a memory reset
- Selector operation without inserted SIMATIC memory card: CPU executes reset to factory settings

To perform a memory reset of the CPU using the mode selector, follow these steps:

1. Set the mode selector to the STOP position.

   Result: The RUN/STOP LED lights up yellow.
2. Set the mode selector to the MRES position. Hold the selector in this position until the RUN/STOP LED lights up for the 2nd time and remains continuously lit (this takes three seconds). After this, release the selector.
3. Within the next three seconds, switch the mode selector back to the MRES position, and then back to STOP again.

Result: The CPU executes memory reset.

You can find information on resetting the CPU to factory settings in CPU reset to factory settings (Page 282).

Procedure using STEP 7

To perform a memory reset of the CPU via STEP 7, follow these steps:

1. Open the "Online Tools" task card of the CPU.
2. Click the "MRES" button in the "CPU control panel" pane.
3. Click "OK" in response to the confirmation prompt.

Result: The CPU is set to STOP mode and performs memory reset.

12.8 Configuring SIMATIC Drive Controller backup and restore

Backing up the software and hardware configuration

If you have already downloaded a configuration to the SIMATIC Drive Controller, it is advisable to back it up.

Before you test a new configuration, create a backup of the current device version. You can then restore the previous configuration at a later time.

You can create as many backups as you want and store a variety of configurations for the SIMATIC Drive Controller.

Scope of the backup

The backup includes all data that is needed to restore a particular configuration version of the SIMATIC Drive Controller.

The following data is backed up, for example:

- The content of the SIMATIC memory card including SINAMICS Integrated
- Retentive memory areas of the CPU, for example, of data blocks, counters, and bit memory
- Other retentive memory content, for example, IP address parameters

The backup is performed with the current values of the CPU. Entries in the diagnostic buffer are not included in the backup.

The current time of day of the CPU is not backed up.

SINAMICS Integrated configured

Note

If a SINAMICS Integrated is configured, the configuration of the SINAMICS Integrated is also backed by/restored from the SIMATIC memory card. NVRAM data must first have been backed up on the SIMATIC memory card.

You can find more information in Backing up, restoring and deleting SINAMICS Integrated NVRAM data (Page 240).

12.8.1 Backing up and restoring the CPU configuration

Backup from online device

You may want to make changes to your plant over time (for example, add new devices, replace existing devices or adapt the user program). Before you download a changed configuration to the CPU, first use the option "Backup from online device" to create a complete backup of the current device state. If you have assigned a password to protect confidential PLC configuration data, then this password is not secured as well. You can find more information about the password in the section Protection of confidential configuration data (Page 197).

Upload from device (software)

With the option "Upload from device (software)", you load the software project data from the CPU to an existing CPU in the project.

Upload device as new station

If you are operating a new PG/PC in a plant, the STEP 7 project that was used to create the plant configuration might not be available. In this case, you can use the option "Upload device as new station" to load the device data to a project in your PG/PC.

Snapshot of the actual values

You can use the option "Snapshot of the actual values" to back up the actual values of the data blocks so that you can restore the actual values after any changes, if necessary.

Overview of backup types

The table below shows the backup of CPU data in line with the selected type of backup and its specific characteristics:

Table 12- 3 Types of backup

	Backup from online device	Upload from device (software)	Upload device as new station	Snapshot of the monitor values
Current values of all DBs (global and instance data blocks)[1]	✓	✓	✓	✓
Blocks of the type OB, FC, FB and DB	✓	✓	✓	--
PLC tags (tag names and constant names)	✓	✓	✓	--
Technology objects	✓	✓	✓	--
Hardware configuration	✓	--	✓	--
Actual values (bit memories, timers and counters)[1]	✓	--	--	--
Content of the SIMATIC Memory Card	✓	--	✓[2]	--
Archives, recipes	✓	--	--	--
Entries in the diagnostics buffer	--	--	--	--
Current time	--	--	--	--

	Backup from online device	Upload from device (software)	Upload device as new station	Snapshot of the monitor values
Properties of the backup type				
Backup possible for failsafe CPUs	✓	✓	✓	✓
Backup can be edited	--	✓	✓	✓
Backup possible in operating mode	STOP	RUN, STOP	RUN, STOP	RUN, STOP
SINAMICS Integrated configuration backup	✓[3]	--	--	--

1 Only the values of the tags that are set as retentive are saved.

2 Content of DataLogs, Recipes and UserFiles folders

3 SINAMICS NVRAM data must first have been backed up on the SIMATIC Memory Card.

Note

Downloading project data to the CPU

Files with project data to be loaded from the SIMATIC Memory Card to the CPU must not be larger than 2 GB.

Additional information

You can find more information on the different backup types in the STEP 7 online help.

For more details on backing up NVRAM data of SINAMICS Integrated, see the section Backing up, restoring and deleting SINAMICS Integrated NVRAM data (Page 240).

Emergency address (emergency IP)

The emergency address (emergency IP address) of a CPU is designed for diagnostic and download functions, for example, if the CPU can no longer be reached via the IP protocol because the wrong project has been loaded. You can find information on the emergency address in the Communication (https://support.industry.siemens.com/cs/ww/en/view/59192925) function manual.

Storing multilingual project texts

When you configure a CPU, different categories of texts are generated, for example

- Object names (names of blocks, modules, tags, etc.)
- Comments (for blocks, networks, watch tables, etc.)
- Messages and diagnostic texts

Texts are provided by the system (for example diagnostic buffer texts) or are created during configuration (for example messages).

In a project, texts exist in one single language or in several languages after a translation process. You can maintain project texts in all language available to you in the project tree (Languages & Resources > Project Texts). The texts created during configuration can be loaded to the CPU.

The following texts containing the project data are loaded to the CPU in the chosen languages and are also used by the Web server:

- Diagnostic buffer texts (not editable)
- Module state texts (not editable)
- Message texts with associated text lists
- Tag comments and step comments for S7 GRAPH and PLC Code Viewer
- Comments in watch tables

The following texts containing the project languages are also loaded to the CPU in the chosen languages, but are not used by the Web server:

- Comments in tag tables (for tags and constants)
- Comments in global data blocks
- Comments of elements in block interfaces of FBs, FCs, DBs and UDTs
- Network titles in blocks written in LAD, FBD or STL
- Block comments
- Network comments
- Comments of LAD and FBD elements

The SIMATIC Drive Controller CPU supports the storage of multilingual project texts in up to three different project languages. If the project texts belonging to a specific project language nevertheless exceed the memory space reserved for them, the project cannot be loaded to the CPU. The operation is canceled with a message indicating that not enough free storage space is available. In such a case, take measures to reduce the required storage space, for example by shortening comments.

Note

Size of the SIMATIC Memory Card

If the storage space needed to load projects exceeds the storage space available on the SIMATIC Memory Card in use, loading to the CPU is canceled with an error message.

Therefore, make sure that there is enough available storage space on your SIMATIC Memory Card for loading projects.

Please remember when selecting the memory card capacity that the project data of both the CPU and SINAMICS Integrated is stored on the memory card.

In order to be able to download and back up projects, the project size and the size of files on the SIMATIC Memory Card may not exceed 2 GB.
Do not manipulate any of the contents in the OMSSTORE folder on the SIMATIC Memory Card.

You can find information on reading out the storage space capacity utilization of the CPU and the SIMATIC Memory Card in the Structure and Use of the CPU Memory (https://support.industry.siemens.com/cs/ww/en/view/59193101) function manual.

You can find information on parameter assignment of multilingual project texts in STEP 7 in the STEP 7 online help.

12.8.2 Backing up, restoring and deleting SINAMICS Integrated NVRAM data

Backing up the non-volatile memory

The SINAMICS Integrated has a non-volatile memory, NVRAM (Non-Volatile Random Access Memory), for operating data. Data stored in this memory includes the data from the fault buffer, diagnostics buffer and message buffer.

In certain circumstances, for example, a defect or device replacement, this data needs to be backed up. After changing the hardware, you transfer the backup data back to the NVRAM.

p7775 (Control Unit parameter) is used to execute the following operations:

- p7775 = 1 backs up NVRAM data to the memory card.
- P7775 = 2 copies the NVRAM data from the memory card to the NVRAM.
- p7775 = 3 deletes the data in the NVRAM.

A POWER ON is executed automatically once the data has been successfully deleted. If the operation was successful, p7775 = 0 is automatically set. If the operation was not successful, p7775 displays an error value. You can find further details on error values in the SINAMICS S120/S150 list manual (https://support.industry.siemens.com/cs/ww/en/view/109763271).

Backing up NVRAM data

P7775 = 1 stores the NVRAM data of the SINAMICS Integrated in the folder "SINAMICS.S7S\USER\SINAMICS\NVRAM\PMEMORY.ACX" on the memory card.

The storage operation backs up all data from the NVRAM.

Note

Backing up NVRAM data

NVRAM data backup to the memory card is also possible during pulse enable. If the drive is moved during NVRAM data transfer, the data backup may not be consistent with the NVRAM data.

Restoring NVRAM data

There are two situations that require NVRAM data to be restored.

- Replacement of the SIMATIC Drive Controller.
- Targeted NVRAM data restore due to suspected data errors.

Replacement of the SIMATIC Drive Controller:

The SINAMICS Integrated detects a replacement based on the serial number of the SIMATIC Drive Controller. Following POWER ON, the NVRAM of the SINAMICS Integrated is cleared and the NVRAM data is then loaded from the SIMATIC Memory Card.

NVRAM restore:

A targeted restore process of the saved NVRAM data is triggered by setting p7775 = 2. The original file is first deleted in NVRAM. If the file "PMEMORY.ACX" is available and has a valid checksum, it is loaded to the NVRAM.

The following data is not restored:

- Operating hours counter
- Temperature
- Safety logbook
- Crash diagnostics data

Deleting NVRAM data

p7775 = 3 deletes the NVRAM data.

The following data is not deleted in the process:

- Operating hours counter
- Temperature
- Safety logbook
- Crash diagnostics data

12.9 Time synchronization

12.9.1 Time-of-day synchronization of the CPU

NTP procedure

All CPUs are equipped with an internal clock. The clock always shows the time-of-day with a resolution of 1 millisecond and the date including the day of the week. The time adjustment for daylight saving time is also taken into account.

You can update the time of the CPUs using the NTP procedure with an NTP server. NTP (Network Time Protocol) is a standard for synchronizing clocks.

In NTP mode, the device sends time queries at regular intervals (in client mode) to the NTP server in the subnet (LAN). Based on the replies from the server, the most reliable and most accurate time is calculated and the time of day on the CPU is synchronized. The advantage of this mode is that it allows the time to be synchronized across subnets. You can configure the IP addresses of up to a maximum of four NTP servers. You address the sources for the time-of-day synchronization via IP addresses, for example, an HMI device.

The update interval defines the interval between the time queries (in seconds). The value of the interval ranges between 10 seconds and one day. The NTP procedure generally uses UTC (Universal Time Coordinated). UTC corresponds to GMT (Greenwich Mean Time).

NTP server for the SIMATIC Drive Controller

You can assign up to 4 NTP servers to a SIMATIC Drive Controller .

You have the following options to reset the IP addresses of the NTP servers:

- Configuring IP addresses of the NTP servers in STEP 7
- Setting the IP addresses of the NTP servers with the "T_CONFIG" instruction
- Obtaining IP addresses of the NTP servers via DHCP.
  As of firmware version V2.9, the CPU can also obtain the IP addresses of the NTP servers via DHCP. You can find more information on the procedure and the DHCP communication protocol in the Communication function manual (https://support.industry.siemens.com/cs/ww/en/view/59192925).

Configuring IP addresses of the NTP servers in STEP 7

To configure the IP addresses of the NTP servers in STEP 7, follow these steps:

1. Select the CPU in STEP 7.
2. In the properties of the CPU, navigate to "Time of day" > "Time synchronization"> "NTP mode".
3. For "Time synchronization:", select "Set NTP server in the project" from the drop-down list.
4. Enter the IP addresses of up to four NTP servers for "Server 1" to "Server 4".
5. Set the time interval of time queries for "Update interval". Set the update interval to between 10 s and 86400 s.

Setting the IP addresses of the NTP servers with the "T_CONFIG" instruction

Requirement:

- You selected the option "Set NTP server directly on the device (e.g. PLC program, display)" in the "Time synchronization" drop-down list in STEP 7.

Proceed as follows to set the IP addresses of the NTP servers with the T_CONFIG instruction:

1. Save the IP addresses for the NTP servers in a tag of the data type IF_CONF_NTP.
2. Interconnect the tag of the data type IF_CONF_NTP at the block parameter CONF_DATA of the T_CONFIG instruction.
3. Call the T_CONFIG instruction in the user program.

Result: The addresses of the NTP servers from the T_CONFIG instruction are transferred to the CPU.

You can change the addresses of the NTP servers with T_CONFIG more than once if necessary.

Additional information

For additional information on time-of-day synchronization - time synchronization, refer to the following FAQ on the Internet (https://support.industry.siemens.com/cs/de/en/view/86535497).

12.9.2 Time-of-day synchronization of SINAMICS drives

In the factory setting, SINAMICS drives (SINAMICS Integrated, SINAMICS S120) use an operating hours counter. The SINAMICS drive saves interrupts or warnings that occur on the basis of the operating hours. This method does not allow comparable time stamps between multiple drives and the CPU.

If you want comparable time stamps between multiple devices, you need to switch from operating hours counting to UTC format and implement synchronization with the time-of-day master (CPU).

UTC = Universal Time Coordinated; corresponds to GMT (Greenwich Mean Time)

You can then compare the events of all bus nodes that are synchronized with the CPU time.

SINAMICS drives offer the following time-of-day synchronization options:

Synchronization type	Accuracy	Notes
Simple synchronization	Approx. 100 ms	Only possible with suitable user program
Synchronization with ping compensation in non-isochronous communication	Approx. 10 ms	
Synchronization with ping compensation in isochronous communication	Approx. 1 ms	Time-of-day synchronization is available as a system functionality for the SIMATIC Drive Controller .
Synchronization with Network Time Protocol (NTP) over a PROFINET connection	Approx. 10 ms	Only for converters on PROFINET IO (e.g. SINAMICS S120 CU320-2 PN or SINAMICS S120) Cannot be used for SINAMICS Integrated

With the SIMATIC Drive Controller, time-of-day synchronization of the SINAMICS drives can be implemented automatically by the system or through a user program.

Time-of-day synchronization by the system

Time-of-day synchronization between CPU and SINAMICS drives is activated in the TIA Portal. By default, time-of-day synchronization is deactivated.

Proceed as follows to activate time-of-day synchronization:

1. Select "General" > "Time-of-day synchronization"
2. Select the option "By the system"

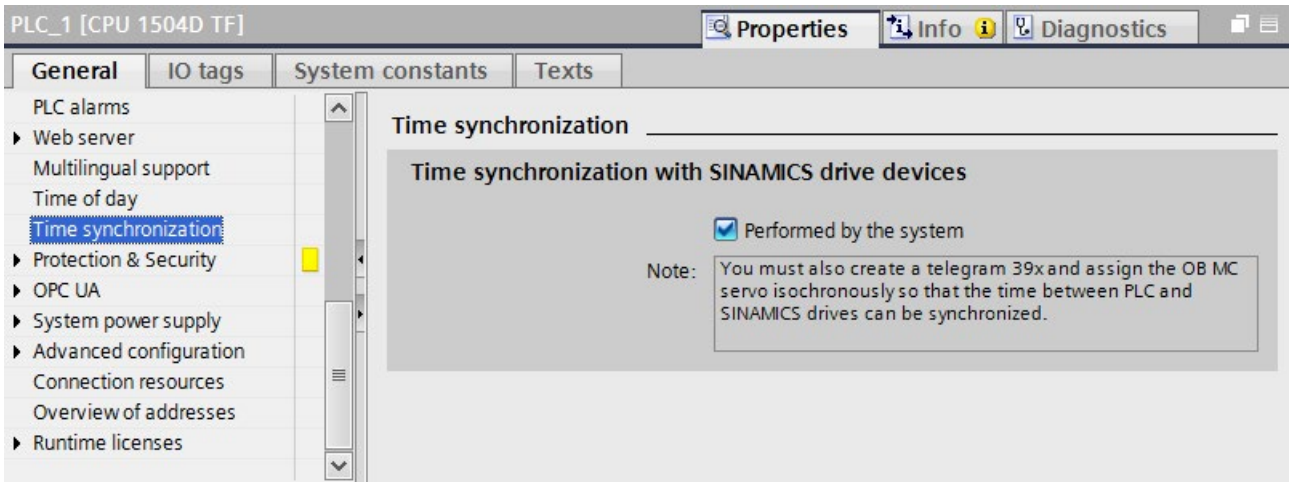

Figure 12-3 Time-of-day synchronization

Please note the following in relation to time-of-day synchronization:

- An OB MC Servo must be available and be synchronized with the relevant subnet.
- Frame 39x must be assigned to OB MC Servo and its process image.
- Selecting the "By the system" option switches the drive from operating hours counting to time-of-day synchronization with the controller.
- The time-of-day synchronization takes place with isochronous ping compensation.
- The first time-of-day synchronization takes place after the SIMATIC Drive Controller has entered the RUN state.
- Interrupts and alarms before the first synchronization are saved with the valid time stamp in SINAMICS at those times; all subsequent interrupts and alarms are saved with the synchronized time. The first time-of-day synchronization after synchronization is activated is entered in the diagnostic buffer of the drive with the status of the operating hours counter and the time of day (UTC time, synchronized with SIMATIC Drive Controller).
- If you want to implement time-of-day synchronization through a user program, the option "By the system" must be deselected.

Compensation for runtime deviations

To compensate for runtime deviations between SIMATIC and SINAMICS clocks, the time is automatically re-synchronized at regular intervals.

Please note the following response to setting the SINAMICS clock time:

SIMATIC clock time	Response of SINAMICS
Great than time/date on SINAMICS	Time and date are tracked on SINAMICS
Less than time/date on SINAMICS	The clock on SINAMICS is stopped until the "Time/date to be set" is reached (for details, see "Resetting the time").

This response ensures that the order of SINAMICS diagnostic buffer entries is retained following runtime difference compensation.

The SINAMICS clock operates with a resolution of 1 ms. A synchronization accuracy of 1 ms is achieved for all bus clock cycles divisible by 1 ms (for example 1 ms, 2 ms, 3 ms).

For all bus clock cycles that cannot be divided by 1 ms (for example 1.25 ms), a slightly lower synchronization accuracy is achieved in line with the system.

Precise synchronization is only ensured if OB MC Servo is operated in isochronous mode.

Resetting the time

Parameter p3109 is used to define a threshold that has the following effect in the event of negative time jumps:

Negative time jump	Effect on time
Less than threshold value	Time is paused (for details, see "Compensation for runtime deviations")
Greater than threshold value	Clock time is reset

Default setting for the threshold: p3109 = 100 ms

This means that the clock time is reset in the event of negative time jumps of more than 100 ms.

The default value is set so that normal runtime deviations (quartz drift) are below the threshold. If the CPU clock is set back by more than 100 ms, this is interpreted as an "intentional clock time reset" and the clock time of the drives is also set back immediately. The warning A01099 is also output.

If the real-time clock is reset by more than 60 seconds, an entry is also written to the diagnostic buffer in the drive:

Time correction (adjustment) by <correction value> seconds

Following another synchronization operation (negative time jump greater than the threshold), the parameter cu.p3107 has the following values:

- p3107[0 ... 1] the UTC time after synchronization
- p3107[2 ... 3] the UTC time before synchronization

[0] and [2] are milliseconds; [1] and [3] are days.

Note

The diagnostic buffer entries are not converted to the new time after the clock time changeover.

Time-of-day synchronization with the user program

Time-of-day synchronization can be implemented through a user program.

Example:

SIMATIC S7-1200/S7-1500 and SIMOTION: LAcycCom library for acyclic communication (https://support.industry.siemens.com/cs/ww/en/view/109479553),

FB LAcycCom_RTCSinamicsAcyclic

Note

If you want to implement time-of-day synchronization for SINAMICS S120 through a user program or the NTP time-of-day synchronization, you need to deselect the option "By the system" for "Time-of-day synchronization".

NTP time-of-day synchronization can be used for SINAMICS S210 drives independent of this.

Additional information

For additional information, see SINAMICS S120 Communication function manual (https://support.industry.siemens.com/cs/ww/en/view/109763284), "Time-of-day synchronization between controller and converter".

12.10 Identification and maintenance data

12.10.1 Reading out and entering I&M data

I&M data

Identification and maintenance data (I&M data) is data saved on the module as read-only (I data) or read/write (M data) information.

- **Identification data (I&M0):** Manufacturer information about the module that can only be read and is in part also printed on the enclosure of the module, such as article number and serial number.
- **Maintenance data (I&M1, 2, 3):** Plant-dependent information, e.g. installation location. The maintenance data for the SIMATIC Drive Controller is created during configuration and downloaded to the automation system/distributed I/O system.

The SIMATIC Drive Controller supports identification data (I&M0 to I&M3).

The I&M identification data supports you in the following activities:

- Checking the plant configuration
- Locating hardware changes in a plant
- Correcting errors in a plant

Modules can be clearly identified online using the I&M identification data.

You can read out the identification data with STEP 7 (see online help for STEP 7).

Options for reading out I&M data

- Via the user program
- Via STEP 7 or HMI devices
- Via the CPU web server

Procedure for reading I&M data via the user program

You have the following options for reading the I&M data of the modules in the user program:

- Using the RDREC instruction

  The data record structure for the CPU as well as for distributed modules accessible via PROFINET IO/PROFIBUS DP is described in Record structure for I&M data (Page 250).
- Using the Get_IM_Data instruction

Further information

The description of the instructions can be found in the STEP 7 online help.

Procedure for reading I&M data via STEP 7

Requirement: There must be an online connection to the CPU/interface module.

To read I&M data using STEP 7, follow these steps:

1. In the project tree, select the CPU/interface module and go to "Online & diagnostics".
2. In the "Diagnostics" folder, select the "General" area.

Procedure for entering maintenance data via STEP 7

STEP 7 assigns a default module name. You can enter the following information:

- Plant designation (I&M 1)
- Location identifier (I&M 1)
- Installation date (I&M 2)
- Additional information (I&M 3)

To enter maintenance data via STEP 7, follow these steps:

1. In the device view of STEP 7, select the CPU/interface module or a module.
2. In the properties under "General", select the "Identification & Maintenance" area and enter the data.

During the loading of the hardware configuration, the maintenance data (I&M 1, 2, 3) are also loaded.

Procedure for reading I&M data via the Web server

The procedure is described in detail in the Web server Function Manual (https://support.industry.siemens.com/cs/ww/en/view/59193560).

12.10.2 Record structure for I&M data

Reading I&M records via user program (centrally and distributed via PROFINET IO)

Use **Read data record** ("RDREC" instruction) to access specific identification data. Under the associated record index you obtain the corresponding part of the identification data.

The records are structured as follows:

Table 12- 4 Basic structure of data records with I&M identification data

Contents	Length (bytes)	Coding (hex)
Header information		
BlockType	2	I&M0: 0020_H I&M1: 0021_H I&M2: 0022_H I&M3: 0023_H
BlockLength	2	I&M0: 0038_H I&M1: 0038_H I&M2: 0012_H I&M3: 0038_H
BlockVersionHigh	1	01
BlockVersionLow	1	00
Identification data		
Identification data (see table below)	I&M0/Index $AFF0_H$: 54 I&M1/Index $AFF1_H$: 54 I&M2/Index $AFF2_H$: 16 I&M3/Index $AFF3_H$: 54	- - - -

Table 12- 5 Record structure for I&M identification data

Identification data	Access	Example	Explanation
Identification data 0: (record index $AFF0_H$)			
VendorIDHigh	Read (1 byte)	0000_H	Vendor name ($002A_H$ = SIEMENS AG)
VendorIDLow	Read (1 byte)	$002A_H$	
Order_ID	Read (20 bytes)	6ES7615-4DF10-0AB0	Article number of the module (for example, CPU 1504D TF)
IM_SERIAL_NUMBER	Read (16 bytes)	-	Serial number (device-specific)
IM_HARDWARE_REVISION	Read (2 bytes)	1	corresponds to hardware version (e.g. 1)
IM_SOFTWARE_REVISION	Read	Firmware version	Provides information about the firmware version of the module (e.g. V1.0.0)
• SWRevisionPrefix	(1 byte)	V	

Identification data	Access	Example	Explanation
• IM_SWRevision_Functional_Enhancement	(1 byte)	0000H - 00FFH	
• IM_SWRevision_Bug_Fix	(1 byte)	0000H - 00FFH	
• IM_SWRevision_Internal_Change	(1 byte)	0000H - 00FFH	
IM_REVISION_COUNTER	Read (2 bytes)	0000H	Provides information about parameter changes on the module (not used)
IM_PROFILE_ID	Read (2 bytes)	0000 H	Generic Device
IM_PROFILE_SPECIFIC_TYPE	Read (2 bytes)	0001H	CPU
		0003H	I/O modules
IM_VERSION	Read	0101H	Provides information on the ID data version (0101H = Version 1.1)
• IM_Version_Major	(1 byte)		
• IM_Version_Minor	(1 byte)		
IM_SUPPORTED	Read (2 bytes)	000EH	provides information about the available identification and maintenance data (I&M1 to I&M3)
Maintenance data 1: (Record index AFF1H)			
IM_TAG_FUNCTION	Read/write (32 bytes)	-	Enter an identifier for the module here, that is unique plant-wide.
IM_TAG_LOCATION	Read/write (22 bytes)	-	Enter the installation location of the module here.
Maintenance data 2: (Record index AFF2H)			
IM_DATE	Read/write (16 bytes)	YYYY-MM-DD HH:MM	Enter the installation date of the module here.
Maintenance data 3: (Record index AFF3H)			
IM_DESCRIPTOR	Read/write (54 bytes)	-	Enter a comment about the module here.

Reading I&M records with record 255 (distributed configuration via PROFIBUS)

You can directly access specific identification data by selecting **Read data record** ("RDREC" instruction).

The modules support standardized access to identification data using DR 255 (index 65000 to 65003). For additional information on the DR 255 data structure, refer to the specifications of the Profile Guidelines Part 1: Identification & Maintenance Functions - Order no.: 3.502, Version 1.2, October 2009. You can find further information on the Internet (https://www.profibus.com/) website of the PROFIBUS user organization.

12.10.3 Example: Read out firmware version of the CPU with Get_IM_Data

Automation task

You want to check whether the modules in your automation system have the current firmware. You can find the firmware version of the modules in the I&M0 data. The I&M0 data is the basic information for a device. The I&M0 data contains information such as:

- Manufacturer ID
- Article number and serial number
- Hardware and firmware version

To read out the I&M0 data, use the "Get_IM_Data" instruction. You read the I&M0 data of all modules in the user program of the CPU with "Get_IM_Data" instructions and store the I&M data in a data block.

Conditions and parameters

To read out the I&M data of the CPU, use the following block parameters of the "Get_IM_Data" instruction:

- LADDR: Enter the hardware identifier of the module at the block parameter "LADDR".
- IM_TYPE: Enter the I&M data number (for example "0" for I&M0 data) at the "IM_TYPE" block parameter.
- DATA: Area for storing the read I&M data (for example. in a global data block). Store I&M0 data in an area of the data type "IM0_Data".

This example shows how to read out the I&M0 data of a CPU 1504D TF (6ES7615-4DF10-0AB0) . To read out the I&M0 data of a different module, simply use the hardware identifier of the module at the LADDR parameter.

Solution

Proceed as follows to read out the I&M0 data of the CPU:

1. Create a global data block to store the I&M0 data.
2. Create a structure of the data type "IM0_Data" in the global data block. You can assign any name for the structure (in this case "imData").

SLI_gDB_Get_IM_Data

		Name	Data type	Start value
1		Static		
2		imData	IM0_Data	
3		done	Bool	false
4		busy	Bool	false
5		error	Bool	false
6		status	Word	16#0

Figure 12-4 Example: Data block for I&M data

3. Create the "Get_IM_Data" instruction in the user program, for example, in OB 1.

4. Interconnect the "Get_IM_Data" instruction as follows:

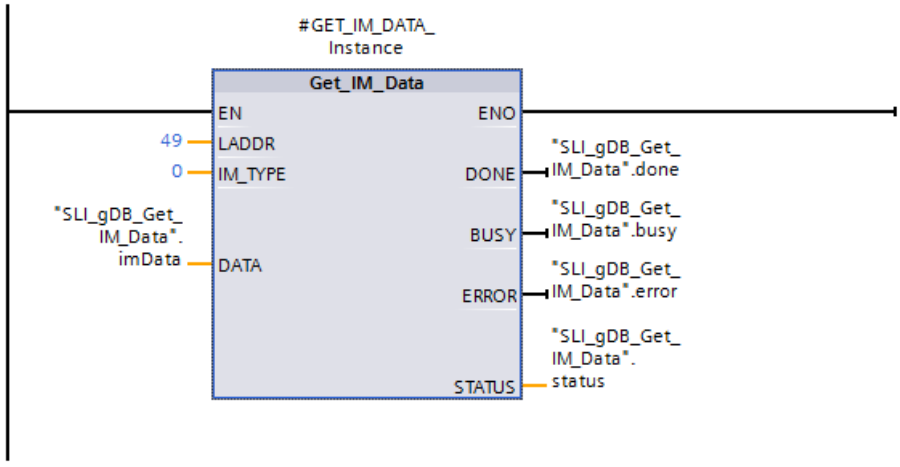

Figure 12-5 Example: Reading out I&M0 data

5. Call the "Get_IM_Data" instruction in the user program.

Result

The "Get_IM_Data" instruction has stored the I&M0 data in the data block.

You can view the I&M0 data online in STEP 7, for example, in the data block with the "Monitor all" button. The CPU in the example is a CPU 1507D TF (6ES7615-7DF10-0AB0) with the firmware version V2.8.

SLI_gDB_Get_IM_Data

	Name	Datentyp	Startwert	Beobachtungswert
1	Static			
2	imData	IM0_Data		
3	Manufacturer_ID	UInt	0	42
4	Order_ID	String[20]	''	'6ES7 615-7DF10-0AB0 '
5	Serial_Number	String[16]	''	'S C-HNPV77072016'
6	Hardware_Revision	UInt	0	10061
7	Software_Revision	IM0_Version		
8	Type	Char	' '	'V'
9	Functional	USInt	0	28
10	Bugfix	USInt	0	19
11	Internal	USInt	0	2
12	Revision_Counter	UInt	0	0
13	Profile_ID	UInt	0	0
14	Profile_Specific_Ty...	UInt	0	0
15	IM_Version	Word	16#0	16#0101
16	IM_Supported	Word	16#0	16#000E
17	<Hinzufügen>			

Figure 12-6 Example: I&M0 data of an S7-1500 CPU

12.11 Shared commissioning of projects

Team Engineering

In Team Engineering, several users from various engineering systems work on a project at the same time and access one SIMATIC Drive Controller CPU.

The users can edit separate parts of a master project independently of one another at the same time. When the configuration is loaded to the CPU, the CPU shows changes by the other editors in a synchronization dialog and – if possible – synchronizes the changes automatically.

Certain online functions can also be executed in parallel from several engineering systems on a shared CPU, for example:

- Monitoring blocks on the CPU
- Modifying blocks on the CPU
- Trace functions

You can find detailed information on the topic of Team Engineering in the STEP 7 online help.

SIMATIC memory card 13

13.1 SIMATIC memory card – Overview

Introduction

The SIMATIC Drive Controller uses the SIMATIC Memory Card of the S7-1500 automation system. The CPU data and the data of the SINAMICS Integrated is stored on the memory card.

The SIMATIC Memory Card is pre-formatted and is compatible with the Windows file system. The memory card is available in different memory sizes and can be used for the following purposes:

- Portable data storage medium
- Assigning a password to protect confidential PLC configuration data of a CPU
- CPU program card including SINAMICS Integrated configuration
- Firmware update card for CPU and SINAMICS Integrated
- Service data card for CPU and SINAMICS Integrated

You can find an overview of the memory card sizes available to order in Accessories/spare parts (Page 312).

Backing up the CPU configuration

When you transfer the user program to the CPU via an online connection, the user program is written to the SIMATIC Memory Card. The SIMATIC Memory Card must be in the card slot of the CPU for this to work.

You can also write the SIMATIC Memory Card in the PG/PC. A commercially available SD card reader is needed to read or write the SIMATIC Memory Card with the PG/PC. This allows you to copy files directly to the SIMATIC Memory Card with Windows Explorer, for example.

Note

The SIMATIC Memory Card is essential for operation of the CPU.

Backing up the drive configuration

The SINAMICS Integrated parameter assignment settings are only saved in the volatile memory. If you do not back up the settings on the SIMATIC Memory Card, they will be lost when the SIMATIC Drive Controller is switched off.

Requirements

To save the configuration of the SINAMICS Integrated to the SIMATIC Memory Card, you need an online connection to the SINAMICS Integrated. To establish the online connection, you must first load the hardware configuration to the SIMATIC Drive Controller. You can find additional information on this in Downloading a project to the device (Page 222).

Saving online data

To save the current project data to the retentive memory of the SIMATIC Memory Card, go to the function view for the active drive and click on the icon (Save data for entire device to retentive memory).

Saving offline data

Proceed as follows to save offline data to the SIMATIC Memory Card as well as in the TIA Portal project:

1. Establish an online connection to SINAMICS Integrated .
2. Download the project data to the SINAMICS Integrated.

   To do so, click on the icon (Download to device) in the toolbar.
3. Click on the icon in the function view for the active drive (Save data for entire device to retentive memory).

   The parameters are saved to the SIMATIC Memory Card retentive memory.

Note

The function "Save data for entire device to retentive memory" is also known as "RAM to ROM".

Labeling of the SIMATIC Memory Card

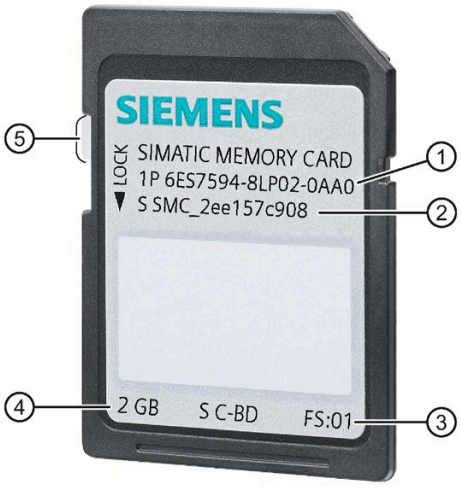

① Article number
② Serial number
③ Production version
④ Memory size
⑤ Slider for setting write protection:
- Slider up: not write-protected
- Slider down: write-protected

Figure 13-1 Labeling of the SIMATIC Memory Card

Folders and files on the SIMATIC Memory Card

The SIMATIC Memory Card can contain the following folders and files:

Table 13- 1 Folder structure

Folder	Description
FWUPDATE.S7S	Firmware update files for CPU and SINAMICS Integrated
SIMATIC.S7S	Project data of the CPU; user program, i.e. all blocks (OBs, FCs, FBs, DBs) and system blocks
SINAMICS.S7S	If SINAMICS Integrated is configured, project data of the SINAMICS Integrated The folder structure under the SINAMICS.S7S folder is based on the structure of a SINAMICS S120 memory card.
SIMATIC.HMI	HMI-related data
DataLogs [1)]	DataLog files
Recipes [1)]	Recipe files
UserFiles [1)]	You need to manually create the folder "UserFiles" for user data on the memory card. Only files in this folder (*.pdf, *.txt, *.csv, etc.) are also loaded to the TIA Portal project with the "Upload device as new station" function.
Backups	Files for backup and restore
DUMP.S7S	Service data files

Folder	Description
SET_PWD.S7S	Files for "SET PASSWORD" job For more information, see Communication Function Manual (https://support.industry.siemens.com/cs/ww/en/view/59192925), section Assign password via SIMATIC Memory Card.
MCRC	Motion Control Runtime Component: Motion control package for KinPlus

1) The content of these folders is also loaded to the TIA Portal project with "Upload device as new station".

Table 13- 2 File structure

File type	Description
S7_JOB.S7S	Job file
SIMATIC.HMI\Backup*.psb	Panel backup files
SIMATICHMI_Backups_DMS.bin	Protected file (required for use of panel backup files in STEP 7)
__LOG__	Protected system file (required for use of card)
crdinfo.bin	Protected system file (required for use of card)
*.pdf, *.txt, *.csv, etc.	Additional file with different formats that you can also store in folders on the SIMATIC Memory Card If you store the files in the "UserFiles" folder, the files are stored in the STEP 7 project with "Upload device as new station" and can be used, for example, for restoring files in the event of a defective SIMATIC Memory Card.
SET_PWD.S7S/PWD.TXT	Files for protecting confidential PLC configuration data For more information, see Communication Function Manual (https://support.industry.siemens.com/cs/ww/en/view/59192925), section Assign password via SIMATIC Memory Card.

Note

Supported file/folder names and hierarchy levels on the SIMATIC Memory Card

The following rules apply to file names, folder names and hierarchy levels on the SIMATIC Memory Card:

- Do not use any umlauts (ö, ä, ü, Ö, Ä, Ü) in file and/or folder names.
- Use a maximum of 60 characters for file and/or folder names.
- Use a maximum of 6 hierarchy levels for the folder structure of the SIMATIC Memory Card (for example: /mountpoint/1/2/3/4/5/6/file.txt).
  The operating system of the CPU supports folders of no more than 8 levels, where one level is reserved for the root node and one for the actual file.

Using the serial number for copy protection

You can set up copy protection for CPUs that binds execution of the block to a specific SIMATIC Memory Card. Configuration is carried out in STEP 7 in the properties of the block "Bind to serial number of the SIMATIC Memory Card".

You can then only execute the block if it is on the SIMATIC Memory Card with the specified serial number (see Copy protection (Page 205)).

Note

SINAMICS Integrated

You can find information on how to protect settings on SINAMICS Integrated from unauthorized reproduction in the SINAMICS S120 Drive Functions (https://support.industry.siemens.com/cs/ww/den/view/109763287) function manual.

Removing a SIMATIC Memory Card from the CPU

Note

Do not remove the SIMATIC Memory Card while a write operation is in progress.

If you remove the memory card from the CPU during a write operation, the content of the memory card may become invalid. The memory areas can then lose their retentivity. You may need to clear the memory card on the programming device and load the program again.

Proceed as follows to remove the SIMATIC Memory Card:

- Switch off the supply voltage.

  Note

  If there is no write access over the programming device in progress, you can also remove the memory card when the supply voltage is on and the system is in STOP. In this case, first disconnect all communication connections as a precaution.

Inserting the SIMATIC Memory Card in the CPU in STOP state triggers a re-evaluation of the SIMATIC Memory Card. The CPU compares the content of the configuration on the SIMATIC Memory Card with the backed-up retentive data. If the backed-up retentive data matches the data of the configuration on the SIMATIC Memory Card, the retentive data is retained. If the data differs, the CPU automatically performs a memory reset. A memory reset deletes the retentive data on the CPU. After the memory reset, the CPU switches to STOP.

Please also note the following FAQ on the Internet (https://support.industry.siemens.com/cs/ww/en/view/59457183) relating to the removal of the SIMATIC Memory Card.

Note

Using the SIMATIC Memory Card as a firmware update card

If you use the SIMATIC Memory Card as a firmware update card, removing and inserting the card will not result in the loss of retentive data. You can find more information in SIMATIC Drive Controller firmware update (Page 272).

Removing a SIMATIC Memory Card from Windows computers

If you are using the card in a commercially available card reader under Windows, use the "Eject" function before you remove the card from the card reader. If you remove the card without using the "Eject" function, you may lose data.

Deleting content from the SIMATIC Memory Card

You have the following options for deleting the content of the SIMATIC Memory Card:

- Delete files using Windows Explorer
- Format with STEP 7

Note

If you format the card with Windows tools, you will render the SIMATIC Memory Card unusable as a storage medium for a CPU.

Deletion of files and folders is permitted, with the exception of the "__LOG__" and "crdinfo.bin" system files. The CPU needs these system files. If you delete the files, you will no longer be able to use the SIMATIC Memory Card with the CPU.

If you have deleted the "__LOG__" and "crdinfo.bin" system files, format the SIMATIC Memory Card as described in the following section.

Formatting a SIMATIC Memory Card

Note

Formatting the SIMATIC Memory Card

Do **not** format the memory card with Windows tools. Formatting with Windows renders the memory card initially unusable by a CPU.

You can find information on how to repair an inconsistent or incorrectly formatted card in the following FAQ on the Internet (https://support.industry.siemens.com/cs/ww/en/view/69063974).

To free up memory space on your SIMATIC Memory Card, you have the option of formatting the SIMATIC Memory Card. During formatting, the entire contents of the memory card including the project data of the SINAMICS Integrated are deleted.

The SIMATIC Memory Card may only be formatted in the CPU. Proceed as follows with the SIMATIC Memory Card inserted:

Formatting with STEP 7:

- Establish an online connection.
- Open the online and diagnostics view of the CPU (either from the project context or via "Accessible devices").
- In the dialog window, select "Functions > Format memory card" and then select the "Format" button.

Results:

- The SIMATIC Memory Card is formatted.
- The CPU is temporarily unavailable.
- The project data on the CPU is deleted with the exception of the IP address.

Replacing the SIMATIC Memory Card without loss of retentive data

You can change the SIMATIC Memory Card or use a larger SIMATIC Memory Card without losing the retentive data. When you switch off the CPU, the retentive data is backed up in the retentive memory of the CPU. While the CPU is off, you can remove the memory card and copy its content to a larger memory card. After the CPU is switched on, the data backed up in the CPU when the CPU was switched off is restored.

13.2 Setting the card type

Introduction

You can use the SIMATIC Memory Card as a program card or as a firmware update card.

Note

Password to protect confidential PLC configuration data

If you want to transfer the password to protect confidential PLC configuration data to a CPU without using TIA Portal, you can also use a SIMATIC Memory Card for this function.

For more information about assigning the password via SIMATIC Memory Card, refer to the Communication Function Manual (https://support.industry.siemens.com/cs/ww/en/view/59192925), in the section Assign password via SIMATIC Memory Card.

Procedure using STEP 7

1. To set the card type, insert the SIMATIC Memory Card in the card reader of the programming device.
2. Select the "SIMATIC Card Reader" folder in the project tree.
3. In the properties of the selected SIMATIC Memory Card, specify the card type:

- Program card

  You use a program card as an external load memory for the SIMATIC Drive Controller. The program card contains the complete user program for the CPU and the configuration of the SINAMICS Integrated. The SIMATIC Drive Controller transfers the user program and drive configuration from the load memory to the work memory. The user program and automatic speed control run in the work memory.

  The following folders are created on the SIMATIC Memory Card:

  – SIMATIC.S7S

  – SINAMICS.S7S (if a SINAMICS Integrated is configured)

- Firmware update card

  You can save the firmware of a CPU and SINAMICS Integrated on a SIMATIC Memory Card. This enables you to perform a firmware update with the help of a specially prepared SIMATIC Memory Card.

  The following folder is created on the SIMATIC Memory Card: FWUPDATE.S7S

  You can find information on how to update the SIMATIC Drive Controller in SIMATIC Drive Controller firmware update (Page 272) You can find information on how to update the firmware of the DRIVE-CLiQ component in DRIVE-CLiQ component firmware update (Page 280).

Procedure using the FUNCT button

You can use the FUNCT button to set whether the SIMATIC Memory Card works as a program card or as a firmware update card:

- Function 2: Switching the SIMATIC Memory Card from program card to firmware update card and performing a firmware update
- Function 3: Switching the SIMATIC Memory Card from firmware update card to program card

Function 2: Switching the SIMATIC Memory Card to firmware update card and perform update

Requirements:

- The memory card is of type program card (PROGRAM); the write protection of the card is not set.
- The CPU is in STOP mode.
- Valid firmware update files are available in the FWUPDATE.S7S folder.

Procedure:

1. To get to the function selection mode, press the FUNCT button for at least 3 seconds with a sharp object and then release it. As an aid, the 7-segment display flashes "0" at one-second intervals during this time.

   After you release the button, you are in function selection mode. The 7-segment display shows function "1": Save service data on SIMATIC Memory Card
2. Select the function "2" with a brief press of a button.
3. To confirm the selection, press the FUNCT button within 10 seconds for at least 3 seconds and then release it.

   The 7-segment display now displays a "U" (Update) for 10 seconds. The memory card is set to FWUPDATE. The CPU will then re-evaluate the SIMATIC Memory Card, and the firmware update starts.

If the requirements for the function selection are not fulfilled (for example, write protection of the card set, no card inserted, CPU not in operational state STOP), then the 7-segment display shows the status "F" (Fault) for 10 seconds and the function is not performed. Next, the menu is closed and the 7-segment display shows "0".

If the card is already of the type FWUPDATE, the function is not executed. The menu is closed and the 7-segment display displays "0".

Function 3: Switching the SIMATIC Memory Card to program card

Requirements:

- The memory card is of type firmware update card (FWUPDATE); the write protection of the card is not set.
- No firmware update in progress; otherwise, the function cannot be selected.

Procedure:

1. To get to the function selection mode, press the FUNCT button for at least 3 seconds with a sharp object and then release it. As an aid, the 7-segment display flashes "0" at one-second intervals during this time.

   After you release the button, you are in function selection mode. The 7-segment display shows function "1": Save service data on SIMATIC Memory Card
2. Select the function "3" by briefly pressing the button twice.
3. To confirm the selection, press the FUNCT button within 10 seconds for at least 3 seconds and then release it.

   The 7-segment display now displays a "P" (Program) for 10 seconds. The memory card is set to PROGRAM and the CPU re-evaluates the SIMATIC Memory Card.

   After the startup, you can change the operating mode of the CPU via the mode selector switch or via the TIA Portal. The firmware update files are retained.

If the requirements for the function selection are not fulfilled (for example, write protection of the card set, no card inserted) then the 7-segment display shows the status "F" (Fault) for 10 seconds and the function is not performed. Next, the menu is closed and the 7-segment display shows "0".

If the card is already of the PROGRAM type, the function is not executed. The menu is closed and the 7-segment display displays "0".

Note

The function 3 is available to you as of the CPU firmware version V2.9.

When downgrading to firmware version V2.8, function 3 is only available until the firmware version V2.8 has been activated by a restart. This means that, immediately after a downgrade, you can still perform Function 3 to reset the SIMATIC Memory Card back to program card.

Exit function selection mode

In function selection mode, briefly pressing a button for < 3 seconds selects the next function (function "1", "2", "3" or "4"). The last function is "E". If you press the button for at least 3 seconds, the function selection module is exited. The function selection mode is also exited if no key is pressed for 10 seconds.

Procedure using the job file

Whether the SIMATIC Memory Card is operating as a program card or firmware update card, can also be set using the job file S7_JOB.S7S on the SIMATIC Memory Card.

Entry in the job file:

- PROGRAM: the SIMATIC Memory Card is used as a program card
- FWUPDATE: the SIMATIC Memory Card is used as a firmware update card

Proceed as follows:

1. Open the job file S7_JOB.S7S with an editor.
2. Use the editor to overwrite the PROGRAM entry with FWUPDATE (or vice versa).

   Do not use any spaces, line breaks or quotation marks.
3. Save the file under the existing file name.

Service data card

You can save service data on a SIMATIC Memory Card. The service data contains the CPU diagnostic buffer and the diagnostic buffer of SINAMICS Integrated. The service data contains much more information on the internal state of the CPU and SINAMICS Integrated.

The following folder is created on the SIMATIC Memory Card: DUMP.S7S

You can find more information on service data in the section Reading/saving service data (Page 296).

Program card including firmware update files

If you want to deliver your project with firmware validated by you, for example, you can store the program data and firmware update files together on the memory card. Your customers then have the option of changing CPU and SINAMICS Integrated to exactly that firmware version.

Note

Please note that, depending on the tool used (for example STEP 7, Web server), the firmware update files may also be deleted if you reset to "Program card". Therefore, use the FUNCT button (function 3) or change the job file S7_JOB.S7S to PROGRAM with an editor.

Additional information

You can find additional information on the FUNCT button in the SIMATIC Drive Controller manual (https://support.industry.siemens.com/cs/ww/en/view/109766666).

You can find additional information in the STEP 7 online help.

13.3 Data transfer with SIMATIC memory cards

Transferring objects from the project to the SIMATIC Memory Card

While the SIMATIC Memory Card is in the programming device or external card reader, you can transfer the following objects from the project tree (STEP 7) to the SIMATIC Memory Card:

- Individual blocks (multiple selection possible)

  In this case, the transfer is consistent, i.e. the function takes account of dependencies between blocks through block calls.

- CPU folder

  In this case, all runtime-related objects such as blocks and the hardware configuration are transferred to the SIMATIC Memory Card, just as with downloading.

- Service data

  In this case, the service data saved beforehand is saved to the SIMATIC Memory Card. You can find more information on service data in the section Reading/saving service data (Page 296).

You have the following options for performing the transfer:

- Transfer the objects using drag-and-drop.
- Use the "Card Reader/USB memory > Write to memory card" command in the "Project" menu.

Storing CPU trace recordings on the SIMATIC Memory Card

The "Save measurements on device (memory card)" function allows you to save CPU trace recordings on the SIMATIC Memory Card.

1. Select "Traces" -> "Trace" in the project tree.
2. In the working area, select "Configuration" -> "Recording conditions" -> "Measurements in device (memory card)".

Response when number reached

The "Deactivate recording" parameter value repeats the measurements until the configured "Number of measurements" is reached.

The "Overwrite oldest recording" parameter value replaces the oldest measurement with the latest measurement when the configured "Number of measurements" is reached. Please note, however, that continuously writing data to the SIMATIC Memory Card shortens its service life.

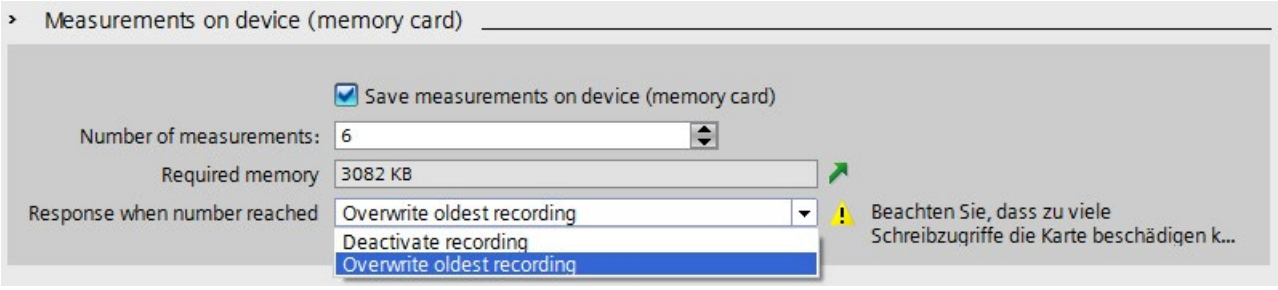

Figure 13-2 Dialog with settings for saving measurements to the memory card in STEP 7

Number of measurements

The CPU supports a maximum of 999 measurements. The CPU writes the Trace recordings to the load memory of the memory card. Meanwhile, the CPU pauses the checking of trigger conditions for the Trace job. Once the CPU has finished saving the Trace recordings, the CPU continues checking the trigger conditions.

NOTICE
Memory required on the SIMATIC Memory Card If the Trace function "Measurements on device (memory card)" requires more memory than is available on the SIMATIC Memory Card, this can have undesirable effects. Ensure there is always sufficient free memory space to use the "Measurements on device (memory card)" function. In addition to the "Measurements on device (memory card)" Trace function, other functions, such as storing data logs, use memory space on the SIMATIC Memory Card. Make sure that enough memory space is available for all functions that occupy memory.

You can find additional information on Trace measurements and Trace recordings:

- In the Using the Trace and Logic Analyzer Function (https://support.industry.siemens.com/cs/ww/en/view/64897128) function manual
- In the Web Server (https://support.industry.siemens.com/cs/ww/en/view/59193560) function manual
- In the STEP 7 online help

Firmware update using SIMATIC Memory Card

You can find information on how to perform a firmware update in SIMATIC Drive Controller firmware update (Page 272).

13.4 Service life of the SIMATIC memory card

Effects on the service life

The following factors can affect the service life of SIMATIC Memory Cards:

- Size of card and number of guaranteed write operations
- Actual number of write operations

  The number of physical write operations to the memory blocks of the card is a result of the number of write operations from the application.

Note

With the SIMATIC Drive Controller, this includes not only CPU access but also memory card access (write and delete access) by the SINAMICS Integrated.

You can find methods for calculating the service life of a SIMATIC Memory Card in the Function Manual Structure and use of the CPU memory (https://support.industry.siemens.com/cs/ww/en/view/59193101) and in an FAQ (https://support.industry.siemens.com/cs/ww/en/view/109482591) on the Internet.

GetSMCinfo instruction

If the SIMATIC Memory Card is inserted, you can read out the following information in STEP 7 (TIA Portal) with the GetSMCinfo instruction:

- Memory size in KB (1 KB = 1024 bytes)
- Occupied memory in KB (1 KB = 1024 bytes)
- Maintenance information: Percentage of service life used up so far
- Configured percentage of service life after which the CPU creates a diagnostics buffer entry and the maintenance LED is activated

You can find additional information on the "GetSMCinfo" instruction in the STEP 7 online help.

Additional information

You can find additional information on the service life of the SIMATIC Memory Card, on storage capacity utilization, and on the memory areas used in the Structure and Use of the CPU Memory (https://support.industry.siemens.com/cs/ww/en/view/59193101) function manual.

Maintenance 14

14.1 Replacing system components

14.1.1 Replacing a defective SIMATIC Drive Controller

Requirements

The power supply must be switched off before the SIMATIC Drive Controller is removed.

NOTICE
Material damage possible Install or uninstalling the SIMATIC Drive Controller with the power connected can lead to undefined states in your plant. Your automation system may be damaged as a result. Only install/uninstall the SIMATIC Drive Controller if the power supply is disconnected.

Removing the SIMATIC Drive Controller

Proceed as follows to remove the SIMATIC Drive Controller:

1. Switch off the power supply.
2. Open the bottom cover by pressing the "PUSH" button and remove the SIMATIC Memory Card from the slot.
3. Open the top cover.
4. Loosen the terminal block for the 24 V power supply.
5. Release the DRIVE-CLiQ connectors to the SINAMICS S120 modules.
6. Release the connectors of the PROFINET interfaces or PROFIBUS interface.
7. Unplug the connectors to the digital inputs and digital outputs at interfaces X122, X132 and X142
8. Separate the connection to the protective conductor.
9. Loosen the fixing screws that are holding the SIMATIC Drive Controller to the cabinet wall.

Installing and connecting a new SIMATIC Drive Controller

Proceed as follows to install the new SIMATIC Drive Controller:

1. Install the new SIMATIC Drive Controller.
2. Connect the protective conductor to the SIMATIC Drive Controller.
3. Reconnect all connectors you have previously removed.
4. You use the "PUSH" button to open the bottom cover.
5. Insert the SIMATIC Memory Card in the slot.
6. Switch the power supply back on.

Following a module replacement, the CPU operates with the configured start values. SINAMICS Integrated detects a module replacement on the basis of the new SIMATIC Drive Controller serial number. Following POWER ON, the NVRAM of the SINAMICS Integrated is cleared and the NVRAM data is then loaded from the memory card.

Note

Make sure that the new SIMATIC Drive Controller has the same or a higher main firmware version for CPU and SINAMICS Integrated .

If the main SINAMICS firmware version is higher, you will need to upgrade your project to the relevant SINAMICS version to ensure that you can still go online with your project on SINAMICS Integrated. Alternatively, you can downgrade the SINAMICS firmware main version of a new SIMATIC Drive Controller back to the configured version.

Note

Setting up copy protection

For code blocks, you can set up copy protection (Page 205) that binds execution of the blocks to a specific CPU or a specific memory card on the basis of the serial number. In such cases, a substitute controller cannot be used without additional measures being taken.

14.1.2 Replacing a defective SIMATIC memory card

Initial situation

Possible error scenario if the SIMATIC Memory Card of a CPU is defective:

- System diagnostics reports a system error.
- The CPU has switched to STOP.
- The RUN/STOP LED is yellow and the ERROR LED is flashing red.

Requirement

- Replacement is only possible if you have a suitable replacement card. The replacement card can be a copy of the defective card or a new project card created using engineering.
- The new SIMATIC Memory Card must have sufficient memory for the project.

Note

For code blocks, you can set up copy protection (Page 205) that binds execution of the blocks to a specific CPU or a specific memory card on the basis of the serial number. In such cases, a replacement card cannot be used without additional measures being taken.

Procedure

Proceed as follows to replace a defective SIMATIC Memory Card:

1. Remove the defective memory card.
2. Insert the replacement card with the correct configuration.

14.1.3 Replacing a DRIVE-CLiQ component

Replacing a DRIVE-CLiQ component

Defective components in the SINAMICS S120 drive system can be replaced with components with identical or with different article numbers depending on the equivalence level set.

You can find further information in the SINAMICS S120 function manual (https://support.industry.siemens.com/cs/ww/en/view/109763287) under "Component replacement".

Firmware update

DRIVE-CLiQ components are automatically upgraded or downgraded to the component firmware version on the memory card during power up. A module replacement can therefore lead to a firmware update (see DRIVE-CLiQ component firmware update (Page 280)).

14.2 SIMATIC Drive Controller firmware update

Introduction

You update the firmware of the SIMATIC Drive Controller using firmware files. The retentive data is retained after the firmware update on the CPU and SINAMICS Integrated.

Requirement

- You have downloaded the file(s) for the firmware update from the Siemens Industry Online Support (https://support.industry.siemens.com/cs/ww/en/view/109773914).
- Before installing the firmware update, make sure that the SIMATIC Drive Controller and any connected drives are not in use.

Additional requirement for failsafe modules

WARNING

Check the firmware version for F-approval

When using a new firmware version, always check that the version is approved for use in the module in question.

The attachments of the certificate (https://support.industry.siemens.com/cs/ww/en/ps/14675/cert) for SIMATIC Safety specify which firmware version is approved.

Options for the firmware update

There are the following options for performing a firmware update:

- Online in STEP 7 via Online & Diagnostics
- Online in STEP 7 via accessible devices (PROFINET)
- Via the SIMATIC Memory Card
- Via the SIMATIC Memory Card: with the FUNCT button (function 2) on the SIMATIC Drive Controller
- Via the integrated Web server
- Online via the SIMATIC Automation Tool

The following table provides an overview of the various options for a firmware update.

Table 14- 1 Overview of firmware update options

Firmware update	Drive Controller CPU	Drive Controller SINAMICS Integrated	Interface module	Distributed I/O module
STEP 7, Online & Diagnose	✓	--	✓	✓
STEP 7, accessible devices	✓	--	✓	--
SIMATIC Memory Card	✓	✓	--	--
Web server of the CPU	✓	✓	✓	✓
SIMATIC Automation Tool	✓	--	✓	✓

Installation of the firmware update

WARNING

Impermissible plant states possible

Installation of the firmware update causes the CPU to switch to STOP or a distributed interface module to "station failure". The STOP operating state results in a frame failure at the drive with a corresponding response at the drive end (for example, OFF3 fast stop, depends on the parameter assignment). STOP or station failure can have an adverse effect on the operation of an online process or a machine.

Unexpected operation of a process or a machine can lead to fatal or severe injuries and/or to material damages.

Before you install the firmware update, make sure that the SIMATIC Drive Controller is not controlling any active process.

Note

Management of the license conditions and copyright notices of firmware updates

Open-source software is used in the firmware of the SIMATIC Drive Controllers. For legal reasons, Siemens AG is obliged to publish the original text of the license conditions and copyright notices. You can find it on the Internet in the FW downloads (https://support.industry.siemens.com/cs/de/en/view/109773914) and in the scope of supply of the SIMATIC Drive Controller for the firmware version that has been supplied (see the note on the type plate at the side).

The license conditions and copyright notices in the scope of delivery can change as a result of firmware updates. In order to avoid license violations by the reseller and the buyer, if there are firmware updates, you must pass on the license conditions and copyright notices of the firmware update to the buyer (for example, by saving them to the SIMATIC Memory Card).

Procedure: online in STEP 7 via Online & diagnostics

Requirement: There is an online connection between the CPU/module and PG/PC.

Proceed as follows to perform an online firmware update via STEP 7:

1. Select the CPU of the SIMATIC Drive Controller in the project tree.
2. Select the "Online & diagnostics" menu command from the shortcut menu.
3. Select the "Firmware update" group in the "Functions" folder.
4. Click the "Browse" button to select the firmware update files in the "Firmware update" area.
5. Select the matching firmware file. The table in the firmware update area lists all modules for which an update is possible with the selected firmware file.
6. Click the "Run update" button. If the module can interpret the selected file, the file is downloaded to the module. If you must change the CPU mode, STEP 7 prompts you to do so with dialogs.

Updating the firmware

The "Run firmware after update" check box is always selected.

After a successful loading process the CPU includes imports the firmware and subsequently operates with the new firmware.

Note

When a firmware update is interrupted, you need to switch the SIMATIC Drive Controller off/on or remove and insert the relevant module in a distributed I/O station before starting the firmware update again. An update can only be performed for the CPU and not for the SINAMICS Integrated over STEP 7.

Procedure: online in STEP 7 via accessible devices

To perform a firmware update online via accessible devices, follow these steps:

1. From the "Online" menu, select the "Accessible devices" menu item.
2. In the Accessible devices dialog, search for the accessible devices for the selected PROFINET interface.
3. To go to a device in the project tree, select the desired device from the list of accessible devices and click the "Show" button.
4. In the project tree, select the "Online & diagnostics" option for the relevant device and perform the firmware update under the category Functions/Firmware Update (CPU, Local modules).

   Note

   An update can only be performed for the CPU and not for the SINAMICS Integrated over accessible devices.

Procedure via the SIMATIC Memory Card

With a SIMATIC Memory Card, you can perform an update for CPU and SINAMICS Integrated on the SIMATIC Drive Controller. Separate update files are available for CPU and SINAMICS Integrated.

Example for CPU 1504D TF

CPU: 6ES7 615-4DF10-0AB0 V03.00.00.upd

SINAMICS Integrated: 6ES7 615-xDS1x-0xxx V52.03.10.upd

Note

The update files for SINAMICS Integrated are available in 2 different file formats. In this context, see the section "Compatibility information"

Proceed as follows perform a firmware update via the SIMATIC Memory Card:

1. Insert a SIMATIC Memory Card in the SD card reader of your PG/PC.
2. To store the update file on the SIMATIC Memory Card, select the SIMATIC Memory Card in the "Card Reader/USB memory" folder in the project tree.
3. Select the "Card Reader/USB memory > Create firmware update memory card" command in the "Project" menu.
4. Use a file selection dialog to navigate to the firmware update file. You can select one or multiple files.
   You can then also decide whether to delete the content of the SIMATIC Memory Card or add the firmware update files to the SIMATIC Memory Card.
5. Insert the SIMATIC Memory Card with the firmware update files into the CPU.

   After the SIMATIC Memory Card is inserted, the boot process starts. It takes several seconds. Next, the firmware update begins and the RUN LED flashes yellow.
6. The firmware update is successfully completed when the RUN LED of the CPU lights up yellow and the MAINT LED flashes yellow. Remove the SIMATIC Memory Card.
   If you use the SIMATIC Memory Card subsequently as a program card, then manually delete the firmware update files, including JobFile "S7_JOB.S7S".

   Alternatively, you can convert the SIMATIC Memory Card to a program card in STEP 7. To do so, specify the required card type in properties in the project tree for the selected SIMATIC Memory Card.

Note

Memory size of the SIMATIC Memory Card

For a firmware update of the SIMATIC Drive Controller, you need a memory card with at least 256 MB.

Other alternatives

You can also copy the update files to the FWUPDATE.S7S folder in Windows Explorer. Alternatively, you can also unzip the ZIP file with the firmware to the SIMATIC Memory Card. For the firmware update files from the Siemens Industry Online Support on the Internet, the necessary folder structure including the job file S7_JOB.S7S (Contents: FWUPDATE) is created at the same time.

You can also use the FUNCT button to perform a firmware update (function 2: Use the SIMATIC Memory Card as firmware update card and perform a firmware update). The procedure is described in the section Setting the card type (Page 262).

Program card including firmware update files

If you want to deliver your project with firmware validated by you, for example, you can store the program data and firmware update files together on the memory card. Your customers then have the option of changing CPU and SINAMICS Integrated to exactly that firmware version.

Note

Please note that, depending on the tool used (for example STEP 7, Web server), the firmware update files may also be deleted if you reset to "Program card". Therefore, use the FUNCT button (function 3) or change the job file S7_JOB.S7S to PROGRAM with an editor.

You can find additional information on using the SIMATIC Memory Card as a program card or firmware update card in Setting the card type (Page 262).

Compatibility information

Please note the following information on combinations of CPU and SINAMICS Integrated firmware:

- An update at hotfix level is always possible.
- Restrictions apply to updates at the level of the main version for the "CPU firmware" and "SINAMICS Integrated firmware" combination.
- Update files for the SINAMICS Integrated are available in different file formats:
  - Old file formats for CPU firmware V2.x with 1-/4-digit version: for example, 6ES7615-xDS1x-0ABx_v52.upd or 6ES7 615-xDS1x-0xxx V05.02.03.10.upd
  - New file format from CPU firmware V3.0 onwards with 3-digit version: for example, 6ES7 615-xDS1x-0xxx V52.03.10.upd
    The new file formats support SINAMICS Integrated firmware updates also via the Web server. In this case, "52" denotes the main version V5.2.

Please note the compatibility information in the relevant publications (https://support.industry.siemens.com/cs/ww/en/view/109773914).

Note

If you insert the SIMATIC Memory Card in a SIMATIC Drive Controller with a higher SINAMICS Integrated main firmware version, you need to upgrade your project to the relevant SINAMICS version.

You can only go online with your project if the configured SINAMICS version corresponds to the SINAMICS firmware version on the SIMATIC Drive Controller.

NOTICE

SIMATIC Drive Controllers with a hardware function version ≥ FS 09 have a CPU firmware version ≥ V2.9. You must **not** downgrade these SIMATIC Drive Controllers to CPU firmware version V2.8.

The CPU firmware version V2.8 may no longer be executable on SIMATIC Drive Controllers with hardware function version ≥ FS 09. In this case, the downgrading can no longer be reversed and the device must be sent in.

SINAMICS Integrated firmware missing or incompatible

If there is no SINAMICS Integrated firmware or the firmware is incompatible with the CPU, this is signaled by a red flashing RDY LED (2 Hz) and a red ERROR LED. A corresponding error message is also entered in the diagnostic buffer.

If the SIMATIC Memory Card has a SINAMICS Integrated firmware version that is incompatible with the CPU firmware, the SINAMICS Integrated firmware update is rejected. The ERROR LED flashes red and the MAINT LED flashes yellow. A corresponding error message is also entered in the diagnostic buffer.

An update of the CPU firmware, however, is always possible.

Update sequence

If the SINAMICS Integrated firmware also needs a new CPU firmware, then the CPU firmware must always be updated first and then activated by a CPU restart. (CPU restart through power off/on or by removing/inserting the SIMATIC Memory Card).

Examples:

- The Service Pack of the SINAMICS firmware V5.2 SP3 needs at least CPU firmware V2.9
- SINAMICS Integrated update files (upd files) with a 3-digit version need at least CPU firmware V3.0

Update with SIMATIC Memory Card

If both update files for CPU and SINAMICS Integrated firmware are located on the SIMATIC Memory Card in the folder FWUPDATE.S7S, a distinction must be made between the following two cases:

Case 1: The SINAMICS Integrated firmware does not need any new CPU firmware
The CPU and SINAMICS Integrated firmware is updated in one process.

Case 2: The SINAMICS Integrated firmware also needs a new CPU firmware
In this case, a two-step procedure is required. When you carry out the firmware update, only the CPU firmware is updated first. The SINAMICS Integrated update is rejected with errors (ERROR LED flashes red).
In order for the SINAMICS Integrated firmware to also be updated successfully in a second step, you have to force a CPU restart through power off/on or by removing/inserting the SIMATIC Memory Card.
The CPU firmware is activated due to the restart and another update for the SINAMICS Integrated firmware takes place automatically.

Please note the compatibility information in the relevant publications
(https://support.industry.siemens.com/cs/ww/en/view/109773914)

Procedure: via the integrated Web server

You can perform an update of CPU and SINAMICS Integrated from the SIMATIC Web server.

Requirements:

- SIMATIC Drive Controller including SINAMICS Integrated is configured
- Web server with user rights is configured and activated
- Configuration has been loaded into the CPU

In addition, for SINAMICS Integrated firmware updates, at least CPU firmware V3.0 is required (configured CPU version can be < V3.0). It is not necessary to download the SINAMICS Integrated configuration.

Procedure:

To perform a firmware update, go to the corresponding node on the "Module status" web page and perform the update in the "firmware" tab.
The SINAMICS Integrated can be found under the PROFIdrive system.

Alternatively, there is a direct link to SINAMICS Integrated in the "Identification" tab under "Drive Controller Info" on the "Diagnostics" web page.

You can find further details in the Web server (https://support.industry.siemens.com/cs/ww/en/view/59193560) Function Manual.

Procedure: online via the SIMATIC Automation Tool

The procedure is described in the SIMATIC Automation Tool (https://support.industry.siemens.com/cs/ww/en/view/98161300) user manual (included in the SIMATIC Automation Tool).

Note

An update can only be performed for the CPU and not for the SINAMICS Integrated using the SIMATIC Automation Tool.

Behavior after the firmware update

After the firmware update, check the firmware version of the CPU / SINAMICS Integrated.

You can find the firmware version for the CPU or SINAMICS Integrated under "Online & diagnostics". In the working area, the firmware version is under "Diagnostics" > "General".

Additional information

You can find the latest firmware versions for the SIMATIC Drive Controller on the Internet (https://support.industry.siemens.com/cs/ww/en/view/109773914).

14.3 DRIVE-CLiQ component firmware update

DRIVE-CLiQ components

The SINAMICS Integrated (for SINAMICS S120 control units, the memory card) also contains the firmware for the DRIVE-CLiQ components. With factory setting p7826 = 1, this is automatically transferred from SINAMICS Integrated (for SINAMICS S120 control units from the memory card) to the DRIVE-CLiQ components upon initial commissioning.

The firmware is saved to non-volatile memory in the DRIVE-CLiQ components in the event of an upgrade.

Following a project download or automatic configuration, a firmware update is automatically performed on all connected DRIVE-CLiQ components. This upgrades all DRIVE-CLiQ components to the correct firmware versions.

Update process

The update process can take a few minutes. It is indicated by the RDY LED on the relevant component flashing green/red and the RDY LED for SINAMICS Integrated (or on the control unit) flashing yellow at 0.5 Hz.

A progress indicator is implemented in parameter p7827.

The update is complete when the RDY LED of the SINAMICS Integrated (control unit) stops flashing at 0.5 Hz. Once the upgrade has ended, the RDY LED for the component in question remains continuously lit, provided the upgrade is complete and the new firmware has been activated.

For components whose RDY LED is flashing green/red at 2 Hz, you need to perform a POWER OFF/POWER ON to activate the new firmware.

For components without LED (for example motors with DRIVE-CLiQ interface), check for relevant warnings on the drive.

Note

During activation of the new firmware, it is possible for a component to interrupt cyclic communication. In this case, communication faults occur and must be acknowledged.

You can check the firmware versions of the individual components with parameters. The versions of the DRIVE-CLiQ components and those of SINAMICS Integrated (or of the control unit) may differ.

Note

DRIVE-CLiQ components with higher firmware versions are backward compatible and can also operate with DRIVE-CLiQ components with lower firmware versions.

Automatic firmware update

You can use parameter p7826 to influence the response for automatic firmware updates of DRIVE-CLiQ components.

With the automatic firmware update, the firmware version of the DRIVE-CLiQ components is checked against the firmware version of SINAMICS Integrated (or the control unit) and if necessary updated upon each power up. This means power up can take a few minutes longer.

The following settings are possible:

- p7826 = 0: Upgrade and downgrade deactivated
- p7826 = 1: Upgrade and downgrade (factory setting)
- p7826 = 2: upgrade only

A parameter change does not become effective until the next drive system power up.

Where Safety Basic, Extended and/or Advanced Functions are enabled, the system checks whether the parameter for automatic firmware updates p7826 = 1 is set. Otherwise, the following message is output: F01664 (SI CU: No automatic firmware update).

14.4 System update SIMATIC Drive Controller

The system software of the SIMATIC Drive Controller is necessary for basic operation of the controller and contains components like BIOS, drivers and configuration data.

Thus, the system update is different from a firmware update, with which, for example, the functionality of the SIMATIC Drive Controller can be expanded. It is only necessary to update the system software if Siemens Service & Support or your Siemens contact person has recommended it.

The version of a system update that has been performed can be determined at the following places:

- in the TIA Portal in the CPU diagnostics using the option "Online & Diagnostics" and the secondary option "Diagnostics > General" under "Drive Controller information"
- in the CPU Web server on the web page "Diagnostics" in the "Identification" tab under "Drive Controller Info"
- in the exported diagnostic buffer of the CPU

If "---" is displayed as the version, there is no system update installed.

14.5 CPU reset to factory settings

Introduction

"Reset to factory settings" restores the CPU to its delivery state. The function deletes all information that was stored internally on the CPU.

Recommendation:

Switch the CPU to its as-delivered condition if:

- You remove a CPU and use it elsewhere with a different program
- You store the CPU

When resetting to factory settings, remember that the IP address parameters are also deleted.

Options for resetting a CPU to factory settings

To reset the CPU to its delivery state, follow these steps:

- Using the mode selector
- Using STEP 7
- Using the SIMATIC Automation Tool

Procedure using the mode selector

Make sure that the CPU is in STOP: The RUN/STOP LED lights up yellow.

Note

Reset to factory settings ↔ Memory reset

The procedure described below corresponds to the procedure for a memory reset:

- Selector operation with inserted SIMATIC Memory Card: CPU executes a memory reset
- Selector operation without inserted SIMATIC Memory Card: CPU executes reset to factory settings

---

Restore the factory settings of the CPU as follows:

1. Set the mode selector to the STOP position.

   Result: The RUN/STOP LED lights up yellow.
2. Remove the SIMATIC Memory Card from the CPU. Wait until the RUN/STOP LED stops flashing.
3. Set the mode selector to the MRES position. Hold the mode selector in this position until the RUN/STOP LED lights up for the second time and remains lit (this takes three seconds). After this, release the selector.
4. Within the next three seconds, switch the mode selector back to the MRES position, and then back to STOP again.

Result: The CPU executes a "Reset to factory settings", during which time the RUN/STOP LED flashes yellow. When the RUN/STOP LED lights up yellow, then the CPU has been reset to factory settings, and is in the STOP mode. The "Reset to factory settings" event is entered into the diagnostics buffer.

Note

The IP address of the CPU is also deleted when the CPU is reset to the factory settings through the mode selector.

Procedure using STEP 7

To reset a CPU to factory settings via STEP 7, follow these steps:

Make sure that there is an online connection to the CPU.

1. Open the Online and Diagnostics view of the CPU.
2. In the "Functions" folder, select the "Reset to factory settings" group.
3. If you want to keep the IP address, select the "Keep IP address" option button. If you want to delete the IP address, select the "Delete IP address" option button.

   Note

   "Delete IP address" deletes all IP addresses, regardless of how you established the online connection.

   If there is a SIMATIC Memory Card inserted, selecting the "Delete IP address" option has the following effect:
   - The IP addresses are deleted and the CPU is reset to factory settings.
   - The configuration (including IP address) on the SIMATIC Memory Card is then loaded to the CPU. If there is no saved configuration (because the SIMATIC Memory Card has been cleared or formatted, for example), no new IP address is assigned.

4. Click the "Reset" button.
5. Click "OK" in response to the confirmation prompts.

Result: The CPU executes a "Reset to factory settings", during which time the RUN/STOP LED flashes yellow. A yellow RUN/STOP LED indicates that the CPU has been reset to factory settings and is in the STOP operating state. The "Reset to factory settings" event is entered into the diagnostics buffer.

Procedure using the SIMATIC Automation Tool

The procedure is described in the SIMATIC Automation Tool (https://support.industry.siemens.com/cs/ww/en/view/98161300) user manual (included in the SIMATIC Automation Tool).

Result after resetting to factory settings

The following table provides an overview of the contents of the memory objects after the reset to factory settings.

Table 14- 2 Result after resetting to factory settings

Memory object	Contents
Actual values of the data blocks, instance data blocks	Initialized
Bit memories, timers and counters	Initialized
Retentive tags of technology objects (e.g. adjustment values of absolute encoders)	Initialized
Entries in the diagnostics buffer	Initialized
IP address	Depends on the procedure: • Using mode switch: is deleted • Using STEP 7: Depending on the setting of the "Keep IP address"/"Delete IP address" option buttons
Device name	Is set to "CPU"
Counter readings of the runtime meters	Initialized
Time of day	Is set to "00:00:00, 01.01.2012"

System updates and firmware updates are retained when the CPU is reset to factory settings.

If there was a SIMATIC Memory Card inserted in the CPU prior to the reset to factory settings, the CPU downloads the configuration on the SIMATIC Memory Card (hardware and software). A configured IP address is then valid again.

Note

Password for protection of confidential configuration data

The password for protection of confidential configuration data is retained after the CPU is reset to factory settings. The password is only deleted when the "Delete password for protection of confidential PLC configuration data" option is set in STEP 7.

You can find additional information on the password for protection of confidential configuration data in the Communication function manual (https://support.industry.siemens.com/cs/ww/en/view/59192925).

Additional information

Additional information on "Reset to factory settings" can be found in the Function Manual Structure and use of the CPU memory (https://support.industry.siemens.com/cs/ww/en/view/59193101) in the section on memory areas and retentivity, and in the online help for STEP 7.

14.6 SINAMICS Integrated reset to factory settings

Restoring factory settings

In online mode, you can restore the factory settings for SINAMICS Integrated.

1. Establish an online connection to SINAMICS Integrated.
2. Open the online and diagnostics view of SINAMICS Integrated
3. In the dialog box, select "Backup/Restore > Reset to factory settings" and then the "Start" button.
4. Click "OK" in response to the confirmation prompt.

The factory settings are restored. System updates and firmware updates are retained when the SINAMICS Integrated is reset to factory settings.

Note

Alternatively, you can reset the SINAMICS Integrated to factory settings in the function view of the drive control. To do so, click the icon

---

14.7 Fault reactions with failsafe components

Safe state (safety concept)

The basic principle behind the safety concept is the existence of a safe state for all process variables.

Note

For fail-safe input and output modules, this safe state is the value "0".

Fault reactions and startup of the F-system

The safety function requires the output of substitute values (safe state) instead of process values for a failsafe module (**passivation of the failsafe module**) in the following cases:

- When the F-system is started up
- If errors are detected during safety-related communication between the F-CPU and the F-module via the PROFIsafe safety protocol (communication error)
- If F-I/O faults or channel faults are detected (for example wire break, discrepancy error)

Detected faults are written to the diagnostic buffer of the F-CPU and communicated to the safety program in the F-CPU.

F-modules cannot save errors as retentive data. When the system is powered down and then restarted, any faults persisting are detected again during startup. However, you have the option of saving faults in your safety program.

WARNING

Channel faults do not trigger any diagnostic reactions or error handling for channels that have been set to "deactivated" in STEP 7. This applies even if such a channel is affected indirectly by a channel group fault (channel parameter "activated/deactivated").

Remedying faults in the F-system

To remedy faults in your F-system, follow the procedure described in IEC 61508-1:2010 section 7.15.2.4 and IEC 61508-2:2010 section 7.6.2.1 e.

The following steps must be performed:

1. Diagnostic and repair of the fault
2. Revalidation of the safety function
3. Recording in the service report

Fail-safe value output for F-modules

In the case of F-modules with inputs, if there is passivation, the F-system provides substitute values (0) for the safety program instead of the process data pending at the failsafe inputs.

In the case of F-modules with outputs, if there is passivation, the F-system transfers substitute values (0) to the failsafe outputs instead of the output values provided by the safety program. The output channels are de-energized. This also applies when the F-CPU goes into STOP mode. The parameter assignment of fail-safe values is not possible.

Substitute values are used either for the relevant channel only or for all channels of the relevant failsafe module depending on:

- The F-system used
- The type of error that occurred (F-I/O, channel or communication error)
- The F-module parameter assignment

Reintegration of a fail-safe module

The system changes from fail-safe to process values (reintegration of an F-module) either automatically or only after user acknowledgment in the safety program. If channel errors occur, it may be necessary to remove and reinsert the F-module. A detailed listing of faults requiring removal and insertion of the F-module can be found in the section Diagnostic messages of the respective F-module.

After reintegration, the following occurs:

- In the case of an F-module with inputs, the process data pending at the failsafe inputs is made available to the safety program again
- In the case of an F-module with outputs, the output values provided in the safety program are transferred to the failsafe outputs again

Additional information on passivation and reintegration

For additional information on passivation and reintegration of F-I/O, refer to the SIMATIC Safety, Configuring and Programming (https://support.industry.siemens.com/cs/ww/en/view/54110126) manual.

Reaction of the F-module with inputs to communication errors

F-modules with inputs respond differently to communication errors compared to other errors.

If a communication error is detected, the current process values remain set at the inputs of the F-module. The channels are not passivated. The current process values are passivated in the F-CPU.

14.8 Temperature monitoring

The SIMATIC Drive Controller has integrated temperature monitoring. Temperature monitoring ensures that the SIMATIC Drive Controller is only operated within the permissible temperature range. This prevents device defects and undefined device behavior.

Function

Temperature sensors monitor the inside temperature. There are temperature thresholds with the following reactions in the event of overtemperature:

Inside temperature	Maintenance event	Reaction
High limit violation Threshold 1	CPU overtemperature (Warning, incoming)	MAINT LED lights up in yellow. An entry is made in the diagnostic buffer. The diagnostics interrupt OB (OB82, incoming event) is called. For details, see Evaluation of interrupts.
Low limit violation Threshold 1	CPU overtemperature (Warning, outgoing)	The MAINT LED goes out. An entry is made in the diagnostic buffer. The diagnostics interrupt OB (OB82, outcoming event) is called. For details, see Evaluation of interrupts section
High limit violation Threshold 2	CPU overtemperature (Error)	MAINT LED lights up in yellow. ERROR LED flashes red. A diagnostic buffer entry (no OB82 call) is made. The SIMATIC Drive Controller switches to STOP and a start-up lock is set (POWER OFF/ON is required).

Evaluation of interrupts

You evaluate the interrupt and corresponding information with the "RALRM" instruction.

Call the "RALRM" instruction in the diagnostics interrupt OB (OB82).

Table 14- 3 Structure of the additional interrupt information in an overtemperature warning

Byte	Data type	Meaning	
0 to 1	WORD	Format identifier for the configuration of the following data as additional interrupt information. The overtemperature information is provided with the format identifier W#16#8002 (advanced channel diagnostics).	
2 to 3	WORD	Channel number of the component that triggered the interrupt: W#16#0C72: PLC hardware	
4	BYTE	Bit 0:	Not relevant
		Bits 1 to 2:	Maintenance type: 2: Maintenance requested
		Bits 3 to 4:	Error type: 1: Incoming error 2: Outgoing error

Byte	Data type	Meaning	
		Bits 5 to 7:	3: Input/output signal
5	BYTE	Data format: B#16#05: Word	
6 to 7	WORD	Error type: W#16#3530: Overtemperature warning	
8 to 9	WORD	Additional error value: W#16#1010: Diagnostics interrupt/OB82 call	
10 to 13	DWORD	Additional error information: Not relevant	

Programming example

You can find a programming example in the following FAQ on the Internet (https://support.industry.siemens.com/cs/ww/en/view/109782270).

14.9 Maintenance and repair

The SIMATIC Drive Controller is maintenance-free.

Note

Repairs to the SIMATIC Drive Controller may only be carried out by the manufacturer.

Test and service functions 15

15.1 Test functions

Introduction

You have the option of testing the operation of your user program on the CPU. You monitor signal states and values of tags, and preassign values to tags so that you can simulate specific situations for program execution.

Note

Using test functions

Using test functions affects the program execution time and thus the cycle and response times of the controller to a slight extent (a few milliseconds).

Requirements

- There is an online connection to the relevant CPU.
- An executable user program is available in the CPU.

Test options

- Testing with program status
- Testing with breakpoints
- Testing with a watch table
- Testing with a force table
- Testing with a PLC tag table
- Testing with a data block editor
- Testing with the LED flash test
- Testing with a trace function

Testing with program status

The program status allows you to monitor the execution of the program. You can display the values of operands and the results of logic operations (RLO). This allows you to detect and fix logical errors in your program.

Note

Restrictions with the "Program status" function

Monitoring loops can significantly increase the cycle time. The increase in cycle time depends on the following factors:

- The number of tags to be monitored
- The actual numbers of loops run through

WARNING

Testing with program status

A test with the "Program status" function can cause serious damage to property or injury to persons if there are functional disturbances or program errors.

Make sure that you take appropriate measures to exclude the risk of dangerous states occurring before running a test with the "Program status" function.

Testing with breakpoints

With this test option, you set breakpoints in your program, establish an online connection, and enable the breakpoints on the CPU. You then execute a program from one breakpoint to another.

Requirements:

- Setting breakpoints is possible in the programming language SCL or STL.

Testing with breakpoints provides you with the following advantages:

- Localization of logic errors step by step
- Simple and quick analysis of complex programs prior to actual commissioning
- Recording of current values within individual executed loops
- Use of breakpoints for program validation also possible in SCL/STL networks within LAD/FBD blocks

Note

Restriction during testing with breakpoints

- When you test with breakpoints, there is a risk of overwriting the cycle time of the CPU.
- If you are using technology objects and test them with breakpoints, the CPU switches to STOP.

Note

F-System SIMATIC Safety

Setting breakpoints in the standard user program results in errors in the

security program:

- Sequence of F cycle time monitoring
- Error in communication with the fail-safe I/O
- Error during safety-oriented CPU-CPU communication
- internal CPU error

If you still wish to use breakpoints for testing, you must deactivate

the safety mode beforehand. This will result in the following errors:

- Error in communication with the fail-safe I/O
- Error during safety-oriented CPU-CPU communication

Testing with watch tables

The following functions are available in the watch table:

- Monitoring of tags

  With watch tables, you monitor the current values of individual tags in a user program or a CPU on the PG/PC and Web server. Please note the following requirement for displaying the tag values on the Web server: You must specify a symbolic name for the tag in the "Name" column of the watch table.

  You monitor the following operand areas:

  – Inputs and outputs (process image) and bit memory
  – Contents of data blocks
  – Peripheral inputs and peripheral outputs
  – Timers and counters

- Modifying tags

  You use this function to assign fixed values to individual tags in a user program or a CPU on the PG/PC. Modifying is also possible with Test with program status.

  The following operand areas are modifiable:

  – Inputs and outputs (process image) and bit memory
  – Contents of data blocks
  – Peripheral inputs and peripheral outputs (for example, %I0.0:P, %Q0.0:P)
  – Timers and counters

- "Enable peripheral outputs" and "Modify now"

  These two functions enable you to assign fixed values to individual peripheral outputs of a CPU in the STOP mode. You can also use them to check your wiring.

Testing with a force table

The following functions are available in the force table:

- Monitoring of tags

  Force tables are used to monitor the actual values of the individual tags of a CPU user program or a CPU

  - On the PG/PC

  - On the Web server

  You monitor the table with or without a trigger condition.

  You monitor the following tags:

  – Bit memory

  – Contents of data blocks

  – Peripheral inputs

- Modifying tags

  You use this function to assign fixed values to individual tags in a user program or a CPU on the PG/PC and Web server. Modifying is also possible with Test with program status.

  The following tags are modifiable:

  – Bit memory

  – Contents of data blocks

  – Peripheral inputs (e.g. %I0.0:P)

- Forcing of peripheral inputs and peripheral outputs

  You can force individual peripheral inputs or peripheral outputs.

  – Peripheral inputs: Forcing of peripheral inputs (for example %I0.0:P) is a "bypassing" of sensors / inputs by the specification of fixed values to the program. The program receives the force value instead of the actual input value (via process image or via direct access).

  – Peripheral outputs: Forcing of peripheral outputs (for example %Q0.0:P) is a "bypassing" of the complete program by the specification of fixed values to the actuators.

The advantage of the force table is that you can simulate different test environments and overwrite tags in the CPU with a fixed value. This enables you to intervene in the ongoing process for regulating purposes.

Difference between modifying and forcing

The fundamental difference between the modifying and forcing functions consists in the storage behavior:

- Modifying: Modifying of tags is an online function and is not stored in the CPU. You can end modifying of tags in the watch table or force table or by terminating the online connection.
- Forcing: A force job is written to the SIMATIC memory card and is retained after a POWER OFF. You can only end the forcing of peripheral inputs and peripheral outputs in the force table.

Testing with a PLC tag table

You can monitor the current data values of tags in the CPU directly in the PLC tag table. To do so, open the PLC tag table and start the monitoring.

You can also copy PLC tags to a watch or force table and monitor, modify or force them there.

Testing with a data block editor

The data block editor offers different options for monitoring and modifying tags. These functions directly access the actual values of the tags in the online program. Actual values are the current values of tags in the CPU work memory at any moment during program execution. The following functions for monitoring and modifying are available in the database editor.

- Monitor tags online
- Modify individual actual values
- Create a snapshot of the actual values
- Overwrite actual values with a snapshot

Note

Setting data values during commissioning

During plant commissioning, you often need to adjust data values to adapt the program to local conditions. The declaration table for data blocks offers some functions for this purpose.

Testing with the LED flash test

In many online dialogs, you can perform an LED flash test. This feature is useful if you are not sure which device in the hardware configuration corresponds to the device currently selected in the software.

If you click on the "Flash LED" button in STEP 7 under Online & diagnostics (online access), an LED flashes on the device currently selected. The RUN/STOP, ERROR, and MAINT LEDs flash on the CPU. The LEDs flash until you cancel the flash test.

Testing with CPU Trace

The trace function is used to record the CPU tags, depending on the settable trigger conditions. Examples of tags are the system and user tags of a CPU. Plant states can also be recorded if the drive parameters have been interconnected with CPU tags using relevant frames.

The CPU saves the recordings. If necessary, you can display and evaluate the recordings with STEP 7 or over the Web server. The Trace function can be called from the CPU's folder in the project tree, under "Traces".

Please also see the following FAQ on the Internet (https://support.industry.siemens.com/cs/ww/en/view/102781176) relevant for Trace functions.

Testing with Drive Trace

You use Drive Trace to records the states of a drive and evaluate them using Startdrive. As the states are recorded in the drive itself (minimum clock 125 µs), Drive Trace is particularly useful for monitoring highly dynamic processes.

For further information, see the Trace function section in the SINAMICS S120 Startdrive (https://support.industry.siemens.com/cs/ww/de/view/109763294/en) commissioning manual

Simulation

With STEP 7 and S7-PLCSIM or S7-PLCSIM Advanced you can run and test the hardware and software of the project in a simulated environment.

Start the simulation with S7-PLCSIM using the menu command "Online" > "Simulation" > "Start".

You can find more information on simulation with S7-PLCSIM Advanced in the S7 PLCSIM Advanced (https://support.industry.siemens.com/cs/de/en/view/109773484) function manual.

Additional information

Additional information on the test functions can be found in the STEP 7 online help.

Additional information about testing with trace functions is available in the Function Manual Using the trace and logic analyzer function (https://support.industry.siemens.com/cs/ww/en/view/64897128).

15.2 Reading/saving service data

Service data

The service data contain the CPU diagnostic buffer and the diagnostic buffer of SINAMICS Integrated. It also contains much more information on the internal state of the CPU and SINAMICS Integrated. If a problem occurs with the SIMATIC Drive Controller that cannot be solved with other methods, send the service data to SIEMENS Service & Support. The service data allows Service & Support to quickly analyze the problems that have occurred.

Note

You cannot execute a download to the device while reading the service data of the SIMATIC Drive Controller.

Methods of reading service data

You can read service data with:

- The FUNCT button on the SIMATIC Drive Controller (function 1, storing the service data on the SIMATIC Memory Card)
- the web server
- STEP 7
- the SIMATIC Memory Card

Only use the SIMATIC Memory Card to read service data if you are no longer able to communicate with the CPU via Ethernet. In all other cases, it is preferable to read service data via the Web server or STEP 7.

- Since the service data must be directly loaded to the PC, you need not ensure that there is still sufficient memory space on the SIMATIC Memory Card.
- You can send the service data straight from the PC.

Procedure using the FUNCT button

You can save the service data to the SIMATIC Memory Card on the SIMATIC Drive Controller with the FUNCT button.

In principle, there are 2 options for reading the service data:

- Reading out service data in the STOP or RUN state of the SIMATIC Drive Controller
- Reading out service data during SIMATIC Drive Controller startup

Reading service data in STOP or RUN allows you to back up the data quickly and easily on a memory card. If backup is no longer possible (due to a persistent error, for example), you can also back up the service data during startup immediately after switch-on. In this case, only the service data of the CPU are saved and not the service data of the SINAMICS Integrated.

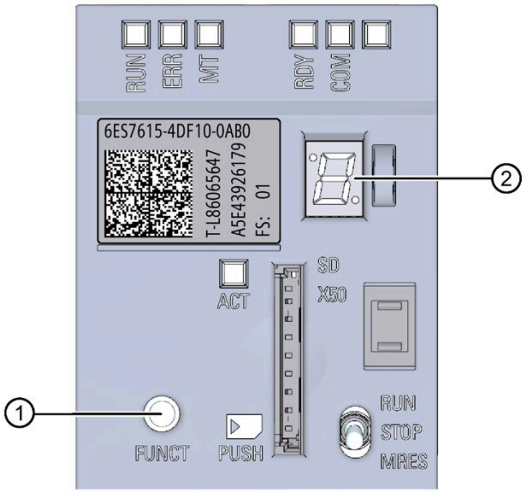

① FUNCT button

Figure 15-1 SIMATIC Drive Controller FUNCT button

Requirements:

- The memory card is inserted and the write protection of the card is not set.
- There is sufficient free memory available on the card.

Saving the service data in STOP or RUN state of the SIMATIC Drive Controller

1. To get to the function selection mode, press the FUNCT button for at least 3 seconds with a sharp object and then release it. As an aid, the 7-segment display flashes "0" at one-second intervals during this time.

   After you release the button, you are in function selection mode. The 7-segment display shows function "1" (Save service data).

2. To confirm the selection, press the FUNCT button within 10 seconds for at least 3 seconds and then release it. The service data is saved.

   While the function is being executed:

   – The 7-segment display shows "d" (DUMP)
   – The ACT-LED flickers
   – The RUN/STOP LED flashes yellow
   – The ERROR and MAINT LEDs are off

   After the function has been executed, the 7-segment display shows "0".

Result: The CPU writes the service data to the folder DUMP.S7S on the SIMATIC Memory Card.

If the requirements for the function selection are not fulfilled (for example, write protection set, no card inserted) then the 7-segment display shows the status "F" (Fault) for 10 seconds and the function is not performed. Next, the menu is closed and the 7-segment display shows "0".

If an error occurs during saving:

- The RUN/STOP LED flashes yellow (for STOP) or green (for RUN) depending on the previous operating state
- The ERROR LED flashes red

In this case, the text file in the DUMP.S7S folder contains information about the error that has occurred.

Note

In the function selection mode, a brief button press for less than 3 seconds selects the next function (function "1", "2" or "3"). The last function is "E". If you press the button for at least 3 seconds, the function selection module is exited. The function selection mode is also exited if no key is pressed for 10 seconds.

Saving the service data during SIMATIC Drive Controller startup

During startup, only the service data of the CPU are saved and not the service data of the SINAMICS Integrated.

1. Switch the supply voltage off at the SIMATIC Drive Controller.
2. Press and hold down the FUNCT button.
3. Switch the supply voltage on at the SIMATIC Drive Controller.
4. To start the saving process, release the FUNCT button as soon as the 7-segment display flashes at least once (approx. 1 to 2 seconds after POWER ON).

   The save process only begins after about 45 seconds and is indicated by a yellow flashing RUN/STOP LED. The ERROR and MAINT LEDs are off. As the save process progresses, the 7-segment display shows "d" (DUMP) and the ACT LED flickers. After completion of the saving process, the 7-segment display shows "0".

Result: The CPU writes the service data to the folder DUMP.S7S on the SIMATIC Memory Card.

If an error occurs during saving:

- The RUN/STOP LED flashes yellow (for STOP) or green (for RUN) depending on the previous operating state
- The ERROR LED flashes red

In the event of an error, the text file in the DUMP.S7S folder contains information about the error that has occurred.

Note

Procedure using the SIMATIC Memory Card

Instead of using the FUNCT button, you can also initiate saving the service data using the job file S7_JOB.S7S and the DUMP string.

To do so, use an editor to overwrite the PROGRAM entry with the DUMP string.

To ensure that the file size is exactly 4 bytes, do not use any spaces/line breaks/quotation marks.

If you read out the service data (with the entry String DUMP), the SIMATIC Drive Controller does not start.

You must change the entry back to PROGRAM once the function has been executed.

Procedure using the Web server

Requirement: Access to the Web server has been activated for the interface used.

Proceed as follows to read service data using the Web server:

1. Open a Web browser that is suitable for communication with the SIMATIC Drive Controller. You can find additional information in the Web server (https://support.industry.siemens.com/cs/ww/en/view/59193560) function manual.
2. Enter the following address in the address bar of the web browser: https://<CPU IP address>/save_service_data, e.g. https://172.23.15.3/save_service_data
3. The service data page will appear on your screen, with a button for saving the service data.

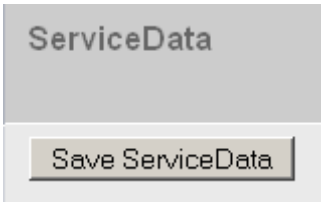

Figure 15-2 Saving service data via the Web server

4. Save the service data locally on your PC/programming device, by clicking "Save ServiceData".

Result: The data is saved in a .dmp file with the following naming convention: "<Article number> <Serial number> <Time stamp>.dmp". You can change the file name.

Note

If you have defined your user page as the Web server homepage, you cannot directly access the service data by entering the IP address of the SIMATIC Drive Controller. For more information on reading out service data via a user-defined page, refer to the Web server (https://support.industry.siemens.com/cs/ww/en/view/59193560) function manual.

Procedure using STEP 7

A description of how to save service data is available under the keyword "Save service data" in STEP 7 online help.

Technical data 16

16.1 Introduction

System data

This section sets out general technical data for a system comprising the SIMATIC Drive Controller and components of the S120 drive system (Booksize). You can find detailed technical data for individual system components in the relevant manuals.

Technical data of the SIMATIC Drive Controller

You can find the technical data for the SIMATIC Drive Controller in the SIMATIC Drive Controller manual.

16.2 Standards and Approvals

Currently valid markings and authorizations

Note

Information on the system components

The markings and approvals currently valid are printed on the system components.

EU Declaration of Conformity

Our products fulfill the requirements and safety objectives of the following EC Directives and comply with the harmonized European standards (EN):

The EU Declaration of Conformity is available on the Siemens Industry Online Support (https://support.industry.siemens.com/cs/ww/en/view/59239904) website.

UK Declaration of Conformity

The SIMATIC Drive Controller complies with the designated British Standards (BS) published in the official consolidated list of the British Government.
The UK Declaration of Conformity is also available on the Siemens Industry Online Support (https://support.industry.siemens.com/cs/de/en/view/109798398) website.

cULus approval

Underwriters Laboratories Inc. in accordance with

- UL 508 (Industrial Control Equipment)

RCM (C-Tick) Declaration of conformity for Australia/New Zealand

The device fulfills the requirements of standard AS/NZS CISPR 16.

Korea Certification

KC registration number: R-R-S7M-SimaticDC

Please note that this device corresponds to limit value class A in terms of the emission of radio frequency interference. This device can be used in all areas, except residential areas.

이 기기는 업무용(A급) 전자파 적합기기로서 판매자 또는 사용자는 이 점을 주의하시기 바라며 가정 외의 지역에서 사용하는 것을 목적으로 합니다.

The EMC limits for Korea correspond to the limits of the EMC product standard for variable-speed electrical drives EN 61800-3 of the category C2 or the limit class A, group 1 to EN 55011. The limits to category C2 or limit class A, group 1, are maintained with adequate additional measures. Additional measures, such as the use of an additional radio interference suppression filter (EMC filter), may be necessary.

Measures for an appropriate EMC-compliant setup of the plant are also described in detail in this manual and in the Configuration Manual EMC installation guidelines (https://support.industry.siemens.com/cs/ww/en/view/60612658).

Please note that it is ultimately the label on the device that determines the compliance with standards.

Marking for the Eurasian Customs Union

EAC (Eurasian Conformity)

Customs Union of Russia, Belarus and Kazakhstan

Declaration of conformity with the technical requirements of the Customs Union (TR CU).

China RoHS

The SIMATIC Drive Controllers comply with the China RoHS directive. Additional information can be found on the Internet (https://support.industry.siemens.com/cs/ww/en/view/109775373).

Additional information

The certificates for the markings and approvals can be found on the Internet under Service&Support (https://support.industry.siemens.com/cs/ww/en/ps/25715/cert).

16.3 Electromagnetic compatibility

EMC

Electromagnetic compatibility (EMC) is the ability of an electrical installation to function satisfactorily in its electromagnetic environment without interfering with that environment.

The SIMATIC Drive Controller meets the electromagnetic compatibility requirements for drive systems (PDS – Power Drive Systems) as defined in IEC 61800-3 category C2; 2. Environment.

Environments

EN 61800-3 defines different requirements depending on the location of the drive system, referred to as the First and Second Environment.

First Environment locations are defined as residential buildings or locations in which the drive system is directly connected to the public low-voltage power supply network without intermediate transformers.

The **Second Environment** is understood as all non-residential locations. The main Second Environment locations are industrial zones supplied by the medium voltage network via their own transformers.

Category

The SIMATIC Drive Controller meets the electromagnetic compatibility requirements for drive systems (PDS – Power Drive Systems) as defined in IEC 61800-3 category C2; 2. Environment.

Table 16- 1 Category pursuant to EN 61800-3

Category	Description
C2	Fixed drive systems for rated voltages <1000 V for use in the Second Environment. Use in the First Environment is possible if the drive system is installed by a professional. The system must be configured in accordance with the EC Declaration of Conformity on EMC and the "EMC Design Guidelines" configuration manual.

To observe the limits according to EN 61800-3 category C2 for the SINAMICS S120 drive system, additional measures, such as the use of line filters, may be necessary. For details, see the SINAMICS S120 manuals.

Range of applications of drive systems

The SIMATIC Drive Controller and the SINAMICS S120 drive system are designed for use in the Second Environment. They are intended for professional use in the industry, in specific professions or industries and are not sold to the general public.

To meet the EMC requirements, the drive system must be installed EMC-compliant by trained personnel taking into account the installation instructions in the SINAMICS S120 manuals.

Note

Trained personnel

Trained personnel have the necessary experience for the setup and/or commissioning of drive systems (Power drive system - PDS) including their EMC aspects.

Further information

Additional information is available in the SINAMICS S120 manuals and in the EMC Installation Guideline. (https://support.industry.siemens.com/cs/ww/en/view/60612658)

16.4 Shipping and storage conditions

Introduction

The SIMATIC Drive Controller exceeds requirements in terms of shipping and storage conditions pursuant to EN 61800-2.

The following applies under these conditions:

- Long-term storage in transport and product packaging:
  At weather-protected locations that have continuous contact with outside air through openings.
- Transport in transport packaging:
  - In unventilated containers in conditions without protection from the weather.
  - In the "cold" as in open-air climate.
  - Air transport in the air-conditioned cargo hold.

Transport and storage conditions for devices

Table 16- 2 Ambient conditions during storage and transport

Type of condition	Permissible range/class	
	Transport	**Storage**
Classification	EN 60721-3-2	EN 60721-3-1
Environmental class	2K4	1K4
Ambient temperature	From -40° C to +70° C	From -25° C to +55° C

Type of condition	Permissible range/class		
Biological ambient conditions	2B1 [1]	1B1 [1]	
Chemically active environmental conditions	2C2 [2]	1C2 [2]	
Maximum permissible temperature change	Direct interaction in air/air: -40/+30 °C at 95% relative humidity	30 K/h	
Relative humidity	5 to 95%		
Precipitation, rain	6 mm/min [1]	Not permitted	
Water other than rain	1 m/s and wet loading surfaces [3]	Not permitted [4]	1 m/s and wet loading surfaces [3]
Condensation, splash water, icing, salt spray	Permitted	Not permitted [4]	Permitted [3]

[1] Mold growth, slime, rodents, termites and other vermin are not permissible.

[2] In marine and weather-resistant transport packaging (container).

[3] For storage in transport packaging.

[4] For storage in product packaging.

Note

Remove the packaging material before installing the components.

16.5 Mechanical and climatic ambient conditions

Ambient conditions for operation

The SIMATIC Drive Controller is designed for stationary use at weather-protected locations. The documented ambient conditions apply for conditions in the immediate vicinity of the devices and for the cooling air inlet. Compliance with the following standards: EN 60204-1, EN 61800-2, EN 61131-2 and IEC 62477-1.

Table 16- 3 Ambient conditions for operation

Ambient conditions	Areas of application	Comments
Climatic ambient conditions		
Environmental class	Better than class 3K3	In accordance with EN 60721-3-3
Temperature limits at 100% load	0 °C to 55 °C	From an altitude of 2000 m, the max. ambient temperature is reduced by 7 °C for each additional 1000 m (derating).
Relative humidity (without condensation)	5 to 95% (60% in the presence of corrosive gases and/or dust)	
Condensation; icing; drip, spray and splash water	Not permitted	

Ambient conditions	Areas of application	Comments
Max. installation altitude	4000 m above sea level	For SINAMICS S120 drive components, see SINAMICS documentation
Barometric pressure	620 to 1060 hPa	
Biological, chemical and mechanical influences; pollutants		
Biological ambient conditions		Class 3B1 in accordance with EN 60721-3-3: Mold, mold growth, slime, rodents, termites and other vermin are not permissible.
Mechanically active environmental conditions		Class 3S1 in accordance with EN 60721-3-3: Conductive dust is not permissible.
Classification of the mechanical environment		Class 3M1 in accordance with EN 60721-3-3
Vibratory load		Frequency range: 10 to 150 Hz Displacement at 10 to 58 Hz: 0.075 mm Acceleration at 58 to 150 Hz: 1 g
Shock load with shock-sensitive parts		Acceleration: 5 g Duration of shock: 30 ms Load: 3 x in each direction
Pollution degree		2 (inside use only)
Type of enclosure		Open type
Overvoltage category		OVC 2

Note

The user must consider emitted interference for the complete plant. Particular attention should be paid to cabling. Please contact your sales partner for assistance.

Note

In a residential environment, this product can cause high-frequency interference that can make radio interference suppression measures necessary.

Have the installation and commissioning with appropriate radio interference suppression measures preformed by qualified personnel.

Maximum installation altitude

From an altitude of 2000 m, the max. ambient temperature is reduced by 7 °C for each additional 1000 m (derating).

- The derating factor compensates for the decreasing cooling effect of air at higher elevations due to lower density.
- Linear interpolation between elevations is permissible.
- Install the SIMATIC Drive Controller only in a vertical mounting position and maintain a ventilation clearance of 80 mm above and below the SIMATIC Drive Controller.
- Make sure that the power supplies you use are also rated for altitudes > 2000 m.
- Observe the maximum installation altitude of the SINAMICS S120 drive components. Refer to the SINAMICS documentation for details.

Protection of the device against environmental factors

Protect the device against the following environmental factors:

- Direct sunlight and heat sources
- Mechanical vibrations
- Dust
- Humidity
- Strong magnetic fields

Reduction of vibrations

If the SIMATIC Drive Controller is exposed to severe shock or vibration, take appropriate measures to reduce the acceleration or amplitude.

We recommend installing the SIMATIC Drive Controller on damping materials (for example rubber-bonded-to-metal mounting.)

16.6 Information on insulation tests, protection class, degree of protection and rated voltage

Insulation

The insulation is designed in accordance with the requirements of EN 61131-2: 2007.

Note

Galvanic isolation with 707 V DC (Type Test) is tested for modules with 24 V DC supply voltage (SELV/PELV).

Pollution degree

The SIMATIC Drive Controller is designed for pollution degree 2 in accordance with EN 61800-5.

This means that the components must be protected from conductive contamination, for example, by installing them in a control cabinet with degree of protection IP54 pursuant to IEC 60529 or Type 12 pursuant to NEMA 250. If the occurrence of conductive contamination can be ruled out, a correspondingly lower degree of protection for the control cabinet is permitted.

Protection class

Protection class of the SIMATIC Drive Controllers	Note
Protection class III	Protection class III equipment may only be connected to SELV or PELV current sources.

Degree of protection

The SIMATIC Drive Controller has the degree of protection IP20 in accordance with IEC 60529, open type pursuant to UL/CSA:

- Protection against contact with standard test finger
- Protection against foreign objects with diameters in excess of 12.5 mm
- No protection against water

Rated voltage for operation

The rated voltages and corresponding tolerances for the power supply to the system components are listed in the following table.

Table 16- 4 Rated voltage of system components

Component/connection	Tolerance range
Electronics power supply for SIMATIC Drive Controllers or SINAMICS S120 components	24 V DC -15/+20% (20.4 to 28.8 V)[1] Protective extra low voltage PELV or SELV
Line connection (power units)	3 AC 380 to 480 V ±10 % (-15 % < 1 min)
Line frequency	47 to 63 Hz

1) The supply voltage must not fall below the minimum of 20.4 V (24 V -15%) at the final device in the line-up as malfunctions can otherwise occur. A sufficiently high input voltage must therefore be selected. To prevent the maximum 24 V supply voltage (= 28.8 V) being exceeded, the voltage can be supplied at various different points in the line-up.

Information for users changing from SIMOTION D4x5-2

A

A.1 Information for users changing from SIMOTION D4x5-2

SIMATIC S7-1500 and the SIMOTION Motion Control system are two automation systems whose architecture and therefore programming are fundamentally different. Be aware of these differences when switching between the two automation systems.

Comparison

The comparison below is based largely on the hardware differences between a SIMATIC Drive Controller and a SIMOTION D4x5-2 control unit.

Table A- 1 Differences between SIMOTION D4x5-2 control unit and SIMATIC Drive Controller

Feature	SIMOTION D4x5-2 DP/PN	SIMATIC Drive Controller
General		
Size (width x height x depth)	Booksize 50 x 380 x 230 mm	Booksize compact 50 x 300 x 226 mm
Automation system	SIMOTION	SIMATIC S7-1500
Available Performance classes	Four performance classes (D425-2 / D435-2 / D445-2 / D455-2)	Two performance classes currently available (CPU 1504D and CPU 1507D)
Failsafe CPU	No (additional SIMATIC S7 F-CPU required)	Yes (TF-CPU)
Integrated in the drive Safety functions	Yes, on the basis of SINAMICS S120	Yes, on the basis of SINAMICS S120
Engineering • Controller • Drive	STEP 7 V5.x or TIA Portal with • SCOUT or SCOUT TIA • STARTER integrated in SCOUT	TIA Portal with • STEP 7 Professional • Startdrive
Device modeling	Controller and integrated automatic speed control (SINAMICS Integrated) are modeled as ONE device	Controller and integrated automatic speed control (SINAMICS Integrated) are modeled as TWO devices in a TIA Portal group.
Runtime licenses (control)	With licensed memory card licenses: axis licenses, technology packages, etc.	With engineering (STEP 7 Professional) licenses: OPC UA, etc. (no axis licenses required with SIMATIC)
Interfaces		
Option slot	Yes (for TB30 or CBE30-2)	No
PROFINET interface 1	PN IO with IRT: X150 (3 ports, 100 Mbps)	PN IO with IRT: X150 (3 ports, 100 Mbps)
PROFINET interface 2	PN basic communication: X127 (1 port, 1000 Mbps)	PN IO with RT: X160 (1 port, 100 Mbps)
PROFINET interface 3	PN basic communication: X130 (1 port, 1000 Mbps)	PN basic communication: X130 (1 port, 1000 Mbps)
PROFINET interface 4	Optional, CBE30-2 (PN IO with IRT, 4 ports)	-

Feature	SIMOTION D4x5-2 DP/PN	SIMATIC Drive Controller
PROFIBUS interfaces	2 (master/slave)	1 (master) Note: PROFIBUS cannot be operated in isochronous mode at the same time as other bus systems on MC Servo.
DRIVE-CLiQ	4 ports (D425-2); 6 ports (D435-2, D445-2, D455-2)	4 ports
Onboard I/Os (assigned to the drive)	12 DI, 8 DI/DQ	12 DI, 8 DI/DQ Terminal type and terminal assignment as SIMOTION D4x5-2
Onboard I/Os (assigned to the controller)	8 DI/DQ, channel-by-channel as: DI, DQ, measuring input, output cam	8 DI/DQ, channel-by-channel as: DI, DQ, Timer DI (for measuring inputs), Timer DQ (for output cams), Oversampling DI, Oversampling DQ, PWM, Event/period measurement DQ can be operated as high-speed output Terminal type and terminal assignment as SIMOTION D4x5-2
Other interfaces	2 x USB (for device updates)	2 x USB (non-functional, no connection permitted)
SINAMICS Integrated		
SINAMICS Integrated	On basis of CU320-2 (no EPos, no SINAMICS Web server)	On basis of CU320-2 (no free function blocks, no SINAMICS Web server, no output frequencies > 550 Hz)
CX32-2	Yes	No, expansion with CU320-2 PN
Memory card	CF card For firmware and project	SD card (SIMATIC Memory Card) Can be used as program card or firmware update card
Firmware	Firmware is located on the memory card A common firmware file for controller and SINAMICS Integrated	Firmware is located on the Drive Controller Separate firmware update files for controller and SINAMICS Integrated
Runtime licensing	With licensed memory card	With engineering (Startdrive)
Miscellaneous		
Controls	2 rotary switches (mode selector; service selector switch) Diagnostics button; reset button	Toggle switch (mode selector) Function button (for example, for diagnostics)
Display elements	10 LEDs for controller and SINAMICS Integrated PN interfaces with LINK/Activity LED 7-segment display	3 LEDs for controller / 3 LEDs for SINAMICS Integrated PN interfaces with LINK/Activity LED LED for memory card access 7-segment display
Fan	Yes (dual fan for redundancy)	No
Battery	Yes (required for buffering date/time > 4 days)	No (buffering date/time > 6 weeks)
Protection with seal	No	Yes, cover can be secured
Installation	On the cabinet wall with/without spacer (D445-2 / D455-2: without spacer only with external heat dissipation with cooling fins)	On the cabinet wall with/without spacer (as for CU320-2)

Feature	SIMOTION D4x5-2 DP/PN	SIMATIC Drive Controller
Possible installation positions	Vertical and on its back	Vertical
SIPLUS variant for use in tough operating conditions, for example, in atmospheres with harmful gases	Yes (SIMOTION D435-2 DP/PN and D455-2 DP/PN)	No

Accessories/spare parts

B

Accessories

You can order the following accessories for the SIMATIC Drive Controller:

Table B- 1 Accessories

Article	Article number	Comments
SIMATIC Memory Card		We recommend a memory card with at least 12 MB if you are using SINAMICS Integrated. A memory card of at least 256 MB is required for firmware updates.
4 MB	6ES7954-8LC03-0AA0	
12 MB	6ES7954-8LE03-0AA0	
24 MB	6ES7954-8LF03-0AA0	
256 MB	6ES7954-8LL03-0AA0	
2 GB	6ES7954-8LP03-0AA0	
32 GB	6ES7954-8LT03-0AA0	

Note

S7-1500T Motion Control KinPlus with SIMATIC Drive Controllers

The required function extensions are not contained in the firmware of the SIMATIC Drive Controllers. To be able to use "S7-1500T motion control KinPlus", a special S7-1500T motion control KinPlus memory card is required instead of the standard SIMATIC Memory Card. For more information on this, see the Function Manual SIMATIC S7-1500T Kinematics functions (https://support.industry.siemens.com/cs/ww/en/view/109812058)

Table B- 2 SIMATIC Memory Cards S7-1500 Motion Control KinPlus

Article number	Capacity
6ES7 954-8LP80-0AA0	2 GB
6ES7 954-8LT80-0AA0	32 GB

Accessories for PROFIBUS	Article number	Comments
PROFIBUS bus connector RS485		
With angled cable outlet (35°) in screw-type connection technology, max. transmission rate 12 Mbps:		
• without PG/PC interface	6ES7972-0BA42-0XA0	-
• with PG/PC interface	6ES7972-0BB42-0XA0	-
PROFIBUS FastConnect bus connector RS485		

Accessories for PROFIBUS	Article number	Comments
With angled cable outlet (35°) in insulation displacement technology, max. transmission rate 12 Mbps:		
• without PG/PC interface	6ES7972-0BA61-0XA0	-
• with PG/PC interface	6ES7972-0BB61-0XA0	-
FastConnect cables for PROFIBUS		
Sold by the meter; max. consignment 1000 m; minimum order quantity 20 m:		
• FC Standard Cable GP	6XV1830-0EH10	-
• FC Robust Cable	6XV1830-0JH10	-
• FC Flexible Cable	6XV1831-2K	-
• FC Trailing Cable, sheath color: Petrol	6XV1830-3EH10	-
• FC Trailing Cable, sheath color: Violet	6XV1831-2L	-
• FC Food Cable	6XV1830-0GH10	-
• FC Ground Cable	6XV1830-3FH10	-
• FC FRNC Cable GP	6XV1830-0LH10	-
PROFIBUS FastConnect Stripping Tool Default stripping tool for the fast stripping of PROFIBUS FastConnect bus cables	6GK1905-6AA00	-

Accessories for PROFINET (X150/X160 interface)	Article number	Comments
RJ45 connector FastConnect for Industrial Ethernet/PROFINET		
145° cable outlet (10/100 Mbps):		
• 1 pack= 1 item	6GK1901-1BB30-0AA0	-
• 1 pack= 10 items	6GK1901-1BB30-0AB0	-
• 1 pack= 50 items	6GK1901-1BB30-0AE0	-
FastConnect cables for Industrial Ethernet/PROFINET [1]		
• IE FC Standard Cable GP 2x2	6XV1840-2AH10	-
• IE FC Flexible Cable GP 2x2	6XV1870-2B	-
• IE FC Trailing Cable GP 2x2	6XV1870-2D	-
• IE FC Trailing Cable 2x2	6XV1840-3AH10	-
• IE FC Marine Cable 2x2	6XV1840-4AH10	-
Stripping tool for Industrial Ethernet/PROFINET FastConnect cables		
• IE FC Stripping Tool	6GK1901-1GA00	-

[1] Sold by the meter; max. delivery unit depends on cable type; minimum order quantity 20 m.

Accessories for Industrial Ethernet (interface X130)	Article number	Comments
RJ45 FastConnect connector for Industrial Ethernet/PROFINET		
180° cable outlet (10/100/1000 Mbps):		
• 1 pack= 1 item	6GK1901-1BB11-2AA0	-
• 1 pack= 10 items	6GK1901-1BB11-2AB0	-
• 1 pack= 50 items	6GK1901-1BB11-2AE0	-
FastConnect cables for Industrial Ethernet/PROFINET [1]		
• IE FC Standard Cable GP 4x2	6XV1878-2A	-
• IE FC Flexible Cable GP 4x2	6XV1878-2B	-
Stripping tool for Industrial Ethernet/PROFINET FastConnect cables		
• IE FC Stripping Tool	6GK1901-1GA00	-
Dust cover blanking plug for protecting unused DRIVE-CLiQ, Ethernet and PROFINET ports		
• Blanking plug (50 units)	6SL3066-4CA00-0AA0	-

[1] Sold by the meter; max. consignment 1000 m; minimum order quantity 20 m.

Note

The PROFINET interface X130 supports transmission rates of 10, 100 and 1000 Mbps.

For the maximum transmission rate of 1000 Mbps, use:

- 8-wire cables (4x2)
- 1000 Mbit 180° FastConnect connectors

You can use the 145° FastConnect connectors for PROFINET interface X130 only with a max. of 100 Mbps.

Spare parts

You can order the following spare parts for the SIMATIC Drive Controller:

Table B- 3 Spare parts

Article	Article number	Comments
Bottom cover	6ES7615-0AC10-0AA0	-
Top cover	6ES7615-0AC10-1AA0	-
Spacer	6SL3064-1BB00-0AA0	-
Terminal kit • 3 x I/O connector for X122/X132/X142 • 1 x 24 V connector for X124 • 5 x DRIVE-CLiQ blanking cover	6SL3064-2CB00-0AA0	-

Decommissioning

C

C.1 Introduction

The following appendix has information on how you can decommission components of the SIMATIC Drive Controller in an orderly manner. Decommissioning is necessary if the components have reached the end of their service life.

Decommissioning includes environmentally sound disposal and secure removal of all digital data of electronic components with storage medium.

C.2 Securely removing data

Before disposing of components of the SIMATIC Drive Controller, you must securely delete all data from the storage media of these components.

NOTICE
Data misuse resulting from non-secure deletion of data Incomplete or non-secure deletion of data from data memories can result in data misuse by third parties. For this reason, ensure secure deletion of data from all storage media before disposing of the product.

To remove all the data from the data memories of the SIMATIC Drive Controller, first reset the SINAMICS Integrated and then the CPU (PLC) to the factory settings. For this purpose, use the "Factory reset" function, which will reset the SINAMICS Integrated or the CPU (PLC), as the case may be, to the delivery state. The function deletes all information that was stored internally.

Deleting data

For secure deletion of data from the SIMATIC Drive Controller and the SIMATIC Memory Card, follow these steps in the order given:

1. Establish an online connection to the CPU (PLC) and to the SINAMICS Integrated.
2. Open the online and diagnostics view of SINAMICS Integrated from the project context.
3. In the dialog box, select "Backup/Restore > Reset to factory settings" and then the "Start" button. Click "OK" in response to the confirmation prompt.
4. Open the online and diagnostics view of CPU (PLC) from the project context.
5. In the dialog box, select "Functions > Reset to factory settings". Before resetting, select the options shown in the figure. Select the option "Format memory card" only if the entire contents of the SIMATIC Memory Card are to be deleted.

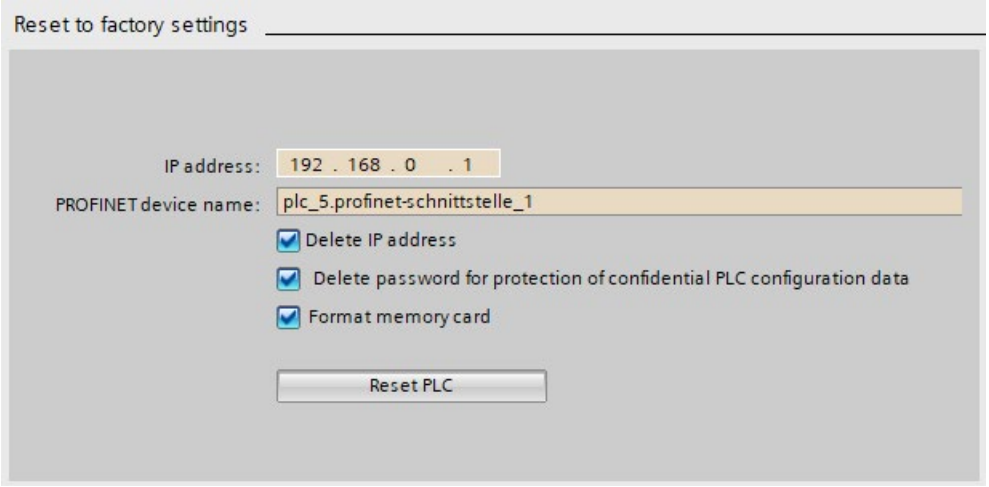

Figure C-1 Restore factory settings

Note

The factory setting of the SINAMICS Integrated must always be restored first. If the CPU (PLC) is factory reset first, an online connection to the SINAMICS Integrated will not be possible due to the routing information being absent.

Detailed information on resetting to factory settings can be found in the following sections:

- CPU reset to factory settings (Page 282)
- SINAMICS Integrated reset to factory settings (Page 285)

Result: All the data that was still in the data memories of the SIMATIC Drive Controller and the SIMATIC Memory Card was deleted. You can now hand over the components for disposal.

Note

If you no longer plan to use the SIMATIC Memory Card after formatting it, destroy it before disposing of it.

A secure destruction method is to shred the card to such a degree that it cannot be reconstructed. For this, you can also use a waste disposal service that specializes in data storage medium destruction.

C.3 Recycling and disposal

For environmentally friendly recycling and disposal of your old equipment, contact a certified electronic waste disposal company and dispose of the equipment according to the applicable regulations in your country.

Glossary

Accessible devices

Accessible devices are all devices connected to an interface of the programming device / PC that are turned on.

Automatic speed control, for example S120

Automatic speed control covers all elements and components for current and speed control of an electric drive.

Automation system

Programmable logic controller for the open-loop and closed-loop control of process chains in the process engineering industry and in manufacturing technology. The automation system consists of different components and integrated system functions according to the automation task.

Basic positioner (EPos)

SINAMICS converter function for calculating profiles for the position controller.

Baud rate

Baud rate is the symbol or modulation rate in data transmission. For example, if a symbol comprises 4 bits, 9600 bps are transmitted at a modulation rate of 2400 baud. For symbols with only two possible states (binary symbols), the baud rate is the same as the bit rate.

Bit memory

Bit memory is a component of the system memory of the CPU for saving intermediate results. It can be accessed in bit, byte, word or double word mode.

Booksize device

Booksize design of the components of a drive unit, suitable for installation side-by-side. Usually intended for the operation of multiple motors.

Bus

Joint transmission path to which all devices in a fieldbus system are connected; has two defined ends.

Bus cable connector

Physical connection between the bus node and the bus cable.

Code block

In SIMATIC S7, a code block is a block that contains a section of the STEP 7 user program. (in contrast to a data block, which contains only data)

Configuration

Systematic arrangement of the individual modules (configuration).

Connection plug

Physical connection between device and cable.

Consistent data

Data whose content belongs together and must not be separated is known as consistent data.

Control Unit

Converter component with automatic speed control function (e.g. CU320-2). With SIMOTION D, SINUMERIK NCUs and the SIMATIC Drive Controller, the Control Unit and controller are combined in one device as SINAMICS Integrated.

Controller extension

This component scales the number of drive controls in SIMOTION D4x5-2.

Counter

Counters are components of the system memory of the CPU. You can modify the content of the "counter cells" using STEP 7 instructions (e.g. count up/down).

CPU

The CPU contains the operating system and executes the user program. The user program is located on the SIMATIC Memory Card and is processed in the work memory of the CPU. The PROFINET interfaces on the CPU allow simultaneous communication with PROFINET devices, PROFINET controllers, HMI devices, programming devices, other controllers and other systems. The S7-1500 CPUs support operation as an IO controller and I-device. Similarly to the PROFINET interface, the PROFIBUS interface available on some of the S7-1500 CPUs allows communication with other devices. When the interface is used as PROFIBUS DP interface, the CPU on the PROFIBUS DP also assumes the role of a DP master.

Cross-PLC synchronous operation

This functionality allows you to create a master value source and a synchronous axis on different controllers.

Cycle control point

The cycle control point marks the end of a cycle and the start of the next cycle. The cycle time statistics and monitoring of the configured maximum cycle time start at the cycle control point.

Once the cycle control point has been reached, the CPU writes the process image output to the output modules, reads the state of the inputs in the input modules and then executes the first cyclic OB.

Cycle time

The cycle time represents the time a CPU requires to execute the user program once.

Cyclic interrupt

You can find relevant information in the entry "Interrupt, cyclic".

Data block

Data blocks (DBs) are data areas in the user program that contain user data. There are global data blocks, which can be accessed from all code blocks, and instance data blocks, which are assigned to a specific FB call.

Device

A device can send, receive or amplify data via the bus, e.g. IO device via PROFINET IO.

Device names

Before an IO device can be addressed by an IO controller, it must have a device name. This approach was chosen for PROFINET because names are easier to administer than complex IP addresses.

In its delivery state, an IO device has no device name. An IO device can only be addressed by an IO controller – for example for transferring configuration data (including the IP address) during startup, or for user data exchange during cyclic operation – after it has been assigned a device name with the PG/PC.

Diagnostic buffer

The diagnostic buffer is a battery-backed memory area in the CPU where diagnostic events are stored in their order of occurrence.

Diagnostics

Monitoring functions for the detection, localization, classification, display, and further evaluation of errors, faults, and alarms. They run automatically while the system is in operation. This increases the availability of systems by reducing commissioning times and downtimes.

Diagnostics interrupt

You can find relevant information in the entry "Interrupt, diagnostics".

Distributed I/O system

System with I/O modules that are configured on a distributed basis, at a large distance from the CPU controlling them.

DP

Distributed I/O

DP master

The DP master is a central component in the PROFIBUS DP data bus that exchanges data with its assigned distributed stations (slaves) in a defined, continually repeating message cycle.

DP slave

An I/O device acting as a passive node in PROFIBUS DP that reads in input information and sends output information to the I/O.

Drive Control Block (DCB)

Multi-instance block that is selected from a predefined block library in the DCC editor and is used to set the control functionality.

Drive Control Chart (DCC)

Allows the user to implement additional continuous, drive control and math functions using a set of function blocks ("Drive Control Blocks", DCB) in a function block library. These function blocks can be graphically interconnected using a configuration tool ("Drive Control Chart Editor", DCC editor).

Drive object

A drive object is a separate, discrete software functionality with its own parameters and in some cases also its own faults and warnings.

DRIVE-CLiQ

Abbreviation for Drive Component Link with IQ. This is a SINAMICS drive technology communication system for connecting the various drive components such as Control Unit, Line Modules, Motor Modules, motors and speed/positioning encoders. In terms of hardware, DRIVE-CLiQ is based on the Industrial Ethernet standard with twisted-pair lines. In addition to the transmit and receive signals, the 24 V voltage supply is also provided via the DRIVE-CLiQ cable.

Equipotential bonding

Electrical connection (potential equalization conductor) that brings the bodies of electrical equipment and other conductive bodies to the same or almost the same potential, in order to prevent disruptive or dangerous voltages between these bodies.

Failsafe module

Collective name for failsafe inputs and outputs available in SIMATIC S7 for integration into F-systems.

Firmware update

Upgrade of firmware for the CPU and modules (interface modules, I/O modules etc.), for example after function extensions, to the newest firmware version (update).

Forcing

Preassigning to variables in a user program fixed values that cannot subsequently be modified or overwritten by the program.

Free function blocks (FBLOCKS)

Software blocks in a SINAMICS converter that are not active in the factory settings and can be activated and interconnected as required for additional control and math instructions. Free function blocks allow you to implement additional control and math instructions (for example logic functions, math functions, time functions, and storage functions).

Function

A function (FC) is a code block with no static data. A function allows you to pass parameters in the user program. Functions are thus suited for programming frequently recurring complex functions, such as calculations.

Function block

A function block (FB) is a code block with static data. An FB allows you to pass parameters in the user program. Function blocks are thus suited for programming frequently recurring complex functions, such as closed-loop controls or operating mode selection.

Functional ground

The functional ground is a low-impedance current path between electric circuits and ground. It is not intended as a protective measure but rather, for example, for improvement of interference immunity.

Ground

Conductive ground whose electrical potential can be set to zero at any point.

All interconnected, inactive parts of a piece of equipment that cannot accept any dangerous contact voltage, even in the event of a fault.

Ground

Conductive ground whose electrical potential can be set to zero at any point.

All interconnected, inactive parts of a piece of equipment that cannot accept any dangerous contact voltage, even in the event of a fault.

Grounding

Grounding means connecting an electrically conductive part to a grounding electrode by means of a grounding system.

GSD file

The Generic Station Description file contains all properties of a PROFINET or PROFIBUS device that are necessary for its configuration.

Handling system

A device that manages the flow of material from or to a workstation, in other words that is used for handling.

Hardware interrupt

You can find relevant information in the entry "Interrupt, process".

I/O modules

All modules that can be operated with a CPU or an interface module.

Identification data

Information that is saved in modules, and that supports the user in reviewing the system configuration and locating hardware changes.

Instance data block

Each call of a function block in the STEP 7 user program is assigned a data block, which is automatically generated. Values of the input, output and in/out parameters, as well as local block data, are stored in the instance data block.

Interrupt

The operating system of the CPU distinguishes between various priority classes that control the execution of the user program. These priority classes include, for example, hardware interrupts. When an interrupt occurs, the operating system automatically calls an assigned organization block. The user can program the desired reaction in the organization block, for example in an FB.

Interrupt, cyclic

The CPU generates a cyclic interrupt periodically within a parameterizable time grid and then processes the corresponding organization block.

Interrupt, hardware

A hardware interrupt is triggered by interrupt-triggering modules due to a certain event in the process. The hardware interrupt is signaled to the CPU. The CPU then processes the assigned organization block according to the priority of this interrupt.

Interrupt, time-delay

The time-delay interrupt is one of the program execution priority classes of SIMATIC S7. It is generated after expiration of a timer started in the user program. The CPU then processes the corresponding organization block.

Interrupt, time-of-day

The time-of-day interrupt is one of the program execution priority classes of SIMATIC S7.. It is generated based on a defined date (or daily) and time (e.g. 9:50 or every hour, every minute). The CPU then processes the corresponding organization block.

Interrupt, update

When it receives an update interrupt, the operating system calls the update interrupt OB. This may happen if you changed a parameter on a slot of a device.

IP address

The IP address is made up of four decimal numbers with a range of values from 0 through 255. The decimal numbers are separated by a dot (for example 192.162.0.0).

The IP address consists of the following:

- Address of the network
- Address of the device (PROFINET interface of the IO controller/IO device)

IRT, isochronous real time

A synchronized transmission method for the cyclic exchange of I/O data between PROFINET IO devices.

A fixed bandwidth within the send clock is reserved for the I/O data, ensuring that the I/O data is exchanged at equal intervals.

Isochronous mode

Signal acquisition, transmission and processing linked to a specified cycle.

Line Module

Self-commutated infeed/regenerative feedback unit for generating a controlled DC-link voltage, which decouples connected Motor Modules from the line voltage and thus prevents line voltage fluctuations within the permitted line tolerances from affecting the motor voltage.

Load current supply

Supply of the module's input and output electric circuits.

MAC address

Every PROFINET device is assigned a worldwide unique device identification before it leaves the factory. This 6-byte long device identification is the MAC address. Each interface and also each port has its own MAC address.

The MAC address is divided into:

- 3-byte manufacturer identification
- 3-byte device identification (consecutive number)

The MAC address is generally shown on the front of the device.
Example: 08-00-06-6B-80-C0

Motion control

Siemens AG product family for drives that control motion. Covers all functions and components for coordination in terms of position and time for machine components in processing machinery.

Motor Module

Converter component (inverter) that provides power for one or two connected motors.

NTP

The Network Time Protocol (NTP) is a standard for synchronizing clocks in automation systems via Industrial Ethernet. NTP uses the UDP connectionless network protocol.

Onboard I/O

The digital onboard I/O of the SIMATIC Drive Controller is designed for connecting sensors and actuators. Connection is over the interfaces X122, X132 and X142.

The digital inputs and digital inputs/outputs at X122 and X132 interfaces are assigned to SINAMICS Integrated. Through configuration (frames 39x), you can, however, also use the digital inputs and digital inputs/outputs (X122/X132) for the CPU. The digital input/outputs at interface X142 are assigned to the CPU of the SIMATIC Drive Controller and that assignment is fixed.

Operating mode

The operating mode is a defined manner in which a device or system is able to execute its function (for example continuous duty, short-time duty or periodic duty).

Operating states

Operating states describe the behavior of a single CPU at a specific time.

Organization block

Organization blocks (OBs) form the interface between the operating system of the CPU and the user program. The organization blocks determine the order in which the user program is executed.

Parameter

- Tag of a STEP 7 code block:
- Tag for setting the behavior of a module (one or more per module). In as-delivered state, every module has an appropriate basic setting, which you can change by configuring in STEP 7. There are static and dynamic parameters

Parameters, dynamic

In contrast to static parameters, you can change dynamic parameters of modules during operation by calling an SFC in the user program, e.g. limit values of an analog input module.

Parameters, static

In contrast to dynamic parameters, you cannot change static parameters of modules with the user program but only by configuring in STEP 7, e.g. input delay of a digital input module.

PELV

Protective **E**xtra **L**ow **V**oltage = grounded extra low voltage with safe isolation

PLCopen

With these standardized instructions, you can use OPC UA client functions executed in an S7-1500 CPU in your user program.

Process image (I/O)

The CPU transfers the values from the input and output modules to this memory area. At the start of the cyclic program the signal states of the input modules are transmitted to the process image of the inputs. At the end of the cyclic program the process image of the outputs is transmitted as signal state to the output modules.

Product version (PV) = Function version (FV)

The product version or function version provides information on the hardware version of the module.

PROFIBUS

PROcess FIeld BUS, process and fieldbus standard that is specified in IEC 61158 Type 3. It specifies functional, electrical and mechanical characteristics for a bit-serial field bus system.

PROFIBUS supports the protocols DP (= Distributed I/O), FMS (= Fieldbus Message Specification), PA (= Process Automation), or TF (= Technological Functions).

PROFIdrive Integrated

PROFIBUS profile specified by the PNO (PROFIBUS user organization) for speed-controlled and position-controlled drives.

PROFINET

PROcess FIeld NETwork, open Industrial Ethernet standard which further develops PROFIBUS and Industrial Ethernet. A cross-manufacturer communication, automation, and engineering model defined by PROFIBUS International e.V. as an automation standard.

PROFINET IO

Communication concept for the realization of modular, distributed applications within the scope of PROFINET.

PROFINET IO controller

Device used to address connected I/O devices (for example distributed I/O systems). This means that: The IO controller exchanges input and output signals with assigned IO devices. Often, the IO controller is the CPU on which the automation program runs.

PROFINET IO device

Distributed field device that can be assigned to one or more IO controllers (for example distributed I/O system, valve terminals, frequency converters, switches).

Reference potential

Potential from which the voltages of the circuits involved are observed and/or measured.

Restart

During a warm restart, all non-retentive bit memory is deleted and non-retentive DB contents are reset to the initial values from load memory. Retentive bit memory and retentive DB contents are retained. Program execution begins at the call of the first startup OB.

Retentivity

A memory area whose content is retained after power failure and after a STOP to RUN transition is retentive. The non-retentive area of the bit memory, timers and counters is reset after power failure and after a STOP to RUN transition.

RT, real-time

A transmission method for the cyclic exchange of I/O data between PROFINET devices. The transmission method guarantees that the I/O data is transferred at deterministic intervals.

Runtime error

Error that occurs during execution of the user program in the automation system (thus not in the process).

SELV

Safety **E**xtra **L**ow **V**oltage = Safety extra-low voltage

Sensor Module

Component for implementing encoder interfaces on DRIVE-CLiQ.

SIMATIC Drive Controller

The SIMATIC Drive Controller is a drive-based controller in the SIMATIC S7-1500 range.

SIMATIC Memory Card

External memory card for memory expansion in SIMATIC PLC.

SIMATIC Safe Kinematics

Safe zones and velocity monitoring of kinematics motions.

SIMATIC Safety Integrated

Coordinated product line, for example safety-related low-voltage switchgears and sensors, failsafe PLC, CNC controllers and variable-speed drives, which can be used in automation and drive technology to achieve the required plant security.

SINAMICS Integrated

SINAMICS Integrated is the integrated automatic speed control for controller platforms on which CPU and SINAMICS automatic speed control are combined in one hardware product – for example on the SIMATIC Drive Controller.

SINAMICS S210 servo drive system

A new servo drive system with five performance classes from 50 to 750 watts. The converter already has an integrated safety function.

SINAMICS Startdrive

TIA Portal option package for intuitive integration of SINAMICS drives in automation.

SINAMICS Technology Extension (TEC)

Software component that is installed as an additional technology function and extends the functionality of the SINAMICS drive system.

Slave station

A slave may only exchange data with a master after being requested to by the master.

SNMP

SNMP (Simple Network Management Protocol) is the standardized protocol for performing diagnostics on and assigning parameters to the Ethernet network infrastructure.

In the office setting and in automation engineering, devices from a wide range of vendors on the Ethernet support SNMP.

SNMP-based applications can be operated on the same network in parallel to applications with PROFINET.

The scope of supported functions varies depending on the device type. For example a switch has more functions than a CP 1616.

Switch

PROFIBUS is a linear network. The communication nodes are linked by means of a passive cable - the bus.

By contrast, Industrial Ethernet consists of point-to-point connections: Each communication node is directly connected to exactly one communication node.

If a communication node is linked to several communication nodes, this communication node is connected to the port of an active network component - the switch. Additional communication nodes (including switches) can now be connected to the other ports of the switch. The connection between a communication node and the switch remains a point-to-point connection.

A switch thus has the task of regenerating and distributing received signals. The switch "learns" the Ethernet address(es) of a connected PROFINET device or additional switches and only forwards those signals that are intended for the connected PROFINET device or switch.

A switch has a specific number of connections (ports). You connect at most one PROFINET device or additional switch to each port.

Technology I/Os

Designation for inputs and outputs with hardware-level signal processing, for example for rapid counting, measuring or time-controlled output of signals. Technology I/Os are provided by the ET 200SP/MP technology modules, for example. CPUs with integrated inputs and outputs are also available.

Technology object

A technology object supports you in the configuration and commissioning of a technological function.

The properties of real objects are represented by technology objects in the controller. Real objects include controlled systems and drives.

The technology object contains all data of the real object required for its open-loop or closed-loop control, and it signals back status information.

Terminal Module

Component for implementing inputs and outputs on DRIVE-CLiQ.

TIA Portal

Totally Integrated Automation Portal

High-performance engineering framework for the most important components of an automation project, such as controller, HMI, drives and distributed I/O. Engineering with TIA Portal offers:

- Configuration and programming
- Shared data management
- Uniform operating concept

The TIA Portal simplifies integrated engineering in all configuration phases of a plant.

Time-delay interrupt

You can find relevant information in the entry "Interrupt, delay".

Time-of-day interrupt

You can find relevant information in the entry "Interrupt, time".

Timer

Timers are components of the system memory of the CPU. The operating system automatically updates the content of the "timer cells" asynchronously to the user program. STEP 7 instructions define the precise function of the timer cell (for example on-delay) and trigger its execution.

U/f control

Speed control with output voltage setting on the basis of a V/f characteristic.

Update interrupt

You can find relevant information in the entry "Interrupt, update".

User program

SIMATIC differentiates between the operating system of the CPU and user programs. The user program contains all instructions and declarations as well as data for the signal processing that enable a plant or process to be controlled. The user program is assigned to a programmable module (e.g. CPU) and can be structured in smaller units.

Value status

The value status is additional binary information of a digital input or output signal. The value status is entered simultaneously with the process signal in the process image input and provides information about the validity of the signal.

Vector control

Speed control with sublevel closed-loop control of flow and torque.

Warm restart

You can find relevant information in the entry "Restart".

Index

2

24 V DC supply, 82

A

Access protection with the user program, 201
Accessible devices
    Firmware update, 275
Accessories, 312
Addressing, 115
    Basics, 115
Approvals, 301
    CE, 301
    cULus, 302
    Korea, 302
Asynchronous instructions, 186

C

Cable shield
    Shield bus, 98
    Shield connection, 98
CE approval, 301
China RoHS, 302
Commissioning, 215, 250
    First power-on, 221
    First power-on, requirements, 221
    Identification data, 248, 250
    Identification data - record structure, 250
    Removing/inserting SIMATIC memory card, 217
Comparison, 309
Components
    open, 76
Configuration control, 208, 212
Configuration control for IO systems, 208
Configuring, 99, 99
Connecting
    PROFIBUS DP, 90
    PROFINET, 90
Control interface, 152
CPU
    Backup/restore content, 237
    Memory reset, 233
    Programming, 183
    Reading out service data, 296
    Reset to factory settings, 282
C-Tick, 302
cULus approval, 302

D

Data block editor, 294
Degree of protection IP20, 308
Device replacement, 105
Digital inputs/outputs, 91
Display, 257
DRIVE-CLiQ
    Firmware update, 280
    Rules for wiring, 93

E

EAC, 302
Electromagnetic compatibility (EMC), 303
EMC (Electromagnetic compatibility), 303
    Disturbances, 303
EMC guidelines, 82
EMERGENCY STOP concept, 81
EMERGENCY STOP devices, 81

F

Factory settings, 282
FAQ
    Emergency address, 238
    Formatting a SIMATIC Memory Card, 261
    Removing a SIMATIC Memory Card, 260
    Repairing the SIMATIC Memory Card, 261
FAQs
    Firmware update, 279
    Removing a SIMATIC memory card, 220
F-CPU, 178
Feedback interface, 153
Firmware update, 272
    Card, 262
Force table, 293
F-system, 286
FUNCT, 263, 297
FUNCT button, 263, 297

H

Hardware
    Components, 73
    Configuration, 73
Hardware requirements, 68

I

Identification data, 248
    Record structure, 250
IEC 60204, 81
Installation, 78
Instructions
    GetSMCinfo, 268
Insulation, 307
Interfaces, 60

K

Know-how protection, 202
Korea certification, 302

L

LED flash test, 294
Licenses, 57
Licensing, 229
Lightning protection, 82
Line voltage, 81
LSINATopo library, 211

M

Maintenance, 289
    Firmware update, 272
    Reading out service data, 296
    Reset to factory settings, 282
    Test functions, 290
Maximum cycle time, (Cycle monitoring time), (Cycle monitoring time)
Memory reset
    Automatic, 234
    Basics, 233
    Manual, 235
Modular machine, 209
Multiple use IO systems, 208

O

OBs, 183
    Event source, 185
    Priorities, 183
    Priorities and runtime behavior, 185
    Queue, 183
    Triggers, 183
Openness, 214
Operating conditions, 66
Operating states
    Operating state transitions, 227
    RUN, 226
    Setting startup behavior, 225
    STARTUP, 224
    STOP, 226
Option handling, (See Configuration control)

P

Parameter assignment, 99
    DI operating mode, 124
    Digital inputs/outputs, 121
    DQ operating mode, 126
    Event/period duration measurement operating mode, 143
    Oversampling DI operating mode, 138
    Oversampling DQ, 140
    PWM operating mode, 149
    Timer DI operating mode, 127
    Timer DQ operating mode, 131
Password provider, 202
Performance classes, 25
Performance features, 25
PFD values, 180
PFH values, 180
PID control, 53
Plant components, 31
PLC tag table, 294
Pollution degree, 308
Potential equalization, 96
Power supply
    Safety rules, 81
Process image
    Inputs and outputs, 119
Process image partition
    Updating in the user program, 120
PROFIsafe V2, 179
Program card, 262

Project
Adding a SIMATIC Drive Controller, 101
Creating, 101
Display, 101
Grouping, 103
Project tree, 108
PRONETA, 63
Protection, 198, 203, 206, 207
Access levels, 198
Behavior of a password-protected CPU, 201
Copy protection, 206
Know-how protection, 203
Mechanical locking, 207
Protection class, 307
Protection from external electrical effects, 82
Protection functions, 44
Protective conductor connection, 94

R

rated voltage, 308
RCM, 302
Reading out service data, 296
Repair, 289
Requirements
Hardware, 100
Software, 100
Retentive data, 261

S

Safety mode, 178
Scaling, 33
Security, 44
Shipping conditions, 304
SIMATIC Automation Tool, 64
SIMATIC Memory Card, 266
Basics, 255
Possible applications, 266
Repairing, 261
SIMATIC Safe Kinematics, 41
SIMATIC Safety Integrated, 40
SIMOTION D4x5-2, 309
SINAMICS
Digital inputs/outputs, 156
SINAMICS Integrated
Functions, 57
NVRAM, 240
Operating states, 228
reset to factory settings, 285
Time-of-day synchronization, 244
SINETPLAN, 63
Software requirements, 69
Spare parts, 314
Specific application, 80
Standard machine project, 208
Standard mode, 178
Standards, 301
Storage conditions, 304

T

Team Engineering, 254
Technical specifications
Electromagnetic compatibility (EMC), 303
Shipping and storage conditions, 304
Standards and Approvals, 301
Technology functions, 52
Technology objects, 51
Temperature monitoring, 288
Test functions, 290
Test voltage, 307
TIA Portal, 62
Openness, 214
TIA Portal
TIA Selection Tool, 63
Time-of-day synchronization, 242
Trace, 295
Trace recordings, 267

W

Web server, 48, 182, 300

SIEMENS

SIMATIC

SIMATIC Drive Controller

Product Information

Scope

Scope of validity of the product information

This product information supplements the documentation for the SIMATIC Drive Controller and takes precedence over our system manuals, function manuals and equipment manuals. The statements in this product information are valid for the following SIMATIC Drive Controllers:

SIMATIC Drive Controller	Article number
CPU 1504D TF	6ES7615-4DF10-0AB0
CPU 1507D TF	6ES7615-7DF10-0AB0

You might find an updated product information on the SIMATIC Drive Controller on the Internet (https://support.industry.siemens.com/cs/ww/en/view/109772684)

The SIMATIC Drive Controller CPU has technology functions such as a modular S7-1500T CPU. You can find additional information on the technology functions in the Product Information for SIMATIC S7-1500 Motion Control on the Internet (https://support.industry.siemens.com/cs/de/en/view/109794046).

Security information

Siemens provides products and solutions with industrial security functions that support the secure operation of plants, systems, machines and networks.

In order to protect plants, systems, machines and networks against cyber threats, it is necessary to implement – and continuously maintain – a holistic, state-of-the-art industrial security concept. Siemens' products and solutions constitute one element of such a concept.

Customers are responsible for preventing unauthorized access to their plants, systems, machines and networks. Such systems, machines and components should only be connected to an enterprise network or the internet if and to the extent such a connection is necessary and only when appropriate security measures (e.g. firewalls and/or network segmentation) are in place.

For additional information on industrial security measures that may be implemented, please visit (https://www.siemens.com/industrialsecurity).

Siemens' products and solutions undergo continuous development to make them more secure. Siemens strongly recommends that product updates are applied as soon as they are available and that the latest product versions are used. Use of product versions that are no longer supported, and failure to apply the latest updates may increase customers' exposure to cyber threats.

To stay informed about product updates, subscribe to the Siemens Industrial Security RSS Feed visit (https://www.siemens.com/cert).

© Siemens AG 2019 - 2022. All rights reserved

Corrections to the Communication Function Manual, edition 11/2022

OPC UA - Global Discovery Push (GDS Push) function: Update problems for downloaded certificates

Under certain conditions, the CPU does not register a downloaded certificate (e.g. a new OPC UA server certificate, or an updated web server certificate). A certificate error may be signaled during a connection attempt in this case.

The update problem occurs only when the CPU still manages certificates that were provided during runtime (GDS Push) and when certificates are then transferred by loading the hardware configuration to the CPU. The certificates loaded via the hardware configuration are not registered by the CPU under these conditions.

Examples:

- You have initially enabled the GDS Push function and selected the option "... use certificates provided during runtime" for the certificate settings and loaded this configuration. The required server certificate as well as the trust lists/CRLs are provided exclusively via GDS Push methods in this case.
- You then change the hardware configuration by adding new certificates or changing existing certificates (e.g. web server certificates or certificates for secure PG/HMI communication). During loading, you have **not** deleted existing certificates provided during runtime so that you can use them later.
  Result: The newly loaded server certificates (e.g. web server certificates or certificates for secure PG/HMI communication) are not registered by the CPU.
- The problem also occurs when you have disabled the GDS Push function and selected the option "... use configured and downloaded certificates" for the certificate settings and loaded this configuration. During loading, you have **not** deleted existing certificates provided during runtime so that you can use them later.
  Result: The newly loaded OPC UA server certificate is not registered by the CPU.

Solution: When the CPU still has certificates that were provided during runtime and you want to transfer new/changed certificates by loading the hardware configuration to the CPU, proceed as outlined below:

- After loading the configuration, perform a "Memory reset" or restart the CPU (POWER OFF > POWER ON). After these measures, the CPU reorganizes the loaded configuration and uses the current certificates.

OPC UA server: Change in behavior when using multi-dimensional arrays in a UDT

From firmware version V2.9.4 onwards, S7-1500 CPUs code multi-dimensional arrays within structures according to OPC UA specification V1.04. CPUs with older firmware versions code the corresponding structures in another form. If you have used multi-dimensional arrays in structures for CPUs with older firmware versions and are upgrading to the latest firmware version, then you must modify your client programs accordingly.

Siemens AG
Digital Industries
Postfach 48 48
90026 NÜRNBERG
GERMANY

SIMATIC Drive Controller
A5E48022408-AJ, 11/2022

SIEMENS

SIMATIC

S7-1500

Product information on the S7-1500/1500T Motion Control documentation

Product Information

Introduction

Scope of validity of the product information

This Product Information supplements the S7-1500/S7-1500T Motion Control documentation and takes precedence over the Function Manuals and Equipment Manuals.

- S7-1500/S7-1500T Motion Control Overview V7.0 as of STEP 7 V18
- S7-1500/S7-1500T Axis functions V7.0 as of STEP 7 V18
- S7-1500/S7-1500T Measuring input and cam functions V7.0 as of STEP 7 V18
- S7-1500/S7-1500T Synchronous operation functions V7.0 as of STEP 7 V18
- S7-1500T Kinematics functions V7.0 as of STEP 7 V18
- S7-1500/S7-1500T Motion Control alarms and error IDs V7.0 as of STEP 7 V18

You can find additional information on the S7-1500 CPUs in the Product Information for the S7-1500/ET 200MP documentation (https://support.industry.siemens.com/cs/ww/en/view/68052815).

You can find additional information on the SIMATIC Drive Controller in the Product Information for the SIMATIC Drive Controller (https://support.industry.siemens.com/cs/ww/en/view/109772684).

You can find additional information on the S7-1500 fail-safe CPUs in the Product Information for the F-CPUs (https://support.industry.siemens.com/cs/ww/en/view/109478599).

Safety instructions

Siemens provides products and solutions with industrial security functions that support the secure operation of plants, systems, machines and networks.

In order to protect plants, systems, machines and networks against cyber threats, it is necessary to implement – and continuously maintain – a holistic, state-of-the-art industrial security concept. Siemens' products and solutions constitute one element of such a concept.

Customers are responsible for preventing unauthorized access to their plants, systems, machines and networks. Such systems, machines and components should only be connected to an enterprise network or the internet if and to the extent such a connection is necessary and only when appropriate security measures (e.g. firewalls and/or network segmentation) are in place.

For additional information on industrial security measures that may be implemented, please visit (https://www.siemens.com/industrialsecurity).

Siemens' products and solutions undergo continuous development to make them more secure. Siemens strongly recommends that product updates are applied as soon as they are available and that the latest product versions are used. Use of product versions that are no longer supported, and failure to apply the latest updates may increase customers' exposure to cyber threats.

To stay informed about product updates, subscribe to the Siemens Industrial Security RSS Feed visit (https://www.siemens.com/cert).

© Siemens AG 2021 - 2022. All rights reserved
A5E50859348-AC, 11/2022

Additions to the S7-1500/1500T Motion Control documentation

Axis functions

Override response of "MC_SetAxisSTW" jobs V7

- A new "MC_SetAxisSTW" job does not abort an active Motion Control job.
- An "MC_SetAxisSTW" job is aborted by another "MC_SetAxisSTW" job.
- An "MC_SetAxisSTW" job is aborted during disabling of the technology object ("MC_Power.Enable" = FALSE, "MC_Power.Busy" = TRUE).

Technology alarm 109

Alarm response TO[1]: Remove enable

Alarm response Kin[2]: -

Restart: Required

Alarm text	Validity		Solution
	TO[1]	Kin[2]	
Configuration error.	✓	-	
Neg. hardware limit switch.	✓	-	• Connect a suitable device. • Check the device (I/Os). • Check the topology of the project. • Compare the device configuration and the configuration of the technology object. • Contact customer support.
Pos. hardware limit switch.	✓	-	
Reference cam "Active homing".	✓	-	
Reference cam "Passive homing".	✓	-	
Enable bit for the analog drive interface.	✓	-	
DriveReady bit of the analog drive interface.	✓	-	
Measurement sensing input is faulty.	✓	-	
Cam output faulty.	✓	-	
Data exchange with the drive.	✓	-	• Check whether telegram 750 has been created. • Check the configuration of the logical address.

[1] Applies to all technology objects with the exception of the kinematics technology object.

[2] Applies to the kinematics technology object only.

Synchronous operation functions

No entries available.

Kinematics functions

Jogging kinematics axes in MCS

WARNING

Limits of the joint traversing range are not taken into consideration in the MCS

When you move the kinematics axes in the kinematics control panel in the MCS, the limits that have been set for the joint traversing ranges are not taken into consideration for the joints.

In the case of kinematics without mechanically coupled axes, you can limit the joint position to the operating range by using software limit switches. The software limit switches must be set correctly, and existing offsets or the inverted traversing direction of the joints must be taken into consideration.

In the case of kinematics with mechanically coupled axes, you cannot completely limit the joint position to the operating range using the software limit switches. Therefore, you have to take the configured limits for the joint traversing ranges into consideration yourself. Make sure that no unwanted positions are approached and that no collisions occur.

Jog joints in the JCS

For coupled axes with coupling factor ≠ 1, the jogging of joints in the JCS can result in an unwanted position change of the coupled axes.

Traversing coupled axis with sPTP movement

For coupled axes with coupling factor ≠ 1, the traversing of joints in the JCS with an sPTP movement can result in compensation movements of the coupled axes.

Kinematic movements with cyclic override change

If you are traversing a kinematic system with cyclically adjusted override values, the error detection 16#8001 can occur at the motion control instructions without displaying a technology alarm.

In this case, reload the project into the CPU. Adjust the override value only if value changes are necessary.

Kinematic standstill after speed override = 0.0

If you move a kinematic system via motion control jobs and set the speed override to the value "0.0", the kinematic system comes to a standstill. In rare cases, the kinematics can no longer be moved afterwards.

In this case, switch the CPU off and on again.

Siemens AG
Digital Industries
Postfach 48 48
90026 NÜRNBERG
GERMANY

Product information on the S7-1500/1500T Motion Control documentation
A5E50859348-AC, 11/2022

SIEMENS

Edition 01/2023

SYSTEM MANUAL

SIMATIC

S7-1500

S7-1500R/H redundant system

support.industry.siemens.com

SIEMENS

SIMATIC

S7-1500
S7-1500R/H redundant system

System Manual

Introduction 1
Safety information 2
New properties/functions 3
System overview 4
Application planning 5
Installation 6
Wiring 7
Configuration 8
Basics of program execution 9
Protection 10
Commissioning 11
Display 12
Maintenance 13
Test and service functions 14
Technical specifications 15
Dimension drawings A
Accessories/spare parts B
Decommissioning C

01/2023
A5E41814787-AE

Legal information

Warning notice system

This manual contains notices you have to observe in order to ensure your personal safety, as well as to prevent damage to property. The notices referring to your personal safety are highlighted in the manual by a safety alert symbol, notices referring only to property damage have no safety alert symbol. These notices shown below are graded according to the degree of danger.

⚠ DANGER
indicates that death or severe personal injury **will** result if proper precautions are not taken.

⚠ WARNING
indicates that death or severe personal injury **may** result if proper precautions are not taken.

⚠ CAUTION
indicates that minor personal injury can result if proper precautions are not taken.

NOTICE
indicates that property damage can result if proper precautions are not taken.

If more than one degree of danger is present, the warning notice representing the highest degree of danger will be used. A notice warning of injury to persons with a safety alert symbol may also include a warning relating to property damage.

Qualified Personnel

The product/system described in this documentation may be operated only by **personnel qualified** for the specific task in accordance with the relevant documentation, in particular its warning notices and safety instructions. Qualified personnel are those who, based on their training and experience, are capable of identifying risks and avoiding potential hazards when working with these products/systems.

Proper use of Siemens products

Note the following:

⚠ WARNING
Siemens products may only be used for the applications described in the catalog and in the relevant technical documentation. If products and components from other manufacturers are used, these must be recommended or approved by Siemens. Proper transport, storage, installation, assembly, commissioning, operation and maintenance are required to ensure that the products operate safely and without any problems. The permissible ambient conditions must be complied with. The information in the relevant documentation must be observed.

Trademarks

All names identified by ® are registered trademarks of Siemens AG. The remaining trademarks in this publication may be trademarks whose use by third parties for their own purposes could violate the rights of the owner.

Disclaimer of Liability

We have reviewed the contents of this publication to ensure consistency with the hardware and software described. Since variance cannot be precluded entirely, we cannot guarantee full consistency. However, the information in this publication is reviewed regularly and any necessary corrections are included in subsequent editions.

Siemens AG
Digital Industries
Postfach 48 48
90026 NÜRNBERG
GERMANY

A5E41814787-AE
Ⓟ 02/2023 Subject to change

Copyright © Siemens AG 2018 - 2023.
All rights reserved

Table of contents

1 Introduction ... 9

1.1 S7-1500R/H Documentation Guide ... 11
1.1.1 Information classes S7-1500R/H ... 11
1.1.2 SIMATIC Technical Documentation ... 13

2 Safety information ... 15

2.1 Security information ... 15

2.2 General safety instructions ... 16
2.2.1 Warnings in this document ... 16
2.2.2 Safety-related symbols ... 16
2.2.2.1 Devices without explosion protection ... 16
2.2.2.2 Devices with explosion protection ... 17
2.2.3 Intended use ... 18
2.2.4 Changes to the device and spare parts ... 18
2.2.5 Target group and personnel qualifications ... 19
2.2.6 Personal protective equipment ... 19
2.2.7 Open Source Software ... 20
2.2.8 Safe working ... 21
2.2.8.1 Working on electrical parts ... 21
2.2.9 Residual risks ... 21
2.2.9.1 Live parts ... 21
2.2.9.2 Conductive pollution ... 22
2.2.9.3 Laser radiation ... 22
2.2.9.4 Overheating ... 23
2.2.9.5 Unsafe operating states ... 23
2.2.10 Behavior in case of emergency ... 23
2.2.11 Material damage ... 24
2.2.11.1 Transport and storage ... 24
2.2.11.2 Installation and connection ... 24

3 New properties/functions ... 25

4 System overview ... 30

4.1 What is the S7-1500R/H redundant system? ... 30
4.1.1 Areas of application ... 31
4.1.2 Operating principle of the S7-1500R/H redundant system ... 35
4.1.3 Plant components and automation levels ... 45
4.1.4 Scalability ... 46
4.1.5 Overview of features ... 51

4.2 Configuration ... 52
4.2.1 Structure of the S7-1500R redundant system ... 52
4.2.2 Structure of the S7-1500H redundant system ... 53
4.2.3 Configuration of a fail-safe system with SIMATIC S7-1500HF ... 54
4.2.4 Components ... 56

4.3 S7-1500 R/H-CPUs ... 58
4.3.1 Overview of the CPU technical specifications ... 59
4.3.2 Redundancy ... 60
4.3.3 Safety ... 69
4.3.4 Security ... 72
4.3.5 Diagnostics ... 74
4.3.6 Trace ... 75
4.3.7 PID control ... 77

4.4 Communication ... 80
4.4.1 System and device IP addresses ... 80
4.4.2 Integrated interfaces for communication ... 82
4.4.3 HMI devices ... 82

4.5 Power supply ... 83

4.6 Software ... 84
4.6.1 TIA Portal ... 84
4.6.2 SINETPLAN ... 85
4.6.3 PRONETA ... 85
4.6.4 SIMATIC Automation Tool ... 86

5 Application planning ... 87

5.1 Requirements ... 87

5.2 Restrictions compared to the S7-1500 automation system ... 91

5.3 Configuration versions ... 93
5.3.1 S7-1500R/H configuration with IO devices in the PROFINET ring ... 94
5.3.2 Configuration of S7-1500R/H with switches and additional line topology ... 96
5.3.3 Specific configuration variants for S7-1500H ... 98
5.3.3.1 Configuration of line topology with S2 devices and switch ... 98
5.3.3.2 Configuration of PROFINET rings with R1 devices ... 100
5.3.3.3 Configuration of PROFINET rings with R1 devices and switches with MRP interconnection ... 104
5.3.3.4 Configuration of PROFINET rings with R1 devices and Y-switch with S2 devices ... 106
5.3.3.5 Configuration of line topology with R1 devices ... 109
5.3.3.6 Line topology configuration with R1 devices and switches ... 111
5.3.3.7 Line topology configuration with R1 devices and Y-switch with S2 devices ... 113
5.3.3.8 Configuration of combined topology with S2 devices ... 116
5.3.3.9 Configuration of combined topology with R1 devices ... 117
5.3.3.10 Configuration without additional devices ... 120

5.4 Redundancy scenarios ... 121
5.4.1 Introduction ... 121
5.4.2 Failure of the primary CPU ... 122
5.4.3 Failure of the backup CPU ... 124
5.4.4 Failure of the PROFINET cable in the PROFINET ring ... 126
5.4.5 Specific redundancy scenarios for S7-1500H ... 128
5.4.5.1 Failure of a redundancy connection in S7-1500H ... 128
5.4.5.2 Failure of both redundancy connections in S7-1500H > 55 ms apart ... 130
5.4.5.3 Failure of both redundancy connections and the PROFINET cable in the PROFINET ring ... 132
5.4.5.4 Failure of the two PROFINET cables in the PROFINET ring on the backup CPU ... 134
5.4.5.5 Failure of an interface module in an R1 device in a PROFINET ring ... 135

5.4.5.6 Failure of the two PROFINET lines in PROFINET ring 1 at the primary CPU with R1 devices ... 138
5.4.5.7 Failure of both PROFINET lines between two R1 devices in a line topology ... 140
5.4.5.8 Failure of a PROFINET line between two S2 devices in a line topology ... 142

5.5 Failure scenarios ... 143
5.5.1 Failure of an IO device in the PROFINET ring ... 144
5.5.2 Failure of a switch (with additional line topology) in the PROFINET ring ... 146
5.5.3 Specific failure scenarios with S7-1500R ... 148
5.5.3.1 Two cable interruptions in the PROFINET ring in S7-1500R > 1500 ms apart ... 148
5.5.3.2 Two cable interruptions in the PROFINET ring in S7-1500R within ≤ 1500 ms ... 150
5.5.3.3 Failure of the primary CPU when IO devices have failed in the PROFINET ring ... 152
5.5.4 Specific failure scenarios with S7-1500H ... 155
5.5.4.1 Failure of both redundancy connections in S7-1500H ≤ 55 ms apart ... 155
5.5.4.2 Failure of one redundancy connection and the primary CPU in S7-1500H ... 157
5.5.4.3 Failure of the two PROFINET cables in the PROFINET ring at the primary CPU ... 159
5.5.4.4 Failure of the redundant system through safe state of the HF-CPUs ... 160
5.5.4.5 Failure of an interface module in an R1 device and of the PROFINET lines in two places of a PROFINET ring. ... 163
5.5.4.6 Failure of the primary CPU in PROFINET rings with R1, S2 and S1 devices ... 165
5.5.4.7 Failure of PROFINET lines in two places in a line topology with S2 devices ... 168

5.6 Hardware configuration ... 170

5.7 Using HMI devices ... 172

6 Installation ... 176

6.1 Basics ... 176

6.2 Installing the mounting rail ... 178

6.3 Installing the standard rail adapter ... 183

6.4 Installing a load current supply ... 189

6.5 Installing R/H-CPUs ... 191

7 Wiring ... 194

7.1 Rules and regulations for operation ... 194

7.2 Operation on grounded infeed ... 197

7.3 Electrical configuration ... 200

7.4 Wiring rules ... 201

7.5 Connecting the supply voltage ... 202

7.6 Connecting the load current supply ... 204

7.7 Connecting the CPU to the load power supply ... 205

7.8 Connecting interfaces for communication with S7-1500R ... 207
7.8.1 Connecting the PROFINET ring to S7-1500 ... 207

7.9 Connecting interfaces for communication with S7-1500H ... 210
7.9.1 Connecting redundancy connections (fiber-optic cables) ... 210
7.9.1.1 Synchronization modules for S7-1500H ... 210
7.9.1.2 Selecting fiber-optic cables ... 211
7.9.1.3 Installing fiber-optic cables ... 213

7.9.1.4 Connecting redundancy connections (fiber-optic cables) to S7-1500H ... 215
7.9.2 Connecting the PROFINET ring to S7-1500H ... 219
7.9.3 Connecting line topology to S7-1500H ... 222

8 Configuration ... 224

8.1 Requirements ... 224
8.2 Configuring R/H CPUs ... 224
8.3 Basic procedure for configuring the IO devices and the MRP roles ... 228
8.4 Configuring H-CPUs with PROFINET rings and R1 devices ... 233
8.5 Configuring other configuration variants ... 239
8.6 Display of the IO device assignments in STEP 7 ... 241
8.7 Project tree ... 243
8.8 Parameters ... 244
8.9 Process images and process image partitions ... 244
8.9.1 Process image - overview ... 244
8.9.2 Updating process image partitions in the user program ... 245

9 Basics of program execution ... 247

9.1 Programming the S7-1500R/H ... 247
9.2 Restrictions ... 250
9.3 Events and OBs ... 252
9.4 Special instructions for S7-1500R/H redundant systems ... 259
9.4.1 Disabling/enabling SYNCUP with the RH_CTRL instruction ... 259
9.4.2 Determining the primary CPU with "RH_GetPrimaryID" ... 262
9.5 Asynchronous instructions ... 263

10 Protection ... 270

10.1 Overview of the protection functions ... 270
10.2 Protection of confidential configuration data ... 270
10.3 Configuring access protection for the CPU ... 271
10.4 Using the display to set additional password protection ... 274
10.5 Using the user program to set additional access protection ... 275
10.6 Know-how protection ... 276
10.7 Protection by locking the CPU ... 280

11 Commissioning ... 281

11.1 Overview ... 281
11.2 Check before powering on for the first time ... 282
11.3 Commissioning procedure ... 283
11.3.1 Removing/plugging in SIMATIC memory cards ... 284
11.3.2 First power-on of the CPUs ... 287
11.3.3 CPU pairing ... 287

11.3.4 Redundancy IDs ... 289
11.3.5 Downloading projects to the CPUs ... 293

11.4 Operating and system states ... 301
11.4.1 Overview ... 301
11.4.2 STARTUP operating state ... 304
11.4.3 STOP operating state ... 307
11.4.4 SYNCUP operating state ... 307
11.4.5 RUN operating states ... 308
11.4.6 SYNCUP system state ... 309
11.4.7 System and operating state transitions ... 321
11.4.8 Loss of redundancy CPU ... 330
11.4.9 Displaying and changing the system state ... 334

11.5 CPU memory reset ... 336
11.5.1 Automatic memory reset ... 337
11.5.2 Manual memory reset ... 338

11.6 Backing up and restoring the CPU configuration ... 340

11.7 Time synchronization ... 345
11.7.1 Example: Configuring the NTP server ... 346

11.8 Identification and maintenance data ... 347
11.8.1 Reading out and entering I&M data ... 347
11.8.2 Record structure for I&M data ... 349
11.8.3 Example: Read out firmware version of the CPU with Get_IM_Data ... 351

12 Display ... 354

12.1 CPU display ... 354

13 Maintenance ... 363

13.1 Replacing components of the S7-1500R/H redundant system ... 363
13.1.1 Checking before replacing components ... 363
13.1.2 Replacing defective R/H-CPUs ... 366
13.1.3 Replacing defective redundancy connections ... 368
13.1.3.1 Replacing two defective PROFINET cables with S7-1500R ... 368
13.1.3.2 Replacing a defective redundancy connection with S7-1500H ... 369
13.1.3.3 Replacing defective synchronization module with S7-1500H ... 370
13.1.3.4 Replacing both defective redundancy connections with S7-1500H ... 371
13.1.4 Replacing defective PROFINET cables ... 372
13.1.5 Replacing a defective SIMATIC memory card ... 373
13.1.6 Replace defective load current supply PM ... 374
13.1.7 Replacing defective IO devices/switches ... 375

13.2 Replacing the display/front cover ... 376

13.3 Replacing the coding element at the power connector of the load current supply ... 378

13.4 Firmware update ... 380

13.5 Resetting CPUs to factory settings ... 385

13.6 Maintenance and repair ... 389

14 Test and service functions ... 390

14.1 Test functions ... 390

14.2 Reading out/saving service data ... 396
15 Technical specifications ... 398
15.1 Standards and Approvals ... 399
15.2 Electromagnetic compatibility ... 407
15.3 Shipping and storage conditions ... 409
15.4 Mechanical and climatic ambient conditions ... 410
15.5 Information on insulation tests, protection class, degree of protection and rated voltage ... 413
15.6 Use of S7-1500R/H in Zone 2 hazardous area ... 414
A Dimension drawings ... 415
B Accessories/spare parts ... 418
C Decommissioning ... 420
C.1 Introduction ... 420
C.2 Securely removing data ... 420
C.3 Recycling and disposal ... 422
Glossary ... 423
Index ... 437

Introduction

1

Purpose of the documentation

This documentation provides important information on the following aspects of the S7-1500R/H redundant system:

- An overview of the redundant system
- Configuration and failure scenarios
- How to install, wire and commission the redundant system
- Information on maintenance and fault correction

Basic knowledge required

General knowledge in the field of automation engineering is required to understand this documentation.

Validity of the documentation

This documentation applies to all products of the SIMATIC S7-1500R/H redundant system.

Note

In principle, all contents of the system manual for the H-CPU also apply to the fail-safe CPU (HF-CPU). Deviating contents and special features are described as supplements and marked with references.

When using HF-CPUs in safety mode, note the description of the F-system SIMATIC Safety Programming and Operating Manual SIMATIC Safety - Configuring and Programming (https://support.industry.siemens.com/cs/ww/en/view/54110126).

Conventions

STEP 7: In this documentation, "STEP 7" is used as a synonym for all versions of the configuration and programming software "STEP 7 (TIA Portal)".
Please also see the notes indicated as follows:

Note

A note contains important information on the product described in the documentation, on the handling of the product or on the section of the documentation to which particular attention should be paid.

Special information

Note

Important note for maintaining operational safety of your plant

Plants with safety-related features are subject to special operational safety requirements on the part of the operator. The supplier is also obliged to comply with special product monitoring measures. For this reason, we inform you in personal notifications about product developments and features that are (or could be) relevant to the operation of systems from a safety perspective.

You should subscribe to the corresponding notifications in order to obtain the latest information and to allow you to make any necessary modifications to your system.

Log on to Industry Online Support. Follow the links below and click on "Email on update" on the right-hand side in each case:

- SIMATIC S7-300/S7-300F (https://support.industry.siemens.com/cs/ww/en/ps/13751)
- SIMATIC S7-400/S7-400H/S7-400F/FH (https://support.industry.siemens.com/cs/ww/en/ps/13828)
- SIMATIC WinAC RTX (F) (https://support.industry.siemens.com/cs/ww/en/ps/13915)
- SIMATIC S7-1500/SIMATIC S7-1500F (https://support.industry.siemens.com/cs/ww/en/ps/13716)
- SIMATIC S7-1200/SIMATIC S7-1200F (https://support.industry.siemens.com/cs/ww/en/ps/13883)
- Distributed I/O (https://support.industry.siemens.com/cs/ww/en/ps/14029)
- STEP 7 (TIA Portal) (https://support.industry.siemens.com/cs/ww/en/ps/14340)

Recycling and disposal

For environmentally friendly recycling and disposal of your old equipment, contact a certified electronic waste disposal company and dispose of the equipment according to the applicable regulations in your country.

Industry Mall

The Industry Mall is the catalog and order system of Siemens AG for automation and drive solutions on the basis of Totally Integrated Automation (TIA) and Totally Integrated Power (TIP).

You can find catalogs for all automation and drive products on the Internet (https://mall.industry.siemens.com).

1.1 S7-1500R/H Documentation Guide

1.1.1 Information classes S7-1500R/H

The documentation for the redundant S7-1500R/H system is arranged into three areas.

This arrangement enables you to access the specific content you require.

You can download the documentation free of charge from the Internet (https://support.industry.siemens.com/cs/ww/en/view/109742691).

Basic information

The System Manual and Getting Started describe in detail the configuration, installation, wiring and commissioning of the redundant S7-1500R/H system.

The STEP 7 online help supports you in the configuration and programming.

Examples:

- Getting Started S7-1500R/H
- System manual S7-1500R/H
- Online help TIA Portal

Device information

Equipment manuals contain a compact description of the module-specific information, such as properties, wiring diagrams, characteristics and technical specifications.

Examples:

- Equipment Manuals CPUs
- Equipment Manuals Power Supply Modules

General information

The function manuals contain detailed descriptions on general topics relating to the redundant S7-1500R/H system.

Examples:

- Function Manual Diagnostics
- Function Manual Communication
- Function manual Structure and Use of the CPU Memory
- Function Manual Cycle and Response Times
- PROFINET Function Manual

Product Information

Changes and supplements to the manuals are documented in a Product Information. The Product Information takes precedence over the device and system manuals.

You can find the latest Product Information on the redundant S7-1500R/H system on the Internet. (https://support.industry.siemens.com/cs/ww/en/view/109742691)

Manual Collection S7-1500/ET 200MP

The Manual Collection S7-1500/ET 200MP contains the complete documentation on the redundant S7-1500R/H system gathered together in one file.

You can find the Manual Collection on the Internet.
(https://support.industry.siemens.com/cs/ww/en/view/86140384)

SIMATIC S7-1500 comparison list for programming languages

The comparison list contains an overview of which instructions and functions you can use for which controller families.

You can find the comparison list on the Internet.
(https://support.industry.siemens.com/cs/ww/en/view/86630375)

1.1.2 SIMATIC Technical Documentation

Additional SIMATIC documents will complete your information. You can find these documents and their use at the following links and QR codes.

The Industry Online Support gives you the option to get information on all topics. Application examples support you in solving your automation tasks.

Overview of the SIMATIC Technical Documentation

Here you will find an overview of the SIMATIC documentation available in Siemens Industry Online Support:

Industry Online Support International (https://support.industry.siemens.com/cs/ww/en/view/109742705)

Watch this short video to find out where you can find the overview directly in Siemens Industry Online Support and how to use Siemens Industry Online Support on your mobile device:

Quick introduction to the technical documentation of automation products per video (https://support.industry.siemens.com/cs/us/en/view/109780491)

YouTube video: Siemens Automation Products - Technical Documentation at a Glance (https://youtu.be/TwLSxxRQQsA)

mySupport

With "mySupport" you can get the most out of your Industry Online Support.

Registration	You must register once to use the full functionality of "mySupport". After registration, you can create filters, favorites and tabs in your personal workspace.
Support requests	Your data is already filled out in support requests, and you can get an overview of your current requests at any time.
Documentation	In the Documentation area you can build your personal library.
Favorites	You can use the "Add to mySupport favorites" to flag especially interesting or frequently needed content. Under "Favorites", you will find a list of your flagged entries.
Recently viewed articles	The most recently viewed pages in mySupport are available under "Recently viewed articles".
CAx data	The CAx data area gives you access to the latest product data for your CAx or CAe system. You configure your own download package with a few clicks: • Product images, 2D dimension drawings, 3D models, internal circuit diagrams, EPLAN macro files • Manuals, characteristics, operating manuals, certificates • Product master data

You can find "mySupport" on the Internet. (https://support.industry.siemens.com/My/ww/en)

Application examples

The application examples support you with various tools and examples for solving your automation tasks. Solutions are shown in interplay with multiple components in the system - separated from the focus on individual products.

You can find the application examples on the Internet.
(https://support.industry.siemens.com/cs/ww/en/ps/ae)

Safety information 2

2.1 Security information

Siemens provides products and solutions with industrial security functions that support the secure operation of plants, systems, machines and networks.

In order to protect plants, systems, machines and networks against cyber threats, it is necessary to implement – and continuously maintain – a holistic, state-of-the-art industrial security concept. Siemens' products and solutions constitute one element of such a concept.

Customers are responsible for preventing unauthorized access to their plants, systems, machines and networks. Such systems, machines and components should only be connected to an enterprise network or the internet if and to the extent such a connection is necessary and only when appropriate security measures (e.g. firewalls and/or network segmentation) are in place.

For additional information on industrial security measures that may be implemented, please visit (https://www.siemens.com/industrialsecurity).

Siemens' products and solutions undergo continuous development to make them more secure. Siemens strongly recommends that product updates are applied as soon as they are available and that the latest product versions are used. Use of product versions that are no longer supported, and failure to apply the latest updates may increase customers' exposure to cyber threats.

To stay informed about product updates, subscribe to the Siemens Industrial Security RSS Feed visit (https://www.siemens.com/cert).

2.2 General safety instructions

2.2.1 Warnings in this document

You can find explanations of the warnings used in this document in the "Legal information" section.

2.2.2 Safety-related symbols

2.2.2.1 Devices without explosion protection

The following table contains an explanation of the symbols located in your SIMATIC device, its packaging or the accompanying documentation.

Symbol	Meaning
	General warning sign **Caution/Notice** You must read the product documentation. The product documentation contains information about the potential risks and enable you to recognize risks and implement countermeasures.
	Read the information provided by the product documentation. ISO 7010 M002
	Ensure the device is only installed by electrically skilled person. IEC 60417 No. 6182
CABLE SPEC.	Note that connected mains lines must be designed according to the expected minimum and maximum ambient temperature.
EMC	Note that the device must be constructed and connected in accordance with EMC regulations.
230V MODULES	Note that a 230 V device can be exposed to electrical voltages which can be dangerous. ANSI Z535.2
III 24V MODULES	Note that a device of Protection Class III may only be supplied with a protective low voltage according to the standard SELV/PELV. IEC 60417-1-5180 "Class III equipment"

Symbol	Meaning
INDOOR USE ONLY INDUSTRIAL USE ONLY	Be aware that the device is only approved for the industrial field and only for indoor use.
	Note that an enclosure is required for installing the device. Enclosures are considered: • Standing control cabinet • Serial control cabinet • Terminal boxes • Wall enclosure

2.2.2.2 Devices with explosion protection

The following table contains an explanation of the symbols located in your SIMATIC device, its packaging or the accompanying documentation.

Symbol	Meaning
ONLY EX MODULES	The assigned safety symbols apply to devices **with Ex approval**. You must read the product documentation. The product documentation contains information about the potential risks and enable you to recognize risks and implement countermeasures.
	Read the information provided by the product documentation. ISO 7010 M002
	Ensure the device is only installed by electrically skilled person. IEC 60417 No. 6182
F<2N DISPLAY F<4N HOUSING	Observe the mechanical rating of the device.
CABLE SPEC.	Note that connected mains lines must be designed according to the expected minimum and maximum ambient temperature.
EMC	Note that the device must be constructed and connected in accordance with EMC regulations.
U = 0V	When the device is under voltage, note that it may not be installed or removed, or plugged or pulled.
230V MODULES	Note that a 230 V device can be exposed to electrical voltages which can be dangerous. ANSI Z535.2

Symbol	Meaning
III 24V MODULES	Note that a device of Protection Class III may only be supplied with a protective low voltage according to the standard SELV/PELV. IEC 60417-1-5180 "Class III equipment"
INDOOR USE ONLY INDUSTRIAL USE ONLY	Be aware that the device is only approved for the industrial field and only for indoor use.
ZONE 2 INSIDE CABINET IP54	For Zone 2 potentially explosive atmospheres, be aware that the device may only be used when it is installed in an enclosure with a degree of protection ≥ IP54.
ZONE 22 INSIDE CABINET IP6x	For Zone 22 potentially explosive atmospheres, be aware that the device may only be used when it is installed in an enclosure with a degree of protection ≥ IP6x.

2.2.3 Intended use

The system is used to control machines and plants.

Intended use also includes observance of this documentation, in particular the safety instructions and conditions of use. See section Technical specifications.

2.2.4 Changes to the device and spare parts

Modifications to the device can impair the safety and function of the device.

- Do not make any changes or modifications to the device.
- Do not remove or paste over safety instructions on the device.
- Do not tape over, cover or install ventilation slots.
- Only use original spare parts and accessories.
- Only use the software provided by Siemens.

2.2.5 Target group and personnel qualifications

All persons working with this device require the following knowledge:

- Contents of this document as well as contents of the enclosed documents.
- Handling the device (after instruction)
- Relevant standards and regulations
- Accident prevention regulations

The following activities are reserved for specially qualified personnel:

Working on electrical parts

Work on electrical parts may only be performed by the following persons:

- Qualified electricians
- Persons electrotechnically trained under the direction and supervision of qualified personnel.

Commissioning and configuration

Commissioning and configuration requires general knowledge in the field of automation technology.

2.2.6 Personal protective equipment

The personal protective equipment depends on the activity and is determined by the operator.

During the activities of packing, unpacking and installation (to avoid damage to property):

- ESD wrist strap
- ESD shoes

2.2.7 Open Source Software

This product, solution or service ("Product") contains third-party software components. These components are Open Source Software licensed under a license approved by the Open Source Initiative (https://www.opensource.com) or similar licenses as determined by SIEMENS ("OSS") and/or commercial or freeware software components. With respect to the OSS components, the applicable OSS license conditions prevail over any other terms and conditions covering the Product. The OSS portions of this Product are provided royalty-free and can be used at no charge.

If SIEMENS has combined or linked certain components of the Product with/to OSS components licensed under the GNU LGPL version 2 or later as per the definition of the applicable license, and if use of the corresponding object file is not unrestricted ("LGPL Licensed Module", whereas the LGPL Licensed Module and the components that the LGPL Licensed Module is combined with or linked to is the "Combined Product"), the following additional rights apply, if the relevant LGPL license criteria are met: (i) you are entitled to modify the Combined Product for your own use, including but not limited to the right to modify the Combined Product to relink modified versions of the LGPL Licensed Module, and (ii) you may reverse-engineer the Combined Product, but only to debug your modifications. The modification right does not include the right to distribute such modifications and you shall maintain in confidence any information resulting from such reverse-engineering of a Combined Product.

Certain OSS licenses require SIEMENS to make source code available, for example, the GNU General Public License, the GNU Lesser General Public License and the Mozilla Public License. If such licenses are applicable and this Product is not shipped with the required source code, a copy of this source code can be obtained by anyone in receipt of this information during the period required by the applicable OSS licenses by contacting the following address:

Siemens AG
LC DI FA SL
Werner-von-Siemens Str. 60
91052 Erlangen
Germany

Keyword: Open Source Request (please specify Product name and version, if applicable)

SIEMENS may charge a handling fee of up to 5 EUR to fulfil the request.

Warranty regarding further use of the Open Source Software

SIEMENS' warranty obligations are set forth in your agreement with SIEMENS. If you modify the product or the OSS components or use them in a way other than that specified by SIEMENS, the warranty will be voided and no technical support will be provided. The following license terms may contain limitations of liability that apply between you and the respective licensor. For the avoidance of doubt, SIEMENS does not make any warranty commitment on behalf of or binding upon any third-party licensor. The Open Source Software used in the product and the license agreements concerning this software can be found in the Readme_OSS.

2.2.8 Safe working

2.2.8.1 Working on electrical parts

- Only work on electrical parts if you are a qualified specialist (see section Target group and personnel qualifications (Page 19)).
- Always observe the country-specific safety rules.
- Notify all those who will be affected by the procedure.
- Observe the five safety rules:
  1. Disconnect
  2. Secure to prevent reconnection
  3. Verify safe isolation from all poles of the voltage
  4. Ground and short-circuit
  5. Erect barriers around or cover adjacent live parts

2.2.9 Residual risks

Despite all the technical and procedural risk reductions that have been carried out, not all dangers can be avoided.

The following sections describe these residual risks and measures to avoid them.

2.2.9.1 Live parts

Electrocution on contact with live parts leads to life-threatening injuries (death).

Operation

- Do not open the device.
- Never use damaged devices.
- Pull the plug and not the cable.

Installation and connection

- Only work on electrical parts if you are a qualified specialist (see section Target group and personnel qualifications (Page 19)).
- Adhere to the protective measures for safe working on electrical parts (see section Working on electrical parts (Page 21))
- Fuse the connecting cables according to the cable cross-section.
- Install the device in a control cabinet. The enclosures, cabinets or electrical equipment rooms must guarantee protection against electric shock and spread of fire.
- Ground the device in compliance with the applicable regulations.
- For the 24 V DC supply (SELV/PELV), only use power supply units that provide safe electrical extra-low voltage in accordance with IEC 61131-2 or IEC 61010-2-201.

Maintenance

- Only work on electrical parts if you are a qualified specialist (see section Target group and personnel qualifications (Page 19)).
- Adhere to the protective measures for safe working on electrical parts (see section Working on electrical parts (Page 21)).

2.2.9.2 Conductive pollution

Electrocution during transmission of electrical energy via conductive contamination to the body leads to life-threatening injuries (death).

- Install the device in a control cabinet.
- Keep the control cabinet free of conductive contamination.

2.2.9.3 Laser radiation

The synchronization module contains a laser system and is classified as a "CLASS 1 LASER PRODUCT" in accordance with IEC 60825-1.

Laser beams falling on the retina cause blindness.

- Avoid direct eye contact with the laser beam.
- Do not open the synchronization module.

2.2.9.4 Overheating

Smoke development and fire due to overheating of the device and lines lead to burns and life-threatening injuries (death).

Overheating may be caused by the following:

- Incorrect mounting position
- Insufficient air supply (e.g. due to taped or closed ventilation slots)
- Damaged cables

Installation and connection

- Follow the instructions for the mounting position.
- Adhere to the specified ventilation clearances.
- Fuse the connecting cables according to the cable cross-section.

Maintenance

- Check plug-in connections and cables regularly for damage.

2.2.9.5 Unsafe operating states

Unsafe operating conditions can result in personal injury of unknown extent.

The following factors can be causes:

- Manipulation of the software, e.g. viruses, trojans or worms.

Manipulation of the software, e.g. viruses, trojans or worms.

- Adhere to the protective measures against tampering with the software (see section Security information (Page 15)).
- Keep the software up-to-date.
- Protect files stored on removable media from malware with appropriate protective measures, e.g. virus scanner.
- Set up access protection for the CPU.

2.2.10 Behavior in case of emergency

- Force EMERGENCY OFF

When the safe operating state has been restored:

- Unlock the EMERGENCY OFF mechanism.
- Ensure (as the person responsible for the system) that the system starts up in a controlled and defined manner.

2.2.11 Material damage

2.2.11.1 Transport and storage

- Only pack, store, transport and ship electronic components, modules or devices in the original product packaging or in other suitable materials, e.g. conductive foam rubber or aluminum foil.
- Transport the device only in the transport packaging provided.
- Observe the limits during transport and storage. See section Technical specifications.

2.2.11.2 Installation and connection

- Only touch components, modules and devices when you have grounded yourself with one of the following measures:
  - With an ESD wrist strap
  - With ESD shoes or ESD grounding strips in ESD areas with conductive flooring.
- Place electronic components, modules and devices only on conductive surfaces (e.g. tables with ESD coating, conducting ESD plastic foam, ESD packing bags, ESD transport containers).
- Ensure that there is sufficient overvoltage protection.

Do not install/remove the following elements when the power is on:

- Do not install/remove the following elements when the power is on:
  - CPU

New properties/functions

3

What's new in the System Manual S7-1500R/H redundant system, edition 01/2023 compared to edition 11/2022

What's new?		What are the customer benefits?	Where can I find the information?
New contents	General safety instructions	The sections contains a compilation of general safety instructions for the S7-1500R/H redundant system.	Section General safety instructions (Page 16)

What's new in the System Manual S7-1500R/H redundant system, edition 11/2022 compared to edition 05/2021

What's new?		What are the customer benefits?	Where can I find the information?
New contents	Support PROFINET system redundancy R1	As of FW version V3.0, the S7-1500H redundant system supports PROFINET system redundancy R1: • ET 200SP IM 155-6 PN R1 (6ES7155-6AU00-0HM0) • ET 200SP HA IM 155-6 PN HA (6DL1155-6AU00-0PM0) • ET 200iSP IM 152-1 PN (6ES7152-1BA00-0AB0) R1 devices are equipped with two interface modules compared to S2 devices. If one interface module fails, the R1 device can still be reached by the H-CPUs via the second interface module. Thus, R1 devices have a higher availability than S2 devices.	As of System overview (Page 30) section
	New configuration variants for S7-1500H	As of FW version V3.0, the S7-1500H redundant system supports additional configuration variants: • Configuration of PROFINET rings with R1 devices • Configuration of a line topology with S2 devices, switched S1 devices • Configuration of a line topology with R1 devices • Configuration of a combined topology with R1 devices, S2 devices • Configuration without additional devices This allows you to connect the S7-1500H redundant system to almost any network topology and solve complex automation tasks.	As of System overview (Page 30) section

What's new?		What are the customer benefits?	Where can I find the information?
	OB 70	As of FW version V3.0, OB 70 (I/O redundancy error) is available for the diagnostics of R1 and S2 devices in S7-1500H systems.	Section Basics of program editing (Page 247)
	Synchronization module up to 40 km	As of FW version V3.0, a new synchronization module Sync Module 1 GB FO 40 km is available. The synchronization module enables a spatial distance of the two H-CPUs of up to 40 km via optical fibers. This allows you to use the S7-1500H redundant system for long tunnel installations.	As of Connecting (Page 210) section
	Data block functions	As of FW version V3.0, the instructions for the data block functions are supported: • CREATE_DB (create data block) • READ_DBL (Read from data block in the load memory) • WRIT_DBL (Write to data block in load memory) • DELETE_DB (delete data block)	STEP 7 online help

What's new in the S7-1500R/H redundant system System Manual, edition 05/2021 compared to edition 11/2019

What's new?		What are the customer benefits?	Where can I find the information?
New contents	CPU 1518HF-4 PN	The CPU 1518HF-4 PN expands the R/H-CPU portfolio with an HF-CPU. The CPU provides the following advantages: • Powerful H-CPU with integrated F-functionality • The integrated F-functionality processes standard and safety programs. This allows fail-safe data to be evaluated in the standard user program. Due to this integration, the system benefits and the comprehensive functionality of SIMATIC are also available for fail-safe applications. • 3 PROFINET interfaces per CPU	As of System overview (Page 30) section
	Influence changeover time of switched S1 devices	As of FW version V2.9, you can influence the changeover time between disconnection and return of switched S1 devices after a failure/STOP of the primary CPU. This function provides the following advantage: • Optimization of the changeover time between disconnection and return of switched S1 devices	PROFINET (https://support.industry.siemens.com/cs/ww/en/view/49948856) Function Manual

What's new?		What are the customer benefits?	Where can I find the information?
	MRP interconnection	The MRP interconnection process is an enhancement of MRP. MRP interconnection allows the redundant coupling of two or more rings with MRP in PROFINET networks. MRP interconnection offers the following advantages: • There is no limit to the maximum number of 50 devices in a ring when setting up redundant network topologies. • Monitoring of larger topologies with ring redundancy.	Redundancy (Page 77) section
	Simulation of R/H-CPUs	PLCSIM Advanced V4.0 supports the simulation of the R/H-CPUs • Virtual commissioning of machines with R/H-CPUs in a plant • Automated testing of the STEP 7 user program Simulation provides the following advantages: • Early error detection and risk minimization • Shorter commissioning time • No hardware costs	S7-PLCSIM Advanced (https://support.industry.siemens.com/cs/ww/en/view/109773484/en) function manual
	OB 72 (CPU redundancy error)	As of FW version V2.9, the operating system calls OB 72 on further events: • The R/H-system has entered RUN-Redundant system state and the synchronization of the two R/H-CPUs is possible redundantly. • The R/H-system has entered RUN-Redundant system state, but the synchronization of the two R/H-CPUs is not possible redundantly. • The R/H-system is still in RUN-Redundant system state and the synchronization of the two R/H-CPUs is possible redundantly now or again. • The R/H-system is still in RUN-Redundant system state, but the synchronization of the two R/H-CPUs is no longer possible redundantly.	Programming the S7-1500R/H (Page 247) section
	"RH_CTRL" instruction	As of FW version V2.9, the "RH_CTRL" instruction supports additional functions: • Request SYNCUP • Switch primary CPU to STOP mode (only in RUN-Redundant system state) • Switch backup CPU to STOP mode	Programming the S7-1500R/H (Page 247) section

What's new?		What are the customer benefits?	Where can I find the information?
	Instructions for recipe functions	As of FW version V2.9, instructions for the recipe functions are supported: • RecipeExport (Export recipe) • RecipeImport (Import recipe)	STEP 7 online help
	TO_BasicPos and SSI_Absolute_Encoder technology objects	"TO_BasicPos" technology object With the "TO_BasicPos" instruction, you control a SINAMICS drive cyclically with the technology for SINAMICS S/G/V basic positioners. SSI_Absolute_Encoder technology object With the "SSI_Absolute_Encoder" instruction, you use the user program to control the position detection and measuring functions of the TM PosInput technology object.	STEP 7 online help

What's new in the S7-1500R/H redundant system System Manual, edition 11/2019 compared to edition 10/2018

What's new?		What are the customer benefits?	Where can I find the information?
New contents	Switched S1 device	The "Switched S1 device" function of the CPU enables operation of standard IO devices in the S7-1500R/H redundant system.	Section AUTOHOTSPOT
	Standard rail adapter	You mount the R/H CPUs on a standardized 35 mm rail using the standard rail adapter.	Sec. Installing the standard rail adapter (Page 183)
	Testing with breakpoints	When testing with breakpoints, you run a program from breakpoint to breakpoint in the STARTUP (startup OB) or RUN-Solo system state. Testing with breakpoints provides you with the following advantages: • Testing SCL and STL program code with the help of breakpoints • Localization of logic errors step by step • Simple and quick analysis of complex programs prior to actual commissioning • Recording of current values within individual executed loops • Using breakpoints for program validation is also possible in SCL or STL networks within LAD/FBD blocks.	Section Test functions (Page 390)

What's new?		What are the customer benefits?	Where can I find the information?
	PID controller	PID controllers are built into all R/H-CPUs as standard. PID controllers measure the actual value of a physical variable, for example, temperature or pressure, and compare the actual value with the setpoint. Based on the resulting error signal, the controller calculates a manipulated variable that causes the process value to reach the setpoint as quickly and stably as possible. The PID controllers offer you the following advantages: • Simple configuration and programming through integrated editors and blocks. • Simple simulation, visualization, commissioning and operation via PG and HMI. • Automatic calculation of the control parameters and tuning during operation. • No additional hardware and software required.	Sec. PID control (Page 77)
Changed contents	Download modified user program in RUN-Redundant system state	You can download a modified user program into the R/H CPUs in the RUN-Redundant system state. Advantage: The redundant system will remain in the RUN-Redundant system state during changes to the user program. The system state is not changed after RUN-Solo or SYNCUP.	Sec. Downloading projects to the CPUs (Page 293)
	Backing up the configuration of the S7-1500R/H redundant system in runtime	You do not have to interrupt the process during a backup while the plant is running. Uninterrupted plant operation avoids high restart and material costs.	Section Backing up and restoring the CPU configuration (Page 340)
	Alarms in the user program	Messages enable you to display events from process execution in the S7-1500R/H redundant system and to quickly identify, accurately locate, and correct errors.	Function manual Diagnostics (https://support.industry.siemens.com/cs/ww/en/view/59192926)

System overview

4

4.1 What is the S7-1500R/H redundant system?

S7-1500R/H redundant system

For the S7-1500R/H redundant system, the CPUs are duplicated, in other words redundant. The two CPUs process the same project data and the same user program in parallel. The two CPUs are synchronized over two redundancy connections. If one CPU fails, the other CPU maintains control of the process.

Aims of using redundant automation systems

The aim of redundant automation systems is to reduce the probability of production downtime by operating two systems in parallel.

Aims of fail-safe automation systems

The aim of fail-safe automation systems is to protect life, the environment and capital with safe shutdown to a secure state.

Note

In principle, all contents of the system manual for the H-CPU also apply to the fail-safe CPU (HF-CPU). Deviating contents and special features are described as supplements and marked with references.

4.1.1 Areas of application

Objective

The S7-1500R/H redundant system offers a high degree of reliability and system availability. A redundant configuration of the most important automation components reduces the probability of production downtimes and the consequences of component errors.

The higher the risks and costs of a production downtime, the more worthwhile the use of a redundant system. You can compensate for the generally higher investment costs by avoiding production downtimes.

Use

In redundantly operated systems, failure or malfunction of individual automation components must not impede the operation of the plant. S7-1500R/H redundant systems are used in the following areas, for example:

- Tunnels
- Airports (for example baggage conveyors)
- Subways
- Shipbuilding
- Wastewater treatment plants
- High-bay warehouse

Example 1: Avoiding downtimes

Automation task

An automation solution is required for a road tunnel to:

- Control the lighting in the tunnel
- Control the ventilation in the tunnel in line with the concentration of pollutants in the tunnel

Feature

Uninterrupted operation of the ventilation system is required to keep the concentration of pollutants below a set level. Constant availability must be ensured for the event that individual automation components fail, for example because of a fire in the tunnel.

Solution

Three fans (M) ventilate the tunnel. The automation solution controls the fan speeds in line with the measured pollutant concentration. Three sensors in the tunnel measure the pollutant levels in the air. The S7-1500H redundant system with two redundant CPUs is used to ensure fan availability.

As well as controlling the fans, the S7-1500H redundant system also controls the illumination and the traffic lights.

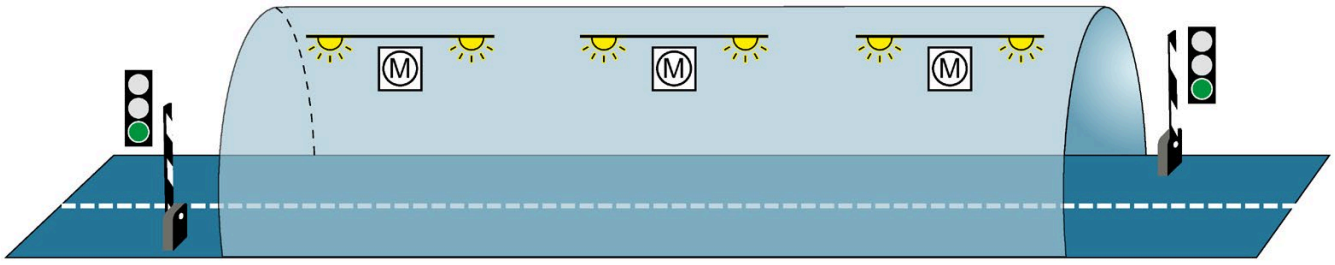

Figure 4-1 Example: Tunnel automation

Benefits

The user program for controlling the fans runs on both CPUs in the S7-1500H redundant system. You can position the two CPUs up to 40 kilometers apart. If one CPU or one redundancy connection fails due to a local incident, the incident does not affect the controlled process. The fans continue to operate.

You can find a detailed description of tunnel automation with S7-1500H in Getting started (https://support.industry.siemens.com/cs/ww/en/view/109757712) Redundant system S7-1500R/H.

Example 2: Avoiding high system restart costs as a result of data loss

Automation task

A logistics company needs a matching automation solution for controlling the storage and retrieval unit in a high-bay warehouse.

Feature

The failure of a controller would have serious consequences. After the system restart, you would have to reposition the storage and retrieval units and record the content of the containers again. The automation solution must ensure that no data is lost if a CPU fails and that the warehouse can continue to operate.

Solution

To store goods in and retrieve them from the bays, the storage and retrieval unit moves along an X, Y and Z axis. If the process is interrupted, data can be lost and the location of the goods is not known. To guard against the loss of data, the storage and retrieval unit is controlled by the S7-1500R redundant system.

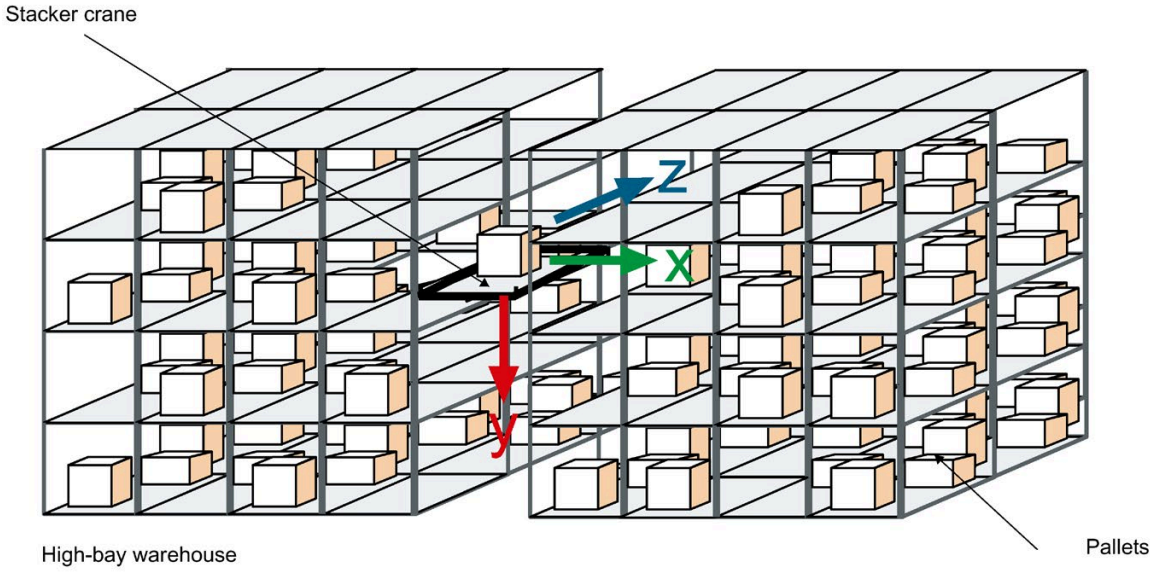

Figure 4-2 Example: High-bay warehouse

Benefits

If one CPU fails, the second CPU maintains control of the process. The project data and the user program are saved redundantly and are not lost if a CPU fails. Once you have replaced the defective CPU and switched it to RUN, the redundant system automatically synchronizes the project data with the user program in the new CPU. The solution saves you service time and downtime costs for the warehouse.

Example 3: Avoiding equipment and material damage

Automation task

A steel works needs a matching automation solution to control a blast furnace for the steel production.

Feature

Failures, especially in the process industry, can result in damages to the system, workpieces or material. In a steelworks, there is a danger of the pig iron cooling if the process is interrupted. The pig iron then cannot be used for the production of steel. The automation solution must ensure that the plant continues to run if a CPU fails and that the material is not damaged.

Solution

The S7-1500R redundant system controls the blast furnace. The distributed automation components of the redundant system control the temperature, volume and pressure parameters.

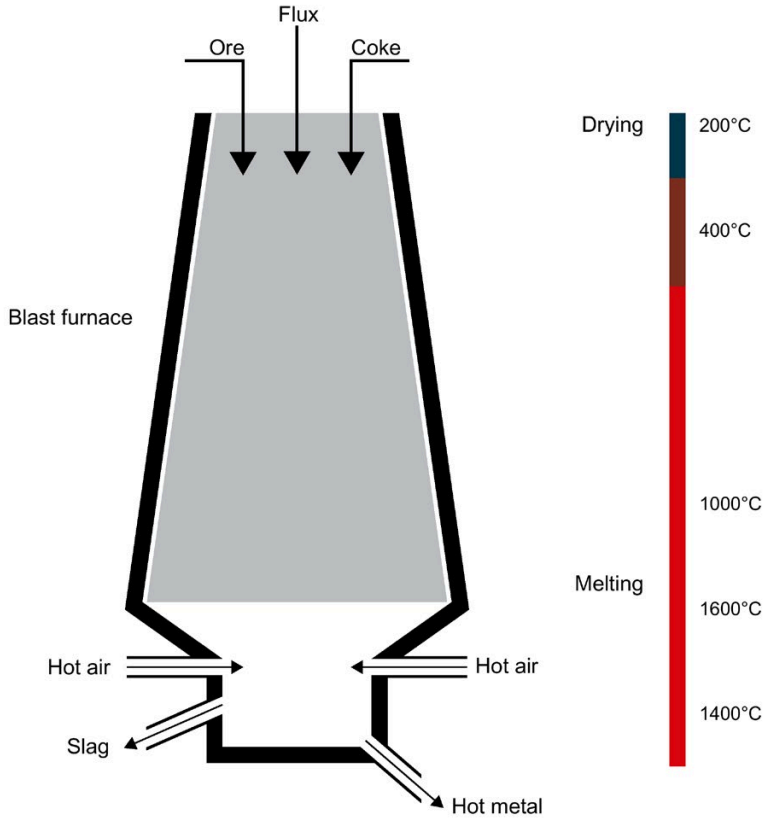

Figure 4-3 Example: Blast furnace

Benefits

The S7-1500R redundant system compensates for the possible failure of a CPU or redundant connection. You do not have to interrupt the smelting process when replacing a CPU while the plant is running. Uninterrupted plant operation avoids high restart and material costs.

Reference

You can find an example for SIMATIC Safety Integrated with the 1518HF-4 PN CPUs in the section Safety (Page 69).

4.1.2 Operating principle of the S7-1500R/H redundant system

Introduction

S7-1500R/H redundant systems tolerate the failure of one of the two CPUs.

The S7-1500R and S7-1500H systems differ in structure, configuration limits and performance.

S7-1500R systems tolerate an interruption of a ring topology.

S7-1500H systems can also tolerate an interruption of a line topology and the failure of an interface module in an R1 device.

Note

Each PROFINET ring may only contain one R-system or one H-system at a time.

A combined setup with one R-system and one H-system in the same PROFINET ring is not supported.

S7-1500 design and operating principle

The S7-1500R redundant system consists of:

- Two S7-1500R CPUs ①
- A PROFINET ring with Media Redundancy Protocol ②
- IO devices ③
- Possibly switches ④

A PROFINET ring is required for the S7-1500R redundant system. The two CPUs must be directly connected to each other with a PROFINET cable. All nodes can still communicate with each other in the event of an interruption in the ring. All PROFINET devices in the PROFINET ring must support media redundancy (MRP).

You can decouple further devices from the PROFINET ring via a ④ switch, e.g.:

- PROFINET devices with one port
- Non MRP-capable PROFINET devices
- PROFINET devices that do not support H-Sync Forwarding, such as standard IO devices

The redundancy connections in an S7-1500R system are the PROFINET ring with MRP ②.

The following picture shows a configuration of the S7-1500R in the PROFINET ring.

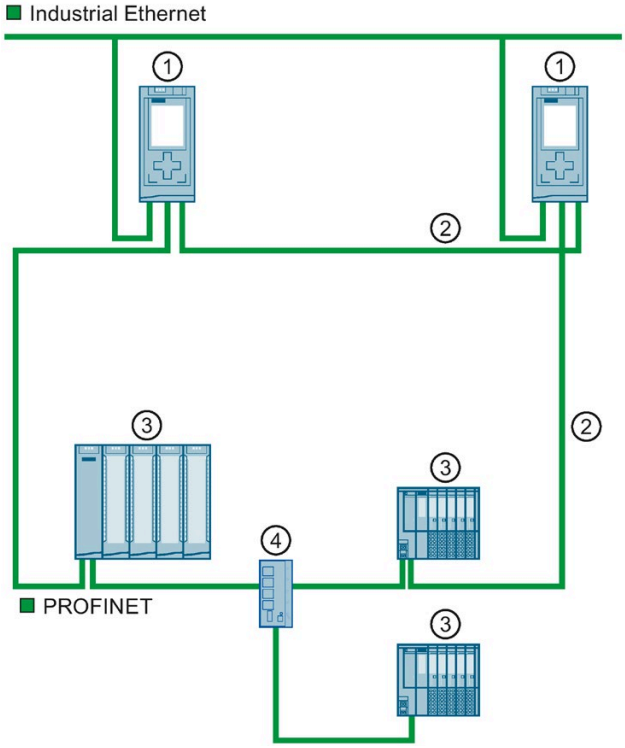

① R-CPU (CPU 1515R-2 PN)
② PROFINET cable (redundancy connections, PROFINET ring)
③ IO device
④ Switch

Figure 4-4 S7-1500R configuration in PROFINET ring

Principle of operation

One of the two CPUs in the redundant system takes on the role of primary CPU. The other CPU takes on the role of the following CPU (backup CPU). The role of the CPUs can change during operation. Synchronization of primary and backup CPU ensures rapid switchover between CPUs in the event of a failure of the primary CPU. If the primary CPU fails, the backup CPU takes over control of the process as the new primary CPU.

The redundancy connections use part of the bandwidth on the PROFINET cable for the synchronization of the R-CPUs. This bandwidth is therefore not available for PROFINET IO communication.

S7-1500H configuration and operating principle

The S7-1500H redundant system consists of:

- Two CPUs S7-1500H ①
- PROFINET ring with Media Redundancy Protocol ② (only when configured as ring topology)
- Two redundancy connections ③
- IO devices ④
- Possibly switches ⑤

Compared to S7-1500R, S7-1500H supports more functions and configuration variants:

- System redundancy R1
- H-CPUs do not have to be part of a PROFINET ring or an MRP domain.
  This makes additional topology variants possible, such as line topology, combined topology, or setup without additional devices.

Ring topologies

For S7-1500H in ring topology, a PROFINET ring ② closed via the CPUs is required as for S7-1500R. All nodes can still communicate with each other in the event of an interruption in the ring. All PROFINET devices in the PROFINET ring must support media redundancy (MRP).

If you configure the redundant system with R1 devices, two separate PROFINET rings are then required.

You can decouple further devices from the PROFINET ring via a ⑤ switch, for example:

- PROFINET devices with one port
- Non MRP-capable PROFINET devices

The following figure shows a configuration of the S7-1500H in a PROFINET ring.

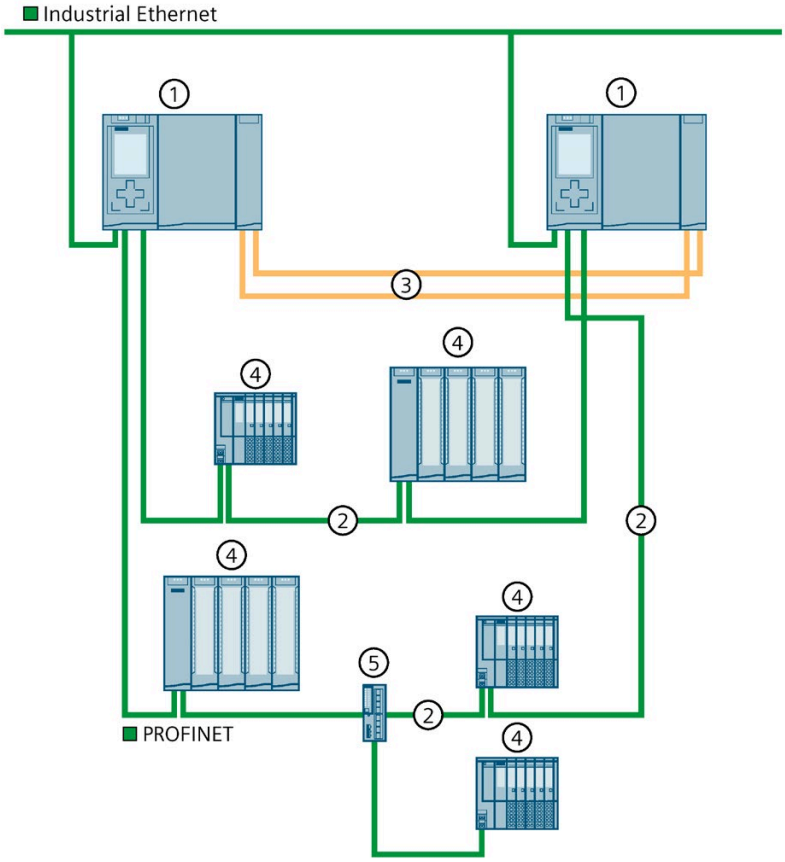

① H-CPU
② PROFINET cable (PROFINET ring)
③ Redundancy connections (fiber-optic cables)
④ IO device
⑤ Switch

Figure 4-5 S7-1500H configuration with IO devices in the PROFINET ring

The following figure shows a configuration of the S7-1500H with R1 devices in two separate PROFINET rings.

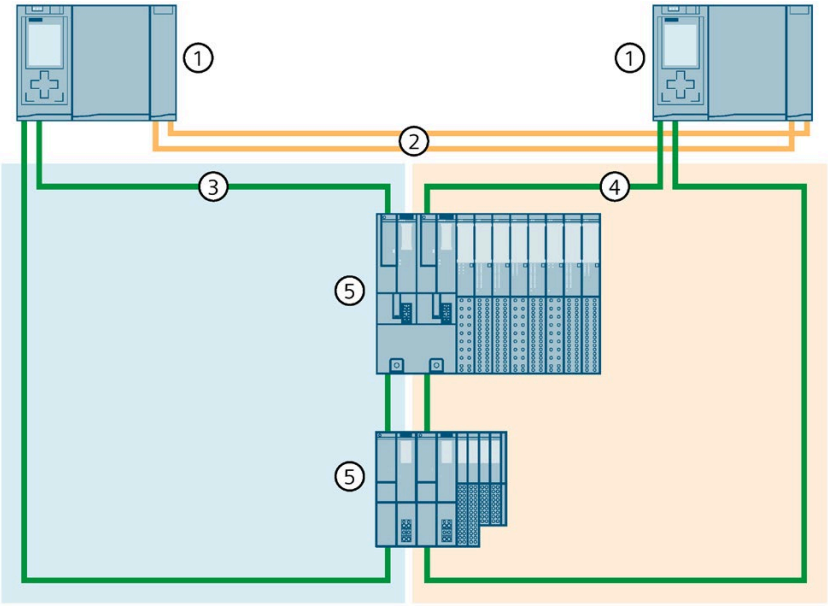

① H-CPU
② Redundancy connections (fiber-optic cables)
③ PROFINET cable (PROFINET ring 1)
④ PROFINET cable (PROFINET ring 2)
⑤ IO device (with R1 system redundancy)

Figure 4-6 Configuration of S7-1500H with R1 devices in the PROFINET ring

Line topology

If you configure the redundant system in a line topology, then no PROFINET ring is required. The PROFINET devices in the line topology do not have to support media redundancy (MRP). This means that no MRP reconfiguration takes place and shorter monitoring times are possible. In applications with SIMATIC Safety, this allows smaller safety distances to be implemented.

Other devices, e.g., PROFINET devices with one port, are decoupled from the line via a switch ④.

With line topology, the H-CPUs must be located at the ends of the line.

The figure below shows a configuration of the S7-1500H with S2 devices in a line topology.

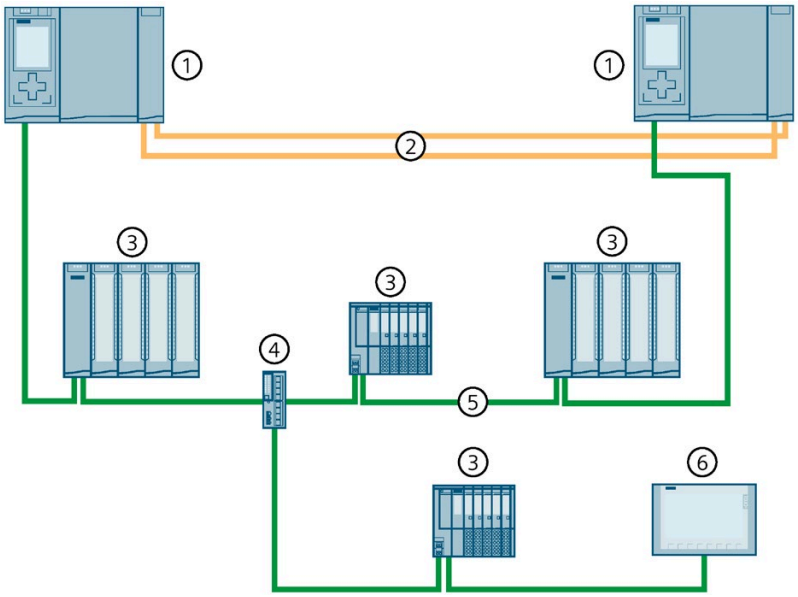

① H-CPU
② Redundancy connections (fiber-optic cables)
③ IO device (with system redundancy S2)
④ Switch
⑤ PROFINET cable (line topology)
⑥ HMI device

Figure 4-7 S7-1500H configuration with S2 devices and switch in a line topology

The figure below shows a configuration of the S7-1500H with R1 devices in a line topology

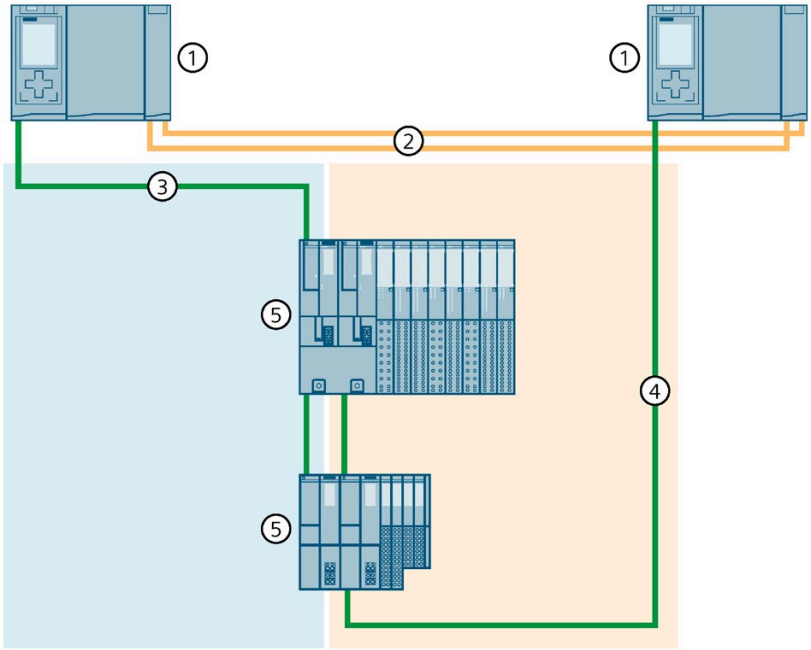

① H-CPU
② Redundancy connections (fiber-optic cables)
③ PROFINET cable (line topology 1)
④ PROFINET cable (line topology 2)
⑤ IO device (with R1 system redundancy)

Figure 4-8 S7-1500H configuration with R1 devices in a line topology

S7-1500H without additional devices at the X1 interface of the H-CPUs

The configuration with only 2 H-CPUs is suitable for all applications that do not require any additional devices at the PROFINET interface X1 P1R/X1 P2R of the H-CPUs (e.g., Modbus/TCP):

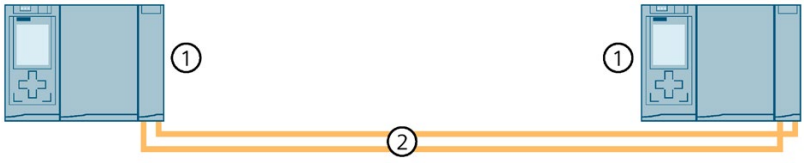

① H-CPU
② Redundancy connections (fiber-optic cables)

Figure 4-9 S7-1500H configuration with additional devices

Principle of operation

Unlike in S7-1500R, the PROFINET ring (PROFINET network) and redundancy connections in S7-1500H are separate. The two redundancy connections are fiber-optic cables that connect the CPUs directly over synchronization modules.

One of the two CPUs in the redundant system takes on the role of primary CPU. The other CPU takes on the role of the following CPU (backup CPU). The role of the CPUs can change during operation.

Synchronization of primary and backup CPU ensures rapid switchover between CPUs in the event of a failure of the primary CPU. If the primary CPU fails, the backup CPU takes over control of the process as the new primary CPU.

The synchronization of the H-CPUs does not affect the bandwidth on the PROFINET.

Reference

Additional information and configuration variants (e.g. combined topology) of the S7-1500H redundant system can be found in the section Specific configuration variants of the S7-1500H redundant system (Page 98).

Differences between S7-1500R and S7-1500H

Table 4- 1 S7-1500R and S7-1500H system differences

	S7-1500R	S7-1500H
	CPU 1513R-1 PN **CPU 1515R-2 PN**	**CPU 1517H-3 PN** **CPU 1518HF-4 PN**
Performance	• Transfer rate of 100 Mbps (for synchronization and communication) • Data work-memory: – CPU 1513R-1 PN: max. 2.5 MB – CPU 1515R-2 PN: max. 4.5 MB • Code work-memory: – CPU 1513R-1 PN: max. 600 KB – CPU 1515R-2 PN: max. 1 MB	• Significantly greater performance than S7-1500R due to: – Separate redundancy connections over fiber-optic cable – High computing power • transfer rate of 1 Gbps (for synchronization) • Data work-memory: – CPU 1517H-3 PN: max. 8 MB – CPU 1518HF-4 PN: max. 60 MB • Code work-memory: – CPU 1517H-3 PN: max. 2 MB – CPU 1518HF-4 PN: max. 9 MB
Hardware	• The CPUs are identical in design with the respective S7-1500 standard versions. • Synchronization of the CPUs takes place over the PROFINET ring. • When you use PROFINET devices with more than two ports (e.g. switch) in the PROFINET ring of an R-system, then H-Sync Forwarding is mandatory for these devices. • H-Sync forwarding is recommended for all devices in the PROFINET ring if you are using PROFINET devices with only 2 ports in the PROFINET ring of an R-system. • Part of the bandwidth on the PROFINET cable is required for synchronization of the CPUs. Less bandwidth is therefore available for PROFINET IO communication.	• The CPUs each have 2 optical interfaces. • The synchronization of the CPUs works independently from the PROFINET network via optical fiber. • The full bandwidth of the PROFINET cable is available for PROFINET IO communication.
Range	• Distance between the two R-CPUs: – Max. 100 m without media converter – Several kilometers with media converter (depends on the media converter used)	• Distance between the two H-CPUs: – Maximum of 40 km (depends on the synchronization modules used)

	S7-1500R	S7-1500H
Configuration versions	PROFINET ring with S2 devices, switched S1 devices	• PROFINET networks with S2 devices, switched S1 devices • PROFINET networks with R1 devices • PROFINET networks with R1 devices, S2 devices, switched S1 devices in a combined topology • Configuration without additional devices
Configuration limits	• In the PROFINET ring: Max. 50 PROFINET devices, including R-CPUs (max. 16 PROFINET devices recommended) • In the PROFINET ring and separated with switches (additional line topology): maximum of 64 IO devices	• PROFINET ring: Max. 50 PROFINET devices (including H-CPUs) • PROFINET network (ring, line or combined topology): maximum of 256 IO devices

Comparison of S7-1500 standard system and S7-1500R/H

The table below sets out the key features of comparable CPUs of the S7-1500 automation system and of the S7-1500R/H redundant system.

Table 4- 2 S7-1500 and S7-1500R/H comparison

	S7-1500		S7-1500R/H	
	CPU 1513-1 PN CPU 1515-2 PN CPU 1517-3 PN/DP	**CPU 1518F-4 PN/DP**	**CPU 1513R-1 PN CPU 1515R-2 PN CPU 1517H-3 PN**	**CPU 1518HF-4 PN**
Support for central I/O	✓	✓	---	---
Configuration control	✓	✓	---	---
Web server	✓	✓	---	---
CPU redundancy	---	---	✓	✓
System redundancy S2	---	---	✓	✓
System redundancy R1	---	---	✓ 1)	✓
S1 device	✓	✓	✓ 2)	✓ 2)
Isochronous mode	✓	✓	---	---
Shared Device	✓	✓	---	---
Operation as I-device	✓	✓	---	---
IRT	✓	✓	---	---
MRP	✓	✓	✓	✓
MRPD	✓	✓	---	---
OPC UA	✓	✓	---	---
Motion Control	✓	✓	---	---
PID control	✓	✓	✓	✓
Security Integrated	✓	✓	✓	✓
Protection function: Copy protection	✓	✓	---	---

	S7-1500		S7-1500R/H	
Safety mode [3]	---	✓	---	✓
Integrated system diagnostics	✓	✓	✓	✓

[1] Only with CPU 1517H-3 PN

[2] As switched S1 device

[3] For personal, environmental or investment protection, you will need fail-safe automation systems (F-systems).

4.1.3 Plant components and automation levels

Plant components and automation levels

The schematic diagram below shows the key components of the redundant system from the management level to the control level and the field level.

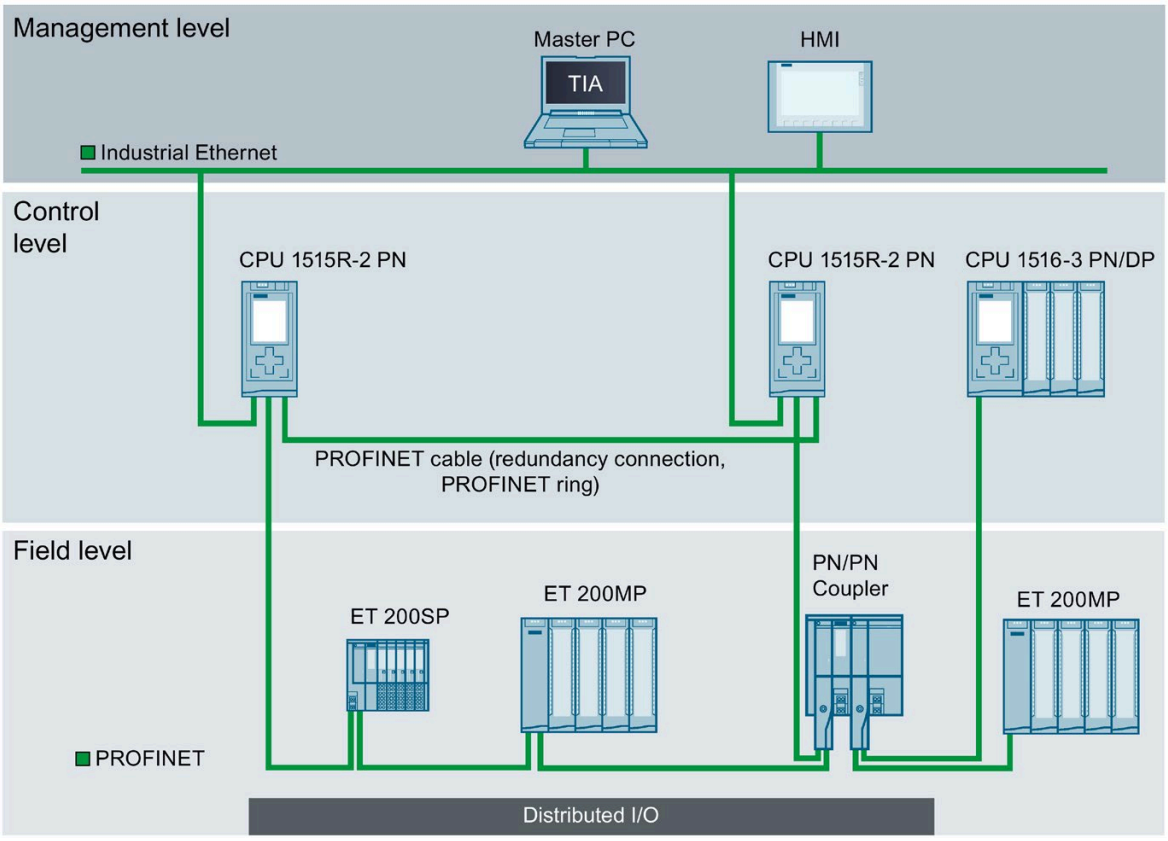

Figure 4-10 Possible configuration at the management, control and field level using the example of S7-1500R

From the management level, the master PC accesses the various devices at the control and field level. The master PC is connected to the CPUs over Industrial Ethernet.

The R-CPUs at the control level are redundant in design. The IO devices at the field level are connected to the R-CPUs within a PROFINET ring.

The redundant S7-1500R system cyclically exchanges IO data with another PROFINET IO system via a PN/PN coupler. The left-hand side of the PN/PN coupler is assigned to the S7-1500R redundant system. The right-hand side of the PN/PN coupler is assigned to the CPU 1516-3 PN/DP (IO controller).

The configuration tolerates the failure of one CPU or an interruption in the PROFINET ring. The primary CPU and the backup CPU execute the user program in parallel. If one CPU fails, the second CPU maintains control of the process.

If the PROFINET ring is interrupted, for example as a result of a cable break or an IO device failure, redundancy in the ring is lost. However, the IO devices that have not failed continue to operate and can be accessed.

4.1.4 Scalability

Introduction

Redundant systems are more cost-intensive to use than non-redundant systems:

- There are two CPUs.
- The physical connections (PROFINET ring and redundancy connections) can be required over large distances.

The S7-1500R/H redundant system is scalable. This means that the S7-1500R and S7-1500H systems have the same functional scope, but differ in terms of:

- Performance
- Hardware
- Configuration versions
- Range
- Configuration limits
- Costs

Note

MRP interconnection

MRP interconnection allows the redundant coupling of two or more rings with MRP in PROFINET networks. With MRP interconnection, you are not limited to the maximum number of devices in a ring when setting up redundant network topologies. You can find more information in the section Redundancy (Page 60).

S7-1500R

You connect the CPUs to the Industrial Ethernet over X2 PROFINET interfaces of CPUs S7-1515R-2 PN or using an additional switch.

S7-1500R supports the following number of PROFINET devices (switches, S7-1500R CPUs, S7-1500 CPUs (V2.5 or later), HMI devices, and IO devices such as ET 200MP and ET 200SP): max. 50 (recommended: max. 16) in the PROFINET ring

S7-1500R supports the following number of IO devices on the R CPUs: max. 64 in PROFINET ring and decoupled by switches (additional line topology)

Note

Recommendation for S7-1500R: Operate a maximum of 16 PROFINET devices (including R-CPUs) in the PROFINET ring.

The number of devices in the PROFINET ring affects the availability of the S7-1500R system. You should therefore operate no more than 16 PROFINET devices (including R-CPUs) in the PROFINET ring. Operating significantly more devices in the PROFINET ring will reduce the availability of the IO devices and the R-CPUs.

The technical specifications in the documentation are based on the recommended maximum of 16 PROFINET devices in the ring in S7-1500R.

The redundancy connections in S7-1500R are the PROFINET ring with MRP. The CPUs are synchronized over the PROFINET ring.

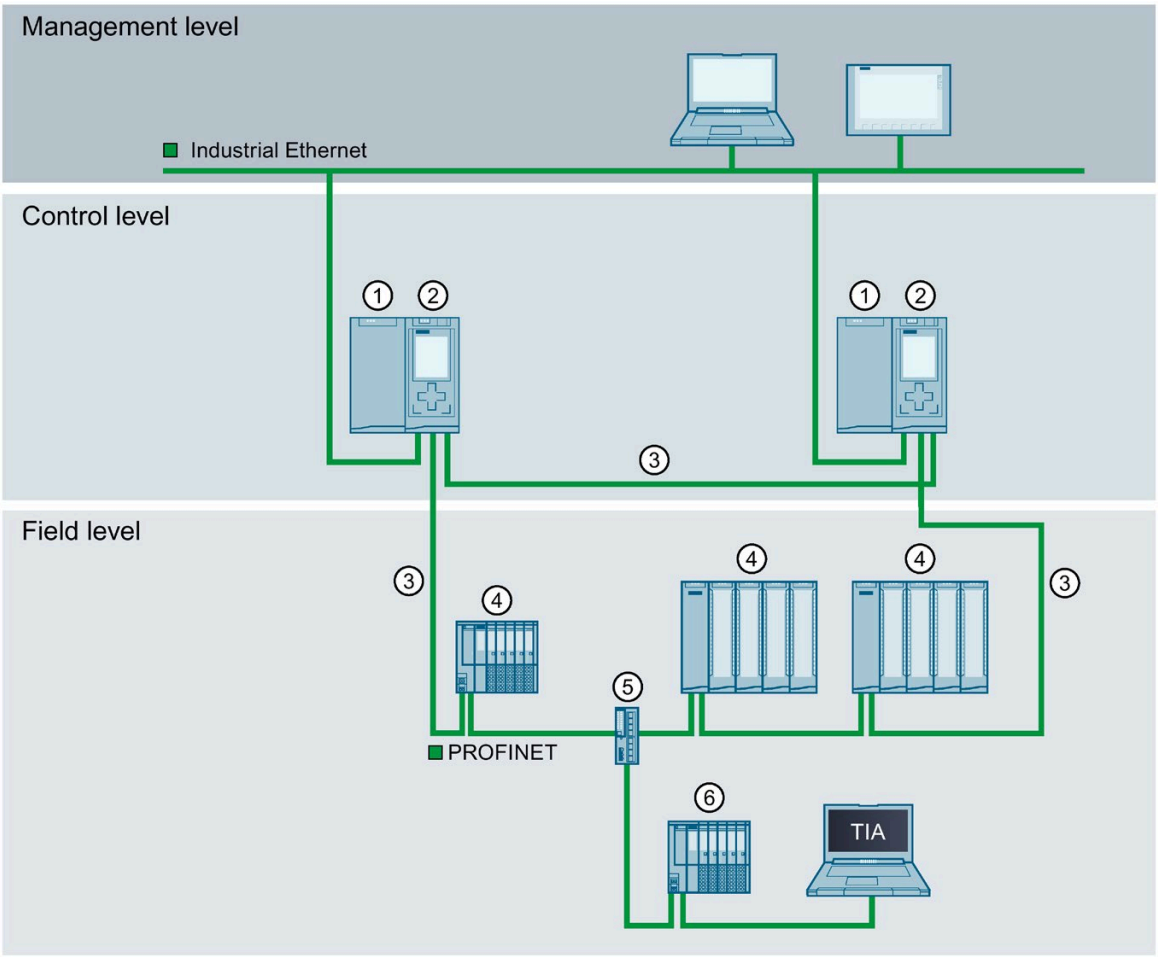

① Load current supply (optional)
② CPU S7-1515R-2 PN
③ PROFINET cable (redundancy connections, PROFINET ring)
④ IO device in the PROFINET ring
⑤ Switch
⑥ IO device outside the PROFINET ring (separated with a switch)

Figure 4-11 S7-1500R configuration variant

S7-1500H

You connect the CPUs to the Industrial Ethernet over a PROFINET interface or using an additional switch.

S7-1500H supports the following number of PROFINET devices (switches, S7-1500H CPUs, S7-1500 CPUs (V2.5 or later), HMI devices, and IO devices such as ET 200MP and ET 200SP): max. 50 in PROFINET ring

S7-1500H supports the following number of IO devices on the H-CPUs: max. 256 in PROFINET network (ring, line or combined topology)

The redundancy connections in S7-1500H are two duplex fiber-optic cables that connect the CPUs directly with plug-in synchronization modules.

The figure below shows a configuration example of the S7-1500H in the PROFINET ring.

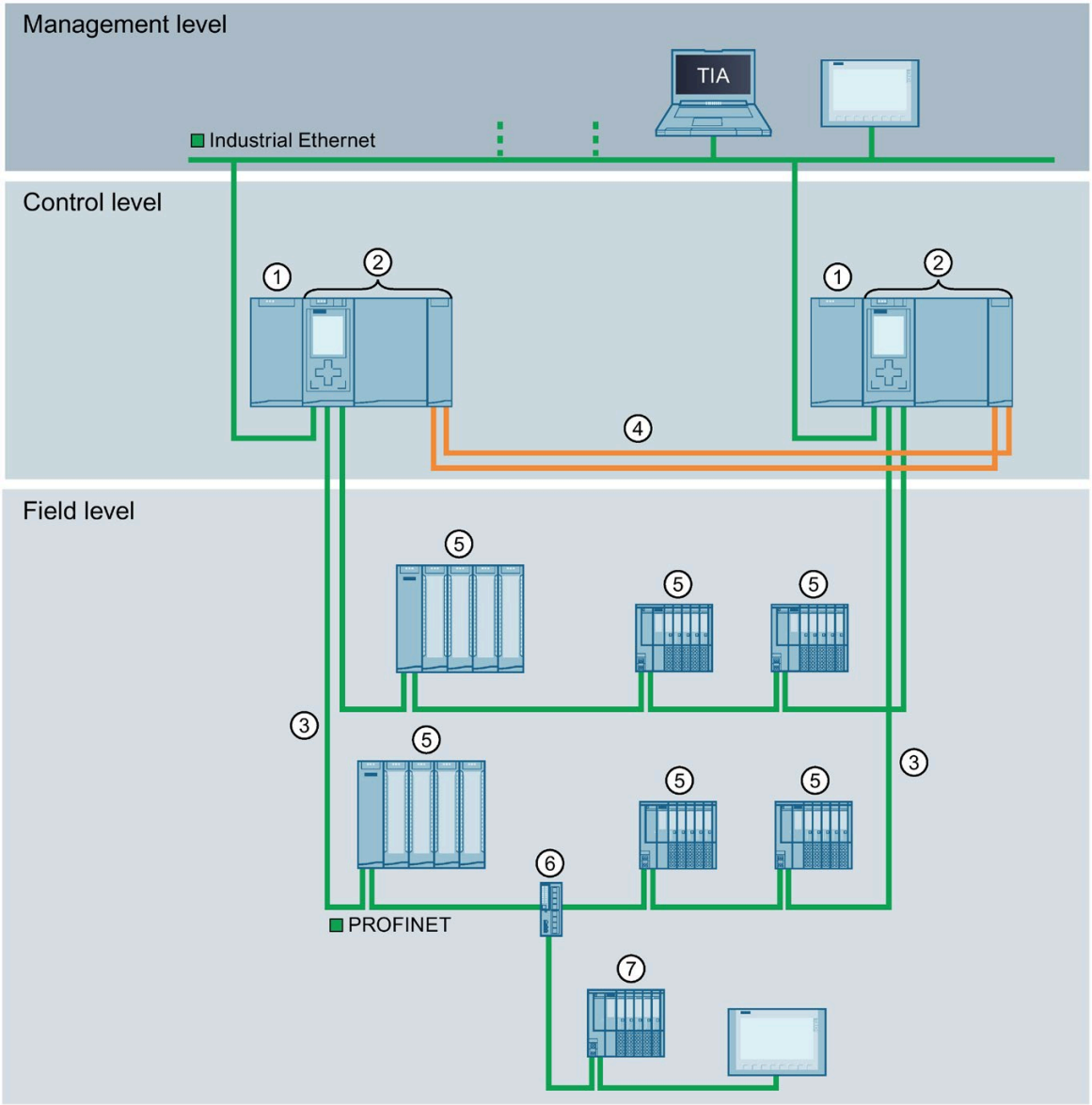

① Load current supply (optional)
② CPU 1517H-3 PN
③ PROFINET cable (PROFINET ring)
④ Redundancy connections (2 duplex fiber-optic cables)
⑤ IO device in the PROFINET ring
⑥ Switch
⑦ IO device outside the PROFINET ring (separated with switch)

Figure 4-12 Configuration variant S7-1500H in PROFINET ring

4.1.5 Overview of features

The following figure summarizes the main features of the redundant S7-1500R/H system.

System redundancy

- Uninterrupted operation
- User can scale availability of System redundancy S2 and R1
- Component replacement during operation

Communication standards

- PROFINET IO

Security Integrated

- Protection level concept for greater access protection

Safety Integrated

- One F-CPU for fail-safe and non-fail-safe applications (CPUs) and fail-safe modules (F-modules)
- Setting of all F parameters via software

Innovative design

- Onboard display for diagnostics and initial commissioning
- Innovative labeling system for clear and simple organization in small spaces

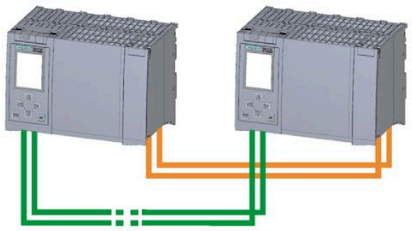

Efficient engineering

- All features of a fault-tolerant system can be configured in the TIA Portal as usual
- Supports a range of programming languages (STL, LAD, FBD, SCL)
- Consistency check with STEP 7 instead of in the CPU

Easy to use

- Easy installation and configuration as for S7-1500 standard systems
- Easy connection to distributed I/O via interface modules
- Redundant mode with automatic CPU synchronization
- Display functions optimized for redundant system operation

Wide range of diagnostics

- Integrated system diagnostics for uniform display concept without additional programming
- Evaluate system errors using system blocks

Figure 4-13 S7-1500R/H features

4.2 Configuration

4.2.1 Structure of the S7-1500R redundant system

Configuration

The S7-1500R redundant system comprises the following components:

- Two R-CPUs
- Two SIMATIC memory cards
- PROFINET cable (redundancy connections, PROFINET ring)
- IO devices
- Load current supply (optional)

The redundant system S7-1500R can be mounted on a common mounting rail or spatially separated on 2 separate mounting rails. Connecting the PROFINET cable to the PROFINET interfaces X1 P2R of the CPUs directly connects the two CPUs. Via the PROFINET interfaces X1 P1R of the CPUs you set up the PROFINET ring from the first CPU via the IO devices to the second CPU.

Configuration example

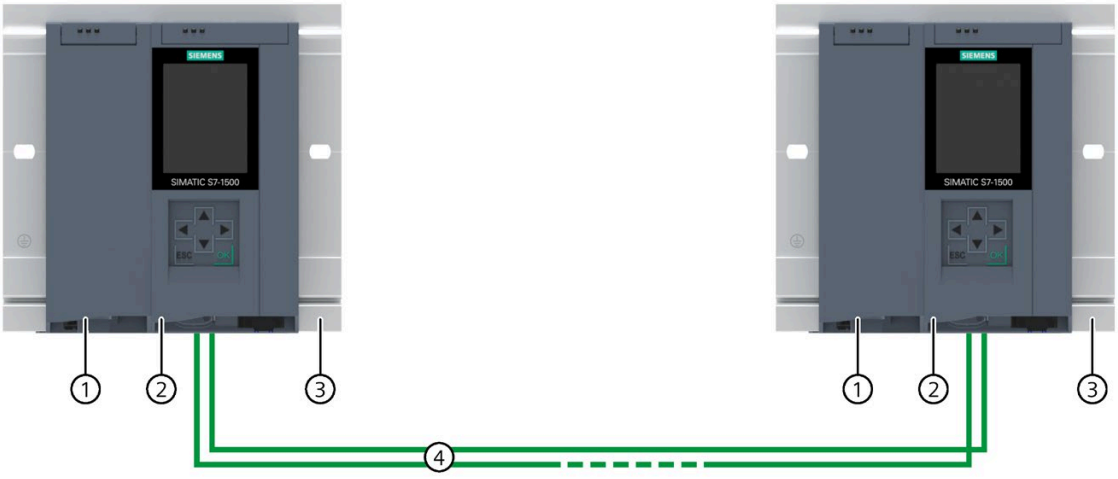

① Optional load current supply
② CPU
③ Mounting rail with integrated DIN rail profile
④ PROFINET cable (redundancy connections, PROFINET ring)

Figure 4-14 S7-1500R configuration example

4.2.2 Structure of the S7-1500H redundant system

Configuration

The S7-1500H redundant system comprises the following components:

- Two H-CPUs
- Two SIMATIC memory cards
- Four synchronization modules (two synchronization modules in each H-CPU)
- Two redundancy connections (two duplex fiber-optic cables)
- If applicable, IO devices
- Load current supply (optional)

The S7-1500H redundant system should be installed either on one shared mounting rail or on two separate mounting rails. You connect the two CPUs with fiber-optic cables to two synchronization modules in each CPU. You set up the PROFINET network via the PROFINET interfaces X1 P1R and X1 P2R of the CPUs.

Configuration example

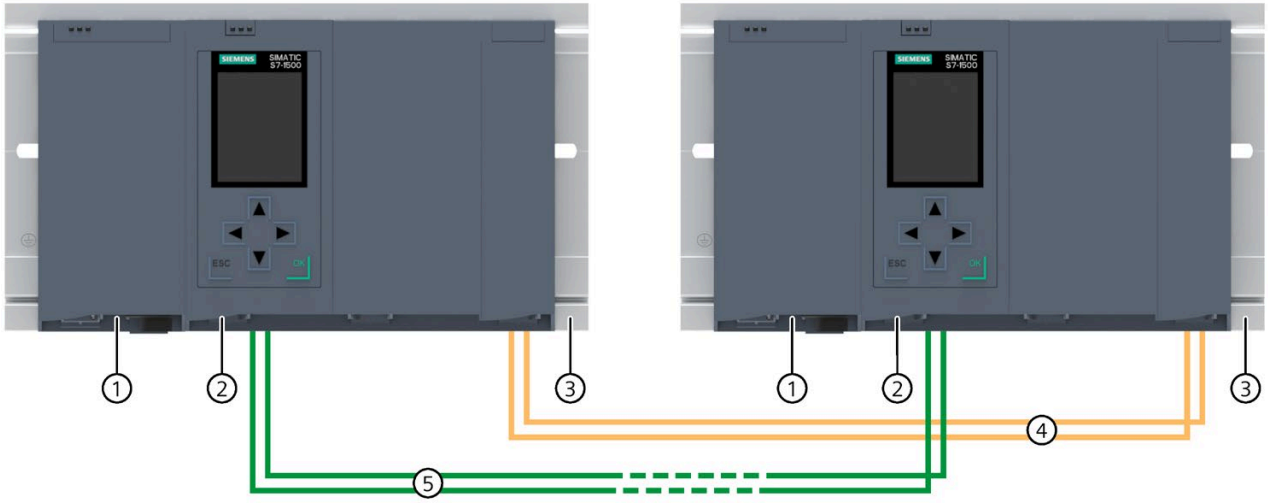

① Optional load current supply
② CPU (with two synchronization modules, connected underneath, not visible in the diagram)
③ Mounting rail with integrated DIN rail profile
④ Redundancy connections (fiber-optic cables)
⑤ PROFINET cable

Figure 4-15 S7-1500H configuration example

4.2.3 Configuration of a fail-safe system with SIMATIC S7-1500HF

Configuration

Fail-safe automation systems (F-systems) are used in systems with higher safety requirements. F-systems control processes and ensure that they are in a safe state immediately after shutdown. In other words, F-systems control processes in which an immediate shutdown does not endanger persons or the environment. The 1518HF-4 PN CPU is a high-availability H-CPU with integrated F-functionality (HF-CPU).

The HF-system is made up of the following components:

- Two HF-CPUs
- Two SIMATIC memory cards
- Four synchronization modules (two synchronization modules in each HF-CPU)
- Two redundancy connections (two duplex fiber-optic cables)
- IO devices with fail-safe modules
- Load current supply (optional)

You can combine fail-safe I/O modules and non-fail-safe I/O modules in the IO devices.

The HF-system (with the 1518HF-4 PN CPUs) exchanges:

- Safety-relevant data with fail-safe modules of the IO devices
- Non-safety-relevant data with non-fail-safe modules of the IO devices

Configuration example

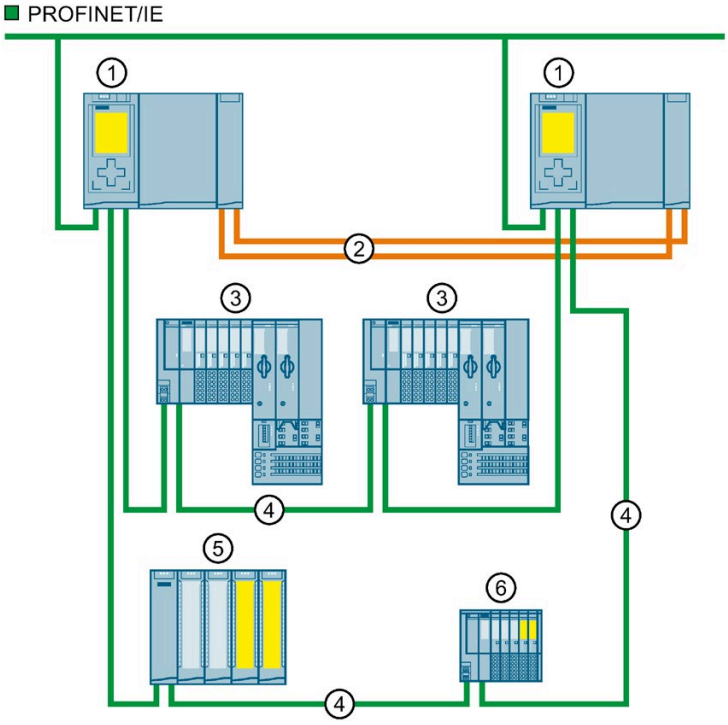

① CPU 1518HF-4 PN
② Redundancy connections (fiber-optic cables)
③ ET 200SP IO device
④ PROFINET cable (PROFINET ring)
⑤ ET 200MP IO device with fail-safe and non-fail-safe modules
⑥ ET 200SP IO device with fail-safe and non-fail-safe modules

Figure 4-16 Example configuration of redundant system with two CPUs 1518HF-4 PN in PROFINET ring

---

Note

Other configuration variants as of FW version V3.0 of the CPU 1518HF-4 PN

As of FW version V3.0, the HF system supports additional functions and configuration variants:

- System redundancy R1
- HF CPUs do not have to be part of a PROFINET ring or MRP domain.
  This makes additional topology variants possible, such as line topology, combined topology, or setup without additional devices.

Reference

For more information on the configuration variants, refer to the section Specific configuration variants for S7-1500H (Page 98).

For more information on the fail-safe modules for ET 200SP / ET 200SP HA / ET 200MP, refer to the associated system and device manuals.

4.2.4 Components

Components of the S7-1500R/H redundant system

Table 4- 3 S7-1500R/H components

Component	Function	Diagram
Mounting rail	The mounting rail is the rack of the S7-1500R/H automation system. You can use the entire length of the mounting rail. You can order the mounting rail as Accessories/spare parts (Page 418).	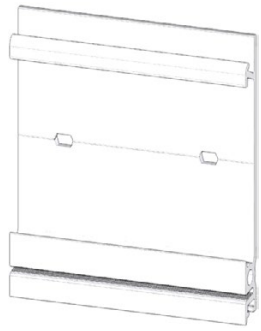
Standard rail adapter	The R/H-CPUs are mounted on a standardized 35 mm rail via the standard rail adapter. The standard rail adapter can be ordered as Accessories/spare parts (Page 418).	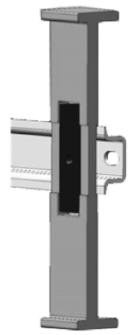
PE connection element for mounting rail	The screw set is inserted in the mounting rail's T-profile groove, and is required for grounding the mounting rail. The set of screws is included in the scope of delivery of the mounting rails in the standard lengths (160 mm to 830 mm) and can be ordered as Accessories/spare parts (Page 418).	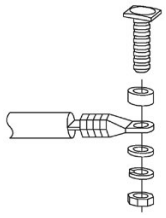

Component	Function	Diagram
R/H-CPUs	The CPU runs the user program. Additional features and functions of the CPU: • Communication via Industrial Ethernet • Communication via PROFINET IO • Redundant mode • HMI communication • Integrated system diagnostics • Integrated protection functions (access and know-how protection)	
PROFINET cable	You connect the CPUs and the IO devices in a PROFINET ring or PROFINET network using PROFINET cables.	
Synchronization modules (for S7-1500H)	You create 2 redundancy connections between the H-CPUs via fiber-optic cables using a total of 4 synchronization modules (2 in each H-CPU). The following synchronization module versions can be ordered: • Sync module 1 GB FO 10 m: for fiber-optic cables up to 10 m in length • Sync module 1 GB FO 10 km: for fiber-optic cables up to 10 km in length • Sync module 1 GB FO 40 km: for fiber-optic cables up to 40 km in length	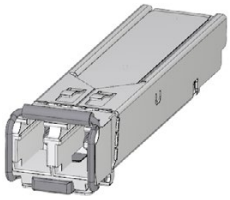
Fiber-optic cable (for S7-1500H)	They connect the 2 synchronization modules per CPU in pairs via a fiber-optic cable. The following lengths of fiber-optic cables can be ordered: • 1 m • 2 m • 10 m • Up to 40 km (additional information on fiber-optic cables in longer versions can be found in the Industry Mall (https://mall.industry.siemens.com).	

Component	Function	Diagram
4-pin connection plug for CPU supply voltage	The 4-pin connection plug provides the supply voltage.	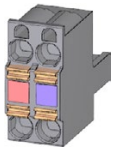
Load current supply (PM)	The load current supply (PM) supplies the central modules (CPU) with 24 V DC. If you are using load current supplies, we recommend the devices from the SIMATIC series. These devices can be mounted on the mounting rail. Various models of load current supply are available: • PM 70 W 120/230 V AC • PM 190 W 120/230 V AC	

4.3 S7-1500 R/H-CPUs

The S7-1500R/H redundant system tolerates the failure of one of the two R- or H-CPUs. If the primary CPU fails, the backup CPU takes over control of the process as the new primary CPU at the point of the interruption.

All relevant data is permanently synchronized between the CPUs over the redundancy connections between primary CPU and backup CPU.

The primary CPU and the backup CPU execute the user program in parallel.

The display of the CPU shows you the control and status information in various menus. Quick access to diagnostic alarms minimizes plant downtimes in the event of a service call.

For effective commissioning and fast optimization of drives and controls, the CPUs support trace functions for all CPU tags.

4.3.1 Overview of the CPU technical specifications

The table below sets out the main technical specifications for the S7-1500 R/H CPUs.

Table 4- 4 Overview of the R/H-CPU technical specifications

	CPU 1513R-1 PN	CPU 1515R-2 PN	CPU 1517H-3 PN	CPU 1518HF-4 PN
Data work-memory, max.	2.5 MB	4.5 MB	8 MB	60 MB
Code work-memory, max.	600 KB	1 MB	2 MB	9 MB
Plug-in load memory (SIMATIC memory card), max.	32 GB	32 GB	32 GB	32 GB
I/O address area, max.	32 KB/32 KB	32 KB/32 KB	32 KB/32 KB	32 KB/32 KB
PROFINET IO interfaces	1	1	1	1
PROFINET interfaces	-	1	1	2
Processing time for bit operations	50 ns	20 ns	4 ns	4 ns
Display screen size	3.45 cm	6.1 cm	6.1 cm	6.1 cm
Applicable PROFINET devices in the PROFINET ring of the R/H system, max: • IO devices • S7-1500R/H CPUs • Switches • S7-1500 CPUs (as of V2.5) • HMI devices	50 (recommended: max. 16)	50 (recommended: max. 16)	50	50
IO devices that can be used on the R/H CPUs, max:	64	64	256	256
Modules per rack, max.	2 (PM and CPU)	2 (PM and CPU)	2 (PM and CPU)	2 (PM and CPU)
Distance between CPUs, max.	Depends on media converter used (with PROFINET cable, max. 100 m)	Depends on media converter used (with PROFINET cable, max. 100 m)	Depends on the synchronization module used: max. 40 km	Depends on the synchronization module used: max. 40 km
Redundancy connections (synchronization link)	PROFINET ring	PROFINET ring	Fiber-optic cable	Fiber-optic cable
System redundancy	Yes	Yes	Yes	Yes
Hot standby	Yes	Yes	Yes	Yes
Switchover time [1]	300 ms	300 ms	50 ms	50 ms

[1] The switchover time is the time starting with the failure or stop of the primary CPU until the backup CPU becomes the primary CPU and assumes control of the process as the primary CPU at the point of interruption. The switchover time can lengthen the cycle time.

Reference

The full technical specifications can be found in the manuals for the CPUs and on the Internet (https://mall.industry.siemens.com).

4.3.2 Redundancy

Introduction

In the following section you will get an overview how to achieve a higher network and plant availability in S7-1500R/H redundant systems.

The **Media Redundancy Protocol (MRP)** enables the connection of IO devices based on ring topologies.

Despite a network failure (switch failure, line interruption), MRP can ensure communication via alternative paths throughout the network.

MRP interconnection enables larger quantity structures by redundantly coupling two or more rings with MRP in PROFINET networks.

The S7-1500R/H redundant system requires media redundancy (MRP) in the PROFINET ring. As of firmware version V3.0, the H-CPUs no longer have to be part of a PROFINET ring. This also allows other topologies, such as line topology.

MRP and MRP interconnection can be used independently of the system redundancy of the IO devices.

You can use the following IO devices on the redundant S7-1500R/H system:

- IO devices with system redundancy S2
- IO devices with system redundancy R1 (only S7-1500H as of FW version V3.0)
- Standard IO devices over the "Switched S1 device" function of the CPU

The **System redundancy S2, R1** tolerates errors in the direct IO controller and IO device communication.
With a **switched S1 device**, an interruption of the IO controller and IO device communication is not tolerated. The S1 device fails temporarily and is then resumed if necessary.

Communication relations in S7-1500R/H

For a redundant system S7-1500R/H different IO device types are available. The IO device types differ with regard to the communication relations AR (Application Relation) they can establish to the CPUs of the redundant system:

- Standard IO devices as switched S1 devices support an AR
- S2 devices support two ARs
- R1 devices support two ARs (one AR per interface module)

To enable an IO device to exchange data with an IO controller (CPU or R/H system), an AR is required between the two. If this AR is interrupted or the IO controller fails, no further data exchange via this AR is then possible. Another AR between the IO device and the second CPU of the R/H system leads to the redundancy of the connection. This increases the reliability of the redundant system.

Media redundancy

Media redundancy is a function for ensuring network and plant availability.

If the transmission link in the ring is interrupted at any point, e.g., due to interruption of the PROFINET line or failure of a station, the redundancy manager immediately activates the alternative communication path.

If you set up the S7-1500R/H redundant system in ring topology, then the two CPUs are located in a PROFINET ring that uses the media redundancy method MRP. All PROFINET devices in the PROFINET ring must support media redundancy (MRP).
In the case of the S7-1500H redundant system, you can also use switches to disconnect the two H-CPUs from the PROFINET ring, in which case they are no longer included in the PROFINET ring.

S7-1500R uses the PROFINET ring (via the PROFINET interfaces X1) for the synchronization of the two CPUs. S7-1500H uses the redundancy connections over fiber-optic cables to synchronize the two CPUs.

To set up a ring topology with media redundancy, you need to bring together the free ends of a linear network topology in one device using 2 ports (ring ports, port label "R"). You specify the ring ports in the device configuration.

With S7-1500H the two H-CPUs can also be located in different PROFINET rings. You can connect the two PROFINET rings via MRP interconnection.

In the S7-1500R/H redundant system with ring topology the media redundancy role of both CPUs must be configured to Manager (auto). For all other PROFINET devices in the PROFINET ring, the media redundancy role Client must be configured. There is a communication connection based on MRP between the redundancy manager and the redundancy clients. The Media Redundancy Protocol (MRP) automatically reconfigures the data paths between the individual devices if the ring is interrupted at any point.

You configure the media redundancy role for IO devices and other PROFINET devices in STEP 7.

H-Sync forwarding

H-Sync forwarding enables a PROFINET device with MRP to forward synchronization data (synchronization frames) of a S7-1500R redundant system only within the PROFINET ring.

In addition, H-Sync forwarding forwards the synchronization data even during reconfiguration of the PROFINET ring. H-Sync forwarding avoids a cycle time increase if the PROFINET ring is interrupted.

Note

Support of H-Sync forwarding

The technical specifications typically state whether a PROFINET device supports H-Sync forwarding.

The GSD file will also indicate whether the device supports H-Sync forwarding. The device supports H-Sync forwarding when the "AdditionalForwardingRulesSupported" attribute in the "MediaRedundancy" element is set to "true".

Conditions:

- H-Sync forwarding is not relevant for redundant S7-1500H systems. With the redundant S7-1500H system, the H-Sync frames are transmitted exclusively via the fiber-optic cables.
- **When you use PROFINET devices with more than two ports (e.g. switch) in the PROFINET ring of an R-system, then H-Sync Forwarding is mandatory for these devices.**

  H-Sync frames leave the PROFINET ring with a switch without H-Sync forwarding. This results in an additional load on the network. Another serious result is that the redundancy of other R-systems in the network can fail or startup can be prevented.
- **H-Sync forwarding is recommended for all devices in the PROFINET ring if you are using PROFINET devices with only 2 ports in the PROFINET ring of an R-system.**

  When you operate PROFINET devices without H-Sync forwarding in the PROFINET ring of the redundant S7-1500R system, the following scenario will result in an additional cycle time increase:

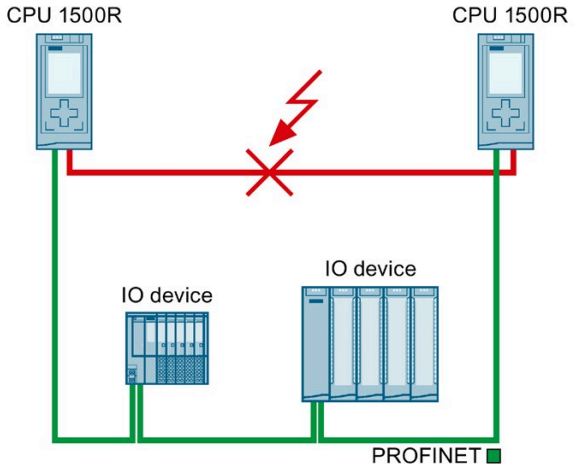

1. The redundant S7-1500R system is in the RUN-Redundant system state.
2. The PROFINET cable which directly connects the two CPUs fails.
3. The PROFINET ring is interrupted.
4. The PROFINET ring is being reconfigured.
5. PROFINET devices without H-Sync forwarding do not forward any H-Sync frames during the reconfiguration time of the PROFINET ring.
6. The cycle time increases by the reconfiguration time of the PROFINET ring.

Figure 4-17 Failure of the PROFINET cable between the CPUs

If the cyclic program exceeds the cycle monitoring time, the time error OB (OB 80) may be started. Redundancy is lost if the time error OB (OB 80) is not present or the double cycle monitoring time was exceeded with OB 80. You can find additional information on the response of the S7-1500R/H redundant system when cycle time is exceeded in the section Events and OBs.

Note

If failure of the PROFINET cable that directly connects the two CPUs of the redundant S7-1500R system is unlikely, you can use PROFINET devices without H-Sync forwarding in the PROFINET ring of the redundant S7-1500R system.

Example: Both CPUs of the redundant S7-1500R/H system are located next to each other in the control cabinet. In this case, it is unlikely that the PROFINET cable will fail.

System redundancy S2

System redundancy S2 is the connection of an IO device via an interface module that supports two ARs to the IO controllers in the redundant system.

IO devices with system redundancy S2 enable uninterrupted process data exchange with the S7-1500R/H redundant system in the event of:

- a CPU fails
- Interruption of the PROFINET ring
- Interruption of the line topology (for S7-1500H as of FW version V3.0)

An IO device with system redundancy S2 supports system redundancy ARs.

In a redundant system, an IO device with system redundancy S2 has a system redundancy AR with each of the two CPUs (IO controllers). An IO device thus supports ARs of two IO controllers simultaneously (for the same modules).

A system redundancy AR can be either a primary AR or a backup AR. An IO device activates the data of the primary AR at the outputs. The data of the backup AR are not initially evaluated.

- Behavior in system state RUN-Redundant:

  Both CPUs are IO controllers. The PROFINET communication runs simultaneously on both system redundancy ARs, in each case between one of the CPUs (IO controllers) and the IO device. If the primary CPU fails or is switched to STOP, then the backup CPU becomes the primary CPU and also switches the backup AR to primary AR. The data of this AR becomes active at the outputs.

  With line topology, only the primary AR can fail. In this case the previous backup AR is switched over to the primary AR, but the roles of the CPUs remain unchanged.

- Behavior in system state RUN-Solo:

  Only the primary CPU is an IO controller. PROFINET communication runs on the primary AR between the primary CPU and the IO device. There is no AR between the backup CPU and the IO device.

In STEP 7, assign an IO device with system redundancy S2 to both CPUs of the redundant S7-1500R/H system.

System redundancy R1

As of FW version V3.0, the S7-1500H redundant system supports IO devices with system redundancy R1.

System redundancy R1 is the connection of an IO device via two interface modules, each of which supports an AR to an IO controller in the redundant system. An IO device can communicate via two separate PROFINET networks (subnets) through the two interface modules.

IO devices with system redundancy R1 enable uninterrupted process data exchange with the S7-1500H redundant system when:

- a CPU fails
- Interruption of the PROFINET ring or of the line topology
- an interface module fails
- a subnet fails.

Unlike system redundancy S2, system redundancy R1 has a separate interface module for each of the two ARs. Due to these redundant interface modules, the availability is higher than with an S2 device.

- Behavior in RUN-Redundant system state:
  The PROFINET communication runs on both system redundancy ARs simultaneously, each between one of the CPUs (IO controller) and an interface module of the R1 device.
  In the case of failure of an interface module of an R1 device, only the ARs switch over. The roles of the H-CPUs do not change.
  If, however, the primary CPU fails or is switched to STOP, the S7-1500H redundant system then behaves as follows:
  - The previous backup CPU becomes the new primary CPU.
  - The new primary CPU uses the AR to the other interface module of the IO device and still has access to the inputs and control over the outputs of the IO device.
  - The AR between the previous primary CPU and the assigned interface module is disconnected.
- Behavior in RUN-Solo system state:
  Only the primary CPU is IO controller. PROFINET communication runs on the AR between the primary CPU (IO controller) and the interface module of the IO device assigned to the primary CPU. The backup CPU separates all its ARs.

In STEP 7 you configure an IO device with system redundancy R1 by:

- Connecting the left interface module of the R1 device to the H-CPU with redundancy ID 1.
- You have to connect the right interface module of the R1 device to the H-CPU with redundancy ID 2.

Switched S1 device

As of FW version V2.8, the S7-1500R/H redundant system supports the "Switched S1 device" function.

The "Switched S1 device" function of the CPU enables operation of standard IO devices on the S7-1500R/H redundant system.

Standard IO devices are always assigned to both CPUs of the S7-1500R/H redundant system. In contrast to an IO device with system redundancy S2, a standard IO device supports only one AR.

As of FW version V3.0, the backup CPU of S7-1500H can establish an AR to an S1 device in a line topology. The primary CPU then receives data via the backup CPU.

- Behavior in the RUN-Redundant system state:
  The PROFINET communication runs on the AR between one of the CPUs (IO controller) and the standard IO device.
  If this is the primary CPU and it fails, the redundant S7-1500R/H system behaves as follows:
  - The AR between the primary CPU and the standard IO device is disconnected.
  - The previous backup CPU becomes the new primary CPU.
  - The S7-1500R/H redundant system temporarily has no access to the inputs and no control over the outputs of the standard IO device. The status of the outputs depends on the substitute value behavior of the respective channels.
  - The new primary CPU builds an AR to the standard IO device.
  - As soon as the new primary CPU has set up the AR, the S7-1500R/H redundant system has access to the inputs again and control over the outputs of the standard IO device.

  Special behavior in S7-1500H when line topology is interrupted:

  Note

  Temporary disconnection of standard IO devices in case of line interruption between primary CPU and IO device

  If the line between the primary CPU and a standard IO device is interrupted, the S7-1500H redundant system temporarily has no access to the inputs and no control over the outputs of the standard IO device. The status of the outputs depends on the substitute value behavior of the respective channels.

  The backup CPU establishes an AR to the standard IO device. As soon as the backup CPU has set up the AR, the S7-1500H redundant system again has access to the inputs and control over the outputs of the standard IO device.

- Behavior in the RUN-Solo system state:
  Only the primary CPU is the IO controller. PROFINET communication runs on the AR between the primary CPU (IO controller) and the standard IO device. There is no AR between the backup CPU and the standard IO device.

In STEP 7 you configure an IO device connected via the "Switched S1 device" function by assigning a standard IO device to both CPUs of the redundant S7-1500R/H system.

Note

Standard IO devices in the redundant system S7-1500R

Standard IO devices usually do not support H-Sync forwarding.

To avoid a cycle time increase when the PROFINET ring is interrupted, integrate the standard IO devices (without H-Sync forwarding) downstream of a switch and not in the PROFINET ring.

Note

I-device as standard IO device

You cannot assign a device that you configured in STEP 7 as an I-device to the S7-1500R/H redundant system.

In order to operate an I-device as a standard IO device on the S7-1500R/H redundant system, always configure the I-device via **GSD file**.

- SIMATIC CPU as I-device
  - First, configure the SIMATIC CPU in STEP 7 as an I-device with all transfer areas.
  - Export the I-device as a GSD file. The GSD export can be found in the properties of the PROFINET interface under "Operating mode" > "I-device communication" > "Export Generic System Description file (GSD)".
  - Install the GSD file in STEP 7.
- HMI device as I-device ("Direct key" function)
  - The GSD files for SIMATIC Comfort Panel and SIMATIC Mobile Panel can be found in this application example (https://support.industry.siemens.com/cs/ww/en/view/73502293).

Assign the device configured via GSD file to the S7-1500R/H redundant system.

As of FW version V2.9, you can influence the changeover time between disconnection and return of switched S1 devices after a failure/STOP of the primary CPU. You can find more information in the PROFINET Function Manual (https://support.industry.siemens.com/cs/ww/en/view/49948856).

MRP interconnection

The MRP interconnection process is an enhancement of MRP and allows the redundant coupling of two or more rings with MRP in PROFINET networks. MRP interconnection is - like MRP - specified in the standard IEC 62439-2 (Edition 3).

MRP interconnection allows the monitoring of larger topologies with ring redundancy. With MRP interconnection, you are not limited to the maximum number of 50 devices in a ring when configuring redundant network topologies. For information on the quantity structure of MRP Interconnection, refer to the SCALANCE XM-400/XR-500 Web Based Management (WBM) configuration manual (https://support.industry.siemens.com/cs/ww/en/view/109760840).

The S7-1500R/H CPUs support MRP interconnection as of firmware version V2.9. Observe the maximum number of devices that can be connected for R/H-CPUs. Additional information can be found in the manuals for the R/H CPUs.

4 devices for MRP interconnection connections

2 MRP interconnection connections provide redundant coupling between 2 MRP rings. Four devices are required for these 2 connections:

- One media redundancy interconnection manager (MIM)
- 3 media redundancy interconnection clients (MIC):
  - Primary MIC
  - Primary Coupled MIC
  - Secondary Coupled MIC

Example

The following figure shows the redundant coupling based on the example of S7-1500R in 2 rings:

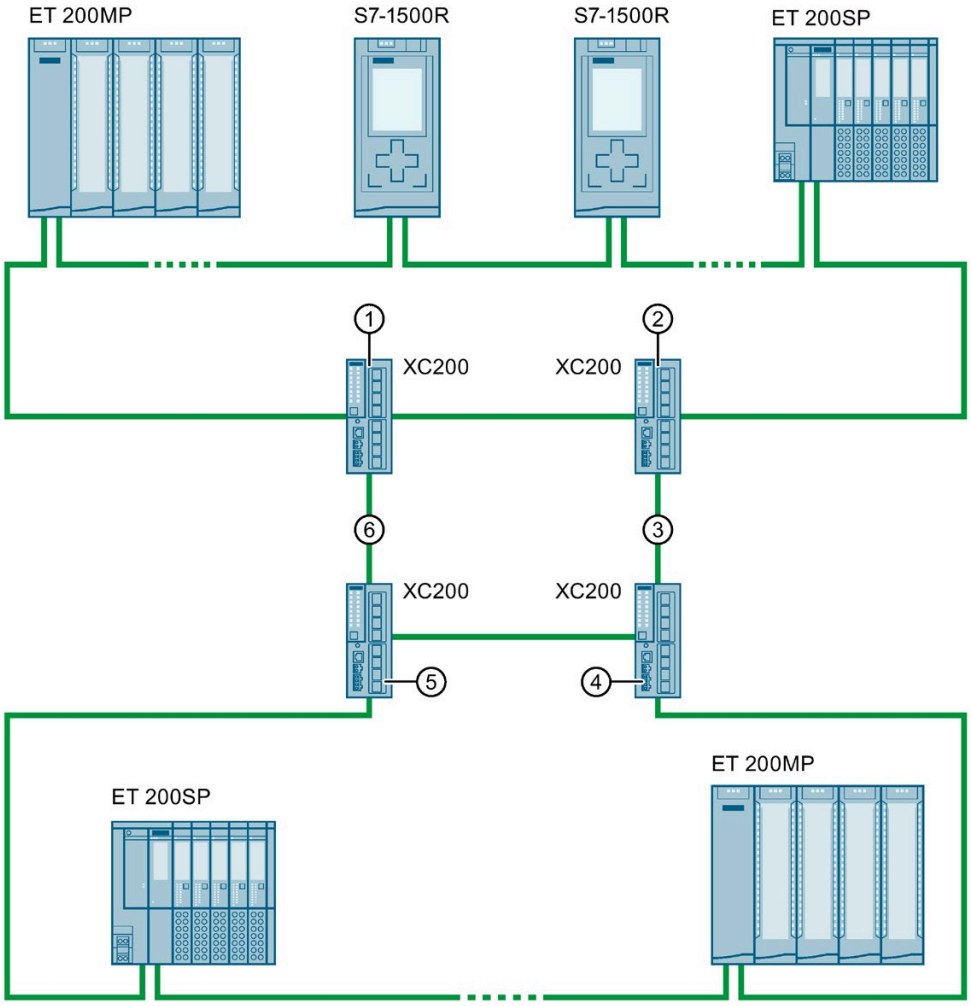

① Primary MIC
② Media Redundancy Interconnection Manager (MIM)
③ Secondary Link
④ Secondary Coupled MIC
⑤ Primary Coupled MIC
⑥ Primary Link

Figure 4-18 Example: Redundant connection of S7-1500R in 2 rings with MRP interconnection

Reference

For more information on media redundancy, system redundancy S2, system redundancy R1 and switched S1 device can be found in the PROFINET Function Manual (https://support.industry.siemens.com/cs/ww/en/view/49948856).

More information on MRP interconnection can be found in the PROFINET Function Manual and in the configuration manual SCALANCE XM-400/XR-500 Web Based Management (WBM).

4.3.3 Safety

Increased security measures

Wherever faults can cause personal injury or material damage, special standards must be applied to the safety of the entire plant. Special, plant-specific regulations exist for the safety of the plant, which must also be taken into account by the operator when setting up the control system.

For electronic controllers with safety responsibility, the measures that must be taken to prevent or control errors are based on the risk posed by the plant. Above a specific hazard potential, the operator must ensure that additional measures are implemented for the plant, for example, by using fail-safe automation systems.

Fail-safe automation systems (F-systems) control processes and ensure that they are in a safe state immediately after shutdown. In other words, F-systems control processes in which an immediate shutdown does not endanger persons or the environment.

The fail-safe SIMATIC Safety system is available for implementing safety concepts in the area of machine and personnel protection (e.g., for EMERGENCY STOP equipment when operating machine tools and processing machines) and in the process industry (e.g. for performing protective functions for I&C protective devices and burners).

Use the 1518HF-4 PN CPUs to integrate the F-functionality in S7-1500HF redundant systems.

SIMATIC Safety Integrated

For fail-safe operation of your plant, program the F-CPUs. Use the "STEP 7 Safety Advanced" of the TIA Portal for this purpose. In combination with STEP 7, the F-CPU offers optimal integration of fail-safe systems into your engineering environment; one controller, one communication system and one engineering platform for standard and fail-safe automation:

- Integration of safety technology
- Instructions approved by German Technical Inspectorate for frequently required safety applications
- Integration of safety functions up to SIL 3 in accordance with IEC 61508, SILCL 3 in accordance with IEC 62061 and/or PL e and Category 4 in accordance with ISO 13849-1
- Uniform engineering for standard and safety automation
- Simple documentation of safety-related changes via the F change history in STEP 7 Safety
- Support in the acceptance of the safety program and no renewed acceptance of the safety program after changes in the standard program

Advantages and customer benefits

SIMATIC Safety Integrated offers the following advantages:

- Engineering with SIMATIC STEP 7 Safety Advanced in STEP 7, same engineering and operating concept for standard and fail-safe automation tasks.
- Use of instructions approved by the German Technical Inspectorate from the system library Safety in the safety program, for example for protective door, emergency stop, monitored feedback loop circuit and user acknowledgment; saves time and reduces the error rate
- Simple connections of PROFIsafe devices via PROFINET
- Additional password protection for F-CPU and safety program for IT security.
- Integration in integrated system diagnostics

Example of baggage conveyor system with emergency stop buttons

Automation task

In an airport, a baggage conveyor distributes the luggage. Conveyor belts and track switches transport the luggage to the various terminals. If a dangerous situation or a baggage jam occurs at a track switch position or transshipment facilities, personnel need to be able to stop the conveyor belt immediately.

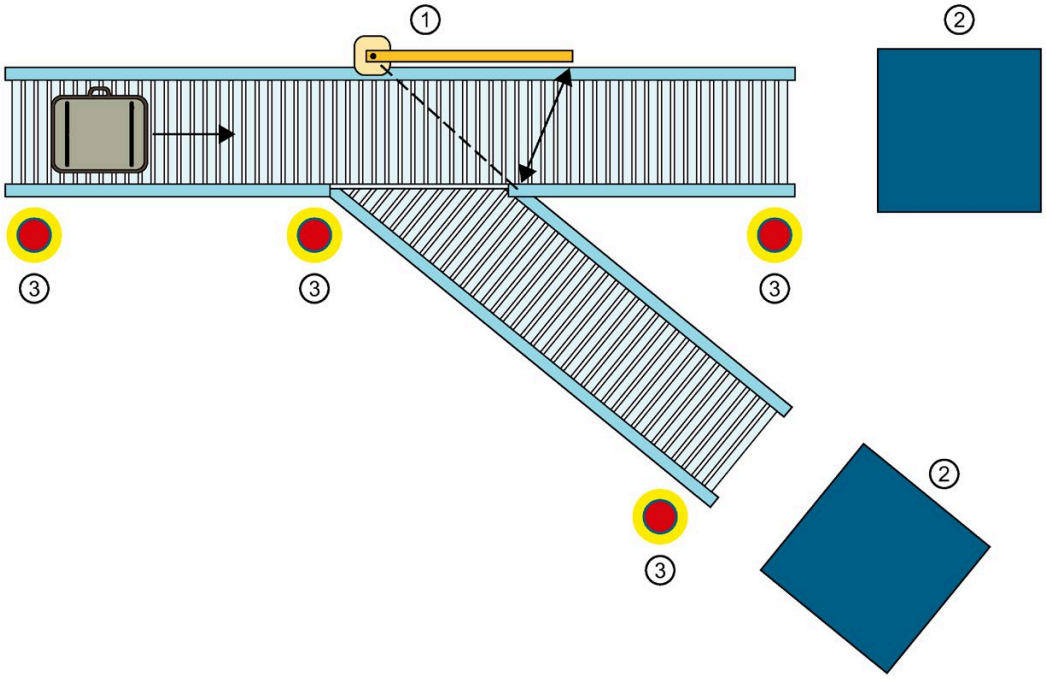

① Conveyor belt switch
② Transshipment equipment
③ Emergency stop buttons

Figure 4-19 Baggage conveyor system with emergency stop buttons

Feature

You need the 1518HF-4 PN CPUs. With the integrated F-functionality, you evaluate the emergency stop buttons via PROFIsafe.

Solution

If one of the CPUs fails (loss of redundancy), the S7-1500HF redundant system switches from the RUN-Redundant system state to the RUN-Solo system state. The HF-system reduces the probability of an F-STOP being triggered on failure of a CPU.

You evaluate the emergency stop buttons at the track switch positions and transshipment facilities via fail-safe modules in the ET 200SP distributed I/O system. If a dangerous situation or a baggage jam occurs, an employee presses the emergency stop button.
Result: The redundant system shuts down the conveyor belt immediately via PROFIsafe.

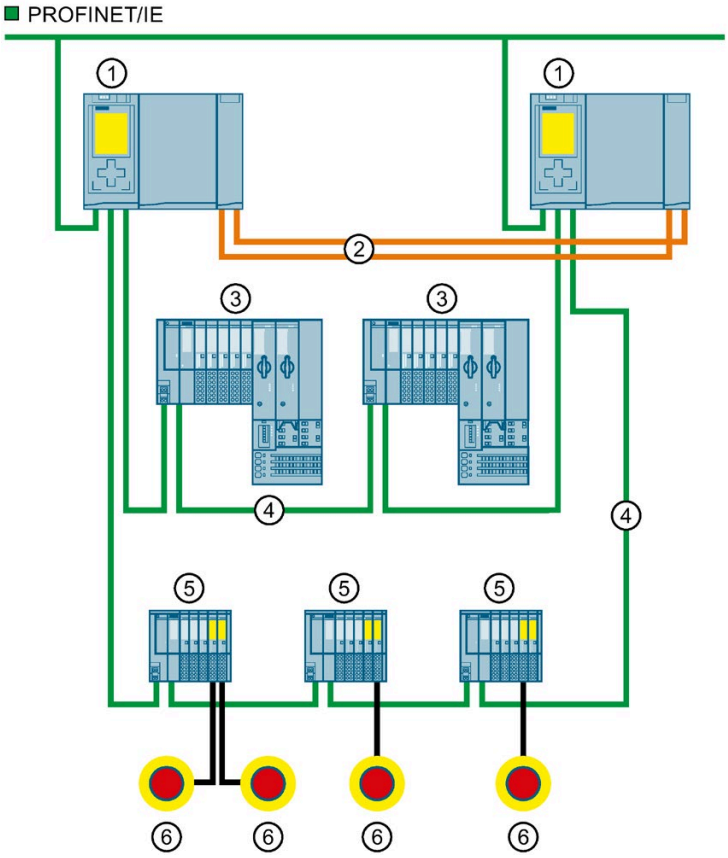

① CPU 1518HF-4 PN
② Redundancy connections (fiber-optic cables)
③ ET 200SP IO device for controlling the conveyor belt
④ PROFINET cables (PROFINET ring)
⑤ ET 200SP IO device with fail-safe modules for evaluating the emergency stop buttons
⑥ Emergency stop buttons

Figure 4-20 Configuration with CPUs 1518HF-4 PN and ET 200SP with fail-safe modules

Advantages

Safety Integrated provides the following advantages:

- Engineering with SIMATIC STEP 7 Safety Advanced in the TIA Portal
- Simple connection of PROFIsafe devices over PROFINET
- Integration in integrated system diagnostics

Reference

You can find a detailed description of F-CPU configuration and programming in the SIMATIC Safety – Configuring and Programming (https://support.industry.siemens.com/cs/ww/en/view/54110126) programming and operating manual.

4.3.4 Security

Security means the protection of technical systems against sabotage, espionage and human error.

Protection functions

For the setup of secure networks, the S7-1500R/H redundant system has an integrated security concept from authorization levels up to block protection:

Table 4- 5 Overview of protection functions

Protection function	Description
Protection of confidential configuration data	Protection of confidential CPU configuration data
Integrity protection	The CPUs feature an integrity protection function by default. This helps detect any manipulations: • To the engineering data on the SIMATIC memory card • To the engineering data during data transfer between TIA Portal and CPU • To the engineering data during data transfer between HMI system and CPU • To the synchronization data during data transfer between primary and backup CPU • To the encrypted firmware
Access protection	Protection against unauthorized configuration changes via four or five (for HF-CPU) authorization levels
Know-how protection	Protection against unauthorized access and modifications to algorithms with password protection
CPU lock	Protection against unauthorized access by locking the front cover with a seal or a lock

You can find additional information about security mechanisms of the SIMATIC automation systems in the Security with SIMATIC S7 controllers (https://support.industry.siemens.com/cs/ww/en/view/77431846) document and in the Communication (https://support.industry.siemens.com/cs/ww/en/view/59192925) function manual.

Access protection example

You can choose from four or five (with HF-CPU) different access levels in STEP 7 to restrict user access to functions and memory areas.

Access level	Access				Access per...
	HMI	Read	Write	Fail-safe	Password
Full access incl. fail-safe (no protection)	✓	✓	✓	✓	
Full access (no protection)	✓	✓	✓		
Read access	✓	✓			
HMI access	✓				
No access (complete protection)					

Figure 4-21 Access protection

If you only want to allow users access over HMI, for example, select the access level "HMI access" in the TIA Portal. Only HMI access and access to diagnostics data is then possible without entering a password.

Users can read and write tags over an HMI device with this access level.

Users **cannot**:

- Download blocks or the hardware configuration to the CPU
- Upload blocks or the hardware configuration from the CPU to the PG/PC
- Run writing test functions
- Change the operating state from the PG/PC
- Run firmware updates

Advantages and customer benefits of protection functions

The protection functions listed above protect your investments from unauthorized access and manipulation, helping to secure plant availability.

PG/PC and HMI communication

With STEP 7 and WinCC as of Version V17, R/H-CPUs from firmware version 2.9 support innovated and standardized secure PG/PC and HMI communication – referred to as Secure PG/HMI communication for short.

Reference

You can find additional information on the protection functions described in the section Protection (Page 270) and in the STEP 7 online help.

Siemens products and solutions are only one element of a comprehensive industrial security concept. Please note the additional information on Industrial Security (http://www.siemens.com/industrialsecurity).

4.3.5 Diagnostics

All levels of automation in the S7-1500R/H redundant system have integrated diagnostics. All SIMATIC products have integrated diagnostic functions that you can use to analyze, localize and log faults and errors efficiently.

System diagnostics is integrated into the firmware of the CPUs and works independently of the cyclic user program. Faults in the plant are immediately detected and reported on the display devices.

A uniform display concept visualizes error messages as plain text information over:

- TIA Portal
- HMI devices
- CPU displays

Displaying faults in an IO device

The various components of the S7-1500R/H redundant system are connected over PROFINET/Industrial Ethernet (IE). The devices detect faults in their modules (for example IO device ET 200SP) and send diagnostics data to the assigned CPU. The CPU analyzes this diagnostic information and notifies the connected display media. The information analyzed is shown in graphic form in the configuration and programming software (TIA Portal), on the HMI devices and on the CPU displays.

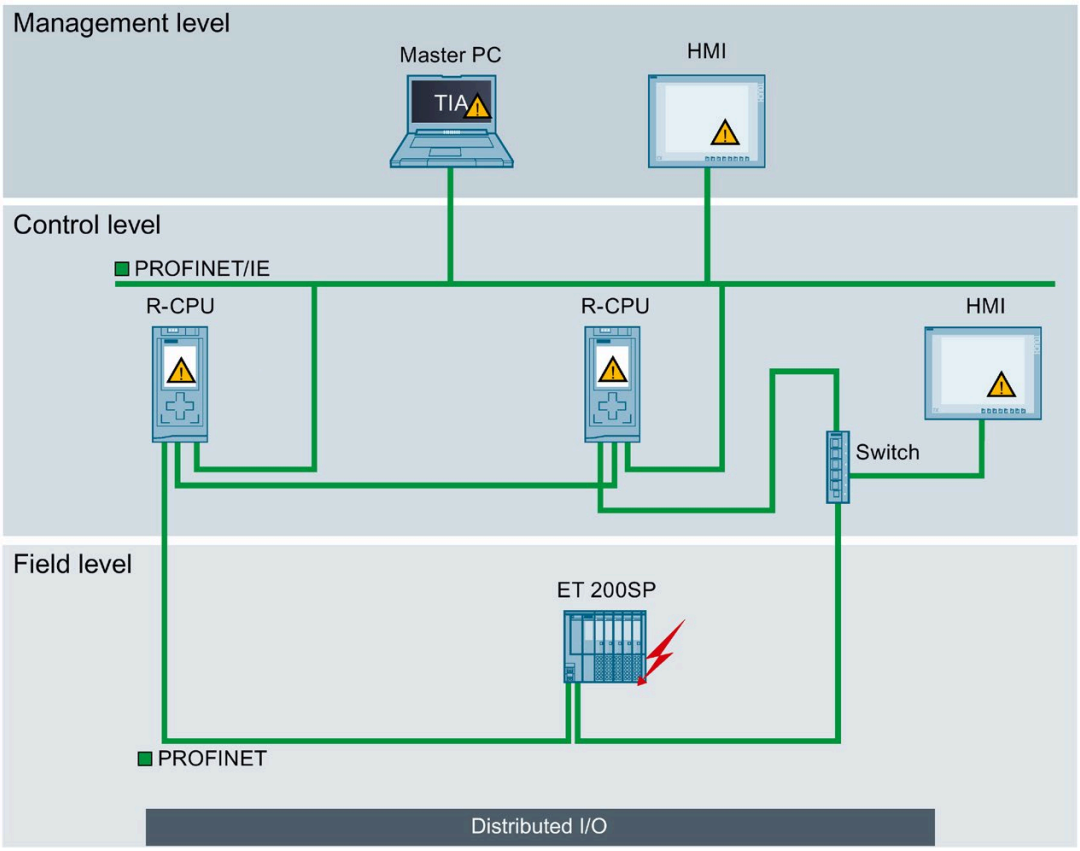

Figure 4-22 Overview of system diagnostics in a plant

Advantages and customer benefits

Integrated system diagnostics offers the following advantages:

- Diagnostics is always consistent with the actual state of the plant. In S7-1500R/H redundant mode, the diagnostic information is synchronized between the CPUs.
- The uniform display concept enables efficient error analysis.
- The immediate identification of the error source in the event of an error speeds up commissioning and minimizes production downtimes.
- By configuring diagnostics events, you tailor the diagnostics to the requirements of your automation task.

Reference

You will find more information on diagnostics in the Diagnostics (https://support.industry.siemens.com/cs/ww/en/view/59192926) function manual.

4.3.6 Trace

The trace functionality facilitates troubleshooting and optimization for the user program. Trace records device tags and evaluates the recordings. This allows you to analyze defective signal responses. Tags are, for example, drive parameters or the system and user tags of a CPU. Because the CPU records tags directly, the trace and logic analyzer function is suitable for monitoring highly dynamic processes.

Note

Trace restrictions

The S7-1500R/H redundant system does not support the storage of measurements on the SIMATIC memory card.

Example of signal response analysis

To analyze a specific signal response, you define the recording and trigger conditions for the signals to be recorded.

① The trace function can be called in the project tree from the "Traces" folder under the top CPU of the redundant system.

The trend diagram ② displays the selected signals of a recording. Bits are shown in the lower diagram as a bit track.

The signal table ③ lists the signals of the selected measurement and provides setting options for specific properties.

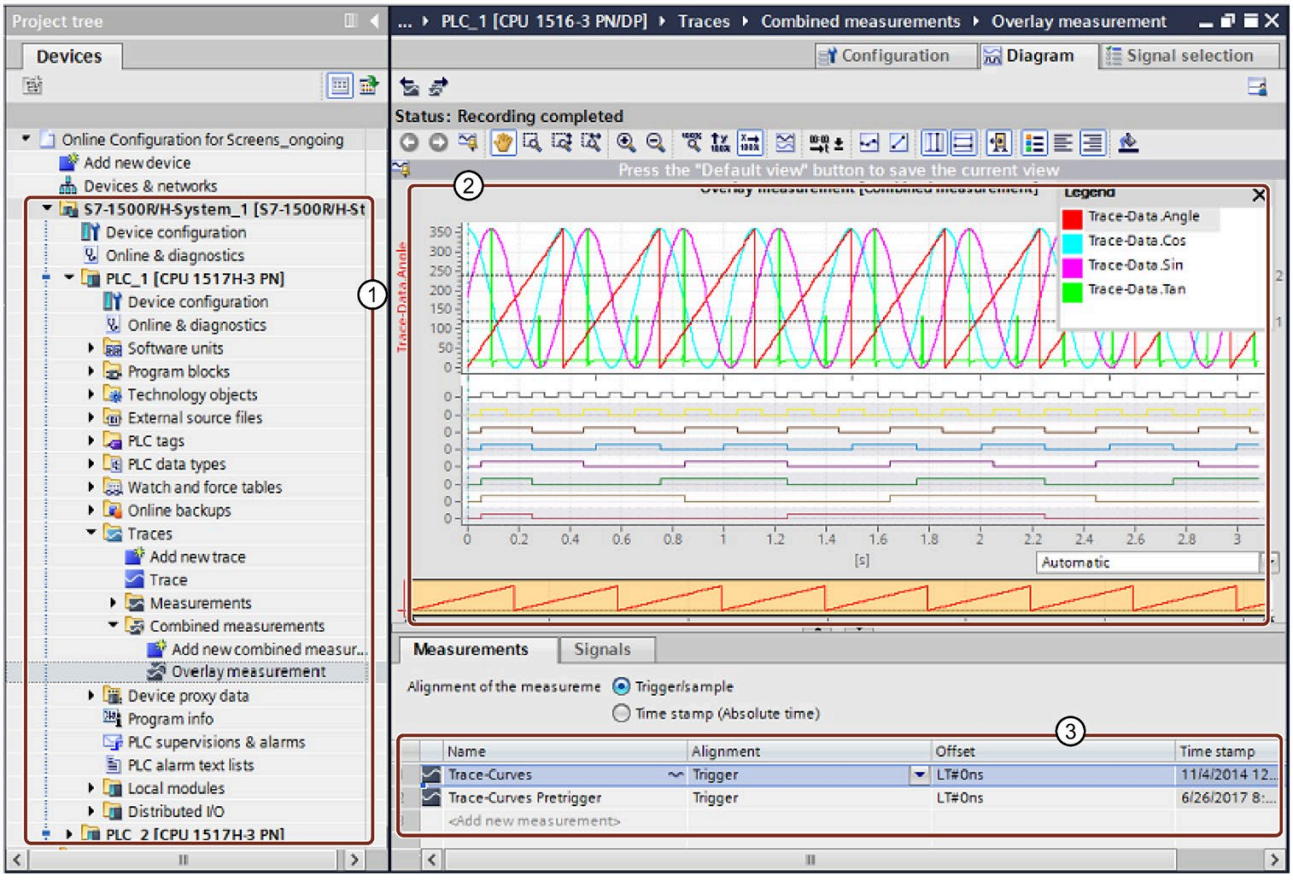

① Trace recordings for S7-1500R/H in the project tree

② Trend diagram

③ Signal table

Figure 4-23 Trace measurement for S7-1500R/H

Advantages and customer benefits

The trace function offers the following advantages:

- Recording of up to 64 different signals and up to four (R-CPUs) or eight (H-CPUs) independent trace jobs simultaneously
- A uniform standard for tag analysis that allows even sporadic errors to be located rapidly

Reference

You can find additional information on the trace function in the section Test functions (Page 390) and in the Using the trace and logic analyzer function manual (http://support.automation.siemens.com/WW/view/en/64897128).

4.3.7 PID control

PID controllers are built into all R/H-CPUs as standard. PID controllers measure the actual value of a physical variable, for example, temperature or pressure, and compare the actual value with the setpoint. Based on the resulting error signal, the controller calculates a manipulated variable that causes the process value to reach the setpoint as quickly and stably as possible.

You can choose from three different PID technology objects:

PID technology object	Description
PID_Compact	The PID_Compact technology object provides a PID controller with integrated tuning for proportional-action final controlling elements. Different operating modes are possible with PID_Compact, e.g: • Pretuning • Fine tuning • Automatic mode • Manual mode
PID_3Step	The PID_3Step technology object provides a PID controller with tuning for valves or actuators with integrating behavior. You can configure the following controllers: • Three-point stepping controller with position feedback • Three-point stepping controller without position feedback • Valve controller with analog output value
PID_Temp	The PID_Temp technology object provides a continuous PID controller with integrated tuning. PID_Temp is specially designed for temperature control and is suitable for heating or heating/cooling applications. Two outputs are available, one for heating and one for cooling. You can also use PID_Temp for other control tasks. PID_Temp can be cascaded. You can use PID_Temp in manual or automatic mode.

Note

Restriction

The display of the start value in the CPU and the corresponding comparison result in the configuration editor of the PID technology object is only possible in the RUN-Solo system state.

Example closed loop control of a valve in a mixer tap

The automation task is to control the valve of a mixer tap according to a desired temperature setting. You configure the opening and closing of the valve in the PID_3Step technology object. For this you need:

- An analog input channel for the actual value
- A digital output for "Control upwards" (e.g. open valve)
- A digital output for "Control downwards" (e.g. close valve)

The first step is to select the PID_3Step technology object in STEP 7:

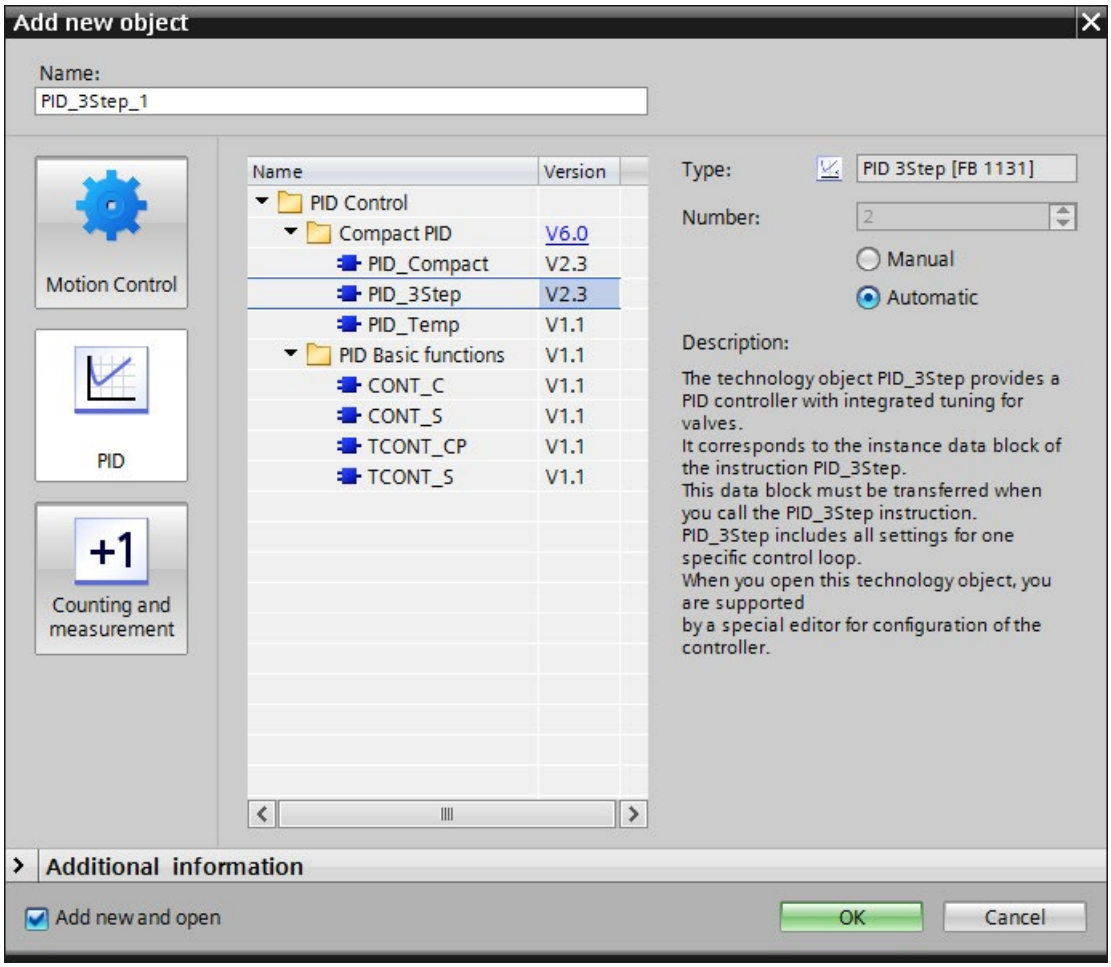

Figure 4-24 Selection of the PID_3Step technology object in STEP 7

After selecting the technology object, it is automatically stored in the project tree in the Technology Objects folder. In the configuration window, select the desired parameter area and enter the configuration data for the PID controller.

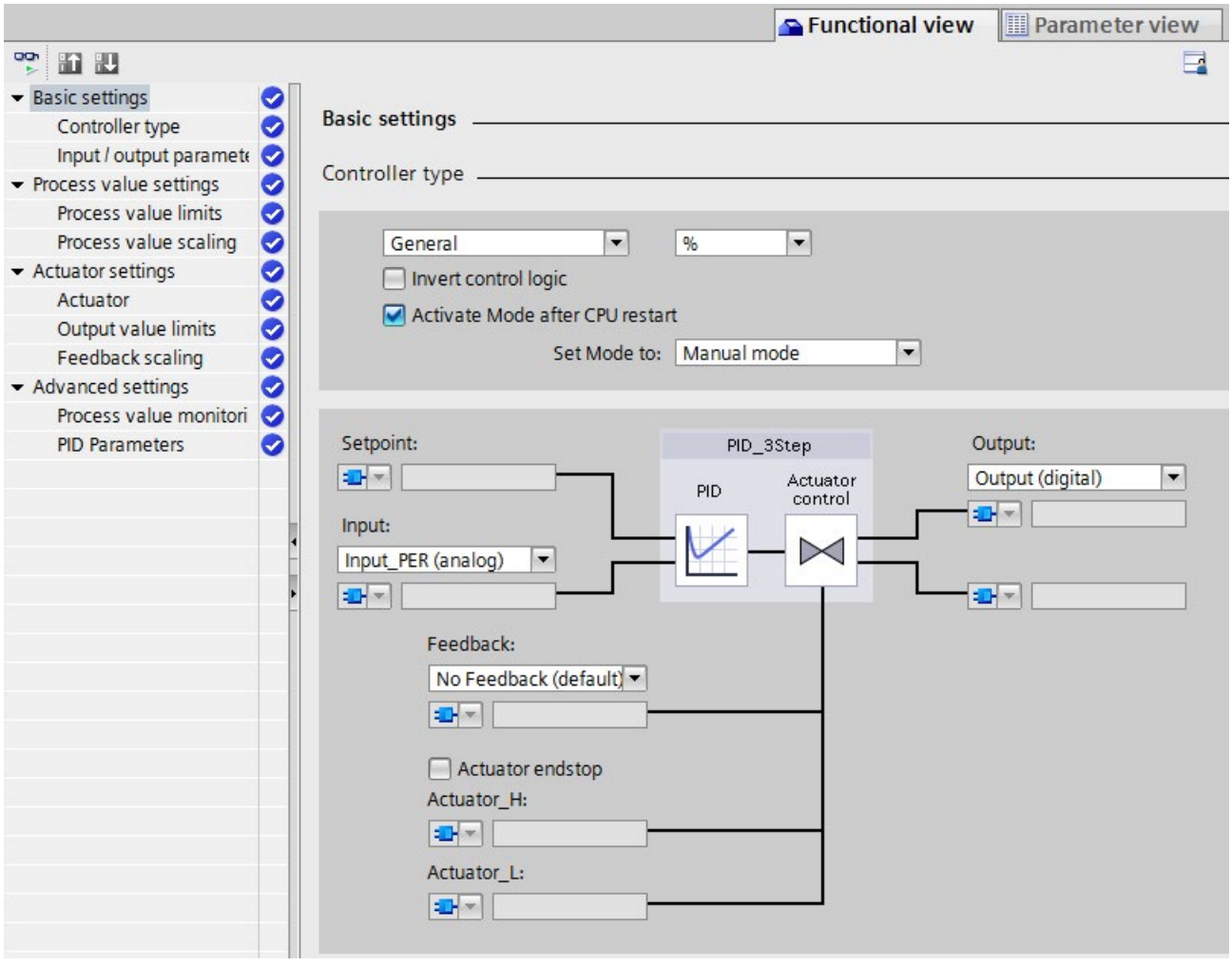

Figure 4-25 Configuration of the PID_3Step technology object in STEP 7

The required instance data module corresponds to the PID_3Step technology object.

Advantages and customer benefits

- Simple configuration and programming through integrated editors and blocks.
- Simple simulation, visualization, commissioning and operation via PG and HMI.
- Automatic calculation of the control parameters and tuning during operation.
- No additional hardware and software required.

Reference

You can find more information on PID controllers PID Control Function Manual (https://support.industry.siemens.com/cs/ww/en/view/108210036).

4.4 Communication

4.4.1 System and device IP addresses

Device IP addresses

For the interfaces of the CPUs and the IO devices to be accessible, the interfaces require IP addresses that are unique within the network (device IP addresses).

MAC addresses

The CPUs have a unique MAC address for each interface and its ports. The MAC addresses of the PROFINET ports are needed for the LLDP protocol, for example for the neighborhood discovery function.

The number range of the MAC addresses is sequential. The first and last MAC addresses are printed on the rating plate on the right-hand side of each CPU.

System IP addresses

In addition to the device IP addresses of the CPUs, the redundant system S7-1500R/H supports system IP addresses:

- System IP address for the X1 PROFINET interfaces of the two CPUs (system IP address X1) for CPU 1513R-1 PN, CPU 1515R-2 PN, CPU 1517H-3 PN and CPU 1518HF-4 PN
- System IP address for the X2 PROFINET interfaces of the two CPUs (system IP address X2) for CPU 1515R-2 PN, CPU 1517H-3 PN and CPU 1518HF-4 PN
- System IP address for the X3 PROFINET interfaces of the two CPUs (system IP-address X3) for CPU 1518HF-4 PN

You use the system IP addresses for communication with other devices (for example, HMI devices, CPUs, PG/PC). The devices always communicate over the system IP address with the primary CPU of the redundant system. This ensures that the communication partner can communicate with the new primary CPU (previously backup CPU) in the RUN-Solo system state after failure of the original primary CPU in redundant operation.

There is a virtual MAC address for each system IP address. The virtual MAC addresses of the PROFINET interfaces must be different.

You enable the system IP addresses in STEP 7.

For information on configuring the system IP addresses and the virtual MAC addresses, refer to the section Configuring S7-1500R.

Advantages of system IP addresses over device IP addresses

- Targeted communication of the communication partner with the primary CPU.
- The S7-1500R/H redundant system can continue to communicate over a system IP address even if the primary CPU fails.

Configuration example

The figure below shows a configuration in which the S7-1500R/H redundant system communicates with other devices over the system IP address X2. The other devices are connected to the S7-1500 redundant system over the X2 PROFINET interfaces.

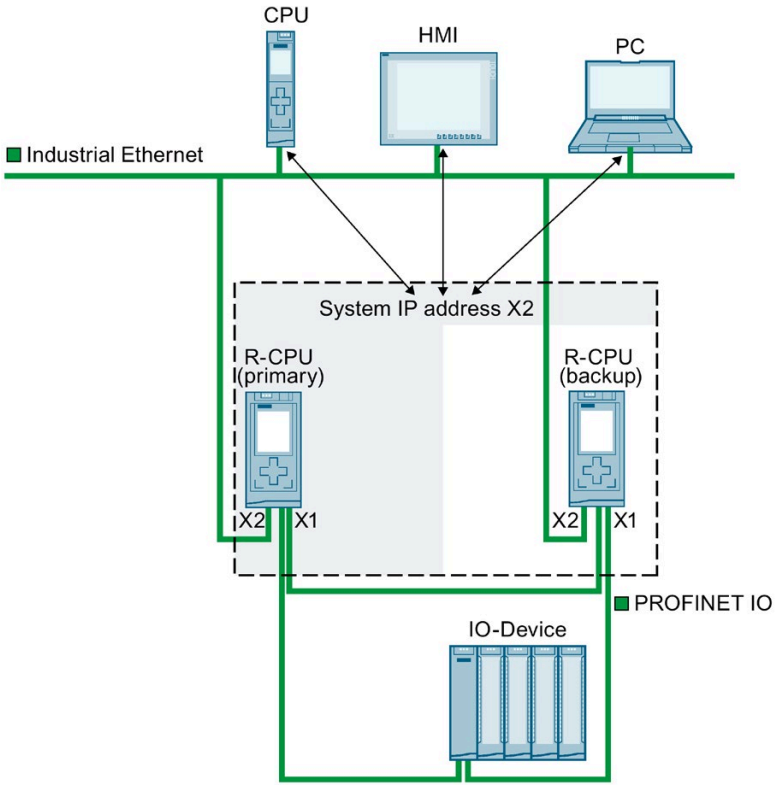

Figure 4-26 Example: Communication of the S7 1500R/H redundant system over the system IP address X2

Reference

You can find more information on the system IP address in the S7-1500R/H redundant system in the Communication (https://support.industry.siemens.com/cs/ww/en/view/59192925) function manual.

4.4.2 Integrated interfaces for communication

The table below provides an overview of CPU communication options in the S7-1500R/H redundant system.

Table 4- 6 S7-1500R/H communication options

Communication option	Service available over:			
	PROFINET interface X1 (devices IP address)	PROFINET interface X2 (devices IP address)[1]	PROFINET interface X3 (devices IP address)[2]	System IP address (on X1, X2 and X3 interfaces)
PROFINET IO	✓	---	---	---
MRP (Media Redundancy Protocol)	✓	---	---	---
LLDP (network topology detection)	✓	✓	✓	---
PG communication for commissioning, testing and diagnostics	✓	✓	✓	---
HMI communication for operator control and monitoring	✓[3]	✓[3]	✓[3]	✓
Open User Communication	✓[3]	✓[3]	✓[3]	✓
S7 communication as server	✓[3]	✓[3]	✓[3]	✓
S7 routing	✓	✓	✓	---
IP forwarding	✓	✓	✓	✓
Time synchronization	✓	✓	✓	---

1) Not with CPU 1513R-1 PN

2) Not with CPU 1513R-1 PN, CPU 1515R-2 PN and CPU 1517H-3 PN

3) Communication mainly over system IP address: If the communication partner uses a device IP address and the CPU with this device IP address fails, communication between the communication partner and S7-1500R/H also fails.

Reference

For more information on communication options, please refer to the Communication function manual.

4.4.3 HMI devices

HMI devices are used for machine-level process visualization and control. You use the same HMI devices for the S7-1500R/H redundant system as for the standard S7-1500 system.

Using HMI communication, one or more HMI devices exchange data with the CPUs . Examples of HMI devices are HMI Basic/Comfort/Mobile Panel.

The connection of the HMI device to the redundant system depends on the specific application. In STEP 7, you can configure the following communication options:

- The HMI device communicates with the redundant system over the system IP address.
- The HMI device communicates with the R/H-CPUs (for example for diagnostics purposes) over the device IP addresses.

Reference

You can find additional information on using HMI devices in the section Using HMI devices (Page 172) and in the Communication function manual (https://support.industry.siemens.com/cs/ww/en/view/59192925).

You can find an overview of all available HMI devices in the Industry Mall (https://mall.industry.siemens.com/mall/en/WW/Catalog/Products/9109999?tree=CatalogTree) .

4.5 Power supply

The CPUs of the redundant system have an integrated system power supply. You can add one load current supply to the integrated system power supply.

Note

The CPUs are designed for fixed operation and continuous operation on a load current supply.

Load power supply (PM)

The load current supply (PM) supplies the system components and CPU. You can install the load current supply directly to the left of the CPU (without connection to the backplane bus).

Using a SITOP power supply as an alternative to a load power supply

Alternatively, an external 24 V power supply from the SITOP range (https://mall.industry.siemens.com/mall/en/WW/Catalog/Products/10008864) (SITOP smart or SITOP modular) can be used:

- With redundant installation (https://support.industry.siemens.com/cs/ww/en/view/109768676) of the 24 V power supply as protection against failure of a power supply unit
- With buffering of the 24 V power supply (e.g. with DC UPS) as protection against power failure
- With selective monitoring of 24 V loads as protection against overload or short-circuit

4.6 Software

4.6.1 TIA Portal

The SIMATIC controllers are integrated into the Totally Integrated Automation Portal. Engineering with TIA Portal offers:

- Configuration and programming
- Shared data management
- A uniform operating concept for control, visualization and drives

The TIA Portal simplifies integrated engineering in all configuration phases of a plant.

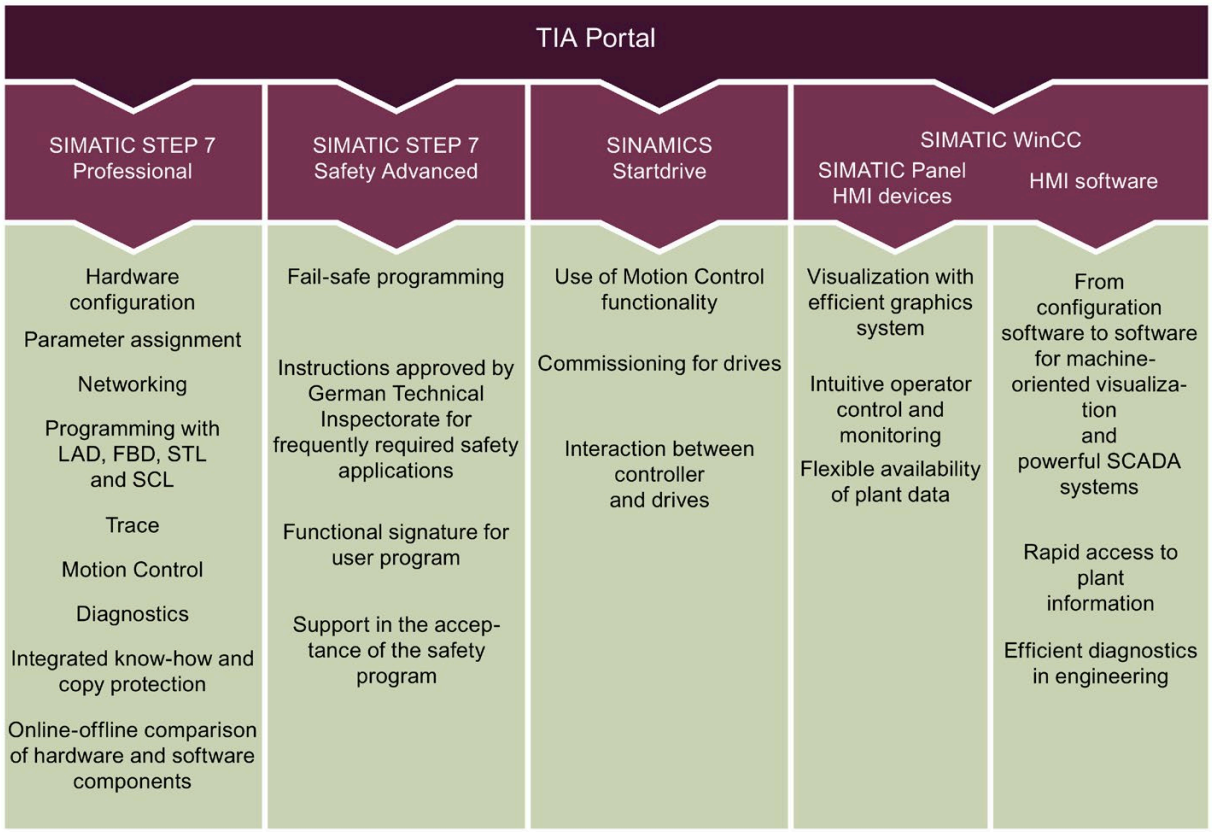

Figure 4-27 TIA Portal overview

4.6.2 SINETPLAN

SINETPLAN (https://www.siemens.com/sinetplan), the Siemens Network Planner, helps you plan automation systems and networks based on PROFINET. The tool facilitates the professional and predictive dimensioning of your PROFINET system right from the planning stage. SINETPLAN also assists with network optimization and helps you to make the best possible use of network resources and to plan for reserves. This allows you to avoid problems in commissioning and failures during productive operation even before planned use. This increases the availability of the production plant and helps improve operational safety.

The advantages at a glance

- Network optimization thanks to port-specific calculation of the network load
- Increased production availability thanks to online scan and verification of existing systems
- Transparency before commissioning through import and simulation of existing STEP7 projects
- Efficiency through securing existing investments in the long term and the optimal use of resources

4.6.3 PRONETA

SIEMENS PRONETA (PROFINET network analysis) allows you to analyze the plant network during commissioning. PRONETA features two core functions:

- The topology overview independently scans PROFINET and all connected components.
- The IO check is a rapid test of the wiring and the module configuration of a plant.

SIEMENS PRONETA (https://support.industry.siemens.com/cs/ww/en/view/67460624) is available for free on the Internet.

4.6.4 SIMATIC Automation Tool

You use the SIMATIC Automation Tool (https://support.industry.siemens.com/cs/ww/en/view/98161300) to perform commissioning and maintenance activities simultaneously on various SIMATIC S7 stations as a bulk operation independent of the TIA Portal. The SIMATIC Automation Tool provides you with a multitude of functions:

- Network browsing and creation of a table showing the accessible devices in the network.
- Flashing of device LEDs or HMI display to locate a device
- Downloading of addresses (IP, subnet, gateway) to a device
- Downloading the PROFINET name (station name) to a device
- Placing a CPU in RUN or STOP mode
- Setting the time in a CPU to the current time of your PG/PC
- Downloading a new program to a CPU or an HMI device
- Downloading from CPU, downloading to CPU or deleting recipe data from a CPU
- Downloading from CPU or deleting data log data from a CPU
- Backup/restore of data from/to a backup file for CPUs and HMI devices
- Downloading service data from a CPU
- Reading the diagnostics buffer of a CPU
- Performing a CPU memory reset
- Resetting devices to factory settings
- Downloading a firmware update to a device

The SIMATIC Automation Tool offers an additional Software Development Kit (SDK) version:

With the SIMATIC Automation Tool SDK (Software Development Kit), you can create applications based on the SIMATIC Automation Tool API (Application Programming Interface). To deal with a large number of device automation tasks efficiently, these user-specific applications can be distributed to third parties including the API software. You do not need any license keys to use the user-specific applications.

Application planning

5

5.1 Requirements

Introduction

Please note the following requirements for use of the S7-1500R/H redundant system.

Hardware requirements

Table 5- 1 Hardware requirements

Property	Requirement
S7-1500R/H CPUs	• 2 identical R-CPUs or H-CPUs in the redundant system • Identical article numbers and firmware versions for the two CPUs • Firmware version display of the R/H-CPUs: As of FW version V2.6 [1)]
PROFINET devices	• Media redundancy (MRP) – All PROFINET devices in the PROFINET ring support the function media redundancy. – Both CPUs have the media redundancy role "Manager (auto)". All other devices in the PROFINET ring have the media redundancy role "Client". • H-Sync forwarding [2)] - for PROFINET devices in the PROFINET ring with S7-1500R: – When you use PROFINET devices with more than two ports (e.g. switch) in the PROFINET ring of an R-system, then H-Sync Forwarding is mandatory for these devices. – H-Sync forwarding is recommended for all devices in the PROFINET ring if you are using PROFINET devices with only 2 ports in the PROFINET ring of an R-system. • Redundancy: – With the switched S1 device function, you can operate any standard IO device on the redundant S7-1500R/H system. – An IO device must support system redundancy S2 or R1 for **uninterrupted** exchange of process data in the event of failure of the primary CPU (primary-backup switch-over).

Property	Requirement
	• The following SIMATIC PROFINET IO devices support system redundancy S2, media redundancy and H-Sync forwarding: – ET 200SP IM 155-6 PN HF (6ES7155-6AU00-0CN0), FW version V4.2 or later – ET 200SP IM 155-6 PN/2 HF (6ES7155-6AU01-0CN0), FW version V4.2 or later – ET 200SP IM 155-6 PN/3 HF (6ES7155-6AU30-0CN0), FW version V4.2 or later – ET 200SP IM 155-6 MF HF (6ES7155-6MU00-0CN0), as of FW version V5.0.1 – ET 200MP (6ES7155-5AA00-0AC0), FW version V4.2 or later – PN/PN coupler (6ES7158-3AD10-0XA0), FW version V4.2 or later – PN/MF coupler (6ES7158-3MU10-0XA0), FW version V5.0 or later • The following SIMATIC PROFINET IO devices support system redundancy R1, media redundancy: – ET 200SP IM 155-6 PN R1 (6ES7155-6AU00-0HM0), FW version V6.0. or later. A list of compatible I/O modules for the IM 155-6 PN R1 interface module can be found in the Product information for the documentation of the ET 200SP distributed I/O system. The R1 capability is also specified in the technical specifications of the I/O modules. – ET 200SP HA IM 155-6 PN HA (6DL1155-6AU00-0PM0) as of FW version V1.2 – ET 200iSP IM 152-1 PN for ET200iSP for standard and redundant operation (6ES7152-1BA00-0AB0), as of FW version V1.0 • The following switch product families support system redundancy S2, media redundancy, and H-Sync forwarding: – XC-200, XP-200 and XF-200BA e.g. SCALANCE XC208 (6GK5208-0BA00-2AC2), as of FW version V4.0 – XM-400 and XR-500, as of FW version V6.3.0 • S7-1500 CPUs: Firmware version V2.5 or later The redundant system in STEP 7 does not recognize the S7-1500 CPUs when calculating the maximum number of IO devices within and outside the PROFINET ring. If you use S7-1500 CPUs, you will have to check the maximum number yourself. • SINAMICS S120 PROFINET Control Unit (CU310-2 PN or CU320-2 PN) support system redundancy S2, media redundancy and H-Sync forwarding, FW version V5.2 or later.
Load current supply PM	Load current supply PM for the R/H CPUs The use of the PM is optional. Suitable load current supplies: • PM 70 W 120/230 V AC • PM 190 W 120/230 V AC

1) As of FW version V3.0 of the R-CPUs, the firmware between CPU and display is no longer separated. The firmware of the display is included in the firmware of the R-CPU.

2) If you use PROFINET devices that do not support H-Sync Forwarding in S7-1500R, additional cycle time increases may occur in the RUN-Redundant system state. If the cyclic program exceeds the cycle monitoring time, the time error OB (OB 80) may be started. You can find additional information in the section Events and OBs.

Special case: Operating R/H CPU individually

You can operate an R/H CPU as a single CPU. If you do, please note the following:

- You always configure 2 R-CPUs or H-CPUs for S7-1500R/H, even if you only set up one CPU.
- The MAINT LED on the CPU is always yellow (maintenance demanded):
  - The R/H system is not in redundant mode.
  - No partner CPU was found.

Requirements

Table 5- 2 Requirements

Requirement	STEP 7 version
CPU 1513R-1 PN, CPU 1515R-2 PN, CPU 1517H-3 PN	SIMATIC STEP 7 Professional, V15.1 or later
CPU 1518HF-4 PN	SIMATIC STEP 7 Professional V17 or higher
S7-1500H(F): • Support of system redundancy R1 • H-CPUs do not have to be part of a PROFINET ring or MRP domain. This allows additional topology variants, such as line topology or setup without additional devices.	SIMATIC STEP 7 Professional V18 or higher

5.2 Restrictions compared to the S7-1500 automation system

Introduction

Please note the following restrictions with the S7-1500R/H redundant system compared to the S7-1500 automation system.

Hardware restrictions

Table 5- 3 Hardware restrictions

Property	Restriction
Fail-safe modules	No support for fail-safe modules on the 1513R-1 PN, 1515R-2 PN, and 1517H-3 PN CPUs because no fail-safe variants of the CPUs are available. Fail-safe modules are only supported by the HF-CPUs.
Series machine projects, configuration control (option handling)	Not supported
Centralized I/O	Centralized I/O modules are not supported in the hardware configuration of the S7-1500R/H redundant system.
Cycle and response times	Longer cycle and response times: You can find additional information in the Cycle and response times (https://support.industry.siemens.com/cs/ww/en/view/59193558) function manual.

Software restrictions

Table 5- 4 Software restrictions

Function	Restriction
Instructions	Restrictions for specific instructions: You can find additional information in the section Restrictions (Page 250).
Display: "Modules" menu command	Not supported
SIMATIC Energy Suite	Not supported
Firmware update	Firmware update via accessible devices is not supported.
Hardware detection in STEP 7 (read out configuration)	Not supported
I-device	The S7-1500R/H redundant system cannot be used as an I-device.
IRT	Not supported

Function	Restriction
Calibrating analog modules	You can only calibrate analog modules of an IO device in the RUN-Solo system state. 1. Switch the CPU with redundancy ID 1 to the STOP operating state. 2. Establish an online connection with STEP 7 to the analog module to be calibrated. 3. Perform the calibration of the analog module with STEP 7. You can find more information on this topic in the STEP 7 online help. 4. Then start the CPU with redundancy ID 1.
Configured connections	Connection type not support for communication connection. Only programmed connections are supported.
Motion Control	Motion Control functions are not supported in the CPUs
MRPD	Not supported
Multiuser Engineering	No support for commissioning mode (commissioning a project online together) in the RUN-Redundant or SYNCUP system state.
Online functions	In RUN-Redundant system state, only an online connection to STEP 7 is possible. In the RUN-Solo or STOP system state, multiple online connections can be established at the same time.
OPC UA	Not supported
Secure OUC	Not supported The TCON instruction is available but not supported.
PROFINET send clock	1 ms only
Shared Device	Not supported
System power supply	The following parameter is irrelevant: "System power supply" > "General" > "Connection to supply voltage L+/No connection to supply voltage L+"
Isochronous mode	Isochronous mode is not supported
Testing with breakpoints	You can only test with breakpoints in the STARTUP (startup OB) or RUN-Solo system state.
Trace	The storage of measurements on the SIMATIC memory card (measurements in the device) is not supported.
Web server	Not supported

5.3 Configuration versions

Introduction

You can configure different versions of the S7-1500R/H redundant system.

For the configuration variants of the S7-1500R/H system, there is redundancy for the following components:

- R/H-CPUs
- Synchronization interfaces
- Media in the PROFINET ring
- Interface modules for R1 devices

This section describes the admissible configuration variants and their advantages/benefits.

The following convention applies:

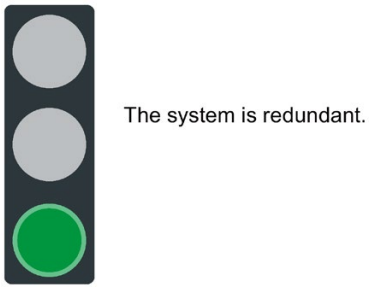

Figure 5-1 Green traffic light

5.3.1 S7-1500R/H configuration with IO devices in the PROFINET ring

Introduction

The following sections set out configurations of the S7-1500R/H redundant system with IO devices in the PROFINET ring.

Advantages/benefits

- IO devices with S2 system redundancy enable uninterrupted process data exchange with the S7-1500R/H redundant system in the event of a CPU failure.
- The redundant system continues to operate following a cable interruption anywhere in the PROFINET ring.

S7-1500R configuration

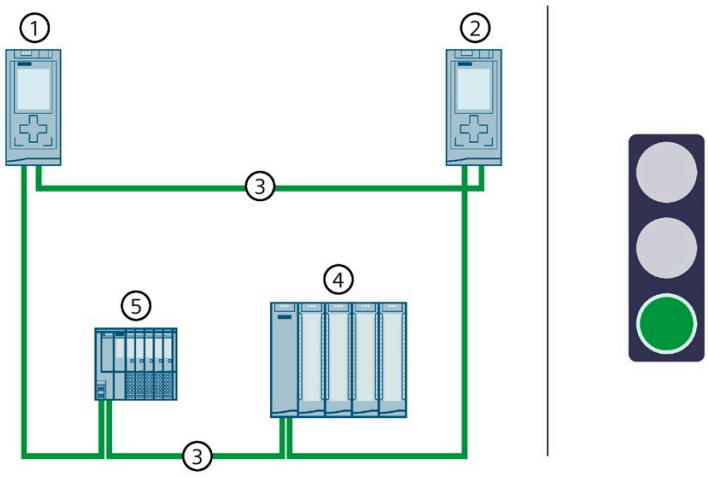

① CPU 1
② CPU 2
③ PROFINET cable (redundancy connections, PROFINET ring)
④ IO device ET 200MP (with system redundancy S2)
⑤ IO device ET 200SP (with system redundancy S2)

Figure 5-2 S7-1500R configuration with IO devices in the PROFINET ring

S7-1500H configuration

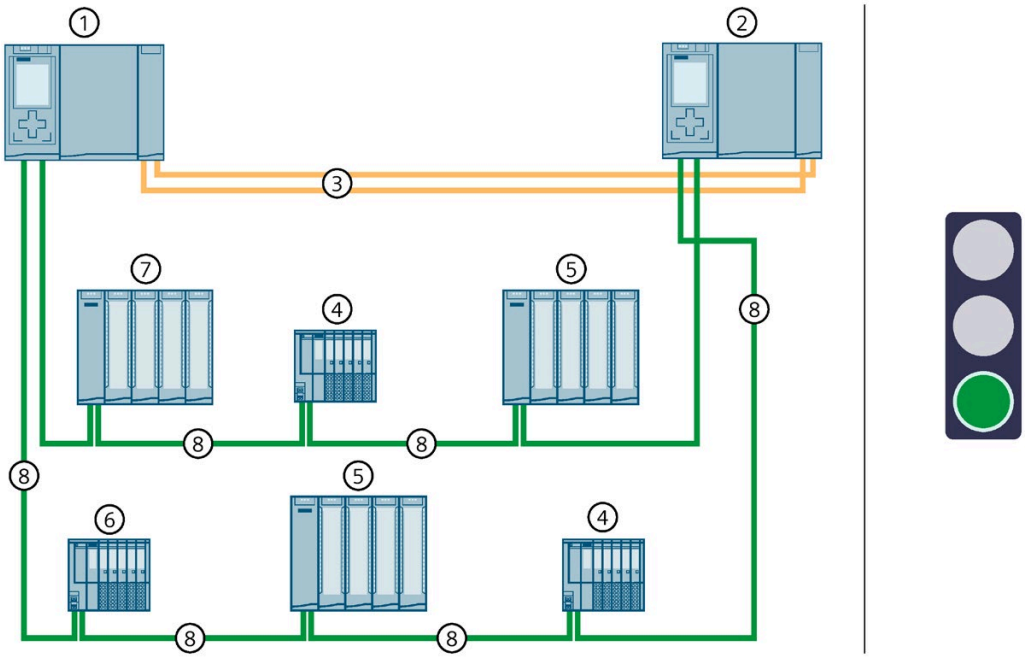

① CPU 1
② CPU 2
③ Two fiber-optic cables (redundancy connections)
④ IO device ET 200SP (with system redundancy S2)
⑤ IO device ET 200MP (with system redundancy S2)
⑥ Standard IO device ET 200SP
⑦ Standard IO device ET 200MP
⑧ PROFINET cable (PROFINET ring)

Figure 5-3 S7-1500H configuration with IO devices in the PROFINET ring

5.3.2 Configuration of S7-1500R/H with switches and additional line topology

Introduction

The following sections set out configurations of the S7-1500R/H redundant system with switches and additional line topology.

Benefits/advantages

- You can use a switch to add an additional line topology to the PROFINET ring. Unlike the PROFINET ring, the line topology is not redundant.
- PROFINET IO devices can be located in the PROFINET ring or they can be separated with a switch.

S7-1500R configuration

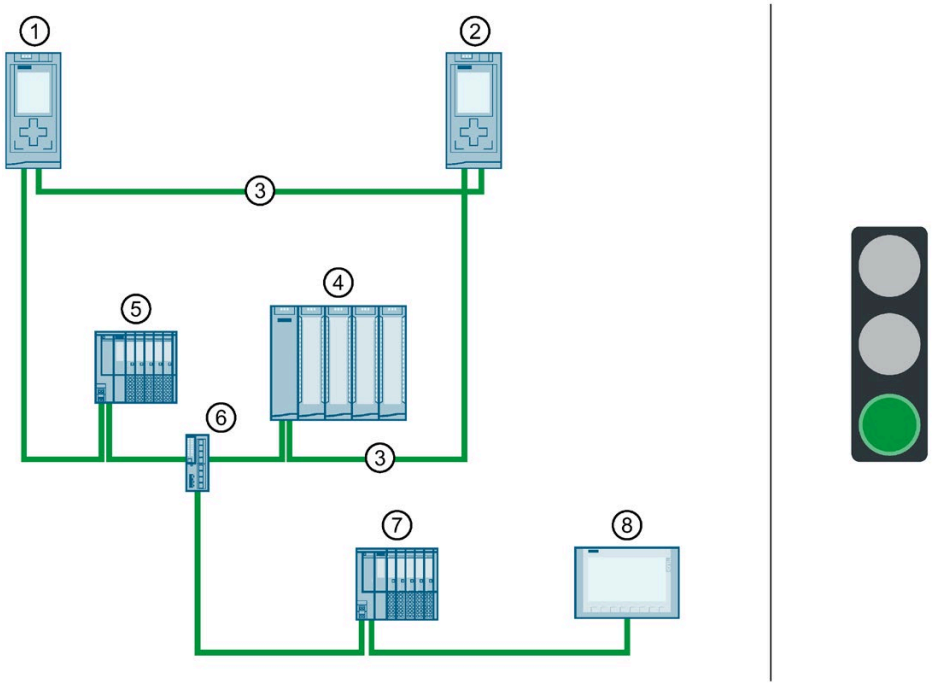

① CPU 1
② CPU 2
③ PROFINET cable (redundancy connections, PROFINET ring)
④ IO device ET 200SP (with system redundancy S2)
⑤ IO device ET 200MP (with system redundancy S2)
⑥ Switch
⑦ Standard IO device ET 200SP
⑧ HMI device

Figure 5-4 Configuration of S7-1500R with switches and additional line topology

S7-1500H configuration

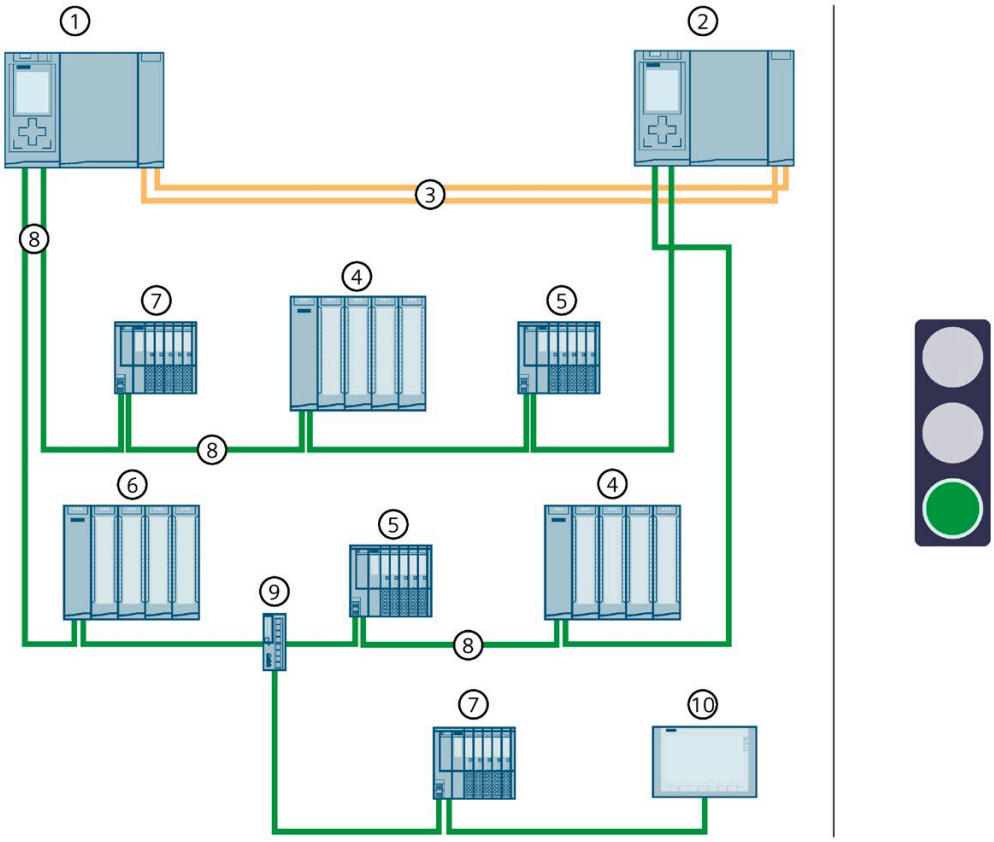

① CPU 1
② CPU 2
③ Two fiber-optic cables (redundancy connections)
④ IO device ET 200MP (with system redundancy S2)
⑤ IO device ET 200SP (with system redundancy S2)
⑥ Standard IO device ET 200MP
⑦ Standard IO device ET 200SP
⑧ PROFINET cable (PROFINET ring)
⑨ Switch
⑩ HMI device

Figure 5-5 S7-1500H configuration with switches and additional line topology

5.3.3 Specific configuration variants for S7-1500H

5.3.3.1 Configuration of line topology with S2 devices and switch

Introduction

The section below shows you the configuration of the S7-1500H redundant system with line topology, S2 devices and switch. An additional line topology is connected to the switch.

Advantages/benefits

- Less wiring effort required due to the line topology. Only one PROFINET line is connected to each of the PROFINET interfaces X1 of the H-CPUs.
- A configuration of the MRP rollers is not required.
- No MRP reconfiguration times required and therefore shorter monitoring times possible.
- In the event of a line break in the line topology between the H-CPUs, the S2 device does not fail.
- The configuration can be expanded with an additional line topology via a switch.

S7-1500H configuration with S2 devices and switch in a line topology

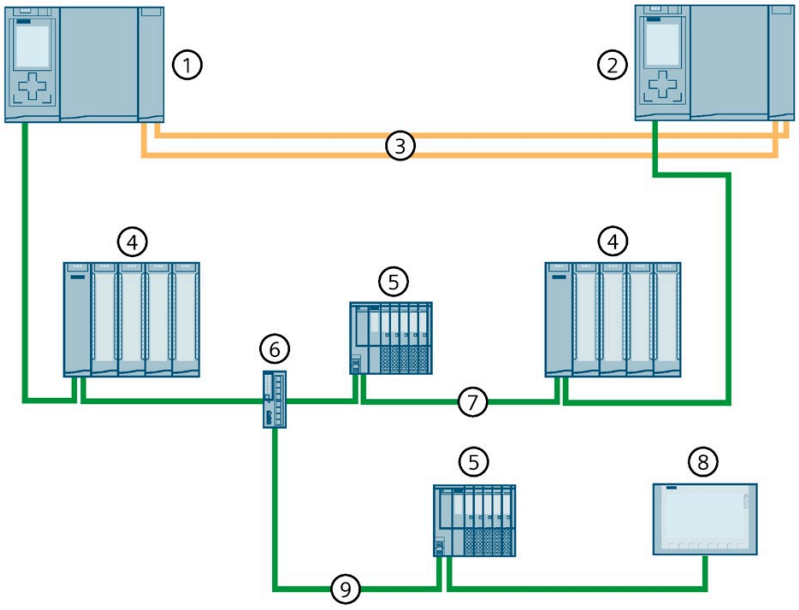

① CPU 1
② CPU 2
③ Two fiber-optic cables (redundancy connections)
④ IO device ET 200MP (with system redundancy S2)
⑤ IO device ET 200SP (with system redundancy S2)
⑥ Switch
⑦ PROFINET cable (line topology)
⑧ HMI device (switched S1 device or S2 device)
⑨ PROFINET cable (additional line topology)

Figure 5-6 S7-1500H configuration with S2 devices and switch in a line topology

Note

If the AR to the backup CPU fails in a line topology (e.g., due to line breakage), then the redundant system must synchronize less data. Result: The cycle time is reduced.

Note

Migration of a PROFINET ring to a line topology

If you want to migrate a configuration scenario with PROFINET ring into a line topology, note the following changes:

- Remove a ring segment (PROFINET cable) at X1 interfaces of the H-CPUs, e.g., directly connected PROFINET cable at X1 P2 interfaces.
- Change the MRP roles of the H-CPUs and the IO devices to the setting "No device in the ring".
- If necessary, adjust the configured topology. Pay attention to HMI devices that are connected in the PROFINET ring via the system IP address.

5.3.3.2 Configuration of PROFINET rings with R1 devices

Introduction

The section below shows you the configuration of the S7-1500H redundant system with R1 devices in 2 PROFINET rings.

Advantages/benefits

- Communication takes place via two separate PROFINET rings.
- As with system redundancy S2, system redundancy R1 enables uninterrupted process data exchange with the S7-1500H redundant system in the event of a CPU failure.
- The redundant system continues to operate in the event of a failure of an interface module of an R1 device or a line interruption of a PROFINET ring.

Configuration of S7-1500H with R1 devices in the PROFINET ring

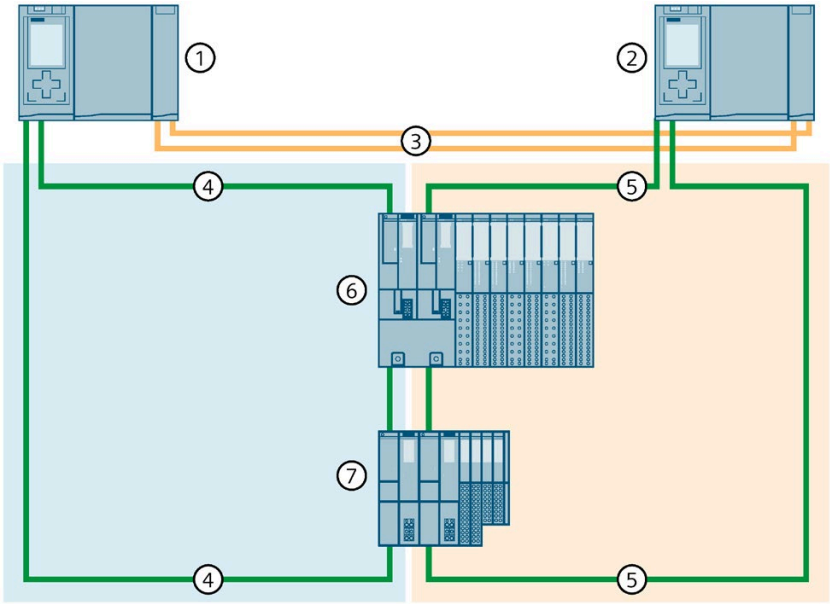

① CPU 1
② CPU 2
③ Two fiber-optic cables (redundancy connections)
④ PROFINET cable (PROFINET ring 1)
⑤ PROFINET cable (PROFINET ring 2)
⑥ IO device ET 200SP HA (with system redundancy R1)
⑦ IO device ET 200SP (with system redundancy R1)

Figure 5-7 Configuration of S7-1500H with R1 devices in the PROFINET ring

Not recommended configuration variants

The following configuration variants are not recommended:

Configuration variant 1

The H-CPUs are each configured in a separate PROFINET ring 1 and 2. Some or all R1 devices are connected to these PROFINET rings via 2 switches. The R1 devices themselves are connected via a line topology.
In this configuration variant, the availability of the media redundancy of the PROFINET rings is limited, since the R1 devices in the lower-level line topology do not benefit from the PROFINET ring.

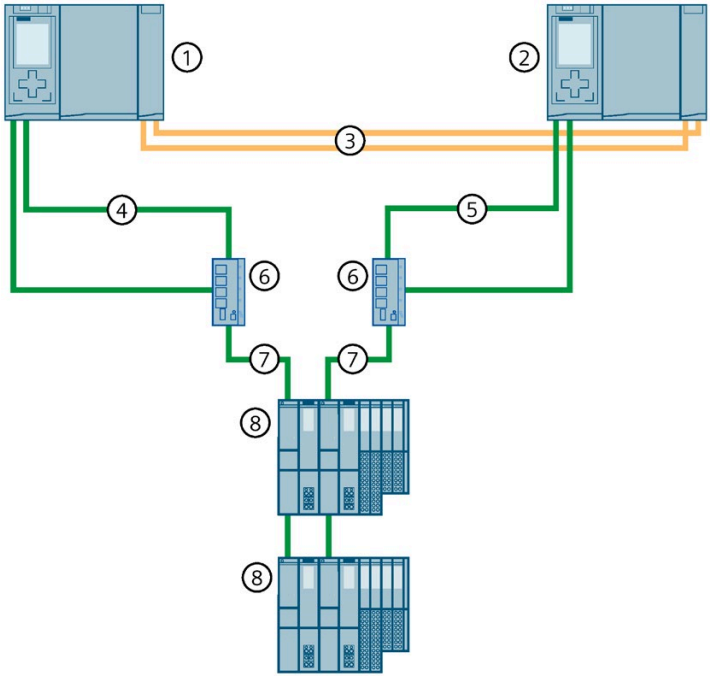

① CPU 1
② CPU 2
③ Two fiber-optic cables (redundancy connections)
④ PROFINET cable (PROFINET ring 1)
⑤ PROFINET cable (PROFINET ring 2)
⑥ Switch
⑦ PROFINET cable (line topology)
⑧ IO device ET 200SP (with system redundancy R1)

Figure 5-8 Configuration variant 1

Configuration variant 2

The H-CPUs are each configured in a separate PROFINET ring 1 and 2. Switches are used to extend PROFINET rings 1 and 2 by PROFINET rings 3 and 4. The extension of PROFINET rings 3 and 4 is connected without MRP interconnection. PROFINET rings 3 and 4 contain additional R1 devices.
The problem with this configuration variant is that the switches in both connected MRP domains must be MRP managers and then this role is no longer possible for the H-CPUs.
Result: The H-system does not know the state of the PROFINET rings on the backup CPU. The synchronization terminates and the RUN-Redundant system state is not reached.
If the hardware configuration of an automation task exceeds the max. possible number of devices in a PROFINET ring, then use MRP interconnection. With MRP interconnection, you are not limited to the maximum number of 50 devices in a ring when configuring redundant network topologies.

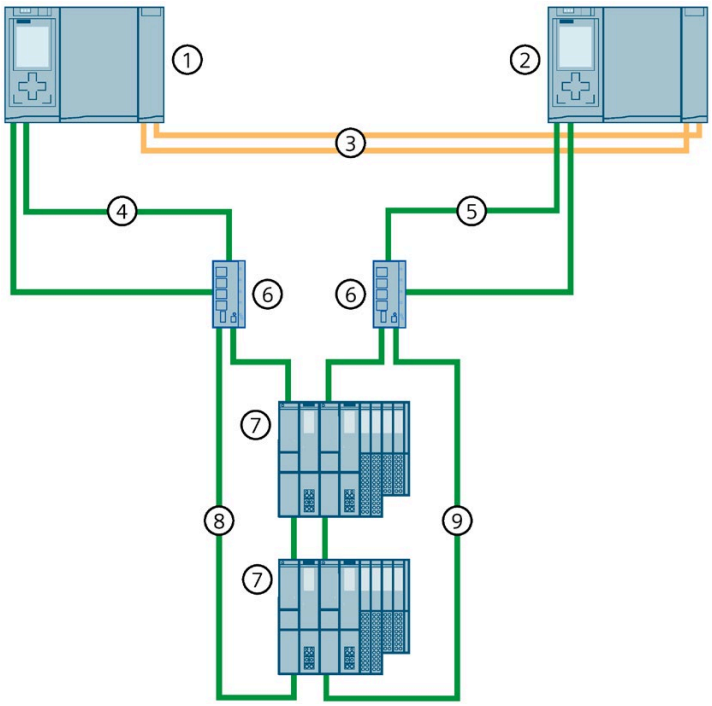

① CPU 1
② CPU 2
③ Two fiber-optic cables (redundancy connections)
④ PROFINET cable (PROFINET ring 1)
⑤ PROFINET cable (PROFINET ring 2)
⑥ Switch
⑦ IO device ET 200SP (with system redundancy R1)
⑧ PROFINET cable (PROFINET ring 3)
⑨ PROFINET cable (PROFINET ring 4)

Figure 5-9 Configuration variant 2

See also

Redundancy (Page 60)

5.3.3.3 Configuration of PROFINET rings with R1 devices and switches with MRP interconnection

Introduction

The section below shows you the configuration of the S7-1500H redundant system with R1 devices and switches with MRP interconnection in a PROFINET ring.

Advantages/benefits

- Redundant data exchange via four or more MRP rings with R1 devices is possible via switches and MRP interconnection.
- Communication via the R1 devices connected with MRP interconnection takes place via two separate PROFINET rings.
- The redundant system continues to operate in the event of a failure of an interface module of an R1 device or a line interruption of a PROFINET ring, regardless of the location.

S7-1500H configuration with R1 devices and switches with MRP interconnection in the PROFINET ring

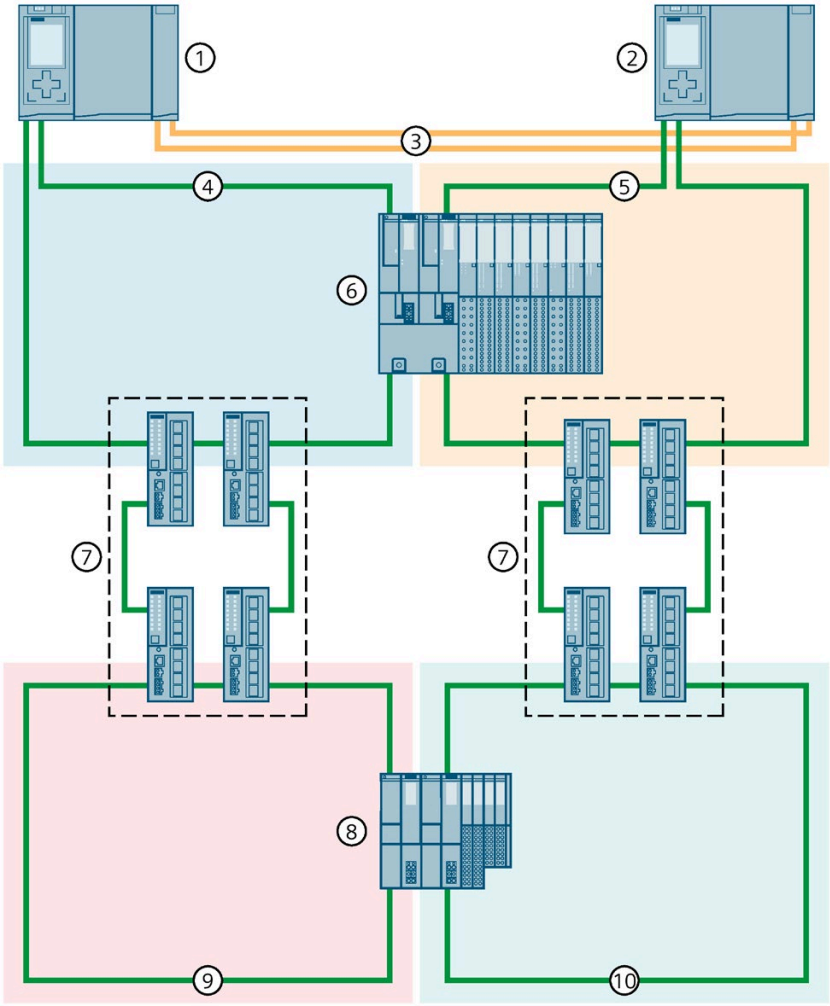

① CPU 1
② CPU 2
③ Two fiber-optic cables (redundancy connections)
④ PROFINET cable (PROFINET ring 1)
⑤ PROFINET cable (PROFINET ring 2)
⑥ IO device ET 200SP HA (with system redundancy R1)
⑦ 4 x XC200 switch (MRP interconnection)
⑧ IO device ET 200SP (with system redundancy R1)
⑨ PROFINET cable (PROFINET ring 3)
⑩ PROFINET cable (PROFINET ring 4)

Figure 5-10 S7-1500H configuration with R1 devices and switches with MRP interconnection in the PROFINET ring

5.3.3.4 Configuration of PROFINET rings with R1 devices and Y-switch with S2 devices

Introduction

The section below shows the configuration of the S7-1500H redundant system with R1 devices and Y-switch with S2 devices in a PROFINET ring.

Advantages/benefits

- If you want to use both R1 devices and S2/S1 devices in your configuration, you need a Y-switch (SCALANCE XF204-2BA DNA) for the S2/S1 device connection. Connect the S2/S1 devices to the PROFINET ring ports of the Y-switch. You connect the Y-switch to the PROFINET ring 1 and PROFINET ring 2 of the S7-1500H redundant system via two switches.
- For increased availability of the PROFINET network you need two Y-switches with DNA redundancy (SCALANCE XF204-2BA DNA), a DNA manager and a DNA client. DNA redundancy is only possible with a connected PROFINET ring. A Y-switch takes on the roles of MRP manager and DNA manager, and a second Y-switch takes on the roles of MRP client and DNA client.
  By means of Y-switches with DNA redundancy, you connect a PROFINET ring consisting of S2-/S1-devices redundantly to the PROFINET ring of S7-1500H. This reduces the probability of failure of the S2/S1 devices at the Y-switches and increases the availability of the network. For more information on DNA redundancy, refer to the SCALANCE XB-200/XC-200/XF-200BA/XP-200/XR-300WG Web Based Management (https://support.industry.siemens.com/cs/ww/en/view/109780061) configuration manual.

Note

Special features of the parameter assignment of the switches and Y-switches

For more information, refer to the section Configuring other configuration variants (Page 239).

S7-1500H configuration with R1 devices and Y-switch in the PROFINET ring

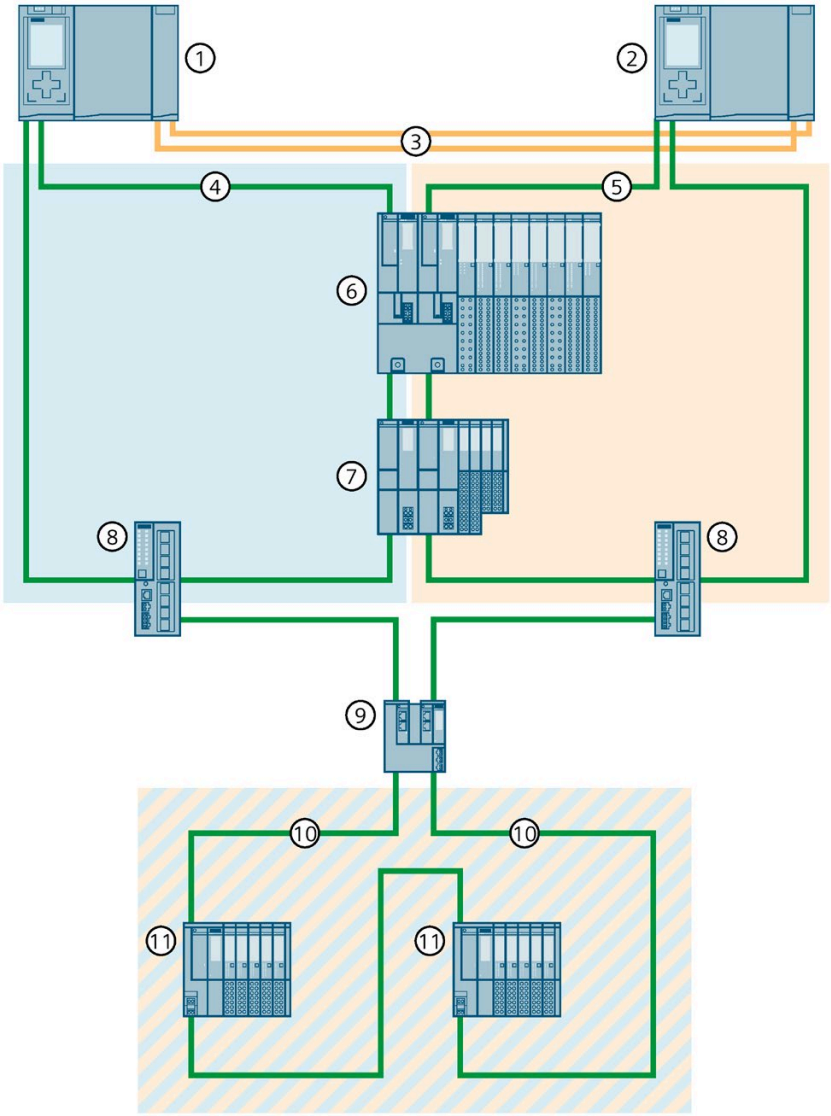

① CPU 1
② CPU 2
③ Two fiber-optic cables (redundancy connections)
④ PROFINET cable (PROFINET ring 1)
⑤ PROFINET cable (PROFINET ring 2)
⑥ IO device ET 200SP HA (with system redundancy R1)
⑦ IO device ET 200SP (with system redundancy R1)
⑧ Switch
⑨ Y-switch (SCALANCE XF204-2BA DNA)
⑩ PROFINET cable (PROFINET ring 3)
⑪ ET 200SP IO device (with system redundancy S2) or switched S1 device

Figure 5-11 S7-1500H configuration with R1 devices and Y-switch in the PROFINET ring

Configuration of S7-1500H with R1 devices and Y-switches with DNA redundancy in PROFINET ring

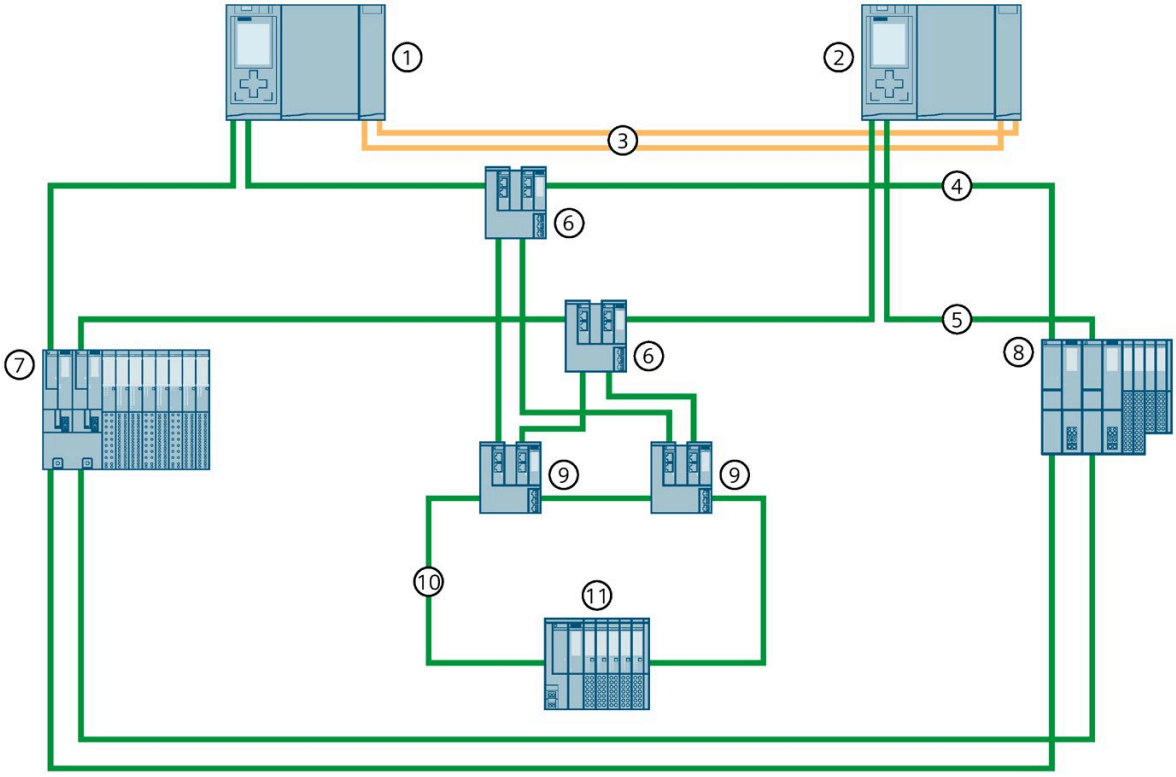

① CPU 1
② CPU 2
③ Two fiber-optic cables (redundancy connections)
④ PROFINET cable (PROFINET ring 1)
⑤ PROFINET cable (PROFINET ring 2)
⑥ Switch (SCALANCE XF204-2BA)
⑦ IO device ET 200SP HA (with system redundancy R1)
⑧ IO device ET 200SP (with system redundancy R1)
⑨ Y-switch (SCALANCE XF204-2BA DNA)
⑩ PROFINET cable (PROFINET ring 3)
⑪ IO device ET 200SP (with system redundancy S2)

Figure 5-12 Configuration of S7-1500H with R1 devices and Y-switches with DNA redundancy in the PROFINET rings

5.3.3.5 Configuration of line topology with R1 devices

Introduction

The section below shows you the configuration of the S7-1500H redundant system with R1 devices in a line topology.

Advantages/benefits

- Less wiring effort required for a line topology compared to ring topologies. Only one PROFINET line is connected to each of the PROFINET interfaces X1 of the H-CPUs.
- A configuration of the MRP rollers is not required.
- The reconfiguration times of the R1 devices are significantly reduced and shorter monitoring times are therefore possible.
- Connect the R1 devices in opposite directions as shown in the figure below. The opposing cabling ensures that in the event of failure or replacement of an R1 device, all other devices remain available. This increases the availability of the redundant system:
  - In the RUN-Redundant system state, replacement of a particular R1 device is possible without failure of the other R1 devices. For more information, refer to the section Replacing components of the S7-1500R/H redundant system (Page 363).
  - In case of a line interruption of the two PROFINET lines between two neighboring R1 devices, the redundant system continues to exchange process data with all R1 devices. For more information, refer to the section Failure of both PROFINET lines between two R1 devices in a line topology (Page 140).

S7-1500H configuration with R1 devices in a line topology

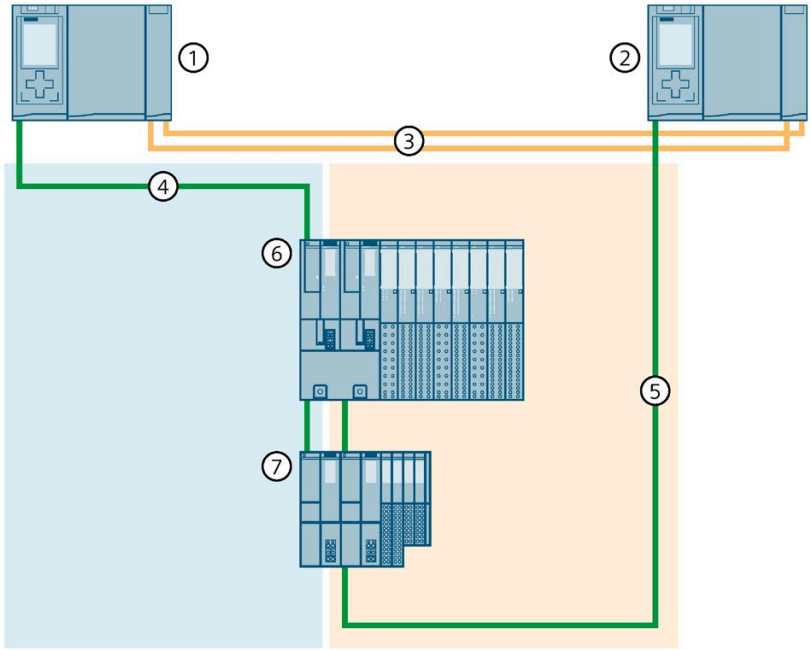

① CPU 1
② CPU 2
③ Two fiber-optic cables (redundancy connections)
④ PROFINET cable (line topology 1)
⑤ PROFINET cable (line topology 2)
⑥ IO device ET 200SP HA (with system redundancy R1)
⑦ IO device ET 200SP (with system redundancy R1)

Figure 5-13 S7-1500H configuration with R1 devices in a line topology

Not recommended configuration variant

The following configuration variants are not recommended:

- Integration into the line topology by looping through the R1 device via port 2 of the two interface modules.
- Direct connection of ports 1 of the two interface modules on the R1 device.

Result: No redundancy of the network available.

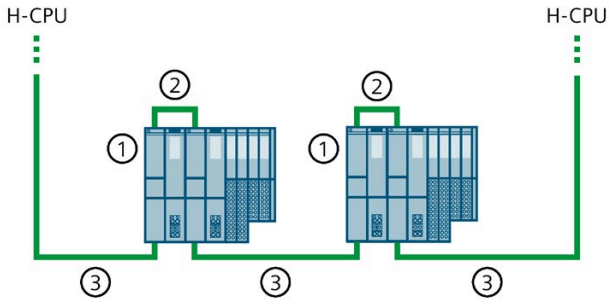

① IO device ET 200SP (with system redundancy R1)
② PROFINET line (connection port 1 to port 1 of the interface modules)
③ PROFINET line (line topology via port 2 of the interface modules)

Figure 5-14 Not recommended configuration variant

5.3.3.6 Line topology configuration with R1 devices and switches

Introduction

The section below shows you the configuration of the S7-1500H redundant system with R1 devices and switches in a line topology.

Advantages/benefits

- You can use switches to extend the line topology with lower-level R1 devices by two PROFINET rings.
- In the configuration variant, one PROFINET ring is connected to each switch. Each PROFINET ring is located in its own MRP domain.
- This configuration variant enables modular commissioning of the redundant system. Example: Distributed I/O systems are already mounted and wired. The H-CPUs are each connected to the distributed I/O systems via the PROFINET interface X1.

Configuration of S7-1500H with R1 devices and switches in a line topology

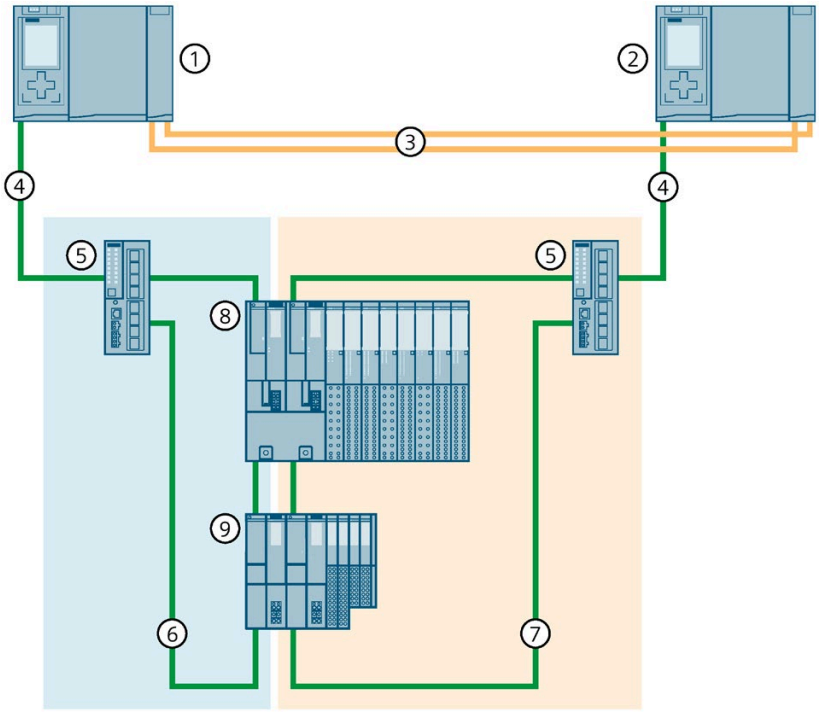

① CPU 1
② CPU 2
③ Two fiber-optic cables (redundancy connections)
④ PROFINET cable (line topology)
⑤ Switch
⑥ PROFINET cable (PROFINET ring 1)
⑦ PROFINET cable (PROFINET ring 2)
⑧ IO device ET 200SP HA (with system redundancy R1)
⑨ IO device ET 200SP (with system redundancy R1)

Figure 5-15 Configuration of S7-1500H with R1 devices and switches in a line topology

Note

For PROFINET diagnostics you have to configure the switches as "Switched S1 device". For more information, refer to the section Configuring other configuration variants (Page 239).

5.3.3.7 Line topology configuration with R1 devices and Y-switch with S2 devices

Introduction

The section below shows you the configuration of the S7-1500H redundant system with R1 devices and Y-switch in a line topology.

Advantages/benefits

- If you want to use both R1 devices and S2/S1 devices in your configuration, you need a Y-switch (SCALANCE XF204-2BA DNA) for the S2/S1 device connection. Connect the S2/S1 devices to the PROFINET ring ports of the Y-switch.
- For increased availability of the PROFINET network you need two Y-switches with DNA redundancy (SCALANCE XF204-2BA DNA), a DNA manager and a DNA client. DNA redundancy is only possible with a connected PROFINET ring. A Y-switch takes on the roles of MRP manager and DNA manager, and a second Y-switch takes on the roles of MRP client and DNA client.
  By means of Y-switches with DNA redundancy, you connect a PROFINET ring consisting of S2/S1 devices redundantly to the line topology of S7-1500H. This reduces the probability of failure of the S2/S1 devices at the Y-switches and increases the availability of the network. For more information on DNA redundancy, refer to the SCALANCE XB-200/XC-200/XF-200BA/XP-200/XR-300WG Web Based Management (https://support.industry.siemens.com/cs/ww/en/view/109780061) configuration manual.

Note

Special features of the parameter assignment of the switches and Y-switches

For more information, refer to the section Configuring other configuration variants (Page 239).

Configuration of S7-1500H with R1 devices and Y-switch in a line topology

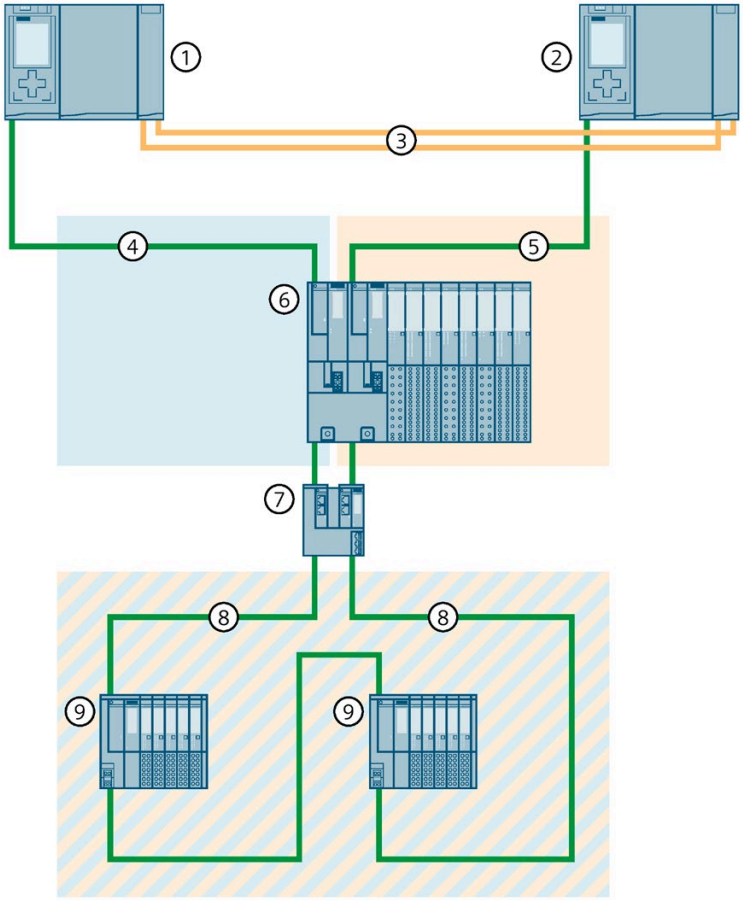

① CPU 1
② CPU 2
③ Two fiber-optic cables (redundancy connections)
④ PROFINET cable (line topology 1)
⑤ PROFINET cable (line topology 2)
⑥ IO device ET 200SP HA (with system redundancy R1)
⑦ Y-switch (SCALANCE XF204-2BA DNA)
⑧ PROFINET cable (PROFINET ring)
⑨ ET 200SP IO device (with system redundancy S2) or switched S1 device

Figure 5-16 Configuration of S7-1500H with R1 devices and Y-switch in line topology

Configuration of S7-1500H with R1 devices and Y-switches with DNA redundancy in a line topology

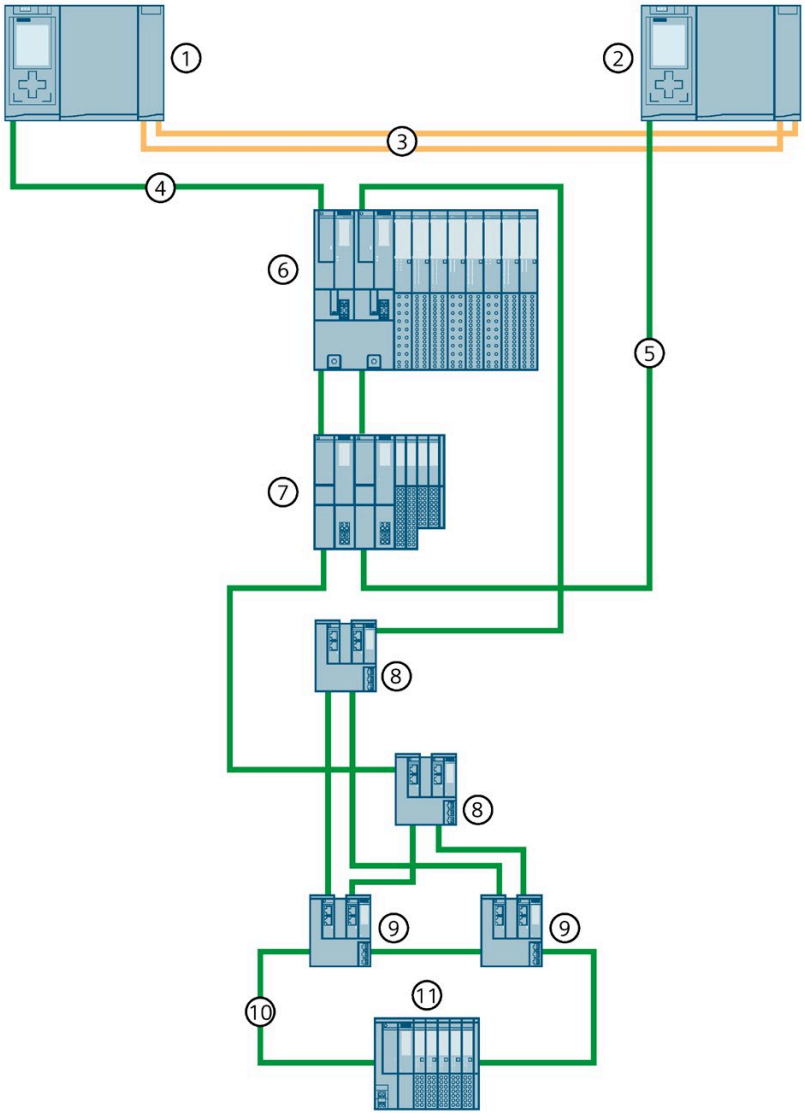

① CPU 1
② CPU 2
③ Two fiber-optic cables (redundancy connections)
④ PROFINET cable (line topology 1)
⑤ PROFINET cable (line topology 2)
⑥ IO device ET 200SP HA (with system redundancy R1)
⑦ IO device ET 200SP (with system redundancy R1)
⑧ Switch (SCALANCE XF204-2BA)
⑨ Y-switch (SCALANCE XF204-2BA DNA)
⑩ PROFINET cable (PROFINET ring)
⑪ IO device ET 200SP (with system redundancy S2)

Figure 5-17 Configuration of S7-1500H with R1 devices and Y-switches with DNA redundancy in line topology

5.3.3.8 Configuration of combined topology with S2 devices

Introduction

The section below shows you the configuration of the S7-1500H redundant system with S2 devices in a combined topology.

Advantages/benefits

- Within the combined topology, any topology is allowed:
  - Ring topology
  - Line topology
  - Star topology
- The combined topology can be extended by additional S2 devices.
- An existing backbone ring can be connected to the S7-1500H redundant system. They connect the backbone ring and other S2 devices via switches.

Configuration of S7-1500H with S2 devices in a combined topology

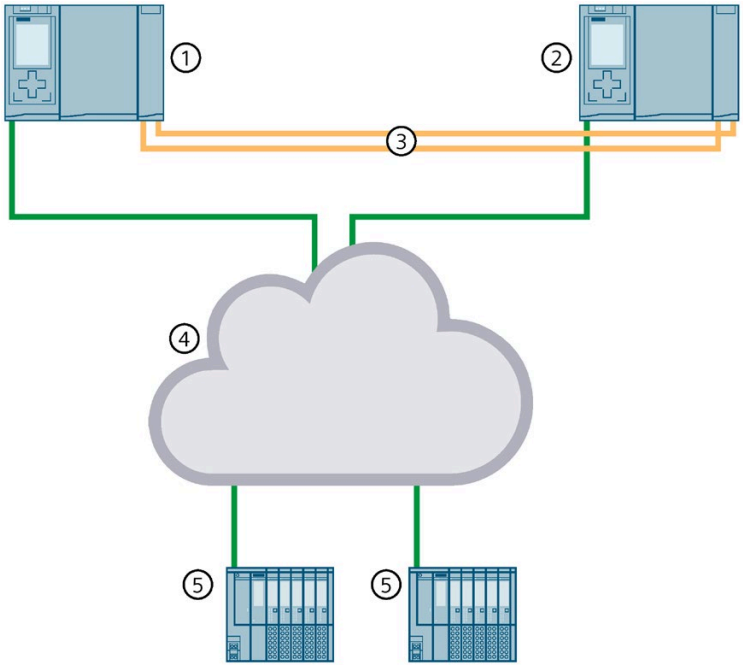

① CPU 1
② CPU 2
③ Two fiber-optic cables (redundancy connections)
④ Combined topology
⑤ IO device ET 200SP (with system redundancy S2)

Figure 5-18 Configuration of S7-1500H and S2 devices in a combined topology

S7-1500H configuration with S2 devices and backbone ring

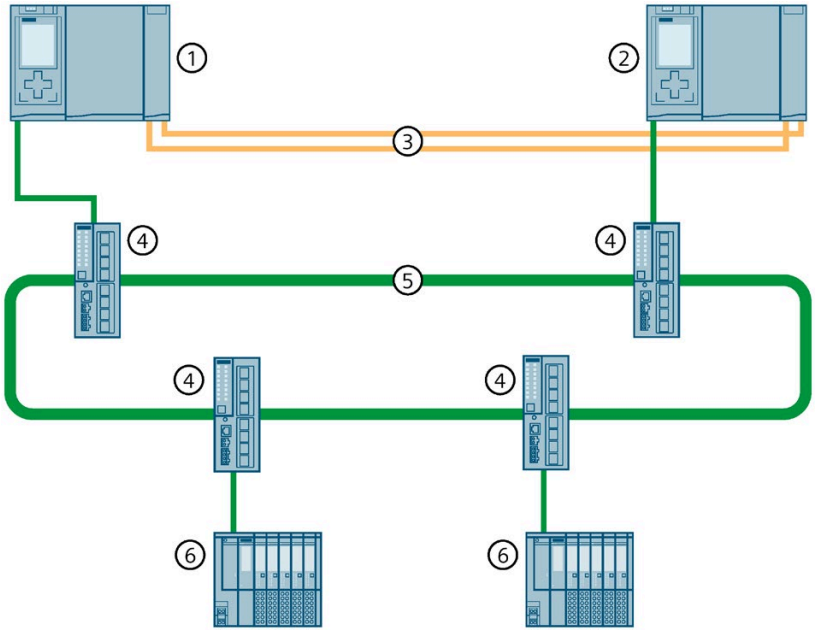

① CPU 1
② CPU 2
③ Two fiber-optic cables (redundancy connections)
④ Switch
⑤ Backbone ring (existing combined topology)
⑥ IO device ET 200SP (with system redundancy S2)

Figure 5-19 S7-1500H configuration with S2 devices and backbone ring

5.3.3.9 Configuration of combined topology with R1 devices

Introduction

The section below shows you the configuration of the S7-1500H redundant system with R1 devices in a combined topology.

Advantages/benefits

- Within the combined topology, any topology is allowed:
  - Ring topology
  - Line topology
  - Star topology
- The combined topologies can be extended by additional R1 devices.
- Two existing backbone rings can be connected to the S7-1500H redundant system as separate networks. They connect backbone rings and other R1 devices via switches.

S7-1500H configuration with R1 devices in a combined topology

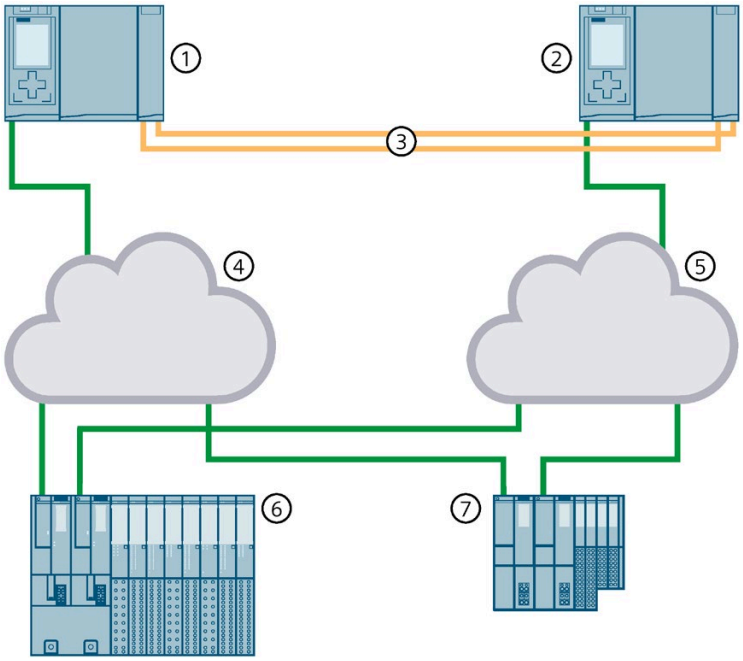

① CPU 1
② CPU 2
③ Two fiber-optic cables (redundancy connections)
④ Combined topology 1
⑤ Combined topology 2
⑥ IO device ET 200SP HA (with system redundancy R1)
⑦ IO device ET 200SP (with system redundancy R1)

Figure 5-20 S7-1500H configuration with R1 devices in a combined topology

Configuration of S7-1500H with R1 devices and backbone rings

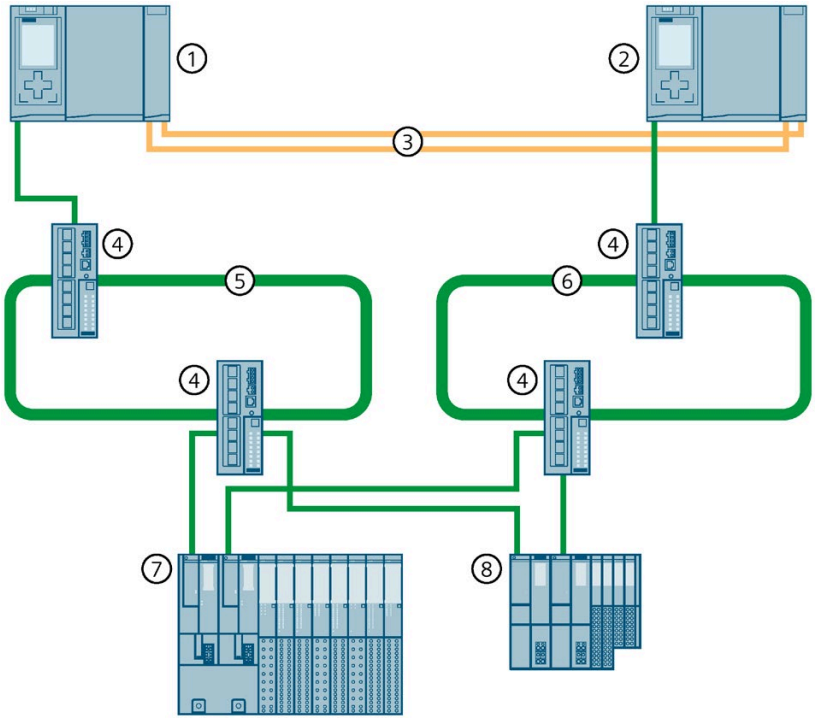

① CPU 1
② CPU 2
③ Two fiber-optic cables (redundancy connections)
④ Switch
⑤ Backbone ring 1 (existing combined topology)
⑥ Backbone ring 2 (existing combined topology)
⑦ IO device ET 200SP HA (with system redundancy R1)
⑧ IO device ET 200SP (with system redundancy R1)

Figure 5-21 Configuration of S7-1500H with R1 devices and backbone rings

5.3.3.10 Configuration without additional devices

Introduction

The section below shows you the configuration of the S7-1500H redundant system without additional devices (IO devices, switches, Y-link) at the PROFINET interface X1 P1R/X1 P2R of the H-CPUs.

Advantages/benefits

The configuration is suitable for all applications that do not require any further devices at the PROFINET interface X1 P1R/X1 P2R of the H-CPUs.
Example: In a plant, the S7-1500H redundant system communicates with third-party devices via Modbus/TCP. You connect the PROFINET lines to the external devices to the PROFINET interfaces X2 of the H-CPUs.

Configuration S7-1500H without further devices at the PROFINET interface X1 of the H-CPUs

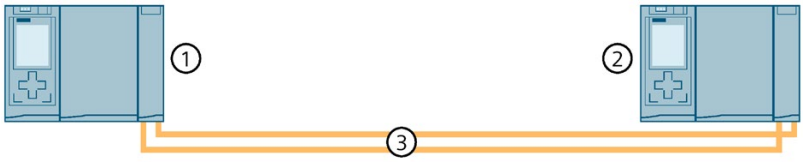

① CPU 1
② CPU 2
③ Two fiber-optic cables (redundancy connections)

Figure 5-22 S7-1500H configuration with additional devices

5.4 Redundancy scenarios

5.4.1 Introduction

Introduction

This section describes possible redundancy scenarios on the basis of various different configuration variants. The redundancy scenarios do not result in process restrictions. In the examples shown, the failures are tolerated by the redundant system.

The following convention applies:

The redundancy of the system is restricted.
The restrictions have no effect on the process.

Figure 5-23 Yellow traffic light

5.4.2 Failure of the primary CPU

Introduction

The following redundancy scenario describes the effects of a defective primary CPU using the example of a PROFINET ring.

Redundancy scenario

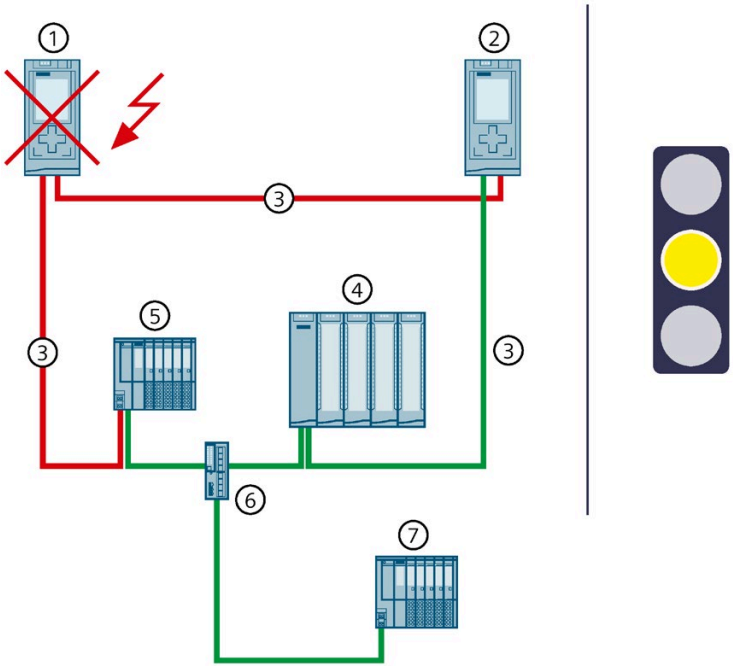

① Primary CPU → failed
② Backup CPU → becomes new primary CPU
③ PROFINET cable (redundancy connections, PROFINET ring)
④ IO device ET 200MP (with system redundancy S2)
⑤ IO device ET 200SP (with system redundancy S2)
⑥ Switch
⑦ Standard IO device ET 200SP

Figure 5-24 Failure of the primary CPU (using S7-1500R as an example)

Sequence of events

1. The primary CPU of the redundant system fails in the RUN-Redundant system state.
2. The redundant system switches to the backup CPU. The backup CPU becomes the new primary CPU. The redundant system switches to the RUN-Solo system state. You can find additional information on the RUN-Solo system state in the section Operating and system states (Page 301).
3. The new primary CPU exchanges process data with the IO devices.

   Note

   Temporary separation of standard IO devices in the event of failure of the primary CPU

   If the primary CPU fails, the standard IO devices ("switched S1 devices") are temporarily separated from the S7-1500R/H redundant system. During this time, the configured substitute value behavior applies to the modules of the standard IO devices.

   The new primary CPU establishes the connections to the standard IO devices again. After a short time, the primary CPU resumes exchanging process data with the standard IO devices.

4. The redundancy of the system is restricted. The restriction has no impact on the process. If another system component or another network segment fails, this can result in the failure of the S7-1500R/H redundant system. You can find additional information in the section Failure scenarios (Page 143).

Diagnostics

System state, operating states and error displays after primary-backup switchover:

- Redundant system → RUN-Solo system state
- Primary CPU (previously backup CPU) → RUN operating state
  - MAINT LED → yellow light: The R/H system is not in the RUN-Redundant system state. No partner CPU has been found in the redundant system. The PROFINET ring is open.
- Backup CPU (previously primary CPU) → failed

Note

To get detailed diagnostics information, evaluate the diagnostics buffer.

Solution

Replace the defective CPU. You can find additional information on the procedure in the section Replacing defective R/H CPUs (Page 366).

5.4.3 Failure of the backup CPU

Introduction

The following redundancy scenario describes the effects of a defective backup CPU using the example of a PROFINET ring.

Redundancy scenario

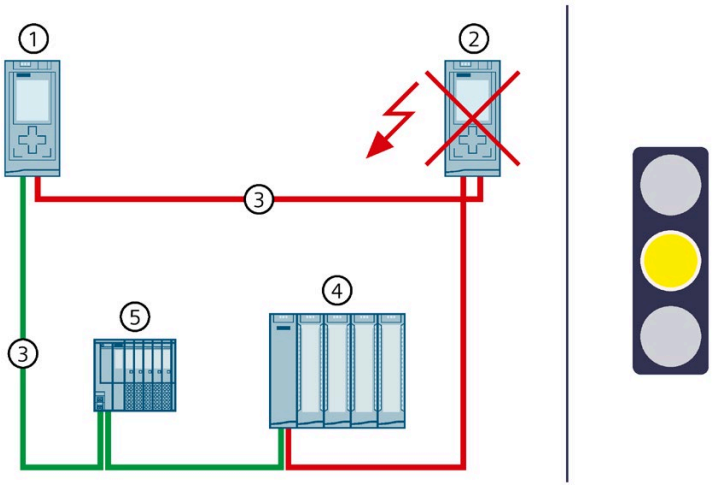

① Primary CPU
② Backup CPU → failed
③ PROFINET cable (redundancy connections, PROFINET ring)
④ IO device ET 200MP
⑤ IO device ET 200SP

Figure 5-25 Failure of the backup CPU (using S7-1500R as an example)

Sequence of events

1. The backup CPU of the redundant system fails in the RUN-Redundant system state.
2. The redundant system switches to the RUN-Solo system state. You can find additional information on the RUN-Solo system state in the section Operating and system states (Page 301).
3. The primary CPU continues to exchange process data with the IO devices (and standard IO devices).
4. The redundancy of the system is restricted. The restriction has no impact on the process. If another system component or another network segment fails, this can result in the failure of the S7-1500R/H redundant system. You can find additional information in the section Failure scenarios (Page 143).

Diagnostics

System state, operating states and error displays after primary-backup switchover:

- Redundant system → RUN-Solo system state
- Primary CPU → RUN operating state
  - MAINT LED → yellow light: The R/H system is not in the RUN-Redundant system state. No partner CPU has been found in the redundant system. The PROFINET ring is open.
- Backup CPU → failed

Note

To get detailed diagnostics information, evaluate the diagnostics buffer.

Solution

Replace the defective CPU. You can find additional information on the procedure in the section Replacing defective R/H CPUs (Page 366).

5.4.4 Failure of the PROFINET cable in the PROFINET ring

Introduction

The following redundancy scenario describes the effects of a defective PROFINET cable in the PROFINET ring.

Redundancy scenario

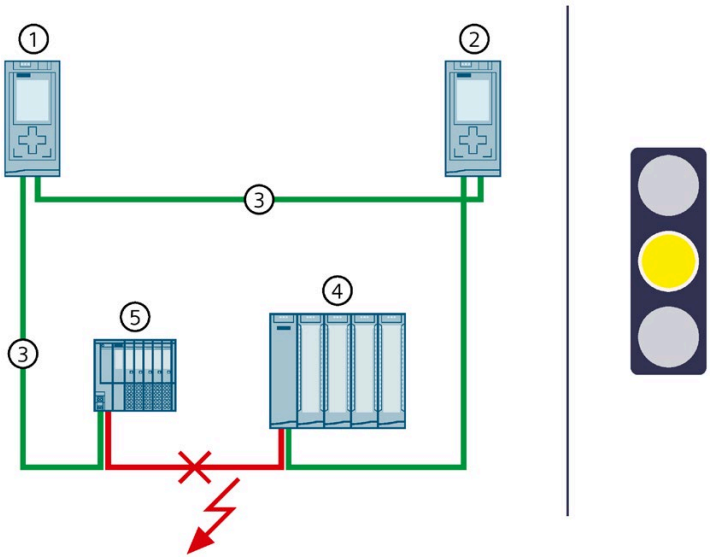

① Primary CPU
② Backup CPU
③ PROFINET cable (redundancy connections, PROFINET ring) → interrupted
④ IO device ET 200MP
⑤ IO device ET 200SP

Figure 5-26 Failure of a PROFINET cable in the PROFINET ring (using S7-1500R as an example)

Sequence of events

1. A defective or disconnected PROFINET cable interrupts the PROFINET ring of the redundant system.
2. The redundant system remains in the RUN-Redundant system state: The primary and backup CPUs remain in the RUN-Redundant operating state.
3. The redundant system selects an alternative connection over the backup CPU. This allows the redundant system to access all IO devices in the PROFINET ring again.
4. The redundancy of the system is restricted. The restriction has no effect on the process.

   If another system component or another network segment fails, this can result in the failure of the S7-1500R/H redundant system.

   – If the PROFINET cable is also interrupted at another point, IO devices in the PROFINET ring may fail depending on the location of the interruption.
   – You can find additional information in the section Failure scenarios (Page 143).

Diagnostics

System state, operating states and error displays after the failure of the PROFINET cable:

- Redundant system → RUN-Redundant system state
- Primary CPU/Backup CPU → RUN-Redundant operating state
  – MAINT LED → yellow light: The PROFINET ring is open. There is only one redundancy connection remaining in the redundant system.

WARNING

Failure of the redundant system S7-1500R

If the primary CPU fails in addition to the PROFINET cable, the backup CPU switches to the STOP operating state. You can find more information in the section Failure of the primary CPU when IO devices have failed in the PROFINET ring (Page 152).

Note

To get detailed diagnostics information, evaluate the diagnostics buffer.

Solution

Replace the defective PROFINET cable or reconnect the disconnected PROFINET cable. You can find additional information on the procedure in the section Replacing defective PROFINET cables.

5.4.5 Specific redundancy scenarios for S7-1500H

5.4.5.1 Failure of a redundancy connection in S7-1500H

Introduction

The following redundancy scenario describes the effects of a defective redundancy connection on S7-1500H using the example of a PROFINET ring.

Redundancy scenario

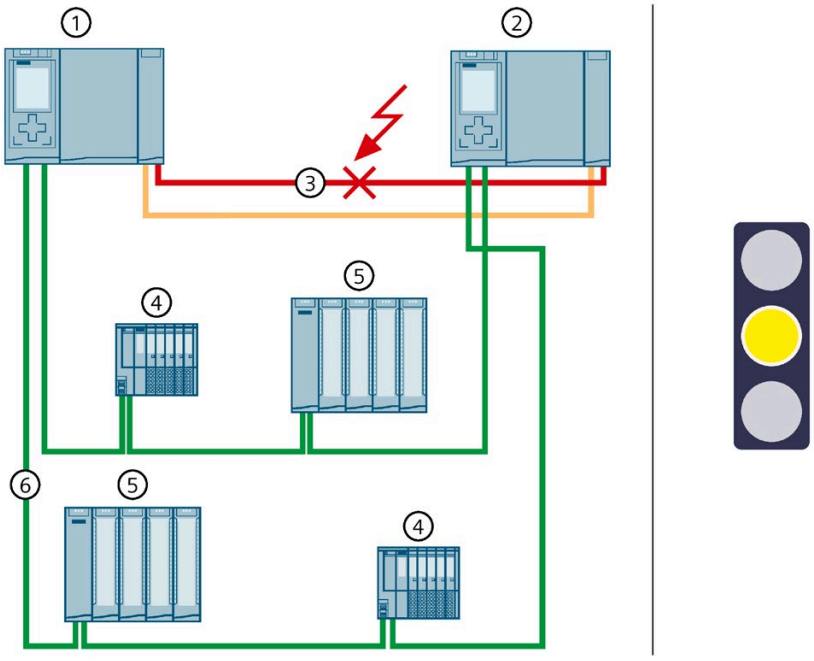

① Primary CPU
② Backup CPU
③ One fiber-optic cable (redundancy connection) → interrupted
④ IO device ET 200SP
⑤ IO device ET 200MP
⑥ PROFINET cable (PROFINET ring)

Figure 5-27 Failure of a redundancy connection

Sequence of events

1. One of the two redundancy connections (fiber-optic cables) is interrupted.
2. The system continues to exchange process data with the IO devices.
3. The redundancy of the system is restricted. The redundant system will remain in the RUN-Redundant system state. The restriction has no effect on the process.

Diagnostics

System state, operating states and error displays after the failure of a redundancy connection:

- Redundant system → RUN-Redundant system state
- Primary CPU/Backup CPU → RUN-Redundant operating state
  - MAINT LED → yellow light: There is only one redundancy connection remaining in the H system.

WARNING

Failure of the redundant system

If the primary CPU fails in addition to the redundancy connection, the backup CPU switches to the STOP operating state. You can find more information in the section Failure of one redundancy connection and the primary CPU in S7-1500H (Page 157).

Note

To get detailed diagnostics information, evaluate the diagnostics buffer.

Solution

Replace the defective redundancy connection. You can find additional information on the procedure in the section Replacing defective redundancy connections (Page 368).

5.4.5.2 Failure of both redundancy connections in S7-1500H > 55 ms apart

Introduction

The following redundancy scenario describes the effects of a defect in each of the two redundancy connections in S7-1500H using a PROFINET ring as example. In this redundancy scenario, the time between the redundancy connection failures is > 55 ms.

Redundancy scenario

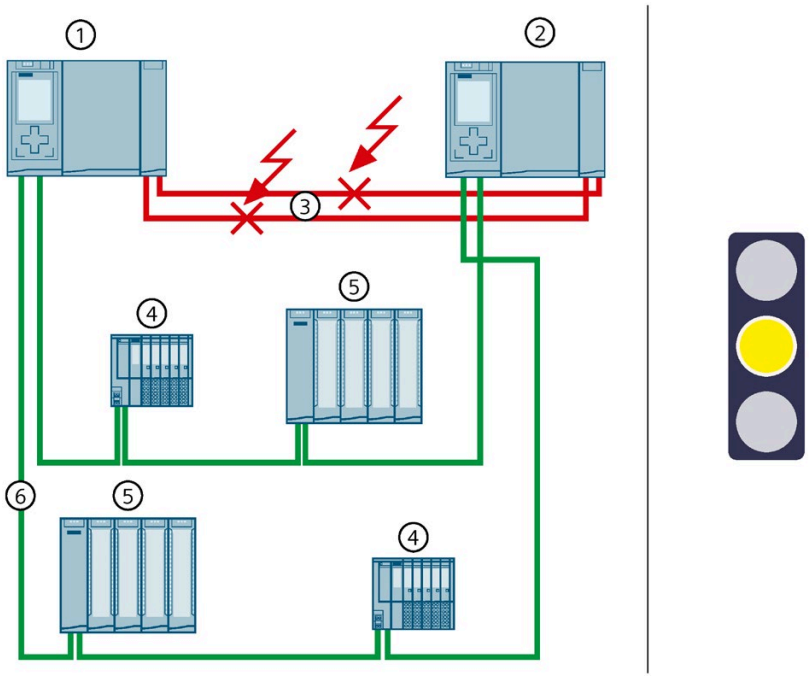

① Primary CPU (S7-1500H)
② Backup CPU (S7-1500H)
③ Two fiber-optic cables (redundancy connections) → interrupted
④ IO device ET 200MP
⑤ IO device ET 200SP
⑥ PROFINET cable (PROFINET ring)

Figure 5-28 Failure of both redundancy connections (> 55 ms apart)

Sequence of events

1. The two redundancy connections (fiber-optic cables) are interrupted > 55 ms apart.
2. The redundant system switches to the RUN-Solo system state. The primary CPU remains in the RUN operating state. The backup CPU switches to the STOP operating state.
3. The primary CPU continues to exchange process data with the IO devices.
4. The redundancy of the system is restricted. The restriction has no impact on the process. If another system component or another network segment fails, this can result in the failure of the S7-1500R/H redundant system. You can find additional information in the section Failure scenarios (Page 143).

Diagnostics

System state, operating states and error displays after the failure of both redundancy connections:

- Redundant system → RUN-Solo system state
- Primary CPU → RUN operating state
  - MAINT LED → yellow light: The H-system is not in the RUN-Redundant system state. No partner CPU has been found in the H-system.
- Backup CPU → STOP operating state
  - MAINT LED → yellow light: The H-system is not in the RUN-Redundant system state. No partner CPU has been found in the H-system.

Note

To get detailed diagnostics information, evaluate the diagnostics buffer.

Solution

Replace the defective redundancy connections. You can find additional information on the procedure in the section Replacing defective redundancy connections (Page 368).

5.4.5.3 Failure of both redundancy connections and the PROFINET cable in the PROFINET ring

Introduction

The following redundancy scenario describes the effects of a defect in each of the two redundancy connections and in the PROFINET cable in the PROFINET ring.
In this redundancy scenario, the time between the redundancy connection failures is > 55 ms.

Redundancy scenario

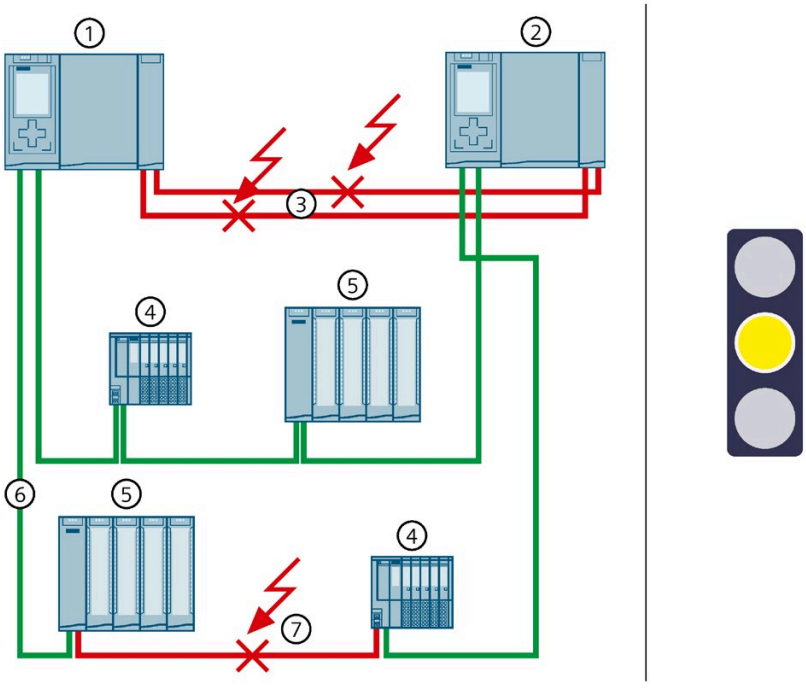

① Primary CPU
② Backup CPU
③ Two fiber-optic cables (redundancy connections) → interrupted
④ IO device ET 200SP
⑤ IO device ET 200MP
⑥ PROFINET cable (PROFINET ring)
⑦ PROFINET cable (PROFINET ring) → interrupted

Figure 5-29 Failure of both redundancy connections and a PROFINET cable in the PROFINET ring

Sequence of events

1. Both redundancy connections (fiber-optic cables) fail in the redundant system. The time between the failures is > 55 ms.
2. The redundant system switches to the RUN-Solo system state. The primary CPU remains in the RUN operating state. The backup CPU switches to the STOP operating state.
3. A defective PROFINET cable also interrupts the PROFINET ring.
4. The redundant system accesses all IO devices in the PROFINET ring again over the remaining PROFINET cables.
5. The redundancy of the system is restricted. The restrictions have no effect on the process.

Diagnostics

System state, operating states and error displays after the failure of the redundancy connections and PROFINET cable:

- Redundant system → RUN-Solo system state
- Primary CPU → RUN operating state
  - MAINT LED → yellow light: The H-system is not in the RUN-Redundant system state. No partner CPU has been found in the H-system. The PROFINET ring is open (requirement: Primary CPU is MRP Manager).
- Backup CPU → STOP operating state
  - MAINT LED → yellow light: The H-system is not in the RUN-Redundant system state. No partner CPU has been found in the H-system.

Note

To get detailed diagnostics information, evaluate the diagnostics buffer.

Solution

Replace the defective redundancy connections and the defective PROFINET cable. You can find more information on the procedure in the following sections:

- Replacing defective redundancy connections (Page 368)
- Replacing defective PROFINET cables

5.4.5.4 Failure of the two PROFINET cables in the PROFINET ring on the backup CPU

Introduction

The following redundancy scenario describes the effects of a defect of both PROFINET cables in the PROFINET ring at the backup CPU.

Redundancy scenario

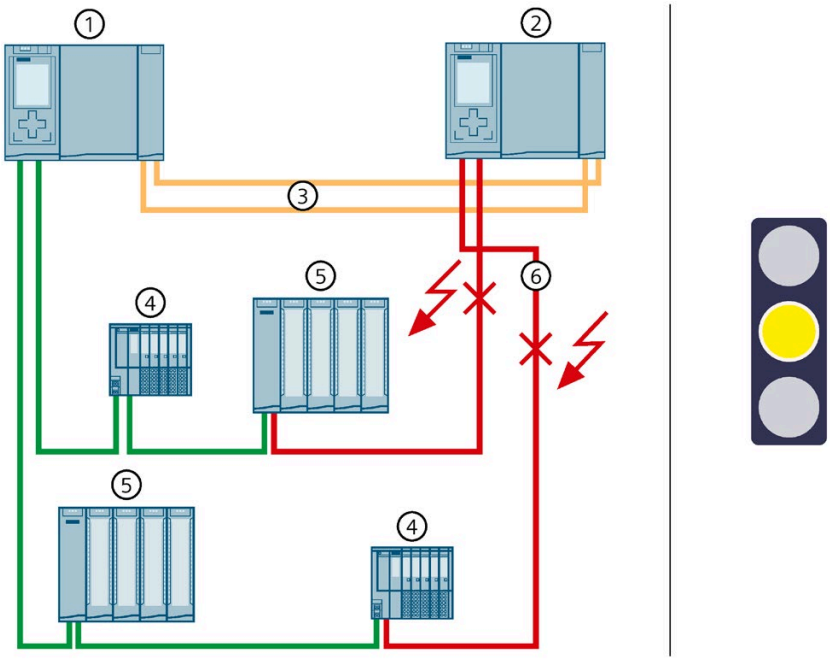

① Primary CPU
② Backup CPU
③ Two fiber-optic cables (redundancy connections)
④ IO device ET 200SP
⑤ IO device ET 200MP
⑥ PROFINET cables (PROFINET ring) → interrupted

Figure 5-30 Failure of the two PROFINET cables in the PROFINET ring on the backup CPU

Sequence of events

1. Both PROFINET cables in the PROFINET ring upon failure of the backup CPU.
2. The redundant system will remain in the RUN-Redundant system state. The primary and backup CPUs remain in the RUN-Redundant operating state.
3. The redundant system continues to reach all IO devices in the PROFINET ring.
4. The redundancy of the system is restricted. The restrictions have no effect on the process.

Diagnostics

System state, operating states and error displays after the failure of both PROFINET cables on the backup CPU:

- Redundant system → RUN-Redundant system state
- Primary CPU/Backup CPU → RUN-Redundant operating state
  - MAINT LED → yellow light: The PROFINET ring is open. No backup AR.

Note

To get detailed diagnostics information, evaluate the diagnostics buffer.

Solution

Replace the defective PROFINET cables. You can find additional information on the procedure in the section Replacing defective PROFINET cables (Page 372).

5.4.5.5 Failure of an interface module in an R1 device in a PROFINET ring

Introduction

The following redundancy scenario describes the effects of a failure of an interface module in an R1 device in the PROFINET ring.

Redundancy scenario

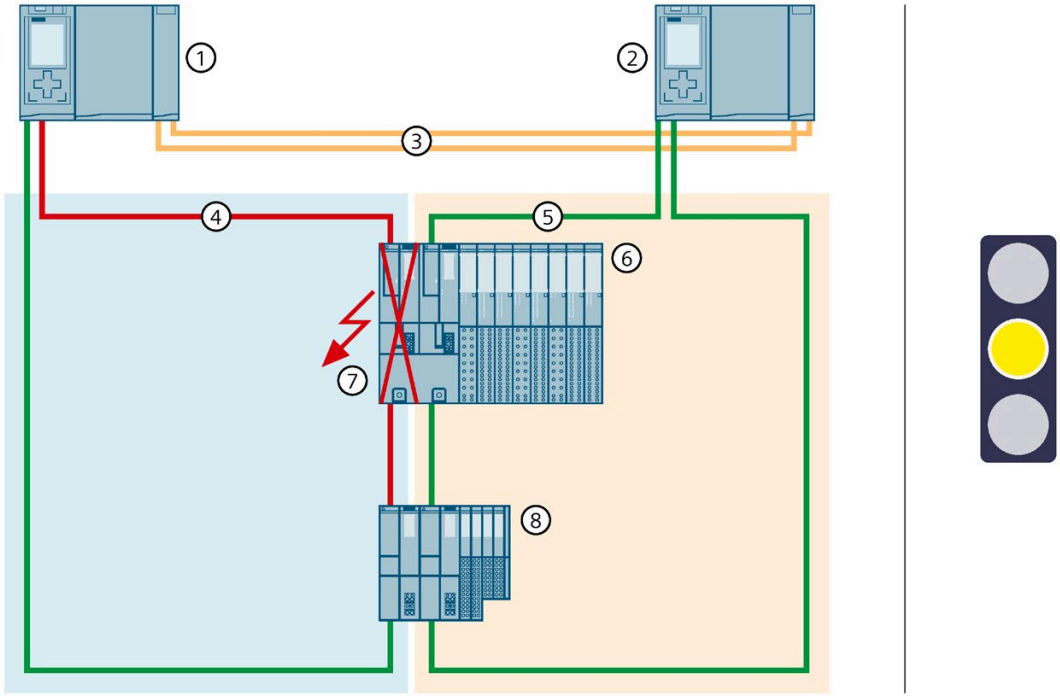

① Primary CPU
② Backup CPU
③ Two fiber-optic cables (redundancy connections)
④ PROFINET cables (PROFINET ring 1)
⑤ PROFINET cables (PROFINET ring 2)
⑥ IO device ET 200SP HA
⑦ ET 200SP HA interface module → failed
⑧ IO device ET 200SP

Figure 5-31 Failure of an interface module in an R1 device in the PROFINET ring

Sequence of events

1. The left interface module (slot 0) of the R1 device fails in PROFINET ring 1 and interrupts PROFINET ring 1.
2. The redundant system will remain in the RUN-Redundant system state: The primary and backup CPUs remain in the RUN-Redundant operating state. The roles of the primary and backup CPUs do not change.
3. The redundant system selects an alternative connection over the backup CPU and the PROFINET ring 2. This allows the redundant system to access the R1 device (via the right-hand interface module at slot 1).
4. The redundancy of the system is restricted. The restriction has no effect on the process. If another system component fails, the S7-1500R/H redundant system can fail as a result.

Diagnostics

System state, operating states and error displays after the failure of the interface module:

- Redundant system → RUN-Redundant system state
- Primary CPU/Backup CPU → RUN-Redundant operating state
  - MAINT LED → yellow light: Interface module failed. The PROFINET ring 1 is open. No backup AR.

Note

Deviating diagnostics display

If you remove an interface module of an R1 device, the other interface module signals this error with a red flashing ERROR LED. The LED error display has no effect on the process because the second interface module of the R1 device takes over.

In the STEP 7 online diagnostics, the R1 device is shown only as "Maintenance demanded, error in lower-level component". The reason for this is the different diagnostics views of the R1 device and H-CPU.

The IO device has only a local view and signals a missing module. The H-CPU, on the other hand, has a higher-level view of the redundancy of the two interface modules. The redundancy then results in the understated diagnostic information.

Therefore, when evaluating diagnostic information, pay attention not only to the LED error display on the devices. For a complete evaluation of diagnostic information, you must also look at the STEP 7 online diagnostics and evaluate the diagnostics buffer. You can find more information in the Diagnostics (https://support.industry.siemens.com/cs/ww/en/view/59192926) function manual.

Solution

Replace the defective interface module of the R1 device. You can find additional information on the procedure in the section Replacing defective I/O devices/switches (Page 375).

5.4.5.6 Failure of the two PROFINET lines in PROFINET ring 1 at the primary CPU with R1 devices

Introduction

The following redundancy scenario describes the effects in case of a defect of both PROFINET lines in PROFINET ring 1 at the primary CPU with R1 devices.

Failure scenario

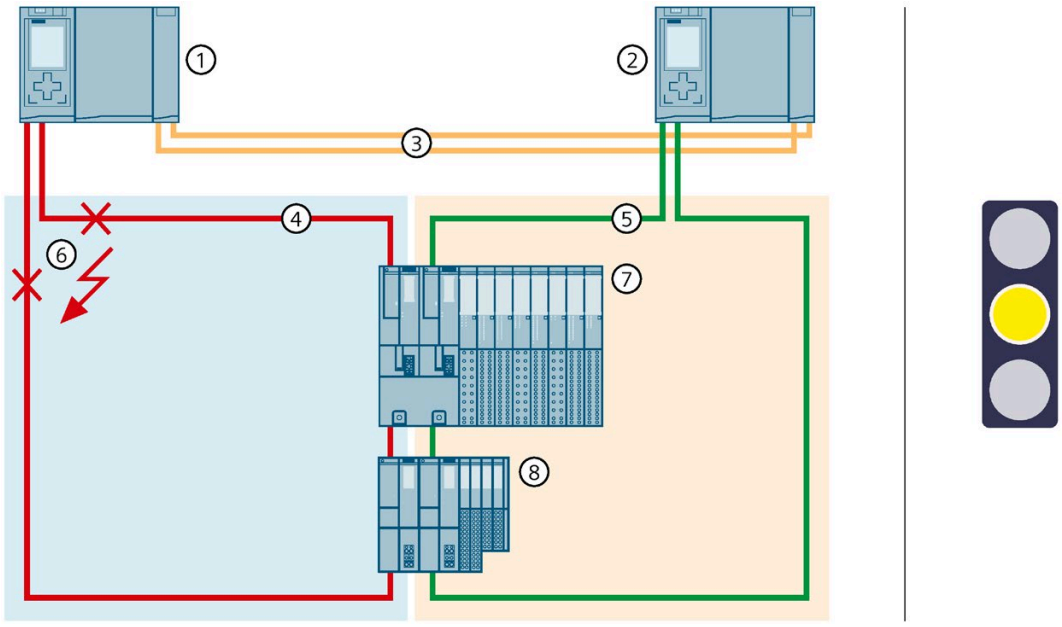

① Primary CPU
② Backup CPU
③ Two fiber-optic cables (redundancy connections)
④ PROFINET cable (PROFINET ring 1)
⑤ PROFINET cable (PROFINET ring 2)
⑥ PROFINET lines → interrupted
⑦ IO device ET 200SP HA
⑧ IO device ET 200SP

Figure 5-32 Failure of the two PROFINET lines in PROFINET ring 1 to the primary CPU.

Sequence of events

1. Both PROFINET lines in PROFINET ring 1 on the primary CPU fail. The redundant system will not execute a primary-backup switchover. The redundant system will remain in the RUN-Redundant system state.
2. The redundant system selects an alternative connection over the backup CPU and the PROFINET ring 2. This allows the redundant system to reach the R1 devices again.
3. The redundancy of the system is restricted. The restriction has no effect on the process. If another system component fails, the S7-1500R/H redundant system can fail as a result.

Diagnostics

System state, operating states and error displays after the failure of both PROFINET cables:

- Redundant system → RUN-Redundant system state
- Primary CPU/Backup CPU → RUN-Redundant operating state
  - MAINT LED → yellow light: The PROFINET ring 1 is open. No backup AR.

Note

To get detailed diagnostics information, evaluate the diagnostics buffer.

Solution

Replace the defective PROFINET cables. You can find additional information on the procedure in the section Replacing defective PROFINET cables (Page 372).

5.4.5.7 Failure of both PROFINET lines between two R1 devices in a line topology

Introduction

The following redundancy scenario describes the effects of a failure of both PROFINET lines between two R1 devices in a line topology.

Redundancy scenario

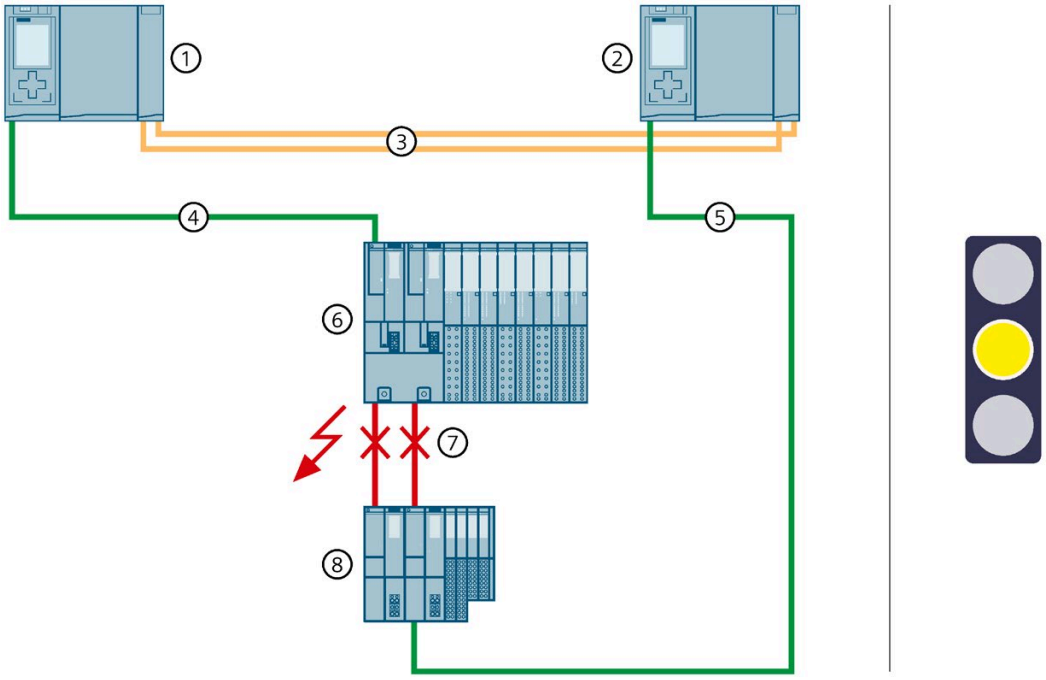

① Primary CPU (S7-1500H)
② Backup CPU (S7-1500H)
③ Two fiber-optic cables (redundancy connections)
④ PROFINET cable (line topology 1)
⑤ PROFINET cable (line topology 2)
⑥ IO device ET 200SP HA
⑦ PROFINET lines → interrupted
⑧ IO device ET 200SP

Figure 5-33 Failure of the two PROFINET lines between two R1 devices in a line topology

Sequence of events

1. Both PROFINET lines between the R1 devices fail.
2. The redundant system will remain in the RUN-Redundant system state: The primary and backup CPUs remain in the RUN-Redundant operating state. The roles of the primary and backup CPUs do not change.
3. The redundant system selects an alternative connection to the lower R1 device via the backup CPU. This allows the redundant system to reach all IO devices in the line topology again.
4. The redundancy of the system is restricted. The restriction has no effect on the process.
   If another system component or another network segment fails, the S7-1500R/H redundant system will fail as a result:
   If the PROFINET cable is also interrupted at another point in the line topology, an IO device will fail.

Note

Separate routing of the PROFINET lines

When routing the PROFINET cables, make sure that you always route the PROFINET cables between the R1 devices and to the H-CPUs separately. This makes simultaneous damage unlikely and increases the availability of the redundant system.

Diagnostics

System state, operating states and error displays after the failure of both PROFINET cables:

- Redundant system → RUN-Redundant system state
- Primary CPU/Backup CPU → RUN-Redundant operating state
  - MAINT LED → yellow light: No backup AR.

Note

To get detailed diagnostics information, evaluate the diagnostics buffer.

Solution

Replace the two PROFINET lines. You can find additional information on the procedure in the section Replacing defective PROFINET cables (Page 372).

5.4.5.8 Failure of a PROFINET line between two S2 devices in a line topology

Introduction

The following redundancy scenario describes the effects of a PROFINET line failure between two S2 devices in a line topology.

Redundancy scenario

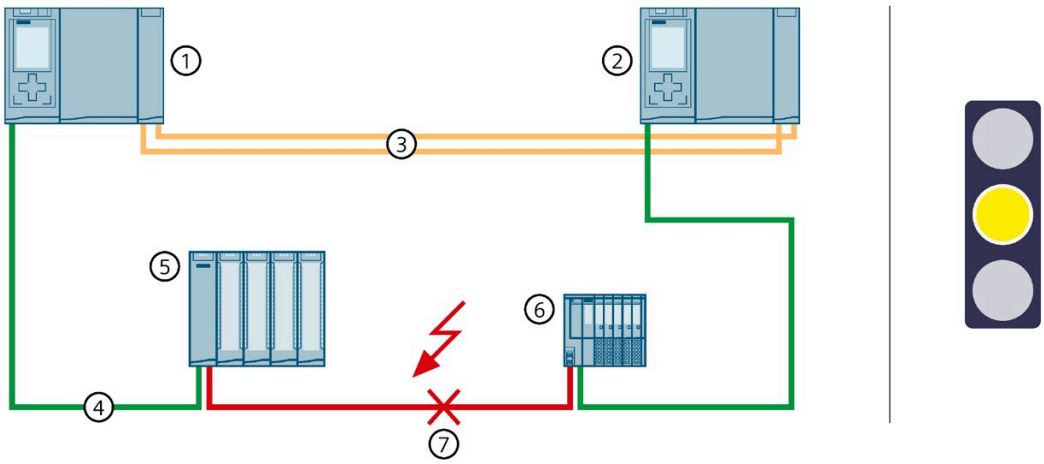

① Primary CPU
② Backup CPU
③ Two fiber-optic cables (redundancy connections)
④ PROFINET cable (line topology)
⑤ IO device ET 200MP
⑥ IO device ET 200SP
⑦ PROFINET line (line topology) → interrupted

Figure 5-34 Failure of a PROFINET line between two S2 devices in a line topology

Sequence of events

1. The PROFINET line between the two S2 devices fails.
2. The redundant system will remain in the RUN-Redundant system state: The primary and backup CPUs remain in the RUN-Redundant operating state.
3. The redundant system selects an alternative connection to the ET 200SP via the backup CPU. This allows the redundant system to reach all IO devices in the line topology again.
4. The redundancy of the system is restricted. The restriction has no effect on the process.
   If another system component or another network segment fails, the S7-1500R/H redundant system will fail as a result:
   If the PROFINET cable is also interrupted at another point in the line topology, an IO device will fail.

Diagnostics

System state, operating states and error displays after the failure of the PROFINET cable:

- Redundant system → RUN-Redundant system state
- Primary CPU/Backup CPU → RUN-Redundant operating state
  - MAINT LED → yellow light: No backup AR.

Note

To get detailed diagnostics information, evaluate the diagnostics buffer.

Solution

Replace the defective PROFINET cable. You can find additional information on the procedure in the section Replacing defective PROFINET cables (Page 372).

5.5 Failure scenarios

Introduction

This section describes possible failure scenarios with the various configuration variants. The failure scenarios lead to process restrictions. In the examples shown, the redundant system cannot tolerate the failures any longer.

The following convention applies:

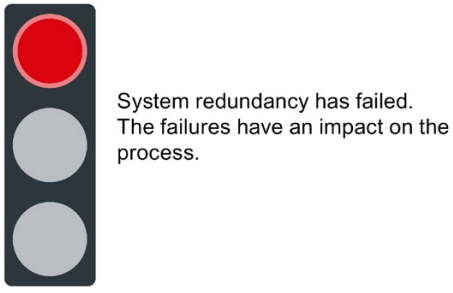

Figure 5-35 Red traffic light

5.5.1 Failure of an IO device in the PROFINET ring

Introduction

The following failure scenario describes the effects of a defective IO device in the PROFINET ring.

Failure scenario

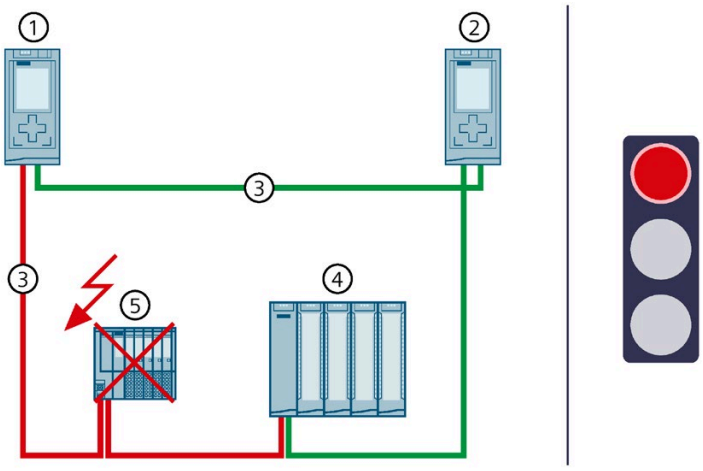

① Primary CPU
② Backup CPU
③ PROFINET cable (redundancy connections, PROFINET ring)
④ IO device ET 200MP
⑤ IO device ET 200SP → failed

Figure 5-36 Failure of an IO device in the PROFINET ring (using S7-1500R as an example)

Sequence of events

1. An IO device in the PROFINET ring fails.
2. The PROFINET ring is interrupted.
3. The redundant system selects an alternative connection over the backup CPU. This allows the redundant system to access all remaining IO devices in the PROFINET ring again.
4. The failure of the IO device has an impact on the process. If the failed inputs and outputs have an important function in the system, their failure can have a critical impact on the process.

Diagnostics

System state, operating states and error displays after the failure of an IO device:

- Redundant system → RUN-Redundant system state
- Primary CPU/Backup CPU → RUN-Redundant operating state
  - MAINT LED: → yellow light: The PROFINET ring is open. Singular redundancy connection available.
  - ERROR LED → flashes red: An IO device has failed.

WARNING

Failure of the redundant system

If the primary CPU fails in addition to the PROFINET cable, the backup CPU switches to the STOP operating state. You can find more information in the section Failure of the primary CPU when IO devices have failed in the PROFINET ring (Page 152).

Note

To get detailed diagnostics information, evaluate the diagnostics buffer.

Solution

Replace the defective IO device. You can find additional information on the procedure in the section Replacing defective I/O devices/switches (Page 375).

5.5.2 Failure of a switch (with additional line topology) in the PROFINET ring

Introduction

The following failure scenario describes the effects of a defective switch (with additional line topology) in the PROFINET ring.

Failure scenario

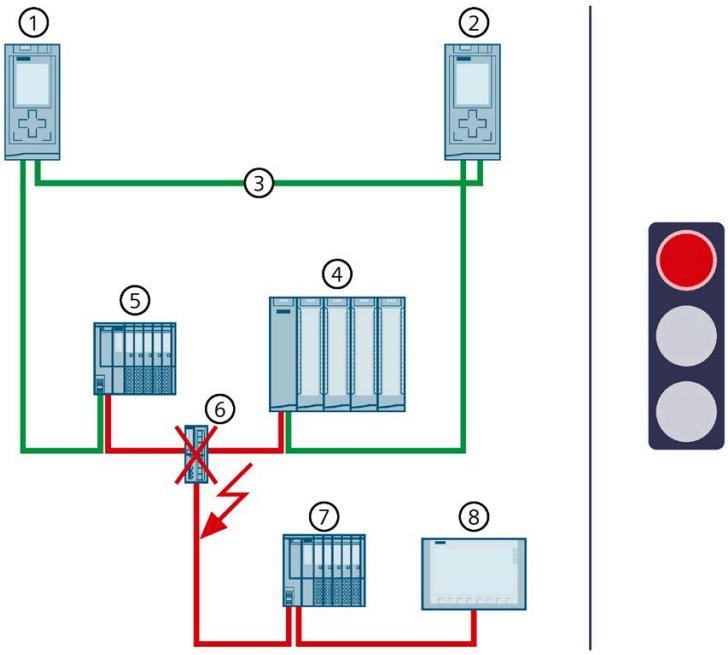

① Primary CPU
② Backup CPU
③ PROFINET cable (redundancy connections, PROFINET ring)
④ IO device ET 200MP
⑤ IO device ET 200SP
⑥ Switch → failed
⑦ IO device ET 200SP
⑧ HMI device

Figure 5-37 Failure of a switch in the PROFINET ring (using S7-1500R as an example)

Sequence of events

1. A switch (with additional line topology) fails in the PROFINET ring.
2. The PROFINET ring is interrupted.
3. If applicable, the redundant system selects an alternative connection to the IO devices ④ and ⑤ over the backup CPU. This allows the redundant system to access all IO devices in the PROFINET ring again.
4. The failure of the switch has an impact on the process as the IO devices in the additional line topology can no longer be accessed.
   If the failed inputs and outputs have an important function in the system, their failure can have a critical impact on the process.

Diagnostics

System state, operating states and error displays after the failure of a switch:

- Redundant system → RUN-Redundant system state
- Primary CPU/Backup CPU → RUN-Redundant operating state
  - MAINT LED → yellow light: The PROFINET ring is open.
  - ERROR LED → flashes red: One or more IO devices have failed.

WARNING

Failure of the redundant system

If the primary CPU fails in addition to the PROFINET cable, the backup CPU switches to the STOP operating state. You can find more information in the section Failure of the primary CPU when IO devices have failed in the PROFINET ring (Page 152).

Note

To get detailed diagnostics information, evaluate the diagnostics buffer.

Solution

Replace the defective switch. You can find additional information on the procedure in the section Replacing defective I/O devices/switches (Page 375).

5.5.3 Specific failure scenarios with S7-1500R

5.5.3.1 Two cable interruptions in the PROFINET ring in S7-1500R > 1500 ms apart

Introduction

The following failure scenario describes the effects of two cable interruptions in the PROFINET ring. In this failure scenario, the time between the two cable interruptions is > 1500 ms.

Failure scenario

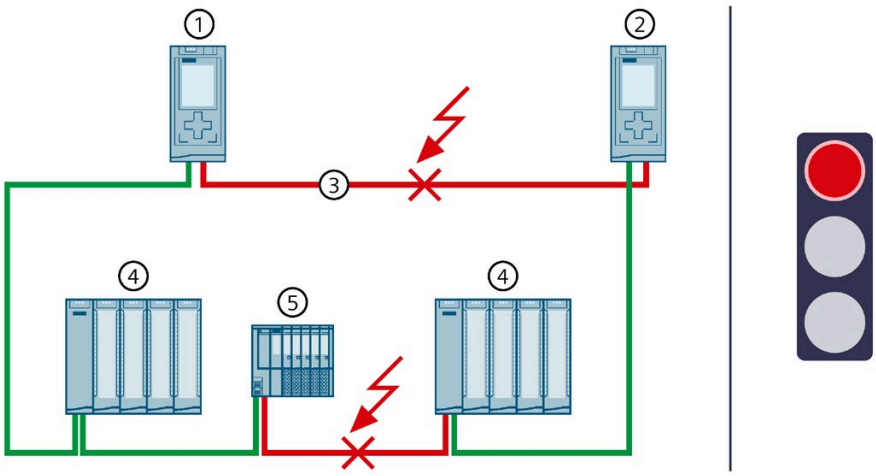

① Primary CPU
② Backup CPU
③ PROFINET ring → interrupted at two points
④ IO device ET 200MP
⑤ IO device ET 200SP

Figure 5-38 Two cable interruptions in the PROFINET ring (> 1500 ms apart)

Sequence of events

1. The PROFINET ring is interrupted at one point.
2. The redundant system remains in the RUN-Redundant system state: The primary and backup CPUs remain in the RUN-Redundant operating state.
3. The PROFINET ring is interrupted at a second point > 1500 ms later.
4. The redundant system switches to the RUN-Solo system state. The primary CPU remains in the RUN operating state. The backup CPU switches to the STOP operating state.
5. CPU redundancy has failed. The failure has an impact on the process. The RUN-Solo system state and the cable interruptions mean that not all IO devices in the PROFINET ring can be accessed.
   If the failed inputs and outputs have an important function in the system, their failure can have a critical impact on the process.

Diagnostics

System state, operating states and error displays after the cable interruptions:

- Redundant system → RUN-Solo system state
- Primary CPU → RUN operating state
  - MAINT LED → yellow light: The R-system is not in the RUN-Redundant system state. No partner CPU has been found in the R-system. The PROFINET ring is open.
  - ERROR LED → flashes red: One or more IO devices cannot be accessed.
- Backup CPU → STOP operating state
  - MAINT LED → yellow light: The R-system is not in the RUN-Redundant system state. No partner CPU has been found in the R-system. The PROFINET ring is open.

Note

To get detailed diagnostics information, evaluate the diagnostics buffer.

Solution

Replace the defective PROFINET cables. You can find additional information on the procedure in the section Replacing defective redundancy connections (Page 368).

5.5.3.2 Two cable interruptions in the PROFINET ring in S7-1500R within ≤ 1500 ms

Introduction

The following failure scenario describes the effects of two cable interruptions in the PROFINET ring. In this failure scenario, the time between the two cable interruptions is ≤ 1500 ms.

Failure scenario

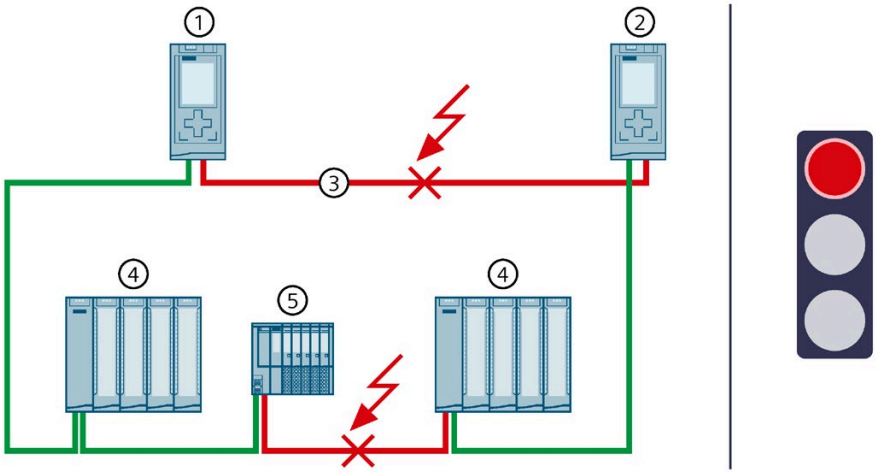

① Primary CPU
② Backup CPU
③ PROFINET ring → interrupted a 2 locations
④ IO device ET 200MP
⑤ IO device ET 200SP

Figure 5-39 2 cable interruptions in the PROFINET ring (within ≤ 1500 ms)

Sequence of events

1. The PROFINET ring is interrupted at 2 points at a time interval of ≤ 1500 ms.
2. The redundant system switches to an undefined system state: The primary CPU remains in the RUN operating state. The backup CPU becomes the primary CPU and remains in RUN operating state.
3. The two primary CPUs continue to exchange process data with the accessible IO devices.
4. The redundancy of the system is defective. The redundant system is in an undefined system state. The undefined system state can lead to dangerous states in the process.

WARNING

Undefined system state of the S7-1500R redundant system at the same time as a cable interruption in the PROFINET ring at 2 points within ≤ 1500 ms.

Lay the PROFINET cables so that they are securely protected from damage. PROFINET cables should also always be laid separately from each other. This makes simultaneous damage to the PROFINET cables (within ≤ 1500 ms) unlikely.

Diagnostics

System state and operating states after cable interruptions:

- Redundant system → System state defective (undefined: Each R-CPU is in the RUN-Solo system state).
- Primary CPU → RUN operating state
  - MAINT LED → yellow light: The R-system is not in the RUN-Redundant system state. No partner CPU has been found in the R-system. The PROFINET ring is open.
  - ERROR LED → flashes red: An IO device has failed.
- Primary CPU (previously backup CPU) → RUN operating state
  - MAINT LED → yellow light: The R-system is not in the RUN-Redundant system state. No partner CPU has been found in the R-system. The PROFINET ring is open.
  - ERROR LED → flashes red: An IO device has failed.

Note

To get detailed diagnostics information, evaluate the diagnostics buffer.

Solution

Please note the following solution:

Note

Before you replace the defective PROFINET cables, you must switch both R-CPUs to the STOP operating state. Only then repair the PROFINET cables in the PROFINET ring. Afterwards, switch the R-CPUs back to the RUN operating state.

You can find additional information on the procedure in the section Replacing defective redundancy connections (Page 368).

5.5.3.3 Failure of the primary CPU when IO devices have failed in the PROFINET ring

Introduction

The following failure scenario describes the effects of a defective IO device in the PROFINET ring and a defective primary CPU.

Failure scenario

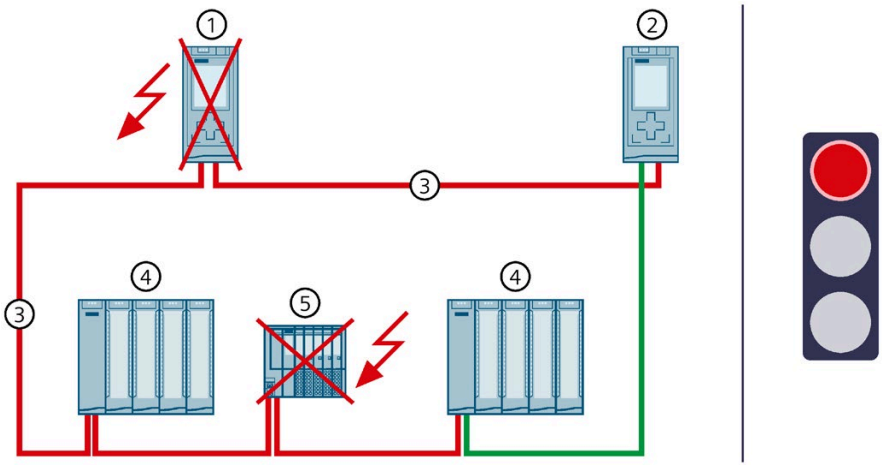

① Primary CPU → failed (2nd failure in sequence of events)
② Backup CPU → switches to STOP operating state
③ PROFINET cable (redundancy connections, PROFINET ring)
④ IO device ET 200MP
⑤ IO device ET 200SP → failed (1st failure in sequence)

Figure 5-40 Failure of an IO device in the PROFINET ring and the primary CPU (using S7-1500R as an example)

Sequence of events

1. An IO device in the PROFINET ring fails.
2. As a result, the PROFINET ring is interrupted.
3. The redundant system selects an alternative connection over the backup CPU. This allows the redundant system to access all remaining IO devices in the PROFINET ring again.
4. The primary CPU also fails.
5. The redundant system does not switch to the backup CPU and switches to the STOP system state. The role of the backup CPU remains unchanged.

   Note

   The backup CPU cannot distinguish between the following scenarios:
   - It can no longer access the primary CPU because the latter has failed.
   - The other redundancy connection has also been interrupted and the primary CPU may still be running.

   That is why the backup CPU does not become the primary CPU. This prevents an undefined system state.

6. The redundant system has failed. The process is no longer controlled by the redundant system.

Diagnostics

System state, operating states and error displays after the failure of the IO device in the PROFINET-Ring and the STOP of Backup CPU:

- Redundant system → STOP system state
- Primary CPU → failed
- Backup CPU → STOP operating state
  - MAINT LED → yellow light: The R-system is not in the RUN-Redundant system state. No partner CPU has been found in the R-system. The PROFINET ring is open.

Note

To get detailed diagnostics information, evaluate the diagnostics buffer.

Solution

Replace the defective IO device and the defective primary CPU. You can find additional information on the procedure in the sections Replacing defective R/H CPUs (Page 366) and Replacing defective I/O devices/switches (Page 375).

Note

Proceed as follows if you have ensured that the CPU is still working in the STOP operating state and can access all important IO devices:

1. Replace the defective IO device.
2. Switch the CPU from STOP operating state to the RUN operating state.
3. Replace the defective CPU. Switch the new CPU to the RUN operating state.

5.5.4 Specific failure scenarios with S7-1500H

5.5.4.1 Failure of both redundancy connections in S7-1500H ≤ 55 ms apart

Introduction

The following failure scenario describes the effects in case of a defect of the two redundancy connections at S7-1500H using the example of a PROFINET ring. In this failure scenario, the time between the redundancy connection failures is ≤ 55 ms.

Failure scenario

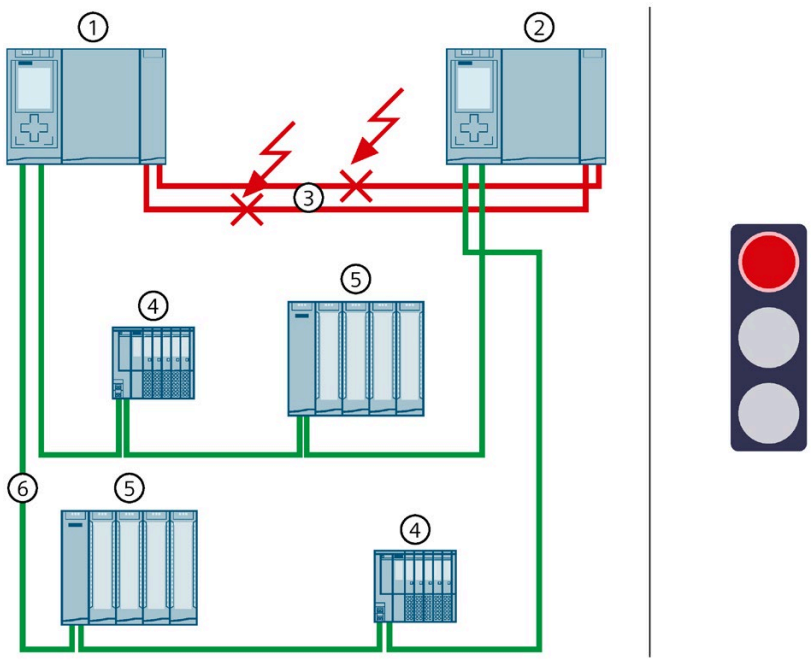

① Primary CPU
② Backup CPU
③ Two fiber-optic cables (redundancy connections) → interrupted
④ IO device ET 200SP
⑤ IO device ET 200MP
⑥ PROFINET cable (PROFINET ring)

Figure 5-41 Failure of both redundancy connections

Sequence of events

1. The two redundancy connections (fiber-optic cables) are interrupted ≤ 55 ms apart.
2. The redundant system switches to an undefined system state: The primary CPU remains in the RUN operating state. The backup CPU becomes the primary CPU and remains in RUN operating state.
3. The two primary CPUs continue to exchange process data with the PROFINET devices.
4. The redundancy of the system is defective. The redundant system is in an undefined system state. The undefined system state can lead to dangerous states in the process.

WARNING

Undefined system state of the S7-1500H redundant system with simultaneous interruption of the two redundancy connections ≤ 55 ms apart.

Lay the redundancy connections in such a way that the fiber-optic cables are securely protected from damage. Also make sure when laying the cables that the two redundancy connections are always separate from each other. This makes simultaneous damage to the redundancy connections (< 55 ms apart) unlikely.

Diagnostics

System state and operating states after the failure of both redundancy connections:

- Redundant system → System state defective (undefined: Each H-CPU is in the RUN-Solo system state).
- Primary CPU → RUN operating state
  - MAINT LED → yellow light: The H-system is not in the RUN-Redundant system state. No partner CPU has been found in the H-system.
- Primary CPU (previously backup CPU) → RUN operating state
  - MAINT LED → yellow light: The H-system is not in the RUN-Redundant system state. No partner CPU has been found in the H-system.

Note

To get detailed diagnostics information, evaluate the diagnostics buffer.

Solution

Please note the following solution:

Note

Before you replace the defective redundancy connections, you must switch both H-CPUs to the STOP operating state. Only then repair the redundancy connections. Switch the H-CPUs back to the RUN operating state.

You can find additional information on the procedure in the section Replacing defective redundancy connections (Page 368).

5.5.4.2 Failure of one redundancy connection and the primary CPU in S7-1500H

Introduction

The following failure scenario describes the effects of a defect in a redundancy connection and the primary CPU in S7-1500H using a PROFINET ring as example. In this failure scenario, the time between the failure of the redundancy connection failure and of the primary CPU is > 55 ms.

Failure scenario

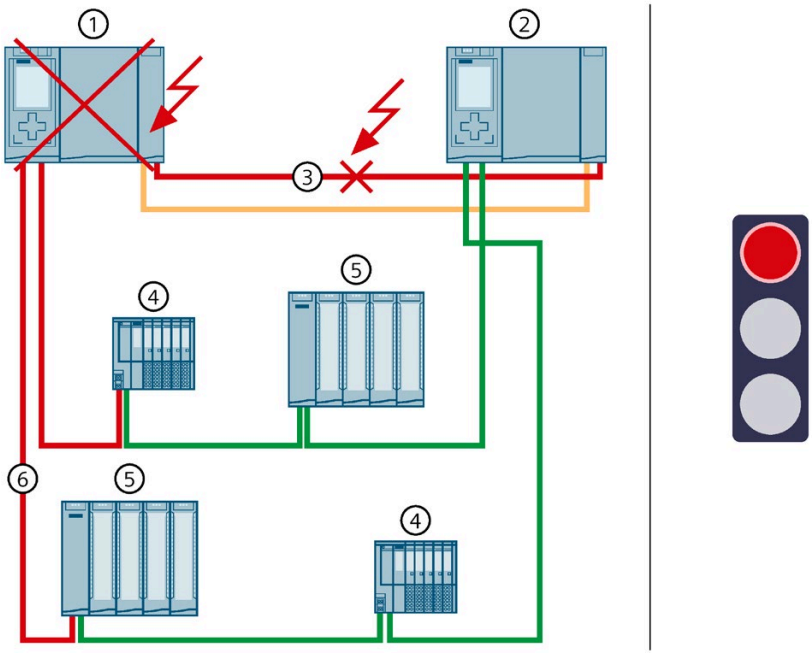

① Primary CPU → failed (2nd failure in sequence of events)
② Backup CPU
③ One fiber-optic cable (redundancy connection) → interrupted (1st failure in sequence of events)
④ IO device ET 200SP
⑤ IO device ET 200MP
⑥ PROFINET cable (PROFINET ring)

Figure 5-42 Failure of one redundancy connection and the primary CPU

Sequence of events

1. One of the two redundancy connections is interrupted.
2. Availability is restricted. The redundant system will remain in the RUN-Redundant system state.
3. The primary CPU also fails. Due to the failure, the primary CPU is no longer visible for the backup CPU.
4. The redundant system does not switch to the backup CPU, but switches to the STOP system state. The role of the backup CPU remains unchanged.

   Note

   The backup CPU cannot distinguish between the following scenarios:
   - It can no longer access the primary CPU because the latter has failed.
   - The other redundancy connection has also been interrupted and the primary CPU may still be running.

   That is why the backup CPU does not become the primary CPU. This prevents an undefined system state.

5. System redundancy has failed. The process is no longer controlled by the redundant system.

Diagnostics

System state and operating states after the failure of the redundancy connection and primary CPU:

- Redundant system → STOP system state
- Primary CPU → failed
- Backup CPU → STOP operating state
  - MAINT LED → yellow light: The H-system is not in the RUN-Redundant system state. No partner CPU has been found in the H-system.

Note

To get detailed diagnostics information, evaluate the diagnostics buffer.

Solution

Replace the defective redundancy connection and the primary CPU. You can find additional information on the procedure in the sections Replacing defective redundancy connections (Page 368) and Replacing defective R/H CPUs (Page 366).

5.5.4.3 Failure of the two PROFINET cables in the PROFINET ring at the primary CPU

Introduction

The following failure scenario describes the effects in case of a defect of both PROFINET lines in the PROFINET ring at the primary CPU.

Failure scenario

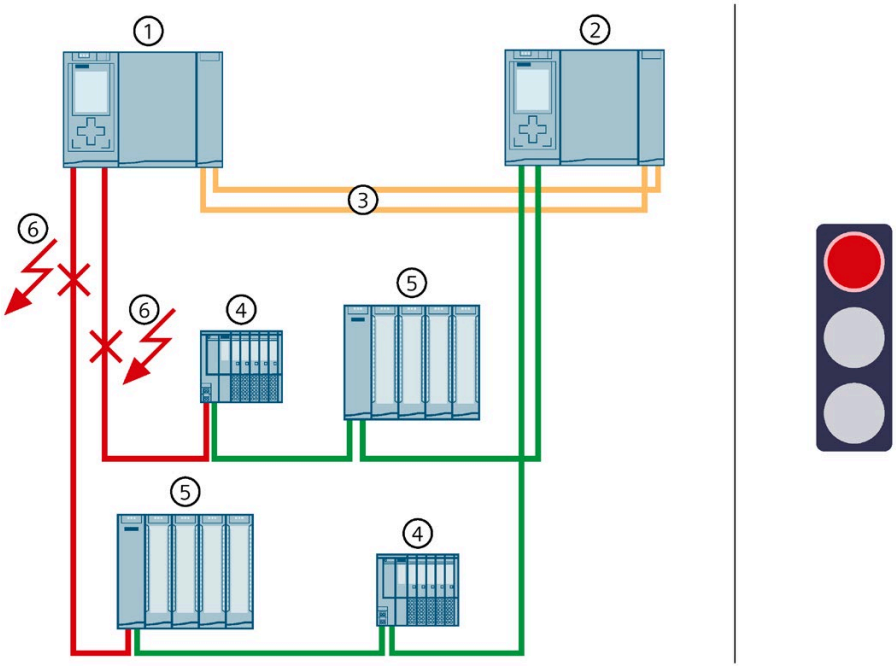

① Primary CPU
② Backup CPU
③ Two fiber-optic cables (redundancy connections)
④ IO device ET 200SP
⑤ IO device ET 200MP
⑥ PROFINET cables (PROFINET ring) → interrupted

Figure 5-43 Failure of both PROFINET cables in the PROFINET ring at the primary CPU

Sequence of events

1. Both PROFINET cables in the PROFINET ring at the primary CPU fail. The redundant system will not execute a primary-backup switchover. The redundant system will remain in the RUN-Redundant system state.
2. The primary CPU can no longer access the IO devices in the PROFINET ring. The IO devices will return to the substitute values.
3. The failure of both PROFINET cables affects the process, since the IO devices in the PROFINET ring can no longer be reached from the primary CPU.

Diagnostics

System state, operating states and error displays after the failure of both PROFINET cables:

- Redundant system → RUN-Redundant system state
- Primary CPU/Backup CPU → RUN-Redundant operating state
  - MAINT LED → yellow light: The PROFINET ring is open.
  - ERROR LED → flashes red: IO devices have failed.

Note

To get detailed diagnostics information, evaluate the diagnostics buffer.

Solution

Replace the defective PROFINET cables. You can find additional information on the procedure in the section Replacing defective PROFINET cables (Page 372).

5.5.4.4 Failure of the redundant system through safe state of the HF-CPUs

Introduction

The following failure scenario describes the effects of data corruption on the safety program of the integrated F-functionality (CPU 1518HF-4 PN). There are also IO devices with fail-safe modules in the PROFINET ring.

You can find more information on data corruption in the safety program in the SIMATIC Safety – Configuring and Programming (https://support.industry.siemens.com/cs/ww/en/view/54110126) programming and operating manual.

Failure scenario

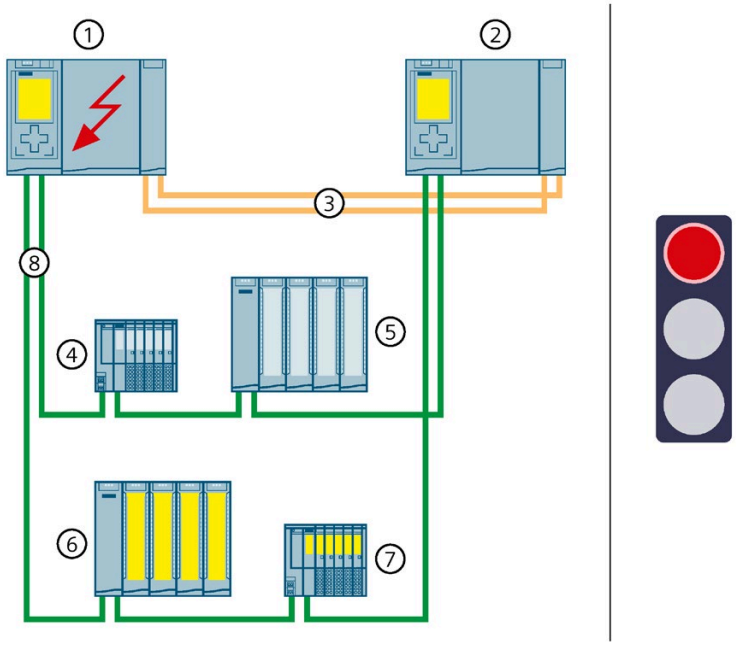

① Primary CPU (CPU 1518HF-4 PN) → Data corruption in the safety program due to incorrect programming
② Backup CPU (CPU 1518HF-4 PN)
③ Two fiber-optic cables (redundancy connections)
④ IO device ET 200SP
⑤ IO device ET 200MP
⑥ ET 200MP IO device with fail-safe modules
⑦ ET 200SP IO device with fail-safe modules
⑧ PROFINET cables (PROFINET ring)

Figure 5-44 Failure of the redundant system through safe state of the 1518HF-4 PN CPUs

Sequence of events

1. Data corruption in the safety program of the primary CPU occurs due to incorrect programming (DIV instruction = 0 if enable output ENO is not connected).
2. The error response state switches all fail-safe inputs/outputs to the safe state. The HF-system then switches to STOP system state.
3. System redundancy has failed. The process is no longer controlled by the redundant system.

Diagnostics

System state, operating states and error displays after failure:

- Redundant system → STOP system state
- Primary CPU/Backup CPU → STOP operating state
  - MAINT LED → yellow light: The H-system is not in the RUN-Redundant system state

Note

To get detailed diagnostics information, evaluate the diagnostics buffer.

Solution

Check the user program (e.g. for write access to the F-data from the standard user program).

5.5.4.5 Failure of an interface module in an R1 device and of the PROFINET lines in two places of a PROFINET ring.

Introduction

The following failure scenario describes the effects of the failure of an interface module in an R1 device and defect of the PROFINET lines at two locations of a PROFINET ring.

Failure scenario

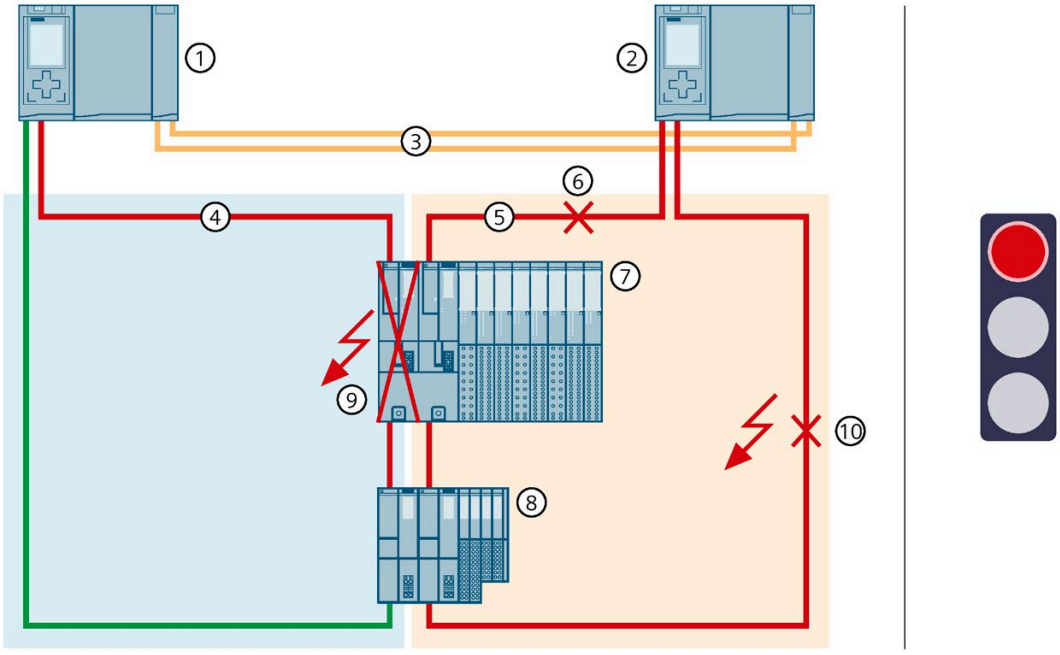

① Primary CPU
② Backup CPU
③ Two fiber-optic cables (redundancy connections)
④ PROFINET cable (PROFINET ring 1)
⑤ PROFINET cable (PROFINET ring 2)
⑥ PROFINET line → interrupted (2nd defect)
⑦ IO device ET 200SP HA
⑧ IO device ET 200SP
⑨ ET 200SP HA interface module → failed (1st defect)
⑩ PROFINET line → interrupted (3rd defect)

Figure 5-45 Failure of an interface module in an R1 device and of the PROFINET lines in two places of a PROFINET ring.

Sequence of events

1. The left interface module (slot 0) of the R1 device fails in PROFINET ring 1 and interrupts PROFINET ring 1.
2. The redundant system selects an alternative connection over the backup CPU and the PROFINET ring 2. This allows the redundant system to access the R1 device (via the right-hand interface module at slot 1).
3. In addition, the PROFINET line from the right interface module (slot 1) to the backup CPU fails.
4. The redundant system selects an alternative connection via the backup CPU over PROFINET ring 2. This allows the redundant system to access the R1 device (via the right-hand interface module at slot 1).
5. In addition, the second PROFINET line to the backup CPU fails.
6. The redundant system will remain in the RUN-Redundant system state: The primary and backup CPUs remain in the RUN-Redundant operating state.
7. The failure of the second PROFINET line to the backup CPU has an impact on the process, since the redundant system no longer reaches the upper R device. The IO device falls back to the substitute values.

Diagnostics

System state, operating states and fault indications after the failure of the interface module and the two PROFINET lines:

- Redundant system → RUN-Redundant system state
- Primary CPU/Backup CPU → RUN-Redundant operating state
  - MAINT LED → yellow light: The PROFINET ring 1 is open. The PROFINET ring 2 is open. No backup AR.
  - ERROR LED → flashes red: One or more IO devices have failed.

Note

To get detailed diagnostics information, evaluate the diagnostics buffer.

Solution

Replace the defective interface module of the R1 device and the defective PROFINET lines. You can find additional information on the procedure in the section Replacing defective IO devices/switches and in the section Replacing defective PROFINET cable.

5.5.4.6 Failure of the primary CPU in PROFINET rings with R1, S2 and S1 devices

Introduction

The following failure scenario describes the effects of a primary CPU failure in PROFINET rings with R1, S2 and S1 devices.

Note

If S2 devices are only accessible by one CPU, then the default operating mode IO-Device (S2) at the H-CPUs triggers the MAINT diagnostics. The MAINT LEDs on the H-CPUs light up. To prevent MAINT diagnostics, you must change the operating mode from "IO device(S2)" to "IO device(S1)". The parameter operating mode can be set in STEP 7 in the "I/O communication" view for each S2 device.

Failure scenario

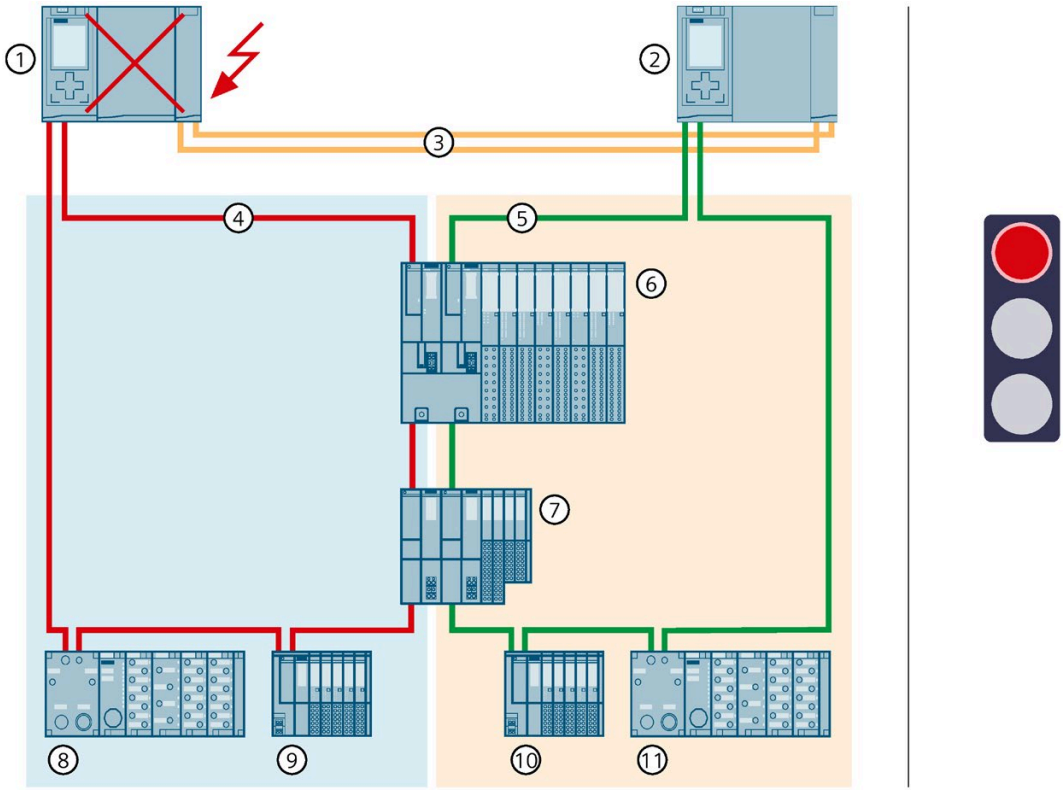

① Primary CPU → failed
② Backup CPU → becomes new primary CPU
③ Two fiber-optic cables (redundancy connections)
④ PROFINET cable (PROFINET ring 1)
⑤ PROFINET cable (PROFINET ring 2)
⑥ IO device ET 200SP HA (R1 device)
⑦ IO device ET 200SP (R1 device)
⑧ IO device ET 200pro (S1 device) → no longer accessible, because PROFINET ring 1 assigned
⑨ IO device ET 200SP (S2 device, reparameterized to an S1 device) → no longer accessible, because PROFINET-Ring 1 assigned
⑩ IO device ET 200SP (S2 device, reparameterized to an S1 device)
⑪ IO device ET 200pro (S1 device)

Figure 5-46 Primary CPU failure in PROFINET rings with R1 and S1 devices

Sequence of events

1. The primary CPU of the redundant system fails in RUN-Redundant system state.
2. The redundant system switches to the backup CPU. The backup CPU becomes the new primary CPU. The redundant system switches to the RUN-Solo system state.
3. The R1 and S1 devices in PROFINET ring 2 can still be accessed via the new primary CPU.
4. The S1 devices in PROFINET ring 1 are no longer accessible by the new primary CPU. The S1 devices return to the substitute values.
5. The failure of the primary CPU affects the process, since the S1 devices in the PROFINET ring 1 can no longer be accessed from the primary CPU.

Diagnostics

System state, operating states and error displays after primary-backup switchover:

- Redundant system → RUN-Solo system state
- Primary CPU (previously backup CPU) → RUN operating state
  - MAINT LED → yellow light: The H-system is not in the RUN-Redundant system state. No partner CPU has been found in the redundant system.
  - ERROR LED → flashes red: One or more IO devices have failed.
- Backup CPU (previously primary CPU) → failed

Note

To get detailed diagnostics information, evaluate the diagnostics buffer.

Solution

Replace the defective CPU. You can find additional information on the procedure in the section Replacing defective R/H CPUs (Page 366).

5.5.4.7 Failure of PROFINET lines in two places in a line topology with S2 devices

Introduction

The following failure scenario describes the effects of a defect in the PROFINET lines at two points in a line topology with S2 devices.

Failure scenario

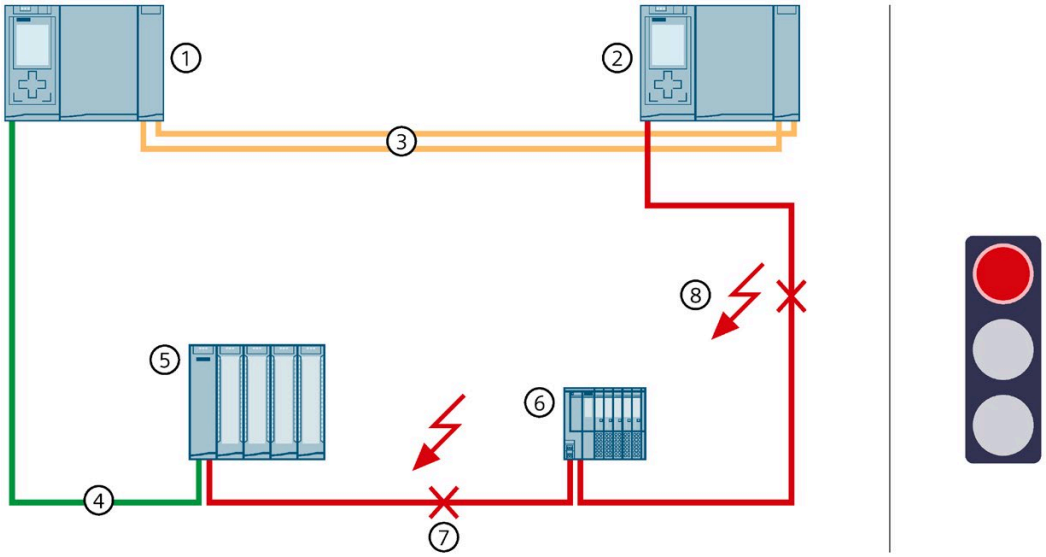

① Primary CPU
② Backup CPU
③ Two fiber-optic cables (redundancy connections)
④ PROFINET lines (line topology)
⑤ IO device ET 200MP
⑥ IO device ET 200SP
⑦ PROFINET line→ interrupted (1st defect)
⑧ PROFINET line→ interrupted (2nd defect)

Figure 5-47 Failure of PROFINET lines in two places in a line topology with S2 devices

Sequence of events

1. The PROFINET line between two IO devices fails.
2. The redundant system continues to reach all IO devices in the line topology.
3. In addition, the PROFINET line to the backup CPU fails.
4. The redundant system no longer reaches all IO devices in the line topology. These IO devices fall back to the substitute values.
5. The redundant system will remain in the RUN-Redundant system state: The primary and backup CPUs remain in the RUN-Redundant operating state.
6. The failure of both PROFINET lines affects the process, as IO devices in the line topology are no longer accessible.

Diagnostics

System state, operating states and error displays after the failure of both PROFINET cables:

- Redundant system → RUN-Redundant system state
- Primary CPU/Backup CPU → RUN-Redundant operating state
  - MAINT LED → yellow light: No backup AR.
  - ERROR LED → flashes red: One or more IO devices have failed.

Note

To get detailed diagnostics information, evaluate the diagnostics buffer.

Solution

Replace the defective PROFINET cables. You can find additional information on the procedure in the section Replacing defective PROFINET cables.

5.6 Hardware configuration

Modules suitable for R/H-CPUs

The integrated system power supply of the R/H-CPU supplies the required power for operation. Optionally, you can also use a load current supply.

The table below shows which modules can be used in the various R/H-CPU slots:

Table 5- 5 Maximum configuration

Module type	Maximum number of modules, primary CPU (mounting rail)	Maximum number of modules, backup CPU (mounting rail)
Load current supply (PM) [1]	Unlimited	Unlimited
CPU	1	1

[1] No connection to the backplane bus.

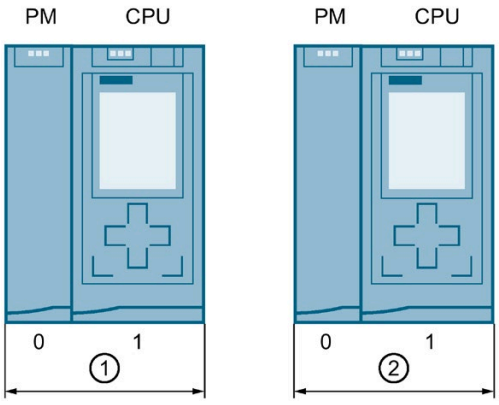

① Optional load current supply and first R/H-CPU

② Optional load current supply and second R/H-CPU

Figure 5-48 Assignment of slot numbers

Maximum number of PROFINET devices, IO devices in the redundant system

The table below shows the maximum number of PROFINET devices, IO devices in the redundant system.

Table 5- 6 Number of PROFINET devices, IO devices in the redundant system

Maximum number of devices	Maximum number of S7-1500R	Maximum number of S7-1500H
Maximum number of PROFINET devices in the PROFINET ring of the R/H system The maximum number includes configured switches, S7-1500R/H CPUs, S7-1500 CPUs (as of V2.5), HMI devices and IO devices. It does not include media converters.	50 (Recommendation 16) [1]	50
Maximum number of connectable IO devices at the R/H CPUs	64	256

[1] Recommendation: The number of devices in the PROFINET ring affects the availability of the S7-1500R system. The number of PROFINET devices including R-CPUs in the PROFINET ring should not exceed 16. If you operate significantly more devices in the PROFINET ring, the availability is reduced.
The technical specifications in the documentation are based on the recommended maximum of 16 PROFINET devices in the ring in S7-1500R.

5.7 Using HMI devices

Introduction

You can use the same HMI devices for the S7-1500R/H redundant system as for the S7-1500 automation system.

If you use HMI devices in the PROFINET ring with S7-1500R, those HMI devices must support media redundancy. The H-Sync forwarding function is also recommended.

If you use HMI devices in the PROFINET ring with S7-1500H, those HMI devices must support media redundancy.

You transfer the HMI configuration to your HMI device using the configuration and programming software (Engineering Station).

You can connect the HMI device to the redundant system with the system IP address. Connection to the redundant system is possible within and outside the PROFINET ring. The HMI device always communicates with the primary CPU over the system IP address in the RUN-Redundant, RUN-Solo and STOP system states, provided you have activated the system IP address and selected it in the connection configuration for the HMI device.

If the role of primary CPU switches to the other CPU, the communication relationship of the HMI device also switches to the other (primary) CPU.

As an alternative to the system IP address, you can also use a device IP address to connect the HMI device to an R/H-CPU. The HMI device then only communicates with the connected CPU.

When exchanging data via device proxy data, make sure that the IP addresses and system IP addresses are correctly assigned to the PROFINET interfaces. You can find additional information on devices proxy data in the STEP 7 online help.

Connecting HMI devices over Industrial Ethernet and the PROFINET ring based on the example of CPU 1518HF-4 PN/CPU 1517H-3 PN/CPU 1515R-2 PN

The figure below is an example of how you can connect the CPU 1518HF-4 PN to an HMI device over Industrial Ethernet and the PROFINET ring. Connect the HMI devices in the same way for the CPU 1517H-3 PN/CPU 1515R-2 PN.

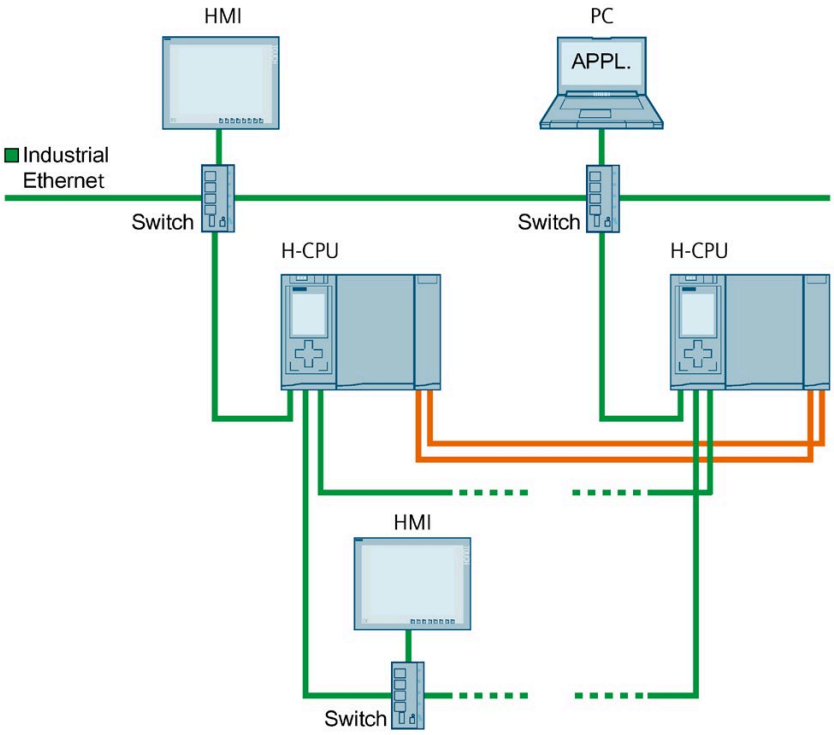

Figure 5-49 Assembly example CPU 1518HF-4 PN: Connecting HMI devices over Industrial Ethernet and the PROFINET ring

The CPUs 1517H-3 PN/CPU 1515R-2 PN have a PROFINET IO interface with 2 ports (X1 P1R, X1 P2R) and a PROFINET interface with a port (X2 P1). The CPU 1518HF-4 PN has an additional PROFINET interface with one port (X3 P1).

To connect an HMI device to the CPUs over Industrial Ethernet, you use the X2/X3 PROFINET interfaces of the CPU. PROFINET interface X2/X3 supports PROFINET basic functionality. The interface, for example, is suitable for communication with an HMI device or configuration and programming software (Engineering Station).

Note

A PROFINET device (such as an HMI device) can only communicate with the redundant system over the system IP address if it has been connected to both R/H-CPUs. Always connect the PROFINET device to the same interfaces, X1 or X2/X3, on both R/H-CPUs. Do not mix interfaces X1 and X2/X3: If you mix interfaces X1 and X2/X3, the HMI connection is no longer redundant.

Integrate a switch into the PROFINET ring to connect an HMI device to the PROFINET ring. Use this to establish a connection to the HMI device.

The PROFINET ring is set up using the PROFINET IO interfaces (X1) of the CPUs. If you operate HMI devices within the ring, you need to assign the MRP role "Client" to the MRP domain. You can find more information on HMI device application planning in the section Requirements (Page 87).

Note

Connecting the HMI device to a line topology

To connect an HMI device to a line topology, also connect the HMI device to the line topology via a switch. Assign the MRP role "Not device in the ring" for the HMI device.

You can find more information on the interfaces of the CPUs 1518HF-4 PN/1517H-3 PN/1515R-2 PN in the relevant equipment manual.

Connecting HMI devices over Industrial Ethernet, example with CPU 1513R-1 PN

The figure below shows how to connect an HMI device over Industrial Ethernet with the CPU 1513R-1 PN.

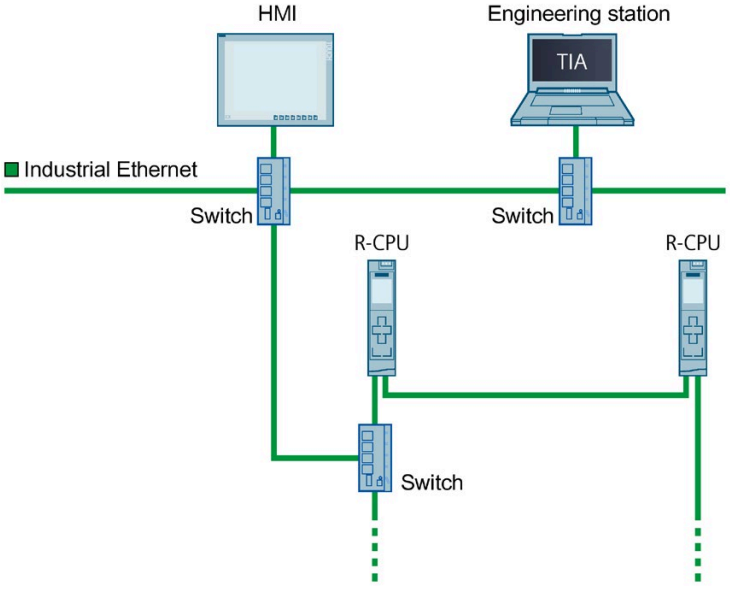

Figure 5-50 Configuration example CPU 1513R-1 PN: Connecting the HMI device via a switch

CPU 1513R-1 PN has a PROFINET IO interface with 2 ports (X1 P1R R and X1 P2R).

To connect an HMI device to the CPUs over Industrial Ethernet, you set up the PROFINET ring over PROFINET interface X1. Integrate a switch into the PROFINET ring. Use this to establish an Industrial Ethernet connection.

You can find additional information on the interfaces of CPU 1513R-1 PN in the relevant device manual.

Reference

You can find more information on the system IP address in the section Configuration process and in the Communication (https://support.industry.siemens.com/cs/ww/en/view/59192925) function manual.

More information on how to set up an HMI connection to the S7-1500R/H redundant system is available in the Communication (https://support.industry.siemens.com/cs/ww/en/view/59192925) function manual.

See the following entry (https://support.industry.siemens.com/cs/ww/en/view/109781687) for an example of how to connect an HMI device with S7-1500R/H.

Installation 6

6.1 Basics

Installation site

All modules of the S7-1500R/H redundant system are unenclosed equipment. You may only install unenclosed equipment in housings, cabinets or electrical operating rooms indoors. The housings, cabinets and electrical operating rooms must guarantee protection against electric shock and spread of fire. The requirements for mechanical strength must also be met. The housings, cabinets, and electrical operating rooms must not be accessible without a key or tool. Personnel must be trained or approved for access.

Installation position

The S7-1500R/H redundant system is designed for use in the following mounting positions:

- Horizontal mounting position up to 60 °C
- Vertical mounting position up to 40 °C

Note

If you use the synchronization modules Sync Module 1 GB FO 40 km (6ES7960-1FE00-0AA5) in the CPUs 1517H-3 PN or 1518HF-4 PN, then the following maximum ambient temperatures apply:

- Horizontal mounting position up to 55 °C
- Vertical mounting position up to 35 °C

Additional information can be found in the section Mechanical and climatic environmental conditions.

Mounting rail

You can mount the following components on the mounting rails alongside the S7-1500R/H CPUs, load current supplies:

- Terminals
- Circuit breakers
- Small contactors
- Similar components

These components can influence the installation dimensions for the cable duct.

Modules can be mounted right to the outer edge of the mounting rail.

The mounting rails are available in various lengths. You order the mounting rails using the online catalog or the online ordering system. The available lengths and article numbers can be found in the appendix Accessories/spare parts (Page 418).

Minimum clearances

Modules can be mounted right to the outer edge of the mounting rail. Maintain the following minimum clearances when installing or dismantling the S7-1500R/H redundant system.

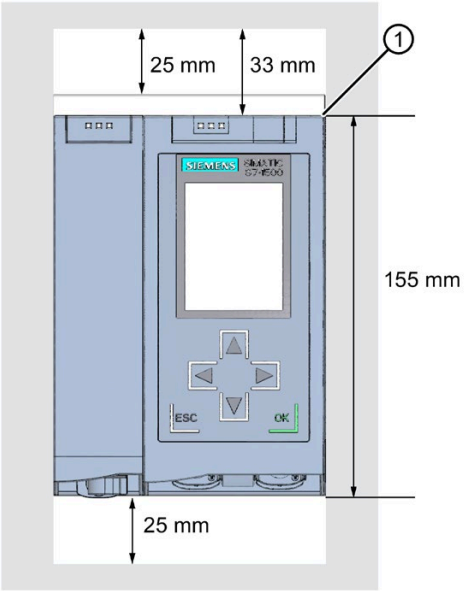

① Upper edge of the mounting rail

Figure 6-1 Minimum clearances in the control cabinet

Installation rules

The redundant system configuration consists of:

R/H-CPU and an optional load current supply.

WARNING

Protection from conductive contamination

Protect the devices from conductive contamination, taking into account the ambient conditions.

Protection from conductive contamination can, for example, be achieved by installing the devices in a control cabinet with the appropriate degree of protection.

6.2 Installing the mounting rail

Introduction

The R/H-CPUs should be mounted either on one mounting rail or on two separate mounting rails.

Lengths and drill holes

The mounting rails are delivered in six lengths:

- 160 mm
- 245 mm
- 482.6 mm (19 inches)
- 530 mm
- 830 mm
- 2000 mm

You can find the article numbers in the appendix Accessories/spare parts (Page 418).

The mounting rails (from 160 to 830 mm) come with two drill holes for fixing screws. A set of screws for grounding the mounting rail is provided.

The 2000 mm mounting rail is designed for assemblies with special lengths and does not have holes for fixing screws. No set of screws for grounding is included with the mounting rail (can be ordered as accessories/spare parts (Page 418)).

The specifications of the maximum offsets between two drill holes can be found in the table, "Dimensions for the drill holes".

Tools required

- Commercially available hacksaw
- Drill ∅ 6.5 mm
- Screwdriver
- Size 10 adjustable screw-wrench or socket wrench for grounding cable connection
- Adjustable screw-wrench, matching the selected fixing screws
- Stripping tool and crimp tool for the grounding cable

Accessories required

Use the following screw types for fastening the mounting rails:

Table 6- 1 Accessories required

For ...	use ...	Explanation
• Outer fixing screws • Additional fixing screws (for mounting rails > 482.6 mm)	M6 fillister head screws according to ISO 1207/ISO 1580 (DIN 84/DIN 85)	Choose a suitable screw length for your assembly. You also need washers for cylinder head screws with an internal diameter of 6.4 mm and an external diameter of 11 mm in accordance with ISO 7092 (DIN 433).
	M6 hexagon head screws according to ISO 4017 (DIN 4017)	

Dimensions for the drill holes

Table 6- 2 Dimensions for the drill holes

"Standard" mounting rails			"Longer" mounting rails
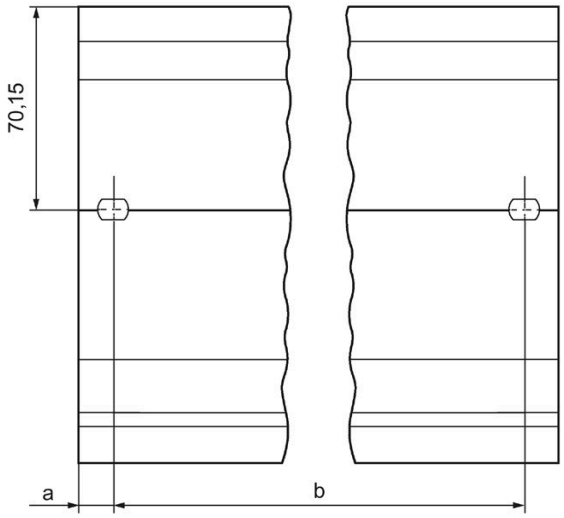			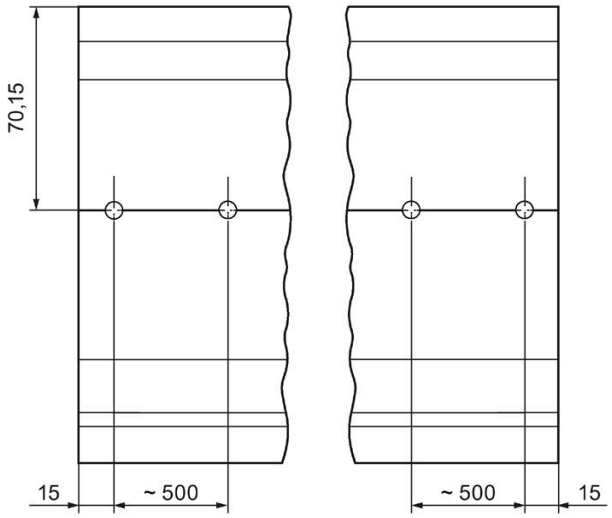
Length of the mounting rail	**Distance a**	**Distance b**	
160 mm	10 mm	140 mm	
245 mm	10 mm	225 mm	
482.6 mm	8.3 mm	466 mm	
530 mm	15 mm	500 mm	
830 mm	15 mm	800 mm	

Additional fixing screws (for mounting rails > 530 mm)

For profile rails > 530 mm, we recommend using additional fixing screws at intervals of >482.6 mm on the identification groove.

Preparing the 2000 mm mounting rail for installation

Proceed as follows to prepare the 2000 mm mounting rail for installation:

1. Cut the 2000 mm mounting rail to the required length.
2. Mark the holes. The necessary dimensions can be found in the table "Dimensions for the drill holes":
   - Two drill holes at the beginning and end of the mounting rail
   - Additional drill holes at equal intervals of 500 mm maximum, along the identification groove
3. Drill the marked holes according to the selected type of fastening.
4. Ensure that there are no burrs or shavings on the mounting rail.

Note

To ensure secure installation of the modules, make sure that the drill holes are centered in the identification groove. Only use the maximum size of screws.

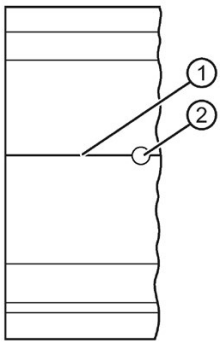

① Identification groove for additional drill holes

② Additional drill hole

Figure 6-2 Preparing the 2000 mm mounting rail for installation

Installing the mounting rail

Install the mounting rails for the R/H-CPUs so that there is still sufficient space for installation and heat dissipation. Please study the figure Minimum clearances in the control cabinet (Page 177).

Screw the rail onto the mounting surface.

Attaching the protective conductor

The mounting rails of the S7-1500R/H redundant system must be connected to the protective conductor system of the electrical system to ensure electrical safety.

Proceed as follows to connect the protective conductor:

1. Strip the grounding conductor with a minimum diameter of 10 mm^2. Attach a ring terminal for M6 bolts with the crimping pliers.
2. Slide the enclosed bolt into the T profile groove.
3. Insert the spacer, ring terminal with the grounding connector, flat washer, and lock washer onto the bolt (in that order). Thread on the hexagon nut. Fasten the components in place with the nut (torque 4 Nm).
4. Connect the opposite end of the grounding cable to the central grounding point/protective conductor busbar (PE).
5. If you mount the redundant system on separate mounting rails, repeat steps 1 to 4 for the second mounting rail.

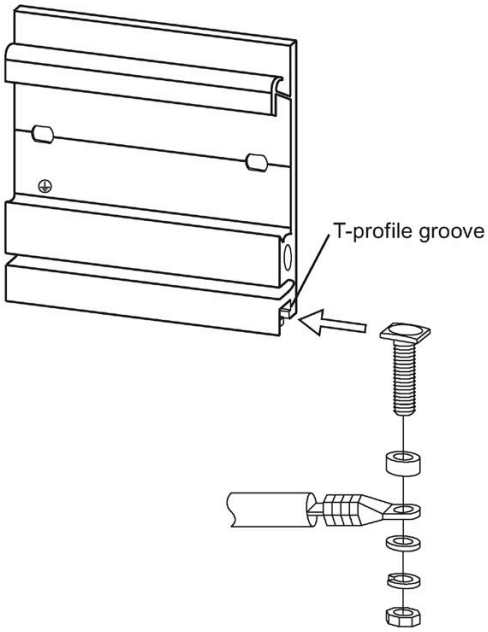

Figure 6-3 Attaching the protective conductor (protective earth)

Note

Alternative grounding of the mounting rails

Grounding with the grounding screw is not required if the following requirements are met:

The mounting rails must be permanently connected to the protective conductor system using an equivalent fitting that complies with the applicable standards, for example by permanent attachment to a grounded control cabinet wall.

Reference

You can find more information on the exact dimensions of the mounting rails in the appendix Dimension drawings (Page 415).

6.3 Installing the standard rail adapter

Introduction

Use the standard rail adapter to mount the redundant SIMATIC S7-1500R/H-system on the standardized 35 mm rails.

You order the DIN rail adapter as separate accessories.

Note

Note the following reduced technical specifications regarding mechanical load when you install the S7-1500R/H modules on the 35 mm standard mounting rail using the standard mounting rail adapter:

Vibration test acc. to IEC 60068-2-6 (sinusoidal)

- 5 Hz ≤ f ≤ 8.4 Hz, constant amplitude **3.5 mm**
- 8.4 Hz ≤ f ≤ 150 Hz, constant acceleration **1 g**

Duration of vibration: 10 frequency sweeps per axis in each of three perpendicular axes

Shock, tested according to IEC 60068-2-27

- Type of shock: Half-sine
- Shock intensity: **150 m/s**^{2} peak value, **11 ms** duration
- Direction of shock: **3** shocks each in +/- direction, along each of the 3 perpendicular axes

---

Article No.

6ES7590-6AA00-0AA0

The scope of delivery consists of ten adapters, ten hexagon socket-head screws and ten washers.

View

The DIN rail adapter consists of a clamp, an adapter frame and a hexagon socket-head screw with washer.

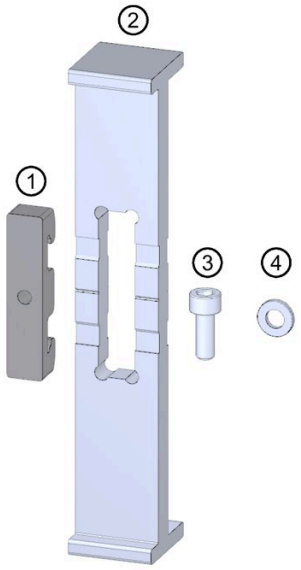

① Clamp
② Adapter frame
③ Hexagon socket-head screw
④ Washer

Figure 6-4 Parts of the DIN rail adapter

Dimensional drawing

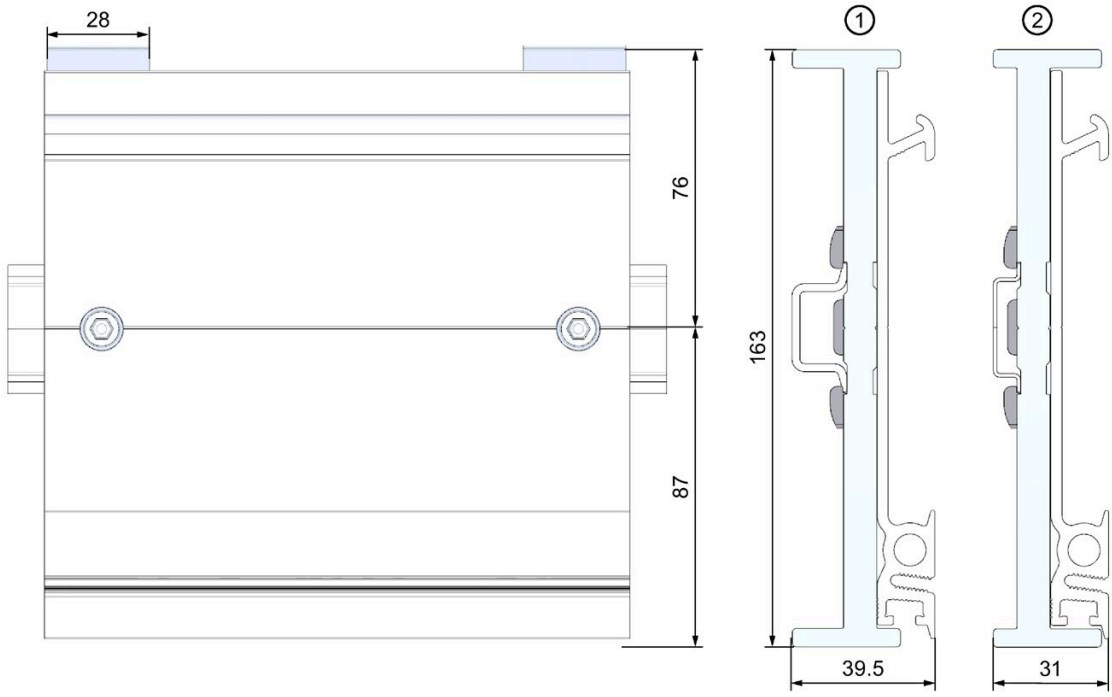

① Position of the adapter frame during mounting to the standard DIN rail 35 mm x 7.5 mm

② Position of the adapter frame during mounting to the standard DIN rail 35 mm x 15 mm

Figure 6-5 Dimensional drawing

Tools required

Wrench matching the hexagon socket head cap screw M6 according to EN ISO 4762 (DIN 912).

Properties

- The standard rail adapter makes it possible to mount the S7-1500R/H mounting rail to the standardized 35 mm standard rails.
- The DIN rail adapter allows for the use of prefabricated control cabinet and terminal box systems.
- The total length of the S7-1500R/H mounting rail can be used again completely as before.
- To ensure optimal stability, the clearance between the two DIN rail adapters must be no more than 250 mm or less.

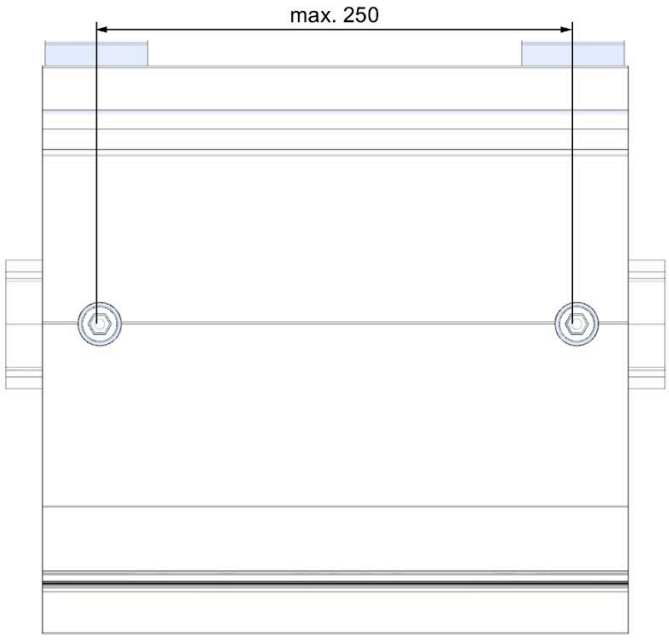

Figure 6-6 Distance between two DIN rail adapters

Note

Note that, depending on the mounting rail width, the mounting rail adapter can protrude up to 4 mm on each side due to the drill holes.
You can find an overview of the protrusion dimensions for the various DIN rails in the table below.

Table 6- 3 Additional lateral space required

Mounting rail	Article No.	Additional space required with adapter
• 160.0 mm (with drill holes)	6ES7590-1AB60-0AA0	4 mm
• 245.0 mm (with drill holes)	6ES7590-1AC40-0AA0	4 mm
• 482.6 mm (with drill holes)	6ES7590-1AE80-0AA0	8 mm
• 530.0 mm	6ES7590-1AF30-0AA0	0 mm
• 830.0 mm (with drill holes)	6ES7590-1AJ30-0AA0	0 mm

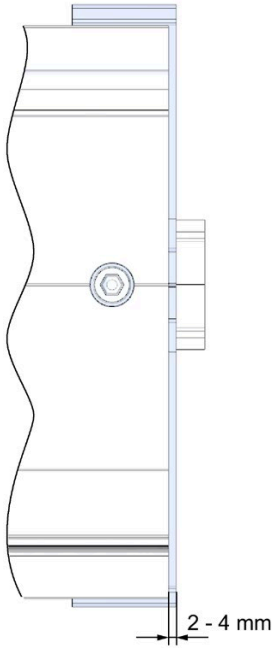

Figure 6-7 DIN rail adapter protrusion

Procedure

Mounting on the standard DIN rail 35 mm x 7.5 mm

To install DIN rail adapter on the standard DIN rail 35 mm x 7.5 mm, follow these steps:

1. Set the clamp onto the standard DIN rail.
2. The **shorter** transverse edge of the adapter frame points towards the cabinet or box wall (2).
3. Place the S7-1500R/H mounting rail on the adapter frame so that the groove in the S7-1500R/H mounting rail covers the groove in the adapter frame.
   Place the S7-1500R/H mounting rail with the adapter frame onto the clamp (4).
4. Use screws to fasten the S7-1500R/H mounting rail to the standard rail adapter and the standard mounting rail (tightening torque 5 Nm to 6 Nm).

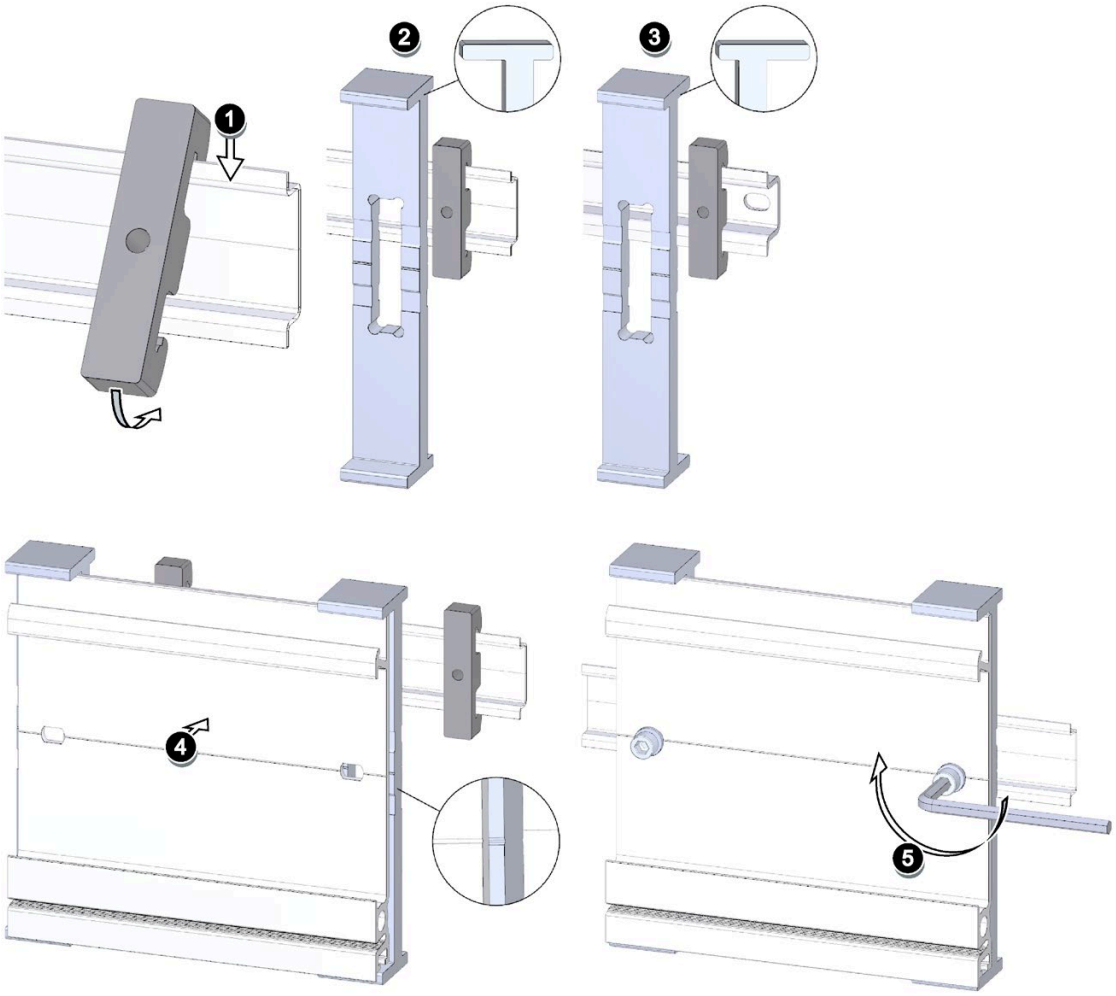

Figure 6-8 Mounting sequence of the DIN rail adapter to the DIN rail 35 mm x 7.5 mm or 35 mm x 15 mm

Mounting to the standard DIN rail 35 mm x 15 mm

To install DIN rail adapter on the standard DIN rail 35 mm x 15 mm, follow these steps:

1. Set the clamp onto the standard DIN rail.
2. The **longer** transverse edge of the adapter frame points toward the cabinet or box wall (3).
3. Place the S7-1500R/H mounting rail on the adapter frame so that the groove in the S7-1500R/H mounting rail fits into the groove in the adapter frame.
   Place the S7-1500R/H mounting rail with the adapter frame onto the clamp (4).
4. Use screws to fasten the S7-1500R/H mounting rail to the standard rail adapter and the standard mounting rail (tightening torque 5 Nm to 6 Nm).

6.4 Installing a load current supply

Introduction

Load current supplies do not have a connection to the backplane bus of the S7-1500R/H redundant system and do not occupy a slot on the backplane bus.

Requirements

The mounting rail is installed.

Tools required

Slotted-head screwdriver with 4.5 mm blade

Installing a load current supply

Watch the video sequence (https://support.industry.siemens.com/cs/ww/en/view/78027451)

To install a load current supply, follow these steps:

1. Hook the load current supply on the mounting rail.
2. Swivel the load current supply to the rear.

Figure 6-9 Installing a load current supply

3. Open the front cover.
4. Disconnect the power cable connector from the load current supply.
5. Screw the load current supply tight (torque 1.5 Nm).
6. Insert the already wired-up power cable connector into the load current supply.

For a description on how to wire the power cable connector, refer to the section Connecting load current supply (Page 204).

Note

Load current supplies can only be mounted on the left or right side outside the S7-1500R/H redundant system. If you mount a load current supply on the right of the configured setup, the heat development of the load current supply may make a gap to the configured setup necessary. For additional information, refer to the relevant manuals. The number of load current supplies that can be used is unlimited.

Uninstalling the load current supply

The load current supply is wired up.

To uninstall a load current supply, follow these steps:

1. Open the front cover.
2. Shut down the load current supply.
3. Turn off the supply voltage.
4. Disconnect the power cable connector, and remove the connector from the load current supply.
5. Unscrew the fixing screw.
6. Swivel the load current supply out of the mounting rail.

Reference

Additional information can be found in the manuals for the load current supplies.

6.5 Installing R/H-CPUs

Introduction

CPUs in the S7-1500R/H redundant system are installed in exactly the same way as CPUs in the S7-1500 automation system.

Requirements

The mounting rail is installed.

Note

Protective film

Please note that the R/H-CPUs come with a removable protective film on the display.

Tools required

Slotted-head screwdriver with 4.5 mm blade

Installing R/H-CPUs

Watch the video sequence (https://support.industry.siemens.com/cs/ww/en/view/78027451)

Proceed as follows to install an R/H-CPU:

1. Install the CPU to the mounting rail.
   Only with optional load current supply: Move the CPU to the load current supply on the left.

2. Swivel the CPU in to the rear.
3. Screw the CPU tight (torque 1.5 Nm).

Uninstalling R/H-CPU

The R/H-CPU is wired.

Proceed as follows to uninstall an R/H-CPU:

1. Open the front cover.
2. Switch the CPU into STOP mode.
3. Turn off the supply voltage.
4. Pull off the connector for the supply voltage.
5. Disconnect the cables at the CPU:
   - R-CPU: Disconnect the PROFINET cables.
   - H-CPU: Disconnect the PROFINET cables and fiber-optic cables.
6. Undo the CPU fixing screw(s).
7. Pivot the CPU out of the mounting rail.

Device damage caused by electrical fields or electrostatic discharge

Electrostatic sensitive devices (ESD) are individual components, integrated circuits, modules or devices that can be damaged by electrostatic fields or electrostatic discharge.

NOTICE

Device damage caused by electrical fields or electrostatic discharge

Electrical fields or electrostatic discharge can cause function failures that result from damaged individual components, integrated circuits, modules or devices.

- Pack, store, transport and send electronic components, modules or devices only in the original product packaging or in other suitable materials, e.g. conducting foam rubber or aluminum foil.
- Only touch components, modules and devices when you have grounded yourself with one of the following measures:
  - Wear an ESD wrist strap
  - Wear ESD shoes or ESD grounding strips in ESD areas with a conducting floor
- Place electronic components, modules and devices only on conducting surfaces (table with ESD coating, conducting ESD plastic foam, ESD packing bag, ESD transport container).

Wiring 7

7.1 Rules and regulations for operation

Introduction

The S7-1500R/H redundant system is a plant and system component. Special rules and regulations must be adhered to in line with the area of application.

This section gives an overview of the key rules for integration of the redundant system into a plant or system. Please follow these rules when connecting the S7-1500R/H redundant system.

Specific application

Observe the safety and accident prevention regulations that are applicable to specific applications (for example Machinery Directive).

EMERGENCY-STOP devices

EMERGENCY OFF equipment to IEC 60204 (corresponds to DIN VDE 0113) must remain effective in all operating modes of the plant or system.

Excluding hazardous plant states

Hazardous operating states must not occur when

- The plant restarts after a voltage dip or power failure.
- Bus communication is reestablished following a fault.
- An undefined system state occurs in the S7-1500R/H. Example: Failure of both redundancy connections ≤ 1500 ms apart (R-system) or ≤ 55 ms apart (H-system).

If a hazardous operating state occurs, force an EMERGENCY STOP.

An uncontrolled or undefined redundant system startup must not occur after the EMERGENCY STOP device is unlocked.

External fuses/switches

Install the external fuses/switches in the proximity of the R/H-CPUs.

Line voltage

The points to note for line voltage are set out below:

- For fixed plants or systems without multipole circuit breaker, a mains disconnection device (multipole) must be available in the building installation.
- For the load current supply, the configured rated voltage range must correspond to the local line voltage.
- For all power circuits of the S7-1500R/H redundant system, the fluctuation/deviation of the line voltage from the rated value must be within the permitted tolerance.

You can find more information in the section Specifications for insulation tests, protection class, degree of protection, and rated voltage (Page 413).

24 V DC supply

The points to note for a 24 V DC supply are set out below:

- Power supply units for the 24 V DC supply (SELV/PELV) must supply safety extra low voltage in accordance with IEC 61131-2 or IEC 61010-2-201.
- To protect the S7-1500R/H redundant system from lightning and overvoltages, use overvoltage arresters.

  Suitable components for the lightning and overvoltage protection are specified in the Defining interference-free controllers (https://support.industry.siemens.com/cs/ww/en/view/59193566) function manual.

Requirements for power supplies in the event of voltage interruption

Note

To ensure adherence to IEC 61131-2, only use power packs/power supply units (e.g. 230/400 V AC → 24 V DC) with a mains buffering time of at least 10 ms. Observe the relevant requirements in your application (e.g. product standard for "burners" 30 ms according to EN 298 or 20 ms according to NAMUR recommendation NE 21) with respect to possible voltage interruptions. The latest up-to-date information on PS components is available on the Internet (https://mall.industry.siemens.com).

Of course, these requirements also apply to power packs/power supply units not constructed using S7-1500 or ET 200SP/S7-300-/S7-400 technology.

Protection against electrical shock

The mounting rails of the S7-1500R/H redundant system must be connected conductively to the protective conductor to protect against electric shock.

You may only use conductors in the colors yellow-green for connections to protective conductor connections.

Protection against external electrical influences

The following describes what you must pay attention to in terms of protection against electrical influences and/or faults:

- The system for discharging electromagnetic interference must be connected to a protective conductor with a sufficient cross-section for all plants with an S7-1500R/H redundant system.
- You must ensure that all supply, signal and bus cables are correctly laid and installed.
- For signal and bus lines, a cable break, wire break or a cross-circuit must not lead to undefined states in the plant or system.

Protection of redundancy connections against unauthorized access

Protect the redundant connections in a redundant S7-1500H system so that the fiber-optic cables are protected against unauthorized access, e.g. by spatial access protection.

Reference

Additional information can be found in the function manual, Designing interference-free controllers (https://support.industry.siemens.com/cs/ww/en/view/59193566).

7.2 Operation on grounded infeed

Introduction

Information is provided below on the overall configuration of an S7-1500R/H redundant system on a grounded incoming supply (TN-S network). The specific subjects discussed are:

- Shut-off devices, short circuit and overload protection in accordance with
  - IEC 60364, corresponds to DIN VDE 0100
  - IEC 60204, corresponds to DIN VDE 0113
- Load current supplies and load circuits

Grounded infeed

In the case of grounding incoming supplies (TN-S system) the neutral conductor (N) and the protective conductor (PE) are each grounded. Both wires form a part of the overvoltage concept. When a plant is in operation, the current flows across the neutral conductor. When a fault occurs, for example a single ground fault between a live conductor and ground, the current flows through the protective conductor.

Safe electrical isolation (SELV in accordance with IEC 61131-2 or IEC 61010-2-201)

Load current supplies with 24 V DC output voltage require safe electrical separation and voltage limiting (extra low voltage). Load current supplies with a 24 V DC output voltage are not connected to the protective conductor.
In accordance with IEC 61131-2 / IEC 61010-2-201, this protection is referred to as SELV (Safety Extra Low Voltage).

The wiring of SELV circuits must be safely separated from the wiring of other circuits that are not SELV, or the insulation of all conductors must be dimensioned for the higher voltage.

Protective extra-low voltage (PELV in accordance with IEC 61131-2 or IEC 61010-2-201)

Load current supplies with grounded 24 V DC output voltage require a safe connection to the protective conductor and voltage limiting (extra low voltage).

In accordance with IEC 61131-2 / IEC 61010-2-201, this protection is referred to as PELV (Protective Extra Low Voltage).

Either the wiring of PELV circuits must be safely isolated from the wiring of other circuits that are not PELV, or the insulation of all wires must be dimensioned for the higher voltage.

Reference potential of the controller

The reference potential of the S7-1500R/H redundant system is connected to the mounting rail over a high-resistance RC combination in the R/H-CPU. This connection conducts high-frequency interference currents and prevents electrostatic charges. Despite the grounded mounting rail, the reference potential of the S7-1500R/H redundant system has to be considered as ungrounded due to the high-resistance connection.

If you want to configure the S7-1500R/H redundant system with a grounded reference potential, establish an electrical connection between the M connection of the CPU and the protective conductor.

You can find a simplified representation of the potentials in the section Electrical configuration (Page 200).

Short-circuit and overload protection

Various measures as protection against short-circuits and overloads are required for setting up a full installation. The nature of the components and the degree to which the required measures are binding depends on the IEC (DIN VDE) regulation applicable to your plant configuration. The table refers to the following figure and compares the IEC (DIN VDE) regulations.

Table 7- 1 Components and required measures

	Reference to following figure	**IEC 60364 (DIN VDE 0100)**	**IEC 60204 (DIN VDE 0113)**
Shut-off device for control system, sensors, and actuators	①	Main switch	Disconnector
Short-circuit and overload protection: In groups for sensors and actuators	②	Single-pole protection of circuits	• With grounded secondary circuit: **Single-pole** protection • Otherwise: **All-pole** protection

Overall configuration of S7-1500R/H

The figure below shows the overall configuration of the S7-1500R/H redundant system (load current supply and grounding concept) with supply from a TN-S network.

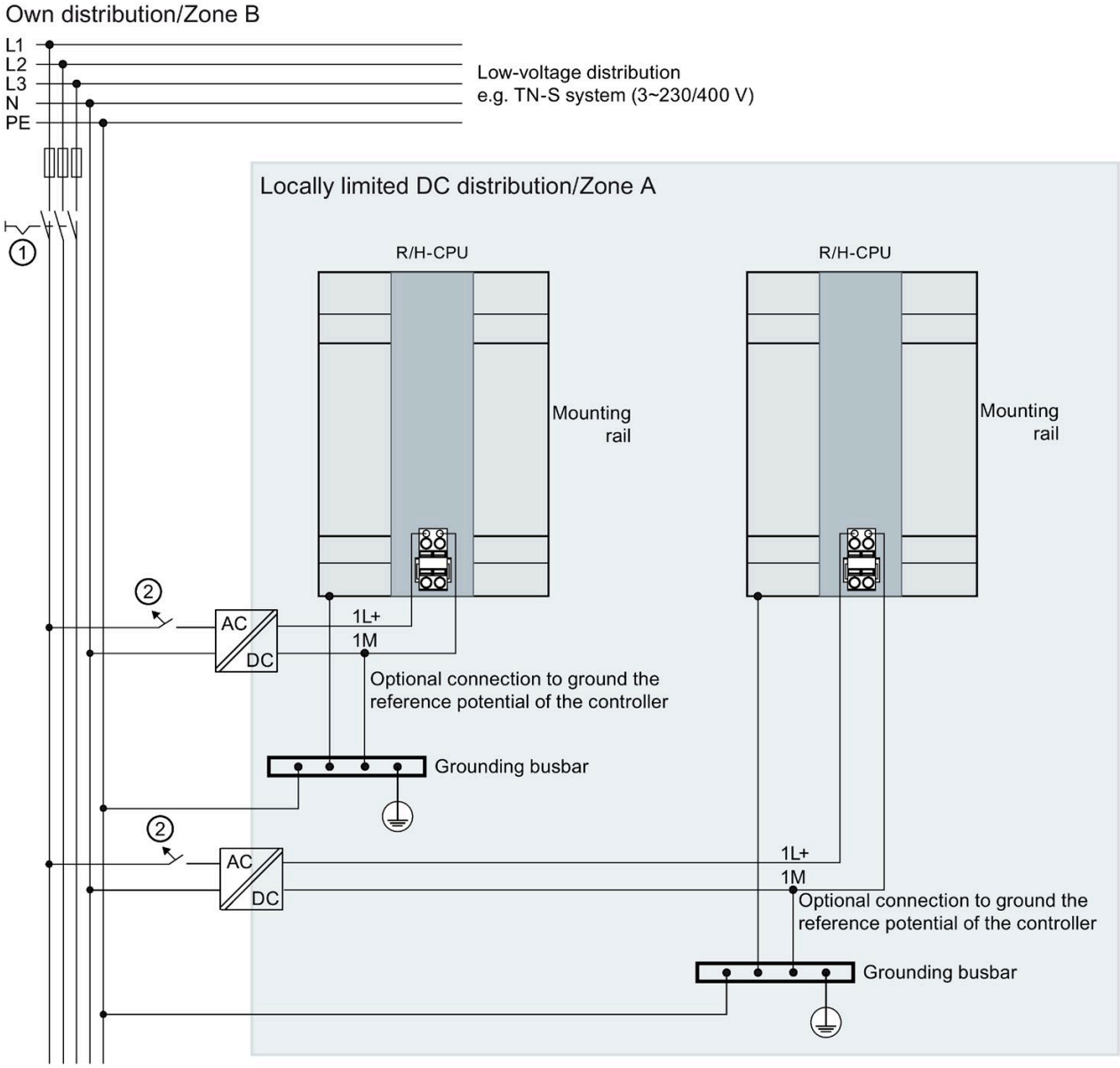

① Main switch
② Short-circuit and overload protection

Figure 7-1 Operating the S7-1500R/H with grounded reference potential

Note

If you connect the S7-1500R/H redundant system via upstream local power supplies to your own distribution (or batteries), then you do not have to provide any additional protective measures against overvoltage.

7.3 Electrical configuration

Galvanic isolation

In the redundant System S7-1500R/H, there is electrical isolation between:

- The communication interfaces (PROFINET) of the R-CPU and all other circuit components
- The communication interfaces (PROFINET) of the H-CPU and all other circuit components

High-frequency interference currents are conducted and electrostatic charges are avoided through integrated RC combinations or integrated capacitors.

S7-1500R/H potentials

The figure below is a simplified diagram of potentials in the S7-1500R/H redundant system.

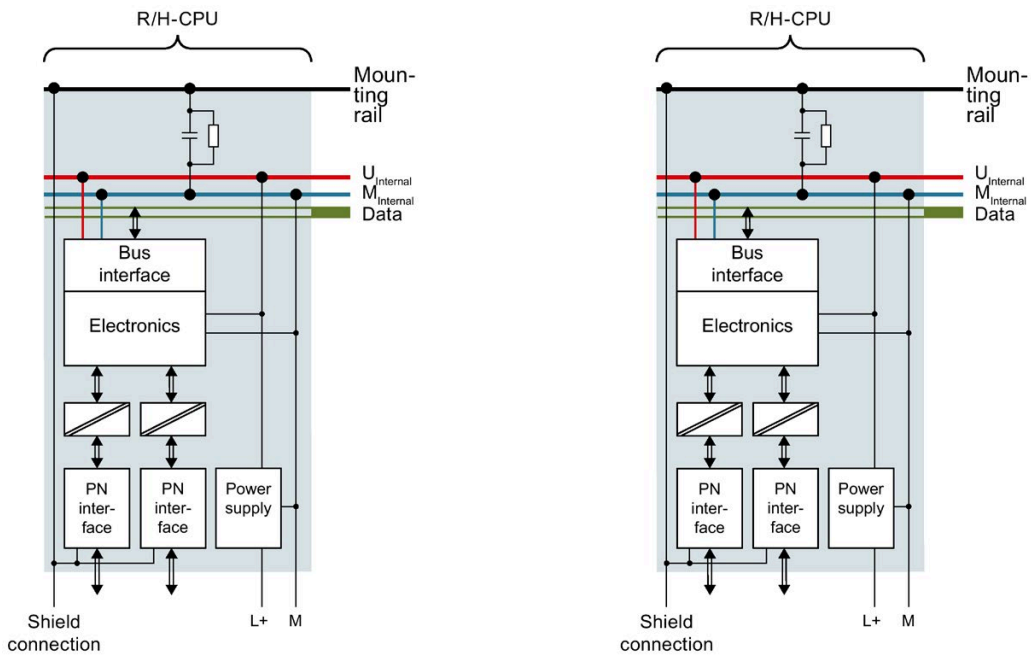

Figure 7-2 Potentials in S7-1500R/H using the example of CPU 1515R-2 PN

7.4 Wiring rules

Introduction

Use suitable cables to connect the S7-1500R/H redundant system. The tables below set out the wiring rules for the R/H-CPUs and load current supply.

R/H CPUs and load current supply

Table 7- 2 Wiring rules for R/H-CPUs and load current supply

Wiring rules for ...		R/H-CPU	Load current supply
Permitted cable cross-sections of solid cables (Cu)		-	-
		-	-
Permitted cable cross-sections of flexible cables (Cu)	Without wire-end ferrule	0.25 to 2.5 mm^2	0.5 to 2.5 mm^2
		AWG[1]: 24 to 14	AWG[1]: 20 to 14
	With end sleeve	0.25 to 1.5 mm^2	0.5 to 1.5 mm^2
		AWG[1]: 24 to 16	AWG[1]: 20 to 16
Number of wires per connection		1	1
Stripped length of the wires		10 to 11 mm	7 to 8 mm
End sleeves according to DIN 46228	Without plastic sleeve	Design A, 10 mm long	Design A, 7 mm long
	With plastic sleeve 0.25 to 1.5 mm^2	Design E, 10 mm long	Design A, 7 mm long
Sheath diameter		-	8.5 mm
Tool		3 to 3.5 mm screwdriver, conic design	3 to 3.5 mm screwdriver, conic design
Connection system		Push-in terminal	Screw terminal
Tightening torque		-	From 0.5 Nm to 0.6 Nm

[1] American Wire Gauge

Permissible cable temperature

Note

Permissible cable temperature

When selecting the cable, note that the cable temperature during operation can be up to 30 °C above the ambient temperature of the S7-1500R/H redundant system.

Example: If you use the system in a switchgear cabinet at an ambient temperature of 30 °C, you must use a connecting conductor with a temperature range of at least 60 °C.

With terminals that carry a current load of ≥ 8 A during operation, you must expect a cable temperature of up to 65 °C above the ambient temperature.

You can more exactly determine the required cable temperature for each application. To do so, measure the cable temperature in the system at a load corresponding to the maximum possible power and ambient temperature values.

You should specify other connection types and material requirements based on the electrical characteristics of the circuits you use and the installation environment.

7.5 Connecting the supply voltage

Introduction

The supply voltage is supplied over a 4-pin connector at the front of or bottom of the R/H-CPU.

Connection for supply voltage (X80)

The connections of the 4-pole connector have the following meaning:

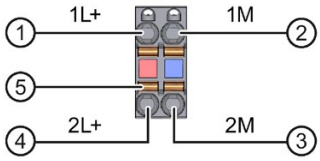

① +24 V DC of the supply voltage (current limited to 10 A)
② Ground of the supply voltage (current limited to 10 A)
③ Ground of the supply voltage for loop-through
④ +24 V DC of the supply voltage for loop-through
⑤ Spring opener (one spring opener per terminal)

Figure 7-3 Connection for supply voltage

The cable connector enables you to loop the supply voltage uninterrupted, even when it is unplugged.

Requirements

- Only wire the cable connector when the supply voltage is turned off.
- Follow the wiring rules (Page 201).

Tool-free connection of cables: multi-wire (stranded), with end sleeve or ultrasonic compressed

To connect a wire without tools, follow these steps:

1. Strip 8 to 11 mm of the wires.
2. Seal or crimp the wire with end sleeves.
3. Insert the cable into the push-in terminal as far as it will go.
4. Push the wired connector into the socket of the CPU.

Tools required

3 to 3.5 mm slotted-head screwdriver

Connection of wires: multi-wire (stranded), without end sleeve, unprocessed

To connect a wire without end sleeve, follow these steps:

1. Strip 8 to 11 mm of the wires.
2. Press the screwdriver into the spring release. Insert the cable into the push-in terminal as far as it will go.
3. Pull the screwdriver out of the spring release.
4. Push the wired connector into the socket of the CPU.

Loosening a wire

To unplug a wire, follow these steps:

1. Push with the screwdriver as far as it will go into the spring release.
2. Remove the wire from the push-in terminal.

Uninstalling the connection plug

With the screwdriver, pry the connector out of the CPU.

7.6 Connecting the load current supply

Introduction

In the delivery condition of the load current supplies, power connectors are inserted. The modules and the associated power connectors are coded. There are two parts to the coding element. One coding element is located in the module, and the other in the power connector. The load current supplies use identical power connectors for the voltage connection.

The coding element prevents the insertion of a power connector into a different type of load current supply.

Tools required

3 to 3.5 mm screwdriver

Connecting the supply voltage to a load current supply

Watch the video sequence (https://support.industry.siemens.com/cs/ww/en/view/78027451)

To connect the supply voltage, follow these steps:

1. Swing the front cover of the module up until the front cover latches.
2. Press down the unlocking button of the power cable connector (Figure 1). Remove the power cable connector from the front of the module.
3. Loosen the screw on the front of the connector. This loosens the housing latch and the cable relief. With a tightened screw the connector's cover can't be removed (Figure 2).
4. Pry off the connector cover using a suitable tool (Figure 3).

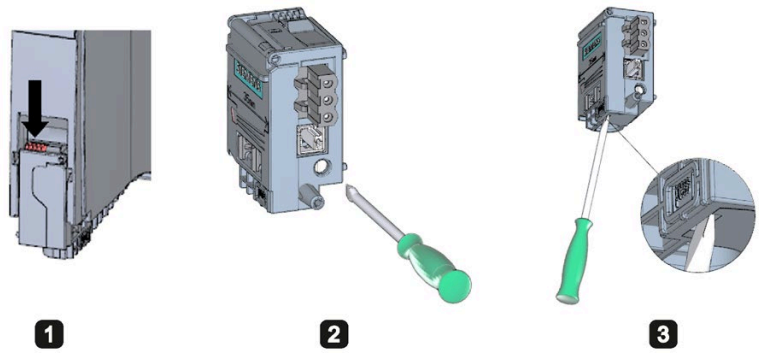

Figure 7-4 Connecting the supply voltage to a load current supply (1)

5. Strip the cable sheathing to a length of 35 mm. Strip the wires to a length of 7 to 8 mm. Attach the end sleeves.
6. Connect the wires in the connector according to the connection diagram (Figure 4).
7. Close the cover (Figure 5).

8. Retighten the screw (Figure 6). This effects a strain relief on the lines.

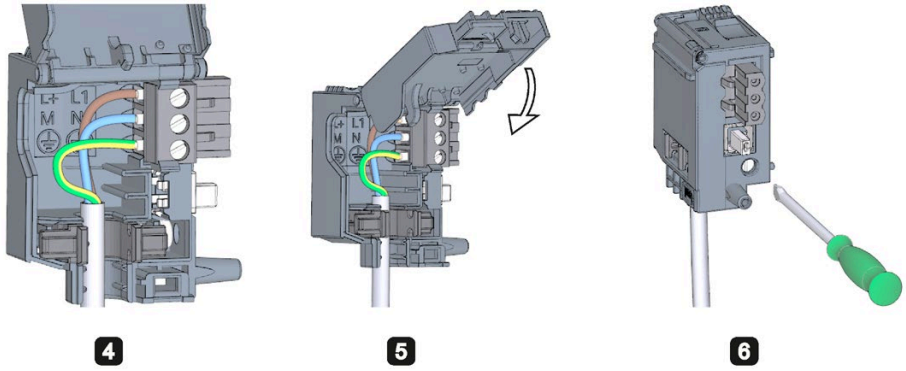

Figure 7-5 Connecting the supply voltage to a load current supply (2)

9. Insert the power connector into the module, until the latch engages.

Reference

You can find more information on connecting the 24 V DC output voltage of the load current supply in the manuals for the relevant modules.

7.7 Connecting the CPU to the load power supply

Introduction

The load current supply is fitted with a plug-in 24 V DC output terminal (behind the front cover at the bottom). You connect the cables for the supply voltage to the CPU at this terminal.

Requirements

- Only wire the cable connector when the supply voltage is turned off.
- The connector for connecting the supply voltage to the CPU is already fitted. You can find more information in the section Connecting the supply voltage (Page 202).

Tools required

3 to 3.5 mm screwdriver

Connecting the CPU to a load current supply

Watch the video sequence (https://support.industry.siemens.com/cs/ww/en/view/78027451)

To connect the cables for the supply voltage, follow these steps:

1. Open the front cover of the load current supply. Pull the 24 V DC output terminal down and off.
2. Wire the 24 V DC output terminal to the wires of the CPU 4-pin connector.

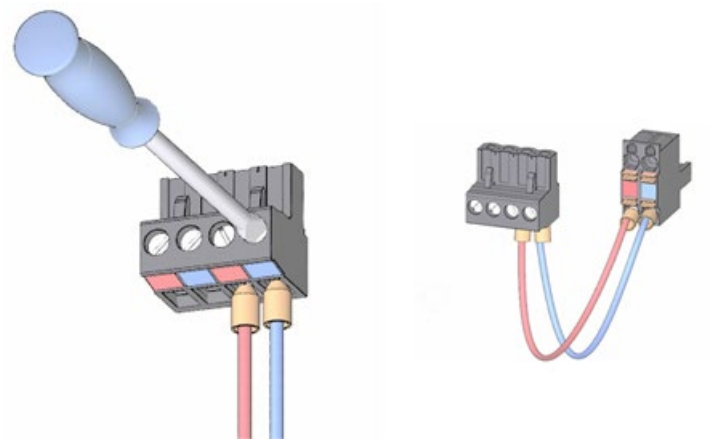

3. Connect the load current supply to the CPU.

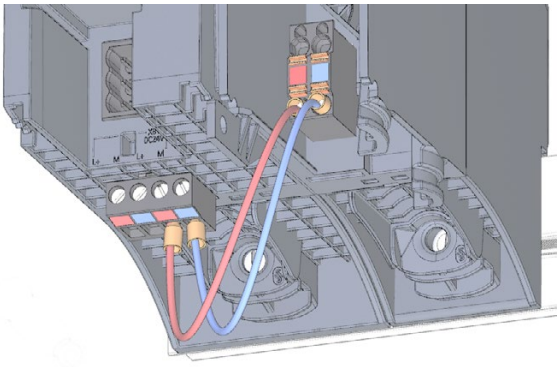

Note

Connection on the underside of the device

The connection socket for the 4-pole connection plug is located on the underside of the device:

- CPU 1513R-1 PN, as of article number 6ES7513-1RM03-0AB0
- CPU 1515R-2 PN, as of article number 6ES7515-2RN03-0AB0

Additional information can be found in the manuals for the CPUs.

7.8 Connecting interfaces for communication with S7-1500R

Connecting interfaces for communication

Connect the communication interfaces of the CPUs using standardized plug connectors.

Use prefabricated connecting cables for the connection. If you want to prepare communication cables yourself, the interface assignment is specified in the CPU manuals. Observe the mounting instructions for the connectors.

7.8.1 Connecting the PROFINET ring to S7-1500

Introduction

Use the RJ45 sockets of the PROFINET interfaces X1 P1R and X1 P2R to connect the PROFINET ring between the two R-CPUs.

Requirements

- One of the two connections of the PROFINET ring between the two R-CPUs must not contain any other IO devices, switches or other PROFINET devices apart from transparent media converters.
- The default setting in STEP 7 is port 2 at PROFINET interface X1.
  - Connect the PROFINET cable to the ports of the PROFINET interfaces of the two R-CPUs.
  - The maximum length of the PROFINET cable is 100 m.
- You can extend the spatial distance between the two R-CPUs using a media converter (electrical/optical). In this case, the maximum length depends on the type of media converter used.
  You can find more information in the documentation for the media converter:
  - About the technical specifications
  - About use
  - About commissioning
- You connect the IO devices, switches and other PROFINET devices to the other PROFINET ring connection. The default setting in STEP 7 is port 1 at PROFINET interface X1.

Accessories required

- PROFINET cable for the PROFINET ring
- Optional transparent media converter (electrical ⇔ optical)

Procedure

To connect the PROFINET ring at SIMATIC S7-1500R, follow these steps:

1. Swing the front cover on the R-CPUs up.
2. Plug the PROFINET cable RJ45 connectors into the RJ45 sockets at PROFINET interfaces X1 P2R on the two R-CPUs.

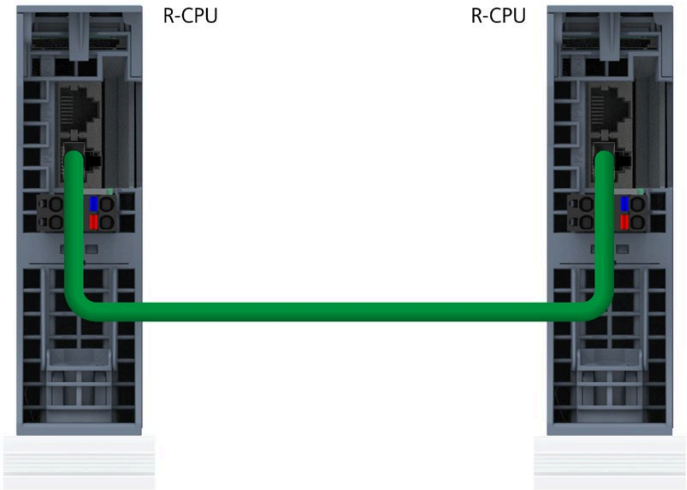

Figure 7-6 PROFINET interface X1 P2R: Connecting R-CPUs (bottom view)

3. Plug the PROFINET cable RJ45 connectors into the RJ45 sockets at PROFINET interfaces X1 P1R on the two R-CPUs. Connect the other PROFINET devices in the PROFINET ring.

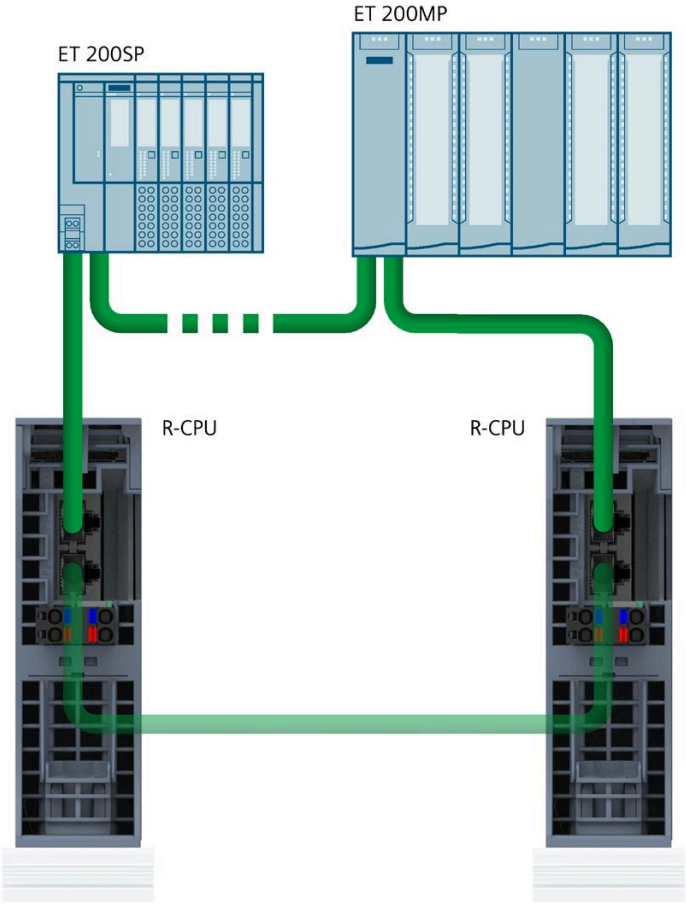

Figure 7-7 PROFINET interface X1 P1R:

4. Close the front cover on the R-CPUs.

7.9 Connecting interfaces for communication with S7-1500H

Connecting interfaces for communication

Connect the communication interfaces of the CPUs using standardized plug connectors.

Use prefabricated connecting cables for the connection. If you want to prepare communication cables yourself, the interface assignment is specified in the CPU manuals. Observe the mounting instructions for the connectors.

7.9.1 Connecting redundancy connections (fiber-optic cables)

7.9.1.1 Synchronization modules for S7-1500H

Introduction

You use the synchronization modules to create two redundancy connections between the two H-CPUs. You need two identical synchronization modules per CPU which you connect with fiber-optic cables.

View

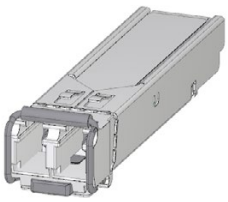

Figure 7-8 Synchronization module

Maximum cable length (fiber-optic cable) between the two H-CPUs

In the S7-1500H redundant system, you need to use four synchronization modules of the same type. You can order the following types of synchronization modules:

Maximum cable lengths between the two H-CPUs	Article number
10 m	6ES7960-1CB00-0AA5
10 km (minimum length: 2 m)	6ES7960-1FB00-0AA5
40 km (minimum length: 8 km)	6ES7960-1FE00-0AA5

7.9.1.2 Selecting fiber-optic cables

Introduction

You can find an overview of fiber-optic cables, the necessary conditions and technical specifications in the system manual Industrial Ethernet/PROFINET Passive network components (https://support.industry.siemens.com/cs/ww/en/view/84922825).

Rules

Observe the following rules:

- If you use fiber-optic cables, ensure sufficient strain relief at the synchronization modules.
- Comply with the technical specifications for the fiber-optic cables used (attenuation, bandwidth).

Cables up to 10 m

Use the synchronization module 6ES7960–1CB00–0AA5 in pairs with fiber-optic cables up to 10 m.

Select the following specifications with cable lengths of up to 10 m:

- 50/125 µ or 62.5/125 µ multimode fiber
- 2 x duplex cables per S7-1500H, crossover
- LC-LC connector type

The following cables are available as accessories for S7-1500H:

Table 7- 3 Fiber-optic cables as accessories

Length	Article number
1 m	6ES7960–1BB00–5AA5
2 m	6ES7960–1BC00–5AA5
10 m	6ES7960–1CB00–5AA5

Cables up to 40 km

Insert the synchronization module 6ES7960-1FB00-0AA5 or 6ES7960-1FE00-0AA5 in pairs with fiber-optic cables up to 40 km.

For cables over 10 m, you will need to have the fiber-optic cables custom-made. Select the following specifications:

- Up to 10 km: Single-mode fiber (mono-mode fiber) 9/125 µ (fiber specification OS1 or OS2)
- From 10 km to 40 km: Single-mode fiber (mono-mode fiber) 9/125 µ (fiber specification OS2)

In exceptional cases, you can use the cables available as accessories in lengths of up to 10 m for commissioning and testing purposes. For permanent use, however, you must use the cables specified in the table below with single-mode fibers.

Please see the following tables for the other specifications applicable to your specific application.

Table 7- 4 Specifications for fiber-optic cables used indoors

Cabling	Necessary components	Specifications
Complete cabling routed within a building. • No cable junction between indoors and outdoors. • Easy complete installation with pre-assembled cables.	Patch cable for indoors	2 x duplex cables for the redundant system (connector type LC-LC, cores crossed): Connector type in line with the other components.
	Installation cable for indoor use	4-core multicore cables for the redundant system (connector type LC-LC, cores crossed): 1 cable with 4 cores for the redundant system: • Both interfaces in one cable 1 or 2 cables with multiple shared cores for the redundant system: • Interfaces laid separately to increase availability (reduction of common cause factor) • Connector type in line with the other components

Table 7- 5 Specifications for fiber-optic cables used outdoors

Cabling	Necessary components	Specifications
A cable junction is required between the indoor and outdoor area. Installation through distribution boxes (patch field). Additional information can be found in the section below.	Installation cable for outdoor applications (and indoor applications)	Installation cable for outdoor use: • 1 cable with 4 cores per S7-1500H system Both interfaces in one cable • 1 or 2 cables with multiple shared cores Interfaces laid separately to increase availability (reduction of common cause factor) • Connector type in line with the other components
	Patch cable for indoors	Connector type in line with the other components.

Installation of fiber-optic cables through distribution boxes (patch fields)

If cabling requires a transition from indoor to outdoor, you need to perform installation of the fiber-optic cables via distribution boxes (patch fields). The distribution boxes (patch fields) connect the different cables (patch and installation cables) and connector types with one another. You need a separate distribution box (patch field) for each transition.

Note

The installation of connectors, distribution boxes (patch fields) and splicing of fiber-optic cables is allowed as long as the additional attenuation does not exceed 1 dB.

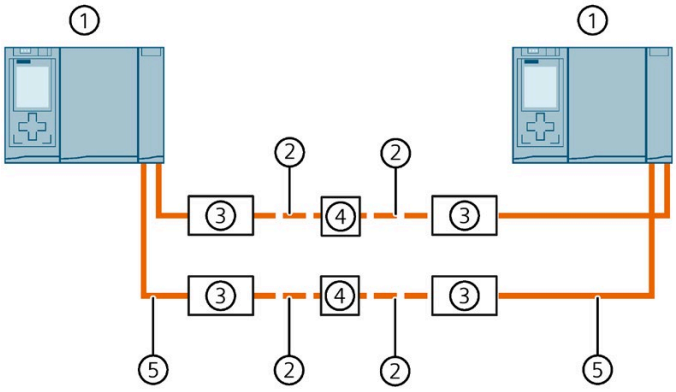

① H-CPU
② Installation cable for outdoor use
③ Distribution box (patch field)
④ Splicing of the fiber-optic cables
⑤ Patch cable for indoors

Figure 7-9 Installation through distribution boxes (patch fields)

7.9.1.3 Installing fiber-optic cables

Introduction

Fiber-optic cables may only be laid by trained specialist personnel. Comply with all applicable regulations and statutory requirements.

In practice, the installation of fiber-optic cables represents the most common cause of errors and failures. These can be caused by:

- Kinks in the fiber-optic cable due to an insufficient bending radius
- Crushing as a result of excessive force caused by persons treading on the cable, by pinching, or by other heavy cables
- Overstretching due to high tensile forces
- Damage caused by sharp edges

Quality assurance on site

Check the following points before laying the fiber-optic cables:

- Has the correct fiber-optic cable been delivered?
- Is there any visible transport damage to the product?
- Have you organized suitable intermediate on-site storage for the fiber-optic cables?
- Does the category of cable match that of the connecting components?

Installing fiber-optic cables

Note the following points when laying fiber-optic cables:

- Fiber-optic cables can be installed in open locations provided you can safely exclude any damage in those areas (vertical risers, connecting shafts, telecommunications switchboard rooms, etc.).
- Attach fiber-optic cables to mounting rails, for example cable trays or wire mesh ducts, using cable ties. Take care not to crush the cables when fastening them. Make sure there is not too much pressure on the fiber-optic cables.
- Before laying the fiber-optic cables: Deburr the edges of the holes. Round the holes. This prevents damage to the sheathing when you pull in and fasten the cable.
- The bending radius must not be smaller than the value specified by the manufacturer.
- The branching radii of the cable ducts must correspond to the specified bending radius for the fiber-optic cable.
- Lay the redundancy connections in such a way that the fiber-optic cables are securely protected from damage.

WARNING

Undefined system state of the S7-1500H redundant system with simultaneous interruption of the two redundancy connections ≤ 1500 ms apart (R-system) or ≤ 55 ms apart (H-system).

Lay the redundancy connections in such a way that the fiber-optic cables are securely protected from damage. Also make sure when laying the cables that the two redundancy connections are always separate from each other. This makes simultaneous damage of the redundancy connections ≤ 1500 ms apart (R-system) or ≤ 55 ms apart (H-system) unlikely.

Reference

Observe the installation notes for fiber-optic cables in the system manual Industrial Ethernet/PROFINET Passive network components (https://support.industry.siemens.com/cs/ww/en/view/84922825).

7.9.1.4 Connecting redundancy connections (fiber-optic cables) to S7-1500H

Introduction

Make the redundancy connections (fiber-optic cables) between the two H-CPUs using the sockets on the synchronization modules. You need two synchronization modules per CPU. Connect the synchronization modules in pairs to the fiber-optic cables.

Requirements

- The redundancy connections (fiber-optic cables) must not include any additional media converters, IO devices or switches. Distribution boxes are allowed.
- The maximum length of the redundancy connections is 10 m / 10 km / 40 km.

Accessories required

- 4 synchronization modules 2 synchronization modules for each H-CPU
  - Up to 10 m: Sync module 1 GB FO 10 m
  - Up to 10 km: Sync module 1 GB FO 10 km
  - Up to 40 km: Sync module 1 GB FO 40 km
- 2 redundancy connections sync cable FO. The redundancy connections can be ordered in the following lengths. You can find the article numbers in the appendix Accessories/spare parts (Page 418).
  - For sync module 1 GB FO 10 m: 1 m, 2 m, 10 m
  - For sync module 1 GB FO 10 km: Additional information on fiber-optic cables in longer versions can be found in the Industry Mall (https://mall.industry.siemens.com).
  - For sync module 1 GB FO 40 km: Additional information on fiber-optic cables in longer versions can be found in the Industry Mall (https://mall.industry.siemens.com).

Note

If you use the synchronization modules Sync Module 1 GB FO 40 km (6ES7960-1FE00-0AA5) in the CPUs 1517H-3 PN or 1518HF-4 PN, then the following maximum ambient temperatures apply:

- Horizontal mounting position up to 55 °C
- Vertical mounting position up to 35 °C

Safety information

WARNING

Personal injury or material damage can occur in zone 2 hazardous areas

If you remove or attach a synchronization module during operation, personal injury and damage can occur in hazardous areas of zone 2. Always disconnect the R/H-CPU from the power supply before you remove or attach a synchronization module in hazardous areas of zone 2.

CAUTION

The synchronization module contains a laser system and is classified as a "CLASS 1 LASER PRODUCT" in accordance with IEC 60825-1.

Can cause personal injury.

Avoid direct eye contact with the laser beam. Do not open the housing. Read the information in the system manual carefully.

Figure 7-10 Class 1 laser products

Inserting synchronization modules and connecting fiber-optic cables

To insert the synchronization modules and connect the fiber-optic cables, follow these steps:

1. Remove the blanking plugs from the synchronization modules.
2. Push the two synchronization modules as far as they will go from below into the module slots at the H-Sync interfaces of port 1:
   CPU 1517H-3 PN: X3 (H-Sync channel 1) and X4 (H-Sync channel 2)
   CPU 1518HF-4 PN: X4 (H-Sync channel 1) and X5 (H-Sync channel 2)
   The synchronization modules must audibly click into place. Then push the clip on each synchronization module to the left. Result: The synchronization modules are locked into place.

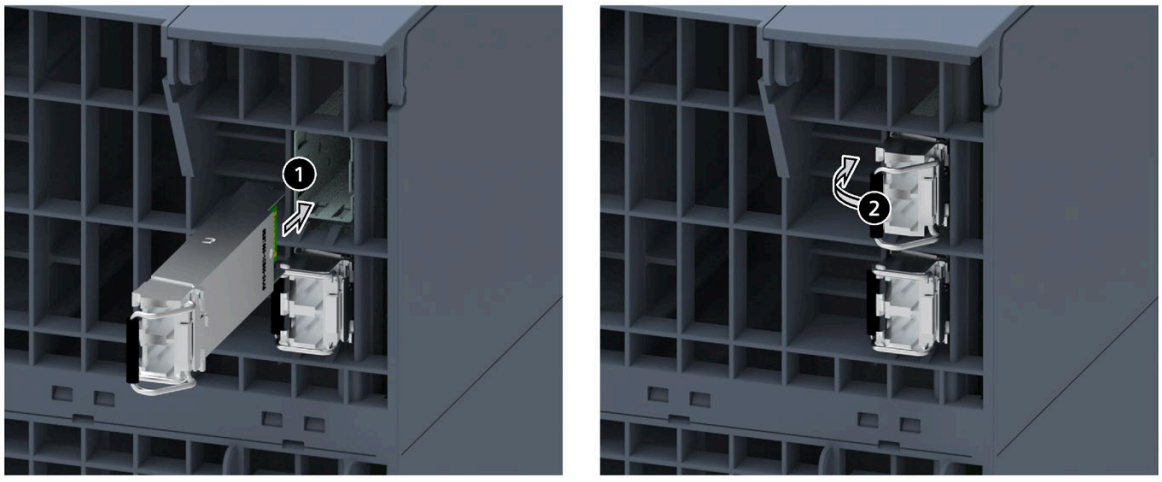

Figure 7-11 Inserting and locking synchronization modules

3. Hold the pre-assembled connectors of the redundancy connection by the housing. Push the connectors into the sockets of the synchronization modules. You should hear the connectors click into place.
4. Repeat steps 1 to 3 for the second H-CPU.

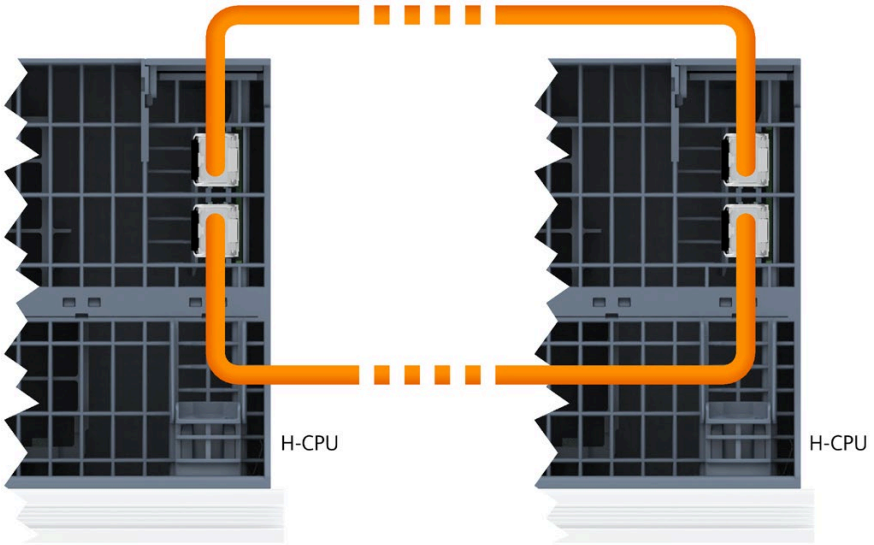

Figure 7-12 Connecting redundancy connections (fiber-optic cables) to S7-1500H

Uninstalling a synchronization submodule

To uninstall the synchronization modules, follow these steps:

1. Press down lightly on the connector release and hold while pulling the connector out of the synchronization module.
2. Flip the synchronization module clip to the right.
3. Pull the synchronization module out of the H-Sync interface on the CPU.
4. Place the blanking plug on the synchronization module.
5. Repeat the process for all H-Sync interfaces on the H-CPUs.

Protecting LC sockets on unused synchronization modules

Protect the LC sockets when storing unused synchronization modules:

Close off the LC sockets with the blanking plugs to protect them from dirt. The synchronization modules come with blanking plugs inserted.

NOTICE
Reduced optical performance due to dirt Even a small amount of dirt in the LC socket can affect the quality of the signal transmission. Dirt can lead to synchronization losses in operation. Protect the LC sockets from contamination during storage and installation of the synchronization modules.

7.9.2 Connecting the PROFINET ring to S7-1500H

Introduction

You connect the PROFINET ring via the RJ45 sockets of the PROFINET interfaces X1 P1R and X1 P2R.

Accessories required

PROFINET cable for the PROFINET ring

Connecting PROFINET ring with S2 devices

Plug the RJ45 connectors of the PROFINET cable of the PROFINET ring respectively into the RJ45 sockets of the PROFINET interfaces X1 P1R/X1 P2R of the two H-CPUs.

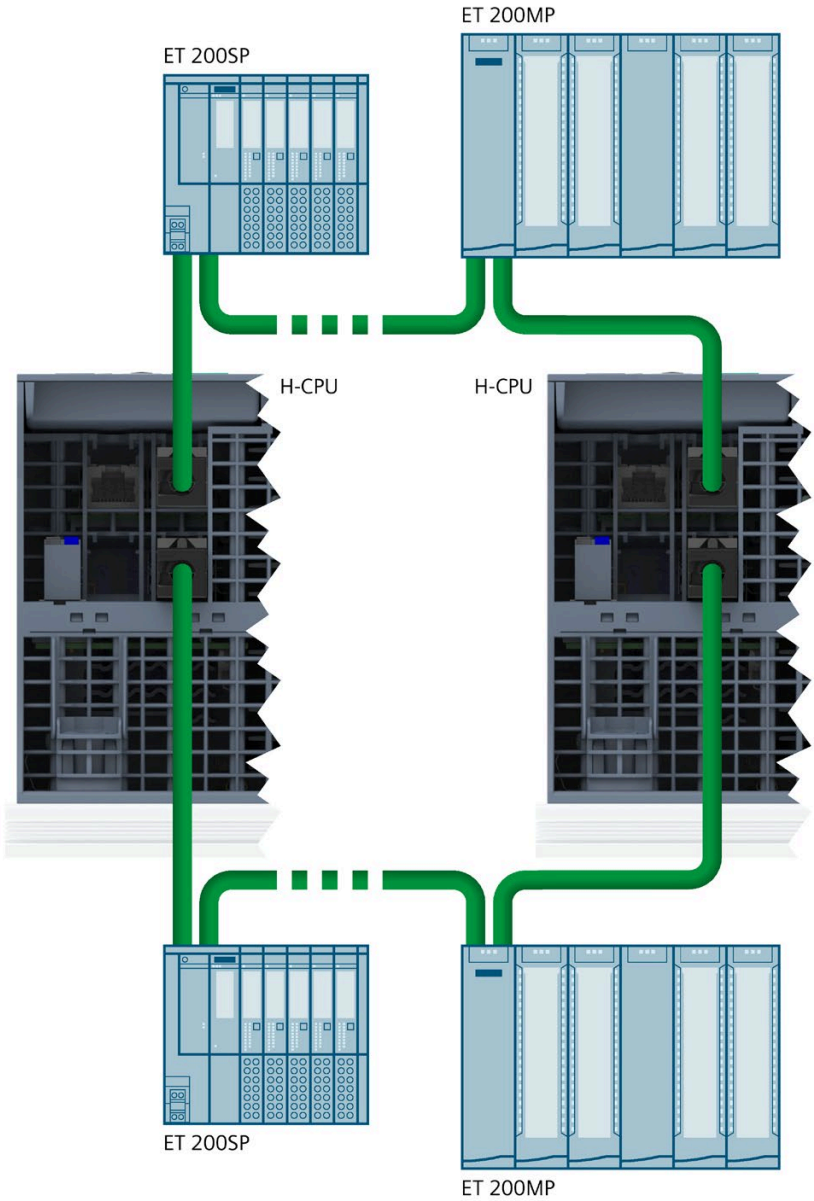

Figure 7-13 Connecting PROFINET ring with S2 devices

Connecting PROFINET rings with R1 devices

Plug the RJ45 connectors of the left PROFINET ring (PROFINET ring 1 with left interface modules) into the RJ45 sockets of the PROFINET interfaces X1 P1R/X1 P2R of the H-CPU with redundancy ID 1.
Plug the RJ45 connectors of the right PROFINET ring (PROFINET ring 2 with right interface modules) into the RJ45 sockets of the PROFINET interfaces X1 P1R/X1 P2R of the H-CPU with redundancy ID 2.

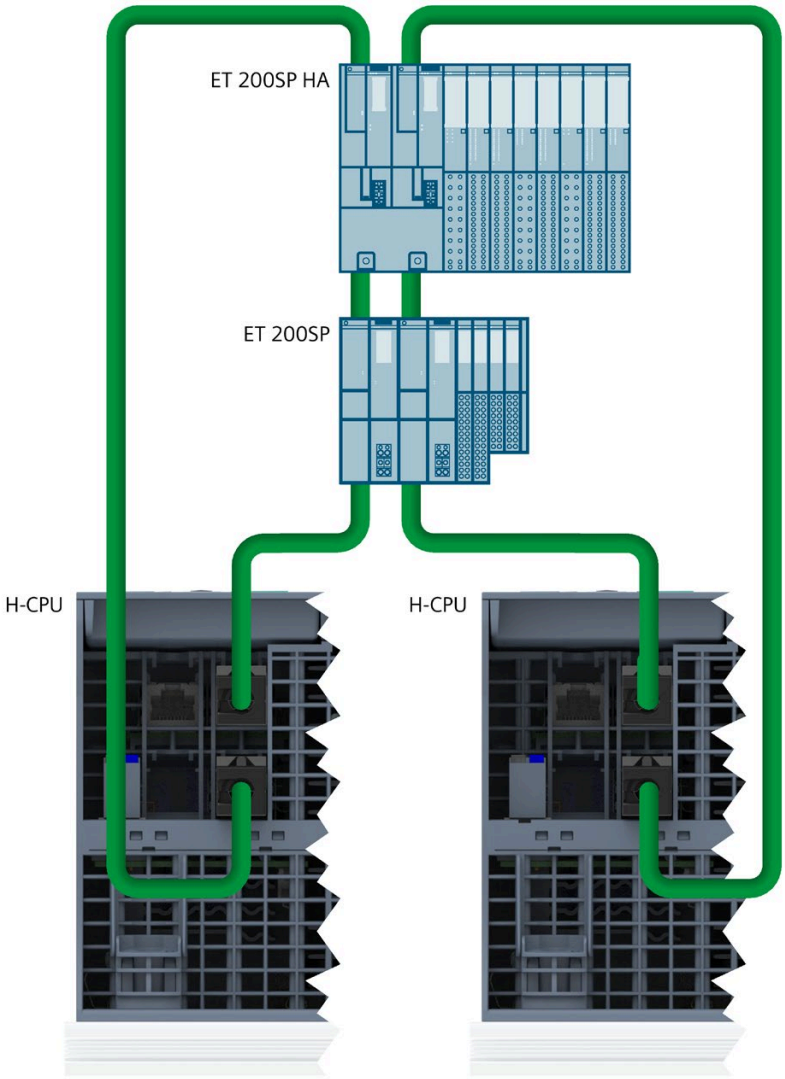

Figure 7-14 Connecting PROFINET rings with R1 devices

7.9.3 Connecting line topology to S7-1500H

Introduction

You connect the line topology via the RJ45 sockets of the PROFINET interfaces X1 P1R.

Accessories required

PROFINET cable for line topology

Connecting line topology with S2 devices

Plug the RJ45 connectors of the PROFINET cable of the line topology into each of the RJ45 sockets of the PROFINET interfaces X1 P1R of the two H-CPUs.

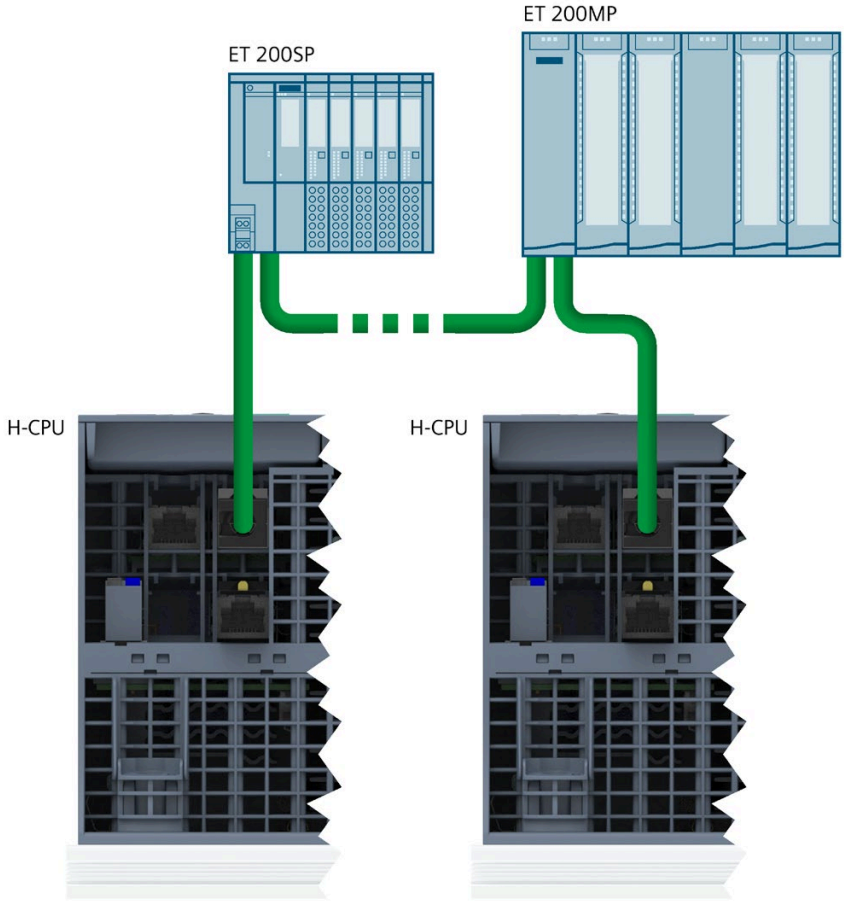

Figure 7-15 Connect line topology with S2 devices to S7-1500H

Connecting line topology with R1 devices

Connect the devices of the line topology with the PROFINET cables as shown in the following figure:

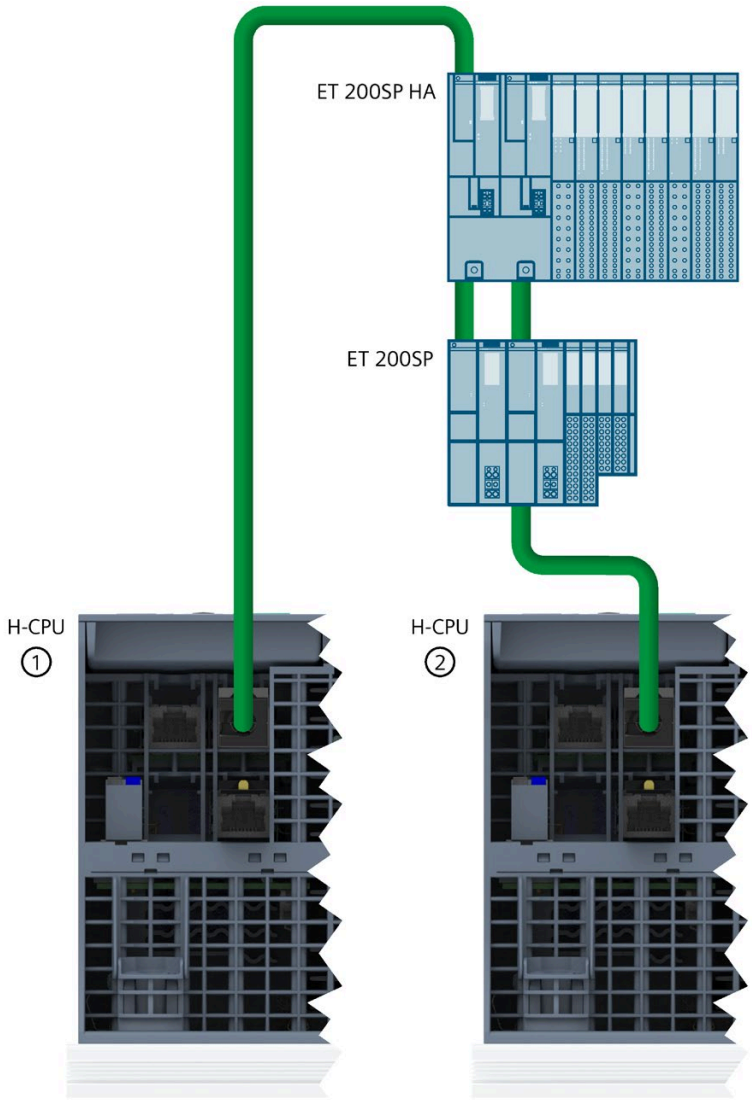

① H-CPU with redundancy ID 1

② H-CPU with redundancy ID 2

Figure 7-16 Connect line topology with R1 devices to S7-1500H

Configuration 8

8.1 Requirements

Hardware and software requirements

You will find the hardware and software requirements for operating S7-1500R/H redundant systems in the section Requirements (Page 87).

Note

Consistency check

If you configure the STEP 7 project as topology, the consistency is then checked by STEP 7. An incorrect configuration is indicated by error messages.

8.2 Configuring R/H CPUs

Introduction

The following section guides you step by step through the configuration of the R-CPUs for a S7-1500R redundant system. The procedure for the project engineering of H-CPUs in S7-1500H is identical to the project engineering of R-CPUs.

Requirements

The configuration detailed assumes that:

- You have set the IP address of the PG/PC.

1. Creating a project and R-CPUs

1. Create a new project in STEP 7. Give the project a name.
2. Select CPU 1515R-2 PN from the hardware catalog in the network view of the hardware configuration.
3. Drag and drop the CPU to the task window in the network view.

Result: STEP 7 automatically creates both 1515R-2 PN CPUs for the redundant system. STEP 7 displays both CPUs in the network view graphically.

Note

Deleting CPUs from the hardware configuration

You can only delete the two CPUs as a pair.

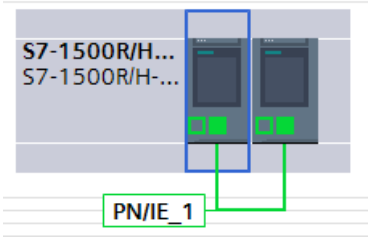

Figure 8-1 Display of CPUs in the network view

1. Open the CPUs in the device view. In the device view, the first CPU and the second CPU are each in slot 1.
2. Give the CPUs unique names under Properties.

2. Assigning IP addresses (device IP addresses)

STEP 7 automatically assigns an IP address to each PROFINET interface of a CPU. You can also assign the IP addresses manually.

For PROFINET interface X1 of the CPUs, the IP addresses must be located in the same subnet.

The IP address is displayed in the CPU properties, in the "PROFINET interface [X1]" area of the "IP protocol" section.

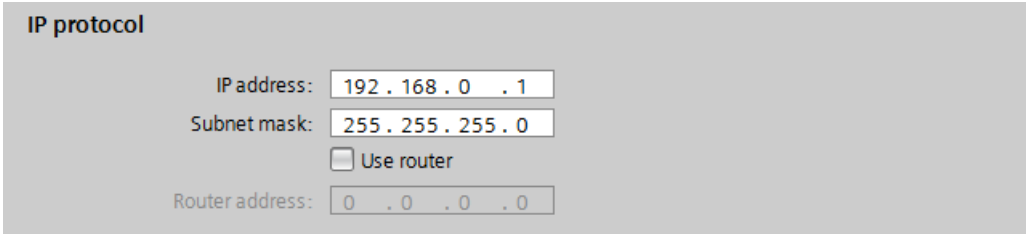

Figure 8-2 IP address

Redundancy IDs

In the STEP 7 project tree, each of the two CPUs is displayed with its own tree in the redundant system:

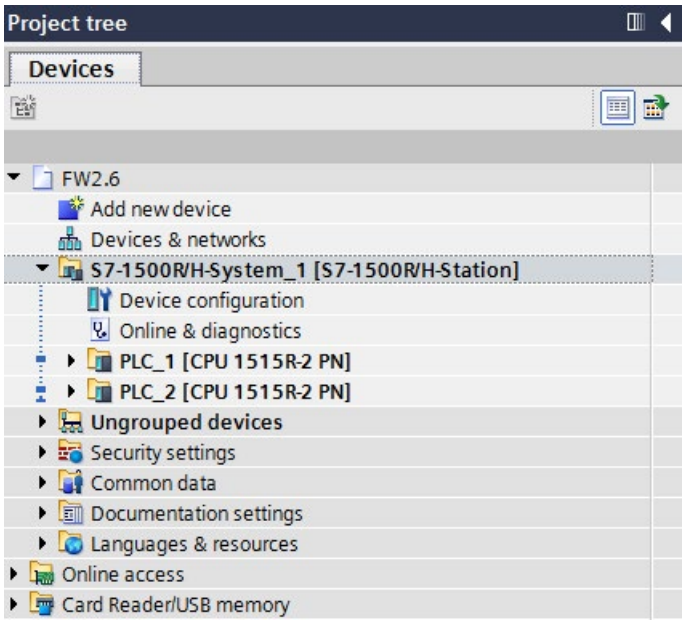

Figure 8-3 Redundant system in the project tree

Each CPU of the redundant system has a redundancy ID. The redundancy ID is used to assign a project tree in STEP 7 to the real CPU. The top CPU of the two in the tree is always the CPU with the redundancy ID "1". The bottom CPU has the redundancy ID "2".

If a CPU has a valid hardware configuration and you change the redundancy ID of that CPU, you also change the CPU's name and IP addresses. You can find more information in the section Redundancy IDs (Page 289).

3. Assigning system IP addresses

In addition to the device IP addresses of the CPUs, you can also assign system IP addresses for the S7-1500R/H redundant system.

You use the system IP addresses for communication with other devices (for example, HMI devices, CPUs, PG/PC). The devices always communicate over the system IP address with the primary CPU of the redundant system. This ensures, for example, that the communication partner can communicate with the new primary CPU (previously backup CPU) in the RUN-Solo system state after failure of the original primary CPU in redundant operation.

Proceed as follows to activate the system IP address for PROFINET interfaces X1 of the two CPUs:

1. Select a CPU in the network view. Select the "Properties" tab in the Inspector window.
2. Select the area "PROFINET interface [X1]" and the section "System IP address for switched communication" in the area navigation.

3. Make sure that the checkbox "Enable the system IP address for switched communication" is selected for the interface X1. Apply or assign the system IP address in the "IP address" field. The subnet mask cannot be modified and corresponds to the subnet mask of the device IP address.
4. Apply or assign a virtual MAC address to the system IP address.
   The virtual MAC address is 6 bytes long. The assignment of the bytes is hexadecimal.

   Note
   Virtual MAC address

   Ensure that all MAC addresses stored in the Ethernet broadcast domain are unique. This applies in particular to systems with third-party devices consisting of VRRP and redundant systems that are configured through several STEP 7 projects.

5. The other CPU applies the settings automatically.

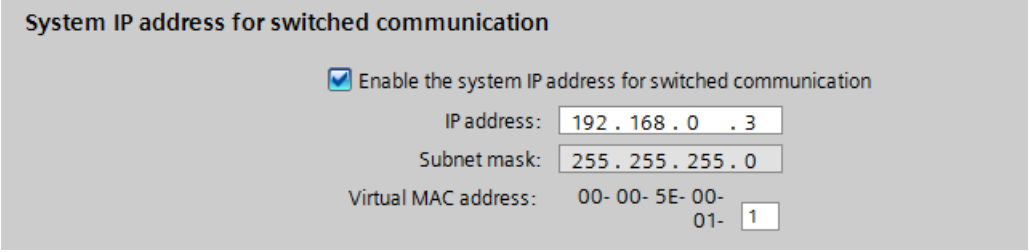

Figure 8-4 System IP address

You can find more information on the system IP address in the Communication function manual (https://support.industry.siemens.com/cs/ww/en/view/59192925).

4. Setting the cycle monitoring time

STEP 7 assigns default values for the minimum and maximum cycle times.

The default values are displayed in the "Cycle" area of the CPU properties.

Note
Set cycle time high
Select the maximum cycle time as high as your process allows.

- The time for the ongoing synchronization of the two CPUs in redundant operation is included in the cycle time.
- A temporary increase in the cycle time can occur upon a system state transition SYNCUP → RUN-Redundant.

If only one CPU controls the process (RUN-Solo system state), the cycle time is significantly shorter than during redundant operation.

You can find more information on the cycle time and recommendations for parameterization of the maximum cycle time and the minimum cycle time in the Cycle and response times function manual (https://support.industry.siemens.com/cs/at/fr/view/59193558).

You can find information on system states in the section Operating and system states (Page 301).

8.3 Basic procedure for configuring the IO devices and the MRP roles

Introduction

The configuration of the IO devices in a S7-1500R/H redundant system is basically the same for S7-1500R and S7-1500H. The configuration differs slightly according to the configuration variants of the redundant system (PROFINET ring, line topology, combined topology) and the S1, R1 and S2 IO device types used.

The following section guides you through the configuration with two IO devices (ET 200MP and ET 200SP) as an example.

The differences in settings and rules are summarized compactly at the end of the section.

The procedure to configure H-CPUs with R1 devices in PROFINET rings differs from the basic procedure. You will find the description in a separate section (Page 233).

Requirements

The configuration detailed assumes that:

- You have configured the R/H CPUs. For more information, refer to the section Configuring R/H CPUs (Page 224).

1. Creating IO devices

To create two IO devices in the redundant system, follow these steps:

1. Switch to the network view.
2. Drag an IO device from the hardware catalog, e.g., the interface module IM 155-5 PN HF into the working window.
3. Drag the required modules to the corresponding slots in the IO device.
4. Select the second IO device, e.g., IM 155-6 PN HF in the same way.
5. Assign the required modules.

2. Assigning IO devices to the redundant system

To assign IO devices to the redundant system, connect every IO device to each CPU.

To do so, proceed as follows:

1. Drag-and-drop a line between the PROFINET interface of IM 155-5 PN HF and PROFINET interface X1 of the left-hand CPU.
2. Drag-and-drop a line between the PROFINET interface of IM 155-5 PN HF and PROFINET interface X1 of the right-hand CPU.
3. Assign the second IO device, IM 155-6 PN HF, to the two CPUs in exactly the same way. Set the watchdog timer for the second IO device.

Result: The IO devices are connected to the redundant S7-1500R/H system. "Multiple assignment" is displayed for the IO devices.

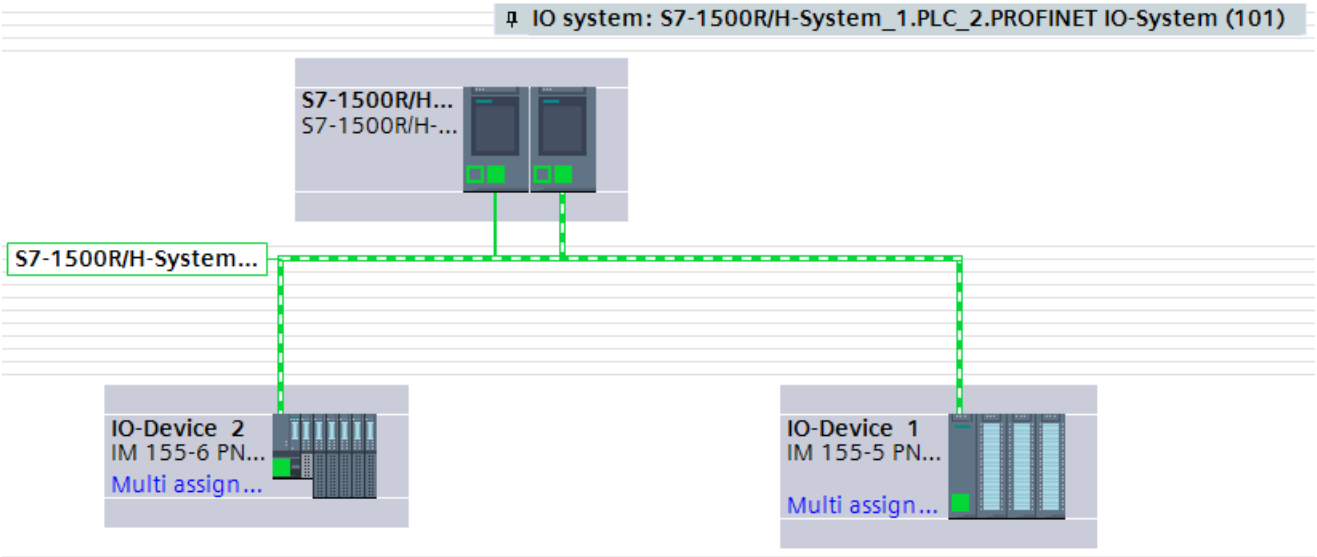

Figure 8-5 IO devices assigned in the network view with system redundancy

Note

If you have configured modules for the IO devices and compile the project, you receive an error message for the watchdog timer in the Inspector window. Set the watchdog timer indicated in the error message.

3. Define MRP roles of the CPUs and the IO devices of the redundant system

As soon as you create an S7-1500R/H redundant system in STEP 7, STEP 7 automatically assigns the MRP role to the PROFINET interfaces X1 of both CPUs. The default setting depends on the topology:

- For PROFINET ring "Manager (auto)"
- For line topology "Not device in the ring"

If necessary you have to change the MRP role of the CPUs. To do so, proceed as follows:

1. In the network view of STEP 7, select PROFINET interface X1 of one of the two CPUs of the redundant system.
2. In the Inspector window, navigate to "Properties > General > Advanced options > Media redundancy".

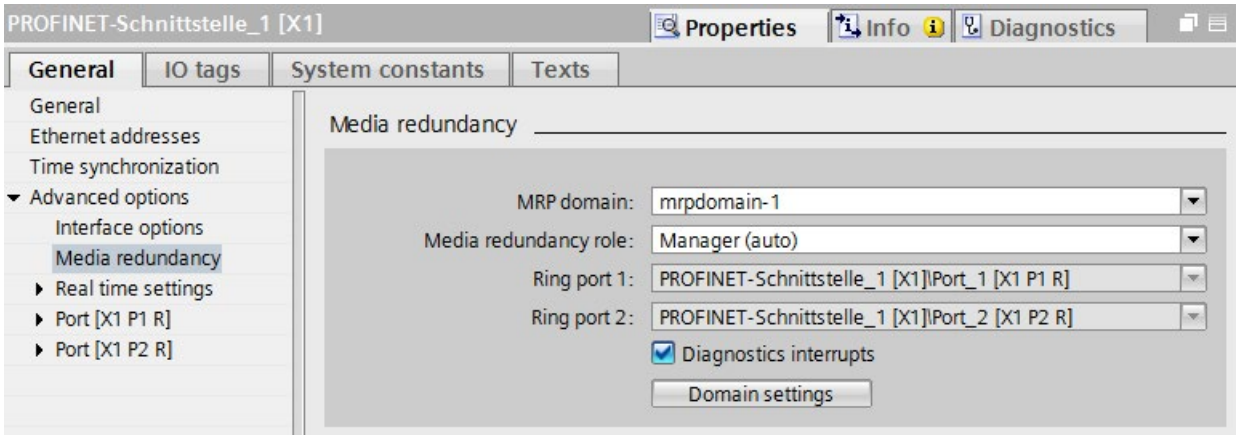

Figure 8-6 S7-1500R/H: Setting media redundancy

In the Inspector window, STEP 7 displays the properties of the MRP domain in which the PROFINET interface X1 of the CPU is located.

3. Take over or set the appropriate media redundancy role for the PROFINET interface X1 of the CPU.

4. Click the "Domain settings" button.
5. In the "Devices" table, assign the MRP roles in the "MRP role" column for all IO devices according to the topology:
   - For all devices in the PROFINET ring "Client"
   - For all devices in a line topology "Not device in the ring"

   The following example shows the setting of the MRP roles for a PROFINET ring.

Devices

	PROFINET device name	MRP domain:	MRP role	Ring port 1	Ring port 2
1	io-device_1	mrpdomain-1	Client	Port_1 [X1 P1 R]	Port_2 [X1 P2 R]
2	io-device_2	mrpdomain-1	Client	Port_1 [X1 P1 R]	Port_2 [X1 P2 R]
3	plc_1.profinet-schnittstel..	mrpdomain-1	Manager (auto)	Port_1 [X1 P1 R]	Port_2 [X1 P2 R]

Figure 8-7 S7-1500R/H: Setting MRP roles for devices

4. Configuring devices outside the STEP 7 project

Set the same MRP role for devices of the PROFINET ring, line or combined topology, that are not in STEP 7 as for the devices that you configured in STEP 7.
Example: For a switch in the PROFINET ring, set the MRP role "Client" via the Web interface of the switch.

Summary of settings in STEP 7 and rules

Table 8- 1 Setting of the MRP roles in STEP 7 and rules

Property	PROFINET ring		Line topology	Combined topology	H-CPUs without additional devices
Topology possible in redundant system	S7-1500R	S7-1500H	S7-1500H		S7-1500H
MRP role of the CPU	Manager (auto)	Manager (auto)	Not device in the ring		Not device in the ring
MRP role of the IO devices	Client	Client	Not device in the ring	Depending on the installation location: Not device in the ring **or** client	-
MRP role of devices outside STEP 7 project	Client	Client	Not device in the ring		-
Rules	-	**Assign individual R1 devices:** Assign in the network view: You have to connect the left interface module of the R1 device to the H-CPU with redundancy ID 1. You have to connect the right interface module of the R1 device to the H-CPU with redundancy ID 2. **Assign multiple R1 devices simultaneously:** 1. In the network view, select the R1 devices. 2. Open the shortcut menu via the right mouse button and select the menu command "Assign new DP master/IO controller". 3. Select the two IO controllers (H-CPUs) in the dialog. Result: All marked R1 devices are assigned to the H-CPUs • IMs on slot 0 with H-CPU with redundancy ID 1 • IMs on slot 1 with H-CPU with redundancy ID 2				• Do not configure any further IO devices in the STEP 7 project. • Do not connect PROFINET lines to the PROFINET interfaces X1 P1R/X1 P2R of the H-CPUs in the hardware configuration.

Reference

You can find information on the PROFINET topologies of S7-1500R/H redundant systems in the PROFINET Function Manual.
(https://support.industry.siemens.com/cs/ww/en/view/49948856)

8.4 Configuring H-CPUs with PROFINET rings and R1 devices

Introduction

The section below guides you step by step through the configuration of PROFINET rings with R1 devices for an S7-1500H redundant system. The configuration example consists of two R1 devices (ET 200SP IM 155-6 PN R1).

Requirements

The configuration detailed assumes that:

- You have configured the H-CPUs. For more information, refer to the section Configuring R/H CPUs (Page 224).

1. Creating additional MRP domains

With an R1 device, communication takes place via two separate PROFINET rings. To do this, you must create another MRP domain in STEP 7. To do so, proceed as follows:

1. Switch to the network view.
2. Click on the connection PN/IE_1 (Sync-Domain_1) between the PROFINET interfaces X1 of the two H-CPUs.

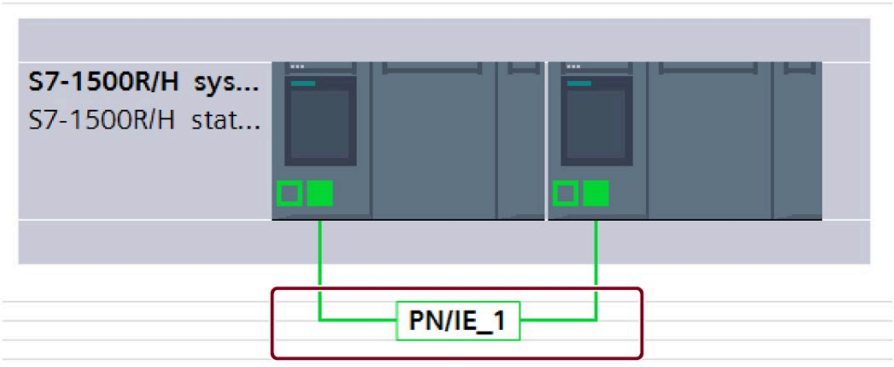

3. Navigate in the Inspector window to "Properties > General > PROFINET subnet > Domain management > MRP domains".

4. Create another domain "mrpdomain-2" in the table in the second row.

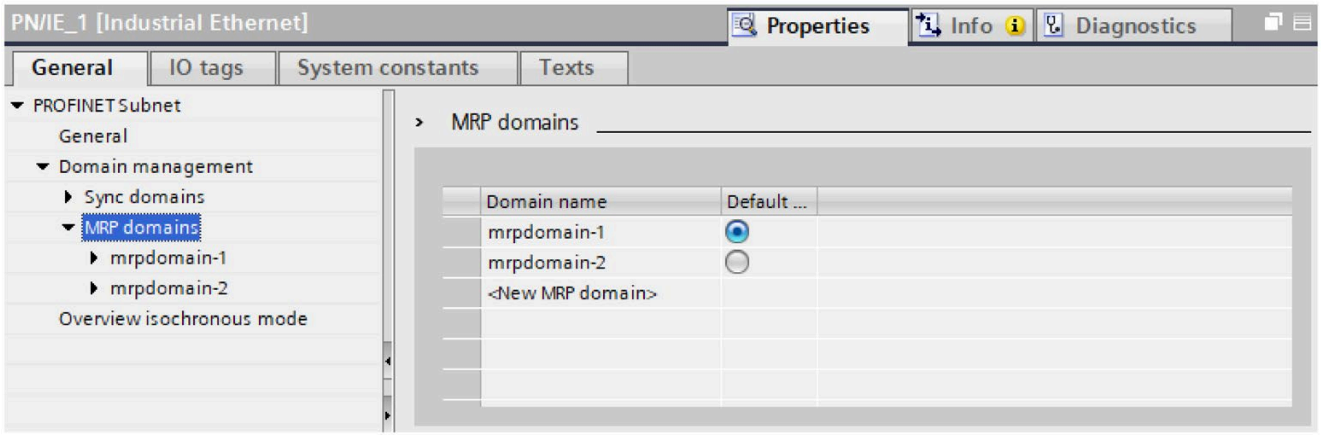

Figure 8-8 Create another MRP domain "mrpdomain-2"

2. Creating R1 devices

In the example, you add two R1 devices with system redundancy R1 to the H-CPUs. To do so, proceed as follows:

1. Switch to the network view.
2. Drag an ET 200SP IM 155-6 PN R1 from the hardware catalog into the working window.
3. Switch to the device view of the ET 200SP IM 155-6 PN R1.
4. Drag the desired I/O modules and the server module to the respective slots of the ET 200SP IM 155-6 PN R1.
5. Repeat steps 1 to 4 for the second ET 200SP IM 155-6 PN R1.

Result: The R1 devices are created and the modules are assigned.

Figure 8-9 ET 200SP IM 155-6 PN R1 created and modules assigned

3. Assigning IO devices to the redundant system

To assign R1 devices to the redundant S7-1500H system, connect each interface module of the R1 device to each H-CPU.

The left interface module of each R1 device must be connected to the left H-CPU in the network view. The right interface module of each R1 device must be connected to the right H-CPU in the network view.

To do so, proceed as follows:

1. Switch to the network view.
2. Drag-and-drop a line between the PROFINET interface of the left interface module of the ET200SP-R1_1 station and the PROFINET interface X1 of the left H-CPU.
3. Drag-and-drop a line between the PROFINET interface of the right interface module of the ET200SP-R1_1 station and the PROFINET interface X1 of the right H-CPU.
4. Switch to the device view of the ET200SP-R1_1 station and set the watchdog timer for both interface modules. To do this, navigate in the Inspector window to "Properties > PROFINET interface [X1] > Advanced options > Real-time settings > IO cycle".
5. Repeat steps 1 to 4 for the ET200SP-R1_2 station.

Result: The R1 devices are connected to the S7-1500H redundant system.

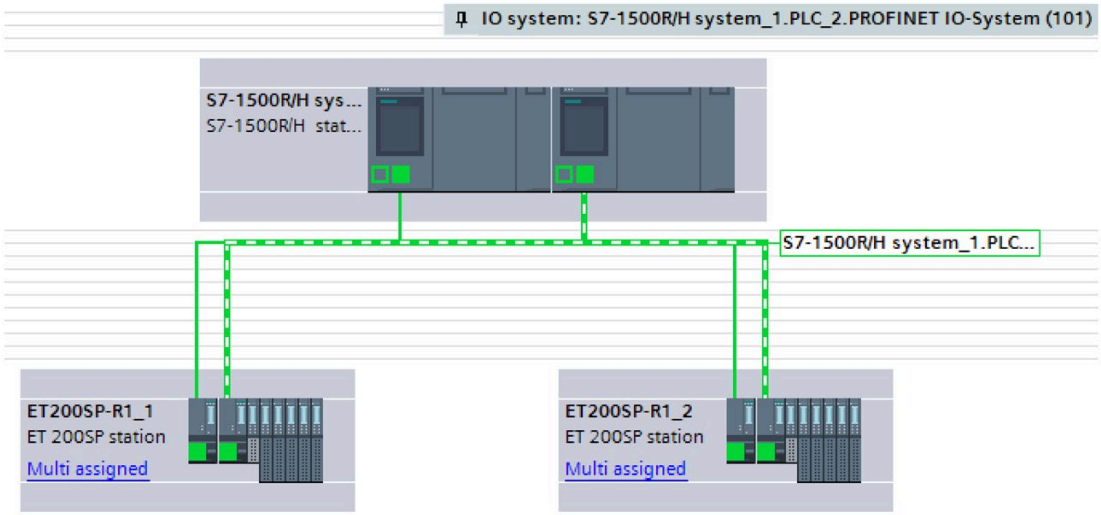

Figure 8-10 R1 devices assigned in the network view with system redundancy

Note

Alternative method for assigning IO devices.

For larger projects, we recommend assigning the IO devices as follows:

1. Switch to the network view.
2. Move the cursor over the station you want to assign.
3. Press the right mouse button and select "Assign to new DP master/IO Controller" in the shortcut menu.
4. Select both IO Controllers in the following dialog and then click on "Ok". This assigns the left interface module to the left IO Controller and the right interface module to the right IO Controller.
5. Repeat steps 2 through 4 for additional IO devices or mark several stations simultaneously.

4. Specify MRP role and MRP domain of the CPUs of the S7-1500H redundant system.

As soon as you create a S7-1500H redundant system in STEP 7, STEP 7 automatically assigns the MRP role "Not device in the ring" for the PROFINET interfaces X1 of the two CPUs. For the project engineering as PROFINET ring you have to change the MRP role to "Manager (auto)".

To change the MRP role of the redundant system, follow these steps:

1. Switch to the device view of the S7-1500H redundant system.
2. Select the PROFINET interface X1 of the upper H-CPU (mounting rail_0) of the S7-1500H redundant system.
3. In the Inspector window, navigate to "Properties > General > Advanced options > Media redundancy".
4. Change the MRP domain to "mrpdomain-1" (if required) and the media redundancy role for the H-CPU to "Manager (auto)".
5. Select the PROFINET interface X1 of the lower H-CPU of the S7-1500H redundant system.
6. Change the MRP domain to "mrpdomain-2" (if required) and the media redundancy role for the H-CPU to "Manager (auto)".
7. Enable the "Diagnostic interrupts" option.

Note

If the "Diagnostic interrupts" option is enabled, diagnostic interrupts are generated at the ring ports in the event of the following errors:

Wiring or port error:

- A neighbor of the ring port does not support media redundancy MRP.
- A ring port is connected to a non-ring port.
- A ring port is connected to the ring port of a different MRP domain.

You can find more information on this topic in the STEP 7 online help.

5. Specify MRP role and MRP domain for the R1 devices of the redundant S7-1500H system in STEP 7.

To define the media redundancy for the further devices of the rings, proceed as follows:

1. Switch to the device view of the left ET 200SP (ET200SP-R1_1).
2. Click on the PROFINET interface X1 of the left IM 155-6 PN R1.
3. Change the MRP domain to "mrpdomain-1" (if required) and the media redundancy role to "Client".
4. Click on the PROFINET interface X1 of the right IM 155-6 PN R1.
5. Change the MRP domain to "mrpdomain-2" and the media redundancy role to "Client".
6. Switch to the device view of the right ET 200SP (ET200SP-R1_2) and repeat steps 2 to 5.

Note

Alternative method for assigning MRP role and MRP domain.

For larger projects, we recommend assigning MRP roles and MRP domains as follows:

1. Switch to the network view.
2. Click the connection PN/IE_1.
3. In the Inspector window, navigate to "Properties > General > MRP domains".
4. Scroll down to the "Devices" section

- Under "PROFINET IO system", select the controller interface.
- Under "Devices" you configure the respective MRP domain and the MRP role.

6. Configuring devices outside the STEP 7 project

Set the MRP role "Client" for devices of the PROFINET rings that are not in STEP 7.

Reference

You can find information on the PROFINET topologies of S7-1500R/H redundant systems in the PROFINET Function Manual.
(https://support.industry.siemens.com/cs/ww/en/view/49948856)

8.5 Configuring other configuration variants

Introduction

In this section you will find information on configuring other configuration variants of the S7-500H redundant system.

Configuration of PROFINET rings or line topology with R1 devices and Y-switch

Reparamaterize operating mode for S2 devices that can only be accessed by an H-CPU

If the S2 device is only accessible by one CPU, then the default operating mode IO device (S2) (e.g., for switches) at the H-CPUs triggers the MAINT diagnostics. The MAINT LEDs on the H-CPUs light up. To prevent MAINT diagnostics, you must change the operating mode from "IO device(S2)" to "IO device(S1)". The parameter operating mode can be set in STEP 7 in the "I/O communication" view for each S2 device.

Configuring Y-switches with DNA redundancy

You have the following options for configuring DNA redundancy:

- You configure DNA redundancy via the web- based management of the Y switches. Result: The Y-switches are not integrated as IO devices in STEP 7.
- Recommendation: You configure DNA redundancy in the hardware configuration and parameterize the Y-switches as IO devices. This allows you to evaluate the PROFINET diagnostics of the Y-switches and perform quick troubleshooting.

MRP roles for Y-switch and IO devices of the lower-level PROFINET ring

Assign the following MRP roles:

- For Y switch: "Manager"
- For two Y switches with DNA redundancy:
  - Y switch as MRP Manager/DNA Manager: "Manager"
  - Y-Switch as MRP client/DNA client: "Client"
- For IO devices: "Client"

For more information on DNA redundancy and the parameter assignment of the lower-level PROFINET ring on the Y-switch, refer to the SCALANCE XB-200/XC-200/XF-200BA/XP-200/XR-300WG Web Based Management (https://support.industry.siemens.com/cs/ww/en/view/109780061) configuration manual.

Note

Special features when configuring the PROFINET interfaces

When using S2/S1 devices downstream of a Y switch, all IP addresses must be in the same subnet. S2/S1 devices have only one interface module in contrast to R1 devices. If the current primary CPU is in a different subnet than the S2/S1 devices, these are no longer accessed by the primary CPU. In this case, STEP 7 already outputs an error message when compiling the configuration.

Line topology configuration with R1 devices and switches

Reparameterize the operating mode of the switches

The default operating mode IO device (S2) of the switches permanently triggers the MAINT diagnostics at the H-CPUs. The MAINT LEDs on the H-CPUs light up. To prevent MAINT diagnostics, you must change the operating mode of the switches from "IO device(S2)" to "IO device(S1)". The parameter operating mode can be set in STEP 7 in the "I/O communication" view for each IO device.

See also

Configuring R/H CPUs (Page 224)

8.6 Display of the IO device assignments in STEP 7

Introduction

In the STEP 7 "I/O communication" view, you can display the IO device assignments and change the operating mode of the IO devices.

Procedure

To access the "I/O communication" view, follow these steps:

1. In the network view of STEP 7, select the redundant system.
2. In the tabular view of the network view switch to "I/O communication".

Display of the IO device assignments in STEP 7

Regardless of whether an IO device is connected as system redundant or as standard IO device ("switched S1 device") to the redundant S7-1500R/H system, the network view always shows "Multi assigned".

The table contains all assignments of IO devices to the PROFINET interfaces of the redundant S7-1500R/H system.
The "Operating mode" column indicates how the IO device is connected to the S7-1500R/H redundant system:

- IO device (S2): IO device is connected system redundant.
- IO device (R1): IO device is connected system redundant.
- IO device (S1): IO device is connected over the "Switched S1 device" function.

If you want to change the operating mode of an IO device, then click on the entry and select another operating mode.

The following figure shows how STEP 7 displays the two IO devices with system redundancy S2 in the tabular view of the network view.

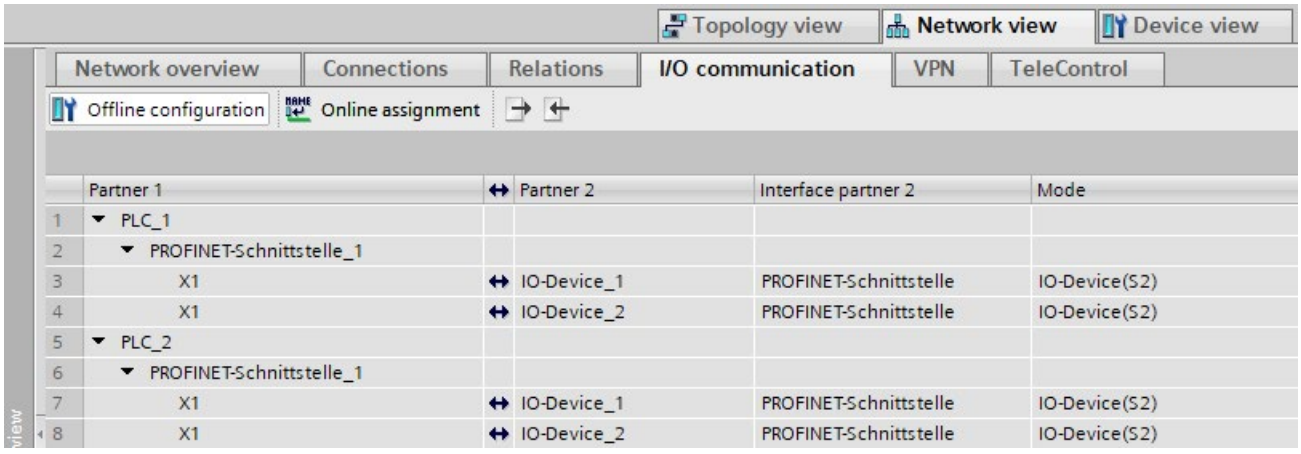

Figure 8-11 Display of the IO device assignments in STEP 7

Reference

Calculation of the PROFIsafe monitoring time

For the calculation of the PROFIsafe monitoring time you will find the times RDHT [ms] and MTOT [ms] in the right area of the "I/O communication" view.

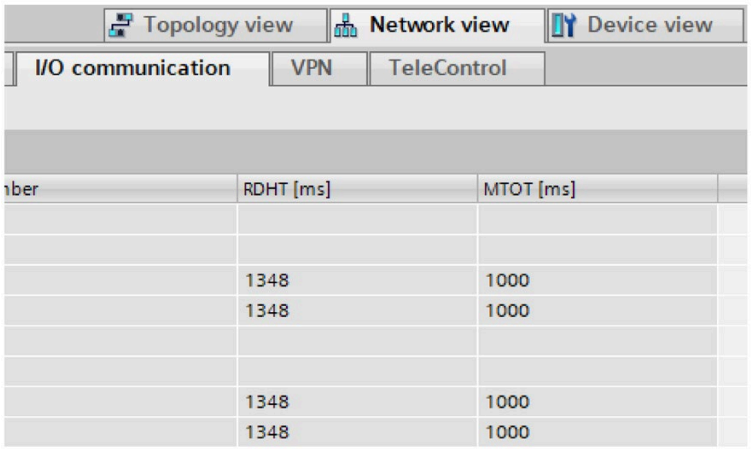

Figure 8-12 Display of time information RDHT and MTOT

Time information RDHT: **R**edundancy **D**ata **H**old **T**ime. RDHT indicates the time duration, how long the outputs of an IO device are not updated during AR switching before the IO device fails.

Time information MTOT: **M**aximum **T**ake **o**ver **T**ime. MTOT indicates the time duration how long the inputs of an IO device are not updated during AR switching before the IO device fails.

Valid values for RDHT and MTOT are only displayed after you have compiled the STEP 7 project. If you change the hardware configuration afterwards, you have to recompile the project. After the compile STEP 7 shows valid values again.

For more information, refer to the following entry on the Internet (https://support.industry.siemens.com/cs/ww/en/view/93839056) and in the SIMATIC Safety - Configuring and Programming (https://support.industry.siemens.com/cs/ww/en/view/54110126) programming and operating manual.

8.7 Project tree

Structure of the project tree

In the project tree, STEP 7 creates the project tree for the CPUs. The project tree has a tree structure and contains all elements and editors of the project.

Table 8- 2 Structure of the project tree

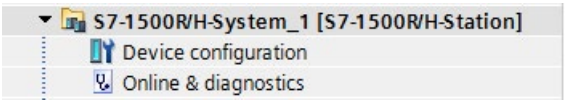	Below the H system, you will find the device configuration and diagnostic options that apply to the system as a whole.
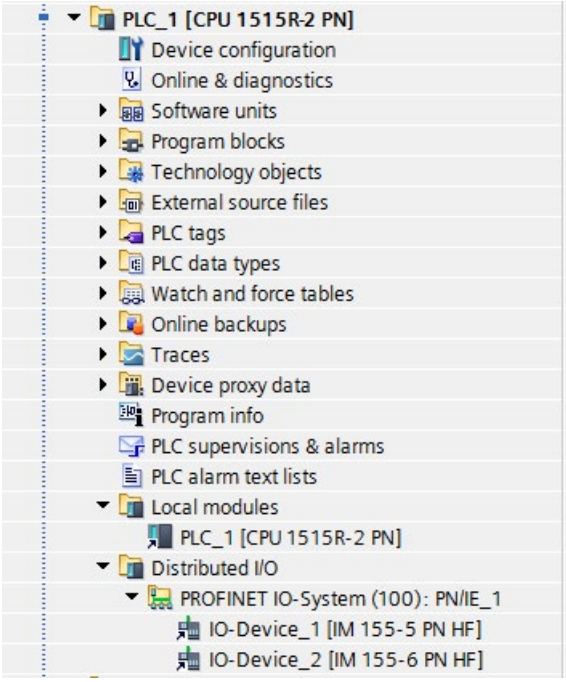	The CPU displayed in the upper section of the project tree has the redundancy ID "1". The properties of the CPU are displayed below it. This section also contains other properties of the redundant system, the user program and other system-related project items. With the HF-CPUs, the Safety Administration Editor is located in the top CPU. The IO devices assigned to the CPU are listed under "Distributed I/O".
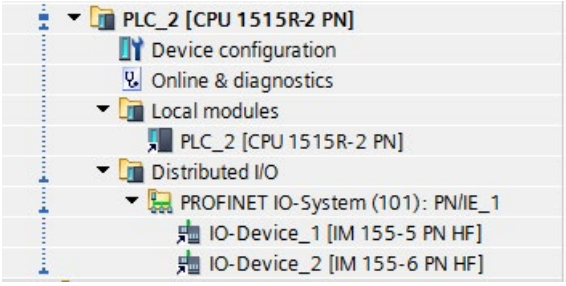	The CPU in the lower section of the project tree has the redundancy ID "2". The properties of the CPU are displayed below it. The IO devices assigned to the CPU are listed under "Distributed I/O".
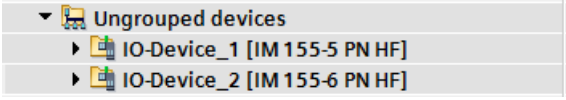	All distributed I/O devices used are listed under "Ungrouped devices".

8.8 Parameters

"Parameter assignment" means setting the module properties. This includes setting addresses, enabling alarms and defining communication properties.

You assign the property parameters for the CPUs in the area navigation, in the STEP 7 Inspector window. The CPUs have general parameters and R/H-specific parameters. Some parameters must be identical for both CPUs. STEP 7 applies these parameters to the second CPU. Other parameters must be different on each CPU (for example device IP addresses). If your configuration is not consistent, STEP 7 will point out the conflict.

Reference

You can find a detailed description of all CPU parameters in the STEP 7 online help.

8.9 Process images and process image partitions

8.9.1 Process image - overview

Process image inputs and outputs

The process image of the inputs and outputs is an image of the signal states. The CPU transfers the values from the input and output modules to the process image inputs and outputs. At the start of the cyclic program, the CPU transfers the process image output as a signal state to the output modules. The CPU then transfers the signal states of the input modules to the process image inputs.

Advantages of the process image

A consistent map of the process signals is available via the process image during cyclic program execution. If a signal state at an input module changes during program execution, the signal state is retained in the process image. The CPU does not update the process image until the next cycle.

Consistency of the process image

When the process image is updated, the S7-1500R/H redundant system accesses the data of each submodule as consistent data. This behavior is identical to that of S7-1500 CPUs.

The maximum data width that is accessed as consistent data for each submodule depends on the IO system. For PROFINET IO, for example, this data width is 1024 bytes.

32 process image partitions

The CPU uses process image partitions to synchronize the updated inputs/outputs of specific modules with specific parts of the user program.

In the S7-1500R/H redundant system, the overall process image is subdivided into up to 32 process image partitions (PIP).

The CPU automatically updates the TPA 0 (automatic update) at the beginning of each program cycle. You can find additional information in the Cycle and response times (http://support.automation.siemens.com/WW/view/en/59193558) function manual.

You can assign other OBs to process image partitions PIP 1 to PIP 31 during configuration of the IO devices.

The CPU always reads the process image partition of the inputs (PIPI) before processing the associated OB. The CPU outputs the process image of the outputs (PIPQ) at the end of the OB.

The figure below illustrates the updating of a process image partition.

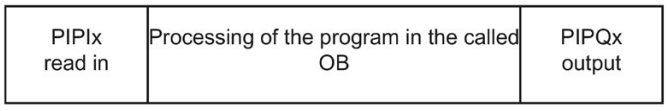

Figure 8-13 Updating a process image partition

8.9.2 Updating process image partitions in the user program

Requirements

Alternatively, you can also use the following instructions to update process images:

- "UPDAT_PI" instruction
- "UPDAT_PO" instruction

You will find the instructions in STEP 7 in the "Instructions" task card under "Extended instructions". The instructions can be called from any point in the user program.

Requirements for updating process image partitions with the "UPDAT_PI" and "UPDAT_PO" instructions:

- The process image partitions must not be assigned to any OB. This means the process image partitions are not automatically updated.

Note

Update of PIP 0

PIP 0 (automatic update) cannot be updated with the "UPDAT_PI" and "UPDAT_PO" instructions.

UPDAT_PI: Updates the process image partition of the inputs

With this instruction, you read the signal states from the input modules of the IO devices to the process image partition of the inputs (PIPI).

UPDAT_PO: Updates the process image partition of the outputs

With this instruction, you transfer the process image partition (PIP) of the outputs to the output modules of the IO devices.

Direct I/O access to the inputs and outputs of the IO devices

You also have direct read and write access to the I/O as an alternative to access via the process image, should direct access be required for programming reasons. Direct (write) I/O access also writes to the process image. This prevents a subsequent output of the process image from again overwriting the value written by direct access.

Note

Avoid direct I/O access. Each instance of direct I/O access is synchronized in the RUN-Redundant system state and results in a higher cycle time. Recommendation: Access the inputs and outputs of the IO devices over the process image or process image partitions.

Reference

You can find more information on process image partitions in the Cycle and response times (http://support.automation.siemens.com/WW/view/en/59193558) function manual.

Basics of program execution 9

9.1 Programming the S7-1500R/H

User program for the S7-1500R/H redundant system

For the design and programming of the user program, the same rules apply for the redundant S7-1500R/H system as for the S7-1500 automation system.

The user program is stored identically in both CPUs in redundant operation. Both CPUs process the user program event-synchronously.

From the point of view of user program execution, the S7-1500R/H redundant system behaves like the S7-1500 automation system. Synchronization is integrated into the operating system and runs automatically and hidden between the primary and backup CPU.

Specific instructions and blocks for the S7-1500R/H redundant system

Specific instructions and OBs are available for the S7-1500R/H redundant system.

"RH_CTRL" instruction

With the "RH_CTRL" instruction, you can influence the redundant system as follows:

- Lock performance of SYNCUP (Mode 3) or release performance of SYNCUP again (Mode 4).
  The goal is to allow SYNCUP only in less critical process phases if necessary (see section Disabling/enabling SYNCUP with the RH_CTRL instruction (Page 259) for more information).

As of firmware version V2.9:

- Request SYNCUP (Mode 7).
  With this function, you can request a SYNCUP via the user program in RUN-Solo system state.
- Switch primary CPU to STOP mode (Mode 8, only in RUN-Redundant system state).
  In an emergency (e.g. fire alarm in the area of the primary CPU), you can perform a primary-backup switchover as a precaution with this function.
- Switch backup CPU to STOP mode (Mode 9).

As of firmware version V3.0:

- Query current status, whether SYNCUP is blocked or enabled (mode 10).

"RH_GetPrimaryID" instruction

You use the instruction "RH_GetPrimaryID" in the user program to read out which CPU is currently the primary CPU (see section Determining the primary CPU with "RH_GetPrimaryID" (Page 262) for additional information).

OB 72 (CPU redundancy error)

In addition to the OBs of the S7-1500 CPU, you can also use OB 72 (CPU redundancy error). The operating system of each CPU of an R/H-system calls up the CPU redundancy error OB (OB72) when one of the following events occurs:

- Loss of redundancy due to a CPU failure
- Loss of redundancy due to a CPU transition to STOP mode (triggered by the user or the system)

Up to firmware version V2.8:

- The R/H system has entered the RUN-Redundant system state.

As of firmware version V2.9:

- The R/H-system has entered RUN-Redundant system state and the synchronization of the two R/H-CPUs is possible redundantly.
- The R/H-system has entered RUN-Redundant system state, but the synchronization of the two R/H-CPUs is not possible redundantly.
- The R/H-system is still in RUN-Redundant system state and the synchronization of the two R/H-CPUs is possible redundantly now or again.
- The R/H-system is still in RUN-Redundant system state, but the synchronization of the two R/H-CPUs is no longer possible redundantly.

Note

An R/H-system with non-redundant synchronization may not tolerate any further failures. In this case, you need to check and possibly repair the PROFINET ring (R-system) or the fiber-optic cables (H-system) immediately.

OB 70 (IO redundancy error)

As of firmware version V3.0, OB 70 (I/O redundancy error) is available for the diagnostics of R1 and S2 devices in S7-1500H systems.

The operating system of the CPUs calls OB 70 if a redundancy loss or a redundancy return occurs in the system state RUN-Redundant at a redundant R1/S2 device. Loss of redundancy means that one AR of two ARs of an R1/S2 device fails. Redundancy return means that the second AR of an R1/S2 device returns.

For example, the loss of redundancy is caused by one of the following events:

- Failure of an S2 device due to voltage failure
- Failure of one of two interface modules of the R1 device
- Line interruption on one side of the R1 or S2 device

OB 70 is only called in the system state RUN-Redundant. When the H-system leaves the system state RUN-Redundant, OB 72 (CPU redundancy error) is called.

STEP 7 online help

You can find additional information on instructions and blocks in the STEP 7 online help.

Special features in program execution

- You create the user program for the S7-1500R/H redundant system in the top CPU (for example PLC_1) in the STEP 7 project tree.
- The S7-1500R/H redundant system does not support some of the instructions the S7-1500 CPUs. Instructions that are not supported by the S7-1500R/H redundant system are grayed out in STEP 7 in the "Instructions" task card.
  STEP 7 shows the instructions that are not supported in the program code in red. If you compile program code with instructions that are not supported, STEP 7 outputs an error message.
  The instructions that are not supported are set out in the section Restrictions (Page 250).
- In the case of instructions with the "LADDR" block parameter, you use this parameter to determine which of the two CPUs is the target of this instruction.
  Example: To read out the I&M data of the CPU with redundancy ID 1, specify the HW identifier 65149 (or the "Local1" system constant) at the "LADDR" block parameter of the Get_IM_Data instruction.
  You can find more information about the block parameters and the system constants of the S7-1500R/H redundant system in the STEP 7 online help.
- In the case of a SYNCUP, the execution time of many instructions operating asynchronously is extended. If you call asynchronous instructions in SYNCUP system state with the redundant S7-1500R/H system, the required function may not be triggered.
  Solution: After SYNCUP ends, call the asynchronous instruction again. The function will then be triggered.
  Recommendation: Always call the asynchronous instructions cyclically.
- In contrast to the S7-1500 automation system, the redundant S7-1500R/H system initializes temporary local data for functions (FCs) not only during optimized block access but also during non-optimized block access. Information on system initialization for optimized block access can be found in the STEP 7 online help.
- Changing CPU settings with data records for the SNMP status and the behavior in case of faults of the acyclic communication (for example with the instructions RDREC and WRREC): If you want to change the default behavior of the CPU for the specified application cases per data record transfer, the following special data records are available to you for this purpose. The structure of the data records is identical for standard and R/H-CPUs. However, when programming in the context of redundant systems, particular points have to be taken into consideration so that the setting acts on both CPUs. These particular points are specified in the corresponding sections of the PROFINET and Communication function manuals:
  - Communication (https://support.industry.siemens.com/cs/ww/en/view/59192925) function manual: SNMP
  - PROFINET (https://support.industry.siemens.com/cs/ww/en/view/49948856) function manual: Handling timeouts while exchanging data

Programming style guide

The programming guidelines described in the programming style guide help you to create a uniform program code. You can better maintain and reuse the uniform program code. This allows you to detect or avoid errors early on, for example, through compilers.

The programming style guide is available on the Internet (https://support.industry.siemens.com/cs/ww/en/view/109478084).

9.2 Restrictions

Supported instructions with restrictions

Table 9- 1 Supported instructions with restrictions CPU 1513R / CPU 1515R / CPU 1517H / CPU 1518HF with firmware version V3.0

Instruction	Description	Restriction
Communication		
TMAIL_C (V5.0 or higher)	Transfer email	The S7-1500R/H CPUs as of firmware version V2.9 support the versions < V5.0 of the instruction "TMAIL_C".
Extended instructions		
CREATE_DB	Create data block	The creation of the data block in the "Only in work memory" mode is not supported. The other two modes "Only in load memory" or "Work and load memory" are supported. For more information, see the STEP 7 online help.

Instructions not supported

Table 9- 2 Unsupported instructions CPU 1513R / CPU 1515R / CPU 1517H / CPU 1518HF with firmware version V3.0

Instruction	Description
Communication	
GET	Read data from a remote CPU
PUT	Write data to a remote CPU
USEND	Send data uncoordinated
URCV	Receive data uncoordinated
BSEND	Send data in segments
BRCV	Receive data in segments
T_CONFIG	Configure interface
OPC_UA_Connect	Create connection
OPC_UA_NamespaceGetIndexList	Read namespace indexes
OPC_UA_NodeGetHandleList	Get handles for read and write access
OPC_UA_MethodGetHandleList	Get handles for method calls
OPC_UA_TranslatePathList	Read node parameters
OPC_UA_ReadList	Read tags
OPC_UA_WriteList	Write tags
OPC_UA_MethodCall	Call method
OPC_UA_NodeReleaseHandleList	Enable handles for read and write access
OPC_UA_MethodReleaseHandleList	Enable handles for method calls
OPC_UA_Disconnect	Close connection
OPC_UA_ConnectionGetStatus	Read connection status
OPC_UA_ServerMethodPre	Preparation of the server method call
OPC_UA_ServerMethodPost	Post preparation of the server method call
WWW	Synchronize user pages
S_USSI	Initialize USS

Instruction	Description
FTP_CMD	Setup of FTP connections from and to an FTP server
Extended instructions	
SET_TIMEZONE[1]	Set time zone
SNC_RTCB	Synchronize slave clocks
SYNC_PI	Synchronize process image inputs
SYNC_PO	Synchronize process image outputs
D_ACT_DP	Enable/disable DP slaves
ReconfigIOSystem	Reconfigure IO system
WR_REC	Write data record to I/O (use new instruction WRREC)
RD_REC	Read data record from I/O (use new instruction RDREC)
RCVREC	Receive data record (I-device)
PRVREC	Make data record available (I-device)
DPSYC_FR	Synchronize DP slaves/Freeze inputs
DPNRM_DG	Read diagnostics data from a DP slave
DP_TOPOL	Determine topology for DP master system
PE_WOL	Start and end energy-saving mode via WakeOnLan
PE_I_DEV	Control PROFIenergy commands in I-Device
WR_DPARM	Transfer data record
ATTACH	Attach OB to interrupt event
DETACH	Detach OB from interrupt event
DataLogCreate	Create data log
DataLogOpen	Open data log
DataLogWrite	Write data log
DataLogClear	Empty data log
DataLogClose	Close data log
DataLogDelete	Delete data log
DataLogNewFile	Data log in new file
FileReadC	Read file from memory card
FileWriteC	Write file on memory card
Basic instructions	
ReadFromArrayDBL	Read from ARRAY data block in load memory
WriteToArrayDBL	Write to ARRAY data block in load memory
Technology	
All instructions for Motion Control (MC_Power, MC_Home, MC_...)	-
Time-based IO	
TIO_SYNC	Synchronize TIO modules
TIO_DI	Read in edges at digital input and associated time stamps
TIO_DQ	Output edges time-controlled at digital output

[1] Upon a call in the CPU, the instruction provides a negative return value RETVAL.

Unsupported OBs

The CPUs of the S7-1500R/H redundant system do not support the following OBs:

- Synchronous cycle interrupt OB
- OB 67 "MC-PreServo"
- OB 91 "MC-Servo"
- OB 92 "MC-Interpolator"
- OB 95 "MC-PostServo"

9.3 Events and OBs

Start events

The table below gives an overview of the possible event sources for start events and their OBs:

Table 9- 3 Start events

Event sources	Possible priorities (default priority)	Possible OB numbers	Default system response[1]	Number of OBs
Startup	1	100, ≥ 123	Ignore	0 to 100
Cyclic program	1	1, ≥ 123	Ignore	0 to 100
Time-of-day interrupt	2 to 24 (2)	10 to 17, ≥ 123	Not applicable	0 to 20
Time-delay interrupt	2 to 24 (3)	20 to 23, ≥ 123	Not applicable	0 to 20
Cyclic interrupt	2 to 24 (8 to 17, frequency dependent)	30 to 38, ≥ 123	Not applicable	0 to 20
Hardware interrupt	2 to 26 (16)	40 to 47, ≥ 123	Ignore	0 to 50
Status interrupt	2 to 24 (4)	55	Ignore	0 or 1
Update alarm	2 to 24 (4)	56	Ignore	0 or 1
Manufacturer-specific or profile-specific interrupt	2 to 24 (4)	57	Ignore	0 or 1
I/O redundancy error	2 to 26 (6)	70	Ignore	0 or 1
CPU redundancy error	2 to 26 (26)	72	Ignore	0 or 1
Time error	22	80	Ignore	0 or 1
Maximum cycle time exceeded			Depends on system state[2]	
Diagnostics interrupt	2 to 26 (5)	82	Ignore	0 or 1
Removal/insertion of modules	2 to 26 (6)	83	Ignore	0 or 1
Rack error	2 to 26 (6)	86	Ignore	0 or 1
Programming error (only for global error handling)	2 to 26 (7)	121	STOP	0 or 1
I/O access error (only for global error handling)	2 to 26 (7)	122	Ignore	0 or 1

1) If you have not configured the OB.

2) See section "Response of S7-1500R/H redundant system when cycle time is exceeded"

Response to start events

The occurrence of a trigger results in the following response:

- If the event comes from an event source to which you have assigned an OB, this event triggers the execution of the assigned OB. The event enters the queue according to its priority (exception: hardware interrupts).
- If the event comes from an event source to which you have not assigned an OB, the CPU executes the default system reaction.

Note

Some event sources, such as startup, pull/plug, exist even if you do not configure them.

Response of OB 72 and OB 86 to system state transitions

If an IO device has failed, the OB 86 reports a "rack failure" if programmed. OB 72 "CPU redundancy error" reports a loss of redundancy in the redundant system or failure of the redundant synchronization.

The figure below shows the behavior of the two OBs during system state transitions from RUN-Solo to RUN-Redundant and vice versa.

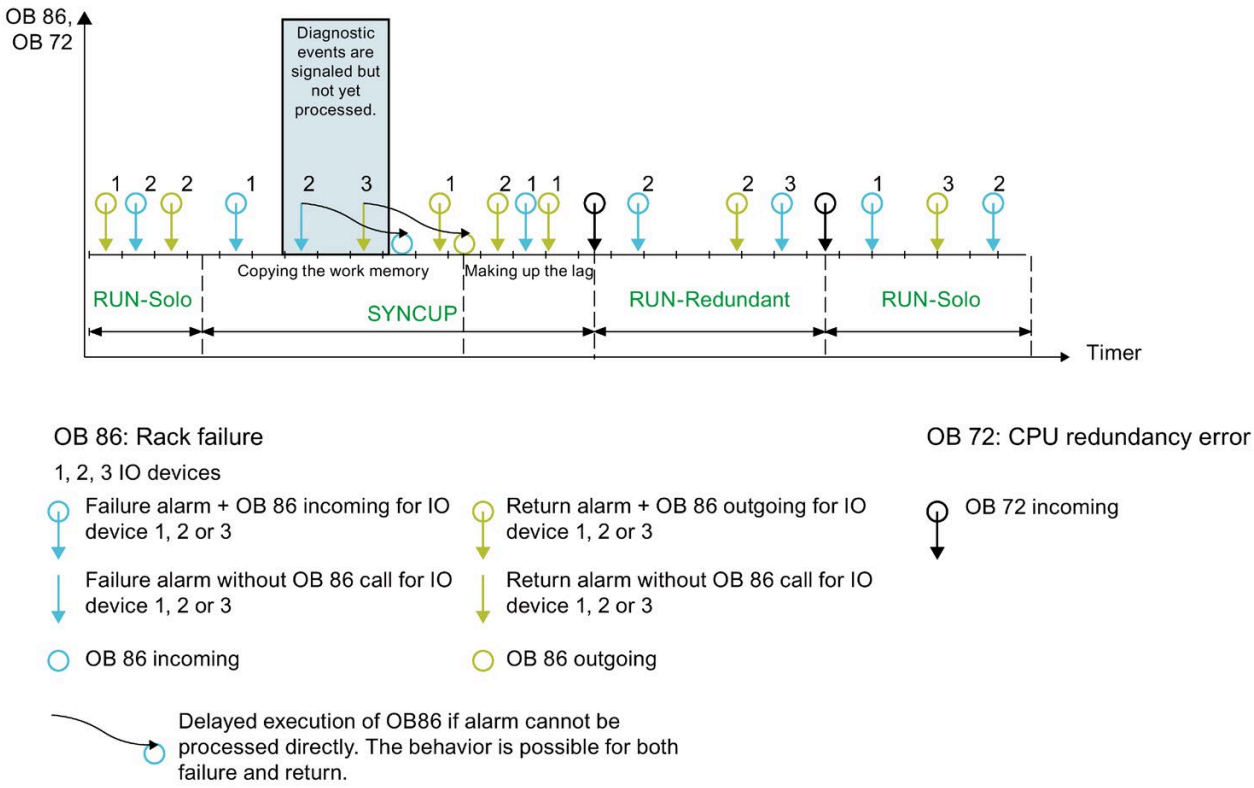

Figure 9-1 OB 72 and OB 86 during system state transitions

OB 86

There are three IO devices in the example. Each failure of one of the three IO devices is followed by recovery of the IO device. Each IO device failure/IO device recovery is signaled. Cyclic program execution is interrupted with an OB 86 call.

In the "Copy main memory" phase of the SYNCUP system state those OBs that interrupt the cyclic program processing are processed. New diagnostic events are signaled but the OBs are not yet processed. In the example, the failure of IO device 2 and the recovery of IO device 3 are signaled. However, the OB 86 are not processed until the following phase, "Making up backup CPU lag".

Note

Order of execution of OB 86

Please note that the order of processing of the OB 86 may differ from the order of processing of the associated diagnostic events.

Note

Station re-integration with errors

When a station returns with errors in an R/H-CPU, no attempt is made - in contrast to a standard CPU - to output exact error information in the diagnostic buffer.

OB 72

If the system then switches to the RUN-Redundant system state, OB 72 "CPU redundancy error" is called. OB 72 is called again:

- If the redundant system exits redundant operation and changes to the RUN-Solo system state.
- If the redundant system is in redundant operation and the synchronization of the two R/H-CPUs is no longer possible redundantly or is possible redundantly again.

All cases can be distinguished by the start information of OB 72. You can find more information on this topic in the STEP 7 online help.

Note

Delayed execution of OB 72

There may also be a delay in executing OB 72 because the corresponding diagnostic event is processed asynchronously to the user program.

Behavior of OB 72 and OB 86 for standard IO devices at primary-backup switchover

If the primary CPU fails or goes to STOP, the standard IO devices are temporarily separated from the redundant S7-1500R/H system. From the CPU perspective, the standard IO devices fail. OB 72 "Redundancy error" is called, additional OB 86 "Module rack failure" for the failed IO devices are not called, however. To detect the failed IO devices, call the DeviceStates instruction in OB 72. To detect all failed IO devices, the OB 72 must have priority 26 (default).

With the "Switched S1 device" function, the new primary CPU establishes the ARs to the standard IO devices again. OB 86 is called for each return of an IO device.

Behavior of OB 70 and OB 86 at failure of a R1/S2 device in system state RUN-Redundant

If an R1/S2 device fails, then OB 86 reports "Module failure" if programmed accordingly.

- If two ARs existed before the R1/S2 device failure, the operating system calls OB 70 "I/O redundancy error" before OB 86.
- If only one AR existed before the R1/S2 device failure and it is lost, no OB 70 is called.

Behavior of the OB 70 and the OB 86 at return of a R1/S2 device in system state RUN-Redundant

If an R1/S2 device returns, then OB 86 reports "Module return" if programmed accordingly.

The call of OB 86 indicates the station return, independent of the redundancy status of the R1/S2 device at the time of the call of OB 86.

- If both ARs can be established on return, OB 70 is called after OB 86. The R1/S2 device is redundant.
- If only one AR can be set up on return, no OB 70 is called. The R1/S2 device is not redundant.

Priority of OB 70 and OB 86

Note

Priority of OB 70 and OB 86

Select the same priority for OB 70 and OB 86 or keep the default setting (priority 6). This prevents the OBs from interrupting each other. The user program processes events of the same priority in order of occurrence.

Behavior of the OB 70 and the OB 86 after SYNCUP

If an R1/S2 device becomes redundant after the system state RUN-Redundant has been accessed, OB 70 (outgoing) is called.

If an IO device is only accessible by the backup CPU and was not reachable at all before the SYNCUP, then in the system state RUN-Redundant OB 86 (outgoing) is called, but not OB 70. This indicates the return of the IO device without redundancy.

Example: OB 72 CPU redundancy failure

Automation task

You use the S7-1500R redundant system to control a blast furnace. The S7-1500R redundant system controls the blast furnace temperature, volume and pressure parameters.

Feature

In the event of a loss of redundancy, for example because the primary CPU fails, a signal lamp in the blast furnace control room signals this event. The control room notifies the service personnel. The service personnel replace the defective CPU.

Solution

OB 72 is called in the event of a CPU redundancy error. The user program in OB 72 controls a digital output module (relay) in an ET 200SP with a connected signal lamp.

Response of S7-1500R/H redundant system when cycle time is exceeded

The tables below show how the redundant system responds when the cycle time is exceeded.

If the user program does not reach the cycle control point within the maximum cycle time, the redundant system responds as described in the column "1st time cycle time is exceeded". The redundant system then resets the cycle time monitoring.

If the maximum cycle time is exceeded for a second time in the same cycle, the redundant system responds as described in the column "2nd time cycle time is exceeded". The redundant system then resets the cycle time monitoring.

If the maximum cycle time is exceeded for a third time in the same cycle, the redundant system responds as described in the column "3rd time cycle time is exceeded". The redundant system then resets the cycle time monitoring (only when time error OB 80 is configured).

Table 9- 4 Response of S7-1500R/H redundant system when cycle time is exceeded, without OB 80

Initial situation			1st time cycle time is exceeded			2nd time cycle time is exceeded		
System	**Primary CPU**	**Backup CPU**	**System**	**Primary CPU**	**Backup CPU**	**System**	**Primary CPU**	**Backup CPU**
RUN-Solo	RUN	STOP	**STOP**	STOP	STOP	**---**	---	---
SYNCUP[1)]	RUN-Syncup	SYNCUP	**STOP**	STOP	STOP	---	---	---
SYNCUP[2)]	RUN-Syncup	SYNCUP	**RUN-Solo**	RUN	STOP	**STOP**	STOP	STOP
RUN-Redundant	RUN-Redundant	RUN-Redundant	**RUN-Solo**	RUN	STOP	**STOP**	STOP	STOP

1) SYNCUP until snapshot of the work memory contents

2) SYNCUP after snapshot of the work memory contents

Table 9- 5 Response of S7-1500R/H redundant system when cycle time is exceeded with OB 80

Initial situation			1st time cycle time is exceeded			2nd time cycle time is exceeded			3rd time cycle time is exceeded		
System	**Primary CPU**	**Backup CPU**	**System**	**Primary CPU**	**Backup CPU**	**System**	**Primary CPU**	**Backup CPU**	**System**	**Primary CPU**	**Backup CPU**
RUN-Solo	RUN	STOP	**RUN-Solo**	RUN + OB 80	STOP	**STOP**	STOP	STOP	**---**	---	---
SYNCUP [1]	RUN-Syncup	SYNCUP	**SYNCUP**	RUN-Syncup + OB 80	SYNCUP	**STOP**	STOP	STOP	---	---	---
SYNCUP [2]	RUN-Syncup	SYNCUP	**SYNCUP**	RUN-Syncup + OB 80	SYNCUP + OB 80	**RUN-Solo**	RUN + OB 80	STOP	**STOP**	STOP	STOP
RUN-Redundant	RUN-Redundant	RUN-Redundant	**RUN-Redundant**	RUN-Redundant + OB 80	RUN-Redundant + OB 80	**RUN-Solo**	RUN + OB 80	STOP	**STOP**	STOP	STOP

[1] SYNCUP until snapshot of the work memory contents

[2] SYNCUP after snapshot of the work memory contents

Assignment between event source and OBs

The type of OB determines where you assign OB to event source:

- For hardware interrupts: Assignment in hardware configuration
- For all other OB types: Assignment when the OB is created, where applicable after you have configured the event source

OB priority and runtime behavior

If you have assigned an OB to the event, the OB has the priority of the event. S7-1500R/H CPUs support the priorities 1 (lowest) to 26 (highest). The following items are essential to the execution of an event:

- Call and execution of the assigned OB
- The update of the process image partition of the assigned OB

The user program processes the OBs exclusively on a priority basis. This means the program processes the OB with the highest priority first when multiple OB requests occur at the same time. If an event occurs that has a higher priority than the currently active OB, this OB is interrupted*. The user program processes events of the same priority in order of occurrence.

*Exception: In the RUN-Redundant system state, a higher-priority OB 83 "Pull/plug modules" does **not** interrupt the execution of an OB 82 "Diagnostic interrupt".

Note

Communication

Communication (for example test functions with the PG/PC) always operates with a priority of 15. To avoid unnecessarily prolonging the program runtime in the case of time-critical applications, make sure that these OBs are not delayed or interrupted by communication. Assign a priority > 15 for these OBs.

Reference

Additional information on organization blocks is available in the STEP 7 online help.

9.4 Special instructions for S7-1500R/H redundant systems

9.4.1 Disabling/enabling SYNCUP with the RH_CTRL instruction

Introduction

You use the "RH_CTRL" instruction to disable SYNCUP or to enable the execution of the SYNCUP for the S7-1500R/H redundant system. The disable applies:

- Until you cancel it with the "RH_CTRL" instruction or
- Until the S7-1500R/H redundant system switches to the STOP system state

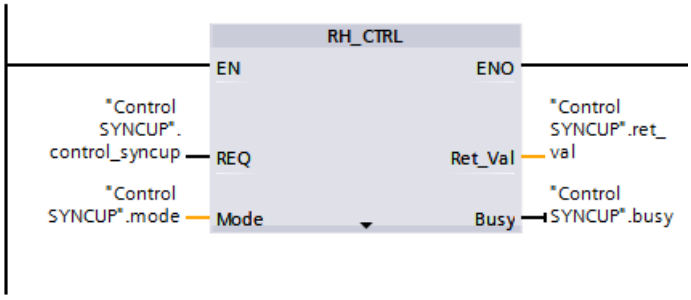

Figure 9-2 RH_CTRL instruction

Example: Disabling/enabling SYNCUP for a baggage handling system

Automation task

A baggage handling system at an airport is used to distribute pieces of baggage. When a flight lands, all baggage is loaded onto the baggage handling system. The baggage passes through a scanner at high speed. The scanner checks the destination of the baggage:

- If a piece of baggage has reached its destination airport, the baggage handling system forwards it directly to baggage claim.
- If a piece of baggage has not reached its final destination, the system immediately redirects it towards the connecting flight.

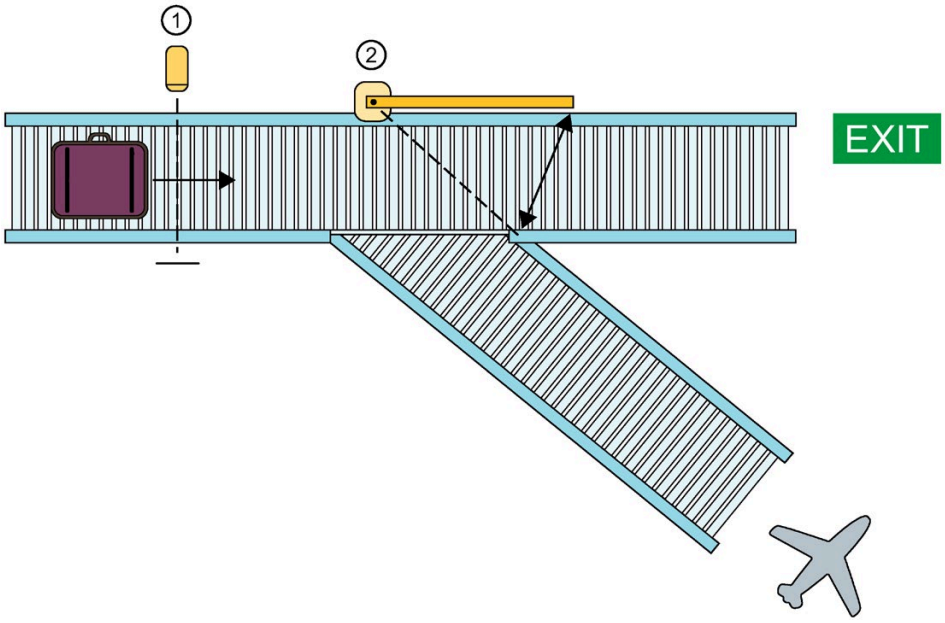

① Scanner

② Deflector

Figure 9-3 Airport baggage handling system

To ensure high availability for the baggage handling system, you use an S7-1500R/H redundant system as controller. If one of the CPUs fails (loss of redundancy), the S7-1500R/H redundant system switches from the RUN-Redundant system state to RUN-Solo. A CPU continues to ensure the control of the baggage handling system, but no second redundant CPU is available.

Replace the failed CPU with a replacement CPU. The procedure for replacing the CPU is described in the section Replacing defective R/H-CPUs (Page 366).

As soon as you set the exchanged CPU to RUN, the R/H-System responds as follows:

- The replaced CPU (Backup CPU) switches to SYNCUP operating state and sends a corresponding status message to the primary CPU.
- The primary CPU then switches from the RUN operating state to RUN-Syncup.
- The S7-1500R/H redundant system then does a SYNCUP.

During SYNCUP, the user program of the primary CPU runs through a cycle with an extended cycle time. In this cycle, there is a delay before the redundant system responds to input signal changes.

If a piece of baggage passes the scanner during the SYNCUP, the redundant system only responds to the scanner after the extended cycle described above. In the worst case scenario, the piece of baggage has already passed the deflector before the system responds. The piece of baggage is then moved to baggage claim rather than to the connecting flight.

Feature

You need the "RH_CTRL" instruction, which allows you to disable and enable the execution of the SYNCUP as required.

Solution

You use the "RH_CTRL" instruction to disable the execution of the SYNCUP system state for the S7-1500RH redundant system. If the disable is no longer required, you enable the execution of the SYNCUP again with the "RH_CTRL" instruction.

Disable the execution of the SYNCUP to avoid a long program cycle when the baggage handling system is operating at or near capacity. To do so, call the "RH_CTRL" instruction with block parameter MODE = 3 in the user program.

Replace the failed CPU with a replacement CPU.

As soon as you set the exchanged CPU with disabled SYNCUP to RUN, the R/H-System responds as follows:

- The exchanged CPU (Backup CPU) shows the SYNCUP state.
- The Primary CPU then displays the RUN-Syncup state.
- The redundant system switches to the SYNCUP system state. The redundant system is **not** yet running a SYNCUP.

As soon as the baggage handling system is operating at low capacity, for example at night, enable the SYNCUP system state. To do so, call the "RH_CTRL" instruction with block parameter MODE = 4 in the user program.

The redundant system runs a SYNCUP. The redundant system then switches to the RUN-Redundant system state. Now disable SYNCUP again by calling the "RH_CTRL" instruction in the user program with the block parameter MODE = 3.

Reference

You can find additional information on the "RH_CTRL" instruction in the STEP 7 online help.

You can find more information on SYNCUP in the section SYNCUP system state (Page 309).

9.4.2 Determining the primary CPU with "RH_GetPrimaryID"

You use the "RH_GetPrimaryID" instruction to read out which CPU is currently the primary CPU. The instruction outputs the redundancy ID of the primary CPU at the Ret_Val block parameter.

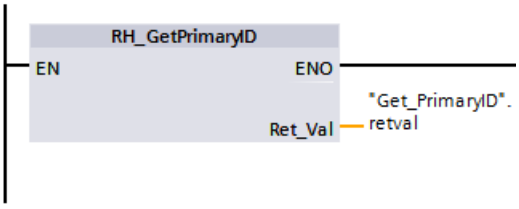

Figure 9-4 "RH_GetPrimaryID" instruction

Example: Reading maintenance information from the SIMATIC memory card of the primary CPU

Proceed as follows to read specific maintenance information from the SIMATIC memory card of the primary CPU:

1. Get the redundancy ID of the primary CPU with "RH_GetPrimaryID".
2. Read the maintenance information from the SIMATIC memory card of the primary CPU with "GetSMCInfo".
   - If the CPU with redundancy ID 1 is the primary CPU, enter "12" at the Mode block parameter ("1" for redundancy ID, "2" for maintenance information).
   - If the CPU with redundancy ID 2 is the primary CPU, enter "22" at the Mode block parameter ("2" for redundancy ID, "2" for maintenance information).

Reference

You can find more information on the "RH_GetPrimaryID" instruction in the STEP 7 online help.

9.5 Asynchronous instructions

Introduction

During program execution a distinction is made between synchronous and asynchronous instructions.

The "synchronous" and "asynchronous" properties relate to the temporal relationship between the call and execution of the instruction.

The following applies to synchronous instructions: When the call of a synchronous instruction is complete, execution of the instruction is also complete.

This is different in the case of asynchronous instructions: When the call of an asynchronous instruction is complete, execution of the asynchronous instruction is not necessarily complete yet. This means the execution of an asynchronous instruction can extend over multiple calls. The CPU processes asynchronous instructions in parallel with the cyclic user program. Asynchronous instructions generate jobs in the CPU for their processing.

Asynchronous instructions are usually instructions for transferring data, for example data records for modules, communication data, or diagnostics data.

Difference between synchronous/asynchronous instructions

The figure below shows the difference between the processing of an asynchronous instruction and a synchronous instruction. In this figure the CPU calls the asynchronous instruction five times before its execution is complete, e.g. a data record has been completely transferred.

With a synchronous instruction, the instruction is fully executed in each call.

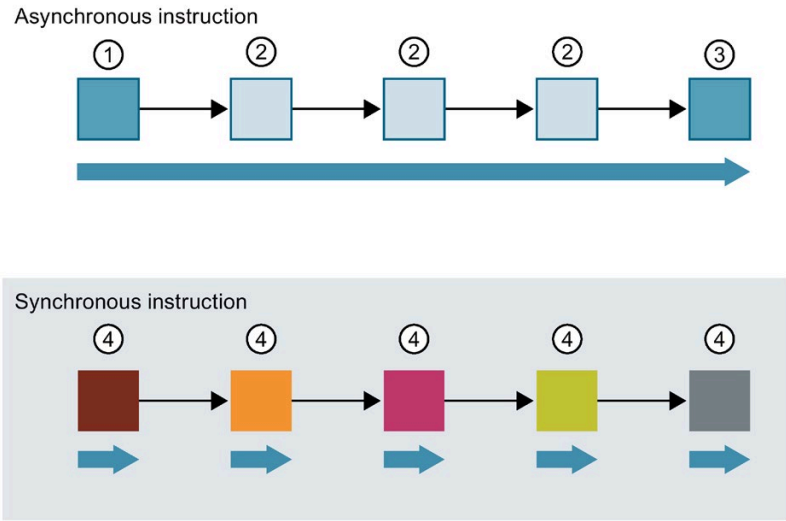

① First call of the asynchronous instruction, start of execution
② Intermediate call of the asynchronous instruction, execution continues.
③ Last call of the asynchronous instruction, completion of execution
④ A job is fully processed by a synchronous instruction with each call.
➡ Duration of a fully executed job

Figure 9-5 Difference between asynchronous and synchronous instructions

---

Note

Processing of an asynchronous instruction during the SYNCUP system state

If the S7-1500R/H redundant system executes SYNCUP, this extends the processing time for an asynchronous instruction.

The dynamic behavior of the system state SYNCUP requires that you call asynchronous instructions cyclically (e.g. in OB 1).

Parallel processing of asynchronous instruction jobs

A CPU can process several asynchronous instruction jobs in parallel. The CPU processes the jobs in parallel under the following conditions:

- Jobs for an asynchronous instruction are started while other jobs for that instruction are still running.
- The maximum number of simultaneously running jobs for the instruction is not exceeded.

The figure below shows the parallel processing of two jobs of the WRREC instruction. The two instructions are executed simultaneously for a certain duration.

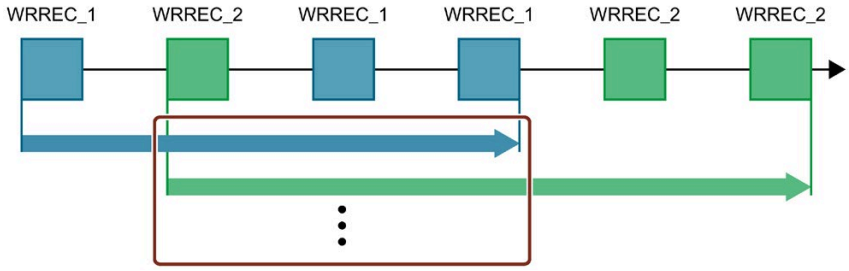

Figure 9-6 Parallel processing of the asynchronous instruction WRREC

Note

Dependencies between asynchronous statements

The call sequence in the user program may differ from the processing sequence of the asynchronous instructions. This can lead to problems with dependencies between asynchronous instructions.

Solution: To ensure correct timing of processing, use the status outputs of the asynchronous statements in a sequencer. If an asynchronous instruction is finished and this is acknowledged via the parameter DONE, then only the next asynchronous instruction should start.

Example: For the RecipeImport and RecipeExport recipe functions, you need a CSV file for the recipe data. If you use the same CSV file for import and export, then the two asynchronous statements are dependent on each other. In a sequencer, link the status of the DONE parameter of the RecipeImport instruction in the transition to the next step where the RecipeExport is executed. The link thus ensures correct processing.

Assigning calls of an instruction to a job

To execute an instruction over multiple calls, the CPU must be able to uniquely relate a subsequent call to a running job of the instruction.

To relate a call to a job, the CPU uses one of the following two mechanisms, depending on the type of the instruction:

- Using the instance data block of the instruction (for "SFB" type)
- Using the input parameters of the instruction that identify the job. These input parameters must match in each call during processing of the asynchronous instruction.
  Example: The instruction "RD_DPARA" is identified by LADDR and RECNUM.

Status of an asynchronous instruction

An asynchronous instruction shows its status via the block parameters STATUS/RET_VAL and BUSY. Many asynchronous instructions also use the block parameters DONE and ERROR.

The figure below shows the two asynchronous instructions WRREC and RD_DPARA.

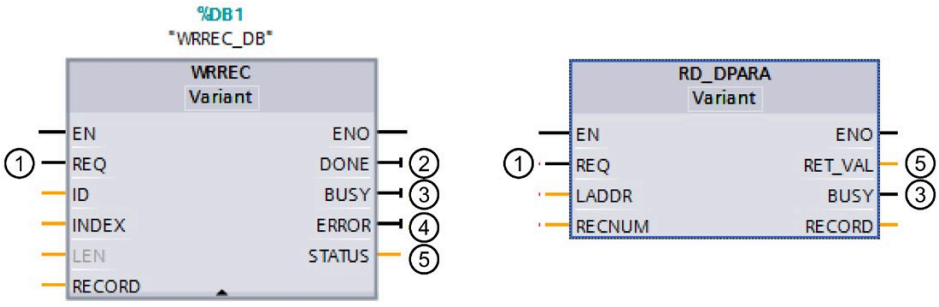

① The input parameter REQ starts the job to execute the asynchronous instruction.

② The output parameter DONE indicates that the job was completed without error.

③ The output parameter BUSY indicates whether the job is currently being executed. When BUSY=1, a resource is allocated for the asynchronous instruction. When BUSY= 0, the resource is free.

④ The output parameter ERROR indicates that an error has occurred.

⑤ The output parameter STATUS/RET_VAL provides information on the status of the job execution. The output parameter STATUS/RET_VAL receives the error information after the occurrence of an error.

Figure 9-7 Block parameters of asynchronous instructions using the instructions WRREC and RD_DPARA as examples.

Summary

The table below provides you with an overview of the relationships described above. It shows in particular the possible values of the output parameters if execution of the instruction is not complete after a call.

Note

The output parameters of an synchronous instruction can change on every call.

You therefore evaluate the relevant output parameters after each call of the asynchronous instruction.

Table 9- 6 Relationship between REQ, STATUS/RET_VAL, BUSY and DONE during a "running" job.

Seq. no. of the call	Type of call	REQ	STATUS/RET_VAL	BUSY	DONE	ERROR
1	First call	1	W#16#7001	1	0	0
			Error code (e.g. W#16#80C3 for lack of resources)	0	0	1
2 to (n - 1)	Intermediate call	Not relevant	W#16#7002	1	0	0
n	Last call	Not relevant	W#16#0000, if no errors have occurred.	0	1	0
			Error code if errors occurred.	0	0	1

Use of resources

Asynchronous instructions use resources in the CPU during their execution. The resources are limited depending on the type of CPU and instruction. The CPU can only simultaneously process a set maximum number of asynchronous instruction jobs. The resources are available again after a job has been processed successfully or with errors.

Example: For the RDREC instruction, an S7-1500R/H CPU can process up to 20 jobs in parallel.

If the maximum number of simultaneous jobs for an instruction is exceeded, the following occurs if another job is started:

- The job is not executed.
- The ERROR output parameter returns a value of 1.
- The STATUS block parameter returns the error code W#16#80C3 (lack of resources).

Note

Lower-level asynchronous instructions

Some asynchronous instructions use one or more lower-level asynchronous instructions for their processing. This dependence is shown in the tables below.

Please note that each lower-level instruction typically occupies one resource in the instruction's resource pool.

Extended instructions: maximum number of simultaneously running jobs

Table 9- 7 Maximum number of simultaneous jobs for asynchronous extended instructions and lower-level instructions used

Extended instructions	1513R-1 PN	1515R-2 PN	1517H-3 PN	1518HF-4 PN
Distributed I/O				
RDREC	20			
WRREC	20			
ASI_CTRL	uses RDREC, WRREC			
PROFIenergy				
PE_START_END	uses RDREC, WRREC			
PE_CMD	uses RDREC, WRREC			
PE_DS3_Write_ET200S	uses RDREC, WRREC			
PE_WOL	uses RDREC, WRREC, TUSEND, TURCV, TCON, TDISCON			
Module parameter assignment				
RD_DPAR	10			
RD_DPARA	10			
RD_DPARM	10			
Diagnostics				
Get_IM_Data	10			
GetStationInfo	10			
Recipes				
RecipeExport	10			
RecipeImport	10			
Data block functions				
CREATE_DB	10			
READ_DBL	10			
WRIT_DBL	10			
DELETE_DB	10			

Communication: maximum number of simultaneously running jobs

Table 9- 8 Maximum number of simultaneous jobs for asynchronous instructions and lower-level instructions used for Open User Communication

Open User Communication	1513R-1 PN	1515R-2 PN		1517H-3 PN	1518HF-4 PN
		up to V2.9.x	V3.0 or higher		
TSEND TUSEND	88	108	128	288	320
TRCV TURCV	88	108	128	288	320
TCON	88	108	128	288	320
TDISCON	88	108	128	288	320
T_RESET	88	108	128	288	320
T_DIAG	88	108	128	288	320
TSEND_C	uses TSEND, TUSEND, TRCV, TCON, TDISCON				
TRCV_C	uses TSEND, TUSEND, TRCV, TURCV, TCON, TDISCON				

Table 9- 9 Lower-level instructions used for asynchronous instructions for MODBUS TCP

MODBUS TCP	1513R-1 PN	1515R-2 PN	1517H-3 PN	1518HF-4 PN
MB_CLIENT	uses TSEND, TUSEND, TRCV, TURCV, TCON, TDISCON			
MB_SERVER	uses TSEND, TUSEND, TRCV, TURCV, TCON, TDISCON			

Table 9- 10 Lower-level instructions used for asynchronous instructions for communications processors

Communications processors	1513R-1 PN	1515R-2 PN	1517H-3 PN	1518HF-4 PN
PtP communication				
Port_Config	uses RDDEC, WRREC			
Send_Config	uses RDDEC, WRREC			
Receive_Config	uses RDDEC, WRREC			
Send_P2P	uses RDDEC, WRREC			
Receive_P2P	uses RDDEC, WRREC			
Receive_Reset	uses RDDEC, WRREC			
Signal_Get	uses RDDEC, WRREC			
Signal_Set	uses RDDEC, WRREC			
Get_Features	uses RDDEC, WRREC			
Set_Features	uses RDDEC, WRREC			
USS communication				
USS_Port_Scan	uses RDDEC, WRREC			
MODBUS (RTU)				
Modbus_Comm_Load	uses RDDEC, WRREC			

Reference

You can find additional information on block parameter assignment in the STEP 7 online help.

Protection 10

10.1 Overview of the protection functions

Introduction

This section describes the functions for protection from unauthorized access:

- Protection of confidential configuration data
- Access protection
- Know-how protection
- Protection by locking the CPUs

Other CPU protective measures

The following measures provide extra protection against unauthorized access from external sources and through the network:

- Do not activate time-of-day synchronization over NTP servers.
- Do not activate PUT/GET communication.

10.2 Protection of confidential configuration data

As of STEP 7 V17, you have the option of assigning a password for protecting confidential configuration data of the respective CPU. This refers to data such as private keys that are required for the proper functioning of certificate-based protocols.

You can find detailed information on protecting confidential configuration data in the Communication (https://support.industry.siemens.com/cs/ww/en/view/59192925) function manual.

10.3 Configuring access protection for the CPU

Introduction

The S7-1500R/H redundant system has four or five different access levels to limit access to specific functions.

By setting up access levels and passwords, you limit the functions and memory areas that are accessible without a password. The individual access levels and corresponding passwords are specified in the object properties of the CPUs.

Rules for passwords

Ensure that passwords are sufficiently secure. Passwords must not follow a machine-recognizable pattern.
Apply the following rules:

- Assign a password that is at least 8 characters long.
- Use different cases and characters: uppercase/lowercase, numbers and special characters.

Access levels for the CPUs

Table 10- 1 Access levels and access restrictions

Access levels	Access restrictions
Full access including fail-safe (no protection)	Users of STEP 7 and HMI applications have access to all standard and fail-safe functions. A password is not required.
Full access (no protection)	Users of STEP 7 have access to standard functions. HMI applications can access all functions (fail-safe and standard). **Required password:** For additional access to the fail-safe functions, the user must enter the password for "Full access incl. fail-safe" in STEP 7.
Read access	In this access level, only read access to the hardware configuration and the blocks is possible without a password. HMI access and access to diagnostics data is also possible. Neither blocks nor the hardware configuration can be downloaded to the CPUs without the password. The following actions are **not** possible without the password either: Writing test functions and firmware updates (online).
HMI access	The same access restrictions apply to HMI access as to read access. The following actions are **not** possible without the password either: Change of operating state (RUN/STOP/SYNCUP) and display of online/offline comparison status.
No access (complete protection)	When the CPUs have complete protection, no read or write access to the hardware configuration or blocks is possible (without access authorization in the form of a password). HMI access is not possible either. Authentication with the correct password provides full access to the CPUs again.

Reference

You can find a list of which functions are possible in the various protection levels in the STEP 7 online help under "Setting options for protection".

Properties of the access levels

Each access level allows unrestricted access to certain functions without a password, for example identification using the "Accessible devices" function.

The default setting of the CPUs is "No access (complete protection)". In the default access level, the user is not allowed to read or modify the hardware configuration or the blocks. To obtain access to the CPUs, assign parameters alternatively in the properties of the CPU:

- A password for the protection level "No access (complete protection)"
- Another protection level, e.g. "Full access (no protection)".

Communication between the CPUs via the communication functions in the blocks is not restricted by the access level of the CPUs.

Entering the correct password enables access to all the functions that are allowed in the given level.

Note

Configuring an access level does not replace know-how protection

Configuring access levels offers a high degree of protection against unauthorized changes to the CPU through network access. Access levels restrict the rights to download the hardware and software configuration to the CPUs. However, blocks on the SIMATIC memory card are not write-protected or read-protected. Use know-how protection to protect the code of blocks on the SIMATIC memory card.

Behavior of functions in different access levels

The STEP 7 online help includes a table listing the online functions available in the various access levels.

Configuring access levels

Proceed as follows to configure the access levels for the CPUs:

1. Open the properties of the CPUs in the Inspector window.
2. Open "Protection & Security" in the area navigation.

   A table with the possible access levels appears in the Inspector window.

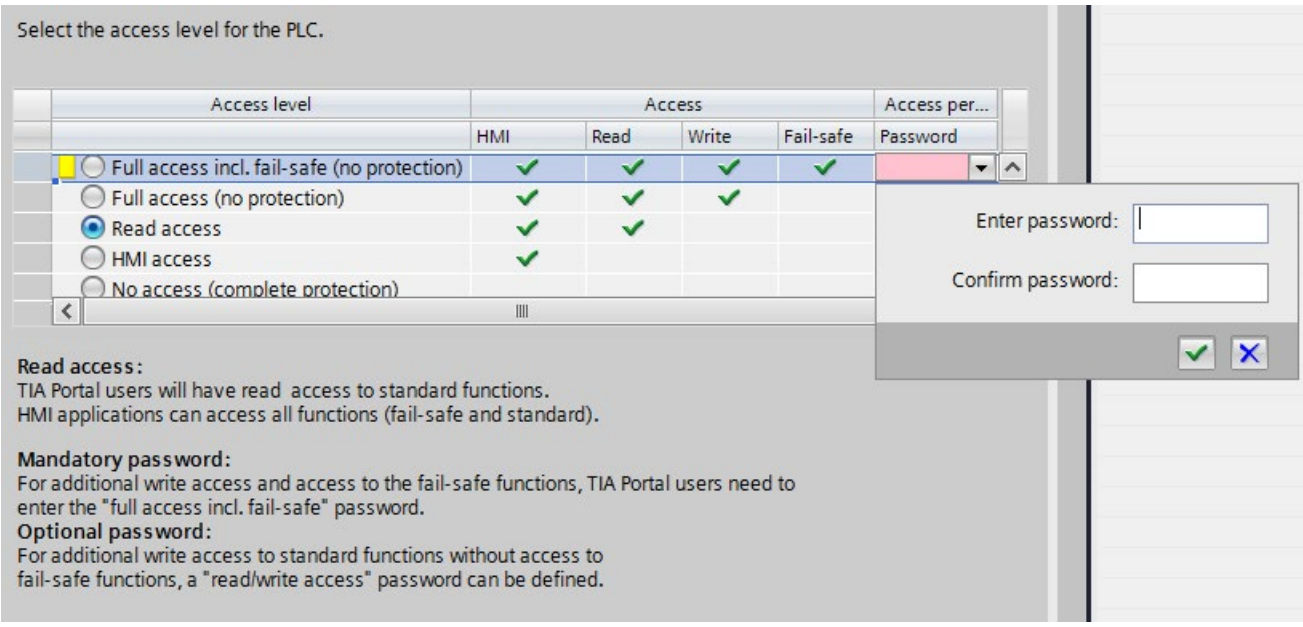

Figure 10-1 Possible access levels

3. Activate the required protection level in the first column of the table. The green check marks in the columns to the right of the access level show which operations are still possible without entering the password. In the example (Figure: Possible access levels), read access and HMI access are still possible without a password.
4. In the "Enter password" column, specify a password for the access level "Full access" in the first row. In the "Confirm password" column, enter the selected password again to avoid incorrect entries.
5. Assign additional passwords as required for other access levels.
6. Download the hardware configuration for the access level to take effect.

The CPUs log the following actions with an entry in the diagnostics buffer:

- Input of the correct or incorrect password
- Changes to access level configuration

Behavior of a password-protected CPU during operation

The protection of the CPUs takes effect for an online connection after you have loaded the settings into the CPUs. If you set a higher access level and download it to the CPU, all other online connections will be interrupted. You will then need to establish a new online connection.

Before an online function is executed, STEP 7 checks the necessary permission and, if necessary, prompts the user to enter a password. The functions protected by a password can only be executed by one programming device/PC at any one time. Another programming device/PC cannot log on.

Access authorization to the protected data applies for the duration of the online connection or for as long as you have STEP 7 open. The menu command "Online > Clear access rights" cancels the access authorization.

You can limit access to a password-protected CPU in RUN locally on the display. This prevents access even with a password.

Access levels for F-CPU

For the fail-safe CPU, there is an additional access level besides the four access levels described. For additional information on this access level, refer to the description of the fail-safe system SIMATIC Safety Programming and Operating Manual SIMATIC Safety - Configuring and Programming (https://support.industry.siemens.com/cs/ww/en/view/54110126).

10.4 Using the display to set additional password protection

Blocking access to a password-protected CPU

You can block access to password-protected CPUs (local password block) on the CPU display. The block is effective if the mode selector is set to RUN.
The access block requires a configured protection level in STEP 7 and applies regardless of password protection. Even if someone accesses the CPUs via a connected PG/PC and has entered the correct password, access to the CPUs is denied.
Set the access block separately for each access level on the display.

The backup CPU takes over the settings during SYNCUP. Changes to the access block for primary CPU or backup CPU in RUN-Redundant system state are also applied to the other CPU.

Procedure

If you want to block access to the CPUs via the display, you need to configure an access level with a password in STEP 7.

If you set local access protection for the CPUs on the display, the block applies to both CPUs in the RUN-Redundant system state. Proceed as follows:

1. On the display, select the Settings > Protection menu.
2. Confirm your selection with "OK". For each access level, specify whether or not access in the RUN operating state is allowed:
   - Allow: Access to the CPUs is possible with the right password in STEP 7.
   - Deactivated in RUN: If the mode selector is set to RUN, no additional logon to the CPUs is possible with the rights of this access level. Access is denied despite the fact that the user knows the password. If the operating mode switch is in the STOP position, then access with the password is enabled again.

Access protection for the display

Configure a password for the display in STEP 7 in the properties of the CPU. This protects local access protection with a local password.

10.5 Using the user program to set additional access protection

Access protection with the user program

In addition to access protection via the display, you have another option. You can also restrict access to a password-protected CPU using the ENDIS_PW instruction in STEP 7.

You can find more information on this instruction in the STEP 7 online help under "ENDIS_PW: Limit and enable password legitimation".

10.6 Know-how protection

Application

You can use know-how protection to protect one or more OB, FB or FC blocks as well as global data blocks in your program from unauthorized access. To restrict access to a block, assign a password. The password offers high-level protection against unauthorized reading and manipulation of the block. Know-how protection does not involve the CPU (offline access in STEP 7).

Password provider

As an alternative to manual password input, you can assign a password provider to STEP 7. When using a password provider, you select a password from a list of available passwords. When a protected block is opened, STEP 7 connects to the password provider and retrieves the corresponding password.

You need to install and activate a password provider before you can connect it. A settings file in which you define the use of a password provider is also required.

A password provider offers the following advantages:

- The password provider defines and manages the passwords. When know-how protected blocks are opened, you work with symbolic names for passwords. For example, a password is marked with the symbolic name "Machine_1" in the password provider. The actual password behind "Machine1" is not disclosed to you.
  A password provider therefore offers optimum block protection as the users do not know the password themselves.
- STEP 7 automatically opens know-how protected blocks without the direct entry of a password. This saves you time.

You can find more information on connecting a password provider in the STEP 7 online help.

Readable data

If a block is know-how protected, only the following data is readable without the correct password:

- Block title, comments and block properties
- Block parameters (INPUT, OUTPUT, IN, OUT, RETURN)
- Call structure of the program
- Global tags without information on the point of use

Further actions

Further actions that can be carried out with a know-how protected block:

- Copying and deleting
- Calling in a program
- Online/offline comparison
- Loading

Global data blocks and array data blocks

You protect global data blocks (global DBs) from unauthorized write access with know-how protection. If you do not have the valid password, you can only read the global data block without information on the point of use. The global data block cannot be changed, however.

Know-how protection is not available for array data blocks (array DBs).

Setting up block know-how protection

Proceed as follows to set up block know-how protection:

1. Open the properties of the block in question.
2. Select the "Protection" option under "General".

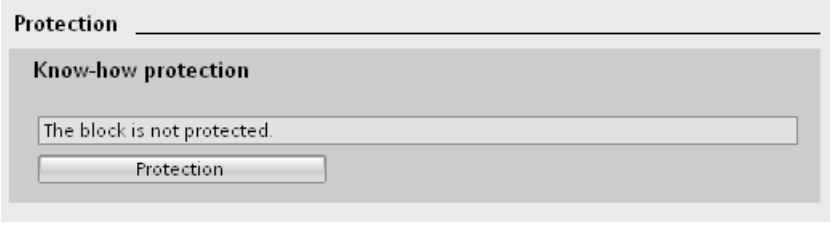

Figure 10-2 Setting up block know-how protection

3. Click "Protection" to display the "Define protection" dialog.

Figure 10-3 Defining protection

4. Enter the new password in the "New password" box. Enter the same password in the "Confirm password" box.

5. Click "OK" to confirm your entry.
6. Close the "Know-how protection" dialog by clicking "OK".

Result: The blocks selected are know-how-protected. Know-how protected blocks are marked with a padlock in the project tree. The password entered applies to all blocks selected.

Note

Password provider

Alternatively, you can set up know-how protection for blocks with a password provider.

Opening know-how protected blocks

Proceed as follows to open a know-how protected block:

1. Double-click on the block to open the "Access protection" dialog.
2. Enter the password for the know-how protected block.
3. Click "OK" to confirm your entry.

Result: The know-how-protected block opens.

After opening the block you can edit the program code and the block interface of the block until you close the block or STEP 7. You need to enter the password again the next time you open the block. If you close the "Access protection" dialog with "Cancel", the block will open but the block code will not be displayed. You will not be able to edit the block.

If you copy the block or add it to a library, this does not cancel the know-how protection of the block. The copies will also be know-how-protected.

Changing block know-how protection

Proceed as follows to change block know-how protection:

1. Select the block for which you want to change know-how protection. The protected block must not be open in the program editor.
2. In the "Edit" menu, select the "Know-how protection" command to open the "Change protection" dialog.
3. To change the password for know-how protection, enter the current password under "Old password".
4. Now enter a new password under "New password" and confirm the password under "Confirm password".
5. Click "OK" to confirm your entry.

Result: The password for know-how protection of the selected block has been changed.

Removing block know-how protection

Proceed as follows to remove block know-how protection:

1. Select the block from which you want to remove know-how protection. The protected block must not be open in the program editor.
2. In the "Edit" menu, select the "Know-how protection" command to open the "Change protection" dialog.

Figure 10-4 Removing know-how protection

3. To remove block protection, enter the current password under "Old password". Leave the fields for the new password blank.
4. Click "Remove" to confirm your entry.

Result: Know-how protection for the selected block has been canceled.

10.7 Protection by locking the CPU

Locking options

Provide additional protection for your CPUs from unauthorized access (for example to the SIMATIC memory card) by using a secure front cover.

You have the following options, for example:

- Attach a seal
- Secure the front cover with a lock (shackle diameter: 3 mm)

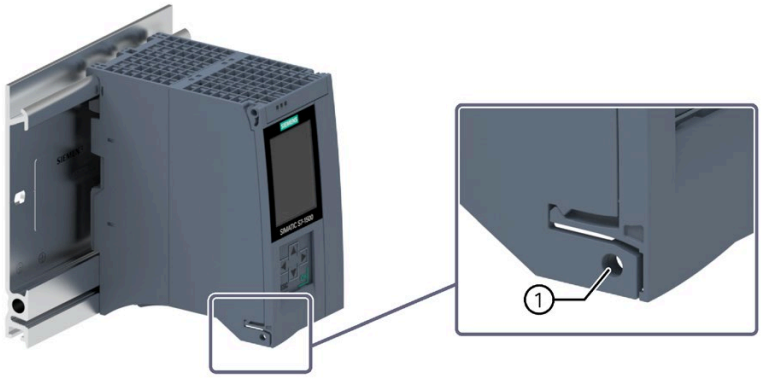

① Locking latch on a CPU

Figure 10-5 Protection by locking the CPU

Commissioning 11

11.1 Overview

Introduction

This section includes information on the following topics:

- Check before powering on for the first time
- Commissioning procedure
- Removing/inserting the SIMATIC Memory Cards
- First power-on of the CPUs
- CPU pairing
- Assigning redundancy IDs
- Downloading projects to the CPUs
- Operating and system states
- CPU memory resets
- Backing up and restoring the configuration
- Time synchronization
- Identification and maintenance data

Commissioning requirements

Note

Performing tests

You must ensure the safety of your plant. You therefore need to run a complete functional test and make the necessary safety checks before the final commissioning of a plant.

Also allow for any possible foreseeable errors in the tests. This prevents you from putting persons or equipment at risk during operation.

Software tools for commissioning

SIEMENS PRONETA provides commissioning support. You can find more information on SIEMENS PRONETA in the section Software (Page 84).

11.2 Check before powering on for the first time

Before the first power-on, check the installation and the wiring of the S7-1500R/H redundant system.

Questions for checking

The following questions provide instructions for checking your system in the form of a checklist.

Rack

- Are the mounting rails firmly mounted to the wall, in the frame, or in the cabinet?
- Are the cable ducts correctly installed?
- Have the minimum clearances been observed?

Grounding concept

- Are the mounting rails connected to the protective conductors?
- If applicable, are all further protective conductor connection points on the S7-1500R/H redundant system connected to the protective conductor? Has the protective conductor been tested?
- Are the required equipotential bonding cables connected with low impedance to the relevant sections of the plant?

Module installation and wiring

- Are all the modules inserted / installed in accordance with the installation plan and configuration with STEP 7 and screwed firmly to the mounting rails?
- Have all synchronization modules been installed and locked in the S7-1500H redundant system? You should hear the modules click into place in the module slots.
- Are all redundancy connection connectors in the S7-1500H redundant system correctly connected to the LC sockets? You should hear the connectors click into place in the LC sockets.
- Are the redundancy connections (PROFINET cable) between the CPUs in the S7-1500R redundant system connected to the correct ports of PROFINET interface X1? The ports used must correspond to the configuration in STEP 7.
- Are the PROFINET devices in the S7-1500R/H redundant system connected?

Load current supply

- Are all load current supplies switched off?
- Is the power cable connector correctly wired?
- Has the connection to line voltage been established?

11.3 Commissioning procedure

Requirements

- The CPUs are in the "Factory settings" state or have been reset to factory settings. You can find more information in the section Resetting CPUs to factory settings (Page 385).
- The CPUs have the same or compatible article numbers.
- The SIMATIC memory cards are as delivered or have been formatted and are not write-protected.
- The two CPUs of the S7-1500R/H redundant system have the same firmware version. You can find more information in the section Firmware update (Page 380).

Procedure for commissioning SIMATIC S7-1500R/H

To commission the S7-1500R/H redundant system, we recommend the following procedure:

Table 11- 1 Procedure for commissioning SIMATIC S7-1500R/H

Step	Procedure	Further information
1	Configure hardware in STEP 7	Section Configuration (Page 224)
2	Create user program	Section Programming the S7-1500R/H (Page 247) and STEP 7 online help
3	Insert required modules	Section Installation (Page 176)
4	Wire the configuration (lines for supply voltage, PROFINET ring or line topology, redundancy connections) and check it.	Section Wiring (Page 194)
5	Insert SIMATIC memory cards in the CPUs	Section Removing/plugging in SIMATIC memory cards (Page 284)
6	Switch on CPUs, optional load current supply and distributed I/O	Section First power-on of the CPUs (Page 287)
7	CPU pairing	Section CPU pairing (Page 287)
8	Assign CPUs redundancy IDs	Section Redundancy IDs (Page 289)
9	Check LEDs	You can find the meaning of the LEDs in the module manuals.
10	Evaluate information on the CPU displays	Section CPU display (Page 354)
11	Load hardware configuration and user program to the CPUs	Section Downloading projects to the CPUs (Page 293)
12	Test inputs and outputs	The following functions are helpful: Monitoring and modifying tags, testing with program status, forcing, controlling the outputs in STOP. You can find more information in the section Test and service functions (Page 390).

Procedure for commissioning a SIMATIC Safety F-system

For commissioning, you need the CPUs 1518HF-4 PN. The procedure for commissioning the F-system is not fundamentally different to commissioning an R/H-system. You use the Safety Administration Editor to commission SIMATIC Safety and activate the safety mode. The Safety Administration Editor is assigned to the top CPU in the STEP 7 project tree.

You can find additional information on commissioning an F-system SIMATIC Safety and the Safety Administration Editor in the programming and operating manual SIMATIC Safety – Configuring and Programming (https://support.industry.siemens.com/cs/ww/en/view/54110126).

11.3.1 Removing/plugging in SIMATIC memory cards

Requirements

For the S7-1500R/H redundant system, you need a SIMATIC memory card for each of the two CPUs.

The CPUs only support pre-formatted SIMATIC memory cards. If required, format the SIMATIC memory cards before using them in the CPU.

You can find more information on formatting SIMATIC memory cards in the function manual Structure and use of the CPU memory (https://support.industry.siemens.com/cs/ww/en/view/59193101).

Make sure that the SIMATIC memory cards of the two CPUs are not write-protected.

Inserting SIMATIC memory cards

Proceed as follows to insert a SIMATIC memory card:

1. Open the front cover of the CPU.
2. Insert the SIMATIC memory card, as shown on the CPU, into the slot for the SIMATIC memory card.

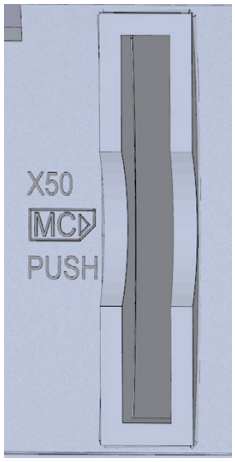

① R-CPUs as of article number 6ES7513-1RM03-0AB0/6ES7515-2RN03-0AB0:
The slot for the SIMATIC memory card is located on the bottom of the CPU.

Figure 11-1 Slot for the SIMATIC memory card

3. Carefully insert the SIMATIC memory card into the CPU, pushing gently, until the SIMATIC Memory Card clicks into place.

Removing SIMATIC memory cards

Proceed as follows to remove a SIMATIC memory card:

1. Open the front cover.
2. Switch the CPU to STOP.
3. Gently push the SIMATIC memory card into the CPU. Once it has clicked into place, remove the SIMATIC memory card.

Only remove the SIMATIC memory card in the POWER OFF or STOP state of the CPU. Ensure that:

- No writing functions are active in STOP. Writing functions are online functions with the PG/PC, for example loading/deleting a block and test functions.
- No writing functions were active before POWER OFF

If you remove the SIMATIC memory card during a write process, the following problems can occur:

- The data contents of a file are incomplete.
- The file is no longer readable, or no longer exists.
- The entire content of the card is corrupted.

Please also note the following FAQs on the Internet (https://support.industry.siemens.com/cs/ww/en/view/59457183) for removal of the SIMATIC memory card.

Note

If you switch a CPU in redundant mode to the STOP operating state, the S7-1500R/H redundant system switches to the RUN-Solo system state. The other CPU maintains control of the process.

CPU response after a SIMATIC memory card is removed or inserted

Inserting or removing the SIMATIC memory card in STOP operating state triggers a re-evaluation of the SIMATIC memory card. The CPU compares the content of the configuration on the SIMATIC memory card with the backed-up retentive data. If the backed-up retentive data matches the data of the configuration on the SIMATIC memory card, the retentive data is retained. If the data differs, the CPU automatically performs a memory reset. A memory reset deletes the retentive data on the CPU. You can find more information on memory resets in the section CPU memory reset (Page 336).

The CPU evaluates the SIMATIC memory card. This process is indicated by the RUN/STOP LED flashing.

Note

Using the SIMATIC memory card as a firmware update card

If you use the SIMATIC memory card as a firmware update card, pulling and plugging the card will not result in the loss of retentive data.

Reference

You can find more information on the SIMATIC memory card in the function manual Structure and use of the CPU memory (https://support.industry.siemens.com/cs/ww/en/view/59193101).

11.3.2 First power-on of the CPUs

Requirements

- The SIMATIC S7-1500R/H redundant system has been installed.
- The system has been wired.
- The SIMATIC memory cards are in the CPUs.

Procedure

Proceed as follows to commission the CPUs:

1. Turn on the load current supply.

Result:

- The CPUs run an LED test. All LEDs flash at 2 Hz,
  - the RUN/STOP LED flashes alternately yellow/green
  - the ERROR-LED red
  - the MAINT LED yellow.
- The CPUs run system initialization and evaluate the SIMATIC memory cards:
  - The RUN/STOP LED flashes yellow at 2 Hz.
- When system initialization is complete, the CPUs switch to STOP:
  - The RUN/STOP LED lights up in yellow.

11.3.3 CPU pairing

Introduction

Pairing is the mutual recognition of the two CPUs within a network. During pairing, the CPUs exchange information for mutual identification. Example: Checking for matching article number and firmware version.

Successful pairing of two CPUs is a fundamental requirement for redundant operation.

Requirement

For successful pairing, the CPUs must have the same firmware version and the same or compatible article numbers.

An invalid configuration variant prevents the pairing of two CPUs, for example more than two R-CPUs in the PROFINET ring. Pairing errors are reported in the diagnostics buffer.

Pairing procedure

Proceed as follows to pair two CPUs

1. Create a redundancy connection between two CPUs. Connect the CPUs to the relevant ports of the interfaces (for example for R-CPUs: X1 P2R).
2. POWER ON both CPUs.

Loss of pairing

If pairing is already established, an invalid configuration variant will lead to the loss of pairing. Loss of pairing in RUN system state also causes the loss of synchronization between primary CPU and backup CPU. The system switches to the RUN-Solo system state.

The primary CPU switches to the RUN operating state and takes on sole control of the process. The backup CPU switches to the STOP operating state.

In the event of the loss of pairing as a result of the failure of the primary CPU, the backup CPU becomes the new primary CPU and takes on sole control of the process.

Checking pairing state

You can find out how to check the success of pairing on the display and in STEP 7 in the section Checking before replacing components (Page 363).

Checking pairing in the RUN-Solo system state

Please observe the following rules if the redundant system is in the RUN-Solo system state:

- Do not immediately start replacing components.
- Do not immediately switch the failed CPU to the RUN operating state.

First check the pairing status in the RUN-Solo system state.

CAUTION

Do not switch the failed CPU in the RUN-Solo system state to the RUN operating state.

This could result in an undefined system state for the redundant system. Both CPUs would become primary CPUs.

If the S7-1500R/H redundant system is in the RUN-Solo system state, you must not immediately switch the backup CPU to the RUN operating state.

Possible cause: No pairing between the two CPUs. Check the pairing status on the display or on the basis of the diagnostics status or diagnostics buffer.

If there is no pairing, the redundancy connections have been interrupted. Follow the procedure described in the section Checking before replacing components (Page 363).

Primary and backup CPU role assignment

The primary CPU and backup CPU roles are assigned by the S7-1500R/H redundant system during pairing.

The redundant system always attempts to restore the previous roles of the R/H CP. The following applies here: The CPU that last controlled the process becomes the primary CPU. Requirement: The system time has been set correctly.

After restoring the factory settings, the redundant system assigns the roles according to the following criteria:

The redundant system compares the following criteria of the two SIMATIC memory cards and prioritizes the assignment of roles:

- SIMATIC memory card contains a STEP 7 project
  → High priority
- SIMATIC memory card is empty and writable
  → Medium priority
- SIMATIC memory card:
  - missing or
  - inserted, is empty or is not writable

  → Low priority

Result:

If the two R/H CPUs have different priorities, the CPU with the higher priority becomes the primary CPU.

If the priorities are identical, the R/H CPU with the lower CPU serial number becomes the primary CPU (see nameplate on the CPU or on the CPU display).

Note

If an R/H CPU is in RUN mode, the assigned role does not change when pairing again.

11.3.4 Redundancy IDs

Introduction

For redundant operation, the two CPUs in the redundant system must process identical project data. In SYNCUP, the operating system copies the content of the SIMATIC memory card from the primary CPU to the backup CPU.

The load memories contain the project data of both CPUs. This duplication of the project data is necessary for ensuring redundant operation. By assigning the redundancy IDs, you define which project data a CPU uses for itself.

Redundancy IDs 1 and 2

Redundant operation is only possible if the two CPUs have different redundancy IDs. The redundancy IDs can have values of 1 and 2. The CPUs save the redundancy IDs in their retentive data areas.

Both CPUs have redundancy ID 1 in the following cases:

- Default setting upon initial commissioning
- After reset to factory settings

In the STEP 7 project tree, each of the two CPUS is displayed with its own tree. The redundancy ID is used to assign a project tree to the real CPU in STEP 7. The upper CPU of the two CPUs in the project tree always has a redundancy ID of 1. The lower CPU of the two always has a redundancy ID of 2.

Diagnostics displays are assigned to the real CPUs in the project tree in the same way.

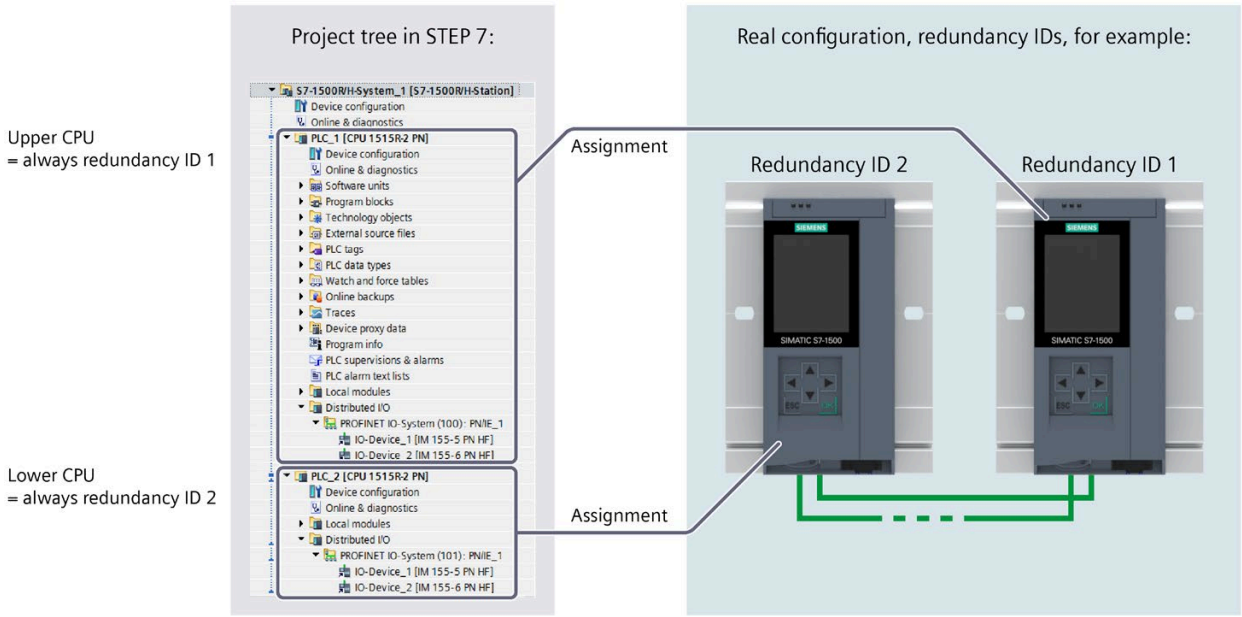

Figure 11-2 Assignment of the redundancy IDs between project tree and real configuration

Assigning redundancy IDs to CPUs in the configuration

Requirement: The CPUs have the same firmware version and the same or compatible article numbers.

You have the following options for assigning different redundancy IDs to the CPUs:

- Automatic assignment
- Assignment using the display

Automatic assignment

Requirement:

Both real CPUs of the redundant system have the same redundancy ID (e.g."1").

Options for automatic assignment:

- Both CPUs are in STOP. There is pairing between the two CPUs. The ERROR LEDs are flashing red.

  Procedure: Switch the left-hand CPU in the configuration to the RUN operating state. Result: The right-hand CPU in the configuration changes its redundancy ID.

- The left-hand CPU in the configuration is in RUN operating state. The right-hand CPU in the configuration is in STOP. Both redundancy connections are separated, therefore there is no pairing between the two CPUs.

  Procedure: Implement pairing between the two CPUs by establishing at least one redundancy connection. Result: The right-hand CPU in the configuration changes its redundancy ID.

- The left-hand CPU in the configuration is in RUN. The right-hand CPU in the configuration is in POWER OFF. At least one redundancy connection is established. There is no pairing between the two CPUs due to POWER OFF.

  Procedure: POWER ON the right-hand CPU in the configuration. Result: The right-hand CPU in the configuration changes its redundancy ID.

Assignment using the display

Requirements:

The two real CPUs in the redundant system:

- Are connected to each other
- Have redundancy ID 1
- The mode switches of the CPUs are in the STOP position
- Both CPUs are in POWER OFF mode

Procedure:

Proceed as follows to assign the redundancy IDs via the CPU display:

1. POWER ON the CPU to which you want to assign redundancy ID 2.
2. On the display of that CPU, select the menu command "Overview > Redundancy". Assign the CPU redundancy ID 2.
   Once you have assigned the CPU redundancy ID 2, the CPU will automatically restart.
3. Switch the other CPU POWER OFF.

4. Download the project and the hardware configuration to the CPU that you want to switch to RUN first.

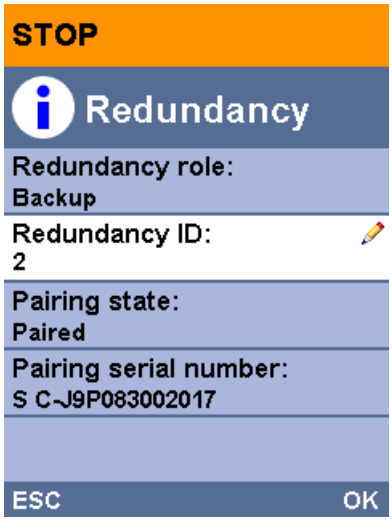

Figure 11-3 Assigning redundancy IDs

Reading redundancy IDs from the display

As well as assigning redundancy IDs over the display, you can read out the redundancy ID with the menu command "Overview > Redundancy". The display always shows the redundancy ID of the CPU on whose display you query the redundancy ID.

Switching redundancy IDs over the display

Since each of the CPUs already has its own redundancy ID, you can exchange the redundancy IDs of the CPUs for each other if required.

Switching redundancy IDs can, for example, be useful in the following situations:

- You only have access to one of the two CPUs.
- You have incorrectly assigned the redundancy IDs.

Note

Switching the redundancy IDs switches the assignment of the real CPUs to the project trees in the project navigation.

If the two real CPUs contain the same project, switching the redundancy IDs switches all configured properties between the CPUs. These include, for example, the IP addresses of the PROFINET interfaces, the device names and the configured topology.

On the display, you can exchange on only one CPU the redundancy IDs already assigned for both CPUs.

Proceed as follows to switch the redundancy IDs:

1. Make sure that both CPUs are in STOP operating state:
2. Make sure that the two CPUs are connected to each other.
3. Change the redundancy ID of a CPU using the display.

Result: Once the redundancy ID has been changed on one CPU, both CPUs restart and each now has the previous redundancy ID of the other.

Incompatible assignment of redundancy IDs

There is pairing between the two CPUs. You can find more information in the section CPU pairing (Page 287).
In the following case, the redundant system automatically checks the compatibility of the redundancy IDs:

- Both CPUs are in STOP operating state and they have the same redundancy ID.

If the same redundancy ID has been assigned to both CPUs, the ERROR LEDs on both CPUs flash in red. Each CPU display indicates an assignment conflict (symbol ⚠). The CPUs generate an entry in the diagnostics buffer. You can read the entry on the display, for example.

To establish redundant mode, resolve the assignment conflict in one of the following ways:

- Assign a different redundancy ID to one CPU using the display.
- Switch the CPU that is to retain its assigned redundancy ID to the RUN operating state.

Behavior of the CPUs when redundancy IDs are changed

Please note that you can only change the redundancy ID of a CPU in STOP operating state. After each successful change of a redundancy ID, the CPU in question automatically restarts.

11.3.5 Downloading projects to the CPUs

Introduction

You need to download the project data to the CPU. Download either offline using the SIMATIC memory card or over an online connection from the PG/PC/HMI device to a CPU. The complete project data (all configuration data and the complete user program) can only be downloaded when a CPU is in STOP operating state.

Note

Simultaneous online access to both CPUs

Simultaneous online access to both CPUs from STEP 7 is not possible. You can access either the primary CPU or the backup CPU.

Options for downloading

To download project data into the S7-1500R/H redundant system, you have the following options:

- Loading the complete project data in STOP system state
- Loading the changed user program in RUN-Solo system state
- Loading the changed user program in RUN-Redundant system state

---

Note

Loading in the RUN-Redundant system state: Check for sufficient free space before a write function

Before a write function is performed, the system checks whether there is enough free space on the SIMATIC memory cards of the CPUs for the function. Write functions are online functions with the PG/PC, e.g. test functions, loading a modified user program in the RUN-Redundant system state.

If there is not enough space on a SIMATIC memory card or on both SIMATIC memory cards, the write function is aborted and the redundant system continues operation with the original configuration. The redundant system will remain in the RUN-Redundant system state.

Note

Password for confidential configuration data

With S7-1500R/H CPUs, the password for confidential PLC configuration data is only loaded onto one of the two CPUs during loading. In order that the SYNCUP process works and that the partner CPU also works properly, the password must be transferred to the partner CPU before the SYNCUP, using the Online and Diagnostics editor:

- In the Online and diagnostics view, you specify the area "Password to protect confidential PLC configuration data".
- Enter the required password and click the "Set" button. If the correct password has been entered, the partner CPU can use the protected PLC configuration data and start the SYNCUP process.

Note

Loading the safety program with an F-system SIMATIC Safety with the 1518HF-4 PN CPUs

You can find the exact procedure in the SIMATIC Safety - Configuring and Programming (https://support.industry.siemens.com/cs/ww/EN/view/54110126) programming and operating manual.

Downloading project data to the CPU

By default, the project data is downloaded to the primary CPU.

Procedure

Proceed as follows:

1. Right-click to select the S7-1500R/H system in the project tree.
2. Select the "Download to device" > "Hardware and software (changes only)" command from the shortcut menu.

The "Extended download" dialog window shows the addresses of the configured CPUs in the "Configured access nodes of..." table.

1. Select the subnet from the "Type of the PG/PC interface" drop-down lists.
2. Select the adapter at the "PG/PC interface".
3. Select the interface to which the PG/PC is connected from the "Connection to interface/subnet" drop-down list. Alternatively, select the entry "Try all interfaces".
4. Then click on the "Start search" button.

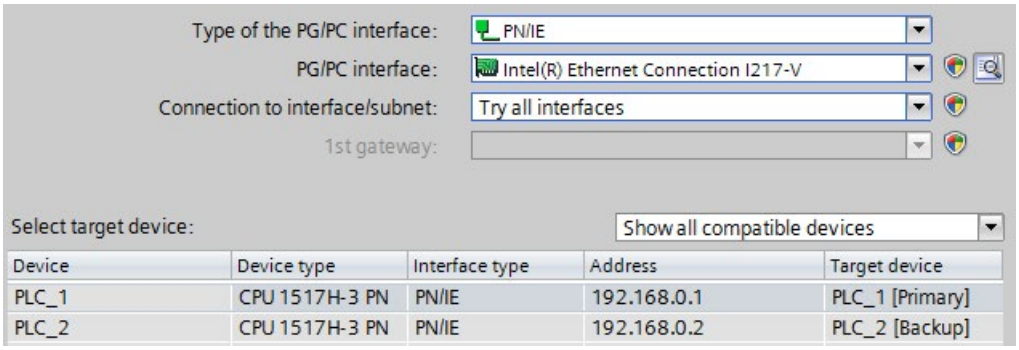

Figure 11-4 "Extended download" dialog window (primary CPU)

The "Select target device" table shows the CPUs in the S7-1500R/H system and their roles. The primary CPU is already selected. Requirement: You have already assigned the IP addresses using the displays of the CPU (for example for commissioning) or over accessible devices in STEP 7.

5. Click "Load".

Note

Remember the redundancy IDs of the CPUs in the configuration:

- The real CPU with redundancy ID 1 uses the project data of the top CPU in the STEP 7 project tree.
- The real CPU with redundancy ID 2 uses the project data of the bottom CPU in the STEP 7 project tree.

You read out the redundancy ID of a CPU over the display with the menu command "Overview > Redundancy". You can find more information on assigning redundancy IDs in the section Redundancy IDs (Page 289).

"Load preview" dialog window

If necessary, the project data is compiled before the download. You can only load project data that is consistent and has been compiled without errors.

The "Load preview" dialog window sets out the key information on the load process to be run:

Procedure

1. After compilation, check the messages in the "Load preview" dialog window.
2. If the S7-1500R/H system is not in STOP, stop the system. To do so, select "Stop RH system" in the "Action" column of the drop-down menu.
3. Click the "Download" button to start the download.

Starting the CPU after loading

The "Results of loading" dialog window displays the results of the loading process.

WARNING

CPU startup with user program with errors

Before starting the CPU, make sure that a user program with errors:

- Cannot cause damage or injury
- Will not lead to dangerous system states

Requirement

The CPU mode selector is in the RUN position.

Procedure

1. To start the primary CPU after loading is complete, select "Start module" in the "Action" column.
2. To complete loading, click "Finish".

   Result: The primary CPU switches to the RUN operating state.
3. Switch the backup CPU to the RUN operating state.

   Result: After successful SYNCUP, the S7-1500R/H system switches to redundant mode.

Note

Role change during loading

Beware of a possible role change between primary and backup CPU shortly before, during or after loading.

A role change can occur during loading if the primary CPU fails (power failure, hardware defect) or is in STOP and:

- You switch the backup CPU to RUN operating state during this time using the mode selector, the display or a communication command.

  or

- You switch on the backup CPU during this time.

In the event of a role change, the new primary CPU starts up with the old project data. The new project data in the backup CPU is overwritten with the old project data during synchronization of the two CPUs for redundant operation.

Downloading project data to the backup CPU

You can also download the project data to the backup CPU. This makes sense if the backup CPU is to be primary CPU with its project data upon a restart.

Requirement

The backup CPU is in STOP mode.

Procedure:

1. Download the project data to the backup CPU. The primary CPU continues to control the process.
2. Switch the primary CPU to the STOP operating state after loading.
3. Switch the backup CPU to the RUN operating state. It becomes the new primary CPU and controls the process on its own with the newly loaded user program in the RUN-Solo system state.
4. Switch the new backup CPU to the RUN operating state.

Result: The system state is RUN-Redundant.

Note

Please note the following during download to the backup CPU:

If the project uses retentive data, the backup CPU runs with its data which may be outdated.

Detailed procedure for download to the backup CPU:

1. Right-click to select the S7-1500R/H system in the project tree.
2. Select "Hardware and software (changes only)" under "Download to backup CPU".

The backup CPU is now selected instead of the primary CPU in the "Extended download" dialog window.

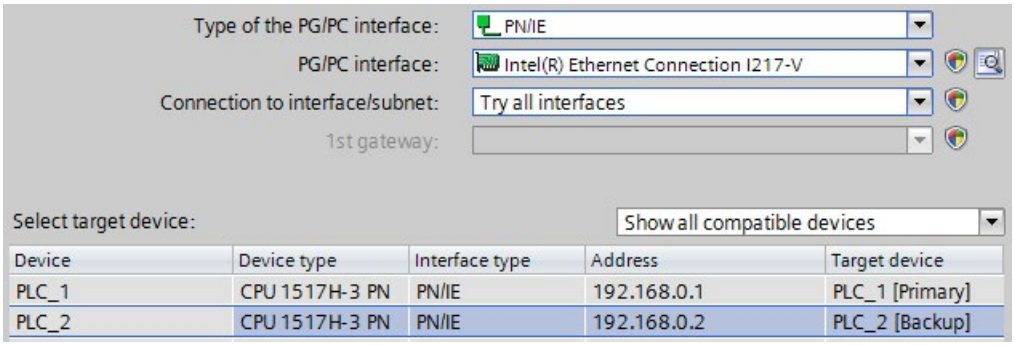

Figure 11-5 "Extended download" dialog window (backup CPU)

Load user program in RUN-Solo system state

The redundant system is in the RUN-Redundant system state. You can download a modified user program to the primary CPU.

Advantages:

- During downloading, the primary CPU maintains control of the process. The plant remains in operation.
- Restore the previous user program:
  After loading in the RUN-Solo operating mode, the backup CPU is in the STOP mode The previous user program is still on the backup CPU.
  If you want to restore the previous user program, then switch the primary CPU to the STOP operating mode and then the backup CPU to the RUN operating state. Result: The backup CPU with the previous user program starts as primary CPU.
  Then switch the backup CPU to the RUN operating state. Result: The redundant system with the previous user program is in the system state Run-Redundant.

Note

If you restore the previous user program, the procedure describes leads to the STOP system of the redundant system.

Procedure

Proceed as follows to download the user program in RUN:

1. Switch the backup CPU to the STOP operating state. The S7-1500R/H system switches to RUN-Solo system state.
2. Download the modified user program to the primary CPU with "Download to device" > "Software (changes only)". The primary CPU continues to control the process.
3. Switch the backup CPU to the RUN operating state.

The primary CPU remains in the RUN operating state and synchronizes the modified user program with the backup CPU in SYNCUP.

Result: The S7-1500R/H system switches back to redundant mode with the modified user program.

Downloading a modified user program in RUN-Redundant system state

From firmware version V2.8 of the R/H CPUs, you can download a modified user program in RUN-Redundant system state. If no error messages are issued during the download process, the modified user program is then downloaded into the redundant system.

Advantage: The redundant system remains in the RUN-Redundant system state during the download.

Changes in the user program

The redundant system remains in the RUN-Redundant system state during the download process when the following changes are made to the user program:

Table 11- 2 Loading changes in the RUN-Redundant system state

User program	Action	Feature to note
Text lists (alarms)	New, Change	-
Comments	New, Change, Delete	Exception: Comments in the hardware configuration
Blocks	Consistent loading of multiple changes	-
OB	New, Change, Delete, Change properties	-
FB, FC, DB, user data type UDT	New, Change, Delete	-
FB, FC	Change code, Change interface	-
DB	Change properties (change "Optimized block access" attribute)	-
	New	Actual values in the new data blocks are set to start values.
	Change name/type of tags, add or delete tags (memory reserve not enabled)	Actual values of tags in the structurally modified data blocks are set to start values.
	Add new tags (memory reserve activated)	Actual values of added tags within the memory reserve are set to start values.
PLC tags	Add (timers, counters, bit memories)	-

Note

Response time when downloading a modified user program into the R/H CPUs in the RUN-Redundant system state

During the download process in the RUN-Redundant system state, the response time of the system is restricted compared with the normal redundant mode. The more changes the user program contains, the higher the impact on the response time.

Requirements

- Possible as of firmware version V2.8
- SIMATIC memory cards of the R/H CPUs with sufficient free storage space
- The redundant system is in the RUN-Redundant system state.

Procedure

There are various ways of downloading the modified user program in RUN-Redundant system state:

Options for downloading in the RUN-Redundant system state	Proceed as follows to download the modified user program in the RUN-Redundant system state:
Downloading the modified user program to the primary CPU	1. Select the program folder or the blocks of the modified user program in the project tree. 2. Select the "Download to device" button or select the "Online > Download to device" menu command.
	1. Select the S7-1500R/H system in the project navigation. 2. Press the right mouse button. Select the "Download to device" > "Software (only changes)" command from the shortcut menu.
Downloading the modified user program to the backup CPU	1. Select the S7-1500R/H system in the project navigation. 2. Press the right mouse button. Select the "Download to backup CPU" > "Software (only changes)" command from the shortcut menu.

Result: The redundant system remains in the RUN-Redundant system state with the modified user program.

Note

The redundant system remains in the RUN-Redundant system state only with the menu command "Download to device" > "Software (only changes)".

The following menu can subsequently stop the redundant system:

- "Download to device" > "Hardware configuration"
- "Download to device" > "Software (all blocks)"
- Download to device >" Hardware and software" (only changes)

11.4 Operating and system states

11.4.1 Overview

Operating states

Operating states describe the behavior of an individual CPU at a specific time. Knowledge of the operating states of the CPUs is useful for programming startup, testing and error diagnostics. The status LEDs on the front of the CPU and the CPU display indicate the current operating state.

Like standard S7-1500 CPUs, the S7-1500R/H CPUs have the operating states STOP, STARTUP and RUN. For operation as redundant system, one of the two CPUs can take on an additional operating state, SYNCUP, for synchronizing the two subsystems. The RUN operating mode is divided into the following states for redundant systems:

- RUN
- RUN-Syncup
- RUN-Redundant.

System states

The system states enable the direct assessment of the behavior of a redundant system. They result from the combination of the operating states of the individual CPUs.

- STOP
- STARTUP
- RUN-Solo
- SYNCUP
- RUN-Redundant

Event-controlled synchronization

Event-controlled synchronization ensures that both CPUs in a redundant system can operate redundantly (RUN-Redundant system state).

For all events that could result in different internal subsystem states, the operating system automatically synchronizes the data of the primary and backup CPU.

Primary and backup CPU are, for example, synchronized in the event of:

- Direct access to the IO devices
- Events that interrupt cyclic program execution
- Updates to user times, for example S7 timer
- Updates to the process image
- Changes to data through communication functions
- Access to data that could be different on the different CPUs, for example current time, system time, or runtime messages

Synchronization for redundant mode

In the SYNCUP system state, the operating system synchronizes the user programs in the two CPUs for redundant operation.

Synchronization ensures that both CPUs can operate redundantly. In the event of failure of the primary CPU in redundant operation, the backup CPU takes over control of the process as the new primary CPU at the point of interruption.

Requirements for achieving a redundant system state

If the following requirements are met, the redundant system reaches the RUN-Redundant system state:

- The requirements for use of the S7-1500R/H redundant system have been met (see section Application planning (Page 87)).
- The two CPUs of the redundant system have recognized each other, which means pairing was successful (see section CPU pairing (Page 287));
- You have commissioned the system as detailed in the section Commissioning procedure (Page 283).

Overview of system and operating states

The figure below shows the possible operating states of the CPUs and the resulting system states.

In general, the two CPUs have equal priority; each CPU can be either primary or backup.

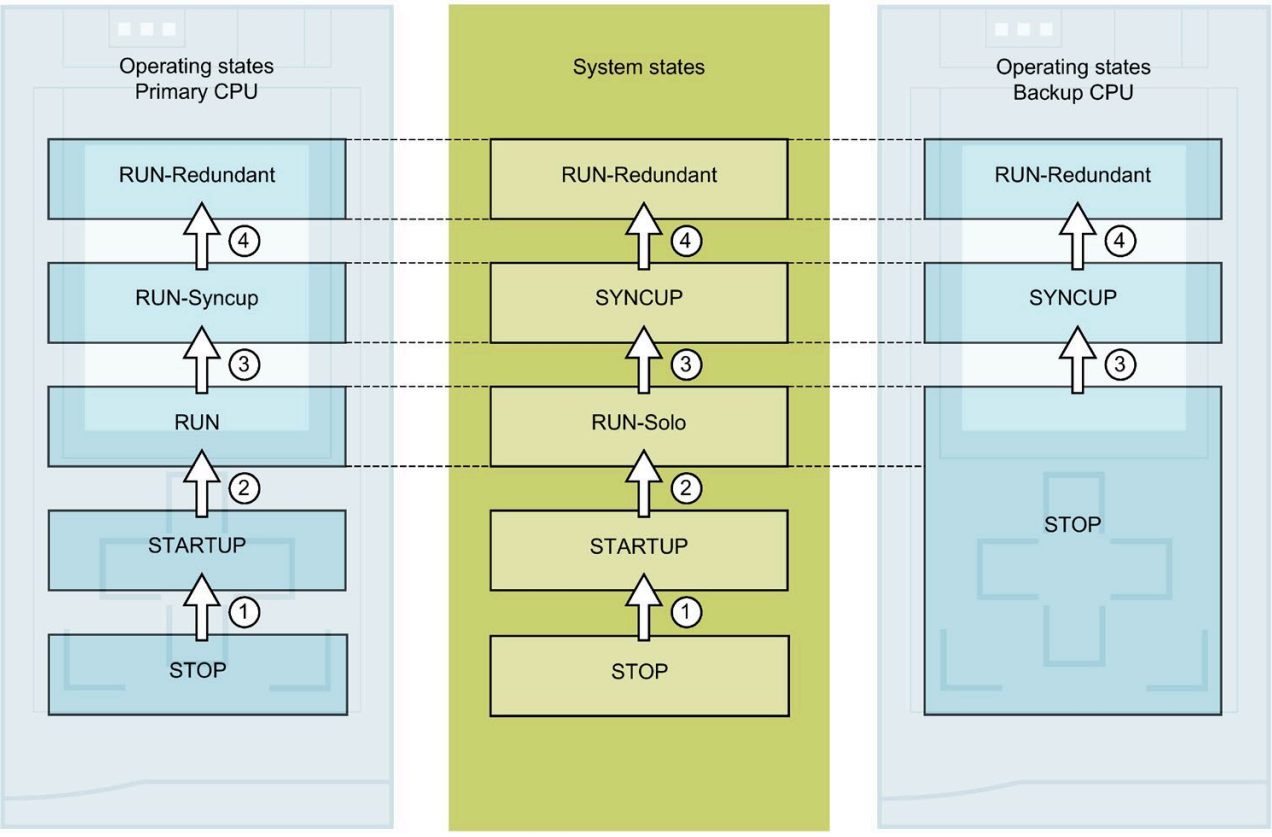

Figure 11-6 System and operating states

The following table provides you with an overview of how the redundant system starts and at the same time runs through the various operating modes and system states. The following initial situation and steps are an example.

The operating and system states are described in detail in the following sections.

Table 11- 3 Redundant system startup

No. in diagram	Primary CPU	System state	Backup CPU
Initial situation: Both CPUs are in STOP operating state. The mode selectors are also in the STOP position.			
Step 1: Switch the mode selector of the CPU that is to be **primary CPU** from STOP to RUN.			
①	The CPU switches to STARTUP and executes startup OB 100 and other available startup OBs.	STOP → STARTUP	The CPU remains in STOP mode.
②	Following successful STARTUP, the CPU switches to RUN. The CPU runs like a standard CPU in RUN and executes the user program.	STARTUP → RUN-Solo	The CPU remains in STOP mode.
Step 2: Switch the mode selector on the **backup CPU** from STOP to RUN.			
③	RUN → RUN-Syncup	RUN-Solo → SYNCUP	STOP → SYNCUP
	The two user programs are synchronized for redundant mode. The primary CPU copies the contents of the load and work memory to the backup CPU. The backup CPU catches up with user program processing on the primary CPU. After successful synchronization, the memory content is identical on the two CPUs.		
④	RUN-Syncup → RUN-Redundant	SYNCUP → RUN-Redundant	SYNCUP → RUN-Redundant
	After the SYNCUP CPUs go to RUN-Redundant mode. Both CPUs process the user program synchronously. The state transition also triggers OB 72 and possibly OB 70. You can find more information on the OB 72 and OB 70 in the section Programming the S7-1500R/H (Page 283).		

See also

Programming the S7-1500R/H (Page 247)

11.4.2 STARTUP operating state

Startup processing (in the primary CPU only)

STARTUP is only executed by the primary CPU.

In STARTUP, the primary CPU behaves just like an S7-1500R/H standard CPU.

Response

Before the CPU starts to execute the cyclic user program, a startup program is executed.

By suitably programming startup OBs, you can initialize variable tags for your cyclic program in the startup routine. You can program one or more startup OBs, or none at all.

Points to note

- All outputs are disabled or respond as configured for the given module: They provide a configured substitute value or retain the last value output and switch the controlled process to a safe operating state.
- The process image is initialized.
- The process image is not updated.
  To read the current state of inputs during STARTUP, you can access inputs with direct I/O access.
  To initialize outputs during STARTUP, you can write values via the process image or with direct I/O access. However, the values are first output at the outputs during the transition to the RUN operating mode.
- The CPU always starts up in warm restart mode.
  - If you define data as retentive, its content is retained beyond program startup after STOP or a power failure.
  - The non-retentive bit memories, timers and counters are initialized.
  - The non-retentive tags in data blocks are initialized.
- During STARTUP, cycle time monitoring is not yet running.
- The CPU processes the startup OBs in the order of the startup OB numbers. The CPU processes all programmed startup OBs regardless of the selected startup type (Figure "Setting the startup behavior").
- If a relevant event occurs, the CPU can start the following OBs in startup:
  - OB 82: Diagnostics interrupt
  - OB 83: Removal/insertion of modules
  - OB 86: Rack error
  - OB 121: Programming error (only for global error handling)
  - OB 122: I/O access error (only for global error handling)
    You can find a description of how to use global and local error handling in the STEP 7 online help.

  All other OBs are started by the CPU only at the transition to the operating state RUN or system state RUN-Redundant (OB 70).

Behavior when expected and actual configurations do not match

The configuration downloaded to the CPU is the expected configuration. The actual configuration is the actual, physical configuration of the automation system. If the expected configuration and actual configuration differ, the hardware compatibility setting defines the behavior of the CPU.

Aborting or not running startup

If errors occur during startup, the CPU aborts STARTUP and returns to the STOP operating state.

The CPU does not perform STARTUP under the following conditions:

- You have not inserted a SIMATIC memory card or an invalid one is inserted.
- You have not downloaded a hardware configuration to the CPU.

Configuring startup behavior

You configure the behavior of the CPU in STEP 7 in the "Startup" group of the CPU properties.

Proceed as follows to set the startup behavior:

1. Select the CPU in the device view of the STEP 7 hardware network editor.
2. In the properties, select the "Startup" area.

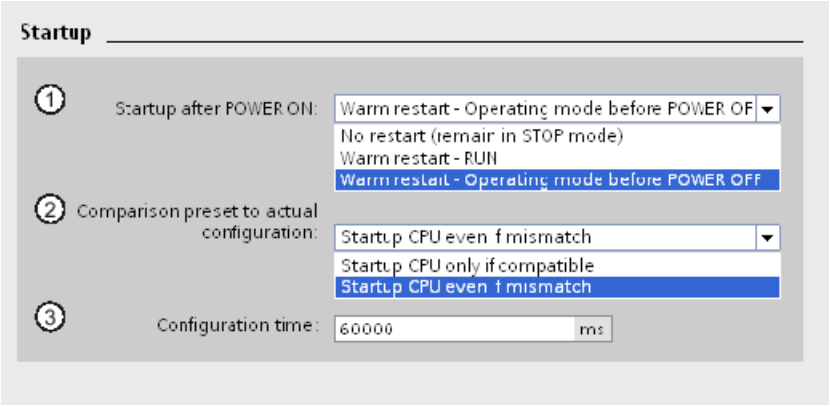

Figure 11-7 Setting the startup behavior

① Sets the startup type after POWER ON

② Defines the startup behavior for the event that a module in a slot does not correspond to the configured module. This parameter applies to the CPU and to all the modules for which no other setting has been selected.

- Startup CPU only if compatible: In this setting, a module in a configured slot must be compatible with the configured module. Compatible means that the module matches the configured module in terms of:
  - The number of inputs and outputs
  - The electrical and functional properties
- Startup CPU even if mismatch: With this setting, the CPU starts up irrespective of the type of module inserted.

③ Specifies a maximum period (default: 60 000 ms) in which the distributed I/O must be ready for operation.
If the distributed I/O is ready for operation within the configuration time, the CPU switches to RUN.

If the distributed I/O is not ready for operation within the configuration time, the startup behavior of the CPU depends on the hardware compatibility setting.

11.4.3 STOP operating state

Response

The CPU does not execute the user program in the STOP operating state.

All outputs are disabled or respond as configured for the given module if both CPUs are in STOP operating state: They provide a configured substitute value or retain the last value output and thus hold the controlled process in a safe operating state.

Points to note

The backup CPU establishes no connections to the IO devices in the STOP operating state.

The primary CPU establishes connections to the IO devices in the STOP operating state. The primary CPU activates the system IP address even in the STOP operating state if the system IP address has been configured.

If both CPUs are in STOP and you download a configuration to one CPU, note the following:

- You have not downloaded a configuration to the backup CPU and the backup CPU should become the primary CPU:

  Switch the backup CPU to the primary CPU (either in the event dialog of the download process or via the mode switch of the CPU).
- Downloading to the primary CPU configures the connected IO devices in line with the downloaded hardware configuration, even in STOP operating state.

11.4.4 SYNCUP operating state

SYNCUP operating state (only in the backup CPU)

In the SYNCUP operating state, the operating system synchronizes the backup CPU with the primary CPU. The primary CPU is in the RUN-Syncup operating state and controls the process.

Unlike the primary CPU, the backup CPU does not go through the STARTUP operating state.

You can find more information in the section SYNCUP system state (Page 309).

Points to note

You have only limited access to online functions during SYNCUP. You can find more information in the section Test functions (Page 390).

11.4.5 RUN operating states

RUN operating states

The primary CPU goes through multiple operating states before reaching the RUN-Redundant system state:

- RUN
- RUN-Syncup
- RUN-Redundant

The backup CPU only has the RUN-Redundant operating state.

Response

In the RUN operating state, the primary CPU behaves just like an S7-1500 standard CPU. It performs cyclic, time-driven and interrupt-driven program execution on its own.

Addresses that are in the "Automatic update" process image are automatically updated in each program cycle. You can find more information in the section Process images and process image partitions (Page 244).

Once the CPU has written the outputs and read the inputs, it runs through the cyclic program from the first instruction to the last instruction. Events with a higher priority such as hardware interrupts, diagnostic interrupts and communication can interrupt the cyclic program flow and prolong the cycle time.

If you have configured a minimum cycle time, the CPU does not terminate the cycle until after this minimum cycle time has expired, even if the user program is completed sooner.

The operating system monitors the runtime of the cyclic program on the basis of a configurable upper limit known as the maximum cycle time. You can restart this time monitoring at any point in your program by calling the RE_TRIGR instruction.

If the cyclic program exceeds the maximum cycle time, the operating system may start the time error OB (OB 80). You can find additional information in the section Start events (Page 252).

Points to note in the RUN operating state

In non-redundant operation, the CPUs are independent of each other. They can have different projects.

RUN-Syncup operating state

In the RUN-Syncup operating state, the backup CPU synchronizes with the primary CPU. The SYNCUP that temporarily affects the primary CPU (for example delay of asynchronous services, cycle time extension through transfer of the load and work memory contents) runs simultaneously in the backup CPU. You can find more information in the section SYNCUP system state (Page 309).

RUN-Redundant operating state

The redundant system is in the RUN-Redundant system state. Both CPUs process the user program synchronously.

11.4.6 SYNCUP system state

Requirements

- The article numbers and firmware versions of the two CPUs are the same.
- There is a SIMATIC memory card in each CPU.
- The PROFINET ring is closed and configured.
- There is at least one redundancy connection (fiber-optic cable) in the S7-1500H redundant system.
- Media redundancy role in the configured PROFINET ring:
  - The two CPUs have the media redundancy role "Manager (auto)".
  - All other devices in the PROFINET ring have the media redundancy role "Client".
- Pairing for the two CPUs has been implemented.
- The primary CPU is in the RUN operating state.
- The execution of SYNCUP is not disabled (default setting).
- No load functions are running.
- Testing with breakpoints is not used.
  No SYNCUP is performed during testing with breakpoints. You will find more information on testing with breakpoints in the STEP 7 online help.

SYNCUP system state

Synchronization in the SYNCUP system state ensures that the two CPUs can operate redundantly. With the SYNCUP system state, the redundant system switches from RUN-Solo to the RUN-Redundant system state. Afterwards, both CPUs synchronously process the same user program.

Starting SYNCUP

The initial situation is the RUN-Solo system state. The primary CPU of a redundant system is in the RUN operating state and the backup CPU is in the STOP operating state.

The operating states are shown on the displays:

Table 11- 4 Starting SYNCUP

Primary CPU	Backup CPU
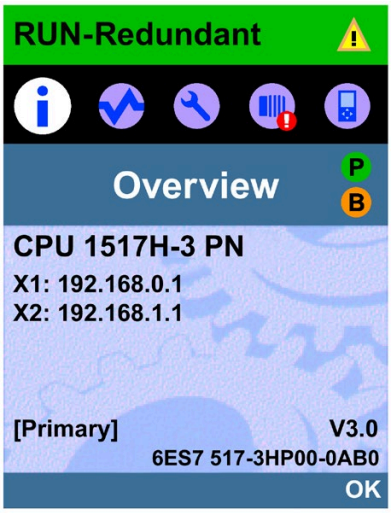	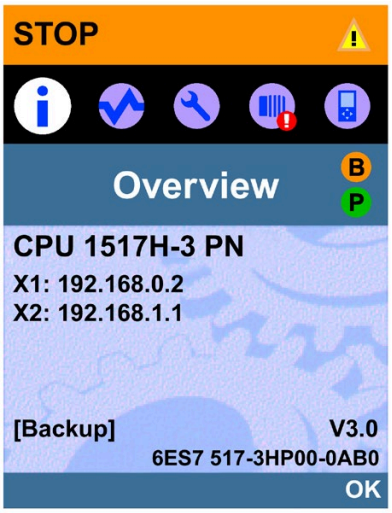

Start SYNCUP by:

- Starting the backup CPU via the PG/PC/HMI device or the display, and the mode selector is set to RUN.

  or

- Switching the mode selector on the backup CPU from STOP to RUN.

  or

- Powering on the backup CPU (mode selector to RUN).

Preparing the SYNCUP system state

After SYNCUP starts, the CPUs prepare SYNCUP:

- The backup CPU switches to SYNCUP operating state and sends a status message to the primary CPU.
- The primary CPU then switches from the RUN operating state to RUN-Syncup.

The current operating states are shown on the displays:

Table 11- 5 Preparing SYNCUP

Primary CPU	Backup CPU
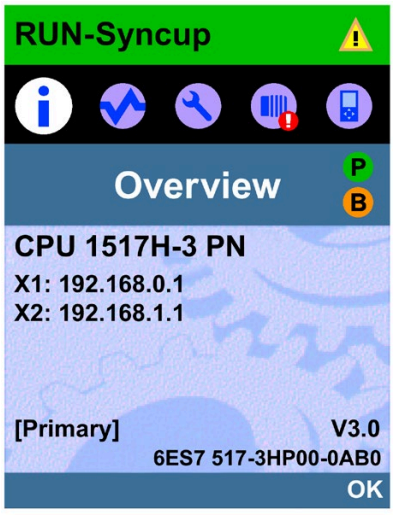	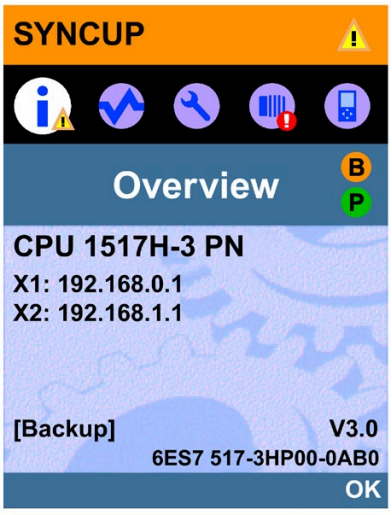

Sequence of the SYNCUP system state

The operating systems of the two CPUs run through SYNCUP in five phases:

- Copying the SIMATIC memory card ①
- Restart of the backup CPU ②
- Finishing tasks ③
- Copying the work memory ④
- Making up backup CPU lag ⑤

The display of the primary CPU shows you the current phase of the SYNCUP system state.

The display of the backup CPU shows "Connect..." state during the phases ② to ⑤ until the RUN-Redundant system state is reached.

① Copying the SIMATIC memory card

The primary CPU copies parts of the load memory to the backup CPU:

- User program, system blocks and project data of the CPU from the \SIMATIC.S7S folder

---

Note

Overwriting load memory content

Copying overwrites the load memory contents on the SIMATIC memory card of the backup CPU with the content of the primary CPU load memory.

The display of the primary CPU indicates the copying progress.

Table 11- 6 Copying the SIMATIC memory card

Primary CPU	Backup CPU
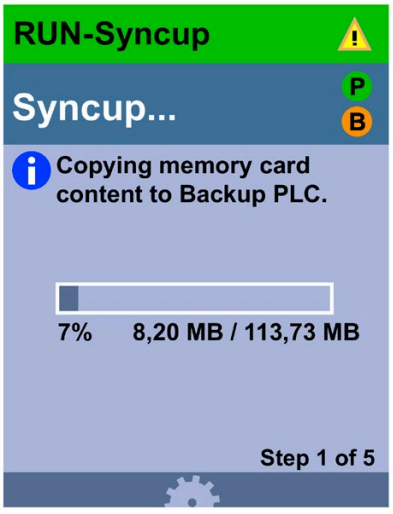	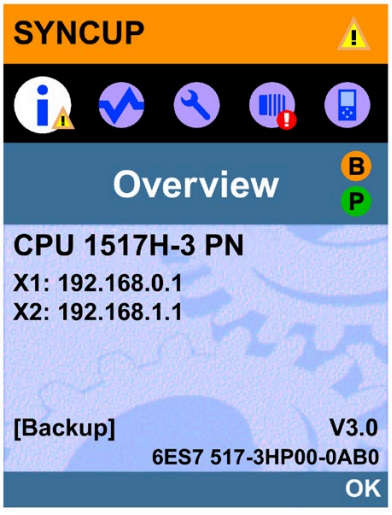

The backup CPU copies the transferred load memory contents to its work memory.

② Restart of the backup CPU

The backup CPU restarts and automatically switches back to the SYNCUP operating state.

The display of the backup CPU shows the "Connecting..." state.

Table 11- 7 Restart of the backup CPU

Primary CPU	Backup CPU
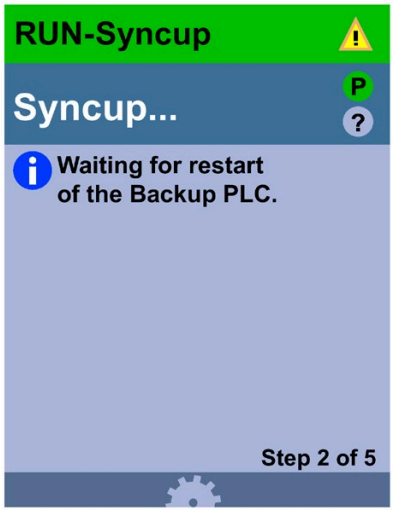	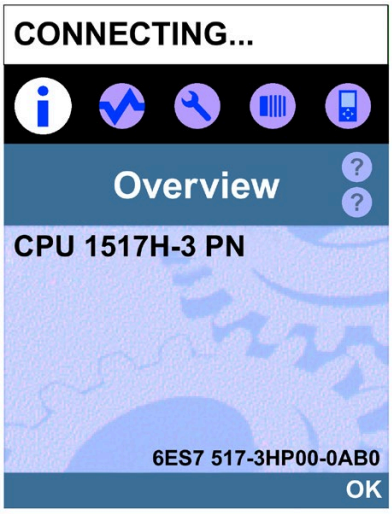

③ Finishing tasks

The instructions running asynchronously on the primary CPU are terminated and new ones are accepted but not started.

From this point on, restarted asynchronous instructions are delayed until the "Copying the working memory" phase. The "BUSY" output parameter of instructions is"1". However, processing does not yet start.

The communication connections in the primary CPU are temporarily ended. You can no longer delete, load, generate or compress blocks in the user program. You can no longer run any test or commissioning functions.

Table 11- 8 Preparing the copying of the work memory

Primary CPU	Backup CPU
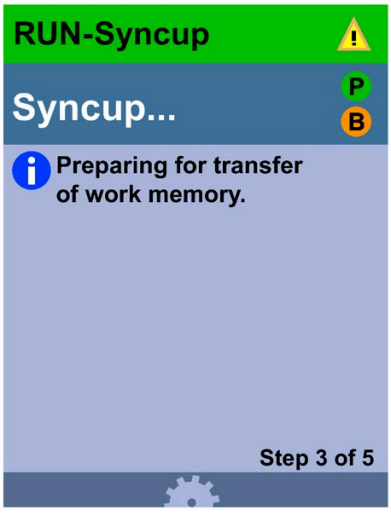	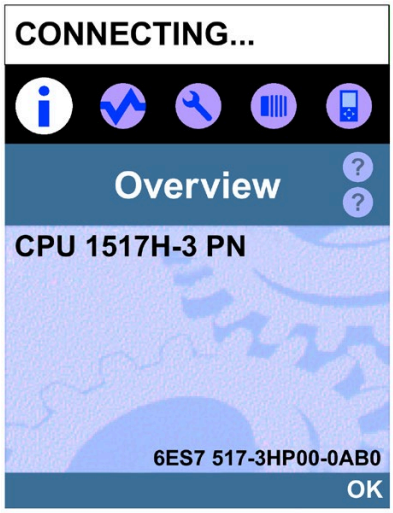

④ Copying the work memory

The primary CPU stores a consistent snapshot of its memory contents and some system memory contents (backup CPU dump) at the next cycle control point: Process image, bit memory, SIMATIC time/count functions, temporary local data, data block contents.

After the snapshot, the primary CPU immediately resumes user program execution. Communication connections are reestablished and asynchronous instructions are started.

The primary CPU copies the consistent snapshot to the backup CPU and continues operating in parallel. Data blocks, the process image, etc. are immediately overwritten with current data from the primary CPU.

The display of the primary CPU indicates the copying progress.

Table 11- 9 Copying the work memory

Primary CPU	Backup CPU
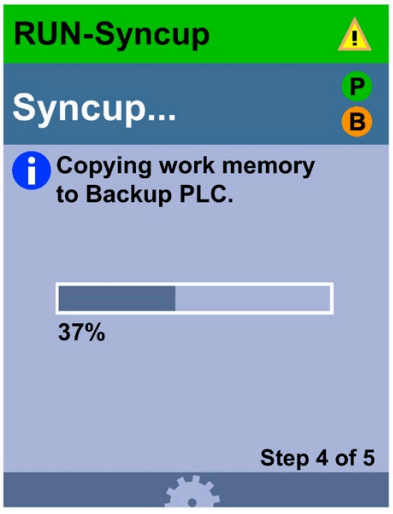	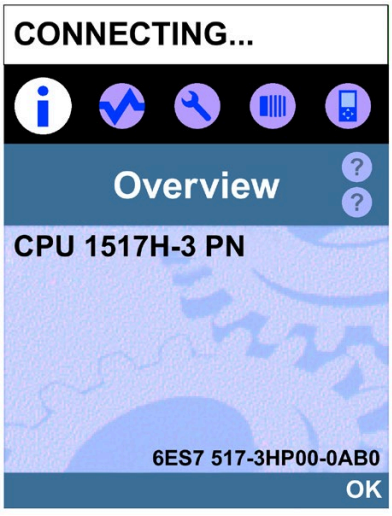

The backup CPU is busy accepting the data before it can also process the user program.

⑤ Making up backup CPU lag

In phase ⑤, the backup CPU catches up with the primary CPU.

The backup CPU sends a status message on its program progress to the primary CPU at each cycle control point.

The display of the primary CPU indicates the lag of the backup CPU.

Table 11- 10 Making up backup CPU lag

Primary CPU	Backup CPU
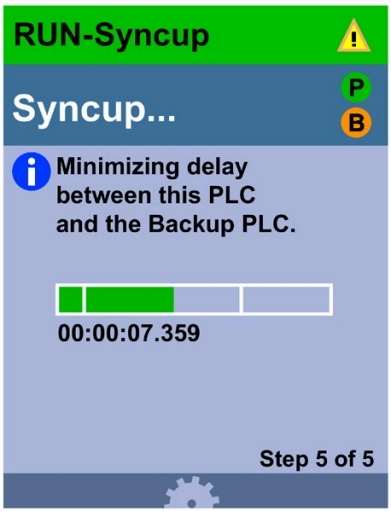	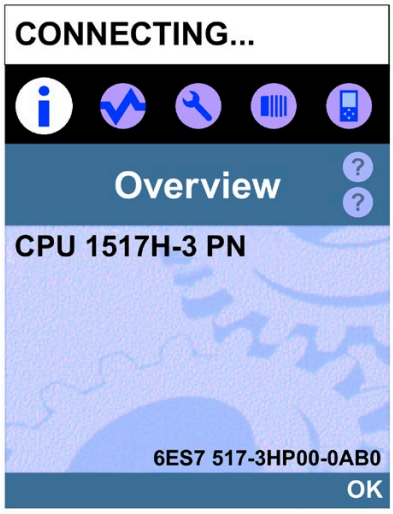

Once the backup CPU has caught up, both CPUs switch to the RUN-Redundant operating state. The backup CPU establishes connections to the IO devices (only with system redundancy S2 and R1) and the communication links are available again. Both CPUs process the user program synchronously.

Note

High load during SYNCUP

The higher load during SYNCUP can prolong the program cycle.

If SYNCUP is taking too long and the displays are not showing any progress, you can abort SYNCUP and optimize your user program. You can find more information under "SYNCUP system state aborts".

Note

Setting a sufficiently long maximum cycle time

Configure a sufficiently long maximum cycle time for the CPUs. A temporary increase in the cycle time can occur upon a system state transition SYNCUP → RUN-Redundant.

Effects of the SYNCUP system state

In SYNCUP, there are different effects on the execution of the user program and communication functions. The effects are set out in the table below.

Table 11- 11 Properties of SYNCUP

Procedure	Effects during the SYNCUP system state
Processing of the user program on the primary CPU	All priority classes (OBs) are processed. Processing is delayed during the snapshot. After the snapshot, the primary CPU immediately resumes user program execution and asynchronous instructions are started.
Deleting, loading, generating and compressing blocks	Blocks cannot be deleted, loaded, generated or compressed.
Processing communication functions	The execution of parts of functions is limited and delayed. The system makes up the delays in all functions after SYNCUP.
PG/PC operation	Depending on the SYNCUP phase, online connections from the PG/PC to the CPU may not be possible. Existing connections are aborted.
Test and commissioning functions, for example "Monitor and modify tags", "Monitoring (on/off)".	Depending on the SYNCUP phase, no test and commissioning functions may be possible.
Connection handling in the primary CPU	All communication connections are initially aborted. After the snapshot, the primary CPU re-establishes communication connections with active connection establishment. Note that the CPU takes some time to re-establish the communication connections. The CPU re-establishes connection endpoints for communication connections with passive connection setup.
Connection handling in the backup CPU	All communication connections are initially aborted. The backup CPU establishes connections (ARs) to the IO devices (only with system redundancy S2 and R1). The communication connections on the backup CPU become available during the backup CPU catch-up process.
Diagnostics alarms	Diagnostic alarms can be delayed during the SYNCUP system state. The OB 82 reports delayed diagnostic alarms. If diagnostic alarms occur during the "Making up backup CPU lag" phase, the diagnostic alarms can prolong this phase. You can find additional information in the section Basics to the Program processing (Page 252).

SYNCUP system state aborts

Abort is possible in a range of cases even if you have successfully launched the SYNCUP system state:

- If one of the two CPUs POWERS OFF.
- If you switch the backup CPU to STOP; the primary CPU continues operating in RUN operating state.
  The abort of SYNCUP may be delayed by a few seconds.
- If you set the primary CPU to STOP; the redundant system switches to the STOP system state as the backup CPU was not ready to take over control of the process (not shown in the following figure). If appropriate. the backup CPU restarts.
- If the backup CPU lag is not reduced to less than the smallest value after 100 program cycles and 10 to 13 seconds, the primary CPU aborts SYNCUP. Evaluate the diagnostics buffer of the primary and the backup CPU.

- If one of the CPUs detects an error that impedes progress, for example if the cycle time is exceeded in the primary CPU.
- If the PROFINET ring was already interrupted before changing to the SYNCUP system state or if the PROFINET ring is interrupted during SYNCUP.
- If there are other devices in the PROFINET ring apart from the CPUs to which the media redundancy role "Manager" or "Manager (auto)" was assigned.
- If, in a configuration with PROFINET rings (R1), the backup CPU was assigned the media redundancy role "Not device in the ring" before the SYNCUP.

You can find a detailed list of the causes of error and remedies in the table SYNCUP abort: Causes and solutions.

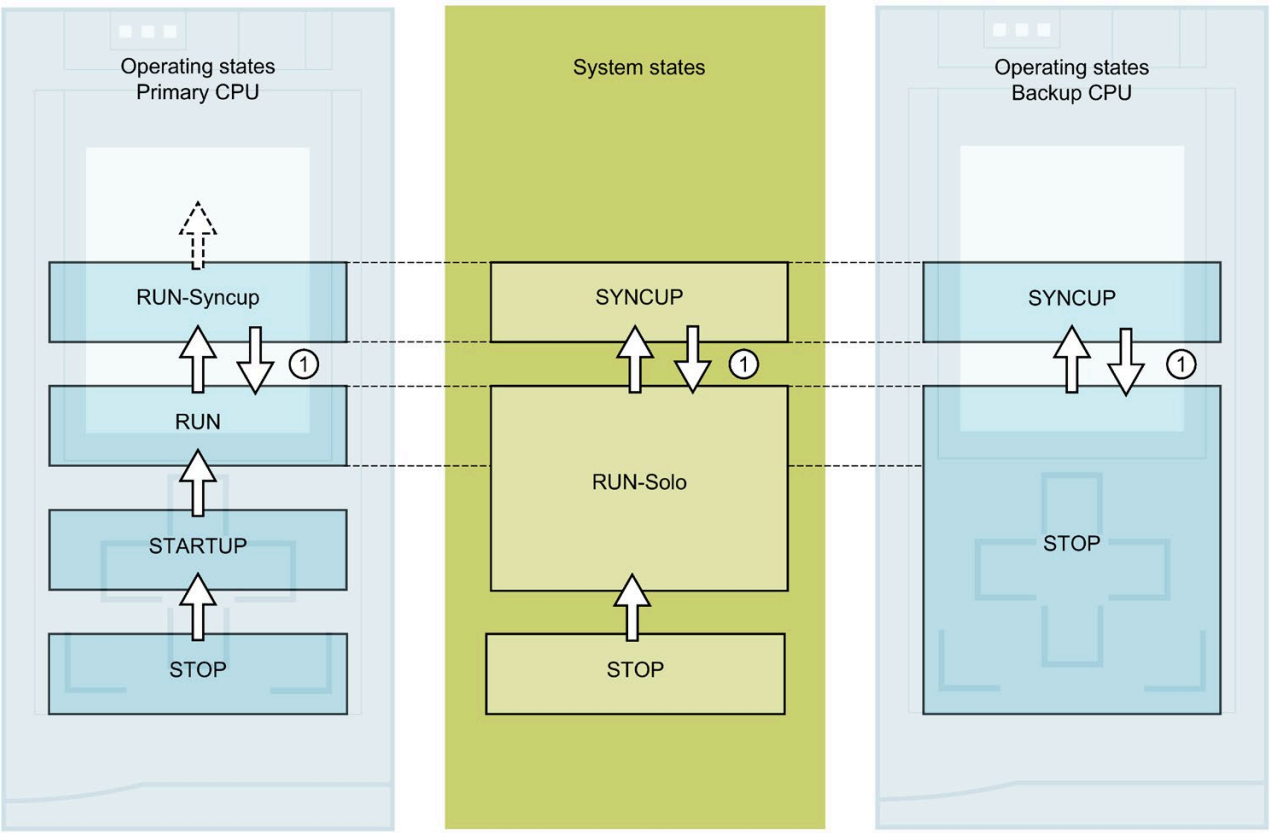

Figure 11-8 SYNCUP system state aborts

Table 11- 12 Sequence of events: SYNCUP aborts

No. in dia-gram	Primary CPU	System state	Backup CPU
Initial situation: The S7-1500R/H redundant system is in the SYNCUP system state. An error occurs in the backup CPU.			
①	The CPU does not switch from the RUN-Syncup operating state to RUN-Redundant, but instead returns to RUN and continues to execute the user program.	SYNCUP → RUN-Solo	If SYNCUP aborts, the backup CPU may restart and then switch to the STOP operating state. The backup CPU is ready for a new SYNCUP.

Procedure for error correction

1. Eliminate the error.
2. Switch the backup CPU from STOP to RUN.

The backup CPU switches from STOP to the SYNCUP operating state. Synchronization restarts.

Causes of error and troubleshooting

There are various possible causes of a SYNCUP system state abort. In the event of a SYNCUP abort, evaluate the diagnostics buffer of the primary and the backup CPU.

Table 11- 13 SYNCUP abort: Causes and solutions

Cause of SYNCUP abort	Solution
Too little memory on the SIMATIC memory card of the back-up CPU.	Delete data from the SIMATIC memory card or use a SIMATIC memory card with greater memory capacity. You can find more information in the function manual Structure and use of the CPU memory (https://support.industry.siemens.com/cs/ww/en/view/59193101).
The name of files or directories on the SIMATIC memory card of the backup CPU contains unsupported characters.	Make sure that file and/or directory names do not contain umlauts (ö, ä, ü, Ö, Ä, Ü).
The number of hierarchy levels used in directories on the SIMATIC memory card of the backup CPU is too large.	Make sure that the directory structure does not consist of more than 6 hierarchy levels (e.g. (F:) SIMATIC MC/1/2/3/4/5/6/file.txt).
System overload. The user program load is too high, and the backup CPU is therefore not catching up with program execution on the primary CPU.	Use the "RT_INFO" instruction to generate statistics on the runtime of OBs, communication or the user program. You can shorten the backup CPU delay compared to the primary CPU by: • Addressing the CPU overload by reducing the post-processing of cyclic events (events from one source, for example start events for a cyclic interrupt OB). You can find more information in the Cycle and response times (https://support.industry.siemens.com/cs/ww/en/view/59193558) function manual. • Not setting too low a minimum cycle time for program cycle OBs or increasing the minimum cycle time. This reduces the frequency at which the program cycle OBs are called.
The load on the redundancy connections between primary and backup CPU is too high. As a result, the backup CPU is not catching up with program execution on the primary CPU.	Reduce the load on the redundancy connections between primary and backup CPU by: • Reducing the post-processing of cyclic events (see above) • Avoiding instructions that increase the synchronization load, for example direct access, time access (for example RD_SYS_T, WR_SYS_T, RD_LOC_T) • Reducing communication (HMI, PG/PG, Open User Communication, etc.) • Complying with the configuration rules

Cause of SYNCUP abort	Solution
Maximum cycle time in the primary CPU exceeded	• Reduce the cycle time by setting a lower communication load in the hardware configuration. • Configure a sufficiently long maximum cycle time. • If there is an OB 80 (time error OB) in the downloaded user program, it is called by the operating system to tolerate the cycle time being exceeded (see section Start events (Page 252)).
Primary CPU or backup CPU goes into STOP operating state.	Switch the primary CPU or backup CPU into RUN operating state.
PROFINET ring interrupted	Replace defective PROFINET cables or PROFINET devices in the PROFINET ring.
In the PROFINET ring, in addition to the two CPUs, there are other devices with the media redundancy role "Manager" or "Manager (auto)".	Configure the media redundancy role "Client" for all other devices in the PROFINET ring.
In a configuration with PROFINET rings (R1), the backup CPU is assigned the media redundancy role "Not device in the ring" before the SYNCUP.	Delete the SIMATIC Memory Card of the backup CPU.
Supply voltage of the primary or backup CPU has failed.	Restore the supply voltage. Replace a defective load current supply (PM).
Simultaneous POWER OFF / POWER ON switching at both CPUs during SYNCUP: If you switch both CPUs POWER OFF/ON at the same time during SYNCUP, SYNCUP will be aborted.	Switch both CPUs POWER OFF/ON again. The SYNCUP is executed again.

See also

Resetting CPUs to factory settings (Page 385)

11.4.7 System and operating state transitions

System state transitions

The following figure shows the system state transitions of the redundant S7-1500R/H system.

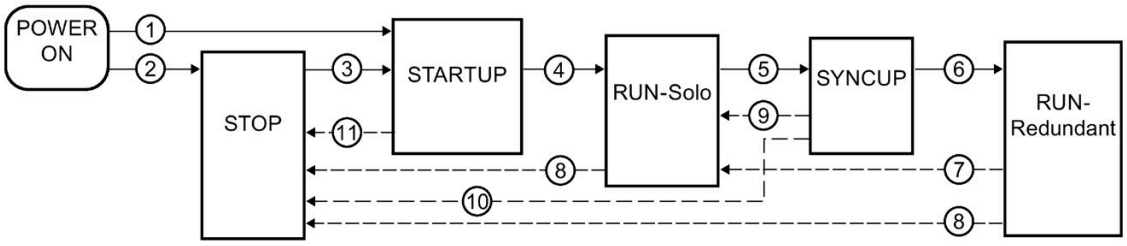

Figure 11-9 System state transitions

Operating state transitions

Operating state transitions of the redundant system

The following figure shows the operating state transitions of the primary and backup CPU.

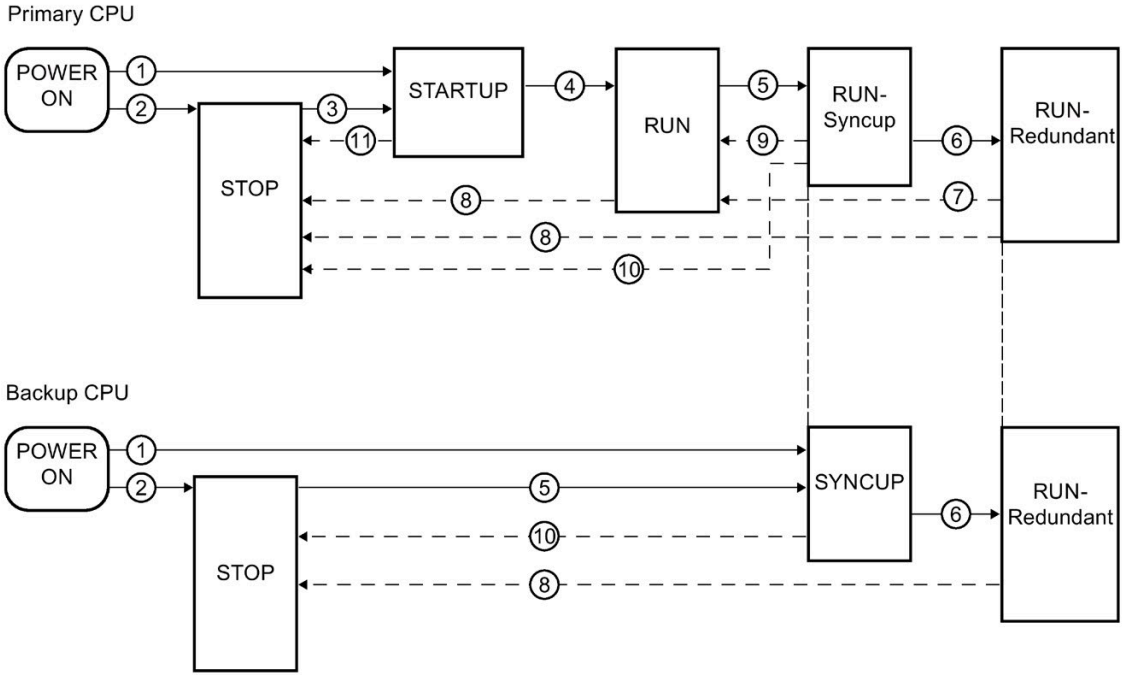

Figure 11-10 Operating state transitions

① POWER ON → STARTUP, POWER ON → SYNCUP

Transition	Description	Effect
System state transition	**POWER ON → STARTUP** The CPUs implement pairing after switch-on. The redundant system then switches to STARTUP if: • The mode selector is set to the RUN position, • The preceding "POWER OFF" was triggered by an interruption of the power supply, • The hardware configuration and program blocks are consistent, and • The startup type "Warm restart - RUN" is set or • The startup type "Warm restart - Operating mode before POWER OFF" is set and the system was in RUN-Solo, SYNCUP or RUN-Redundant before POWER OFF. The CPU that becomes the primary CPU runs the STARTUP. The primary CPU switches to the STARTUP operating state.	After POWER ON → STARTUP, the primary CPU clears the non-retentive memory and resets the contents of non-retentive data blocks to the initial values of the load memory. Retentive memory and retentive DB contents are retained.
Operating state transitions	**POWER ON → STARTUP** The CPUs implement pairing after switch-on. The primary CPU then switches to the STARTUP operating state if: • The mode selector is in the RUN position; • The preceding "POWER OFF" was triggered by an interruption of the power supply, • The hardware configuration and program blocks are consistent, and The startup type "Warm restart - RUN" is set or • The startup type "Warm restart - Operating mode before POWER OFF" is set and the CPU was in STARTUP, RUN, RUN-Syncup or RUN-Redundant before POWER OFF.	
	POWER ON → SYNCUP The CPUs implement pairing after switch-on. The backup CPU then switches to the SYNCUP operating state if: • The mode selector is in the RUN position and • The primary CPU is in the STARTUP or RUN operating state.	

Automatic STARTUP after POWER ON only possible for the primary CPU

Note

The automatic STARTUP after POWER ON only for the primary CPU prevents a CPU with outdated, retentive data from automatically changing to the RUN operating mode.

You can switch the backup CPU manually to RUN, this then automatically becomes the primary CPU and starts with its retentive data.

If you have parameterized "Startup after POWER ON" "Warm restart..." as the startup type, then the primary CPU only carries out the startup if the CPU became the primary CPU in POWER ON, i.e.:

- No partner CPU found
  or
- Due to the role assignment, the local CPU became the primary CPU and the partner CPU became the backup CPU

If a CPU became the backup CPU in POWER ON, then:

- if all the requirements are met, this results in an automatic SYNCUP
  or
- the backup CPU changes to STOP

  In both cases the CPU remains the backup CPU and can therefore not automatically carry out the STARTUP.

To illustrate the process, here are two examples:

① No STARTUP after parameterization "Warm restart - RUN"

Requirements:

- You have parameterized "Warm restart - RUN" for both CPUs.
- The pairing was successful for both CPUs.
- Both CPUs are in STOP.
- Both mode switches are set to RUN.

Procedure:

1. POWER OFF/POWER ON the backup CPU. Result: The CPU becomes the backup CPU again and changes to STOP.
2. POWER OFF/POWER ON the primary CPU. Result: The CPU changes to RUN. The redundant system switches to the RUN-Solo system state.
3. Switch the backup CPU to POWER OFF/POWER ON again. Result: The redundant system switches to the SYNCUP system state.

② No STARTUP after parameterization "Warm restart - operating mode before POWER OFF"

Requirements:

- You have parameterized "Warm restart - operating mode before POWER OFF" for both CPUs.
- The redundant system is in the RUN-Redundant system state.

Procedure:

1. POWER OFF both CPUs at the same time.
2. Set the mode selector for the primary CPU to STOP.
3. POWER ON both CPUs again. Result: The redundant system switches to the STOP system state.

② POWER ON → STOP

Transition	Description	Effects
System state transition Operating state transitions	**POWER ON → STOP** The redundant system switches to the STOP system state after switch-on if: • The CPUs have different firmware versions or • The mode selector is in the STOP position or • The hardware configuration and program blocks are inconsistent or • The startup type "No restart (remain in STOP)" is set or • The startup type "Warm restart - Operating mode before POWER OFF" is set and the redundant system was in STOP before POWER OFF.	The primary CPU clears the non-retentive memory and resets the contents of non-retentive data blocks to the initial values of the load memory. Retentive memory and retentive DB contents are retained.

③STOP → STARTUP

Transition	Description	Effects
System state transition	**STOP → STARTUP** The redundant system switches to the STARTUP system state if: • You set a CPU to RUN via the PG/PC or the display and the mode selector is set to RUN or • You set the mode switch from STOP to RUN. The CPU that you switch from STOP to RUN first remains/becomes the primary CPU. It switches to the STARTUP operating state and processes the startup blocks. The backup CPU remains in STOP.	The primary CPU clears the non-retentive memory and resets the contents of non-retentive data blocks to the initial values of the load memory. Retentive memory and retentive DB contents are retained. If there is a role change between primary and backup CPU, connected IO devices are temporarily unavailable.
Operating state transition	**STOP → STARTUP** After switch-on, the primary CPU switches to the STARTUP operating state if: • The hardware configuration and program blocks are consistent and • You set the CPU to RUN via the PG/PC or the display and the mode selector is set to RUN or • You set the mode switch from STOP to RUN.	

④STARTUP → RUN-Solo, STARTUP → RUN

Transition	Description	Effects
System state transition	**STARTUP → RUN-Solo** The redundant system switches from STARTUP to the RUN-Solo system state if: • The primary CPU has initialized the PLC tags and • The primary CPU has executed the startup blocks successfully and • "Startup CPU only if compatible" is configured, there is feedback from all IO devices before the end of the configuration time and all IO devices match the configured hardware configuration or "Startup CPU even if mismatch" is configured and the configuration time is up. The backup CPU remains in STOP.	The process image is updated and processing of the cyclic user program begins. The outputs of the IO devices are initialized.
Operating state transition	**STARTUP → RUN** The primary CPU switches to the RUN operating state if: • The CPU has initialized the PLC tags; • The CPU has executed the startup blocks successfully; and • "Startup CPU only if compatible" is configured, there is feedback from all IO devices before the end of the configuration time and all IO devices match the configured hardware configuration or "Startup CPU even if mismatch" is configured and the configuration time is up.	

⑤RUN-Solo → SYNCUP, RUN → RUN-Syncup, STOP → SYNCUP

Transition	Description	Effects
System state transition	**RUN-Solo → SYNCUP** The primary CPU is in the RUN operating state. The redundant system switches from the RUN-Solo system state to the SYNCUP system state if: • You set the backup CPU to RUN via the PG/PC, the display or the RH_CTRL instruction (Mode 7) and the mode selector is set to RUN or • You switch the mode selector on the backup CPU from STOP to RUN. or • You POWER ON the backup CPU (mode selector to RUN) and • the SYNCUP system state is not disabled by the RH_CTRL instruction.	See section SYNCUP system state (Page 309)
Operating state transitions	**RUN → RUN-Syncup** The primary CPU switches from the RUN operating state to the RUN-Syncup operating state if: • You set the backup CPU to RUN via the PG/PC or the display and the mode selector is set to RUN or • You switch the mode selector on the backup CPU from STOP to RUN. or • You POWER ON the backup CPU (mode selector to RUN).	
	STOP → SYNCUP The backup CPU switches from the STOP operating state to the SYNCUP operating state.	

⑥SYNCUP → RUN-Redundant, RUN-Syncup → RUN-Redundant

Transition	Description	Effects
System state transition	**SYNCUP → RUN-Redundant** The redundant system switches from SYNCUP to the RUN-Redundant system state if SYNCUP has successfully run. In the RUN-Redundant system state, the two CPUs execute the user program synchronously. **Note: A temporary increase in the cycle time can occur upon a system state transition SYNCUP → RUN-Redundant. Configure a sufficiently long maximum cycle time for the CPUs.**	This system state transition does not have any effect on data. Communication connections (HMI, PG/PC) on the backup CPU become available. Both CPUs process the user program synchronously.
Operating state transitions	**RUN-Syncup → RUN-Redundant** The primary CPU switches from the RUN-Syncup operating state to the RUN-Redundant operating state if SYNCUP has successfully run.	
	SYNCUP → RUN-Redundant The backup CPU switches from the SYNCUP operating state to the RUN-Redundant operating state if SYNCUP has successfully run.	

⑦RUN-Redundant → RUN-Solo, RUN-Redundant → RUN

Transition	Description	Effects
System state transition	**RUN-Redundant → RUN-Solo** The redundant system switches from the RUN-Redundant system state to the RUN-Solo system state (loss of redundancy) if: • You POWER OFF one of the CPUs. or • A CPU detects an error which prevents further work. or • The cycle time was exceeded once, see section Events and OBs (Page 252) or • You set one of the CPUs to STOP with the PG/PC, the display, the RH_CTRL instruction (Mode 8/9) or the mode selector. The primary CPU switches to RUN or the backup CPU becomes the primary CPU and switches to RUN.	This system state transition does not have any effect on the data.
Operating state transition	**RUN-Redundant → RUN** The primary CPU switches from the RUN-Redundant operating state to the RUN operating state and continues to execute the user program.	This operating state transition does not have any effect on data.

⑧RUN-Redundant → STOP, RUN-Solo → STOP, RUN → STOP

Transition	Description	Effects
System state transition	**RUN-Redundant → STOP, RUN-Solo → STOP** The redundant system switches from the RUN-Redundant/RUN-Solo system state to the STOP system state if: • The redundant system detects an error that prevents further processing or • The redundant system processes a STOP command in the user program or • You set the redundant system to STOP with the PG/PC.	This system state transition does not have any effect on data.
Operating state transitions	**RUN-Redundant → STOP, RUN → STOP** The primary CPU switches from the RUN-Redundant/RUN operating state to the STOP operating state if: • The CPU detects an error that prevents further work on one of the two CPUs. or • You set the CPU to STOP with the PG/PC, the display or the mode selector.	These operating state transitions have no effect on data.
	RUN-Redundant → STOP The backup CPU switches from the RUN-Redundant operating state to the STOP operating state.	

⑨ SYNCUP → RUN-Solo, RUN-Syncup → RUN

Transition	Description	Effects
System state transition	**SYNCUP → RUN-Solo** The redundant system switches from the SYNCUP system state to the RUN-Solo system state if: • You execute POWER OFF for the backup CPU or • The redundant system detects an error during SYNCUP that prevents redundant operation or • You set the backup CPU to STOP with the PG/PC, the display or the mode selector.	This system state transition does not have any effect on data.
Primary CPU operating state transition	**RUN-Syncup → RUN** The primary CPU switches from the RUN-Syncup operating state to the RUN operating state and continues to execute the user program.	These operating state transitions have no effect on data.

⑩SYNCUP → STOP, RUN-Syncup → STOP

Transition	Description	Effects
System state transition	**SYNCUP → STOP** The redundant system switches from the SYNCUP system state to the STOP system state if: • You set the primary CPU or both CPUs to STOP with the PG/PC, the display or the mode selector. • SYNCUP Is aborted as a result of an error in the primary CPU or in both CPUs.	This system state transition does not have any effect on data.
Operating state transitions	**RUN-Syncup → STOP** The primary CPU switches from the RUN-Syncup operating state to the STOP operating state if: • The primary CPU detects an error that prevents further processing or • You set the primary CPU to STOP with the PG/PC, the display or the mode selector or • The redundant system processes a STOP command in the user program.	These operating state transitions have no effect on data.
	SYNCUP → STOP The backup CPU restarts and switches to the STOP operating state after SYNCUP aborts if: • SYNCUP Is aborted due to an error (for causes and remedies, see section SYNCUP system state (Page 309)) or • You set the CPU to STOP with the PG/PC, the display or the mode selector.	

⑪STARTUP → STOP

Transition	Description	Effects
System state transition	**STARTUP → STOP** The redundant system switches from the STARTUP system state to the STOP system state if: • The primary CPU detects an error during startup that prevents further processing or • You set the primary CPU to STOP with the PG/PC, the display or the mode selector or • The primary CPU processes a STOP command in startup OB or • In the CPU properties, you have set the following for startup behavior: – Too short a configuration time for the distributed I/O and – "Startup CPU only if compatible" The primary CPU switches to STOP.	This system state transition does not have any effect on data.
Primary CPU operating state transition		This operating state transition does not have any effect on data.

11.4.8 Loss of redundancy CPU

Introduction

In the case of failure or STOP operating state of a CPU in S7-1500R/H the redundant system changes from RUN-Redundant system state to RUN-Solo system state. The operating system calls the OB 72 "CPU redundancy error".

The redundancy loss due to failure/switching to STOP of the CPU is considered (CPU redundancy error) in the following section. The system and operating state transitions ⑦ from the section System and operating state transitions (Page 321) are explained in more detail:

- RUN-Redundant → RUN-Solo
- RUN-Redundant → RUN

Note

Loss of redundancy of I/O

If a loss of redundancy occurs in S7-1500H in the system state RUN-Redundant at a redundant R1/S2 device, then one AR of two ARs of a R1/S2 device has failed. The operating system calls the OB 70 "I/O redundancy error". For more information, refer to the section Programming the S7-1500R/H (Page 247).

Response

Loss of redundancy of CPU means:

- The redundant system switches from the RUN-Redundant system state to the RUN-Solo system state.
- The primary CPU switches from the RUN-Redundant operating state to RUN (1)

  or
- Primary-backup switchover: The backup CPU becomes the primary CPU and switches from the RUN-Redundant operating state to RUN (2).

The primary CPU continues to execute the user program in the RUN operating state and exchanges process data with the IO devices.

Causes of loss of redundancy of CPU

The redundant system switches from the RUN-Redundant system state to RUN-Solo if:

- You POWER OFF one of the CPUs.
- You set one of the two CPUs to STOP with the PG/PC, the display, the RH_CTRL instruction (Mode 8/9) or the mode selector.
- A CPU detects an error that prevents continued processing, for example:
  - Failure of a CPU, for example as a result of a hardware defect.
  - Cycle time exceeded

(1) Primary CPU switches to the RUN operating state

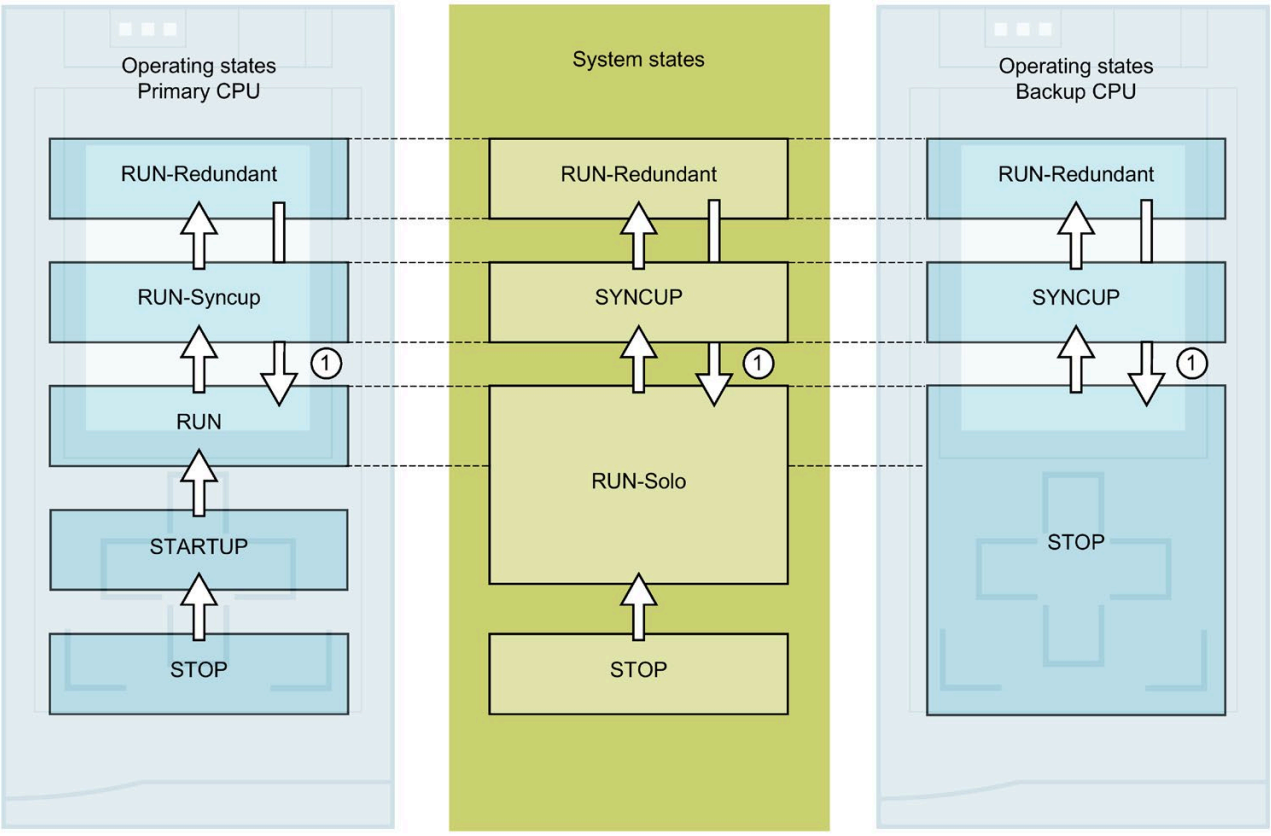

Figure 11-11 Primary CPU switches to the RUN operating state

Table 11- 14 Response to loss of redundancy of CPU: Primary CPU switches to RUN

No. in diagram	Primary CPU	System state	Backup CPU
Initial situation: The S7-1500R/H redundant system is in the RUN-Redundant system state. The backup CPU fails because of a hardware defect.			
①	The CPU switches from RUN-Redundant to RUN. The CPU behaves like a standard CPU and continues to process the user program.	RUN-Redundant → RUN-Solo	Following the error, the CPU switches from the RUN-Redundant operating state to STOP or POWER OFF.

Error elimination procedure for redundant operation

1. Eliminate the error.
2. Start the backup CPU.

The backup CPU switches from the STOP operating state to the SYNCUP operating state.

Synchronization starts as detailed in the section SYNCUP system state (Page 309).

(2) Primary-backup switchover

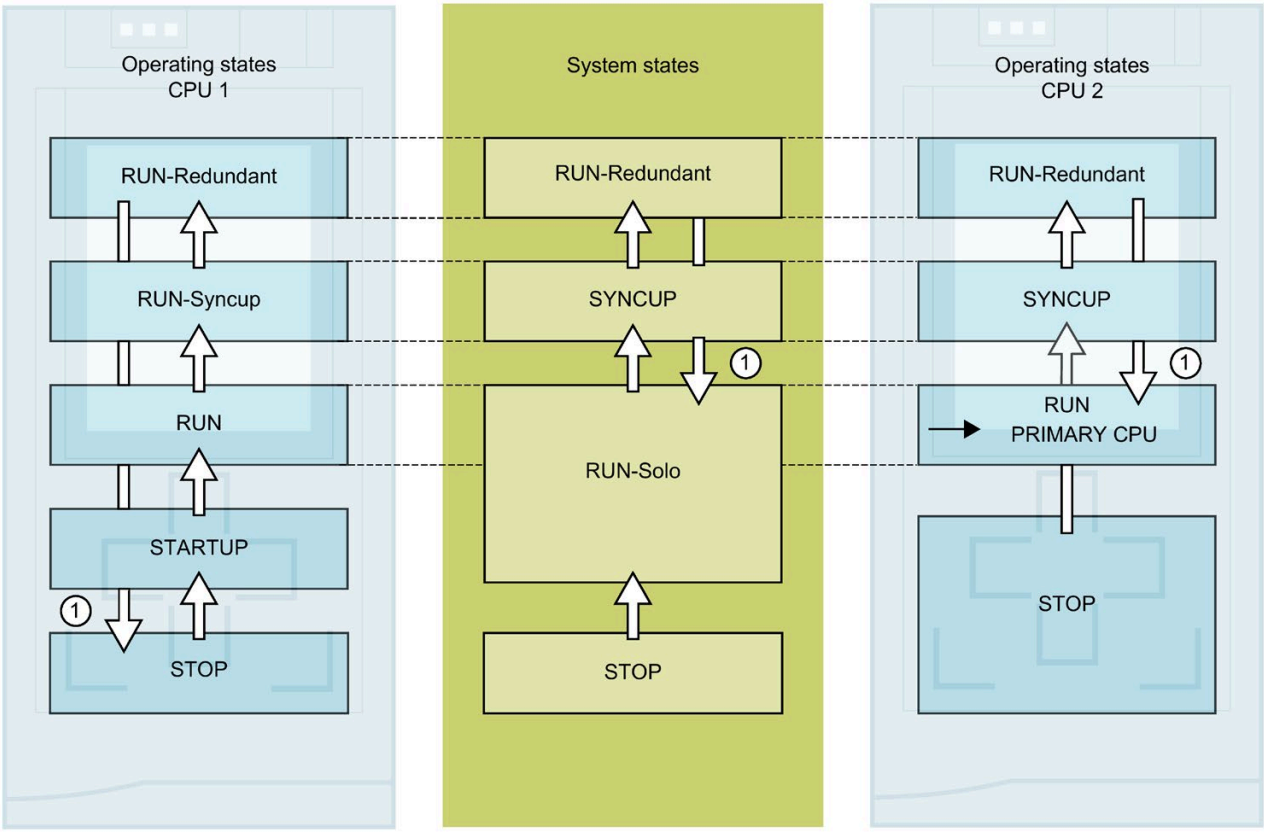

Figure 11-12 Primary-backup switchover

Table 11- 15 Response to primary CPU error: Backup CPU becomes primary CPU and switches to RUN

No. in diagram	CPU 1	System state	CPU 2
Initial situation: The S7-1500R/H redundant system is in the RUN-Redundant system state. The primary CPU (CPU 1) fails because of a hardware defect.			
①	Following the failure, CPU 1 switches from the RUN-Redundant operating state to STOP or POWER OFF.	RUN-Redundant → RUN-Solo	CPU 2 becomes primary CPU and switches to the RUN operating state. The CPU behaves like a standard CPU and continues to process the user program.

Error elimination procedure for redundant operation

1. Eliminate the error.
2. Start CPU 1.

CPU 1 becomes the backup CPU and switches from the STOP operating state to the SYNCUP operating state.

Synchronization starts as detailed in the section SYNCUP system state (Page 309).

11.4.9 Displaying and changing the system state

Introduction

For commissioning and service, you require information on the system state of the redundant system. Examples:

- The redundant system does not switch to the RUN-Redundant system state upon initial commissioning.
- The primary CPU has failed due to a fault.

Options

You have the following options for displaying and changing the system state of the S7-1500R/H redundant system:

- Using the mode selectors on the CPUs, you can change the operating states of the CPUs and therefore the system state
- Via the displays of the primary and backup CPU
- In STEP 7, for example when the R/H-CPUs are far apart

Display of the primary and backup CPU

Displaying the operating state:

The operating state of the primary and backup CPU is shown in the status information in the top section of the displays. The two operating states define the system state.

Examples:

- Status information for the primary and backup CPUs: RUN-Redundant, RUN-Redundant. Result: The system state is RUN-Redundant.
- Status information for the primary and backup CPUs: RUN, STOP. Result: The system state is RUN-Solo.

Changing the operating state:

Switch the CPU to the required operating state in the "Settings > RUN / STOP" menu of the display.

Note

Please note that you can only implement the system states RUN-Redundant and STOP through the displays by switching both CPUs to the operating state RUN or STOP .

SIMATIC S7-1500 Display Simulator

A simulation of the display of the available menu commands is available in the SIMATIC S7-1500 Display Simulator (https://support.industry.siemens.com/cs/ww/en/view/109761758).

STEP 7

Displaying the system state:

The R/H-system operating panel (Online & Diagnostics) displays the system status.

Changing the system state:

On the R/H system control panel (Online & diagnostics):

- STOP system state: Press the STOP R/H-System button.

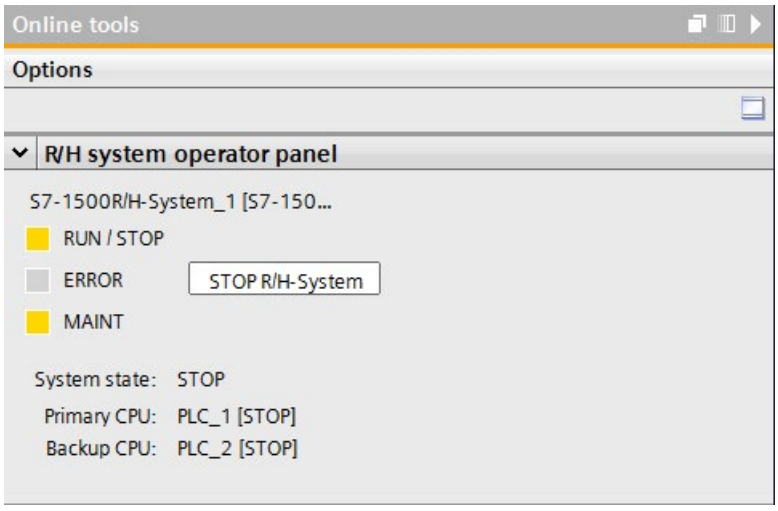

Figure 11-13 STOP system state on the R/H system control panel

On the CPU control panels (Online & diagnostics):

- RUN-Redundant system state: Press the RUN R/H-System button on both CPU operator panels.

Note

Please note that you cannot switch the S7-1500R/H system to the RUN-Redundant system state over the R/H system control panel. You implement the RUN-Redundant system state by switching each CPU on its control panel to RUN.

11.5 CPU memory reset

Basics of a memory reset

Memory resets can be performed for the primary and for the backup CPU. Memory resets are generally only useful for the primary CPU.

Reason: Following a primary CPU memory reset, you need to trigger synchronization for redundant operation. In SYNCUP, the backup CPU is synchronized with the retentive data from the primary CPU. Following SYNCUP, the backup CPU processes the same user program as the primary CPU.

The memory reset process for R/H-CPUs is identical to that for the S7-1500 standard CPUs. The CPU must be in the STOP operating state for a memory reset.

A memory reset returns the CPU to its "initial state".

Note

A memory reset only ever affects the CPU to which you have applied the function. For a memory reset of both CPUs, apply the function to each in turn.

Memory reset means:

- An existing online connection between your programming device/PC and the CPU is terminated.
- The content of the work memory and the retentive and non-retentive data are deleted.
- The diagnostics buffer, time of day, IP address and the redundancy ID are retained.
- Subsequently the CPU is initialized with the loaded project data (hardware configuration, code and data blocks, force jobs). The CPU copies this data from the load memory to the work memory.
- Data blocks no longer have actual values but rather their configured start values.
- Force jobs remain active.

Detecting a CPU memory reset

The RUN/STOP LED flashes yellow at 2 Hz. After completion, the CPU switches to STOP. The RUN/STOP LED lights up yellow.

Result after memory reset

The following table provides an overview of the contents of the memory objects after memory reset.

Table 11- 16 Memory objects after memory reset

Memory object	Contents
Redundancy ID	Retained
Actual values of the data blocks, instance data blocks	Initialized
Bit memories, timers and counters	Initialized
Entries in the diagnostics buffer[1] (retentive area)	Retained
Entries in the diagnostics buffer (non-retentive area)	Initialized
IP addresses	Retained
Device name (module name)	Retained
Counter readings of the runtime meters	Retained
Time of day	Retained

[1] The entries in the diagnostics buffer are the 500 most recent entries.

Note

Password for protection of confidential configuration data

The password for protection of confidential configuration data is retained after a memory reset of the CPU. The password is only deleted when the "Delete password for protection of confidential PLC configuration data" option is set.

You can find additional information on the password for protection of confidential configuration data in the Communication (https://support.industry.siemens.com/cs/ww/en/view/59192925) function manual.

11.5.1 Automatic memory reset

Possible causes of automatic memory reset

Proper continuation of work is prevented in the following cases. The CPU performs an automatic memory reset.

These can be caused by:

- User program is too large and cannot be loaded to the work memory in full.
- The project data on the SIMATIC memory card are damaged, for example because a file was deleted.
- You remove or insert the SIMATIC memory card. The backed-up retentive data differs in structure from the data in the configuration on the SIMATIC memory card.
- SYNCUP aborts in the backup CPU. You can find more information in the section SYNCUP system state (Page 309).

11.5.2 Manual memory reset

Reason for manual memory reset

Memory reset is required to reset the primary or backup CPU to its "initial state". Memory resets can only be run in the STOP operating state of a CPU.

CPU memory reset

There are three options for performing a CPU memory reset:

- Using the mode selector / mode selector keys
- Using the display
- Using STEP 7

Procedure using the mode selector (R/H CPUs with article numbers 6ES7513-1RL00-0AB0, 6ES7515-2RM00-0AB0, 6ES7517-3HP00-0AB0, 6ES7518-4JP00-0AB0)

Note

Memory reset ↔ Reset to factory settings

The procedure described below also corresponds to the procedure for resetting to factory settings:

- Selector operation with inserted SIMATIC memory card: CPU executes a memory reset
- Selector operation without inserted SIMATIC memory card: CPU executes reset to factory settings

Proceed as follows for a CPU memory reset using the mode selector:

1. Set the mode selector to STOP.

   Result: The RUN/STOP LED lights up yellow.
2. Set the mode selector to MRES. Hold the switch in this position until the RUN/STOP LED lights up for the second time and remains continuously lit after three seconds. Then release the mode selector.
3. Within the next three seconds, switch the mode selector back to the MRES position and then back to STOP.

Result: The CPU executes a memory reset.

For information on resetting the CPU to factory settings, refer to the section Reset CPUs to factory settings (Page 385).

Procedure via the operating mode keys (R-CPUs as of article number 6ES7513-1RM03-0AB0, 6ES7515-2RN03-0AB0)

Note

Memory reset ↔ Reset to factory settings

The procedure described below also corresponds to the procedure for resetting to factory settings:

- Key operation with inserted SIMATIC memory card: CPU executes a memory reset
- Key operation without inserted SIMATIC memory card: CPU executes reset to factory settings

To perform a memory reset of the CPU using the mode selector keys, follow these steps:

1. Press the STOP mode selector key.

   Result: The STOP ACTIVE and RUN/STOP LED light up yellow.
2. Press the operating mode button STOP until the RUN/STOP LED lights up for the 2nd time and remains continuously lit after three seconds. After this, release the button.
3. Press the STOP mode selector key again within the next three seconds.

Result: The CPU executes a memory reset.

For information on resetting the CPU to factory settings, refer to the section Reset CPU to factory settings (Page 385).

Procedure using the display

To navigate to the desired "Memory reset" menu command, select the following sequence of menu commands and confirm after each selection with "OK".

- Settings → Reset → Memory reset

Result: The CPU executes a memory reset.

Procedure using STEP 7

Requirement: There is an online connection between the CPU ad PG/PC.

Proceed as follows for a CPU memory reset with STEP 7:

1. Open the "Online Tools" task card of the CPU.
2. Click "MRES" in the "CPU operator panel" pane.
3. Click "OK" in response to the confirmation prompt.

Result: The CPU executes a memory reset.

11.6 Backing up and restoring the CPU configuration

Backup from online device

You may make changes in the operation of your plant. For example, you may add new devices, replace existing ones or adapt the user program. If these changes result in undesirable behavior, you can restore the plant to an earlier state. Before you download a changed configuration to the CPU, first use the option "Backup from online device" to create a complete backup of the current device state. If you have assigned a password to protect confidential PLC configuration data, then this password is not secured. For more information on the password, refer to the section Protection of confidential configuration data (Page 270).

Upload from device (software)

With the option "Upload from device (software)", you load the software project data from the CPU to an existing CPU in the project.

Upload device as new station

If you are operating a new PG/PC in the plant, the STEP 7 project that was used to create the plant configuration might not be available. In this case, you can use the option "Upload device as new station" to load the device data to a project in your PG/PC.

Snapshot of the actual values

To allow you to restore the actual values at a later date, back up the actual values of the data blocks using the option "Snapshot of the actual values".

Overview of backup types

The table below shows the backup of CPU data depending on the selected type of backup and its specific characteristics:

Table 11- 17 Types of backup

	Backup from online device	Upload from device (software)	Upload device as new station	Snapshot of the actual values
Actual values of all DBs (global and instance data blocks)	✓	✓	✓	✓
Blocks of the type OB, FC, FB and DB	✓	✓	✓	--
PLC tags (tag names and constant names)	✓	✓	✓	--
Hardware configuration	✓	--	✓	--
Actual values (bit memories, timers and counters)	✓	--	--	--
Contents of the SIMATIC memory card	✓	--	--	--
Entries in the diagnostics buffer	--	--	--	--
Current time	--	--	--	--
Password for protection of confidential configuration data	--	--	--	--
Properties of the type of backup				
Backup can be edited	--	✓	✓	✓
Backup possible in system state	RUN-Solo[1], STOP	RUN-Redundant, RUN-Solo, STOP	RUN-Redundant, RUN-Solo, STOP	RUN-Redundant, RUN-Solo, STOP

[1] From backup CPU

Example: Backup from online device

The following example shows how to carry out a complete backup of the current device state of the CPUs in STEP 7. The S7-1500R/H redundant system is in the RUN-Redundant system state. Special consideration should be given to the following:

- Before the backup, the backup CPU goes into STOP mode.
- The CPU data of the backup CPU is backed up.

To start the backup, proceed as follows:

1. Right-click to select the S7-1500R/H system in the project tree.
2. Select the "Backup from online device" command from the shortcut menu.
3. The "Upload preview" dialog window sets out the key information on the backup process to be run. To make a backup, you need to set the S7-1500R/H redundant system to the RUN-Solo system state.

   Note: If you open the entry "Stop module" in the preview, then you can see which CPU is stopped.
4. In the "Action" column, select the "Stop module" command from the drop-down menu.

5. Click "Upload from device". The backup CPU switches to the STOP operating state. The backup of the CPU data of the backup CPU begins. The backup is saved in the folder of the top CPU in the project tree.
6. Switch the redundant system to the RUN-Redundant system state again.

Example: Restoring a backup of an online device

If you have saved the CPU data beforehand, you can transfer the backup back to the device. The saved backup is then restored to the CPU.

The S7-1500R/H redundant system is in the RUN-Redundant system state. Special consideration should be given to the following:

- The backup is loaded into the primary CPU.
- Before the restore, the redundant system goes to the STOP system state.

To start the backup restore, proceed as follows:

1. In the project, open the folder of the top CPU in the project tree to display the lower-level objects.
2. Open the "Online backups" folder.
3. Select the backup you want to restore.
4. In the "Online" menu, select the "Download to device" command.
5. The "Load preview" dialog window sets out the key information on the restore process to be run: For a restore, you must switch the S7-1500R/H redundant system to the STOP system state.
6. In the "Action" column, select the "Overwrite" command from the drop-down menu.
7. Click "Download". The redundant system switches to the STOP system state. The backup is transferred to the primary CPU and restored. The "Load results" dialog then opens. In this dialog, you can check whether or not the loading operation was successful and take any further action that may be necessary (no action, start modules).
8. Click "Finish".

Reference

You can find more information on the various types of backup in the STEP 7 online help.

Emergency address (emergency IP)

If you cannot access the CPU via the IP address, you can set a temporary emergency IP address for the CPU. To the more information on emergency address options, please refer to the Communication (https://support.industry.siemens.com/cs/ww/de/view/59192925/en) function manual.

Storage of multilingual project texts

Different categories of texts are created when you configure a CPU, for example

- Object names (names of blocks, modules, tags, etc.)
- Comments (for blocks, networks, watch tables, etc.)
- Messages and diagnostic texts

Texts are provided by the system, for example texts in the diagnostics buffer, or they are created during configuration, for example messages.

Texts exist in the project in one language or, after a translation process, in multiple languages. You can maintain project texts in all languages available to you in the project tree (Languages & resources > Project texts). The texts created during configuration can be downloaded to the CPU.

The following texts containing the project data are downloaded to the CPU in the chosen languages and are also used by the CPU display:

- Diagnostics buffer texts (not editable)
- Status texts for the module status (cannot be changed)
- Message texts with associated text lists
- Tag comments and step comments for PLC Code Viewer
- Comments in watch tables

The following texts are also loaded into the CPU in the selected languages with the project languages, but are not used by the CPU display:

- Comments in tag tables (for tags and constants)
- Comments in global data blocks
- Comments of elements in block interfaces of FBs, FCs, DBs and UDTs
- Network titles in blocks written in LAD, FBD or STL
- Block comments
- Network comments
- Comments of LAD and FBD elements

The S7-1500R/H CPUs support archiving of multilingual project texts in up to three different project languages. If the project texts for a project language nevertheless exceed the memory space reserved for them on the SIMATIC memory card, the project cannot be downloaded to the CPU. The download is aborted with a notice that not enough memory space is available. In such a case, take measures to reduce the required storage space, for example by shortening comments.

Note

SIMATIC memory card

Make sure that there is enough available storage space on your SIMATIC memory card for downloading projects.

In order to be able to download and back up projects, the project size and the size of files on the SIMATIC memory card may not exceed 2 GB.

Do not manipulate any contents in the OMSSTORE folder on the SIMATIC memory card.

You can find information on reading out the memory usage of the CPU and the SIMATIC memory card in the Structure and Use of the CPU Memory (https://support.industry.siemens.com/cs/de/de/view/59193101/en) Function Manual.

You can find information on parameter assignment of multilingual project texts in STEP 7 in the STEP 7 online help.

11.7 Time synchronization

Introduction

All S7-1500R/H CPUs have an internal clock. The clock shows:

- The time of day with a resolution of 1 millisecond
- The date and the day of the week

The CPUs take into account the time change caused by daylight saving time.

In redundant mode, the two CPUs of the S7-1500R/H redundant system constantly synchronize their internal clocks.

You can synchronize the time of the CPUs using the NTP procedure.

Principle of operation

In NTP mode, the device sends time queries at regular intervals (in client mode) to the NTP server in the subnet (LAN). Based on the replies from the servers, the most reliable and most accurate time is calculated and the time of day on the S7-1500R/H CPU is synchronized. The advantage of this mode is that it allows the time to be synchronized across subnets. You can synchronize the time of day of up to a maximum of four NTP servers. You address a communications processor or an HMI device, for example, as sources for time synchronization via the IP addresses.

The update interval defines the interval between the time queries (in seconds). The value range for the interval is 10 seconds to one day. In NTP mode, it is generally UTC (Universal Time Coordinated) that is transferred. UTC corresponds to GMT (Greenwich Mean Time).

Conditions

- In the S7-1500R/H redundant system, you need to configure time synchronization in NTP mode for each CPU individually. If possible, use the same settings for both CPUs.
- You define the settings for the time synchronization via NTP method in the "Properties > General > Time" parameter group.
- Make sure that the primary CPU maintains a constant connection to the NTP server. The backup CPU then receives its synchronized time of day from the primary CPU.

Procedure

Proceed as follows to enable time synchronization for a CPU:

1. Configure the interface properties in the "Properties > General > Time" parameter group.
2. Set the "Set NTP server in project" value at the "Time synchronization" parameter.
3. Enter the IP addresses of up to four NTP servers at parameter "Server 1-4".
4. Set the time interval for time queries at the parameter "Update interval".

11.7.1 Example: Configuring the NTP server

Configuring time synchronization with your own NTP server

Automation task

You use your own server in your network. Your own server offers the following advantages:

- Protection against unauthorized external accesses
- Every device that you synchronize with your own NTP server uses the same time.

You want to synchronize the CPUs of your S7-1500R/H redundant system with this NTP server.

Conditions and parameters

- You have your own NTP server in your network with the IP address 192.168.1.15.
- S7-1500R/H redundant system

Solution

1. Select the first R/H CPU in STEP 7.
2. Navigate to "Properties > General > Time" in the properties of the CPU.
3. Set the "Set NTP server in project" value at the "Time synchronization" parameter.
4. At "NTP Server 1:", enter the IP address of the NTP server: 192.168.1.15.

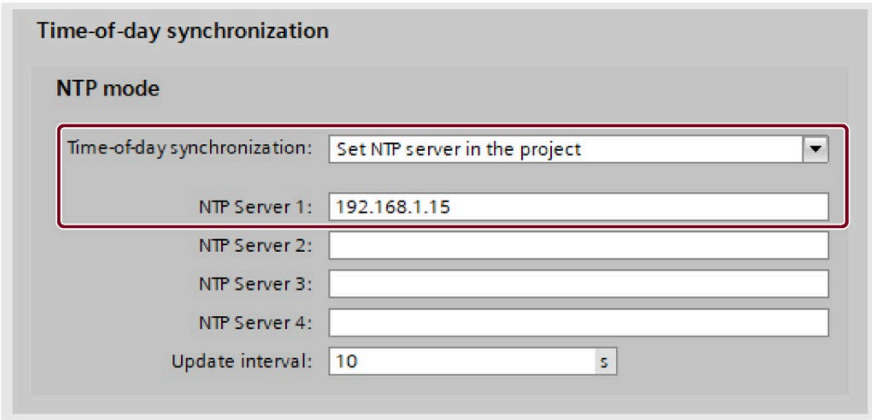

Figure 11-14 Example: Configuring the NTP server

5. Repeat steps 2 and 4 for the second CPU.
6. Download the hardware configuration to the primary CPU.

Result

The S7-1500R/H redundant system synchronizes its time with NTP server 192.168.1.15.

11.8 Identification and maintenance data

11.8.1 Reading out and entering I&M data

I&M data

Identification and maintenance data (I&M data) is information saved on the module. The data is:

- Read-only (I data) or
- Read/write (M data)

Identification data (I&M0): Manufacturer information about the module that can only be read. Some identification data is also printed on the housing of the module, for example article number and serial number.
Maintenance data (I&M1, 2, 3): Plant-specific information, for example installation location. Maintenance data for S7-1500R/H is created during configuration and downloaded to the redundant system.

S7-1500R/H supports identification data I&M0 to I&M3. Exception: The synchronization modules for S7-1500H only support identification data I&M0.

The I&M identification data supports you in the following activities:

- Checking the plant configuration
- Locating hardware changes in a plant
- Correcting errors in a plant

Modules can be clearly identified online using the I&M identification data.

Options for reading out I&M data

- Over the user program
- From the display of the CPUs
- Via STEP 7 or HMI devices

Reading I&M data over the user program

You have the following options for reading module I&M data in the user program:

- Using the RDREC instruction

  The data record structure for centrally inserted modules and for distributed modules accessible over PROFINET IO is described in the section Record structure for I&M data (Page 349).

- Using the Get_IM_Data instruction

Note

Get_IM_Data: Loss of redundancy when reading out the I&M data from the S7-1500 R/H CPU displays up to FW version V2.8

If you read out the I&M data from the displays of the CPUs, then the "Get_IM_Data" instruction might, under certain circumstances, return different data to the two CPUs of the S7-1500R/H redundant system. Further processing of this data in the user program could possibly result in loss of redundancy.

Do not use the HW identifiers of the displays (65154, 65354) for the LADDR parameter of the "Get_IM_Data" instruction.

Reference

The description of the instructions can be found in the STEP 7 online help.

Reading I&M data from displays

Proceed as follows to read the I&M data of a CPU:

1. Navigate to the "Overview/PLC" menu on the display of the CPU.
2. Select "Plant designation" or "Location identifier". Click "OK" to confirm.

Reading I&M data via STEP 7

Requirement: There must be an online connection to the CPU.

Proceed as follows to read the I&M data using STEP 7 from the primary and backup CPU:

1. Select the CPU in the project tree.
2. Go to "Online & diagnostics".
3. In the "Diagnostics" folder, select the "General" area.

Enter maintenance data over STEP 7

STEP 7 assigns a default module name. You can enter the following information:

- Plant designation (I&M 1)
- Location identifier (I&M 1)
- Installation date (I&M 2)
- Additional information (I&M 3)

To enter maintenance data via STEP 7, follow these steps:

1. Select the CPU in the STEP 7 device view.
2. Go to properties, "General", and select the "Identification & Maintenance" area.
3. Enter the data.

During the loading of the hardware configuration, the maintenance data (I&M 1, 2, 3) are also loaded.

11.8.2 Record structure for I&M data

Reading I&M records via user program (centrally and distributed via PROFINET IO)

Use **Read data record** ("RDREC" instruction) to access specific identification data. Under the associated record index you obtain the corresponding part of the identification data.

The records are structured as follows:

Table 11- 18 Basic structure of data records with I&M identification data

Contents	Length (bytes)	Coding (hex)
Header information		
BlockType	2	I&M0: 0020_H I&M1: 0021_H I&M2: 0022_H I&M3: 0023_H
BlockLength	2	I&M0: 0038_H I&M1: 0038_H I&M2: 0012_H I&M3: 0038_H
BlockVersionHigh	1	01
BlockVersionLow	1	00
Identification data		
Identification data (see table below)	I&M0/Index $AFF0_H$: 54 I&M1/Index $AFF1_H$: 54 I&M2/Index $AFF2_H$: 16 I&M3/Index $AFF3_H$: 54	- - - -

Table 11- 19 Record structure for I&M identification data

Identification data	Access	Example	Explanation
Identification data 0: (record index AFF0H)			
VendorIDHigh	Read (1 bytes)	0000H	Vendor name (002AH = SIEMENS AG)
VendorIDLow	Read (1 bytes)	002AH	
Order_ID	Read (20 bytes)	6ES7515-2RM00-0AB0	Article number of module (for example CPU 1515R-1 PN)
IM_SERIAL_NUMBER	Read (16 bytes)	-	Serial number (device-specific)
IM_HARDWARE_REVISION	Read (2 bytes)	1	corresponds to hardware version (e.g. 1)
IM_SOFTWARE_REVISION	Read	Firmware version	Provides information about the firmware version of the module (e.g. V1.0.0)
• SWRevisionPrefix	(1 byte)	V	
• IM_SWRevision_Functional_Enhancement	(1 byte)	0000H - 00FFH	
• IM_SWRevision_Bug_Fix	(1 byte)	0000H - 00FFH	
• IM_SWRevision_Internal_Change	(1 byte)	0000H - 00FFH	
IM_REVISION_COUNTER	Read (2 bytes)	0000H	Provides information about parameter changes on the module (not used)
IM_PROFILE_ID	Read (2 bytes)	0000 H	Generic Device
IM_PROFILE_SPECIFIC_TYPE	Read (2 bytes)	0001H	CPU
		0003H	I/O modules
IM_VERSION	Read	0101H	Provides information on the ID data version (0101H = Version 1.1)
• IM_Version_Major	(1 byte)		
• IM_Version_Minor	(1 byte)		
IM_SUPPORTED	Read (2 bytes)	000EH	provides information about the available identification and maintenance data (I&M1 to I&M3)
Maintenance data 1: (Record index AFF1H)			
IM_TAG_FUNCTION	Read/write (32 bytes)	-	Enter an identifier for the module here, that is unique plant-wide.
IM_TAG_LOCATION	Read/write (22 bytes)	-	Enter the installation location of the module here.
Maintenance data 2: (Record index AFF2H)			
IM_DATE	Read/write (16 bytes)	YYYY-MM-DD HH:MM	Enter the installation date of the module here.
Maintenance data 3: (Record index AFF3H)			
IM_DESCRIPTOR	Read/write (54 bytes)	-	Enter a comment about the module here.

11.8.3 Example: Read out firmware version of the CPU with Get_IM_Data

Automation task

You want to check whether the modules in your redundant system have the current firmware. The firmware version of the modules can be found in the I&M 0 data. The IM 0 data is the basic information for a device. I&M 0 data contains information such as:

- Manufacturer ID
- Article number and serial number
- Hardware and firmware version

To read out the I&M 0 data, use the "Get_IM_Data" instruction. You read the I&M 0 data of all modules in the user program of the CPU with "Get_IM_Data" instructions and store the I&M 0 data in a data block.

Conditions and parameters

The following block parameters of the "Get_IM_Data" instruction are important for reading out the I&M data of the CPU:

- LADDR: You enter the system constants or hardware identifier of the CPU at the LADDR parameter. You have the following options:
  - "Local1" (65149): The instruction always returns the I&M data of the CPU with redundancy ID 1.
  - "Local2" (65349): The instruction always returns the I&M data of the CPU with redundancy ID 2.
- IM_TYPE: Enter the I&M data number (for example "0" for I&M 0 data) at the IM_TYPE block parameter.
- DATA: Area for storing the I&M data read (for example in a global data block). Store the I&M 0 data in an area of the data type "IM0_Data".

This example shows you how to read out the I&M 0 data of a CPU 1513R-1 PN (redundancy ID 1, 6ES7513-1RM03-0AB0).

Solution

Proceed as follows to read out the I&M 0 data of the CPU with the redundancy ID 1:

1. Create a global data block to store the I&M 0 data.
2. Create a structure of the data type "IM0_Data" in the global data block. You can assign any name to the structure ("imData" in this case).

SLI_gDB_Get_IM_Data

	Name	Data type	Start value
1	Static		
2	imData	IM0_Data	
3	done	Bool	false
4	busy	Bool	false
5	error	Bool	false
6	status	Word	16#0

Figure 11-15 Example: Data block for I&M data

3. Create the "Get_IM_Data" instruction in the user program, for example in OB 1.
4. Connect the "GET_IM_DATA" instruction as follows:

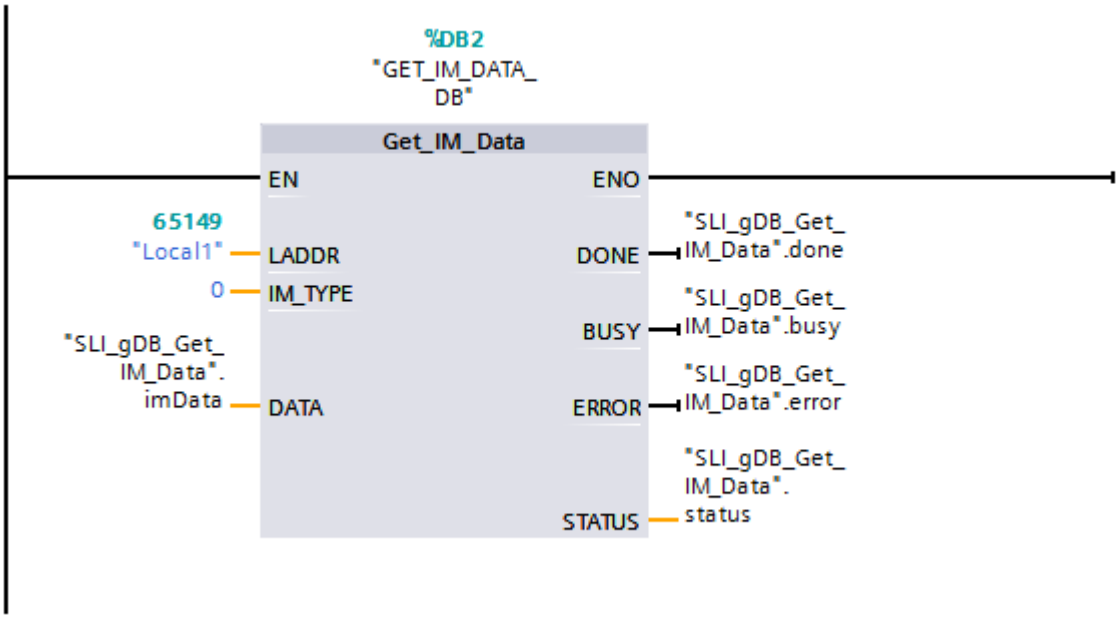

Figure 11-16 Example: Read out I&M0 data from the S7-1500R redundant system

5. Call the "Get_IM_Data" instruction in the user program.

Result

The "Get_IM_Data" instruction has stored the I&M 0 data of the CPU with redundancy ID 1 in the data block.

You can view the I&M 0 data online in STEP 7, for example with the "Monitor all" button in the data block. The CPU in the example is a CPU 1513R-1 PN (6ES7513-1RM03-0AB0) with the firmware version V3.0. The serial number of the CPU is 'S C-F9S840662018'.

SLI_gDB_Get_IM_Data

	Name	Data type	Start value	Monitor value
1	Static			
2	imData	IM0_Data		
3	Manufacturer_ID	UInt	0	42
4	Order_ID	String[20]	''	'6ES7513-1RM03-0...
5	Serial_Number	String[16]	''	'S C-F9S840662018'
6	Hardware_Revision	UInt	0	1
7	Software_Revision	IM0_Version		
8	Type	Char	' '	'V'
9	Functional	USInt	0	3
10	Bugfix	USInt	0	0
11	Internal	USInt	0	0
12	Revision_Counter	UInt	0	0
13	Profile_ID	UInt	0	0
14	Profile_Specific_Ty...	UInt	0	0
15	IM_Version	Word	16#0	16#0101
16	IM_Supported	Word	16#0	16#001E
17	done	Bool	false	TRUE
18	busy	Bool	false	FALSE
19	error	Bool	false	FALSE
20	status	Word	16#0	16#0000

Figure 11-17 Example: I&M 0 data of an R CPU

Benefits

You can see from the data block at a glance which module requires an update.

Display 12

12.1 CPU display

Introduction

The following section gives an overview of how the R/H-CPU display operates. Detailed information on the individual options, a training course and a simulation of the selectable menu items is available in the SIMATIC S7-1500 Display Simulator (https://support.industry.siemens.com/cs/ww/en/view/109761758).

Display

The R/H-CPUs have a front cover with a display and operating keys. The display of the CPUs shows you the control and status information in various menus. You use operating keys to navigate through the menus and make a variety of settings in the process.

Benefits

The display offers the following advantages:

- Reduced downtimes through diagnostic messages in plain text
- Less time required for commissioning and maintenance, shorter plant downtime.
- Shorter downtimes due to read/write access to force tables and read/write access to watch tables.
  The watch and force tables allow you to monitor and modify the actual values of individual tags of a user program on the display. You can find additional information on the watch and force tables in the section Test and service functions (Page 390) and in the STEP 7 online help.
- Visualization of the SYNCUP system state with graphic and percentage progress display
- Overview of status of safety mode and of F-parameters of integrated F-CPU

Password protection for the display

In the properties of the CPUs, you configure a password in STEP 7 for display operation. Local access protection is thus protected with a local password. Password protection can be configured differently for each display.

Operating temperature for the display

To increase the service life of the display, the display switches off when the permitted operating temperature is exceeded. When the display has cooled down again, it switches back on automatically. When the display is switched off, the LEDs continue to show the status of the CPUs.

You can find additional information on display temperatures in the technical specifications in the CPU manuals.

Note

The R/H-CPUs have no internal temperature measurement. Reading out the internal temperature of the R/H-CPUs is not supported.

Display

The following figures show an example of a large display (left: for example CPU 1517H-3 PN) and small display (right: CPU 1513R-1 PN) of a CPU.

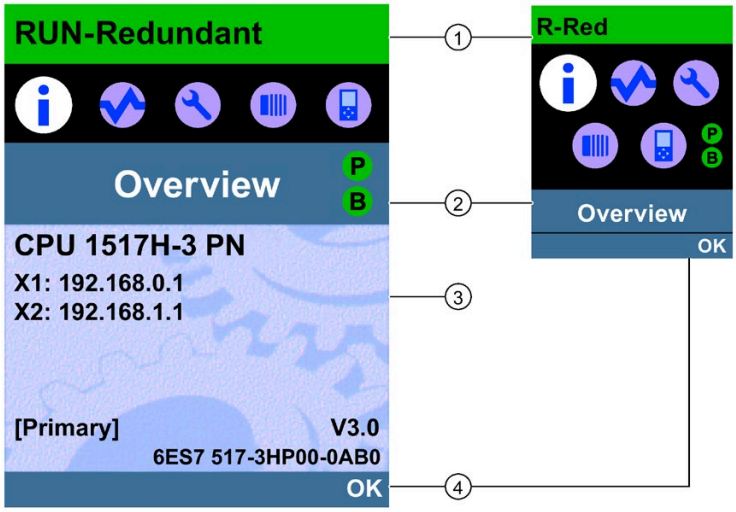

① CPU status information
② Names of the menus
③ Data display field
④ Navigation aid, e.g. OK/ESC or the page number

Figure 12-1 Example views of the displays

Regarding ①: CPU status information

The following table shows the CPU status information that can be retrieved via the display.

Table 12- 1 CPU status information

Color and icons for the status data	Meaning
Green	• RUN • RUN-Syncup • RUN-Redundant
Orange	• STARTUP • SYNCUP • STOP • STOP - firmware update
Red	FAULT
White	• Connection established between CPU and display.
	Protection level configured.
	• At least one alarm is active in the CPU. • No SIMATIC memory card inserted in the CPU. • No user program loaded.
	Force job is active in the CPU.
	F-capability activated. Safety mode active. The symbol is grayed out when safety mode is deactivated.
	Fail-safe CPU

Regarding ②: Names of the menus

The following table shows the available menus of the display.

Table 12- 2 Names of the menus

Main menu items	Meaning	Description
	Overview	The "Overview" menu contains information about: • Properties of the local CPU • Properties of the F-CPU – Status of the safety mode – Collective signature – Date of the last changes • Redundancy properties, for example – Display of role (primary CPU or backup CPU) – Displaying and setting the redundancy ID – Display of the pairing state • Properties of the inserted SIMATIC memory card
	Diagnostics	The "Diagnostics" menu includes: • Display of alarms • Display of the diagnostics buffer • Read and write access to force and watch tables • Display of cycle time • Display of memory used
	Settings	In the "Settings" menu you: • Assign IP address and PROFINET device name of the CPU • Setting date/time • Set operating states (RUN/STOP) • Perform a CPU memory reset or reset to factory settings • Disabling and enabling passwords • Disable/enable display with display password • Format SIMATIC memory card • Run firmware update and display status • Convert SIMATIC memory card or delete user program
	Modules	The "Modules" menu is not supported for R/H-CPUs.
	Display	In the "Display" menu you can configure settings related to the display, such as language setting, brightness and energy-saving mode. The energy-saving mode dims the display. Standby mode switches off the display.

Menu icons

The following table shows the icons that are displayed in the menus.

Table 12- 3 Menu icons

Icon	Meaning
	Editable menu item.
	Select the required language.
	A message is available in the next lower level page.
	There is an error in the next lower level page.
	The marked module is not accessible.
	Navigate to the next lower level page.
	In edit mode you make the selection using two arrow keys: • Down/up: Jumps to the selection or is used to select the desired digits/options.
	In edit mode you make the selection using four arrow keys: • Down/up: Jumps to the selection or is used to select the desired digits. • Left/right: Jumps one place forward or back.
	The alarm is not yet acknowledged.
	The alarm is acknowledged.

Control keys

You operate the display using the following keys:

- Four arrow keys: "up", "down", "left", "right"
  If you press and hold an arrow key for 2 seconds, this generates an automatic scroll function.
- One ESC key
- One OK key

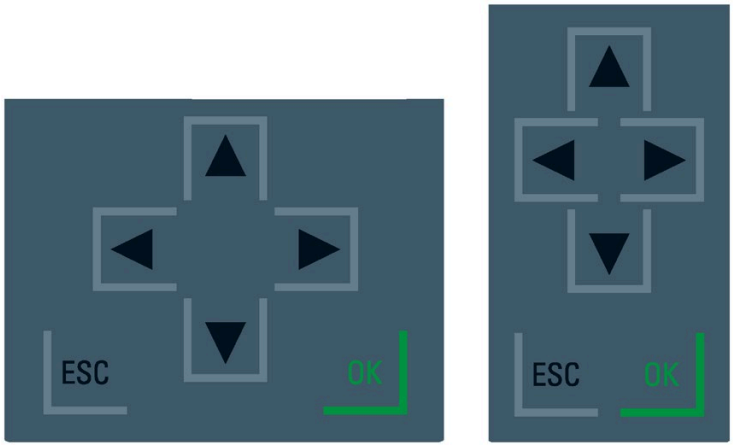

Figure 12-2 Control keys

Note

If the display is in energy-saving mode or in standby mode, you can exit this mode by pressing any key.

Functions of the "OK" and "ESC" keys

- For menu commands in which an entry can be made:
  - OK → valid access to the menu command, confirmation of input, and exit from the edit mode
  - ESC → restore original content (changes are not saved) and exit edit mode
- For menu commands in which no entry can be made:
  - OK → to next submenu command
  - ESC → back to previous menu command

Hold ESC for about 3 seconds on any screen of the display. Result: You automatically return to the home page.

Tooltips

Some of the values shown on the display can exceed the available display width. The values in question include:

- Station name
- Plant designation
- Location identifier
- PROFINET device name

The available display width is frequently exceeded on CPUs with small displays.

If you focus on the relevant value on the display and press the "Left" arrow key, a tooltip appears. The tooltip shows the name of the value in complete length. To hide the tooltip again, press the "Left" arrow key again or the "ESC" key.

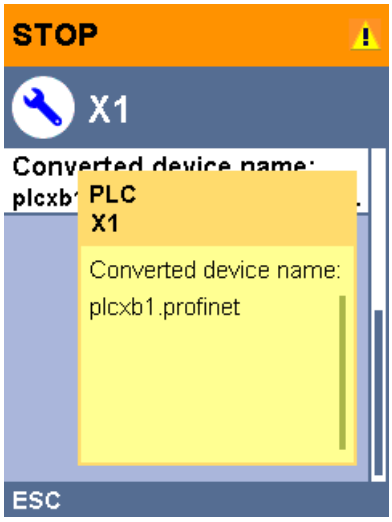

Figure 12-3 Tooltip function

Uploading image to the display via STEP 7

In the STEP 7 device view, you download an image from your file system to the CPU display with the "Display > User-defined logo" function. Different images can be downloaded to the two R/H-CPUs for clearer differentiation.

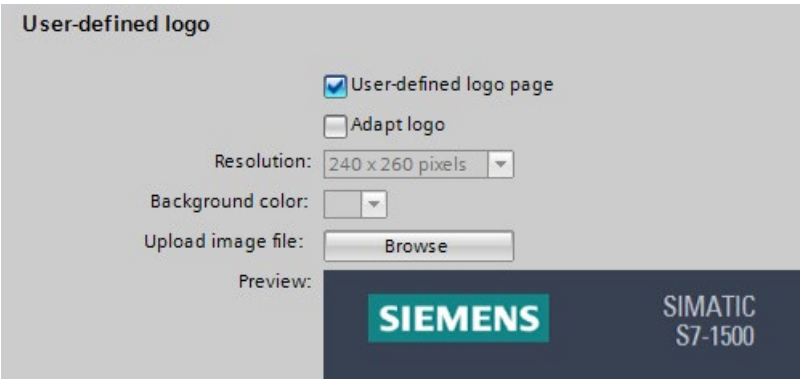

Figure 12-4 Uploading image to CPU

To display the uploaded image in the correct aspect ratio, use images with the following dimensions depending on the CPU:

Table 12- 4 Dimensions

CPU	Dimensions	Supported formats
CPU 1513R-1 PN	128 x 120 pixels	Bitmap, JPEG, GIF, PNG
CPU 1515R-2 PN	240 x 260 pixels	Bitmap, JPEG, GIF, PNG
CPU 1517H-3 PN	240 x 260 pixels	Bitmap, JPEG, GIF, PNG
CPU 1518HF-4 PN	240 x 260 pixels	Bitmap, JPEG, GIF, PNG

If the uploaded image exceeds the specified dimensions, the display shows only part of the image. The "Adapt logo" option in STEP 7 allows you to reduce the image to the specified dimensions. However, note that the original aspect ratio of the image is not retained in such cases.

Displaying image on the display

To display the uploaded image on the display of the CPU, press the ESC key in the main screen of the display. When you upload an image and are in the main screen, the display automatically shows the image after 60 seconds. To hide the image again, press any key on the display.

Available language settings

You can set the following languages separately for menu and message texts:

- Chinese
- German
- English
- French
- Italian
- Japanese
- Korean
- Portuguese (Brazil)
- Russian
- Spanish
- Turkish

You select the required language directly at the display in the "Display" menu or in STEP 7 in the hardware configuration of the CPU under "User interface languages".

Proceed as follows to display message texts on the display:

1. Configure the project language that you want to be displayed as the interface language.
   - To do so, select a CPU and navigate to the "Multiple languages" area ("Properties > General > Multilingual support") in the Inspector window.
   - Assign the required project languages to the interface languages.
2. Download the message texts to the CPU as a software component.
   - To do so, select the "Consistent download" option under "Text libraries" in the "Load preview" dialog (default).

Reference

Important information/special requirements for the display of HF-CPUs can be found in the Product Information F-CPUs S7-1500 (https://support.industry.siemens.com/cs/ww/de/view/109478599/en).

Maintenance 13

13.1 Replacing components of the S7-1500R/H redundant system

13.1.1 Checking before replacing components

Introduction

Please observe the following rules if the redundant system is in the RUN-Solo system state:

- Do not immediately start replacing components.
- Do not immediately switch the failed CPU to the RUN. operating state.

First check the pairing status in the RUN-Solo system state.

Checking pairing in the RUN-Solo system state

CAUTION

Do not switch the failed CPU in the RUN-Solo system state to the RUN operating state.

This could result in an undefined system state for the redundant system. Both CPUs would become primary CPUs.

If the S7-1500R/H redundant system is in the RUN-Solo system state, you must not immediately switch the backup CPU to the RUN operating state.

Possible cause: No pairing between the two CPUs. Check the pairing status on the display or on the basis of the diagnostics status or diagnostics buffer.

If there is no pairing, the redundancy connections have been interrupted, for example. Observe the following procedure.

Checking pairing state

You have the following options for checking the pairing state:

- Directly from the display of the backup CPU.
  In the "Overview > Redundancy > Pairing state" menu:
  - Paired
  - Single paired (X*P*)
  - Not paired
  - Not paired - Too many partners
  - Not paired - Article number mismatch
  - Not paired - Firmware mismatch

Primary CPU	Backup CPU
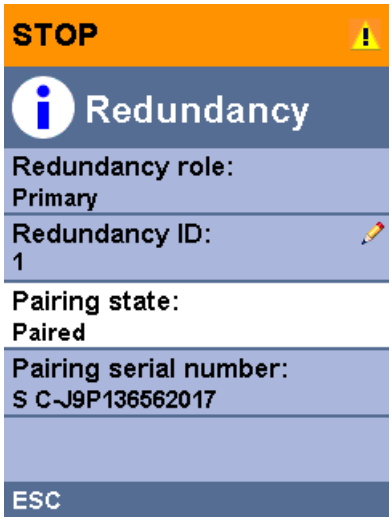	

Example: Paired

- In STEP 7 in the diagnostic status (Online & diagnostics) of the S7-1500R/H system: Check the system state in the diagnostic status:
  - Pairing: "Paired" is shown in the "Pairing state" field.
  - No pairing: "No pairing" is displayed in the "Pairing status" field.

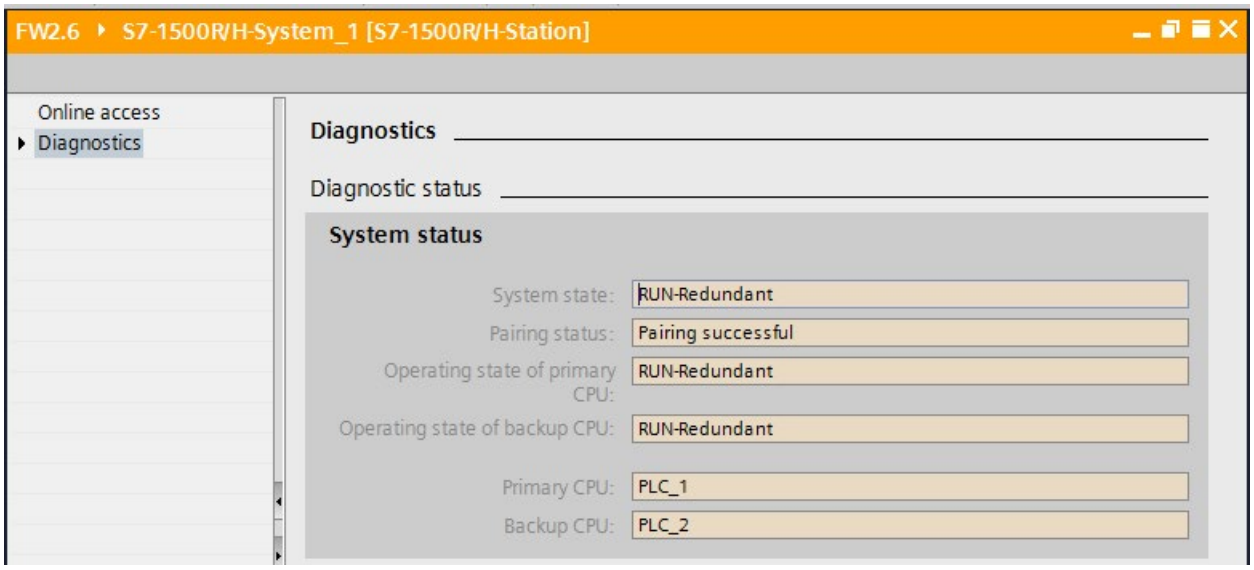

Figure 13-1 "Paired" diagnostics state

- In STEP 7 in the diagnostics buffer (Online & diagnostics): Check the entries on pairing.

Procedure

To start the pairing, for example when redundancy connections are interrupted, follow these steps:

1. Set the mode selector for the backup CPU to STOP.
2. S7-1500R: Repair the PROFINET cables in the PROFINET ring. Insert the PROFINET cables into the R-CPU interfaces.
   S7-1500H: Repair the fiber-optic cables and synchronization modules. Insert the fiber-optic cables into the synchronization modules.
3. Check for successful pairing of the redundant system. Please note the information in "Checking pairing state" above.
4. Set the mode selector for the backup CPU to RUN.

Result

The S7-1500R/H redundant system switches to the RUN-Redundant system state.

13.1.2 Replacing defective R/H-CPUs

Initial situation

One of the two R/H-CPUs has failed or the R/H-CPU is no longer working.

The S7-1500R/H redundant system is in the RUN-Solo system state.

Note

Replacing defective HF-CPU with safety program

You can find the exact procedure in the SIMATIC Safety - Configuring and Programming (https://support.industry.siemens.com/cs/ww/en/view/54110126) programming and operating manual.

Note

Replacement part case R/H-CPU

Replacing a R/H-CPU in the replacement part scenario has an impact on the password for protection of confidential configuration data. If you replace a defective R/H-CPU with a new R/H-CPU, you must assign the previously valid password for the new R/H-CPU for the first time.

For more information and rules for the replacement part scenario, please refer to the Communication (https://support.industry.siemens.com/cs/ww/en/view/59192925) Function Manual.

Requirements

- Read the information in the section Checking before replacing components (Page 363).
- The replacement CPU has the same article number and firmware version as the failed R/H-CPU. It may be necessary to load an older firmware version onto the replacement CPU.

  Note

  CPUs S7-1500R with firmware version V3.0

  CPUs S7-1500R with firmware version V3.0 have new article numbers.

  Combined mode between old (6ES751x-xRx0**0**-0AB0) and new article number (6ES751x-xRx0**3**-0AB0) is not possible.

- The replacement CPU has a SIMATIC memory card with sufficient storage capacity.
- The primary CPU has not disabled SYNCUP (default).

Procedure for replacing R/H-CPUs

Proceed as follows to replace an R/H-CPU in the redundant system:

1. Switch off the supply voltage to the failed R/H-CPU.
2. Remove the connector for the supply voltage.
3. Disconnect all PROFINET bus connectors. Then remove the bus connectors from the R/H-CPU.
4. For H-CPUs only: Disconnect the redundancy connections (fiber-optic cables) at the H-CPU.
5. For H-CPUs only: Pull the synchronization modules out of the H-CPU.
6. Remove the failed R/H-CPU.
7. Install the replacement CPU with the SIMATIC memory card inserted and the mode selector in the STOP position.
8. For H-CPUs only: Insert the synchronization modules in the replacement CPU.
9. For H-CPUs only: Insert the redundancy connections (fiber-optic cables) in the synchronization modules.
10. Insert the PROFINET bus connectors into the R/H-CPU.
11. Push the connector for the supply voltage into the socket on the R/H-CPU.
12. Switch the supply voltage back on.
13. Check the pairing.
14. Start the replacement CPU.

Result

1. The replaced R/H-CPU executes SYNCUP.
2. The replaced R/H-CPU switches to the RUN-Redundant operating state and operates as backup CPU.

13.1.3 Replacing defective redundancy connections

Introduction

This section describes the following replacement scenarios:

S7-1500R:

- Replace defective PROFINET cable with S7-1500R.
  The PROFINET ring has been interrupted at any given point. You can find additional information in the section Replacing defective PROFINET cables (Page 372).
- Replace two defective PROFINET cables with S7-1500R.
  The PROFINET ring has been interrupted at two points.

S7-1500H:

- Replace a defective redundancy connection with S7-1500H.
  A fiber-optic cable has been interrupted.
- Replace defective synchronization module with S7-1500H.
- Replace two defective redundancy connections with S7-1500H.
  Both fiber-optic cables have been interrupted.

Evaluating the diagnostics buffer

Detailed diagnostics information is provided in the diagnostics buffer of the R/H-CPU. The entries are particularly useful in the replacement scenarios for the redundancy connections:

- S7-1500R: They contain information on whether one PROFINET cable or both PROFINET cables have been interrupted or a port of an R-CPU is defective.
- S7-1500H: You can access information on whether a fiber-optic cable has been interrupted or the synchronization module is defective (with additional module diagnostics).

13.1.3.1 Replacing two defective PROFINET cables with S7-1500R

Initial situation: Failure of two PROFINET cables, one after the other

Two PROFINET cables in the PROFINET ring have been interrupted one after the other at two points (> 1500 ms apart).

The S7-1500R redundant system is in the RUN-Solo system state.

Requirement

Read the information in the section Checking before replacing components (Page 363).

Procedure: Replacing the two PROFINET cables

Proceed as follows to replace the defective PROFINET cables:

1. Locate the defective PROFINET cables in the PROFINET ring.
2. Replace the PROFINET cables, one after the other.
3. If necessary, restart each of the two CPUs on after the other.

Result

The redundant system switches to the RUN-Redundant system state.

Initial situation: Failure of two PROFINET cables simultaneously

Two PROFINET cables in the PROFINET ring have been interrupted at two points simultaneously (≤ 1500 ms apart).

Both R-CPUs are primary CPUs. The S7-1500R redundant system is in an undefined system state.

Procedure: Replacing the two PROFINET cables

Proceed as follows to replace the defective PROFINET cables:

1. Immediately switch both R-CPUs to the STOP operating state.
2. Locate the defective PROFINET cables in the PROFINET ring.
3. Replace the PROFINET cables, one after the other.
4. Then start the R-CPUs.

Result

The redundant system switches to the RUN-Redundant system state.

13.1.3.2 Replacing a defective redundancy connection with S7-1500H

Initial situation

One redundancy connection (fiber-optic cable) has been interrupted. Display shows: Single pairing with information on interface and port.

The S7-1500H redundant system is in the RUN-Redundant system state.

Procedure: Replacing the redundancy connection

Proceed as follows to replace a defective redundancy connection:

1. Check the LEDs X3/X4 (CPU 1517H-3 PN) or LEDs X4/X5 (CPU 1518HF-4 PN). You can pinpoint the defective redundancy connection on the basis of which LEDs are off.
2. Check the redundancy connection that you have located with the LEDs.
3. If the redundancy connection is defective, replace the fiber-optic cable.

Result

The defective redundancy connection has been replaced. The X3/X4 or X4/X5 LEDs flicker yellow/green.

13.1.3.3 Replacing defective synchronization module with S7-1500H

Initial situation

A synchronization module has failed.

The redundant S7-1500H is in the RUN-Redundant system state.

Procedure: Replacing the synchronization module

Proceed as follows to replace a defective synchronization module:

1. Check the LEDs X3/X4 (CPU 1517H-3 PN) or LEDs X4/X5 (CPU 1518HF-4 PN) on the primary and backup CPU. Locate the defective synchronization module on the basis of which LEDs are off.
2. Replace the defective synchronization module. Connect the redundancy connection (fiber-optic cable).
3. If the X3/X4 or X4/X5 LEDs remain off, replace the synchronization module on the other CPU.

Result

The defective synchronization module has been replaced. The X3/X4 or X4/X5 LEDs flicker yellow/green.

13.1.3.4 Replacing both defective redundancy connections with S7-1500H

Initial situation: Failure of both redundancy connections, one after the other

The two redundancy connections (fiber-optic cables) have been interrupted one after the other (> 55 ms apart).

The S7-1500H redundant system is in the RUN-Solo system state.

Requirement

Read the information in the section Checking before replacing components (Page 363).

Procedure: Replacing both redundancy connections

Proceed as follows to replace the defective redundancy connections:

1. Check the LEDs X3/X4 (CPU 1517H-3 PN) or LEDs X4/X5 (CPU 1518HF-4 PN) on the primary and backup CPU. If all LEDs are off, both redundancy connections are defective.
2. Replace the redundancy connections (fiber-optic cables) one after the other.
3. Start the CPU which is in STOP mode.

Result

The defective redundancy connections have been replaced. The redundant system switches to the RUN-Redundant system state. The X3/X4 or X4/X5 LEDs flicker yellow/green.

Initial situation: Failure of both redundancy connections simultaneously

The two redundancy connections (fiber-optic cables) have been interrupted simultaneously (≤ 55 ms apart).

Both H-CPUs are primary CPUs. The S7-1500H redundant system is in an undefined system state.

Procedure: Replacing both redundancy connections

Proceed as follows to replace the defective redundancy connections:

1. Immediately switch an H-CPU to the STOP operating state.
2. Replace the redundancy connections (fiber-optic cables) one after the other.
3. Switch the H-CPUs back to the RUN operating state.

Result

The redundant system switches to the RUN-Redundant system state. The X3/X4 or X4/X5 LEDs flicker yellow/green.

13.1.4 Replacing defective PROFINET cables

Initial situation

The PROFINET ring has been interrupted at any given point. The MAINT LEDs on both CPUs are yellow. The following is shown on the S7-1500R display: Single pairing with information on interface and port.

The S7-1500R/H redundant system is in the RUN-Redundant system state.

Procedure: Replacing the PROFINET cable

Proceed as follows to replace the defective PROFINET cable:

1. Check the X1 P1/X1 P2 LEDs on the primary and backup CPU. LEDs that are off indicate an interruption to the PROFINET ring.
2. Locate the defective PROFINET cable in the PROFINET ring. Check the link RX/TX LEDs of the PROFINET nodes. If the link RX/TX LEDs are switched off, there is no connection between the interface of the PROFINET device and the communication partner.
3. Replace the defective PROFINET cable.

Result

The defective PROFINET cable has been replaced.
The X1 P1/X1 P2 LEDs on the primary and backup CPU are yellow. The MAINT LEDs on both CPUs are off.

13.1.5 Replacing a defective SIMATIC memory card

Initial situation

The SIMATIC memory card of a CPU is defective. System diagnostics reports a system error. The CPU affected has switched to the STOP operating state.

The S7-1500R/H redundant system is in the RUN-Solo system state.

Note

Replacing defective SIMATIC memory card in HF-CPU with safety program

You can find the exact procedure in the SIMATIC Safety - Configuring and Programming (https://support.industry.siemens.com/cs/ww/en/view/54110126) programming and operating manual.

Requirement

- Read the information in the section Checking before replacing components (Page 363).
- The new SIMATIC memory card must have sufficient memory for the project.

Procedure

Proceed as follows to replace a defective SIMATIC memory card:

1. Replace the SIMATIC memory card in the CPU in STOP.
2. Start the CPU.

Result

1. The redundant system runs SYNCUP. SYNCUP transfers the project data from the primary to the backup CPU.
2. The CPU switches to the RUN-Redundant operating state and operates as backup CPU. The redundant system is in the RUN-Redundant system state again.

Reference

If there is not enough memory space on a SIMATIC memory card, the card can be replaced during operation. You will find the procedure, the response of the redundant system and other information on the SIMATIC memory card in the function manual Structure and use of the CPU memory (https://support.industry.siemens.com/cs/ww/en/view/59193101).

13.1.6 Replace defective load current supply PM

Initial situation

A load current supply PM has failed.

The S7-1500R/H redundant system is in the RUN-Solo system state.

Requirement

Read the information in the section Checking before replacing components (Page 363).

Procedure

Proceed as follows to replace a defective load current supply:

1. Switch off the mains supply (24 V DC or 230 V AC).
2. Replace the defective load current supply PM.
3. Switch the mains supply back on.
4. Switch on the replaced load current supply PM.

Result

1. The CPU with the replaced load current supply PM runs SYNCUP. Requirement: The CPU mode selector is in RUN.
2. The CPU switches to the RUN-Redundant operating state and operates as backup CPU. The redundant system is in the RUN-Redundant system state again.

13.1.7 Replacing defective IO devices/switches

Initial situation

A PROFINET device (IO device/switch) in the PROFINET ring or the line topology has failed, for example because of a defect in the IO device or failure of the power supply. The PROFINET ring or line topology is interrupted. The MAINT LEDs on both CPUs are yellow. The ERROR LEDs on both CPUs are flashing red.

The S7-1500R/H redundant system is in the RUN-Redundant system state.

Note

If a switch/IO device fails, the S7-1500R/H redundant system has no access to the downstream devices in the connected line topology.

Replace IO device procedure

Proceed as follows to replace a defective PROFINET device:

1. Locate the faulty PROFINET device.
2. Switch off the supply voltage for the PROFINET device.
3. Disconnect the cables for the supply voltage.
4. Disconnect the PROFINET cables from the ports of the PROFINET device.
5. Replace the PROFINET device.
6. Connect the PROFINET cables to the ports of the PROFINET device.
7. Connect the cables for the supply voltage to the PROFINET device.
8. Switch the supply voltage back on.

Note

Setting the media redundancy role Client for the PROFINET devices

If you replace a PROFINET device in the PROFINET ring, you need to assign the media redundancy role "Client" to the PROFINET device in STEP 7. The client media redundancy role setting is important for nodes that are not IO devices (such as switches). These nodes do not receive the parameters assigned by the R/H CPUs.

Replaced IO devices are automatically configured by the R/H-System and receive the correct setting again.

Procedure for replacing the interface module of an R1 device

If you replace a defective interface module of an R1 device, then follow the procedure in the associated documentation.

Result

The PROFINET ring or line topology is closed again. The PROFINET device can be accessed again in the S7-1500R/H redundant system. The MAINT and ERROR LEDs on both CPUs are off.

13.2 Replacing the display/front cover

Introduction

The front cover/display is pluggable. If necessary, remove the front cover/display during operation (RUN-Redundant) or replace the front cover/display. Removing or replacing the front cover/display does not affect the CPU in operation.

Replace display (R-CPUs as of article number 6ES7513-1RM03-0AB0, 6ES7515-2RN03-0AB0)

To remove the display from the R-CPU, proceed as follows:

1. Flip the front cover up.
2. Press with a 3.5 mm screwdriver from the front into the unlatching mechanism of the display. This is found in the middle directly above the display.
3. Press the screwdriver lightly from above and lever out the display from the support.
4. Remove the display in an upward direction.
5. You have removed the display.
6. Place the new display in the R-CPU and press the display firmly in the top area until it audibly engages.
7. Flip the front cover down into place.

The figure below shows an example of the operation at the CPU 1513R-1 PN.

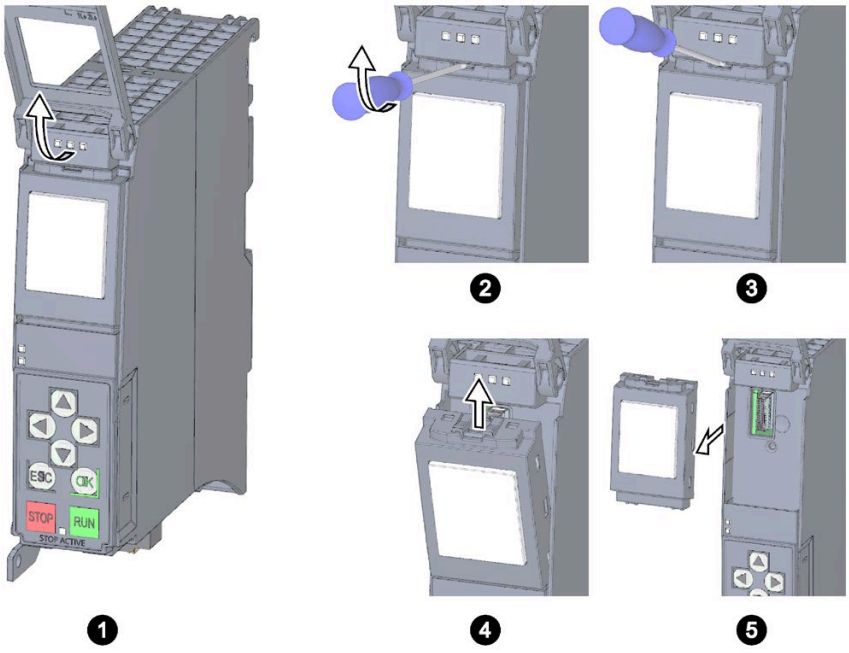

Figure 13-2 Remove display

Replace front cover (R/H CPUs with article numbers 6ES7513-1RL00-0AB0, 6ES7515-2RM00-0AB0, 6ES7517-3HP00-0AB0, 6ES7518-4JP00-0AB0)

To remove the front cover from the CPU, follow these steps:

1. Flip up the front cover until the front cover stands at a 90° angle to the front of the module.
2. In the top section of the front cover, press on the anchor(s): Two anchors with CPU 1515R-2 PN, CPU 1517H-3 PN and CPU 1518HF-4 PN. One anchor with CPU 1513R-1 PN.
   At the same time, pull the front cover towards you and off.

The view in the figure below is an example of CPU 1515R-2 PN.

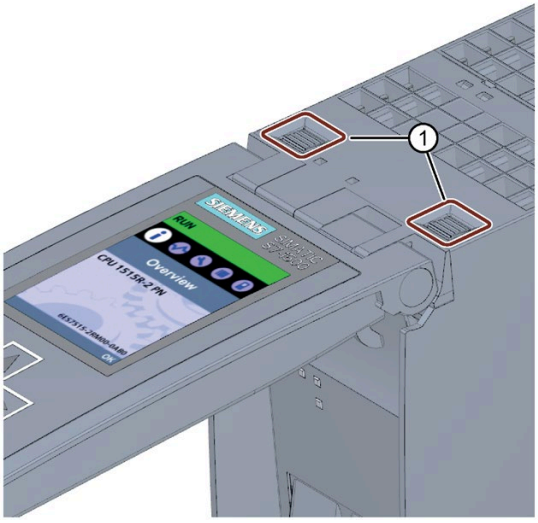

① Fasteners for removing and fitting the front panel

Figure 13-3 Remove display

Zone 2 hazardous area

WARNING

Personal injury or material damage can occur in zone 2 hazardous areas

If you remove or attach the front cover/display during operation, personal injury and damage can occur in hazardous areas of zone 2.

Always disconnect the R/H-CPU from the power supply before you remove or attach the front cover in hazardous areas of zone 2.

13.3 Replacing the coding element at the power connector of the load current supply

Introduction

The coding consists of a 2-part coding element.

Ex factory a part of the coding element is inserted into the back side of the power connector. The other part is firmly inserted in the load current supply.

This prevents the insertion of a power connector of a load current supply into a module of a different type.

DANGER

Do not manipulate the coding element, or leave it off

- Changing or replacing the coding element can result in dangerous system states.
- To avoid damage, do not change or replace the coding element.
- You must not remove the coding element.

Replacement parts scenario

Insertion of the coding element into a new power connector in the case of a replacement part.

DANGER

Dangerous voltage

When installing the coding element, you must take into account the supply voltage of the load current supply: 24 V DC, 24/48/60 V DC or 120/230 V AC/DC

Only install the coding element with switched-off voltage.

You must insert the coding element in such a way that the power connector matches the power supply module in terms of voltage.

Procedure

To replace the coding element on the power connector of the load current supply, follow these steps:

1. Orient yourself using the labeling on the power cable connection.

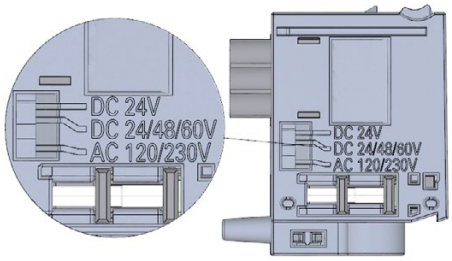

Figure 13-4 Labeling on the power connector

2. Orient yourself using the red marking on the coding element.
3. The coding element has 3 red markings. Turn the coding element in such a way that one of the 3 red markings corresponds to the voltage indicated on the connector.
4. Insert the coding element into the back side of the power cable connector, until you hear it click into place. The figure below shows you how to insert a coding element into a power cable connector for 24 V DC.

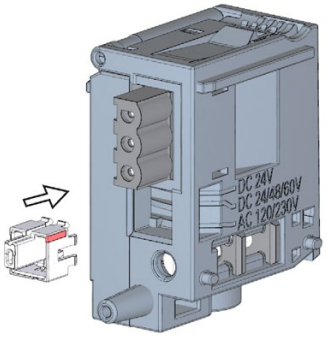

Figure 13-5 Inserting a coding element into a power connector

13.4 Firmware update

Introduction

You use firmware files to update the firmware of the CPUs, displays and the IO devices (for example for new functions). The retentive data is retained after the firmware has been updated.

Note

CPUs operating in redundant mode

CPUs operating in redundant mode must have the same article number and the same firmware version.

For the replacement of components, the two CPUs operating in redundant mode must have the same firmware version. Downgrades are therefore possible as well as updates.

Note

CPU downgrades and upgrades

You cannot upgrade a standard CPU or F-CPU to an R-CPU or H-CPU. You cannot downgrade the firmware of an R/H-CPU to a standard or F-CPU either.

We recommend that you always update to the latest firmware version available for the respective article number. The previous versions of the firmware are only intended as a backup to enable you to downgrade to the original version.

A firmware update has no effects on the user program of the CPU on which the update was performed. However, a downgrade can have effects on the user program if you use new functions in the user program which were not yet supported by the firmware of the CPU.

The following entry (https://support.industry.siemens.com/cs/de/en/view/109478459) lists all firmware versions for the CPUs including displays. You will also find a description of the new functions of the respective firmware versions.

Requirement

You have downloaded the files for the firmware update from Siemens Industry Online Support (https://support.industry.siemens.com/cs/ww/en/ps).

On this Web page, select:

Automation technology > Automation systems > SIMATIC industrial automation systems > Controllers > Advanced Controller > S7-1500 > CPUs > Redundant CPUs

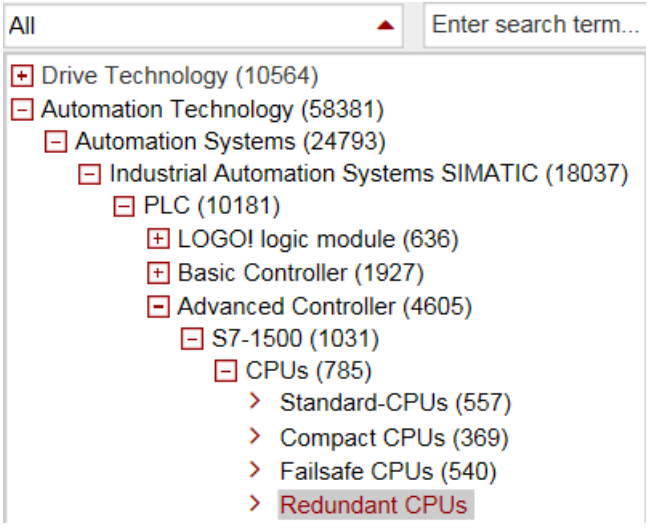

Figure 13-6 Product tree using the S7-1500 as an example

From this position, navigate to the specific type of module that you want to update. To continue, click on the "Software downloads" link under "Support". Save the required firmware update files.

Before installing the firmware update, make sure that the modules are not being used.

Options for the firmware update

The options for performing a firmware update are as follows:

- Online in STEP 7 via Online & Diagnostics
- Via the SIMATIC memory card: For CPU and display only

The table below gives an overview of the various options for a firmware update.

Firmware update	CPU	Display	PROFINET IO devices
STEP 7 via Online & diagnostics	✓		✓
SIMATIC memory card	✓		--

Procedure: online in STEP 7 via Online & diagnostics

Requirement: There is an online connection between CPU/PROFINET IO device and PG/PC and the CPU is configured.

Proceed as follows to perform a firmware update online via STEP 7:

1. Select the module in the device view.
2. Select the "Online & diagnostics" menu command from the shortcut menu.
3. In the "Functions" folder, select the "Firmware update" group.
   For a CPU, you can select whether you want to update the CPU or the display.
4. Click the "Browse" button to select the path to the firmware update files in the "Firmware update" area.
5. Select the correct firmware file. The table in the firmware update area lists all modules for which an update is possible with the selected firmware file.
6. Click the "Run update" button. If the module can interpret the selected file, the file is downloaded to the module. If you need to change the CPU operating state, STEP 7 prompts you to do so with dialogs.

Note

Updating PROFINET IO device

The R/H system remains in the RUN-Redundant system state if you update an IO device.

Updating the firmware

The "Run firmware after update" check box is always selected.

Once the files have been successfully loaded, the CPU accepts the firmware and operates with the new firmware.

Procedure with the SIMATIC memory card

Proceed as follows to perform a firmware update using the SIMATIC memory card:

1. Insert a SIMATIC memory card into the SD card reader of your PG/PC.
2. To store the update file on the SIMATIC memory card, select the SIMATIC memory card under "Card reader/USB memory" in the project tree.
3. Select the "Card Reader/USB memory > Create firmware update memory card" command in the "Project" menu.
4. Use a file selection dialog to navigate to the firmware update file. You can then also decide whether to delete the content of the SIMATIC memory card or add the firmware update files to the SIMATIC memory card.

5. Insert the SIMATIC memory card with the firmware update files into the CPU.

   The firmware update begins shortly after the SIMATIC memory card has been inserted.

   The display indicates that the CPU is in STOP and is running a firmware update.

   The display shows a results screen after completion of the firmware update.

6. The RUN LED on the CPU lights up in yellow and the MAINT LED flashes yellow.
   Remove the SIMATIC memory card after the firmware update is complete.
   If you subsequently wish to use the SIMATIC memory card as a program card, leave the SIMATIC memory card in the CPU. To do so, after completion of the firmware update, select the "Convert memory card" menu item on the display.
   Alternatively, you can also convert the SIMATIC memory card to a program card in STEP 7.

Note

Memory size of the SIMATIC memory card

If you perform a firmware update via the SIMATIC memory card, you must use a large enough card.

Check the specified file sizes of the update files when downloading them from Siemens Industry Online Support. The total size of the update files must not exceed the available memory size of your SIMATIC memory card.

You can find more information on the capacity of SIMATIC memory cards in the section Accessories/spare parts (Page 418) and in the function manual Structure and use of the CPU memory (https://support.industry.siemens.com/cs/ww/en/view/59193101).

Installation of the firmware update of R/H-CPUs

For a firmware update of the R/H-CPUs, you must switch both R/H-CPUs to the STOP operating state. A role change between primary and backup CPU can occur during the firmware update. The initial situation is assumed in the following: CPU 1 is the primary CPU. CPU 2 is the backup CPU.

You must proceed in the following order for retentive data to be retained during a firmware update:

1. Switch CPU 2 to the STOP operating state.
2. Run the update for CPU 2.
   Please note: Ignore any pairing error (incorrect firmware) after CPU 2 startup.
3. Switch CPU 1 to the STOP operating state.
4. Now run the update for CPU 1.
5. Switch CPU 1 to the RUN operating state.

6. Switch CPU 2 to the RUN operating state.

WARNING

Risk of impermissible system states

The installation of the firmware update switches the CPUs to the STOP operating state and therefore the redundant system to the STOP system state. STOP can impact the operation of an online process or a machine.

Unexpected operation of a process or a machine can lead to fatal or severe injuries and/or to material damage.

Ensure before installing the firmware update that the CPU is not controlling any active process.

Installation of the firmware update for R/H-CPU displays

Firmware updates for the R/H-CPU displays are run in the RUN-Solo system state. A role change between primary and backup CPU can occur during the firmware update. The initial situation is assumed in the following: CPU 1 is the primary CPU. CPU 2 is the backup CPU.

Follow the sequence below:

1. Switch CPU 2 to the STOP operating state.
2. Run the update for the CPU 2 display.
3. Switch CPU 2 to the RUN operating state. Wait until the R/H system switches to the RUN-Redundant system state.
4. Switch CPU 1 to the STOP operating state.
5. Run the update for the CPU 1 display.
6. Switch CPU 1 to the RUN operating state. Wait until the R/H system switches to the RUN-Redundant system state.

Behavior after the firmware update

After the firmware update, check the firmware version of the updated module.

Reference

You can find more information on firmware updates in the STEP 7 online help.

13.5 Resetting CPUs to factory settings

Introduction

The CPU can be reset to its as-delivered condition using "Reset to factory settings". The function deletes all information saved internally on the CPU.

Recommendation:

Switch the CPU to its as-delivered condition if:

- You remove a CPU and use it elsewhere with a different program.
- You store the CPU.

When resetting to factory settings, remember that the IP address parameters are also deleted.

Options for resetting a CPU to factory settings

You can reset the CPU to its as-delivered condition:

- Using the mode selector / mode selector keys
- Using the display
- Using STEP 7

Procedure using the mode selector (R/H CPUs with article numbers 6ES7513-1RL00-0AB0, 6ES7515-2RM00-0AB0, 6ES7517-3HP00-0AB0, 6ES7518-4JP00-0AB0)

Make sure that the CPU is in STOP operating state: The CPU display indicates the STOP operating state. The RUN/STOP LED lights up yellow.

Note

Reset to factory settings ↔ Memory reset

The procedure described below also corresponds to the procedure for a memory reset:

- Selector operation with inserted SIMATIC memory card: CPU executes a memory reset
- Selector operation without inserted SIMATIC memory card: CPU executes reset to factory settings

---

Restore the factory settings of the CPU as follows:

1. Set the mode selector to the STOP position.

   Result: The RUN/STOP LED lights up yellow.

2. Remove the SIMATIC memory card from the CPU. Wait until the RUN/STOP LED stops flashing.

3. Set the mode selector to the MRES position. Hold the mode selector in this position until the RUN/STOP LED lights up for the second time and remains continuously lit after 3 seconds. Then release the mode selector.
4. Within the next three seconds, switch the mode selector back to the MRES position and then back to STOP.

Result: The CPU executes a "Reset to factory settings", during which time the RUN/STOP LED flashes yellow. When the RUN/STOP LED lights up in yellow, the CPU has been reset to factory settings and is in the STOP operating state. The "Reset to factory settings" event is entered in the diagnostics buffer.

Note

Resetting the CPU to the factory settings with the mode selector also deletes the IP address of the CPU and resets the redundancy ID to 1.

Procedure via the operating mode keys (R-CPUs as of article number 6ES7513-1RM03-0AB0, 6ES7515-2RN03-0AB0)

Make sure that the CPU is in STOP operating state: The CPU display indicates the STOP operating state. The RUN/STOP LED lights up yellow.

Note

Reset to factory settings ↔ Memory reset

The procedure described below also corresponds to the procedure for a memory reset:

- Key operation with inserted SIMATIC memory card: CPU executes a memory reset
- Key operation without inserted SIMATIC memory card: CPU executes reset to factory settings

Perform a reset to factory settings as follows:

1. Press the STOP mode selector key.

   Result: The STOP-ACTIVE and RUN/STOP LED light up yellow.
2. Press the STOP operating mode button until the RUN/STOP LED lights up for the 2nd time and remains continuously lit (this takes three seconds). After this, release the button.
3. Press the STOP mode selector key again within the next three seconds.

Result: The CPU executes a "Reset to factory settings", during which time the RUN/STOP LED flashes yellow. When the STOP-ACTIVE and RUN/STOP LED light up yellow, then the CPU has been reset to factory settings, and is in the STOP mode. The "Reset to factory settings" event is entered in the diagnostics buffer.

Note

Resetting the CPU to the factory settings via the operating mode buttons also deletes the IP address of the CPU and resets the redundancy ID to 1.

Procedure using the display

Make sure that the CPU is in STOP operating state: The CPU indicates the STOP operating state. The RUN/STOP LED lights up yellow.

1. Wait until the RUN/STOP LED stops flashing.
2. To navigate to the required "Factory settings" menu command, select the following sequence of menu commands and confirm each selection with "OK".
   - Settings → Reset → Factory settings

Result: The CPU executes a "Reset to factory settings", during which time the RUN/STOP LED flashes yellow. When the RUN/STOP LED lights up in yellow, the CPU has been reset to factory settings and is in the STOP operating state. The "Reset to factory settings" event is entered in the diagnostics buffer.

Procedure using STEP 7

Proceed as follows to reset a CPU to factory settings with STEP 7:

Make sure that there is an online connection to the CPU.

1. Open the Online and Diagnostics view of the CPU.
2. In the "Functions" folder, select the "Reset to factory settings" group.
3. If you want to keep the IP address, select the "Keep IP address" option button. If you want to delete the IP address, select the "Delete IP address" option button.

   Note

   "Delete IP address" deletes all IP addresses, regardless of how you established the online connection.

   If a SIMATIC memory card is inserted, selecting the "Delete IP address" option has the following effect:
   - The IP addresses are deleted and the CPU is reset to factory settings.
   - The configuration (including IP address) on the SIMATIC memory card is then downloaded to the CPU. If there is no saved configuration (because the SIMATIC memory card has been cleared or formatted, for example), no new IP address is assigned.

4. Click the "Reset" button.
5. Click "OK" in response to the confirmation prompts.

Result: The CPU executes a "Reset to factory settings", during which time the RUN/STOP LED flashes yellow. When the RUN/STOP LED lights up in yellow, the CPU has been reset to factory settings and is in STOP. The "Reset to factory settings" event is entered in the diagnostics buffer.

Result after resetting to factory settings

The table below gives an overview of the contents of the memory objects after the reset to factory settings.

Table 13- 1 Result after resetting to factory settings

Memory object	Contents
Redundancy ID	Set to "1"
Actual values of the data blocks, instance data blocks	Initialized
Bit memories, timers and counters	Initialized
Retentive tags of technology objects	Initialized
Entries in the diagnostics buffer (retentive area)	Initialized
Entries in the diagnostics buffer (non-retentive area)	Initialized
IP address	Depends on the procedure: • Using mode switch: Is deleted • Using display: Is deleted • Using STEP 7: Depends on the setting of the "Retain IP address"/"Delete IP address" option buttons
Device name (module name)	Is set to "CPUcommon"
Counter readings of the runtime meters	Initialized
Time of day	Set to "00:00:00, Jan. 01, 2012"

Note

IP address conflict

Resetting the CPU to the factory settings also deletes the IP address of the CPU and resets the redundancy ID to 1. Please note the following:
An S7-1500R/H redundant system that is already in operation is switched to the STOP system state. If you reset the CPU with redundancy ID 2 to factory settings, that CPU is assigned the IP address of the other CPU (with redundancy ID 1). This results in an IP address conflict. You can only access the CPU with the emergency address. You can find information on the emergency address in the section Backing up and restoring the CPU configuration (Page 340).

Possible remedy: Using the display, assign the CPU the redundancy ID previously set. You can then access the CPU over the original IP address again.

Note

Password for protection of confidential configuration data

The password for protection of confidential configuration data is retained after the CPU is reset to factory settings. The password is only deleted when the "Delete password for protection of confidential PLC configuration data" option is set.

You can find additional information on the password for protection of confidential configuration data in the Communication (https://support.industry.siemens.com/cs/ww/en/view/59192925) function manual.

Reference

You can find more information on "Reset to factory settings" in the section on memory areas and retentivity in the function manual Structure and use of the CPU memory (http://support.automation.siemens.com/WW/view/en/59193101), and in the STEP 7 online help. For information on CPU memory resets, please refer to the section CPU memory reset (Page 336).

13.6 Maintenance and repair

The R/H CPUs are maintenance-free.

Note

Repairs to the R/H CPUs may only be carried out by the manufacturer.

Test and service functions 14

14.1 Test functions

Introduction

You have the option of testing the operation of your user program on the CPU. You monitor the signal states and values of tags. You preassign values to tags to allow you to simulate specific situations for program execution.

Note

Using test functions

Using test functions affects the program execution time and thus the cycle and response times of the controller.

Note

Test functions in the RUN-Redundant system state: Check for sufficient free space before a write function

Before a write function is performed, the system checks whether there is enough free space on the SIMATIC memory cards of the CPUs for the function. Writing functions are online functions with the PG/PC, for example, loading/deleting a block, test functions, loading a modified user program in RUN-Redundant system state.

If there is not enough space on a SIMATIC memory card or on both SIMATIC memory cards, the write function is aborted and the redundant system continues operation with the original configuration. The redundant system will remain in the RUN-Redundant system state.

Requirements

- There is an online connection to the relevant primary or backup CPU. A simultaneous online connection to both CPUs is not possible.
- An executable user program is available in the CPU.
- The redundant system must not be in the SYNCUP system state.
  Exception: The test functions "Test with a force table" and "Trace function" are also supported in the SYNCUP system state. However, there is no online connection during the SYNCUP system state. You can find more information in this section.

Test options

- Testing with program status
- Testing with breakpoints (only in the STARTUP (startup OB) or RUN-Solo system state)
- Testing with a watch table
- Testing with a force table
- Testing with a PLC tag table
- Testing with a data block editor
- Testing with the LED flash test
- Testing with a trace function

Testing with program status

The program status allows you to monitor the execution of the program. You can display the values of operands and the results of logic operations (RLO). This allows you to detect and fix logical errors in your program.

Note

Restrictions with the "Program status" function

Monitoring loops can significantly increase the cycle time. The increase in cycle time depends on the following factors:

- The number of tags to be monitored
- The actual numbers of loops run through

WARNING

Testing with program status

Testing with the "Program status" function can cause serious damage and injury if there are functional disruptions or program errors.

Make sure that you take appropriate measures to exclude the risk of dangerous states occurring before running a test with the "Program status" function.

Testing with breakpoints

With this test option, you set breakpoints in your program, establish an online connection, and enable the breakpoints on the CPU. You then execute a program from one breakpoint to another.

Requirements:

- You can only test with breakpoints with the primary CPU in the STARTUP (startup OB) or RUN-Solo system state.
- Setting breakpoints is possible in the programming language SCL or STL.

Testing with breakpoints provides you with the following advantages:

- Localization of logic errors step by step
- Simple and quick analysis of complex programs prior to actual commissioning
- Recording of current values within individual executed loops
- Using breakpoints for program validation is also possible in SCL or STL networks within LAD/FBD blocks.

Note

Restrictions during testing with breakpoints

- If you test with breakpoints, there is a risk that you will exceed the cycle time of the R/H-CPU.
- SYNCUP is rejected if a breakpoint is set in the RUN-Solo system state.
- If you set breakpoints in the standard user program in an HF-system with the CPUs 1518HF-4 PN, errors occur in the safety program. If you nevertheless want to use breakpoints for testing, you must disable safety mode beforehand. Observe the additional information about the errors and effects in the programming and operating manual SIMATIC Safety - Configuring and Programming (https://support.industry.siemens.com/cs/ww/de/view/54110126).

Difference between modifying and forcing

The fundamental difference between the modifying and forcing functions is the storage behavior:

- Modifying: Modifying tags is an online function and is not stored in the CPU. You can end the modifying of tags in the watch table or force table or by terminating the online connection.
- Forcing: A force job is written to the SIMATIC memory card and is retained after a POWER OFF. The S7-1500R/H CPU displays an active force job with a symbol. You can only end the forcing of peripheral inputs and peripheral outputs in the force table.
  A force job is transferred to the backup CPU in SYNCUP. The force job is then effective in both CPUs in the RUN-Redundant system state.

Testing with watch tables

The following functions are available in the watch table:

- Monitoring of tags

  Using watch tables, you can monitor the actual values of the individual tags of a CPU user program.

  - On the PG/PC
  - On the display of the CPU

  Please note the following requirement for displaying the tag values on the CPU display: You must specify a symbolic name for each tag in the "Name" column of the force table.

  You monitor the following operand areas:

  - Inputs and outputs (process image) and bit memory
  - Contents of data blocks
  - Peripheral inputs and peripheral outputs
  - Timers and counters
- Modifying tags

  You use this function to assign values to the individual tags of a user program or a CPU on the PG/PC. Modifying is also possible with Test with program status.

  The following operand areas are modifiable:

  - Inputs and outputs (process image) and bit memory
  - Contents of data blocks
  - Peripheral inputs and peripheral outputs (for example, %I0.0:P, %Q0.0:P)
  - Timers and counters

Testing with a force table

The following functions are available in the force table:

- Monitoring of tags

  You use watch tables to monitor the actual values of the individual tags of a CPU user program.

  - On the PG/PC
  - On the display of the CPU

  You can monitor the table with or without trigger conditions.
  Please note the following requirement for displaying the tag values on the CPU display: You must specify a symbolic name for each tag in the "Name" column of the force table.

  You monitor the following tags:

  - Bit memory
  - Contents of data blocks
  - Peripheral inputs
- Forcing of peripheral inputs and peripheral outputs

  You can force individual peripheral inputs or peripheral outputs.

  - Peripheral inputs: Forcing peripheral inputs "bypasses" sensors/inputs by specifying fixed values for the program. Instead of the actual input value via a process image or direct access, the program receives the force value.
  - Peripheral outputs: Forcing peripheral outputs "bypasses" the complete program by specifying fixed values for the actuators.

The advantage of the force table is that you can simulate different test environments and overwrite tags in the CPU with a fixed value. This enables you to intervene in the running process in a regulating way.

Testing with a PLC tag table

You can monitor the current data values of tags in the CPU directly in the PLC tag table. To do so, open the PLC tag table and start the monitoring.

You may also copy PLC tags to a watch table or force table and monitor, modify or force them there.

Testing with a data block editor

The data block editor offers different options for monitoring and modifying tags. These functions directly access the actual values of the tags in the online program. Actual values are the current values of tags in the CPU work memory at any given moment during program execution. The following functions for monitoring and modifying are available in the database editor.

- Monitor tags online
- Modify individual actual values
- Create a snapshot of the actual values

Note

Setting data values during commissioning

During plant commissioning, you often need to adjust data values to adapt the program to local conditions.

The declaration table for data blocks offers some functions for this purpose.

Testing with the LED flash test

In many online dialogs, you can perform an LED flash test. This feature is useful if you are not sure which device in the hardware configuration corresponds to the device currently selected in the software.

If you click on the "Flash LED" button in STEP 7 under Online & diagnostics (online access), specific LEDs flash on the device currently selected. The RUN/STOP, ERROR, and MAINT LEDs flash on the CPU. The LEDs flash until you cancel the flash test.

Testing with a trace function

The trace function is used to record the CPU tags, depending on settable trigger conditions. Examples of tags are the system and user tags of a CPU. The CPU saves the recordings. If necessary, you can display the recordings with STEP 7 and evaluate them.

- Restriction: The storage of measurements on the SIMATIC memory card (measurements in the device) is not supported for R/H-CPUs.
- Procedure
  - The trace function can be called from the folder of the top CPU in the project tree, under the name "Traces".
  - In the "Measurements" system folder, double-click to open the recording to display the measurement. The "Diagram" tab for the measurement opens in the work area.

Please also see the FAQs on the Internet (https://support.industry.siemens.com/cs/ww/en/view/102781176) for testing with the trace function.

Reference

Additional information on the test functions can be found in the STEP 7 online help.

You can find more information on testing with trace functions in the function manual Using the trace and logic analyzer function (http://support.automation.siemens.com/WW/view/en/64897128).

14.2 Reading out/saving service data

Service data

In addition to the contents of the diagnostics buffer, the service data contain numerous additional data points about the internal status of the CPU. If a problem occurs with the CPU that you cannot resolve with other methods, send the service data to the Product Support team. The Product Support team will use the service data to help you with problem analysis.

Please note the following:

- Read out the service data in the following cases:
  - Immediately after a CPU has switched to the STOP operating state.
  - Immediately after a loss of synchronization in the redundant system.
- Always read out the service data of the primary and the backup CPU.

Note

You cannot execute a download to the device while reading out the service data of the CPU.

Requirement

The S7-1500R/H redundant system must not be in the SYNCUP or RUN-Redundant system state.

Methods of reading service data

You can read service data with:

- STEP 7
- SIMATIC memory card

Procedure using STEP 7

You can find more information on saving service data with the keyword "Saving service data" in the STEP 7 online help.

Procedure using the SIMATIC memory card

Use the SIMATIC memory card to save the service data if communication with the CPU is not possible over the Ethernet. In all other cases, save the service data using STEP 7.
The procedure using the SIMATIC memory card is more time-consuming than the other options for saving the service data. You must also ensure before saving that there is sufficient memory space on the SIMATIC memory card.

Proceed as follows for the R/H-CPU to save service data using the SIMATIC memory card:

1. Insert the SIMATIC memory card into the card reader of your PC/PG.
2. Open the job file S7_JOB.S7S in an editor.
3. Overwrite the entry PROGRAM with the STRING or character string DUMP in the editor.
   Do not use any spaces/line breaks/quotation marks to ensure that the file size is exactly 4 bytes.
4. Make sure that the SIMATIC memory card is not write-protected. Insert the SIMATIC memory card into the card slot of the CPU.
   For the R/H-CPU, you require one card ≥ 32 MB in each case.
5. Save the file under the existing file name.

Result: The CPU writes the service data file DUMP S7S to the SIMATIC memory card and remains in STOP.

Service data transfer is complete when the STOP LED stops flashing and is lit continuously. If service data transfer has been successful, only the STOP LED lights up.

In the event of errors in transfer, the STOP LED is lit continuously and the ERROR LED flashes. The CPU also stores a text file with information on the error that occurred in the DUMP.S7S folder.

Technical specifications 15

Introduction

This chapter lists the technical specifications of the system:

- The standards and test values that the modules of the S7-1500R/H redundant system comply with and fulfill.
- The test criteria according to which the S7-1500R/H redundant system was tested.

Technical specifications for the modules

The technical specifications of the individual modules can be found in the manuals of the modules themselves. In the event of deviations between the statements in this document and the manuals, the statements in the manuals take priority.

15.1 Standards and Approvals

Currently valid markings and authorizations

Note

Information on the components of the S7-1500R/H redundant system

The identifiers and approvals currently valid are printed on the components of the S7-1500R/H redundant system.

Safety information

WARNING

Personal injury and damage to property may occur

In hazardous areas, injury and damage can occur if you disconnect plug-in connections during operation of an S7-1500R/H redundant system.

Always switch off the power to the S7-1500R/H redundant system before disconnecting plug-in connections in hazardous areas.

WARNING

Explosion hazard

If you replace components, compliance with Class I, Div. 2 or zone 2 may become invalid.

WARNING

Deployment requirements

This device is only suitable for use in Class I, Div. 2, Group A, B, C, D; Class I, zone 2, Group IIC, or in non-hazardous areas.

Safety of the plant or the system

NOTICE

Safety is the responsibility of the assembler

The safety of any plant or system incorporating the equipment is the responsibility of the assembler of the plant or system.

Five safety rules for work in or on electrical installations

A set of rules, which are summarized in DIN VDE 0105 as the "five safety rules", are defined for work in or on electrical installations as a preventative measure against electrical accidents:

1. Disconnect
2. Secure to prevent reconnection
3. Verify that the equipment is not live
4. Ground and short-circuit
5. Erect barriers around or cover adjacent live parts

These five safety rules must be applied in the above order prior to starting work on an electrical system. After completing the work, proceed in the reverse order.

It is assumed that every electrician is familiar with these rules.

CE mark

The S7-1500R/H redundant system complies with the harmonized European standards (EN) for programmable logic controllers published in the official gazettes of the European Community. The S7-1500R/H redundant system meets the requirements and protection targets of the following directives.

- 2014/30/EU "Electromagnetic Compatibility" (EMC Directive)
- 2014/34/EU "Equipment and protective systems intended for use in potentially explosive atmospheres" (Explosion Protection Directive)
- 2011/65/EU "Restriction of the use of certain hazardous substances in electrical and electronic equipment" (RoHS Directive)

EU declarations of conformity for the respective authorities are available from the following address:

Siemens AG
Digital Industries

Factory Automation
DI FA TI COS TT
Postfach 1963
D-92209 Amberg

The EU declarations of conformity are also available for download from the Siemens Industry Online Support website, under the keyword "Declaration of Conformity".

UKCA marking

The S7-1500R/H redundant system complies with the designated British Standards (BS) for programmable logic controllers published in the official consolidated list of the British government. The S7-1500R/H redundant system fulfills the requirements and protection goals of the following regulations and related supplements:

- Electrical Equipment (Safety) Regulations 2016 (Low Voltage)
- Electromagnetic Compatibility Regulations 2016 (EMC)
- Equipment and Protective Systems Intended for use in Potentially Explosive Atmospheres Regulations 2016 (Explosion Protection)
- The Restriction of the Use of Certain Hazardous Substances in Electrical and Electronic Equipment Regulations 2012 (RoHS).
- Rules for the supply of machines (safety) 2008 for S7-1500R/H safety components

UK declarations of conformity for the respective authorities are available from:

Siemens AG
Digital Industries
Factory Automation
DI FA TI COS TT
P.O. Box 1963
D-92209 Amberg

The UK Declaration of Conformity is also available for download from the Siemens Industry Online Support website under the keyword "Declaration of Conformity".

cULus approval

Underwriters Laboratories Inc. in accordance with

- UL 508 (Industrial Control Equipment) OR UL 61010-1 and UL 61010-2-201
- CAN/C22.2 No. 142 (Process Control Equipment) OR CAN/CSA C22.2 No. 61010-1 and CAN/CSA C22.2 No. 61010-2-201

OR

cULus HAZ. LOC. approval

Underwriters Laboratories Inc. in accordance with

- UL 508 (Industrial Control Equipment) OR UL 61010-1 and UL 61010-2-201
- CAN/CSA C22.2 No. 142 (Process Control Equipment) OR CAN/CSA C22.2 No. 61010-1 and CAN/CSA C22.2 No. 61010-2-201
- ANSI/ISA 12.12.01
- CAN/CSA C22.2 No. 213 (Hazardous Location)

APPROVED for use in
Class I, Division 2, Group A, B, C, D T4;
Class I, Zone 2, Group IIC T4

Installation Instructions for cULus haz.loc.

- WARNING - Explosion Hazard - Do not disconnect while circuit is live unless area is known to be non-hazardous.
- WARNING - Explosion Hazard - Substitution of components may impair suitability for Class I, Division 2 or Zone 2.
- This equipment is suitable for use in Class I, Division 2, Groups A, B, C, D; Class I, Zone 2, Group IIC; or non-hazardous locations.

WARNING: EXPOSURE TO SOME CHEMICALS MAY DEGRADE THE SEALING PROPERTIES OF MATERIALS USED IN THE RELAYS.

FM approval

Factory Mutual Research (FM) according to

- Approval Standard Class Number 3611, 3600, 3810
- ANSI/UL 121201
- ANSI/UL 61010-1
- CAN/CSA C22.2 No. 213
- CAN/CSA C22.2 No. 61010-1
- CAN/CSA C22.2 No. 0-10

APPROVED for use in Class I, Division 2, Group A, B, C, D T4;
Class I, Zone 2, Group IIC T4

Installation Instructions for FM

- WARNING - Explosion Hazard - Do not disconnect while circuit is live unless area is known to be non-hazardous.
- WARNING - Explosion Hazard - Substitution of components may impair suitability for Class I, Division 2 or Zone 2.
- This equipment is suitable for use in Class I, Division 2, Groups A, B, C, D; Class I, Zone 2, Group IIC; or non-hazardous locations.

WARNING: EXPOSURE TO SOME CHEMICALS MAY DEGRADE THE SEALING PROPERTIES OF MATERIALS USED IN THE RELAYS.

ATEX approval

According to EN 60079-15 (Electrical apparatus for potentially explosive atmospheres - Part 15: Type of protection "n") and EN 60079-0 (Electrical apparatus for potentially explosive gas atmospheres - Part 0: General Requirements).

II 3 G Ex nA IIC T4 Gc
DEKRA 12ATEX0004X

OR

According to EN 60079-7 (Electrical apparatus for potentially explosive atmospheres - Part 7: Increased safety "e") and EN IEC 60079-0 (Electrical apparatus for potentially explosive gas atmospheres - Part 0: General Requirements).

II 3 G Ex ec IIC T4 Gc
DEKRA 20ATEX0003 X

Special conditions in hazardous areas:

1. The equipment shall only be used in an area of not more than pollution degree 2, as defined in EN 60664-1.
2. The equipment shall be installed in a suitable enclosure providing a degree of protection not less than IP54 in accordance with EN 60079-15 **or** EN 60079-7. The ambient conditions must be taken into consideration for use.
3. Provisions shall be made to prevent the rated voltage from being exceeded by transient disturbances of more than 119 V.

UKEX approval

According to EN 60079-7 (Explosive atmospheres – Part 7: Equipment protection by increased safety "e") and EN IEC 60079-0 (Explosive atmospheres – Part 0: Equipment - General requirements).

II 3 G Ex ec IIC T4 Gc
DEKRA 21UKEX0008 X

Special conditions in explosive atmospheres:

1. The equipment shall only be used in an area of not more than pollution degree 2, as defined in EN 60664-1.
2. The equipment shall be installed in a suitable enclosure providing a degree of protection not less than IP54 in accordance with EN IEC 60079-0. The ambient conditions must be taken into consideration for use.
3. Provisions shall be made to prevent the rated voltage from being exceeded by transient disturbances of more than 119 V.

IECEx approval

According to IEC 60079-15 (Explosive atmospheres - Part 15: Equipment protection by type of protection "n") and IEC 60079-0 (Explosive atmospheres - Part 0: Equipment - General requirements).

II 3 G Ex nA IIC T4 Gc
IECEx DEK 13.0010X

OR

According to IEC 60079-7 (Explosive atmospheres - Part 7: Equipment protection by increase safety "e") and IEC 60079-0 (Explosive atmospheres - Part 0: Equipment - General requirements).

II 3 G Ex ec IIC T4 Gc
IECEx DEK 19.0087 X

Special conditions in hazardous areas:

1. The equipment shall only be used in an area of not more than pollution degree 2, as defined in IEC 60664-1.
2. The equipment shall be installed in a suitable enclosure providing a degree of protection not less than IP54 in accordance with EN 60079-15 **or** EN 60079-7. The ambient conditions must be taken into consideration for use.
3. Provisions shall be made to prevent the rated voltage from being exceeded by transient disturbances of more than 119 V.

CCCEx approval

According to GB/T 3836.8 (Explosive atmosphere - Part 8: Equipment protection by type of protection "n") and GB/T 3836.1 (Explosive atmospheres - Part 1: Equipment - General requirements).

Ex nA IIC T4 Gc

Special conditions in hazardous areas:

- The equipment shall only be used in an area of not more than pollution degree 2, as defined in GB/T 16935.1.
- The device must be installed in a suitable enclosure that ensures a degree of protection of at least IP54 according to GB/T 3836.8. The ambient conditions must be taken into consideration for use.
- It must be ensured that the transient protection is set to a value which does not exceed 140% of the rated peak voltage value at the supply terminals of the device.

RCM Declaration of conformity for Australia/New Zealand

The redundant S7-1500R/H system meets the requirements of the standard EN 61000-6-4.

Korea Certification

Please note that this device corresponds to limit value class A in terms of the emission of radio frequency interference. This device can be used in all areas, except residential areas.

이 기기는 업무용(A급) 전자파 적합기기로서 판매자 또는 사용자는 이 점을 주의하시기 바라며 가정 외의 지역에서 사용하는 것을 목적으로 합니다.

Marking for the Eurasian Customs Union

EAC (Eurasian Conformity)

Customs Union of Russia, Belarus and Kazakhstan

Declaration of conformity with the technical requirements of the Customs Union (TR CU).

IEC 61131-2

The S7-1500R/H redundant system fulfills the requirements and criteria of standard IEC 61131-2 (programmable logic controllers, Part 2: Equipment requirements and tests).

IEC 61010-2-201

The S7-1500R/H redundant system fulfills the requirements and criteria of standard IEC 61010-2-201
(Safety requirements for electrical equipment for measurement, control, and laboratory use Part 2-201: Particular requirements for control equipment).

PROFINET standard

The PROFINET interfaces of the redundant S7-1500R/H system are based on the standard IEC 61158 Type 10.

Marine approval

Classification societies:

- ABS (American Bureau of Shipping)
- BV (Bureau Veritas - French marine classification society)
- DNV- GL (Det Norske Veritas - Germanischer Lloyd)
- LRS (Lloyds Register of Shipping)
- Class NK (Nippon Kaiji Kyokai)
- CCS (China Classification Society)

Industrial use

The S7-1500R/H redundant system is designed for use in industrial environments. It meets the following standards for this type of use:

- Requirements on emission EN 61000-6-4: 2007 + A1: 2011
- Requirements on immunity EN 61000-6-2: 2019

Use in mixed areas

Under certain circumstances, you can use the S7-1500R/H redundant system in a mixed area. A mixed area is used for residential purposes and for commercial operations that do not significantly impact on residents.

If you use the S7-1500R/H redundant system in a mixed area, you must ensure that radio interference emission complies with the limit classes of the technical standard EN 61000-6-3. Suitable measures for observing these limits for use in a mixed area are, for example:

- Installation of the S7-1500R/H redundant system in grounded control cabinets
- Use of noise filters in the supply cables

An individual acceptance test is also required.

Use in residential areas

Note

S7-1500R/H redundant system not intended for use in residential areas

The S7-1500R/H redundant system is not intended for use in residential areas. Using the S7-1500R/H redundant system in residential areas can affect radio and television reception.

Reference

The certificates for the identifiers and approvals can be found in Siemens Industry Online Support on the Internet (http://www.siemens.com/automation/service&support).

15.2 Electromagnetic compatibility

Definition

Electromagnetic compatibility (EMC) is the ability of an electrical installation to function satisfactorily in its electromagnetic environment, without affecting that environment.

The S7-1500R/H redundant system also meets the requirements of EMC legislation for the European Single Market. This is dependent on the S7-1500R/H redundant system complying with the requirements and guidelines relating to electrical equipment.

EMC in accordance with NE21

The S7-1500R/H redundant system meets the EMC specifications of NAMUR guideline NE21.

Pulse-shaped disturbances

The table below shows the electromagnetic compatibility of the S7-1500R/H redundant system with regard to pulse-shaped disturbances.

Table 15- 1 Pulse-shaped disturbances

Pulse-shaped disturbance	Test voltage	Corresponds with degree of severity
Electrostatic discharge in accordance with IEC 61000-4-2.	Air discharge: ±8 kV Contact discharge: ±6 kV	3 3
Burst pulses (high-speed transient disturbances) in accordance with IEC 61000-4-4.	±2 kV (power supply line) ±2 kV (signal cable > 30 m) ±1 kV (signal cable < 30 m)	3 4 3
High-energy single pulse (surge) in accordance with IEC 61000-4-5 External protective circuit required (not for 230 V modules) You can find more information in the Designing interference-free controllers function manual.		3
• Asymmetric coupling	±2 kV (power supply cables) DC with protective elements ±2 kV (signal/data line only > 30 m), with protective elements	
• Symmetric coupling	±1 kV (power supply cable) DC with protective elements ±1 kV (signal/data line only > 30 m), with protective elements	

Sinusoidal disturbances

The following table shows the electromagnetic compatibility of the S7-1500R/H redundant system with respect to sinusoidal disturbances (RF radiation).

Table 15- 2 Sinusoidal disturbances with RF radiation

RF radiation in accordance with IEC 61000-4-3/NAMUR 21 **Electromagnetic RF field, amplitude-modulated**		**Corresponds with degree of severity**
80 MHz to 2.7 GHz	10 V/m	3
2.7 GHz to 6 GHz	3 V/m	2
80 % AM (1 kHz)		

The following table shows the electromagnetic compatibility of the S7-1500R/H redundant system with respect to sinusoidal disturbances (RF coupling).

Table 15- 3 Sinusoidal disturbances with RF coupling

RF coupling in accordance with IEC 61000-4-6	**Corresponds with degree of severity**
from 10 kHz	3
10 V_{rms}	
80 % AM (1 kHz)	
150 Ω source impedance	

Emission of radio interference

Interference emission of electromagnetic fields in accordance with EN 55016

Table 15- 4 Interference emission of electromagnetic fields

Frequency	**Interference emission**	**Measuring distance**
30 MHz to 230 MHz	< 40 dB (µV/m) QP	10 m
230 MHz to 1000 MHz	< 47 dB (µV/m) QP	10 m
From 1 GHz to 3 GHz	< 76 dB (µV/m) P	3 m
From 3 GHz to 6 GHz	< 80 dB (µV/m) P	3 m

Interference emission via the AC power supply in accordance with EN 55016.

Table 15- 5 Interference emission via the AC power supply

Frequency	**Interference emission**
0.15 MHz to 0.5 MHz	< 79 dB (µV) Q < 66 dB (µV) M
0.5 MHz to 30 MHz	< 73 dB (µV) Q < 60 dB (µV) M

15.3 Shipping and storage conditions

Introduction

The S7-1500R/H redundant system meets the specifications regarding shippings and storage conditions pursuant to IEC 61131-2. The following information applies to modules that are shipped and/or stored in their original packaging.

Shipping and storage conditions for modules

Table 15- 6 Shipping and storage conditions

Type of condition	Permissible range
Free fall (in shipping package)	≤ 1 m
Temperature	from -40 °C to +70 °C
Barometric pressure	From 1140 to 660 hPa (corresponds to an elevation of -1000 to 3500 m)
Relative humidity	5% to 95%, without condensation
Sinusoidal vibrations in accordance with IEC 60068-2-6	5 - 8.4 Hz: 3.5 mm 8.4 - 500 Hz: 9.8 m/s^2
Shock in accordance with IEC 60068-2-27	250 m/s^2, 6 ms, 1000 shocks

15.4 Mechanical and climatic ambient conditions

Operating conditions

The S7-1500R/H redundant system is designed for stationary use in weather-proof locations. The operating conditions are based on the requirements of IEC 61131-2:2017:

- OTH4
- STH4 (R/H CPUs: Minimum ambient temperature -40 °C, minimum relative humidity 5%)
- TTH4 (R/H CPUs: minimum relative humidity 5%)

Test of mechanical ambient conditions

The table below provides important information with respect to the type and scope of the test of ambient mechanical conditions.

Table 15- 7 Test of mechanical ambient conditions

Condition tested	Test Standard	Comment
Vibration	Vibration test according to IEC 60068-2-6 (Sinus)	Type of oscillation: Frequency sweeps with a rate of change of 1 octave/minute. 5 Hz ≤ f ≤ 8.4 Hz, constant amplitude 7 mm 8.4 Hz ≤ f ≤ 150 Hz, constant acceleration 2 g Duration of oscillation: 10 frequency sweeps per axis, along each of the 3 mutually perpendicular axes
Shock	Shock, tested according to IEC 60068-2-27	Type of shock: Half-sine Shock intensity: 15 g max., duration 11 ms Direction of shock: 3 shocks each in +/- direction, along each of the 3 perpendicular axes
Continuous shock	Shock, tested according to IEC 60068-2-27	Type of shock: Half-sine Shock intensity: 250 m/s^2 peak value, 6 ms duration Direction of shock: 1000 shocks each in (+/-) direction, along each of the 3 mutually perpendicular axes

Reduction of vibrations

If the S7-1500R/H redundant system is exposed to severe shock or vibration, take appropriate measures to reduce the acceleration or the amplitude.

We recommend installing the S7-1500R/H redundant system on damping materials (for example, rubber-bonded metal mounting).

Climatic ambient conditions

The table below shows the permissible climatic environmental conditions for the SIMATIC S7-1500R/H redundant system during operation.

Table 15- 8 Climatic ambient conditions

Ambient conditions		Permissible range	Comments
Temperature R-CPUs	Horizontal mounting position	from 0 to 60 °C Article No. 6ES7513-1RL00-0AB0, 6ES7515-2RM00-0AB0:	To increase the service life of the display, the display switches off when the permitted operating temperature is exceeded. At certain temperatures, the display switches off and on again. You can find more information in the technical specifications in the CPU manuals.
		from -30 to 60 °C Article No. 6ES7513-1RM03-0AB0, 6ES7515-2RN03-0AB0:	
	Vertical mounting position	from 0 to 40 °C Article No. 6ES7513-1RL00-0AB0, 6ES7515-2RM00-0AB0:	
		from -30 to 40 °C Article No. 6ES7513-1RM03-0AB0, 6ES7515-2RN03-0AB0:	
Temperature H-CPUs	Horizontal mounting position	from 0 to 60 °C	
		from 0 to 55 °C with synchronization modules Sync Module 1 GB FO 40 km (6ES7960-1FE00-0AA5)[1]	
	Vertical mounting position	from 0 to 40 °C	
		from 0 to 35 °C with synchronization modules Sync Module 1 GB FO 40 km (6ES7960-1FE00-0AA5)[1]	
Temperature variation		10 K/h	-
Relative humidity		from 10 % to 95 %	Without condensation
Barometric pressure		From 1140 to 795 hPa	Corresponds to an altitude of -1000 m to 2000 m. Note the following section "Using the redundant S7-1500R/H system over 2000 m above sea level".
Pollutant concentration		ANSI/ISA-71.04 severity level G1; G2; G3	-

[1] If you use the Sync Module 1 GB FO 40 km (6ES7960-1FE00-0AA5) synchronization modules in the H-CPUs, then restrictions apply to the maximum ambient temperature.

Using the redundant S7-1500R/H system over 2000 m above sea level

Table 15- 9 R/H CPUs for maximum installation altitude 5000 m

CPU designation	Article number	Version	Max. installation altitude
CPU 1513R-1 PN	6ES7513-1RL00-0AB0 6ES7513-1RM03-0AB0	FS01 or higher	5,000 m
CPU 1515R-2 PN	6ES7515-2RM00-0AB0 6ES7515-2RN03-0AB0		
CPU 1517H-3 PN	6ES7517-3HP00-0AB0		
CPU 1518HF-4 PN	6ES7518-4JP00-0AB0		

The maximum "operating height above sea level" is described in the technical specifications of the respective module. The product data sheets with daily updated technical specifications can be found on the Internet (https://support.industry.siemens.com/cs/ww/en/ps/td) at Industry Online Support. Enter the article number or the short description of the desired module on the website.

For altitudes > 2000 m, the following constraints apply to the maximum specified ambient temperature:

Restrictions of the specified maximum ambient temperature in reference to the installation altitude

Installation altitude	Derating factor for ambient temperature [1]
-1000 m to 2000 m	1.0
2000 m to 3000 m	0.9
3000 m to 4000 m	0.8
4000 m to 5000 m	0.7

[1] Base value for application of the derating factor is the maximum permissible ambient temperature in °C for 2000 m.

Note

- Linear interpolation between altitudes is permissible.
- The derating factors compensate for the decreasing cooling effect of air at higher altitudes due to lower density.
- Note the mounting position of the respective CPU in the technical specifications. The basis is the standard IEC 61131-2:2017.
- Make sure that the power supplies you use are rated for altitudes > 2000 m.
- The displays of the R/H CPUs are designed for an altitude of ≤ 3,000 m. When operating the device at altitudes > 3,000 m, you may experience problems with the CPU display in rare cases; however, these do not affect operation of the CPU.
- The synchronization modules for the CPU 1517H-3 PN/CPU 1518HF-4 PN (sync module 1 GB FO 10 m: 6ES7960-1CB00-0AA5, Sync module 1 GB FO 10 km: 6ES7960-1FB00-0AA5, Sync module 1 GB FO 40 km: 6ES7960-1FE00-0AA5) are also released for 5000 m.

Effects on the availability of modules

The higher cosmic radiation present during operation at altitudes above 2000 m will also start to have an effect on the failure rate of electronic components (the so-called soft error rate). In individual cases this might result in a primary backup switchover.

PFDavg, PFH values for HF-CPUs

Below you will find the probability of failure values (PFDavg, PFH values) for the HF-CPUs with a service life of 20 years and with a repair time of 100 hours:

Operation in low demand mode low demand mode **According to IEC 61508:2010:** **PFDavg = Average probability of dangerous failure on demand**	**Operation in high demand or continuous mode** high demand/continuous mode **According to IEC 61508:2010:** **PFH = Average frequency of a dangerous failure [h^{-1}]**
< 2E-05	< 1E-09

15.5 Information on insulation tests, protection class, degree of protection and rated voltage

Insulation

The insulation is designed in accordance with the requirements of IEC 61010-2-201.

Note

For modules with 24 V DC (SELV/PELV) supply voltage, electrical isolation is tested with 707 V DC (type test).

Pollution degree/overvoltage category in accordance with IEC 61131-2, IEC 61010-2-201

- Pollution degree 2
- Overvoltage category: II

Protection class according to IEC 61131-2, IEC 61010-2-201

The S7-1500R/H redundant system meets protection class I requirements and parts of protection classes II and III.

Degree of protection IP20

Degree of protection IP20 in accordance with IEC 60529 for all modules of the S7-1500R/H redundant system:

- Protection against contact with standard test fingers
- Protection against foreign objects with diameters in excess of 12.5 mm
- No protection against water

Rated voltage for operation

The S7-1500R/H redundant system works with the rated voltages and corresponding tolerances listed in the table below.

Table 15- 10 Rated voltage for operation

rated voltage	Tolerance range
24 V DC	19.2 V DC to 28.8 V DC[1)]

[1)] Static value: Generation as protective extra-low voltage with safe electrical isolation in accordance with IEC 61131-2 or IEC 61010-2-201.

15.6 Use of S7-1500R/H in Zone 2 hazardous area

Reference

You can find more information in the product information Use of modules in a Zone 2 Hazardous Area (http://support.automation.siemens.com/WW/view/en/19692172).

Dimension drawings

A

Mounting rail 160 mm

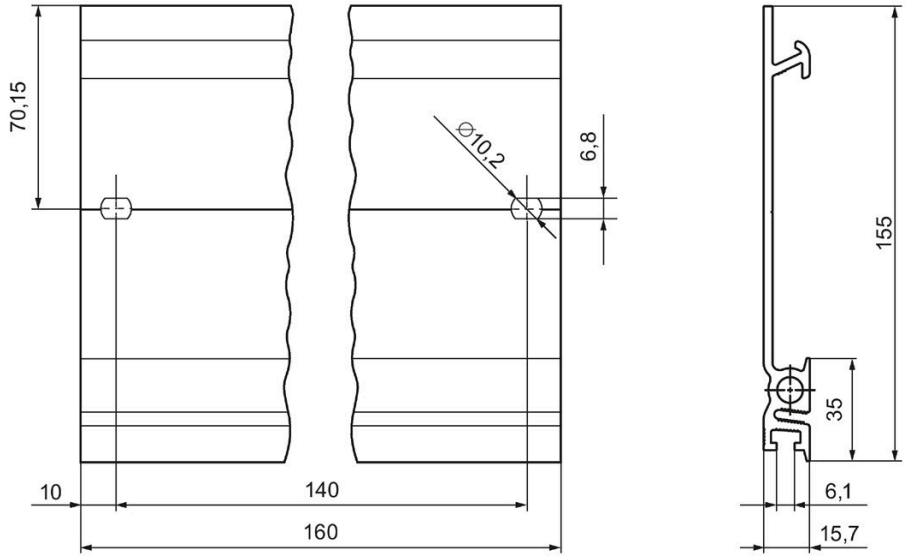

Figure A-1 Mounting rail 160 mm

Mounting rail 245 mm

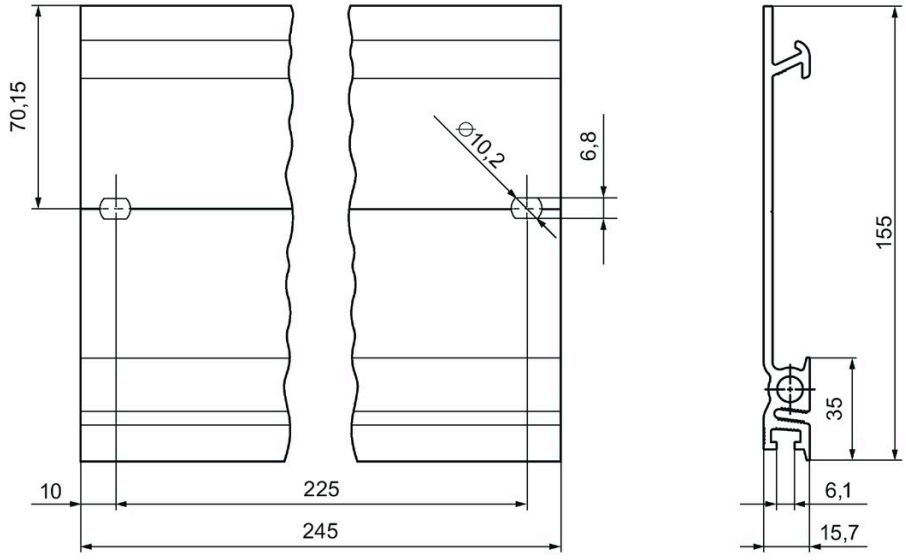

Figure A-2 Mounting rail 245 mm

Mounting rail 482.6 mm

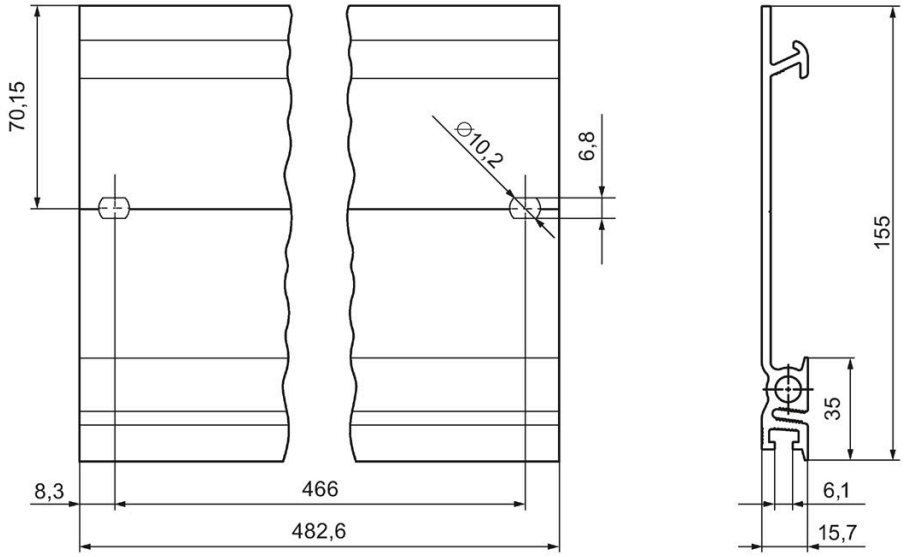

Figure A-3 Mounting rail 482.6 mm

Mounting rail 530 mm

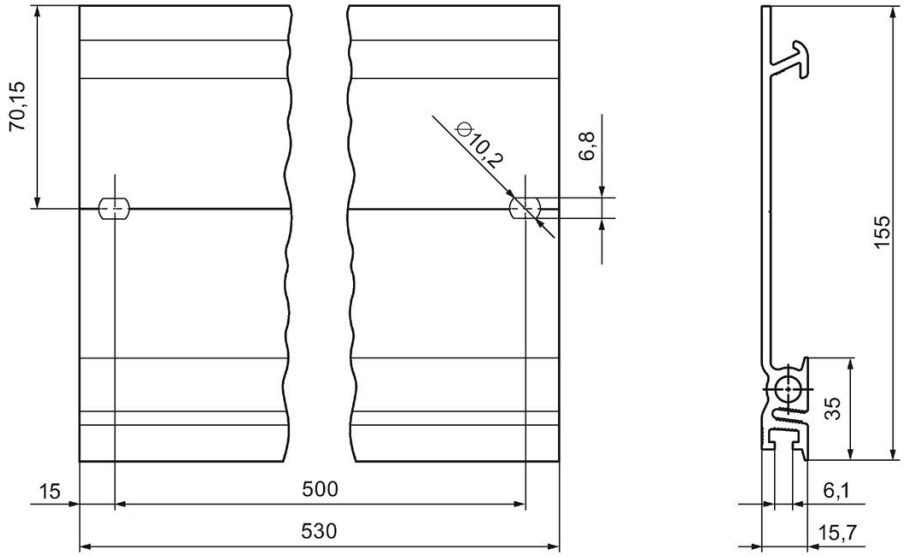

Figure A-4 Mounting rail 530 mm

Mounting rail 830 mm

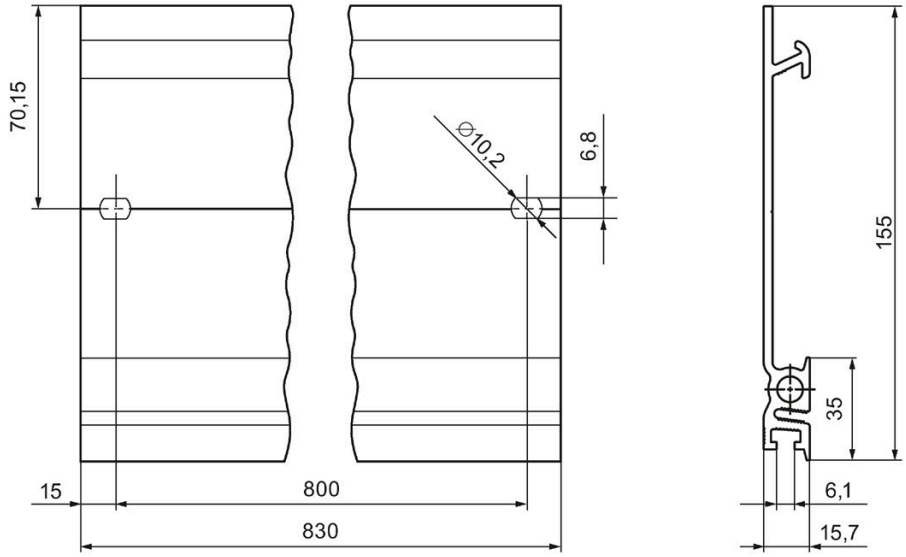

Figure A-5 Mounting rail 830 mm

Mounting rail 2000 mm

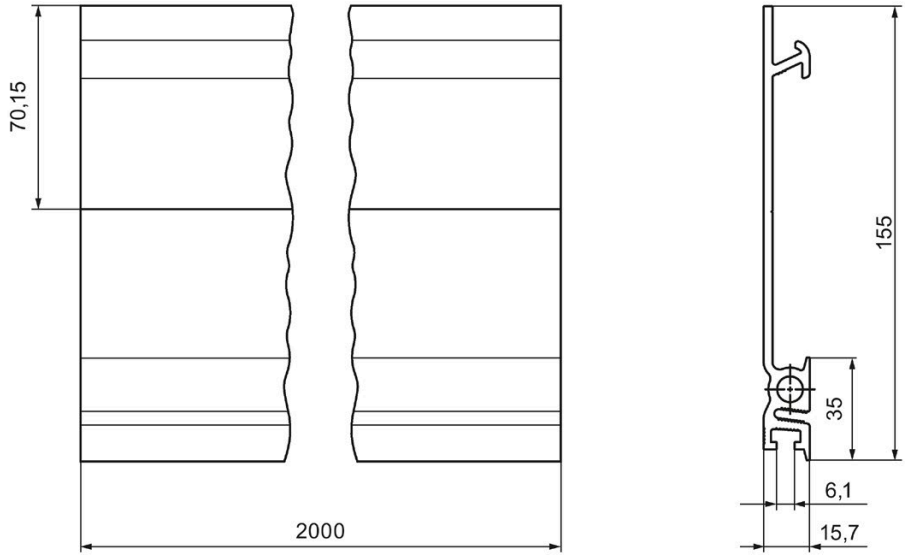

Figure A-6 Mounting rail 2000 mm

Accessories/spare parts

B

General accessories

Table B- 1 General accessories

Designation	Article number
Mounting rail	
• Mounting rail, 160 mm (with drill holes)	6ES7590-1AB60-0AA0
• Mounting rail, 245 mm (with drill holes)	6ES7590-1AC40-0AA0
• Mounting rail, 482 mm (with drill holes)	6ES7590-1AE80-0AA0
• Mounting rail, 530 mm (with drill holes)	6ES7590-1AF30-0AA0
• Mounting rail, 830 mm (with drill holes)	6ES7590-1AJ30-0AA0
• Mounting rail, 2000 mm (without drill holes) for cutting to length	6ES7590-1BC00-0AA0
Standard rail adapter, 10 adapters, 10 hexagon socket screws and 10 washers	6ES7590-6AA00-0AA0
PE connection element for mounting rail, 2000 mm (spare part), 20 units	6ES7590-5AA00-0AA0
4-pole connection plug for supply voltage (spare part), 10 units	6ES7193-4JB00-0AA0
U connector (spare part), 5 units	6ES7590-0AA00-0AA0
Display module 35 mm for R-CPU (replacement part), 1 unit	6ES7591-1AA01-0AA0
Display module 35 mm (replacement part) for R-CPU from article number 6ES7513-1RM03-0AB0, 1 unit	6ES7591-1AB00-0AA0
Cover flap 35 mm (replacement part) with cutout for display/display keys for R-CPUs as of article number 6ES7513-1RM03-0AB0, 5 units	6ES7591-4AB00-0AA0
Display module 70 mm for R/H CPU (replacement part), 1 unit	6ES7591-1BA02-0AA0
Display module 70 mm (replacement part) for R-CPUs from article number 6ES7515-2RN03-0AB0, 1 unit	6ES7591-1BB00-0AA0
Cover flap 70 mm (replacement part) with cutout for display/display keys for R-CPUs as of article number 6ES7515-2RN03-0AB0, 5 units	6ES7591-4BB00-0AA0
Power cable connector with coding element for power supplies (spare part), 10 units	6ES7590-8AA00-0AA0
Synchronization module for CPU 1517H-3 PN, CPU 1518HF-4 PN	
• Sync module 1 GB FO 10 m	6ES7960-1CB00-0AA5
• Sync module 1 GB FO 10 km	6ES7960-1FB00-0AA5
• Sync module 1 GB FO 40 km	6ES7960-1FE00-0AA5

Designation	Article number
Redundancy connections for CPU 1517H-3 PN, CPU 1518HF-4 PN	
• Sync cable FO 1 m (multimode fiber)	6ES7960-1BB00-5AA5
• Sync cable FO 2 m (multimode fiber)	6ES7960-1BC00-5AA5
• Sync cable FO 10 m (multimode fiber)	6ES7960-1CB00-5AA5
• Sync cable FO up to 40 km (single-mode fiber)	See Industry Mall (https://mall.industry.siemens.com)
PROFINET cables for redundancy connections, PROFINET ring of CPU 1513R-1 PN, CPU 1515R-2 PN; PROFINET cables for PROFINET ring of CPU 1517H-3 PN, CPU 1518HF-4 PN	
• Industrial Ethernet FastConnect RJ45 plug 180 degrees, 1 unit	6GK1901-1BB10-2AA0
• Industrial Ethernet FastConnect RJ45 plug 180 degrees, 10 units	6GK1901-1BB10-2AB0
• Industrial Ethernet FastConnect RJ45 plug 90 degrees, 1 unit	6GK1901-1BB20-2AA0
• Industrial Ethernet FastConnect RJ45 plug 90 degrees, 10 units	6GK1901-1BB20-2AB0

SIMATIC memory cards

Table B- 2 SIMATIC memory cards

Article number	Capacity
6ES7954-8LCxx-0AA0	4 MB
6ES7954-8LExx-0AA0	12 MB
6ES7954-8LFxx-0AA0	24 MB
6ES7954-8LL02-0AA0	256 MB
6ES7954-8LPxx-0AA0	2 GB
6ES7954-8LT02-0AA0	32 GB

Media converter (electrical ⇔ optical)

Table B- 3 Media converter (electrical ⇔ optical)

Article number	Article number
SIMATIC NET Media Converter SCALANCE X101-1	6GK5101-1BB00-2AA3
RUGGEDCOM RMC-24-TXFXSM-XX	6GK6001-0AC01-0EA0
Additional media converters	On request

Online catalog

You can find more article numbers for the S7-1500R/H redundant system on the Internet (https://mall.industry.siemens.com) in the online catalog and online ordering system.

Decommissioning

C

C.1 Introduction

In the following section, you will find information on how to properly decommission individual components of your SIMATIC S7-1500R/H redundant system. Decommissioning is necessary when the component has reached the end of its service life.

Decommissioning includes environmentally sound disposal and secure removal of all digital data of electronic components with storage medium.

C.2 Securely removing data

Before disposing of components of the S7-1500R/H redundant system, you must securely delete all data from the storage media of these components.

NOTICE
Data misuse resulting from non-secure deletion of data Incomplete or non-secure deletion of data from data memories can result in data misuse by third parties. For this reason, ensure secure deletion of data from all storage media before disposing of the product.

To delete all data from the data memories of the R/H CPUs to be disposed of, reset the corresponding modules to their factory settings. The "Reset to factory settings" function resets the CPU to its as-delivered condition. The function deletes all information saved internally on the CPU.

Deleting data

For secure deletion of the data from each R/H-CPU and the SIMATIC Memory Card, follow these steps in the order given:

1. Format the SIMATIC Memory Card.

   The format operation deletes all contents from the SIMATIC Memory Card.

   Formatting with STEP 7:

   – Establish an online connection.
   – Open the online and diagnostics view of the CPU (either from the project context or via "Accessible devices").
   – In the dialog window, select "Functions > Format memory card" and then click the "Format" button.

   Formatting using the display of a CPU

   – In the display of the CPU, select the menu "Settings" > "Card functions" > "Format card" and confirm with OK.

2. Restore the factory settings of the CPU.

   We recommend resetting the CPU in STEP 7. When you reset a CPU to factory settings, select the options shown in the figure before the reset.

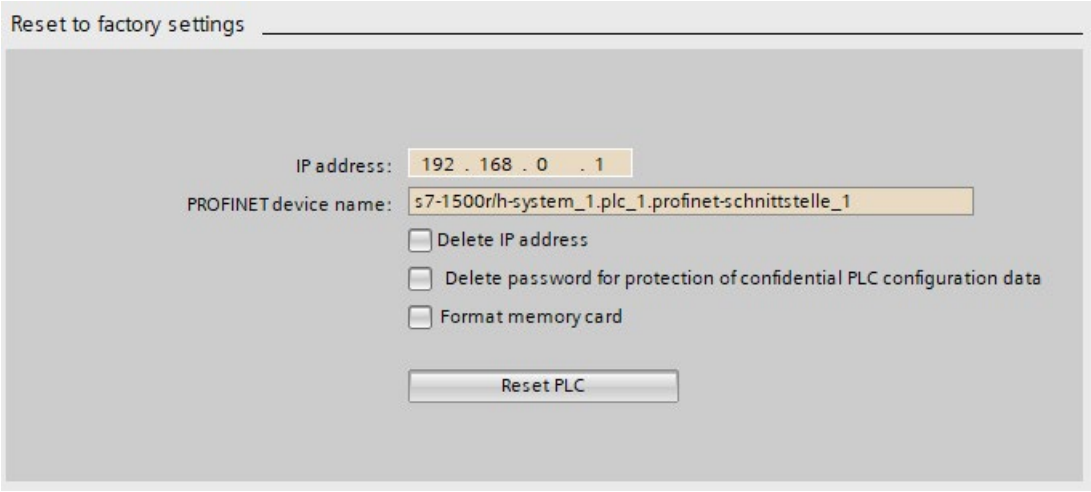

Figure C-1 Resetting the CPU to factory settings

Note

If you reset the CPU using STEP 7 and you have selected the "Format memory card" option, you can skip step 1 of the described sequence of steps.

For detailed information on resetting the CPU to factory settings, refer to the section Reset CPUs to factory settings (Page 385).

Result: All data that was still contained in the data memories of the modules and the SIMATIC Memory Card has been deleted. You can now dispose of the components.

Note

If you no longer plan to use the SIMATIC Memory Card after formatting it, destroy it before disposing of it.

A secure destruction method is to shred the card to such a degree that it cannot be reconstructed. For this, you can also use a waste disposal service that specializes in data storage medium destruction.

C.3 Recycling and disposal

For environmentally sustainable recycling and disposal of your old equipment, contact a certified electronic waste disposal company and dispose of the equipment according to the applicable regulations in your country.

Glossary

AR

The AR (Application Relation) covers all communication relations between IO controller and IO device (for example IO data, data records, interrupts).

Automation system

Programmable logic controller for the open-loop and closed-loop control of process chains in the process engineering industry and in manufacturing technology. The automation system consists of different components and integrated system functions according to the automation task.

Backbone ring

A backbone ring is a very high-speed network. PROFINET components can only be connected to the backbone ring via switches, as the bandwidth for PROFINET is limited to 100 Mbps.

Example: Network ring with video cameras in a tunnel.

Backup CPU

Role of a CPU in the S7-1500R/H redundant system. If the R/H system is in the RUN-Redundant system state, the primary CPU controls the process. The backup CPU processes the user program synchronously and can take over process control if the primary CPU fails.

Baud rate

Data transmission rate indicates the number of bits transmitted per second (baud rate = bit rate).

Bit memory

Bit memory is a component of the system memory of the CPU for saving intermediate results. You access the bit memory through the user program bit by bit, byte by byte, word by word or double word by double word.

Bus

Joint transmission path to which all devices in a fieldbus system are connected.

Bus cable connector

The bus cable connector is the physical connection between bus node and bus cable.

Bus, self-assembling

The modules are lined up on the mounting rail. They are mechanically and electrically connected to each other with a U connector as they are swiveled into position. In this way the bus is extended with each module.

Code block

In SIMATIC S7, a code block contains part of the STEP 7 user program.

Configuration

Systematic arrangement of the individual modules (configuration).

Connection plug

The connection plug provides the physical connection between devices and the cable, for example.

Consistent data

Consistent data is data that belongs together in terms of content. Consistent data items are read and written together.

Counter

Counters are components of the system memory of the CPU. You can modify the content of the "counter cells" using STEP 7 instructions. Example: counting up or down).

CPU

The **C**entral **P**rocessing **U**nit (CPU) contains the operating system and executes the user program. The user program is located on the SIMATIC memory card and is processed in the work memory of the CPU. The PROFINET interfaces on the CPU allow simultaneous communication with PROFINET devices, PROFINET controllers, HMI devices and PGs/PCs.

Crimping

Procedure whereby two components joined together, e.g. wire end sleeve and cable, are connected with one another through plastic strain.

Cycle control point

The cycle control point marks the end of a cycle and the start of the next cycle. The cycle time statistics and monitoring of the configured maximum cycle time start at the cycle control point.

Once the cycle control point has been reached, the CPU writes the process image output to the output modules, reads the state of the inputs in the input modules and then executes the first program cycle OB.

The following requirements must be met for reaching the cycle control point in redundant mode:

- the primary CPU has reached the end of the cyclic program
- the backup CPU has reached the end of the cyclic program and reported this to the primary CPU
- if a minimum cycle time was configured, this is removed

Cycle time

The cycle time is the time a CPU requires to execute the cyclic user program once.

Cyclic interrupt

You will find further information in the glossary entry "Interrupt, cyclic".

Data block

Data blocks (DBs) are data areas in the user program that contain user data. Available data blocks:

- Global data blocks that you can access from all code blocks.
- Instance data blocks that are assigned to a specific FB call.

Device

A device can send, receive or amplify data via the bus, e.g. IO device via PROFINET IO.

Device names

Each IO device must have a unique device name. This is required to allow the IO controller to communicate with an IO device. Advantage: Device names are easier to manage than complex IP addresses.

In its delivery state, an IO device has no device name. A device name must be assigned using the PG/PC before an IO device can be addressed by an IO controller. Example: For transmission of the configuration data (e.g. the IP address) during startup or for exchanging user data in cyclic mode.

Diagnostics

Monitoring functions include:

- Detection, localization and classification of errors, faults and alarms.
- Display and further evaluation of errors, faults and alarms.

They run automatically while the system is in operation. This increases the availability of systems by reducing commissioning times and downtimes.

Diagnostics buffer

The diagnostics buffer is a battery-backed memory area in the CPU where diagnostics events are stored in their order of occurrence.

Diagnostics interrupt

You will find further information in the glossary entry "Interrupt, diagnostics".

Distributed I/O system

System with I/O modules that are configured on a distributed basis, at a large distance from the CPU controlling them.

DNA redundancy

DNA redundancy is the use of redundant **D**ual **N**etwork **A**ccess (DNA) to connect a network with two decoupled networks. Two Y-switches are used for this purpose, a DNA manager and a DNA client.

DP

Distributed I/O

Equipotential bonding

Electrical connection (equipotential bonding conductor) that brings the conductive parts of electrical equipment and other conductive parts to the same or approximately the same potential. This prevents disruptive or dangerous voltages arising between these parts.

Fail-safe systems

Fail-safe systems (F-systems) are characterized by the fact that they remain in the safe state during the occurrence of specific failures or immediately transition into a different safe state.

F-CPU

An F-CPU is a CPU with F-capability that has been approved for use in SIMATIC Safety. A standard user program can also be run in the F-CPU.

Firmware of the CPU

In SIMATIC, a distinction is made between the firmware of the CPU and user programs.

The firmware is a software embedded in electronic devices. The firmware is permanently connected to the hardware in functional terms. It is usually saved in a flash memory, such as EPROM, EEPROM or ROM, and cannot be replaced by the user or only with special tools or functions.

User program: You will find further information in the glossary entry "User program".

Firmware update

You update the module firmware with a firmware update. A firmware update is, for example, run for new functions of a CPU or an interface module.

Function

A function (FC) is a code block with no static data. A function allows you to pass parameters in the user program. Functions are thus suited for programming frequently recurring complex functions, such as calculations.

Function block

A function block (FB) is a code block with static data. An FB allows you to pass parameters in the user program. Function blocks are thus suited for programming frequently recurring complex functions, such as closed-loop controls or operating mode selection.

Functional ground

Functional ground is a low-impedance current path between electric circuits and ground. It is not intended as a protective measure but rather, for example, for improvement of interference immunity.

Ground

Conductive ground whose electrical potential can be set equal to zero at any point.

All interconnected, inactive parts of a piece of equipment.

Ground

Conductive ground whose electrical potential can be set equal to zero at any point.

All interconnected, inactive parts of a piece of equipment.

Grounding

Grounding means connecting an electrically conductive part to a grounding electrode by means of a grounding system.

GSD file

As a Generic Station Description, this file contains all the properties of a PROFINET or PROFIBUS device that are necessary for its configuration.

Hardware interrupt

You will find further information in the glossary entry "Interrupt, hardware".

H-Sync forwarding

H-Sync Forwarding enables a PROFINET device with MRP to forward synchronization data (synchronization frames) of a S7-1500R redundant system only within the PROFINET ring.

In addition, H-Sync forwarding forwards the synchronization data even during reconfiguration of the PROFINET ring. H-Sync forwarding avoids a cycle time increase if the PROFINET ring is interrupted.

S7-1500R: H-Sync Forwarding is recommended for all PROFINET devices with only 2 ports in the PROFINET ring. All PROFINET devices with more than two ports (e.g. switch) in the PROFINET ring must support H-Sync forwarding.

S7-1500H: H-Sync forwarding is not relevant for redundant S7-1500H systems.

I/O module

Device of the distributed I/O that is used as an interface between the controller and the process.

Identification data

Information that is saved in modules, and that supports the user in reviewing the system configuration and locating hardware changes.

Instance data block

Each call of a function block in the STEP 7 user program is assigned a data block, which is automatically generated. Values of the input, output and in/out parameters are stored in the instance data block, as is the local block data.

Interface module

Module in the distributed I/O system. The interface module connects the distributed I/O system to the CPUs (IO controllers) via a fieldbus, and prepares the data of the I/O modules.

Interrupt

The operating system of the CPU distinguishes between various priority classes that control the execution of the user program. These priority classes include interrupts such as hardware interrupts. When an interrupt occurs, the operating system automatically calls an assigned organization block. You program the required reaction in the organization block (for example in an FB).

Interrupt, cyclic

The CPU generates a cyclic interrupt periodically within a parameterizable time grid and then processes the corresponding organization block.

Interrupt, diagnostics

Diagnostics-capable modules signal detected system errors to the CPU using diagnostics interrupts.

Interrupt, hardware

A hardware interrupt is triggered by interrupt-triggering modules following a certain event in the process. The hardware interrupt is signaled to the CPU. The CPU then processes the assigned organization block according to the priority of this interrupt.

Interrupt, time-delay

The time-delay interrupt is one of the program execution priority classes of SIMATIC S7. The time-delay interrupt is generated upon expiration of a timer started in the user program. The CPU then processes the corresponding organization block.

Interrupt, time-of-day

The time-of-day interrupt is one of the program execution priority classes of SIMATIC S7. The time-of-day interrupt is generated based on a specific date and time. The CPU then processes the corresponding organization block.

Interrupt, update

When it receives an update interrupt, the operating system calls the update interrupt OB. This may happen if you changed a parameter on a slot of a device.

IP address

The IP address is made up of four decimal numbers with a range of values from 0 through 255. The decimal numbers are separated by a dot (for example 192.162.0.0).

The IP address consists of the following:

- Address of the network
- Device address (PROFINET interface of the IO controllers/IO devices)

Isolated modules

In the case of isolated input/output modules, the reference potentials of the control and load circuits are electrically isolated. Examples are optical isolators, relays or transformers. Input/output circuits can be connected to common potential.

Load current supply

The load current supply supplies the electric input and output circuits of the module.

MAC address

Each port of a PROFINET interface (PROFINET device) is assigned a unique global device identifier in the factory. This 6-byte long device identifier is the MAC address.

The MAC address is divided into:

- 3-byte manufacturer ID
- 3-byte device ID (consecutive number)

The MAC addresses are generally shown on the front of the device.
Example: 08-00-06-6B-80-C0

Non-isolated modules

In the case of non-isolated input and output modules, the reference potentials of the control and load circuits are electrically connected.

NTP

The Network Time Protocol (NTP) is a standard for synchronizing clocks in automation systems via Industrial Ethernet. NTP uses the UDP connectionless network protocol.

Operating states

Operating states describe the behavior of a single CPU at any given time.

The primary CPU of the S7-1500R/H redundant system has the operating states STOP, STARTUP, RUN, RUN-Syncup and RUN-Redundant. The backup CPU has the operating states STOP, SYNCUP and RUN-Redundant.

Organization block

Organization blocks (OBs) form the interface between the operating system of the CPU and the user program. The organization blocks determine the order in which the user program is executed.

Pairing

Pairing is the mutual recognition of the CPUs of an S7-1500R/H system within a network. During pairing, the CPUs exchange information for mutual identification. Example: Checking for matching article number and firmware version. Successful pairing of two CPUs is a fundamental requirement for redundant operation.

Parameter

- Tag of a STEP 7 code block:
- Tag for setting the behavior of a module (one or more per module). In as-delivered state, every module has an appropriate basic setting, which you can change by configuring in STEP 7. There are static and dynamic parameters

Parameters, dynamic

You can change dynamic module parameters during operation by calling an SFC in the user program, for example, limits of an analog input module.

Parameters, static

You cannot change static module parameters with the user program, but only with configuration in STEP 7, for example, the input delay of a digital input module.

PELV

Protective **E**xtra **L**ow **V**oltage = safety extra low voltage connected to protective earth

Pre-wiring

Wiring of the front connector in the "pre-wiring position" at the I/O module or before you insert the front connector into the I/O module.

Primary CPU

Role of a CPU in the S7-1500R/H redundant system. If the R/H system is in the RUN-Redundant system state, the primary CPU controls the process. The backup CPU processes the user program synchronously and can take over process control if the primary CPU fails.

Primary-backup switchover

The primary CPU has the leading role within the redundant system. If the primary CPU fails following a fault, the backup CPU takes over the primary role and operates as the primary CPU.

Process image (I/O)

The CPU transfers the values from the input and output modules to this memory area. At the start of the cyclic program, the CPU transfers the process image output as a signal state to the output modules. The CPU then reads the signal states of the input modules into the process image inputs. The CPU then executes the user program.

Product version (PV) = Function version (FV)

The product version or function version provides information on the hardware version of the module.

PROFINET

PROcess **FI**eld **NET**work, open Industrial Ethernet standard that continues PROFIBUS and Industrial Ethernet. A cross-manufacturer communication, automation, and engineering model defined by PROFIBUS International e.V. as an automation standard.

PROFINET IO

Communication concept for the realization of modular, distributed applications within the scope of PROFINET.

PROFINET IO controller

Device used to address connected IO devices (for example distributed I/O systems). The IO controller exchanges input and output signals with assigned IO devices. The IO controller is often the CPU on which the user program is running.

PROFINET IO device

Distributed field device that can be assigned to one or more IO controllers. Examples: Distributed I/O system, valve terminals, frequency converters, switches

PROFIsafe

Safety-oriented PROFINET IO bus profile for communication between the → safety program and the F-I/O module in a fail-safe system.

Push-in terminal

Terminal for the tool-free connection of wires.

Redundancy connection/redundancy connections

The redundancy connection in an S7-1500R system is the PROFINET ring with MRP. The redundancy connection uses part of the bandwidth on the PROFINET cable for the synchronization of the CPUs. This bandwidth is therefore not available for PROFINET IO communication.

Unlike in S7-1500R, the PROFINET ring and redundancy connections in S7-1500H are separate. The two redundancy connections are fiber-optic cables that connect the CPUs directly over synchronization modules. The bandwidth on the PROFINET cable is available for PROFINET IO communication.

Redundancy ID

The load memory of both CPUs contains the project data of one as well as the other CPU. By assigning the redundancy IDs, you define which project data a CPU uses for itself.

Redundant systems

Redundant systems have multiple (redundant) instances of key automation components. Process control is maintained if a redundant component fails.

Reference potential

Potential from which the voltages of the circuits involved are observed and/or measured.

Restart

A warm restart deletes all non-retentive bit memory and resets non-retentive DB contents to the initial values from load memory. Retentive bit memory and retentive DB contents are retained. Program execution begins at the call of the first startup OB. A restart is triggered with CPU POWER OFF/POWER ON.

Retentivity

A memory area whose content is retained after power failure and after a STOP to RUN transition is retentive. The non-retentive area bit memory area, timers and counters are reset after a power failure and after a STOP to RUN transition. The non-retentive content of data blocks is reset to the initial values.

Row

All the modules attached to a mounting rail.

Runtime error

Error that occurs during execution of the user program in the automation system (thus not in the process).

Safety class

Safety level (Safety Integrity Level) SIL according to IEC 61508. The greater the Safety Integrity Level, the stronger the measures for preventing system errors as well as for control of system errors and hardware failures.

With the fail-safe modules, use up to safety class SIL3 is possible.

Safety function

Mechanism integrated in F-CPU and F-I/O that enables use in the SIMATIC Safety fail-safe system.

According to IEC 61508: Function that is implemented by a safety relay to keep the system in the safe state in case of a specific error or to bring it into a safe state.

Safety program

Safety-oriented user program

SELV

Safety **E**xtra **L**ow **V**oltage = Safety extra-low voltage

SNMP

SNMP (Simple Network Management Protocol) is the standardized protocol for performing diagnostics on and assigning parameters to the Ethernet network infrastructure.

In the office setting and in automation engineering, devices from a wide range of vendors on the Ethernet support SNMP.

You can operate SNMP-based applications on the same network in parallel to applications with PROFINET.

The scope of supported functions varies depending on the device type. For example, a switch has more functions than a CP 1616.

Switch

PROFIBUS is a linear network. The communication nodes are linked by means of a passive cable - the bus.

By contrast, Industrial Ethernet consists of point-to-point connections: Each communication node is directly connected to exactly one communication node.

If you want to link a communication node to several communication nodes, you connect this communication node to the port of an active network component (the switch). You can connect other communication nodes (including switches) to the other ports of the switch. The connection between a communication node and the switch remains a point-to-point connection.

A switch thus has the task of regenerating and distributing received signals. The switch "learns" the MAC addresses of a connected PROFINET device or additional switches. The switch only forwards those signals that are intended for the connected PROFINET device or switch.

A switch has a specific number of connections (ports). You connect at most one PROFINET device or additional switch to each port.

Switched S1 device

The "Switched S1 device" function of the CPU enables operation of standard IO devices on the S7-1500R/H redundant system.

PROFINET communication runs on an AR between the primary CPU and the standard IO device. When replacing the primary CPU, the standard IO device is briefly disconnected from the S7-1500R/H redundant system until the new primary CPU has set up an AR to the standard IO device. If a line topology in S7-1500H is interrupted, the backup CPU establishes an AR to the standard IO device after a short time.

Synchronization module

You use the synchronization modules to create the redundancy connections between the CPUs of the redundant S7-1500H system. You need two synchronization modules per CPU that you connect in pairs with fiber-optic cables.

System states

The system states of the S7-1500R/H redundant system result from the operating states of the primary and backup CPU. The term system state is used as a simplified expression that refers to the operating states that occur simultaneously on both CPUs. The S7-1500R/H redundant system has the system states STOP, STARTUP, RUN-Solo, SYNCUP and RUN-Redundant.

System IP address

In addition to the device IP addresses of the CPUs, the redundant system S7-1500R/H supports system IP addresses. You use the system IP addresses for communication with other devices (for example, HMI devices, CPUs, PG/PC). The devices always communicate over the system IP address with the primary CPU of the redundant system. This ensures that the communication partner can communicate with the new primary CPU (previously backup CPU) in the RUN-Solo system state after failure of the original primary CPU in redundant operation.

TIA Portal

Totally Integrated Automation Portal

The TIA Portal is the key to the full performance capability of Totally Integrated Automation. The software optimizes operating, machine and process sequences.

Time-delay interrupt

You will find further information in the glossary entry "Interrupt, time-delay".

Time-of-day interrupt

You will find further information in the glossary entry "Interrupt, time-of-day".

Timer

Timers are components of the system memory of the CPU. The operating system automatically updates the content of the "timer cells" asynchronously to the user program. STEP 7 instructions define the precise function of the timer cell (for example on-delay) and trigger its execution.

Update interrupt

You will find further information in the glossary entry "Interrupt, update".

User program

In SIMATIC, a distinction is made between user programs and the firmware of the CPU.

The user program contains all instructions, declarations and data that control a system or process. The user program is assigned to the redundant system. Structuring into smaller unit is supported.

Firmware: You will find further information in the glossary entry "Firmware of the CPU".

Warm restart

You will find further information in the glossary entry "Restart".

Index

2

24 V DC supply, 195

A

Access levels
  Assign parameters, 273
Access levels for the CPUs, 271
Access protection for the display, 275
Access protection with the user program, 275
Accessories, 418
Ambient conditions
  Climatic, 411
  Mechanical, 410
  Operating conditions, 410
Approvals, 399
  CE, 400
  cULus, 401
  FM, 402
  IEC 61010-2-201, 405
  IEC 61131-2, 405
Asynchronous instructions, 263
Automation levels, 45

B

Backup types of the CPU data, 341
Breakpoints, 392

C

Cable length
  up to 10 m, 211
  up to 40 km, 212
Calculation of the PROFIsafe monitoring time, 242
Causes and solutions, 319
CE approval, 400
Changes previous version of system manual, 28
Climatic ambient conditions, 411
Coding element, 204
  Power connector, 378
Commissioning, 349
  Check before power-on, 282
  First power-on, 287
  First power-on, requirements, 287
  Identification data, 347, 349
  Identification data - record structure, 349
  Procedure, 283
  Removing/plugging in a SIMATIC memory card, 284
Communication, 80
Communication relations in S7-1500R/H, 60
Configuration, 54, 198, 224
  Electrical, 200
  Of the redundant system S7-1500H, 37, 53
  Of the redundant system S7-1500H
  Of the redundant system S7-1500R, 35, 52
  Of the redundant system S7-1500R
  On grounded reference potential, 197
Configuration of S7-1500H and S2 devices in a combined topology, 116
Configuration of S7-1500H with R1 devices and backbone rings, 119
Configuration of S7-1500H with R1 devices and switches in a line topology, 112
Configuration of S7-1500H with R1 devices and Y-switch in line topology, 114
Configuration of S7-1500H with R1 devices and Y-switches with DNA redundancy in line topology, 115
Configuration of S7-1500H with R1 devices and Y-switches with DNA redundancy in the PROFINET rings, 108
Configuration of S7-1500H with R1 devices in the PROFINET ring, 101
Configuration of S7-1500R with switches and additional line topology, 96
Configuration versions of S7-1500R/H, 93
Configuring IO devices, 228
Configuring other configuration variants, 239
Configuring PROFINET rings with R1 devices, 233
Configuring the NTP server, 346
Connecting communication interfaces to S7-1500H, 210
Connecting communication interfaces to S7-1500R, 207
Connecting PROFINET ring
  To S7-1500H, 219, 222
  To S7-1500R, 207
Connecting redundancy connections (fiber-optic cables) to S7-1500H, 215
Connecting the supply voltage, 202
Connection plug
  4-pin, 58

Control, 392
Correct defect, 363
    Exchange load current supply, 374
    Replace coding element on mains connection plug, 378
    Replace redundancy connection for S7-1500H, 369
    Replacing IO device/Switch, 375
    Replacing PROFINET cable, 372
    Replacing PROFINET cables for S7-1500R, 368
    Replacing R/H-CPUs, 367
    Replacing redundant connections, 368
    Replacing redundant connections for S7-1500H, 371
    Replacing SIMATIC memory card, 373
    Replacing the synchronization module for S7-1500H, 370
CPU, 57
    Backup/restore contents, 341
    Reading out service data, 396
    Reset to factory settings, 385
CPU redundancy error, 248, 253
cULus approval, 401

D

Degree of protection IP20, 414
Device IP addresses, 80
    Assigning, 225
Diagnostics, 74
Difference between synchronous/asynchronous instructions, 264
Differences between S7-1500R and S7-1500H, 43
Dimension drawing
    Mounting rail, 415
Disable SYNCUP, 259
Display, 354
    Basics, 354
    Control keys, 359
    Languages, 362
    Menu, 357
    Menu icons, 358
    Password protection, 354
    Upload image to display, 361
Display of the IO device assignments in STEP 7, 241
Distribution boxes, 213
Downloading a project to the CPUs, 295
Downloading project data, 293

E

Electrical relationships, 200
Electromagnetic compatibility (EMC), 407
    Disturbances, 407
    Radio interference, 408
Electrostatic discharge, 407
Emergency address, 342
Emergency IP, 342
EMERGENCY-STOP devices, 194
Entering maintenance data, 349
Exchanging the front cover, 377

F

Factory settings, 385
Fail-safe automation systems, 54
Failure scenarios, 121, 143
FAQs
    Firmware update, 384
    Removing a SIMATIC memory card, 285
F-CPU, 69
Features of the S7-1500R/H redundant system, 51
Fiber-optic cable, 57
    Connection, 210
    Installation, 213
    Selection, 211
Firmware update, 380
    Using STEP 7, 382
    Via the SIMATIC memory card, 382
FM approval, 402
Force table, 394
Forcing, 392
F-systems, 54, 284
F-systems

G

Galvanic isolation, 200
Grounded extra-low-voltage, 197
Grounded infeed, 197
Grounding, 182
    Configuration on grounded reference potential, 197
    Overview of the CPU, 199

H

Hardware
    Requirements, 88
    Restrictions, 91
Hardware restrictions, 91
H-CPU
    Installing, 192
    Uninstalling, 192
HMI devices, 82

Connecting, 173
Use, 172
HMI devices
H-Sync forwarding, 61

I

I&M data
Read, 347
I/O redundancy error, 248, 255
Identification data
Record structure, 349
IEC 60204, 194
IEC 61010-2-201, 405
IEC 61131-2, 405
Infeed
grounded, 197
Installation
Basics, 176
DIN rail adapter, 183
Load current supply, 190
Mounting rail, 178, 181
R/H-CPU, 192
Installation position, 176
Installation rules, 178
Installing the standard rail adapter, 183
Instructions not supported, 250
Insulation, 413

K

Know-how protection, 276
Know-how protection for blocks
Changing, 278
Removing, 279
Setting up, 277

L

Languages
Display, 362
LED flashing test, 395
Lightning protection, 195
Line topology, 39
Line voltage, 195
Load current supply, 58
Connecting a CPU, 206
Installing, uninstalling, 190
Load power supply (PM), 83
Loss of redundancy, 331
Response of OB 72 and OB 86, 253
Loss of redundancy

M

MAC addresses, 80
Maintenance, 363
Firmware update, 380
Reading out service data, 396
Reset to factory settings, 385
Test functions, 390
Maximum configuration, 170
Media converter (electrical ⇔ optical), 419
Media redundancy, 61
Media redundancy (MRP)
Assigning MRP roles, 238
Memory reset
Automatic, 337
Basics, 336
Manual, 338, 339
Minimum clearances, 177
Mounting rail, 56, 177, 178
Attaching the protective conductor, 182
Dimension drawing, 415
Drill holes, 180
Fastening, 180
Installation, 181
Length, 180
MRP interconnection, 66

N

NTP procedure, 345

O

OB 70, 248, 255
OB 72, 248, 253
OB 86, 253
OBs
Event source, 257
Priorities and runtime behavior, 258
Open Source Software, 20
Use, 20
Opening know-how protected blocks, 278
Operating mode
Changing, 334
Configuring startup behavior, 306
Displaying, 334
RUN, 308
RUN-Redundant, 309
Run-Syncup, 308

STARTUP, 304
STOP, 307
SYNCUP, 307
Operating principle of the S7-1500H redundant system, 37
Operating principle of the S7-1500R redundant system, 35
Operating state transitions, 321
Overall configuration, 199
Overview
Components of an S7-1500R/H, 56
Grounding the CPU, 199
System and operating states, 303
Overview of the CPU technical specifications, 59

P

Pairing, 288
Password provider, 276
Patch fields, 213
PE connection element, 56
PELV
Grounded extra-low-voltage, 197
Permissible cable temperature, 202
PID control, 77
PID controller, 77
Plant components, 45
PLC tag table, 394
Pollution degree, 413
Power supply, 83
Process image
Inputs and outputs, 244
Process image partition
Update in the user program, 246
PROFINET cable, 57
Program execution, 249
Program status, 391
Programming style guide, 249
Project languages, 343
Project tree, 243
PRONETA, 85
Protection, 271, 277, 280
Access levels, 271
Against electrical shock, 195
Behavior of a password-protected CPU, 274
Know-how protection, 277
Mechanical locking, 280
Protection against external electrical influences, 196
Protection class, 413
Protection functions, 72

R

R/H-CPU
Accessories, 418
Configuration versions, 93
Display, 354
Hardware configuration, 170
Memory reset, 336
Reference potential, 198
Replacing, 367
R1 device, 255
R1 Devices, 39
Rack failure, 253
Radio interference, 406, 408
rated voltage, 414
R-CPU
Installing, 192
Uninstalling, 192
Redundancy
Failure, 121
Redundancy IDs
Assigning, 291
Reading, 292
Replacing, 292
Redundant system startup, 304
Reference potential of the controller, 198
Removing/plugging in a SIMATIC memory card
CPU response after a SIMATIC memory card is removed or inserted, 286
Replace display (R-CPUs as of article number 6ES7513-1RM03-0AB0/6ES7515-2RN03-0AB0), 376
Replacement of components, 363
Coding element on power plug, 378
IO device/switch, 375
Load current supply, 374
PROFINET cable, 372
PROFINET cables for S7-1500R, 368
R/H-CPU, 367
Redundancy connection for S7-1500H, 369
Redundancy connections, 368
Redundancy connections at S7-1500H, 371
SIMATIC memory card, 373
Synchronization module for S7-1500H, 370
Replacing the interface module of an R1 device, 375
Requirements
Hardware, 88
Software, 90
Restrictions
Software, 91
Ring topologies, 37

S

S2 device, 255
S2 Devices, 40
S7 routing, 82
S7-1500 hardware configuration
    Slots, 170, 171
S7-1500H configuration with additional devices, 120
S7-1500H configuration with IO devices in the PROFINET ring, 95
S7-1500H configuration with R1 devices and switches with MRP interconnection in the PROFINET ring, 105
S7-1500H configuration with R1 devices and Y-switch in the PROFINET ring, 107
S7-1500H configuration with R1 devices in a combined topology, 118
S7-1500H configuration with R1 devices in a line topology, 110
S7-1500H configuration with S2 devices and backbone ring, 117
S7-1500H configuration with S2 devices and switch in a line topology, 99
S7-1500H configuration with switches and additional line topology, 97
S7-1500H without additional devices, 41
S7-1500R configuration with IO devices in the PROFINET ring, 94
S7-1500R/H
    Overview of components, 56
S7-1500R/H communication options, 82
S7-1500R/H components, 56
Safe electrical isolation, 197
Safety Administration Editor, 284
Safety requirements, 54
Safety rules, 400
Scalability, 46
SELV
    Safe electrical isolation, 197
Service data, 396
    Read via SIMATIC memory card, 397
    Reading, 396
    Save via STEP 7, 396
Shipping conditions, 409
Short-circuit and overload protection, 198
SIMATIC memory cards, 419
SIMATIC Safety Integrated, 69
SINETPLAN, 85
SITOP power supply, 83
Software, 84
    Requirements, 90
    Restrictions, 91
Spare parts, 418
Specific application, 194
Specific blocks, 247
Standard IO device, 255
Standard rail adapter, 56
Standards, 399
Start events, 252
Storage conditions, 409
Supported instructions with restrictions, 250
Switched S1 device, 65
Synchronization modules, 57, 210
    Plug and pull, 217
    Uninstalling, 218
SYNCUP
    OB behavior, 255
SYNCUP system state, 309, 319
    Cancel, 317
    Preparations, 311
    Requirements, 309
    Sequence of events, 311
System diagnostics, 74
System differences between S7-1500R and S7-1500H, 43
System IP address, 80
    Assigning, 226
System IP address
System redundancy R1, 64
System redundancy S2, 63
System state
    Changing, 335
    Displaying, 335
System state transitions, 321

T

Technical specifications
    Climatic ambient conditions, 411
    CPU S7-1500R/H, 59
    Electromagnetic compatibility (EMC), 407
    Shipping and storage conditions, 409
    Standards and Approvals, 399
Test functions, 390
Test voltage, 413
TIA Portal, 84
Time synchronization, 345
Tooltips, 360
Trace, 75
Trace function, 395

U

Uninstalling
    Load current supply, 191

R/H-CPU, 192
Use, 31
From HMI devices, 172
In hazardous area Zone 2, 414
in industrial environments, 406
in mixed areas, 406
in residential areas, 406
User program, 247
Download in the RUN-Redundant system state, 299
Download in the RUN-Solo system state, 298
Using PROFINET devices, 171

W

Watch tables, 393
Wiring, 194
General rules, 194
HMI devices, 173
Load current supply, 204
Supply voltage at the R/H-CPUs, 202
Without tools, 203
Wiring rules, 201

SIEMENS

Getting Started

SIMATIC

S7-1500

S7-1500R/H redundant system

Edition 10/2018

https://support.industry.siemens.com

SIEMENS

Introduction to the example 1

Configuration 2

Programming 3

Commissioning 4

Additional information 5

SIMATIC

S7-1500
S7-1500R/H redundant system

Getting Started

10/2018

A5E44910930-AA

Legal information

Warning notice system

This manual contains notices you have to observe in order to ensure your personal safety, as well as to prevent damage to property. The notices referring to your personal safety are highlighted in the manual by a safety alert symbol, notices referring only to property damage have no safety alert symbol. These notices shown below are graded according to the degree of danger.

⚠ DANGER

indicates that death or severe personal injury **will** result if proper precautions are not taken.

⚠ WARNING

indicates that death or severe personal injury **may** result if proper precautions are not taken.

⚠ CAUTION

indicates that minor personal injury can result if proper precautions are not taken.

NOTICE

indicates that property damage can result if proper precautions are not taken.

If more than one degree of danger is present, the warning notice representing the highest degree of danger will be used. A notice warning of injury to persons with a safety alert symbol may also include a warning relating to property damage.

Qualified Personnel

The product/system described in this documentation may be operated only by **personnel qualified** for the specific task in accordance with the relevant documentation, in particular its warning notices and safety instructions. Qualified personnel are those who, based on their training and experience, are capable of identifying risks and avoiding potential hazards when working with these products/systems.

Proper use of Siemens products

Note the following:

⚠ WARNING

Siemens products may only be used for the applications described in the catalog and in the relevant technical documentation. If products and components from other manufacturers are used, these must be recommended or approved by Siemens. Proper transport, storage, installation, assembly, commissioning, operation and maintenance are required to ensure that the products operate safely and without any problems. The permissible ambient conditions must be complied with. The information in the relevant documentation must be observed.

Trademarks

All names identified by ® are registered trademarks of Siemens AG. The remaining trademarks in this publication may be trademarks whose use by third parties for their own purposes could violate the rights of the owner.

Disclaimer of Liability

We have reviewed the contents of this publication to ensure consistency with the hardware and software described. Since variance cannot be precluded entirely, we cannot guarantee full consistency. However, the information in this publication is reviewed regularly and any necessary corrections are included in subsequent editions.

Siemens AG
Division Digital Factory
Postfach 48 48
90026 NÜRNBERG
GERMANY

A5E44910930-AA
℗ 09/2018 Subject to change

Copyright © Siemens AG 2018.
All rights reserved

Table of contents

1 Introduction to the example 4
1.1 Security information 5
1.2 Structure and task of the example 6
1.3 Procedure 11
1.4 Requirements 12
1.5 Wiring diagram for a tunnel section 13
2 Configuration 19
2.1 Configuring the assembly 19
2.2 Configuring H CPUs 22
2.3 Configuring ET 200SP 25
2.4 Configuring HMI devices 30
3 Programming 34
4 Commissioning 48
5 Additional information 51

Introduction to the example 1

Redundant automation systems are used in practice to achieve greater availability. In redundantly operated systems, failure or malfunction of individual automation components must not impede the operation of the plant.

S7-1500R/H redundant system

For the S7-1500R/H redundant system, the CPUs are duplicated, in other words redundant. The two CPUs process the same project data and the same user program in parallel. The two CPUs are synchronized over redundancy connections. If one CPU fails, the other CPU maintains control of the process.

Basic knowledge required

The Getting Started guides you through the configuration and programming of an S7-1500H redundant system using a concrete example. The following knowledge is required in order to understand the Getting Started:

- General knowledge of automation technology
- Knowledge of requirements for high availability of automation systems
- Knowledge of the engineering system STEP 7 V15.1

WARNING

Personal injury and damage to property may occur.

The S7-1500 as a component of plants or systems is governed by specific standards and regulations, based on the relevant field of application. Please observe the applicable safety and accident prevention regulations such as IEC 60204-1 (general machine safety requirements).

The example in this Getting Started serves as an introduction to the configuration and programming of an S7-1500H redundant system. It cannot always and in every case be transferred to effective live operations. Before you do this, you are urgently advised to consult the current version of the system manual "SIMATIC S7-1500R/H redundant system" and the device manuals of the modules used. The warnings and other information there must be observed, even if they are not repeated in this Getting Started.

Failure to observe these regulations can result in serious injuries and damages to machinery and facilities.

1.1 Security information

Siemens provides products and solutions with industrial security functions that support the secure operation of plants, systems, machines and networks.

In order to protect plants, systems, machines and networks against cyber threats, it is necessary to implement – and continuously maintain – a holistic, state-of-the-art industrial security concept. Siemens' products and solutions constitute one element of such a concept.

Customers are responsible for preventing unauthorized access to their plants, systems, machines and networks. Such systems, machines and components should only be connected to an enterprise network or the internet if and to the extent such a connection is necessary and only when appropriate security measures (e.g. firewalls and/or network segmentation) are in place.

For additional information on industrial security measures that may be implemented, please visit (https://www.siemens.com/industrialsecurity).

Siemens' products and solutions undergo continuous development to make them more secure. Siemens strongly recommends that product updates are applied as soon as they are available and that the latest product versions are used. Use of product versions that are no longer supported, and failure to apply the latest updates may increase customers' exposure to cyber threats.

To stay informed about product updates, subscribe to the Siemens Industrial Security RSS Feed under (https://www.siemens.com/industrialsecurity).

1.2 Structure and task of the example

Automation task light and fan control in a tunnel

The continuing increase in traffic volumes coupled with growing safety requirements demand state-of-the-art tunnel systems. At the same time, equipment requirements for these constructions are rising, especially when it comes to maximum safety and availability.

The example below comprises three subtasks:

- Control of the safety ventilation as a function of the air pollution level in the tunnel
- Control of the traffic lights and the barriers as a function of the air pollution level in the tunnel
- Control of the lighting in the tunnel as a function of the illuminance of the outdoor light

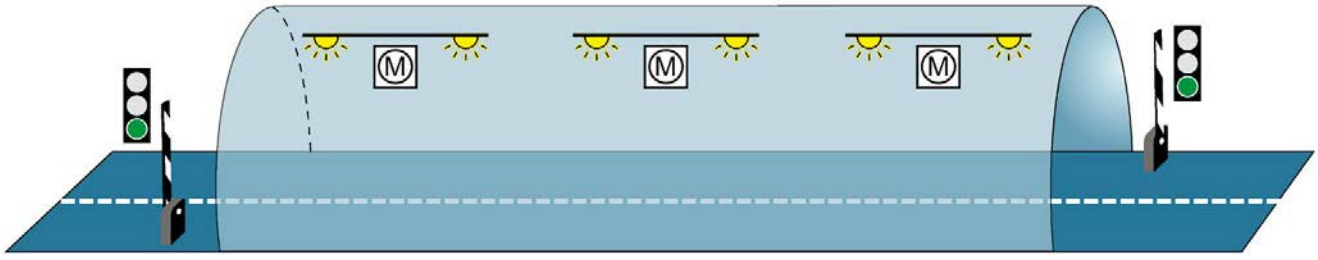

Figure 1-1 Example Light and fan control tunnel

Control of the safety ventilation as a function of the air pollution level in the tunnel

Fans are used in the tunnel to extract harmful exhaust gases and supply fresh air.

Uninterrupted operation of the ventilation system is required to keep the concentration of pollutants below a set level. Constant availability must be ensured for the event that individual automation components fail, for example because of a fire in the tunnel. The S7-1500H redundant system with two redundant H-CPUs is used to ensure fan availability. Three fans ventilate the tunnel.

Control of the traffic lights and the barriers as a function of the air pollution level in the tunnel

The tunnel entries are controlled via two traffic lights. The traffic light control also requires higher availability for safety reasons.

If the pollutant concentration exceeds a maximum limit for more than 2 minutes in a tunnel section, then the tunnel is blocked.

Control of the lighting in the tunnel as a function of the illuminance of the outdoor light

The abrupt transition between light and dark at the entry to the tunnel is compensated for by tunnel lighting in the various tunnel sections. Two light sensors measure the light intensity outside the tunnel. The light intensity of the entry lights in the tunnel is controlled accordingly.

The interior lights in the tunnel are controlled by the prevailing daytime / nighttime.

Technology diagram

The technology diagram below shows the structure of the automation solution.

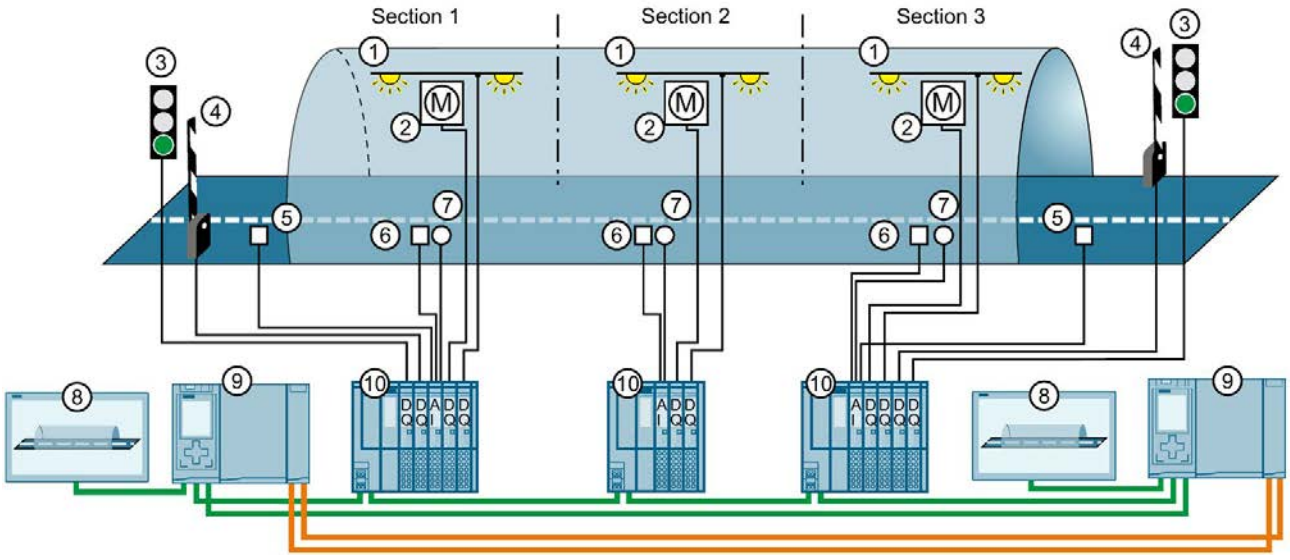

①	Tunnel lighting
②	Fan
③	Traffic lights
④	Barriers
⑤	Outdoor light sensors
⑥	Turbidity sensors
⑦	Air-quality sensors
⑧	HMI devices
⑨	H-CPUs
⑩	IO devices for tunnel sections 1 to 3

Figure 1-2 Technology diagram

Automation components of the example

The configuration consists of:

2 S7-1500 H-CPUs

- When a CPU fails in redundant operation, the other CPU maintains control over the tunnel operation.

3 ET 200SP as IO devices in the PROFINET ring

An ET 200SP (IO device) distributed I/O system is found in every tunnel section (1 to 3). Sensors and actuators are connected to each IO device for the following tasks:

- Measurement of the pollutant concentration and as a function thereof:
  - Control of the fan speed and air flow
  - Control of the traffic lights and barriers
- Measurement of the light outside the tunnel:
  - Control of the entry lights
- Control of the interior lights in the tunnel, depending on the day / night time.

2 Comfort Panels

The Comfort Panels are used by operators as a control center for monitoring tunnel operation.

Principle of operation

Controlling the speed of the fans and controlling the traffic lights and barriers

Every fan:

- has two speeds (stages), which are switched on or off depending on the measured pollutant concentration.
- has 2 directions of rotation. Depending on whether pollution is measured, the fan must blow or suck.

The H-CPU measures the pollutant concentrations in the tunnel via analog input modules and air-quality sensors.

If the pollutant concentration exceeds the maximum limit, the H-CPU responds in ET 200SP via digital output modules as follows:

- It increases the speed of the fan motors
- It switches the traffic light system to red after two minutes
- It closes the barriers after two minutes

If the pollutant concentration falls below an average limit, the H-CPU responds in ET 200SP via digital output modules as follows:

- It switches the ventilation motors to stop
- It switches the traffic lights to green
- It opens the barriers

Controlling the lighting in the tunnel

The H-CPU measures the light intensity outside and inside the tunnel using analog input modules. Depending on the outdoor light, digital output modules adjust the brightness of the entry lights in the tunnel to the optimum vision conditions. The digital output modules also control the interior lights in the tunnel, depending on the day / night time.

The user program in the CPU specifies limits and controls the input and output modules of the ET 200SP.

The Comfort Panels visualize the S7-1500H redundant system in an HMI screen. If required, the operator can switch to manual operation via the HMI screen and change limit values.

S7-1500H versus S7-1500R

As an alternative to S7-1500H, you can use an S7-1500R redundant system for the solution to the automation task. In this example, the S7-1500H redundant system is used as it offers the following advantages for tunnel automation:

- much higher performance than S7-1500R with:
  - separate redundancy connections over fiber-optic cable
  - high computing power
  - a higher number of PROFINET devices can be used
- distance between the two H CPUs up to 10 km

Advantages and benefits of the solution

- High availability of the system: If an H-CPU fails or is being maintained, the lighting and fan control continues to function. The tunnel does not need to be blocked.
- Reliable monitoring and control of the tunnel facilities over large distances, up to 10 km between the two H-CPUs
- Monitoring of the system and targeted information of the operating engineers in real time
- Signals are recorded and output directly in the ET 200SP distributed I/O systems in the tunnel. There are no long cable runs.

1.3 Procedure

Tasks

Perform the following tasks for implementation of the example:

Table 1- 1 Procedure for tunnel automation

Step	Procedure	Further information
1	Configure hardware in STEP 7: Configure the assembly with 2 H-CPUs, 3 ET 200SP stations with their I/O modules and 2 Comfort Panels.	Section Configuring (Page 19)
2	Creating a user program in STEP 7: • Program the user program in an organization block. • You create an HMI screen.	Section Programming (Page 34)
3	Installing modules and wiring the assembly: • Install all modules. • Wire the load current supply, the modules in the PROFINET ring, the redundancy connections and the Comfort Panels.	Redundant System S7-1500R/H (https://support.industry.siemens.com/cs/ww/en/view/109754833) system manual ET 200SP Distributed I/O System (https://support.industry.siemens.com/cs/ww/en/view/58649293) system manual Chapter Wiring diagram for a tunnel section (Page 13)
4	Commissioning the example: • Insert the SIMATIC memory cards in the H-CPUs. • Switch on the load current supply and the CPUs. • Assign redundancy IDs to the CPUs in the configuration on commissioning. • Load the project data (hardware configuration and user program) to the CPUs. • Check the LEDs and evaluate the information on the CPU displays. • Test how the example works.	Chapter Commissioning (Page 48)

1.4 Requirements

Requirements for the Example

The following hardware and software is available for processing the example:

Table 1- 2 Hardware/software requirements

Hardware/software	Modules//Versions
2 H-CPUs with synchronization modules and SIMATIC Memory Cards	• 2 identical 1517H-3 PN CPUs with identical article numbers, function versions and firmware version • 4 synchronization modules for cables up to 10 km in length (6ES7960-1FB00-0AA5) • 2 SIMATIC Memory Cards e.g. with 256 Mbyte capacity (6ES7954-8LL02-0AA0)
3 ET 200SP distributed I/O systems	**2 ET 200SP for tunnel sections 1 and 3 each consisting of:** • 1 interface module IM 155-6 PN HF (6ES7155-6AU01-0CN0), FW version V4.2 or later (with system redundancy S2) • 4 digital output modules: – 2 DQ 4x24VDC/2A ST each with a light-colored BaseUnit, BU type A0: BU15-P16+A0+2D – 1 DQ 4x24VDC/2A ST with a dark-colored BaseUnit, BU type A0: BU15-P16+A0+2B – 1 DQ 4x24..230VAC/2A HF with a light-colored BaseUnit, BU type U0: BU20-P16+A0+2D • 1 analog input module: – AI 4xU/I 2-wire ST with a dark-colored BaseUnit, BU type A0: BU15-P16+A0+2B • 1 server module **1 ET 200SP for tunnel section 2 consisting of:** • 1 interface module IM 155-6 PN HF (6ES7155-6AU01-0CN0), FW version V4.2 or later (with system redundancy S2) • 2 digital output modules: – 1 DQ 4x24VDC/2A ST with a light-colored BaseUnit, BU type A0: BU15-P16+A0+2D – 1 DQ 4x24..230VAC/2A HF with a light-colored BaseUnit, BU type U0: BU20-P16+A0+2D • 1 analog input module: – AI 4xU/I 2-wire ST with a dark-colored BaseUnit, BU type A0: BU15-P16+A0+2B • 1 server module
2 HMI devices	TP1900 Comfort
2 load current supplies for S7-1500R/H	PM 190 W 120/230 V AC
3 load current supplies for ET 200SP	Load current supplies with 24 V DC output voltage (with safe electrical isolation)
Accessories	1 mounting rail, 2 fiber-optic cables, PROFINET cables
PC/PG with Engineering-System	PG/PC with Ethernet interface and the following correctly installed software package: • SIMATIC STEP 7 Professional, V15.1 or later
Switch for the connection of the PG/PC	SCALANCE X-204IRT

Additional requirement

The PG/PC is connected to a switch via the PROFINET interface. The switch is a device in the PROFINET ring during commissioning.

Installing modules and wiring the assembly

You can set up and wire the hardware before or after configuration and programming of the user program.

You can find additional information on installation and wiring of an ET 200SP in the ET 200SP distributed I/O system (https://support.industry.siemens.com/cs/ww/en/view/58649293) system manual .

The wiring diagram for an ET 200SP for a tunnel section can be found in the section Wiring diagram for a tunnel section (Page 13).

The procedure for installation and wiring of an S7-1500R/H redundant system is available in the S7-1500R/H redundant system (https://support.industry.siemens.com/cs/ww/en/view/109754833) system manual.

Conventions

Steps and settings which are specific for configuration and programming of an S7-1500H redundant system will be dealt with in detail in the following sections. Procedures which you are already familiar with from configuring and programming a SIMATIC S7-1500 will only be briefly outlined.

1.5 Wiring diagram for a tunnel section

Introduction

The figures below show the wiring of the I/O modules of an ET 200SP distributed I/O system for tunnel section 1 or 3.

When wiring the tunnel section 2, there is no wiring of the digital output modules for the traffic lights control and barrier control nor of the outdoor light sensor on the analog input module.

Connecting the supply voltage, PROFINET cables and grounding

The following figure shows the wiring of the supply voltage, the PROFINET cables and the grounding on the ET 200SP.

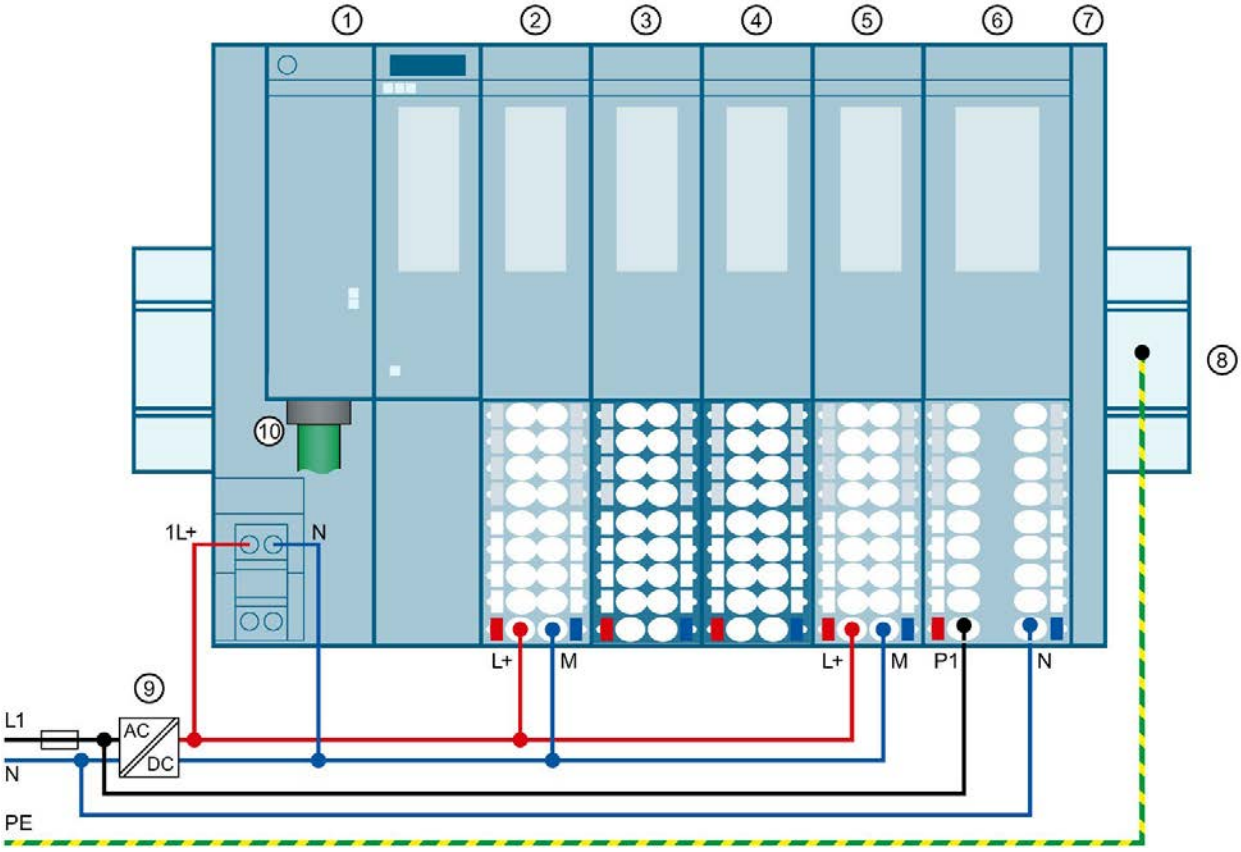

① Interface module IM 155-6 PN HF (6ES7155-6AU01-0CN0 firmware version V4.2 and later)

② Traffic light control: DQ 4x24VDC/2A ST digital output module with a light-colored BaseUnit BU15-P16+A0+2D (BU type A0)

③ Barrier control: DQ 4x24VDC/2A ST digital output module with a dark-colored BaseUnit BU15-P16+A0+2B (BU type A0)

④ Measuring the light intensity and air pollution level: 4xU/I 2-wire ST analog input module with a dark-colored BaseUnit BU15-P16+A0+2B (BU type A0)

⑤ Fan control system: DQ 4x24VDC/2A ST digital output module with a light-colored BaseUnit BU15-P16+A0+2D (BU type A0)

⑥ Light control system: DQ 4x24..230VAC/2A HF digital output module with a light-colored BaseUnit BU20-P16+A0+2D (BU type U0)

⑦ Server module

⑧ Mounting rail grounded at PE

⑨ Load current supply with 24 V DC output voltage (with safe electrical isolation)

⑩ PROFINET cables for the PROFINET ring

Figure 1-3 Wiring diagram

Connecting traffic light control

The following figure shows the wiring of the traffic lights on the DQ 4x24VDC/2A ST digital output module ②.

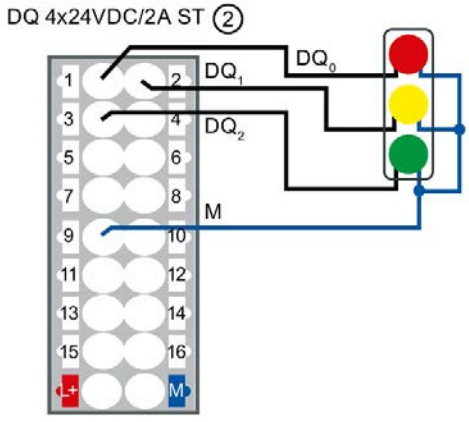

Figure 1-4 Wiring of the traffic lights

Connecting barrier control

The following figure shows the wiring of the barrier control on the DQ 4x24VDC/2A ST digital output module ③.
The barrier is opened and closed via a three-phase motor. The direction of rotation of the three-phase motor is controlled via a reversing contactor:

- Open barrier → Contactor K1 actuated
- Close barrier → Contactor K2 actuated

If the barriers have reached their respective end position, they automatically switch off via limit switches.

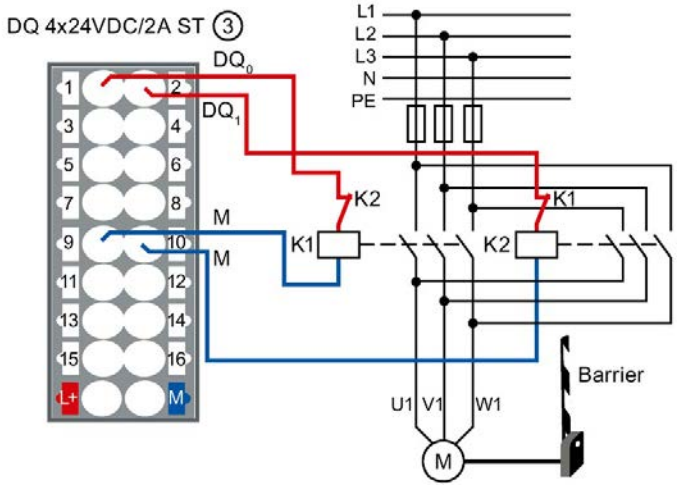

Figure 1-5 Wiring of the barrier control

Connecting sensors for light intensity and air pollution level

The following figure shows the wiring of the sensors for measuring the light intensity and air pollution level on the AI 4xU/I 2-wire ST analog input module ④.

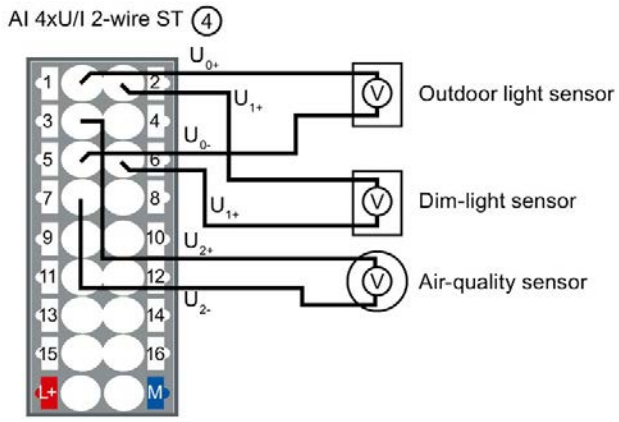

Figure 1-6 Wiring of sensors for light intensity and air pollution level

Connect light control function

The following figure shows the wiring of the fan control on the DQ 4x24VDC/2A ST digital output module ⑤.
The direction of rotation of the fan (right/left) is controlled via a reversing contactor:

- Fan rotates clockwise → Contactor K1 actuated
- Fan rotates counterclockwise → Contactor K2 actuated

The speed (high/low) of the fan is controlled via a Dahlander circuit:

- Fan low speed → Contactor K5 actuated
- Fan high speed → Contactors K3 and K4 actuated

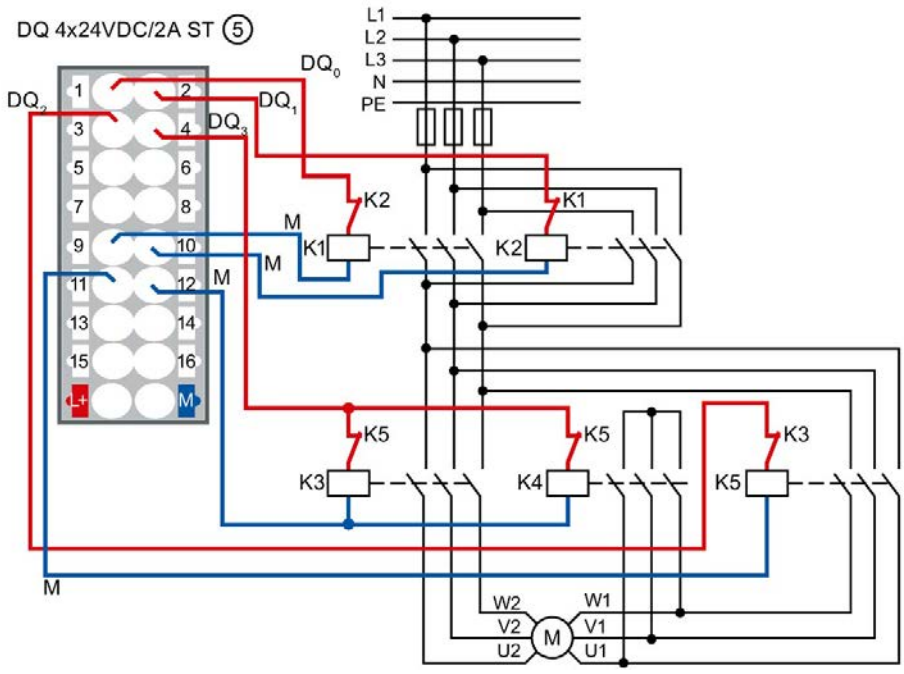

Figure 1-7 Wiring of fan control

Connect light control function

The following figure shows the wiring of the light control on the DQ 4x24..230VAC/2A HF digital output module ⑥.
The lamps are dimmed via the Phase angle control - Phase angle proportional function of the digital output mode:

- L1 → Entry light
- L2 → Interior light

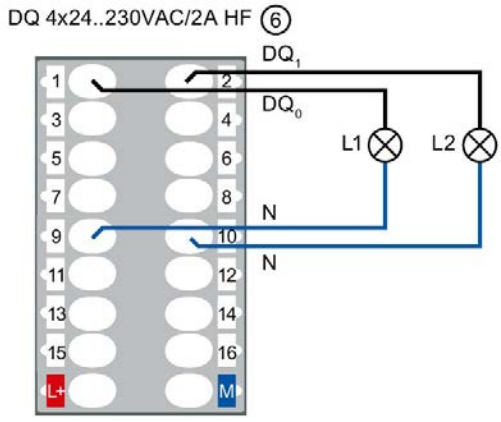

Figure 1-8 Wiring of the traffic lights

Configuration 2

2.1 Configuring the assembly

Introduction

Create a new project and add the CPU 1517H-3 PN and the 3 ET 200SP distributed I/O systems. Network the assembly to a PROFINET ring.

Add 2 HMI devices TP1900 Comfort to the assembly.

You do not configure the PM 190 W 120/230 V AC load current supplies.

Requirement

You have set the IP address of the PG/PC, 192.168.0.50 in the example.

Creating a project and assigning hardware

1. Create a new project in STEP 7. Give the project the name "S7-1500H_GS".

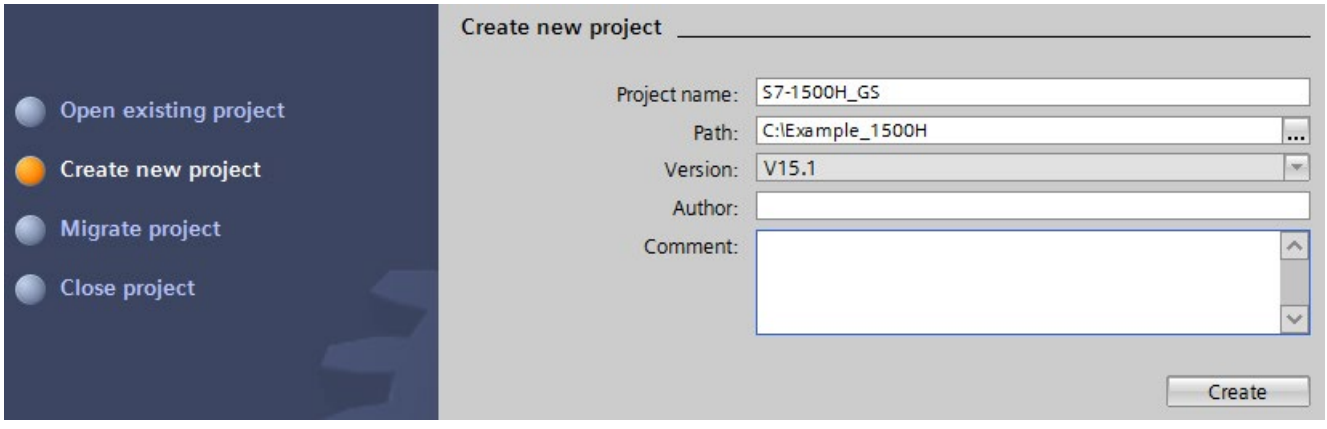

Figure 2-1 Creating a new project

2. Select "Configure a device" and then "Configure networks".

   The network view opens.

3. Select CPU 1517H-3 PN from the hardware catalog in the network view.

4. Drag and drop the CPU to the task window in the network view.

   Results:

   – STEP 7 automatically creates both 1517H-3 PN CPUs for the redundant system.
   – STEP 7 automatically assigns the MRP role "Manager (auto)" to the PROFINET interfaces X1 of both CPUs.
   – STEP 7 displays both CPUs in the network view graphically.

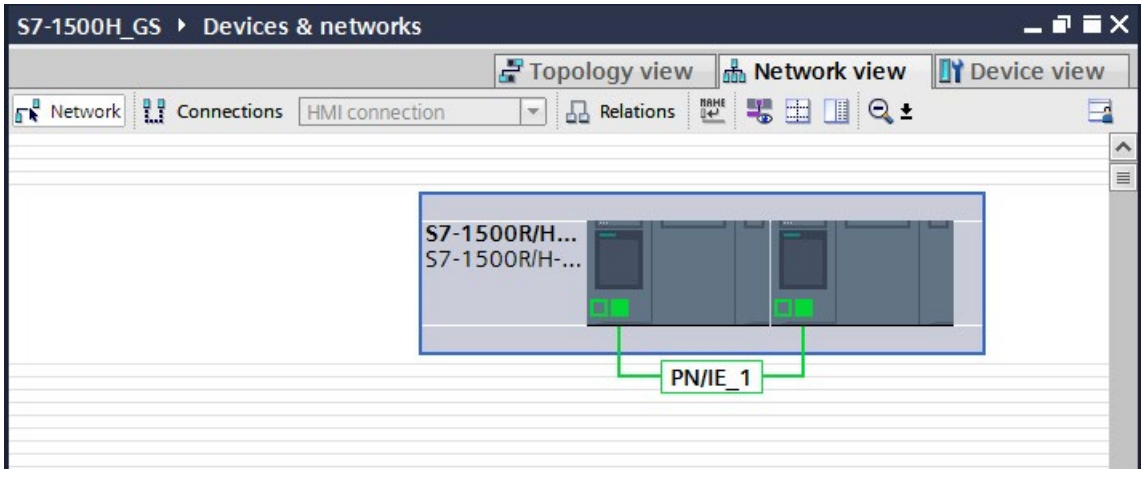

Figure 2-2 CPUs in the network view

5. Select an ET 200SP interface module IM 155-6 PN HF (article number 6ES7155-6AU01-0CN0) from the hardware catalog.
6. Drag and drop the interface module to the task window in the network view.
7. Drag and drop 2 further IM 155-6 PN HF interface modules to the task window in the network view.
8. Select a SIMATIC Comfort Panel TP1900 Comfort from the hardware catalog as an HMI device.
   Recommendation: Configure the HMI devices with the HMI Device Wizard (Page 30).
9. Drag and drop the TP1900 Comfort to the task window in the network view.
10. Drag and drop a further TP1900 Comfort to the task window in the network view.

Results: The project has been created. The hardware components have been inserted. IP addresses for the PROFINET interfaces of the devices have been automatically assigned.

Assign ET 200SP with system redundancy S2

To assign the ET 200SP distributed I/O systems to S7-1500H on a system-redundant basis, connect every IM 155-6 PN HF interface module to every CPU.

To do so, proceed as follows:

1. Drag-and-drop a line between the PROFINET interface of IM 155-6 PN HF and PROFINET interface X1 of the left-hand CPU.
2. Drag-and-drop a line between the PROFINET interface of IM 155-6 PN HF and PROFINET interface X1 of the right-hand CPU.
3. Assign the two other IM 155-6 PN HF devices to the two CPUs in exactly the same way.

Result: The distributed I/O system ET 200SP are connected to S7-1500H on a system-redundant basis.

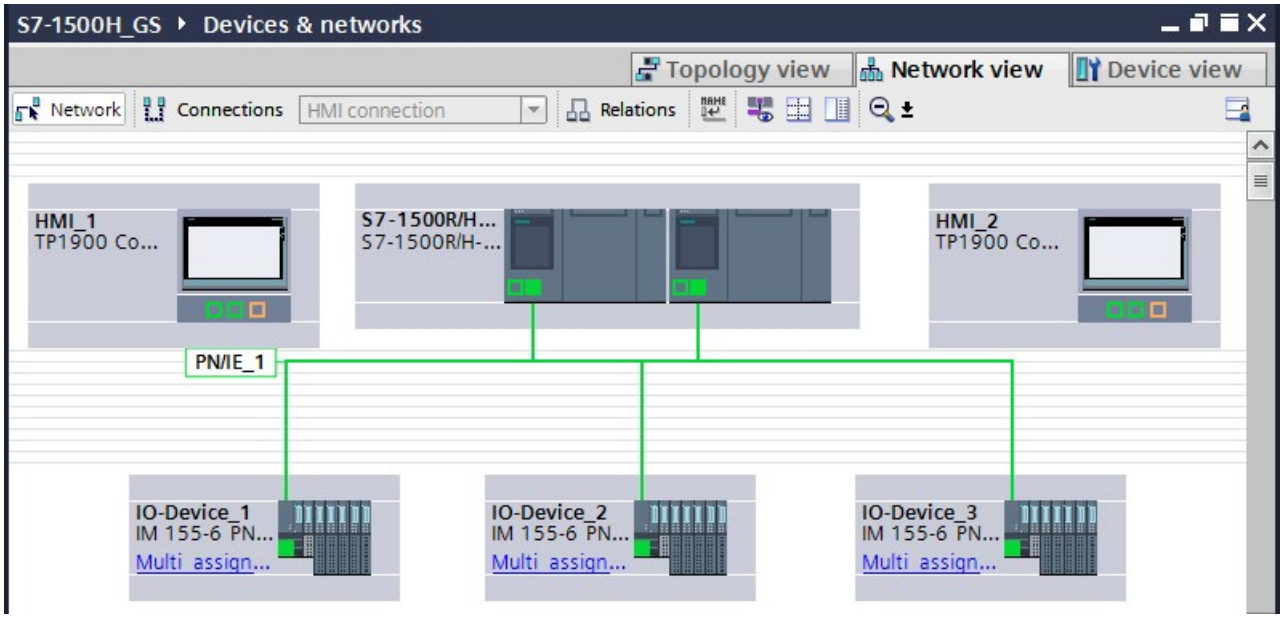

Figure 2-3 ET 200SP assigned to S7-1500H on a system-redundant basis

2.2 Configuring H CPUs

Introduction

You create two redundancy connections between the H-CPUs via fiber-optic cables using a total of four synchronization modules (two in each H-CPU). You replace the synchronization modules (for cables up to 10 km in length) in STEP 7.

STEP 7 automatically assigns an IP address to each PROFINET interface of a CPU. You can also assign the IP addresses manually. For PROFINET interface X1 of the CPUs, the IP addresses must be located in the same subnet. In the example you accept the preset IP addresses.

STEP 7 assigns default values for the minimum and maximum cycle times. Select the minimum scan cycle time so that the cyclic program does not have to be executed more frequently than your process requires.

Assigning synchronization modules to the H-CPUs

In STEP 7 synchronization modules for 10 m length are assigned to the H-CPUs (default setting).

For the tunnel application, assign synchronization modules for cables up to 10 km in length (6ES7960-1FB00-0AA5) to the H-CPUs as follows:

1. Change to the device view of an H-CPU.
2. From the hardware catalog, drag and drop the synchronization module with the article number 6ES7960-1FB00-0AA5 to the interface for a synchronization module of the H-CPU.
3. The "Replace device- Synchronization module" dialog opens. Confirm the replacement with "OK".

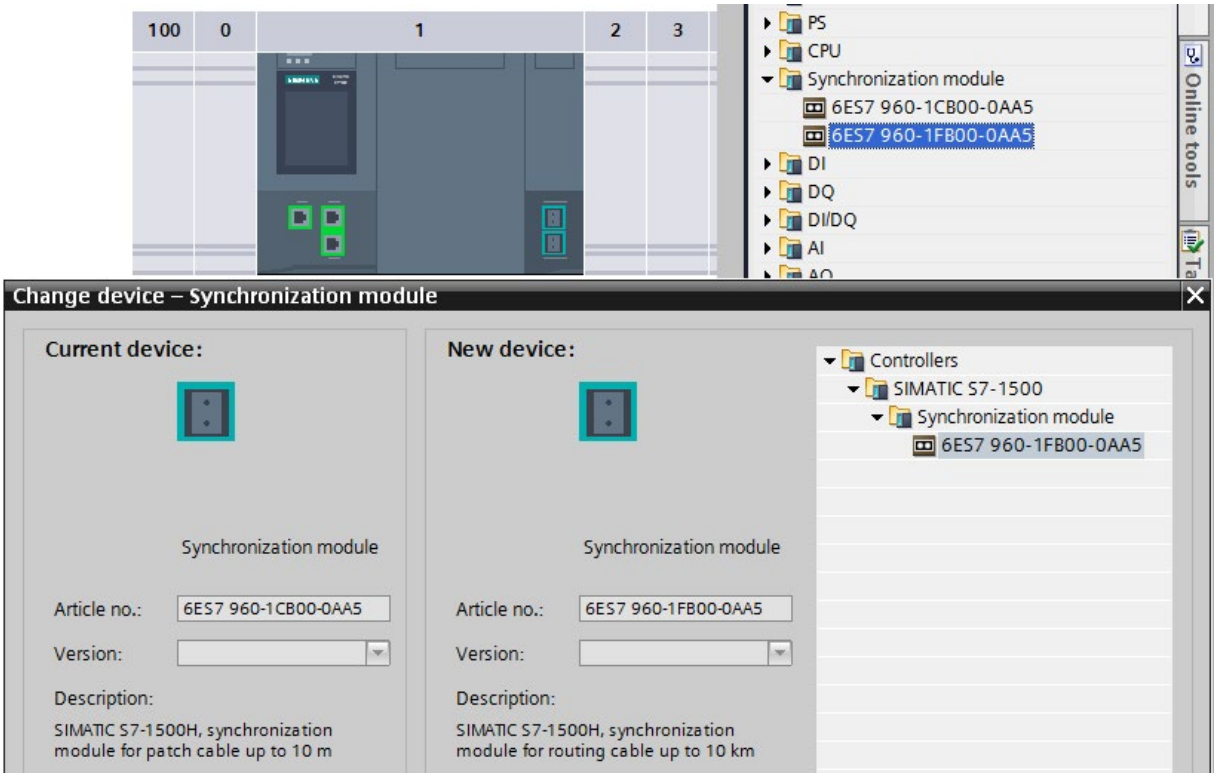

Figure 2-4 Assigning a synchronization module to the H-CPU

Result: The four synchronization modules for cables up to 10 km in length have been assigned to the H-CPUs of the redundant system.

Setting the cycle monitoring time

The default values are displayed in the "Cycle" area of the CPU properties.

1. Set a maximum cycle time of 6000 ms and a minimum cycle time of 10 ms for the example.
2. Adopt the presets for the other parameters.

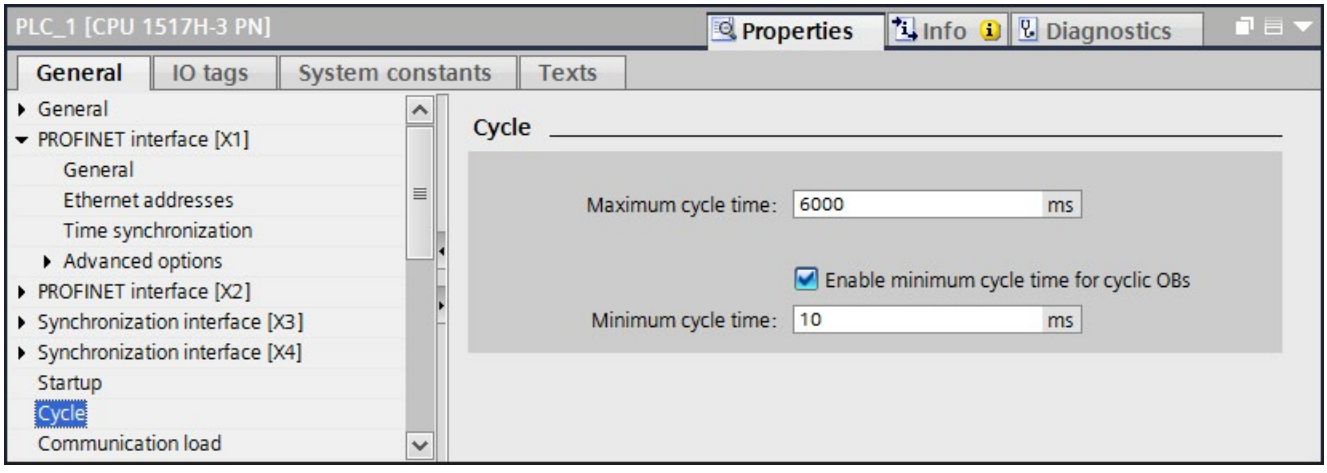

Figure 2-5 Setting the cycle monitoring time

Result: When you change the parameters described above for a CPU, the parameters are automatically adopted in STEP 7 for the other CPU of the redundant system.

2.3 Configuring ET 200SP

Introduction

In the S7-1500H redundant system the devices communicate in a PROFINET ring via MRP.

Define the media redundancy role of the devices.

Assign the I/O modules for the various automation tasks in the three tunnel sections to the three ET 200SP distributed I/O systems.

Set the watchdog time for each ET 200SP. If you set a higher watchdog time, then a failure of the IO device on interruption of the PROFINET ring can be avoided.

Defining MRP role for ET 200SP in the PROFINET ring

Proceed as follows to define the media redundancy role for the ET 200SP distributed I/O systems as devices in the ring:

1. In the network view of STEP 7, select PROFINET interface X1 of one of the two CPUs.
2. In the Inspector window, navigate to "Properties" > "General" > "Advanced options" > "Media redundancy".

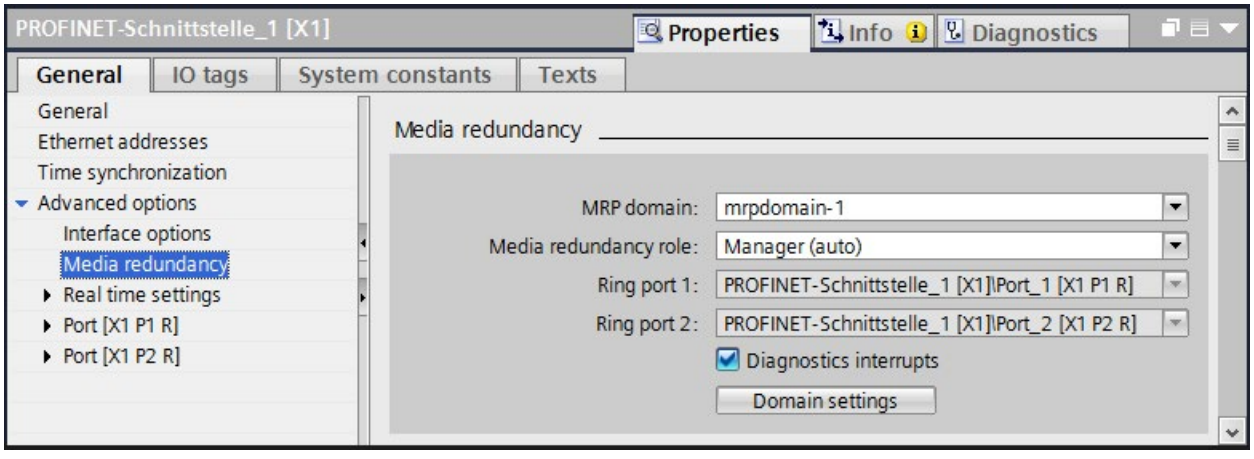

Figure 2-6 Media redundancy domain settings

3. Click the "Domain settings" button.

4. In the Inspector window, STEP 7 displays the properties of the MRP domain in which PROFINET interface X1 of the CPU is located. The CPU has the role "Manager (auto)" in a redundant system.
5. In the "MRP role" column of the "Devices" table, assign the MRP role "Client" to all other devices.

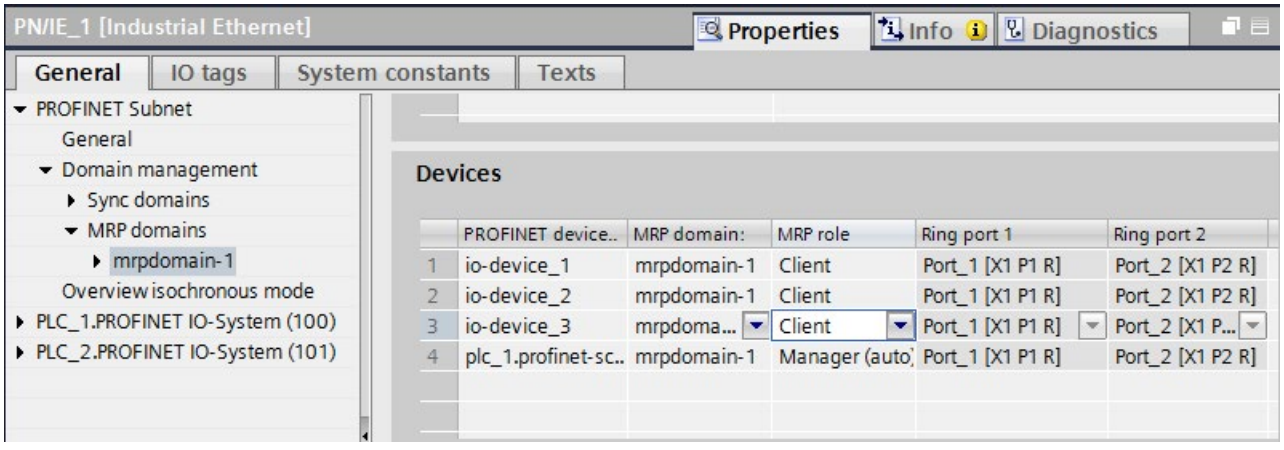

Figure 2-7 Assigning MRP roles to the ET 200SP

Assign I/O modules to the ET 200SP and set parameters

1. Change to the device view of an IM 155-6 PN HF.
2. In the properties of the interface module in the "General" area, assign "Section1" as the name for tunnel section 1.
3. Select the following modules in succession from the hardware catalog. Assign the modules to the interface module from slot 1 to 6:
   - DQ 4x24VDC/2A ST (for traffic lights)
   - DQ 4x24VDC/2A ST (for barrier)
   - AI 4xU/I 2-wire ST (for outdoor light, indoor light and air-quality sensors)
   - DQ 4x24VDC/2A ST (for fans)
   - DQ 4x24..230VAC/2A HF (for tunnel lighting)
   - 1 server module (as termination of the configuration)

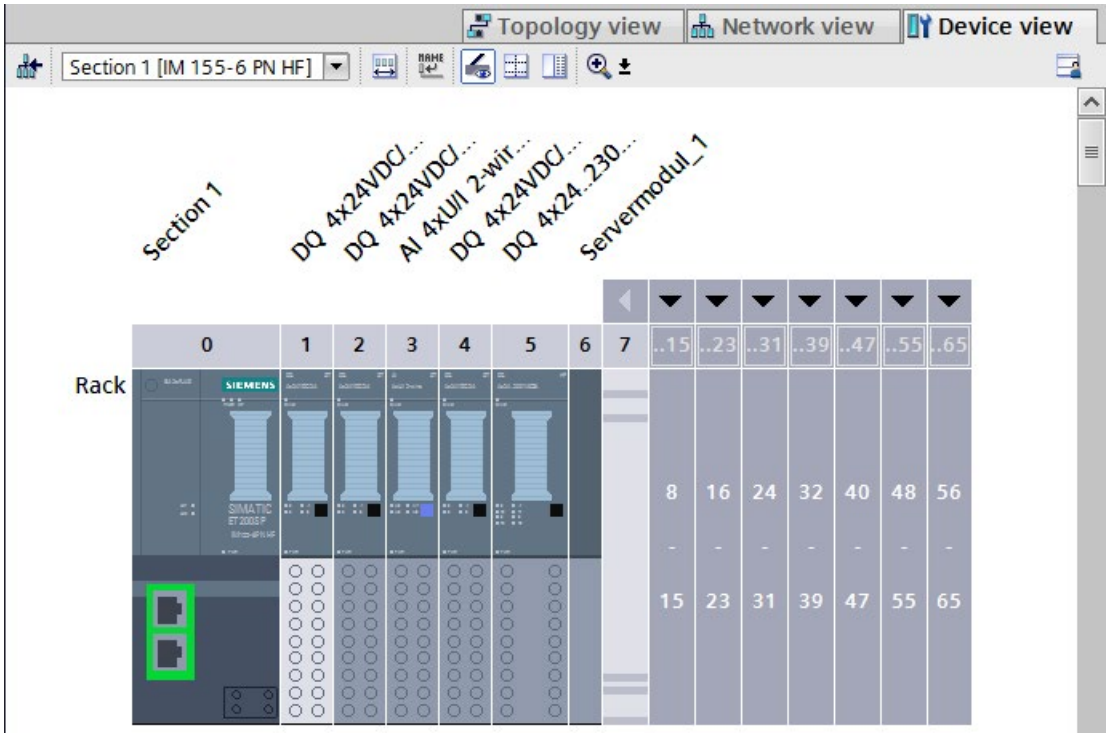

Figure 2-8 Assigning ET 200SP I/O modules

4. Double-click on the 3rd module DQ 4x24VDC/2A ST in the configuration (for fan).
5. In the module properties "General" > "Potential group", select "Enable new potential group (light-colored BaseUnit)".
6. Double-click on the module DQ 4x24..230VAC/2A HF (for tunnel lighting).
7. In the module properties "General" > "Potential group", select "Enable new potential group (light-colored BaseUnit)".
8. Double-click on the module AI 4xU/I 2-wire ST.

9. In the module properties, set the measurement type "Voltage" and measuring range "0..10 V" under "Inputs" for channels 0 to 2 in each case.

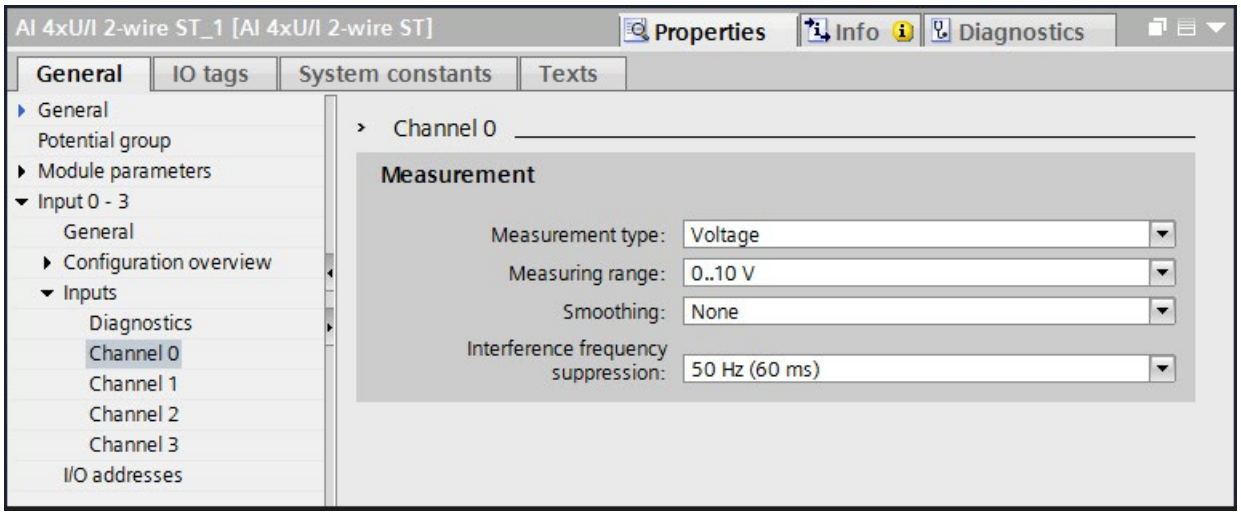

Figure 2-9 Setting the measurement type and measuring ranges

10. Set the measurement type to "Disabled" for channel 3.
11. For the module DQ 4x24..230VAC/2A HF retain the defaults, in particular the "Phase angle control - phase angle proportional" mode.
12. Proceed in exactly the same way according to steps 1 to 11 for tunnel section 3. For tunnel section 2, the two digital output modules DQ 4x24VDC/2A ST for barrier and traffic lights control are not required.

Result: The ET 200SP I/O modules are fully configured for the tunnel application.

Setting the watchdog time

Do not enter the watchdog time directly, but as "Accepted number of update cycles when IO data is missing". The resulting watchdog time is automatically calculated from the "Accepted number of update cycles when IO data is missing".

1. Select an interface module IM 155-6 PN HF.
2. Navigate to "Properties" > "Advanced options" > "Real time settings" > "IO cycle" > "Watchdog monitoring".
3. Set the update cycles for the example to 112 (224 ms).

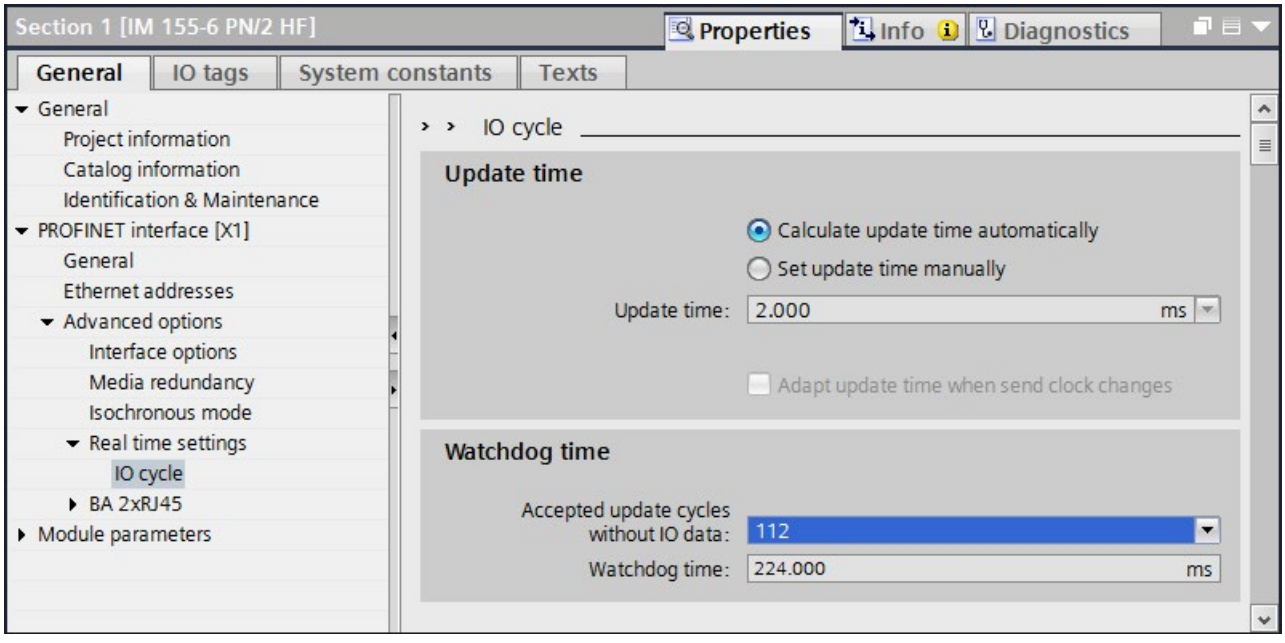

Figure 2-10 Setting the watchdog time

4. Follow steps 1. to 3. for the other two interface modules IM 155-6 PNHF (tunnel sections 2 and 3).

2.4 Configuring HMI devices

Introduction

Assign names for the two HMI devices.

Connect the HMI devices to the redundant system as follows:

- Network the HMI devices with an H-CPU in each case.
- Configure two HMI connections.
- Assign the system IP address of a PROFINET interface of the H-CPU or
- Use the device IP address of the respective PROFINET interface of the two H-CPUs

HMI device wizard

Recommendation: Configure the HMI devices with the HMI Device Wizard. The HMI device wizard will guide you through each dialog step by step and help you set up an HMI device. The HMI device wizard will automatically start when you create a new HMI device in your project via the project navigation.

Connection via a device IP address:

When connecting via the device IP address, the HMI device always communicates with the connected CPU. Communication is independent of the system state. The connected CPU then synchronizes the data with the other CPU.

Requirements: Each HMI device is connected to a CPU via a separate subnet.

In the example, the TP1900 Comforts communicate in each case via the devices IP address of the PROFINET interface with the directly connected CPU.

Assigning names for HMI devices

1. Select the left-hand TP1900 Comfort in the network view.
2. Change to the device view.
3. In the properties in the "General" area, assign the name "HMI left".
4. Assign the name "HMI right" for the TP1900 Comfort of the CPU on the right.

Setting up HMI connections

Connect the HMI devices to the CPUs via separate PROFINET subnets.

1. Using drag-and-drop, draw a line between the PROFINET interface X1 of the "HMI left" and the PROFINET interface X2 of the left-hand CPU.
2. Using drag-and-drop, draw a line between the PROFINET interface X1 of the "HMI right" and the PROFINET interface X2 of the right-hand CPU.

   Result: The HMI devices are networked with the CPUs.

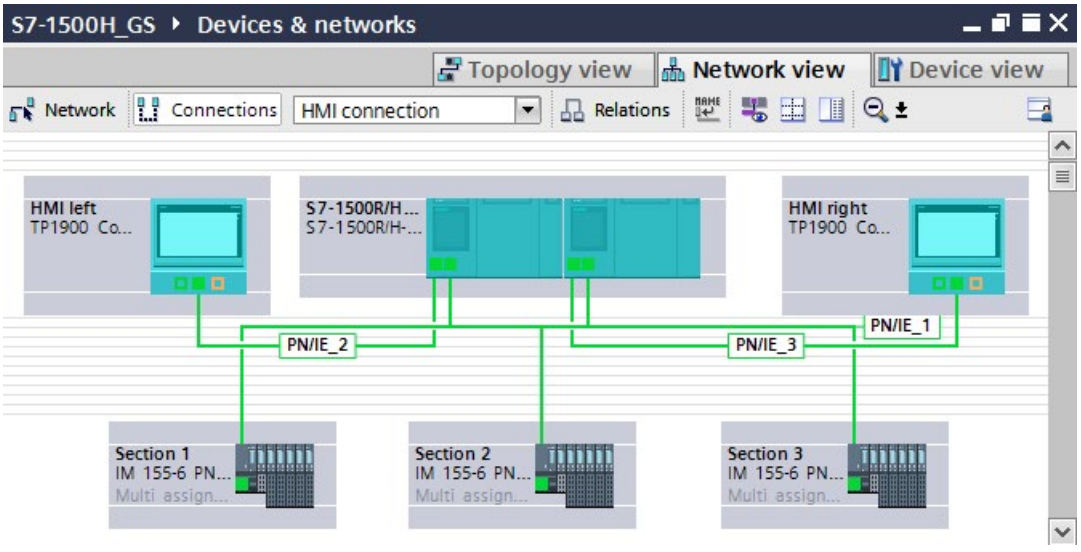

Figure 2-11 HMI devices networked with CPUs

3. In the network view, click on "Connections". This activates connection mode.
4. Using drag-and-drop, draw a line between the networked PROFINET interfaces of "HMI left" and the left-hand CPU. The "Connection partners" list opens.

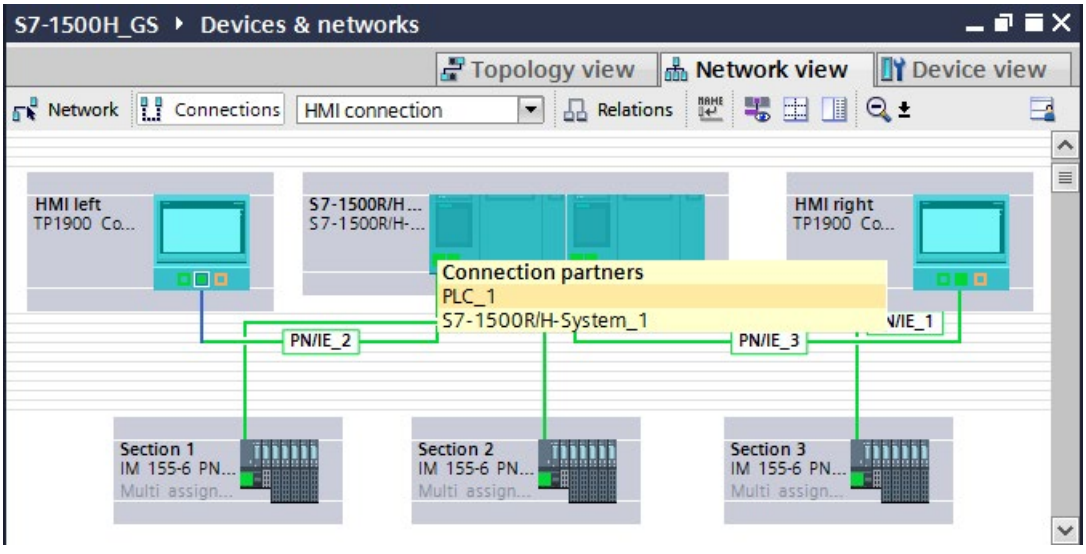

Figure 2-12 Assign HMI connection_1 connection partner

5. In the "Connection partner" list, select the CPU "PLC_1".
6. Using drag-and-drop, draw a line between the networked PROFINET interfaces of "HMI right" and the right-hand CPU. The "Connection partners" list opens.
7. In the "Connection partner" list, select the CPU "PLC_2".

Result: You have set up the HMI connections from the HMI devices TP1900 Comfort to the CPUs.

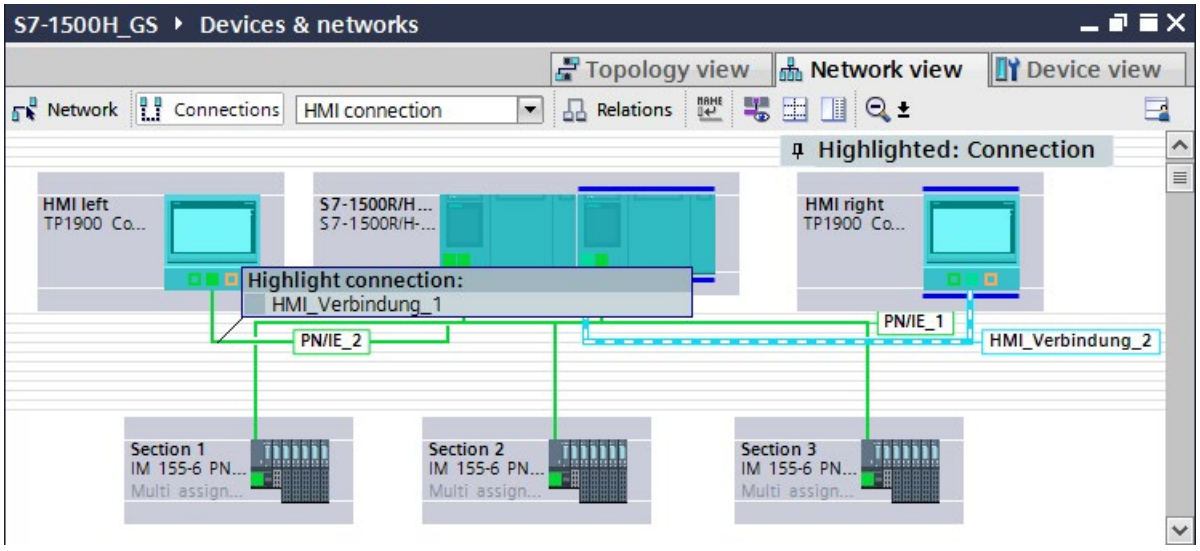

Figure 2-13 HMI connections set up

Setting devices IP addresses for the HMI connections

Change the IP addresses of the PROFINET interfaces of the HMI devices and the CPUs for the PROFINET subnets 2 and 3 (PN/IE_2/3).

1. Select the respective PROFINET interface of the device in the network view.
2. Change the IP address into a valid one in the subnet in the properties in the "Ethernet addresses" area.

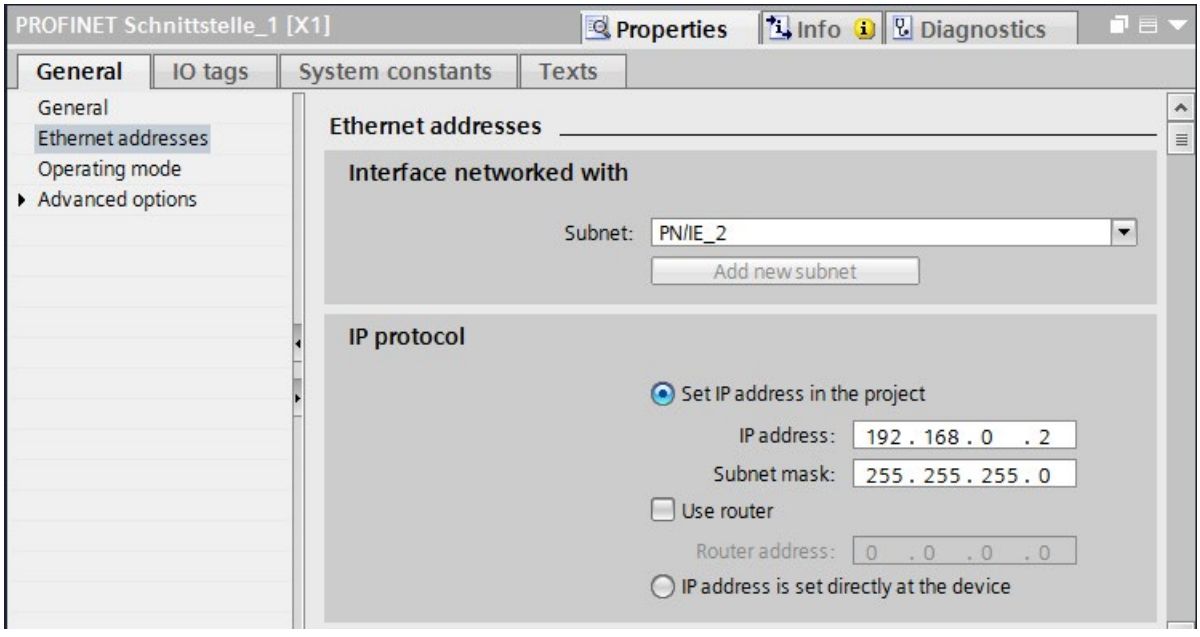

Figure 2-14 IP address for HMI connection to "HMI left" changed

The table below shows all the IP addresses used for the example:

Table 2- 1 IP addresses used in the example

PROFINET interface	Subnet	IP address
PG/PC	PN/IE1	192.168.0.50
X1 at CPU left	PN/IE1	192.168.0.1
X1 at CPU right	PN/IE1	192.168.0.2
at ET 200SP "section 1"	PN/IE1	192.168.0.3
at ET 200SP "section 2"	PN/IE1	192.168.0.4
at ET 200SP "section 3"	PN/IE1	192.168.0.5
X2 at CPU left	PN/IE_2	192.168.2.1
X1 at HMI left	PN/IE_2	192.168.2.2
X2 at CPU right	PN/IE_3	192.168.3.1
X1 at HMI right	PN/IE_3	192.168.3.2

Programming

3

Introduction

The example consists of three parts:

- The air quality measurement and fan control in the tunnel
- The traffic light and barrier control
- The lighting control in the tunnel

The following section explains, based on flow diagrams, how the user program works.

Using an HMI screen, you can switch the fans and the lighting in the tunnel from automatic to manual mode and, if necessary, change limit values.

The user program runs on a CPU 1517H-3 PN with SIMATIC STEP 7 Professional, Version V15.1.

The executable user program for the example can be found in the annex to the entry on the Internet (https://support.industry.siemens.com/cs/us/en/view/109757712).

States in the tunnel

The user program implements 3 states in the tunnel:

Everything is OK: The air quality sensors measure values within the permissible range:

- The traffic lights are green.
- The barriers are open.
- The motors for ventilation are in Stop mode, only the flow of air moves the fans.

The air quality sensors measure an increased concentration of pollutants between mean and maximum value:

- The fans immediately run at low level (slow) for at least 30 seconds. The direction of rotation of the fans depends on the extent of the load in the tunnel section and the distance to the exit.
- The traffic lights are still green.
- The barriers are still open.

The air quality sensors measure a pollutant concentration above the maximum value:

- The fans run immediately at the highest level (fast) for at least 30 seconds. The direction of rotation of the fans depends on the affected tunnel section and the distance to the exit.
- If the fans did not provide sufficient air within 2 minutes, the tunnel will be blocked:
  - The traffic lights are first yellow, then red.
  - The barriers close.

Default tag table

The standard tag table contains the PLC tags for the 3 parts of the user program.

Name	Data type	Address	Description
Air quality measurement and fan control in tunnel section 1			
sectionOneAirVisibility	Int	IW3	Input word for turbidity sensor in section 1
sectionOneAirPollution	Int	IW5	Input word for air quality sensor in section 1
sectionOneVentBlowRight	Bool	Q2.0	Output bit for clockwise rotation fan in section 1
sectionOneVentDrawLeft	Bool	Q2.1	Output bit for anticlockwise rotation fan in section 1
sectionOneVentSlow	Bool	Q2.2	Output bit for low speed fan in section 1
sectionOneVentFast	Bool	Q2.3	Output bit for high speed fan in section 1
Traffic light and cabinet control in tunnel section 1			
section1TrafficLightRed	Bool	Q0.0	Output bit for red traffic light in section 1
section1TrafficLightYellow	Bool	Q0.1	Output bit for yellow traffic light in section 1
sectionOneTrafficLightGreen	Bool	Q0.2	Output bit for green traffic light in section 1
sectionOneBarrierUp	Bool	Q1.0	Output bit for barrier in section 1
sectionOneBarrierDown	Bool	Q1.1	Output bit for barrier in section 1

Name	Data type	Address	Description
Lighting control in tunnel section 1			
sectionOneLuminance	Int	IW1	Input word for outdoor light sensor in section 1
sectionOneLightEntry	Word	QW21	Output word for brightness of the entry light in section 1
sectionOneLightPassage	Word	QW23	Output word for brightness of the interior luminance in section 1
Air quality measurement and fan control in tunnel section 2			
sectionTwoAirVisibility	Int	IW21	Input word for turbidity sensor in section 2
sectionTwoAirPollution	Int	IW23	Input word for outdoor light sensor in section 2
sectionTwoVentBlowRight	Bool	Q6.0	Output bit for clockwise rotation fan in section 2
sectionTwoVentDrawLeft	Bool	Q6.1	Output bit for anticlockwise rotation fan in section 2
sectionTwoVentSlow	Bool	Q6.2	Output bit for low speed fan in section 2
sectionTwoVentFast	Bool	Q6.3	Output bit for high speed fan in section 2
Lighting control in tunnel section 2			
sectionTwoRight-LightPassage	Word	QW13	Output word for brightness of the right interior luminance in section 2
sectionTwoLeftLightPassage	Word	QW15	Output word for brightness of the left interior luminance in section 2
Air quality measurement and fan control in tunnel section 3			
sectionThreeAirVisibility	Int	IW11	Input word for turbidity sensor in section 3
sectionThreeAirPollution	Int	IW13	Input word for air quality sensor in section 3
sectionThreeVentBlowRight	Bool	Q10.0	Output bit for clockwise rotation fan in section 3
sectionThreeVentDrawLeft	Bool	Q10.1	Output bit for anticlockwise rotation fan in section 3
sectionThreeVentSlow	Bool	Q10.2	Output bit for low speed fan in section 3
sectionThreeVentFast	Bool	Q10.3	Output bit for high speed fan in section 3
Traffic light and cabinet control in tunnel section 3			
sectionThreeTrafficLightRed	Bool	Q4.0	Output bit for red traffic light in section 3
sectionThreeTrafficLightYel-low	Bool	Q4.1	Output bit for yellow traffic light in section 3
sectionThreeTrafficLight-Green	Bool	Q4.2	Output bit for green traffic light in section 3
sectionThreeBarrierUp	Bool	Q8.0	Output bit for barrier in section 3
sectionThreeBarrierDown	Bool	Q8.1	Output bit for barrier in section 3
Lighting control in tunnel section 3			
sectionThreeLuminance	Int	IW9	Input word for outdoor light sensor in section 3
sectionThreeLightPassage	Word	QW29	Output word for brightness of the interior luminance in section 3
sectionThreeLightEntry	Word	QW31	Output word for brightness of the entry light in section 3

Flow diagram of the user program OB30

The OB30 contains the user program of the tunnel application with three function blocks for:

- The fan control in the tunnel (FB10)
- The traffic light and barrier control (FB20)
- The lighting control in the tunnel (FB30)
- DB1 contains the HMI tags for the HMI screen.

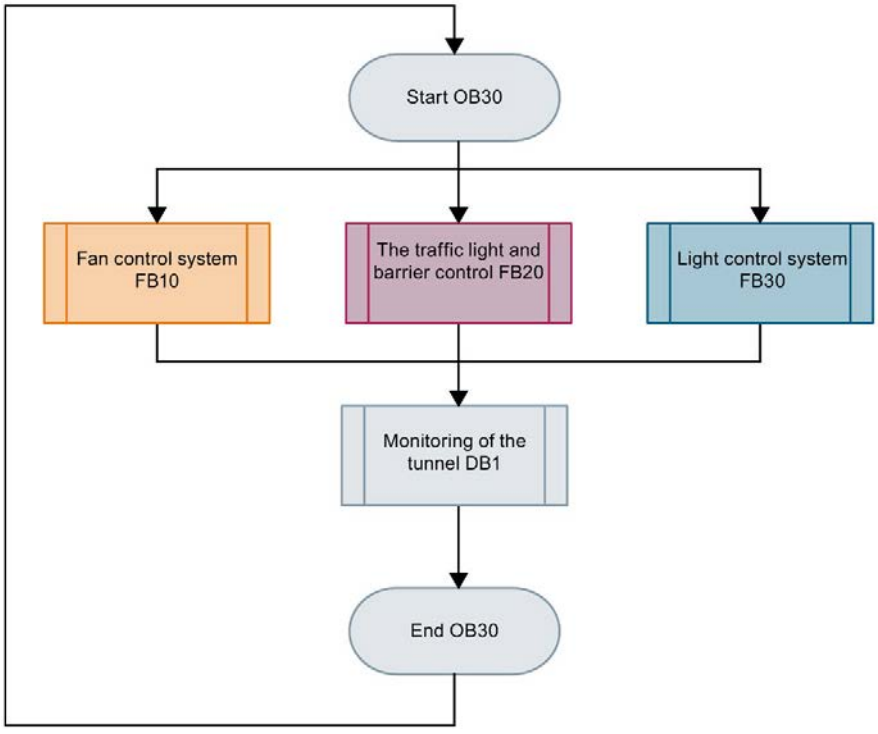

Figure 3-1 Flow diagram for user program in OB30

Flow diagram for fan control in FB10

Turbidity measurement and air quality measurement:

FB10 calls FB11. FB11 reports:

- The status of the air pollution level
- A pollutant concentration above the maximum value, which lasts longer than 2 minutes, to block the tunnel

Ventilation in tunnel sections 1, 2 and 3:

FB12 switches the speed and direction of rotation of the fans according to the status of the air pollution level (FB13) in the tunnel sections.

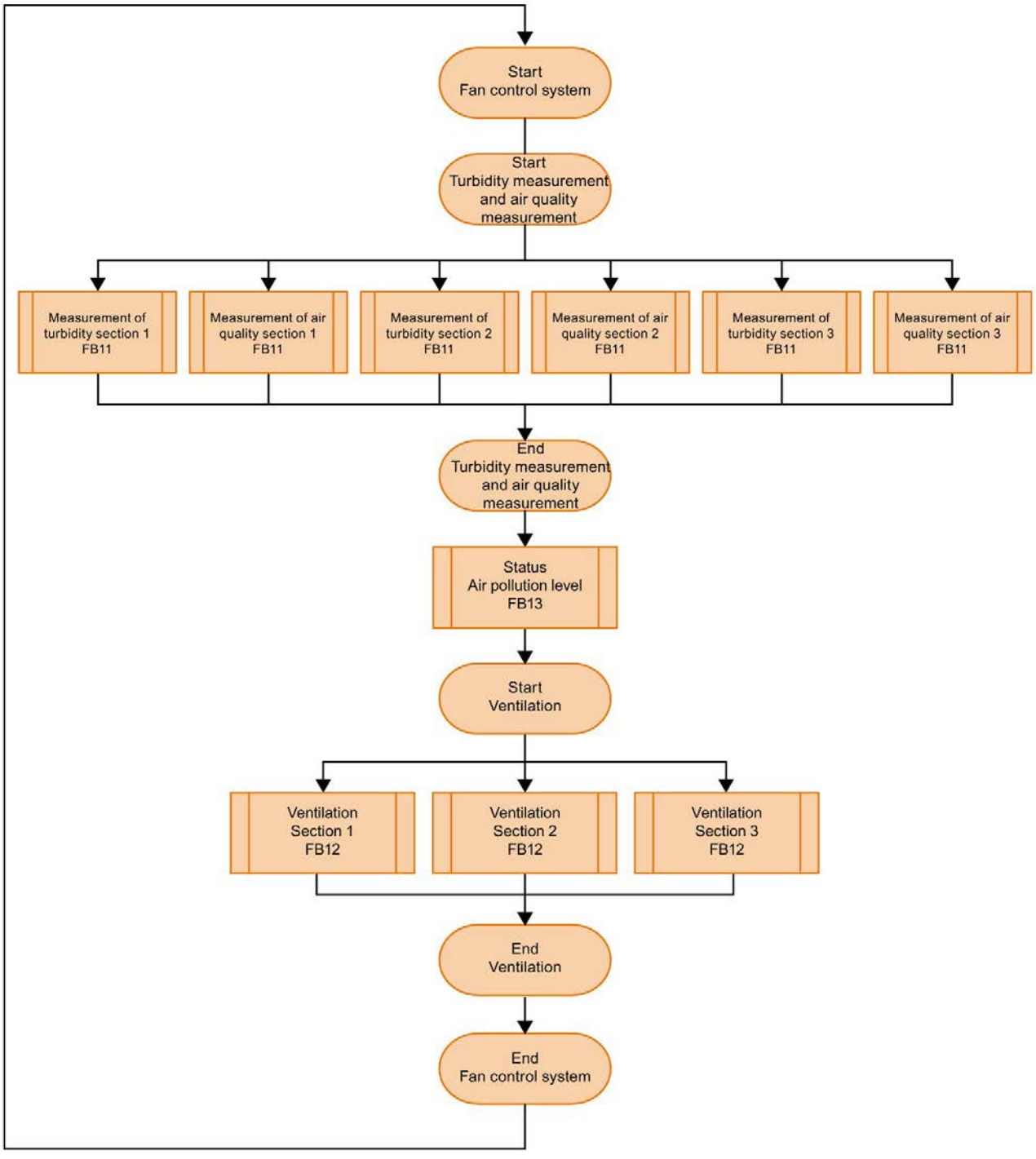

Figure 3-2 Flow diagram for fan control in FB10

Flow diagram for traffic light and cabinet control FB20

FB20 calls FB21. Depending on the status of the air pollution level (FB13) in the tunnel sections, both traffic lights are set to green, yellow or red and the barriers are opened or closed.

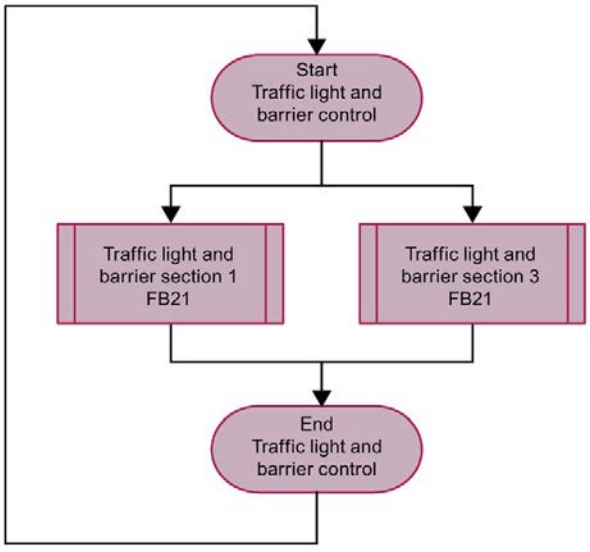

Figure 3-3 Flow diagram for traffic light and cabinet control FB20

Flow diagram for lighting control in FB30

Control of the entry and interior lights in the tunnel sections.

FB30 calls FB31. The user program controls the turn-on light according to the status of the outdoor light sensor.

The user program controls the interior lights according to the respective time of day or enables manual mode:

- Daylight: 8:00 am to 6:00 pm
- Night light: 8:00 pm to 6:00 am
- Twilight light: 6:00 am to 8:00 am and 6:00 pm to 8:00 pm

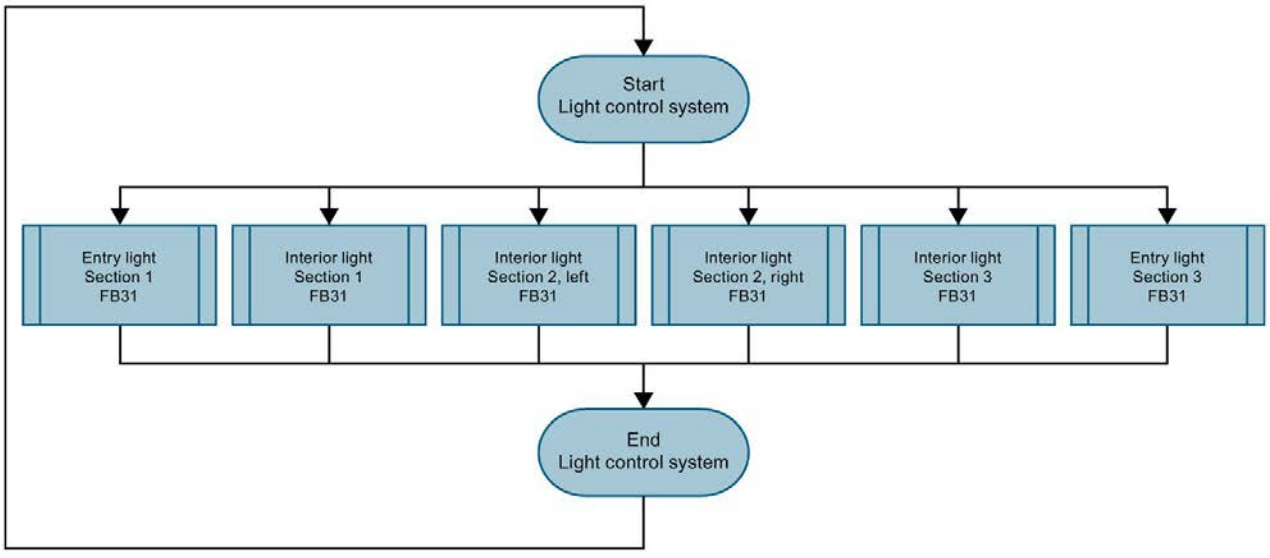

Figure 3-4 Flow diagram for lighting control in FB30

Display the status of the tunnel on the panel

An HMI screen is used to display the status of the tunnel on both Comfort Panels and to set parameters. The white fields are used to show the current measured values of the sensors.

By double-clicking on the "Air parameters" and "Lighting parameters" buttons, you can display and change the parameter settings.

By double-clicking on the symbols for lamp and motor, you access the automatic / manual operating mode.

By double-clicking on a box for the sensors, you access the automatic / manual operating mode for specifying sensor values.

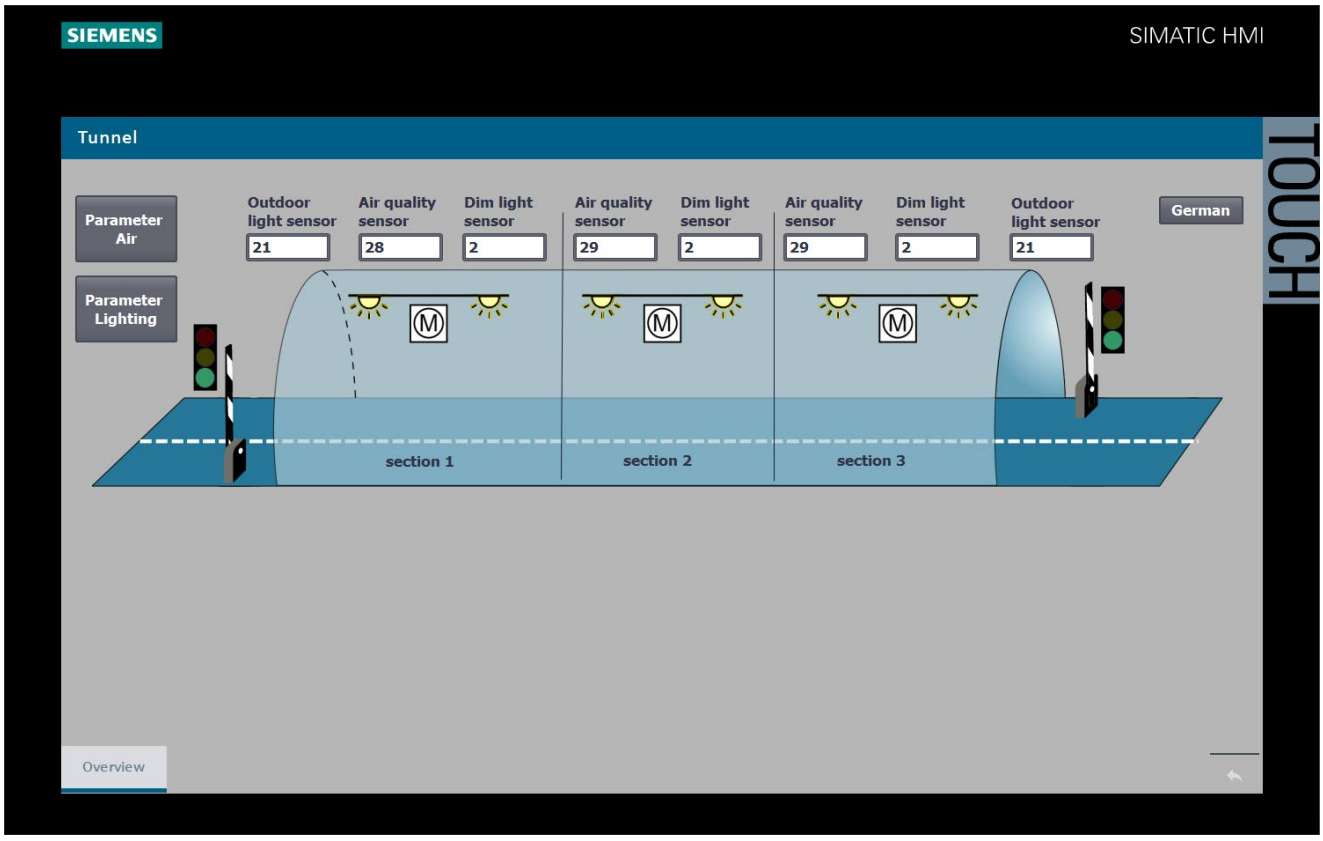

Figure 3-5 HMI overview screen of tunnel

Adjustable limits and parameters in the HMI screen

You can use the HMI screen to change the following limit values during user program runtime:

- The limit values for air pollution (carbon monoxide and turbidity) in the tunnel sections
- The light intensity limit value for the outdoor light sensors at the tunnel

You can use the HMI screen to change the following limit values in manual operation:

- Switch the fans in the tunnel sections to stop / slow / fast
- Change the clockwise / anticlockwise direction of rotation of the fans in the tunnel sections
- Change the light intensity for the dimmer control of the lighting in the tunnel
- The lamps in the tunnel individually control day, twilight or night mode with different light intensities
- For test purposes, set the values for the outdoor light, air quality and turbidity sensors

Limit values for air pollution

The "Air parameters" button is used to display the air pollution limit values (carbon monoxide and turbidity) in the tunnel sections.

If a maximum value is exceeded after 2 minutes:

- The traffic lights are red
- The barriers close
- The fan sucks in / blows out air in the tunnel section at high speed, in the example in the left direction (tunnel exit)

In the example in the screen, the air quality sensor measures the value 28 in tunnel section 1, the maximum limit value is 25.

In the example in the screen, the turbidity sensor measures the value 2. The value is below the mean, therefore the view is in the normal range.

As soon as a mean value is exceeded:

- The traffic lights are green
- The barriers remain open
- The fan sucks in / blows out air in the tunnel section at low speed

You can change the mean and maximum value limits for each tunnel section.

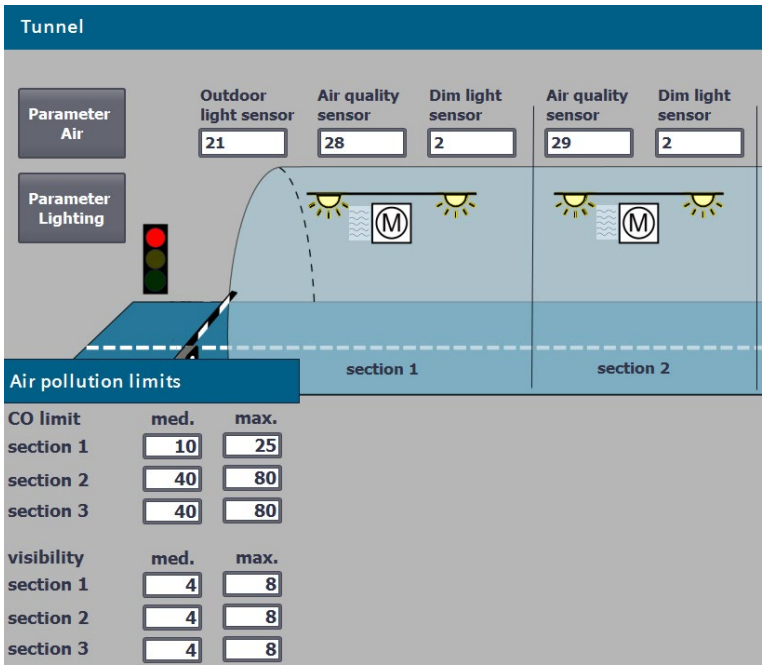

Figure 3-6 HMI screen for air pollution limit value

The light intensity limit value for the exterior light sensors and light intensity

Using the "Lighting parameters" button you display the following:

- The limit value for outdoor light sensors
- The limit values for day / twilight / night light
- The light intensity in the tunnel according to the time of day

The outdoor light sensors on the tunnel control the respective entrance light in the tunnel. The interior lights are controlled by the time of day.

In the example, the outdoor light sensor measures 1, the night light setting (subdued light) is thus effective for the entry into the tunnel.

You can change the limit values for the tunnel.

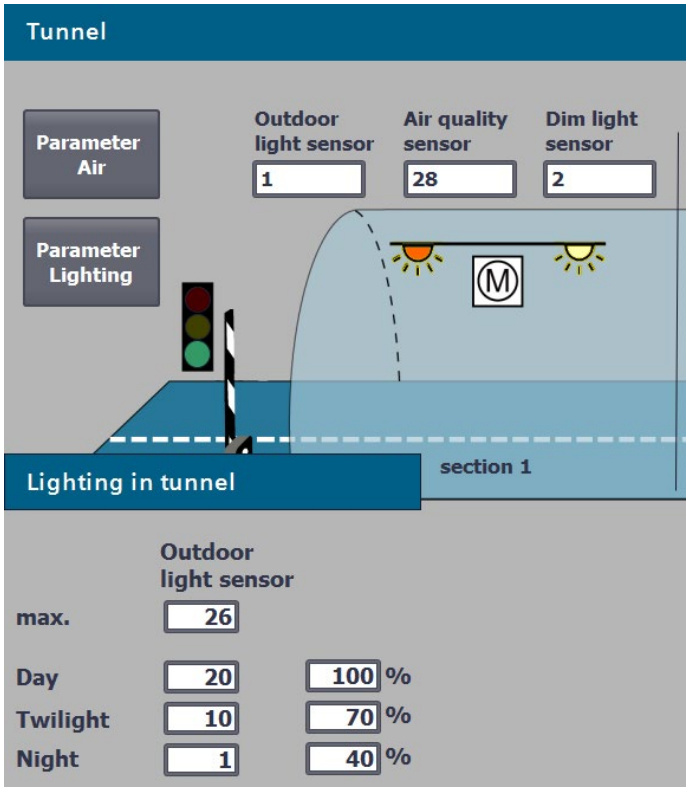

Figure 3-7 HMI screen for light limit value

Change manual mode speed and direction of rotation of the fans

By double-clicking on a symbol for a motor, you access the automatic / manual operating mode for the fan in the corresponding tunnel section.

In the example, the following was set for tunnel section 2:

- Manual operation for the fan
- Low speed (slow)
- Clockwise

The fan blows at slow speed in clockwise direction.

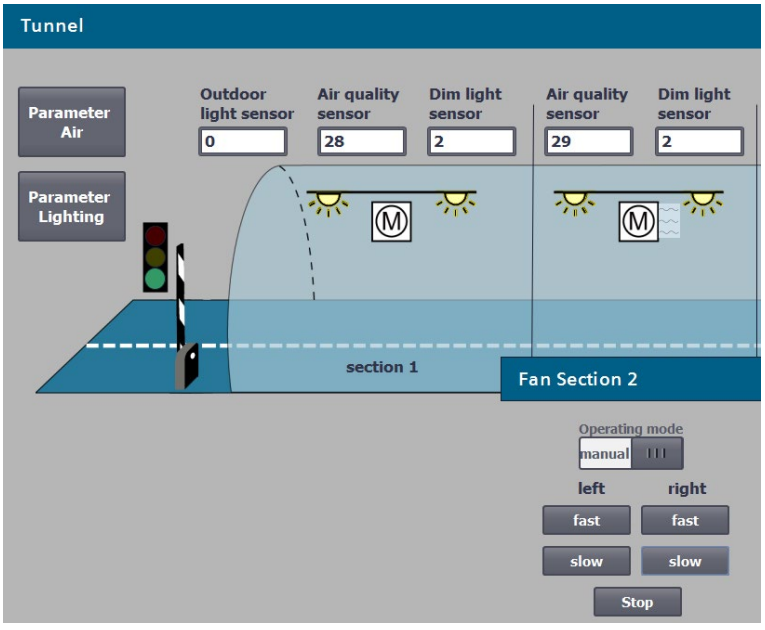

Figure 3-8 HMI screen manual mode fan speed and direction of rotation

Controlling manual operation of the lamps individually

For maintenance tasks, it may be advisable to manually set the brightness in the tunnel. By double-clicking on a symbol for a lamp, you access the automatic / manual operating mode for the lighting in the corresponding tunnel section.

In the example, for the left interior light was set in tunnel section 2:

- Manual mode
- Night light

The lamp emits subdued light.

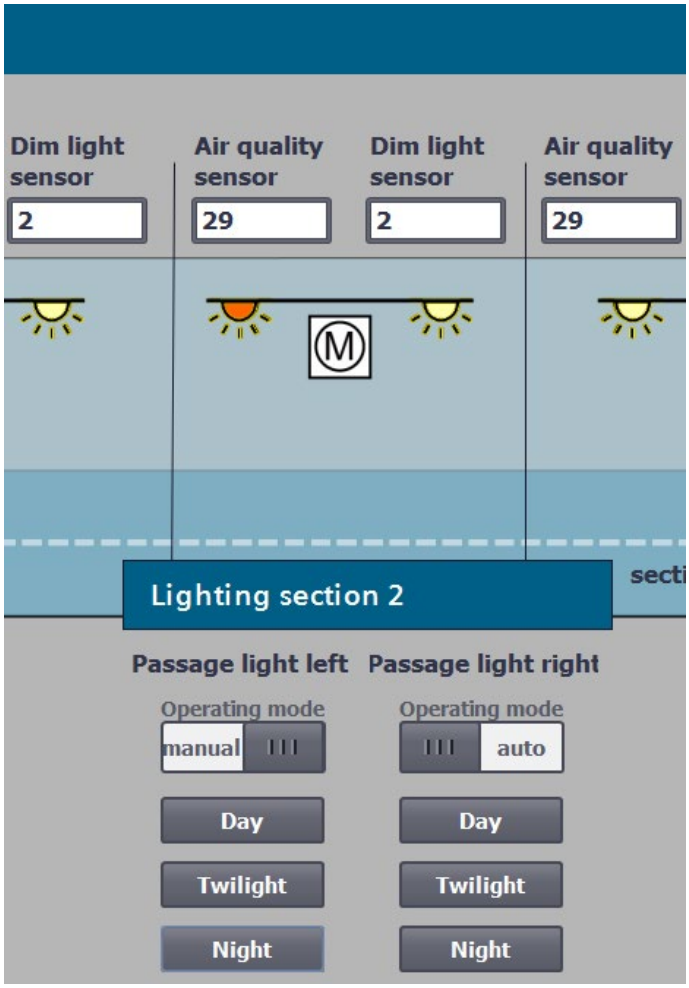

Figure 3-9 Controlling the HMI screen lamps individually

Specifying manual operation sensor values

By specifying the sensor values, you can test the function of the tunnel application. By double-clicking on a box for the sensors, you access the automatic / manual operating mode.

In the example, the following was set for tunnel section 1:

- Manual operation for setting the CO limit value (air quality sensor)
- CO limit value of 28
- Manual operation for specifying the limit value for the vision (turbidity sensor)
- Value for the vision of 2

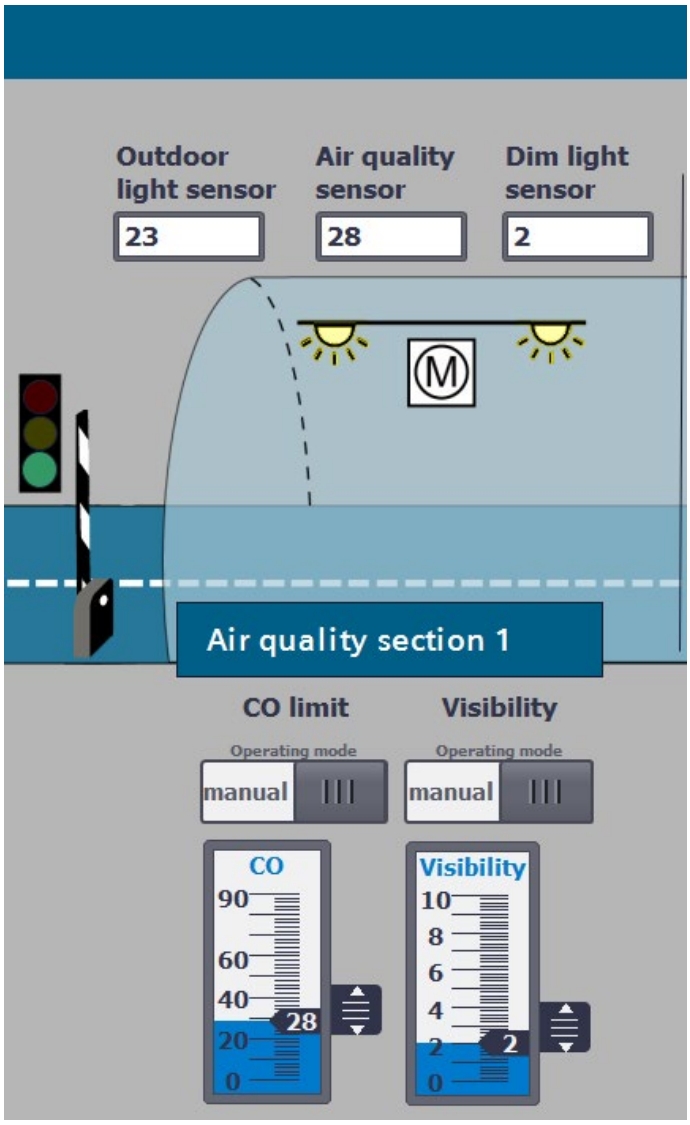

Figure 3-10 Specifying HMI screen sensor values

Commissioning 4

Introduction

You have configured and programmed the tunnel application. The following sections describe how to commission the tunnel application.

Further information on commissioning is available in the system manual of Redundant System S7-1500R/H (https://support.industry.siemens.com/cs/ww/en/view/109754833).

Inserting SIMATIC memory cards

Requirement:

The CPUs only support pre-formatted SIMATIC memory cards. If required, format the SIMATIC memory cards before using them in the CPU.

Procedure: Insert a SIMATIC memory card into the left-hand CPU as follows.

1. Open the front cover of the CPU.
2. Ensure that the CPU is either switched off or in STOP mode.
3. Insert the SIMATIC memory card, as shown on the CPU, into the slot for the SIMATIC memory card.
4. Carefully insert the SIMATIC memory card into the CPU, pushing gently, until the card clicks into place.
5. Insert the other SIMATIC memory card into the right-hand CPU as described in steps 1 to 4.

Switching on load current supply and CPUs

Requirements:

The SIMATIC S7-1500R/H redundant system has been installed. The system has been wired. The SIMATIC memory cards are in the CPUs. The load current supply is connected to the power supply.

Procedure:

Turn on the load current supply.

Result:

- The CPUs run a flash test and on completion of system initialization goes to STOP. The RUN/STOP LEDs on both CPUs are yellow.
- The two CPUs implement pairing. The ERROR LEDs are flashing red. In STEP 7 in the diagnostic status (Online & diagnostics) of the S7-1500R/H system, check successful paring. "Paired" is shown in the "Pairing state" field.

Assigning redundancy IDs to CPUs in the configuration

Redundant operation is only possible if the two CPUs have different redundancy IDs. The redundancy IDs can have values of 1 and 2. Both CPUs have redundancy ID 1 in the configuration as the default:

The redundancy ID is used to assign a project tree to the real CPU in STEP 7. The upper CPU of the two in the tree always has a redundancy ID of 1. The lower CPU of the two always has the redundancy ID 2.

Requirements:

Both CPUs are in STOP. There is pairing between the two CPUs.

Procedure:

1. On the CPU display of the right CPU, select the menu item "Overview> Redundancy".
2. Assign the CPU redundancy ID 2.

Result: The right-hand CPU in the configuration is assigned redundancy ID 2.

Downloading project data to the primary CPU

In the example, download the project data from the PG/PC to the primary CPU via an online connection. The project data (all configuration data and the complete user program) can only be downloaded when a CPU is in STOP operating state.

Procedure:

1. Right-click to select the S7-1500R/H system in the project tree.
2. Select the "Download to device" > "Hardware and software (changes only)" command from the shortcut menu.

   Result: The "Extended download" dialog window opens.
3. Select the PG/PC interface.
4. Select the interface to which the PG/PC is connected.
5. Click on the "Start search" button.

   Result: The "Choose target device" table shows the CPUs in the S7-1500H system. The primary CPU is already selected.
6. Click "Load".

   Result: The "Load preview" dialog window sets out the key information on the load process to be run:
7. If the S7-1500R/H system is not in STOP, stop the system. To do so, select "Stop RH system" in the "Action" column of the drop-down menu.
8. Click the "Download" button to start the download.

The "Results of loading" dialog window displays the results of the loading process.

Starting CPUs after downloading

Requirement:

The CPU mode selector is in the RUN position.

Procedure:

1. To start the primary CPU after loading is complete, select "Start module" in the "Action" column.
2. To complete loading, click "Finish".

   Result: The primary CPU switches to the RUN operating state.
3. Switch the backup CPU to the RUN operating state.

   Result: After successful synchronization between the primary and backup CPU, the S7-1500R/H system switches to redundant mode (system state RUN=Redundant).

Evaluating LEDs and displays at the CPUs

If the CPUs are in the "target" system state RUN-Redundant and there are no events, requirements and errors, then the two CPUs show the following LED screens:

- the RUN/STOP LED lights up green
- the ERROR-LED is off
- the MAINT LED is off

The status information of the CPU is displayed on the display. In the system state RUN-Redundant, "RUN-Redundant" is displayed in a green bar on the two CPU displays.

Result

You have fully created and downloaded the configuration and the user program in accordance with the task of the example.

Additional information 5

Further information

Below is a collection of links:

- for additional information on the systems and components which were used in the Getting Started
- to tunnel automation

Table 5- 1 Collection of links

Topics	Further information
Components, failure scenarios, setup, installation, wiring and commissioning of S7-1500R/H	Redundant System S7-1500R/H (https://support.industry.siemens.com/cs/ww/en/view/109754833) system manual
Components, setup, installation, wiring and commissioning of ET 200SP	System manual ET 200SP Distributed I/O System (https://support.industry.siemens.com/cs/ww/en/view/58649293)
PM 190 W 120/230 V AC load current supply	PM 190 W 120/230 V AC load current supply (https://support.industry.siemens.com/cs/ww/en/view/68022506) manual
HMI devices TP1900 Comfort	SIMATIC HMI Comfort Panels (https://support.industry.siemens.com/cs/de/en/view/49313233) operating instructions
SIMATIC STEP 7 Professional: Configuration, programming, HMI visualization, diagnostics	In the STEP 7 online help
PROFINET at S7-1500R/H, system redundancy S2, media redundancy (MRP)	PROFINET (https://support.industry.siemens.com/cs/ww/en/view/49948856) function manual
HMI communication to S7-1500R/H, System IP address	Communication (https://support.industry.siemens.com/cs/ww/en/view/59192925) function manual
Diagnostics of S7-1500R/H on the CPU display and in STEP 7	Function manual Diagnostics (https://support.industry.siemens.com/cs/ww/en/view/59192926)
Siemens tunnel automation	on the Internet (https://w3.siemens.com/topics/global/en/tunnelautomatisierung/Seiten/Default.aspx)

SIEMENS

Reference manual

SIMATIC

S7-300/S7-400/S7-1200/S7-1500

Comparison list for programming languages

Edition 11/2022

support.industry.siemens.com

SIEMENS

Comparison list for S7-300, S7-400, S7-1200, S7-1500

Reference manual

Legal information

Warning notice system

This manual includes notices you have to observe to ensure your personal safety and to prevent damage to property. Notices referring to your personal safety are highlighted in the manual by a safety alert symbol; notices referring to property damage only have no safety alert symbol. Depending on the hazard level, the warnings are displayed in descending order as follows.

⚠ DANGER
Indicates that death or severe bodily injury **will** result if proper precautions are not taken.

⚠ WARNING
Indicates that death or severe bodily injury **may** result if proper precautions are not taken.

⚠ CAUTION
Indicates that minor personal injury may result if proper precautions are not taken.

NOTICE
Indicates that damage to property may result if proper precautions are not taken.

If multiple hazard levels may occur, the warning is always displayed with the highest possible level.
A notice warning of injury to persons with a safety alert symbol may also include a warning relating to property damage.

Qualified personnel

The product/system described in this documentation may be operated only by **personnel qualified** for the specific task in accordance with the relevant documentation, in particular its warning notices and safety information. Qualified personnel are those who, based on their training and experience, are capable of identifying risks and avoiding potential hazards when working with these products/systems.

Proper usage of SIMATIC products

Please note the following:

⚠ **WARNING**
Siemens products may only be used for the applications described in the catalog and the associated technical documentation. If third-party products and components are used, these have to be recommended or approved by Siemens. Correct, reliable operation of the products requires proper transport, storage, positioning, assembly, installation, commissioning and operation, as well as careful maintenance. The permitted ambient conditions must be adhered to. Notes in the respective documentation must be observed.

Trademarks

All names identified by ® are registered trademarks of Siemens AG.
The remaining names in this publication may be trademarks whose use by third parties for their own purposes could violate the rights of the owner.

Disclaimer

We have reviewed the contents of this publication to ensure consistency with the hardware and software described. However, since deviations cannot be ruled out entirely, we cannot guarantee full consistency. The information in this publication is reviewed regularly and any necessary corrections are included in subsequent editions.

Siemens AG
Digital Industries
Postfach 48 48
90026 NUREMBERG

Content of the comparison list for S7-300, S7-400, S7-1200, S7-1500

- Measuring program runtimes –see below
- Load objects to the CPU: Which modifications and which modified blocks you load to the CPU in which operating mode – next page.
- Overview, requirements, general conditions and legend for the comparison list (Page 6)
- Comparison list for S7-300, S7-400 (without H systems), S7-1200, S7-1500 including Software Controller CPU 150xS: Which instructions and functions you can use for which controller family – as of Page 8 .
- Instructions for SIMATIC Ident and SIMATIC Energy Suite – Appendix.

Measuring program runtimes

The runtime of parts of the user program depends on many factors. A listing of runtimes of individual instructions in a table is thus not possible.
The **RUNTIME** (runtime measuring) instruction is used to measure the runtime of the entire program, individual blocks or command sequences. The runtime measurement begins with the first call of the **RUNTIME** instruction and ends with the second call. Use an OB priority >15 for runtime measurement.
You can find more detailed information in the SIMATIC STEP 7 online help. Enter "RUNTIME" in the search and select "S7-1200", "S7-1500" or "S7-1500T" as validity identifier.

Programming examples in SCL:

```
#tempLastCycle := RUNTIME(#statRuntimeMemory); // Start of runtime measurement
// instance call where the time measurement takes place:
"instSpeedTest"(enable:="true",…);
#tempLastCycle := RUNTIME(#statRuntimeMemory);  // End of runtime measurement
```

The `#tempLastCycle` tag contains the time that has passed from the preceding call to the current call of **RUNTIME**. Record the tag with "Trace". Do not use "Monitor".

Load objects to the CPU

The table shows which modifications and which modified blocks you can download in which operating state. Very complex programs can prevent downloading in RUN mode.

Solution approaches:

- Use a memory card with sufficient capacity.
- Select a CPU with sufficient work memory.
- Reduce the number of modified used blocks, constants, PLC tags or data types.

You can find information about the behavior of the F-CPU for fail-safe blocks in the "SIMATIC Safety – Configuring and Programming manual".

Modifications and blocks	S7-300	S7-400	S7-1200 V2.2 - V3.0	S7-1200 V4.0 and higher	S7-1500
Modified properties of HW components	STOP	STOP, with restrictions in RUN	STOP	STOP	STOP
Added hardware components	STOP	STOP, with restrictions in RUN	STOP	STOP	STOP
New/revised text lists (messages)	RUN	RUN	—	—	RUN
Load number of blocks	RUN (<17)	RUN (<57)	RUN (<11)	RUN (<21)	RUN
Reset work memory (MRES)	STOP (Reset)	STOP (Reset)	STOP (Reset)	STOP (Reset)	STOP (Reset)
New OB	RUN	RUN	STOP	STOP	RUN
Modified OB: Code modifications, modification of comments	RUN	RUN	RUN	RUN	RUN
OB with modified properties (e.g., cycle time change)	STOP	RUN	STOP	STOP	RUN

Modifications and blocks	S7-300	S7-400	S7-1200 V2.2 - V3.0	S7-1200 V4.0 and higher	S7-1500
Deleted OB	RUN	RUN	STOP	STOP	RUN
New FB/FC/DB/PLC data type (UDT)	RUN	RUN	RUN	RUN	RUN
Deleted FB/FC/DB/PLC data type (UDT)	RUN	RUN	RUN	RUN	RUN
Revised FB/FC: Code modification, modification of comments	RUN	RUN	RUN	RUN	RUN
Revised FB/FC: Change to interface	STOP	STOP	STOP	RUN (Init)	RUN (Init)
Modified DB (no memory reserve configured): Name/type of tags modified, tags added or deleted	RUN (Init)	RUN (Init)	STOP	RUN (Init)	RUN (Init)
Modified DB (memory reserve configured): New tags added	—	—	—	RUN	RUN
Modified PLC data type (UDT)	STOP	STOP	STOP	RUN (Init)	RUN (Init)
Modified PLC tags (added, deleted, name or data type changed)	RUN	RUN	STOP	RUN	RUN
Modified retentivity settings (bit memory address area, DB area)	STOP	All objects retentive	STOP	STOP	STOP
Motion control technology objects: Changes to MC Servo cycle time, change from free-running to cyclical (and vice versa). Changes to the hardware interface of the TO	--	--	--	--	STOP

(init) means that the CPU overwrites the actual values of the DBs with start values during downloading.

Validity and general conditions

- SIMATIC STEP 7 version 18 or higher
- The contents of the S7-1500 column also apply to SIMATIC S7-1500 Software Controller CPU 150xS
- SIMATIC S7-1200 firmware 4.6 or higher, SIMATIC S7-1200 only supports LAD, FBD and SCL.
- SIMATIC S7-1500 firmware 3.0 or higher
- STL: Some instructions have to be called via CALL.
- The special features of SIMATIC S7-400H systems are not taken into consideration.
- The instructions of the SIMATIC S7-300T controller are only taken partly into account.
- Some system state lists (SSLs) for SIMATIC S7-300/400 contain similar information such as function calls with the SIMATIC S7-1200/1500.

Legend

✔	Applicable
(✔)	Applicable with restrictions
☑	Not yet available for SIMATIC CPU S7-1500R/H
nn	Not required, you can, for example, replace many instructions with simple commands in SCL.
gray italics	We recommend that you do not use the grayed-out instructions in S7-1200 or S7-1500. The instructions are not suitable for symbolic addressing or multiple instances. Avoid SIMATIC counters and timers because they do not have multiple instance capability.
Xyz	New instruction as of SIMATIC STEP 7 V18. For this purpose, SIMATIC S7-1200 requires at least firmware 4.6 and SIMATIC S7-1500 at least firmware 3.0.
Xyz	Also available as fail-safe safety instruction in LAD and FBD.

Structure of the comparison list

- Overview of the data types
- Instructions

Overview of the instructions

- Basic instructions
  Instructions that you use often, e.g. bit logic operations, timers, counters, mathematical functions
- Extended instructions
  Extended instructions for more possibilities, e.g. date and time-of-day, interrupts, alarms, PROFIenergy
- Technological instructions (technology)
  Technological functions and Motion Control, e.g. PID control, kinematics
- Instructions for communication
  Brief overview and basics of communication and
  Instructions for communication, such as S7 communication, Open user communication
- Optional instructions
  Optional instructions, e.g. for SINAMICS or SIMATIC Ident
- CEM
  Instruction of the Cause Effect Matrix

Overview of data types

S7-300 S7-400	S7-1200	S7-1500	Data type	Bit length	Value range	Examples, comments
Binary						
✔	✔	✔	**BOOL**	1	TRUE, FALSE	varBool := (var1 AND var2) BOOL#0, BOOL#1
Binary numbers and character strings						
Decimal, binary, octal or hexadecimal						
✔	✔	✔	**BYTE**	8	0 ... 255	varByte := 2#0011_1010
✔	✔	✔	**WORD**	16	0 to 65535	varWord := 16#6B0F
✔	✔	✔	**DWORD**	32	0 to 4294967295	varDword := 50_000
		✔	**LWORD**	64	0 to 18 446 744 073 709 551 615	varLword := 16#F2F6_FA9F_FBFF_FBFF
Integer numbers						
Decimal, binary, octal or hexadecimal When an integer number is not in decimal format, the most significant bit, MSB, determines the sign: 0 = positive, 1 = negative						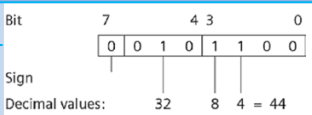
	✔	✔	**SINT**	8	-128 to +127	varSint := -42

S7-300	S7-400	S7-1200	S7-1500	Data type	Bit length	Value range	Examples, comments
✔	✔	✔	✔	**INT**	16	-32768 to +32767	varInt := 16#0EC9
✔	✔	✔	✔	**DINT**	32	-2147483648 to +2147483647	varDint := +125_790
			✔	**LINT**	64	-9 223 372 036 854 775 808 ... +9 223 372 036 854 775 807	varLint := 16#0000_8C5B_C5F0_F79F
Integer numbers without sign							
Decimal, binary, octal or hexadecimal							
		✔	✔	**USINT**	8	0 ... 255	varUsint := 2#0100_1110
		✔	✔	**UINT**	16	0 to 65535	varUint := 65_295
		✔	✔	**UDINT**	32	0 to 4294967295	varUdint := 8#360_7417_0360
			✔	**ULINT**	64	0 to 18 446 744 073 709 551 615	varUlint := 16#0000_8C5B_C5F0_F79F

S7-300	S7-400	S7-1200	S7-1500	Data type	Bit length	Value range	Examples, comments
Floating-point numbers							
Floating-point numbers correspond to the standard IEEE 754-1985							
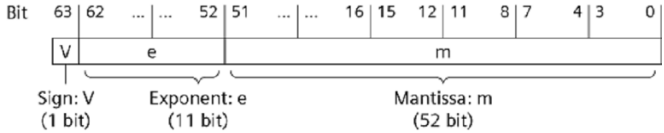							
✔	✔	✔		**REAL**	32	-3.402823e+38 ... -1.175 495e-38 ±0 +1.175 495e-38 ... +3.402823e+38	varReal := 1.0e-5 Mantissa: 23 bits, Exponent: 8-bit, Sign 1 bit
		✔	✔	**LREAL**	64	-1,7976931348623158e+308 ... -2,2250738585072014e-308 ±0 +2.2250738585072014e-308 ... +1.7976931348623158e+308	varLreal := 20.0e-15 Mantissa: 52 bits, Exponent: 11-bit, Sign: 1-bit
Timer							
✔			✔	**S5TIME**	16	0 ms ... 2 h 46 m 30 s 0 ms	varS5time := S5T#10s
✔		✔	✔	**TIME**	32	-24 d 20 h 31 m 23 s 648 ms ... +24 d 20 h 31 m 23 s 647 ms	varTime := T#10d20h30m20s630ms

S7-300	S7-400	S7-1200	S7-1500	Data type	Bit length	Value range	Examples, comments
			✔	LTIME	64	-106 751 d 23 h 47 m 16 s 854 ms 775 µs 808 ns ... +106 751 d 23 h 47 m 16 s 854 ms 775 µs 807 ns	varLtime := LT#11350d20h25m14s830ms 652us315ns
Date and time-of-day							
✔	✔	✔		DATE	16	01.01.1990 ... 31.12.2168	varDate := D#2009-12-31
✔	✔	✔		TIME_OF_DAY (TOD)	32	00:00:00.000 ... 23:59:59.999	varTod := TOD#10:20:30.400
			✔	LTOD (LTIME_OF_DAY)	64	00:00:00.000000000 ... 23:59:59.999999999	varLtod := LTOD#10:20:30.400_365_215
✔			✔	DT (DATE_ AND_TIME)	64	01.01.1990--0:0:0 ... 31.12.2089--23:59:59.999	varDt := DT#2008-10-25-8:12:34.567
			✔	LDT	64	01.01.1970--0:0:0.000000000 ... 11.04.2262--23:47:16.854775807	varLdt := LDT#2008-10-25-8:12:34.567
		✔	✔	DTL	96	01.01.1970--00:00:00.0 ... 31.12.1554--23:59:59.999999999	varDtl := DTL#2008-12-16-20:30:20.250

S7-300 S7-400	S7-1200	S7-1500	Data type	Bit length	Value range	Examples, comments
Character string						
An operand of the STRING data type occupies two bytes more than the specified maximum length in the memory. An operand of the WSTRING data type occupies two words (4 bytes) more than the specified maximum length in the memory. You can specify the length of a character string by adding a definition. FOR EXAMPLE: STRING[254]						
✔	✔	✔	**CHAR**	8	ASCII character set	varChar := 'A'
	✔	✔	**WCHAR**	16	Unicode character set	varWchar := 'A'
✔	✔	✔	**STRING**	n+2 (bytes)	0 ... 254 ASCII characters Default length: 254 CHAR + 2 bytes	varString := 'Name'
	✔	✔	**WSTRING**	n+2 (Word)	0 ... 16382 Unicode characters Default length: 254 WCHAR + 2 words	varWstring := 'Hallo Welt'
Pointer						
✔		✔	**POINTER**	48	Area-internal pointer, Cross-area pointer, DB pointer, Zero pointer	Symbolic: "MyDB"."MyTag" Absolute: P#20.0, P#DB10.DBX20.0
✔		✔	**ANY**	80	P#MemoryArea DataAddress Type Number, P#Zero value	Symbolic: "MyDB".StructVariable.Component1" Absolute: P#DB11.DBX20.0 INT 10

S7-300 S7-400	S7-1200	S7-1500	Data type	Bit length	Value range	Examples, comments
	✔	✔	**VARIANT**	0	*Symbolic* operand, DataBlock.Operant.Component, *Absolut* operand, DataBlockNumber.Operand Type Length, NULL pointer	Symbolic: "DataBlockl".StructVariable.Variable1" Absolute: %MW10, P#DB10.DBX10.0 INT 12

Instructions in the section "Basic instructions"

Instruction groups	Page
Additional instructions for S7 GRAPH	14
General	15
Bit logic operations	15
Safety functions	17
Timers	18
Counters	20
Comparator operations	21
Mathematical functions	24
Move	26
Conversion operations	31
Program control operations	34
Word logic operations	40
Shift and rotate	41

S7-300	S7-400	S7-1200	S7-1500	Description	LAD	FBD	STL (not S7-1200)	SCL	CFC (S7-1500 only)
Additional instructions for S7 GRAPH									
		✔	✔	Monitoring entire duration of a step (greater than step activation time)	CMP >T				
		✔	✔	Monitoring entire duration of a step minus interferences (greater than uninterrupted step activation time)	CMP >U				
		✔	✔	Monitoring entire duration of a step (greater than maximum step activation time)	CMP >T_MAX				
		✔	✔	Monitoring duration of a step and output a warning when time is exceeded (greater than warning time)	CMP >T_WARN				

Basic instructions				Extended instructions	Technology		Communication		
S7-300	S7-400	S7-1200	S7-1500	Description	LAD	FBD	STL (not S7-1200)	SCL	CFC (S7-1500 only)
General									
✔	✔	✔	✔	Insert network	✔		✔	nn	
✔	✔	✔	✔	Insert empty box	✔		nn	nn	
✔	✔	✔	✔	Open branch	✔		(		
✔	✔	✔	✔	Close branch	✔		)		
✔	✔	✔	✔	Insert input	-|		nn	nn	
✔	✔	✔	✔	Invert Boolean result	-|NOT|-	-o|	NOT		
Bit logic operations									
✔	✔	✔	✔	AND logic operation	✔	&	E	&	-I&I-
✔	✔	✔	✔	OR logic operation	✔	>=1	O	OR	-I>=1I-
✔	✔	✔	✔	EXCLUSIVE OR logic operation	✔	X	X	XOR	-IXORI-
✔	✔	✔	✔	Assignment	-( )-	=	=	:=	

Basic instructions				Extended instructions	Technology		Communication		
S7-300	S7-400	S7-1200	S7-1500	**Description**	**LAD**	**FBD**	**STL** (not S7-1200)	**SCL**	**CFC** (S7-1500 only)
		✔	✔	Negate assignment	-(/)-	=	NOT		
✔	✔	✔	✔	Invert input					--ol
✔	✔	✔	✔	Reset output	-(R)	-[R]	R	nn	
✔	✔	✔	✔	Set output	S	S	S	nn	
		✔	✔	*Set bit field* *S7-400: SFC 79 SET*	*SET_BF*		*nn*	*nn*	
		✔	✔	*Reset bit field* *S7-400: SFC 89 RSET*	*RESET_BF*		*nn*	*nn*	
✔	✔	✔	✔	Set/reset flip-flop CFC: set dominant	SR		nn	nn	SR
✔	✔	✔	✔	Reset/set flip-flop CFC: reset dominant	RS		nn	nn	RS
✔	✔	✔	✔	Scan operand for positive signal edge	-(P)-	-|P|-	<Operand>; FP;	nn	
✔	✔	✔	✔	Scan operand for negative signal edge	-(N)-	-|N|-	<Operand>; FN;	nn	

Basic instructions				Extended instructions	Technology		Communication		
S7-300	S7-400	S7-1200	S7-1500	**Description**	**LAD**	**FBD**	**STL** (not S7-1200)	**SCL**	**CFC** (S7-1500 only)
		✔	✔	Set operand on positive signal edge	-(P)-	-|P|-	R_TRIG		
		✔	✔	Set operand on negative signal edge	-(N)-	-|N|-	F_TRIG		
✔	✔	✔	✔	Scan Boolean result for positive signal edge	P_TRIG		FP	nn	
✔	✔	✔	✔	Scan Boolean result for negative signal edge	N_TRIG		FN	nn	

		✔	✔	Detect positive signal edge
				SCL: Programming with two instructions is more effective:
				`posFlanke := signal and not laststate;`
				`laststate := signal;`
					R_TRIG				

		✔	✔	Detect negative signal edge
				SCL: Programming with two instructions is more effective:
				`negFlanke := not signal and not last-state;`
				`laststate := not signal;`
					F_TRIG				

✔	✔	✔	✔	Normally open contact	-||-	nn	nn	nn	
✔	✔	✔	✔	Normally closed contact	-|/|-	nn	nn	nn	

Basic instructions				Extended instructions	Technology		Communication		
S7-300	S7-400	S7-1200	S7-1500	Description	LAD	FBD	STL (not S7-1200)	SCL	CFC (S7-1500 only)
Safety functions									
✔	✔	✔	✔	Only Safety: EMERGENCY STOP up to Stop Category 1	ESTOP1				
✔	✔			Only Safety: Two-hand monitoring	TWO_HAND				
✔	✔	✔	✔	Only Safety: Two-hand monitoring with enable	TWO_H_EN				
✔	✔			Only Safety: parallel muting with two or four muting sensors	MUTING				
✔	✔	✔	✔	Only Safety: parallel muting with two or four muting sensors	MUT_P				
✔	✔	✔	✔	Only Safety: 1oo2 evaluation of two single-channel encoders combined with a discrepancy analysis	EV1oo2DI				
✔	✔	✔	✔	Only Safety: Feedback monitoring	FDBACK				
✔	✔	✔	✔	Only Safety: Safety door monitoring.	SFDOOR				

S7-300	S7-400	S7-1200	S7-1500	Description	LAD	FBD	STL (not S7-1200)	SCL	CFC (S7-1500 only)
✔	✔	✔	✔	Only Safety: Acknowledgment for simultaneous reintegration of all F-I/O/channels of the F-I/O of an F-runtime group after communication errors or F-I/O/channel errors	ACK_GL				
Times									
IEC timers									
✔	✔	✔	✔	Generate pulse	TP		TP		
✔	✔	✔	✔	Generate on-delay	TON		TON		
✔	✔	✔	✔	Generate off-delay	TOF		TOF		
		✔	✔	Time accumulator	TONR				
		✔	✔	Time accumulator (start timer)	-(TONR)-	-[TONR]-	nn	nn	
		✔	✔	Reset timer	RT	RT	RESET_TIMER		
		✔	✔	Load time duration	PT:	PT:	PRESET_TIMER		
		✔	✔	Start pulse timer	-(TP)-	-[TP]-	nn	nn	

Basic instructions	Extended instructions	Technology	Communication

S7-300	S7-400	S7-1200	S7-1500	Description	LAD	FBD	STL (not S7-1200)	SCL	CFC (S7-1500 only)
		✔	✔	Start on-delay timer	-(TON)-	-[TON]-	SD	nn	
		✔	✔	Start off-delay timer	-(TOF)-	-[TOF]-	SA	nn	
SIMATIC timers legacy									
✔	✔		✔	*Assign pulse timer parameters and start*	*S_PULSE*		*nn*	*S_PULSE*	
✔	✔		✔	*Assign extended pulse timer parameters and start*	*S_PEXT*		*nn*	*S_PEXT*	
✔	✔		✔	*Assign on-delay timer parameters and start*	*S_ODT*		*nn*	*S_ODT*	
✔	✔		✔	*Assign retentive on-delay timer parameters and start*	*S_ODTS*		*nn*	*S_ODTS*	
✔	✔		✔	*Assign off-delay timer parameters and start*	*S_OFFDT*		*nn*	*S_OFFDT*	
✔	✔		✔	*Start pulse timer*	*-(SP)*	*-[SP]*	*SP*	*nn*	
✔	✔		✔	*Start extended pulse timer*	*-(SD)*	*-[SD]*	*SD*	*nn*	
✔	✔		✔	*Enable timer*			*FR*	*nn*	
✔	✔		✔	*Load timer value*			*Ch*	*nn*	

S7-300	S7-400	S7-1200	S7-1500	Description	LAD	FBD	STL (not S7-1200)	SCL	CFC (S7-1500 only)
✔	✔		✔	*Load BCD-coded timer value*			*LC*	*nn*	
✔	✔		✔	*Reset timer*	*-(R)*	*-[R]*	*R*	*nn*	
✔	✔		✔	*Start off-delay timer*	*-(SF)*	*-[SF]*	*SF*	*nn*	
✔	✔		✔	*Start on-delay timer*	*-(SD)*	*-[SD]*	*SD*	*nn*	
✔	✔		✔	*Start retentive on-delay timer*	*-(SS)*	*-[SS]*	*SS*	*nn*	
Counters									
IEC counters									
✔	✔	✔	✔	Count up	CTU		CTU		
✔	✔	✔	✔	Count down	CTD		CTD		
✔	✔	✔	✔	Count up and down	CTUD		CTUD		
SIMATIC counters legacy									
✔	✔		✔	*Assign parameters and count up*	*S_CU*		*nn*	*S_CU*	
✔	✔		✔	*Assign parameters and count down*	*S_CD*		*nn*	*S_CD*	

Basic instructions	Extended instructions	Technology	Communication

S7-300	S7-400	S7-1200	S7-1500	Description	LAD	FBD	STL (not S7-1200)	SCL	CFC (S7-1500 only)
✔	✔		✔	*Assign parameters and count up / down*	*S_CUD*		*nn*	*S_CUD*	
✔	✔		✔	*Set counter value*	*-(SC)*	*- [SC]*	*nn*	*nn*	
✔	✔		✔	*Count up*	*-(CU)*	*-[CU]*	*CU*	*nn*	
✔	✔		✔	*Count down*	*-(CD)*	*-[CD]*	*CD*	*nn*	
✔	✔		✔	*Enable counter*			*FR*	*nn*	
✔	✔		✔	*Load counter value*			*Ch*	*nn*	
✔	✔		✔	*Load BCD-coded counter value*			*LC*	*nn*	
✔	✔		✔	*Reset counter*			*R*	*nn*	
✔	✔		✔	*Set counter*			*S*	*nn*	
Comparator operations									
✔	✔	✔	✔	Equal	CMP ==		== I/D/R	=	CMP ==
✔	✔	✔	✔	Not equal	CMP <>		<> I/D/R	<>	CMP <>

Basic instructions	Extended instructions	Technology	Communication

S7-300	S7-400	S7-1200	S7-1500	Description	LAD	FBD	STL (not S7-1200)	SCL	CFC (S7-1500 only)
✔	✔	✔	✔	Greater than or equal	CMP >=		>= I/D/R	>=	CMP >=
✔	✔	✔	✔	Less or equal	CMP <=		<= I/D/R	<=	CMP <=
✔	✔	✔	✔	Greater than	CMP >		> I/D/R	>	CMP >
✔	✔	✔	✔	Less than	CMP <		< I/D/R	<	CMP <
		✔	✔	Value within range	IN_RANGE			nn	
		✔	✔	Value outside range	OUT_RANGE			nn	
		✔	✔	Check validity	-|OK|-			nn	
		✔	✔	Check invalidity	-|NOT_OK|-			nn	
Variant									
		✔	✔	Check data type of a VARIANT tag				TypeOf	
		✔	✔	Check data type of an ARRAY element of a VARIANT tag				TypeO-fElements	
		✔	✔	Compare data type for EQUAL with the data type of a tag	EQ_Type			*)	

Basic instructions	Extended instructions	Technology	Communication

S7-300	S7-400	S7-1200	S7-1500	Description	LAD	FBD	STL (not S7-1200)	SCL	CFC (S7-1500 only)
		✔	✔	Compare data type of an ARRAY element for EQUAL with the data type of a tag	EQ_ElemType			*)	
		✔	✔	Compare data type of an indirectly addressed DB with a data type for EQUAL with a tag of type DB_ANY. Identify any data block with DB_ANY. You access a data block that is not yet available during programming.	EQ_TypeOfDB			*)	
		✔	✔	Compare data type for UNEQUAL with the data type of a tag	NE_Type			*)	
		✔	✔	Compare data type of an ARRAY element for UNEQUAL with the data type of a tag	NE_ElemType			*)	
		✔	✔	Compare data type of an indirectly addressed DB with a data type for NOT EQUAL with a tag of TYPE DB_ANY.	NE_TypeOfDB:			*)	
		✔	✔	Check for EQUALS NULL pointer	IS_NULL			*)	
		✔	✔	Check for UNEQUALS NULL pointer	NOT_NULL			*)	

S7-300	S7-400	S7-1200	S7-1500	Description	LAD	FBD	STL (not S7-1200)	SCL	CFC (S7-1500 only)

				***) Application examples for SCL:**
				`IF TypeOf(...) = INT THEN ... // corresponds to EQ_Type`
				`IF TypeOfElements(...) = INT THEN ... // corresponds to EQ_ElemType`
				`IF ... <> NULL THEN ... // corresponds to NOT_NULL`
				Instead of "=", you can also use other operators, e.g.: "<>".
				Instead of "INT", you can also use any other data types or data types that you have defined, e.g.: "REAL", "Recipe".					

		✔	✔	Check for ARRAY	IS_ARRAY				
			✔	Compare tag structured data types			CompType	=	
Math functions									
		✔	✔	Calculate	CALCULATE (SCL network in LAD/ FBD)		nn	nn	
✔	✔	✔	✔	Add	ADD		+	+	
✔	✔	✔	✔	Subtract	SUB		-	-	
✔	✔	✔	✔	Multiply	MUL		*	*	
✔	✔	✔	✔	Divide	DIV		/	/	

Basic instructions				Extended instructions	Technology				Communication
S7-300	S7-400	S7-1200	S7-1500	**Description**	**LAD**	**FBD**	**STL** (not S7-1200)	**SCL**	**CFC** (S7-1500 only)
✔	✔	✔	✔	Form absolute value Safety instruction only for S7-1200/1500	ABS		ABS		
✔	✔	✔	✔	Return remainder of division	MOD				
✔	✔	✔	✔	Create twos complement	NEG		NEGI, NEGD	nn	NEG
✔	✔	✔	✔	Create ones complement	nn		INVI, INVD	NOT	
✔	✔	✔	✔	Increment	INC			nn	
✔	✔	✔	✔	Decrement	DEC			nn	
✔	✔	✔	✔	Get minimum	MIN				
✔	✔	✔	✔	Get maximum	MAX				
✔	✔	✔	✔	Set limit value	LIMIT				
✔	✔	✔	✔	Form square	SQR				
✔	✔	✔	✔	Form square root	SQRT				
✔	✔	✔	✔	Form natural logarithm	LN				

Basic instructions				Extended instructions	Technology			Communication	
S7-300	S7-400	S7-1200	S7-1500	**Description**	**LAD**	**FBD**	**STL** (not S7-1200)	**SCL**	**CFC** (S7-1500 only)
✔	✔	✔	✔	Form exponential value	EXP				
✔	✔	✔	✔	Form sine value	SIN				
✔	✔	✔	✔	Form cosine value	COS				
✔	✔	✔	✔	Form tangent value	TAN				
✔	✔	✔	✔	Form arcsine value	ASIN				
✔	✔	✔	✔	Form arccosine value	ACOS				
✔	✔	✔	✔	Form arctangent value	ATAN				
		✔	✔	Return fraction	FRAC			FRAC	
		✔	✔	Exponentiate	EXPT		**	**	
Move									
(✔)	(✔)	✔	✔	Move value S7-300/400: Only LAD and FBD	MOVE		MOVE	:=	
✔	✔			Only Safety: Write value indirectly to an F-DB	WR_FBD				

Basic instructions	Extended instructions	Technology	Communication

S7-300	S7-400	S7-1200	S7-1500	Description	LAD	FBD	STL (not S7-1200)	SCL	CFC (S7-1500 only)
✔	✔			Only Safety: Read value indirectly from an F-DB	RD_FBD				
			✔	Only Safety: Read value from INT F-Array	RD_ARRAY_I				
			✔	Only Safety: Read value from DINT F-Array	RD_ARRAY_DI				
		✔	✔	Move data type from ARRAY of BYTE (Deserialize)	Deserialize				
		✔	✔	Move data type to ARRAY of BYTE (Serialize)	Serialize				
		✔	✔	Move block S7-400: SFC 20 BLKMOV	MOVE_BLK				
		✔	✔	Move block not interruptible S7-400: SFC 81 UBLKMOV	UMOVE_BLK				
		✔	✔	Move block	MOVE_BLK_VARIANT				
		✔	✔	Fill block	FILL_BLK				
		✔	✔	Fill block not interruptible	UFILL_BLK				

S7-300	S7-400	S7-1200	S7-1500	Description	LAD	FBD	STL (not S7-1200)	SCL	CFC (S7-1500 only)
		✔	✔	Disassemble a tag bit string data type BYTE, WORD, DWORD or LWORD into individual bits (= scatter)	SCATTER				
		✔	✔	Disassemble an ARRAY of BYTE, WORD, DWORD or LWORD into individual bits	SCATTER_BLK				
		✔	✔	Merge all bits from an ARRAY of BOOL, an anonymous STRUCT or a PLC data type exclusively with Boolean elements into a bit string data type BYTE, WORD, DWORD or LWORD (= gather)	GATHER				
		✔	✔	Merge individual bits into multiple elements of an ARRAY of BOOL, an anonymous STRUCT or a PLC data type exclusively with Boolean elements	GATHER_BLK				
		✔	✔	Swap	SWAP				

S7-300	S7-400	S7-1200	S7-1500	Description	LAD	FBD	STL (not S7-1200)	SCL	CFC (S7-1500 only)
✔			✔	With "AssignmentAttempt", you attempt to assign to a reference tag. The data type of a reference tag is specified at the time of the declaration.	?=				
ARRAY DB									
		✔	✔	Read from ARRAY data block	ReadFromArrayDB				
		✔	✔	Write to ARRAY data block	WriteToArrayDB				
		✔	✔	Read from ARRAY data block in load memory	ReadFromArrayDBL				
		✔	✔	Write to ARRAY data block in load memory	WriteToArrayDBL				
Variant									
		✔	✔	Read out VARIANT tag value	VariantGet				
		✔	✔	Write VARIANT tag value	VariantPut				

S7-300	S7-400	S7-1200	S7-1500	Description	LAD	FBD	STL (not S7-1200)	SCL	CFC (S7-1500 only)
		✔		Get number of ARRAY elements	CountOfElements				
		✔	✔	Resolve multiple symbolic tag names. Result: References to the tags.	ResolveSymbols				
		✔	✔	Write value into resolved symbol: Read the value of a tag and write it to target tag referenced by a resolved symbol.	MoveToResolvedSymbol				
		✔	✔	Read value from resolved symbol: Read the value of a tag referenced by a resolved symbol and write it to the target tag.	MoveFromResolvedSymbol				
		✔	✔	Read values from resolved symbols and write them into a memory area (Array of BYTE).	MoveResolvedSymbolsToBuffer				
		✔	✔	Read values from a memory area (array of BYTE) and write them into the resolved symbols	MoveResolvedSymbolsFromBuffer				
ARRAY [*]									
		✔	✔	Read out ARRAY low limit	LOWER_BOUND				
		✔	✔	Read out ARRAY high limit	UPPER_BOUND				

Basic instructions	Extended instructions	Technology	Communication

S7-300	S7-400	S7-1200	S7-1500	Description	LAD	FBD	STL (not S7-1200)	SCL	CFC (S7-1500 only)
Read/write access Recommendation: Symbolic programming.									
		✔	✔	Read data in little endian format			READ_LITTLE		
		✔	✔	Write data in little endian format			WRITE_LITTLE		
		✔	✔	Read data in big endian format			READ_BIG		
		✔	✔	Write data in big endian format			WRITE_BIG		
		✔	✔	*Read memory address*			*PEEK*		
		✔	✔	*Read memory bit*			*PEEK_BOOL*		
		✔	✔	*Write memory address*			*POKE*		
		✔	✔	*Write memory bit*			*POKE_BOOL*		
		✔	✔	*Write memory area*			*POKE_BLK*		

S7-300	S7-400	S7-1200	S7-1500	Description	LAD	FBD	STL (not S7-1200)	SCL	CFC (S7-1500 only)
				Legacy Recommendation: Symbolic programming					
✔	✔		✔	*Move block*	*BLKMOV*				
✔	✔		✔	*Move block not interruptible*	*UBLKMOV*				
✔	✔		✔	*Fill block*	*FILL*				
		✔	✔	*Read field; recommendation: Indexed access to an array*	*FieldRead*				
		✔	✔	*Write field; recommendation: Indexed access to an array*	*FieldWrite*				
				Conversion operations					
✔	✔	✔	✔	Convert value S7-1200/1500: Convert numerical formats and data types to other numerical formats and data types. You can find more detailed information in the information system of STEP 7.	CONVERT		xxx_TO_yyy		CONVERT
✔	✔	✔	✔	Only Safety: Convert data of data type BOOL into data of data type WORD	BO_W				

Basic instructions	Extended instructions	Technology	Communication

S7-300	S7-400	S7-1200	S7-1500	Description	LAD	FBD	STL (not S7-1200)	SCL	CFC (S7-1500 only)
✔	✔	✔	✔	Only Safety: Convert data of data type WORD into data of data type BOOL	W_BO				
✔	✔	✔	✔	Round numerical value	ROUND		RND	ROUND	
✔	✔	✔	✔	Generate next higher integer from floating-point number	CEIL		RND+	CEIL	
✔	✔	✔	✔	Generate next lower integer from floating-point number	FLOOR		RND-	FLOOR	
✔	✔	✔	✔	Truncate numerical value	TRUNC				
✔	✔	✔	✔	Scale	SCALE_X				
		✔	✔	Normalize	NORM_X				
			✔	Create a reference to a tag: "REF()" is used to specify to which tag a previously declared reference should point.	nn		nn	REF	
✔	✔	✔	✔	Convert BCD to integer (16 bit)	nn		BTI	BCD16_TO_INT	

S7-300	S7-400	S7-1200	S7-1500	Description	LAD	FBD	STL (not S7-1200)	SCL	CFC (S7-1500 only)
✔	✔	✔	✔	Convert integer (16 bit) to BCD	nn		ITB	INT_TO_ BCD16	
✔	✔	✔	✔	Convert BCD to integer (32 bit)	nn		BTD	BCD32_ TO_INT	
✔	✔	✔	✔	Convert integer (32 bit) to BCD	nn		DTB	DINT_TO_ BCD32	
✔	✔	✔	✔	Convert integer (16 bit) to integer (32 bit) S7-1500: Conversion also done implicitly	nn		ITD	INT_TO_ DINT	
✔	✔	✔	✔	Convert integer (32 bit) to floating-point number S7-1500: Conversion also done implicitly	nn		DTR	DINT_TO_ REAL	
✔	✔		✔	Create ones complement integer (16 bit) S7-1500: Conversion also done implicitly	nn		INVI	nn	
✔	✔		✔	Create ones complement double integer (32 bit) S7-1500: Conversion also done implicitly	nn		INVD	nn	
✔	✔		✔	Negate integer (16 bit)	nn		NEGI	nn	

Basic instructions | Extended instructions | Technology | Communication

S7-300	S7-400	S7-1200	S7-1500	Description	LAD	FBD	STL (not S7-1200)	SCL	CFC (S7-1500 only)
✔	✔		✔	Negate integer (32 bit)	nn		NEGD	nn	
✔	✔		✔	Negate floating-point number	nn		NEGR	nn	
✔	✔		✔	*Switch bytes in the right word of accumulator 1*	*nn*		*CAW*	*nn*	
✔	✔		✔	*Switch all bytes in accumulator 1*	*nn*		*CAD*	*nn*	
Variant instructions									
		✔	✔	Convert VARIANT to DB_ANY			VARIANT_TO_DB_ANY		
		✔	✔	Convert DB_ANY to VARIANT			DB_ANY_TO_VARIANT		

Basic instructions				Extended instructions	Technology		Communication		
S7-300	S7-400	S7-1200	S7-1500	**Description**	**LAD**	**FBD**	**STL** (not S7-1200)	**SCL**	**CFC** (S7-1500 only)
				Legacy Recommendation: Symbolic programming					
✔	✔	✔	✔	Convert the integer to a physical unit between a low limit and high limit (scaling). Standard CPU: INT in REAL F-CPU: INT in INT	SCALE		*SCALE*		
		✔	✔	Convert the integer to a physical unit between a low limit and high limit (scaling). F-CPU: INT in DINT	SCALE_D				
✔	✔		✔	*Unscale the floating-point number into physical units between a low limit and a high limit and convert it to an integer (unscaling).*	*UNSCALE*				

Basic instructions				Extended instructions	Technology		Communication		
S7-300	S7-400	S7-1200	S7-1500	**Description**	**LAD**	**FBD**	**STL** (not S7-1200)	**SCL**	**CFC** (S7-1500 only)
Program control operations									
✔	✔	✔	✔	Branch conditionally			JC	IF... THEN... ELSE...	
✔	✔	✔	✔	Branch conditionally multiple times				IF... THEN... ELSIF...	
✔	✔	✔	✔	Branch to a list element			SPL	CASE... OF...	
✔	✔	✔	✔	Run in counting loop				FOR... TO... DO...	
✔	✔	✔	✔	Run in counting loop with step width				FOR... TO... BY... DO...	
✔	✔	✔	✔	Run if condition is met, the CPU checks the condition at the start of the loop			JC	WHILE... DO...	

Basic instructions				Extended instructions	Technology			Communication	
S7-300	S7-400	S7-1200	S7-1500	**Description**	**LAD**	**FBD**	**STL** (not S7-1200)	**SCL**	**CFC** (S7-1500 only)
✔	✔	✔	✔	Run if condition is not met. The CPU checks the condition at the end of the loop, i.e. the CPU runs the loop at least once.			LOOP	REPEAT... UNTIL...	
✔	✔	✔	✔	Terminate running through the loop and start with the next run				CON-TINUE	
✔	✔	✔	✔	Exit loop immediately				EXIT	
✔	✔	✔	✔	Exit block	RET		BEU	RETURN	
		✔	✔	Organize source code				REGION... END_RE-GION	
✔	✔		✔	Conditional block end			BEB	nn	
✔	✔	✔	✔	Insert a comment section Multilingual comments: (/*...*/)	nn		//	//, (*...*), (/*...*/)	
			✔	Only SIMATIC S7-1500 Software Controller CPU 150xS: Shut down or restart Windows and the controller	SHUT_DOWN				

Basic instructions	Extended instructions	Technology	Communication

S7-300	S7-400	S7-1200	S7-1500	Description	LAD	FBD	STL (not S7-1200)	SCL	CFC (S7-1500 only)
				Jumps					
✔	✔	✔	✔	*Jump*	nn		JU	*GOTO...*	
✔	✔	✔	✔	Jump if RLO = 1	-(JMP)	-[JMP]	JC	nn	
✔	✔	✔	✔	Jump if RLO = 0	-(JMPN)	-[JMPN]	JCN	nn	
✔	✔	✔	✔	Jump label	LABEL		:	nn	
		✔	✔	Define jump list	JMP_LIST		JL	nn	
		✔	✔	Jump distributor	SWITCH			nn	
✔	✔	✔	✔	Return	-(RET)	-[RET]		nn	
✔	✔			Only Safety: Open global data block	-(OPN)	-[OPN]		nn	
✔	✔		✔	Jump if RLO = 1 and save RLO	nn		JCB	nn	
✔	✔		✔	Jump if RLO = 0 and save RLO	nn		JNB	nn	
✔	✔		✔	Jump if BR = 1	nn		JBI	nn	

S7-300	S7-400	S7-1200	S7-1500	Description	LAD	FBD	STL (not S7-1200)	SCL	CFC (S7-1500 only)
✔	✔		✔	Jump if BR = 0	nn		JNBI	nn	
✔	✔		✔	Jump if OV = 1	nn		JO	nn	
✔	✔		✔	Jump if OS = 1	nn		JOS	nn	
✔	✔		✔	Jump if the result is zero	nn		JZ	nn	
✔	✔		✔	Jump if the result is not zero	nn		JN	nn	
✔	✔		✔	Jump if the result is greater than zero	nn		JP	nn	
✔	✔		✔	Jump if the result is less than zero	nn		JM	nn	
✔	✔		✔	Jump if the result is greater than or equal to zero	nn		JPZ	nn	
✔	✔		✔	Jump if the result is less than or equal to zero	nn		JMZ	nn	
✔	✔		✔	Jump if the result is invalid	nn		JUO	nn	
✔	✔		✔	Loop	nn		LOOP	nn	

Basic instructions	Extended instructions	Technology	Communication

S7-300	S7-400	S7-1200	S7-1500	Description	LAD	FBD	STL (not S7-1200)	SCL	CFC (S7-1500 only)
				Data blocks					
✔	✔		✔	Open global data block S7-1500: only for non-optimized blocks			OPN	nn	
✔	✔		✔	Open instance data block S7-1500: only for non-optimized blocks			OPNI	nn	
✔	✔		✔	*Swap data block register*			*CDB*	*nn*	
✔	✔		✔	*Load the length of a global data block into accumulator 1*			*L DBLG*	*nn*	
✔	✔		✔	*Load the number of a global data block into accumulator 1*			*L DBNO*	*nn*	
✔	✔		✔	*Load the length of an instance data block into accumulator 1*			*L DILG*	*nn*	
✔	✔		✔	*Load the number of an instance data block into accumulator 1*			*L DINO*	*nn*	
				Code blocks					
✔	✔		✔	Call block LAD / FBD: Only for S7-300/400	CALL			nn	

S7-300	S7-400	S7-1200	S7-1500	Description	LAD	FBD	STL (not S7-1200)	SCL	CFC (S7-1500 only)
✔	✔		✔	*Conditional block call*			*CC*	*nn*	
✔	✔		✔	*Unconditional block call*			*UC*	*nn*	
Runtime control									
		✔	✔	Limit and enable password legitimation	ENDIS_PW				
✔	✔	✔	✔	Restart cycle monitoring time	RE_TRIGR				
✔	✔	✔	✔	Exit program	STP				
			✔	Only SIMATIC S7-1500 Software Controller CPU 150xS: Shut down or restart Windows and the controller	SHUT_DOWN				
		✔	✔	Get error locally	GET_ERROR				
		✔	✔	Get error ID locally	GET_ERR_ID				
✔	✔			Compress CPU memory	COMPRESS				
✔	✔			Control CiR process	CiR				
		✔	✔	Initialize all retain data	INIT_RD				

Basic instructions	Extended instructions	Technology	Communication

S7-300	S7-400	S7-1200	S7-1500	Description	LAD	FBD	STL (not S7-1200)	SCL	CFC (S7-1500 only)
✔	✔	✔	✔	Program time delay	WAIT				
✔	✔			Change protection level	PROTECT				
		✔	✔	Runtime measurement with nanosecond accuracy	RUNTIME				
✔	✔	✔	✔	Only Safety: Fail-safe acknowledgment from an operator control and monitoring system	F_ACK_OP				
Word logic operations									
✔	✔	✔	✔	Create ones complement	INVERT			NOT	INV (NOT)
✔	✔	✔	✔	Decode: set a specified bit	DECO				
✔	✔	✔	✔	Encode: Output bit number of least significant bit set in the input value	ENCO				
✔	✔	✔	✔	Select: Output a parameter as result depending on a BOOL value	SEL				
(✔)	(✔)	✔	✔	Multiplexing S7-300/400: Only SCL	MUX		nn	MUX	

Basic instructions				Extended instructions	Technology		Communication		
S7-300	S7-400	S7-1200	S7-1500	Description	LAD	FBD	STL (not S7-1200)	SCL	CFC (S7-1500 only)
		✔	✔	Demultiplex	DEMUX		nn	DEMUX	
✔	✔	✔	✔	AND logic operation word by word	AND		AW	&, AND	AND
✔	✔	✔	✔	OR logic operation word by word	OR		OW	OR	OR
✔	✔	✔	✔	EXCLUSIVE OR logic operation word by word	XOR		XOW	XOR	XOR
✔	✔	✔	✔	AND logic operation double word by double word	AND		AD	&, AND	AND
✔	✔	✔	✔	OR logic operation double word by double word	OR		OD	OR	OR
✔	✔	✔	✔	EXCLUSIVE OR logic operation double word by double word	XOR		XOD	XOR	XOR
Shift and rotate									
✔	✔	✔	✔	Rotate right	ROR				
✔	✔	✔	✔	Rotate left	ROL				
✔	✔	✔	✔	Shift right word by word	SHR		SRW	SHR	

Basic instructions	Extended instructions	Technology	Communication

S7-300	S7-400	S7-1200	S7-1500	Description	LAD	FBD	STL (not S7-1200)	SCL	CFC (S7-1500 only)
✔	✔	✔	✔	Shift left word by word	SHL		SLW	SHL	
✔	✔		✔	Shift word by word with sign			SSI	nn	
✔	✔		✔	Shift double word by double word with sign			SSD	nn	
✔	✔		✔	Shift right double word by double word			SRD	nn	
✔	✔		✔	Shift left double word by double word			SLD	nn	
✔	✔		✔	Rotate right double word by double word	SHR		RRD	SHR	
✔	✔		✔	Rotate left double word by double word	SHL		RLD	SHL	
✔	✔		✔	Rotate left by status bit CC 1			RLDA	nn	
✔	✔		✔	Rotate right by status bit CC 1			RRDA	nn	
Information on S7-400: The controllers have four accumulators. You will find only the instructions for two accumulators in the list below.									
Load									
✔	✔		✔	Load	nn		Ch	nn	

S7-300	S7-400	S7-1200	S7-1500	Description	LAD	FBD	STL (not S7-1200)	SCL	CFC (S7-1500 only)
✔	✔		✔	*Load status word in accumulator 1*			*L STW*	*nn*	
✔	✔		✔	*Load AR1 with contents of accumulator 1*			*LAR1*	*nn*	
✔	✔		✔	*Load AR1 with double word or area pointer*			*LAR1 <D>*	*nn*	
✔	✔		✔	*Load AR1 with contents of AR2*			*LAR1 AR2*	*nn*	
✔	✔		✔	*Load AR2 with contents of accumulator 1*			*LAR2*	*nn*	
✔	✔		✔	*Load AR2 with double word or area pointer*			*LAR2 <D>*	*nn*	
				Transfer					
✔	✔		✔	Transfer	nn		T	nn	
✔	✔		✔	*Transfer accumulator 1 to status word*			*T STW*	*nn*	
✔	✔		✔	*Switch AR1 and AR2*			*TAR*	*nn*	
✔	✔		✔	*Transfer AR1 to accumulator 1*			*TAR1*	*nn*	
✔	✔		✔	*Transfer AR1 to double word*			*TAR1 <D>*	*nn*	

S7-300	S7-400	S7-1200	S7-1500	Description	LAD	FBD	STL (not S7-1200)	SCL	CFC (S7-1500 only)
✔	✔		✔	*Transfer AR1 to AR2*			*TAR1 AR2*	*nn*	
✔	✔		✔	*Transfer AR2 to accumulator 1*			*TAR2*	*nn*	
✔	✔		✔	*Transfer AR2 to double word*			*TAR2 <D>*	*nn*	
Legacy									
✔	✔		✔	Implement sequencer	DRUM				
✔	✔			Implement sequencer	DRUM_X				
✔	✔		✔	Discrete control time interrupt	DCAT				
✔	✔		✔	Motor control time interrupt	MCAT				
✔	✔		✔	Compare input bits with the bits of a mask	IMC				
✔	✔		✔	Matrix scanner	SMC				
✔	✔		✔	Lead and lag algorithm	LEAD_LAG				
✔	✔		✔	Create bit pattern for seven-segment display	SEG				

S7-300	S7-400	S7-1200	S7-1500	Description	LAD	FBD	STL (not S7-1200)	SCL	CFC (S7-1500 only)
✔	✔		✔	Create tens complement	BCDCPL				
✔	✔		✔	Count number of set bits	BITSUM				
✔	✔			Time accumulator	TONR_X				
✔	✔			Save data to shift register	WSR				
✔	✔			Shift bit to shift register	SHRB				
✔	✔			*Get status bit*	*Status -||-*		*A 0V*	*nn*	
✔	✔			*Call block*	*-(CALL)*	*-[CALL]*	*UC*	*nn*	
✔	✔			*Save RLO in BR bit*	*-(SAVE)*	*-[SAVE]*	*SAVE*	*nn*	
✔	✔			*Open MCR ranges*	*-(MCR<)*	*-[MCR<]*	*MCR(*	*nn*	

Basic instructions	Extended instructions	Technology	Communication

S7-300	S7-400	S7-1200	S7-1500	Description	LAD	FBD	STL (not S7-1200)	SCL	CFC (S7-1500 only)
✔	✔			*Close MCR ranges*	*-(MCR>)*	*-[MCR>]*	*)MCR*	*nn*	
✔	✔			*Enable MCR range*	*-(MCRA)*	*-[MCRA]*	*MCRA*	*nn*	
✔	✔			*Disable MCR range*	*-(MCRD)*	*-[MCRD]*	*MCRD*	*nn*	
✔	✔			*Set bit array*	*SET*				
✔	✔			*Set byte array*	*SETI*				
✔	✔			*Reset bit array*	*RESET*				
✔	✔			*Reset byte array*	*RESETI*				
✔	✔			*Enter substitute value*	*REPL_VAL*				
✔	✔		✔	*Swap content of accumulators 1 and 2*	*nn*		*TAK*	*nn*	
✔	✔		✔	*Shift contents to the next highest accumulator*	*nn*		*PUSH*	*nn*	
✔	✔		✔	*Shift contents to the next lowest accumulator*	*nn*		*POP*	*nn*	
✔	✔		✔	*Add accumulator 1 to AR1*	*nn*		*+AR1*	*nn*	

S7-300	S7-400	S7-1200	S7-1500	Description	LAD	FBD	STL (not S7-1200)	SCL	CFC (S7-1500 only)
✔	✔		✔	*Add accumulator 1 to AR2*	*nn*		*+AR2*	*nn*	
✔	✔		✔	*Program display (null instruction)*	*nn*		*BLD*	*nn*	
✔	✔		✔	*Null instruction*	*nn*		*NOP 0*	*nn*	
✔	✔		✔	*Null instruction*	*nn*		*NOP 1*	*nn*	

Instructions in the section "Extended instructions"

Instruction groups	Page	Instruction groups	Page	Instruction groups	Page
Date and time	46	Interrupts	56	Table functions	62
String and Character	48	Alarms	58	Addressing	63
Process image	51	Diagnostics	59	File operations (file handling)	65
Distributed I/O	51	Pulse	61	R/H system	66
PROFIenergy	54	Recipes & data logging	61	Additional instructions	67
Module parameter assignment	55	Data block functions	62		

S7-300	S7-400	S7-1200	S7-1500	Description	LAD / FBD STL (not S7-1200)	SCL	CFC (S7-1500 only)
Date and time-of-day							
✔	✔		✔	Compare time tags	T_COMP*		
✔	✔	✔	✔	Convert times and extract	T_CONV*		
✔	✔	✔	✔	Add times	T_ADD*		
✔	✔	✔	✔	Subtract times	T_SUB*		
✔	✔	✔	✔	Time difference	T_DIFF*		
✔	✔		✔	Combine times	T_COMBINE*		

* SCL: Use conversion functions x_TO_y (e.g. TIME_TO_DINT), or comparator and arithmetic operators (e.g. +, -, >, <).

S7-300	S7-400	S7-1200	S7-1500	Description	LAD / FBD STL (not S7-1200)	SCL	CFC (S7-1500 only)
Clock functions							
✔	✔	✔	✔	Set time-of-day (STEP 7 V 5x: SET_CLK)	WR_SYS_T		
✔	✔	✔	✔	Read time-of-day (STEP 7 V 5x: READ_CLK)	RD_SYS_T		
		✔	✔	Read local time	RD_LOC_T		
		✔	✔	Write local time	WR_LOC_T		
	✔		☑	Synchronize slave clocks	SNC_RTCB		
✔	✔		✔	Read system time	TIME_TCK		
		✔	☑	Set time zone	SET_TIMEZONE		
✔	✔	✔	✔	Operating hours counter	RTM		
✔	✔			Set runtime meters	SET_RTM		-
✔	✔			Starting and stopping operating hours counters	CTRL_RTM		-
✔	✔			Read runtime meters	READ_RTM		-
	✔			Set time-of-day and time-of-day status	SET_CLKS		-

S7-300	S7-400	S7-1200	S7-1500	Description	LAD / FBD STL (not S7-1200)	SCL	CFC (S7-1500 only)
				Local time			
✔	✔			Calculate local time	LOC_TIME		-
✔	✔			Calculate local time from base time	BT_LT		-
✔	✔			Calculate base time from local time	LT_BT		-
✔	✔			Time-of-day interrupt, local time	S_LTINT		-
✔	✔			Set daylight saving time/standard time without time-of-day status	SET_SW		-
✔	✔			Transfer time-stamped alarms	TIMESTMP		-
	✔			Set daylight saving time/standard time with time-of-day status	SET_SW_S		-
				String and Character			
		✔	✔	Move character string	S_MOVE	:=	S_MOVE
✔	✔		✔	Compare character strings	S_COMP	=	S_COMP
✔	✔	✔	✔	Convert character string	S_CONV		-
		✔	✔	Convert character string to numerical value	STRG_VAL	STRG_...	STRG_VAL

S7-300	S7-400	S7-1200	S7-1500	Description	LAD / FBD STL (not S7-1200)	SCL	CFC (S7-1500 only)
		✔	✔	Convert numerical value to character string	VAL_STRG	..._STRG	VAL_STRG
		✔	✔	Convert character string to Array of CHAR	Strg_TO_Chars		-
		✔	✔	Convert Array of CHAR to character string	Chars_TO_Strg		-
		✔	✔	Determine the length of a character string	MAX_LEN		-
			✔	Join multiple character strings	JOIN		-
			✔	Split character array in multiple character strings	SPLIT		-
✔	✔	✔	✔	*Convert ASCII string to hexadecimal number (conversion is contained in the converting functions, e.g.: CHAR_TO_WORD)*	*HTA*		-
✔	✔	✔	✔	*Convert hexadecimal number to ASCII string*	*HTA*		-
✔	✔	✔	✔	Determine the length of a character string	LEN		
✔	✔	✔	✔	Connect character strings	CONCAT		
✔	✔	✔	✔	Read the left characters of a character string	LEFT		
✔	✔	✔	✔	Read the right characters of a character string	RIGHT		
✔	✔	✔	✔	Read the middle characters of a character string	MID		
✔	✔	✔	✔	Delete characters in a character string	DELETE		

S7-300	S7-400	S7-1200	S7-1500	Description	LAD / FBD STL (not S7-1200)	SCL	CFC (S7-1500 only)
✔	✔	✔	✔	Insert characters in a character string	INSERT		
✔	✔	✔	✔	Replace characters in a character string	REPLACE		
✔	✔	✔	✔	Find characters in a character string	FIND		
Runtime information							
		✔	✔	Read out a tag on the input parameter	GetSymbolName		-
		✔	✔	Read global name at beginning of a call path. Illustration: OB Main 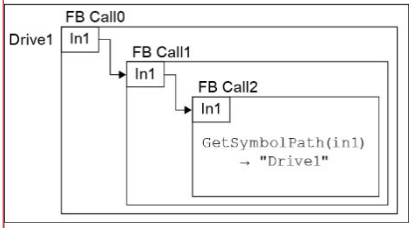 	GetInstanceName		-
		✔	✔	Read out name of the block instance	GetSymbolPath		-

S7-300	S7-400	S7-1200	S7-1500	Description	LAD / FBD STL (not S7-1200)	SCL	CFC (S7-1500 only)
		✔	✔	Query composed global name of block instance	GetInstancePath		-
		✔	✔	Read out name of block in block itself	GetBlockName		-
Process image							
	✔		✔	Update the process image inputs	UPDAT_PI		
	✔		✔	Update the process image outputs	UPDAT_PO		
✔	✔		☑	Synchronize process image inputs	SYNC_PI		
✔	✔		☑	Synchronize process image outputs	SYNC_PO		
Distributed I/O							
DP and PROFINET							
✔	✔	✔	✔	Read data record	RDREC		
✔	✔	✔	✔	Write data record	WRREC		
✔	✔	✔	✔	Read process image	GETIO		
✔	✔	✔	✔	Transfer process image	SETIO		

S7-300	S7-400	S7-1200	S7-1500	Description	LAD / FBD STL (not S7-1200)	SCL	CFC (S7-1500 only)
✔	✔	✔	✔	Read process image area	GETIO_PART		
✔	✔	✔	✔	Transfer process image area	SETIO_PART		
✔	✔	✔	✔	Receive interrupt	RALRM		
✔	✔	✔	☑	Enable/disable DP slaves	D_ACT_DP		
			☑	Control configuration of a PROFINET IO system (options handling) Enable or disable devices in order to, for example: flexibly run through or bypass production steps of a manufacturing process.	ReconfigIOSystem		
Other instructions							
✔	✔		☑	Read data record from I/O	RD_REC		-
✔	✔		☑	Write data record to I/O	WR_REC		
✔	✔	✔	✔	Read consistent data of a DP standard slave	DPRD_DAT		-
✔	✔	✔	✔	Write consistent data of a DP standard slave	DPWR_DAT		-

S7-300	S7-400	S7-1200	S7-1500	Description	LAD / FBD STL (not S7-1200)	SCL	CFC (S7-1500 only)
iDevice/iSlave							
✔		✔	☑	Receive data record	RCVREC		
✔		✔	☑	Make data record available	PRVREC		
			☑	Disable/enable DP slaves or I-devices	D_ACT_DP		-
✔				Send interrupt	SALRM		-
PROFIBUS							
✔	✔			Trigger hardware interrupt from DP standard slave	DP_PRAL		-
✔	✔		☑	Synchronize DP slaves/Freeze inputs	DPSYC_FR		
✔	✔	✔	☑	Read diagnostics data from a DP slave	DPNRM_DG		-
✔	✔		☑	Determine topology for DP master system	DP_TOPOL		-
ASi							
✔	✔			Control ASi master behavior	ASi_3422		-
✔	✔		✔	Control ASi master behavior	ASI_CTRL		-

S7-300	S7-400	S7-1200	S7-1500	Description	LAD / FBD STL (not S7-1200)	SCL	CFC (S7-1500 only)
PROFIenergy							
IO controller							
✔	✔		✔	Start and exit energy-saving mode	PE_START_END		-
✔	✔		✔	Start and exit energy-saving mode / Read out status information	PE_CMD		-
✔	✔		✔	Set switching behavior of power modules	PE_DS3_WRITE_ET200S		-
✔	✔		☑	Start and end energy-saving mode via WakeOnLan	PE_WOL		-
iDevice/iSlave							
✔		✔	☑	Control PROFIenergy commands in the iDevice	PE_I_DEV		-
✔		✔	✔	Generate negative answer to command	PE_Error_RSP		-
✔		✔	✔	Generate answer to command at start of pause	PE_Start_RSP		-
✔		✔	✔	Generate answer to command at end of pause	PE_End_RSP		-
✔		✔	✔	Generate queried energy savings modes as answer	PE_List_Modes_RSP		-

S7-300	S7-400	S7-1200	S7-1500	Description	LAD / FBD STL (not S7-1200)	SCL	CFC (S7-1500 only)
✔		✔	✔	Generate scanned energy saving data as answer	PE_Get_Mode_RSP		-
✔		✔	✔	Generate PEM status as answer	PE_PEM_Status_RSP		-
✔		✔	✔	Number of PROFIenergy commands	PE_Identify_RSP		-
✔		✔	✔	Generate supported PROFIenergy commands as answer	PE_Measurement_List_RSP		-
✔		✔	✔	Generate queried measured values as answer	PE_Measurement_Value_RSP		-
Module parameter assignment							
✔	✔		✔	Read module data record (predefined parameters)	RD_DPAR		-
✔			✔	Read data record of a module asynchronously (predefined parameters)	RD_DPARA		-
✔	✔			Transfer module data records	PARM_MOD		-

S7-300	S7-400	S7-1200	S7-1500	Description	LAD / FBD STL (not S7-1200)	SCL	CFC (S7-1500 only)
	✔		✔	Read data record from configured system data (predefined parameters)	RD_DPARM		-
✔	✔			Write module data record (dynamic parameters)	WR_PARM		-
✔	✔		☑	Transfer data record (predefined parameters)	WR_DPARM		-
Interrupts							
		✔	☑	Attach an OB to an interrupt event	ATTACH		-
		✔	☑	Detach an OB from an interrupt event	DETACH		-
Cyclic interrupt							
		✔	✔	Set cyclic interrupt parameters	SET_CINT		-
		✔	✔	Query cyclic interrupt parameters	QRY_CINT		-

S7-300	S7-400	S7-1200	S7-1500	Description	LAD / FBD STL (not S7-1200)	SCL	CFC (S7-1500 only)
Time-of-day interrupt							
✔	✔		✔	Set time-of-day interrupt	SET_TINT		-
		✔	✔	Set time-of-day interrupt "LOCAL": Refer SDT to local or system time. ACTIVATE: When does the OB apply the settings.	SET_TINTL		-
✔	✔	✔	✔	Cancel time-of-day interrupt	CAN_TINT		-
✔	✔	✔	✔	Enable time-of-day interrupt	ACT_TINT		-
✔	✔	✔	✔	Query status of time-of-day interrupt	QRY_TINT		-
Time-delay interrupt							
✔	✔	✔	✔	Start time-delay interrupt	SRT_DINT		-
✔	✔	✔	✔	Cancel time-delay interrupt	CAN_DINT		-
✔	✔	✔	✔	Query time-delay interrupt status	QRY_DINT		-

S7-300	S7-400	S7-1200	S7-1500	Description	LAD / FBD STL (not S7-1200)	SCL	CFC (S7-1500 only)
Synchronous error events							
✔	✔		✔	Mask synchronous error events	MSK_FLT		-
✔	✔		✔	Unmask synchronous error events	DMSK_FLT		-
✔	✔		✔	Read out event status register	READ_ERR		-
Asynchronous error event							
✔	✔		✔	Disable interrupt event	DIS_IRT		-
✔	✔		✔	Enable interrupt event	EN_IRT		-
✔	✔	✔	✔	Delay execution of higher priority interrupts and asynchronous error events	DIS_AIRT		-
✔	✔	✔	✔	Enable execution of higher priority interrupts and asynchronous error events	EN_AIRT		-
	✔			Trigger multicomputing interrupt	MP_ALM		-

S7-300	S7-400	S7-1200	S7-1500	Description	LAD / FBD STL (not S7-1200)	SCL	CFC (S7-1500 only)
Alarms							
			✔	Generate program alarm with associated values	Program_Alarm		-
			✔	Output alarm status	Get_AlarmState		-
			✔	Read pending alarms	Get_Alarm		-
			✔	Determine the number of alarms for which your CPU currently has sufficient memory.	Get_AlarmResources		-
			✔	Acknowledge alarms	Ack_Alarms		-
		✔	✔	Generate user diagnostic alarms that are entered in the diagnostics buffer	Gen_UsrMsg		-
✔	✔			Write a user diagnostics event to the diagnostic buffer and send to logged on participants	WR_USMSG		-
✔	✔			*Generate alarm messages*	*ALARM_S*		-
✔	✔			Generate alarm message with acknowledgment	ALARM_SQ		-
✔	✔			Create permanently acknowledged PLC alarms	ALARM_D		-

Basic instructions | **Extended instructions** | Technology | Communication

S7-300	S7-400	S7-1200	S7-1500	Description	LAD / FBD STL (not S7-1200)	SCL	CFC (S7-1500 only)
✔	✔			Create acknowledgeable PLC alarms	ALARM_DQ		-
✔	✔			Determine acknowledgment status of the last ALARM_SQ incoming alarm	ALARM_SC		-
	✔			Report up to eight signal changes	NOTIFY_8P		-
	✔			Create PLC alarms without associated values for eight signals	ALARM_8		-
	✔			Create PLC alarms with associated values for eight signals	ALARM_8P		-
	✔			Report a signal change	NOTIFY		-
	✔			Create PLC alarms with acknowledgment display	INTERRUPT		-
	✔			Send archive data	AR_SEND		-

S7-300	S7-400	S7-1200	S7-1500	Description	LAD / FBD STL (not S7-1200)	SCL	CFC (S7-1500 only)
Other instructions							
✔	✔			Read out dynamically assigned system resources	READ_SI		-
✔	✔			Delete dynamically assigned system resources	DEL_SI		-
	✔			Enable PLC alarms	EN_MSG		-
	✔			Disable PLC alarms	DIS_MSG		-
Diagnostics							
✔	✔		✔	Read current OB start information	RD_SINFO		-
			✔	Read runtime statistics	RT_INFO		
	✔			Determine OB program runtime	OB_RT		-
	✔			Determine current connection status	C_DIAG		-
✔	✔			Read system status list	RDSYSST		-
		✔	✔	Read LED status	LED		-

S7-300	S7-400	S7-1200	S7-1500	Description	LAD / FBD STL (not S7-1200)	SCL	CFC (S7-1500 only)
		✔	✔	Reading identification and maintenance data	Get_IM_Data		
		✔	✔	Read out the name of a module	Get_Name		
		✔	✔	Read information of an IO device	GetStationInfo		
		✔	✔	Read out checksum	GetChecksum		-
		✔	✔	Read out information about the memory card	GetSMCinfo		-
			✔	Read out status of the CPU clock • Is time synchronization via NTP server enabled? • Time synchronization missed? • Is automatic adjustment for daylight saving time enabled?	GetClockStatus		-
		✔	☑	Read module status information in an IO system	DeviceStates		-
		✔	✔	Read module status information of a module	ModuleStates		-
			✔	Generate diagnostic information	GEN_DIAG		-
		✔	✔	Read diagnostic information	GET_DIAG		-

S7-300	S7-400	S7-1200	S7-1500	Description	LAD / FBD STL (not S7-1200)	SCL	CFC (S7-1500 only)
Pulse							
		✔		Pulse width modulation	CTRL_PWM		-
		✔		Pulse train output, output a pulse sequence with specified frequency	CTRL_PTO		-
Recipes & data logging							
Recipe functions							
		✔	✔	Export recipe, as of V17	RecipeExport		-
		✔	✔	Import recipe, as of V17	RecipeImport		-
Data logging							
		✔	☑	Create data log	DataLogCreate		-
		✔	☑	Open data log	DataLogOpen		-
		✔	☑	Write data log	DataLogWrite		-
		✔	☑	Empty data log	DataLogClear		-

S7-300	S7-400	S7-1200	S7-1500	Description	LAD / FBD STL (not S7-1200)	SCL	CFC (S7-1500 only)
		✔	☑	Close data log	DataLogClose		-
		✔	☑	Delete data log	DataLogDelete		-
		✔	☑	Data log in new file	DataLogNewFile		-
Data block functions							
✔	✔			Create data block	CREAT_DB		-
		✔	✔	Create data block	CREATE_DB		-
✔	✔			Create data block in the load memory	CREA_DBL		-
✔	✔	✔	✔	Read from data block in the load memory	READ_DBL		-
✔	✔	✔	✔	Write to data block in the load memory	WRIT_DBL		-
		✔	✔	Read data block attribute	ATTR_DB		-
✔	✔			Delete data block	DEL_DB		-
		✔	✔	Delete data block	DELETE_DB		-

S7-300	S7-400	S7-1200	S7-1500	Description	LAD / FBD STL (not S7-1200)	SCL	CFC (S7-1500 only)
✔	✔			Test data block	TEST_DB		-
Table functions							
✔	✔			Add value to table	ATT		-
✔	✔			Output first value of the table	FIFO		-
✔	✔			Find value in table	TBL_FIND		-
✔	✔			Output last value in table	LIFO		-
✔	✔			Execute table instruction	TBL		-
✔	✔			Run value from table	TBL_WRD		-
✔	✔			Link value logically with table element and save	WRD_TBL		-
✔	✔			Calculate standard deviation	DEV		-
✔	✔			Correlated data tables	CDT		-
✔	✔			Link tables	TBL_TBL		-

S7-300	S7-400	S7-1200	S7-1500	Description	LAD / FBD STL (not S7-1200)	SCL	CFC (S7-1500 only)
✔	✔			Collect/distribute table data	PACK		-
Addressing							
		✔	✔	Determine hardware identifier from slot	GEO2LOG		-
		✔	✔	Determine slot from hardware identifier	LOG2GEO		-
			✔	Determine the hardware identifier from addressing of STEP 7 V5.5 SPx	LOG2MOD		-
		✔	✔	Determine hardware identifier from an IO address	IO2MOD		-
		✔	✔	Determine the IO addresses from the hardware identifier	RD_ADDR		-
Other instructions for addressing							
✔	✔		✔	*S7-300/400: Determine start address from slot* *S7-1500: Determine hardware identifier from slot. Exists only for compatibility reasons, not recommended*	*GEO_LOG*		-

S7-300	S7-400	S7-1200	S7-1500	Description	LAD / FBD STL (not S7-1200)	SCL	CFC (S7-1500 only)
✔	✔		✔	*S7-300/400: Determine slot from a logical address* *S7-1500: Determine slot from hardware identifier. Exists only due to compatibility, not recommended*	*LOG_GEO*		-
✔	✔		✔	*S7-300/400: Determine all logical addresses from a logical address* *S7-1500: Determine the logical addresses from the hardware identifier*	*RD_LGADR*		-
✔	✔		✔	*S7-300/400: Determine logical basic address from slot and offset in the user data address area* *S7-1500: Determine hardware identifier from slot and offset in the user data address area*	*GADR_LGC*		-
✔	✔		✔	*S7-300/400: Determine slot and offset in the user database from a logical address* *S7-1500: Determine slot from hardware identifier. Exists only due to compatibility, not recommended*	*LGC_GADR*		-

S7-300	S7-400	S7-1200	S7-1500	Description	LAD / FBD STL (not S7-1200)	SCL	CFC (S7-1500 only)
File operations (file handling)							
		✔	☑	Read data from a binary file from the memory card, the binary file has a serialized format/byte array	FileReadC		-
		✔	☑	Write data to a binary file on the memory card	FileWriteC		-
			✔	Delete existing file on the memory card	FileDelete		-
R/H system							

			RH	• Request system state "SYNCUP".
				• Make backup CPU to primary CPU.
				• Set backup CPU to "STOP".
				• Enable or disable the SYNCUP sytem state. The disable applies:
				  • Until you disable the lock again
				  • Until the S7-1500R/H goes to STOP
				• Query if "SYNCUP" is active
					RH_CTRL		-

			RH	Specify redundancy ID of the primary CPU 1 = The CPU with redundancy ID 1 is the primary CPU. 2 = The CPU with redundancy ID 2 is the primary CPU.	RH_GetPrimaryID		-

S7-300	S7-400	S7-1200	S7-1500	Description	LAD / FBD STL (not S7-1200)	SCL	CFC (S7-1500 only)
Other instructions							
iSlave							
✔				Set own network address as DP iSlave	SET_ADDR		-
Safety extensions							
		✔	✔	Acknowledge warning message for exceeding the F-cycle time	ACK_FCT_WARN		-

Instructions in the section "Technology"

Instruction groups	Page	Instruction groups	Page	Instruction groups	Page
Counting (and measuring)	68	Motion Control	72	S7-300C functions	80
PID Control	69	Time-driven inputs/outputs	80	Function modules	81

T in the S7-300 column means: Instruction for the S7-300 Technology CPU S7-31xT. The operating principle of the instructions can differ between S7-300 and S7-1500. Instructions solely for the S7-31xT are not listed in the table. The Technology CPU S7-31xT cannot be programmed in the TIA Portal.

T in the S7-1500 column means: Instruction for the Technology CPU S7-15xyT.

S7-300	S7-400	S7-1200	S7-1500	Description	LAD / FBD / STL (not S7-1200) / SCL
Counting (and measuring)					
		✔		Control high-speed counters	CTRL_HSC
		✔		Extended high-speed counters Period duration measurement with system data type 331	CTRL_HSC_EXT
			✔	High-speed counter for counting and measuring	High_Speed_Counter
			✔	Detect position with SSI absolute encoder	SSI_Absolut_Encoder

S7-300	S7-400	S7-1200	S7-1500	Description	LAD / FBD / STL (not S7-1200) / SCL
PID Control					
Compact PID					
		✔	✔	Universal PID controller with integrated tuning for proportional-action actuators	PID_Compact
		✔	✔	PID controller with integrated self-optimization for valves and actuators	PID_3Step
		✔	✔	Temperature controller with integrated optimization for temperature processes	PID_Temp
PID basic function					
✔	✔		✔	Continuous-action controller	CONT_C
✔	✔		✔	Step controller for integrating actuators	CONT_S
✔	✔		✔	Pulse generator for proportional-acting actuators S7-1500: also as CFC instruction	PULSEGEN
✔	✔		✔	Continuous temperature controller with pulse generator	TCONT_CP

S7-300	S7-400	S7-1200	S7-1500	Description	LAD / FBD / STL (not S7-1200) / SCL
✔	✔		✔	Temperature controller for integrating actuators	TCONT_S
✔	✔			Automatic optimization for a continuous-action controller	TUN_EC
✔	✔			Automatic optimization for a step controller	TUN_ES
				Integrated system functions	
✔				Continuous-action controller	CONT_C_SF
✔				Step controller for integrating actuators	CONT_S_SF
✔				Pulse generator for proportional-acting actuators	PULSGEN_SF
				Auxiliary functions	
		✔	✔	Mapping an input value to an output value using a characteristic curve. The characteristic curve is a polyline with maximum 50 interpolation points with linear interpolation.	Polyline
		✔	✔	Distribute input value to multiple output areas	SplitRange
		✔	✔	Limiting the change speed of a signal	RampFunction

S7-300	S7-400	S7-1200	S7-1500	Description	LAD / FBD / STL (not S7-1200) / SCL
		✔	✔	Implement time-dependent profile	RampSoak
✔		✔	✔	First-order proportional transfer element Application: - Low-pass filter - Delay element for smoothing signal jumps - Process simulation block for a closed control circuit within a CPU Parameters: Gain, Lag	Filter_PT1
✔		✔	✔	Second-order proportional transfer element Application: - Low-pass filter - Delay element for smoothing signal jumps - Process simulation block for a closed control circuit within a CPU Parameters: Gain, TimeConstant, Damping	Filter_PT2

S7-300	S7-400	S7-1200	S7-1500	Description	LAD / FBD / STL (not S7-1200) / SCL
✔		✔	✔	First-order differentiator Application: - High-pass filter - Differentiator to calculate the derivative of a signal - Feedforward control Parameters: Td, Lag	Filter_DT1
Motion Control					
T		✔	☑	Enable/disable axis/technology object	MC_Power
T		✔	☑	Acknowledge interrupts, restart axis/technology object	MC_Reset
T		✔	☑	Home axis/technology object, set home position	MC_Home
T		✔	☑	Halt axis	MC_Halt
T		✔	☑	Position axis absolutely	MC_MoveAbsolute
T		✔	☑	Position axis relatively	MC_MoveRelative
T		✔	☑	Move axis at set velocity/speed	MC_MoveVelocity
		✔	☑	Move axis in jog mode	MC_MoveJog

S7-300	S7-400	S7-1200	S7-1500	Description	LAD / FBD / STL (not S7-1200) / SCL
		✔		Run axis commands as movement sequence	MC_CommandTable
		✔		Change Dynamics settings for the axis	MC_ChangeDynamic
		✔		Write tag of the positioning axis	MC_WriteParam
		✔		Continuously read motion data of a positioning axis	MC_ReadParam
T			☑	Position axis overlapping	MC_MoveSuperImposed
T			T	Set alternative encoder as active encoder	MC_SetSensor
T			☑	Stop axis and prevent new motion jobs Stop all motions of an axis and prevent new motion jobs. The axis brakes to a standstill and remains switched on.	MC_STOP
			☑	Set bits in the control words (STW) 1 and/or 2 of the PROFIdrive telegram.	MC_SetAxisSTW

S7-300	S7-400	S7-1200	S7-1500	Description	LAD / FBD / STL (not S7-1200) / SCL
T			☑	Enable and disable hardware limit switches during runtime. The changed state is effective immediately and remains effective until the next restart of the technology object.	MC_WriteParameter
T				Read parameters from technology object	MC_ReadParameter
			T	Save absolute encoder adjustment for device replacement	MC_SaveAbsoluteEncoderData:
Output cam, cam track, measuring input					
T			☑	Start one-time measuring	MC_MeasuringInput
			☑	Start cyclic measuring	MC_MeasuringInputCyclic
			☑	Cancel active measuring job	MC_AbortMeasuringInput

S7-300	S7-400	S7-1200	S7-1500	Description	LAD / FBD / STL (not S7-1200) / SCL
T			☑	Enable/disable output cam	S7-1500: MC_OutputCam (distance output cams and time-based output cams) S7-300T: MC_CamSwitch (distance output cam) S7-300T: MC_CamSwitchTime (time-based output cam)
T			☑	Enable/disable cam track	MC_CamTrack
Synchronous motion - Gearing/camming					
T			☑	Start gearing	MC_GearIn
			T	Start velocity synchronous operation	MC_GearInVelocity
T			T	Start gearing with specified synchronous positions	S7-1500T: MC_GearInPos S7-300T: MC_GearIn
T			T	Relative shift of master value on the following axis	S7-1500T: MC_PhasingRelative S7-300T: MC_Phasing

S7-300	S7-400	S7-1200	S7-1500	Description	LAD / FBD / STL (not S7-1200) / SCL
T			T	Absolute shift of master value on the following axis	S7-1500T: MC_PhasingAbsolute S7-300T: MC_Phasing
			T	Relative shift of following value on the following axis	MC_OffsetRelative
			T	Absolute shift of following value on the following axis	MC_OffsetAbsolute
T			T	Desynchronize gearing	MC_GearOut
			T	Start camming	MC_CamIn
			T	Simulate synchronous operation	MC_SynchronizedMotionSimulation
T			T	Desynchronize camming	MC_CamOut
			T	Specify additive leading value, active leading value + additive leading value = effective leading value	MC_LeadingValueAdditive

S7-300	S7-400	S7-1200	S7-1500	Description	LAD / FBD / STL (not S7-1200) / SCL
				Cam	
T			T	Interpolate cam	S7-1500T: MC_InterpolateCam S7-300T: MC_CamInterpolate
T			T	Read master value of a cam	S7-1500T: MC_GetCamLeadingValue S7-300T: MC_GetCamPoint
T			T	Read out slave value of a cam	S7-1500T: MC_GetCamFollowingValue S7-300T: MC_GetCamPoint
			T	Copy calculated cam elements to a cam	MC_CopyCamData
				MotionIn	
			T	Set motion setpoints for velocity and acceleration	MC_MotionInVelocity
			T	Set motion setpoints for position, velocity and acceleration	MC_MotionInPosition
			T	Specify superimposed motion setpoints	MC_MotionInSuperimposed:

S7-300	S7-400	S7-1200	S7-1500	Description	LAD / FBD / STL (not S7-1200) / SCL
				Torque data	
			☑	Specify additive torque	MC_TorqueAdditive
			☑	Set high and low torque limits	MC_TorqueRange
T			☑	Enable and disable force/torque limit / fixed stop detection	MC_TorqueLimiting
				Motion (kinematics)	
T			T	Interrupt motion execution	MC_GroupInterrupt
T			T	Continue motion execution	MC_GroupContinue
T			T	Stop motion	MC_GroupStop
T			T	Position kinematics absolutely with linear path motion	MC_MoveLinearAbsolute
T			T	Relative positioning of kinematics with linear path motion	MC_MoveLinearRelative
T			T	Position kinematics absolutely with circular path motion	MC_MoveCircularAbsolute
T			T	Relative positioning of kinematics with circular path motion	MC_MoveCircularRelative

S7-300	S7-400	S7-1200	S7-1500	Description	LAD / FBD / STL (not S7-1200) / SCL
			T	Absolute positioning of kinematics in synchronous "point-to-point" motion	MC_MoveDirectAbsolute
			T	Relative positioning of kinematics in synchronous "point-to-point" motion	MC_MoveDirectRelative
			T	Enable conveyor tracking. Take along object coordinate system (OCS) with a technology object positioning axis/external sensor/leading axis proxy	MC_TrackConveyorBelt
T			T	Start/end simulation of kinematics	S7-1500T: MC_Kinematics-MotionSimulation S7-300T: MC_GroupSyncCon-veyorBelt
Zones					
T			T	Define workspace zone	S7-1500T: MC_DefineWorkspace-Zone S7-300T: MC_ZoneCheck

S7-300	S7-400	S7-1200	S7-1500	Description	LAD / FBD / STL (not S7-1200) / SCL
T			T	Define kinematics zone	S7-1500T: MC_DefineKinematicsZone S7-300T: MC_ZoneCheck
T			T	Activate workspace zone	S7-1500T: MC_SetWorkspaceZoneActive S7-300T: MC_ZoneCheck
T			T	Deactivate workspace zone	S7-1500T: MC_SetWorkspaceZoneInactive S7-300T: MC_ZoneCheck
T			T	Activate kinematics zone	S7-1500T: MC_SetKinematicsZoneActive S7-300T: MC_ZoneCheck
T			T	Deactivate kinematics zone	S7-1500T: MC_SetKinematicsZoneInactive S7-300T: MC_ZoneCheck
Tools					
			T	Re-define tool	MC_DefineTool
			T	Change active tool	MC_SetTool

S7-300	S7-400	S7-1200	S7-1500	Description	LAD / FBD / STL (not S7-1200) / SCL
Coordinate systems					
			T	Redefine object coordinate systems	MC_SetOcsFrame
			T	Transform axis coordinates to Cartesian coordinates without moving kinematics.	MC_KinematicsTransformation
			T	Transform Cartesian coordinates to axis coordinates - without moving kinematics.	MC_InverseKinematicsTransfor-mation
Time-driven inputs/outputs					
HSP	HSP		☑	Synchronize TIO modules	TIO_SYNC
HSP	HSP		☑	Read in process input signals with time stamps	TIO_IOLink_IN
HSP	HSP		☑	Read in edges at digital input and associated time stamps	TIO_DI
HSP	HSP		☑	Time-controlled output of process output signals	TIO_IOLink_OUT
HSP	HSP		☑	Output edges time-controlled at digital output	TIO_DQ
S7-300C functions					
✔				Position with analog output	ANALOG

S7-300	S7-400	S7-1200	S7-1500	Description	LAD / FBD / STL (not S7-1200) / SCL
✔				Position with digital output	DIGITAL
✔				Control counter	COUNT
✔				Control frequency measurement	FREQUENC
✔				Control pulse width modulation	Pulse
Function modules					
✔	✔			Diverse instructions for FM modules Counting / Positioning / Cam Control / PID Control / Temp Control	✔

The following pages provide an overview of the details and usage of important functions of open communication and S7 communication.

Open communication

Definition: Open exchange of data via PROFINET/Industrial Ethernet between SIMATIC controllers or between SIMATIC controllers and third-party devices. Example of suitable interfaces:

- Integrated PROFINET/Industrial Ethernet interfaces of controllers
- PROFINET/Industrial Ethernet interfaces of communication modules

Due to the open and flexible communication, the size of a sent data package is not automatically known to the receiver.

Connection-oriented with TCP or ISO-on-TCP

With TCP or ISO-on-TCP you establish a connection between the communication partners. TCP or ISO-on-TCP ensures the arrival of the data at the receiver through a transport acknowledgment. In the event of data loss the controller automatically resends the data.

To ensure that the data has arrived completely in the application of the receiver with TCP, you must determine:

1. Determine the size of the data package in the sender.
2. Transfer the size of the data package to the receiver.
3. Evaluate the information in the receiver.

Connection-free with UDP

You send data packets to recipients via UDP without establishing a dedicated connection. The controller cannot detect data loss. UDP offers the following transmission options:

- Transfer to a specific partner - Unicast
- Transfer to a specific group of partners - Multicast; e.g. Multicast via defined Multicast addresses 224.0.1.0.
- Transfer to all - Broadcast

S7-300/400:	S7-1200	S7-1500	Instruction	Protocols	Property of the data transfer	Data package size	Application and Application example
✔	✔	✔	TSEND/TRCV	TCP or ISO-on-TCP	Reliable with acknowledgment	<= 64 KB Exception S7-1200: <= 8 KB	Exchange large data volumes with acknowledgment. FOR EXAMPLE: Send data block with measured value logs to any network node. Secure connections by means of exchange of certificates. Implementation of TCP-based protocols, e.g. FTP(s), MQTT, HTTP(S). Application examples: HTTP: https://support.industry.siemens.com/cs/document/109763879/sending-and-receiving-messages-with-messenger-services-as-demonstrated-with-telegram-?dti=0&lc=en-DE MQTT: https://support.industry.siemens.com/cs/document/109748872/use-the-simatic-controller-as-an-mqtt-client?dti=0&lc=en-DE
	✔	✔	TSEND_C/TRCV_C (Connection establishment and termination are integrated)				
	✔	✔		UDP	Fast, without acknowledgment		Distribute data without acknowledgment. FOR EXAMPLE: Distribute position data quickly to many devices. An exact calculation of the limits is available in the controller manuals.
(✔)	✔	✔	TUSEND/TURCV (not S7-300)			Max. 2048 bytes	

S7 communication

Definition: SIMATIC-homogeneous data exchange between SIMATIC CPUs via PROFIBUS or PROFINET/Industrial Ethernet. The S7 communication can route data between PROFINET and PROFIBUS through a controller. With S7 communication, you connect existing S7-300/400 to S7-1200/1500 or migrate existing systems to S7-1200/1500. Recommendation: Use open communication for data exchange between S7-1200/1500 and thus the possibilities of common Ethernet standards.

Coordinated data transmission with BSEND and BRCV

BSEND sends data to an instruction of the type BRCV in a partner controller. Since BSEND and BRCV coordinate the data transfer, BSEND/BRCV transport the largest amount of data of all the configured S7 connections. BSEND segments the data area to be sent and sends each segment individually to the partner. BRCV acknowledges the acceptance of the sent segment. When BRCV has acknowledged the receipt of the complete data area, you can start a new send job BSEND.

Uncoordinated data transmission with USEND and URCV

USEND sends data to an instruction of the type URCV in a partner controller. URCV does not acknowledge the receipt of the data. The data transfer is not coordinated with the partner controller. This means that USEND can overwrite received data before URCV has written all the data to the target area. If USEND overwrites data, the receiver outputs an error message.

S7-300/400:	S7-1200	S7-1500	Instruction	Operating state of partner controller	Property of the data transfer	Guaranteed user data size for specified partner controller	Application	Notes
✔	✔	☑	GET	RUN or STOP	Reliable with acknowledgment	<= 64 KB S7-300: 160 bytes S7-400: 400 bytes S7-1200: 160 bytes S7-1500: 880 bytes Exception S7-1200: <= 8 KB	Accessing data in the partner controller without any programming. For example, read operating data.	You have to use data blocks with absolute addressing. Symbolic addressing is not possible. You must also enable this service in the CPU configuration in the "Protection" area.
✔			GET_S					
✔	✔	☑	PUT				Changing data in the partner controller without any programming. For example, write parameters in a data block and change a recipe.	
✔			PUT_S					
✔		☑	BSEND/BRCV	RUN		S7-300 CPs: 32768 S7-300: 65534 bytes S7-400: 65534 bytes S7-1500: 65534 bytes, optimized: 65535 bytes	Exchange large amounts of data. For example, send data block with measured value logs to a SCADA system for further evaluation.	Coordinated transmission (see above)
✔		☑	USEND/URCV		Fast, without acknowledgment	S7-300: 160 bytes S7-400: 440 bytes S7-1500: 920 bytes	Control multiple controllers, or send data to multiple controllers. For example, distribute actual values of a sensor to several controllers.	Uncoordinated transmission (see above)
✔			USEND_S/ URCV_S					

Overview of connection types

Automatic connections

For basic communication, e.g. controller for the programming device for engineering or for the HMI, the system automatically reserves connections.

Programmed connections

Programmed connections are very flexible. Use TSEND_C and TRCV_C for communication. The system automatically establishes and terminates the connection. Alternatively, for SIMATIC S7-300/400 use the TCON, TDISCON, TSEND, and TRCV instructions. Use programmed connections, e.g.for sporadic connections.

- Communication resources are free again after the connection establishment.
- Establish and terminate programmed connections in the user program in RUN.

Configured connections

If the connection is interrupted, the controller automatically restores the connection. Create the connection in the network view of SIMATIC STEP 7 and configure the connection.

- Connection resources remain permanently occupied.
- Connection establishment in STOP

The table shows you the dependency of the connection type on the protocol.

Connection type	PG	HMI	TCP	ISO-on-TCP	UDP	ISO	Modbus TCP	FDL	S7 Communication
Automatically	X	X	-	-	-	-	-	-	-
Programmed	-	-	X	X	X	-	X	-	-
Configured	-	X	X	X	X	X	X	X	X

Instructions in the section "Communication"

Instruction groups	Page
PROFINET and PROFIBUS	88
S7 communication	88
Open User Communication	90
OPC UA	92
Web server	95

Instruction groups	Page
Fail-safe HMI Panels (only in the safety program)	95
Modbus TCP	96
Communications processors	97
S7-300C functions	104
Communication with iSlave/iDevice	105

Instruction groups	Page
PROFINET CBA	105
MPI communication	105
TeleService	106

S7-300	S7-400	S7-1200	S7-1500	Description	LAD / FBD	STL (not S7-1200)	SCL
PROFINET and PROFIBUS							
✔	✔	✔	✔	Only Safety: Fail-safe sending of data via PROFIBUS DP/PROFINET IO	SENDDP		
✔	✔	✔	✔	Only Safety: Fail-safe receipt of data via PROFIBUS DP/PROFINET IO	RCVDP		
S7 communication							
✔	✔	✔	☑	*Read data from a remote CPU* *Example of an application: Integrating SIMATIC S7-1500 into an already existing system with SIMATIC S7-300.*	*GET*		
✔	✔	✔	☑	*Write data to a remote CPU* *Example of an application: Integrating SIMATIC S7-1500 into an already existing system with SIMATIC S7-300.*	*PUT*		

S7-300	S7-400	S7-1200	S7-1500	Description	LAD / FBD	STL (not S7-1200)	SCL
✔	✔		☑	Send data uncoordinated to a partner (URCV) S7-1500: also as CFC instruction	USEND		
✔	✔		☑	Receive data uncoordinated from a partner (USEND) S7-1500: also as CFC instruction	URCV		
✔	✔		☑	Send data in segments to a partner (BRCV) S7-1500: also as CFC instruction	BSEND		
✔	✔		☑	Receive data in segments from a partner (BSEND) S7-1500: also as CFC instruction	BRCV		
	✔			Initiate a warm or cold restart in a remote device	START		
	✔			Transition a remote device to STOP state	STOP		
	✔			Initiate a restart in a remote device.	RESUME		
	✔			Query the status of a remote partner	STATUS		
	✔			Receive remote device status change	USTATUS		
	✔			Query the status of connection that belongs to an SFB instance	CONTROL		
	✔			Send data to printer	PRINT		

S7-300	S7-400	S7-1200	S7-1500	Description	LAD / FBD	STL (not S7-1200)	SCL
✔				Query connection status	C_CNTRL		
✔	✔			Only Safety: Fail-safe sending of data via S7 connections	SENDS7		
✔	✔			Only Safety: Fail-safe receipt of data via S7 connections	RCVS7		
				Other instructions	Note: "S" stands for short since only one parameter is possible		
✔	✔			Read data from a remote CPU	GET_S		
✔	✔			Write data to a remote CPU	PUT_S		
✔	✔			Send data uncoordinated	USEND_S		
✔	✔			Receive data uncoordinated	URCV_S		
Open User Communication							
Compact instructions (..._C) Connect and Disconnect are integrated							
		✔	✔	Manage communication connection and send data via Ethernet or Profibus S7-1500: also as CFC instruction	TSEND_C		

S7-300	S7-400	S7-1200	S7-1500	Description	LAD / FBD	STL (not S7-1200)	SCL
		✔	✔	Manage communication connection and receive data via Ethernet or Profibus S7-1500: also as CFC instruction	TRCV_C		
		✔	☑	Manage communication connection and transfer email. S7-1500R/H: Possible up to and including V 4.0.	TMAIL_C		
			☑	Modify NTP server address, read and modify communication parameters: - DNS Hostname, DNS Domainname, DNS Server "addresses": - DHCP ClientId - IP Suite (IP Address, Subnet Mask, Default Gateway or Default Router)	CommConfig		
Other instructions							
✔	✔	✔	✔	Establish communication connection S7-1500: also as CFC instruction	TCON		
✔	✔	✔	✔	Terminate communication connection S7-1500: also as CFC instruction	TDISCON		
✔	✔	✔	✔	Send data via communication connection S7-1500: also as CFC instruction	TSEND		

Basic instructions | Extended instructions | Technology | **Communication**

S7-300	S7-400	S7-1200	S7-1500	Description	LAD / FBD	STL (not S7-1200)	SCL
✔	✔	✔	✔	Receive data via communication connection S7-1500: also as CFC instruction	TRCV		
		✔	✔	Resetting the connection S7-1500: also as CFC instruction	T_RESET		
		✔	✔	Check the connection S7-1500: also as CFC instruction	T_DIAG		
		✔	☑	Configure interface S7-1500: also as CFC instruction	T_CONFIG		
		✔	✔	Preparing and changing the communication connection. FOR EXAMPLE: Request connection ID, specify connection properties.	TCONSettings		
✔	✔			Program-controlled IP and connection configuration via SEND/RECEIVE	IP_CONFIG		
✔	✔	✔	✔	Send data via Ethernet (UDP)	TUSEND		
✔	✔	✔	✔	Receive data via Ethernet (UDP)	TURCV		
✔	✔			Change IP configuration parameters	IP_CONF		
✔	✔			Swap data using FETCH and WRITE via TCP	FW_TCP		

S7-300	S7-400	S7-1200	S7-1500	Description	LAD / FBD	STL (not S7-1200)	SCL
✔	✔			Swap data using FETCH and WRITE via ISO-on-TCP	FW_IOT		
OPC UA							
OPC UA server							
		✔	☑	Query to operating system whether the server method was called and provision of the input parameters for processing the method.	OPC_UA_ServerMethodPre		
		✔	☑	Transferring information to the operating system about the status of method execution and whether the output parameters of the method are valid.	OPC_UA_ServerMethodPost		

S7-300	S7-400	S7-1200	S7-1500	Description	LAD / FBD	STL (not S7-1200)	SCL
OPC UA client							
				Schematic flow:			
				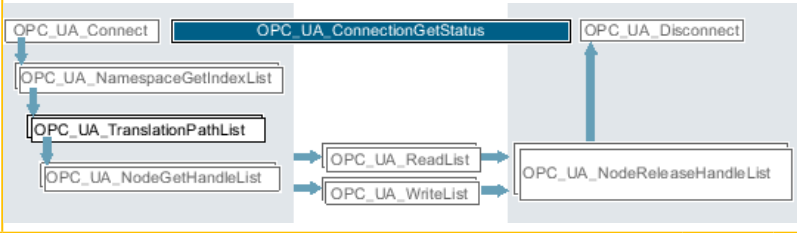			
Preparing data exchange, establishing a session							
		☑		Establish connection.	OPC_UA_Connect		
		☑		Request the current indexes of the namespaces in an OPC UA server	OPC_UA_NamespaceGetIndex-List		
		☑		Register PLC tags with an OPC UA server, get handles for read and write access	OPC_UA_NodeGetHandleList		

S7-300	S7-400	S7-1200	S7-1500	Description	LAD / FBD	STL (not S7-1200)	SCL
			☑	Determine NodeIds (node parameters) from tag names (BrowseName).	OPC_UA_TranslatePathList		
			☑	Register OPC UA method with an OPC UA server	OPC_UA_MethodGetHandleList		
				Data exchange/data access			
			☑	Read values from PLC tags; V18: access the OPC UA address space of the local CPU, e.g., to read out diagnostic information via the local OPC UA server and edit this in the user program.	OPC_UA_ReadList		
			☑	Write new values in PLC tags; V18: " Set the SourceTimestamp and StatusCode of the OPC UA nodes of the user-defined Server_Interfaces in addition to the DataValue. It is now possible to transmit the time of the last value change via OPC UA.	OPC_UA_WriteList		
			☑	Call method	OPC_UA_MethodCall		
			☑	Set up session and read values from PLC tags	OPC_UA_ReadList_C		
			☑	Set up session and write values to PLC tags	OPC_UA_WriteList_C		
			☑	Set up session and call method	OPC_UA_MethodCall_C		

S7-300	S7-400	S7-1200	S7-1500	Description	LAD / FBD	STL (not S7-1200)	SCL
Ending data exchange, ending a session							
			☑	Terminate connection to the OPC UA server	OPC_UA_Disconnect		
			☑	Enable handles for read and write access	OPC_UA_NodeReleaseHandleList		
			☑	Enable handles for method calls	OPC_UA_MethodReleaseHandleList		
Diagnostics							
			☑	Read connection status and determine quality of a connection	OPC_UA_ConnectionGetStatus		
OPC UA: CP 443-1 OPC UA							
	✔			Establish connection.	UA_Connect		
	✔			Request the current indexes of the namespaces in an OPC UA server	UA_NamespaceGetIndex		
	✔			Register PLC tags with an OPC UA server, get handles for read and write access	UA_NodeGetHandleList		
	✔			Reading out the data from nodes of the connected server using the list of node handles	UA_ReadList		

S7-300	S7-400	S7-1200	S7-1500	Description	LAD / FBD	STL (not S7-1200)	SCL
	✔			Writing the data in nodes of the connected server using the list of node handles	UA_WriteList		
	✔			Register PLC tags with an OPC UA server, get handles for read and write access	UA_NodeReleaseHandleList		
	✔			Terminate connection to the OPC UA server	UA_Disconnect		
Web server							
✔	✔	✔	☑	Synchronizing user-defined web pages	WWW		
Fail-safe HMI panels (only in the safety program)							
✔	✔	✔	✔	For Mobile Panel 277 F IWLAN: Communication with connected device via PROFIsafe	F_FB_MP		
✔	✔	✔	✔	For Mobile Panel 277 F IWLAN: Managing of up to 4 panels in the effective range	F_FB_RNG_4		
✔	✔		✔	For Mobile Panel 277 F IWLAN: Managing of up to 16 panels in the effective range	F_FB_RNG_16		
✔	✔	✔	✔	For Mobile Panels of the second generation: Communication with connected device via PROFIsafe	F_FB_KTP_		

S7-300	S7-400	S7-1200	S7-1500	Description	LAD / FBD	STL (not S7-1200)	SCL
✔	✔	✔	✔	For Mobile Panels of the second generation: Managing of panels in the effective range	F_FB_ KTP_RNG		
Modbus TCP							
		✔	✔	Communicate via PROFINET as Modbus TCP client Also supports the Modbus function 23: Write data to the Modbus server and read data from the Modbus server.	MB_CLIENT		
		✔	✔	Communicate via PROFINET as Modbus TCP server	MB_SERVER		
		✔	✔	Communicate redundantly via PROFINET as MODBUS TCP client	MB_RED_CLIENT		
		✔	✔	Communicate redundantly via PROFINET as a MODBUS TCP server	MB_RED_SERVER		
✔	✔			Establish communication between a CPU with integrated PN interface and a partner that supports the Modbus/TCP protocol.	MODBUSPN		
✔	✔			Connection management	TCP_COMM		
✔	✔			Communicate via Ethernet as Modbus TCP client	MOD_CLI		
✔	✔			Communicate via Ethernet as Modbus TCP server	MOD_SRV		

S7-300	S7-400	S7-1200	S7-1500	Description	LAD / FBD	STL (not S7-1200)	SCL
Communications processors Not for S7-1500 Software Controller CPU 150xS							
Point-to-Point or PtP communication S7-300/400: Commands for ET 200SP CM PtP							
✔	✔	✔	✔	Configure PtP communication port S7-300/400: Only if ET 200SP CM PtP is used	Port_Config		
✔	✔	✔	✔	Configure PtP sender	Send_Config		
✔	✔	✔	✔	Configure PtP recipient	Receive_Config		
✔	✔	✔	✔	Configure 3964 (R) protocol	P3964_Config		
✔	✔	✔	✔	Send data	Send_P2P		
✔	✔	✔	✔	Receive data	Receive_P2P		
✔	✔	✔	✔	Delete receive buffer	Receive_Reset		
✔	✔	✔	✔	Read status	Signal_Get		

Basic instructions | Extended instructions | Technology | Communication

S7-300	S7-400	S7-1200	S7-1500	Description	LAD / FBD	STL (not S7-1200)	SCL
✔	✔	✔	✔	Set accompanying signals	Signal_Set		
✔	✔	✔	✔	Get advanced functions	Get_Features		
✔	✔	✔	✔	Set advanced functions	Set_Features		
				Instructions with lower memory requirements, but also less functional scope.	Recommendation: Use the instructions specified above. You cannot apply the instructions decentrally in an ET 200.		
		✔		Configure communication parameters dynamically	PORT_CFG		
		✔		Configure serial transmission parameters dynamically	SEND_CFG		
		✔		Configure serial receive parameters dynamically	RCV_CFG		
		✔		Transmit send buffer data	SEND_PTP		
		✔		Enable receive messages	RCV_PTP		
		✔		Delete receive buffer	RCV_RST		
		✔		Query RS-232 signals	SGN_GET		

S7-300	S7-400	S7-1200	S7-1500	Description	LAD / FBD	STL (not S7-1200)	SCL
		✔		Set RS-232 signals	SGN_SET		
USS communication S7-300/400: Commands for ET200SP CM PtP							
		✔		Edit communication via USS network	USS_PORT		
✔	✔	✔	✔	Communication via USS network (16 drives)	USS_Port_Scan		
			✔	Communication via USS network (31 drives)	USS_Port_Scan_31		
		✔		Prepare and display data for the drive	USS_DRIVE		
✔	✔	✔	✔	Data exchange with the drive (16 drives)	USS_Drive_Control		
			✔	Data exchange with the drive (31 drives)	USS_Drive_Control_31		
		✔		Read out parameters from the drive	USS_RPM		
✔	✔	✔	✔	Read data from drive (16 drives)	USS_Read_Param		
			✔	Read data from drive (31 drives)	USS_Read_Param_31		

S7-300	S7-400	S7-1200	S7-1500	Description	LAD / FBD	STL (not S7-1200)	SCL
		✔		Change parameters in the drive	USS_WPM		
✔	✔	✔	✔	Change data in drive (16 drives)	USS_Write_Param		
			✔	Change data in drive (31 drives)	USS_Write_Param_31		
MODBUS (RTU) S7-300/400: Commands for ET200SP CM PtP							
✔	✔	✔	✔	Configure communication module for Modbus	Modbus_Comm_Load		
✔	✔	✔	✔	Communicate as Modbus master	Modbus_Master		
✔	✔	✔	✔	Communicate as Modbus slave	Modbus_Slave		
				Instructions with lower memory requirements, but also less functional scope.	Recommendation: Use the instructions specified above. You cannot apply the instructions decentrally with a CM or in an ET 200.		
		✔		Configure port on the PtP module for Modbus RTU	MB_COMM_LOAD		
		✔		Communicate via the PtP port as Modbus master	MB_MASTER		

S7-300	S7-400	S7-1200	S7-1500	Description	LAD / FBD	STL (not S7-1200)	SCL
		✔		Communicate via the PtP port as Modbus slave	MB_SLAVE		
Point-to-point connection: CP 340							
✔				Receive data	P_RCV		
✔				Send data	P_SEND		
✔				Output alarm text with up to 4 tags to printer	P_PRINT		
✔				Delete receive buffer	P_REST		
✔				Read accompanying signals at the RS-232C interface	V24_STAT_340		
✔				Write accompanying signals at the RS-232C interface	V24_SET_340		
Point-to-point connection: CP 341							
✔				Receive or provide data	P_RCV_RK		
✔				Send or fetch data	P_SND_RK		

S7-300	S7-400	S7-1200	S7-1500	Description	LAD / FBD	STL (not S7-1200)	SCL
✔				Output alarm text with up to 4 tags to printer	P_PRT341		
✔				Read accompanying signals at the RS-232C interface	V24_STAT		
✔				Write accompanying signals at the RS-232C interface	V24_SET		
Point-to-point connection: CP 440							
	✔			Receive data	RECV_440		
	✔			Send data	SEND_440		
	✔			Delete receive buffer	RES_RECV		
Point-to-point connection: CP 441							
	✔			Read accompanying signals at the RS-232C interface	V24_STAT_441		
	✔			Write accompanying signals at the RS-232C interface	V24_SET_441		
MODBUS slave (RTU)							
✔	✔			Modbus slave instruction for CP 341	MODB_341		

S7-300	S7-400	S7-1200	S7-1500	Description	LAD / FBD	STL (not S7-1200)	SCL
✔	✔			Modbus slave instruction for CP 441	MODB_441		
				MODBUS: CP 343-1, CP 443-1			
✔	✔			Establish communication between a CP and a partner that supports the OPEN MODBUS/TCP protocol	MODBUSCP		
✔	✔			Communicate as Modbus client	MB_CPCLI		
✔	✔			Communicate as Modbus server	MB_CPSRV		
				ET 200S serial interface ("S_" stands for "serial")			
✔	✔		✔	Receive data	S_RCV		
✔	✔		✔	Send data	S_SEND		
✔	✔		✔	Read accompanying signals at the RS-232C interface	S_VSTAT		
✔	✔		✔	Write accompanying signals at the RS-232C interface	S_VSET		
✔	✔		✔	Set data flow control using XON/XOFF	S_XON		
✔	✔		✔	Set data flow control using RTS/CTS	S_RTS		

S7-300	S7-400	S7-1200	S7-1500	Description	LAD / FBD	STL (not S7-1200)	SCL
✔	✔		✔	Configure data flow control via automatic Configure operation of the RS-232C accompanying signals	S_V24		
✔	✔		✔	Modbus slave instruction for ET 200S 1SI	S_MODB		
✔	✔		☑	Send data to a USS slave	S_USST		
✔	✔		☑	Receive data from a USS slave	S_USSR		
✔	✔		☑	Initialize USS	S_USSI		
SIMATIC NET CP							
Open User Communication							
✔	✔			Passes data to the CP for transfer via a configured connection	AG_SEND		
✔	✔			Passes jobs to the CP for accepting received data	AG_RECV		
✔	✔			Locks data exchange via a connection with FETCH/WRITE	AG_LOCK		
✔	✔			Enable external access to user memory areas of the controller. Data exchange is then possible with FETCH/WRITE.	AG_UNLOCK		
✔	✔			Diagnostics of connections	AG_CNTRL		

S7-300	S7-400	S7-1200	S7-1500	Description	LAD / FBD	STL (not S7-1200)	SCL
✔	✔			Connection diagnostics, connection establishment, ping request	AG_CNTEX		
				PROFIBUS DP			
✔	✔			Data transfer to the CP as DP master or DP slave	DP_SEND		
✔	✔			Data receipt from CP as DP master or DP slave	DP_RECV		
✔	✔			Request of diagnostics information	DP_DIAG		
✔	✔			Transfer of control information to the PROFIBUS CP	DP_CTRL		
				PROFINET IO			
✔	✔			Data passing to the CP as IO controller or IO device	PNIO_SEND		
✔	✔			Data receipt from CP as IO controller or IO device	PNIO_RECV		
✔	✔			Read data record or write data record in IO controller	PNIO_RW_REC		
✔	✔			Alarm evaluation through CP343-1 as IO controller	PNIO_ALARM		

S7-300	S7-400	S7-1200	S7-1500	Description	LAD / FBD	STL (not S7-1200)	SCL
				PROFIenergy			
✔	✔			Triggering or ending an energy saving pause	PE_START_END_CP		
✔	✔			Extended triggering or ending of an energy saving pause	PE_CMD_CP		
✔	✔			Handling of commands from the IO controller in the PROFIenergy device	PE_I_DEV_CP		
✔	✔			Transfer of the switch setting from power modules to ET 200S	PE_DS3_Write_ET200_CP		
				Other instructions			
✔	✔			Use of a logical trigger for ERPC communication	LOGICAL_TRIGGER		
✔	✔		☑	Setup of FTP connections from and to an FTP server	FTP_CMD		
✔	✔			Transfer connection data from configurations DB to CP	IP_CONFIG		
				GPRSComm: CP 1242-7			
		✔		Establish connection via GSM network	TC_CON		
		✔		Terminate connection via GSM network	TC_DISCON		

S7-300	S7-400	S7-1200	S7-1500	Description	LAD / FBD	STL (not S7-1200)	SCL
		✔		Send data via the GSM network	TC_SEND		
		✔		Receive data via the GSM network	TC_RECV		
		✔		Transfer configuration data to CP	TC_CONFIG		
S7-300C functions							
ASCII, 3964®							
✔				Send data (ASCII, 3964(R))	SEND_PTP_300C		
✔				Fetch data (ASCII, 3964(R))	RCV_PTP_300C		
✔				Reset input buffer (ASCII, 3964(R))	RES_RCVB_300C		
RK 512							
✔				Send data (RK 512)	SEND_RK_300C		
✔				Fetch data (RK 512)	FETCH_RK_300C		
✔				Receive and provide data (RK 512)	SERVE_RK_300C		

S7-300	S7-400	S7-1200	S7-1500	Description	LAD / FBD	STL (not S7-1200)	SCL
Communication with iSlave/iDevice							
✔	✔			Read data from a communication partner within the local S7 station	I_GET		
✔	✔			Write data to a communication partner within the local S7 station	I_PUT		
✔	✔			Abort a connection to a communication partner within the local S7 station	I_ABORT		
PROFINET CBA							
✔	✔			Update the inputs of the user program interface	PN_IN		
✔	✔			Update the outputs of the user program interface	PN_OUT		
✔	✔			Release DP interconnections	PN_DP		
MPI communication							
Note: "X_" stands for the MPI interface Note: "X_" stands for the MPI interface							
✔	✔			Send data to a communication partner outside the local S7 station	X_SEND		
✔	✔			Receive data from a communication partner outside the local S7 station	X_RCV		

S7-300	S7-400	S7-1200	S7-1500	Description	LAD / FBD	STL (not S7-1200)	SCL
✔	✔			Read data from a communication partner outside the local S7 station	X_GET		
✔	✔			Write data to a communication partner outside the local S7 station	X_PUT		
✔	✔			Abort an existing connection to a communication partner outside the local S7 station	X_ABORT		
TeleService							
		✔		Transfer email	TM_MAIL		
✔	✔			Establish remote connection to programming device/PC	PG_DIAL		
✔	✔			Establish remote connection to AS	AS_DIAL		
✔	✔			Send text (SMS) message	SMS_SEND		
✔	✔			Transfer email	AS_MAIL		

Appendix "Optional instructions"

S7-300	S7-400	S7-1200	S7-1500	Description	LAD / FBD	STL (not S7-1200)	SCL
SIMATIC Ident							
✔	✔	✔	✔	Read data from transponder	Read		
✔	✔	✔	✔	Read out data from code reading system	Read_MV		
✔	✔	✔	✔	Reset reader	Reset_Reader		
✔	✔	✔	✔	Set program at code reading system	Set_MV_Program		
✔	✔	✔	✔	Write data to the transponder	Write		
Status queries							
✔	✔	✔	✔	Read out status of the reader	Reader_Status		
✔	✔	✔	✔	Read out status of the transponder	Tag_Status		
Extended functions							
✔	✔	✔	✔	Load the configuration data to the reader	Config_Download		
✔	✔	✔	✔	Back up configuration data from the reader	Config_Upload		

Optional instructions

S7-300	S7-400	S7-1200	S7-1500	Description	LAD / FBD	STL (not S7-1200)	SCL
✔	✔	✔	✔	Detect transponder population	Inventory		
✔	✔	✔	✔	Read out data of the TID memory of a transponder	Read_TID		
✔	✔	✔	✔	Read out UID of an HF transponder	Read_UID		
✔	✔	✔	✔	Switch on/off antenna of RF300 readers	Set_ANT_RF300		
✔	✔	✔	✔	Set UHF parameters in the reader	Set_Param		
✔	✔	✔	✔	Write EPC ID of a UHF transponder	Write_EPC_ID		
✔	✔	✔	✔	Ident function for trained users with command transfer in a data structure	Advanced_CMD		
✔	✔	✔	✔	Complex Ident function for experts with all commands and possibilities	Ident_Profile		
Legacy							
✔	✔	✔		Read out data of the EPC memory of a transponder	Read_EPC_Mem		
✔	✔	✔	✔	Write EPC memory of a UHF transponder	Write_EPC_Mem		

Optional instructions

S7-300	S7-400	S7-1200	S7-1500	Description	LAD / FBD	STL (not S7-1200)	SCL
✔	✔	✔	✔	Switch on/off antennas of RF620R/RF630R	Set_ANT_RF600		
✔	✔	✔	✔	Reset MOBY D reader	Reset_MOBY_D		
✔	✔	✔	✔	Reset MOBY U reader	Reset_MOBY_U		
✔	✔	✔	✔	Reset MV code reading device	Reset_MV		
✔	✔	✔	✔	Reset RF200 reader	Reset_RF200		
✔	✔	✔	✔	Reset RF300 reader	Reset_RF300		
✔	✔	✔	✔	Reset RF600 reader	Reset_RF600		
✔	✔	✔	✔	Reset function for experts allows universally adjustable parameters	Reset_Univ		
Energy Suite							
		✔	✔	Calculate operating-mode-related energy data of machines and systems for uniform efficiency evaluation according to measuring regulation	EnS_EEm_Calc		
		✔	✔	Create efficiency protocol in CSV format on the SIMATIC memory card of the CPU according to measuring regulation	EnS_EEm_Report		

S7-300	S7-400	S7-1200	S7-1500	Description	LAD / FBD	STL (not S7-1200)	SCL
				SINAMICS			
		✔	✔	Cyclic control of SINAMICS as basic positioner	TO_BasicPos		
		✔	✔	Cyclic control of SINAMICS as basic positioner with standard telegram 1111; Position-controlled axis	SinaPos		
		✔	✔	Cyclic control of SINAMICS with standard telegram 1; speed-controlled axis	SinaSpeed		
		✔	✔	Acyclic read/write of max. 16 parameters from/on the SINAMICS inverter	SinaPara		
		✔	✔	Acyclic read/write a parameter from/on the SINAMICS inverter	SinaParaS		
		✔	✔	Control feed unit of a SINAMICS S120 via standard telegram 370	SinaInfeed		

Cause Effect Matrix

S7-1200	S7-1500	Description	CEM
General			
✔	✔	Add output	✔
✔	✔	Add input	✔
✔	✔	Invert pin	✔
Cause instructions			
Bit logic operations			
✔	✔	AND logic operation	&
✔	✔	OR logic operation	>=1
✔	✔	EXCLUSIVE OR logic operation	X
✔	✔	Assignment	=
Comparator operations			
✔	✔	Equal	CMP ==
✔	✔	Not equal	CMP <>

S7-1200	S7-1500	Description	CEM
✔	✔	Greater than or equal	CMP >=
✔	✔	Less or equal	CMP <=
✔	✔	Greater than	CMP >
✔	✔	Less than	CMP <
		Times	
✔	✔	Delay activation	OnDelay
✔	✔	Delay deactivation	OffDelay
✔	✔	Activate for a limited time	Pulse
		Effect instructions	
✔	✔	With "Assignment" you set an operand	✔
✔	✔	Set output	S
✔	✔	Reset output	R

Cause Effect Matrix

S7-1200	S7-1500	Description	CEM
Intersection actions			
✔	✔	Set as long as the cause is active	✔
✔	✔	Set permanently to 1	S
✔	✔	Set permanently to 0	R

Siemens AG
Digital Industries
Postfach 48 48
90026 Nuremberg
GERMANY

https://www.siemens.com/automation

Subject to change without prior notice.
A5E33285102-AJ
© Siemens AG 2022

SIEMENS

Security with SIMATIC controllers

STEP 7 / SIMATIC WinAC/S7-1200/ S7-1500

https://support.industry.siemens.com/cs/ww/en/view/90885010

Siemens Industry Online Support

Legal information

Use of application examples

Application examples illustrate the solution of automation tasks through an interaction of several components in the form of text, graphics and/or software modules. The application examples are a free service by Siemens AG and/or a subsidiary of Siemens AG ("Siemens"). They are non-binding and make no claim to completeness or functionality regarding configuration and equipment. The application examples merely offer help with typical tasks; they do not constitute customer-specific solutions. You yourself are responsible for the proper and safe operation of the products in accordance with applicable regulations and must also check the function of the respective application example and customize it for your system.
Siemens grants you the non-exclusive, non-sublicensable and non-transferable right to have the application examples used by technically trained personnel. Any change to the application examples is your responsibility. Sharing the application examples with third parties or copying the application examples or excerpts thereof is permitted only in combination with your own products. The application examples are not required to undergo the customary tests and quality inspections of a chargeable product; they may have functional and performance defects as well as errors. It is your responsibility to use them in such a manner that any malfunctions that may occur do not result in property damage or injury to persons.

Disclaimer of liability

Siemens shall not assume any liability, for any legal reason whatsoever, including, without limitation, liability for the usability, availability, completeness and freedom from defects of the application examples as well as for related information, configuration and performance data and any damage caused thereby. This shall not apply in cases of mandatory liability, for example under the German Product Liability Act, or in cases of intent, gross negligence, or culpable loss of life, bodily injury or damage to health, non-compliance with a guarantee, fraudulent non-disclosure of a defect, or culpable breach of material contractual obligations. Claims for damages arising from a breach of material contractual obligations shall however be limited to the foreseeable damage typical of the type of agreement, unless liability arises from intent or gross negligence or is based on loss of life, bodily injury or damage to health. The foregoing provisions do not imply any change in the burden of proof to your detriment. You shall indemnify Siemens against existing or future claims of third parties in this connection except where Siemens is mandatorily liable.
By using the application examples you acknowledge that Siemens cannot be held liable for any damage beyond the liability provisions described.

Other information

Siemens reserves the right to make changes to the application examples at any time without notice. In case of discrepancies between the suggestions in the application examples and other Siemens publications such as catalogs, the content of the other documentation shall have precedence.
The Siemens terms of use (https://support.industry.siemens.com) shall also apply.

Security information

Siemens provides products and solutions with Industrial Security functions that support the secure operation of plants, systems, machines and networks.
In order to protect plants, systems, machines and networks against cyber threats, it is necessary to implement – and continuously maintain – a holistic, state-of-the-art industrial security concept. Siemens' products and solutions constitute one element of such a concept.
Customers are responsible for preventing unauthorized access to their plants, systems, machines and networks. Such systems, machines and components should only be connected to an enterprise network or the Internet if and to the extent such a connection is necessary and only when appropriate security measures (e.g. firewalls and/or network segmentation) are in place.
For additional information on industrial security measures that may be implemented, please visit https://www.siemens.com/industrialsecurity.
Siemens' products and solutions undergo continuous development to make them more secure. Siemens strongly recommends that product updates are applied as soon as they are available and that the latest product versions are used. Use of product versions that are no longer supported, and failure to apply the latest updates may increase customer's exposure to cyber threats.
To stay informed about product updates, subscribe to the Siemens Industrial Security RSS Feed at: https://www.siemens.com/industrialsecurity.

© Siemens AG 2022 All rights reserved

Table of contents

Legal information **2**

1 Minimizing risk through security **4**

1.1 Security strategies 4

1.2 Implementation of strategies as solutions 5
1.2.1 Strengthen a sense of responsibility 5
1.2.2 The Siemens protection concept: "Defense in depth" 6
1.2.3 Security management 8

1.3 Differentiation and differences 9

2 Security mechanisms on the S7 CPU **10**

2.1 Secure communication 11
2.1.1 Overview 11
2.1.2 Secure PG/HMI communication 13
2.1.3 Secure Open User Communication (OUC) 15
2.1.4 Secure OPC UA communication 15

2.2 Access protection 16
2.2.1 On-site access restriction (S7-1500) 16
2.2.2 Project access protection 17
2.2.3 Online access and function restriction 18

2.3 Block protection 20
2.3.1 Know-how protection 20
2.3.2 Copy protection 21
2.3.3 Write protection 22

2.4 CPU integrity protection 23
2.4.1 Protection of confidential PLC configuration data 23
2.4.2 Firmware signature 25

2.5 Additional CPU protection measures 25

3 Security mechanisms on the S7 CPs **27**

3.1 Stateful inspection firewall 27

3.2 Data encryption via VPN 28

3.3 NAT/NAPT (address translation) 28

3.4 Secure IT functions 29
3.4.1 File Transfer Protocol (FTP) 29
3.4.2 Network Time Protocol (NTP) 30
3.4.3 Hypertext Transfer Protocol (HTTP) 30
3.4.4 Simple Network Management Protocol (SNMP) 31

4 Appendix **32**

4.1 Service and support 32

4.2 Industry Mall 33

4.3 Links and literature 33

4.4 Change documentation 34

© Siemens AG 2022 All rights reserved

1 Minimizing risk through security

Increasing networking and the use of technologies traditionally associated with the "office world" in automation facilities increase the need for security. It is not enough to simply offer superficial and limited protection, because attacks from the outside can occur on several levels. Optimal protection requires a deep awareness of security.

1.1 Security strategies

Motivation

Top priority is given in automation engineering to the maintaining production and process control. Any measures taken to prevent the propagation of security risks must not have a negative impact in this context. A satisfactory security strategy implementation should ensure that only authenticated users can perform authorized (permitted) operator inputs on authenticated devices using the operator input options assigned to them. These operator inputs should use only defined and planned access paths in order to ensure reliable production or coordination during a job without endangering people, the environment, the product, the goods being coordinated, or the company's business.

Strategies

Proceeding from these principles, a security concept encompasses general defense strategies that are intended to defend against the following attacks:

- Reduction of availability (e.g. "denial of service")
- Circumvention of specific security mechanisms (e.g. "man in the middle")
- Deliberate operator error using permitted actions (e.g. following password theft)
- Maloperations as a result of non-configured user access rights
- Data espionage (e.g. to find out formulas and trade secrets or discover how plants and their security mechanisms work)
- Data tampering (e.g. to make alarm messages appear innocuous)
- Deletion of data (e.g. deletion of log files to cover up attacks)

Siemens' defense strategy uses defense-in-depth mechanisms.

Defense in depth

The concept of defense in depth implies layers of security and detection, even on single-station systems. It possesses the following characteristics:

- Attackers are faced with breaking through or bypassing each layer without being detected.
- A flaw in one layer of the architecture can be protected by capabilities in other layers.
- System security becomes a set of layers within the overall network security structure.

© Siemens AG 2022 All rights reserved

1.2 Implementation of strategies as solutions

1.2.1 Strengthen a sense of responsibility

Successful implementation of the security strategies in the form of security solutions in automation facilities can only be accomplished when all parties involved cooperate with a awareness of shared responsibility. These parties primarily include:

- Manufacturers (development, system testing, security testing)
- Configuration engineers and integrators (design, setup, factory acceptance test)
- Owners (operation and administration)

These strategies and their implementation must be pursued and updated across the entire lifecycle of a plant (from initial tendering, planning and design to migration and finally to eventual decommissioning of the plant).

The following aspects make it possible for the security concept to achieve its intended effect in automation facilities:

- Use of stable, fault-tolerant and system-tested products possessing baseline hardening (IP hardening) and predefined security settings, and which are specially designed for industrial use
- A cutting-edge configuration that uses current techniques and standards, allowing for a plant design that is adapted to the customer's security needs
- Careful and responsible operation of plants and components according to their potential applications as defined by the manufacturer

© Siemens AG 2022 All rights reserved

1.2.2 The Siemens protection concept: "Defense in depth"

Siemens operates on the "defense in depth" strategy to achieve its required security objectives. This strategy follows the approach of a multi-layered security model consisting of the following components:

- Plant security
- Network security
- System integrity

Figure 1-1 The "defense in depth" concept

The advantage of this strategy is that an attacker first needs to overcome multiple security mechanisms in order to cause damage. The security requirements of each of the layers can be tailored individually.

The Siemens plant security solution

Plant security prevents unauthorized persons from gaining physical access to critical components using a number of different methods. This starts with conventional building access and extends to securing sensitive areas with identity cards or access cards.

Comprehensive security monitoring leads to transparency with regard to the security status of production facilities. Thanks to continuous analyses and correlations of existing data and through comparison of these data with threat indicators, security-relevant events can be detected and classified according to risk factors.

The Siemens network security solution

If a network segment contains controllers or other intelligent devices that have little or no intrinsic protection, the only other option is to provide these devices a secure network environment. This is most easily done with special routers or gateways. These create security with integrated industrial-strength firewalls, and are themselves protected in the process. Additional security comes from segmenting individual subnets, for example by using the cell security concept or a demilitarized zone (DMZ). The security-related segmentation of the plant network into individually protected automation cells minimizes risks and increases security at the same time. The cells are divided and the devices assigned according to communication and protection requirements. Data transmission can be encrypted using "virtual private networks"

© Siemens AG 2022 All rights reserved

(VPN). In this way, data can be protected from espionage and manipulation. The communication partners are securely authenticated.

Readme

References

You can find an overview document on this topic in Siemens Industry Online Support (article ID: 92651441):

https://support.industry.siemens.com/cs/ww/en/view/92651441

The Siemens solution for system integrity

To safeguard system integrity, it is important to minimize weak points in PC systems and on the controller level. Siemens implements this requirement with the following solutions:

- Use of antivirus and whitelisting software
- Maintenance and update processes
- User authentication for machine or plant operators
- Access protection mechanisms are integrated into automation components
- Protection of the program code with know-how protection, copy protection and passwords

Readme

References

You can find an overview document on this topic in Siemens Industry Online Support (article ID: 92605897):

https://support.industry.siemens.com/cs/ww/en/view/92605897

© Siemens AG 2022 All rights reserved

1.2.3 Security management

The basis for the design and realization of an industrial security solution is the implementation of expedient, overarching security management. Security management is a process which encompasses the following four essential steps:

- Risk analysis with definition of risk minimization measures: These measures have to be defined depending on the determined threats and risks for the plant.
- Definition of guidelines and coordination of organizational measures
- Coordination of technical measures
- Systematic security management process with regular or event-dependent repetition of a risk analysis

Security management forms an essential component of an industrial security concept for addressing security-related aspects of an automation solution – whether for a single machine, a subsystem or a complete plant. Since the risk environment of an automation solution changes over the lifecycle independent of the solution's actual function, the question at hand is rather one of a security management process. The goal of such a process is to attain and uphold the necessary security level of an automation solution. Establishing a security management process also ensures, for example, that the risk analysis entailed by the process only implements appropriate risk minimization countermeasures. Such a process could look like the following:

Figure 1-2 Security management process

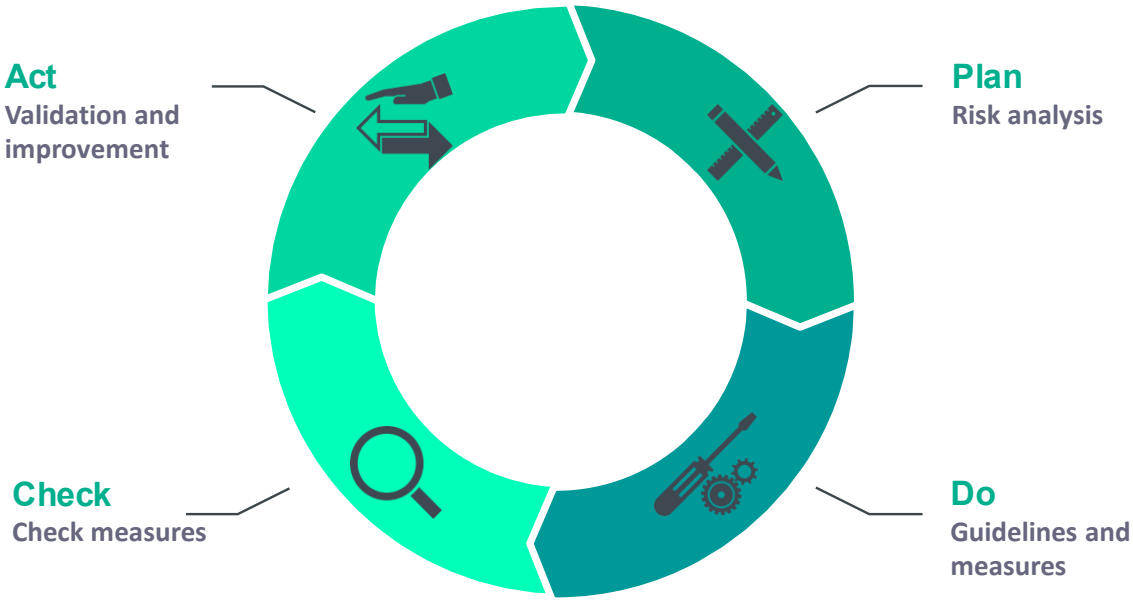

© Siemens AG 2022 All rights reserved

1.3 Differentiation and differences

Differences between office security and industrial security

The integrated security measures of PCs and Windows operating systems generally provide a high level of security. However, these measures are typically oriented to the needs of the office environment. The objects requiring protection in the industrial security sector may be similar, but their priorities can differ greatly.

While the confidentiality and integrity of information typically has top priority in office IT, with industrial security it is plant availability and operator control that take precedence.

Therefore, when selecting suitable security measures, care should always be taken that these measures offer the necessary protection while not hindering actual operation.

Differences between functional security and industrial security

Functional security (safety) addresses the protection of the environment against malfunction of a system. On the other hand, industrial security addresses the protection of regular operation of a system against deliberate or inadvertent faults. However, even safety systems require protection against such faults.

It is the task of the machine's manufacturer to establish appropriate safety mechanisms. However, it is not permissible to make these mechanisms a primary part of the "defense in depth" concept even when they contribute to it.

While safety threats remain principally unchanged, security threats can change over the service life of a machine/plant. Therefore, regular adaptation of security is required.

© Siemens AG 2022 All rights reserved

2 Security mechanisms on the S7 CPU

Overview

The chapters below list the integrated security mechanisms offered by SIMATIC S7 controllers.

The security mechanisms of the S7 CPU can be divided into 4 phases:

- Secure communication

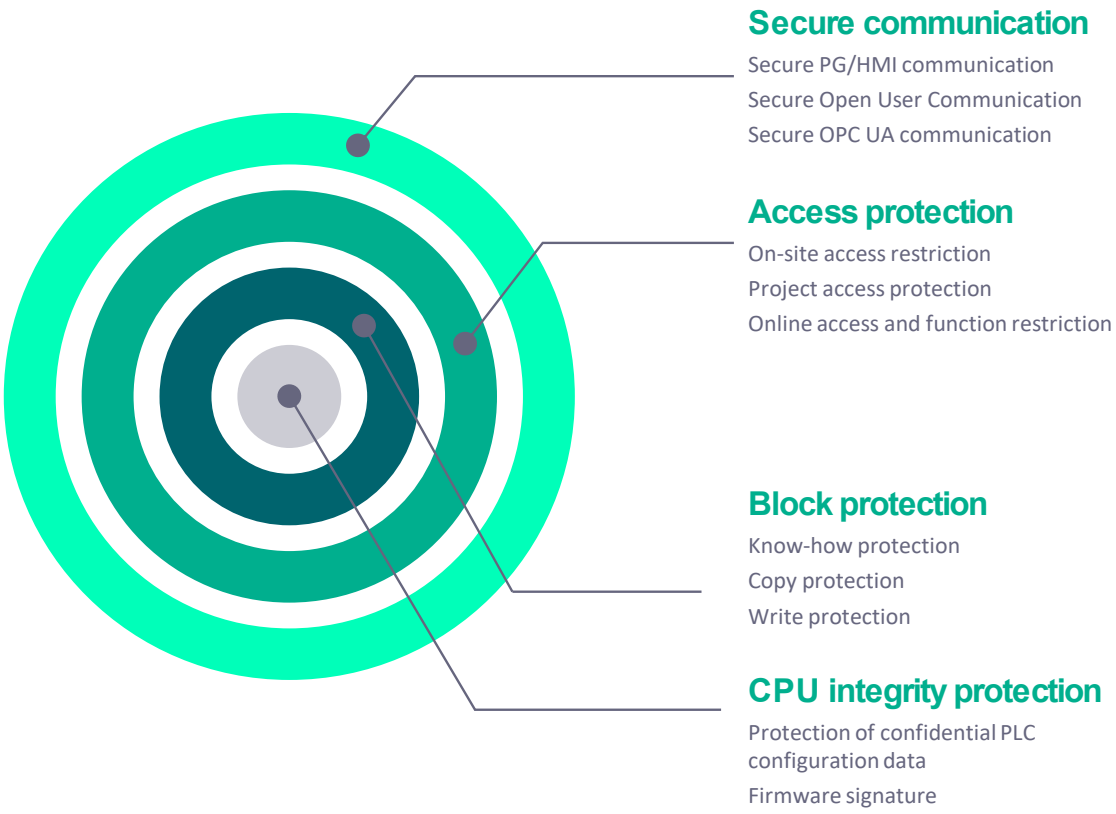

© Siemens AG 2022 All rights reserved

2.1 Secure communication

Communication protection concerns the reliability and trust of data exchanged between communication partners. Data tampering by unauthorized users must be prevented.

Regardless of context, secure communication is based on the concept of public key infrastructure (PKI).

2.1.1 Overview

Public key infrastructure (PKI)

The attribute "secure" is used to describe communication mechanisms that rely on public key infrastructure (PKI). Public key infrastructure (PKI) refers to a system that can issue, distribute and verify digital certificates. Issued digital certificates are used in within the PKI to secure computer-based communication by signing and encrypting messages on the network.

Components that you have configured in STEP 7 (TIA Portal) for secure communication use an asymmetric key method with a public key and a private key. TLS (Transport Layer Security) is employed as the encryption protocol. TLS is the successor to the SSL (Secure Sockets Layer) protocol.

The essential principle of secure communication includes the following components:

- An asymmetric encryption protocol
  This protocol enables the following:
  - Encryption or decryption of messages using public or private keys
  - Verification of signatures on messages and certificates

  The messages/certificates are signed by the sender/certificate owner with that entity's private key. The recipient/verifier checks the signature with the public key of the sender/certificate owner.
- Transport and storage of public keys by means of X.509 certificates:
  - X.509 certificates are digitally signed data that make it possible to verify the veracity of public keys with respect to the associated identity.
  - X.509 certificates can contain more precise information about or restrictions on the use of public keys, for example, the date from which or until which a public key in a certificate is valid.
  - X.509 certificates contain information about the certificate issuer in secure form.

TIA Portal V17 lets the user use custom, user-specific certificates for communication partners, giving the system additional security. If one device is compromised, the other devices remain secure because they use other certificates. The certificates can be imported or, in TIA Portal, generated with the certificate manager. More information on the use of certificates in TIA Portal can be found at the following link: \3\ in chapter 4.3.

© Siemens AG 2022 All rights reserved

Objectives for secure communication

Secure communication is employed to achieve the following goals:

- Confidentiality, i.e. data are secret or non-readable to unauthorized eavesdroppers.
- Integrity, i.e. the message received by the recipient is the same unmodified message that was sent by the sender. The message was not modified along its transport path.
- Endpoint authentication, i.e. the communication partner as endpoint is exactly who it claims to be and is the intended destination. The identity of the communication partner is verified.

If these objectives were in the past primarily a concern for the IT world and networked computers, today machines and controllers with valuable data in the industrial environment are, because they are networked, subject to the very same dangers. They therefore pose stringent requirements for secure data exchange.

It is common practice to protect the automation cell with the cell security concept by using a firewall or a VPN connection, e.g. with the security module. However, there is increasing need to transmit data to external computers in encrypted form via an intranet or public networks.

Secure communication with STEP 7

As of V14, STEP 7 provides the PKI required for the configuration and operation of secure communication. This document describes in greater detail the following communication mechanisms:

- Secure PG/HMI communication
- Secure Open User Communication (OUC)
- Secure OPC UA communication

All of the methods listed above use the TLS (Transport Layer Security) protocol to safeguard the data in communication.

© Siemens AG 2022 All rights reserved

2.1.2 Secure PG/HMI communication

Overview

As of version V17, central components of TIA Portal, STEP 7 and WinCC work together with the latest controllers and HMI devices to implement innovative and standardized (secure) PG/PC communication and HMI communication, referred to as PG [programming device] / HMI communication for short.

Components

We refer in particular to the following CPU families:

- S7-1500 controller family with firmware version V2.9 or later
- S7-1200 controller family with firmware version V4.5 or later
- Software controller with firmware version V21.9 or later
- SIMATIC Drive Controller with firmware version V2.9 or later
- PLCSim and PLCSim Advanced version V4.0

In addition, HMI components have been updated to provide support for secure PG/HMI communication:

- Panels or PCs configured with WinCC Basic, Comfort and Advanced
- PCs with WinCC RT Professional
- WinCC Unified PCs and Comfort Panels

SINAMICS RT SW version V6.1 onward and STARTDRIVE version V17 onward have also been updated.

Properties of PG/HMI communication

The main feature of PG/HMI communication is its simplicity: Establishing an online connection from a programming device (with TIA Portal installed) to a CPU (for example to download a program) requires minimal effort. Here, the online connection also meets criteria such as confidentiality and integrity on the basis of an established SIMATIC communication standard.

In the process of integrating machines and plants into an open IT environment, however, it is also necessary to set up switches for communication between the programming device / HMI device and the CPU. Communication must not only be secure with respect to integrity and confidentiality of sensitive data, rather, communication security also needs to measure up to widely accepted security standards and thereby meet the requirements for the future.

As of TIA Portal version V17, PG/HMI communication has been upgraded: The TLS protocol (Transport Layer Security) is available to secure PG/HMI communication by means of standardized security mechanisms.

Process

Secure PG/HMI communication relies on the programming device and HMI panel verifying the authenticity of the CPU by means of the communication certificate (sent by the CPU when the connection is established) and recognizing the CPU as "trustworthy". Secure PG/HMI communication is only possible when the PG/HMI panel trust the CPU. When the connection is being established, the CPU transmits the communication certificate to the communication partner (programming device or HMI panel). To ensure that communication between the CPU and a programming device / HMI panel is secure, the CPU must possess a certificate. However, this certificate is only issued once the project is downloaded to the CPU. Secure communication between the programming device / HMI panel and CPU is described below.

Initial connection setup to the CPU – Preparation phase

The Figure below explains the initial connection setup sequence from a programming device or HMI panel to the CPU. This is known as the "preparation phase".

© Siemens AG 2022 All rights reserved

Figure 2-2 TLS connection setup

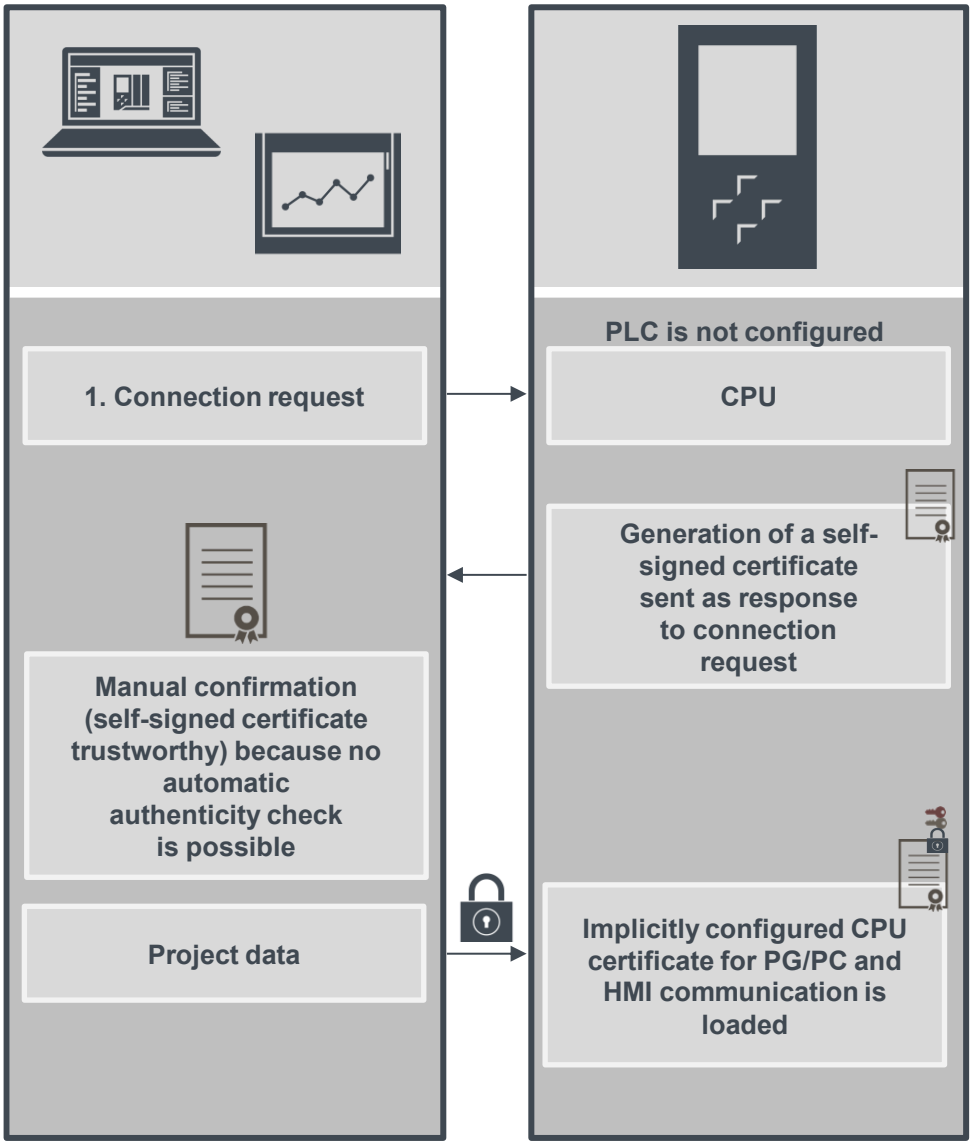

Even the initial connection setup for downloading to the CPU is secured with the TLS protocol in the model of secure PG/HMI communication.

However, for this connection setup step, the CPU uses its manufacturer device certificate (if present) or a self-signed certificate. Use of the CPU is restricted in this phase. In this phase, the CPU waits for the provision of password-based key information. In simple terms: It is waiting for the password for sensitive PLC configuration data. See chapter 2.4.1. This phase is referred to below as the "preparation phase". The CPU indicates that it is in the preparation phase through a corresponding message in the diagnostic buffer.

Downloading a project to the CPU provides the CPU with the project data:

- Hardware configuration, including configured certificates for secure communication (OPC UA, HTTPS, secure OUC, secure PG/HMI communication)
- User program

Exiting the preparation phase

The password for confidential PLC configuration data and/or the key information generated from the password are not saved in the project by TIA Portal.

Therefore, the password will be requested in a series of dialogs during the initial download (or when a new project is downloaded), then transferred to the CPU. Only through this step is the

© Siemens AG 2022 All rights reserved

CPU able to use the protected PLC configuration data. This concludes the preparation phase and the CPU can go into RUN.

Note

If you do not protect confidential PLC configuration data with a password, the password will not need to be entered during the initial download. While this does not affect the PG/HMI communication sequence, you must bear in mind that confidential PLC configuration data (e.g. private keys) have virtually no protection against unauthorized access. See chapter 2.4.1.

PG/HMI communication startup

When the CPU is loaded and it has received the CPU certificate for secure PG/HMI communication, the programming device will reconnect – this time on the basis of the downloaded CPU certificate.

2.1.3 Secure Open User Communication (OUC)

TCP/IP-based Open User Communication (OUC) has become the standard for communication with SIMATIC S7 CPUs. In the S7 CPU, OUC is implemented on the basis of instructions (e.g. TCON, TSEND, TRCV und TDISCON). To establish secure TCP communication with the S7 CPU, the data block with system data type TCON_IP_V4_SEC must be used.

S7-1500 CPUs with firmware version V2 or later support secure communication with addressing via a domain name server (DNS).

To set up secure TCP communication with a domain name, you must create your own data block with the system data type TCON_QDN_SEC, assign parameters and call the system data type right at the instruction. The TCON instruction supports the TCON_QDN_SEC and TCON_IP_V4_SEC system data type. As of firmware version V2.5, the TSEND_C and TRCV_C instructions also support the system data types TCON_QDN_SEC and TCON_IP_V4_SEC. Additional information on the structure of secure OUC and on the S7 CPU can be found at the following link: \4\ in chapter 4.3.

© Siemens AG 2022 All rights reserved

2.1.4 Secure OPC UA communication

OPC UA allows data exchange between different systems, both within the process and production level as well as with systems on the control and enterprise levels.

This option also contains security risks. For this reason, OPC UA offers a range of security mechanisms:

- Identify verification of OPC UA server and OPC UA clients,
- User identity verification, and
- Signed/encrypted data exchange between OPC UA server and OPC UA clients.

The security settings should only be circumvented when there is good reason to do so:

- During commissioning, or
- With island projects without an Ethernet connection to the outside world.

A secure connection between the OPC UA server and an OPC UA client is only established when the server can identify itself to the client. This is the purpose of the server certificate. Link \5\ in chapter 4.3 provides more information on working with the OPC UA server/client certificate in TIA Portal.

Automated certificate management with Global Discovery Server (GDS)

As of firmware V2.9, the OPC UA server of the S7-1500 CPU supports certificate management services which can be used by a Global Discovery Server (GDS), for example.

Using GDS push management functions, OPC UA certificates, trusted lists and Certificate Revocation Lists (CRLs) can be updated for the OPC UA server of the S7-1500 CPU on an automated basis. Automation of certificate management saves manual effort in giving the CPU a new configuration, for instance, after a certificate's validity period expires and the CPU is redownloaded. In addition, you can use the GDS push management functions to transfer

updated certificates and lists in the CPU's STOP and RUN states. More information on OPC UA certificate management with GDS can be found at link \6\ in chapter 4.3.

2.2 Access protection

Access to the CPU should only be granted to authorized persons, processes and devices. This entails an on-site access restriction and system access to the CPU.

2.2.1 On-site access restriction (S7-1500)

CPU lock

The SIMATIC S7-1500 has a hinged front cover with a display and control keys. It must be opened in order to insert or remove the SIMATIC Memory Card, or to manually change the CPU operating state. To protect the CPU against unauthorized access, this front cover can be adequately secured with the locking tab. Your options include:

- Securing the front cover with a padlock, or
- Attaching a seal

Figure 2-3 CPU lock

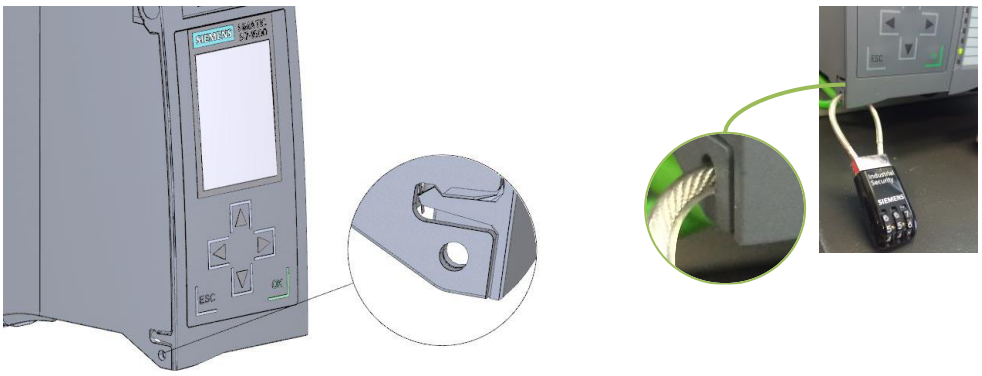

Display lock

The SIMATIC S7-1500 additionally offers a password authentication function on the display. It is possible to configure a CPU access password for each access level. If access is disabled, the user receives a message in TIA Portal that the password is currently invalid. This on-site deactivation can, for example, offer additional protection against undesired, invalid configurations. The legitimation setting for the password is only active when the CPU is in RUN mode. If the CPU is in STOP mode, access with the passwords remains possible.

To protect the CPU functions that can be operated from the display, a display password can be defined in TIA Portal. This is accomplished in the CPU properties under "Display > Password". Due to the restricted character set and the difficulty of entering characters with the display keys, the password in this case is limited to uppercase letters and numbers.

Note

If the CPU is in STOP mode, access with the appropriate password is possible regardless of the setting on the display.

© Siemens AG 2022 All rights reserved

Figure 2-4 Display lock

2.2.2 Project access protection

TIA Portal provides a user management function (UMAC – User Management and Access Control) for projects. It allows you to create and manage users and roles in your project. You can also protect your project and define which user is allowed to perform which functions. When you set up project protection, you are created as the project administrator. Then you can create additional users and assign them roles with certain rights. After project protection is enabled, the project can only be opened and modified by authorized users.

Note

Note that project protection cannot be removed once set up.

The project administrator can add the following users and user groups to a project:

- Local project users:
  Local project users are users who are defined and managed in a TIA Portal project. These user accounts are valid only for this one project. Using project user accounts is a good idea when the entire automation solution is created within one project.
  The system additionally creates the local project user "Anonymous". This user does not need to authenticate itself with a password. You can use roles to grant this user certain rights. Note that your project's security will be greatly diminished if you assign this user too many rights. The anonymous user "Anonymous" is disabled by default. It cannot be deleted.
- Global users and user groups:
  These user accounts are defined and managed outside of TIA Portal in UMC (User Management Component). You can import global users and user groups into the various TIA Portal projects that these users will be working on. Adding users and user groups from UMC requires the corresponding rights in UMC. Global users can also use the single sign-on method to authenticate themselves.

UMC – User Management Component

Additionally, you can install the "User Management Component UMC" software package on one or more computers. It provides central user management. This creates a system of interconnected UMC installations (UMC ring server, UMC server). In this UMC system, you can define users and user groups, or import them from a Windows Active Directory. When UMC is installed, you can access the UMC server from TIA Portal in order to add users and user groups (defined on the UMC server) to the TIA Portal user management. In this way you can also assign users and user groups the necessary function rights to a TIA Portal project via roles.

Within TIA Portal, however, you cannot modify the data of the users and user groups that were added from UMC. As a result, for example, you cannot change passwords or other data of UMC users or UMC user groups even if you are an administrator in the project. This is only possible in UMC. You nevertheless have the option of synchronizing the user management in TIA Portal with UMC, and you can check the synchronization status. This allows you to fix inconsistencies between the global users and user groups in UMC and the UMC users/user groups that have already been imported into TIA Portal.

© Siemens AG 2022 All rights reserved

2.2.3 Online access and function restriction

The S7 CPU has four access levels, in order to limit access to specific functions. Setting up the access level and password will limit the functions and memory ranges that are accessible without a password. The individual access levels and the associated passwords are defined in the object properties of the CPU. Legitimating oneself with a configured password grants access according to the associated protection level.

Table 2-1

Access levels	Restriction of access
Full access (no protection)	Hardware configuration and blocks can be read and changed by anyone.
Read access for F blocks (only with F-CPUs)	F blocks in the safety program cannot be modified without legitimation with the password associated with this access level or a higher access level.
Read access	This access level grants only write-protected access to the hardware configuration and the blocks unless the password is entered. Without the password, the following functions can be utilized: • Read the hardware configuration and blocks • Download the hardware configuration and blocks to the programming device • Read diagnostic data • Display online/offline comparison results • Set the time • Change operating mode (RUN/STOP) The following functions **cannot** be run without entering the password: • Download the blocks and hardware configuration to the CPU • Write-based test functions • Firmware update (online)
HMI access	This access level only allows the following when the password has not been entered: • HMI access • Read diagnostic data Example: With the "HMI access" access level, you can go online and display diagnostic icons for the states of objects. Tags can be read and written via an HMI device. The following functions **cannot** be run without entering the password: • Download the blocks and hardware configuration to/from the CPU • Display online/offline comparison results • Change operating mode (RUN/STOP) • Write-based test functions • Firmware update (online)

© Siemens AG 2022 All rights reserved

Access levels	Restriction of access
No access (complete protection)	Only identification data can be read, e.g. via "Accessible subscribers". With complete protection, the CPU forbids: • Read and write access to the hardware configuration and blocks • HMI access • Modification in the server function for PUT/GET communication

Operational performance with protection level activated

A password-protected CPU behaves as follows when in operation:

- The CPU protection takes effect once the settings are downloaded to the CPU and a new connection has been established.
- Before an online function is executed, the necessary permission is checked and, if password-protected, the user is prompted to enter a password.
- The password-protected functions can only be executed from a programming device or PC at any given time. Another programming device or PC cannot sign in with a password.
- Access permissions to the protected data apply while the online connection is active, or until the access protection is removed manually via "Online > Delete access permissions".

Going online with a password-protected CPU

Going online with a password-protected CPU requires read access as of STEP 7 V14. Therefore, you must enter the password for read access when you go online or, if no password was configured for this, you must enter the password for full access.

If you have a fully protected CPU and you only have a password for HMI access on hand, cancel the password prompt after the read access password prompt. You will then be prompted to enter the password for HMI access. The permission for HMI access is not sufficient for the online/offline comparison, however. For this you will need read access permissions.

Note

Configuring an access level is not a replacement for know-how protection.

It prevents improper modifications to the CPU by restricting download permissions. However, the blocks on the SIMATIC Memory Card are neither write-protected nor read-protected. Know-how protection should be used to safeguard the program code.

© Siemens AG 2022 All rights reserved

2.3 Block protection

Various block protection mechanisms are available in STEP 7 (TIA Portal) to protect the know-how in the blocks' programs from unauthorized persons.

2.3.1 Know-how protection

Know-how protection lets you guard blocks of type OB, FB, FC and global data blocks against unauthorized access by using a password.

Take the following features into account with know-how protection:

- You cannot manually protect instance data blocks; they are dependent on the know-how protection of the associated FB. This means that when you generate an instance data block for a know-how-protected FB, the instance data block likewise receives know-how protection. This happens regardless of whether you explicitly create the instance data block or whether it was generated by a block call.
- With global data blocks, you cannot edit the start values and comments, but this is possible with instance data blocks.
- ARRAY data blocks cannot be provided with know-how protection.
- Storage space requirements may be higher with know-how-protected blocks.
- During a comparison between the offline and online version of know-how-protected blocks, only the non-protected data are compared.
- Further access to the block is not possible without a password.
- When you add a know-how-protected block to a library, the resulting master copy also received know-how protection.

Restrictions

With a know-how-protected block, only the following data are readable without a password:

- Call parameters: Input, Output, InOut, Return, Static
- Block title
- Block comment
- Block properties
- Tags of global data blocks, minus information about the location of use

The following actions can be carried out with a know-how-protected block:

- Copying and deleting
- Calling in a program
- Offline/online comparison
- Downloading

© Siemens AG 2022 All rights reserved

Readme

References

You can find more information at the following link: \7\ in chapter 4.3, specifically regarding:

- Setting up know-how protection for blocks
- Opening blocks protected by know-how protection
- Removing know-how protection from blocks

2.3.2 Copy protection

Copy protection links a program or blocks with a specific SIMATIC Memory Card or CPU. By linking the serial number of a SIMATIC Memory Card or CPU, use of the program or block in question is only possible in connection with this specific SIMATIC Memory Card or CPU.

If a block with copy protection is downloaded to a device whose serial number does not match the defined serial number, the download process will be rejected. However, this does not mean that blocks without copy protection cannot be downloaded.

Copy protection is set up and the associated serial number is entered via the block properties.

Applications

- If the program is bound to the serial number of the CPU, use of TIA Portal to adjust the serial number is mandatory upon hardware replacement in the event of a fault.
- If the serial number is linked to the memory card, the hardware can be replaced and the memory card taken from the old CPU. Due to the fact that the program is stored on the memory card, it is still possible to ensure that the program only runs on one CPU.

Note

When setting up copy protection for a block, it is important that this block also receive block protection. Without know-how protection, anyone could reset the copy protection.

Copy protection must be set up prior to block protection. The copy protection settings are write-protected when the block has know-how protection.

There are two options for adding the serial number:

- Manual entry of serial number:
  The serial number must be known during the engineering phase.
- Automatic assignment during download:
  The serial number does not need to be known for engineering.
  During download to a new CPU, the password defined for copy protection is requested.

© Siemens AG 2022 All rights reserved

2.3.3 Write protection

Set up write protection for blocks of type OB, FB or FC to prevent inadvertent modifications.

Blocks with write protection can only be opened in read-only mode. However, you can still edit the block properties. There are no restrictions on diagnostics.

Note

Note that write protection is not the same as know-how protection. When a block is write-protected, you cannot set up know-how protection on top of this. Remove the block's write protection if you want to give it know-how protection.

© Siemens AG 2022 All rights reserved

2.4 CPU integrity protection

Integrity refers to the protection of data against unauthorized modification or deletion.

In the context of CPU security, this entails the following:

- Protection of confidential CPU configuration data
- Protection of the CPU firmware signature

2.4.1 Protection of confidential PLC configuration data

Trouble-free functioning of certificate-based communication mechanisms for secure communication (see chapter 2.1) requires that the private keys employed by these certificates are protected as much as possible.

As of TIA Portal V17, you can set up a user defined password to protect these keys and other sensitive data.

Password for protecting confidential CPU configuration data

To protect the confidential configuration data of the CPU, for example certificates and private keys, enter the password in TIA Portal.

The following Figure is a simplified representation of how confidential CPU configuration data (for example a standard S7-1500 CPU) can be protected.

Figure 2-5 Secure memory concept

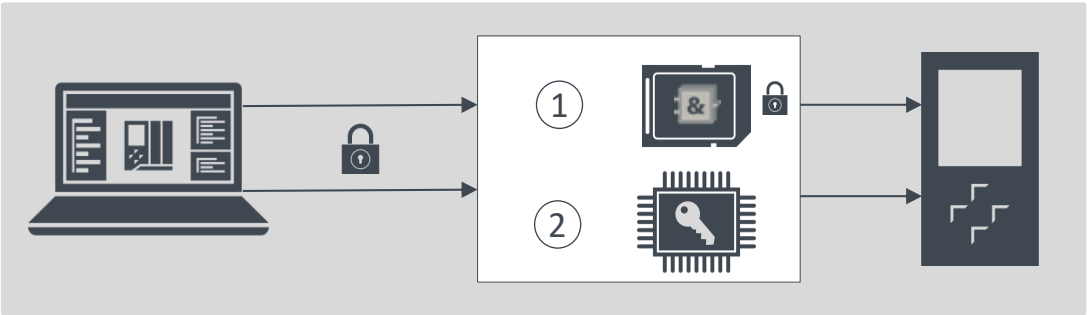

The project and key information is stored in different memory ranges during the initial download:

1. The project is stored in the load memory (SIMATIC Memory Card).
2. The key information is stored in a memory range in the CPU. This key is used to read the confidential configuration data on the SIMATIC Memory Card.

For target systems such as S7-1200 CPUs and software controllers with other storage concepts, the implementation is adapted to fit the relevant storage concept. The principle remains the same, however.

© Siemens AG 2022 All rights reserved

Two memory ranges for additional security

The project and the keys belong together like two interlocking puzzle pieces. The project is linked with the downloaded key information; the downloaded key information is in turn linked with the password that was assigned during configuration. The project and key information must match, otherwise the CPU will not start.

The principle of two separate memory ranges also applies for S7-1200 CPUs and S7-1500 CPU versions without a SIMATIC Memory Card, for example software controllers, PLCSIM or PLCSIM Advanced. In the versions without a SIMATIC Memory Card, two separate partitions are used so that the two information elements can be managed independently of one another.

Figure 2-6 Secure memory ranges

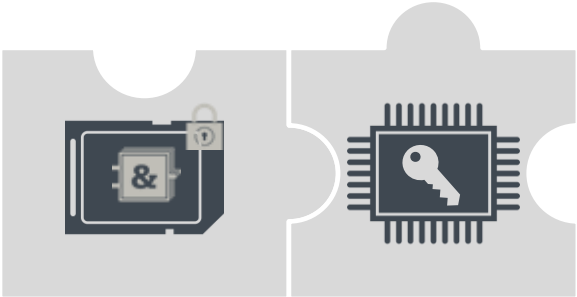

Readme

References

Further information on setting up protection of confidential PLC configuration data, as well as things to note when replacing the CPU, can be found at the following application example link:

https://support.industry.siemens.com/cs/ww/en/view/109798583

© Siemens AG 2022 All rights reserved

2.4.2 Firmware signature

Every CPU firmware is signed by Siemens. The CPU checks this signature at every firmware update. If the firmware signature verification fails, the firmware is not uploaded to the CPU. This ensures protection against manipulated firmware updates.

2.5 Additional CPU protection measures

The following measures additionally increase the protection against unauthorized access to functions and data on the S7 CPU, both externally as well as over the network:

- Disable or restrict the web server
- Disable PUT/GET communication (S7-1200(V4)/S7-1500)
- Disable time synchronization via NTP server

Note These functions are disabled by default in the modules' default configurations.

Security functions for the web server

The web server allows you to remotely control and monitor the CPU via a company's internal intranet. This allows evaluation and diagnostics to be carried out remotely.

However, enabling the web server can increase the risk of unauthorized access to the CPU.

If you wish to enable the web server, the following measures are recommended for protecting the CPU:

- Access via the secure transmission "https" transmission protocol
- Configurable user and function privileges via user list
  - Create users
  - Define execution rights
  - Assign passwords

  User management grants users exclusively the options that are assigned to execution rights. If a user is configured, the user's password grants access to the web pages in accordance with the user's access rights.
  A user with the name "Jeder" [German: *Everyone*] has been preconfigured. This user has minimal access permissions (write-protected access to Intro and Start page). The "Jeder" user has been set without a password and cannot be modified.

Disable PUT/GET communication (S7-1200(V4)/S7-1500)

The CPU can act as a server for a number of communication services. Other communication participants can access CPU data even if you do not configure or program any CPU connections. This renders the local CPU, in its role as a server, incapable of controlling communication with the clients.

You can use the "Connection mechanisms" parameter in the "Protection" area of the CPU parameters to set whether this type of communication is permissible for the local CPU while in operation.

By default, the option "Allow access via PUT/GET communication from remote partners" is disabled. Read and write access to CPU data is only possible with communication connections that require configuration/programming not only for the local CPU but also for the communication partner. Access operations, such as those via BSEND/BRCV instructions, are possible.

Connections for which the local CPU is only a server (i.e. for the local CPU, no configuration/programming has been carried out for the communication to the communication partner) are this not possible when the CPU is in operation. Examples of such connections include:

© Siemens AG 2022 All rights reserved

- PUT/GET, FETCH/WRITE or FTP access operations via communication modules.
- PUT/GET access from other S7 CPUs
- HMI access operations implemented via PUT/GET communication

If you wish to allow client-side access to CPU data, i.e. if you do not wish to restrict the CPU's communication services, then enable the option "Allow access via PUT/GET communication from remote partners".

© Siemens AG 2022 All rights reserved

3 Security mechanisms on the S7 CPs

The chapters below show which security mechanisms are offered by the SIMATIC S7 CPs (CP x43-1 Advanced V3 and CP 1x43-1).

Note

The functions in the CP 1543-1 are configurable as of STEP 7 Professional V12 incl. Update 1.
The CP 1243-1 requires at least STEP 7 Professional V13 Update 3.

Figure 3-1 Types of CPs

CP 1543-1 CP 1243-1 CP 343-1 Advanced CP 443-1 Advanced

3.1 Stateful inspection firewall

Description

The filtering performance of a packet filter can be greatly improved by checking the IP packets in their respective context. For example, it is desirable to let in a UDP packet inbound from an external computer only if another UDP packet was recently sent out to the same computer (e.g. in the event of a DNS query sent from a client in the internal network to an external DNS server). To enable this feature, the packet filter on all current connections must be able to manage a status. Packet filters with this capability are thus referred to as "stateful".

Properties

Stateful inspection firewalls have the following properties:

- With TCP connections: Emulation of status inspection of a full TCP/IP protocol stack.
- With UDP connections: Simulation of virtual connections.
- Generation and deletion of dynamic filter rules.

© Siemens AG 2022 All rights reserved

3.2 Data encryption via VPN

Description

A VPN (virtual private network) refers to a private network that uses a public network (e.g. the internet) as a transit network to transmit private data to a private destination network. The networks do not need to be compatible with one another for this.

While VPNs use the addressing mechanisms of the transit network to work, they use their own network packets to separate the transport of private data packets from the others. This fact allows the private networks to appear as a contiguous logical (virtual) network.

IPSec

An important aspect of data communication across network boundaries is IPSec (IP security). It is a standardized protocol suite that allows for vendor-agnostic, secure and protected data exchange over IP networks. The essential aim of IPSec is to secure and safeguard data during transmission into an unsecure network. All known vulnerabilities, such as eavesdropping and modification of data packets, can be prevented using this security standard. This is made possible through encrypted data packets and authentication of participants.

3.3 NAT/NAPT (address translation)

© Siemens AG 2022 All rights reserved

Description

Network Address Translation (NAT) and Network Address Port Translation (NAPT) are protocols for translating private IP addresses into public IP addresses.

Address translation with NAT

NAT is a protocol for translating between two address spaces. Its primary function is to translate public addresses, that is, IP addresses used and routed in the public internet, into private IP addresses and vice versa.

This technique allows for addresses in the internal network to be hidden from the outside in the external network. The internal nodes are only visible in the external network via the external IP addresses defined in the address translation list (NAT table).

Traditional NAT is a 1:1 translation, i.e. one private IP address is translated to one public one.

The address by which an internal node is reached is thus an external IP address.

The NAT table contains a mapping between private and public IP addresses, and is configured and managed in a gateway or router.

Address translation with NAPT

NAPT is a variant of NAT and the two are often equated with one another. The difference to NAT is that with this protocol, ports can also be translated.

There is no longer a 1:1 translation of IP addresses. Rather, there is only one public IP address which is translated into a series of private IP addresses through the addition of port numbers.

The address by which an internal node is reached is an external IP address with a port number.

The NAPT table contains a mapping from external ports to the private IP addresses, including port number; it is configured and managed in a gateway or router.

3.4 Secure IT functions

3.4.1 File Transfer Protocol (FTP)

Description

The File Transfer Protocol is a specific network protocol used for data transmission between an FTP server and FTP client or, when client-driven, between two FTP servers.

FTP allows data to be exchanged and folders created, renamed or deleted. Communication between an FTP client and FTP server takes place in the form of an exchange of text-based commands. Each command sent by the FTP client induces a response from the FTP server in the form of a status code and a message in cleartext.

FTP creates two logical connections for this purpose: one control channel via port 21 for transmitting FTP commands (and the responses thereto), and one data channel via port 20 for transmitting data.

With passive FTP, both channels are initiated by the FTP client, while with active FTP one of the channels is initiated by the FTP server.

Solution for secure FTP

To protect data during transmission, FTP also has the capability of data encryption and authentication.

The simplest method of implementing a secure FTP connection is Transport Layer Security, or TLS (formerly Secure Sockets Layer, or SSL). TLS is located on the Presentation Layer of the OSI layer model. Here, the data stream is encrypted with a key at the lowest bit level at the start of a connection.

The TLS handshake protocol is used for identification and authentication of the participants. Negotiation of an encryption key takes place through the public key method. To this end, the FTP server sends the FTP client a certificate with its public key. The public key to the certificate must be certified before the fact by a certificate authority and provided with a digital signature.

© Siemens AG 2022 All rights reserved

FTPS

The explicit FTP for secure data transmission is a combination of FTP and the TLS protocols. It uses the same ports as in normal FTP mode (port 20/21).

The key for TLS is a certificate that is generated and shipped with the configuration of the security CPs.

Secure FTP data transfer with the CP x43-1 Advanced V3 and CP 1x43-1 is only possible with security function enabled, and is explicitly required in the CP configuration.

3.4.2 Network Time Protocol (NTP)

Description

The Network Time Protocol (NTP) is a standardized protocol for time synchronization on multiple computers/modules via the network. Its accuracy is in the millisecond range.

The clock time is provided to NTP clients by an NTP server.

NTP (secure)

Secure NTP allows for secure and authenticated time synchronization utilizing authentication methods and a shared encryption code. The NTP server and the NTP clients must support this function.

Secure time synchronization is supported by the CP x43-1 Advanced V3 and CP 1x43-1 as long as the security function and the advanced NTP configuration are explicitly enabled in the CP's configuration in STEP 7.

3.4.3 Hypertext Transfer Protocol (HTTP)

Description

The Hypertext Transfer Protocol (HTTP) belongs to the family of internet protocols and is a standardized method of transmitting data on a network. HTTP is preferred for loading web pages from a web server on a web browser.

HTTPS

Data transmitted over HTTP are readable as cleartext and can be eavesdropped by third parties.

Today more than ever – in the age of online banking, online shopping and social networks – it is important that confidential and private data be transmitted safely and away from the eyes of unauthorized parties.

The easiest method of tap-proof transmission is Hypertext Transfer Protocol Secure (HTTPS). HTTPS is structured like HTTP, but it always uses the TLS protocol for encryption.

© Siemens AG 2022 All rights reserved

3.4.4 Simple Network Management Protocol (SNMP)

Description

SNMP (Simple Network Management Protocol) is a UDP-based protocol that was defined specifically for the administration of data network. It has become established as the de facto standard in TCP/IP devices. The individual nodes in the network (network components or end devices) are equipped with a so-called SNMP agent that provides information in structured form. This structure is called MIB, or Management Information Base. The agent in the network node is typically implemented as a firmware functionality.

Management Information Base – MIB

An MIB (Management Information Base) is a standardized data structure made up of different SNMP variables and written in a language that is independent of the target system. Thanks to the cross-vendor standardization of MIBs and the access mechanisms, even a heterogeneous network with components from different manufacturers can be monitored and controlled. If component-specific data and non-standardized data are needed for the network monitoring, these can be described by manufacturers in so-called "Private MIBs".

Secure SNMP (SNMPv3)

SNMP is available in different versions: SNMPv1, SNMPv2 and SNMPv3. SNMPv1 are SNMPv2 still in use to some extent. However, SNMPv1 and SNMPv2 should not be used because these versions implement limited or no security mechanisms unless other security mechanisms have been implemented (e.g. the cell security concept). From version 3 onward, SNMP additionally offers user management with authentication as well as optional encryption of data packets. This aspect greatly increased the security of SNMP. Secure SNMP is supported by the CP x43-1 Advanced V3 and CP 1x43-1 if the security function and SNMPv3 have been explicitly enabled in the configuration of the CP in STEP 7.

© Siemens AG 2022 All rights reserved

4 Appendix

4.1 Service and support

Industry Online Support

Do you have any questions or need assistance?

Siemens Industry Online Support offers round the clock access to our entire service and support know-how and portfolio.

The Industry Online Support is the central address for information about our products, solutions and services.

Product information, manuals, downloads, FAQs, application examples and videos – all information is accessible with just a few mouse clicks:

support.industry.siemens.com

Technical Support

The Technical Support of Siemens Industry provides you fast and competent support regarding all technical queries with numerous tailor-made offers
– ranging from basic support to individual support contracts. Please send queries to Technical Support via Web form:

siemens.com/SupportRequest

SITRAIN – Digital Industry Academy

We support you with our globally available training courses for industry with practical experience, innovative learning methods and a concept that's tailored to the customer's specific needs.

For more information on our offered trainings and courses, as well as their locations and dates, refer to our web page:

siemens.com/sitrain

Service offer

Our range of services includes the following:

- Plant data services
- Spare parts services
- Repair services
- On-site and maintenance services
- Retrofitting and modernization services
- Service programs and contracts

You can find detailed information on our range of services in the service catalog web page:

support.industry.siemens.com/cs/sc

Industry Online Support app

You will receive optimum support wherever you are with the "Siemens Industry Online Support" app. The app is available for iOS and Android:

support.industry.siemens.com/cs/ww/en/sc/2067

© Siemens AG 2022 All rights reserved

4.2 Industry Mall

The Siemens Industry Mall is the platform on which the entire siemens Industry product portfolio is accessible. From the selection of products to the order and the delivery tracking, the Industry Mall enables the complete purchasing processing – directly and independently of time and location:
mall.industry.siemens.com

4.3 Links and literature

Table 4-1

No.	Topic
\1\	Siemens Industry Online Support https://support.industry.siemens.com
\2\	Link to the article page of the manual https://support.industry.siemens.com/cs/de/en/view/90885010
\3\	Using Certificates with TIA Portal https://support.industry.siemens.com/cs/ww/en/view/109769068
\4\	Secure OUC between two S7-1500 CPUs https://support.industry.siemens.com/cs/de/en/view/109798671/143787499659
\5\	Secure transfer of messages (OPC UA) https://support.industry.siemens.com/cs/de/en/view/109798671/143868596107
\6\	Automated certificate management with GDS https://support.industry.siemens.com/cs/de/en/view/109798671/143868648715
\7\	Protecting user-defined functions https://support.industry.siemens.com/cs/de/en/view/109798671/94283635595
\8\	Questions and answers about the new security features in TIA Portal V17 https://support.industry.siemens.com/cs/ww/en/view/109799540
\9\	Central User Management with "User Management Component (UMC)" https://support.industry.siemens.com/cs/at/en/view/109780337
\10\	SIMATIC S7-1500, ET 200MP Automation system https://support.industry.siemens.com/cs/ww/en/view/59191792
\11\	SIMATIC S7 S7-1200 Programmable controller https://support.industry.siemens.com/cs/ww/en/view/109759862
\12\	SIMATIC S7-1200 Update to the S7-1200 System Manual, edition 11/2019 https://support.industry.siemens.com/cs/ww/en/view/109780810
\13\	Device manual for CP 343-1 Advanced - Part B http://support.automation.siemens.com/WW/view/en/62046619
\14\	Device manual for Industrial Ethernet CP 443-1 Advanced http://support.automation.siemens.com/WW/view/en/59187252
\15\	SIMATIC NET: S7-1500 - Industrial Ethernet CP 1543-1 https://support.industry.siemens.com/cs/ww/en/view/67700710

© Siemens AG 2022 All rights reserved

\16\	All-round protection with Industrial Security – Plant Security https://support.industry.siemens.com/cs/ww/en/view/50203404
\17\	All-round protection with Industrial Security – Network Security https://support.industry.siemens.com/cs/ww/en/view/92651441
\18\	All-round protection with Industrial Security – System Integrity https://support.industry.siemens.com/cs/ww/en/view/92605897
\19\	Overview document: Secure remote access with VPN https://support.industry.siemens.com/cs/de/en/view/26662448
\20\	Getting Started with Industrial Remote Communication https://support.industry.siemens.com/cs/de/en/view/64721753

4.4 Change documentation

Table 4-2

Version	Date	Change
V1.0	09/2013	First version
V2.0	03/2016	Added CP 1243-1, inserted additional links
V3.0	11/2022	Added new security functions from TIA V17

© Siemens AG 2022 All rights reserved

SIEMENS

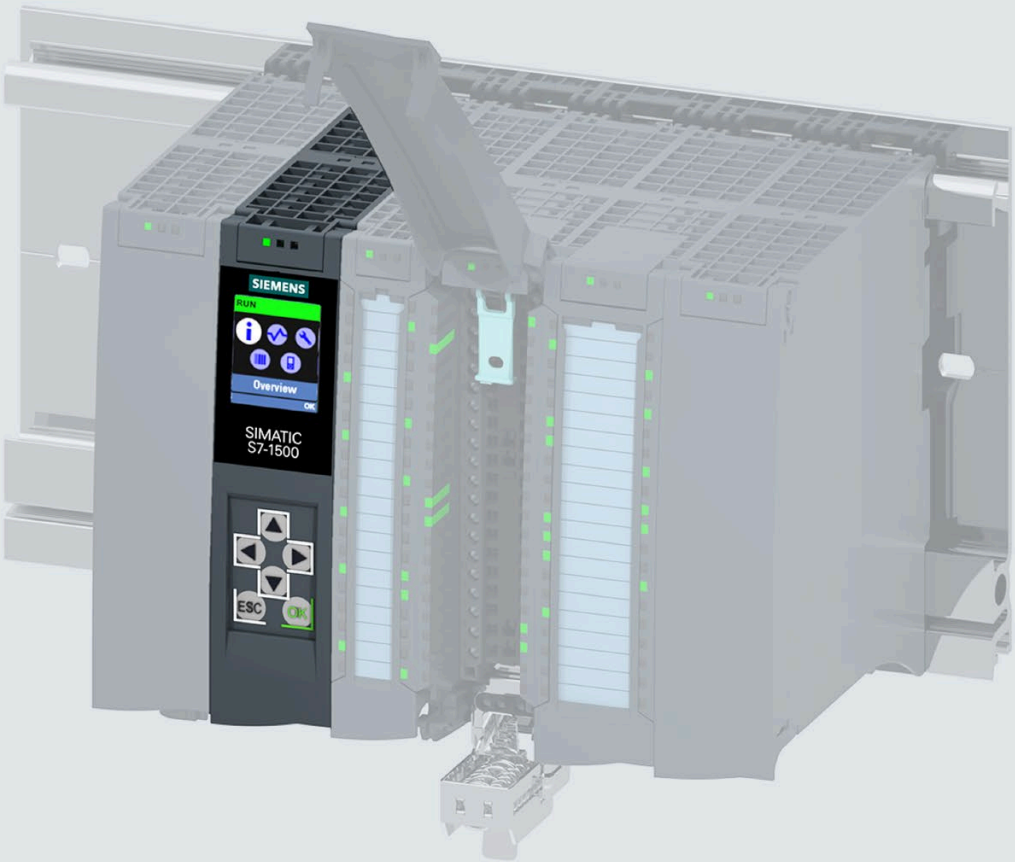

Manual

SIMATIC

S7-1500

CPU 1511-1 PN (6ES7511-1AK02-0AB0)

Edition 05/2021

support.industry.siemens.com

SIEMENS

SIMATIC

S7-1500
CPU 1511-1 PN
(6ES7511-1AK02-0AB0)

Equipment Manual

Preface

S7-1500 / ET 200MP Documentation Guide 1

Product overview 2

Connecting up 3

Interrupts, error messages, diagnostics and system alarms 4

Technical specifications 5

Dimensional drawing A

05/2021

A5E40869673-AB

Legal information

Warning notice system

This manual contains notices you have to observe in order to ensure your personal safety, as well as to prevent damage to property. The notices referring to your personal safety are highlighted in the manual by a safety alert symbol, notices referring only to property damage have no safety alert symbol. These notices shown below are graded according to the degree of danger.

⚠ DANGER
indicates that death or severe personal injury **will** result if proper precautions are not taken.

⚠ WARNING
indicates that death or severe personal injury **may** result if proper precautions are not taken.

⚠ CAUTION
indicates that minor personal injury can result if proper precautions are not taken.

NOTICE
indicates that property damage can result if proper precautions are not taken.

If more than one degree of danger is present, the warning notice representing the highest degree of danger will be used. A notice warning of injury to persons with a safety alert symbol may also include a warning relating to property damage.

Qualified Personnel

The product/system described in this documentation may be operated only by **personnel qualified** for the specific task in accordance with the relevant documentation, in particular its warning notices and safety instructions. Qualified personnel are those who, based on their training and experience, are capable of identifying risks and avoiding potential hazards when working with these products/systems.

Proper use of Siemens products

Note the following:

⚠ WARNING
Siemens products may only be used for the applications described in the catalog and in the relevant technical documentation. If products and components from other manufacturers are used, these must be recommended or approved by Siemens. Proper transport, storage, installation, assembly, commissioning, operation and maintenance are required to ensure that the products operate safely and without any problems. The permissible ambient conditions must be complied with. The information in the relevant documentation must be observed.

Trademarks

All names identified by ® are registered trademarks of Siemens AG. The remaining trademarks in this publication may be trademarks whose use by third parties for their own purposes could violate the rights of the owner.

Disclaimer of Liability

We have reviewed the contents of this publication to ensure consistency with the hardware and software described. Since variance cannot be precluded entirely, we cannot guarantee full consistency. However, the information in this publication is reviewed regularly and any necessary corrections are included in subsequent editions.

Siemens AG
Digital Industries
Postfach 48 48
90026 NÜRNBERG
GERMANY

A5E40869673-AB
Ⓟ 05/2021 Subject to change

Copyright © Siemens AG 2017 - 2021.
All rights reserved

Preface

Purpose of the documentation

This manual supplements the system manual of the S7-1500 automation system/ET 200MP distributed I/O system as well as the function manuals. This manual contains a description of the module-specific information. The system-related functions are described in the system manual. All system-spanning functions are described in the function manuals.

The information provided in this manual and the system manual enables you to commission the CPU 1511-1 PN.

Conventions

STEP 7: In this documentation, "STEP 7" is used as a synonym for all versions of the configuration and programming software "STEP 7 (TIA Portal)".

Please also observe notes marked as follows:

Note

A note contains important information on the product described in the documentation, on the handling of the product or on the section of the documentation to which particular attention should be paid.

Security information

Siemens provides products and solutions with industrial security functions that support the secure operation of plants, systems, machines and networks.

In order to protect plants, systems, machines and networks against cyber threats, it is necessary to implement – and continuously maintain – a holistic, state-of-the-art industrial security concept. Siemens' products and solutions constitute one element of such a concept.

Customers are responsible for preventing unauthorized access to their plants, systems, machines and networks. Such systems, machines and components should only be connected to an enterprise network or the internet if and to the extent such a connection is necessary and only when appropriate security measures (e.g. firewalls and/or network segmentation) are in place.

For additional information on industrial security measures that may be implemented, please visit (https://www.siemens.com/industrialsecurity).

Siemens' products and solutions undergo continuous development to make them more secure. Siemens strongly recommends that product updates are applied as soon as they are available and that the latest product versions are used. Use of product versions that are no longer supported, and failure to apply the latest updates may increase customers' exposure to cyber threats.

To stay informed about product updates, subscribe to the Siemens Industrial Security RSS Feed visit (https://www.siemens.com/industrialsecurity).

Siemens Industry Online Support

You can find current information on the following topics quickly and easily here:

- **Product support**

  All the information and extensive know-how on your product, technical specifications, FAQs, certificates, downloads, and manuals.

- **Application examples**

  Tools and examples to solve your automation tasks – as well as function blocks, performance information and videos.

- **Services**

  Information about Industry Services, Field Services, Technical Support, spare parts and training offers.

- **Forums**

  For answers and solutions concerning automation technology.

- **mySupport**

  Your personal working area in Industry Online Support for messages, support queries, and configurable documents.

This information is provided by the Siemens Industry Online Support in the Internet (https://support.industry.siemens.com).

Industry Mall

The Industry Mall is the catalog and order system of Siemens AG for automation and drive solutions on the basis of Totally Integrated Automation (TIA) and Totally Integrated Power (TIP).

Catalogs for all the products in automation and drives are available on the Internet (https://mall.industry.siemens.com).

Table of contents

Preface **3**

1 S7-1500 / ET 200MP Documentation Guide **6**

2 Product overview **8**

2.1 New functions 8

2.2 Area of application of the SIMATIC S7-1500 CPUs 10

2.3 Hardware properties 19

2.4 Firmware functions 21

2.5 Operating and display elements 25

2.5.1 Front view of the CPU with closed front panel 25

2.5.2 Front view of the CPU without front panel and view from below 27

2.5.3 Rear view of the CPU 28

2.6 Operating mode buttons 29

3 Connecting up **30**

4 Interrupts, error messages, diagnostics and system alarms **34**

4.1 Status and error display of the CPU 34

5 Technical specifications **38**

A Dimensional drawing **50**

S7-1500 / ET 200MP Documentation Guide

1

The documentation for the SIMATIC S7-1500 automation system and the SIMATIC ET 200MP distributed I/O system is arranged into three areas.
This arrangement enables you to access the specific content you require.

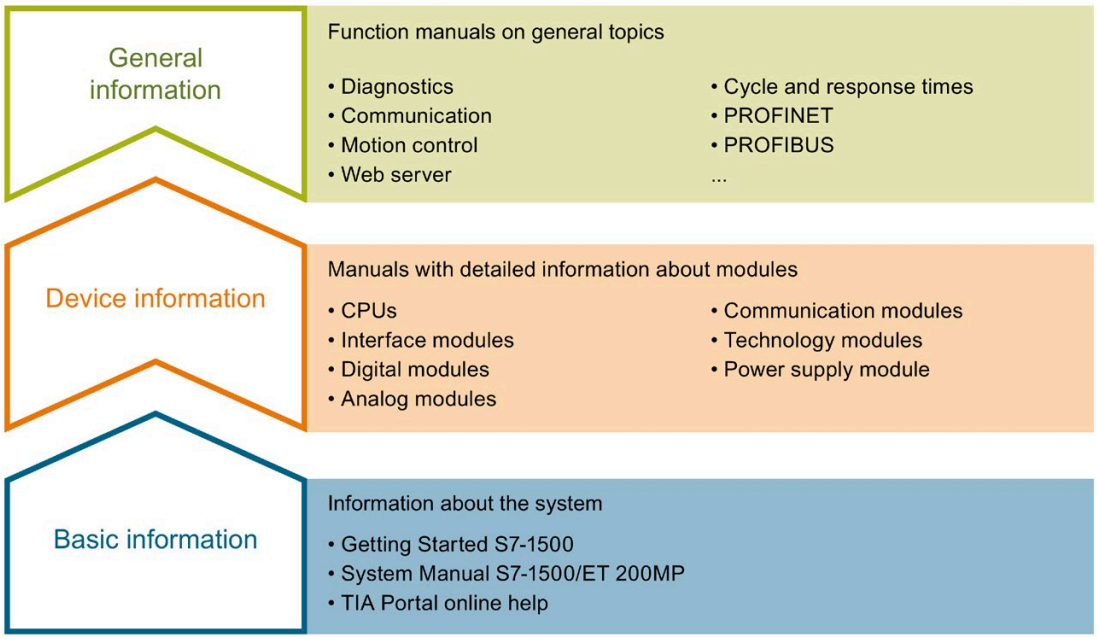

Basic information

The System Manual and Getting Started describe in detail the configuration, installation, wiring and commissioning of the SIMATIC S7-1500 and ET 200MP systems. The STEP 7 online help supports you in the configuration and programming.

Device information

Product manuals contain a compact description of the module-specific information, such as properties, wiring diagrams, characteristics and technical specifications.

General information

The function manuals contain detailed descriptions on general topics regarding the SIMATIC S7-1500 and ET 200MP systems, e.g. diagnostics, communication, motion control, Web server, OPC UA.

You can download the documentation free of charge from the Internet (https://support.industry.siemens.com/cs/ww/en/view/109742691).

Changes and supplements to the manuals are documented in a Product Information.

You can download the product information free of charge from the Internet (https://support.industry.siemens.com/cs/us/en/view/68052815).

Manual Collection S7-1500/ET 200MP

The Manual Collection contains the complete documentation on the SIMATIC S7-1500 automation system and the ET 200MP distributed I/O system gathered together in one file.

You can find the Manual Collection on the Internet (https://support.industry.siemens.com/cs/ww/en/view/86140384).

SIMATIC S7-1500 comparison list for programming languages

The comparison list contains an overview of which instructions and functions you can use for which controller families.

You can find the comparison list on the Internet (https://support.industry.siemens.com/cs/ww/en/view/86630375).

"mySupport"

With "mySupport", your personal workspace, you make the best out of your Industry Online Support.

In "mySupport", you can save filters, favorites and tags, request CAx data and compile your personal library in the Documentation area. In addition, your data is already filled out in support requests and you can get an overview of your current requests at any time.

You must register once to use the full functionality of "mySupport".

You can find "mySupport" on the Internet (https://support.industry.siemens.com/My/ww/en).

Application examples

The application examples support you with various tools and examples for solving your automation tasks. Solutions are shown in interplay with multiple components in the system - separated from the focus on individual products.

You will find the application examples on the Internet (https://support.industry.siemens.com/cs/ww/en/ps/ae).

Product overview

2

2.1 New functions

New functions of the CPU in firmware version V2.9

The following table provides an overview of the most important new functions of the CPU with firmware version V2.9.

New functions	Applications	Customer benefits	Where can I find information?
Communication of the CPU			
Secure PG/HMI communication	With STEP 7 and WinCC as of Version V17, SIMATIC S7-1500 CPUs and ET 200 CPUs from firmware version 2.9 support innovated and standardized secure PG/PC and HMI communication – referred to as Secure PG/HMI communication for short.	Secure and standardized creation or assignment of PLC communication certificates	Communication function manual (https://support.industry.siemens.com/cs/ww/en/view/59192925)
Protection of confidential configuration data	You have the option of assigning a password for protecting confidential configuration data of the respective CPU. This refers to data such as private keys that are required for the proper functioning of certificate-based protocols.	Additional password protection of confidential configuration data	
OPC UA: Alarms & Conditions	OPC UA clients from any manufacturer can subscribe to alarms of the CPU via OPC UA Alarms & Conditions.	Without further measures, alarms created once via OPC UA are available as events and alarms. The alarms can be displayed by any display device with corresponding OPC UA client functionality.	
OPC UA: Certificate management via Global Discovery Server (GDS)	Via GDS push management functions: • Automated update of OPC UA certificates of an S7-1500 CPU • Transfer of updated certificates and lists in RUN operating state of the CPU	The automation of the certificate management eliminates any manual work required for reconfiguring the CPU, for example, after a certificate has expired, and a new download to the CPU.	

New functions	Applications	Customer benefits	Where can I find information?
DHCP (Dynamic Host Configuration Protocol)	The CPU can use the DHCP communication protocol to assign the network configuration via a DHCP server. The CPU uses a client ID for identification on the DHCP server. The following parameters can be obtained: • IP Suite • DNS server • NTP server The CPU can also send its host name to the DHCP server.	With DHCP, you can integrate the CPU into an existing IT network without having to make additional changes to the PROFINET interface.	Communication function manual (https://support.industry.siemens.com/cs/ww/en/view/59192925)
MRP interconnection in PROFINET networks	The MRP interconnection procedure is an extension of MRP. MRP interconnection enables the redundant coupling of two or more rings with MRP in PROFINET networks.	There is no limit to the maximum number of 50 devices in a ring when setting up redundant network topologies. Monitoring of larger topologies with ring redundancy	PROFINET function manual (https://support.industry.siemens.com/cs/ww/en/view/49948856)
Web server of the CPU			
Web applications that can be loaded by the user	Additional methods to manage web applications via Web API You can use all available Web API methods within the web application	Web applications are also available in STOP mode of the CPU Reduced development times of web server user pages	Web server function manual (https://support.industry.siemens.com/cs/ww/en/view/59193560)
New Web API methods	Reading and changing the CPU operating state via Web API Ticket methods for transferring large amounts of data outside of the JSON RPC protocol	Additional applications for the web server	
Diagnostic information on motion control	Diagnostic information is available for all technology objects Improved display and grouping of the tags	Comprehensive diagnostic options by means of motion control applications are possible via the web server.	
Optimizations to the DNS (Domain Name System) functionality with OPC UA/Open User Communication and on the web server	The feedback messages of the OPC UA server with the "Application Name" can be sent via DNS. The NTP client of the CPU can address its relevant NTP servers via DNS. The Web server can be consistently reached via DNS addressing. DNS is taken into account during certificate handling.	A pool of NTP servers can be addressed.	Communication function manual (https://support.industry.siemens.com/cs/ww/en/view/59192925) Web server function manual (https://support.industry.siemens.com/cs/ww/en/view/59193560)
Technology functions of the CPU			
Axis functions	• Backlash compensation • Linear motor	The repeat accuracy of a movement is increased by compensation for the mechanical play of the real axis. Easier control of highly dynamic linear motors.	S7-1500T Motion Control function manuals (https://support.industry.siemens.com/cs/ww/en/view/109751049)

Reference

You can find an overview of all new functions, improvements and revisions in the respective firmware versions on the Internet (https://support.industry.siemens.com/cs/ww/en/view/109478459).

2.2 Area of application of the SIMATIC S7-1500 CPUs

Area of application

SIMATIC S7-1500 is the modular control system for a wide variety of automation applications in discrete automation.

SIMATIC S7-1500 is the cost-effective and convenient solution for a broad range of tasks and offers the following advantages:

- Modular, fanless design
- Simple realization of distributed structures
- User-friendly handling

Areas of application of the SIMATIC S7-1500 automation system include, for example:

- Special-purpose machines
- Textile machinery
- Packaging machines
- General mechanical engineering
- Controller engineering
- Machine tool engineering
- Installation engineering
- Electrical industry and crafts
- Automobile engineering
- Water/waste water
- Food & Beverage

Areas of application of the SIMATIC S7-1500R/H redundant system include, for example:

- Tunnels
- Airports (e.g. baggage conveyors)
- Subways
- Shipbuilding
- Wastewater treatment plants
- High-bay warehouses

Areas of application of the SIMATIC S7-1500T automation system for advanced motion control applications include, for example:

- Packaging machines
- Converting applications
- Assembly automation
- Pick-and-place automation
- Palletizers

You can choose between CPUs with various levels of performance and a comprehensive range of modules with many convenient functions. Fail-safe CPUs enable use in fail-safe applications. The modular design allows you to use only the modules that you need for your application. The controller can be retrofitted with additional modules at any time to expand its range of tasks.

High industrial suitability due to the high resistance to EMC, shock and vibration enable universal use of the SIMATIC S7-1500, S7-1500R/H and S7-1500T automation systems.

Performance segments of the CPUs

The CPUs can be used for smaller and mid-range applications, as well as for the high-end range of machine and plant automation.

Table 2- 1 Standard CPUs

CPU	Performance segment	PROFIBUS interfaces	PROFINET IO RT/IRT interfaces	PROFINET IO RT interface	Basic PROFINET functional-ity	Work memory	Pro-cessing time for bit oper-ations
CPU 1511-1 PN	Standard CPU for small to mid-range applica-tions	--	1	--	--	1.15 MB	60 ns
CPU 1513-1 PN	Standard CPU for mid-range applications	--	1	--	--	1.8 MB	40 ns
CPU 1515-2 PN	Standard CPU for mid-range to large applica-tions	--	1	1	--	3.5 MB	30 ns
CPU 1516-3 PN/DP	Standard CPU for de-manding applications and communication tasks	1	1	1	--	6 MB	10 ns
CPU 1517-3 PN/DP	Standard CPU for de-manding applications and communication tasks	1	1	1	--	10 MB	2 ns

CPU	Performance segment	PROFIBUS interfaces	PROFINET IO RT/IRT interfaces	PROFINET IO RT interface	Basic PROFINET functional-ity	Work memory	Pro-cessing time for bit oper-ations
CPU 1518-4 PN/DP	Standard CPU for high-performance applica-tions, demanding com-munication tasks and very short reaction times	1	1	1	1	24 MB	1 ns
CPU 1518-4 PN/DP MFP	Standard CPU for high-performance applica-tions, demanding com-munication tasks, very short reaction times and C/C++ blocks for the user program	1	1	1	1	74* MB	1 ns

* 50 MB of the integrated work memory is reserved for the function library of CPU runtime

Table 2- 2 Redundant CPUs

CPU	Performance segment	PROFIBUS interfaces	PROFINET IO RT/IRT interfaces	PROFINET IO RT interface	Basic PROFINET functional-ity	Work memory	Pro-cessing time for bit oper-ations
CPU 1513R-1 PN	Redundant CPU for smaller to mid-range applications	--	1	--	--	1.8 MB	80 ns
CPU 1515R-2 PN	Redundant CPU for mid-range to large applica-tions	--	1	--	1	3.5 MB	60 ns
CPU 1517H-3 PN	Redundant CPU for demanding applications and communication tasks	--	1	--	1	10 MB	4 ns
CPU 1518HF-4 PN	Fail-safe and redundant CPU for demanding applications and com-munication tasks	--	1	--	2	69 MB	4 ns

Table 2- 3 Compact CPUs

CPU	Performance segment	PROFIBUS interfaces	PROFINET IO RT/IRT interfaces	PROFINET IO RT interface	Basic PROFINET functional-ity	Work memory	Pro-cessing time for bit oper-ations
CPU 1511C-1 PN	Compact CPU for small to mid-range applica-tions	--	1	--	--	1.175 MB	60 ns
CPU 1512C-1 PN	Compact CPU for mid-range applications	--	1	--	--	1.25 MB	48 ns

Table 2- 4 Fail-safe CPUs

CPU	Performance segment	PROFIBUS interfaces	PROFINET IO RT/IRT interfaces	PROFINET IO RT interface	Basic PROFINET functional-ity	Work memory	Pro-cessing time for bit oper-ations
CPU 1511F-1 PN	Fail-safe CPU for small to mid-range applica-tions	--	1	--	--	1.225 MB	60 ns
CPU 1511TF-1 PN	Fail-safe technology CPU for small to mid-range applications	--	1	--	--	1.225 MB	60 ns
CPU 1513F-1 PN	Fail-safe CPU for mid-range applications	--	1	--	--	1.95 MB	40 ns
CPU 1515F-2 PN	Fail-safe CPU for mid-range to large applica-tions	--	1	1	--	3.75 MB	30 ns
CPU 1515TF-2 PN	Fail-safe technology CPU for demanding applications and com-munication tasks	--	1	1	--	3.75 MB	30 ns
CPU 1516F-3 PN/DP	Fail-safe CPU for de-manding applications and communication tasks	1	1	1	--	6.5 MB	10 ns
CPU 1516TF-3 PN/DP	Fail-safe technology CPU for demanding applications and com-munication tasks	1	1	1	--	6.5 MB	10 ns
CPU 1517F-3 PN/DP	Fail-safe CPU for de-manding applications and communication tasks	1	1	1	--	11 MB	2 ns
CPU 1517TF-3 PN/DP	Fail-safe technology CPU for demanding applications and com-munication tasks	1	1	1	--	11 MB	2 ns

CPU	Performance segment	PROFIBUS interfaces	PROFINET IO RT/IRT interfaces	PROFINET IO RT interface	Basic PROFINET functionality	Work memory	Processing time for bit operations
CPU 1518F-4 PN/DP	Fail-safe CPU for high-performance applications, demanding communication tasks and very short reaction times	1	1	1	1	26 MB	1 ns
CPU 1518F-4 PN/DP MFP	Fail-safe CPU for high-performance applications, demanding communication tasks, very short reaction times and C/C++ blocks for the user program	1	1	1	1	76* MB	1 ns
CPU 1518TF-4 PN/DP	Technology CPU for high-performance motion control applications with large quantities, demanding communication tasks and very short reaction times	1	1	1	1	69 MB	1 ns

* 50 MB of the integrated work memory is reserved for the function library of CPU runtime

Table 2- 5 Technology CPUs

CPU	Performance segment	PROFIBUS interfaces	PROFINET IO RT/IRT interfaces	PROFINET IO RT interface	Basic PROFINET functionality	Work memory	Processing time for bit operations
CPU 1511T-1 PN	Technology CPU for small to mid-range applications	--	1	--	--	1.225 MB	60 ns
CPU 1515T-2 PN	Technology CPU for mid-range to large applications	--	1	1	--	3.75 MB	30 ns
CPU 1516T-3 PN /DP	Technology CPU for high-end applications and communication tasks	1	1	1	--	6.5 MB	10 ns
CPU 1517T-3 PN/DP	Technology CPU for complex applications and communication tasks	1	1	1	--	11 MB	2 ns

CPU	Performance segment	PROFIBUS interfaces	PROFINET IO RT/IRT interfaces	PROFINET IO RT interface	Basic PROFINET functional-ity	Work memory	Pro-cessing time for bit oper-ations
CPU 1518T-4 PN/DP	Technology CPU for high-performance mo-tion control applications with large quantities, demanding communi-cation tasks and very short reaction times	1	1	1	1	69 MB	1 ns
CPU 1511TF-1 PN CPU 1515TF-2 PN CPU 1516TF-3 PN/DP CPU 1517TF-3 PN/DP CPU 1518TF-4 PN/DP	These CPUs are described in the fail-safe CPUs						

Performance segments of compact CPUs

The compact CPUs can be used for smaller to mid-range applications and have an integrated analog and digital on-board I/O as well as integrated technology functions. The following table shows the specific properties of the Compact CPUs.

	CPU 1511C-1 PN	CPU 1512C-1 PN
Integrated analog inputs/outputs	5 inputs/2 outputs	5 inputs/2 outputs
Integrated digital inputs/outputs	16 inputs/16 outputs	32 inputs/32 outputs
High-speed counters	6	6
Frequency meters	6 (max. 100 kHz)	6 (max. 100 kHz)
Period duration measurement	6 channels	6 channels
Pulse width modulation (PWM output)	Max. 4 (up to 100 kHz)	Max. 4 (up to 100 kHz)
Pulse Train Output (PTO output)	Max. 4 (up to 100 kHz)	Max. 4 (up to 100 kHz)
Frequency output	Up to 100 kHz	Up to 100 kHz

Integrated Motion Control technology functions

All CPUs of the SIMATIC S7-1500 automation system support motion control technology functions. STEP 7 provides PLCopen-standardized Motion Control instructions for configuring and connecting a drive to the CPU.

S7-1500 Motion Control supports the following technology objects:

- Speed-controlled axes
- Positioning axes
- Synchronous axes
- External encoders
- Cam
- Cam track
- Measuring input

The technology CPUs of the SIMATIC S7-1500-automation system offer enhanced Motion Control functions:

- Advanced synchronization functions
  - Synchronization with specification of the synchronous position
  - Actual value coupling
  - Shifting of the master value at the following axis
  - Camming
- Up to 4 encoder or measuring systems as actual position for position control
- Cam
- Kinematics for control of:
  - Cartesian portals
  - Roller pickers
  - Jointed-arm robots
  - Delta pickers
  - SCARA robots

Due to the supported technology functions, the S7-1500T CPUs are suitable for controlling packaging machines, converting applications, assembly automation, etc.

Additional integrated technology functions

For effective commissioning, diagnostics and fast optimization of drives and controls, the SIMATIC S7-1500 controller series offers extensive trace functions for all CPU tags.

In addition to drive integration, the SIMATIC S7-1500 controller series has a PID compact closed-loop controller; easy-to-configure blocks allow automatic optimization of the controller parameters for optimum control quality.

Other technology functions

Technology modules also implement functions such as high-speed counting, position detection, measuring functions and pulse generators (PTO, PWM and frequency output). With the CPU 1511C-1 PN and CPU 1512C-1 PN compact CPUs, these functions are already integrated and can be implemented without additional technology modules.

SIWAREX is a versatile and flexible weighing module which you can use as a static scale for operation.

Redundant CPUs

The CPUs of the S7-1500R/H redundant system offer a high degree of reliability and system availability. A redundant configuration of the most important automation components reduces the likelihood of production downtimes and the consequences of component errors.

The higher the risks and costs of a production downtime, the more worthwhile the use of a redundant system. The avoidance of production downtimes compensates for the generally higher investment costs.

Security Integrated

In conjunction with STEP 7, each CPU offers password-based know-how protection against unauthorized reading out or modification of the program blocks.

Copy protection provides reliable protection against unauthorized reproduction of program blocks. With copy protection, individual blocks on the SIMATIC memory card can be tied to its serial number so that the block can only be run if the configured memory card is inserted into the CPU.

In addition, you can assign various access rights to different user groups in the controller using four different authorization levels.

Improved manipulation protection allows changed or unauthorized transfers of engineering data to be detected by the controller.

The use of an Ethernet CP (CP 1543-1) provides you with additional access protection through a firewall or possibilities to establish secure VPN connections.

Safety Integrated

The fail-safe CPUs are intended for users who want to implement demanding standard and fail-safe applications both centrally and decentrally.

These fail-safe CPUs allow the processing of standard and safety programs on a single CPU. This allows fail-safe data to be evaluated in the standard user program. The integration also provides the system advantages and the extensive functionality of SIMATIC for fail-safe applications.

The fail-safe CPUs are certified for use in safety mode up to:

- Safety class (Safety Integrity Level) SIL 3 according to IEC 61508:2010
- Performance Level (PL) e and Category 4 according to ISO 13849-1:2015 or EN ISO 13849-1:2015

Additional password protection for F-configuration and F-program is set up for IT security.

Design and handling

All CPUs of the SIMATIC S7-1500 product series feature a display with plain text information. The display provides the user with information on the order numbers, firmware version, and serial number of all connected modules. In addition, the IP address of the CPU and other network settings can be adapted locally without a programming device. Error messages are shown on the display directly in plain text. When performing servicing, you can minimize plant downtimes by quickly accessing the diagnostics alarms. Detailed information about this and a multitude of other display functions is available in the SIMATIC S7-1500 Display Simulator (https://support.industry.siemens.com/cs/ww/en/view/109761758).

Uniform front connectors for all modules and integrated potential jumpers for flexible formation of potential groups simplify storage. Additional components such as circuit breakers, relays, etc., can be installed quickly and easily, since a DIN rail is implemented in the rail of the SIMATIC S7-1500. The CPUs of the SIMATIC S7-1500 product series can be expanded centrally and in a modular fashion with signal modules. Space-saving expansion enables flexible adaptation to each application.

The system cabling for digital signal modules enables fast and clear connection to sensors and actuators from the field (fully modular connection consisting of front connector modules, connection cables and I/O modules), as well as easy wiring inside the control cabinet (flexible connection consisting of front connectors with assembled single conductors).

System diagnostics and alarms

Integrated system diagnostics is activated by default for the CPUs. The different types of diagnostics are configured instead of programmed. System diagnostics information and alarms from the drives are displayed consistently and in plain text:

- On the CPU display
- In STEP 7
- On the HMI
- On the Web server

This information is available in RUN mode, but also in STOP mode of the CPU. The diagnostic information is updated automatically when you configure new hardware components.

The CPU is available as a central interrupt server in up to three project languages. The HMI takes over the display in the project languages defined for the CPU. If you require alarm texts in additional languages, you can load them into your HMI via the configured connection. The CPU, STEP 7 and your HMI ensure data consistency without additional engineering steps. The maintenance work is easier.

2.3 Hardware properties

Article number

6ES7511-1AK02-0AB0

View of the module

The following figure shows a CPU 1511-1 PN.

Figure 2-1 CPU 1511-1 PN

Note

Protective film

Note that a protective film is attached to the display of the CPU when shipped from the factory. Remove the protective film if necessary.

Properties

CPU 1511-1 PN has the following technical properties:

Property	Description	Additional information
CPU display	All CPUs of the SIMATIC S7-1500 product series feature a display with plain text information. The display provides information on order numbers, firmware version and serial numbers of all connected modules. In addition, you can set the IP address of the CPU and carry out further network settings. The display shows occurring error messages directly in plain text. In addition to the functions listed here, a multitude of other functions that are described in the SIMATIC S7-1500 Display Simulator are shown on the display.	• S7-1500, ET 200MP system manual (http://support.automation.siemens.com/WW/view/en/59191792) • SIMATIC S7-1500 Display Simulator (https://support.industry.siemens.com/cs/ww/en/view/109761758)
Supply voltage	The 24 V DC supply voltage is fed in via a 4-pin plug located at the bottom of the CPU.	• Chapter Connecting up (Page 30) • S7-1500, ET 200MP system manual (http://support.automation.siemens.com/WW/view/en/59191792)
PROFINET IO		
PROFINET interface (X1 P1 R and X1 P2 R)	The interface has two ports. In addition to basic PROFINET functionality, its also supports PROFINET IO RT (real time) and IRT (isochronous real time).	PROFINET function manual (https://support.industry.siemens.com/cs/ww/en/view/49948856)
Operation of the CPU as • IO controller • I-device	• **IO controller:** As an IO controller the CPU addresses the connected IO devices • **I-device:** As an I-device (intelligent IO device) the CPU is assigned to a higher-level IO controller and is used in the process as an intelligent pre-processing unit of sub-processes	

Accessories

You can find information on "Accessories/spare parts" in the S7-1500, ET 200MP system manual (http://support.automation.siemens.com/WW/view/en/59191792).

2.4 Firmware functions

Functions

The CPU 1511-1 PN supports the following firmware functions:

Function	Description	Additional information
Integrated system diagnostics	The system automatically generates the messages for the system diagnostics and outputs these messages via a programming device/PC, HMI device, the Web server or the integrated display. System diagnostics information is also available when the CPU is in STOP mode.	Diagnostics function manual (https://support.industry.siemens.com/cs/ww/en/view/59192926)
Integrated Web server	The Web server lets you access the CPU data by means of a network. Evaluations, diagnostics, and modifications are thus possible over long distances. Monitoring and evaluation is possible without STEP 7; all you need is a Web browser. Make sure that you take appropriate measures (e.g. limiting network access, using firewalls) to protect the CPU from being compromised.	• Web server function manual (https://support.industry.siemens.com/cs/ww/en/view/59193560) • Security with SIMATIC S7 controllers system manual (https://support.industry.siemens.com/cs/ww/en/view/90885010)
Integrated trace functionality	Trace functionality supports you in troubleshooting and/or optimizing the user program. You record device tags and evaluate the recordings with the trace and logic analyzer function. Tags are, for example, drive parameters or system and user tags of a CPU. The device saves the recordings. You can read out and permanently save the recordings with the configuration system (ES), if required. The trace and logic analyzer function is therefore suitable for monitoring highly dynamic processes. The trace record can also be displayed through the Web server.	Using the trace and logic analyzer function function manual (https://support.industry.siemens.com/cs/ww/en/view/64897128)
OPC UA	With OPC UA, you can exchange data via an open and manufacturer-neutral communication protocol. The CPU can act as OPC UA server. The CPU as OPC UA server can communicate with OPC UA clients. The OPC UA Companion Specification allows methods to be specified uniformly and independently of the manufacturer. Using these specified methods, you can easily integrate devices from various manufacturers into your plants and production processes.	Communication function manual (https://support.industry.siemens.com/cs/ww/en/view/59192925)
Configuration control	You can use configuration control to operate different real hardware configurations with a configured maximum configuration of the S7-1500 automation system/ET 200MP distributed I/O system. This means that, in series machine manufacturing in particular, you have the option of operating/configuring different configuration variants of a machine with a single project.	S7-1500, ET 200MP system manual (https://support.industry.siemens.com/cs/ww/en/view/59191792)

Function	Description	Additional information
PROFINET IO		
RT (real time)	RT prioritizes PROFINET IO telegrams over standard telegrams. This ensures the required determinism in the automation technology. In this process the data is transferred via prioritized Ethernet telegrams.	PROFINET function manual (https://support.industry.siemens.com/cs/ww/en/view/49948856)
IRT (isochronous real time)	A reserved bandwidth within the send clock is available for IRT data. The reserved bandwidth ensures that the IRT data can be transmitted in time-synchronized intervals, unaffected by other high network loading (e.g. TCP/IP communication or additional real-time communication). Update times with maximum determinism can be realized through IRT. Isochronous applications are possible with IRT.	
Isochronous mode	The Isochronous mode system property acquires measured values and process data and processes the signals in a fixed system clock. Isochronous mode thus contributes to high control quality and hence to greater manufacturing precision. Isochronous mode reduces possible fluctuations of the process reaction times to a minimum. Time-assured processing makes higher machine cycles possible.	
MRP (Media Redundancy Protocol)	It is possible to establish redundant networks via the Media Redundancy Protocol. Redundant transmission links (ring topology) ensure that an alternative communication path is made available if a transmission link fails. The PROFINET devices that are part of this redundant network form an MRP domain. RT operation is possible with the use of MRP.	
MRPD (Media Redundancy with Planned Duplication)	The advantage of the MRP extension MRPD is that, in the event of a failure of a device or a line in the ring, all other devices continue to be supplied with IO data without interruption and with short update times. MRPD is based on IRT and MRP. To realize media redundancy with short update times, the PROFINET devices participating in the ring send their data in both directions. The devices receive this data at both ring ports so that there is no reconfiguration time.	
Shared device	The "Shared device" function allows you to divide the modules or submodules of an IO device up among different IO controllers. Numerous IO controllers are often used in larger or widely distributed systems. Without the "Shared device" function, each I/O module of an IO device is assigned to the same IO controller. If sensors that are physically close to each other must provide data to different IO controllers, several IO devices are required. The "Shared device" function allows the modules or submodules of an IO device to be divided up among different IO controllers, thus allowing flexible automation concepts. You can, for example, combine I/O modules that are physically close to each other in one IO device.	
PROFIenergy	PROFIenergy is a PROFINET-based data interface for switching off consumers centrally and with full coordination during pause times regardless of the manufacturer or device type. Through this, the process should only be provided with the energy that is absolutely required. The majority of the energy is saved by the process; the PROFINET device itself only contributes a few watts of savings potential.	

Function	Description	Additional information
Integrated technology		
Motion Control	S7-1500 CPUs support the controlled positioning and traveling of axes via S7-1500 Motion Control functions by means of the following technology objects: Speed-controlled axes, positioning axes, synchronized axes, external encoders, cams, cam tracks and measuring inputs. • Speed-controlled axis for controlling a drive with speed specification • Positioning axis for position-controlled positioning of a drive • Synchronous axis to interconnect with a master value. The axis is synchronized to the master axis position. • External encoder for detecting the actual position of an encoder and its use as a master value for synchronous operation • Cams, cam track for position-dependent generation of switching signals • Measuring input for fast, accurate and event-dependent sensing of actual positions	S7-1500T Motion Control function manuals (https://support.industry.siemens.com/cs/ww/en/view/109751049)
Integrated closed-loop control functionality	• PID Compact (continuous PID controller) • PID 3Step (step controller for integrating actuators) • PID Temp (temperature controller for heating and cooling with two separate actuators)	PID control function manual (https://support.industry.siemens.com/cs/ww/en/view/108210036)

Function	Description	Additional information
Integrated safety		
Know-how protection	The know-how protection protects user blocks against unauthorized access and modifications.	S7-1500, ET 200MP system manual (https://support.industry.siemens.com/cs/ww/en/view/59191792)
Copy protection	Copy protection links user blocks to the serial number of the SIMATIC memory card or to the serial number of the CPU. User programs cannot run without the corresponding SIMATIC memory card or CPU.	
Access protection	You can use authorization levels to assign separate rights to different users.	
Integrity protection	The CPUs dispose of integrity protection by default. Integrity protection identifies possible manipulations of engineering data on the SIMATIC memory card or during data transfer between TIA Portal and CPU. Integrity protection also checks the communication from a SIMATIC HMI system to the CPU for possible manipulations of engineering data. If integrity protection identifies the manipulation of engineering data, the user receives a corresponding message.	
Password provider	As an alternative to manual password input you can connect a password provider to STEP 7. A password provider offers the following advantages: • Convenient handling of passwords. STEP 7 reads the password automatically for the blocks. This saves you time. • Optimum block protection because the users do not know the password itself.	

2.5 Operating and display elements

2.5.1 Front view of the CPU with closed front panel

The following figure shows the front view of the CPU 1511-1 PN.

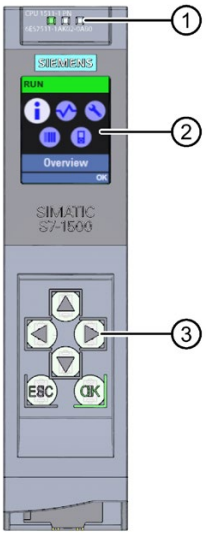

① LEDs for the current operating mode and diagnostics status of the CPU

② Display

③ Operator control buttons

Figure 2-2 View of the CPU 1511-1 PN (with front panel) - front

---

Note

Temperature range for display

To increase its service life, the display switches off at a temperature below the permitted operating temperature of the device. When the display cools down, it automatically switches itself on again. When the display is switched off, the LEDs continue to show the status of the CPU.

For more information on the temperatures at which the display switches itself on and off, refer to the Technical specifications (Page 38).

Removing and fitting the front panel or display

You can remove and fit the front panel or the display during operation.

WARNING

Personal injury and damage to property may occur

If you pull or plug the front panel of an S7-1500 automation system during operation, personal injury or damage to property can occur in zone 2 hazardous areas.

Before you remove or fit the front panel, always switch off the power supply to the S7-1500 automation system in hazardous area zone 2.

Locking the front panel

You can lock the front panel to protect your CPU against unauthorized access.

You can attach a security seal or a padlock with a diameter of 3 mm to the front panel.

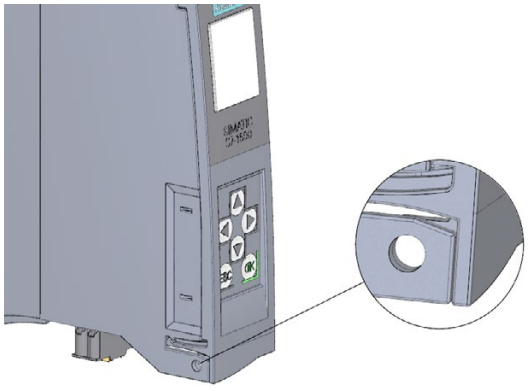

Figure 2-3 Locking latch on the CPU

In addition to the mechanical lock, you can also block access to a password-protected CPU on the display (local lock) and assign a password for the display. You can find additional information on the display, configurable protection levels and local locks in the S7-1500, ET 200MP (http://support.automation.siemens.com/WW/view/en/59191792) system manual.

Reference

You will find detailed information on the individual display options, a training course and a simulation of the available menu commands in the SIMATIC S7-1500 Display Simulator (https://support.industry.siemens.com/cs/ww/en/view/109761758).

2.5.2 Front view of the CPU without front panel and view from below

The following figure shows the operator controls and connection elements of the CPU 1511-1 PN.

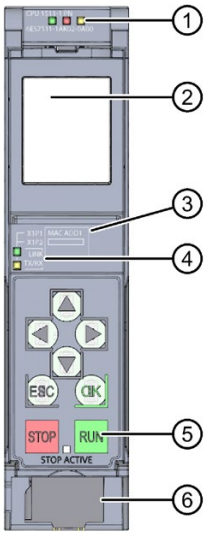

① LEDs for the current operating mode and diagnostic status of the CPU
② Display
③ MAC address
④ LED displays for the 2 ports of the PROFINET interface X1
⑤ Operating modes with "STOP ACTIVE" LED
⑥ Connector for power supply

Figure 2-4 View of the CPU 1511-1 PN (without front panel) – front

Note

Removing the display

Only remove the display if it is faulty.

You can find information on removing and replacing displays in the S7-1500, ET 200MP system manual (https://support.industry.siemens.com/cs/ww/en/view/59191792).

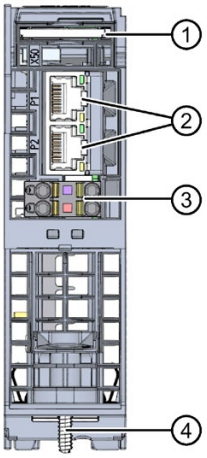

① Slot for the SIMATIC memory card
② PROFINET IO interface (X1) with 2 ports
③ Connection for supply voltage
④ Fixing screw

Figure 2-5 View of the CPU 1511-1 PN – bottom

2.5.3 Rear view of the CPU

The following figure shows the connection elements on the back of the CPU 1511-1 PN.

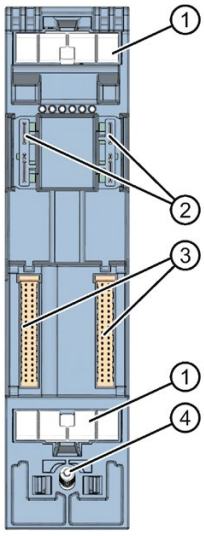

① Shield contact surface
② Plug-in connection for power supply
③ Plug-in connection for backplane bus
④ Fastening screw

Figure 2-6 View of the CPU 1511-1 PN - rear

2.6 Operating mode buttons

You use the operating mode buttons to set the operating mode of the CPU.

The following table shows the meaning of the corresponding operation of the operating mode buttons.

Table 2- 6 Meaning of the operating mode buttons

Operation of the operating mode buttons	Meaning	Explanation
RUN	RUN mode	The CPU is executing the user program.
STOP	STOP mode	The user program is not being executed. (STOP ACTIVE LED lights up).
MRES 1. Press the operating mode button STOP. Result: The RUN/STOP LED lights up yellow. 2. Press the operating mode button STOP until the RUN/STOP LED lights up for the 2nd time and remains continuously lit (this takes three seconds). After this, release the button. 3. Press the operating mode button STOP again within the next three seconds.	Manual memory reset (with inserted SIMATIC memory card) or Reset to factory settings (without inserted SIMATIC memory card):	The CPU executes memory reset. or The CPU is reset to its factory settings. You can find additional information in the S7-1500/ET 200MP system manual (https://support.industry.siemens.com/cs/ww/den/view/59191792).

Connecting up

3

This section provides information on the terminal assignment of the individual interfaces and the block diagram of the CPU 1511-1 PN.

24 V DC supply voltage (X80)

The connector for the power supply is plugged in when the CPU ships from the factory.

The following table shows the signal names and the descriptions of the pin assignment of the 24 V DC supply voltage.

Table 3- 1 Pin assignment 24 V DC supply voltage

View Connector	Signal name [1]		Description
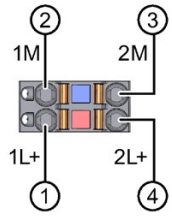	1	1L+	+ 24 V DC of the supply voltage
	2	1M	Ground of the supply voltage
	3	2M	Ground of the supply voltage for loop-through [2]
	4	2L+	+ 24 V DC of the supply voltage for loop-through [2]

[1] 1L+ and 2L+ as well as 1M and 2M are bridged internally

[2] Maximum 10 A permitted

If the CPU is supplied by a system power supply, it is not necessary to connect the 24 V supply.

PROFINET interface X1 with 2-port switch (X1 P1 R and X1 P2 R)

The assignment corresponds to the Ethernet standard for an RJ45 plug.

- When autonegotiation is deactivated, the RJ45 socket is allocated as a switch (MDI-X).
- When autonegotiation is activated, autocrossing is in effect and the RJ45 socket is allocated either as data terminal equipment (MDI) or a switch (MDI-X).

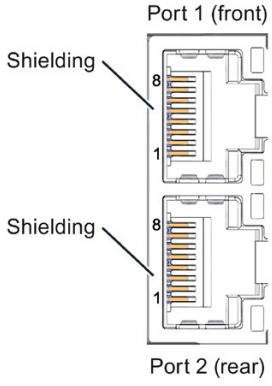

Figure 3-1 PROFINET ports

Note

You need a screwdriver (max. blade width 2.5 mm) to remove the PROFINET plug.

Remove display

You can find a description of how to remove and replace the display in the S7-1500, ET 200MP (http://support.automation.siemens.com/WW/view/en/59191792) system manual.

Reference

You can find additional information on the topics of "Connecting the CPU" and "Accessories/spare parts" in the S7-1500, ET 200MP (http://support.automation.siemens.com/WW/view/en/59191792) system manual.

Assignment of the MAC addresses

The CPU 1511-1 PN has a PROFINET interface with two ports. The PROFINET interface itself has a MAC address, and each of the two PROFINET ports has its own MAC address. The CPU 1511-1 PN therefore has three MAC addresses in total.

The MAC addresses of the PROFINET ports are needed for the LLDP protocol, for example for the neighborhood discovery function.

The number range of the MAC addresses is sequential. The first and last MAC address are lasered on the rating plate on the right side of each CPU 1511-1 PN.

The table below shows how the MAC addresses are assigned.

Table 3- 2 Assignment of the MAC addresses

	Assignment	Labeling
MAC address 1	PROFINET interface X1 (visible in STEP 7 for accessible devices)	• Front, lasered • Right side, lasered (start of number range)
MAC address 2	Port X1 P1 R (required for LLDP, for example)	• Front and right side, not lasered
MAC address 3	Port X1 P2 R (required for LLDP, for example)	• Front, not lasered • Right side, lasered (end of number range)

Block diagram

The following figure shows the block diagram of the CPU 1511-1 PN.

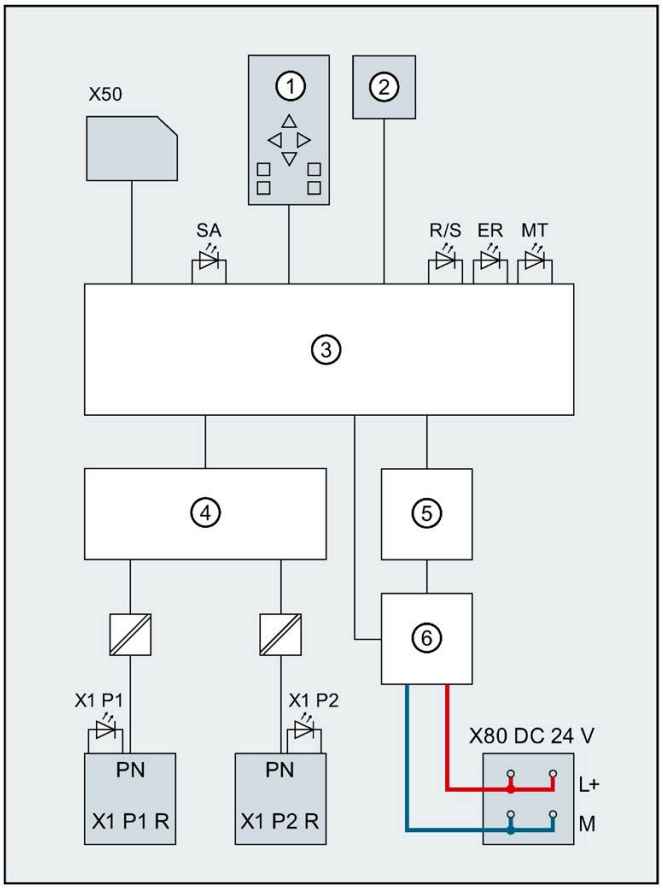

①	CPU with control and operating mode buttons	X80 24 V DC	Infeed of supply voltage
②	Display	L+	24 V DC supply voltage
③	Electronics	M	Ground
④	PROFINET 2-port switch	SF	STOP ACTIVE LED (yellow)
⑤	Backplane bus interface	R/S	RUN/STOP LED (yellow/green)
⑥	Internal supply voltage	ER	ERROR LED (red)
PN X1 P1 R	PROFINET interface X1 Port 1	MT	MAINT LED (yellow)
PN X1 P2 R	PROFINET interface X1 Port 2	X1 P1, X1 P2	LED Link TX/RX
X50	SIMATIC memory card		

Figure 3-2 Block diagram CPU 1511-1 PN

Interrupts, error messages, diagnostics and system alarms

4

The status and error displays of the CPU 1511-1 PN are described below.

You will find additional information on "Interrupts" in the STEP 7 online help.

You can find additional information on the topics of "Diagnostics" and "System alarms" in the Diagnostics (http://support.automation.siemens.com/WW/view/en/59192926) function manual.

4.1 Status and error display of the CPU

LED display

The figure below shows the LED display of the CPU 1511-1 PN.

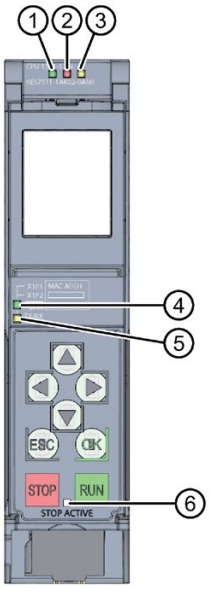

① RUN/STOP LED (yellow/green LED)
② ERROR LED (red LED)
③ MAINT LED (yellow LED)
④ LINK RX/TX LED for port X1 P1 (yellow/green LED)
⑤ LINK RX/TX LED for port X1 P2 (yellow/green LED)
⑥ STOP ACTIVE-LED (yellow LED)

Figure 4-1 LED display of the CPU 1511-1 PN (without front panel)

Meaning of the RUN/STOP, ERROR and MAINT LEDs

The CPU 1511-1 PN has three LEDs to signal the current operating status and diagnostics status. The following table shows the meaning of the various combinations of colors for the RUN/STOP, ERROR and MAINT LEDs.

Table 4- 1 Meaning of the LEDs

RUN/STOP LED	ERROR LED	MAINT LED	Meaning
LED off	LED off	LED off	Missing or insufficient power supply on the CPU.
LED off	LED flashes red	LED off	An error has occurred.
LED lit green	LED off	LED off	CPU is in RUN mode.
LED lit green	LED flashes red	LED off	A diagnostics event is pending.
LED lit green	LED off	LED lit yellow	Maintenance demanded for the plant. The affected hardware must be checked/replaced within a short period of time.
			Active Force job
LED lit green	LED off	LED flashes yellow	Bad configuration
LED lit yellow	LED flashes red	LED off	A diagnostics event is pending.
LED lit yellow	LED off	LED flashes yellow	Firmware update successfully completed.
LED lit yellow	LED off	LED off	CPU is in STOP mode.
LED lit yellow	LED flashes red	LED flashes yellow	The program on the SIMATIC memory card is causing an error.
			Firmware update using SIMATIC memory card has failed.
			The CPU has detected an error state. Additional information is available via the CPU diagnostic buffer.
LED flashes yellow	LED off	LED off	CPU is performing internal activities during STOP, e.g. startup after STOP.
			Download of the user program from the SIMATIC memory card
			CPU carries out a program with active breakpoint.
LED flashes yellow/green	LED off	LED off	Startup (transition from STOP → RUN)
LED flashes yellow/green	LED flashes red	LED flashes yellow	Startup (CPU booting)
			Test of LEDs during startup, inserting a module.
			LED flashing test

Meaning of LINK RX/TX LED

Each port has a LINK RX/TX LED. The table below shows the various "LED scenarios" of the ports for the CPU 1511-1 PN.

Table 4- 2 Meaning of the LEDs

LINK TX/RX LED	Meaning
LED off	There is no Ethernet connection between the PROFINET interface of the PROFINET device and the communication partner. No data is currently being sent/received via the PROFINET interface. There is no LINK connection.
LED flashes green	The "LED flashing test" is being performed.
LED lit green	There is an Ethernet connection between the PROFINET interface of your PROFINET device and a communication partner.
LED flashes yellow/green	Data is currently being received from or sent to a communications partner on Ethernet via the PROFINET interface of the PROFINET device.

Note

"LED" instruction

You can read the status (e.g. "On" or "Off") of LEDs of a CPU or a module using the "LED" instruction. Note, however, that it is not possible to read the LED status of the LINK RX/TX LEDs on all S7-1500 CPUs.

You can find additional information on the "LED" instruction in the STEP 7 online help.

Meaning of the STOP ACTIVE LED

The following table shows the meaning of the STOP ACTIVE LED for the CPU 1511-1 PN.

Table 4- 3 Meaning of the LEDs

STOP ACTIVE LED	Meaning
■ LED lit yellow	The CPU is switched to "STOP" mode using the STOP button. • As long as the STOP ACTIVE LED is lit up, switching the CPU to RUN mode is only possible using the RUN button. • The CPU can then no longer be set to RUN mode via the display operation or via online functions. The state of the buttons is retained at power-off. If the CPU does not start up automatically after a power-on, you have to keep the STOP button pressed during start-up until the STOP ACTIVE LED is activated. • If an automatic start-up is to be reliably prevented after a power-up, the STOP button has to be kept pressed during the start-up of the CPU until the STOP ACTIVE LED is activated.
□ LED off	• The CPU is set to "STOP" mode using the display or programming device and not with the STOP button on the device. • The CPU is in RUN mode.

Technical specifications

5

The following table shows the technical specifications as of 05/2021. You will find a data sheet including daily updated technical specifications on the Internet (https://support.industry.siemens.com/cs/ww/en/pv/6ES7511-1AK02-0AB0/td?dl=en).

Article number	6ES7511-1AK02-0AB0
General information	
Product type designation	CPU 1511-1 PN
HW functional status	FS03
Firmware version	V2.9
Product function	
• I&M data	Yes; I&M0 to I&M3
• Isochronous mode	Yes; Distributed and central; with minimum OB 6x cycle of 625 µs (distributed) and 1 ms (central)
Engineering with	
• STEP 7 TIA Portal configurable/integrated from version	V17 (FW V2.9) / V15 (FW V2.5) or higher; with older TIA Portal versions configurable as 6ES7511-1AK01-0AB0
Configuration control	
via dataset	Yes
Display	
Screen diagonal [cm]	3.45 cm
Control elements	
Number of keys	8
Mode buttons	2
Supply voltage	
Type of supply voltage	24 V DC
permissible range, lower limit (DC)	19.2 V
permissible range, upper limit (DC)	28.8 V
Reverse polarity protection	Yes
Mains buffering	
• Mains/voltage failure stored energy time	5 ms
• Repeat rate, min.	1/s
Input current	
Current consumption (rated value)	0.7 A
Current consumption, max.	0.95 A
Inrush current, max.	1.9 A; Rated value
I^2t	0.02 $A^2 \cdot s$
Power	
Infeed power to the backplane bus	10 W
Power consumption from the backplane bus (balanced)	5.5 W
Power loss	
Power loss, typ.	5.7 W

Article number	6ES7511-1AK02-0AB0
Memory	
Number of slots for SIMATIC memory card	1
SIMATIC memory card required	Yes
Work memory	
• integrated (for program)	150 kbyte
• integrated (for data)	1 Mbyte
Load memory	
• Plug-in (SIMATIC Memory Card), max.	32 Gbyte
Backup	
• maintenance-free	Yes
CPU processing times	
for bit operations, typ.	60 ns
for word operations, typ.	72 ns
for fixed point arithmetic, typ.	96 ns
for floating point arithmetic, typ.	384 ns
CPU-blocks	
Number of elements (total)	4 000; Blocks (OB, FB, FC, DB) and UDTs
DB	
• Number range	1 ... 60 999; subdivided into: number range that can be used by the user: 1 ... 59 999, and number range of DBs created via SFC 86: 60 000 ... 60 999
• Size, max.	1 Mbyte; For DBs with absolute addressing, the max. size is 64 KB
FB	
• Number range	0 ... 65 535
• Size, max.	150 kbyte
FC	
• Number range	0 ... 65 535
• Size, max.	150 kbyte
OB	
• Size, max.	150 kbyte
• Number of free cycle OBs	100
• Number of time alarm OBs	20
• Number of delay alarm OBs	20
• Number of cyclic interrupt OBs	20; With minimum OB 3x cycle of 500 µs
• Number of process alarm OBs	50
• Number of DPV1 alarm OBs	3
• Number of isochronous mode OBs	2
• Number of technology synchronous alarm OBs	2
• Number of startup OBs	100

Article number	6ES7511-1AK02-0AB0
• Number of asynchronous error OBs	4
• Number of synchronous error OBs	2
• Number of diagnostic alarm OBs	1
Nesting depth	
• per priority class	24
Counters, timers and their retentivity	
S7 counter	
• Number	2 048
Retentivity	
– adjustable	Yes
IEC counter	
• Number	Any (only limited by the main memory)
Retentivity	
– adjustable	Yes
S7 times	
• Number	2 048
Retentivity	
– adjustable	Yes
IEC timer	
• Number	Any (only limited by the main memory)
Retentivity	
– adjustable	Yes
Data areas and their retentivity	
Retentive data area (incl. timers, counters, flags), max.	128 kbyte; In total; available retentive memory for bit memories, timers, counters, DBs, and technology data (axes): 88 KB
Extended retentive data area (incl. timers, counters, flags), max.	1 Mbyte; When using PS 6 0W 24/48/60 V DC HF
Flag	
• Size, max.	16 kbyte
• Number of clock memories	8; 8 clock memory bit, grouped into one clock memory byte
Data blocks	
• Retentivity adjustable	Yes
• Retentivity preset	No
Local data	
• per priority class, max.	64 kbyte; max. 16 KB per block
Address area	
Number of IO modules	1 024; max. number of modules / submodules

Article number	6ES7511-1AK02-0AB0
I/O address area	
• Inputs	32 kbyte; All inputs are in the process image
• Outputs	32 kbyte; All outputs are in the process image
per integrated IO subsystem	
– Inputs (volume)	8 kbyte
– Outputs (volume)	8 kbyte
per CM/CP	
– Inputs (volume)	8 kbyte
– Outputs (volume)	8 kbyte
Subprocess images	
• Number of subprocess images, max.	32
Hardware configuration	
Number of distributed IO systems	32; A distributed I/O system is characterized not only by the integration of distributed I/O via PROFINET or PROFIBUS communication modules, but also by the connection of I/O via AS-i master modules or links (e.g. IE/PB-Link)
Number of DP masters	
• Via CM	4; A maximum of 4 CMs/CPs (PROFIBUS, PROFINET, Ethernet) can be inserted in total
Number of IO Controllers	
• integrated	1
• Via CM	4; A maximum of 4 CMs/CPs (PROFIBUS, PROFINET, Ethernet) can be inserted in total
Rack	
• Modules per rack, max.	32; CPU + 31 modules
• Number of lines, max.	1
PtP CM	
• Number of PtP CMs	the number of connectable PtP CMs is only limited by the number of available slots
Time of day	
Clock	
• Type	Hardware clock
• Backup time	6 wk; At 40 °C ambient temperature, typically
• Deviation per day, max.	10 s; Typ.: 2 s
Operating hours counter	
• Number	16
Clock synchronization	
• supported	Yes
• in AS, master	Yes
• in AS, slave	Yes
• on Ethernet via NTP	Yes

Article number	6ES7511-1AK02-0AB0
Interfaces	
Number of PROFINET interfaces	1
1. Interface	
Interface types	
• RJ 45 (Ethernet)	Yes; X1
• Number of ports	2
• integrated switch	Yes
Protocols	
• IP protocol	Yes; IPv4
• PROFINET IO Controller	Yes
• PROFINET IO Device	Yes
• SIMATIC communication	Yes
• Open IE communication	Yes; Optionally also encrypted
• Web server	Yes
• Media redundancy	Yes
PROFINET IO Controller	
Services	
– PG/OP communication	Yes
– Isochronous mode	Yes
– Direct data exchange	Yes; Requirement: IRT and isochronous mode (MRPD optional)
– IRT	Yes
– PROFIenergy	Yes; per user program
– Prioritized startup	Yes; Max. 32 PROFINET devices
– Number of connectable IO Devices, max.	128; In total, up to 256 distributed I/O devices can be connected via AS-i, PROFIBUS or PROFINET
– Of which IO devices with IRT, max.	64
– Number of connectable IO Devices for RT, max.	128
– of which in line, max.	128
– Number of IO Devices that can be simultaneously activated/deactivated, max.	8; in total across all interfaces
– Number of IO Devices per tool, max.	8
– Updating times	The minimum value of the update time also depends on communication share set for PROFINET IO, on the number of IO devices, and on the quantity of configured user data

Article number	6ES7511-1AK02-0AB0
Update time for IRT	
– for send cycle of 250 µs	250 µs to 4 ms; Note: In the case of IRT with isochronous mode, the minimum update time of 625 µs of the isochronous OB is decisive
– for send cycle of 500 µs	500 µs to 8 ms; Note: In the case of IRT with isochronous mode, the minimum update time of 625 µs of the isochronous OB is decisive
– for send cycle of 1 ms	1 ms to 16 ms
– for send cycle of 2 ms	2 ms to 32 ms
– for send cycle of 4 ms	4 ms to 64 ms
– With IRT and parameterization of "odd" send cycles	Update time = set "odd" send clock (any multiple of 125 µs: 375 µs, 625 µs ... 3 875 µs)
Update time for RT	
– for send cycle of 250 µs	250 µs to 128 ms
– for send cycle of 500 µs	500 µs to 256 ms
– for send cycle of 1 ms	1 ms to 512 ms
– for send cycle of 2 ms	2 ms to 512 ms
– for send cycle of 4 ms	4 ms to 512 ms
PROFINET IO Device	
Services	
– PG/OP communication	Yes
– Isochronous mode	No
– IRT	Yes
– PROFIenergy	Yes; per user program
– Shared device	Yes
– Number of IO Controllers with shared device, max.	4
– activation/deactivation of I-devices	Yes; per user program
– Asset management record	Yes; per user program
Interface types	
RJ 45 (Ethernet)	
• 100 Mbps	Yes
• Autonegotiation	Yes
• Autocrossing	Yes
• Industrial Ethernet status LED	Yes
Protocols	

Article number	6ES7511-1AK02-0AB0
Number of connections	
• Number of connections, max.	96; via integrated interfaces of the CPU and connected CPs / CMs
• Number of connections reserved for ES/HMI/web	10
• Number of connections via integrated interfaces	64
• Number of S7 routing paths	16
Redundancy mode	
• H-Sync forwarding	Yes
Media redundancy	
– Media redundancy	only via 1st interface (X1)
– MRP	Yes
– MRP interconnection, supported	Yes; as MRP ring node according to IEC 62439-2 Edition 3.0
– MRPD	Yes; Requirement: IRT
– Switchover time on line break, typ.	200 ms; For MRP, bumpless for MRPD
– Number of stations in the ring, max.	50
SIMATIC communication	
• PG/OP communication	Yes; encryption with TLS V1.3 pre-selected
• S7 routing	Yes
• S7 communication, as server	Yes
• S7 communication, as client	Yes
• User data per job, max.	See online help (S7 communication, user data size)
Open IE communication	
• TCP/IP	Yes
– Data length, max.	64 kbyte
– several passive connections per port, supported	Yes
• ISO-on-TCP (RFC1006)	Yes
– Data length, max.	64 kbyte
• UDP	Yes
– Data length, max.	2 kbyte; 1 472 bytes for UDP broadcast
– UDP multicast	Yes; Max. 5 multicast circuits
• DHCP	Yes
• DNS	Yes
• SNMP	Yes
• DCP	Yes

Article number	6ES7511-1AK02-0AB0
• LLDP	Yes
• Encryption	Yes; Optional
Web server	
• HTTP	Yes; Standard and user pages
• HTTPS	Yes; Standard and user pages
OPC UA	
• Runtime license required	Yes; "Small" license required
• OPC UA Client	Yes
– Application authentication	Yes
– Security policies	Available security policies: None, Basic128Rsa15, Basic256Rsa15, Basic256Sha256
– User authentication	"anonymous" or by user name & password
– Number of connections, max.	4
– Number of nodes of the client interfaces, max.	1 000
– Number of elements for one call of OPC_UA_NodeGetHandleList/OPC_UA_ReadList/OPC_UA_WriteList, max.	300
– Number of elements for one call of OPC_UA_NameSpaceGetIndexList, max.	20
– Number of elements for one call of OPC_UA_MethodGetHandleList, max.	100
– Number of simultaneous calls of the client instructions per connection (except OPC_UA_ReadList,OPC_UA_WriteList,OPC_UA_MethodCall), max.	1
– Number of simultaneous calls of the client instructions OPC_UA_ReadList,OPC_UA_WriteList and OPC_UA_MethodCall, max.	5
– Number of registerable nodes, max.	5 000
– Number of registerable method calls of OPC_UA_MethodCall, max.	100
– Number of inputs/outputs when calling OPC_UA_MethodCall, max.	20
• OPC UA Server	Yes; Data access (read, write, subscribe), method call, custom address space
– Application authentication	Yes
– Security policies	Available security policies: None, Basic128Rsa15, Basic256Rsa15, Basic256Sha256
– User authentication	"anonymous" or by user name & password
– GDS support (certificate management)	Yes

Article number	6ES7511-1AK02-0AB0
– Number of sessions, max.	32
– Number of accessible variables, max.	50 000
– Number of registerable nodes, max.	10 000
– Number of subscriptions per session, max.	20
– Sampling interval, min.	100 ms
– Publishing interval, min.	500 ms
– Number of server methods, max.	20
– Number of inputs/outputs per server method, max.	20
– Number of monitored items, max.	1 000; for 1 s sampling interval and 1 s send interval
– Number of nodes for user-defined server interfaces, max.	1 000
• Alarms and Conditions	Yes
– Number of program alarms	100
– Number of alarms for system diagnostics	50
Further protocols	
• MODBUS	Yes; MODBUS TCP
Isochronous mode	
Equidistance	Yes
S7 message functions	
Number of login stations for message functions, max.	32
Program alarms	Yes
Number of configurable program messages, max.	5 000; Program messages are generated by the "Program_Alarm" block, ProDiag or GRAPH
Number of loadable program messages in RUN, max.	2 500
Number of simultaneously active program alarms	
• Number of program alarms	600
• Number of alarms for system diagnostics	100
• Number of alarms for motion technology objects	80
Test commissioning functions	
Joint commission (Team Engineering)	Yes; Parallel online access possible for up to 5 engineering systems
Status block	Yes; Up to 8 simultaneously (in total across all ES clients)
Single step	No
Number of breakpoints	8

Article number	6ES7511-1AK02-0AB0
Status/control	
• Status/control variable	Yes
• Variables	Inputs/outputs, memory bits, DBs, distributed I/Os, timers, counters
• Number of variables, max.	
– of which status variables, max.	200; per job
– of which control variables, max.	200; per job
Forcing	
• Forcing	Yes
• Forcing, variables	Peripheral inputs/outputs
• Number of variables, max.	200
Diagnostic buffer	
• present	Yes
• Number of entries, max.	1 000
– of which powerfail-proof	500
Traces	
• Number of configurable Traces	4; Up to 512 KB of data per trace are possible
Interrupts/diagnostics/status information	
Diagnostics indication LED	
• RUN/STOP LED	Yes
• ERROR LED	Yes
• MAINT LED	Yes
• STOP ACTIVE LED	Yes
• Connection display LINK TX/RX	Yes
Supported technology objects	
Motion Control	Yes; Note: The number of technology objects affects the cycle time of the PLC program; selection guide via the TIA Selection Tool
• Number of available Motion Control resources for technology objects	800
• Required Motion Control resources	
– per speed-controlled axis	40
– per positioning axis	80
– per synchronous axis	160
– per external encoder	80
– per output cam	20
– per cam track	160
– per probe	40

Article number	6ES7511-1AK02-0AB0
• Positioning axis	
– Number of positioning axes at motion control cycle of 4 ms (typical value)	5
– Number of positioning axes at motion control cycle of 8 ms (typical value)	10
Controller	
• PID_Compact	Yes; Universal PID controller with integrated optimization
• PID_3Step	Yes; PID controller with integrated optimization for valves
• PID-Temp	Yes; PID controller with integrated optimization for temperature
Counting and measuring	
• High-speed counter	Yes
Standards, approvals, certificates	
Suitable for safety functions	No
Ambient conditions	
Ambient temperature during operation	
• horizontal installation, min.	-25 °C; No condensation
• horizontal installation, max.	60 °C; Display: 50 °C, at an operating temperature of typically 50 °C, the display is switched off
• vertical installation, min.	-25 °C; No condensation
• vertical installation, max.	40 °C; Display: 40 °C, at an operating temperature of typically 40 °C, the display is switched off
Ambient temperature during storage/transportation	
• min.	-40 °C
• max.	70 °C
Altitude during operation relating to sea level	
• Installation altitude above sea level, max.	5 000 m; Restrictions for installation altitudes > 2 000 m, see manual
Configuration	
Programming	
Programming language	
– LAD	Yes
– FBD	Yes
– STL	Yes
– SCL	Yes
– GRAPH	Yes

Article number	6ES7511-1AK02-0AB0
Know-how protection	
• User program protection/password protection	Yes
• Copy protection	Yes
• Block protection	Yes
Access protection	
• protection of confidential configuration data	Yes
• Password for display	Yes
• Protection level: Write protection	Yes
• Protection level: Read/write protection	Yes
• Protection level: Complete protection	Yes
Cycle time monitoring	
• lower limit	adjustable minimum cycle time
• upper limit	adjustable maximum cycle time
Dimensions	
Width	35 mm
Height	147 mm
Depth	129 mm
Weights	
Weight, approx.	405 g

General technical specifications

You can find information on the general technical specifications, such as standards and approvals, electromagnetic compatibility, protection class, etc., in the S7-1500, ET 200MP (http://support.automation.siemens.com/WW/view/en/59191792) system manual.

Dimensional drawing

A

This section includes a dimensional drawing of the module on a mounting rail and a dimensional drawing with the front panel open. Always observe the specified dimensions for installation in cabinets, control rooms, etc.

Dimensional drawings for CPU 1511-1 PN

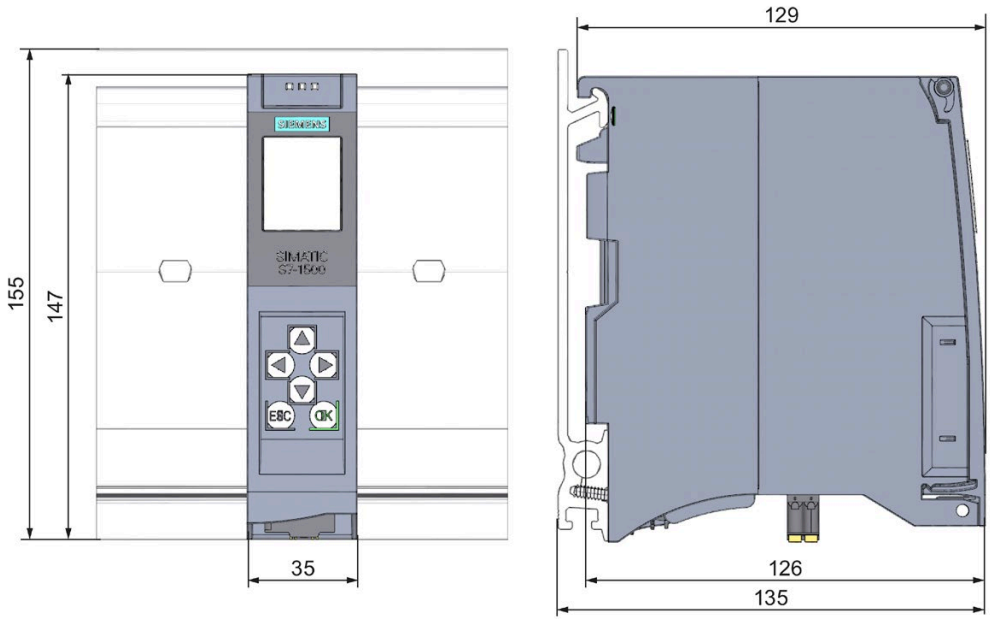

Figure A-1 Dimensional drawing of CPU 1511-1 PN, front and side views

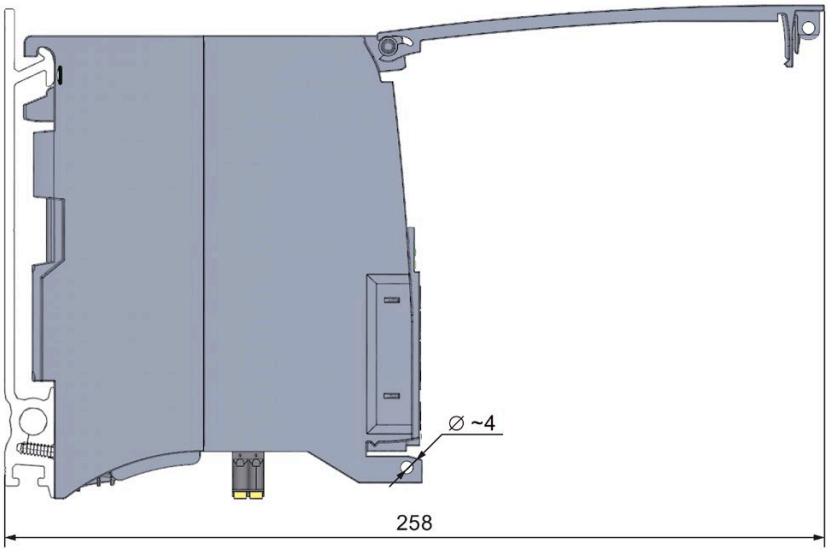

Figure A-2 Dimensional drawing of CPU 1511-1 PN, side view with front panel open

SIEMENS

Manual

SIMATIC

S7-1500

CPU 1511C-1 PN (6ES7511-1CK01-0AB0)

Edition 05/2021

support.industry.siemens.com

SIEMENS

SIMATIC

S7-1500
CPU 1511C-1 PN
(6ES7511-1CK01-0AB0)

Equipment Manual

Preface

S7-1500 / ET 200MP Documentation Guide 1

Product overview 2

Technology functions 3

Wiring 4

Parameters/address space 5

Interrupts/diagnostics alarms 6

Technical specifications 7

Dimension drawings A

Parameter data records B

Analog value processing C

05/2021

A5E40898565-AB

Legal information

Warning notice system

This manual contains notices you have to observe in order to ensure your personal safety, as well as to prevent damage to property. The notices referring to your personal safety are highlighted in the manual by a safety alert symbol, notices referring only to property damage have no safety alert symbol. These notices shown below are graded according to the degree of danger.

⚠ DANGER
indicates that death or severe personal injury **will** result if proper precautions are not taken.

⚠ WARNING
indicates that death or severe personal injury **may** result if proper precautions are not taken.

⚠ CAUTION
indicates that minor personal injury can result if proper precautions are not taken.

NOTICE
indicates that property damage can result if proper precautions are not taken.

If more than one degree of danger is present, the warning notice representing the highest degree of danger will be used. A notice warning of injury to persons with a safety alert symbol may also include a warning relating to property damage.

Qualified Personnel

The product/system described in this documentation may be operated only by **personnel qualified** for the specific task in accordance with the relevant documentation, in particular its warning notices and safety instructions. Qualified personnel are those who, based on their training and experience, are capable of identifying risks and avoiding potential hazards when working with these products/systems.

Proper use of Siemens products

Note the following:

⚠ WARNING
Siemens products may only be used for the applications described in the catalog and in the relevant technical documentation. If products and components from other manufacturers are used, these must be recommended or approved by Siemens. Proper transport, storage, installation, assembly, commissioning, operation and maintenance are required to ensure that the products operate safely and without any problems. The permissible ambient conditions must be complied with. The information in the relevant documentation must be observed.

Trademarks

All names identified by ® are registered trademarks of Siemens AG. The remaining trademarks in this publication may be trademarks whose use by third parties for their own purposes could violate the rights of the owner.

Disclaimer of Liability

We have reviewed the contents of this publication to ensure consistency with the hardware and software described. Since variance cannot be precluded entirely, we cannot guarantee full consistency. However, the information in this publication is reviewed regularly and any necessary corrections are included in subsequent editions.

Siemens AG
Digital Industries
Postfach 48 48
90026 NÜRNBERG
GERMANY

A5E40898565-AB
Ⓟ 05/2021 Subject to change

Copyright © Siemens AG 2017 - 2021.
All rights reserved

Preface

Purpose of the documentation

This manual supplements the system manual of the S7-1500 automation system / ET 200MP distributed I/O system as well as the function manuals. This manual contains a description of the module-specific information. The system-related functions are described in the system manual. Cross-system functions are described in the function manuals.

The information provided in this manual and the system manual enables you to commission the CPU 1511C-1 PN.

Conventions

STEP 7: In this documentation, "STEP 7" is used as a synonym for all versions of the configuration and programming software "STEP 7 (TIA Portal)".

Please also observe notes marked as follows:

Note

A note contains important information on the product described in the documentation, on the handling of the product or on the section of the documentation to which particular attention should be paid.

Security information

Siemens provides products and solutions with industrial security functions that support the secure operation of plants, systems, machines and networks.

In order to protect plants, systems, machines and networks against cyber threats, it is necessary to implement – and continuously maintain – a holistic, state-of-the-art industrial security concept. Siemens' products and solutions constitute one element of such a concept.

Customers are responsible for preventing unauthorized access to their plants, systems, machines and networks. Such systems, machines and components should only be connected to an enterprise network or the internet if and to the extent such a connection is necessary and only when appropriate security measures (e.g. firewalls and/or network segmentation) are in place.

For additional information on industrial security measures that may be implemented, please visit (https://www.siemens.com/industrialsecurity).

Siemens' products and solutions undergo continuous development to make them more secure. Siemens strongly recommends that product updates are applied as soon as they are available and that the latest product versions are used. Use of product versions that are no longer supported, and failure to apply the latest updates may increase customers' exposure to cyber threats.

To stay informed about product updates, subscribe to the Siemens Industrial Security RSS Feed visit (https://www.siemens.com/industrialsecurity).

Siemens Industry Online Support

You can find current information on the following topics quickly and easily here:

- **Product support**

  All the information and extensive know-how on your product, technical specifications, FAQs, certificates, downloads, and manuals.

- **Application examples**

  Tools and examples to solve your automation tasks – as well as function blocks, performance information and videos.

- **Services**

  Information about Industry Services, Field Services, Technical Support, spare parts and training offers.

- **Forums**

  For answers and solutions concerning automation technology.

- **mySupport**

  Your personal working area in Industry Online Support for messages, support queries, and configurable documents.

This information is provided by the Siemens Industry Online Support in the Internet (https://support.industry.siemens.com).

Industry Mall

The Industry Mall is the catalog and order system of Siemens AG for automation and drive solutions on the basis of Totally Integrated Automation (TIA) and Totally Integrated Power (TIP).

Catalogs for all the products in automation and drives are available on the Internet (https://mall.industry.siemens.com).

Table of contents

Preface ... **3**

1 S7-1500 / ET 200MP Documentation Guide ... **9**

2 Product overview ... **11**

2.1 New functions ... 11

2.2 Area of application of the SIMATIC S7-1500 CPUs ... 13

2.3 Hardware properties and firmware functions ... 23
2.3.1 Hardware properties of the CPU part ... 24
2.3.2 Firmware functions of the CPU part ... 26
2.3.3 Hardware properties of the analog on-board I/O module ... 30
2.3.4 Firmware functions of the analog on-board I/O module ... 32
2.3.5 Hardware properties of the digital on-board I/O module ... 33
2.3.6 Firmware functions of the digital on-board I/O module ... 36

2.4 Operator controls and display elements ... 38
2.4.1 Front view with closed front panel ... 38
2.4.2 Front view of the CPU without front panel and view from below ... 40
2.4.3 Rear view ... 42

2.5 Operating mode buttons ... 43

3 Technology functions ... **44**

3.1 High-speed counters ... 44
3.1.1 Functions ... 45
3.1.1.1 Counting ... 45
3.1.1.2 Measuring ... 46
3.1.1.3 Position detection for motion control ... 47
3.1.1.4 Additional functions ... 48
3.1.2 Configuring the high-speed counters ... 49
3.1.2.1 General ... 49
3.1.2.2 Assignment of the control interface of the high-speed counters ... 49
3.1.2.3 Assignment of the feedback interface of the high-speed counters ... 51

3.2 Pulse generators ... 53
3.2.1 Operating modes ... 53
3.2.1.1 Operating mode: Pulse-width modulation (PWM) ... 53
3.2.1.2 Operating mode: Frequency output ... 60
3.2.1.3 Operating mode: PTO ... 64
3.2.2 Functions ... 69
3.2.2.1 Function: High-speed output ... 69
3.2.2.2 Function: Direct control of the pulse output (DQA) ... 70
3.2.3 Configuring the PWM and frequency output modes ... 70
3.2.3.1 Assignment of the control interface ... 70
3.2.3.2 Handling the SLOT parameter (control interface) ... 73
3.2.3.3 Assignment of the feedback interface ... 77

4 Wiring ... 79

4.1 Supply voltage ... 79

4.2 PROFINET interfaces ... 80

4.3 Terminal and block diagrams ... 82
4.3.1 Block diagram of the CPU part ... 82
4.3.2 Terminal and block diagram of the analog on-board I/O ... 83
4.3.3 Wiring and block diagrams of the digital on-board I/O ... 92
4.3.4 Addresses of the high-speed counters ... 104
4.3.5 Addresses of the pulse generators in the Pulse Width Modulation (PWM) and Frequency Output modes ... 106
4.3.6 Addresses of pulse generators in the PTO mode ... 107
4.3.7 Interconnection overview of the inputs ... 108
4.3.8 Interconnection overview of the outputs ... 109

5 Parameters/address space ... 112

5.1 Address space of the analog on-board I/O ... 112

5.2 Address space of the digital on-board I/O ... 114

5.3 Address space of the high-speed counters ... 115

5.4 Address space of the pulse generators ... 116

5.5 Measurement types and measuring ranges of the analog on-board I/O ... 116

5.6 Output type and output ranges of the analog on-board I/O ... 117

5.7 Parameters of the analog on-board I/O ... 118

5.8 Parameters of the digital on-board I/O ... 121

6 Interrupts/diagnostics alarms ... 123

6.1 Status and error displays ... 123
6.1.1 Status and error displays of the CPU part ... 123
6.1.2 Status and error displays of the analog on-board I/O ... 127
6.1.3 Status and error displays of the digital on-board I/O ... 129

6.2 Interrupts and diagnostics ... 131
6.2.1 Interrupts and diagnostics of the CPU part ... 131
6.2.2 Interrupts and diagnostics of the analog on-board I/O ... 131
6.2.3 Interrupts and diagnostics of the digital on-board I/O ... 134

7 Technical specifications ... 137

A Dimension drawings ... 159

B Parameter data records ... 161

B.1 Parameter assignment and structure of the parameter data records of the analog on-board I/O ... 161

B.2 Structure of a data record for input channels of the analog on-board I/O ... 161

B.3 Structure of a data record for output channels of the analog on-board I/O ... 166

B.4 Parameter assignment and structure of the parameter data records of the digital on-board I/O ... 169

B.5 Structure of a data record for input channels of the digital on-board I/O ... 169

B.6 Structure of a data record for output channels of the digital on-board I/O 171
B.7 Parameter data records of the high-speed counters 172
B.8 Parameter data records (PWM) 180
C Analog value processing 182
C.1 Conversion method 182
C.2 Representation of analog values 189
C.3 Representation of input ranges 190
C.3.1 Representation of analog values in voltage measuring ranges 191
C.3.2 Representation of analog values in current measuring ranges..... 192
C.3.3 Representation of the analog values of resistance-type sensors/resistance-type thermometers 193
C.3.4 Measured values for wire break diagnostics..... 195
C.4 Representation of output ranges 196
C.4.1 Representation of analog values in the voltage output ranges 197
C.4.2 Representation of analog values in the current output ranges..... 198

S7-1500 / ET 200MP Documentation Guide

1

The documentation for the SIMATIC S7-1500 automation system and the SIMATIC ET 200MP distributed I/O system is arranged into three areas.
This arrangement enables you to access the specific content you require.

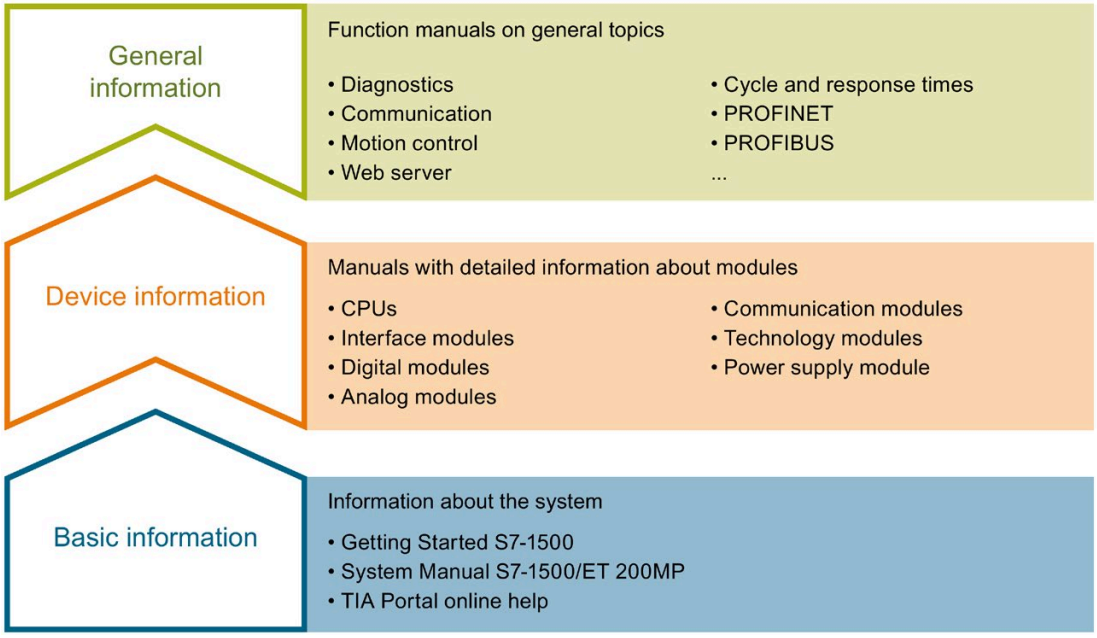

Basic information

The System Manual and Getting Started describe in detail the configuration, installation, wiring and commissioning of the SIMATIC S7-1500 and ET 200MP systems. The STEP 7 online help supports you in the configuration and programming.

Device information

Product manuals contain a compact description of the module-specific information, such as properties, wiring diagrams, characteristics and technical specifications.

General information

The function manuals contain detailed descriptions on general topics regarding the SIMATIC S7-1500 and ET 200MP systems, e.g. diagnostics, communication, motion control, Web server, OPC UA.

You can download the documentation free of charge from the Internet (https://support.industry.siemens.com/cs/ww/en/view/109742691).

Changes and supplements to the manuals are documented in a Product Information.

You can download the product information free of charge from the Internet (https://support.industry.siemens.com/cs/us/en/view/68052815).

Manual Collection S7-1500/ET 200MP

The Manual Collection contains the complete documentation on the SIMATIC S7-1500 automation system and the ET 200MP distributed I/O system gathered together in one file.

You can find the Manual Collection on the Internet (https://support.industry.siemens.com/cs/ww/en/view/86140384).

SIMATIC S7-1500 comparison list for programming languages

The comparison list contains an overview of which instructions and functions you can use for which controller families.

You can find the comparison list on the Internet (https://support.industry.siemens.com/cs/ww/en/view/86630375).

"mySupport"

With "mySupport", your personal workspace, you make the best out of your Industry Online Support.

In "mySupport", you can save filters, favorites and tags, request CAx data and compile your personal library in the Documentation area. In addition, your data is already filled out in support requests and you can get an overview of your current requests at any time.

You must register once to use the full functionality of "mySupport".

You can find "mySupport" on the Internet (https://support.industry.siemens.com/My/ww/en).

Application examples

The application examples support you with various tools and examples for solving your automation tasks. Solutions are shown in interplay with multiple components in the system - separated from the focus on individual products.

You will find the application examples on the Internet (https://support.industry.siemens.com/cs/ww/en/ps/ae).

Product overview

2

2.1 New functions

New functions of the CPU in firmware version V2.9

The following table provides an overview of the most important new functions of the CPU with firmware version V2.9.

New functions	Applications	Customer benefits	Where can I find information?
Communication of the CPU			
Secure PG/HMI communication	With STEP 7 and WinCC as of Version V17, SIMATIC S7-1500 CPUs and ET 200 CPUs from firmware version 2.9 support innovated and standardized secure PG/PC and HMI communication – referred to as Secure PG/HMI communication for short.	Secure and standardized creation or assignment of PLC communication certificates	Communication function manual (https://support.industry.siemens.com/cs/ww/en/view/59192925)
Protection of confidential configuration data	You have the option of assigning a password for protecting confidential configuration data of the respective CPU. This refers to data such as private keys that are required for the proper functioning of certificate-based protocols.	Additional password protection of confidential configuration data	
OPC UA: Alarms & Conditions	OPC UA clients from any manufacturer can subscribe to alarms of the CPU via OPC UA Alarms & Conditions.	Without further measures, alarms created once via OPC UA are available as events and alarms. The alarms can be displayed by any display device with corresponding OPC UA client functionality.	
OPC UA: Certificate management via Global Discovery Server (GDS)	Via GDS push management functions: • Automated update of OPC UA certificates of an S7-1500 CPU • Transfer of updated certificates and lists in RUN operating state of the CPU	The automation of the certificate management eliminates any manual work required for reconfiguring the CPU, for example, after a certificate has expired, and a new download to the CPU.	

New functions	Applications	Customer benefits	Where can I find information?
DHCP (Dynamic Host Configuration Protocol)	The CPU can use the DHCP communication protocol to assign the network configuration via a DHCP server. The CPU uses a client ID for identification on the DHCP server. The following parameters can be obtained: • IP Suite • DNS server • NTP server The CPU can also send its host name to the DHCP server.	With DHCP, you can integrate the CPU into an existing IT network without having to make additional changes to the PROFINET interface.	Communication function manual (https://support.industry.siemens.com/cs/ww/en/view/59192925)
MRP interconnection in PROFINET networks	The MRP interconnection procedure is an extension of MRP. MRP interconnection enables the redundant coupling of two or more rings with MRP in PROFINET networks.	There is no limit to the maximum number of 50 devices in a ring when setting up redundant network topologies. Monitoring of larger topologies with ring redundancy	PROFINET function manual (https://support.industry.siemens.com/cs/ww/en/view/49948856)
Web server of the CPU			
Web applications that can be loaded by the user	Additional methods to manage web applications via Web API You can use all available Web API methods within the web application	Web applications are also available in STOP mode of the CPU Reduced development times of web server user pages	Web server function manual (https://support.industry.siemens.com/cs/ww/en/view/59193560)
New Web API methods	Reading and changing the CPU operating state via Web API Ticket methods for transferring large amounts of data outside of the JSON RPC protocol	Additional applications for the web server	
Diagnostic information on motion control	Diagnostic information is available for all technology objects Improved display and grouping of the tags	Comprehensive diagnostic options by means of motion control applications are possible via the web server.	
Optimizations to the DNS (Domain Name System) functionality with OPC UA/Open User Communication and on the web server	The feedback messages of the OPC UA server with the "Application Name" can be sent via DNS. The NTP client of the CPU can address its relevant NTP servers via DNS. The Web server can be consistently reached via DNS addressing. DNS is taken into account during certificate handling.	A pool of NTP servers can be addressed.	Communication function manual (https://support.industry.siemens.com/cs/ww/en/view/59192925) Web server function manual (https://support.industry.siemens.com/cs/ww/en/view/59193560)
Technology functions of the CPU			
Axis functions	• Backlash compensation • Linear motor	The repeat accuracy of a movement is increased by compensation for the mechanical play of the real axis. Easier control of highly dynamic linear motors.	S7-1500T Motion Control function manuals (https://support.industry.siemens.com/cs/ww/en/view/109751049)

Reference

You can find an overview of all new functions, improvements and revisions in the respective firmware versions on the Internet (https://support.industry.siemens.com/cs/ww/en/view/109478459).

2.2 Area of application of the SIMATIC S7-1500 CPUs

Area of application

SIMATIC S7-1500 is the modular control system for a wide variety of automation applications in discrete automation.

SIMATIC S7-1500 is the cost-effective and convenient solution for a broad range of tasks and offers the following advantages:

- Modular, fanless design
- Simple realization of distributed structures
- User-friendly handling

Areas of application of the SIMATIC S7-1500 automation system include, for example:

- Special-purpose machines
- Textile machinery
- Packaging machines
- General mechanical engineering
- Controller engineering
- Machine tool engineering
- Installation engineering
- Electrical industry and crafts
- Automobile engineering
- Water/waste water
- Food & Beverage

Areas of application of the SIMATIC S7-1500R/H redundant system include, for example:

- Tunnels
- Airports (e.g. baggage conveyors)
- Subways
- Shipbuilding
- Wastewater treatment plants
- High-bay warehouses

Areas of application of the SIMATIC S7-1500T automation system for advanced motion control applications include, for example:

- Packaging machines
- Converting applications
- Assembly automation
- Pick-and-place automation
- Palletizers

You can choose between CPUs with various levels of performance and a comprehensive range of modules with many convenient functions. Fail-safe CPUs enable use in fail-safe applications. The modular design allows you to use only the modules that you need for your application. The controller can be retrofitted with additional modules at any time to expand its range of tasks.

High industrial suitability due to the high resistance to EMC, shock and vibration enable universal use of the SIMATIC S7-1500, S7-1500R/H and S7-1500T automation systems.

Performance segments of the CPUs

The CPUs can be used for smaller and mid-range applications, as well as for the high-end range of machine and plant automation.

Table 2- 1 Standard CPUs

CPU	Performance segment	PROFIBUS interfaces	PROFINET IO RT/IRT interfaces	PROFINET IO RT interface	Basic PROFINET functionality	Work memory	Processing time for bit operations
CPU 1511-1 PN	Standard CPU for small to mid-range applications	--	1	--	--	1.15 MB	60 ns
CPU 1513-1 PN	Standard CPU for mid-range applications	--	1	--	--	1.8 MB	40 ns
CPU 1515-2 PN	Standard CPU for mid-range to large applications	--	1	1	--	3.5 MB	30 ns
CPU 1516-3 PN/DP	Standard CPU for demanding applications and communication tasks	1	1	1	--	6 MB	10 ns
CPU 1517-3 PN/DP	Standard CPU for demanding applications and communication tasks	1	1	1	--	10 MB	2 ns
CPU 1518-4 PN/DP	Standard CPU for high-performance applications, demanding communication tasks and very short reaction times	1	1	1	1	24 MB	1 ns
CPU 1518-4 PN/DP MFP	Standard CPU for high-performance applications, demanding communication tasks, very short reaction times and C/C++ blocks for the user program	1	1	1	1	74* MB	1 ns

* 50 MB of the integrated work memory is reserved for the function library of CPU runtime

Table 2- 2 Redundant CPUs

CPU	Performance segment	PROFIBUS interfaces	PROFINET IO RT/IRT interfaces	PROFINET IO RT interface	Basic PROFINET functional-ity	Work memory	Pro-cessing time for bit oper-ations
CPU 1513R-1 PN	Redundant CPU for smaller to mid-range applications	--	1	--	--	1.8 MB	80 ns
CPU 1515R-2 PN	Redundant CPU for mid-range to large applica-tions	--	1	--	1	3.5 MB	60 ns
CPU 1517H-3 PN	Redundant CPU for demanding applications and communication tasks	--	1	--	1	10 MB	4 ns
CPU 1518HF-4 PN	Fail-safe and redundant CPU for demanding applications and com-munication tasks	--	1	--	2	69 MB	4 ns

Table 2- 3 Compact CPUs

CPU	Performance segment	PROFIBUS interfaces	PROFINET IO RT/IRT interfaces	PROFINET IO RT interface	Basic PROFINET functional-ity	Work memory	Pro-cessing time for bit oper-ations
CPU 1511C-1 PN	Compact CPU for small to mid-range applica-tions	--	1	--	--	1.175 MB	60 ns
CPU 1512C-1 PN	Compact CPU for mid-range applications	--	1	--	--	1.25 MB	48 ns

Table 2- 4 Fail-safe CPUs

CPU	Performance segment	PROFIBUS interfaces	PROFINET IO RT/IRT interfaces	PROFINET IO RT interface	Basic PROFINET functional-ity	Work memory	Pro-cessing time for bit oper-ations
CPU 1511F-1 PN	Fail-safe CPU for small to mid-range applica-tions	--	1	--	--	1.225 MB	60 ns
CPU 1511TF-1 P N	Fail-safe technology CPU for small to mid-range applications	--	1	--	--	1.225 MB	60 ns
CPU 1513F-1 PN	Fail-safe CPU for mid-range applications	--	1	--	--	1.95 MB	40 ns

CPU	Performance segment	PROFIBUS interfaces	PROFINET IO RT/IRT interfaces	PROFINET IO RT interface	Basic PROFINET functionality	Work memory	Processing time for bit operations
CPU 1515F-2 PN	Fail-safe CPU for mid-range to large applications	--	1	1	--	3.75 MB	30 ns
CPU 1515TF-2 PN	Fail-safe technology CPU for demanding applications and communication tasks	--	1	1	--	3.75 MB	30 ns
CPU 1516F-3 PN/DP	Fail-safe CPU for demanding applications and communication tasks	1	1	1	--	6.5 MB	10 ns
CPU 1516TF-3 PN/DP	Fail-safe technology CPU for demanding applications and communication tasks	1	1	1	--	6.5 MB	10 ns
CPU 1517F-3 PN/DP	Fail-safe CPU for demanding applications and communication tasks	1	1	1	--	11 MB	2 ns
CPU 1517TF-3 PN/DP	Fail-safe technology CPU for demanding applications and communication tasks	1	1	1	--	11 MB	2 ns
CPU 1518F-4 PN/DP	Fail-safe CPU for high-performance applications, demanding communication tasks and very short reaction times	1	1	1	1	26 MB	1 ns
CPU 1518F-4 PN/DP MFP	Fail-safe CPU for high-performance applications, demanding communication tasks, very short reaction times and C/C++ blocks for the user program	1	1	1	1	76* MB	1 ns
CPU 1518TF-4 PN/DP	Technology CPU for high-performance motion control applications with large quantities, demanding communication tasks and very short reaction times	1	1	1	1	69 MB	1 ns

* 50 MB of the integrated work memory is reserved for the function library of CPU runtime

Table 2- 5 Technology CPUs

CPU	Performance segment	PROFIBUS interfaces	PROFINET IO RT/IRT interfaces	PROFINET IO RT interface	Basic PROFINET functional-ity	Work memory	Pro-cessing time for bit oper-ations
CPU 1511T-1 PN	Technology CPU for small to mid-range applications	--	1	--	--	1.225 MB	60 ns
CPU 1515T-2 PN	Technology CPU for mid-range to large ap-plications	--	1	1	--	3.75 MB	30 ns
CPU 1516T-3 PN /DP	Technology CPU for high-end applications and communication tasks	1	1	1	--	6.5 MB	10 ns
CPU 1517T-3 PN/DP	Technology CPU for complex applications and communication tasks	1	1	1	--	11 MB	2 ns
CPU 1518T-4 PN/DP	Technology CPU for high-performance mo-tion control applications with large quantities, demanding communi-cation tasks and very short reaction times	1	1	1	1	69 MB	1 ns
CPU 1511TF-1 P N CPU 1515TF-2 P N CPU 1516TF-3 P N/DP CPU 1517TF-3 PN/DP CPU 1518TF-4 PN/DP	These CPUs are described in the fail-safe CPUs						

Performance segments of compact CPUs

The compact CPUs can be used for smaller to mid-range applications and have an integrated analog and digital on-board I/O as well as integrated technology functions. The following table shows the specific properties of the Compact CPUs.

	CPU 1511C-1 PN	CPU 1512C-1 PN
Integrated analog inputs/outputs	5 inputs/2 outputs	5 inputs/2 outputs
Integrated digital inputs/outputs	16 inputs/16 outputs	32 inputs/32 outputs
High-speed counters	6	6
Frequency meters	6 (max. 100 kHz)	6 (max. 100 kHz)
Period duration measurement	6 channels	6 channels
Pulse width modulation (PWM output)	Max. 4 (up to 100 kHz)	Max. 4 (up to 100 kHz)
Pulse Train Output (PTO output)	Max. 4 (up to 100 kHz)	Max. 4 (up to 100 kHz)
Frequency output	Up to 100 kHz	Up to 100 kHz

Integrated Motion Control technology functions

All CPUs of the SIMATIC S7-1500 automation system support motion control technology functions. STEP 7 provides PLCopen-standardized Motion Control instructions for configuring and connecting a drive to the CPU.

S7-1500 Motion Control supports the following technology objects:

- Speed-controlled axes
- Positioning axes
- Synchronous axes
- External encoders
- Cam
- Cam track
- Measuring input

The technology CPUs of the SIMATIC S7-1500-automation system offer enhanced Motion Control functions:

- Advanced synchronization functions
  - Synchronization with specification of the synchronous position
  - Actual value coupling
  - Shifting of the master value at the following axis
  - Camming
- Up to 4 encoder or measuring systems as actual position for position control
- Cam
- Kinematics for control of:
  - Cartesian portals
  - Roller pickers
  - Jointed-arm robots
  - Delta pickers
  - SCARA robots

Due to the supported technology functions, the S7-1500T CPUs are suitable for controlling packaging machines, converting applications, assembly automation, etc.

Additional integrated technology functions

For effective commissioning, diagnostics and fast optimization of drives and controls, the SIMATIC S7-1500 controller series offers extensive trace functions for all CPU tags.

In addition to drive integration, the SIMATIC S7-1500 controller series has a PID compact closed-loop controller; easy-to-configure blocks allow automatic optimization of the controller parameters for optimum control quality.

Other technology functions

Technology modules also implement functions such as high-speed counting, position detection, measuring functions and pulse generators (PTO, PWM and frequency output). With the CPU 1511C-1 PN and CPU 1512C-1 PN compact CPUs, these functions are already integrated and can be implemented without additional technology modules.

SIWAREX is a versatile and flexible weighing module which you can use as a static scale for operation.

Redundant CPUs

The CPUs of the S7-1500R/H redundant system offer a high degree of reliability and system availability. A redundant configuration of the most important automation components reduces the likelihood of production downtimes and the consequences of component errors.

The higher the risks and costs of a production downtime, the more worthwhile the use of a redundant system. The avoidance of production downtimes compensates for the generally higher investment costs.

Security Integrated

In conjunction with STEP 7, each CPU offers password-based know-how protection against unauthorized reading out or modification of the program blocks.

Copy protection provides reliable protection against unauthorized reproduction of program blocks. With copy protection, individual blocks on the SIMATIC memory card can be tied to its serial number so that the block can only be run if the configured memory card is inserted into the CPU.

In addition, you can assign various access rights to different user groups in the controller using four different authorization levels.

Improved manipulation protection allows changed or unauthorized transfers of engineering data to be detected by the controller.

The use of an Ethernet CP (CP 1543-1) provides you with additional access protection through a firewall or possibilities to establish secure VPN connections.

Safety Integrated

The fail-safe CPUs are intended for users who want to implement demanding standard and fail-safe applications both centrally and decentrally.

These fail-safe CPUs allow the processing of standard and safety programs on a single CPU. This allows fail-safe data to be evaluated in the standard user program. The integration also provides the system advantages and the extensive functionality of SIMATIC for fail-safe applications.

The fail-safe CPUs are certified for use in safety mode up to:

- Safety class (Safety Integrity Level) SIL 3 according to IEC 61508:2010
- Performance Level (PL) e and Category 4 according to ISO 13849-1:2015 or EN ISO 13849-1:2015

Additional password protection for F-configuration and F-program is set up for IT security.

Design and handling

All CPUs of the SIMATIC S7-1500 product series feature a display with plain text information. The display provides the user with information on the order numbers, firmware version, and serial number of all connected modules. In addition, the IP address of the CPU and other network settings can be adapted locally without a programming device. Error messages are shown on the display directly in plain text. When performing servicing, you can minimize plant downtimes by quickly accessing the diagnostics alarms. Detailed information about this and a multitude of other display functions is available in the SIMATIC S7-1500 Display Simulator (https://support.industry.siemens.com/cs/ww/en/view/109761758).

Uniform front connectors for all modules and integrated potential jumpers for flexible formation of potential groups simplify storage. Additional components such as circuit breakers, relays, etc., can be installed quickly and easily, since a DIN rail is implemented in the rail of the SIMATIC S7-1500. The CPUs of the SIMATIC S7-1500 product series can be expanded centrally and in a modular fashion with signal modules. Space-saving expansion enables flexible adaptation to each application.

The system cabling for digital signal modules enables fast and clear connection to sensors and actuators from the field (fully modular connection consisting of front connector modules, connection cables and I/O modules), as well as easy wiring inside the control cabinet (flexible connection consisting of front connectors with assembled single conductors).

System diagnostics and alarms

Integrated system diagnostics is activated by default for the CPUs. The different types of diagnostics are configured instead of programmed. System diagnostics information and alarms from the drives are displayed consistently and in plain text:

- On the CPU display
- In STEP 7
- On the HMI
- On the Web server

This information is available in RUN mode, but also in STOP mode of the CPU. The diagnostic information is updated automatically when you configure new hardware components.

The CPU is available as a central interrupt server in up to three project languages. The HMI takes over the display in the project languages defined for the CPU. If you require alarm texts in additional languages, you can load them into your HMI via the configured connection. The CPU, STEP 7 and your HMI ensure data consistency without additional engineering steps. The maintenance work is easier.

2.3 Hardware properties and firmware functions

The CPU 1511C-1 PN consists of a CPU part, an analog on-board I/O module (X10) and a digital on-board I/O module (X11). When configured in the TIA Portal, the compact CPU therefore occupies a single shared slot (slot 1).

The properties and functions of the CPU part and the analog and digital on-board I/O modules can be found in the subsections below. The **properties** describe the hardware features of the CPU part and the analog and digital on-board I/O modules. The **functions** describe the functions of the firmware of the CPU part and the analog and digital on-board I/O modules.

Article number

6ES7511-1CK01-0AB0

Accessories

The following accessories are included in the scope of delivery and can also be ordered separately as spare parts:

- 2 x front connector (push-in terminals) including cable ties
- 2 x shield clamp
- 2 x shield terminal
- 2 x infeed element (push-in terminals)
- 2 x labeling strip
- 2 x universal front cover

For more information on accessories, refer to the S7-1500, ET 200MP system manual (http://support.automation.siemens.com/WW/view/en/59191792).

2.3.1 Hardware properties of the CPU part

View of the CPU

The figure below shows the CPU part of the CPU 1511C-1 PN.

Figure 2-1 CPU 1511C-1 PN

Note

Protective film

Note that a protective film is attached to the display of the CPU when shipped from the factory. Remove the protective film if necessary.

Properties

The CPU 1511C-1 PN has the following technical properties:

Property	Description	Additional information
CPU display	All CPUs of the SIMATIC S7-1500 product series feature a display with plain text information. The display provides information on order numbers, firmware version and serial numbers of all connected modules. In addition, you can set the IP address of the CPU and carry out further network settings. The display shows occurring error messages directly in plain text. In addition to the functions listed here, a multitude of other functions that are described in the SIMATIC S7-1500 Display Simulator are shown on the display.	• S7-1500, ET 200MP system manual (http://support.automation.siemens.com/WW/view/en/59191792) • SIMATIC S7-1500 Display Simulator (https://support.industry.siemens.com/cs/ww/en/view/109761758)
Supply voltage	A 4-pole connection plug that is located at the front of the CPU supplies the 24 V DC supply voltage.	• Chapter Wiring (Page 79) • S7-1500, ET 200MP system manual (http://support.automation.siemens.com/WW/view/en/59191792)
PROFINET IO		
PROFINET interface (X1 P1 R and X1 P2 R)	The X1 interface has two ports (P1 R and P2 R). In addition to basic PROFINET functionality, its also supports PROFINET IO RT (real time) and IRT (isochronous real time), which means you can configure PROFINET IO communication or real-time settings on the interface. Port 1 and Port 2 can also be used as ring ports for the configuration of redundant ring structures in Ethernet (media redundancy). Basic PROFINET functionality comprises: • HMI communication • Communication with the configuration system • Communication with a higher-level network (backbone, router, Internet) • Communication with another machine or automation cell	PROFINET function manual (http://support.automation.siemens.com/WW/view/en/68039307)
Operation of the CPU as • IO controller • I-device	• **IO controller:** As an IO controller the CPU addresses the connected IO devices • **I-device:** As an I-device (intelligent IO device) the CPU is assigned to a higher-level IO controller and is used in the process as an intelligent pre-processing unit of sub-processes	

2.3.2 Firmware functions of the CPU part

Functions

The CPU 1511C-1 PN supports the following functions:

Function	Description	Additional information
Integrated system diagnostics	The system automatically generates the messages for the system diagnostics and outputs these messages via a programming device/PC, HMI device, the Web server or the integrated display. System diagnostics information is also available when the CPU is in STOP mode.	Diagnostics function manual (http://support.automation.siemens.com/WW/view/en/59192926)
Integrated Web server	The Web server lets you access the CPU data by means of a network. Evaluations, diagnostics, and modifications are thus possible over long distances. Monitoring and evaluation is possible without STEP 7; all you need is a Web browser. Make sure that you take appropriate measures (e.g. limiting network access, using firewalls) to protect the CPU from being compromised.	• Web server function manual (http://support.automation.siemens.com/WW/view/en/59193560) • Security with SIMATIC S7 controllers system manual (https://support.industry.siemens.com/cs/ww/en/view/90885010)
Integrated trace functionality	Trace functionality supports you in troubleshooting and/or optimizing the user program. You record device tags and evaluate the recordings with the trace and logic analyzer function. Tags are, for example, drive parameters or system and user tags of a CPU. The device saves the recordings. You can read out and permanently save the recordings with the configuration system (ES), if required. The trace and logic analyzer function is therefore suitable for monitoring highly dynamic processes. The trace record can also be displayed through the Web server.	Using the trace and logic analyzer function function manual (http://support.automation.siemens.com/WW/view/en/64897128)
OPC UA	With OPC UA, data is exchanged via an open and vendor-neutral communication protocol. The CPU can act as OPC UA server. The CPU can communicate with OPC UA clients as an OPC UA server. Through OPC UA Companion Specification, the methods can be specified uniformly and independently of manufacturers. The specified methods enable you to integrate devices from various manufacturers more easily into your plants and production processes.	Communication function manual (https://support.industry.siemens.com/cs/ww/en/view/59192925)
Configuration control	You can use configuration control to operate different real hardware configurations with a configured maximum configuration of the hardware. This means that, in series machine manufacturing in particular, you have the option of operating/configuring different configuration variants of a machine with a single project.	S7-1500, ET 200MP system manual (http://support.automation.siemens.com/WW/view/en/59191792)
PROFINET IO		
RT (real time)	RT prioritizes PROFINET IO telegrams over standard telegrams. This ensures the required determinism in the automation technology. In this process the data is transferred via prioritized Ethernet telegrams.	PROFINET function manual (http://support.automation.siemens.com/WW/view/en/49948856)

Function	Description	Additional information
IRT (isochronous real time)	A reserved bandwidth within the send clock is available for IRT data. The reserved bandwidth ensures that the IRT data can be transmitted in time-synchronized intervals, unaffected by other high network loading (e.g. TCP/IP communication or additional real time communication). Update times with maximum determinism can be realized through IRT. Isochronous applications are possible with IRT.	
Isochronous mode	The Isochronous mode system property acquires measured values and process data and processes the signals in a fixed system clock. Isochronous mode thus contributes to high control quality and hence to greater manufacturing precision. Isochronous mode reduces possible fluctuations of the process reaction times to a minimum. Time-assured processing makes higher machine cycles possible.	
MRP (Media Redundancy Protocol)	It is possible to establish redundant networks via the Media Redundancy Protocol. Redundant transmission links (ring topology) ensure that an alternative communication path is made available if a transmission link fails. The PROFINET devices that are part of this redundant network form an MRP domain. RT operation is possible with the use of MRP.	
MRPD (Media Redundancy with Planned Duplication)	The advantage of the MRP extension MRPD is that, in the event of a failure of a device or a line in the ring, all other devices continue to be supplied with IO data without interruption and with short update times. MRPD is based on IRT and MRP. To realize media redundancy with short update times, the PROFINET devices participating in the ring send their data in both directions. The devices receive this data at both ring ports so that there is no reconfiguration time.	
Shared device	The "Shared device" function allows you to divide the modules or submodules of an IO device up among different IO controllers. Numerous IO controllers are often used in larger or widely distributed systems. Without the "Shared device" function, each I/O module of an IO device is assigned to the same IO controller. If sensors that are physically close to each other must provide data to different IO controllers, several IO devices are required. The "Shared device" function allows the modules or submodules of an IO device to be divided up among different IO controllers, thus allowing flexible automation concepts. You can, for example, combine I/O modules that are physically close to each other in one IO device.	
PROFIenergy	PROFIenergy is a PROFINET-based data interface for switching off consumers centrally and with full coordination during pause times regardless of the manufacturer or device type. Through this, the process should only be provided with the energy that is absolutely required. The majority of the energy is saved by the process; the PROFINET device itself only contributes a few watts of savings potential.	
Integrated technology		

Function	Description	Additional information
Motion Control	S7-1500 CPUs support the controlled positioning and traveling of axes via S7-1500 Motion Control functions by means of the following technology objects: Speed-controlled axes, positioning axes, synchronized axes, external encoders, cams, cam tracks and measuring inputs. • Speed-controlled axis for controlling a drive with speed specification • Positioning axis for position-controlled positioning of a drive • Synchronous axis to interconnect with a master value. The axis is synchronized to the master axis position. • External encoder for detecting the actual position of an encoder and its use as a master value for synchronous operation • Cams, cam track for position-dependent generation of switching signals • Measuring input for fast, accurate and event-dependent sensing of actual positions	• Section Technology functions (Page 44) • S7-1500T Motion Control function manuals (https://support.industry.siemens.com/cs/ww/en/view/109751049)
Integrated closed-loop control functionality	• PID Compact (continuous PID controller) • PID 3Step (step controller for integrating actuators) • PID Temp (temperature controller for heating and cooling with two separate actuators)	PID control function manual (https://support.industry.siemens.com/cs/ww/en/view/108210036)

Function	Description	Additional information
Integrated safety		
Know-how protection	The know-how protection protects user blocks against unauthorized access and modifications.	S7-1500, ET 200MP system manual (http://support.automation.siemens.com/WW/view/en/59191792)
Copy protection	Copy protection links user blocks to the serial number of the SIMATIC memory card or to the serial number of the CPU. User programs cannot run without the corresponding SIMATIC memory card or CPU.	
Access protection	You can use authorization levels to assign separate rights to different users.	
Integrity protection	The CPUs dispose of integrity protection by default. Integrity protection identifies possible manipulations of engineering data on the SIMATIC memory card or during data transfer between TIA Portal and CPU. Integrity protection also checks the communication from a SIMATIC HMI system to the CPU for possible manipulations of engineering data. If integrity protection identifies the manipulation of engineering data, the user receives a corresponding message.	
Password provider	As an alternative to manual password input you can connect a password provider to STEP 7. A password provider offers the following advantages: • Convenient handling of passwords. STEP 7 reads the password automatically for the blocks. This saves you time. • Optimum block protection because the users do not know the password itself.	

2.3.3 Hardware properties of the analog on-board I/O module

View

The following figure shows the analog on-board I/O (X10) of the CPU 1511C-1 PN.

Figure 2-2 Analog on-board I/O

Properties of the analog inputs

The 5 inputs of the analog on-board I/O module have the following properties:

Property	Description	Additional information
Resolution: 16 bits including sign	A CPU processes information exclusively in digital format. An ADC (analog-to-digital converter) integrated into the analog on-board I/O module therefore converts the analog value into a bit pattern. For the CPU, this conversion always returns a 16-bit word for SIMATIC products. The ADC used digitalizes the analog signal and approximates its value with a stepped curve. The resolution specifies the number of increments of the analog value along this stepped curve here.	• Chapter Analog value processing • Analog value processing function manual (http://support.automation.siemens.com/WW/view/en/67989094)
Integrated types of measuring	Controllers are only capable of processing analog values in the form of bit patterns. For this purpose, transducers which can be connected to the analog module measure physical variables such as pressure or temperature. This analog value is measured by the analog input module in the form of the measurement types current, voltage or resistance. The analog on-board I/O module supports the following measurement types on the following channels. • Voltage measurement type can be set individually for channel 0 to 3 • Current measurement type can be set individually for channel 0 to 3 • Resistor measurement type can be set for channel 4 • Thermal resistor measurement type can be set for channel 4	
Configurable diagnostics	The analog on-board I/O module can diagnose errors. The module reports the diagnosed state to the CPU using a diagnostics error interrupt. Different types of diagnostics are available that you can parameterize channel-granularly.	Chapter Parameters of the analog on-board I/O (Page 118)
Hardware interrupt	You can react to process events (such as negative/positive exceeding of specific limits) through the configuration of a hardware interrupt. Hardware interrupts can be parameterized channel-granularly.	• Chapter Parameters of the analog on-board I/O (Page 118) • Chapter Structure of a data record for input channels of the analog on-board I/O (Page 161) • STEP 7 online help

Properties of the analog outputs

The 2 outputs of the analog on-board I/O module have the following properties:

Property	Description	Additional information
Resolution: 16 bits including sign	Once the CPU has processed the digital signal, a DAC (digital-to-analog converter) integrated in the analog on-board I/O module converts the output signal to an analog current or voltage value. The resulting value of the output signal corresponds to the output value with which the analog on-board I/O module controls the analog actuators.	• Chapter Analog value processing • Analog value processing function manual (http://support.automation.siemens.com/WW/view/en/67989094)
Integrated output types	With the selection of the type of output you specify whether the digital-to-analog converter is to convert the output signal into the type of output "Current" or "Voltage". The output can be selected by individual channel.	
Configurable diagnostics	The analog on-board I/O module can diagnose errors. The module reports the diagnosed state to the CPU using a diagnostics error interrupt. Different types of diagnostics are available that you can parameterize channel-granularly.	Chapter Parameters of the analog on-board I/O (Page 118)

See also

Parameter assignment and structure of the parameter data records of the analog on-board I/O (Page 161)

2.3.4 Firmware functions of the analog on-board I/O module

Functions of the analog inputs

The 5 inputs of the analog on-board I/O module have the following functions:

Function	Description	Additional information
Reconfiguration in RUN	You have the option of reassigning parameters for the analog on-board I/O module in RUN (for example, measuring ranges of individual channels can be modified in RUN without affecting the other channels).	• Chapter Parameters of the analog on-board I/O (Page 118) • Chapter Parameter assignment and structure of the parameter data records of the analog on-board I/O (Page 161)
Support of the value status (Quality Information, QI)	Value status = 1 ("Good") indicates that the value of the assigned input at the terminal is valid. Value status = 0 ("Bad") indicates that the read value is not valid.	Chapter Address space of the analog on-board I/O (Page 112)

Functions of the analog outputs

The 2 outputs of the analog on-board I/O module have the following functions:

Function	Description	Additional information
Reconfiguration in RUN	You have the option of reassigning parameters for the analog on-board I/O module in RUN (for example, output ranges of individual channels can be modified in RUN without affecting the other channels).	• Chapter Parameters of the analog on-board I/O (Page 118) • Chapter Parameter assignment and structure of the parameter data records of the analog on-board I/O (Page 161)
Support of the value status (Quality Information, QI)	Value status = 1 ("Good") indicates that the process value specified by the user program is correctly output at the terminal. Value status = 0 ("Bad") indicates that the process value output at the hardware output is incorrect.	Chapter Address space of the analog on-board I/O (Page 112)

2.3.5 Hardware properties of the digital on-board I/O module

View

The following figure shows the digital on-board I/O (X11) of the CPU 1511C-1 PN.

Figure 2-3 Digital on-board I/O

Properties of the digital inputs

The digital inputs of the digital on-board I/O module have the following properties:

Property	Description	Additional information
Standard and high-speed inputs	The digital on-board I/O module has 16 high-speed inputs for signals up to a max. of 100 kHz. The inputs can be used as standard inputs and as inputs for technology functions. The inputs have a rated input voltage of 24 V DC. The inputs are suitable for switches and 2-/3-/4-wire proximity switches.	Chapter Wiring (Page 79)
Configurable diagnostics	The digital on-board I/O module is able to diagnose errors. The module reports the diagnosed state to the CPU using a diagnostics error interrupt. You can parameterize the type of diagnostics channel-specifically.	Chapter Parameters of the digital on-board I/O (Page 121)
Hardware interrupt	You can react to process events (such as positive edge, negative edge) through the configuration of a hardware interrupt. Hardware interrupts can be parameterized channel-granularly.	Chapter Parameters of the digital on-board I/O (Page 121) Chapter Structure of a data record for input channels of the digital on-board I/O (Page 169) STEP 7 online help

Properties of the digital outputs

The digital outputs of the digital on-board I/O module have the following properties:

Property	Description	Additional information
Configurable diagnostics	The digital on-board I/O module is able to diagnose errors. The module reports the diagnosed state to the CPU using a diagnostics error interrupt. You can parameterize the type of diagnostics channel-specifically.	Chapter Interconnection overview of the outputs (Page 109)
Standard and high-speed outputs		
Standard outputs	The digital on-board I/O module has 16 standard outputs.	Chapter Wiring (Page 79)
High-speed outputs	Of the 16 standard outputs you can also use 8 outputs as high-speed outputs for technology functions.	
Rated output voltage	The outputs have a rated output voltage of 24 V DC.	
Output frequencies and output currents	Rated output current as output for standard mode: 0.5 A per channel. As an output for technology functions, you can select between an output current of up to 0.5 A at an output frequency up to 10 kHz (load dependent) and a reduced output current of max. 0.1 A at an increased output frequency of up to 100 kHz.	Chapter Interconnection overview of the outputs (Page 109)
Application	The outputs are suitable for, e.g. solenoid valves, DC contactors and indicator lights, or also for signal transmission or proportional valves.	
Driver blocks with push-pull outputs.	The digital outputs feature driver blocks with push-pull outputs. Due to their basic functional design, such driver blocks always contain parasitic diodes that act as freewheeling diodes when shutting off inductive loads. The shutdown voltage is limited to -0.8 V. Therefore, the demagnetization of inductive loads takes longer and can be approximately calculated using the following formula. **tau = L / R** (tau= time constant, L = inductance value, R = ohmic resistance value) After the expiration of a period of 5 * tau, the current has decreased in effect to 0 A due to the inductive load. The maximum value is derived from: tau = 1.15H / 48 Ohm = 24 ms. After 5 * 24 ms = 120 ms, the current has decreased in effect to 0 A. For comparison: With standard modules, inductive shutdown voltage is limited, for example, to Vcc -53 V (supply voltage – 53 V), which causes the current to decrease to 0 A after about 15 ms.	Figure "Current flow with correct wiring using the digital on-board I/O X11 as an example" in Chapter Wiring and block diagrams of the digital on-board I/O (Page 92).

Simultaneous use of technology and standard functions

You can use technology and standard functions at the same time, provided the hardware allows this. For example, all the digital inputs not assigned to the counting, measuring or position detection or PTO technology functions can be used as standard DI.

Inputs to which technology functions are assigned can be read. Outputs to which technology functions are assigned cannot be written.

2.3.6 Firmware functions of the digital on-board I/O module

Functions of the digital inputs

The digital inputs of the digital on-board I/O module have the following functions:

Function	Description	Additional information
Technology functions	The high-speed digital inputs of the digital on-board I/O module support technology functions such as fast counting, measuring, position detection and pulse generators (PWM, PTO and frequency output). Due to the supported technology functions, the compact CPUs are suitable for controlling pumps, fans, mixers, conveyor belts, lifting platforms, gate control systems, building management systems, synchronized axes, etc.	Chapter Technology functions (Page 44)
Reconfiguration in RUN	You have the option of reassigning parameters for the digital on-board I/O module in RUN (for example, values for input delay of individual channels can be modified without affecting the other channels).	• Chapter Parameters of the digital on-board I/O (Page 121) • Chapter Parameter assignment and structure of the parameter data records of the digital on-board I/O (Page 169)
Support of the value status (Quality Information, QI)	Value status = 1 ("Good") indicates that the value of the assigned input at the terminal is valid. Value status = 0 ("Bad") indicates that no/too little supply voltage L+ is applied at the terminal and that the read value is therefore not valid.	Chapter Address space of the digital on-board I/O (Page 114)

Functions of the digital outputs

The digital outputs of the digital on-board I/O module have the following functions:

Function	Description	Additional information
Technology functions	The high-speed digital outputs of the digital on-board I/O module support technology functions such as fast counting, measuring, position detection and pulse generators (PWM, PTO and frequency output). Due to the supported technology functions, the compact CPUs are suitable for controlling pumps, fans, mixers, conveyor belts, lifting platforms, gate control systems, building management systems, synchronized axes, etc.	Chapter Technology functions (Page 44)
Reconfiguration in RUN	You have the option of reassigning parameters for the digital on-board I/O module in RUN (for example, behavior during CPU STOP, without affecting the other channels).	• Chapter Parameters of the digital on-board I/O (Page 121) • Chapter Parameter assignment and structure of the parameter data records of the digital on-board I/O (Page 169)
Support of the value status (Quality Information, QI)	Value status = 1 ("Good") indicates that the process value specified by the user program is correctly output at the terminal. Value status = 0 ("Bad") indicates that the process value output at the hardware output is incorrect or the channel is used for technology functions.	Chapter Address space of the digital on-board I/O (Page 114)

2.4 Operator controls and display elements

2.4.1 Front view with closed front panel

The following figure shows the front view of the CPU 1511C-1 PN.

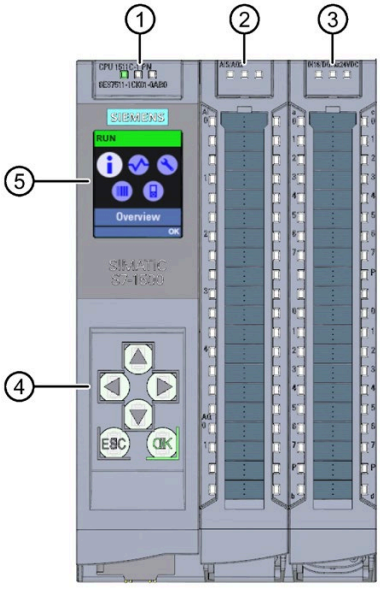

① LEDs for the current operating mode and diagnostics status of the CPU
② Status and error displays RUN/ERROR of the analog on-board I/O
③ Status and error displays RUN/ERROR of the digital on-board I/O
④ Control keys
⑤ Display

Figure 2-4 View of the CPU 1511C-1 PN with closed front panels (front)

Note

Temperature range for display

To increase its service life, the display switches off at a temperature below the permitted operating temperature of the device. When the display cools down again, it automatically switches itself on again. When the display is switched off, the LEDs continue to show the status of the CPU.

You can find additional information on the temperatures at which the display switches itself on and off in the Technical specifications (Page 137).

Removing and fitting the front panel or display

You can remove and fit the front panel or the display during operation.

WARNING

Personal injury and damage to property may occur

If you pull or plug the front panel of an S7-1500 automation system during operation, personal injury or damage to property can occur in zone 2 hazardous areas.

Before you remove or fit the front panel, switch off the power supply to the S7-1500 automation system in hazardous area zone 2.

Locking the front panel

You can lock the front panel to protect your CPU against unauthorized access.

You can attach a security seal or a padlock with a hoop diameter of 3 mm to the front panel.

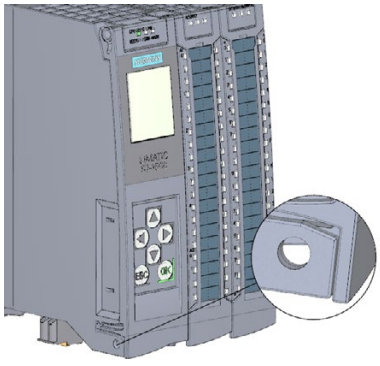

Figure 2-5 Locking latch on the CPU

In addition to the mechanical lock, you can also block access to a password-protected CPU on the display (local lock) and assign a password for the display. For more information on the display, the configurable protection levels and the local lock, refer to the S7-1500, ET 200MP (http://support.automation.siemens.com/WW/view/en/59191792) system manual.

Reference

You will find detailed information on the individual display options, a training course and a simulation of the available menu commands in the SIMATIC S7-1500 Display Simulator (https://support.industry.siemens.com/cs/ww/en/view/109761758).

2.4.2 Front view of the CPU without front panel and view from below

The following figure shows the operator control and connection elements of the CPU 1511C-1 PN with the front cover of the CPU open.

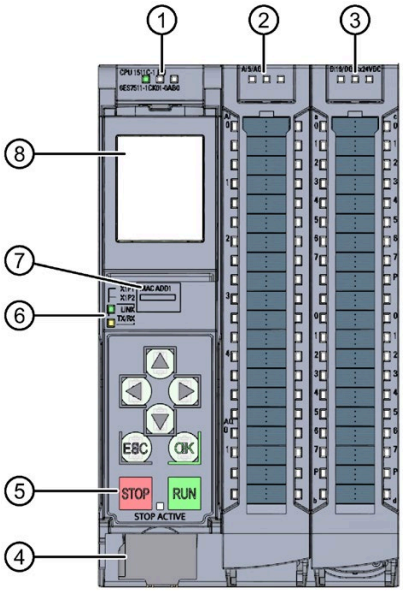

① LEDs for the current operating mode and diagnostics status of the CPU
② Status and error displays RUN/ERROR of the analog on-board I/O
③ Status and error displays RUN/ERROR of the digital on-board I/O
④ Connector for power supply
⑤ Operating modes with "STOP ACTIVE" LED
⑥ LEDs for the 2 ports (X1 P1 and X1 P2) of the PROFINET interface X1
⑦ MAC address
⑧ Display

Figure 2-6 View of the CPU 1511C-1 PN without front panel on the CPU (front)

Note

Removing the display

Only remove the display if it is faulty.

You can find information on removing and replacing displays in the S7-1500, ET 200MP system manual (http://support.automation.siemens.com/WW/view/en/59191792).

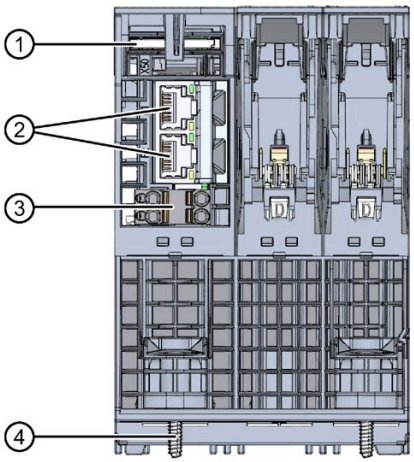

① Slot for the SIMATIC memory card
② PROFINET IO interface (X1) with 2 ports
③ Connection for supply voltage
④ Fastening screw

Figure 2-7 View of the CPU 1511C-1 PN – bottom

2.4.3 Rear view

The following figure shows the connection elements on the rear of the CPU 1511C-1 PN.

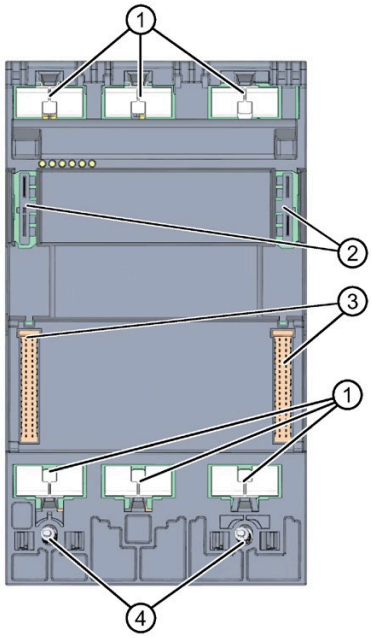

① Shield contact surfaces
② Plug-in connection for power supply
③ Plug-in connection for backplane bus
④ Fastening screws

Figure 2-8 View of the CPU 1511C-1 PN - rear

2.5 Operating mode buttons

You use the operating mode buttons to set the operating mode of the CPU.

The following table shows the meaning of the corresponding operation of the operating mode buttons.

Table 2- 6 Meaning of the operating mode buttons

Operation of the operating mode buttons	Meaning	Explanation
RUN	RUN mode	The CPU executes the user program.
STOP	STOP mode	The user program is not executed. (STOP ACTIVE LED lights up).
MRES 1. Press the operating mode button STOP. Result: The RUN/STOP LED lights up yellow. 2. Press the operating mode button STOP until the RUN/STOP LED lights up for the 2nd time and remains continuously lit (this takes three seconds). After this, release the button. 3. Press the operating mode button STOP again within the next three seconds.	Manual memory reset (with inserted SIMATIC memory card) or Reset to factory settings (without inserted SIMATIC memory card):	The CPU executes memory reset. or The CPU is reset to its factory settings. You can find additional information in the S7-1500/ET 200MP system manual (https://support.industry.siemens.com/cs/ww/en/view/59191792).

Technology functions 3

3.1 High-speed counters

Properties

The technology functions of the compact CPU have the following technical properties:

- 16 high-speed digital inputs (up to 100 kHz), isolated
  - 6 high-speed counters (High Speed Counter/HSC), 4 of which can be used as A/B/N
- Interfaces
  - 24 V encoder signals of sourcing or push-pull encoders and sensors
  - 24 V encoder supply output, short-circuit-proof
  - Up to 2 additional digital inputs per high-speed counter for possible HSC DI functions (Sync, Capture, Gate)
  - 1 digital output per high-speed counter for fast reaction to the count
- Counting range: 32 bits
- Diagnostics and hardware interrupts can be configured
- Supported encoder/signal types
  - 24 V incremental encoder
    (with 2 tracks A and B, phase-shifted by 90°, up to 4 incremental encoders also with zero track N)
  - 24 V pulse encoder with direction signal
  - 24 V pulse encoder without direction signal
  - 24 V pulse encoder each for forward pulse & reverse pulse

The high-speed counters support reconfiguration in RUN. You can find additional information in chapter Parameter data records of the high-speed counters (Page 172).

3.1.1 Functions

3.1.1.1 Counting

Counting refers to the detection and adding up of events. The counters acquire and evaluate encoder signals and pulses. You can specify the count direction using suitable encoder or pulse signals or through the user program.
You can control counting processes using the digital inputs. You can switch the digital outputs exactly at defined count values, regardless of the user program.
You can configure the response of the counters using the functionalities described below.

Counting limits

The counting limits define the count value range used. The counting limits are selectable and can be modified during runtime by the user program.
The highest counting limit that can be set is 2147483647 (2^{31}–1). The lowest counting limit that can be set is –2147483648 (–2^{31}).
You can configure the response of the counter at the counting limits:

- Continue or stop counting (automatic gate stop) on violation of a counting limit
- Set count value to start value or to opposite counting limit on violation of a counting limit

Start value

You can configure a start value within the counting limits. The start value can be modified during runtime by the user program.
Depending on the parameter assignment, the compact CPU can set the current count value to the start value during synchronization, during the Capture function, on violation of a counting limit or when the gate is opened.

Gate control

The opening and closing of the hardware gate (HW gate) and software gate (SW gate) defines the period of time during which the counting signals are acquired.
The digital inputs of the digital on-board I/O control the HW gate. The user program controls the software gate. You can enable the hardware gate using the parameter assignment. The software gate (bit in the control interface of the cyclic I/O data) cannot be disabled.

Capture

You can configure an external reference signal edge that triggers the saving of the current count value as a Capture value. The following external signals can trigger the Capture function:

- Rising or falling edge of a digital input
- Both edges of a digital input
- Rising edge of signal N at the encoder input

You can configure whether counting continues from the current count value or from the start value after the Capture function.

Hysteresis

You can specify hysteresis for the comparison values, within which a digital output is prevented from switching again. An encoder may stop at a certain position, and slight movements may make the count value fluctuate around this position. If a comparison value or a counting limit lies within this fluctuation range, the corresponding digital output will be switched on and off often if hysteresis is not used. The hysteresis prevents these unwanted switching operations.

Reference

For more information on the counter, refer to the S7-1500, ET 200MP, ET 200SP Counting, measurement and position detection function manual (http://support.automation.siemens.com/WW/view/en/59709820).

3.1.1.2 Measuring

Measuring functions

The following measuring functions are available:

Table 3- 1 Overview of available measuring functions

Measurement type	Description
Frequency measurement	A measuring interval calculates the average frequency based on the time sequence of the count pulses, and returns this frequency as a floating-point number in units of hertz.
Period measurement	A measuring interval calculates the average period duration based on the time sequence of the count pulses, and returns this period duration as a floating-point number in units of seconds.
Velocity measurement	A measuring interval calculates the average velocity based on the time sequence of the count pulses, and returns this velocity in the configured unit.

The measured value and count value are both available in the feedback interface.

Update time

You can configure the interval at which the compact CPU updates the measured values cyclically as the update time. Greater update times smooth uneven measured variables and increase the measuring accuracy.

Gate control

Opening and closing the hardware gate and software gate defines the period of time during which the count signals are acquired. The update time is asynchronous to the opening of the gate, which means that the update time is not started when the gate is opened. After the gate is closed, the last measured value calculated is still returned.

Measuring ranges

The measuring functions have the following measuring range limits:

Table 3- 2 Overview of low and high measuring range limits

Measurement type	Low measuring range limit	High measuring range limit
Frequency measurement	0.04 Hz	400 kHz *
Period measurement	2.5 µs *	25 s
Velocity measurement	Depending on the configured number of "increments per unit" and the "timebase for velocity measurement"	

* Applies to 24 V incremental encoder and "quadruple" signal evaluation

All measured values are returned as signed values. The sign indicates whether the count value increased or decreased during the relevant time period. For example, a value of -80 Hz means that the count value decreases at 80 Hz.

Reference

For more information on measuring, refer to the S7-1500, ET 200MP, ET 200SP Counting, measurement and position detection function manual (http://support.automation.siemens.com/WW/view/en/59709820).

3.1.1.3 Position detection for motion control

You can use the digital on-board I/O, e.g. with an incremental encoder, for position detection with S7-1500 Motion Control. The position detection is based on the counting function, which evaluates the acquired encoder signals and provides them for S7-1500 Motion Control. In the hardware configuration of the CPU 1511C-1 PN in STEP 7 (TIA Portal), select the "Position input for Motion Control" mode.

Reference

For a detailed description of the use of motion control and its configuration, refer to the S7-1500/S7-1500T Motion Control function manual (https://support.industry.siemens.com/cs/ww/en/view/109766459). In the function manual, the interface between the drives and encoders is referred to as a technology module (TM). In this context, a technology module (TM) also refers to the digital on-board I/O of the compact CPU described here.

3.1.1.4 Additional functions

Synchronization

You can configure an external reference signal edge to load the counter with the specified start value. The following external signals can trigger a synchronization:

- Rising or falling edge of a digital input
- Rising edge of signal N at the encoder input
- Rising edge of signal N at the encoder input depending on the level of the assigned digital input

Comparison values

The integrated counter supports 2 comparison values and digital output HSC DQ1. If the counter or measured value meets the set comparison condition, HSC DQ1 can be set in order to trigger direct control operations in the process.

Both comparison values can be set in the parameters and can be changed during runtime via the user program.

Hardware interrupts

If you have enabled a hardware interrupt in the hardware configuration, the counter can trigger a hardware interrupt in the CPU when a comparison event occurs, if there is overflow or underflow, at a zero crossing of the counter, and/or at a change of count direction (direction reversal). You can specify which events are to trigger a hardware interrupt during operation in the hardware configuration.

Diagnostics interrupts

If you have enabled a diagnostics interrupt in the hardware configuration, the counter can trigger a diagnostics interrupt if the supply voltage is missing, if there is an incorrect A/B count signal or lost hardware interrupt.

3.1.2 Configuring the high-speed counters

3.1.2.1 General

You configure the high-speed counters (HSC) in STEP 7 (TIA Portal).

The functions are controlled via the user program.

Reference

A detailed description of configuring the counting and measuring functions can be found in:

- S7-1500, ET 200MP, ET 200SP Counting, measurement and position detection (http://support.automation.siemens.com/WW/view/en/59709820) function manual
- in the STEP 7 online help under "Using technology functions > Counting, measuring and position detection > Counting, measuring and position detection (S7-1500)"

A detailed description of configuring Motion Control be found in:

- in the S7-1500/S7-1500T Motion Control (http://support.automation.siemens.com/WW/view/en/59381279) function manual
- in the STEP 7 online help under "Using technology functions > Motion Control > Motion Control (S7-1500)"

3.1.2.2 Assignment of the control interface of the high-speed counters

The user program uses the control interface to influence the behavior of the high speed counter.

Note

Operation with High_Speed_Counter technology object

The High_Speed_Counter technology object is available for high-speed counting mode. We therefore recommend use of the High_Speed_Counter technology object instead of the control interface/feedback interface for controlling the high speed counter.

For information on configuring the technology object and programming the associated instruction, refer to the S7-1500, ET 200MP, ET 200SP Counting, measurement and position detection (http://support.automation.siemens.com/WW/view/en/59709820) function manual.

Control interface per channel

The following table shows the control interface assignment:

Table 3- 3 Assignment of the control interface

Offset from start address	Parameter	Meaning				
Bytes 0 to 3	Slot 0	Load value (meaning of the value is specified in LD_SLOT_0)				
Bytes 4 to 7	Slot 1	Load value (meaning of the value is specified in LD_SLOT_1)				
Byte 8	LD_SLOT_0*	Specifies the meaning of the value in Slot 0				
		Bit 3	**Bit 2**	**Bit 1**	**Bit 0**	
		0	0	0	0	No action, idle state
		0	0	0	1	Load counter
		0	0	1	0	Reserve
		0	0	1	1	Load start value
		0	1	0	0	Load comparison value 0
		0	1	0	1	Load comparison value 1
		0	1	1	0	Load low counting limit
		0	1	1	1	Load high counting limit
		1	0	0	0	Reserve
		to				
		1	1	1	1	
	LD_SLOT_1*	Specifies the meaning of the value in Slot 1				
		Bit 7	**Bit 6**	**Bit 5**	**Bit 4**	
		0	0	0	0	No action, idle state
		0	0	0	1	Load counter
		0	0	1	0	Reserve
		0	0	1	1	Load start value
		0	1	0	0	Load comparison value 0
		0	1	0	1	Load comparison value 1
		0	1	1	0	Load low counting limit
		0	1	1	1	Load high counting limit
		1	0	0	0	Reserve
		to				
		1	1	1	1	
Byte 9	EN_CAPTURE	Bit 7: Enable capture function				
	EN_SYNC_DN	Bit 6: Enable downward synchronization				
	EN_SYNC_UP	Bit 5: Enable upward synchronization				
	SET_DQ1	Bit 4: Set DQ1				
	SET_DQ0	Bit 3: Set DQ0				
	TM_CTRL_DQ1	Bit 2: Enable technological function DQ1				
	TM_CTRL_DQ0	Bit 1: Enable technological function DQ0				
	SW_GATE	Bit 0: Software gate				
Byte 10	SET_DIR	Bit 7: Count direction (with encoder without direction signal)				
	–	Bits 2 to 6: Reserve; bits must be set to 0				
	RES_EVENT	Bit 1: Reset of saved events				
	RES_ERROR	Bit 0: Reset of saved error states				

Offset from start address	Parameter	Meaning
Byte 11	–	Bits 0 to 7: Reserve; bits must be set to 0

* If values are loaded simultaneously via LD_SLOT_0 and LD_SLOT_1, the value from Slot 0 is taken first internally and then the value from Slot 1 . This may lead to unexpected intermediate states.

Reference

You can find a graphic representation of the processing of the various SLOT parameters in the section Handling the SLOT parameter (control interface) (Page 73).

3.1.2.3 Assignment of the feedback interface of the high-speed counters

The user program receives current values and status information from the high speed counter via the feedback interface.

Note

Operation with High_Speed_Counter technology object

The High_Speed_Counter technology object is available for high-speed counting mode. We therefore recommend use of the High_Speed_Counter technology object instead of the control interface/feedback interface for controlling the high speed counter.

For information on configuring the technology object and programming the associated instruction, refer to the S7-1500, ET 200MP, ET 200SP Counting, measurement and position detection (http://support.automation.siemens.com/WW/view/en/59709820) function manual.

Feedback interface per channel

The following table shows the feedback interface assignment:

Table 3- 4 Assignment of the feedback interface

Offset from start address	Parameter	Meaning
Bytes 0 to 3	COUNT VALUE	Current count value
Bytes 4 to 7	CAPTURED VALUE	Last Capture value acquired
Bytes 8 to 11	MEASURED VALUE	Current measured value
Byte 12	–	Bits 3 to 7: Reserve; set to 0
	LD_ERROR	Bit 2: Error when loading via control interface
	ENC_ERROR	Bit 1: Incorrect encoder signal
	POWER_ERROR	Bit 0: Incorrect supply voltage L+
Byte 13	–	Bits 6 to 7: Reserve; set to 0
	STS_SW_GATE	Bit 5: Software gate status
	STS_READY	Bit 4: Digital on-board I/O started up and parameters assigned
	LD_STS_SLOT_1	Bit 3: Load request for Slot 1 detected and executed (toggling)
	LD_STS_SLOT_0	Bit 2: Load request for Slot 0 detected and executed (toggling)
	RES_EVENT_ACK	Bit 1: Reset of event bits active
	–	Bit 0: Reserve; set to 0
Byte 14	STS_DI2	Bit 7: Reserve; set to 0
	STS_DI1	Bit 6: Status HSC DI1
	STS_DI0	Bit 5: Status HSC DI0
	STS_DQ1	Bit 4: Status HSC DQ1
	STS_DQ0	Bit 3: Status HSC DQ0
	STS_GATE	Bit 2: Internal gate status
	STS_CNT	Bit 1: Count pulse detected within last approx. 0.5 s
	STS_DIR	Bit 0: Direction of last count value change
Byte 15	STS_M_INTERVAL	Bit 7: Count pulse detected in previous measuring interval
	EVENT_CAP	Bit 6: Capture event has occurred
	EVENT_SYNC	Bit 5: Synchronization has occurred
	EVENT_CMP1	Bit 4: Comparison event for DQ1 has occurred
	EVENT_CMP0	Bit 3: Comparison event for DQ0 has occurred
	EVENT_OFLW	Bit 2: Overflow has occurred
	EVENT_UFLW	Bit 1: Underflow has occurred
	EVENT_ZERO	Bit 0: Zero crossing has occurred

3.2 Pulse generators

3.2.1 Operating modes

3.2.1.1 Operating mode: Pulse-width modulation (PWM)

Properties

The pulse-width modulation (PWM) mode of the compact CPU has the following technical properties:

	Minimum			Maximum		
	Standard output	**High-speed output deactivated**	**High-speed output activated**	**Standard output**	**High-speed output deactivated**	**High-speed output activated**
Pulse duration	400 µs with load > 0.1 A [1] 500 µs with load ≥ 2 mA [1]	20 µs with load > 0.1 A [1] 40 µs with load ≥ 2 mA [1]	2 µs [1]	10 000 000 µs (10 s)		
Period duration	10 ms [2]	100 µs [2]	10 µs			

[1] A lower value is theoretically possible but, depending on the connected load, the output voltage can no longer be output as complete rectangular pulse

[2] Load-dependent

Principle of operation

With pulse width modulation, a signal with defined cycle duration and variable on-load factor is output at the digital output. The on-load factor is the relationship of the pulse duration to the cycle duration. In PWM mode, you can control the on-load factor and the cycle duration.

With pulse width modulation, you vary the mean value of the output voltage. Depending on the connected load, you can control the load current or the power with this.

You can specify the pulse duration as one-hundredth of the period duration (0 to 100), as one-thousandth (0 to 1 000), as one ten-thousandth (0 to 10 000) or in S7 analog format.

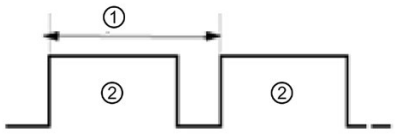

① Period duration

② Pulse duration

The pulse duration can be between 0 (no pulse, always off) and full scale (no pulse, period duration always on).

The PWM output can, for example, be used to control the speed of a motor from standstill to full speed or you can use it to control the position of a valve from closed to completely open.

You configure the pulse width modulation (PWM) mode in STEP 7 (TIA Portal).

The pulse width modulation mode has the following functions:

- When the option "High-speed output (0.1 A)" is activated, you can generate a minimum pulse duration of 2 µs at a current of 100 mA. If the option "High-speed output (0.1 A)" is not activated, you can generate a minimum pulse duration of 20 µs with a load > 0.1 A and a minimum pulse duration of 40 µs with a load of ≥ 2 mA and a current of maximum 0.5 A. If a standard output is used, you can generate a minimum pulse duration of 400 µs with a load of > 0.1 A and a minimum pulse duration of 500 µs with a load of ≥ 2 mA.
- You can control the pulse output (DQA) of the channel manually via the control and feedback interface.
- You can configure the reaction to CPU STOP. Upon change to CPU STOP, the pulse output (DQA) is set to the configured state.

Controller

For the pulse width modulation (PWM) mode, the user program directly accesses the control and feedback interface of the channel.

Reconfiguration via the instructions WRREC/RDREC and parameter assignment data record 128 is supported. You can find additional information in section Parameter data records (PWM) (Page 180).

You control the on-load factor (pulse-cycle ratio) of the pulse width via the OUTPUT_VALUE field of the control interface. Pulse width modulation generates continuous pulses based on this value. The period duration is adjustable.

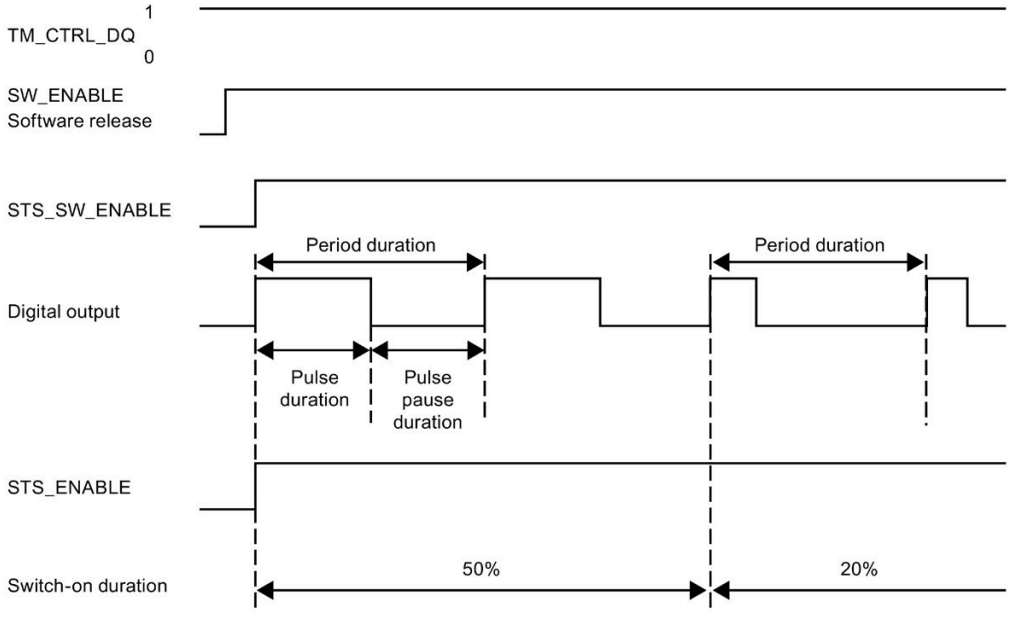

Figure 3-1 Pulse schematic

Starting the output sequence

The control program must output the enable for the output sequence with the help of the software enable (SW_ENABLE 0 → 1). The feedback bit STS_SW_ENABLE indicates that the software enable is pending at the PWM.

If the software enable is activated (rising edge), STS_ENABLE is set. The output sequence runs continuously, as long as SW_ENABLE is set.

Note

Output control signal TM_CTRL_DQ

- If TM_CTRL_DQ = 1, the technology function takes over the control and generates pulse sequences at the output PWM DQA.
- If TM_CTRL_DQ = 0, the user program takes over the control and the user can set the output PWM DQA directly via the control bit SET_DQA.

Canceling the output sequence

Deactivating the software enable (SW_ENABLE = 1 → 0) cancels the current output sequence. The last period duration is not completed. STS_ENABLE and the digital output PWM DQA are immediately reset to 0.

A renewed pulse output is only possible after a restart of the output sequence.

Minimum pulse duration and minimum interpulse period

You assign the minimum pulse duration and the minimum interpulse period with the parameter "Minimum pulse duration".

- A pulse duration determined by the technology function or PWM channel which is shorter than the minimum pulse duration will be suppressed.
- A pulse duration determined by the technology function or PWM channel which is longer than the cycle duration less the minimum interpulse period will be set to the value of the cycle duration (output switched on permanently).

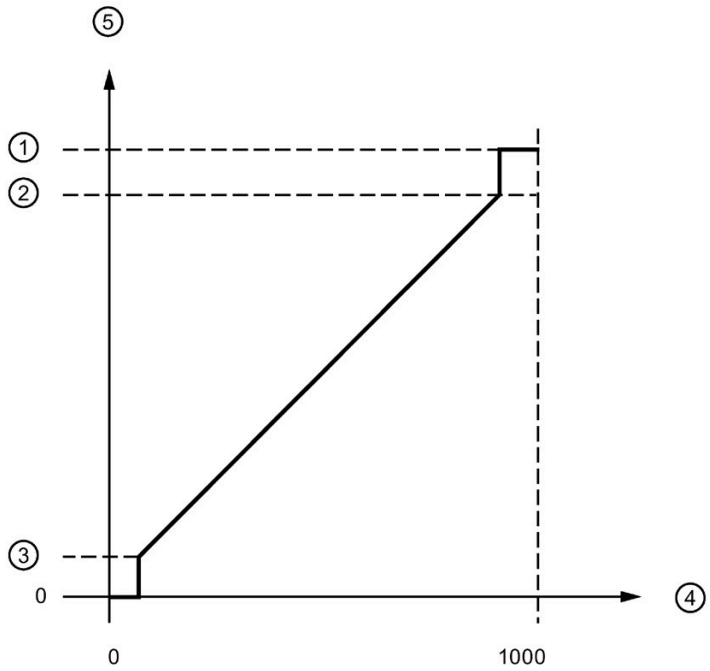

① Cycle duration
② Cycle duration minus minimum interpulse period
③ Minimum pulse duration
④ OUTPUT_VALUE (One tenth of a percent on-load factor)
⑤ Pulse duration

Figure 3-2 Minimum pulse duration and minimum interpulse period

Setting and changing the pulse on-load factor

OUTPUT_VALUE assigns the on-load factor for the current period duration. You select the range of the field OUTPUT_VALUE of the control interface with the "Output format" parameter.

- Output format 1/100: Value range between 0 and 100
  Pulse duration = (OUTPUT_VALUE/100) x period duration.
- Output format 1/1000: Value range between 0 and 1 000
  Pulse duration = (OUTPUT_VALUE/1 000) x period duration.
- Output format 1/10000: Value range between 0 and 10 000
  Pulse duration = (OUTPUT_VALUE/10 000) x period duration.
- Output format "S7 analog output": Value range between 0 and 27 648
  Pulse duration = (OUTPUT_VALUE/27 648) x period duration.

You assign OUTPUT_VALUE directly via the control program. A new OUTPUT_VALUE is applied at the output when the next rising edge occurs.

Setting and changing the period duration

- Permanent update
  The period duration is permanently controlled via the control interface. The MODE_SLOT bit must be set ("1" means permanent update); LD_SLOT must be set to value 1 ("1" means period duration). Set the period value in the field SLOT. The unit is always a microsecond.
  - High-speed output activated: between 10 µs and 10 000 000 µs (10 s) in the field SLOT
  - High-speed output deactivated: between 100 µs and 10 000 000 µs (10 s) in the field SLOT
  - Standard output (100 Hz output): between 10 000 µs (10 ms) and 10 000 000 µs (10 s) in the field SLOT
- Individual updating
  Set the period duration in the configuration parameters. Alternatively, execute an individual update via the control interface. MODE_SLOT must be deleted ("0" means individual update); LD_SLOT must be set to value 1 ("1" means period duration). Set the period duration value in the field SLOT. The unit is always a microsecond.
  - High-speed output activated: between 10 µs and 10 000 000 µs (10 s) in the parameters
  - High-speed output deactivated: between 100 µs and 10 000 000 µs (10 s) in the parameters
  - Standard output (100 Hz output): between 10 000 µs (10 ms) and 10 000 000 µs (10 s) in the parameters

The new period duration is applied at the next rising edge of the output.

Setting the minimum pulse duration and the minimum interpulse period

You assign the minimum pulse duration and the minimum interpulse period as DWORD numerical value between 0 and 10 000 000 µs (10 s) with the help of the channel parameter configuration "Minimum pulse duration".

Parameters of the pulse width modulation (PWM) mode

Category	Parameter	Meaning	Value range	Default
Reaction to CPU STOP	Reaction to CPU STOP	The parameter "Output substitute value" generates a substitute value upon CPU STOP, which you can define with the parameter "Substitute value for pulse output (DQA)".	**Output substitute value**	Output substitute value
		On CPU STOP, the parameter "Continue" still generates the PWM output signal which was generated before the CPU STOP.	**Continue**	
	Substitute value for pulse output (DQA)	If you have set the option "Output substitute value" for "Reaction to CPU STOP", the parameter "Substitute value for pulse output (DQA)" defines the substitute value to be used for the pulse output of the channel. If you have set the option "Continue" for "Reaction to CPU STOP", the parameter "Substitute value for pulse output (DQA)" cannot be selected.	**0** (use substitute value 0)	0
			1 (use substitute value 1)	
Diagnostics interrupt	No supply voltage L+	The parameter "Missing supply voltage L+" activates the diagnostic interrupt of the channel in the case of no supply voltage L+	**Deactivated**	Deactivated
			Activated	
Parameter	High-speed output (0.1 A)	The "High-speed output (0.1 A)" parameter is used to specify whether you want to use the selected pulse output as high-speed output. The requirement for this is that the selected pulse output supports operation as high-speed output.	**Deactivated** The output supports frequencies of up to 10 kHz (load dependent) and currents of up to 0.5 A or frequencies of up to 100 Hz and currents of up to 0.5 A depending on the performance capability of the selected output.	Deactivated
			Activated The output supports frequencies of up to 100 kHz and currents of up to 0.1 A.	
	Output format	Defines the format of the ratio value (on-load factor) in the field "OUTPUT_VALUE" of the control interface of the channel.	**S7 analog output** Interprets the ratio value in the field OUTPUT_VALUE" of the control interface as 1/27648 of the current period duration. Supported value range from 0 to 27 648	1/100
			1/100 Interprets the ratio value in the field "OUTPUT_VALUE" of the control interface as percentage value of the current period duration. Supported value range 0 to 100	

Category	Parameter	Meaning	Value range	Default
			1/1000 Interprets the ratio value in the field "OUTPUT_VALUE"of the control interface as a one-tenth percentage point of the current period duration. Supported value range from 0 to 1 000	
			1/10000 Interprets the ratio value in the field "OUTPUT_VALUE" of the control interface as a one-hundredth percentage point of the current period duration. Supported value range from 0 to 10 000	
	Minimum pulse duration	Defines the minimum pulse duration and the minimum interpulse period of the output signal of the channel. The channel suppresses all pulses and pauses that are below the specified value.	**0 µs to 10 000 000 µs (10 s)**	0 µs
	Period duration	Defines the period duration of the output signal of the channel in µs. In RUN, the user program can control the period duration via the control and feedback interface of the channel.	**x to 10 000 000 µs (10 s)** at 100 kHz hardware output (high-speed output (0.1 A) activated): 10 µs to 10 000 000 µs (10 s) at 10 kHz hardware output (high-speed output (0.1 A) deactivated): 100 µs to 10 000 000 µs (10 s) at 100 kHz hardware output (high-speed output (0.1 A) deactivated): 10 000 µs (10 ms) to 10 000 000 µs (10 s)	2 000 000 µs (2 s)
Hardware inputs/ outputs	Pulse output (DQA)	The parameter "Pulse output (DQA)" defines the hardware output to use as pulse output channel.	For B: X11, terminal 21 (DQ0 / %Q4.0): 10 kHz / 0.5 A or 100 kHz / 0.1 A	Hardware output with the least significant address
			For B: X11, terminal 31 (DQ8 / %Q5.0): 100 Hz / 0.5 A	

Output signals for pulse width modulation (PWM) mode

Output signal	Meaning	Value range
Continuous pulse current at the digital output PWM DQA	A pulse is output at the digital output PWM DQA for the set on-load factor and period duration.	Continuous pulse current

3.2.1.2 Operating mode: Frequency output

In this operating mode, you can assign a frequency value with high frequencies more precisely than by using the period duration in PWM mode.

A rectangular signal with an assigned frequency and a constant on-load factor of 50% is generated at the digital output.

The frequency output mode has the following functions:

- When the option "High-speed output (0.1 A)" is activated, you can generate a minimum pulse duration of 2 µs at a current of 100 mA. If the option "High-speed output (0.1 A)" is not activated, you can generate a minimum pulse duration of 20 µs with a load > 0.1 A and a minimum pulse duration of 40 µs with a load of ≥ 2mA and a current of maximum 0.5 A.
  If you use a standard output, you can generate a minimum pulse duration of 400 µs with a load of > 0.1 A and a minimum pulse duration of 500 µs with a load of ≥ 2 mA and a current of max. 0.5 A.

	Minimum			Maximum		
	Standard output	**High-speed output deactivated**	**High-speed output activated**	**Standard output**	**High-speed output deactivated**	**High-speed output activated**
Frequency	0.1 Hz			100 Hz [1]	10 kHz [1]	100 kHz

[1] Load-dependent

- You can control the pulse output (DQA) of the channel manually via the control and feedback interface.
- You can configure the reaction to CPU STOP. Upon change to CPU STOP, the pulse output (DQA) is set to the configured state.

Controller

For the frequency output mode, the user program directly accesses the control and feedback interface of the channel.

Reconfiguration via the instructions WRREC/RDREC and parameter assignment data record 128 is supported. You can find additional information in section Parameter data records (PWM) (Page 180).

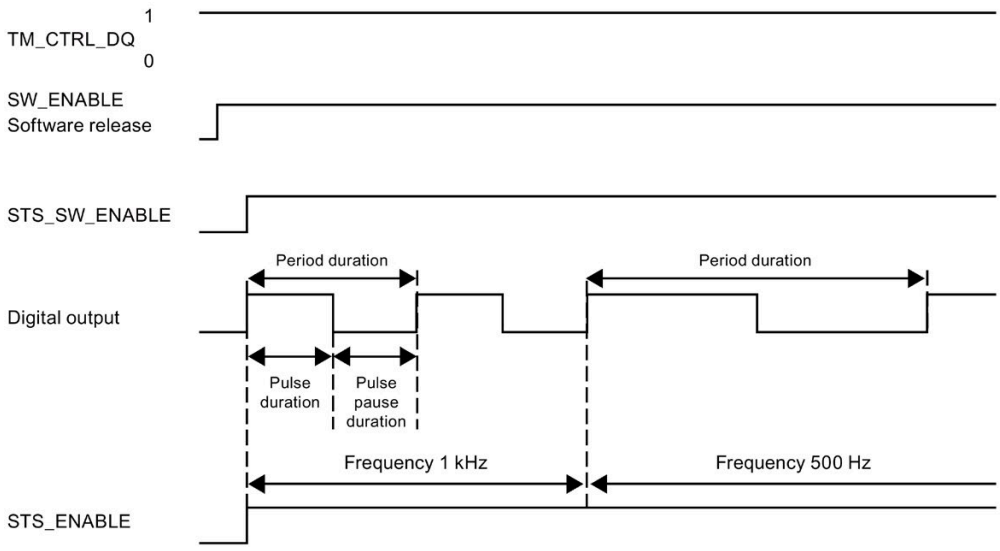

Figure 3-3 Pulse schematic

Starting the output sequence

The control program must initiate the enable for the output sequence with the help of the software enable (SW_ENABLE 0 → 1). The feedback bit STS_SW_ENABLE indicates that the software enable is pending at the pulse generator.

If the software enable is activated (rising edge), STS_ENABLE is set. The output sequence runs continuously, as long as SW_ENABLE is set.

Note

Output control signal TM_CTRL_DQ

- If TM_CTRL_DQ = 1, the technology function takes over the control and generates pulse sequences at the output PWM DQA.
- If TM_CTRL_DQ = 0, the user program takes over the control and the user can directly set the output PWM DQA via the control bit SET_DQA.

Canceling the output sequence

Deactivating the software enable (SW_ENABLE = 1 → 0) during the frequency output cancels the current output sequence. The last period duration is not completed. STS_ENABLE and the digital output PWM DQA are immediately reset to 0.

A renewed pulse output is only possible after a restart of the output sequence.

Setting and changing the output value (frequency)

You set the frequency with the OUTPUT_VALUE directly with the control program in the control interface. The value is specified in the real format and the unit is always "Hz". The possible range depends on the parameter "High-speed output (0.1 A)" as follows:

- High-speed pulse output deactivated
  - Frequency (OUTPUT_VALUE) 0.1 Hz to 10 000 Hz
- High-speed pulse output activated
  - Frequency (OUTPUT_VALUE) 0.1 Hz to 100 000 Hz
- Standard output (100 Hz output)
  - Frequency (OUTPUT_VALUE) 0.1 Hz to 100 Hz

The new frequency is applied at the start of the next period. The new frequency has no impact on the falling edge or the pulse-cycle ratio. However, the application can take up to 10 s depending on the previously set frequency.

Accuracy of the output frequency

The configured output frequency is output with a frequency-dependent accuracy at the digital output PWM DQA. You can find an overview of the accuracy as a function of the frequency used in the section Interconnection overview of the outputs (Page 109).

Parameters of the frequency output mode

Category	Parameter	Meaning	Value range	Default
Reaction to CPU STOP	Reaction to CPU STOP	The parameter "Output substitute value" generates a substitute value upon CPU STOP, which you can define with the parameter "Substitute value for pulse output (DQA)".	**Output substitute value**	Output substitute value
		The parameter "Continue" still generates the frequency output signal upon CPU STOP, which was generated before the CPU STOP.	**Continue**	
	Substitute value for pulse output (DQA)	If you have set the option "Output substitute value" for "Reaction to CPU STOP", the parameter "Substitute value for pulse output (DQA)" defines the substitute value to be used for the pulse output of the channel. If you have set the option "Continue" for "Reaction to CPU STOP", the parameter "Substitute value for pulse output (DQA)" cannot be selected.	**0** (use substitute value 0)	0
			1 (use substitute value 1)	
Diagnostics interrupt	No supply voltage L+	The parameter "Missing supply voltage L+" activates the diagnostic interrupt of the channel in the case of no supply voltage L+	**Deactivated**	Deactivated
			Activated	

Category	Parameter	Meaning	Value range	Default
Parameter	High-speed output (0.1 A)	The "High-speed output (0.1 A)" parameter is used to specify whether you want to use the selected pulse output as high-speed output. The requirement for this is that the selected pulse output supports operation as high-speed output.	**Deactivated** The output supports frequencies of up to 10 kHz (load dependent) and currents of up to 0.5 A or frequencies of up to 100 Hz and currents of up to 0.5 A depending on the performance capability of the selected output.	Deactivated
			Activated The output supports frequencies of up to 100 kHz and currents of up to 0.1 A.	
	Output format	Defines the value for the frequency output in the field "OUTPUT_VALUE" of the control interface of the channel.	**1 Hz** Interprets the value of the frequency output in the field "OUTPUT_VALUE" as frequency with the unit Hz.	1 Hz
Hardware inputs/ outputs	Pulse output (DQA)	The parameter "Pulse output (DQA)" is used to define the hardware output that you want to use as pulse output channel.	For B: X11, terminal 21 (DQ0 / %Q4.0): 10 kHz / 0.5 A or 100 kHz / 0.1 A	Hardware output with the least significant address
			For B: X11, terminal 31 (DQ8 / %Q5.0): 100 Hz / 0.5 A	

Output signals for frequency output mode

Output signal	Meaning	Value range
Continuous pulse current at the digital output PWM DQA	A pulse for the assigned frequency is output at the digital output PWM DQA.	Continuous pulse current

3.2.1.3 Operating mode: PTO

The PTO (Pulse Train Output) mode can be used to output position information. This allows you to, for example, control stepper motor drives or simulate an incremental encoder. The frequency of the pulses represents the speed, while the number of pulses represents the distance. The direction can also be specified by using two signals per channel. You can use a PTO channel for setpoint output (drive) for an axis technology object.

PTO mode is divided into the following four signal types:

- PTO (pulse (A) and direction (B)): If you select the PTO signal type (pulse (A) and direction (B)), an output (A) controls the pulses and an output (B) controls the direction. B is 'High' (active) when pulses are generated in a negative direction. B is 'Low' (inactive) when pulses are generated in a positive direction.

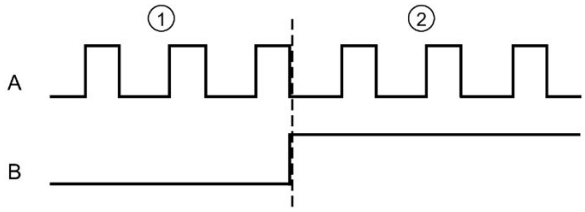

① Positive direction of rotation
② Negative direction of rotation

- PTO (Count up (A) and Count down (B)): When you select the PTO signal type (count up (A) and count down (B)), an output (A) outputs pulses for positive directions and another output (B) outputs pulses for negative directions.

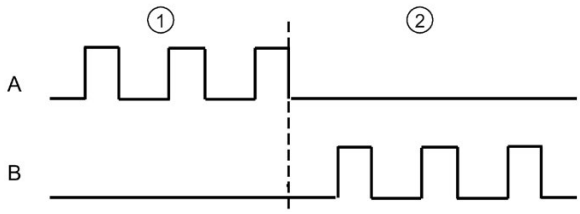

① Positive direction of rotation
② Negative direction of rotation

- PTO (A, B phase-shifted): When you select the PTO signal type (A, B phase-shifted), the two outputs pulses with the specified velocity, but phase-shifted by 90 degrees. This is a 1x combination in which the pulse shows the duration between two positive transitions of A. In this case, the direction is determined based on the output which first changes from 0 to 1. With positive direction, A precedes B. With negative direction B precedes A.

  The number of generated pulses is based on the number of 0-to-1 transitions from phase A. The phase ratio determines the direction of motion:

PTO (A, B phase-shifted)	
Phase A precedes phase B (positive motion)	Phase A follows phase B (negative motion)
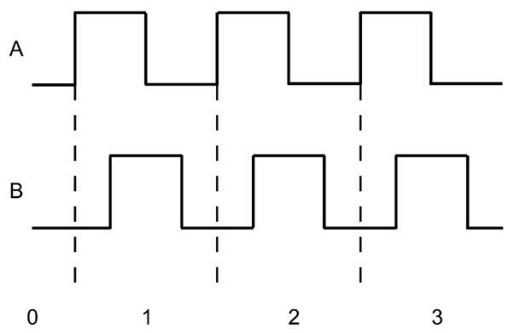	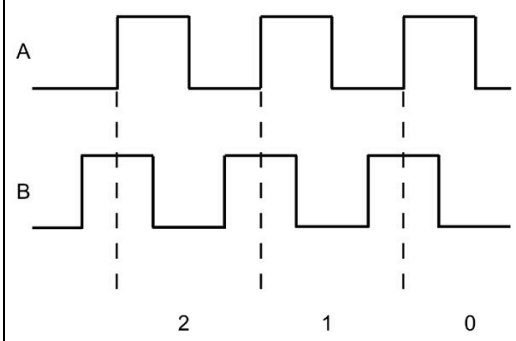
Number of pulses	Number of pulses

- PTO (A, B phase-shifted - quadruple): When you select the PTO signal type (A, B phase-shifted, quadruple), the two outputs transmit pulses with the specified velocity, but phase-shifted by 90 degrees. The quadruple signal type is a 4x configuration in which each edge transition corresponds to an increment. Therefore, a full period of the signal A contains four increments. In this way, two outputs, each with 100 kHz signal frequency, can be used to output a control signal that supplies 400 000 increments per second. The direction is determined based on the output which first changes from 0 to 1. With positive direction, A precedes B. With negative direction B precedes A.

PTO (A, B phase-shifted - quadruple)	
Phase A precedes phase B (positive motion)	Phase A follows phase B (negative motion)
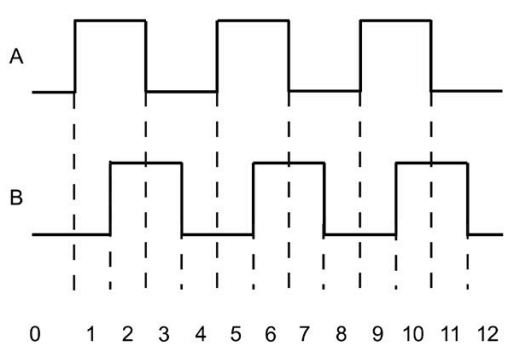	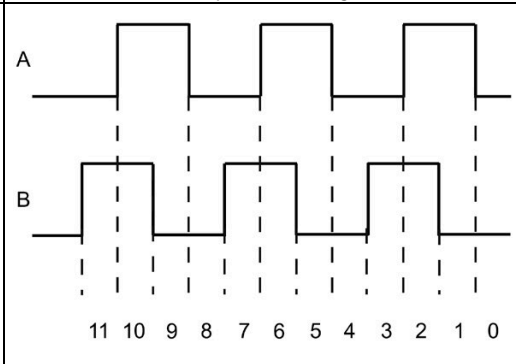
Number of pulses	Number of pulses

Parameters of PTO mode

Category	Parameter	Meaning	Value range	Default
Diagnostics interrupt	No supply voltage L+	With the parameter "Missing supply voltage L+", you activate the diagnostic interrupt of the channel in the event of no supply voltage L+.	Deactivated Activated	Deactivated
Data exchange with the drive	Reference speed	With the parameter "Reference speed", you define the reference value for the drive velocity. The drive velocity is defined as percentage value of the reference speed in the range from -200% to +200%.	Floating-point number: 1.0 to 20 000.0 (rpm)	3 000.0 (rpm)
	Maximum speed	The parameter "Maximum speed" is used to define the required maximum speed for your application.	The supported value range depends on: • the signal type selected under "Operating mode" • the value defined under "Increments per revolution" • the value defined under "Reference speed" The low limit of the value range is: • for the signal type "PTO (A, B phase-shifted - quadruple)": 0.1 Hz * 60 s/min * 4) / Increments per revolution • for the non-quadruple PTO signal types: (0.1 Hz * 60 s/min) / Increments per revolution The high limit of the value range is the minimum of the value: • 2 * reference speed and of the value: • for the signal type "PTO (A, B phase-shifted - quadruple)": (100 000 Hz * 60 s/min * 4) / Increments per revolution • for the non-quadruple PTO signal types: (100 000 Hz * 60 s/min) / Increments per revolution	3 000.0 (rpm)

Category	Parameter	Meaning	Value range	Default
	Increments per revolution	The "Increments per revolution" is used to define the number of increments per revolution (also in microstep mode), which is required by the drive for a revolution.	1 to 1 000 000	200
Fine resolution	Bits in incr. actual value (G1_XIST1)	The parameter defines the number of bits for the coding of the fine resolution in the current incremental value of G1_XIST1.	0	0
Stop behavior	Quick stop time	The parameter "Quick stop time" defines the time period within which the drive should go from the maximum speed to a standstill (OFF3).	1 to 65 535 (ms)	1 000 (ms)
Hardware inputs/ outputs	Reference switch input	The parameter "Reference switch input" defines the hardware input of the reference switch.	[Input address of the reference switch DI]	--
	Edge selection reference switch	The parameter "Edge selection reference switch" defines the edge type which is to be detected by the reference switch.	Rising edge Falling edge	Rising edge
	Measuring input	The parameter "Measuring input" defines the hardware input of the measuring input.	[Input address of the measuring input DI]	--
	"Drive ready" input	The parameter ""Drive ready" input" defines the hardware input of the input "Drive ready".	[Input addresses of the inputs "Drive ready" DIn]	--
	Pulse output A for "PTO (pulse (A) and direction B)"	The parameter "Pulse output A" defines the hardware output for PTO signal A.	[Output address DQ for PTO signal A (output frequency 100 kHz)]	Grayed out Read only access to the parameter
	Direction output B for "PTO (pulse (A) and direction B))"	The parameter "Direction output B" defines the hardware output for PTO signal B.	[Output address 1 of the DQ for PTO signal B (output frequency 100 kHz)] [Output address 2 of the DQ for PTO signal B (output frequency 100 kHz)]	Qn (output frequency 100 kHz)
	Count up for "PTO (Count up (A) and Count down (B))"	The "Clock generator forward (A)" parameter defines the hardware output for PTO signal A.	[Output address DQ for PTO signal A (output frequency 100 kHz)]	Grayed out Read only access to the parameter

Category	Parameter	Meaning	Value range	Default
	Count down for "PTO (Count up (A) and Count down (B))"	The "Clock generator backward (B)" parameter defines the hardware output for PTO signal B.	[Output address 1 of the DQ for PTO signal B (output frequency 100 kHz)]	Grayed out Read only access to the parameter
	Phase A for "PTO (A, B phase-shifted)" and "PTO (A, B phase-shifted, quadruple)"	The "Clock generator output (A)" parameter defines the hardware output for PTO signal A.	[Output address of the DQ for PTO signal A (output frequency 100 kHz)]	Grayed out Read only access to the parameter
	Phase B for "PTO (A, B phase-shifted)" and "PTO (A, B phase-shifted, quadruple)"	The "Clock generator output (B)" parameter defines the hardware output for PTO signal B.	[Output address 1 of the DQ for PTO signal B (output frequency 100 kHz)]	Grayed out Read only access to the parameter
	Drive enable output	The parameter "Drive enable output" defines the hardware output of the output "Drive enable output".	[Output addresses of the enable outputs DQn (output frequency 100 Hz)]	--

Reaction of the PTO channel to CPU STOP

The PTO channel reacts to a change to CPU STOP by removing the drive enable (if the drive enable output is configured) and outputting the velocity setpoint 0 at the hardware outputs configured for the signal tracks A and B. The CPU STOP reaction of the PTO channels cannot be configured.

Note

Reaction to CPU STOP

Upon CPU STOP, the hardware outputs assigned for the PTO outputs A and B can switch to signal state 'High' (1) and/or remain there. It is not guaranteed that the two hardware outputs switch to/remain in signal level 'Low' (0).

Controller

The pulse output channels for the four modes of the pulse generators (PTO) are controlled using Motion Control via the technology objects TO_SpeedAxis, TO_PositioningAxis and TO_SynchronousAxis. With these operating modes, the control and feedback interface of the channels is a partial implementation of the PROFIdrive interface "Telegram 3". For a detailed description of the use of motion control and its configuration, refer to the S7-1500/S7-1500T Motion Control function manual (https://support.industry.siemens.com/cs/ww/en/view/109766459) and the STEP 7 online help.

3.2.2 Functions

3.2.2.1 Function: High-speed output

The function "High-speed output (0.1 A)" improves the signal clock of the digital outputs (DQ0 to DQ7). Less delay, fluctuation, jitter, and shorter rise and fall times occur at the switching edges.

The function "High-speed output (0.1 A)" is suitable for generating pulse signals in a more precise clock, but provides a lower maximum load current.

For the PWM and Frequency output modes, select the high-speed output of the channel in STEP 7 (TIA Portal). You can also change the parameter assignment during runtime with the help of the program via the data record.

High-speed pulse output (high-speed output) is available for the following operating modes:

- PWM
- Frequency output
- PTO (the pulse outputs for the PTO mode are always "High-speed output (0.1 A)")

High-speed output

	Minimum		Maximum	
	High-speed output deactivated	**High-speed output activated**	**High-speed output deactivated**	**High-speed output activated**
Pulse duration	20 µs with load > 0.1 A [1] 40 µs with load ≥ 2 mA [1]	2 µs [1]	10 000 000 µs (10 s)	
Period duration	100 µs [2]	10 µs		
Frequency	0.1 Hz		10 kHz [2]	100 kHz

[1] A lower value is theoretically possible but, depending on the connected load, the output voltage can no longer be output as complete rectangular pulse

[2] Load-dependent

3.2.2.2 Function: Direct control of the pulse output (DQA)

Direct control of the pulse output (DQA)

In the modes "Pulse width modulation PWM" and "Frequency output", you can set the pulse output (DQA) of a pulse generator directly via the control program. Select the function for the DQ direct control by deleting the output control bit of the PWM channel (TM_CTRL_DQ = 0) in the control interface.

The direct control of the pulse output (DQA) can be helpful when commissioning a control system for automation.

When you select the direct control of the pulse output (DQA) during a pulse output sequence, the sequence continues to run in the background so that the output sequence is continued as soon as the channel takes control again (by setting TM_CTRL_DQ = 1).

You assign the status of the pulse output (DQA) using the control bits SET_DQA.

When you set TM_CTRL_DQ = 1, you deselect the direct control of the pulse output (DQA) and the channel takes over the processing. If the output sequence is still running (STS_ENABLE still active), the PWM channel takes over the control of the output again. If TM_CTRL_DQ = 1 and STS_ENABLE is not active, the module's channel also takes over processing, but then outputs "0".

Note

Output control signal TM_CTRL_DQ of the PWM channel

- If TM_CTRL_DQ = 1, the technology function takes over the control and generates pulse sequences at the output PWM DQA.
- If TM_CTRL_DQ = 0, the user program takes over the control and the user can set the PWM DQA directly using the control bits SET_DQA.

3.2.3 Configuring the PWM and frequency output modes

3.2.3.1 Assignment of the control interface

The user program influences the behavior of the PWM channel through the control interface.

Control interface per channel

The following table shows the control interface assignment:

Table 3- 5 Assignment of the control interface

<table>
<tr><th></th><th>7</th><th>6</th><th>5</th><th>4</th><th>3</th><th>2</th><th>1</th><th>0</th></tr>
<tr><td>Byte 0</td><td colspan="8">OUTPUT_VALUE
PWM: On-load factor * (Int)
In PWM mode, the on-load factor uses only the two least significant bytes (byte 2 and byte 3).
Frequency output: Frequency in Hz (Real)</td></tr>
<tr><td>Byte 1</td></tr>
<tr><td>Byte 2</td></tr>
<tr><td>Byte 3</td></tr>
<tr><td>Byte 4</td><td colspan="8">SLOT</td></tr>
<tr><td>Byte 5</td></tr>
<tr><td>Byte 6</td></tr>
<tr><td>Byte 7</td></tr>
<tr><td rowspan="4">Byte 8</td><td colspan="4" rowspan="4">Reserved = 0</td><td rowspan="4">MODE_SLOT</td><td colspan="3">LD_SLOT
Specifies the meaning of the value under SLOT</td></tr>
<tr><td colspan="3">0000: No action</td></tr>
<tr><td colspan="3">0001: Period duration (PWM)</td></tr>
<tr><td colspan="3">0010 to 1111: Reserved</td></tr>
<tr><td>Byte 9</td><td colspan="2">Reserved = 0</td><td>Reserved = 0</td><td>Reserved = 0</td><td>SET_DQA</td><td>Reserved = 0</td><td>TM_CTRL_DQ</td><td>SW_ENABLE</td></tr>
<tr><td>Byte 10</td><td colspan="7">Reserved = 0</td><td>RES_ERROR</td></tr>
<tr><td>Byte 11</td><td colspan="8">Reserved = 0</td></tr>
</table>

* The terms "On-load factor", "Pulse duty factor" and "Duty factor" can be used synonymously

Use case

1. Transfer the control for the output to the PWM channel.
2. Set SW_ENABLE so that the output can be started.
3. Set the required on-load factor using OUTPUT_VALUE.
4. If necessary, change the period duration (cyclically or once). If you do not change the value, the period duration from the hardware configuration will be used.
5. With TM CTRL_DQ and SET_DQ, set the output from the user program permanently to 1 or 0.
6. Acknowledge any errors that occur using RES_ERROR.

Additional parameters for the output sequence are defined before the start of an output sequence.

The data record of the parameter assignment is changed in the device configuration in STEP 7 (TIA Portal) or through WRREC execution.

Control interface parameters

OUTPUT_VALUE

The interpretation of the value OUTPUT_VALUE depends on the set operating mode. OUTPUT_VALUE is always updated. When an invalid value is detected (outside the permissible range), the error memory bit ERR_OUT_VAL is set until a valid value is detected. During the error condition, the invalid value is ignored and the PWM channel continues with the last valid OUTPUT_VALUE. Note that, in the frequency output mode, it is also possible that no last valid value is available. In this case, the pulse output returns the value 0, i.e. there is no pulse output.

Please note that the on-load factor is not checked in PWM mode. If the on-load factor is greater than the format permits, the PWM channel uses a ratio of 100%. For values < 0, 0% is effective.

SLOT, MODE_SLOT and LD_SLOT

Use these control interface fields if you occasionally change the period duration in PWM mode before the start of the output sequence or during operation. You can find a description of the interaction between SLOT, MODE_SLOT and LD_SLOT under Handling the SLOT parameter (control interface) (Page 73).

SW_ENABLE

If 0 → 1, activate the output sequence.

TM_CTRL_DQ

- If 1, the output is controlled by the PWM channel and generates the pulse sequences
- If 0, the output is controlled directly by the program using the SET_DQA assignments

SET_DQA

- If 1, set the output A to 1, if TM_CTRL_DQ is inactive
- If 0, set the output A to 0, if TM_CTRL_DQ is inactive

RES_ERROR

Resetting the error bit memory ERR_LD in the feedback interface

3.2.3.2 Handling the SLOT parameter (control interface)

SLOT and MODE_SLOT

SLOT has the following operating modes.

- **Mode for individual update (MODE_SLOT = 0)**
  Use this mode if you occasionally change the specific parameters (such as period duration) before the start of the output sequence or during operation.
  - The value in SLOT is always applied when the value changes in LD_SLOT.
  - The acknowledgment bit STS_LD_SLOT in the feedback interface is switched.
  - The value of LD_SLOT defines the interpretation of SLOT (see the table below "Interpretation of the SLOT parameter value").
  - If the LD_SLOT value is invalid, the setting of the feedback bit ERR_LD indicates a parameter assignment error. The user has to reset the error using the control bit RES_ERROR and enable the SLOT parameter again for the next value.
  - Changes made in this mode can be read back by the channel to the parameter assignment data record.
  - The current changes are entered in the data record 128 during readback of the parameter assignment data from the user program with RDREC. These changes are lost during a warm restart of the CPU.
- **Mode for cyclic updating (MODE_SLOT = 1)**
  Use this operating mode if the program is to continuously control another parameter in addition to the main parameter to be controlled.
  - The value in SLOT is transferred with each module cycle.
  - No acknowledgment bit is available.
  - The value of LD_SLOT defines the interpretation of SLOT (see the table below "Interpretation of the SLOT parameter value").
  - If the value in SLOT is not valid, the error ERR_SLOT_VAL occurs. The error is automatically reset as soon as a valid value is loaded.
  - In this mode, the value in the parameter assignment data record is not updated. If LD_SLOT is changed in this mode, the last value applied from LD_SLOT is valid.
  - The mode for permanent updating can be stopped by setting LD_SLOT to 0 and MODE_SLOT to 0. By stopping the mode for permanent updating, the changes made at the parameters during permanent updating are retained until the next changes via SLOT (cyclic or once) or until the next STOP-RUN transition.

Interpretation of the SLOT parameter value

The value written in the SLOT parameter is interpreted depending on the LD_SLOT value and the mode as shown in the table below.

LD_SLOT	Meaning of SLOT value	Valid modes for using the SLOT value	SLOT data type
0	No action / idling	All operating modes	
1	Period duration	PWM	UDInt Permissible value range*: Minimum value: 10 µs, 100 µs or 10 000 µs (10 ms) Maximum value: 10 000 000 µs (10 s)

* The permissible value range depends on the selected hardware output and sometimes on the high-speed mode (high-speed/standard).

Individual updating of the parameter 'Period duration'

The following representation illustrates the sequence of the individual updating of the parameter 'Period duration'. The described workflow principle can also be used on the channels of the high-speed counters.

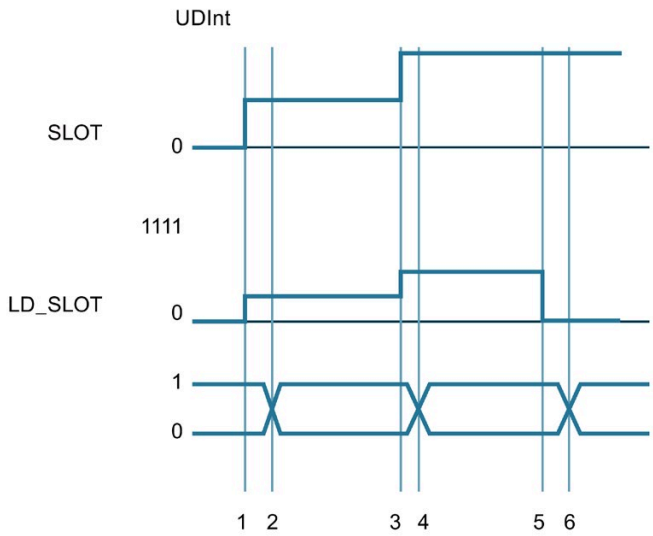

① User writes the first parameter in SLOT and specifies the first parameter in LD_SLOT
② Technology channel applies the first parameter and indicates the application with a change in the bit STS_LD_SLOT
③ User writes the second parameter in SLOT and specifies the second parameter in LD_SLOT
④ Technology channel applies the second parameter and indicates the application with a change in the bit STS_LD_SLOT
⑤ User writes 0 in LD_SLOT, (SLOT inactive)
⑥ Technology channel answers change in LD_SLOT with a change in STS_LD_SLOT

Figure 3-4 Individual updating

Note that the following requirements apply to the representation shown above:

- The value MODE_SLOT must be set to 0
- Errors or invalid values are shown in the feedback bit ERR_SLOT_VAL
- The error must be acknowledged

If MODE_SLOT 0 = 1, the following applies (for PWM mode only):

- The value in SLOT is continuously evaluated according to LD_SLOT
- STS_LD_SLOT does not change
- An error is automatically reset as soon as a valid value is set in SLOT

Cyclic updating of the parameter 'Period duration'

The following representation illustrates the sequence of the cyclic updating of the parameter 'Period duration'. The described workflow principle can also be used on the channels of the high-speed counters.

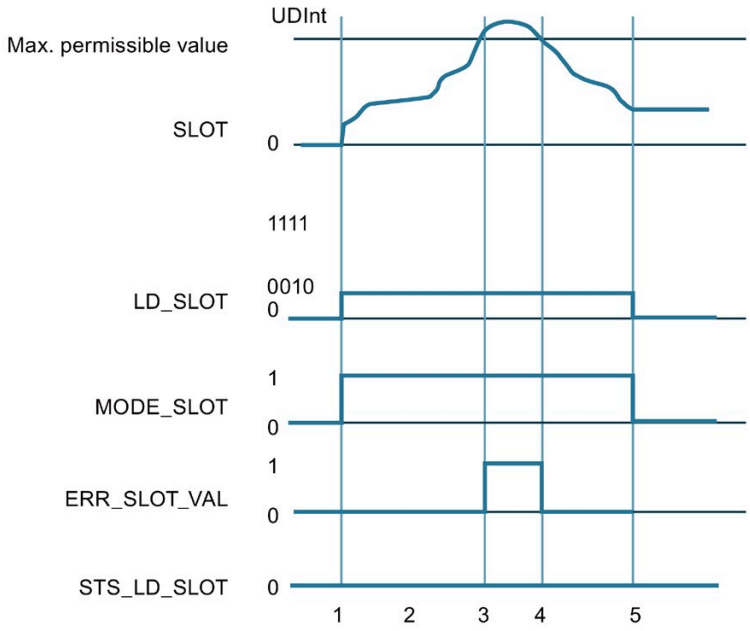

①
- User sets SLOT to the required parameter
- User sets MODE_SLOT to 1
- User sets LD_SLOT to the required value (1 for period duration)

② User changes value in SLOT continuously and technology channel evaluates continuously

③ Value in SLOT exceeds permitted limit, technology channel shows this ERR_SLOT_VAL and continues working with the last valid value

④ Value in SLOT again in permitted range, technology channel resets ERR_SLOT_VAL independently and continues working with the value in SLOT

⑤ User resets LD_SLOT and MODE_SLOT, technology channel continues to work with last value

Figure 3-5 Cyclic updating

3.2.3.3 Assignment of the feedback interface

The user program receives current values and status information from the pulse width modulation via the feedback interface.

Feedback interface per channel

The following table shows the feedback interface assignment:

Table 3- 6 Assignment of the feedback interface

	7	6	5	4	3	2	1	0
Byte 0	ERR_SLOT_VAL The valid in SLOT is invalid	ERR_OUT_VAL The value in OUTPUT_VALUE is invalid	Reserved = 0	Reserved = 0	ERR_PULSE	ERR_LD Error during loading via control interface	Reserved = 0	ERR_PWR missing supply voltage L+
Byte 1	Reserved = 0		STS_SW_ENABLE SW_ENABLE detected or feedback status SW_ENABLE	STS_READY Channel parameters assigned and ready	Reserved = 0	STS_LD_SLOT Load prompt detected and executed for slot (toggling)	Reserved = 0	
Byte 2	Reserved = 0			Reserved = 0	Reserved = 0	Reserved = 0	STS_DQA	STS_ENABLE
Byte 3	Reserved = 0				Reserved = 0			

Feedback parameters

Table 3- 7 Status feedback

Feedback parameters	Meaning	Value range
STS_READY	The channel is correctly configured, is operating and supplying valid data.	0: Not ready to run 1: Ready to run
STS_SW_ENABLE	Current status of the software enable	0: SW_ENABLE is not active 1: SW_ENABLE detected
STS_LD_SLOT	Acknowledgment bit for each action of the SLOT in the SLOT mode for individual updating (for a description of the acknowledgment bit, refer to the section Handling the SLOT parameter (control interface) (Page 73)).	Each switching of this bit represents a successful LD_SLOT action.
STS_ENABLE	The output sequence is active. (STS_ENABLE always depends on the status of the software enable STS_SW_ENABLE)	0: No output sequence running 1: Output sequence running
STS_DQA	State of the pulse output (DQA)	0: Pulse output is not active 1: Pulse output is active

Feedback parameters	Meaning	Value range
ERR_PWR	No supply voltage L+	0: No error 1: Error
ERR_LD	Error during loading of a parameter value in the operating mode for individual updating	0: No error 1: Error
ERR_OUT_VAL	The value in OUTPUT_VALUE is invalid	0: No error 1: Error
ERR_SLOT_VAL	The value in SLOT is invalid, where MODE_SLOT = 1 (permanent updating)	0: No error 1: Error

Wiring

4

4.1 Supply voltage

24 V DC supply voltage (X80)

The connecting plug for the supply voltage is plugged in when the CPU ships from the factory.

The following table shows the signal names and the descriptions of the pin assignment of the 24 V DC supply voltage.

Table 4- 1 Pin assignment 24 V DC supply voltage

View Connector	Signal name [1]		Description
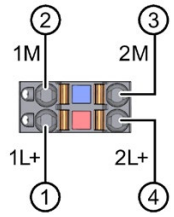	1	1L+	+ 24 V DC of the supply voltage
	2	1M	Ground of the supply voltage
	3	2M	Ground of the supply voltage for loop-through [2]
	4	2L+	+ 24 V DC of the supply voltage for loop-through [2]

[1] 1L+ and 2L+ as well as 1M and 2M are bridged internally

[2] Maximum 10 A permitted

If the CPU is supplied by a system power supply, it is not necessary to connect the 24 V supply.

4.2 PROFINET interfaces

PROFINET interface X1 with 2-port switch (X1 P1 R and X1 P2 R)

The assignment corresponds to the Ethernet standard for an RJ45 plug.

- When autonegotiation is deactivated, the RJ45 socket is allocated as a switch (MDI-X).
- When autonegotiation is activated, autocrossing is in effect and the RJ45 socket is allocated either as data terminal equipment (MDI) or a switch (MDI-X).

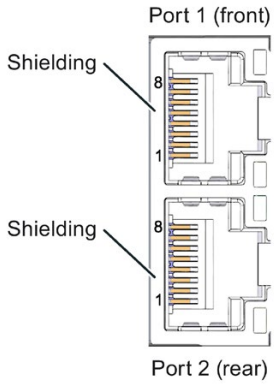

Figure 4-1 PROFINET ports

Note

You need a screwdriver (max. blade width 2.5 mm) to remove the PROFINET plug.

Remove display

You can find a description of how to remove and replace the display in the S7-1500, ET 200MP (http://support.automation.siemens.com/WW/view/en/59191792) system manual.

Reference

For more information on "Wiring the CPU" and "Accessories/spare parts", refer to the S7-1500, ET 200MP system manual (http://support.automation.siemens.com/WW/view/en/59191792).

Assignment of the MAC addresses

The CPU 1511C-1 PN has a PROFINET interface with two ports. The PROFINET interface itself has a MAC address, and each of the two PROFINET ports has its own MAC address. The CPU 1511C-1 PN therefore has three MAC addresses in total.

The MAC addresses of the PROFINET ports are needed for the LLDP protocol, for example for the neighborhood discovery function.

The number range of the MAC addresses is continuous. The first and last MAC address are lasered on the rating plate on the right side of each CPU 1511C-1 PN.

The table below shows how the MAC addresses are assigned.

Table 4- 2 Assignment of the MAC addresses

	Assignment	Labeling
MAC address 1	PROFINET interface X1 (visible in STEP 7 for accessible devices)	• Front, lasered • Right side, lasered (start of number range)
MAC address 2	Port X1 P1 R (required for LLDP, for example)	• Front and right side, not lasered
MAC address 3	Port X1 P2 R (required for LLDP, for example)	• Front, not lasered • Right side, lasered (end of number range)

4.3 Terminal and block diagrams

4.3.1 Block diagram of the CPU part

Block diagram

The following figure shows the block diagram of the CPU part.

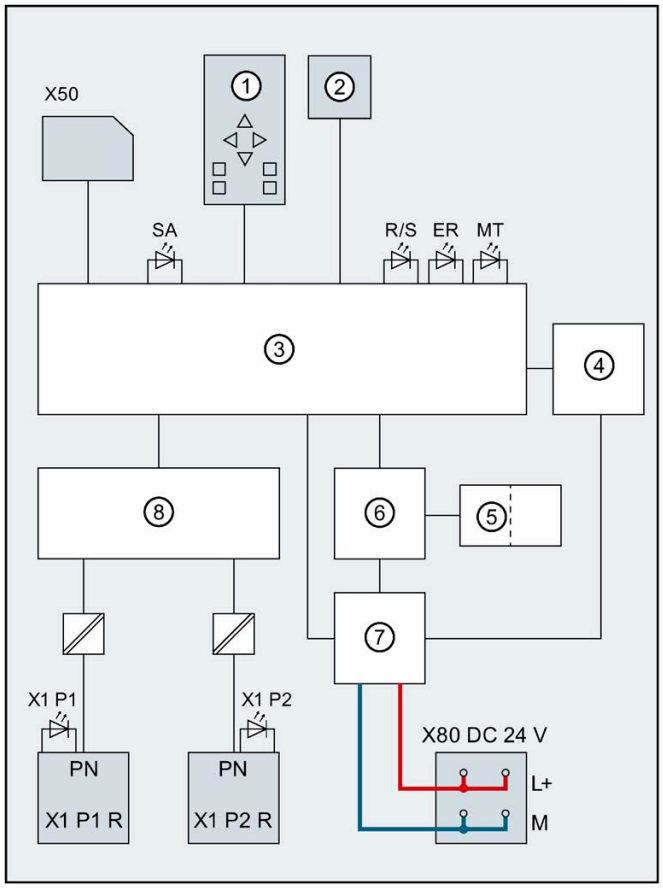

①	CPU with control and operating mode buttons	PN X1 P1 R	PROFINET interface X1 port 1
②	Display	PN X1 P2 R	PROFINET interface X1 Port 2
③	Electronics	L+	24 V DC supply voltage
④	Interface to on-board I/O	M	Ground
⑤	Interfaces to the backplane bus	SF	STOP ACTIVE LED (yellow)
⑥	Backplane bus interface	R/S	RUN/STOP LED (yellow/green)
⑦	Internal supply voltage	ER	ERROR LED (red)
⑧	2-port switch	MT	MAINT LED (yellow)
X50	SIMATIC memory card	X1 P1, X1 P2	Link TX/RX LED
X80 24 V DC	Infeed of supply voltage		

Figure 4-2 Block diagram of the CPU part

4.3.2 Terminal and block diagram of the analog on-board I/O

This section contains the block diagram of the analog on-board I/O (X10) and various wiring options.

For information on wiring the front connector, establishing the cable shield, etc., refer to the S7-1500, ET 200MP (http://support.automation.siemens.com/WW/view/en/59191792) system manual.

Note

You can use and combine the different wiring options for all channels. Note, however, that unneeded terminals of an analog input channel must not be connected.

Definition

U_n+/U_n-	Voltage input channel n (voltage only)
M_n+/M_n-	Measuring input channel n (only resistance-type transmitters or thermal resistors (RTD))
I_n+/I_n-	Current input channel n (current only)
$I_{c\,n}$+/$I_{c\,n}$-	Current output for RTD, channel n
QV_n	Voltage output channel
QI_n	Current output channel
M_{ANA}	Reference potential of the analog circuit
CHx	Channel or display of the channel status

Infeed element

The infeed element is inserted on the front connector and serves to shield the analog on-board I/O.

Note

The analog on-board I/O does not require power to be supplied by the infeed element. The infeed element is, however, necessary for shielding.

Wiring: Voltage measurement

The following figure shows the terminal assignment for voltage measurement at the channels available for this measurement type (channels 0 to 3).

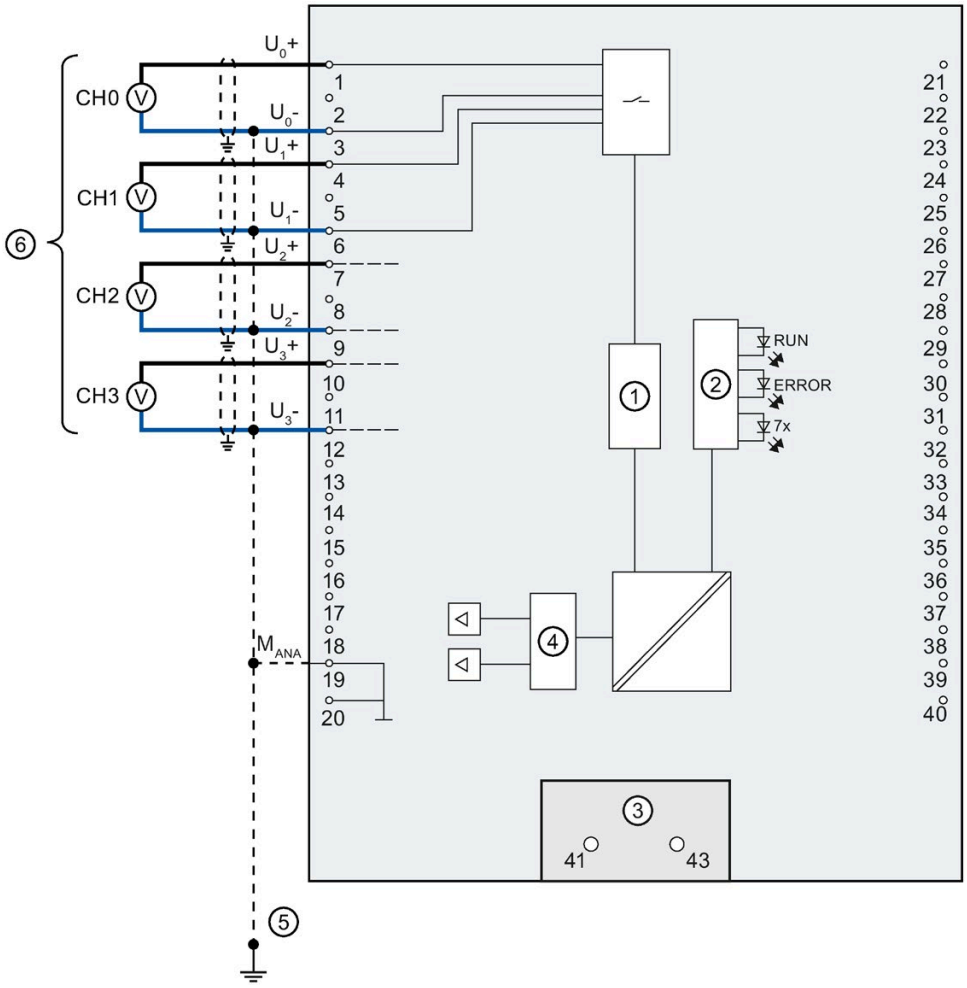

① Analog-to-digital converter (ADC)
② LED interface
③ Infeed element (for shielding only)
④ Digital-to-analog converter (DAC)
⑤ Equipotential bonding cable (optional)
⑥ Voltage measurement

Figure 4-3 Block diagram and terminal assignment for voltage measurement

Wiring: 4-wire measuring transducer for current measurement

The following figure shows the terminal assignment for current measurement with 4-wire measuring transducer at the channels available for this measurement type (channels 0 to 3).

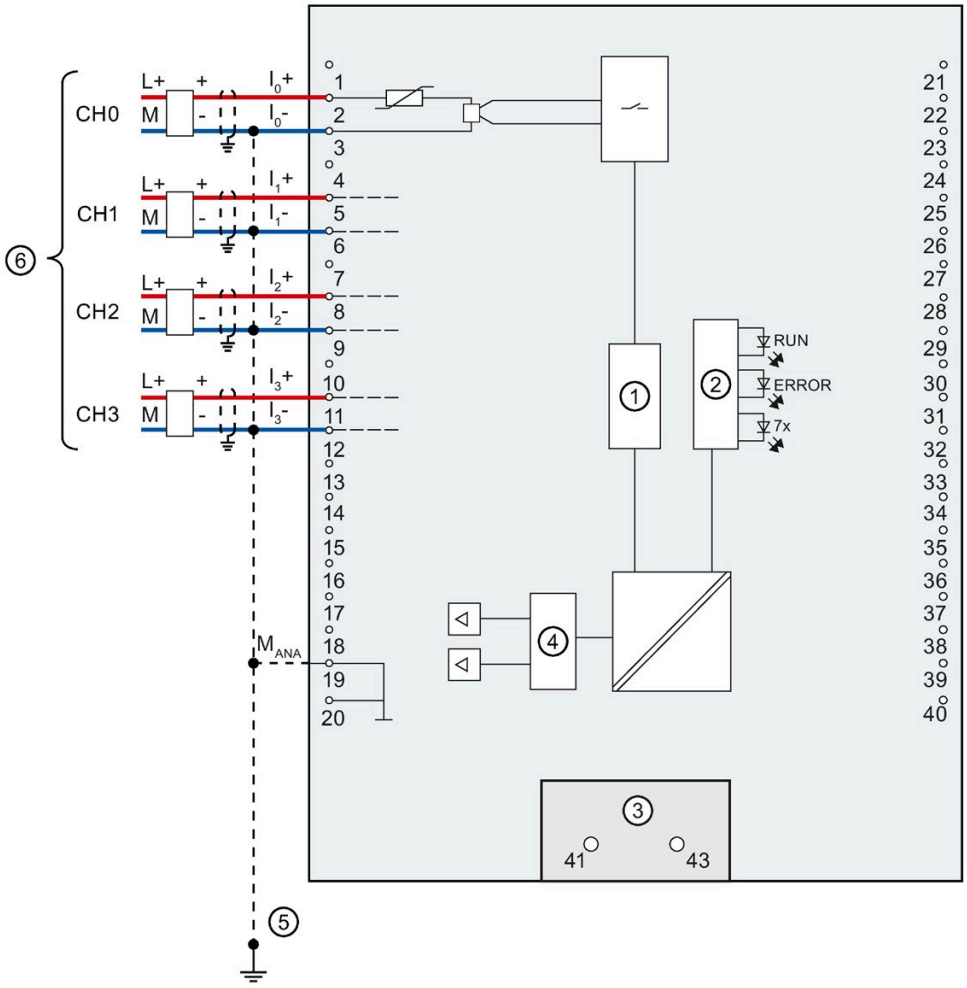

① Analog-to-digital converter (ADC)
② LED interface
③ Infeed element (for shielding only)
④ Digital-to-analog converter (DAC)
⑤ Equipotential bonding cable (optional)
⑥ Connector 4-wire measuring transducer

Figure 4-4 Block diagram and terminal assignment for current measurement with 4-wire measuring transducer

Wiring: 2-wire measuring transducer for current measurement

As an alternative to connecting a 4-wire measuring transducer, you can also connect 2-wire measuring transducers to channels 0 to 3. An external 24 V power supply is required to connect a 2-wire measuring transducer to the analog on-board I/O of the compact CPU. Feed this voltage short-circuit proof to the 2-wire transducer. Use a fuse to protect the power supply unit.

NOTICE
Defective measuring transducer Note that the analog input of the measuring transducer is not protected against destruction in the event of a defect (short circuit). Take the necessary precautions against such cases.

The figure below shows an example of the connection of a 2-wire measuring transducer to channel 0 (CH0) of the analog on-board I/O.

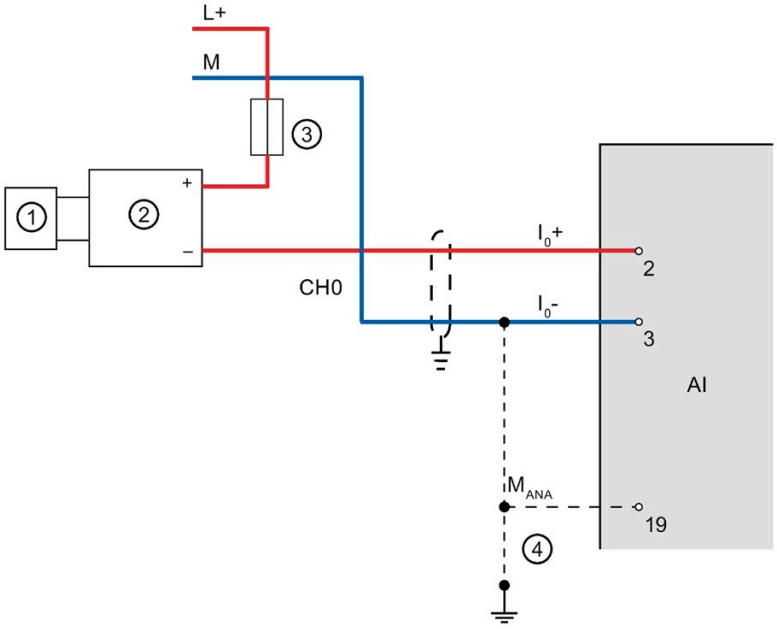

① Sensor (e.g. pressure gauge)
② 2-wire measuring transducer
③ Fuse
④ Equipotential bonding cable (optional)

Figure 4-5 2-wire measuring transducer at channel 0

Use the measurement type "Current (4-wire transducer)" and the measuring range 4 to 20 mA for the parameter assignment of the 2-wire measuring transducer in STEP 7 (TIA Portal).

Wiring: 4-wire connection of resistance-type sensors or thermal resistors (RTD)

The following figure shows the terminal assignment for 4-wire connection of resistance-type sensors or thermal resistors at the channel available for this (channel 4).

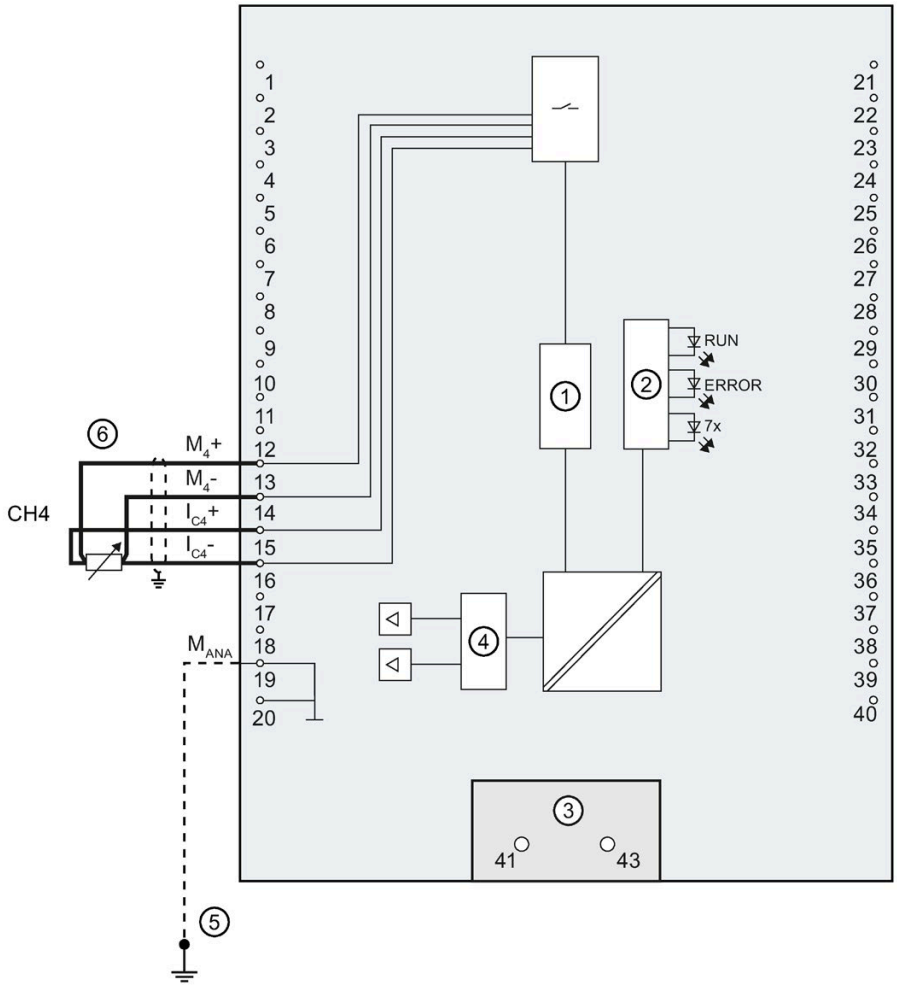

① Analog-to-digital converter (ADC)
② LED interface
③ Infeed element (for shielding only)
④ Digital-to-analog converter (DAC)
⑤ Equipotential bonding cable (optional)
⑥ 4-wire connection

Figure 4-6 Block diagram and terminal assignment for 4-wire connection

Wiring: 3-wire connection of resistance-type sensors or thermal resistors (RTD)

The following figure shows the terminal assignment for 3-wire connection of resistance-type sensors or thermal resistors at the channel available for this (channel 4).

Note

3-wire connection

Note that line resistances are not compensated with a 3-wire connection.

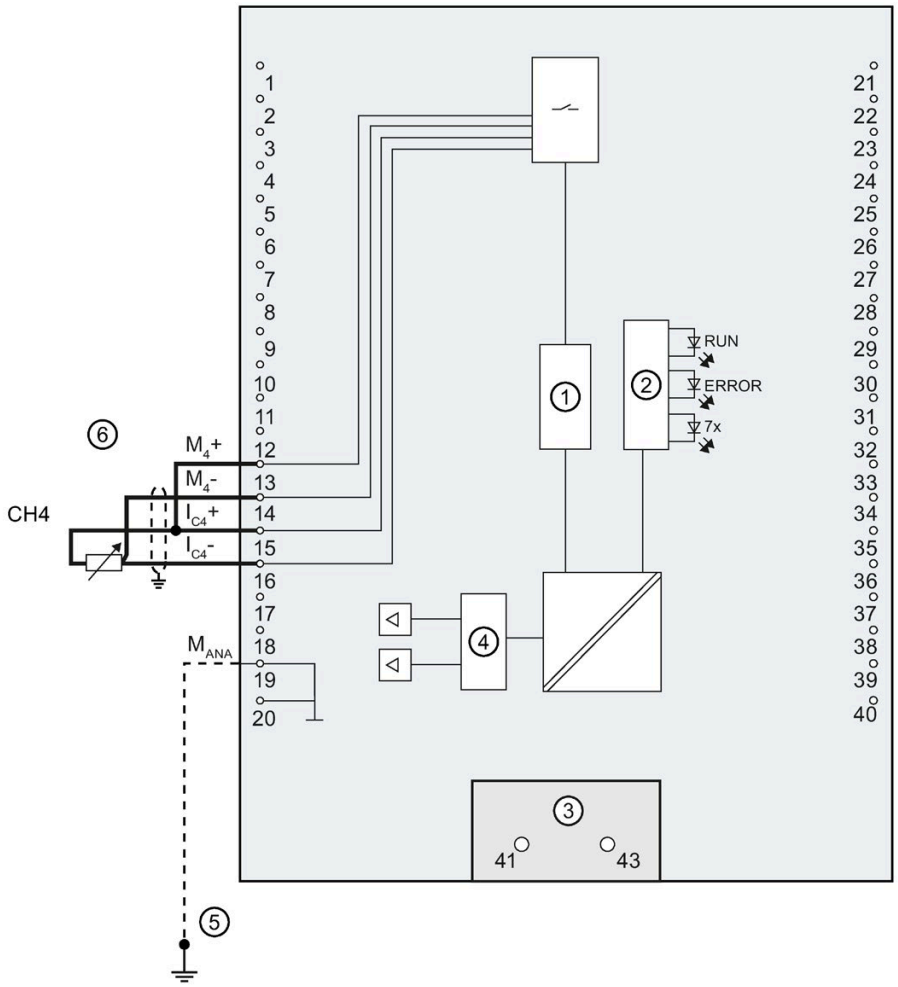

① Analog-to-digital converter (ADC)
② LED interface
③ Infeed element (for shielding only)
④ Digital-to-analog converter (DAC)
⑤ Equipotential bonding cable (optional)
⑥ 3-wire connection

Figure 4-7 Block diagram and terminal assignment for 3-wire connection

Wiring: 2-wire connection of resistance-type sensors or thermal resistors (RTD)

The following figure shows the terminal assignment for 2-wire connection of resistance-type sensors or thermal resistors at the channel available for this (channel 4).

Note

2-wire connection

Note that line resistances are not compensated with a 2-wire connection.

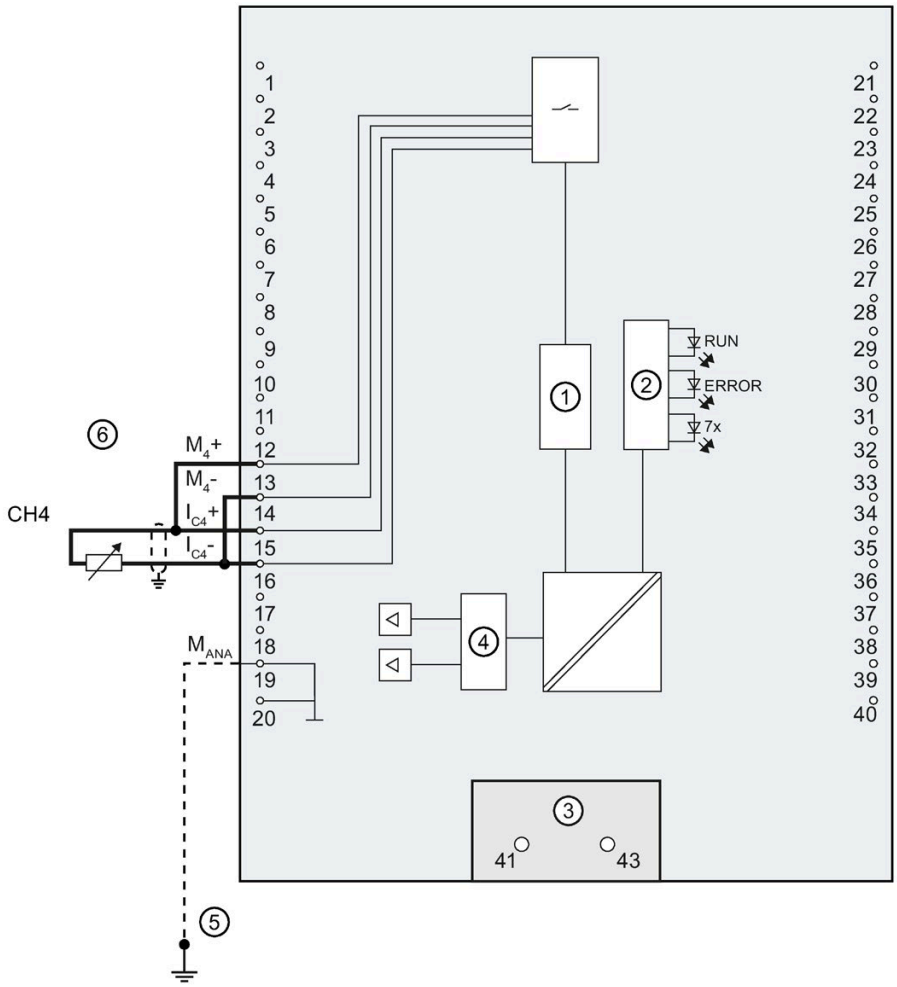

① Analog-to-digital converter (ADC)
② LED interface
③ Infeed element (for shielding only)
④ Digital-to-analog converter (DAC)
⑤ Equipotential bonding cable (optional)
⑥ 2-wire connection

Figure 4-8 Block diagram and terminal assignment for 2-wire connection

Wiring: Voltage output

The figure below shows the terminal assignment for the wiring of the voltage outputs with:

- 2-wire connection without compensation for line resistances.

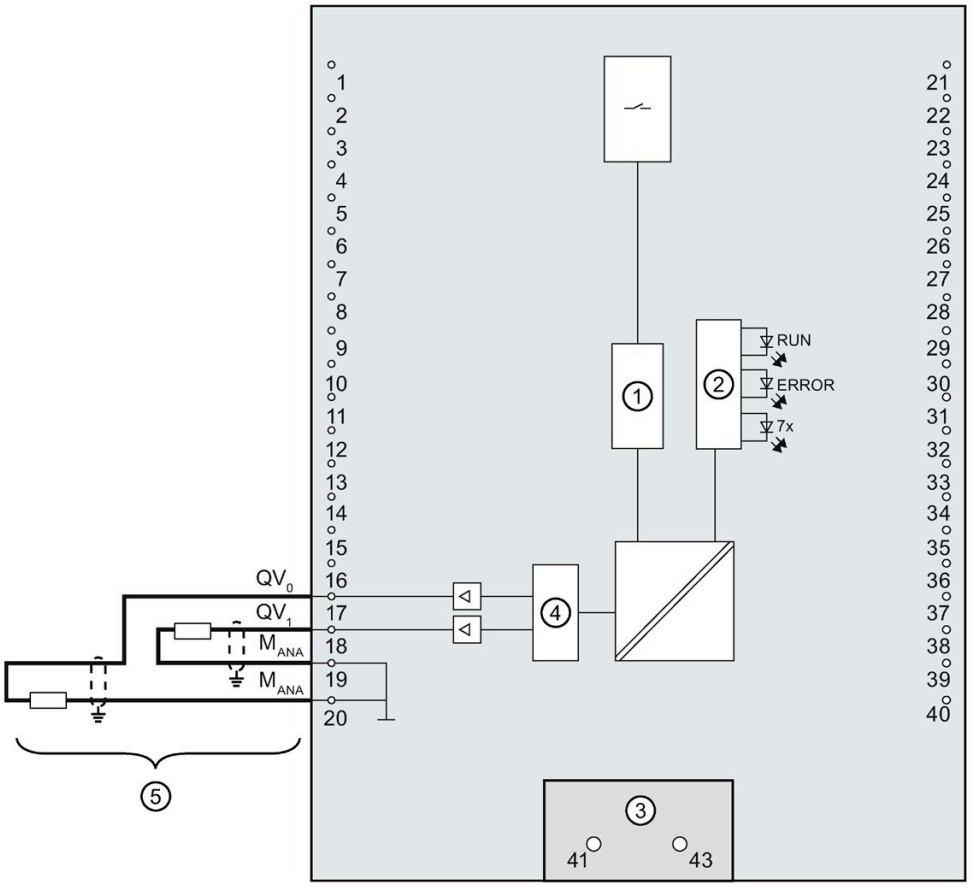

① Analog-to-digital converter (ADC)
② LED interface
③ Infeed element (for shielding only)
④ Digital-to-analog converter (DAC)
⑤ 2-wire connection CH0 and CH1

Figure 4-9 Block diagram and terminal assignment for voltage output

Note

M_{ANA} on terminals 19 and 20 is equivalent.

Wiring: Current output

The following figure shows an example of the terminal assignment for wiring current outputs.

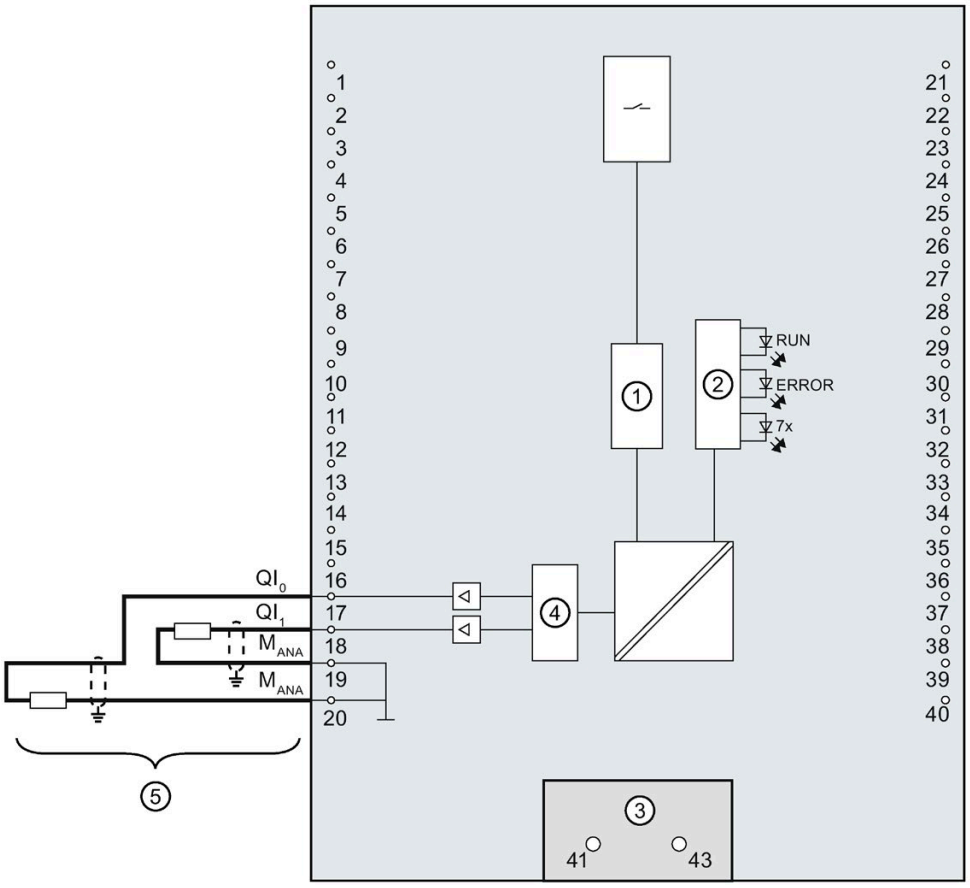

① Analog-to-digital converter (ADC)
② LED interface
③ Infeed element (for shielding only)
④ Digital-to-analog converter (DAC)
⑤ Current output CH0 and CH1

Figure 4-10 Block diagram and terminal assignment for current output

Note

M_{ANA} on terminals 19 and 20 is equivalent.

4.3.3 Wiring and block diagrams of the digital on-board I/O

This section contains the block diagram of the digital on-board I/O (X11) with standard inputs and outputs and the encoder supply, as well as the rules for the correct wiring of the ground connections.

For information on wiring the front connector, establishing the cable shield, etc., refer to the S7-1500, ET 200MP (http://support.automation.siemens.com/WW/view/en/59191792) system manual.

Infeed element

The infeed element is inserted on the front connector and serves to shield the digital on-board I/O.

Note

The digital on-board I/O is supplied via the front connector terminals and therefore does not require power to be supplied by the infeed element. The infeed element is, however, necessary for shielding.

Output driver

The digital onboard I/O uses the following output drivers:

- X11, DQ0 to DQ7: Push-pull stage and freewheeling diode
- X11, DQ8 to DQ15: High-side switch and freewheeling diode

Block diagram and terminal assignment

The figure below shows you how to connect the digital on-board I/O and the assignment of the channels to the addresses (input byte a and b, output byte c and d).

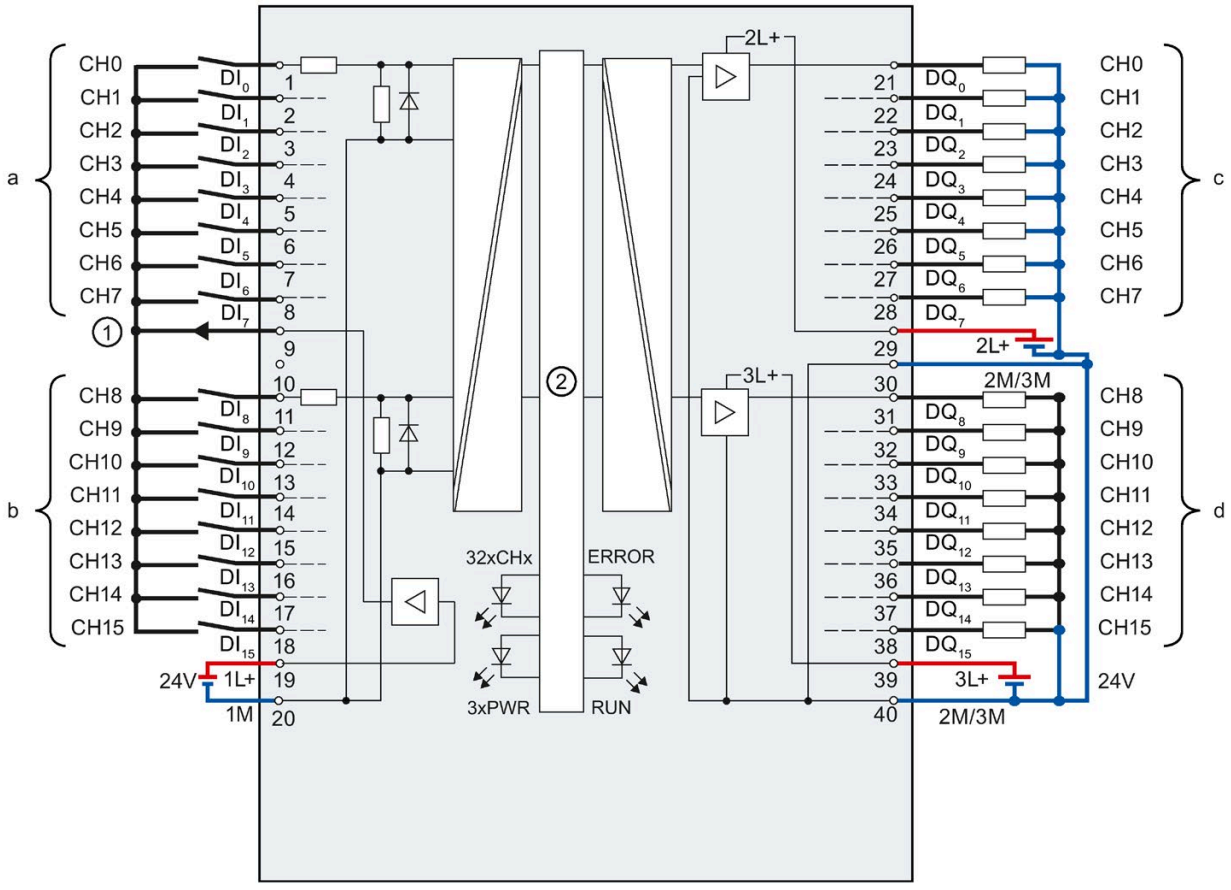

①	Encoder supply for the digital inputs
②	CPU interface
xL+	Connection for 24 V DC supply voltage
xM	Connection for ground
CHx	Channel or channel status LED (green)
RUN	Status display LED (green)
ERROR	Error display LED (red)
PWR	POWER supply voltage LED (green)

Figure 4-11 Block diagram and terminal assignment

NOTICE
Polarity reversal of the supply voltage
An internal protective circuit protects the digital on-board I/O against destruction if the polarity of the supply voltage is reversed. In the case of polarity reversal of the supply voltage, however, unexpected states can occur at the digital outputs.

Supply voltage

The inputs and outputs of the digital on-board I/O are divided into two load groups which are supplied with 24 V DC.

The digital inputs DI0 to DI15 form a load group and are supplied via the connections 1L+ (terminal 19) and 1M (terminal 20).

The digital outputs DQ0 to DQ7 are supplied via the connection 2L+ (terminal 29). The digital outputs DQ8 to DQ15 are supplied via the connection 3L+ (terminal 39). Please note that the digital outputs DQ0 to DQ15 only have a common ground. In each case, they are led through to the two terminals 30 and 40 (2M/3M) and bridged in the module. The digital outputs form a common load group.

Response of the digital outputs to a wire break at ground connection of the outputs

Due to the characteristics of the output driver used in the module, approx. 25 mA supply current flows out through the outputs via a parasitic diode in the event of a ground wire break. This behavior can lead to non-set outputs also carrying high levels and emitting up to 25 mA output current. Depending on the type of load, 25 mA can be sufficient to control the load with high level. To prevent unintended switching of the digital outputs in the event of a ground wire break, follow these steps:

Wire to ground twice

Connect ground to terminal 30 and to terminal 40.

1. Route the first ground connection from terminal 30 to the central ground connection of the plant.

2. Route the second ground connection from terminal 40 to the central ground connection of the plant.

If terminal 30 or 40 are interrupted by a ground wire break, the outputs will continue to be supplied via the second, intact ground connection.

WARNING

Wire break at ground connection

Never bridge from terminal 30 to terminal 40 in the front connector and **never** lead only one wire to the central ground connection.

Connect terminal 30 and terminal 40 to a common ground point.

As a supplement to the block diagram and terminal assignment, the following figure shows the correct wiring of the outputs in order to prevent switching of the outputs in the event of a ground wire break.

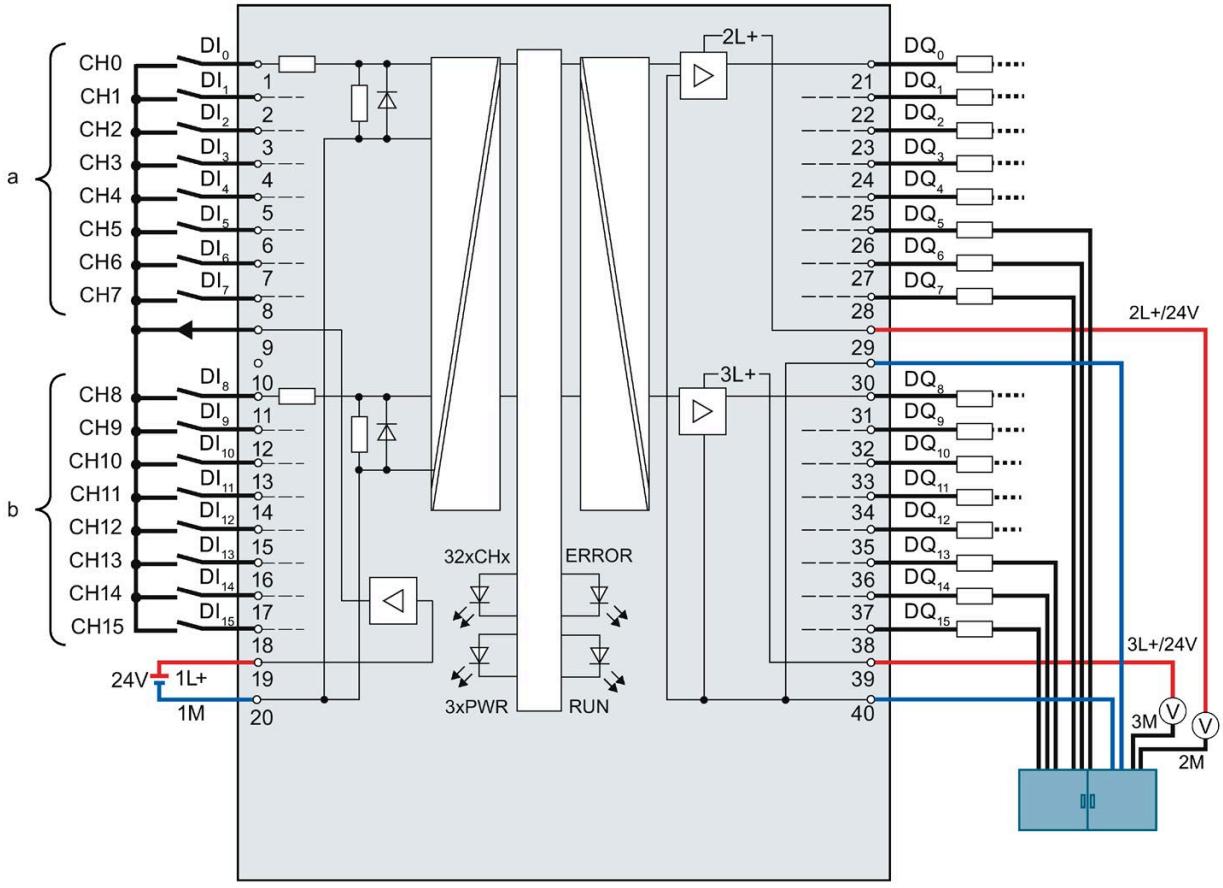

Figure 4-12 Correct wiring

The ground is supplied with a first cable from the central terminal block to terminal 30 of the module and additionally with a second cable also from the central terminal block to terminal 40 of the module.

At the digital outputs, each of the ground connections of the loads is connected with a separate cable for each load to the central terminal block.

The figure below shows the current flow with correct wiring.

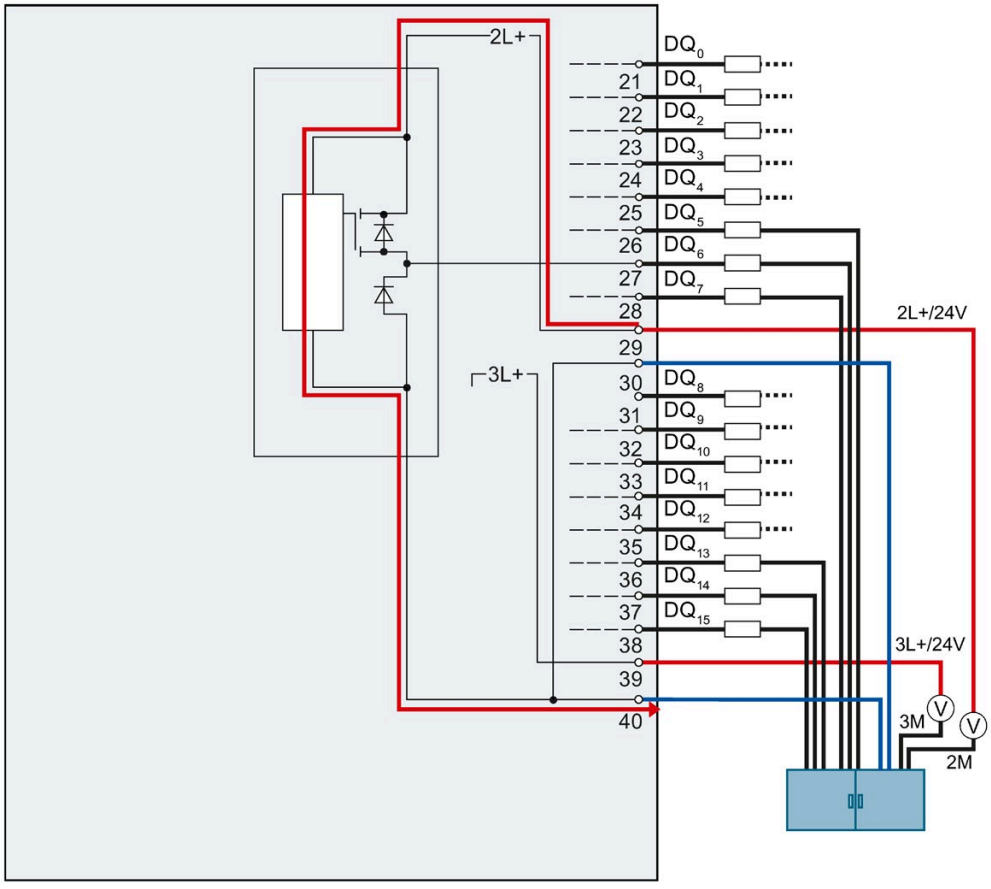

Figure 4-13 Current flow with correct wiring

With correct wiring, the supply current flows from the power supply 2L+ via terminal 29 to the module. In the module, the current flows via the output driver and exits the module via terminal 40.

The figure below shows the reaction to interruption of the first ground cable.

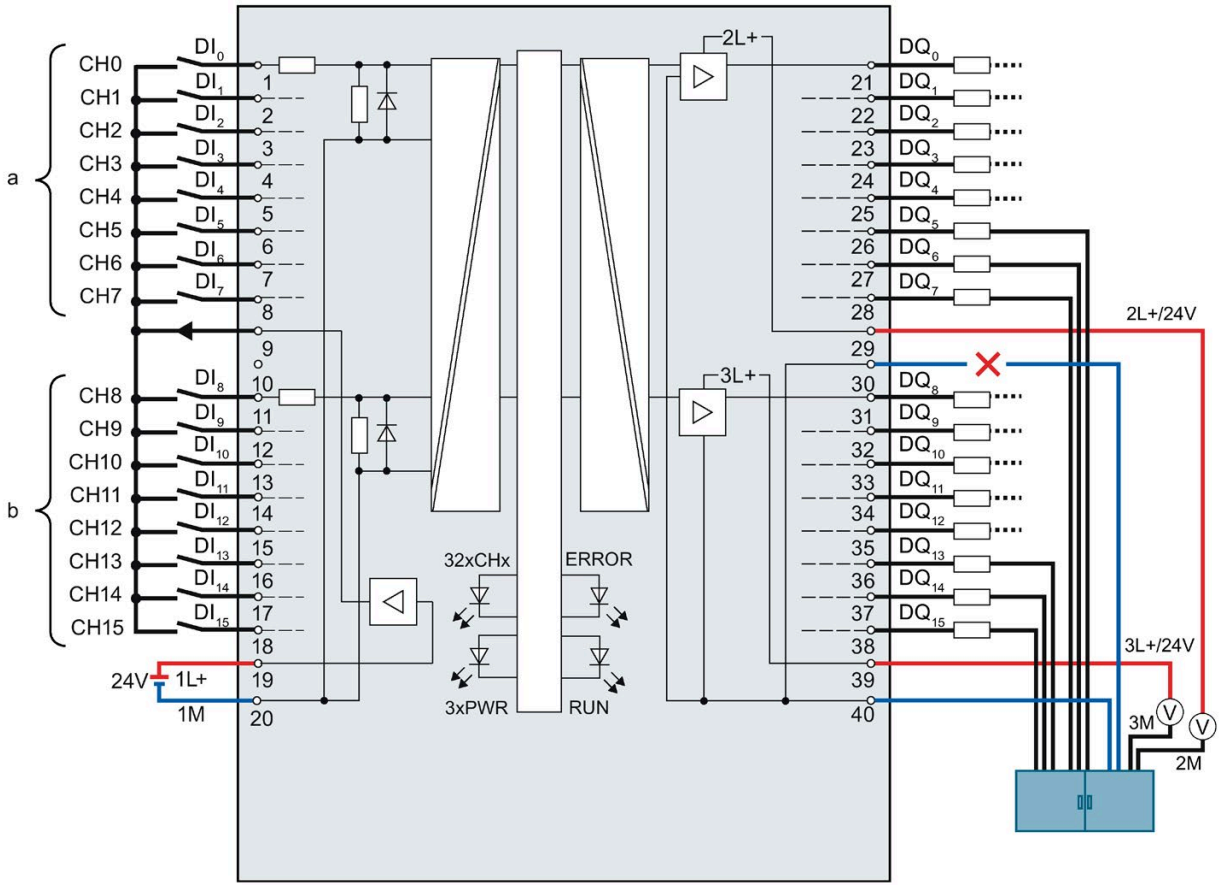

Figure 4-14 Interruption of the first ground cable

If a wire break occurs on the first ground cable from the central terminal block to terminal 30, the module can continue to operate without restrictions, as it is still connected to the ground via the second cable from the central terminal block to terminal 40.

The figure below shows the reaction to interruption of the second ground cable.

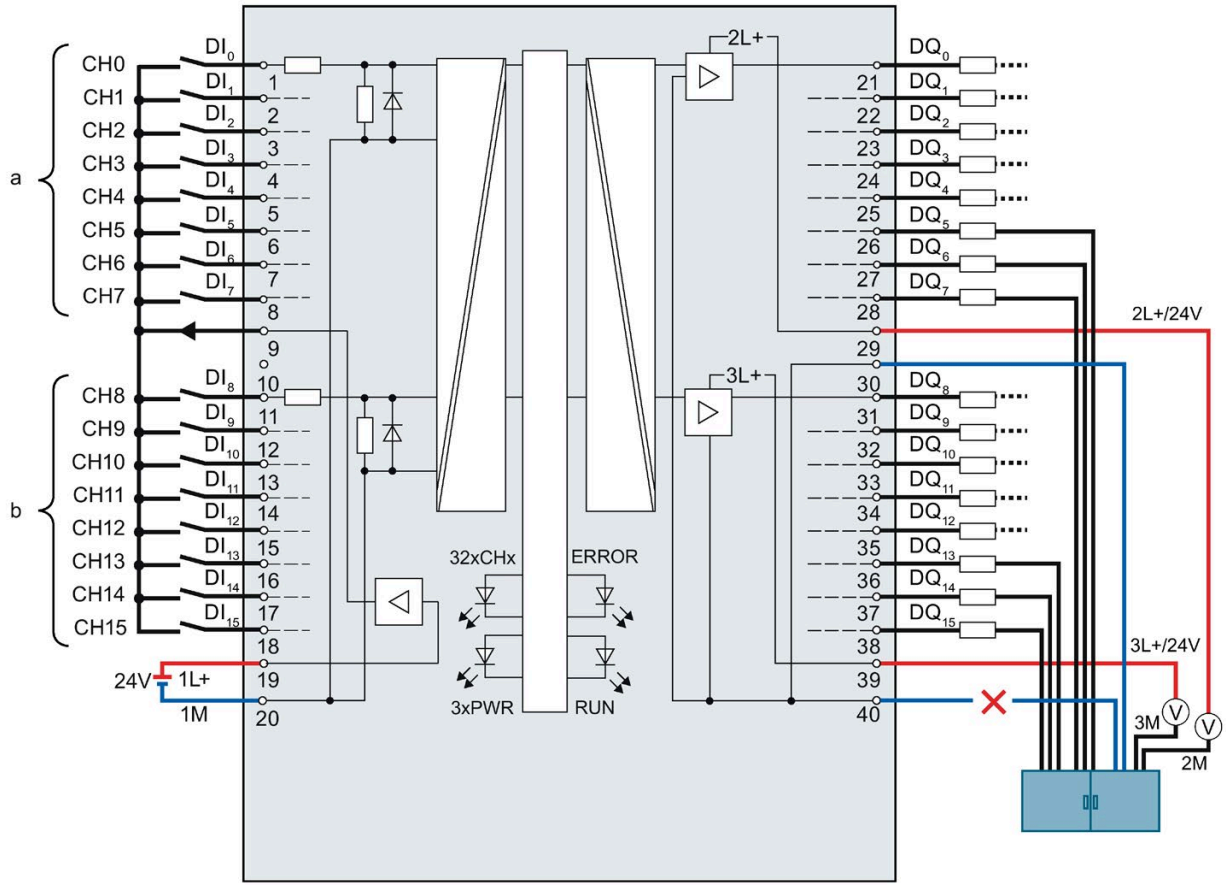

Figure 4-15 Interruption of the second ground cable

If a wire break occurs on the second ground cable from the central block terminal to terminal 30, the module can continue to operate without restrictions, as it is still connected to the ground via the first cable from the central terminal block to terminal 40.

The figure below shows the current flow upon interruption of both ground cables.

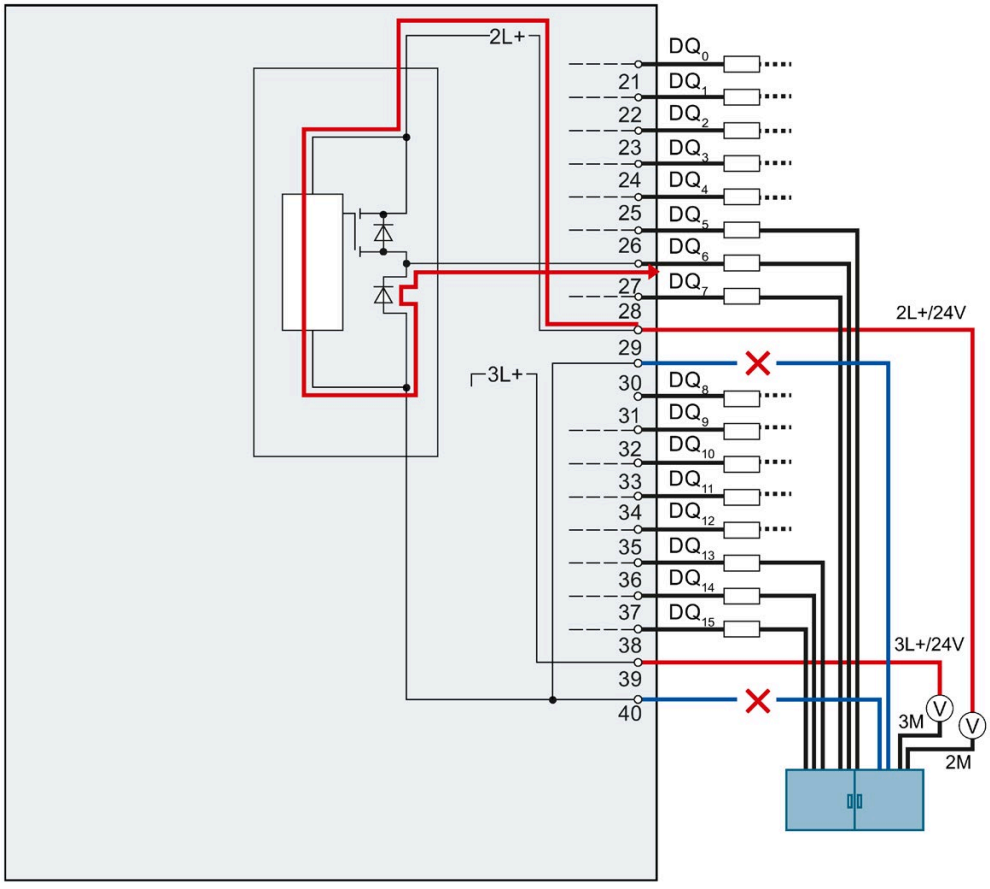

Figure 4-16 Current flow upon interruption of both ground cables

If a wire break occurs on the first and on the second ground cable from the central terminal block to the terminals 30 and 40 of the module, a malfunction occurs on the module. Both ground connections of the module are interrupted.

The supply current flows from the power supply 2L+ via terminal 29 to the module. In the module, the current flows via the output driver into the parasitic diode and exits the module via the output terminal, e.g. as shown in the figure via terminal 27. The supply current therefore flows via the connected load. The internal supply current is typically 25 mA.

WARNING

Interruption of both ground cables

If the ground terminals 30 and 40 are interrupted, the following incorrect response can occur:

The activated outputs, which are switched to high, start to switch back and forth between high and low. If the load connected at the output is sufficiently small, the output is continuously activated.

Faulty wiring

The following figure shows faulty wiring which has a bridge on the front connector.

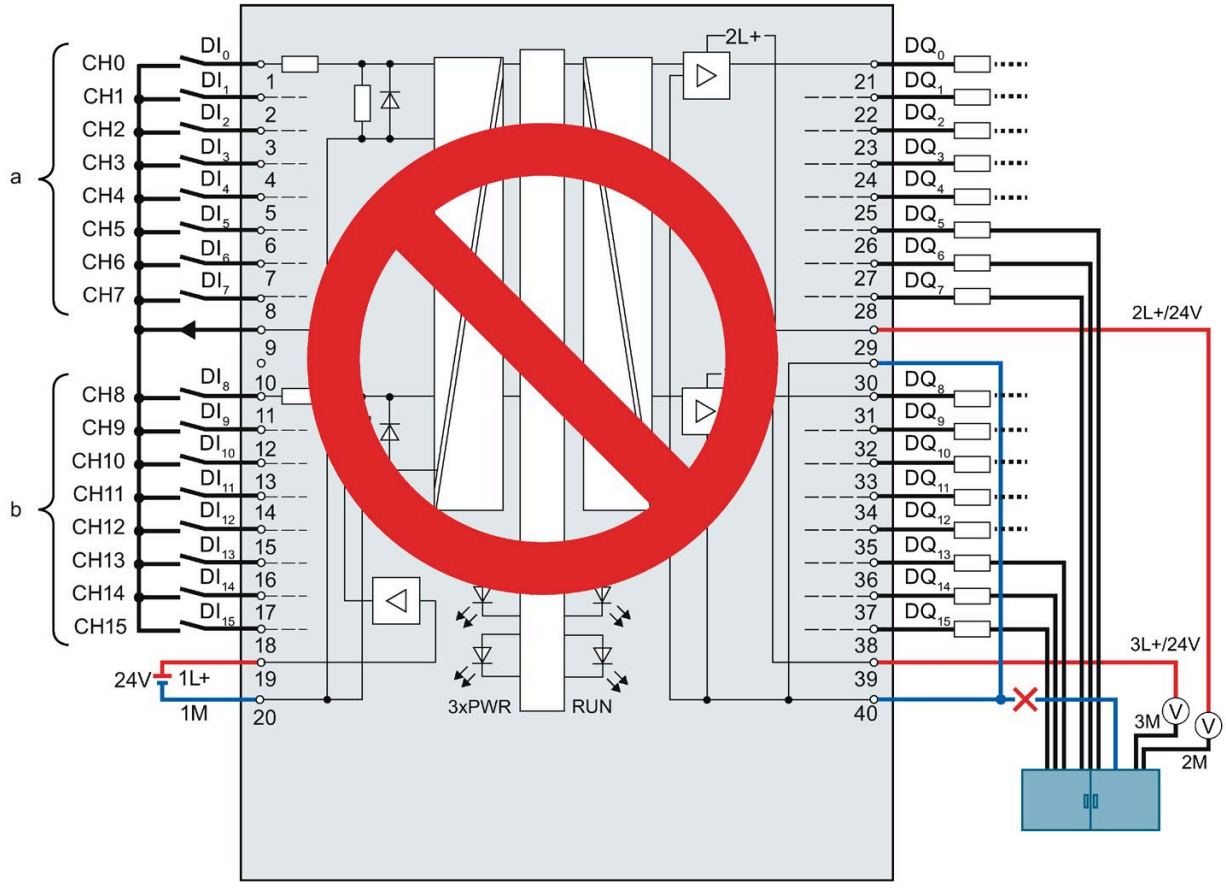

Figure 4-17 Faulty wiring: Bridge

Terminals 30 and 40 are connected in the front connector and only routed with one cable to the central terminal block. If this cable breaks, terminals 30 and 40 are no longer connected to the ground. The module's supply current flows out via the output terminal.

The figure below shows the current flow when the ground connections of the loads and the ground connection of terminal 30 are routed with a common cable to the central terminal block.

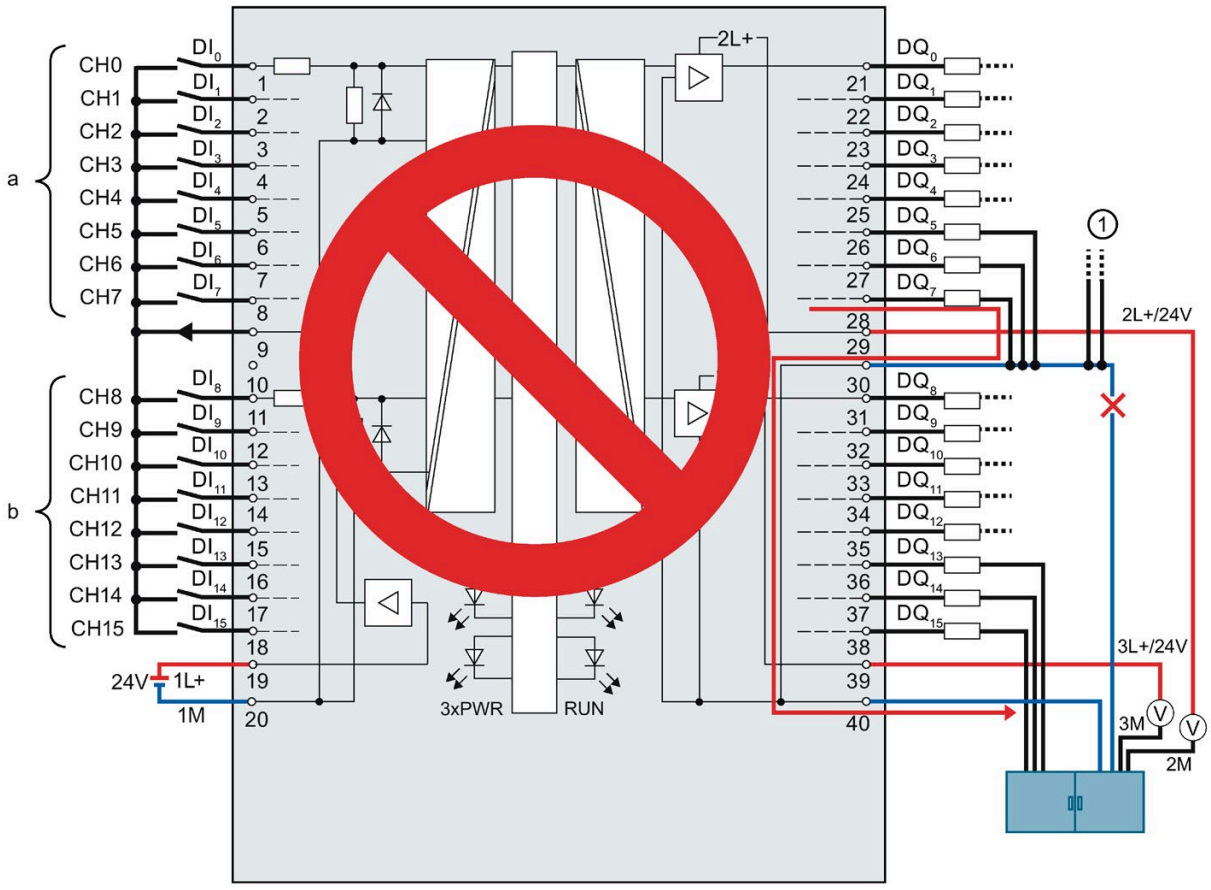

① Ground connections of other plant parts that can also carry large currents.

Figure 4-18 Faulty wiring: Common cable

If a break occurs in the common cable, the current of the outputs flows via terminal 30 to the module and via terminal 40 to the central terminal block. The current flows via the module.

WARNING

Current flow with faulty wiring

If a break occurs in the common cable, the current can be very high, depending on the plant, and lead to the destruction of the module.

The figure below shows the current flow with correct wiring when a potential difference exits between the grounding points.

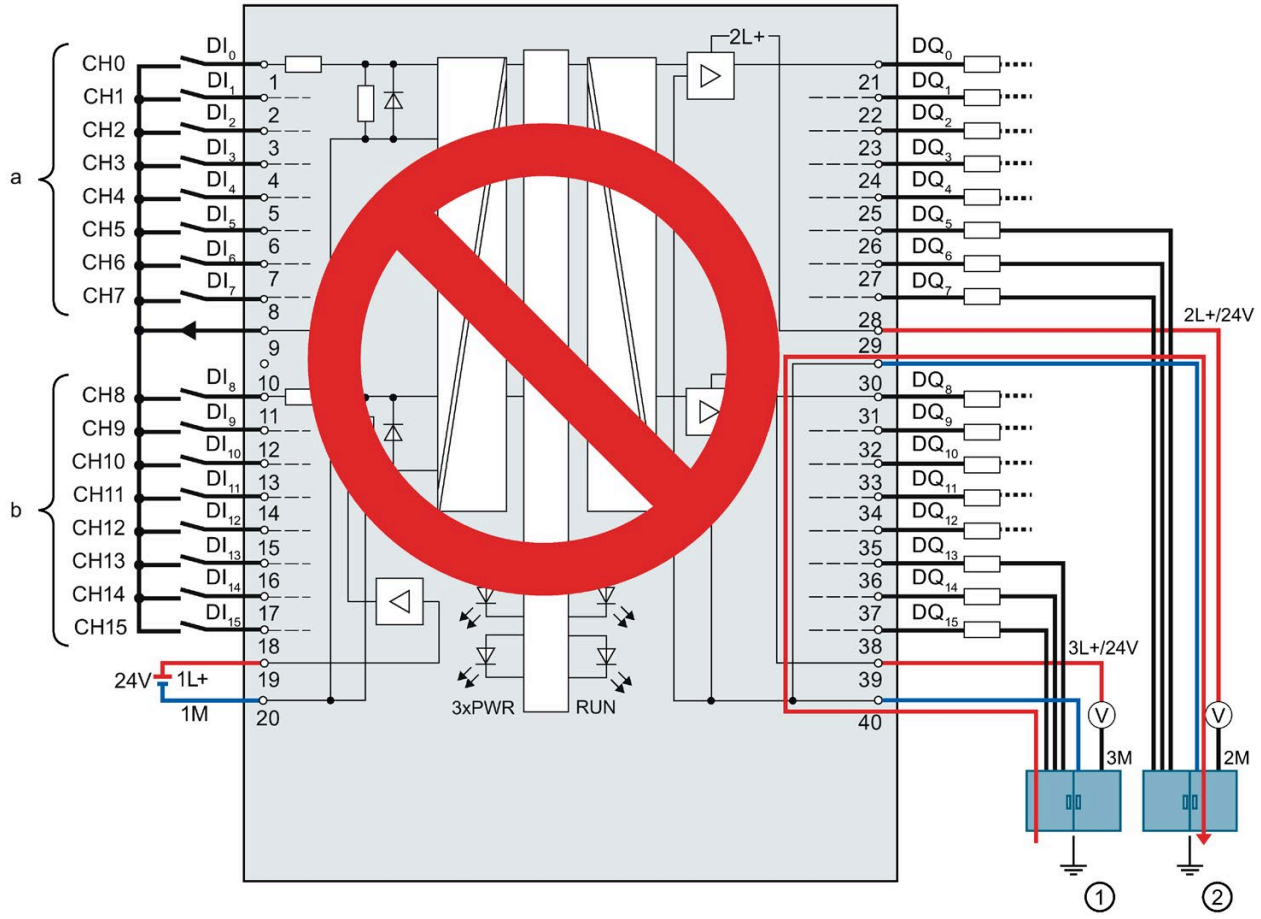

① Grounding point functional earth 1 (FE 1)

② Grounding point functional earth 2 (FE 2)

Figure 4-19 Potential difference

Equipotential bonding occurs via terminals 30 and 40. When a potential difference exists between the grounding points FE1 and FE2, the compensating current flows via terminals 30 and 40.

WARNING

Current flow with faulty wiring

In the event of a potential difference, the current can be very high, depending on the potential conditions, and lead to the destruction of the module.

Input filter for digital inputs

To suppress disruptions, you can configure an input delay for the digital inputs.

You can specify the following values for the input delay:

- None
- 0.05 ms
- 0.1 ms
- 0.4 ms
- 1.6 ms
- 3.2 ms (default setting)
- 12.8 ms
- 20 ms

Note

Shielding

If you use standard digital inputs with "None" set as the input delay, you must use shielded cables. Shielding and the infeed element are recommended for use of standard digital inputs starting from an input delay of 0.05 ms but are not absolutely necessary.

4.3.4 Addresses of the high-speed counters

You connect the encoder signals, the digital input and output signals and the encoder supplies to the 40-pin front connector of the digital on-board I/O. For information on wiring the front connector, creating the cable shield, etc., refer to the S7-1500, ET 200MP (http://support.automation.siemens.com/WW/view/en/59191792) system manual.

Encoder signals

The 24 V encoder signals are designated with letters A, B and N. You can connect the following encoder types:

- Incremental encoder with signal N:

  Signals A, B and N are connected using the correspondingly marked connections. Signals A and B are the two incremental signals, phase-shifted by 90°. N is the zero mark signal that supplies a pulse per revolution.

- Incremental encoder without signal N:

  Signals A and B are connected using the correspondingly marked connections. Signals A and B are the two incremental signals, phase-shifted by 90°.

- Pulse encoder without direction signal:

  The count signal is connected to the A connection.

- Pulse encoder with direction signal:

  The count signal is connected to the A connection. The direction signal is connected to the B connection.

- Pulse encoder with up/down count signal:

  The up count signal is connected to the A connection. The down count signal is connected to the B connection.

You can connect the following encoders or sensors to the A, B and N inputs:

- Sourcing output:
  The encoder or sensor switches the A, B and N inputs to 24 V DC.

  Note

  External load resistance

  Note that, depending on the characteristics of the signal source, effective load and height of the signal frequency, you may require an external load resistance to limit the fall time of the signal from high level to low level.

  The specifications/technical data of the signal source (e.g. sensor) are decisive for the configuration of such a load resistance.

- Push-pull:
  The encoder or sensor switches the A, B and N inputs alternately to 24 V DC and to ground M.

Digital inputs HSC DI0 and HSC DI1

The digital inputs are logically assigned to the high-speed counters (HSC). For information on the possible assignment of the on-board I/O inputs to the high-speed counters, refer to the table Interconnection overview of the inputs (Page 108). Up to two digital inputs are available for each high-speed counter (HSC DI0 and HSC DI1). You can use the digital inputs for the gate control (Gate), synchronization (Sync) and Capture functions. Alternatively, you can use one or more digital inputs as standard digital inputs without the functions mentioned and read the signal state of the respective digital input using the feedback interface.

Digital inputs that you do not use for high-speed counting are available for use as standard DIs.

Input addresses of the high-speed counters

You set the digital input addresses used by the high-speed counters (HSC) and the assignment of A/B/N, DI0, DI1 and DQ1 signals in STEP 7 (TIA Portal). You can enable and configure each HSC when you configure the compact CPU.

The compact CPU assigns the input addresses for the A/B/N signals automatically according to the configuration.

You specify the input addresses for DI0 and DI1 according to the table Interconnection overview of the inputs (Page 108). The interconnection produces a direct connection of the HSC to an input of the on-board I/O. The high-speed counter then uses this input as HSC DI0 or HSC DI1 ([DI] symbol). The [DI] symbols in the table identify the input addresses for HSC DI0 and HSC DI1 that are offered for selection in the hardware configuration.

Assignment of HSC addresses of inputs

You can find an overview of the options for interconnecting the inputs of the front connectors X11 and X12 in the section Interconnection overview of the inputs (Page 108).

Digital outputs HSC-DQ0 and HSC-DQ1

Two digital outputs are available for each high-speed counter. Digital output HSC-DQ0 is a logical output that cannot be interconnected with a digital output of the on-board I/O. Digital output HSC-DQ0 can only be used via the user program. HSC-DQ1 is a physical output that can be interconnected with a digital output of the on-board I/O.

The digital outputs are 24 V sourcing output switches relative to M and can be loaded with a rated load current of 0.1 A. The outputs used as standard outputs have a rated load current of 0.5 A. The digital outputs are protected against overload and short-circuit.

Note

It is possible to directly connect relays and contactors without external wiring. For information on the maximum possible operating frequencies and the inductance values of the inductive loads at the digital outputs, refer to the Technical specifications section.

The section Interconnection overview of the outputs (Page 109) provides an overview of which digital outputs you can interconnect to which high-speed counters. Digital outputs to which no high-speed counter is interconnected can be used as standard outputs. The maximum output delay of each digital output used as standard output is 500 µs.

Shielding

Note

When you use digital inputs/outputs with technology functions, i.e. interconnect high-speed counters with the inputs/outputs, you must use shielded cables and the infeed element for shielding.

Reference

For more information on configuring the inputs of the high-speed counters, refer to the S7-1500, ET 200MP, ET 200SP Counting, measurement and position detection (http://support.automation.siemens.com/WW/view/en/59709820) function manual and the STEP 7 online help.

4.3.5 Addresses of the pulse generators in the Pulse Width Modulation (PWM) and Frequency Output modes

Configuring the outputs as pulse generators

If you configure the memory of the outputs of the CPU as pulse generators (for PWM or PTO), the corresponding addresses of the outputs are removed from the memory of the outputs. You cannot use the addresses of the outputs for other purposes in your user program. When your user program writes a value to an output that you are using as a pulse generator, the CPU does not write this value to the physical output.

Assignment of the PWM addresses of the outputs

The section Interconnection overview of the outputs (Page 109) provides an overview of which digital outputs you can interconnect to which PWM channels.

Note

The digital inputs and outputs assigned to PWM and PTO cannot be forced.

You assign the digital inputs and outputs to the pulse duration modulation (PWM) and the pulse train output (PTO) during the device configuration. If you assign digital inputs and outputs to these functions, the values of the addresses of the assigned digital inputs and outputs cannot be changed by the function for forcing in the watch table. Instead, you can force the output bit TM_CTRL_DQ to 0 and switch the output on or off with the bit SET_DQA (relevant for the PWM and Frequency Output modes).

For more information on forcing inputs and outputs, refer to the S7-1500, ET 200MP system manual (http://support.automation.siemens.com/WW/view/en/59191792).

4.3.6 Addresses of pulse generators in the PTO mode

You connect the encoder signals, the digital input and output signals and the encoder supply to the 40-pin front connector of the digital on-board I/O. For information on wiring the front connectors, establishing the cable shields, etc., refer to the S7-1500, ET 200MP system manual. (http://support.automation.siemens.com/WW/view/en/59191792)

Encoder signals

In addition to supporting its outputs, each PTO channel also supports the three following optional inputs:

- Reference Switch (RS)
- Measuring Input (MI)
- Drive Ready (DR)

Input addresses of the pulse generators (PTO)

You make the settings of the digital input addresses used by the pulse generators (PTO) in the hardware configuration of STEP 7 (TIA Portal). When you configure the compact CPU, you can individually activate and configure the four PTO channels.

Assignment of PTO addresses of inputs

A direct connection from the PTO to an input of the on-board I/O is established through the interconnection. You can find an overview of the options for interconnecting the inputs (DI0 to DI15) to the available PTO channels (PTO1 to PTO4) in the section Interconnection overview of the inputs (Page 108).

Assignment of the PTO addresses of the outputs

The section Interconnection overview of the outputs (Page 109) provides an overview of which digital outputs you can interconnect to which PTO channels.

4.3.7 Interconnection overview of the inputs

Combined interconnection of the technology channels

The following table provides you with an overview of the possible interconnections of the inputs of front connector X11 to allow you to correctly distribute the available inputs over the possible technology channels HSC and PTO. This overview is a combination of interconnection options of technology channels for HSC and PTO.

Front connector	Terminal	Channel	PTO								High-speed counters (HSC)											
			PTO1		PTO2		PTO3		PTO4		HSC1		HSC2		HSC3		HSC4		HSC5		HSC6	
X11	1	DI0	[DR]		[DR]		[DR]		[DR]		A			[DI]		[DI]						
	2	DI1	[DR]	[MI]	[DR]		[DR]		[DR]		[B]	[DI]		[DI]		[DI]						
	3	DI2	[DR]	[RS]	[DR]		[DR]		[DR]		[N]	[DI]		[DI]		[DI]						
	4	DI3	[DR]		[DR]		[DR]		[DR]			[DI]	A			[DI]						
	5	DI4	[DR]		[DR]	[MI]	[DR]		[DR]			[DI]	[B]	[DI]		[DI]						
	6	DI5	[DR]		[DR]	[RS]	[DR]		[DR]			[DI]	[N]	[DI]		[DI]						
	7	DI6	[DR]		[DR]		[DR]	[MI]	[DR]			[DI]		[DI]	A							
	8	DI7	[DR]		[DR]		[DR]	[RS]	[DR]			[DI]		[DI]	[B]	[DI]						
	11	DI8	[DR]		[DR]		[DR]		[DR]								A			[DI]		[DI]
	12	DI9	[DR]		[DR]		[DR]		[DR]								[B]	[DI]		[DI]		[DI]
	13	DI10	[DR]		[DR]		[DR]		[DR]								[N]	[DI]		[DI]		[DI]
	14	DI11	[DR]		[DR]		[DR]		[DR]									[DI]	A			[DI]
	15	DI12	[DR]		[DR]		[DR]		[DR]									[DI]	[B]	[DI]		[DI]

	16	DI13	[DR]		[DR]		[DR]		[DR]									[DI]	[N]	[DI]		[DI]
	17	DI14	[DR]		[DR]		[DR]		[DR]	[MI]								[DI]		[DI]	A	
	18	DI15	[DR]		[DR]		[DR]		[DR]	[RS]								[DI]		[DI]	[B]	[DI]

[...] = Use is optional

[DR] = Drive ready; [MI] = Measuring input; [RS] = Reference switch

[DI] stands for [HSC DI0/HSC DI1] = DI: Is used for the HSC functions: Gate, Sync and Capture

The assignment to [B] or [N] takes precedence over the assignment to HSC DI0 or HSC DI1. This means that input addresses that are assigned to count signal [B] or [N] based on the selected signal type cannot be used for other signals such as HSC DI0 or HSC DI1.

4.3.8 Interconnection overview of the outputs

Combined interconnection of the technology channels

The following table provides you with an overview of the possible interconnections of the outputs of front connector X11 to allow you to correctly distribute the available outputs over the possible technology channels HSC, PWM and PTO. This overview is a combination of interconnection options of technology channels for HSC, PWM and PTO.

	Hardware output			Standard DQ	PWM	PTO			HSC
Front connector	**Terminal**	**Channel**	**Output module**	**Configurable as standard DQ for channel**	**Configurable as PWM output for channel**	**Configurable as PTO output A for channel 1)**	**Configurable as PTO output B for channel 2)**	**Configurable as "Drive enable output" for channel**	**Can be used as HSC-DQ1 for channel**
X11	1	DQ 0	High-speed		PWM 1	PTO1			
			Standard	DQ0	PWM 1			[PTO 2/3/4]	
	2	DQ 1	High-speed				PTO1)		[HSC1]
			Standard	DQ1				[PTO 1/2/3/4]	
	3	DQ 2	High-speed		PWM 2	PTO2			
			Standard	DQ2	PWM 2			[PTO 1/3/4]	
	4	DQ 3	High-speed				PTO2		[HSC2]
			Standard	DQ3				[PTO 1/2/3/4]	
	5	DQ 4	High-speed		PWM 3	PTO3			[HSC3]
			Standard	DQ4	PWM 3			[PTO 1/2/4]	
	6	DQ 5	High-speed				PTO3		[HSC4]
			Standard	DQ5				[PTO 1/2/3/4]	
	7	DQ	High-speed		PWM 4	PTO4			[HSC6]

		6	Standard	DQ6	PWM 4			[PTO 1/2/3]	
	8	DQ 7	High-speed				PTO4		[HSC5]
			Standard	DQ7				[PTO 1/2/3/4]	
	11	DQ 8	Standard	DQ8	PWM 1			[PTO 1/2/3/4]	
	12	DQ 9		DQ9			PTO1*	[PTO 1/2/3/4]	[HSC1
	13	DQ 10		DQ10	PWM 2			[PTO 1/2/3/4]	
	14	DQ 11		DQ11			PTO2*	[PTO 1/2/3/4]	[HSC2
	15	DQ 12		DQ12	PWM 3			[PTO 1/2/3/4]	[HSC3
	16	DQ 13		DQ13			PTO3*	[PTO 1/2/3/4]	[HSC4
	17	DQ 14		DQ14	PWM 4			[PTO 1/2/3/4]	[HSC6
	18	DQ 15		DQ15			PTO4*	[PTO 1/2/3/4]	[HSC5

* Only supports for PTO direction signal (signal type "pulse A and direction B")

1) "PTOx - Output A" stands for the signal types Pulse output A or Pulse

2) "PTOx - Output B" stands for the signal types Pulse output B or Direction

Technical characteristics of the outputs

The following table shows an overview of the technical characteristics of the individual outputs.

	Frequency range (period duration)	DQ0 to DQ7		DQ8 to DQ15
		High-speed output (0.1 A) activated	**High-Speed output (0.1 A) deactivated**	**Standard output**
		max. 100 kHz	max. 10 kHz	max. 100 Hz
		max. 0.1 A	max. 0.5 A	max. 0.5 A
		Sourcing/sinking output	Switching to P potential[1)]	Switching to P potential[1)]
Accuracy of the pulse duration	10 to <= 100 kHz (100 to > = 10 µs)	±100 ppm ±2 µs	---	---
	100 Hz to <10 kHz (10 ms to > 100 µs)		±100 ppm ±10 µs with load > 0.1 A ±100 ppm ±20 µs with load ≥ 2mA	
	10 to < 100 Hz (0.1 s to > 10 ms)			±100 ppm ±100 µs with load > 0.1 A ±100 ppm ±200 µs with load ≥ 2mA
	1 to <10 Hz (1 to > 0.1 s)	±150 ppm ±2 µs	±150 ppm ±10 µs with load > 0.1 A ±150 ppm ±20 µs with load ≥ 2mA	±150 ppm ±100 µs with load > 0.1 A ±150 ppm ±200 µs with load ≥ 2mA
	0.1 to < 1 Hz (10 to >1 s)	±600 ppm ±2 µs	±600 ppm ±10 µs with load > 0.1 A ±600 ppm ± 20 µs with load ≥ 2mA	±600 ppm ±100 µs with load > 0.1 A ±600 ppm ±200 µs with load ≥ 2mA
Accuracy of the frequency	---	± 100 ppm[2)]	± 100 ppm[2)]	± 100 ppm[2)3)]
Minimum pulse duration		2 µs	20 µs with load > 0.1 A 40 µs with load ≥ 2 mA 20 µs with load < 240 Ω[1)]	400 µs with load > 0.1 A 500 µs with load ≥ 2 mA 400 µs with load < 240 Ω[1)]

1) With sourcing outputs, it must be taken into consideration that falling edges can be delayed as compared to rising edges depending on the load. The on-load factor can therefore be falsified. Consider using a high-speed output if the load at the output is greater than 240 Ω.

2) The frequency has a basic accuracy of ±100 ppm with a resolution of 0.3638 mHz.

3) Standard outputs are affected by jitter during generation of frequencies. The set period duration is not adhered to in every period, but it is adhered to on average over several periods.

Parameters/address space

5

5.1 Address space of the analog on-board I/O

Address space of the analog input and analog output channels

The addresses are divided into five analog input channels and two analog output channels. STEP 7 (TIA Portal) assigns the addresses automatically. You can change the addresses in the hardware configuration of STEP 7 (TIA Portal), i.e. freely assign the start address. The addresses of the channels are based on the start address.

"IB x", for example, stands for the start address input byte x. "QB x" stands, for example, for the start address output byte x.

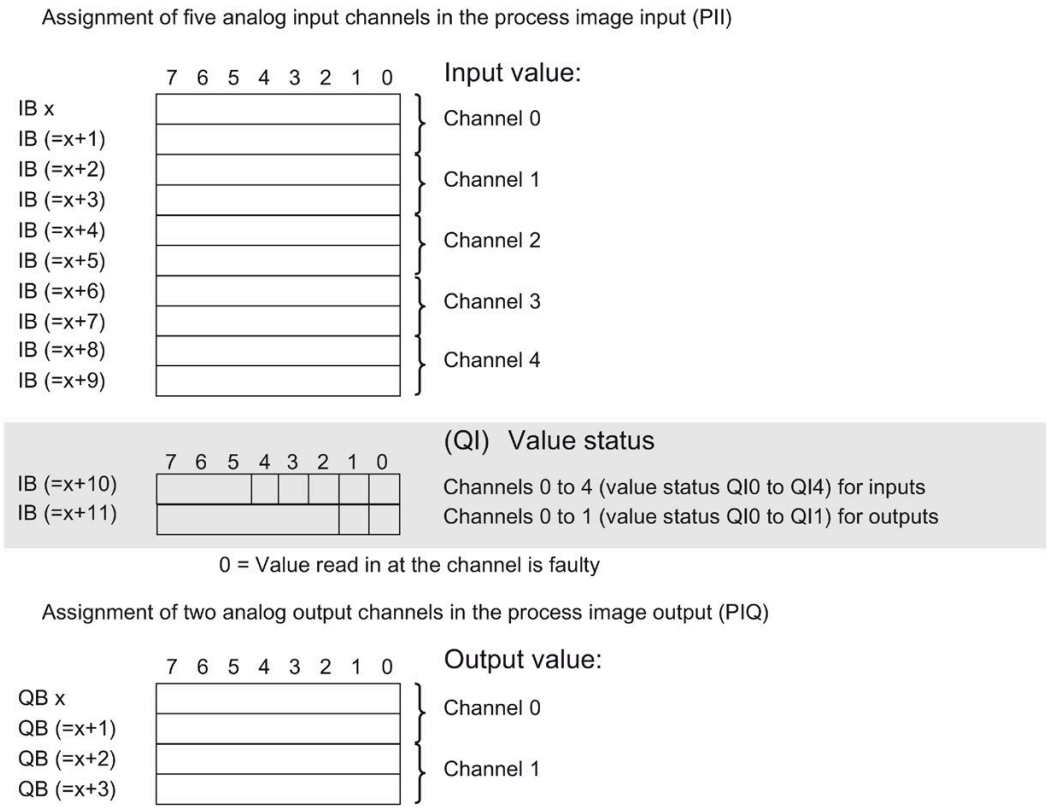

Figure 5-1 Address space 7-channel analog on-board I/O with value status

Value status (quality information, QI)

As of firmware version 2.0, the analog and digital on-board I/O support the value status as diagnostics option. You activate the use of the value status in the hardware configuration of STEP 7 (TIA Portal). Value status is deactivated by default.

When you activate the value status, the input area of the analog on-board I/O contains two additional bytes, which provide the QI bits to the five analog input channels and two analog output channels. You access the QI bits through the user program.

Value status of input channels

Value status = 1 ("Good") indicates that the value of the assigned input at the terminal is valid.

Value status = 0 ("Bad") indicates that the read value is not valid.

Possible cause for value status = 0:

- A channel has been deactivated
- A measured value was not updated after a parameter change
- A measured value is outside the low/high measuring range (overflow/underflow)
- Wire break has occurred (only for the "Voltage" measurement type in the measuring range "1 to 5 V" and for the "Current" measurement type in the measuring range "4 to 20 mA")

Value status of output channels

The value status = 1 ("Good") indicates that the process value specified by the user program is correctly output at the terminal.

The value status = 0 ("Bad") indicates that the process value output at the hardware output is incorrect.

Possible cause for value status = 0:

- A channel has been deactivated
- Outputs are inactive (for example, CPU in STOP)
- An output value is outside the high/low measuring range (overflow/underflow)
- Wire break has occurred (only for the "Current" output type)
- Short-circuit has occurred (only for the "Voltage" output type)

5.2 Address space of the digital on-board I/O

Address space of the digital input and digital output channels

The addresses are divided into 16 digital input channels and 16 digital output channels. STEP 7 (TIA Portal) assigns the addresses automatically. You can change the addresses in the hardware configuration of STEP 7 (TIA Portal), i.e. freely assign the start address. The addresses of the channels are based on the start address.

The letters "a" to "d" are lasered on the on-board I/O. "IB a", for example, stands for start address input byte a. "QB x", for example, stands for start address output byte x.

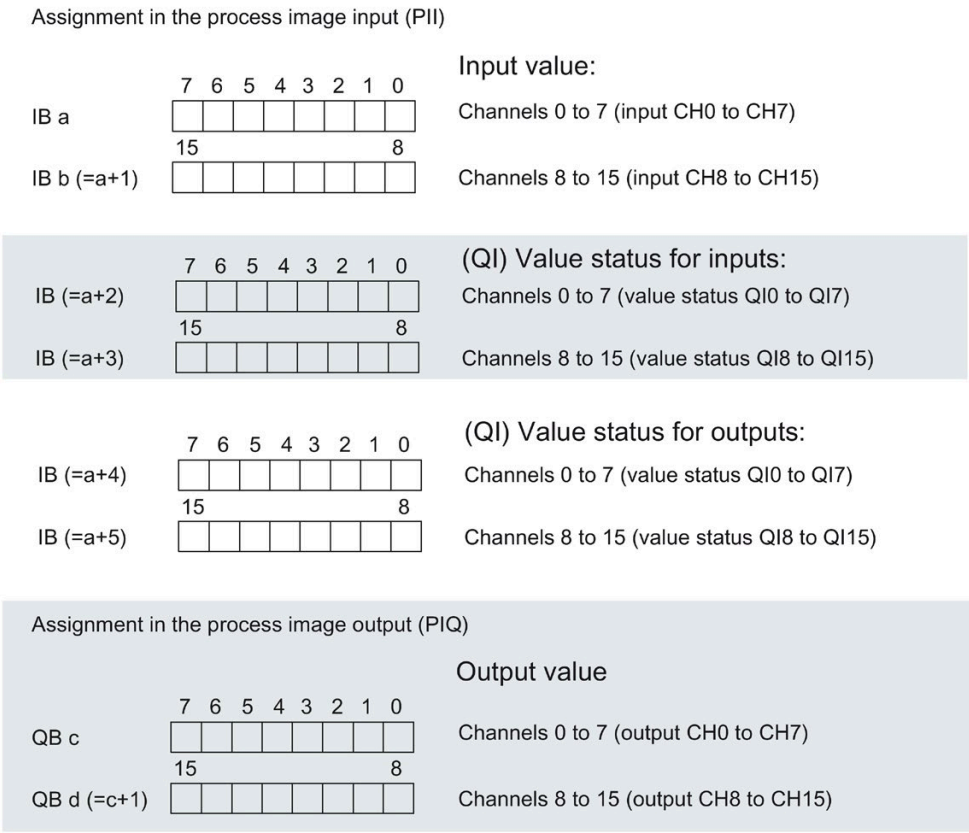

Figure 5-2 Address space 32-channel digital on-board I/O (16 digital inputs/16 digital outputs) with value status

Value status (quality information, QI)

As of firmware version 2.0, the analog and digital on-board I/O support the value status as diagnostics option. You activate the use of the value status in the hardware configuration of STEP 7 (TIA Portal). Value status is deactivated by default. You can activate/deactivate the value status of the digital on-board I/O for X11 and X12 independently of each other.

When you activate the value status, the input area of the digital on-board I/O (X11/X12) contains four additional bytes, which provide the QI bits to the 16 digital input channels and 16 digital output channels. You access the QI bits through the user program.

Value status of input channels

Value status = 1 ("Good") indicates that the value of the assigned input at the terminal is valid.

Value status = 0 ("Bad") indicates that no or too little supply voltage L+ is applied at the terminal and that the read value is therefore not valid.

Value status of output channels

The value status = 1 ("Good") indicates that the process value specified by the user program is correctly output at the terminal.

The value status = 0 ("Bad") indicates that the process value output at the hardware output is incorrect or the channel is used for technology functions.

Possible cause for value status = 0:

- The supply voltage L+ is missing at the terminals or is not sufficient
- Outputs are inactive (for example, CPU in STOP)
- Technology functions (HSC, PWM or PTO) use the channel

Note

Behavior of the value status at the output channels for technology functions

The output channels return the value status 0 ("Bad") when a technology channel (HSC, PWM or PTO) is used. It does not matter in this context whether the output value is incorrect or not.

5.3 Address space of the high-speed counters

Address space of the high-speed counters

Table 5- 1 Size of the input and output addresses of the high-speed counters

	Inputs	Outputs
Size per high-speed counter (6x)	16 bytes	12 bytes

You can find a description of the control interface in the section Assignment of the control interface of the high-speed counters (Page 49). You can find a description of the feedback interface in the section Assignment of the feedback interface of the high-speed counters (Page 51).

Table 5- 2 Size of the input and output addresses in operating mode "Position detection for Motion Control"

	Inputs	Outputs
Size per high-speed counter (6x)	16 bytes	4 bytes

5.4 Address space of the pulse generators

Address space of the pulse generators in the PWM, frequency output and PTO modes

Operating mode	Feedback interface (inputs)	Control interface (outputs)
PWM (4x)	4 bytes	12 bytes
Frequency output	4 bytes	12 bytes
PTO	18 bytes	10 bytes
Deactivated	4 bytes *	12 bytes *

* In "Deactivated" mode, the control interface is not evaluated and the feedback interface is set to 0 values

5.5 Measurement types and measuring ranges of the analog on-board I/O

Introduction

The analog on-board I/O is set to voltage measurement type and measuring range ±10 V by default for the inputs on channels 0 to 3. By default, channel 4 is set to resistance measuring type and measuring range 600 Ω. If you want to use another measurement type or measuring range, change the parameter settings of the analog on-board I/O with STEP 7 (TIA Portal).

Disable unused inputs to prevent disturbances that cause incorrect behavior (e.g. triggering of a hardware interrupt).

Measurement types and measuring ranges

The following table shows the measurement types, the measuring range and the possible channels.

Table 5- 3 Measurement types and measuring range

Measurement type	Measuring range	Channel
Voltage	0 to 10 V 1 to 5 V ±5 V ±10 V	0 to 3
Current 4WMT (4-wire measuring transducer)	0 to 20 mA 4 to 20 mA ±20 mA	0 to 3
Resistance	150 Ω 300 Ω 600 Ω	4
Thermal resistor RTD	Pt 100 Standard/Climate Ni 100 Standard/Climate	4
Deactivated	-	-

The tables of the input ranges, overflow, underrange, etc. can be found in the appendix .

5.6 Output type and output ranges of the analog on-board I/O

Introduction

The analog on-board I/O is set to voltage output type and output range ±10 V as default for the outputs. If you want to use another output range or output type, you need to change the parameter settings of the analog on-board I/O with STEP 7 (TIA Portal).

Output types and output ranges

The following table shows the output type and the corresponding output ranges.

Table 5- 4 Output type and output ranges

Output type	Output range
Voltage	1 to 5 V 0 to 10 V ±10 V
Current	0 to 20 mA 4 to 20 mA ±20 mA
Deactivated	-

5.7 Parameters of the analog on-board I/O

Parameters of the analog on-board I/O

You specify the properties of the analog on-board I/O during parameter assignment with STEP 7 (TIA Portal). The tables below list the parameters that can be set for inputs and outputs, respectively.

When parameters are assigned in the user program, they are transferred to the analog on-board I/O via data records with the WRREC instruction, see section Parameter assignment and structure of the parameter data records of the analog on-board I/O (Page 161).

Configurable parameters and default settings for inputs

Table 5- 5 Configurable "Diagnostics" parameters

Parameters [1]	Value range	Default	Reconfiguration in RUN
Diagnostics			
• Overflow	Yes/No	No	Yes
• Underflow	Yes/No	No	Yes
• Wire break [2]	Yes/No	No	Yes
• Current limit for wire break diagnostics	1.185 mA or 3.6 mA	1.185 mA	Yes

[1] All parameters can be set for on a channel-specific basis

[2] Only for the "Voltage" measurement type in the measuring range 1 to 5 V and for the "Current" measurement type in the measuring range 4 to 20 mA

Table 5- 6 Configurable "Measuring" parameters

Parameters [1]	Value range	Default	Reconfiguration in RUN
Measuring			
• Measurement type	See section Measurement types and measuring ranges of the analog on-board I/O (Page 116)	Voltage (channels 0 to 3) Resistance (channel 4)	Yes
• Measuring range		±10 V (channels 0 to 3) 600 Ω (channel 4)	Yes
• Temperature coefficient	Pt: 0.003851 Pt: 0.003916 Pt: 0.003902 Pt: 0.003920 Ni: 0.006180 Ni: 0.006720	0.003851	Yes
• Temperature unit	• Kelvin (K) [2] • Fahrenheit (°F) • Celsius (°C)	°C	Yes
• Interference frequency suppression	400 Hz 60 Hz 50 Hz 10 Hz	50 Hz	Yes [3]
• Smoothing	None/weak/medium/strong	None	Yes

[1] All parameters can be set for on a channel-specific basis

[2] Kelvin (K) is only possible for the "Standard range" measuring range and not for the "Climatic range" measuring range

[3] The interference frequency suppression must have the same value for all active input channels. This value can only be changed by reassigning parameters in RUN with single channel parameter assignment (data records 0 to 4) if all other input channels are disabled.

Table 5- 7 Configurable "Hardware interrupt" parameters

Parameters [1]	Value range	Default	Reconfiguration in RUN
Hardware interrupts			
• Hardware interrupt low limit 1	Yes/No	No	Yes
• Hardware interrupt high limit 1	Yes/No	No	Yes
• Hardware interrupt low limit 2	Yes/No	No	Yes
• Hardware interrupt high limit 2	Yes/No	No	Yes

[1] All parameters can be set for on a channel-specific basis

You can find an overview of the limits for the hardware interrupts in the section Structure of a data record for input channels of the analog on-board I/O (Page 161).

Configurable parameters and default settings for outputs

Table 5- 8 Configurable "Diagnostics" parameters

Parameters [1]	Value range	Default	Reconfiguration in RUN
Diagnostics			
• Wire break [2]	Yes/No	No	Yes
• Short-circuit to ground [3]	Yes/No	No	Yes
• Overflow	Yes/No	No	Yes
• Underflow	Yes/No	No	Yes

[1] All parameters can be set for on a channel-specific basis

[2] Only for the "Current" output type

[3] Only for the "Voltage" output type

Table 5- 9 Configurable output parameters

Parameters [1]	Value range	Default	Reconfiguration in RUN
Output parameters			
• Output type	See section Output type and output ranges of the analog on-board I/O (Page 117)	Voltage	Yes
• Output range		±10 V	Yes
• Reaction to CPU STOP	• Turn off • Keep last value • Output substitute value	Turn off	Yes
• Substitute value	Must be within the permitted voltage/current output range. See "Valid substitute value for the output range" table in the section Structure of a data record for output channels of the analog on-board I/O (Page 166)	0	Yes

[1] All parameters can be set for on a channel-specific basis

Short-circuit detection

The diagnostics for short circuit to ground can be configured for the voltage output type. Short-circuit detection is not possible for low output values. The output voltages must therefore be under -0.1 V or over +0.1 V.

Wire break detection

The diagnostics for wire break can be configured for the current output type. Wire break detection is not possible for low output values; the output currents must therefore be below -0.2 mA or above +0.2 mA.

5.8 Parameters of the digital on-board I/O

Parameters of the digital on-board I/O in standard mode

You specify the properties of the digital on-board I/O during parameter assignment with STEP 7 (TIA Portal). The tables below list the parameters that can be set for inputs and outputs, respectively.

When parameters are assigned in the user program, they are transferred to the digital on-board I/O via data records with the WRREC instruction, see section Parameter assignment and structure of the parameter data records of the digital on-board I/O (Page 169).

The use of a digital input by a technology channel

When a digital input is in use by a technology channel (HSC, PTO or PWM) the corresponding digital input channel remains fully usable without any restriction.

Use of a digital output by a technology channel

When a digital output is in use by a technology channel (HSC, PTO or PWM), the following restrictions apply to the use of the corresponding digital output channel:

- Output values for the digital output channel are not effective. The output values are specified by the technology channel.
- The CPU STOP behavior configured for the digital output channel is not effective. The reaction of the output to CPU Stop is specified by the technology channel.
- With activated value status (Quality Information) for the DI16/DQ16 submodule, the QI bit for the digital output channel shows the value 0 (= Status "Bad").
- The current state of the digital output is not returned to the process image output. In the PTO operating mode, you can only observe the switching operations of the assigned digital outputs directly at the output. In the PWM operating mode and with high-speed counters (HSC), you can observe the current state additionally via the feedback interface. Note, however, that high frequencies may no longer be observed under certain circumstances due to an excessively low sampling rate.

Configurable parameters and default settings for inputs

Table 5- 10 Configurable parameters of inputs

Parameters [1]	Value range	Default	Reconfiguration in RUN
Diagnostics			
• Missing supply voltage L+	Yes/No	No	Yes
Input delay	None, 0.05 ms, 0.1 ms, 0.4 ms, 1.6 ms, 3.2 ms, 12.8 ms, 20 ms	3.2 ms	Yes
Hardware interrupt			
• Rising edge	Yes/No	No	Yes
• Falling edge	Yes/No	No	Yes

[1] All parameters can be set for on a channel-specific basis

Configurable parameters and default settings for outputs

Table 5- 11 Configurable parameters of outputs

Parameters [1]	Value range	Default	Reconfiguration in RUN
Diagnostics			
• Missing supply voltage L+	Yes/No	No	Yes
Reaction to CPU STOP When the digital output is controlled by a technology channel (HSC, PTO or PWM), this parameter is not effective. In this case, the technology channel specifies the reaction of the digital output to CPU STOP.	• Turn off • Keep last value • Output substitute value 1	Turn off	Yes

[1] All parameters can be set for on a channel-specific basis

Interrupts/diagnostics alarms

6

6.1 Status and error displays

6.1.1 Status and error displays of the CPU part

LED display

The figure below shows the LED displays of the CPU part.

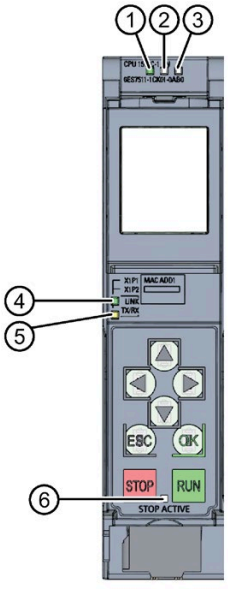

① RUN/STOP LED (yellow/green LED)
② ERROR LED (red LED)
③ MAINT LED (yellow LED)
④ LINK RX/TX LED for port X1 P1 (yellow/green LED)
⑤ LINK RX/TX LED for port X1 P2 (yellow/green LED)
⑥ STOP ACTIVE-LED (yellow LED)

Figure 6-1 LED display of the CPU 1511C-1 PN (without front panel)

Meaning of the RUN/STOP, ERROR and MAINT LEDs

The CPU has three LEDs for displaying the current operating mode and diagnostics status. The following table shows the meaning of the various combinations of colors for the RUN/STOP, ERROR and MAINT LEDs.

Table 6- 1 Meaning of the LEDs

RUN/STOP LED	ERROR LED	MAINT LED	Meaning
LED off	LED off	LED off	Missing or insufficient supply voltage on the CPU.
LED off	LED flashes red	LED off	An error has occurred.
LED lit green	LED off	LED off	CPU is in RUN mode.
LED lit green	LED flashes red	LED off	A diagnostics event is pending.
LED lit green	LED off	LED lit yellow	Maintenance demanded for the plant. The affected hardware must be checked/replaced within a short period of time.
			Active Force job
LED lit green	LED off	LED flashes yellow	Bad configuration
LED lit yellow	LED flashes red	LED off	A diagnostics event is pending.
LED lit yellow	LED off	LED flashes yellow	Firmware update successfully completed.
LED lit yellow	LED off	LED off	CPU is in STOP mode.
LED lit yellow	LED flashes red	LED flashes yellow	The program on the SIMATIC memory card is causing an error.
			Firmware update using SIMATIC memory card has failed.
			The CPU has detected an error state. Additional information is available via the CPU diagnostic buffer.
LED flashes yellow	LED off	LED off	CPU is performing internal activities during STOP, e.g. ramp-up after STOP.
			Download of the user program from the SIMATIC memory card
			CPU carries out a program with active breakpoint.
LED flashes yellow/green	LED off	LED off	Startup (transition from STOP → RUN)
LED flashes yellow/green	LED flashes red	LED flashes yellow	Startup (CPU booting)
			Test of LEDs during startup, inserting a module.
			LED flashing test

Meaning of LINK RX/TX LED

Each port has a LINK RX/TX LED. The table below shows the various "LED scenarios" of the CPU ports.

Table 6- 2 Meaning of the LED

LINK TX/RX LED	Meaning
LED off	There is no Ethernet connection between the PROFINET interface of the PROFINET device and the communication partner. No data is currently being sent/received via the PROFINET interface. There is no LINK connection.
LED flashes green	The "LED flashing test" is being performed.
LED lit green	There is an Ethernet connection between the PROFINET interface of your PROFINET device and a communication partner.
LED flashes yellow/green	Data is currently being received from or sent to a communications partner on Ethernet via the PROFINET interface of the PROFINET device.

Note

"LED" instruction

You can read the status (e.g. "On" or "Off") of LEDs of a CPU or a module using the "LED" instruction. Note, however, that it is not possible to read the LED status of the LINK RX/TX LEDs on all S7-1500 CPUs.

You can find additional information on the "LED" instruction in the STEP 7 online help.

Meaning of the STOP ACTIVE LED

The following table shows the meaning of the STOP ACTIVE LED for the CPU 1511C-1 PN.

Table 6- 3 Meaning of the LED

STOP ACTIVE LED	Meaning
LED lit yellow	The CPU is in STOP mode. • As long as the STOP ACTIVE LED is lit up, switching the CPU to RUN mode is only possible using the RUN button. • The CPU can then no longer be set to RUN mode via the display operation or via online functions. The state of the buttons is retained at power-off. If the CPU does not start up automatically after a power-on, you have to keep the STOP button pressed during start-up until the STOP ACTIVE LED is activated. • If an automatic start-up is to be reliably prevented after a power-up, the STOP button has to be kept pressed during the start-up of the CPU until the STOP ACTIVE LED is activated.
LED off	• The CPU is set to "STOP" mode using the display or programming device and not with the STOP button on the device. • The CPU is in RUN mode.

6.1.2 Status and error displays of the analog on-board I/O

LED displays

The figure below shows the LED displays (status and error displays) of the analog on-board I/O.

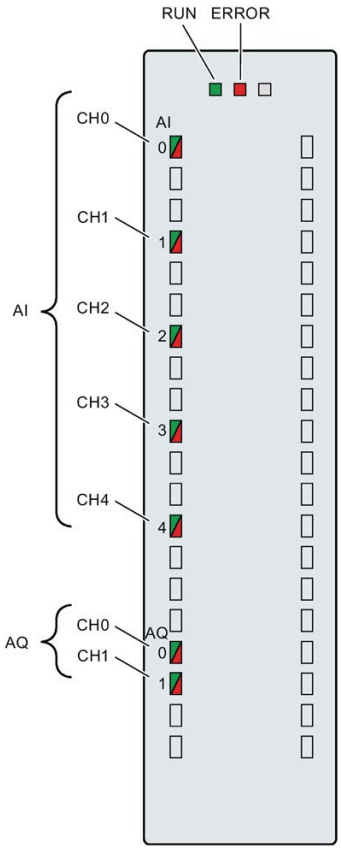

Figure 6-2 LED displays

Meaning of the LED displays

The following tables explain the meaning of the status and error displays. Corrective measures for diagnostic alarms can be found in the section Interrupts and diagnostics of the analog on-board I/O (Page 131).

Table 6- 4 RUN/ERROR status and error displays

LEDs		Meaning	Remedy
RUN	ERROR		
Off	Off	No voltage or voltage too low.	• Turn on the CPU and/or the system power supply modules.
Flashes	Off	Analog on-board I/O starts up and flashes until valid parameter assignment.	---
On	Off	Parameters have been set for the analog on-board I/O.	
On	Flashes	Indicates module errors (at least one error is present on one channel, e.g. wire break).	Evaluate the diagnostics and eliminate the error (e.g. wire break).

CHx LED

Table 6- 5 CHx status display

CHx LED	Meaning	Remedy
Off	Channel disabled.	---
On	Channel parameters set and OK.	---
On	Channel parameters set, channel error present. Diagnostics alarm: e.g. wire break	Check the wiring. Disable diagnostics.

Note

Maintenance LED

During ramp-up, the firmware of the CPU checks the consistency of the calibration data of the analog on-board I/O stored by the SIEMENS production. The yellow MAINT LED lights up if the firmware detects an inconsistency (e.g. an invalid value) or missing calibration data. The MAINT LED is located next to the red ERROR LED on the analog on-board I/O.

Note that the MAINT LED on the analog on-board I/O is only intended for troubleshooting by SIEMENS. In normal conditions, the MAINT LED should not light up. However, if this is the case, please contact SIEMENS "mySupport" on the Internet (https://support.industry.siemens.com/My/ww/en/).

6.1.3 Status and error displays of the digital on-board I/O

LED displays

The figure below shows the LED displays (status and error displays) of the digital on-board I/O. Remedial measures for diagnostics alarms can be found in section Interrupts and diagnostics (Page 131).

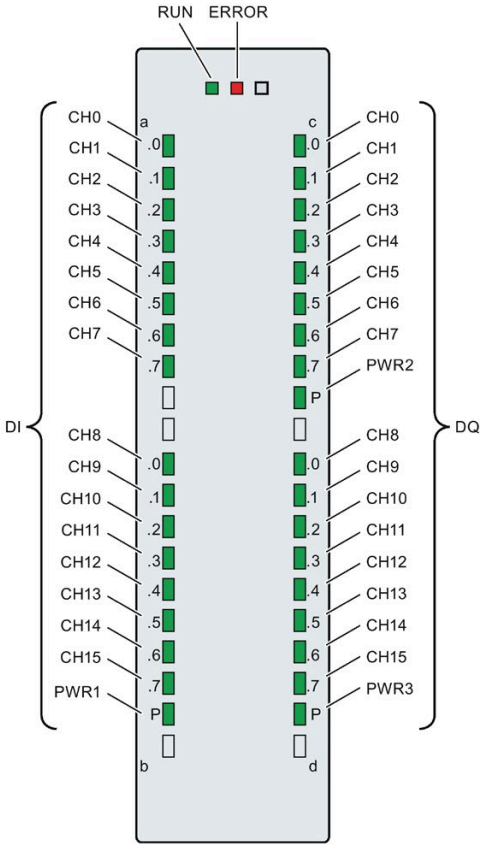

Figure 6-3 LED displays

Meaning of the LED displays

The following tables explain the meaning of the status and error displays.

RUN/ERROR LED

Table 6- 6 RUN/ERROR status and error displays

LED		Meaning	Remedy
RUN	ERROR		
□ Off	□ Off	No voltage or voltage too low.	• Turn on the CPU. • Check whether too many modules are inserted.
☼ Flashes	□ Off	Digital on-board I/O starts up.	---
■ On	□ Off	Digital on-board I/O is ready for operation.	
■ On	☼ Flashes	A diagnostics interrupt is pending. Supply voltage missing.	Check supply voltage L+.

PWRx LED

Table 6- 7 PWRx status display

PWRx LED	Meaning	Remedy
□ Off	Supply voltage L+ to module too low or missing.	Check supply voltage L+.
■ On	Supply voltage L+ is present and OK.	---

CHx LED

Table 6- 8 CHx status display

CHx LED	Meaning	Remedy
□ Off	0 = Status of the input/output signal.	---
■ On	1 = Status of the input/output signal.	---

Note

For the status display, the digital inputs only take into account the filter time of the corresponding DI and not the filter time of the A/B/N signals of the fast counters (HSC).

For example, a static signal may be displayed when the DI has a configured input delay of 3.2 ms, even though a 100 kHz counter on these inputs still detects edge transitions.

6.2 Interrupts and diagnostics

6.2.1 Interrupts and diagnostics of the CPU part

For information on the topic of "Interrupts", refer to the STEP 7 (TIA Portal) online help.

For information on "Diagnostics" and "System alarms", refer to the Diagnostics (http://support.automation.siemens.com/WW/view/en/59192926) function manual.

6.2.2 Interrupts and diagnostics of the analog on-board I/O

Diagnostics interrupt

The analog on-board I/O generates a diagnostics interrupt at the following events:

Table 6- 9 Diagnostics interrupt for inputs and outputs

Event	Diagnostics interrupt	
	Inputs	Outputs
Overflow	x	x
Underflow	x	x
Wire break	x [1]	x [2]
Short-circuit to ground	---	x [3]

[1] Possible for the voltage measuring range (1 to 5 V), current measuring range (4 to 20 mA)

[2] Possible for current output type

[3] Possible for voltage output type

Hardware interrupt for inputs

The compact CPU can generate a hardware interrupt for the following events:

- Below low limit 1
- Above high limit 1
- Below low limit 2
- Above high limit 2

You can find detailed information on the event in the hardware interrupt organization block with the "RALARM" (read additional interrupt information) instruction and in the STEP 7 (TIA Portal) online help.

The start information of the organization block includes information on which channel of the analog on-board I/O triggered the hardware interrupt. The figure below shows the assignment to the bits of double word 8 in local data.

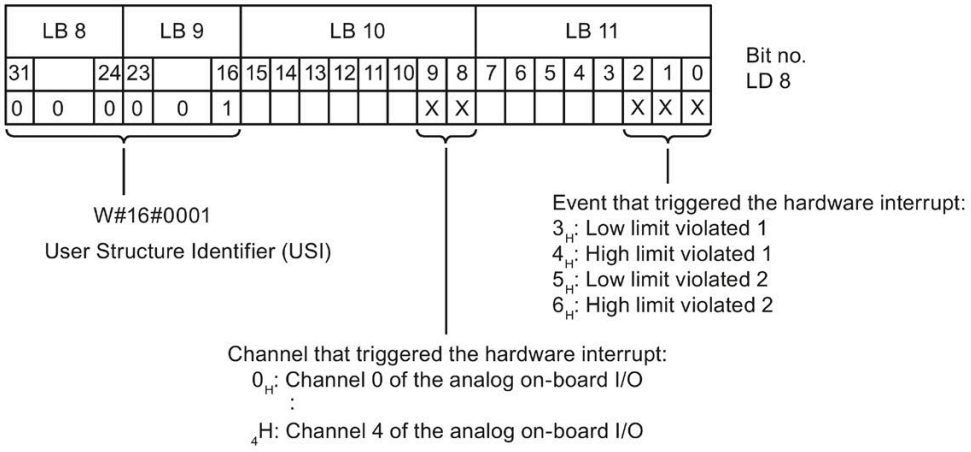

Figure 6-4 Start information of the organization block

Behavior when limits 1 and 2 are reached at the same time

If the two high limits 1 and 2 are reached at the same time, the analog on-board I/O always signals the hardware interrupt for high limit 1 first. The configured value for high limit 2 is irrelevant. After processing the hardware interrupt for high limit 1, the compact CPU triggers the hardware interrupt for high limit 2.

The analog on-board I/O behaves accordingly when the low limits are reached simultaneously. If the two low limits 1 and 2 are reached at the same time, the analog on-board I/O always signals the hardware interrupt for low limit 1 first. After processing the hardware interrupt for low limit 1, the analog on-board I/O triggers the hardware interrupt for low limit 2.

Structure of the additional interrupt information

Table 6- 10 Structure of USI = W#16#0001

Data block name		Contents	Comment	Bytes
USI (User Structure Identifier)		W#16#0001	Additional interrupt information of the analog on-board I/O	2
The channel that triggered the hardware interrupt follows.				
	Channel	B#16#00 to B#16#n	Number of the event-triggering channel (n = number of analog on-board I/O channels -1)	1
It is followed by the event that triggered the hardware interrupt.				
	Event	B#16#03	Below low limit 1	1
		B#16#04	Above high limit 1	
		B#16#05	Below low limit 2	
		B#16#06	Above high limit 2	

Diagnostics alarms

A diagnostics alarm is output for each diagnostics event and the ERROR LED flashes on the analog on-board I/O. The diagnostics alarms can, for example, be read out in the diagnostics buffer of the CPU. You can evaluate the error codes with the user program.

Table 6- 11 Diagnostics alarms, their meaning and corrective measures

Diagnostics alarm	Error code	Meaning	Remedy
Wire break	6_H	Resistance of encoder circuit too high	Use a different encoder type or modify the wiring, for example, using cables with larger cross-section
		Interruption of the cable between the analog on-board I/O and sensor	Connect the cable
		Channel not connected (open)	• Disable diagnostics • Connect the channel
Overflow	7_H	Measuring range exceeded	Check the measuring range
		The output value set by the user program exceeds the valid rated range/overrange	Correct the output value
Underflow	8_H	Value below measuring range	Check the measuring range
		The output value set by the user program is below the valid rated range/underrange	Correct the output value
Short-circuit to ground	1_H	Overload at output	Eliminate overload
		Short-circuit of output Q_V to M_{ANA}	Eliminate the short-circuit

6.2.3 Interrupts and diagnostics of the digital on-board I/O

Diagnostics interrupt

A diagnostics alarm is output for each diagnostics event and the ERROR LED flashes on the digital on-board I/O. You can read out the diagnostics alarms, for example, in the diagnostics buffer of the CPU. You can evaluate the error codes with the user program.

Table 6- 12 Diagnostics alarms, their meaning and corrective measures

Diagnostics alarm	Error code	Meaning	Corrective measures
Load voltage missing	11H	No supply voltage L+	Feed supply voltage L+
Hardware interrupt lost	16H	The digital on-board I/O cannot trigger an interrupt because the previous interrupt was not acknowledged; possibly a configuration error	• Change the interrupt processing in the CPU and reconfigure the digital on-board I/O.

Diagnostics interrupt when using high-speed counters

Table 6- 13 Diagnostics alarms, their meaning and corrective measures

Diagnostics alarm	Error code	Meaning	Corrective measures
Illegal A/B signal ratio	500H	• Time sequence of the A and B signals of the incremental encoder do not meet certain requirements • Possible causes: – Signal frequency too high – Encoder is defective – Process wiring is incorrect	• Correct the process wiring • Check the encoder/sensor • Check the parameter assignment

Hardware interrupt

The compact CPU can generate a hardware interrupt for the following events:

- Rising edge
- Falling edge

You will find detailed information on the event in the hardware interrupt organization block with the "RALRM" (read additional interrupt information) instruction and in the STEP 7 online help.

The start information of the organization block includes information on which channel triggered the hardware interrupt. The figure below shows the assignment to the bits of double word 8 in local data.

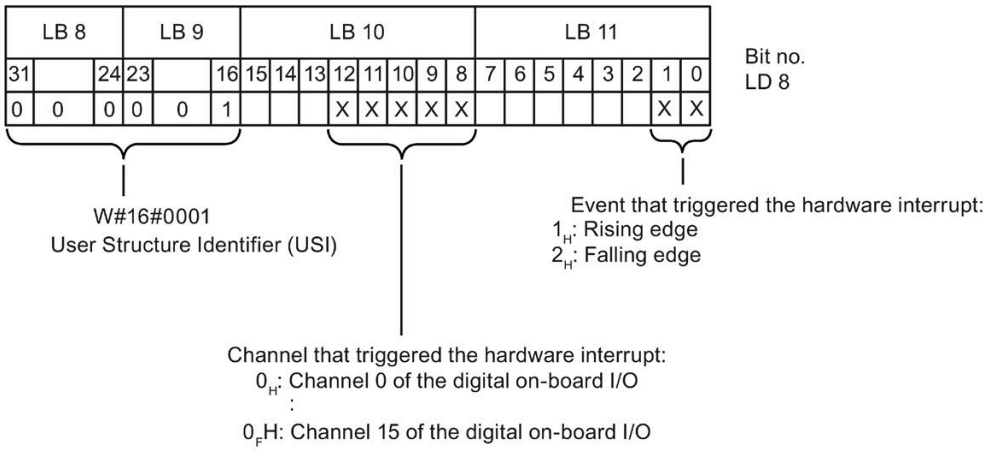

Figure 6-5 Start information of the organization block

Structure of the additional interrupt information

Table 6- 14 Structure of USI = W#16#0001

Data block name		Contents	Comment	Bytes
USI (User Structure Identifier)		W#16#0001	Additional interrupt information of the hardware interrupts of the digital on-board I/O	2
The channel that triggered the hardware interrupt follows.				
	Channel	B#16#00 to B#16#0F	Number of the event-triggering channel (channel 0 to channel 15)	1
The error event that triggered the hardware interrupt follows.				
	Event	B#16#01	Rising edge	1
		B#16#02	Falling edge	

Hardware interrupts when using the high-speed counters

Table 6- 15 Hardware interrupts and their meaning

Hardware interrupt	Event type number	Meaning
Opening of the internal gate (gate start)	1	When the internal gate is opened, the technology function triggers a hardware interrupt in the CPU.
Closing of the internal gate (gate stop)	2	When the internal gate is closed, the technology function triggers a hardware interrupt in the CPU.
Overflow (high counting limit violated)	3	When the count value exceeds the high counting limit, the technology function triggers a hardware interrupt in the CPU.
Underflow (low counting limit violated)	4	When the count value falls below the low counting limit, the technology function triggers a hardware interrupt in the CPU.
Comparison event for DQ0 occurred	5	When a comparison event for DQ0 occurs due to the selected comparison condition, the technology function triggers a hardware interrupt in the CPU. When the change of the count value for an incremental or pulse encoder was not caused by a count pulse, the technology function does not trigger a hardware interrupt.
Comparison event for DQ1 occurred	6	When a comparison event for DQ1 occurs due to the selected comparison condition, the technology function triggers a hardware interrupt in the CPU. When the change of the count value for an incremental or pulse encoder was not caused by a count pulse, the technology function does not trigger a hardware interrupt.
Zero crossing	7	At a zero crossing of the counter or position value, the technology function triggers a hardware interrupt in the CPU.
New Capture value present[1)]	8	When the current counter or position value is saved as a Capture value, the technology function triggers a hardware interrupt in the CPU.
Synchronization of the counter by an external signal	9	At the synchronization of the counter by an N signal or edge at DI, the technology function triggers a hardware interrupt in the CPU.
Direction reversal[2)]	10	When the count value or position value changes direction, the technology function triggers a hardware interrupt in the CPU.

1) Can only be set in counting mode

2) Feedback bit STS_DIR is preset to "0". When the first count value or position value change occurs in the reverse direction directly after switching on the digital on-board I/O, a hardware interrupt is not triggered.

Technical specifications

7

Technical specifications of the CPU 1511C-1 PN

The following table shows the technical specifications as of 05/2021. You will find a data sheet including daily updated technical specifications on the Internet (https://support.industry.siemens.com/cs/ww/en/pv/6ES7511-1CK01-0AB0/td?dl=en).

Article number	6ES7511-1CK01-0AB0
General information	
Product type designation	CPU 1511C-1 PN
HW functional status	FS03
Firmware version	V2.9
Product function	
• I&M data	Yes; I&M0 to I&M3
• Isochronous mode	Yes; With minimum OB 6x cycle of 625 µs (distributed)
Engineering with	
• STEP 7 TIA Portal configurable/integrated from version	V17 (FW V2.9) / V15 (FW V2.5) or higher; with older TIA Portal versions configurable as 6ES7511-1CK00-0AB0
Configuration control	
via dataset	Yes
Display	
Screen diagonal [cm]	3.45 cm
Control elements	
Number of keys	8
Mode buttons	2
Supply voltage	
Type of supply voltage	24 V DC
permissible range, lower limit (DC)	19.2 V; 20.4 V DC, for supplying the digital inputs/outputs
permissible range, upper limit (DC)	28.8 V
Reverse polarity protection	Yes
Mains buffering	
• Mains/voltage failure stored energy time	5 ms; Refers to the power supply on the CPU section
• Repeat rate, min.	1/s
Input current	
Current consumption (rated value)	0.8 A; Without load; 9.8 A: CPU + load
Current consumption, max.	1 A; Without load; 10 A: CPU + load
Inrush current, max.	1.9 A; Rated value
I^2t	0.34 $A^2 \cdot s$

Article number	6ES7511-1CK01-0AB0
Digital inputs	
• from load voltage L+ (without load), max.	20 mA; per group
Digital outputs	
• from load voltage L+, max.	30 mA; Per group, without load
Output voltage	
Rated value (DC)	24 V
Encoder supply	
Number of outputs	1; One common 24 V encoder supply
24 V encoder supply	
• 24 V	Yes; L+ (-0.8 V)
• Short-circuit protection	Yes
• Output current, max.	1 A
Power	
Infeed power to the backplane bus	10 W
Power consumption from the backplane bus (balanced)	8.5 W
Power loss	
Power loss, typ.	11.8 W
Memory	
Number of slots for SIMATIC memory card	1
SIMATIC memory card required	Yes
Work memory	
• integrated (for program)	175 kbyte
• integrated (for data)	1 Mbyte
Load memory	
• Plug-in (SIMATIC Memory Card), max.	32 Gbyte
Backup	
• maintenance-free	Yes
CPU processing times	
for bit operations, typ.	60 ns
for word operations, typ.	72 ns
for fixed point arithmetic, typ.	96 ns
for floating point arithmetic, typ.	384 ns
CPU-blocks	
Number of elements (total)	4 000; Blocks (OB, FB, FC, DB) and UDTs
DB	
• Number range	1 ... 60 999; subdivided into: number range that can be used by the user: 1 ... 59 999, and number range of DBs created via SFC 86: 60 000 ... 60 999
• Size, max.	1 Mbyte; For DBs with absolute addressing, the max. size is 64 KB
FB	
• Number range	0 ... 65 535
• Size, max.	175 kbyte

Article number	6ES7511-1CK01-0AB0
FC	
• Number range	0 ... 65 535
• Size, max.	175 kbyte
OB	
• Size, max.	175 kbyte
• Number of free cycle OBs	100
• Number of time alarm OBs	20
• Number of delay alarm OBs	20
• Number of cyclic interrupt OBs	20; With minimum OB 3x cycle of 500 µs
• Number of process alarm OBs	50
• Number of DPV1 alarm OBs	3
• Number of isochronous mode OBs	1
• Number of technology synchronous alarm OBs	2
• Number of startup OBs	100
• Number of asynchronous error OBs	4
• Number of synchronous error OBs	2
• Number of diagnostic alarm OBs	1
Nesting depth	
• per priority class	24
Counters, timers and their retentivity	
S7 counter	
• Number	2 048
Retentivity	
– adjustable	Yes
IEC counter	
• Number	Any (only limited by the main memory)
Retentivity	
– adjustable	Yes
S7 times	
• Number	2 048
Retentivity	
– adjustable	Yes
IEC timer	
• Number	Any (only limited by the main memory)
Retentivity	
– adjustable	Yes

Article number	6ES7511-1CK01-0AB0
Data areas and their retentivity	
Retentive data area (incl. timers, counters, flags), max.	128 kbyte; In total; available retentive memory for bit memories, timers, counters, DBs, and technology data (axes): 88 KB
Extended retentive data area (incl. timers, counters, flags), max.	1 Mbyte; When using PS 6 0W 24/48/60 V DC HF
Flag	
• Size, max.	16 kbyte
• Number of clock memories	8; 8 clock memory bit, grouped into one clock memory byte
Data blocks	
• Retentivity adjustable	Yes
• Retentivity preset	No
Local data	
• per priority class, max.	64 kbyte; max. 16 KB per block
Address area	
Number of IO modules	1 024; max. number of modules / submodules
I/O address area	
• Inputs	32 kbyte; All inputs are in the process image
• Outputs	32 kbyte; All outputs are in the process image
per integrated IO subsystem	
– Inputs (volume)	8 kbyte
– Outputs (volume)	8 kbyte
per CM/CP	
– Inputs (volume)	8 kbyte
– Outputs (volume)	8 kbyte
Subprocess images	
• Number of subprocess images, max.	32
Hardware configuration	
Number of distributed IO systems	32; A distributed I/O system is characterized not only by the integration of distributed I/O via PROFINET or PROFIBUS communication modules, but also by the connection of I/O via AS-i master modules or links (e.g. IE/PB-Link)
Number of DP masters	
• Via CM	4; A maximum of 4 CMs/CPs (PROFIBUS, PROFINET, Ethernet) can be inserted in total
Number of IO Controllers	
• integrated	1
• Via CM	4; A maximum of 4 CMs/CPs (PROFIBUS, PROFINET, Ethernet) can be inserted in total
Rack	
• Modules per rack, max.	32; CPU + 31 modules
• Number of lines, max.	1

Article number	6ES7511-1CK01-0AB0
PtP CM	
• Number of PtP CMs	the number of connectable PtP CMs is only limited by the number of available slots
Time of day	
Clock	
• Type	Hardware clock
• Backup time	6 wk; At 40 °C ambient temperature, typically
• Deviation per day, max.	10 s; Typ.: 2 s
Operating hours counter	
• Number	16
Clock synchronization	
• supported	Yes
• in AS, master	Yes
• in AS, slave	Yes
• on Ethernet via NTP	Yes
Digital inputs	
integrated channels (DI)	16
Digital inputs, parameterizable	Yes
Source/sink input	P-reading
Input characteristic curve in accordance with IEC 61131, type 3	Yes
Digital input functions, parameterizable	
• Gate start/stop	Yes
• Capture	Yes
• Synchronization	Yes
Input voltage	
• Type of input voltage	DC
• Rated value (DC)	24 V
• for signal "0"	-3 to +5V
• for signal "1"	+11 to +30V
Input current	
• for signal "1", typ.	2.5 mA
Input delay (for rated value of input voltage) for standard inputs	
– parameterizable	Yes; none / 0.05 / 0.1 / 0.4 / 1.6 / 3.2 / 12.8 / 20 ms
– at "0" to "1", min.	4 µs; for parameterization "none"
– at "0" to "1", max.	20 ms
– at "1" to "0", min.	4 µs; for parameterization "none"
– at "1" to "0", max.	20 ms

Article number	6ES7511-1CK01-0AB0
for interrupt inputs	
– parameterizable	Yes; Same as for standard inputs
for technological functions	
– parameterizable	Yes; Same as for standard inputs
Cable length	
• shielded, max.	1 000 m; 600 m for technological functions; depending on input frequency, encoder and cable quality; max. 50 m at 100 kHz
• unshielded, max.	600 m; for technological functions: No
Digital outputs	
Type of digital output	Transistor
integrated channels (DO)	16
Current-sourcing	Yes; Push-pull output
Short-circuit protection	Yes; electronic/thermal
• Response threshold, typ.	1.6 A with standard output, 0.5 A with high-speed output; see manual for details
Limitation of inductive shutdown voltage to	-0.8 V
Controlling a digital input	Yes
Accuracy of pulse duration	Up to ±100 ppm ±2 µs at high-speed output; see manual for details
minimum pulse duration	2 µs; With High Speed output
Digital output functions, parameterizable	
• Switching tripped by comparison values	Yes; As output signal of a high-speed counter
• PWM output	Yes
– Number, max.	4
– Cycle duration, parameterizable	Yes
– ON period, min.	0 %
– ON period, max.	100 %
– Resolution of the duty cycle	0.0036 %; For S7 analog format, min. 40 ns
• Frequency output	Yes
Switching capacity of the outputs	
• with resistive load, max.	0.5 A; 0.1 A with high-speed output, i.e. when using a high-speed output; see manual for details
• on lamp load, max.	5 W; 1 W with high-speed output, i.e. when using a high-speed output; see manual for details
Load resistance range	
• lower limit	48 Ω; 240 ohms with high-speed output, i.e. when using a high-speed output; see manual for details
• upper limit	12 kΩ

Article number	6ES7511-1CK01-0AB0
Output voltage	
• Type of output voltage	DC
• for signal "0", max.	1 V; With high-speed output, i.e. when using a high-speed output; see manual for details
• for signal "1", min.	23.2 V; L+ (-0.8 V)
Output current	
• for signal "1" rated value	0.5 A; 0.1 A with high-speed output, i.e. when using a high-speed output, observe derating; see manual for details
• for signal "1" permissible range, min.	2 mA
• for signal "1" permissible range, max.	0.6 A; 0.12 A with high-speed output, i.e. when using a high-speed output, observe derating; see manual for details
• for signal "0" residual current, max.	0.5 mA
Output delay with resistive load	
• "0" to "1", max.	200 µs
• "1" to "0", max.	500 µs; Load-dependent
for technological functions	
– "0" to "1", max.	5 µs; Depending on the output used, see additional description in manual
– "1" to "0", max.	5 µs; Depending on the output used, see additional description in manual
Parallel switching of two outputs	
• for logic links	Yes; for technological functions: No
• for uprating	No
• for redundant control of a load	Yes; for technological functions: No
Switching frequency	
• with resistive load, max.	100 kHz; For high-speed output, 100 Hz for standard output
• with inductive load, max.	0.5 Hz; Acc. to IEC 60947-5-1, DC-13; observe derating curve
• on lamp load, max.	10 Hz
Total current of the outputs	
• Current per channel, max.	0.5 A; see additional description in the manual
• Current per group, max.	8 A; see additional description in the manual
• Current per power supply, max.	4 A; 2 power supplies for each group, current per power supply max. 4 A, see additional description in manual
for technological functions	
– Current per channel, max.	0.5 A; see additional description in the manual
Relay outputs	
• Number of relay outputs	0

Article number	6ES7511-1CK01-0AB0
Cable length	
• shielded, max.	1 000 m; 600 m for technological functions; depending on output frequency, load, and cable quality; max. 50 m at 100 kHz
• unshielded, max.	600 m; for technological functions: No
Analog inputs	
Number of analog inputs	5; 4x for U/I, 1x for R/RTD
• For current measurement	4; max.
• For voltage measurement	4; max.
• For resistance/resistance thermometer measurement	1
permissible input voltage for voltage input (destruction limit), max.	28.8 V
permissible input current for current input (destruction limit), max.	40 mA
Cycle time (all channels), min.	1 ms; Dependent on the parameterized interference frequency suppression; for details, see conversion procedure in manual
Technical unit for temperature measurement adjustable	Yes; °C/°F/K
Input ranges (rated values), voltages	
• 0 to +10 V	Yes; Physical measuring range: ± 10 V
– Input resistance (0 to 10 V)	100 kΩ
• 1 V to 5 V	Yes; Physical measuring range: ± 10 V
– Input resistance (1 V to 5 V)	100 kΩ
• -10 V to +10 V	Yes
– Input resistance (-10 V to +10 V)	100 kΩ
• -5 V to +5 V	Yes; Physical measuring range: ± 10 V
– Input resistance (-5 V to +5 V)	100 kΩ
Input ranges (rated values), currents	
• 0 to 20 mA	Yes; Physical measuring range: ± 20 mA
– Input resistance (0 to 20 mA)	50 Ω; Plus approx. 55 ohm for overvoltage protection by PTC
• -20 mA to +20 mA	Yes
– Input resistance (-20 mA to +20 mA)	50 Ω; Plus approx. 55 ohm for overvoltage protection by PTC
• 4 mA to 20 mA	Yes; Physical measuring range: ± 20 mA
– Input resistance (4 mA to 20 mA)	50 Ω; Plus approx. 55 ohm for overvoltage protection by PTC

Article number	6ES7511-1CK01-0AB0
Input ranges (rated values), resistance thermometer	
• Ni 100	Yes; Standard/climate
– Input resistance (Ni 100)	10 MΩ
• Pt 100	Yes; Standard/climate
– Input resistance (Pt 100)	10 MΩ
Input ranges (rated values), resistors	
• 0 to 150 ohms	Yes; Physical measuring range: 0 ... 600 ohms
– Input resistance (0 to 150 ohms)	10 MΩ
• 0 to 300 ohms	Yes; Physical measuring range: 0 ... 600 ohms
– Input resistance (0 to 300 ohms)	10 MΩ
• 0 to 600 ohms	Yes
– Input resistance (0 to 600 ohms)	10 MΩ
Cable length	
• shielded, max.	800 m; for U/I, 200 m for R/RTD
Analog outputs	
integrated channels (AO)	2
Voltage output, short-circuit protection	Yes
Cycle time (all channels), min.	1 ms; Dependent on the parameterized interference frequency suppression; for details, see conversion procedure in manual
Output ranges, voltage	
• 0 to 10 V	Yes
• 1 V to 5 V	Yes
• -10 V to +10 V	Yes
Output ranges, current	
• 0 to 20 mA	Yes
• -20 mA to +20 mA	Yes
• 4 mA to 20 mA	Yes
Load impedance (in rated range of output)	
• with voltage outputs, min.	1 kΩ
• with voltage outputs, capacitive load, max.	100 nF
• with current outputs, max.	500 Ω
• with current outputs, inductive load, max.	1 mH
Cable length	
• shielded, max.	200 m

Article number	6ES7511-1CK01-0AB0
Analog value generation for the inputs	
Integration and conversion time/resolution per channel	
• Resolution with overrange (bit including sign), max.	16 bit
• Integration time, parameterizable	Yes; 2.5 / 16.67 / 20 / 100 ms, acts on all channels
• Interference voltage suppression for interference frequency f1 in Hz	400 / 60 / 50 / 10
Smoothing of measured values	
• parameterizable	Yes
• Step: None	Yes
• Step: low	Yes
• Step: Medium	Yes
• Step: High	Yes
Analog value generation for the outputs	
Integration and conversion time/resolution per channel	
• Resolution with overrange (bit including sign), max.	16 bit
Settling time	
• for resistive load	1.5 ms
• for capacitive load	2.5 ms
• for inductive load	2.5 ms
Encoder	
Connection of signal encoders	
• for voltage measurement	Yes
• for current measurement as 4-wire transducer	Yes
• for resistance measurement with two-wire connection	Yes
• for resistance measurement with three-wire connection	Yes
• for resistance measurement with four-wire connection	Yes
Connectable encoders	
• 2-wire sensor	Yes
– permissible quiescent current (2-wire sensor), max.	1.5 mA

Article number	6ES7511-1CK01-0AB0
Encoder signals, incremental encoder (asymmetrical)	
• Input frequency, max.	100 kHz
• Counting frequency, max.	400 kHz; with quadruple evaluation
• Signal filter, parameterizable	Yes
• Incremental encoder with A/B tracks, 90° phase offset	Yes
• Incremental encoder with A/B tracks, 90° phase offset and zero track	Yes
• pulse encoder	Yes
• pulse encoder with direction	Yes
• pulse encoder with one impulse signal per count direction	Yes
Errors/accuracies	
Linearity error (relative to input range), (+/-)	0.1 %
Temperature error (relative to input range), (+/-)	0.005 %/K
Crosstalk between the inputs, max.	-60 dB
Repeat accuracy in steady state at 25 °C (relative to input range), (+/-)	0.05 %
Output ripple (relative to output range, bandwidth 0 to 50 kHz), (+/-)	0.02 %
Linearity error (relative to output range), (+/-)	0.15 %
Temperature error (relative to output range), (+/-)	0.005 %/K
Crosstalk between the outputs, max.	-80 dB
Repeat accuracy in steady state at 25 °C (relative to output range), (+/-)	0.05 %
Operational error limit in overall temperature range	
• Voltage, relative to input range, (+/-)	0.3 %
• Current, relative to input range, (+/-)	0.3 %
• Resistance, relative to input range, (+/-)	0.3 %
• Resistance thermometer, relative to input range, (+/-)	Pt100 Standard: ±2 K, Pt100 Climate: ±1 K, Ni100 Standard: ±1.2 K, Ni100 Climate: ±1 K
• Voltage, relative to output range, (+/-)	0.3 %
• Current, relative to output range, (+/-)	0.3 %

Article number	6ES7511-1CK01-0AB0
Basic error limit (operational limit at 25 °C)	
• Voltage, relative to input range, (+/-)	0.2 %
• Current, relative to input range, (+/-)	0.2 %
• Resistance, relative to input range, (+/-)	0.2 %
• Resistance thermometer, relative to input range, (+/-)	Pt100 Standard: ±1 K, Pt100 Climate: ±0.5 K, Ni100 Standard: ±0.6 K, Ni100 Climate: ±0.5 K
• Voltage, relative to output range, (+/-)	0.2 %
• Current, relative to output range, (+/-)	0.2 %
Interference voltage suppression for f = n x (f1 +/- 1 %), f1 = interference frequency	
• Series mode interference (peak value of interference < rated value of input range), min.	30 dB
• Common mode voltage, max.	10 V
• Common mode interference, min.	60 dB; at 400 Hz: 50 dB
Interfaces	
Number of PROFINET interfaces	1
1. Interface	
Interface types	
• RJ 45 (Ethernet)	Yes; X1
• Number of ports	2
• integrated switch	Yes
Protocols	
• IP protocol	Yes; IPv4
• PROFINET IO Controller	Yes
• PROFINET IO Device	Yes
• SIMATIC communication	Yes
• Open IE communication	Yes; Optionally also encrypted
• Web server	Yes
• Media redundancy	Yes
PROFINET IO Controller	
Services	
– PG/OP communication	Yes
– Isochronous mode	Yes
– Direct data exchange	Yes; Requirement: IRT and isochronous mode (MRPD optional)
– IRT	Yes
– PROFIenergy	Yes; per user program
– Prioritized startup	Yes; Max. 32 PROFINET devices

Article number	6ES7511-1CK01-0AB0
– Number of connectable IO Devices, max.	128; In total, up to 256 distributed I/O devices can be connected via AS-i, PROFIBUS or PROFINET
– Of which IO devices with IRT, max.	64
– Number of connectable IO Devices for RT, max.	128
– of which in line, max.	128
– Number of IO Devices that can be simultaneously activated/deactivated, max.	8; in total across all interfaces
– Number of IO Devices per tool, max.	8
– Updating times	The minimum value of the update time also depends on communication share set for PROFINET IO, on the number of IO devices, and on the quantity of configured user data
Update time for IRT	
– for send cycle of 250 µs	250 µs to 4 ms; Note: In the case of IRT with isochronous mode, the minimum update time of 625 µs of the isochronous OB is decisive
– for send cycle of 500 µs	500 µs to 8 ms; Note: In the case of IRT with isochronous mode, the minimum update time of 625 µs of the isochronous OB is decisive
– for send cycle of 1 ms	1 ms to 16 ms
– for send cycle of 2 ms	2 ms to 32 ms
– for send cycle of 4 ms	4 ms to 64 ms
– With IRT and parameterization of "odd" send cycles	Update time = set "odd" send clock (any multiple of 125 µs: 375 µs, 625 µs ... 3 875 µs)
Update time for RT	
– for send cycle of 250 µs	250 µs to 128 ms
– for send cycle of 500 µs	500 µs to 256 ms
– for send cycle of 1 ms	1 ms to 512 ms
– for send cycle of 2 ms	2 ms to 512 ms
– for send cycle of 4 ms	4 ms to 512 ms
PROFINET IO Device	
Services	
– PG/OP communication	Yes
– Isochronous mode	No
– IRT	Yes
– PROFIenergy	Yes; per user program
– Shared device	Yes
– Number of IO Controllers with shared device, max.	4
– activation/deactivation of I-devices	Yes; per user program
– Asset management record	Yes; per user program

Article number	6ES7511-1CK01-0AB0
Interface types	
RJ 45 (Ethernet)	
• 100 Mbps	Yes
• Autonegotiation	Yes
• Autocrossing	Yes
• Industrial Ethernet status LED	Yes
Protocols	
Number of connections	
• Number of connections, max.	96; via integrated interfaces of the CPU and connected CPs / CMs
• Number of connections reserved for ES/HMI/web	10
• Number of connections via integrated interfaces	64
• Number of S7 routing paths	16
Redundancy mode	
• H-Sync forwarding	Yes
Media redundancy	
– Media redundancy	only via 1st interface (X1)
– MRP	Yes
– MRP interconnection, supported	Yes; as MRP ring node according to IEC 62439-2 Edition 3.0
– MRPD	Yes; Requirement: IRT
– Switchover time on line break, typ.	200 ms; For MRP, bumpless for MRPD
– Number of stations in the ring, max.	50
SIMATIC communication	
• PG/OP communication	Yes; encryption with TLS V1.3 pre-selected
• S7 routing	Yes
• S7 communication, as server	Yes
• S7 communication, as client	Yes
• User data per job, max.	See online help (S7 communication, user data size)
Open IE communication	
• TCP/IP	Yes
– Data length, max.	64 kbyte
– several passive connections per port, supported	Yes
• ISO-on-TCP (RFC1006)	Yes
– Data length, max.	64 kbyte
• UDP	Yes

Article number	6ES7511-1CK01-0AB0
– Data length, max.	2 kbyte; 1 472 bytes for UDP broadcast
– UDP multicast	Yes; Max. 5 multicast circuits
• DHCP	Yes
• DNS	Yes
• SNMP	Yes
• DCP	Yes
• LLDP	Yes
• Encryption	Yes; Optional
Web server	
• HTTP	Yes; Standard and user pages
• HTTPS	Yes; Standard and user pages
OPC UA	
• Runtime license required	Yes; "Small" license required
• OPC UA Client	Yes
– Application authentication	Yes
– Security policies	Available security policies: None, Basic128Rsa15, Basic256Rsa15, Basic256Sha256
– User authentication	"anonymous" or by user name & password
– Number of connections, max.	4
– Number of nodes of the client interfaces, max.	1 000
– Number of elements for one call of OPC_UA_NodeGetHandleList/OPC_UA_ReadList/OPC_UA_WriteList, max.	300
– Number of elements for one call of OPC_UA_NameSpaceGetIndexList, max.	20
– Number of elements for one call of OPC_UA_MethodGetHandleList, max.	100
– Number of simultaneous calls of the client instructions per connection (except OPC_UA_ReadList,OPC_UA_WriteList,OPC_UA_MethodCall), max.	1
– Number of simultaneous calls of the client instructions OPC_UA_ReadList,OPC_UA_WriteList and OPC_UA_MethodCall, max.	5
– Number of registerable nodes, max.	5 000
– Number of registerable method calls of OPC_UA_MethodCall, max.	100
– Number of inputs/outputs when calling OPC_UA_MethodCall, max.	20

Article number	6ES7511-1CK01-0AB0
• OPC UA Server	Yes; Data access (read, write, subscribe), method call, custom address space
– Application authentication	Yes
– Security policies	Available security policies: None, Basic128Rsa15, Basic256Rsa15, Basic256Sha256
– User authentication	"anonymous" or by user name & password
– GDS support (certificate management)	Yes
– Number of sessions, max.	32
– Number of accessible variables, max.	50 000
– Number of registerable nodes, max.	10 000
– Number of subscriptions per session, max.	20
– Sampling interval, min.	100 ms
– Publishing interval, min.	500 ms
– Number of server methods, max.	20
– Number of inputs/outputs per server method, max.	20
– Number of monitored items, max.	1 000; for 1 s sampling interval and 1 s send interval
– Number of nodes for user-defined server interfaces, max.	1 000
• Alarms and Conditions	Yes
– Number of program alarms	100
– Number of alarms for system diagnostics	50
Further protocols	
• MODBUS	Yes; MODBUS TCP
Isochronous mode	
Equidistance	Yes
S7 message functions	
Number of login stations for message functions, max.	32
Program alarms	Yes
Number of configurable program messages, max.	5 000; Program messages are generated by the "Program_Alarm" block, ProDiag or GRAPH
Number of loadable program messages in RUN, max.	2 500
Number of simultaneously active program alarms	
• Number of program alarms	600
• Number of alarms for system diagnostics	100
• Number of alarms for motion technology objects	80

Article number	6ES7511-1CK01-0AB0
Test commissioning functions	
Joint commission (Team Engineering)	Yes; Parallel online access possible for up to 5 engineering systems
Status block	Yes; Up to 8 simultaneously (in total across all ES clients)
Single step	No
Number of breakpoints	8
Status/control	
• Status/control variable	Yes
• Variables	Inputs/outputs, memory bits, DBs, distributed I/Os, timers, counters
• Number of variables, max.	
– of which status variables, max.	200; per job
– of which control variables, max.	200; per job
Forcing	
• Forcing	Yes
• Forcing, variables	Peripheral inputs/outputs
• Number of variables, max.	200
Diagnostic buffer	
• present	Yes
• Number of entries, max.	1 000
– of which powerfail-proof	500
Traces	
• Number of configurable Traces	4; Up to 512 KB of data per trace are possible
Interrupts/diagnostics/status information	
Alarms	
• Diagnostic alarm	Yes
• Hardware interrupt	Yes
Diagnoses	
• Monitoring the supply voltage	Yes
• Wire-break	Yes; for analog inputs/outputs, see description in manual
• Short-circuit	Yes; for analog outputs, see description in manual
• A/B transition error at incremental encoder	Yes
Diagnostics indication LED	
• RUN/STOP LED	Yes
• ERROR LED	Yes
• MAINT LED	Yes
• STOP ACTIVE LED	Yes
• Monitoring of the supply voltage (PWR-LED)	Yes

Article number	6ES7511-1CK01-0AB0
• Channel status display	Yes
• for channel diagnostics	Yes; For analog inputs/outputs
• Connection display LINK TX/RX	Yes
Supported technology objects	
Motion Control	Yes; Note: The number of technology objects affects the cycle time of the PLC program; selection guide via the TIA Selection Tool
• Number of available Motion Control resources for technology objects	800
• Required Motion Control resources	
– per speed-controlled axis	40
– per positioning axis	80
– per synchronous axis	160
– per external encoder	80
– per output cam	20
– per cam track	160
– per probe	40
• Positioning axis	
– Number of positioning axes at motion control cycle of 4 ms (typical value)	5
– Number of positioning axes at motion control cycle of 8 ms (typical value)	10
Controller	
• PID_Compact	Yes; Universal PID controller with integrated optimization
• PID_3Step	Yes; PID controller with integrated optimization for valves
• PID-Temp	Yes; PID controller with integrated optimization for temperature
Counting and measuring	
• High-speed counter	Yes
Integrated Functions	
Counting functions	
• Continuous counting	Yes
• Counter response parameterizable	Yes
• Hardware gate via digital input	Yes
• Software gate	Yes
• Event-controlled stop	Yes
• Synchronization via digital input	Yes
• Counting range, parameterizable	Yes

Article number	6ES7511-1CK01-0AB0
Comparator	
– Number of comparators	2; per count channel; see manual for details
– Direction dependency	Yes
– Can be changed from user program	Yes
Position detection	
• Incremental acquisition	Yes
• Suitable for S7-1500 Motion Control	Yes
Measuring functions	
• Measuring time, parameterizable	Yes
• Dynamic measurement period adjustment	Yes
• Number of thresholds, parameterizable	2
Measuring range	
– Frequency measurement, min.	0.04 Hz
– Frequency measurement, max.	400 kHz; with quadruple evaluation
– Cycle duration measurement, min.	2.5 µs
– Cycle duration measurement, max.	25 s
Accuracy	
– Frequency measurement	100 ppm; depending on measuring interval and signal evaluation
– Cycle duration measurement	100 ppm; depending on measuring interval and signal evaluation
– Velocity measurement	100 ppm; depending on measuring interval and signal evaluation
Potential separation	
Potential separation digital inputs	
• between the channels	No
• between the channels, in groups of	16
Potential separation digital outputs	
• between the channels	No
• between the channels, in groups of	16
Potential separation channels	
• between the channels and backplane bus	Yes
• Between the channels and load voltage L+	No
Isolation	
Isolation tested with	707 V DC (type test)
Ambient conditions	
Ambient temperature during operation	
• horizontal installation, min.	-25 °C; No condensation
• horizontal installation, max.	60 °C; note derating data for onboard I/O in the manual. Display: 50 °C, at an operating temperature of typically 50 °C, the display is switched off

Article number	6ES7511-1CK01-0AB0
• vertical installation, min.	-25 °C; No condensation
• vertical installation, max.	40 °C; note derating data for onboard I/O in the manual. Display: 40 °C, at an operating temperature of typically 40 °C, the display is switched off
Ambient temperature during storage/transportation	
• min.	-40 °C
• max.	70 °C
Altitude during operation relating to sea level	
• Installation altitude above sea level, max.	5 000 m; Restrictions for installation altitudes > 2 000 m, see manual
Configuration	
Programming	
Programming language	
– LAD	Yes
– FBD	Yes
– STL	Yes
– SCL	Yes
– GRAPH	Yes
Know-how protection	
• User program protection/password protection	Yes
• Copy protection	Yes
• Block protection	Yes
Access protection	
• protection of confidential configuration data	Yes
• Password for display	Yes
• Protection level: Write protection	Yes
• Protection level: Read/write protection	Yes
• Protection level: Complete protection	Yes
Cycle time monitoring	
• lower limit	adjustable minimum cycle time
• upper limit	adjustable maximum cycle time
Dimensions	
Width	85 mm
Height	147 mm
Depth	129 mm
Weights	
Weight, approx.	1 050 g

Power reduction (derating) to total current of digital outputs (per power supply)

The following figure shows the load rating of the digital outputs in relation to the mounting position and the ambient temperature.

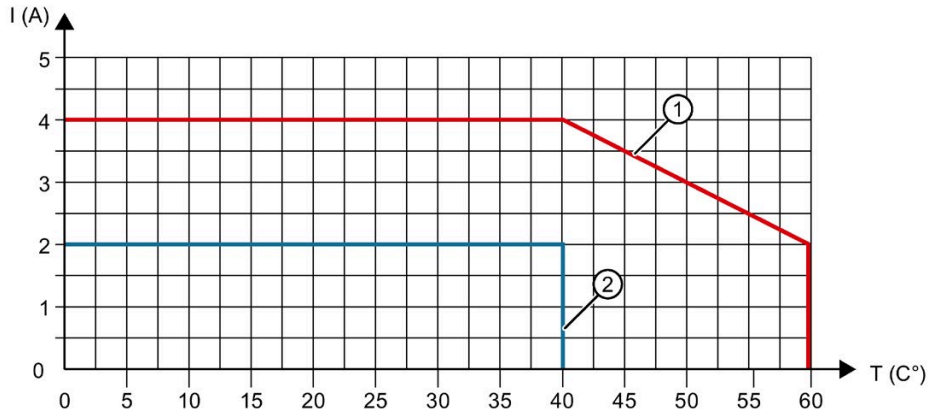

① Horizontal mounting position

② Vertical mounting position

Figure 7-1 Loading capacity of the digital outputs per mounting position

The following trends shows the load rating of the digital outputs when technology functions are used in dependence on the ambient temperature.

① Horizontal mounting position

Figure 7-2 Load rating of the digital outputs when technology functions are used

Power reduction (derating) to total current of digital inputs (per power supply)

The following figure shows the load rating of the current for encoder supplies of digital inputs.

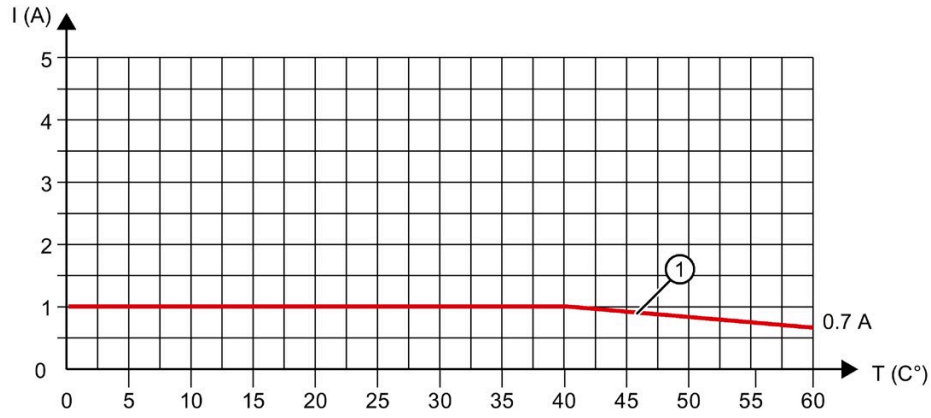

① Horizontal mounting position

Figure 7-3 Load rating of the current for encoder supplies of digital inputs

Simultaneous operation of digital inputs per group

If the maximum voltage at the inputs is 24 V, all the digital inputs may be simultaneously at high level (corresponds to 100% of the digital inputs).

If the maximum voltage at the inputs is 30 V, only 12 digital inputs of 16 digital inputs of one group may be simultaneously at high level (corresponds to 75% of the digital inputs).

General technical specifications

For information on the general technical specifications, such as standards and approvals, electromagnetic compatibility, protection class, etc., refer to the S7-1500, ET 200MP system manual (http://support.automation.siemens.com/WW/view/en/59191792).

Dimension drawings

A

This appendix contains the dimension drawings of the compact CPU installed on a mounting rail. You must take the dimensions into consideration for installation in cabinets, control rooms, etc.

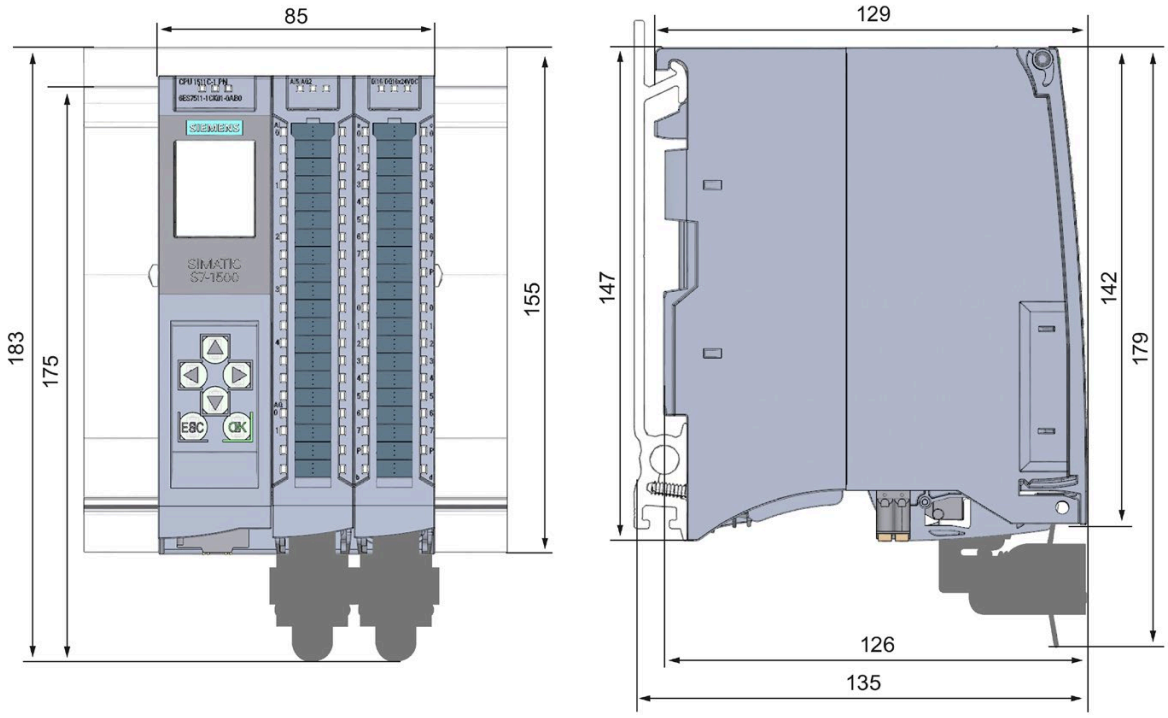

Figure A-1 Dimension drawing of CPU 1511C-1 PN – front and side views

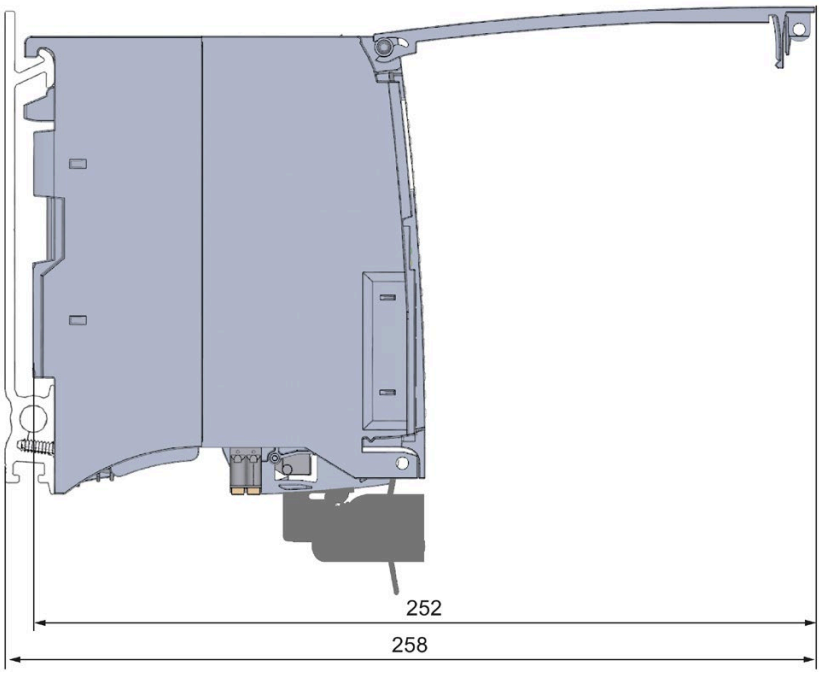

Figure A-2 Dimension drawing of CPU 1511C-1 PN – side view with front panel open

Parameter data records

B

B.1 Parameter assignment and structure of the parameter data records of the analog on-board I/O

Parameter assignment in the user program

You have the option of reassigning parameters for the analog on-board I/O in RUN (for example, measuring ranges of individual channels can be modified in RUN without affecting the other channels).

Changing parameters in RUN

The parameters are transferred to the analog on-board I/O via data records with the WRREC instruction. The parameters set with STEP 7 (TIA Portal) are not changed in the CPU, which means that the parameters set in STEP 7 (TIA Portal) will be valid again after a restart.

The parameters are checked for plausibility by the analog on-board I/O only after the transfer.

Output parameter STATUS

If errors occur when transferring parameters with the "WRREC" instruction, the analog on-board I/O continues operation with the previous parameter assignment. However, a corresponding error code is written to the STATUS output parameter.

You will find a description of the "WRREC" instruction and the error codes in the STEP 7 (TIA Portal) online help.

B.2 Structure of a data record for input channels of the analog on-board I/O

Assignment of data record and channel

The parameters for the 5 analog input channels are located in data records 0 to 4 and are assigned as follows:

- Data record 0 for channel 0
- Data record 1 for channel 1
- Data record 2 for channel 2
- Data record 3 for channel 3
- Data record 4 for channel 4

Data record structure

The figure below shows the structure of data record 0 for channel 0 as an example. The structure is identical for channels 1 to 4. The values in byte 0 and byte 1 are fixed and must not be changed.

You enable a parameter by setting the corresponding bit to "1".

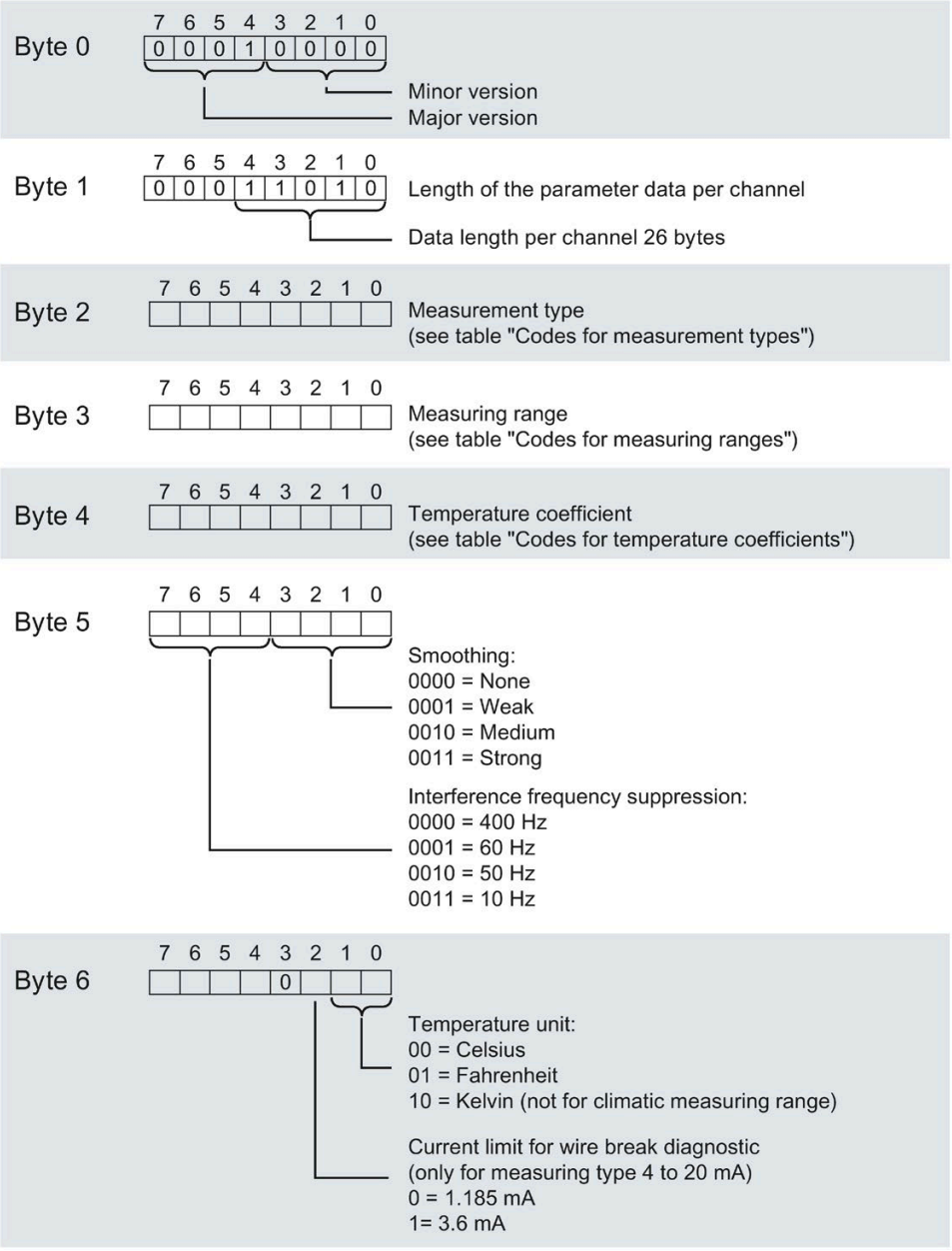

Figure B-1 Structure of data record 0: Bytes 0 to 6

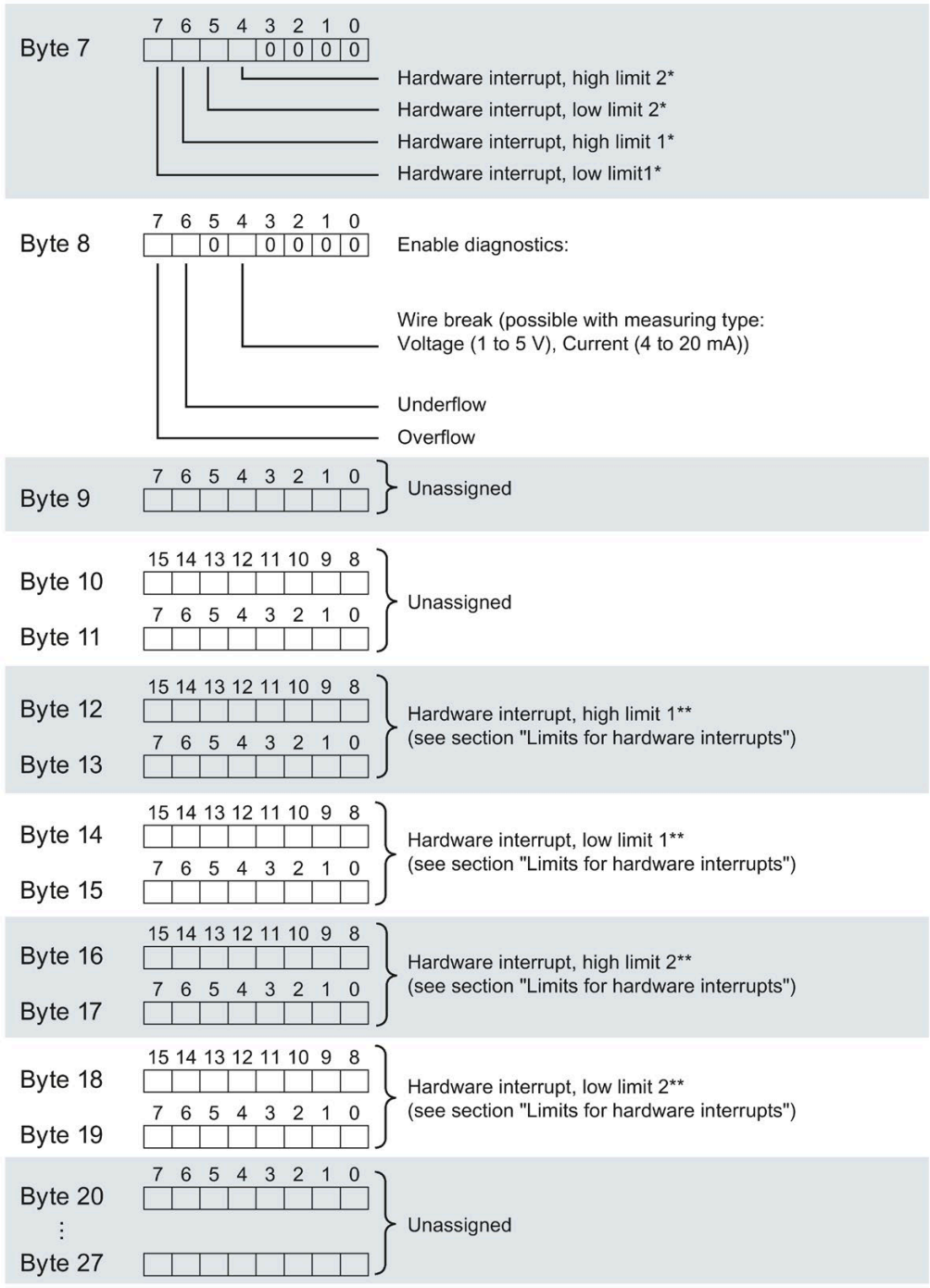

* Activation of hardware limits via data records is only possible when a hardware interrupt OB is assigned to the channel in STEP 7

** High limit must be greater than low limit

Figure B-2 Structure of data record 0: Bytes 7 to 27

Codes for measurement types

The following table contains all measurement types of the inputs of the analog on-board I/O with the corresponding codes. You must enter these codes in byte 2 of the data record for the corresponding channel (refer to the figure Structure of data record 0: Bytes 0 to 6).

Table B- 1 Codes for measurement type

Measurement type	Code
Deactivated	0000 0000
Voltage (valid for channels 0 to 3)	0000 0001
Current, 4-wire measuring transducer (valid for channels 0 to 3)	0000 0010
Resistance (valid for channel 4)	0000 0100
Thermal resistor linear (valid for channel 4)	0000 0111

Codes for measuring ranges

The following table contains all measuring ranges of the inputs of the analog on-board I/O with the corresponding codes. You must enter these codes in each case in byte 3 of the data record for the corresponding channel (refer to the figure Structure of data record 0: Bytes 0 to 6).

Table B- 2 Codes for measuring range

Measuring range	Code
Voltage	
±5 V	0000 1000
±10 V	0000 1001
1 to 5 V	0000 1010
0 to 10 V	0000 1011
Current, 4-wire measuring transducer	
0 to 20 mA	0000 0010
4 to 20 mA	0000 0011
±20 mA	0000 0100
Resistance	
150 Ω	0000 0001
300 Ω	0000 0010
600 Ω	0000 0011
Thermal resistor	
Pt 100 Climate	0000 0000
Ni 100 Climate	0000 0001
Pt 100 Standard	0000 0010
Ni 100 Standard	0000 0011

Codes for temperature coefficient

The following table lists all temperature coefficients for temperature measurement of the thermal resistors along with their codes. You must enter these codes in each case in byte 4 of the data record for the corresponding channel (refer to the figure Structure of data record 0: Bytes 0 to 6)

Table B- 3 Codes for temperature coefficient

Temperature coefficient	Code
Pt xxx	
0.003851	0000 0000
0.003916	0000 0001
0.003902	0000 0010
0.003920	0000 0011
Ni xxx	
0.006180	0000 1000
0.006720	0000 1001

Hardware interrupt limits

The values that can be set for hardware interrupts (high/low limit) must be within the nominal range and overrange/underrange of the relevant measuring range.

The following tables list the permitted hardware interrupt limits. The limits depend on the selected measurement type and measuring range.

Table B- 4 Voltage limits

Voltage		
±5 V, ±10 V	1 to 5 V, 0 to 10 V	
32510	32510	High limit
-32511	-4863	Low limit

Table B- 5 Current and resistance limits

Current		**Resistance**	
±20 mA	4 to 20 mA / 0 to 20 mA	(all configurable measuring ranges)	
32510	32510	32510	High limit
-32511	-4863	1	Low limit

Table B- 6 Limits for thermal resistor Pt 100 Standard and Pt 100 Climate

Thermal resistor						
Pt 100 Standard			Pt 100 Climate			
°C	°F	K	°C	°F	K	
9999	18319	12731	15499	31099	---	High limit
-2429	-4053	303	-14499	-22899	---	Low limit

Table B- 7 Limits for thermal resistor Ni 100 Standard and Ni 100 Climate

Thermal resistor						
Ni 100 Standard			Ni 100 Climate			
°C	°F	K	°C	°F	K	
2949	5629	5681	15499	31099	---	High limit
-1049	-1569	1683	-10499	-15699	---	Low limit

B.3 Structure of a data record for output channels of the analog on-board I/O

Assignment of data record and channel

The parameters for the 2 analog output channels are located in data records 64 and 65 and are assigned as follows:

- Data record 64 for channel 0
- Data record 65 for channel 1

Data record structure

The figure below shows the structure of data record 64 for channel 0 as an example. The structure is identical for channel 1. The values in byte 0 and byte 1 are fixed and must not be changed.

You enable a parameter by setting the corresponding bit to "1".

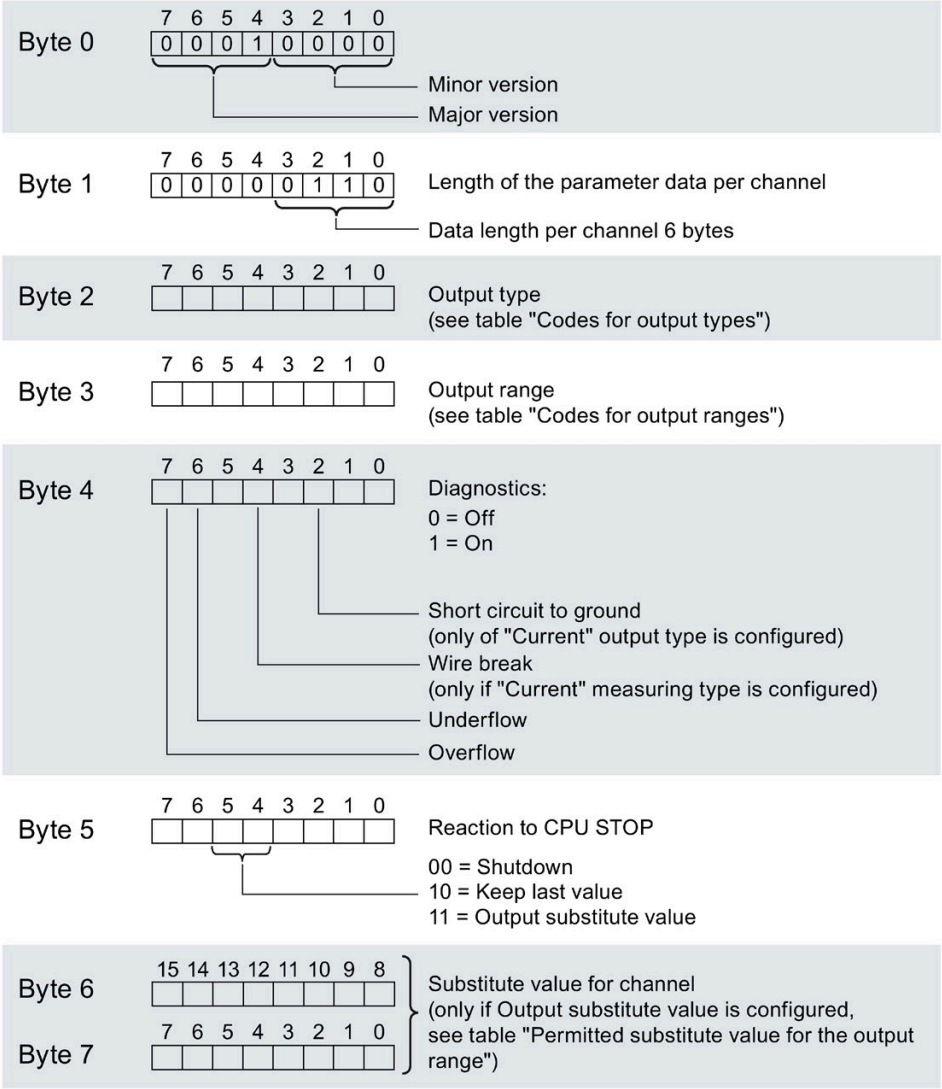

Figure B-3 Structure of data record 64: Bytes 0 to 7

Codes for the output type

The following table contains all output types of the outputs of the analog on-board I/O with the corresponding codes. You must enter these codes in each case in byte 2 of the data record for the corresponding channel (see the previous figure).

Table B- 8 Codes for the output type

Output type	Code
Disabled	0000 0000
Voltage	0000 0001
Current	0000 0010

Codes for output ranges

The following table contains all output ranges for voltage and current of the outputs of the analog on-board I/O with the corresponding codes. You must enter these codes in each case in byte 3 of the corresponding data record (see previous figure).

Table B- 9 Code for the output range

Output range for voltage	Code
1 to 5 V	0000 0011
0 to 10 V	0000 0010
±10 V	0000 0000
Output range for current	**Code**
0 to 20 mA	0000 0001
4 to 20 mA	0000 0010
±20 mA	0000 0000

Permitted substitute values

The following table lists all output ranges for the permitted substitute values. You must enter these substitute values in each case in bytes 6 and 7 of the data record for the corresponding channel (see the previous figure). You can find the binary representation of the output ranges in the section Representation of output ranges (Page 196).

Table B- 10 Permitted substitute value for the output range

Output range	Permitted substitute value
±10 V	-32512 ... +32511
1 to 5 V	-6912 ... +32511
0 to 10 V	0 ... +32511
±20 mA	-32512 ... +32511
4 to 20 mA	-6912 ... +32511
0 to 20 mA	0 ... +32511

B.4 Parameter assignment and structure of the parameter data records of the digital on-board I/O

Parameter assignment in the user program

You have the option of reassigning parameters for the digital on-board I/O in RUN (for example, values for input delay of individual channels can be modified in RUN without affecting the other channels).

Changing parameters in RUN

The parameters are transferred to the digital on-board I/O via data records 0 to 15 with the WRREC instruction. The parameters set with STEP 7 (TIA Portal) are not changed in the CPU, which means the parameters set in STEP 7 (TIA Portal) will be valid again after a restart.

The parameters are only checked for plausibility after the transfer.

Output parameter STATUS

If errors occur when transferring parameters with the "WRREC" instruction, the digital on-board I/O continues operation with the previous parameter assignment. However, a corresponding error code is written to the STATUS output parameter.

You will find a description of the "WRREC" instruction and the error codes in the STEP 7 (TIA Portal) online help.

B.5 Structure of a data record for input channels of the digital on-board I/O

Assignment of data record and channel

The parameters for the 16 digital input channels are located in data records 0 to 15 and are assigned as follows:

- Data record 0 for channel 0
- Data record 1 for channel 1
- ...
- Data record 14 for channel 14
- Data record 15 for channel 15

Data record structure

The figure below shows the structure of data record 0 for channel 0 as an example. The structure is identical for channels 1 to 15. The values in byte 0 and byte 1 are fixed and must not be changed.

You enable a parameter by setting the corresponding bit to "1".

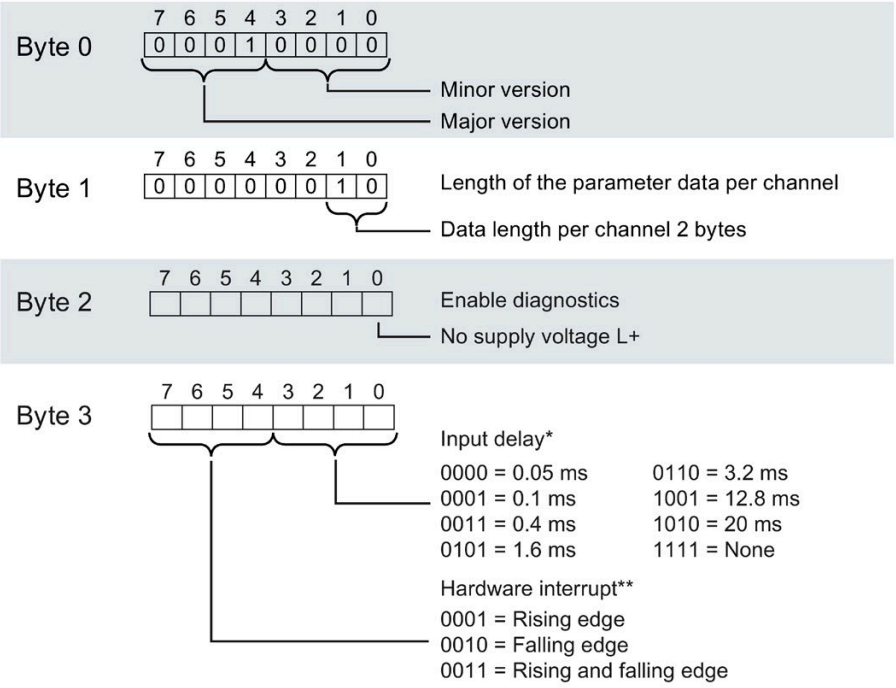

* In isochronous mode 0.05 ms (cannot be changed)

** Activation of hardware limits via data records is only possible when a hardware interrupt OB is assigned to the channel in STEP 7

Figure B-4 Structure of data record 0: Bytes 0 to 3

B.6 Structure of a data record for output channels of the digital on-board I/O

Assignment of data record and channel

The parameters for the 16 digital output channels are located in data records 64 to 79 and are assigned as follows:

- Data record 64 for channel 0
- Data record 65 for channel 1
- ...
- Data record 78 for channel 14
- Data record 79 for channel 15

Data record structure

The figure below shows the structure of data record 64 for channel 0 as an example. The structure is identical for channels 1 to 15. The values in byte 0 and byte 1 are fixed and must not be changed.

You enable a parameter by setting the corresponding bit to "1".

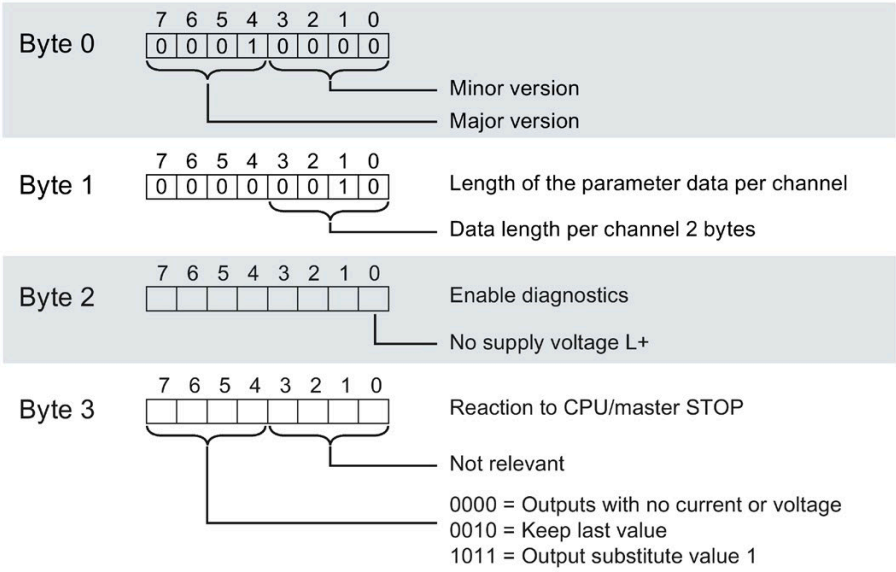

Figure B-5 Structure of data record 64: Bytes 0 to 3

B.7 Parameter data records of the high-speed counters

You can change the parameters of the High Speed Counter in RUN. The WRREC instruction is used to transfer the parameters to the High Speed Counter using data record 128.

If errors occur when transferring or validating parameters with the WRREC instruction, the High Speed Counter continues operation with the previous parameter assignment. The STATUS output parameter then contains a corresponding error code. If no error has occurred, the length of the data actually transferred is entered in the STATUS output parameter.

You will find a description of the "WRREC" instruction and the error codes in the STEP 7 (TIA Portal) online help.

Data record structure

The following table shows you the structure of data record 128 with the counter channel. The values in byte 0 to byte 3 are fixed and must not be changed. The value in byte 4 may only be changed by parameter reassignment and not in RUN mode.

Table B- 11 Parameter data record 128 - HSC parameter header

Bit → / Byte	7	6	5	4	3	2	1	0
0	Major Version = 1				Minor Version = 0			
1	Length of parameter data of the channel = 48							
2	Reserved = 0 [1]							
3								

[1] Reserved bits must be set to 0

Table B- 12 Parameter data record 128 - Operating mode

Bit → / Byte	7	6	5	4	3	2	1	0
	Operating mode							
4	Reserved = 0 [1]				Operating mode:			
					0000_B: Deactivated			
					0001_B: Counting			
					0010_B: Measuring			
					0011 to 1111_B: Reserved			

[1] Reserved bits must be set to 0

Table B- 13 Parameter data record 128 - Basic parameters

Bit → / Byte	7	6	5	4	3	2	1	0
	Basic parameters							
5	Reserved = 0 [1]					Enable additional diagnostic interrupts[2]	Reaction to CPU STOP:	
							00_B: Output substitute value	
							01_B: Keep last value	
							10_B: Continue	
							11_B: Reserved	

[1] Reserved bits must be set to 0

[2] Must be set to 1 for the activation of the diagnostic interrupts "Missing supply voltage L+, "Illegal A/B signal ratio" and "Hardware interrupt lost"

Table B- 14 Parameter data record 128 - Counter inputs

Bit → / Byte	7	6	5	4	3	2	1	0
	Counter inputs							
6	Reserved = 0 [1]		Signal evaluation:		Signal type:			
			00_B: Single		0000_B: Pulse (A)			
			01_B: Double		0001_B: Pulse (A) and direction (B)			
			10_B: Quadruple		0010_B: Count up (A), count down (B)			
			11_B: Reserved		0011_B: Incremental encoder (A, B phase-shifted)			
					0100_B: Incremental encoder (A, B, N)			
					0101 to 1111_B: Reserved			
7	Response to signal N:		Invert direction	Reserved = 0 [1]	Filter frequency.			
	00_B: No reaction to signal N				0000_B: 100 Hz			
					0001_B: 200 Hz			
	01_B: Synchronization at signal N				0010_B: 500 Hz			
					0011_B: 1 kHz			
	10_B: Capture at signal N				0100_B: 2 kHz			
	11_B: Reserved				0101_B: 5 kHz			
					0110_B: 10 kHz			
					0111_B: 20 kHz			
					1000_B: 50 kHz			
					1001_B: 100 kHz			
					1010_B: Reserved			
					1011 to 1111_B: Reserved			

[1] Reserved bits must be set to 0

Table B- 15 Parameter data record 128 - Hardware interrupts

Bit → / Byte	7	6	5	4	3	2	1	0
	Hardware interrupts[1]							
8	Reserved = 0 [1]	Reserved = 0 [1]	Reserved = 0 [1]	Direction reversal	Underflow (low counting limit violated)	Overflow (high counting limit violated)	Gate stop	Gate start
9	Synchronization of the counter by an external signal	New capture value available	Reserved = 0 [1]	Zero crossing	Reserved = 0 [1]	Comparison event for DQ1 occurred	Reserved = 0 [1]	Comparison event for DQ0 occurred

[1] Reserved bits must be set to 0

Table B- 16 Parameter data record 128 - Behavior DQ0/1

Bit → / Byte	7	6	5	4	3	2	1	0
	Behavior of DQ0/1							
10	Set output (DQ1):				Set output (DQ0):			
	0000_B: Use by user program				0000_B: Use by user program			
	0001_B: Counting: Between comparison value 1 and high counting limit; Measuring: Measured value >= Comparison value 1				0001_B: Counting: Between comparison value 0 and high counting limit; Measuring: Measured value >= Comparison value 0			
	0010_B: Counting: Between comparison value 1 and low counting limit; Measuring: Measured value <= Comparison value 1				0010_B: Counting: Between comparison value 0 and low counting limit; Measuring: Measured value <= Comparison value 0			
	0011_B: Counting: At comparison value 1 for one pulse duration; Measuring: Reserved				0011_B: Counting: At comparison value 0 for one pulse duration; Measuring: Reserved			
	0100_B: Between comparison value 0 and 1				0100_B: Reserved			
	0101_B: Counting: After set command from CPU until comparison value 1; Measuring: Reserved				0101_B: Counting: After set command from CPU until comparison value 0; Measuring: Reserved			
	0110_B: Counting: Reserved Measuring: Not between comparison value 0 and 1				0110 to 1111_B: Reserved			
	0111 to 1111_B: Reserved							
11	Count direction (DQ1):		Count direction (DQ0):		Reserved = 0 [1]		Substitute value for DQ1	Substitute value for DQ0
	00_B: Reserved		00_B: Reserved					
	01_B: Up		01_B: Up					
	10_B: Down		10_B: Down					
	11_B: In both directions		11_B: In both directions					
12	Pulse duration (DQ0):							
13	WORD: Value range in ms/10: 0 to 65535_D							
14	Pulse duration (DQ1):							
15	WORD: Value range in ms/10: 0 to 65535_D							

[1] Reserved bits must be set to 0

Table B- 17 Parameter data record 128 - Behavior DI0

<table>
<tr><th>Bit →
Byte</th><th>7</th><th>6</th><th>5</th><th>4</th><th>3</th><th>2</th><th>1</th><th>0</th></tr>
<tr><td></td><td colspan="8">Behavior of DI0</td></tr>
<tr><td rowspan="10">16</td><td rowspan="4">Behavior of count value after Capture (DI0):</td><td colspan="2">Edge selection (DI0):</td><td rowspan="2">Level selection (DI0):</td><td rowspan="9">Reserved = 0 [1]</td><td colspan="3">Set function of the DI (DI0):</td></tr>
<tr><td colspan="2">00B: Reserved</td><td colspan="3">000B: Gate start/stop (level-controlled)</td></tr>
<tr><td colspan="2">01B: On a rising edge</td><td rowspan="2">0B: Active at high level</td><td colspan="3">001B: Gate start (edge-controlled)</td></tr>
<tr><td colspan="2">10B: On a falling edge</td><td colspan="3">010B: Gate stop (edge-controlled)</td></tr>
<tr><td rowspan="2">0B: Continue counting</td><td colspan="2" rowspan="2">11B: On rising and falling edge</td><td rowspan="5">1B: Active at low level</td><td colspan="3">011B: Synchronization</td></tr>
<tr><td colspan="3">100B: Enable synchronization at signal N</td></tr>
<tr><td rowspan="3">1B: Set to start value and continue counting</td><td colspan="2" rowspan="3"></td><td colspan="3">101B: Capture</td></tr>
<tr><td colspan="3">110B: Digital input without function</td></tr>
<tr><td colspan="3">111B: Reserved</td></tr>
</table>

[1] Reserved bits must be set to 0

Table B- 18 Parameter data record 128 - Behavior DI1

<table>
<tr><th>Bit →
Byte</th><th>7</th><th>6</th><th>5</th><th>4</th><th>3</th><th>2</th><th>1</th><th>0</th></tr>
<tr><td>17</td><td colspan="8">Behavior of DI1:
See byte 16</td></tr>
<tr><td>18</td><td colspan="8">Reserved = 0 [1]</td></tr>
<tr><td rowspan="3">19</td><td>Sync option</td><td colspan="3" rowspan="3">Reserved = 0 [1]</td><td colspan="4" rowspan="3">Reserved = 0 [1]</td></tr>
<tr><td>0B: Once</td></tr>
<tr><td>1B: Periodically</td></tr>
</table>

[1] Reserved bits must be set to 0

Table B- 19 Parameter data record 128 - Behavior DI1

Bit → / Byte	7	6	5	4	3	2	1	0
	Values							
20-23	High counting limit: DWORD: Value range: –2147483648 to 2147483647$_D$ or 80000000 to 7FFFFFFF$_H$							
24-27	Comparison value 0: Counting mode: DWORD Value range: –2147483648 to 2147483647$_D$ or 80000000 to 7FFFFFFF$_H$; Measuring mode: REAL Floating-point number in the set unit of the measured variable							
28-31	Comparison value 1: Counting mode: DWORD Value range: –2147483648 to 2147483647$_D$: or 80000000 to 7FFFFFFF$_H$; Measuring mode: REAL Floating-point number in the set unit of the measured variable							
32-35	Start value: DWORD: Value range: –2147483648 to 2147483647$_D$ or 80000000 to 7FFFFFFF$_H$							
36-39	Low counting limit: DWORD: Value range: –2147483648 to 2147483647$_D$ or 80000000 to 7FFFFFFF$_H$							
40-43	Update time: DWORD: Value range in µs: 0 to 25000000$_D$							

Table B- 20 Parameter data record 128 - Counter behavior at limits and at gate start

Bit → / Byte	7	6	5	4	3	2	1	0
	Counter behavior at limits and at gate start							
44	Response to gate start:		Response to counting limit violation:			Reset at counting limit violation:		
	00$_B$: Set to start value		000$_B$: Stop counting			000$_B$: To other counting limit		
	01$_B$: Continue with current value		001$_B$: Continue counting			001$_B$: On start value		
	10 to 11$_B$: Reserved		010 to 111$_B$: Reserved			010 to 111$_B$: Reserved		

Table B- 21 Parameter data record 128 - Specify measured value

Bit → / Byte	7	6	5	4	3	2	1	0
	Specify measured value							
45	Reserved = 0 [1)]			Time base for velocity measurement:			Measured variable:	
				000$_B$: 1 ms			00$_B$: Frequency	
				001$_B$: 10 ms			01$_B$: Period duration	
				010$_B$: 100 ms			10$_B$: Velocity	
				011$_B$: 1 s			11$_B$: Reserved	
				100$_B$: 60 s/1 min				
				101 to 111$_B$: Reserved				
46	Increments per unit: WORD: Value range: 1 to 65535$_D$							
47								

Bit → / Byte	7	6	5	4	3	2	1	0
48	Set hysteresis range: Value range: 0 to 255D							
49	Use of HSC DI0 0B: Not used 1B: Used	Reserved = 0 [1]		Selection HSC DI0 Value range: HSC1: 00001B: Front connector X11, terminal 2 (DI1) 00010B: Front connector X11, terminal 3 (DI2) 00011B: Front connector X11, terminal 4 (DI3) 00100B: Front connector X11, terminal 5 (DI4) 00101B: Front connector X11, terminal 6 (DI5) 00110B: Front connector X11, terminal 7 (DI6) 00111B: Front connector X11, terminal 8 (DI7) HSC2: 00000B: Front connector X11, terminal 1 (DI0) 00001B: Front connector X11, terminal 2 (DI1) 00010B: Front connector X11, terminal 3 (DI2) 00100B: Front connector X11, terminal 5 (DI4) 00101B: Front connector X11, terminal 6 (DI5) 00110B: Front connector X11, terminal 7 (DI6) 00111B: Front connector X11, terminal 8 (DI7) HSC3: 00000B: Front connector X11, terminal 1 (DI0) 00001B: Front connector X11, terminal 2 (DI1) 00010B: Front connector X11, terminal 3 (DI2) 00011B: Front connector X11, terminal 4 (DI3) 00100B: Front connector X11, terminal 5 (DI4) 00101B: Front connector X11, terminal 6 (DI5) 00111B: Front connector X11, terminal 8 (DI7) HSC4: 01001B: Front connector X11, terminal 12 (DI9) 01010B: Front connector X11, terminal 13 (DI10) 01011B: Front connector X11, terminal 14 (DI11) 01100B: Front connector X11, terminal 15 (DI12) 01101B: Front connector X11, terminal 16 (DI13) 01110B: Front connector X11, terminal 17 (DI14) 01111B: Front connector X11, terminal 18 (DI15) HSC5: 01000B: Front connector X11, terminal 11 (DI8) 01001B: Front connector X11, terminal 12 (DI9) 01010B: Front connector X11, terminal 13 (DI10) 01100B: Front connector X11, terminal 15 (DI12) 01101B: Front connector X11, terminal 16 (DI13) 01110B: Front connector X11, terminal 17 (DI14) 01111B: Front connector X11, terminal 18 (DI15) HSC6: 01000B: Front connector X11, terminal 11 (DI8) 01001B: Front connector X11, terminal 12 (DI9) 01010B: Front connector X11, terminal 13 (DI10) 01011B: Front connector X11, terminal 14 (DI11) 01100B: Front connector X11, terminal 15 (DI12) 01101B: Front connector X11, terminal 16 (DI13) 01111B: Front connector X11, terminal 18 (DI15) All other values: Reserved The value range also applies for the 'Selection HSC DI1' parameter in the same way.					

Bit → / Byte	7	6	5	4	3	2	1	0
50	Use of HSC DI1 0B: Not used 1B: Used	Reserved = 0 [1]		Selection HSC DI1 Value range: The value range also applies for the 'Selection HSC DI0' parameter in the same way.				
51	Use of HSC DQ1 0B: Not used 1B: Used	Reserved = 0 [1]		Selection HSC DQ1 Value range: HSC1: 00001B: Front connector X11, terminal 22 (DQ1) 01001B: Front connector X11, terminal 32 (DQ9) HSC2: 00011B: Front connector X11, terminal 24 (DQ3) 01011B: Front connector X11, terminal 34 (DQ11) HSC3: 00100B: Front connector X11, terminal 25 (DQ4) 01100B: Front connector X11, terminal 35 (DQ12) HSC4: 00101B: Front connector X11, terminal 26 (DQ5) 01101B: Front connector X11, terminal 36 (DQ13) HSC5: 00111B: Front connector X11, terminal 28 (DQ7) 01111B: Front connector X11, terminal 38 (DQ15) HSC6: 00110B: Front connector X11, terminal 27 (DQ6) 01110B: Front connector X11, terminal 37 (DQ14) All other values: Reserved				

[1] Reserved bits must be set to 0

B.8 Parameter data records (PWM)

You have the option of reassigning the pulse width modulation parameters in RUN. The parameters are transferred with the instruction WRREC via the data record 128 to the PWM submodule.

If errors occur when transferring or validating parameters with the WRREC instruction, the module continues operation with the previous parameter assignment. The output parameter STATUS then contains a corresponding error code. If no error has occurred, the length of the data actually transferred is entered in the output parameter STATUS.

You can find a description of the "WRREC" instruction and the error codes in the STEP 7 (TIA Portal) online help.

Data record structure

The following table shows the structure of the data record 128 for the pulse width modulation. The values in byte 0 to byte 3 are fixed and must not be changed.

Table B- 22 Parameter data record 128

Bit → / Byte	7	6	5	4	3	2	1	0
0	Major Version = 1				Minor Version = 0			
1	Length of the parameter data of the channel in bytes = 12							
2	Reserved = 0 [1]							
3								
4	Current control	Dithering	High-speed output		Operating mode			
	0_B: Deactivated	0_B: Deactivated	0_B: Deactivated		0000_B: Reserved			
	1_B: Reserved	1_B: Reserved	01_B: Activated		0001_B: PWM (pulse-width modulation)			
			10_B-11_B: Reserved		0010_B: Reserved			
					0011_B: Reserved			
					0100_B: Frequency output			
					0110_B to 1110_B: Reserved			
					1111_B: Deactivated			
5	Reserved = 0 [1]			Reserved = 0 [1]		Diagnostics interrupt	Reaction to CPU STOP	
						0_B: Deactivated	00_B: DQ substitute value	
						1_B: Activated	01_B: Reserved	
							10_B: Operating mode for continuation of operation	
							11_B: Reserved	

Bit → / Byte	7	6	5	4	3	2	1	0
6	Reserved = 0 [1]			Pulse output (DQA) selection Range of values for PWM1: 00000_B: Front connector X11, terminal 21 (DQ0) 01000_B: Front connector X11, terminal 31 (DQ8) Range of values for PWM2: 00010_B: Front connector X11, terminal 23 (DQ2) 01010_B: Front connector X11, terminal 33 (DQ10) Range of values for PWM3: 00100_B: Front connector X11, terminal 25 (DQ4) 01100_B: Front connector X11, terminal 35 (DQ12) Range of values for PWM4: 00110_B: Front connector X11, terminal 27 (DQ6) 01110_B: Front connector X11, terminal 37 (DQ14) All other values: Reserved				
7	Reserved = 0 [1]		Output format		Reserved = 0 [1]	Reserved = 0 [1]	Reserved = 0 [1]	Substitute value DQA
			PWM	Frequency output				0_B: 0 V
			00_B: S7 analog format	00_B: Reserved				1_B: 24 V
			01_B: per 100 (%)	01_B: 1 Hz				
			10_B: per 1000	10_B: Reserved				
			11_B: per 10 000	11_B: Reserved				
8-11	DWORD minimum pulse duration							
	PWM: Minimum pulse duration (default = 0 µs)							
	Frequency output: Reserved							
12-15	DWORD period duration							
	PWM: Period duration Supported value range depending on configured values for "Pulse output (DQA)" and "High-speed output (0.1 A)" • for 100 kHz DQ (high-speed output activated): 10 µs to 10 000 000 µs (10 s) • for 10 kHz DQ (high-speed output deactivated): 100 µs to 10 000 000 µs (10 s) • for 100 Hz DQ (high-speed output deactivated): 10 000 µs (10 ms) to 10 000 000 µs (10 s) Default = 2 000 000 µs (2 s)							
	Frequency output: Reserved							

[1] Reserved bits must be set to 0

Analog value processing

C

C.1 Conversion method

Conversion

An integrated analog-to-digital converter converts the analog signal into a digital signal so that the compact CPU can process the analog signal read in by an analog channel. Once the CPU has processed the digital signal, an integrated digital-to-analog converter converts the output signal into an analog current or voltage value.

Interference frequency suppression

The interference frequency suppression of the analog inputs suppresses the interference caused by the frequency of the AC voltage network used. The frequency of the AC voltage network may interfere with measured values, particularly for measurements within narrow voltage ranges.

You set the line frequency with which the plant operates (400, 60, 50 or 10 Hz) using the "Interference frequency suppression" parameter in STEP 7 (TIA Portal). The "Interference frequency suppression" parameter can only be set module-wide (for all input channels). The interference frequency suppression filters out the set interference frequency (400/60/50/10 Hz) as well as multiples of it. The selected interference frequency suppression also defines the integration time. The conversion time changes depending on the set interference frequency suppression.

For example, an interference frequency suppression of 50 Hz corresponds to an integration time of 20 ms. The analog on-board I/O supplies one measured value to the CPU every millisecond over a period of 20 ms. This measured value corresponds to the floating mean value of the last 20 measurements.

The following figure shows how this works using a 400 Hz interference frequency suppression as an example. A 400 Hz interference frequency suppression corresponds to an integration time of 2.5 ms. The analog on-board I/O supplies a measured value to the CPU every 1.25 milliseconds within the integration time.

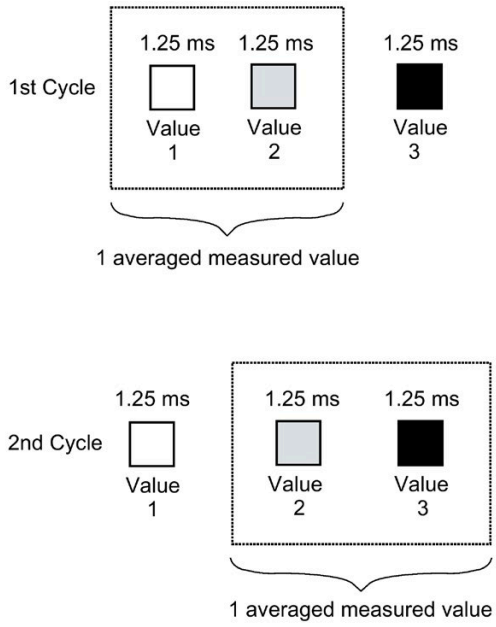

Figure C-1 Interference frequency suppression 400 Hz

The following figure shows how this works using a 60 Hz interference frequency suppression as an example. A 60 Hz interference frequency suppression corresponds to an integration time of 16.6 ms. The analog on-board I/O supplies a measured value to the CPU every 1.04 milliseconds within the integration time.

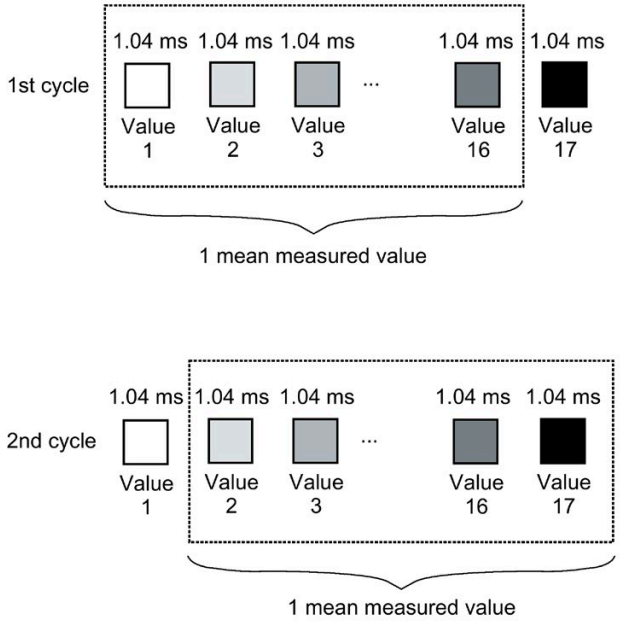

Figure C-2 Interference frequency suppression 60 Hz

The following figure shows how this works using a 50 Hz interference frequency suppression as an example. A 50 Hz interference frequency suppression corresponds to an integration time of 20 ms. The analog on-board I/O supplies a measured value to the CPU every millisecond within the integration time.

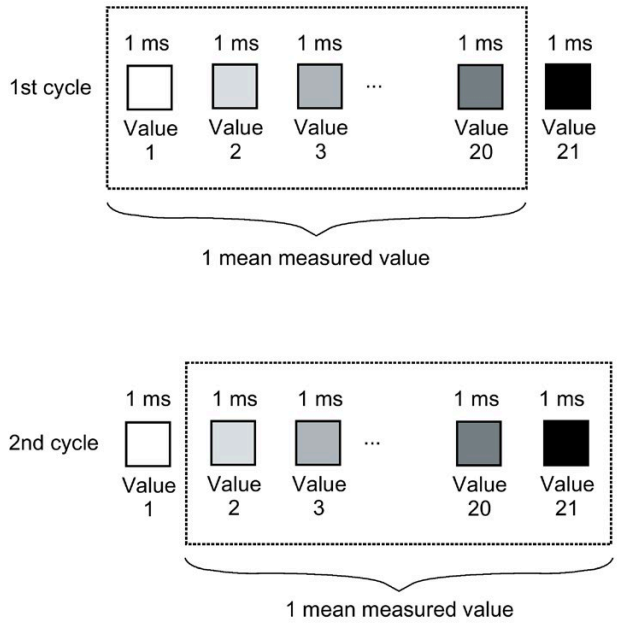

Figure C-3 Interference frequency suppression 50 Hz

The following figure shows how this works using a 10 Hz interference frequency suppression as an example. A 10 Hz interference frequency suppression corresponds to an integration time of 100 ms. The analog on-board I/O supplies a measured value to the CPU every millisecond within the integration time.

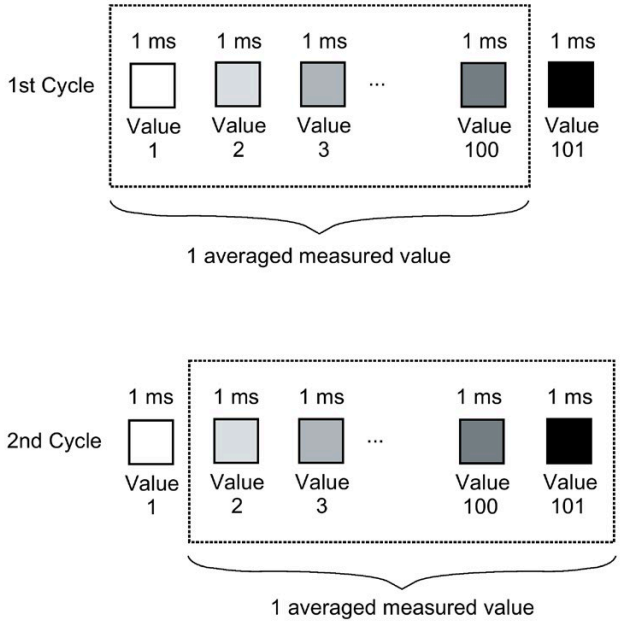

Figure C-4 Interference frequency suppression 10 Hz

The following table provides an overview of the configurable line frequencies, the integration time and the intervals within which measured values are supplied to the CPU.

Table C- 1 Overview of the configurable line frequencies

Interference frequency suppression	Integration time	Interval
400 Hz	2.5 ms	2 x 1.25 ms
60 Hz	16.6 ms	16 x 1.04 ms
50 Hz	20 ms	20 x 1 ms
10 Hz	100 ms	100 x 1 ms

Note

Basic error with an integration time of 2.5 ms.

With an integration time of 2.5 ms, the measured value is changed by the following values based on the additionally obtained basic error and noise:

- with "voltage", "current" and "resistance" by ±0.1 %
- with "Thermal resistor Pt 100 Standard" by ±0.4 K
- with "Thermal resistor Pt 100 Climatic" by ±0.3 K
- with "Thermal resistor Ni 100 Standard" by ±0.2 K
- with "Thermal resistor Ni 100 Climatic" by ±0.1 K

A detailed description of the basic and operating error is available in the function manual Analog value processing (http://support.automation.siemens.com/WW/view/en/67989094).

Smoothing

The individual measured values are smoothed by filtering. The smoothing can be set in 4 levels for individual channels in STEP 7 (TIA Portal).

Smoothing time = Smoothing (k) x configured integration time

The following figure shows the time it takes for the smoothed analog value to reach approximately 100% depending on the set smoothing. This is valid for all signal changes at the analog input.

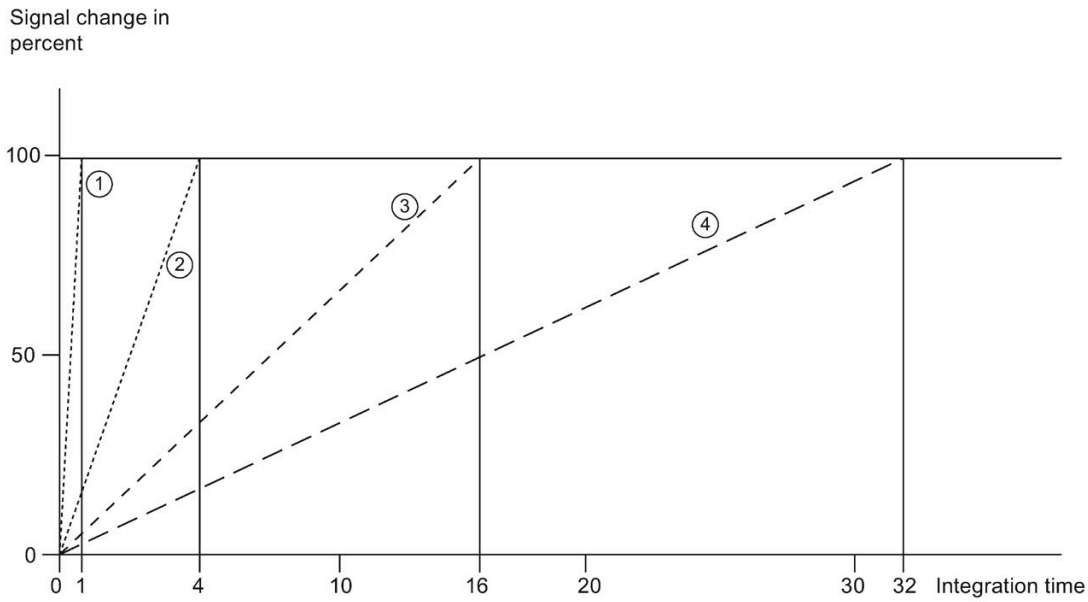

① None (smoothing = 1 x integration time)
② Weak (smoothing = 4 x integration time) *
③ Medium (smoothing = 16 x integration time) *
④ Strong (smoothing = 32 x integration time) *

* The smoothing time can increase by 1 x integration time.

Figure C-5 Smoothing time depending on the set smoothing level

The following table shows the time it takes for the smoothed analog value to reach approximately 100% depending on the set smoothing and the set interference frequency suppression.

Table C- 2 Smoothing time depending on the set smoothing level and interference frequency suppression

Selection of the smoothing (mean value generation from scan values)	Interference frequency suppression/smoothing time			
	400 Hz	60 Hz	50 Hz	10 Hz
None	2.5 ms	16.6 ms	20 ms	100 ms
Weak	10 ms	66.4 ms	80 ms	400 ms
Medium	40 ms	265.6 ms	320 ms	1600 ms
Strong	80 ms	531.2 ms	640 ms	3200 ms

Cycle time

The cycle times (1 ms, 1.04 ms and 1.25 ms) result from the configured interference frequency suppression. The cycle time is independent of the number of configured analog channels. The values for the analog input channels are detected sequentially in each cycle.

Reference

For more information on conversion time, cycle time and conversion method, refer to the Analog value processing (http://support.automation.siemens.com/WW/view/en/67989094) function manual.

C.2 Representation of analog values

Introduction

The analog values for all measuring ranges that you can use with the analog on-board I/O are represented in this appendix.

For cross-product information on "analog value processing", refer to the Analog value processing (http://support.automation.siemens.com/WW/view/en/67989094) function manual.

Measured value resolution

Each analog value is entered left aligned into the tags. The bits marked with "x" are set to "0".

Note

This resolution does not apply to temperature values. The digitalized temperature values are the result of a conversion in the analog on-board I/O.

Table C- 3 Resolution of the analog values

Resolution in bits including sign	Values		Analog value	
	Decimal	Hexadecimal	High byte	Low byte
16	1	1_H	Sign 0 0 0 0 0 0 0	0 0 0 0 0 0 0 1

C.3 Representation of input ranges

The tables below set out the digitized representation of the input ranges separately for bipolar and unipolar input ranges. The resolution is 16 bits.

Table C- 4 Bipolar input ranges

Dec. value	Measured value in %	Data word																Range
		2^{15}	2^{14}	2^{13}	2^{12}	2^{11}	2^{10}	2^{9}	2^{8}	2^{7}	2^{6}	2^{5}	2^{4}	2^{3}	2^{2}	2^{1}	2^{0}	
32767	>117.589	0	1	1	1	1	1	1	1	1	1	1	1	1	1	1	1	Overflow
32511	117.589	0	1	1	1	1	1	1	0	1	1	1	1	1	1	1	1	Overrange
27649	100.004	0	1	1	0	1	1	0	0	0	0	0	0	0	0	0	1	
27648	100.000	0	1	1	0	1	1	0	0	0	0	0	0	0	0	0	0	Nominal range
1	0.003617	0	0	0	0	0	0	0	0	0	0	0	0	0	0	0	1	
0	0.000	0	0	0	0	0	0	0	0	0	0	0	0	0	0	0	0	
-1	-0.003617	1	1	1	1	1	1	1	1	1	1	1	1	1	1	1	1	
-27648	-100.000	1	0	0	1	0	1	0	0	0	0	0	0	0	0	0	0	
-27649	-100.004	1	0	0	1	0	0	1	1	1	1	1	1	1	1	1	1	Underrange
-32512	-117.593	1	0	0	0	0	0	0	1	0	0	0	0	0	0	0	0	
-32768	<-117.593	1	0	0	0	0	0	0	0	0	0	0	0	0	0	0	0	Underflow

Table C- 5 Unipolar input ranges

Dec. value	Measured value in %	Data word																Range
		2^{15}	2^{14}	2^{13}	2^{12}	2^{11}	2^{10}	2^{9}	2^{8}	2^{7}	2^{6}	2^{5}	2^{4}	2^{3}	2^{2}	2^{1}	2^{0}	
32767	>117.589	0	1	1	1	1	1	1	1	1	1	1	1	1	1	1	1	Overflow
32511	117.589	0	1	1	1	1	1	1	0	1	1	1	1	1	1	1	1	Overrange
27649	100.004	0	1	1	0	1	1	0	0	0	0	0	0	0	0	0	1	
27648	100.000	0	1	1	0	1	1	0	0	0	0	0	0	0	0	0	0	Nominal range
1	0.003617	0	0	0	0	0	0	0	0	0	0	0	0	0	0	0	1	
0	0.000	0	0	0	0	0	0	0	0	0	0	0	0	0	0	0	0	
-1	-0.003617	1	1	1	1	1	1	1	1	1	1	1	1	1	1	1	1	Underrange
-4864	-17.593	1	1	1	0	1	1	0	1	0	0	0	0	0	0	0	0	
-32768	<-17.593	1	0	0	0	0	0	0	0	0	0	0	0	0	0	0	0	Underflow

C.3.1 Representation of analog values in voltage measuring ranges

The following tables list the decimal and hexadecimal values (codes) of the possible voltage measuring ranges.

Table C- 6 Voltage measuring ranges ±10 V, ±5 V

Values		Voltage measuring range		Range
dec.	**hex.**	**±10 V**	**±5 V**	
32767	7FFF	>11.759 V	>5.879 V	Overflow
32511	7EFF	11.759 V	5.879 V	Overrange
27649	6C01			
27648	6C00	10 V	5 V	Nominal range
20736	5100	7.5 V	3.75 V	
1	1	361.7 µV	180.8 µV	
0	0	0 V	0 V	
-1	FFFF			
-20736	AF00	-7.5 V	-3.75 V	
-27648	9400	-10 V	-5 V	
-27649	93FF			Underrange
-32512	8100	-11.759 V	-5.879 V	
-32768	8000	<-11.759 V	<-5.879 V	Underflow

Table C- 7 Voltage measuring range 1 to 5 V, 0 to 10 V

Values		Voltage measuring range		Range
dec.	**hex.**	**1 to 5 V**	**0 to 10 V**	
32767	7FFF	>5.704 V	>11.759 V	Overflow
32511	7EFF	5.704 V	11.759 V	Overrange
27649	6C01			
27648	6C00	5 V	10.0 V	Nominal range
20736	5100	4 V	7.5 V	
1	1	1 V + 144.7 µV	361.7 µV	
0	0	1 V	0 V	
-1	FFFF			Underrange
-4864	ED00	0.296 V	-1.759 V	
-32768	8000	< 0.296 V	< -1.759 V	Underflow

C.3.2 Representation of analog values in current measuring ranges

The following tables list the decimal and hexadecimal values (codes) of the possible current measuring ranges.

Table C- 8 Current measuring range ±20 mA

Values		Current measuring range	
dec.	**hex.**	**±20 mA**	
32767	7FFF	>23.52 mA	Overflow
32511	7EFF	23.52 mA	Overrange
27649	6C01		
27648	6C00	20 mA	Nominal range
20736	5100	15 mA	
1	1	723.4 nA	
0	0	0 mA	
-1	FFFF		
-20736	AF00	-15 mA	
-27648	9400	-20 mA	
-27649	93FF		Underrange
-32512	8100	-23.52 mA	
-32768	8000	<-23.52 mA	Underflow

Table C- 9 Current measuring ranges 0 to 20 mA and 4 to 20 mA

Values		Current measuring range		
dec.	**hex.**	**0 to 20 mA**	**4 to 20 mA**	
32767	7FFF	>23.52 mA	>22.81 mA	Overflow
32511	7EFF	23.52 mA	22.81 mA	Overrange
27649	6C01			
27648	6C00	20 mA	20 mA	Nominal range
20736	5100	15 mA	16 mA	
1	1	723.4 nA	4 mA + 578.7 nA	
0	0	0 mA	4 mA	
-1	FFFF			Underrange
-4864	ED00	-3.52 mA	1.185 mA	
-32768	8000	<-3.52 mA	<1.185 mA	Underflow

C.3.3 Representation of the analog values of resistance-type sensors/resistance-type thermometers

The following tables list the decimal and hexadecimal values (codes) of the possible resistance-type sensor ranges.

Table C- 10 Resistance-type sensors of 150 Ω, 300 Ω and 600 Ω

Values		Resistance-type sensor range			
dec.	**hex.**	**150 Ω**	**300 Ω**	**600 Ω**	
32767	7FFF	>176.38 Ω	>352.77 Ω	>705.53 Ω	Overflow
32511	7EFF	176.38 Ω	352.77 Ω	705.53 Ω	Overrange
27649	6C01				
27648	6C00	150 Ω	300 Ω	600 Ω	Nominal range
20736	5100	112.5 Ω	225 Ω	450 Ω	
1	1	5.43 mΩ	10.85 mΩ	21.70 mΩ	
0	0	0 Ω	0 Ω	0 Ω	

Table C- 11 Resistance-type thermometer Pt 100 Standard

Pt 100 Standard in °C (1 digit = 0.1°C)	**Values**		**Pt 100 Standard in °F (1 digit = 0.1 °F)**	**Values**		**Pt 100 Standard in K (1 digit = 0.1 K)**	**Values**		**Range**
	dec.	**hex.**		**dec.**	**hex.**		**dec.**	**hex.**	
> 1000.0	32767	7FFF	> 1832.0	32767	7FFF	> 1273.2	32767	7FFF	Overflow
1000.0 : 850.1	10000 : 8501	2710 : 2135	1832.0 : 1562.1	18320 : 15621	4790 : 3D05	1273.2 : 1123.3	12732 : 11233	31BC : 2BE1	Overrange
850.0 : -200.0	8500 : -2000	2134 : F830	1562.0 : -328.0	15620 : -3280	3D04 : F330	1123.2 : 73.2	11232 : 732	2BE0 : 2DC	Nominal range
-200.1 : -243.0	-2001 : -2430	F82F : F682	-328.1 : -405.4	-3281 : -4054	F32F : F02A	73.1 : 30.2	731 : 302	2DB : 12E	Underrange
< -243.0	-32768	8000	< -405.4	-32768	8000	< 30.2	32768	8000	Underflow

Table C- 12 Resistance-type thermometer Pt 100 Climate

Pt 100 Climate/ in °C (1 digit = 0.01 °C)	Values		Pt 100 Climate/ in °F (1 digit = 0.01 °F)	Values		Range
	dec.	hex.		dec.	hex.	
> 155.00	32767	7FFF	> 311.00	32767	7FFF	Overflow
155.00 : 130.01	15500 : 13001	3C8C : 32C9	311.00 : 266.01	31100 : 26601	797C : 67E9	Overrange
130.00 : -120.00	13000 : -12000	32C8 : D120	266.00 : -184.00	26600 : -18400	67E8 : B820	Nominal range
-120.01 : -145.00	-12001 : -14500	D11F : C75C	-184.01 : -229.00	-18401 : -22900	B81F : A68C	Underrange
< -145.00	-32768	8000	< -229.00	-32768	8000	Underflow

Table C- 13 Resistance-type thermometer Ni 100 standard

Ni 100 Standard in °C (1 digit = 0.1 °C)	Values		Ni 100 Standard in °F (1 digit = 0.1 °F)	Values		Ni 100 Standard in K (1 digit = 0.1 K)	Values		Range
	dec.	hex.		dec.	hex.		dec.	hex.	
> 295.0	32767	7FFF	> 563.0	32767	7FFF	> 568.2	32767	7FFF	Overflow
295.0 : 250.1	2950 : 2501	B86 : 9C5	563.0 : 482.1	5630 : 4821	15FE : 12D5	568.2 : 523.3	5682 : 5233	1632 : 1471	Overrange
250.0 : -60.0	2500 : -600	9C4 : FDA8	482.0 : -76.0	4820 : -760	12D4 : FD08	523.2 : 213.2	5232 : 2132	1470 : 854	Nominal range
-60.1 : -105.0	-601 : -1050	FDA7 : FBE6	-76.1 : -157.0	-761 : -1570	FD07 : F9DE	213.1 : 168.2	2131 : 1682	853 : 692	Underrange
< -105.0	-32768	8000	< -157.0	-32768	8000	< 168.2	32768	8000	Underflow

Table C- 14 Resistance-type thermometer Ni 100 Climate

Ni 100 Climate in °C (1 digit = 0.01 °C)	Values		Ni 100 Climate in °F (1 digit = 0.01 °F)	Values		Range
	dec.	hex.		dec.	hex.	
> 155.00	32767	7FFF	> 311.00	32767	7FFF	Overflow
155.00 : 130.01	15500 : 13001	3C8C : 32C9	311.00 : 266.01	31100 : 26601	797C : 67E9	Overrange
130.00 : -60.00	13000 : -6000	32C8 : E890	266.00 : -76.00	26600 : -7600	67E8 : E250	Nominal range
-60.01 : -105.00	-6001 : -10500	E88F : D6FC	-76.01 : -157.00	-7601 : -15700	E24F : C2AC	Underrange
< - 105.00	-32768	8000	< - 157.00	-32768	8000	Underflow

C.3.4 Measured values for wire break diagnostics

Measured values for "Wire break" diagnostics as a function of diagnostics enables

With suitable parameter assignment, events that occur trigger a diagnostics entry and a diagnostics interrupt.

Table C- 15 Measured values for wire break diagnostics

Format	Parameter assignment	Measured values		Explanation
S7	• "Wire break" diagnostics enabled • "Overflow/Underflow" diagnostics enabled or disabled ("Wire break" diagnostics has a higher priority than "Overflow/Underflow" diagnostics)	32767	7FFF$_H$	"Wire break" or "Cable break" diagnostics alarm
	• "Wire break" diagnostics disabled • "Overflow/Underflow" diagnostics enabled	-32767	8000 $_H$	• Measured value after leaving the under-range • Diagnostics alarm "Low limit" violated
	• "Wire break" diagnostics disabled • "Overflow/Underflow" diagnostics disabled	-32767	8000 $_H$	Measured value after leaving the underrange

C.4 Representation of output ranges

The tables below set out the digitalized representation of the output ranges separately for bipolar and unipolar ranges. The resolution is 16 bits.

Table C- 16 Bipolar output ranges

Dec. value	Output value in %	Data word																Range
		2^{15}	2^{14}	2^{13}	2^{12}	2^{11}	2^{10}	2^9	2^8	2^7	2^6	2^5	2^4	2^3	2^2	2^1	2^0	
32511	117.589	0	1	1	1	1	1	1	0	1	1	1	1	1	1	1	1	Maximum output value*
32511	117.589	0	1	1	1	1	1	1	0	1	1	1	1	1	1	1	1	Overrange
27649	100.004	0	1	1	0	1	1	0	0	0	0	0	0	0	0	0	1	
27648	100.000	0	1	1	0	1	1	0	0	0	0	0	0	0	0	0	0	Nominal range
1	0.003617	0	0	0	0	0	0	0	0	0	0	0	0	0	0	0	1	
0	0.000	0	0	0	0	0	0	0	0	0	0	0	0	0	0	0	0	
-1	-0.003617	1	1	1	1	1	1	1	1	1	1	1	1	1	1	1	1	
-27648	-100.000	1	0	0	1	0	1	0	0	0	0	0	0	0	0	0	0	
-27649	-100.004	1	0	0	1	0	0	1	1	1	1	1	1	1	1	1	1	Underrange
-32512	-117.593	1	0	0	0	0	0	0	1	0	0	0	0	0	0	0	0	
-32512	-117.593	1	0	0	0	0	0	0	1	0	0	0	0	0	0	0	0	Minimum output value**

* When values > 32511 are specified, the output value is limited to 117.589%.

** When values < -32512 are specified, the output value is limited to -117.593%.

Table C- 17 Unipolar output ranges

Dec. value	Output value in %	Data word																Range
		2^{15}	2^{14}	2^{13}	2^{12}	2^{11}	2^{10}	2^9	2^8	2^7	2^6	2^5	2^4	2^3	2^2	2^1	2^0	
32511	117.589	0	1	1	1	1	1	1	1	x	x	x	x	x	x	x	x	Maximum output value*
32511	117.589	0	1	1	1	1	1	1	0	1	1	1	1	1	1	1	1	Overrange
27649	100.004	0	1	1	0	1	1	0	0	0	0	0	0	0	0	0	1	
27648	100.000	0	1	1	0	1	1	0	0	0	0	0	0	0	0	0	0	Nominal range
1	0.003617	0	0	0	0	0	0	0	0	0	0	0	0	0	0	0	1	
0	0.000	0	0	0	0	0	0	0	0	0	0	0	0	0	0	0	0	
0	0	0	0	0	0	0	0	0	0	0	0	0	0	0	0	0	0	Minimum output value**

* When values > 32511 are specified, the output value is limited to 117.589%.

** When values < 0 are specified, the output value is limited to 0%.

C.4.1 Representation of analog values in the voltage output ranges

The tables below list the decimal and hexadecimal values (codes) of the possible voltage output ranges.

Table C- 18 Voltage output range ±10 V

Values			Voltage output range	Range
	dec.	**hex.**	**±10 V**	
>117.589%	>32511	>7EFF	11.76 V	Maximum output value
117.589%	32511	7EFF	11.76 V	Overrange
	27649	6C01		
100%	27648	6C00	10 V	Nominal range
75%	20736	5100	7.5 V	
0.003617%	1	1	361.7 µV	
0%	0	0	0 V	
	-1	FFFF	-361.7 µV	
-75%	-20736	AF00	-7.5 V	
-100%	-27648	9400	-10 V	
	-27649	93FF		Underrange
-117.593%	-32512	8100	-11.76 V	
<-117.593%	<-32512	< 8100	-11.76 V	Minimum output value

Table C- 19 Voltage output range 0 V to 10 V

Values			Voltage output range	Range
	dec.	**hex.**	**0 to 10 V**	
>117.589%	>32511	>7EFF	11.76 V	Maximum output value
117.589%	32511	7EFF	11.76 V	Overrange
	27649	6C01		
100%	27648	6C00	10 V	Nominal range
75%	20736	5100	7.5 V	
0.003617%	1	1	361.7 µV	
0%	0	0	0 V	
<0%	<0	<0	0 V	Minimum output value

Table C- 20 Voltage output range 1 V to 5 V

Values			Voltage output range	Range
	dec.	**hex.**	**1 to 5 V**	
>117.589%	>32511	>7EFF	5.70 V	Maximum output value
117.589%	32511	7EFF	5.70 V	Overrange
	27649	6C01		
100%	27648	6C00	5 V	Nominal range
75%	20736	5100	4 V	
0.003617%	1	1	1 V +144.7 µV	
0%	0	0	1 V	
	-1	FFFF	1 V -144.7 µV	Underrange
-25%	-6912	E500	0 V	
<-25%	<-6912	<E500	0 V	Minimum output value

C.4.2 Representation of analog values in the current output ranges

The tables below list the decimal and hexadecimal values (codes) of the possible current output ranges.

Table C- 21 Current output range ±20 mA

Values			Current output range	Range
	dec.	**hex.**	**±20 mA**	
>117.589%	>32511	>7EFF	23.52 mA	Maximum output value
117.589%	32511	7EFF	23.52 mA	Overrange
	27649	6C01		
100%	27648	6C00	20 mA	Nominal range
75%	20736	5100	15 mA	
0.003617%	1	1	723.4 mA	
0%	0	0	0 mA	
	-1	FFFF	-723.4 mA	
-75%	-20736	AF00	-15 mA	
-100%	-27648	9400	-20 mA	
	-27649	93FF		Underrange
-117.593%	-32512	8100	-23.52 mA	
<-117.593%	<-32512	<8100	-23.52 mA	Minimum output value

Table C- 22 Current output range 0 to 20 mA

Values			Current output range	Range
	dec.	**hex.**	**0 to 20 mA**	
>117.589%	>32511	>7EFF	23.52 mA	Maximum output value
117.589%	32511	7EFF	23.52 mA	Overrange
	27649	6C01		
100%	27648	6C00	20 mA	Nominal range
75%	20736	5100	15 mA	
0.003617%	1	1	723.4 mA	
0%	0	0	0 mA	
<0%	<0	<0	0 mA	Minimum output value

Table C- 23 Current output range 4 to 20 mA

Values			Current output range	Range
	dec.	**hex.**	**4 to 20 mA**	
>117.589%	>32511	>7EFF	22.81 mA	Maximum output value
117.589%	32511	7EFF	22.81 mA	Overrange
	27649	6C01		
100%	27648	6C00	20 mA	Nominal range
75%	20736	5100	16 mA	
0.003617%	1	1	4 mA	
0%	0	0	4 mA	
	-1	FFFF		Underrange
-25%	-6912	E500	0 mA	
<-25%	<-6912	<E500	0 mA	Minimum output value

SIEMENS

Manual

SIMATIC

S7-1500

CPU 1511T-1 PN (6ES7511-1TK01-0AB0)

Edition 05/2021

support.industry.siemens.com

SIEMENS

SIMATIC

S7-1500
CPU 1511T-1 PN
(6ES7511-1TK01-0AB0)

Equipment Manual

Preface

Documentation guide 1

Product overview 2

Wiring 3

Interrupts, error messages, diagnostics and system alarms 4

Technical specifications 5

Dimension drawing A

05/2021

A5E36270833-AC

Legal information

Warning notice system

This manual contains notices you have to observe in order to ensure your personal safety, as well as to prevent damage to property. The notices referring to your personal safety are highlighted in the manual by a safety alert symbol, notices referring only to property damage have no safety alert symbol. These notices shown below are graded according to the degree of danger.

⚠ DANGER
indicates that death or severe personal injury **will** result if proper precautions are not taken.

⚠ WARNING
indicates that death or severe personal injury **may** result if proper precautions are not taken.

⚠ CAUTION
indicates that minor personal injury can result if proper precautions are not taken.

NOTICE
indicates that property damage can result if proper precautions are not taken.

If more than one degree of danger is present, the warning notice representing the highest degree of danger will be used. A notice warning of injury to persons with a safety alert symbol may also include a warning relating to property damage.

Qualified Personnel

The product/system described in this documentation may be operated only by **personnel qualified** for the specific task in accordance with the relevant documentation, in particular its warning notices and safety instructions. Qualified personnel are those who, based on their training and experience, are capable of identifying risks and avoiding potential hazards when working with these products/systems.

Proper use of Siemens products

Note the following:

⚠ WARNING
Siemens products may only be used for the applications described in the catalog and in the relevant technical documentation. If products and components from other manufacturers are used, these must be recommended or approved by Siemens. Proper transport, storage, installation, assembly, commissioning, operation and maintenance are required to ensure that the products operate safely and without any problems. The permissible ambient conditions must be complied with. The information in the relevant documentation must be observed.

Trademarks

All names identified by ® are registered trademarks of Siemens AG. The remaining trademarks in this publication may be trademarks whose use by third parties for their own purposes could violate the rights of the owner.

Disclaimer of Liability

We have reviewed the contents of this publication to ensure consistency with the hardware and software described. Since variance cannot be precluded entirely, we cannot guarantee full consistency. However, the information in this publication is reviewed regularly and any necessary corrections are included in subsequent editions.

Siemens AG
Digital Industries
Postfach 48 48
90026 NÜRNBERG
GERMANY

A5E36270833-AC
Ⓟ 04/2021 Subject to change

Copyright © Siemens AG 2016 - 2021.
All rights reserved

Preface

Purpose of the documentation

This manual supplements the system manual of the S7-1500 automation system/ET 200MP distributed I/O system as well as the function manuals. This manual contains a description of the module-specific information. The system-related functions are described in the system manual. All system-spanning functions are described in the function manuals.

The information provided in this manual and the system manual enables you to commission the CPU 1511T-1 PN.

Conventions

STEP 7: In this documentation, "STEP 7" is used as a synonym for all versions of the configuration and programming software "STEP 7 (TIA Portal)".

Please also observe notes marked as follows:

Note

A note contains important information on the product described in the documentation, on the handling of the product or on the section of the documentation to which particular attention should be paid.

Recycling and disposal

For environmentally friendly recycling and disposal of your old equipment, contact a certified electronic waste disposal company and dispose of the equipment according to the applicable regulations in your country.

Security information

Siemens provides products and solutions with industrial security functions that support the secure operation of plants, systems, machines and networks.

In order to protect plants, systems, machines and networks against cyber threats, it is necessary to implement – and continuously maintain – a holistic, state-of-the-art industrial security concept. Siemens' products and solutions constitute one element of such a concept.

Customers are responsible for preventing unauthorized access to their plants, systems, machines and networks. Such systems, machines and components should only be connected to an enterprise network or the internet if and to the extent such a connection is necessary and only when appropriate security measures (e.g. firewalls and/or network segmentation) are in place.

For additional information on industrial security measures that may be implemented, please visit (https://www.siemens.com/industrialsecurity).

Siemens' products and solutions undergo continuous development to make them more secure. Siemens strongly recommends that product updates are applied as soon as they are available and that the latest product versions are used. Use of product versions that are no longer supported, and failure to apply the latest updates may increase customers' exposure to cyber threats.

To stay informed about product updates, subscribe to the Siemens Industrial Security RSS Feed visit (https://www.siemens.com/industrialsecurity).

Siemens Industry Online Support

You can find current information on the following topics quickly and easily here:

- **Product support**

  All the information and extensive know-how on your product, technical specifications, FAQs, certificates, downloads, and manuals.

- **Application examples**

  Tools and examples to solve your automation tasks – as well as function blocks, performance information and videos.

- **Services**

  Information about Industry Services, Field Services, Technical Support, spare parts and training offers.

- **Forums**

  For answers and solutions concerning automation technology.

- **mySupport**

  Your personal working area in Industry Online Support for messages, support queries, and configurable documents.

This information is provided by the Siemens Industry Online Support in the Internet (https://support.industry.siemens.com).

Industry Mall

The Industry Mall is the catalog and order system of Siemens AG for automation and drive solutions on the basis of Totally Integrated Automation (TIA) and Totally Integrated Power (TIP).

You can find catalogs for all automation and drive products on the Internet (https://mall.industry.siemens.com).

See also

Info Center (https://www.siemens.com/automation/infocenter)

Table of contents

Preface **3**

1 Documentation guide **7**

2 Product overview **9**

2.1 New functions 9

2.2 Applications of the S7-1500 CPU 14

2.3 Hardware properties 20

2.4 Firmware functions 22

2.5 Operator controls and display elements 26

2.5.1 Front view of the CPU with closed front panel 26

2.5.2 Front view of the CPU without front flap 28

2.5.3 Rear view of the CPU 29

2.6 Mode selector 30

3 Wiring **31**

4 Interrupts, error messages, diagnostics and system alarms **35**

4.1 Status and error display of the CPU 35

5 Technical specifications **38**

A Dimension drawing **51**

Documentation guide

1

The documentation for the SIMATIC S7-1500 automation system and the SIMATIC ET 200MP distributed I/O system is arranged into three areas.
This arrangement enables you to access the specific content you require.

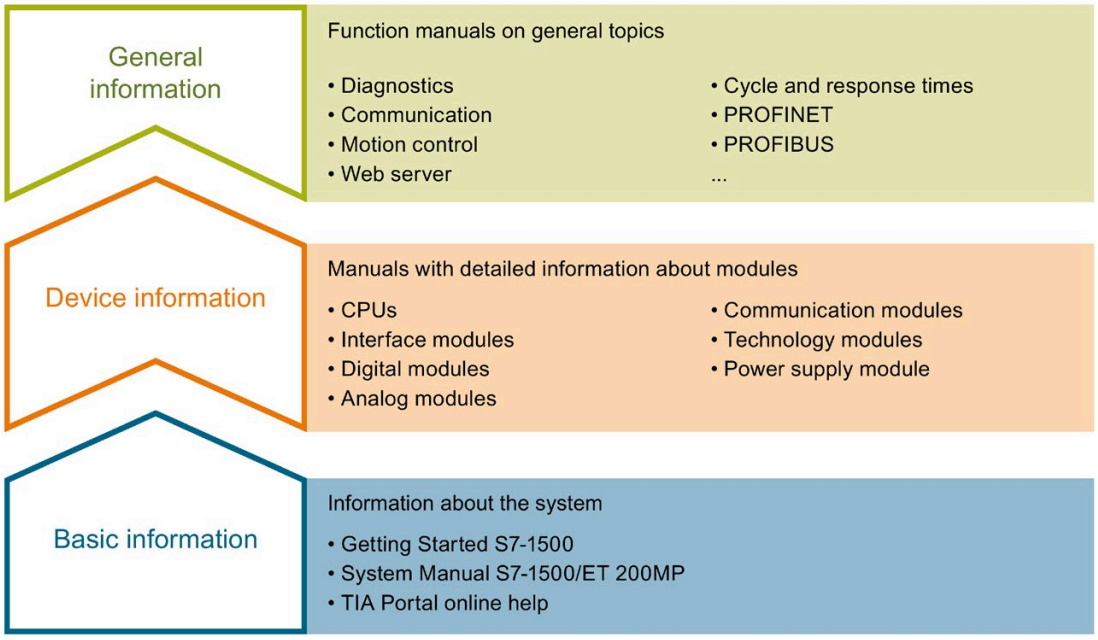

Basic information

The System Manual and Getting Started describe in detail the configuration, installation, wiring and commissioning of the SIMATIC S7-1500 and ET 200MP systems. The STEP 7 online help supports you in the configuration and programming.

Device information

Product manuals contain a compact description of the module-specific information, such as properties, wiring diagrams, characteristics and technical specifications.

General information

The function manuals contain detailed descriptions on general topics regarding the SIMATIC S7-1500 and ET 200MP systems, e.g. diagnostics, communication, motion control, Web server, OPC UA.

You can download the documentation free of charge from the Internet (https://support.industry.siemens.com/cs/ww/en/view/109742691).

Changes and supplements to the manuals are documented in a Product Information.

You can download the product information free of charge from the Internet (https://support.industry.siemens.com/cs/us/en/view/68052815).

Manual Collection S7-1500/ET 200MP

The Manual Collection contains the complete documentation on the SIMATIC S7-1500 automation system and the ET 200MP distributed I/O system gathered together in one file.

You can find the Manual Collection on the Internet (https://support.industry.siemens.com/cs/ww/en/view/86140384).

SIMATIC S7-1500 comparison list for programming languages

The comparison list contains an overview of which instructions and functions you can use for which controller families.

You can find the comparison list on the Internet (https://support.industry.siemens.com/cs/ww/en/view/86630375).

"mySupport"

With "mySupport", your personal workspace, you make the best out of your Industry Online Support.

In "mySupport", you can save filters, favorites and tags, request CAx data and compile your personal library in the Documentation area. In addition, your data is already filled out in support requests and you can get an overview of your current requests at any time.

You must register once to use the full functionality of "mySupport".

You can find "mySupport" on the Internet (https://support.industry.siemens.com/My/ww/en).

Application examples

The application examples support you with various tools and examples for solving your automation tasks. Solutions are shown in interplay with multiple components in the system - separated from the focus on individual products.

You will find the application examples on the Internet (https://support.industry.siemens.com/cs/ww/en/ps/ae).

Product overview

2

2.1 New functions

This section contains an overview of the most important firmware functions of the CPU assigned to your firmware version.

New functions of the CPU in firmware version V2.9

New functions	Applications	Customer benefits
Communication of the CPU		
OPC UA: Alarms & Conditions	OPC UA clients from any manufacturer can subscribe to alarms of the CPU via OPC UA Alarms & Conditions.	Without further measures, alarms created once via OPC UA are available as events and alarms. The alarms can be displayed by any display device with corresponding OPC UA client functionality.
OPC UA: Certificate management via Global Discovery Server (GDS)	Via GDS push management functions: • Automated update of OPC UA certificates of an S7-1500 CPU • Transfer of updated certificates and lists in RUN operating state of the CPU	The automation of the certificate management eliminates any manual work required for reconfiguring the CPU, for example, after a certificate has expired, and a new download to the CPU.
MRP interconnection in PROFINET networks	• The MRP interconnection procedure is an extension of MRP. • MRP interconnection enables the redundant coupling of two or more rings with MRP in PROFINET networks.	There is no limit to the maximum number of 50 devices in a ring when setting up redundant network topologies. Monitoring of larger topologies with ring redundancy
DHCP (Dynamic Host Configuration Protocol)	The CPU can use the DHCP communication protocol to assign the network configuration via a DHCP server. The CPU uses a client ID for identification on the DHCP server. The following parameters can be obtained: • IP Suite • DNS server • NTP server The CPU can also send its host name to the DHCP server.	With DHCP, you can integrate the CPU into an existing IT network without having to make additional changes to the PROFINET interface.
Web server of the CPU		
Web applications that can be loaded by the user	• Additional methods to manage web applications via Web API • You can use all available Web API methods within the web application	Web applications are also available in STOP mode of the CPU Reduced development times of web server user pages

New functions	Applications	Customer benefits
New Web API methods	• Reading and changing the CPU operating state via Web API • Ticket methods for transferring large amounts of data outside of the JSON RPC protocol	Additional applications for the web server
Optimizations to the DNS (Domain Name System) functionality with OPC UA/Open User Communication and on the web server	The feedback messages of the OPC UA server with the "Application Name" can be sent via DNS. The NTP client of the CPU can address its relevant NTP servers via DNS. The web server can be consistently reached via DNS addressing. DNS is taken into account during certificate handling.	A pool of NTP servers can be addressed.
Diagnostic information on motion control	Diagnostic information is available for all technology objects Improved display and grouping of the tags	Comprehensive diagnostic options by means of motion control applications are possible via the web server.
Technology functions of the CPU		
Axis functions	• Backlash compensation • Linear motor	The repeat accuracy of a movement is increased by compensation for the mechanical play of the real axis. Easier control of highly dynamic linear motors.
Synchronous operation functions (S7-1500T)	• A cross-PLC synchronous operation between technology objects with different technology versions on CPUs with different firmware versions is possible. • Desynchronization of gearing or camming at specified positions • Leading value or following value shift in gearing or camming • Cam with 10,000 points • Diagnostics of the cam	• More flexibility in modular machines and multi-axis machines (e.g. printing machines) • More synchronous operation functions • By shifting leading and following values, it is possible, for example, to correct print marks synchronously to the leading value. • More interpolation points allow for a more precise design of complex cams. • Detailed diagnostics of cams, both configured offline and created or modified online.
Kinematics functions (S7-1500T)	• Calibrating zones • Dynamic adaptation in the kinematics control panel • Simulation of kinematics motions	The functions expand the possibilities for realizing complex motion control applications with 2D, 3D and 4D kinematics.

New functions of the CPU in firmware version V2.8

New functions	Applications	Customer benefits
IP forwarding	IP forwarding forwards IP data through the CPU from one IP subnet to another IP subnet. During IP forwarding, the CPU automatically creates an IP route table from the IP configuration in STEP 7.	• Simplified integration of devices for remote access, e.g. for diagnostics during remote maintenance or firmware update • Simple access from the control level to the field level for configuration and parameter assignment of devices Example: You can access the web server of a drive connected to the X1 interface of the CPU from a computer connected to the X2 interface of the CPU.
Direct data exchange	In the case of direct data exchange, an S7-1500 CPU provides cyclic user data from the I/O area to one or more partners.	The "Direct data exchange" function enables deterministic, isochronous I/O communication between multiple S7-1500 CPUs.
API (Application Programming Interface)	The CPU has a web-based API (Application Programming Interface) as an interface for reading and writing CPU data. The API supports all conventional browsers and command line programs, such as cURL and Wget.	• Established standard mechanisms for creating web pages: Automation Web Programming commands (AWP commands) are no longer required for output of CPU data • No dependency between custom web pages and CPU program: No synchronization between user program and web server required by the SFC 99 instruction • Lower communication load: A smaller data packet is transferred between server and client (JSON instead of HTML of the custom web page generated by the CPU). This improves the communication performance. The CPU needs less runtime to generate the information and make it available. • Secure data traffic: API exclusively supports the "HTTPS" transfer protocol
Technology functions of the CPU		
Axis functions	Organization block MC-PreInterpolator "MC_Stop" instruction	You can call motion control instructions at the same time as the MC_Interpolator. You can stop an axis and prevent new jobs to the axis.

New functions	Applications	Customer benefits
Cross-PLC synchronous operation (S7-1500T)	Leading and following axes can be distributed over multiple controllers. Isochronous coupling between the leading axis and the following axis via PROFINET IO with IRT. Compensation of delay times for communication and different clock rates.	• Distribution of high axis configuration limits over different CPUs • Use on modular machines and multi-axis machines (e.g. printing machines) • Highly precise synchronous operation across devices
Kinematics functions	• Scara 2D is supported as predefined kinematics • New instructions for synchronous point-to-point movements, conveyor tracking, and calculation of the forward and backward transformation • Proactive motion preparation	The functions expand the possibilities for realizing complex motion control applications with 2D, 3D and 4D kinematics.
Project trace	Coordination of traces on different devices • Support of multiple CPUs • Support of different device types Visualization in a shared chart Support of alternative trigger sources	• Extensive trigger options for faster localization of sporadically occurring errors • Simple combination of related traces

New functions of the CPU in firmware version V2.6

New functions	Applications	Customer benefits
OPC UA client	In addition to the OPC UA server, an OPC UA client is integrated in the CPU. Using the corresponding OPC UA communication instructions, you can: • Call methods • Read and write data	You can perform, for example, vertical communication to MES systems/cloud services or IO controller-IO controller communication.
Isochronous mode for central I/O	Isochronous mode is also possible for modules that are inserted next to the CPU in a centralized configuration. In this way, you can implement the following functions, for example: • Dynamic control tasks • Measuring input • Output cam • Dosing processes, high-speed analog value acquisition with oversampling	• Optimized controls through constant, calculable dead times • Determinism, reliable reproducibility of response times • Consistent (simultaneous) reading in of input data • Consistent (simultaneous) output of output data

New functions of the CPU in firmware version V2.5

New functions	Applications	Customer benefits
New technology object, kinematics	Controlling of kinematics, such as • Cartesian portals • Roller pickers • Delta pickers • SCARA Motion specification of paths Individual motions and motion sequences Kinematics 2D, 3D, with and without orientation axis	You can realize complex Motion Control applications for controlling 2D, 3D and 4D kinematics.
Additional instructions for torque control	You can apply an additives setpoint torque in the drive. You can predetermine torque limits in the drive cyclically. The torque actual value of the drive can be evaluated directly in the TO-DB of the axis.	You can pre-control the torque precisely for the axes, for example at winders (predetermine traction torque and additionally torque limits in order to prevent tearing of the material). You can take the dynamic model of the kinematics into consideration, pre-control the torque to be expected for each axis and thus improve the precision.
Data adaption for SINAMICS S210	You can also use data adaption for the new drive SINAMICS S210.	You gain time during the configuration of the technology objects and the drives.
MotionIn	Through additional instructions motion setpoints can be specified cyclically via the application.	This means that specific technological motion specifications are possible via the application (for example at winders).
Testing with breakpoints	Testing SCL and STL program code with the help of breakpoints. When testing with breakpoints, you execute a program from one breakpoint to another.	• Localization of logic errors step by step • Simple and quick analysis of complex programs prior to actual commissioning • Recording of current values within individual executed loops • Use of breakpoints for program validation also possible in SCL/STL networks within LAD/FBD blocks
Arithmetic functions for trace	In the case of completed measurements, you can combine the measured signals mathematically with each other and thus generate signals that were not recorded.	• Generation of unavailable information • Post-processing of measurements • Measurement of signal paths (e.g. mean value)

New functions	Applications	Customer benefits
Importing and exporting ASCII files	Using the FileReadC function, you can read out a binary file (ASCII file) in the user program which was stored on the SIMATIC memory card of the CPU via the web server. Using the FileWriteC function, you can store a binary file (ASCII file) on the memory card of the CPU using the user program; this file can be read via the web server.	Complex file structures are used in free ASCII format on the SIMATIC memory card, e.g. to: • Read in recipes for which CSV is not flexible enough • Read in complex parameter assignments or configuration files • Output complex files for documentation
Sending encrypted emails	It is possible to send encrypted emails via the integrated interfaces of the CPU	High security through encrypted transmission of data

Reference

You can find an overview of all new functions, improvements and revisions in the respective firmware versions on the Internet (https://support.industry.siemens.com/cs/ww/en/view/109478459).

2.2 Applications of the S7-1500 CPU

Area of application

SIMATIC S7-1500 is the modular control system for a wide variety of automation applications in discrete automation.

The modular and fanless design, simple implementation of distributed structures, and user-friendly operation make SIMATIC S7-1500 the economic and convenient solution for a variety of tasks.

Areas of application of the SIMATIC S7-1500 are, for example:

- Special-purpose machines
- Textile machinery
- Packaging machines
- General mechanical engineering
- Controller engineering
- Machine tool engineering
- Installation engineering
- Electrical industry and crafts
- Automobile engineering
- Water/waste water
- Food & Beverage

Additional areas of application of the SIMATIC S7-1500T with extended Motion Control functions are, for example:

- Packaging machines
- Converting application
- Assembly automation

Several CPUs with various levels of performance and a comprehensive range of modules with many convenient features are available. Fail-safe CPUs enable use in fail-safe applications. The modular design allows you to use only the modules that you need for your application. The controller can be retrofitted with additional modules at any time to expand its range of tasks.

High industrial capability from the high resistance to EMC, shock and vibration enable universal use of the SIMATIC S7-1500.

Performance segments of standard CPUs

The CPUs can be used for smaller and mid-range applications, as well as for the high-end range of machine and plant automation.

Table 2- 1 Standard CPUs

CPU	Performance segment	PROFIBUS interfaces	PROFINET IO RT/IRT interfaces	PROFINET IO RT interface	PROFINET basic functionality	Work memory	Processing time for bit operations
CPU 1511-1 PN	Standard CPU for small to mid-range applications	--	1	--	--	1.15 MB	60 ns
CPU 1513-1 PN	Standard CPU for mid-range applications	--	1	--	--	1.8 MB	40 ns
CPU 1515-2 PN	Standard CPU for mid-range to large applications	--	1	1	--	3.5 MB	30 ns
CPU 1516-3 PN/DP	Standard CPU for high-end applications and communication tasks	1	1	1	--	6 MB	10 ns
CPU 1517-3 PN/DP	Standard CPU for high-end applications and communication tasks	1	1	1	--	10 MB	2 ns
CPU 1518-4 PN/DP	Standard CPU for high-performance applications, demanding communication tasks and very short reaction times	1	1	1	1	24 MB	1 ns
CPU 1518-4 PN/DP MFP	Standard CPU for high-performance applications, demanding communication tasks, very short reaction times and C/C++ blocks for the user program	1	1	1	1	74* MB	1 ns

Performance segments of compact CPUs

The compact CPUs can be used for smaller to mid-range applications and have an integrated analog and digital on-board I/O as well as integrated technology functions.

Table 2- 2 Compact CPUs

CPU	Performance segment	PROFIBUS interfaces	PROFINET IO RT/IRT interfaces	PROFINET IO RT interface	PROFINET basic functionality	Work memory	Processing time for bit operations
CPU 1511C-1 PN	Compact CPU for small to mid-range applications	--	1	--	--	1.175 MB	60 ns
CPU 1512C-1 PN	Compact CPU for mid-range applications	--	1	--	--	1.25 MB	48 ns

The following table shows the specific properties of the Compact CPUs.

	CPU 1511C-1 PN	CPU 1512C-1 PN
Integrated analog inputs/outputs	5 inputs/2 outputs	5 inputs/2 outputs
Integrated digital inputs/outputs	16 inputs/16 outputs	32 inputs/32 outputs
High-speed counters	6	6
Frequency meters	6 (max. 100 kHz)	6 (max. 100 kHz)
Period duration measurement	6 channels	6 channels
Pulse width modulation (PWM output)	Max. 4 (up to 100 kHz)	Max. 4 (up to 100 kHz)
Pulse Train Output (PTO output)	Max. 4 (up to 100 kHz)	Max. 4 (up to 100 kHz)
Frequency output	Up to 100 kHz	Up to 100 kHz

Performance segments of technology CPUs

The technology CPUs can be used for low and mid-range applications, as well as for the high-end range of machine and plant automation. Because of their extended motion control functions, they are primarily used for drive control.

Table 2- 3 Technology CPUs

CPU	Performance segment	PROFIBUS interfaces	PROFINET IO RT/IRT interfaces	PROFINET IO RT interface	PROFINET basic functionality	Work memory	Processing time for bit operations
CPU 1511T-1 PN	Technology CPU for small to mid-range motion control applications	--	1	--	--	1.225 MB	60 ns
CPU 1515T-2 PN	Technology CPU for mid-range to large motion control applications	--	1	1	--	3.75 MB	30 ns
CPU 1516T-3 PN /DP	Technology CPU for high-end motion control applications and communication tasks	1	1	1	--	6.5 MB	10 ns
CPU 1517T-3 PN/DP	Technology CPU for high-end motion control applications and communication tasks	1	1	1	--	11 MB	2 ns
CPU 1518T-4 PN/DP	Technology CPU for high-performance motion control applications with large quantities, demanding communication tasks and very short reaction times	1	1	1	1	60 MB	1 ns
CPU 1511TF-1 PN CPU 1515TF-2 PN CPU 1516TF-3 PN/DP CPU 1517TF-3 PN/DP CPU 1518TF-4 PN/DP	These CPUs are described in the fail-safe CPUs.						

Performance segments of fail-safe CPUs

The fail-safe CPUs are intended for users who want to implement demanding standard and fail-safe applications both centrally and decentrally.

These fail-safe CPUs allow the processing of standard and safety programs on a single CPU. This allows fail-safe data to be evaluated in the standard user program. The integration thereby provides the system advantages and the extensive functionality of SIMATIC for fail-safe applications.

The fail-safe CPUs are certified for use in safety mode up to:

- Safety class (Safety Integrity Level) SIL 3 according to IEC 61508:2010
- Performance Level (PL) e and Category 4 according to ISO 13849-1:2006 or according to EN ISO 13849-1:2008

Additional password protection for F-configuration and F-program is set up for IT security.

Table 2- 4 Fail-safe CPUs

CPU	Performance segment	PROFIBUS interfaces	PROFINET IO RT/IRT interfaces	PROFINET IO RT interface	PROFINET basic functionality	Work memory	Processing time for bit operations
CPU 1511F-1 PN	Fail-safe CPU for small to mid-range applications	--	1	--	--	1.225 MB	60 ns
CPU 1511TF-1 PN	Fail-safe technology CPU for small to mid-range applications	--	1	--	--	1.225 MB	60 ns
CPU 1513F-1 PN	Fail-safe CPU for mid-range applications	--	1	--	--	1.95 MB	40 ns
CPU 1515F-2 PN	Fail-safe CPU for mid-range to large applications	--	1	1	--	3.75 MB	30 ns
CPU 1515TF-2 PN	Fail-safe technology CPU for demanding applications and communication tasks	--	1	1	--	3.75 MB	30 ns
CPU 1516F-3 PN/DP	Fail-safe CPU for demanding applications and communication tasks	1	1	1	--	6.5 MB	10 ns
CPU 1516TF-3 PN/DP	Fail-safe technology CPU for demanding applications and communication tasks	1	1	1	--	6.5 MB	10 ns
CPU 1517F-3 PN/DP	Fail-safe CPU for demanding applications and communication tasks	1	1	1	--	11 MB	2 ns
CPU 1517TF-3 PN/DP	Fail-safe technology CPU for demanding applications and communication tasks	1	1	1	--	11 MB	2 ns

CPU	Performance segment	PROFIBUS interfaces	PROFINET IO RT/IRT interfaces	PROFINET IO RT interface	PROFINET basic functionality	Work memory	Processing time for bit operations
CPU 1518F-4 PN/DP	Fail-safe CPU for high-performance applications, demanding communication tasks and very short reaction times	1	1	1	1	26 MB	1 ns
CPU 1518F-4 PN/DP MFP	Fail-safe CPU for high-performance applications, demanding communication tasks, very short reaction times and C/C++ blocks for the user program	1	1	1	1	76* MB	1 ns
CPU 1518TF-4 PN/DP	Technology CPU for high-performance motion control applications with large quantities, demanding communication tasks and very short reaction times	1	1	1	1	60 MB	1 ns

* 50 MB of the integrated work memory is reserved for the function library of CPU runtime

In addition to the CPUs, further components such as SINAMICS drives dispose of integrated safety functions. Additional information about integrated safety functions in drives can be found in the manuals for the respective products.

Design and handling

All CPUs of the SIMATIC S7-1500 product series feature a display with plain text information. The display provides the user with information on the order numbers, firmware version, and serial number of all connected modules. In addition, the IP address of the CPU and other network settings can be adapted locally without a programming device. Error messages are immediately shown on the display in plain text. In the case of servicing, plant downtimes are minimized by quick access to diagnostics alarms. Detailed information about this and a multitude of other display functions is available in the SIMATIC S7-1500 Display Simulator (https://support.industry.siemens.com/cs/ww/en/view/109761758).

Uniform front connectors for all modules and integrated potential bridges for flexible formation of potential groups simplifies storage. Additional components such as circuit breakers, relays, etc., can be installed quickly and easily, since a DIN rail is implemented in the rail of the S7-1500. The CPUs of the SIMATIC S7-1500 product series can be expanded centrally and in a modular fashion with signal modules. Space-saving expansion enables flexible adaptation to each application.

The system cabling for digital signal modules enables fast and clear connection to sensors and actuators from the field (fully modular connection consisting of front connector modules, connection cables and I/O modules), as well as easy wiring inside the control cabinet (flexible connection consisting of front connectors with assembled single conductors).

System diagnostics and alarms

Integrated system diagnostics is activated by default for the CPUs. The different types of diagnostics are configured instead of programmed. System diagnostics information is shown uniformly and in plain text on the display of the CPU, in STEP 7, on the HMI and on the web server, even for alarms related to drives. This information is available in RUN mode, but also in STOP mode of the CPU. The diagnostic information is updated automatically when you configure new hardware components.

The CPU is available as a central interrupt server in up to three project languages. The HMI takes over the display in the project languages specified for the CPU. If you require message texts in additional languages, you can load these via the configured connection to your HMI. The CPU, STEP 7 and your HMI guarantee data consistency without additional engineering steps. The maintenance work is easier.

2.3 Hardware properties

Article number

6ES7511-1TK01-0AB0

View of the module

The following figure shows a CPU 1511T-1 PN.

Figure 2-1 CPU 1511T-1 PN

Note

Protective film

Note that a protective film is attached to the display of the CPU when shipped from the factory. Remove the protective film if necessary.

Properties

CPU 1511T-1 PN has the following technical properties:

Property	Description	Additional information
CPU display	All CPUs of the SIMATIC S7-1500 product series feature a display with plain text information. The display provides information on order numbers, firmware version and serial numbers of all connected modules. In addition, you can set the IP address of the CPU and carry out further network settings. The display shows occurring error messages directly in plain text. In addition to the functions listed here, a multitude of other functions that are described in the SIMATIC S7-1500 Display Simulator are shown on the display.	• S7-1500, ET 200MP system manual (http://support.automation.siemens.com/WW/view/en/59191792) • SIMATIC S7-1500 Display Simulator (https://support.industry.siemens.com/cs/ww/en/view/109761758)
Supply voltage	The 24 V DC supply voltage is supplied via a 4-pole connection plug that is located at the front of the CPU.	• Chapter Wiring (Page 31) • S7-1500, ET 200MP system manual (http://support.automation.siemens.com/WW/view/en/59191792)
PROFINET IO		
PROFINET interface (X1 P1 R, X1 P2 R)	The interface has two ports. In addition to basic PROFINET functionality, its also supports PROFINET IO RT (real time) and IRT (isochronous real time).	PROFINET function manual (https://support.industry.siemens.com/cs/ww/en/view/49948856)
Operation of the CPU as • IO controller • I-device	• **IO controller:** As an IO controller the CPU addresses the connected IO devices • **I-device:** As an I-device (intelligent IO device) the CPU is assigned to a higher-level IO controller and is used in the process as an intelligent pre-processing unit of sub-processes	

Accessories

You can find information on "Accessories/spare parts" in the S7-1500, ET 200MP system manual (http://support.automation.siemens.com/WW/view/en/59191792).

2.4 Firmware functions

Functions

The CPU supports the following functions:

Function	Description	Additional information
Integrated system diagnostics	The system automatically generates the messages for the system diagnostics and outputs these messages via a programming device/PC, HMI device, the web server or the integrated display. System diagnostics information is also available when the CPU is in STOP mode.	Diagnostics function manual (https://support.automation.siemens.com/WW/view/en/59191792)
Integrated web server	The web server lets you access the CPU data by means of a network. Evaluations, diagnostics, and modifications are thus possible over long distances. Monitoring and evaluation is possible without STEP 7; all you need is a web browser. Make sure that you take appropriate measures (e.g. limiting network access, using firewalls) to protect the CPU from being compromised.	• Web server function manual (https://support.automation.siemens.com/WW/view/en/59193560) • Security with SIMATIC S7 controllers system manual (https://support.industry.siemens.com/cs/ww/en/view/90885010)
Integrated trace functionality	Trace functionality supports you in troubleshooting and/or optimizing the user program. You record device tags and evaluate the recordings with the trace and logic analyzer function. Tags are, for example, drive parameters or system and user tags of a CPU. The device saves the recordings. You can read out and permanently save the recordings with the configuration system (ES), if required. The trace and logic analyzer function is therefore suitable for monitoring highly dynamic processes. The trace record can also be displayed through the web server. With the project trace, you record the variables of multiple devices within a project, for example, a controller and a drive.	Using the trace and logic analyzer function function manual (https://support.automation.siemens.com/WW/view/en/64897128)
OPC UA	With OPC UA, you can exchange data via an open and manufacturer-neutral communication protocol. The CPU can act as OPC UA server. The CPU acting as the OPC UA server can communicate with OPC UA clients. The OPC UA Companion Specification allows methods to be specified uniformly and independently of the manufacturer. Using these specified methods, you can easily integrate devices from various manufacturers into your plants and production processes.	Communication function manual (https://support.industry.siemens.com/cs/ww/en/view/59192925)
Configuration control	You can use configuration control to operate different real hardware configurations with a configured maximum configuration of the hardware. This means that, in series machine manufacturing in particular, you have the option of operating/configuring different configuration variants of a machine with a single project.	S7-1500, ET 200MP system manual (https://support.automation.siemens.com/WW/view/en/59191792)

Function	Description	Additional information
PROFINET IO		
RT (real time)	RT prioritizes PROFINET IO telegrams over standard telegrams. This ensures the required determinism in the automation technology. In this process the data is transferred via prioritized Ethernet telegrams.	PROFINET function manual (https://support.automation.siemens.com/WW/view/en/49948856)
IRT (isochronous real time)	A reserved bandwidth within the send clock is available for IRT data. The reserved bandwidth ensures that the IRT data can be transmitted in time-synchronized intervals, unaffected by other high network loading (e.g. TCP/IP communication or additional real time communication). Update times with maximum determinism can be realized through IRT. Isochronous applications are possible with IRT.	
Isochronous mode	The Isochronous mode system property acquires measured values and process data and processes the signals in a fixed system clock. Isochronous mode thus contributes to high control quality and hence to greater manufacturing precision. Isochronous mode reduces possible fluctuations of the process reaction times to a minimum. Time-assured processing makes higher machine cycles possible.	
MRP (Media Redundancy Protocol)	It is possible to establish redundant networks via the Media Redundancy Protocol. Redundant transmission links (ring topology) ensure that an alternative communication path is made available if a transmission link fails. The PROFINET devices that are part of this redundant network form an MRP domain. RT operation is possible with the use of MRP.	
MRPD (Media Redundancy with Planned Duplication)	The advantage of the MRP extension MRPD is that, in the event of a failure of a device or a line in the ring, all other devices continue to be supplied with IO data without interruption and with short update times. MRPD is based on IRT and MRP. To realize media redundancy with short update times, the PROFINET devices participating in the ring send their data in both directions. The devices receive this data at both ring ports so that there is no reconfiguration time.	
Shared device	The "Shared device" function allows you to divide the modules or submodules of an IO device up among different IO controllers. Numerous IO controllers are often used in larger or widely distributed systems. Without the "Shared device" function, each I/O module of an IO device is assigned to the same IO controller. If sensors that are physically close to each other must provide data to different IO controllers, several IO devices are required. The "Shared device" function allows the modules or submodules of an IO device to be divided up among different IO controllers, thus allowing flexible automation concepts. You can, for example, combine I/O modules that are physically close to each other in one IO device.	
PROFIenergy	PROFIenergy is a PROFINET-based data interface for switching off consumers centrally and with full coordination during pause times regardless of the manufacturer or device type. Through this, the process should only be provided with the energy that is absolutely required. The majority of the energy is saved by the process; the PROFINET device itself only contributes a few watts of savings potential.	

Function	Description	Additional information
Integrated technology		
Motion Control	**All CPUs** support the S7-1500 Motion Control functions via the technology objects speed axes, positioning axes, synchronized axes, external encoders, cams, cam tracks and measuring inputs. • Speed-controlled axis for controlling a drive with speed specification • Positioning axis for position-controlled positioning of a drive • Synchronous axis to interconnect with a master value. The axis is synchronized to the master axis position. • External encoder for detecting the actual position of an encoder and its use as a master value for synchronous operation • Cams, cam track for position-dependent generation of switching signals • Measuring input for fast, accurate and event-dependent sensing of actual positions You program the technology objects with Motion Control instructions according to PLCopen.	Motion Control topic page
Extended Motion Control functions	**The technology CPUs** of the SIMATIC S7-1500 also support extended Motion Control functions with the additional technology objects cam, leading axis proxy and kinematics: • Advanced synchronization functions – Synchronization with specification of the synchronous position – Actual value coupling – Leading value or following value shift in gearing or camming – Camming – Synchronization to specified positions – Cross-PLC synchronous operation • Up to 4 encoders or measuring systems as actual position for position control • Controlling of kinematics, such as – Cartesian portals – Roller pickers – Delta pickers – SCARA	Motion Control topic page
Integrated closed-loop control functionality	• PID Compact (continuous PID controller) • PID 3Step (step controller for integrating actuators) • PID Temp (temperature controller for heating and cooling with two separate actuators)	PID control function manual (https://support.industry.siemens.com/cs/ww/en/view/108210036)

Function	Description	Additional information
Integrated safety		
Know-how protection	The know-how protection protects user blocks against unauthorized access and modifications.	S7-1500, ET 200MP system manual (https://support.automation.siemens.com/WW/view/en/59191792)
Copy protection	Copy protection links user blocks to the serial number of the SIMATIC memory card or to the serial number of the CPU. User programs cannot run without the corresponding SIMATIC memory card or CPU.	
Access protection	Extended access protection provides high-quality protection against unauthorized configuration changes. You can use authorization levels to assign separate rights to different user groups.	
Integrity protection	The CPUs dispose of integrity protection by default. Integrity protection identifies possible manipulations of engineering data on the SIMATIC memory card or during data transfer between TIA Portal and CPU. Integrity protection also checks the communication from a SIMATIC HMI system to the CPU for possible manipulations of engineering data. If integrity protection identifies the manipulation of engineering data, the user receives a corresponding message.	
Password provider	As an alternative to manual password input you can connect a password provider to STEP 7. A password provider offers the following advantages: • Convenient handling of passwords. STEP 7 reads the password automatically for the blocks. This saves you time. • Optimum block protection because the users do not know the password itself.	

See also

S7-1500 Motion Control function manual (https://support.automation.siemens.com/WW/view/en/109749262)

S7-1500T Motion Control function manual (https://support.industry.siemens.com/cs/ww/en/view/109781854)

S7-1500T Kinematics (https://support.industry.siemens.com/cs/ww/en/view/109766463)

Axis functions function manual (https://support.industry.siemens.com/cs/ww/en/view/109766462)

Measuring input and cam functions function manual (https://support.industry.siemens.com/cs/ww/en/view/109766466)

Synchronous operation functions function manual (https://support.industry.siemens.com/cs/ww/en/view/109766464)

2.5 Operator controls and display elements

2.5.1 Front view of the CPU with closed front panel

The figure below shows the front view of the CPU 1511T-1 PN.

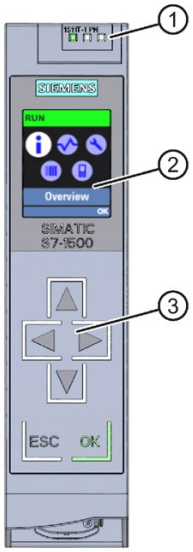

① LEDs for the current operating mode and diagnostics status of the CPU

② Display

③ Operator control buttons

Figure 2-2 View of the CPU 1511T-1 PN (with front panel) - front

Note

Temperature range for display

To increase its service life, the display switches off at a temperature below the permitted operating temperature of the device. When the display cools down, it automatically switches itself on again. When the display is switched off, the LEDs continue to show the status of the CPU.

For more information on the temperatures at which the display switches itself on and off, refer to the Technical specifications.

Removing and attaching the front panel with display

You can remove and attach the front panel with display during operation.

WARNING

Personal injury and damage to property may occur

If you pull or plug the front panel of an S7-1500 automation system during operation, personal injury or damage to property can occur in zone 2 hazardous areas.

Before you remove or fit the front panel, always switch off the power supply to the S7-1500 automation system in hazardous area zone 2.

Locking the front panel

You can lock the front panel to protect your CPU against unauthorized access.

You can attach a security seal or a padlock with a diameter of 3 mm to the front panel.

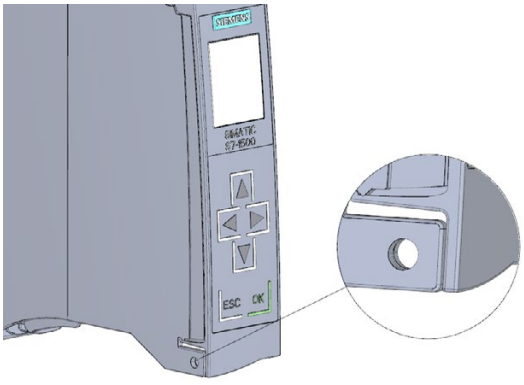

Figure 2-3 Locking latch on the CPU

In addition to the mechanical lock, you can also block access to a password-protected CPU on the display (local lock) and assign a password for the display. You can find additional information on the display, configurable protection levels and local locks in the S7-1500, ET 200MP (http://support.automation.siemens.com/WW/view/en/59191792) system manual.

Reference

You can find detailed information on the individual display options, a training course and a simulation of the available menu commands in the SIMATIC S7-1500 Display Simulator (https://support.industry.siemens.com/cs/ww/en/view/109761758).

2.5.2 Front view of the CPU without front flap

The figure below shows the operator controls and connection elements of the CPU 1511T-1 PN.

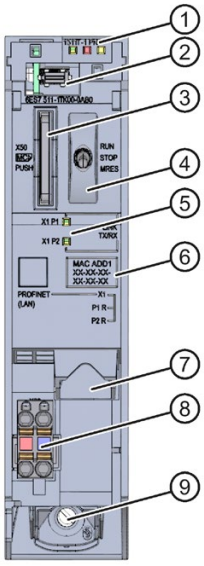

① LEDs for the current operating mode and diagnostics status of the CPU
② Display connection
③ Slot for the SIMATIC memory card
④ Mode selector
⑤ LEDs for the 2 ports of the PROFINET interface X1
⑥ MAC address
⑦ PROFINET IO interface (X1) with 2 ports
⑧ Connection for supply voltage
⑨ Fastening screw

Figure 2-4 View of the CPU 1511T-1 PN (without front panel) - front

2.5.3 Rear view of the CPU

The following figure shows the connection elements on the rear of the CPU 1511T-1 PN.

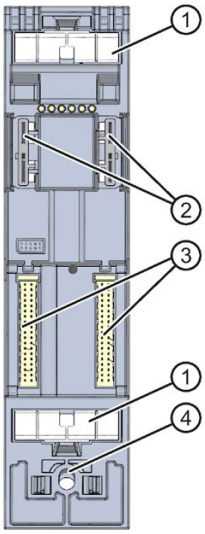

① Shield contact surface
② Plug-in connection for power supply
③ Plug-in connection for backplane bus
④ Fastening screw

Figure 2-5 View of the CPU 1511T-1 PN - rear

2.6 Mode selector

You use the mode switches to set the operating mode of the CPU.

The following table shows the meaning of the corresponding operation of the operating mode buttons.

Table 2- 5 Meaning of the mode switches

Operation of the mode switch	Meaning	Explanation
RUN	RUN mode	The CPU is executing the user program.
STOP	STOP mode	The user program is not executed. (STOP ACTIVE LED lights up)
MRES	Memory reset	Position for CPU memory reset.

Wiring

3

This section provides information on the pin assignment of the individual interfaces and the block diagram of the CPU 1511T-1 PN.

24 V DC supply voltage (X80)

The connector for the power supply is plugged in when the CPU ships from the factory.

The following table shows the signal names and the descriptions of the pin assignment of the 24 V DC supply voltage.

Table 3- 1 Pin assignment 24 V DC supply voltage

View Connector	Signal name [1]		Description
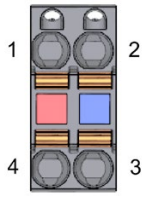	1	1L+	+ 24 V DC of the supply voltage
	2	1M	Ground of the supply voltage
	3	2M	Ground of the supply voltage for loop-through [2]
	4	2L+	+ 24 V DC of the supply voltage for loop-through [2]

[1] 1L+ and 2L+ as well as 1M and 2M are bridged internally

[2] Maximum 10 A permitted

If the CPU is supplied by a system power supply, it is not necessary to connect the 24 V supply.

PROFINET interface X1 with 2-port switch (X1 P1 R and X1 P2 R)

The assignment corresponds to the Ethernet standard for an RJ45 plug.

- When autonegotiation is deactivated, the RJ45 socket is allocated as a switch (MDI-X).
- When autonegotiation is activated, autocrossing is in effect and the RJ45 socket is allocated either as data terminal equipment (MDI) or a switch (MDI-X).

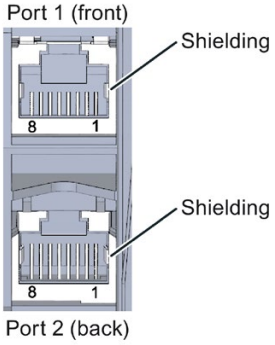

Figure 3-1 PROFINET ports

Reference

You can find additional information on the topics of "Connecting the CPU" and "Accessories/spare parts" in the S7-1500, ET 200MP (https://support.automation.siemens.com/WW/view/en/59191792) system manual.

Assignment of the MAC addresses

The CPU 1511T-1 PN has a PROFINET interface with two ports. The PROFINET interface itself has a MAC address, and each of the two PROFINET ports has its own MAC address. The CPU 1511T-1 PN therefore has three MAC addresses in total.

The MAC addresses of the PROFINET ports are needed for the LLDP protocol, for example for the neighborhood discovery function.

The number range of the MAC addresses is sequential. The first and last MAC addresses are lasered on the rating plate on the right side of each CPU 1511T-1 PN.

The table below shows how the MAC addresses are assigned.

Table 3- 2 Assignment of the MAC addresses

	Assignment	Labeling
MAC address 1	PROFINET interface X1 (visible in STEP 7 for accessible devices)	• Front, lasered • Right side, lasered (start of number range)
MAC address 2	Port X1 P1 R (required for LLDP, for example)	• Front and right side, not lasered
MAC address 3	Port X1 P2 R (required for LLDP, for example)	• Front, not lasered • Right side, lasered (end of number range)

Block diagram

The figure below shows the block diagram of the CPU 1511T-1 PN.

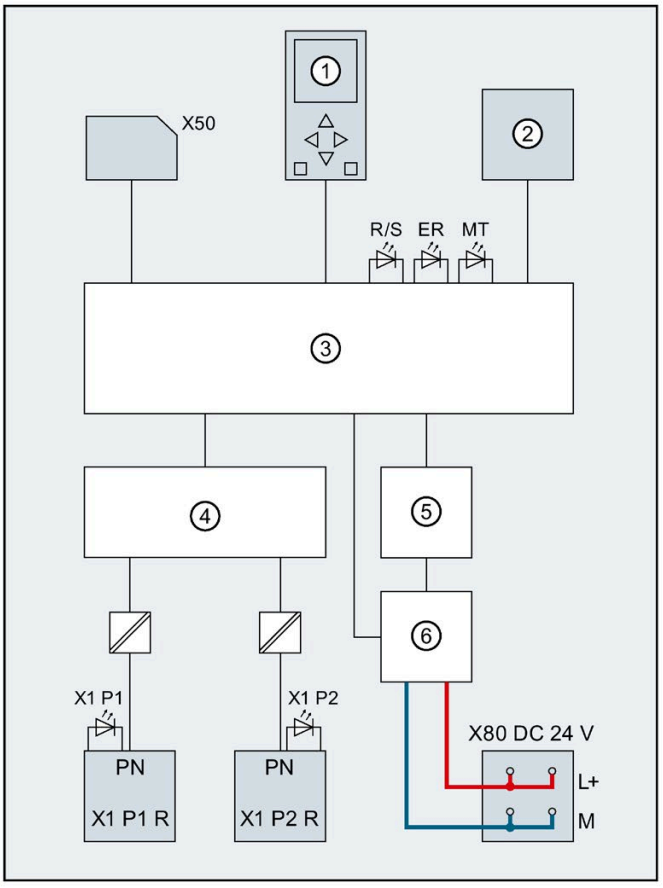

①	Display	PN X1 P1 R	PROFINET interface X1 Port 1
②	RUN/STOP/MRES mode selector	PN X1 P2 R	PROFINET interface X1 Port 2
③	Electronics	L+	24 V DC supply voltage
④	PROFINET 2-port switch	M	Ground
⑤	Backplane bus interface	R/S	RUN/STOP LED (yellow/green)
⑥	Internal supply voltage	ER	ERROR LED (red)
X50	SIMATIC memory card	MT	MAINT LED (yellow)
X80 24 V DC	Infeed of supply voltage	X1 P1, X1 P2	LED Link TX/RX

Figure 3-2 Block diagram of the CPU 1511T-1 PN

Interrupts, error messages, diagnostics and system alarms

4

The status and error displays of the CPU 1511T-1 PN are described below.

You can find additional information on the topic of "Interrupts" in the STEP 7 online help.

You can find additional information on the topic of "Diagnostics" and "System alarms" in the Diagnostics (https://support.automation.siemens.com/WW/view/en/59192926) function manual.

4.1 Status and error display of the CPU

LED display

The figure below shows the LED displays of the CPU 1511T-1 PN.

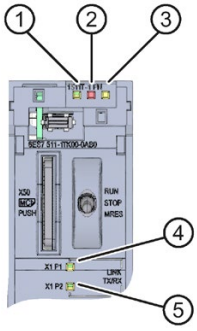

① RUN/STOP LED (yellow/green LED)

② ERROR LED (red LED)

③ MAINT LED (yellow LED)

④ LINK RX/TX LED for port X1 P1 (yellow/green LED)

⑤ LINK RX/TX LED for port X1 P2 (yellow/green LED)

Figure 4-1 LED display of the CPU 1511T-1 PN (without front panel)

Meaning of the RUN/STOP, ERROR and MAINT LEDs

The CPU 1511T-1 PN has three LEDs to signal the current operating status and diagnostics status. The following table shows the meaning of the various combinations of colors for the RUN/STOP, ERROR and MAINT LEDs.

Table 4- 1 Meaning of the LEDs

RUN/STOP LED	ERROR LED	MAINT LED	Meaning
LED off	LED off	LED off	Missing or insufficient power supply on the CPU.
LED off	LED flashes red	LED off	An error has occurred.
LED lit green	LED off	LED off	CPU is in RUN mode. There are no events, requirements, errors, etc.
LED lit green	LED flashes red	LED off	A diagnostics event is pending.
LED lit green	LED off	LED lit yellow	Maintenance demanded for the plant. The affected hardware must be checked/replaced within a short period of time.
			Active Force job
LED lit green	LED off	LED flashes yellow	Bad configuration
LED lit yellow	LED flashes red	LED off	A diagnostics event is pending.
LED lit yellow	LED off	LED flashes yellow	Firmware update successfully completed.
LED lit yellow	LED off	LED off	CPU is in STOP mode.
LED lit yellow	LED flashes red	LED flashes yellow	The program on the SIMATIC memory card is causing an error.
			Firmware update using SIMATIC memory card has failed.
			The CPU has detected an error state. Additional information is available via the CPU diagnostic buffer.
LED flashes yellow	LED off	LED off	CPU is performing internal activities during STOP, e.g. startup after STOP.
			Download of the user program from the SIMATIC memory card
			CPU carries out a program with active breakpoint.
LED flashes yellow/green	LED off	LED off	Startup (transition from STOP → RUN)
LED flashes yellow/green	LED flashes red	LED flashes yellow	Startup (CPU booting)
			Test of LEDs during startup, inserting a module.
			LED flashing test

Meaning of LINK RX/TX LED

Each port has a LINK RX/TX LED. The table below shows the various "LED scenarios" of ports for the CPU 1511T-1 PN.

Table 4- 2 Meaning of the LED

LINK TX/RX LED	Meaning
LED off	There is no Ethernet connection between the PROFINET interface of the PROFINET device and the communication partner. No data is currently being sent/received via the PROFINET interface. There is no LINK connection.
LED flashes green	The "LED flashing test" is being performed.
LED lit green	There is an Ethernet connection between the PROFINET interface of your PROFINET device and a communication partner.
LED flashes yellow/green	Data is currently being received from or sent to a communications partner on Ethernet via the PROFINET interface of the PROFINET device.

Note

"LED" instruction

You can read the status (e.g. "On" or "Off") of LEDs of a CPU or a module using the "LED" instruction. Note, however, that it is not possible to read the LED status of the LINK RX/TX LEDs on all S7-1500 CPUs.

You can find additional information on the "LED" instruction in the STEP 7 online help.

Technical specifications

5

The following table shows the technical specifications as of 12/2017. You can find a data sheet including daily updated technical specifications on the Internet (https://support.industry.siemens.com/cs/ww/en/pv/6ES7511-1TK01-0AB0/td?dl=en).

Article number	6ES7511-1TK01-0AB0
General information	
Product type designation	CPU 1511T-1 PN
HW functional status	FS04
Firmware version	V2.9
Product function	
• I&M data	Yes; I&M0 to I&M3
• Isochronous mode	Yes; Distributed and central; with minimum OB 6x cycle of 625 µs (distributed) and 1 ms (central)
Engineering with	
• STEP 7 TIA Portal configurable/integrated from version	V17 (FW V2.9) / V14 (FW V2.0) or higher
Configuration control	
via dataset	Yes
Display	
Screen diagonal [cm]	3.45 cm
Control elements	
Number of keys	6
Mode selector switch	1
Supply voltage	
Type of supply voltage	24 V DC
permissible range, lower limit (DC)	19.2 V
permissible range, upper limit (DC)	28.8 V
Reverse polarity protection	Yes
Mains buffering	
• Mains/voltage failure stored energy time	5 ms
• Repeat rate, min.	1/s
Input current	
Current consumption (rated value)	0.7 A
Inrush current, max.	1.9 A; Rated value
I^2t	0.02 $A^2 \cdot s$
Power	
Infeed power to the backplane bus	10 W
Power consumption from the backplane bus (balanced)	5.5 W
Power loss	
Power loss, typ.	5.7 W

Article number	6ES7511-1TK01-0AB0
Memory	
Number of slots for SIMATIC memory card	1
SIMATIC memory card required	Yes
Work memory	
• integrated (for program)	225 kbyte
• integrated (for data)	1 Mbyte
Load memory	
• Plug-in (SIMATIC Memory Card), max.	32 Gbyte
Backup	
• maintenance-free	Yes
CPU processing times	
for bit operations, typ.	60 ns
for word operations, typ.	72 ns
for fixed point arithmetic, typ.	96 ns
for floating point arithmetic, typ.	384 ns
CPU-blocks	
Number of elements (total)	4 000; Blocks (OB, FB, FC, DB) and UDTs
DB	
• Number range	1 ... 60 999; subdivided into: number range that can be used by the user: 1 ... 59 999, and number range of DBs created via SFC 86: 60 000 ... 60 999
• Size, max.	1 Mbyte; For DBs with absolute addressing, the max. size is 64 KB
FB	
• Number range	0 ... 65 535
• Size, max.	150 kbyte
FC	
• Number range	0 ... 65 535
• Size, max.	150 kbyte

Article number	6ES7511-1TK01-0AB0
OB	
• Size, max.	150 kbyte
• Number of free cycle OBs	100
• Number of time alarm OBs	20
• Number of delay alarm OBs	20
• Number of cyclic interrupt OBs	20; With minimum OB 3x cycle of 500 µs
• Number of process alarm OBs	50
• Number of DPV1 alarm OBs	3
• Number of isochronous mode OBs	2
• Number of technology synchronous alarm OBs	2
• Number of startup OBs	100
• Number of asynchronous error OBs	4
• Number of synchronous error OBs	2
• Number of diagnostic alarm OBs	1
Nesting depth	
• per priority class	24
Counters, timers and their retentivity	
S7 counter	
• Number	2 048
Retentivity	
– adjustable	Yes
IEC counter	
• Number	Any (only limited by the main memory)
Retentivity	
– adjustable	Yes
S7 times	
• Number	2 048
Retentivity	
– adjustable	Yes
IEC timer	
• Number	Any (only limited by the main memory)
Retentivity	
– adjustable	Yes
Data areas and their retentivity	
Retentive data area (incl. timers, counters, flags), max.	128 kbyte; In total; available retentive memory for bit memories, timers, counters, DBs, and technology data (axes): 88 KB
Extended retentive data area (incl. timers, counters, flags), max.	1 Mbyte; When using PS 6 0W 24/48/60 V DC HF

Article number	6ES7511-1TK01-0AB0
Flag	
• Size, max.	16 kbyte
• Number of clock memories	8; 8 clock memory bit, grouped into one clock memory byte
Data blocks	
• Retentivity adjustable	Yes
• Retentivity preset	No
Local data	
• per priority class, max.	64 kbyte; max. 16 KB per block
Address area	
Number of IO modules	1 024; max. number of modules / submodules
I/O address area	
• Inputs	32 kbyte; All inputs are in the process image
• Outputs	32 kbyte; All outputs are in the process image
per integrated IO subsystem	
– Inputs (volume)	8 kbyte
– Outputs (volume)	8 kbyte
per CM/CP	
– Inputs (volume)	8 kbyte
– Outputs (volume)	8 kbyte
Subprocess images	
• Number of subprocess images, max.	32
Hardware configuration	
Number of distributed IO systems	32; A distributed I/O system is characterized not only by the integration of distributed I/O via PROFINET or PROFIBUS communication modules, but also by the connection of I/O via AS-i master modules or links (e.g. IE/PB-Link)
Number of DP masters	
• Via CM	4; A maximum of 4 CMs/CPs (PROFIBUS, PROFINET, Ethernet) can be inserted in total
Number of IO Controllers	
• integrated	1
• Via CM	4; A maximum of 4 CMs/CPs (PROFIBUS, PROFINET, Ethernet) can be inserted in total
Rack	
• Modules per rack, max.	32; CPU + 31 modules
• Number of lines, max.	1
PtP CM	
• Number of PtP CMs	the number of connectable PtP CMs is only limited by the number of available slots

Article number	6ES7511-1TK01-0AB0
Time of day	
Clock	
• Type	Hardware clock
• Backup time	6 wk; At 40 °C ambient temperature, typically
• Deviation per day, max.	10 s; Typ.: 2 s
Operating hours counter	
• Number	16
Clock synchronization	
• supported	Yes
• in AS, master	Yes
• in AS, slave	Yes
• on Ethernet via NTP	Yes
Interfaces	
Number of PROFINET interfaces	1
1. Interface	
Interface types	
• RJ 45 (Ethernet)	Yes; X1
• Number of ports	2
• integrated switch	Yes
Protocols	
• IP protocol	Yes; IPv4
• PROFINET IO Controller	Yes
• PROFINET IO Device	Yes
• SIMATIC communication	Yes
• Open IE communication	Yes; Optionally also encrypted
• Web server	Yes
• Media redundancy	Yes

Article number	6ES7511-1TK01-0AB0
PROFINET IO Controller	
Services	
– PG/OP communication	Yes
– Isochronous mode	Yes
– Direct data exchange	Yes; Requirement: IRT and isochronous mode (MRPD optional)
– IRT	Yes
– PROFIenergy	Yes; per user program
– Prioritized startup	Yes; Max. 32 PROFINET devices
– Number of connectable IO Devices, max.	128; In total, up to 256 distributed I/O devices can be connected via AS-i, PROFIBUS or PROFINET
– Of which IO devices with IRT, max.	64
– Number of connectable IO Devices for RT, max.	128
– of which in line, max.	128
– Number of IO Devices that can be simultaneously activated/deactivated, max.	8; in total across all interfaces
– Number of IO Devices per tool, max.	8
– Updating times	The minimum value of the update time also depends on communication share set for PROFINET IO, on the number of IO devices, and on the quantity of configured user data
Update time for IRT	
– for send cycle of 250 µs	250 µs to 4 ms; Note: In the case of IRT with isochronous mode, the minimum update time of 625 µs of the isochronous OB is decisive
– for send cycle of 500 µs	500 µs to 8 ms; Note: In the case of IRT with isochronous mode, the minimum update time of 625 µs of the isochronous OB is decisive
– for send cycle of 1 ms	1 ms to 16 ms
– for send cycle of 2 ms	2 ms to 32 ms
– for send cycle of 4 ms	4 ms to 64 ms
– With IRT and parameterization of "odd" send cycles	Update time = set "odd" send clock (any multiple of 125 µs: 375 µs, 625 µs ... 3 875 µs)
Update time for RT	
– for send cycle of 250 µs	250 µs to 128 ms
– for send cycle of 500 µs	500 µs to 256 ms
– for send cycle of 1 ms	1 ms to 512 ms
– for send cycle of 2 ms	2 ms to 512 ms
– for send cycle of 4 ms	4 ms to 512 ms

Article number	6ES7511-1TK01-0AB0
PROFINET IO Device	
Services	
– PG/OP communication	Yes
– Isochronous mode	No
– IRT	Yes
– PROFIenergy	Yes; per user program
– Shared device	Yes
– Number of IO Controllers with shared device, max.	4
– activation/deactivation of I-devices	Yes; per user program
– Asset management record	Yes; per user program
Interface types	
RJ 45 (Ethernet)	
• 100 Mbps	Yes
• Autonegotiation	Yes
• Autocrossing	Yes
• Industrial Ethernet status LED	Yes
Protocols	
Number of connections	
• Number of connections, max.	96; via integrated interfaces of the CPU and connected CPs / CMs
• Number of connections reserved for ES/HMI/web	10
• Number of connections via integrated interfaces	64
• Number of S7 routing paths	16
Redundancy mode	
• H-Sync forwarding	Yes
Media redundancy	
– Media redundancy	only via 1st interface (X1)
– MRP	Yes; MRP Automanager according to IEC 62439-2 Edition 2.0, MRP Manager; MRP Client
– MRP interconnection, supported	Yes; as MRP ring node according to IEC 62439-2 Edition 3.0
– MRPD	Yes; Requirement: IRT
– Switchover time on line break, typ.	200 ms; For MRP, bumpless for MRPD
– Number of stations in the ring, max.	50

Article number	6ES7511-1TK01-0AB0
SIMATIC communication	
• PG/OP communication	Yes; encryption with TLS V1.3 pre-selected
• S7 routing	Yes
• S7 communication, as server	Yes
• S7 communication, as client	Yes
• User data per job, max.	See online help (S7 communication, user data size)
Open IE communication	
• TCP/IP	Yes
– Data length, max.	64 kbyte
– several passive connections per port, supported	Yes
• ISO-on-TCP (RFC1006)	Yes
– Data length, max.	64 kbyte
• UDP	Yes
– Data length, max.	2 kbyte; 1 472 bytes for UDP broadcast
– UDP multicast	Yes; Max. 5 multicast circuits
• DHCP	Yes
• DNS	Yes
• SNMP	Yes
• DCP	Yes
• LLDP	Yes
• Encryption	Yes; Optional
Web server	
• HTTP	Yes; Standard and user pages
• HTTPS	Yes; Standard and user pages

Article number	6ES7511-1TK01-0AB0
OPC UA	
• Runtime license required	Yes; "Small" license required
• OPC UA Client	Yes
– Application authentication	Yes
– Security policies	Available security policies: None, Basic128Rsa15, Basic256Rsa15, Basic256Sha256
– User authentication	"anonymous" or by user name & password
– Number of connections, max.	4
– Number of nodes of the client interfaces, max.	1 000
– Number of elements for one call of OPC_UA_NodeGetHandleList/OPC_UA_ReadList/OPC_UA_WriteList, max.	300
– Number of elements for one call of OPC_UA_NameSpaceGetIndexList, max.	20
– Number of elements for one call of OPC_UA_MethodGetHandleList, max.	100
– Number of simultaneous calls of the client instructions per connection (except OPC_UA_ReadList,OPC_UA_WriteList,OPC_UA_MethodCall), max.	1
– Number of simultaneous calls of the client instructions OPC_UA_ReadList,OPC_UA_WriteList and OPC_UA_MethodCall, max.	5
– Number of registerable nodes, max.	5 000
– Number of registerable method calls of OPC_UA_MethodCall, max.	100
– Number of inputs/outputs when calling OPC_UA_MethodCall, max.	20
• OPC UA Server	Yes; Data access (read, write, subscribe), method call, custom address space
– Application authentication	Yes
– Security policies	Available security policies: None, Basic128Rsa15, Basic256Rsa15, Basic256Sha256
– User authentication	"anonymous" or by user name & password
– GDS support (certificate management)	Yes
– Number of sessions, max.	32
– Number of accessible variables, max.	50 000
– Number of registerable nodes, max.	10 000
– Number of subscriptions per session, max.	20
– Sampling interval, min.	100 ms

Article number	6ES7511-1TK01-0AB0
– Publishing interval, min.	500 ms
– Number of server methods, max.	20
– Number of inputs/outputs per server method, max.	20
– Number of monitored items, max.	1 000; for 1 s sampling interval and 1 s send interval
– Number of nodes for user-defined server interfaces, max.	1 000
• Alarms and Conditions	Yes
– Number of program alarms	100
– Number of alarms for system diagnostics	50
Further protocols	
• MODBUS	Yes; MODBUS TCP
Isochronous mode	
Equidistance	Yes
S7 message functions	
Number of login stations for message functions, max.	32
Program alarms	Yes
Number of configurable program messages, max.	5 000; Program messages are generated by the "Program_Alarm" block, ProDiag or GRAPH
Number of loadable program messages in RUN, max.	2 500
Number of simultaneously active program alarms	
• Number of program alarms	600
• Number of alarms for system diagnostics	100
• Number of alarms for motion technology objects	80
Test commissioning functions	
Joint commission (Team Engineering)	Yes; Parallel online access possible for up to 5 engineering systems
Status block	Yes; Up to 8 simultaneously (in total across all ES clients)
Single step	No
Number of breakpoints	8
Status/control	
• Status/control variable	Yes
• Variables	Inputs/outputs, memory bits, DBs, distributed I/Os, timers, counters
• Number of variables, max.	
– of which status variables, max.	200; per job
– of which control variables, max.	200; per job

Article number	6ES7511-1TK01-0AB0
Forcing	
• Forcing	Yes
• Forcing, variables	Peripheral inputs/outputs
• Number of variables, max.	200
Diagnostic buffer	
• present	Yes
• Number of entries, max.	1 000
– of which powerfail-proof	500
Traces	
• Number of configurable Traces	4; Up to 512 KB of data per trace are possible
Interrupts/diagnostics/status information	
Diagnostics indication LED	
• RUN/STOP LED	Yes
• ERROR LED	Yes
• MAINT LED	Yes
• Connection display LINK TX/RX	Yes
Supported technology objects	
Motion Control	Yes; Note: The number of technology objects affects the cycle time of the PLC program; selection guide via the TIA Selection Tool
• Number of available Motion Control resources for technology objects	800
• Required Motion Control resources	
– per speed-controlled axis	40
– per positioning axis	80
– per synchronous axis	160
– per external encoder	80
– per output cam	20
– per cam track	160
– per probe	40
• Number of available Extended Motion Control resources for technology objects	40
• Required Extended Motion Control resources	
– per cam (1 000 points and 50 segments)	2
– per cam (10 000 points and 50 segments)	20
– for each set of kinematics	30

Article number	6ES7511-1TK01-0AB0
– Per leading axis proxy	3
• Positioning axis	
– Number of positioning axes at motion control cycle of 4 ms (typical value)	5
– Number of positioning axes at motion control cycle of 8 ms (typical value)	10
Controller	
• PID_Compact	Yes; Universal PID controller with integrated optimization
• PID_3Step	Yes; PID controller with integrated optimization for valves
• PID-Temp	Yes; PID controller with integrated optimization for temperature
Counting and measuring	
• High-speed counter	Yes
Standards, approvals, certificates	
Suitable for safety functions	No
Ambient conditions	
Ambient temperature during operation	
• horizontal installation, min.	0 °C
• horizontal installation, max.	60 °C; Display: 50 °C, at an operating temperature of typically 50 °C, the display is switched off
• vertical installation, min.	0 °C
• vertical installation, max.	40 °C; Display: 40 °C, at an operating temperature of typically 40 °C, the display is switched off
Ambient temperature during storage/transportation	
• min.	-40 °C
• max.	70 °C
Altitude during operation relating to sea level	
• Installation altitude above sea level, max.	5 000 m; Restrictions for installation altitudes > 2 000 m, see manual
Configuration	
Programming	
Programming language	
– LAD	Yes
– FBD	Yes
– STL	Yes
– SCL	Yes
– GRAPH	Yes

Article number	6ES7511-1TK01-0AB0
Know-how protection	
• User program protection/password protection	Yes
• Copy protection	Yes
• Block protection	Yes
Access protection	
• protection of confidential configuration data	Yes
• Password for display	Yes
• Protection level: Write protection	Yes
• Protection level: Read/write protection	Yes
• Protection level: Complete protection	Yes
Cycle time monitoring	
• lower limit	adjustable minimum cycle time
• upper limit	adjustable maximum cycle time
Dimensions	
Width	35 mm
Height	147 mm
Depth	129 mm
Weights	
Weight, approx.	430 g

General technical specifications

You can find information on the general technical specifications, such as standards and approvals, electromagnetic compatibility, protection class, etc., in the S7-1500, ET 200MP System Manual (https://support.automation.siemens.com/WW/view/en/59191792).

Dimension drawing

A

This section contains the dimensional drawing of the module on the mounting rail, as well as a dimensional drawing with the front panel open. Always observe the specified dimensions for installation in cabinets, control rooms, etc.

Dimensional drawings of the CPU 1511T-1 PN

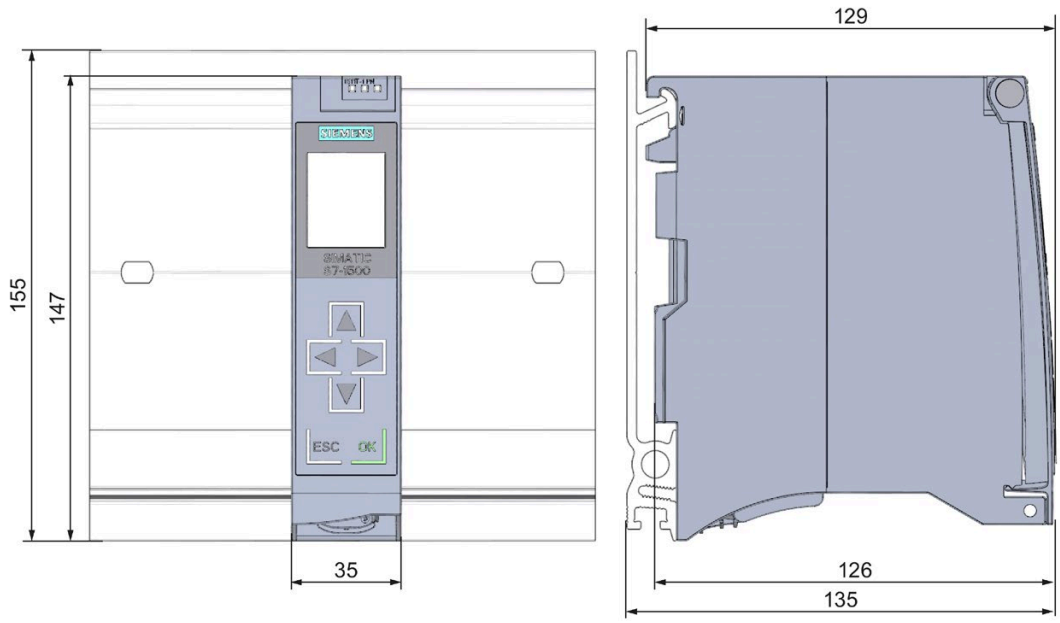

Figure A-1 Dimensional drawing of the CPU 1511T-1 PN, front and side view

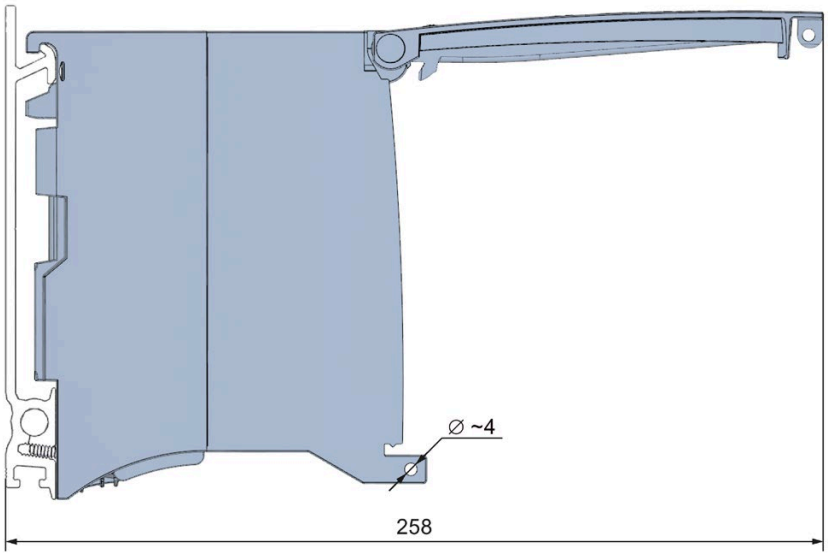

Figure A-2 Dimensional drawing of the CPU 1511T-1 PN, side view with front panel open

SIEMENS

Manual

SIMATIC

S7-1500

CPU 1512C-1 PN (6ES7512-1CK01-0AB0)

Edition 05/2021

support.industry.siemens.com

SIEMENS

SIMATIC

S7-1500
CPU 1512C-1 PN
(6ES7512-1CK01-0AB0)

Equipment Manual

Preface

S7-1500 / ET 200MP Documentation Guide 1

Product overview 2

Technology functions 3

Wiring 4

Parameters/address space 5

Interrupts/diagnostics alarms 6

Technical specifications 7

Dimension drawings A

Parameter data records B

Analog value processing C

05/2021

A5E40898741-AB

Legal information

Warning notice system

This manual contains notices you have to observe in order to ensure your personal safety, as well as to prevent damage to property. The notices referring to your personal safety are highlighted in the manual by a safety alert symbol, notices referring only to property damage have no safety alert symbol. These notices shown below are graded according to the degree of danger.

⚠ DANGER
indicates that death or severe personal injury **will** result if proper precautions are not taken.

⚠ WARNING
indicates that death or severe personal injury **may** result if proper precautions are not taken.

⚠ CAUTION
indicates that minor personal injury can result if proper precautions are not taken.

NOTICE
indicates that property damage can result if proper precautions are not taken.

If more than one degree of danger is present, the warning notice representing the highest degree of danger will be used. A notice warning of injury to persons with a safety alert symbol may also include a warning relating to property damage.

Qualified Personnel

The product/system described in this documentation may be operated only by **personnel qualified** for the specific task in accordance with the relevant documentation, in particular its warning notices and safety instructions. Qualified personnel are those who, based on their training and experience, are capable of identifying risks and avoiding potential hazards when working with these products/systems.

Proper use of Siemens products

Note the following:

⚠ WARNING
Siemens products may only be used for the applications described in the catalog and in the relevant technical documentation. If products and components from other manufacturers are used, these must be recommended or approved by Siemens. Proper transport, storage, installation, assembly, commissioning, operation and maintenance are required to ensure that the products operate safely and without any problems. The permissible ambient conditions must be complied with. The information in the relevant documentation must be observed.

Trademarks

All names identified by ® are registered trademarks of Siemens AG. The remaining trademarks in this publication may be trademarks whose use by third parties for their own purposes could violate the rights of the owner.

Disclaimer of Liability

We have reviewed the contents of this publication to ensure consistency with the hardware and software described. Since variance cannot be precluded entirely, we cannot guarantee full consistency. However, the information in this publication is reviewed regularly and any necessary corrections are included in subsequent editions.

Siemens AG
Digital Industries
Postfach 48 48
90026 NÜRNBERG
GERMANY

A5E40898741-AB
Ⓟ 05/2021 Subject to change

Copyright © Siemens AG 2017 - 2021.
All rights reserved

Preface

Security information

Siemens provides products and solutions with industrial security functions that support the secure operation of plants, systems, machines and networks.

In order to protect plants, systems, machines and networks against cyber threats, it is necessary to implement – and continuously maintain – a holistic, state-of-the-art industrial security concept. Siemens' products and solutions constitute one element of such a concept.

Customers are responsible for preventing unauthorized access to their plants, systems, machines and networks. Such systems, machines and components should only be connected to an enterprise network or the internet if and to the extent such a connection is necessary and only when appropriate security measures (e.g. firewalls and/or network segmentation) are in place.

For additional information on industrial security measures that may be implemented, please visit (https://www.siemens.com/industrialsecurity).

Siemens' products and solutions undergo continuous development to make them more secure. Siemens strongly recommends that product updates are applied as soon as they are available and that the latest product versions are used. Use of product versions that are no longer supported, and failure to apply the latest updates may increase customers' exposure to cyber threats.

To stay informed about product updates, subscribe to the Siemens Industrial Security RSS Feed visit (https://www.siemens.com/industrialsecurity).

Purpose of the documentation

This manual supplements the system manual of the S7-1500 automation system / ET 200MP distributed I/O system as well as the function manuals. This manual contains a description of the module-specific information. The system-related functions are described in the system manual. Cross-system functions are described in the function manuals.

The information provided in this manual and the system manual enables you to commission the CPU 1512C-1 PN.

Conventions

STEP 7: In this documentation, "STEP 7" is used as a synonym for all versions of the configuration and programming software "STEP 7 (TIA Portal)".

Please also observe notes marked as follows:

Note

A note contains important information on the product described in the documentation, on the handling of the product or on the section of the documentation to which particular attention should be paid.

Siemens Industry Online Support

You can find current information on the following topics quickly and easily here:

- **Product support**

  All the information and extensive know-how on your product, technical specifications, FAQs, certificates, downloads, and manuals.

- **Application examples**

  Tools and examples to solve your automation tasks – as well as function blocks, performance information and videos.

- **Services**

  Information about Industry Services, Field Services, Technical Support, spare parts and training offers.

- **Forums**

  For answers and solutions concerning automation technology.

- **mySupport**

  Your personal working area in Industry Online Support for messages, support queries, and configurable documents.

This information is provided by the Siemens Industry Online Support in the Internet (https://support.industry.siemens.com).

Industry Mall

The Industry Mall is the catalog and order system of Siemens AG for automation and drive solutions on the basis of Totally Integrated Automation (TIA) and Totally Integrated Power (TIP).

Catalogs for all the products in automation and drives are available on the Internet (https://mall.industry.siemens.com).

Table of contents

Preface ... **3**

1 S7-1500 / ET 200MP Documentation Guide ... **8**

2 Product overview ... **10**

2.1 New functions ... 10

2.2 Area of application of the SIMATIC S7-1500 CPUs ... 12

2.3 Hardware properties and firmware functions ... 23
2.3.1 Hardware properties of the CPU part ... 24
2.3.2 Firmware functions of the CPU part ... 26
2.3.3 Hardware properties of the analog on-board I/O module ... 30
2.3.4 Firmware functions of the analog on-board I/O module ... 32
2.3.5 Hardware properties of the digital on-board I/O module ... 34
2.3.6 Firmware functions of the digital on-board I/O module ... 37

2.4 Operator controls and display elements ... 39
2.4.1 Front view with closed front panel ... 39
2.4.2 Front view of the CPU without front panel and view from below ... 41
2.4.3 Rear view ... 43

2.5 Operating mode buttons ... 44

3 Technology functions ... **45**

3.1 High-speed counters ... 45
3.1.1 Functions ... 46
3.1.1.1 Counting ... 46
3.1.1.2 Measuring ... 47
3.1.1.3 Position detection for motion control ... 48
3.1.1.4 Additional functions ... 49
3.1.2 Configuring the high-speed counters ... 50
3.1.2.1 General ... 50
3.1.2.2 Assignment of the control interface of the high-speed counters ... 50
3.1.2.3 Assignment of the feedback interface of the high-speed counters ... 52

3.2 Pulse generators ... 54
3.2.1 Operating modes ... 54
3.2.1.1 Operating mode: Pulse-width modulation (PWM) ... 54
3.2.1.2 Operating mode: Frequency output ... 61
3.2.1.3 Operating mode: PTO ... 65
3.2.2 Functions ... 70
3.2.2.1 Function: High-speed output ... 70
3.2.2.2 Function: Direct control of the pulse output (DQA) ... 71
3.2.3 Configuring the PWM and frequency output modes ... 72
3.2.3.1 Assignment of the control interface ... 72
3.2.3.2 Handling the SLOT parameter (control interface) ... 74
3.2.3.3 Assignment of the feedback interface ... 77

4 Wiring ... 79

4.1 Supply voltage ... 79

4.2 PROFINET interfaces ... 80

4.3 Terminal and block diagrams ... 82
4.3.1 Block diagram of the CPU part ... 82
4.3.2 Terminal and block diagram of the analog on-board I/O ... 83
4.3.3 Terminal and block diagram of the digital on-board I/O ... 92
4.3.4 Addresses of the high-speed counters ... 105
4.3.5 Addresses of the pulse generators in the Pulse Width Modulation (PWM) and Frequency Output modes ... 109
4.3.6 Addresses of pulse generators in the PTO mode ... 110
4.3.7 Interconnection overview of the inputs ... 111
4.3.8 Interconnection overview of outputs ... 113

5 Parameters/address space ... 116

5.1 Address space of the analog on-board I/O ... 116

5.2 Address space of the digital on-board I/O ... 118

5.3 Address space of the pulse generators ... 120

5.4 Measurement types and measuring ranges of the analog on-board I/O ... 121

5.5 Output type and output ranges of the analog on-board I/O ... 122

5.6 Parameters of the analog on-board I/O ... 122

5.7 Parameters of the digital on-board I/O ... 125

6 Interrupts/diagnostics alarms ... 127

6.1 Status and error displays ... 127
6.1.1 Status and error displays of the CPU part ... 127
6.1.2 Status and error displays of the analog on-board I/O ... 130
6.1.3 Status and error displays of the digital on-board I/O ... 132

6.2 Interrupts and diagnostics ... 134
6.2.1 Interrupts and diagnostics of the CPU part ... 134
6.2.2 Interrupts and diagnostics of the analog on-board I/O ... 134
6.2.3 Interrupts and diagnostics of the digital on-board I/O ... 136

7 Technical specifications ... 140

A Dimension drawings ... 165

B Parameter data records ... 167

B.1 Parameter assignment and structure of the parameter data records of the analog on-board I/O ... 167

B.2 Structure of a data record for input channels of the analog on-board I/O ... 168

B.3 Structure of a data record for output channels of the analog on-board I/O ... 173

B.4 Parameter assignment and structure of the parameter data records of the digital on-board I/O ... 176

B.5 Structure of a data record for input channels of the digital on-board I/O ... 177

B.6 Structure of a data record for output channels of the digital on-board I/O ... 179

B.7 Parameter data records of the high-speed counters 181

B.8 Parameter data records (PWM) 187

C Analog value processing 190

C.1 Conversion method 190

C.2 Representation of analog values 196

C.3 Representation of input ranges 197
C.3.1 Representation of analog values in voltage measuring ranges 198
C.3.2 Representation of analog values in current measuring ranges 199
C.3.3 Representation of the analog values of resistance-type sensors/resistance-type thermometers 200
C.3.4 Measured values for wire break diagnostics 202

C.4 Representation of output ranges 203
C.4.1 Representation of analog values in the voltage output ranges 204
C.4.2 Representation of analog values in the current output ranges 205

S7-1500 / ET 200MP Documentation Guide 1

The documentation for the SIMATIC S7-1500 automation system and the SIMATIC ET 200MP distributed I/O system is arranged into three areas.
This arrangement enables you to access the specific content you require.

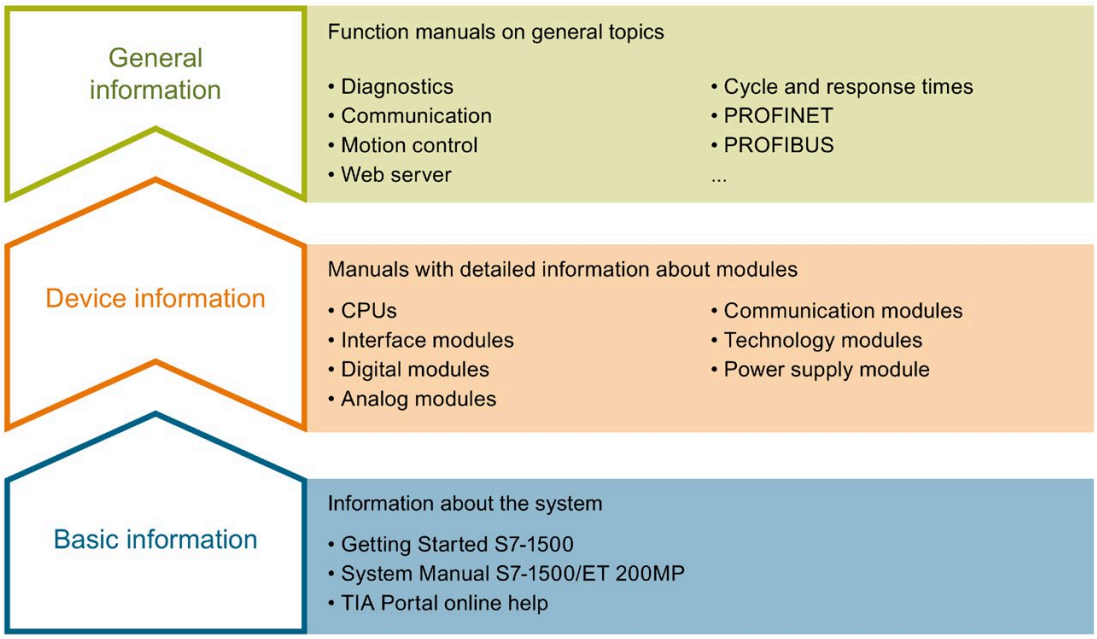

Basic information

The System Manual and Getting Started describe in detail the configuration, installation, wiring and commissioning of the SIMATIC S7-1500 and ET 200MP systems. The STEP 7 online help supports you in the configuration and programming.

Device information

Product manuals contain a compact description of the module-specific information, such as properties, wiring diagrams, characteristics and technical specifications.

General information

The function manuals contain detailed descriptions on general topics regarding the SIMATIC S7-1500 and ET 200MP systems, e.g. diagnostics, communication, motion control, Web server, OPC UA.

You can download the documentation free of charge from the Internet (https://support.industry.siemens.com/cs/ww/en/view/109742691).

Changes and supplements to the manuals are documented in a Product Information.

You can download the product information free of charge from the Internet (https://support.industry.siemens.com/cs/us/en/view/68052815).

Manual Collection S7-1500/ET 200MP

The Manual Collection contains the complete documentation on the SIMATIC S7-1500 automation system and the ET 200MP distributed I/O system gathered together in one file.

You can find the Manual Collection on the Internet (https://support.industry.siemens.com/cs/ww/en/view/86140384).

SIMATIC S7-1500 comparison list for programming languages

The comparison list contains an overview of which instructions and functions you can use for which controller families.

You can find the comparison list on the Internet (https://support.industry.siemens.com/cs/ww/en/view/86630375).

"mySupport"

With "mySupport", your personal workspace, you make the best out of your Industry Online Support.

In "mySupport", you can save filters, favorites and tags, request CAx data and compile your personal library in the Documentation area. In addition, your data is already filled out in support requests and you can get an overview of your current requests at any time.

You must register once to use the full functionality of "mySupport".

You can find "mySupport" on the Internet (https://support.industry.siemens.com/My/ww/en).

Application examples

The application examples support you with various tools and examples for solving your automation tasks. Solutions are shown in interplay with multiple components in the system - separated from the focus on individual products.

You will find the application examples on the Internet (https://support.industry.siemens.com/cs/ww/en/ps/ae).

Product overview

2

2.1 New functions

New functions of the CPU in firmware version V2.9

The following table provides an overview of the most important new functions of the CPU with firmware version V2.9.

New functions	Applications	Customer benefits	Where can I find information?
Communication of the CPU			
Secure PG/HMI communication	With STEP 7 and WinCC as of Version V17, SIMATIC S7-1500 CPUs and ET 200 CPUs from firmware version 2.9 support innovated and standardized secure PG/PC and HMI communication – referred to as Secure PG/HMI communication for short.	Secure and standardized creation or assignment of PLC communication certificates	Communication function manual (https://support.industry.siemens.com/cs/ww/en/view/59192925)
Protection of confidential configuration data	You have the option of assigning a password for protecting confidential configuration data of the respective CPU. This refers to data such as private keys that are required for the proper functioning of certificate-based protocols.	Additional password protection of confidential configuration data	
OPC UA: Alarms & Conditions	OPC UA clients from any manufacturer can subscribe to alarms of the CPU via OPC UA Alarms & Conditions.	Without further measures, alarms created once via OPC UA are available as events and alarms. The alarms can be displayed by any display device with corresponding OPC UA client functionality.	
OPC UA: Certificate management via Global Discovery Server (GDS)	Via GDS push management functions: • Automated update of OPC UA certificates of an S7-1500 CPU • Transfer of updated certificates and lists in RUN operating state of the CPU	The automation of the certificate management eliminates any manual work required for reconfiguring the CPU, for example, after a certificate has expired, and a new download to the CPU.	

New functions	Applications	Customer benefits	Where can I find information?
DHCP (Dynamic Host Configuration Protocol)	The CPU can use the DHCP communication protocol to assign the network configuration via a DHCP server. The CPU uses a client ID for identification on the DHCP server. The following parameters can be obtained: • IP Suite • DNS server • NTP server The CPU can also send its host name to the DHCP server.	With DHCP, you can integrate the CPU into an existing IT network without having to make additional changes to the PROFINET interface.	Communication function manual (https://support.industry.siemens.com/cs/ww/en/view/59192925)
MRP interconnection in PROFINET networks	The MRP interconnection procedure is an extension of MRP. MRP interconnection enables the redundant coupling of two or more rings with MRP in PROFINET networks.	There is no limit to the maximum number of 50 devices in a ring when setting up redundant network topologies. Monitoring of larger topologies with ring redundancy	PROFINET function manual (https://support.industry.siemens.com/cs/ww/en/view/49948856)
Web server of the CPU			
Web applications that can be loaded by the user	Additional methods to manage web applications via Web API You can use all available Web API methods within the web application	Web applications are also available in STOP mode of the CPU Reduced development times of web server user pages	Web server function manual (https://support.industry.siemens.com/cs/ww/en/view/59193560)
New Web API methods	Reading and changing the CPU operating state via Web API Ticket methods for transferring large amounts of data outside of the JSON RPC protocol	Additional applications for the web server	
Diagnostic information on motion control	Diagnostic information is available for all technology objects Improved display and grouping of the tags	Comprehensive diagnostic options by means of motion control applications are possible via the web server.	
Optimizations to the DNS (Domain Name System) functionality with OPC UA/Open User Communication and on the web server	The feedback messages of the OPC UA server with the "Application Name" can be sent via DNS. The NTP client of the CPU can address its relevant NTP servers via DNS. The Web server can be consistently reached via DNS addressing. DNS is taken into account during certificate handling.	A pool of NTP servers can be addressed.	Communication function manual (https://support.industry.siemens.com/cs/ww/en/view/59192925) Web server function manual (https://support.industry.siemens.com/cs/ww/en/view/59193560)
Technology functions of the CPU			
Axis functions	• Backlash compensation • Linear motor	The repeat accuracy of a movement is increased by compensation for the mechanical play of the real axis. Easier control of highly dynamic linear motors.	S7-1500T Motion Control function manuals (https://support.industry.siemens.com/cs/ww/en/view/109751049)

Reference

You can find an overview of all new functions, improvements and revisions in the respective firmware versions on the Internet (https://support.industry.siemens.com/cs/ww/en/view/109478459).

2.2 Area of application of the SIMATIC S7-1500 CPUs

Area of application

SIMATIC S7-1500 is the modular control system for a wide variety of automation applications in discrete automation.

SIMATIC S7-1500 is the cost-effective and convenient solution for a broad range of tasks and offers the following advantages:

- Modular, fanless design
- Simple realization of distributed structures
- User-friendly handling

Areas of application of the SIMATIC S7-1500 automation system include, for example:

- Special-purpose machines
- Textile machinery
- Packaging machines
- General mechanical engineering
- Controller engineering
- Machine tool engineering
- Installation engineering
- Electrical industry and crafts
- Automobile engineering
- Water/waste water
- Food & Beverage

Areas of application of the SIMATIC S7-1500R/H redundant system include, for example:

- Tunnels
- Airports (e.g. baggage conveyors)
- Subways
- Shipbuilding
- Wastewater treatment plants
- High-bay warehouses

Areas of application of the SIMATIC S7-1500T automation system for advanced motion control applications include, for example:

- Packaging machines
- Converting applications
- Assembly automation
- Pick-and-place automation
- Palletizers

You can choose between CPUs with various levels of performance and a comprehensive range of modules with many convenient functions. Fail-safe CPUs enable use in fail-safe applications. The modular design allows you to use only the modules that you need for your application. The controller can be retrofitted with additional modules at any time to expand its range of tasks.

High industrial suitability due to the high resistance to EMC, shock and vibration enable universal use of the SIMATIC S7-1500, S7-1500R/H and S7-1500T automation systems.

Performance segments of the CPUs

The CPUs can be used for smaller and mid-range applications, as well as for the high-end range of machine and plant automation.

Table 2- 1 Standard CPUs

CPU	Performance segment	PROFIBUS interfaces	PROFINET IO RT/IRT interfaces	PROFINET IO RT interface	Basic PROFINET functionality	Work memory	Processing time for bit operations
CPU 1511-1 PN	Standard CPU for small to mid-range applications	--	1	--	--	1.15 MB	60 ns
CPU 1513-1 PN	Standard CPU for mid-range applications	--	1	--	--	1.8 MB	40 ns
CPU 1515-2 PN	Standard CPU for mid-range to large applications	--	1	1	--	3.5 MB	30 ns
CPU 1516-3 PN/DP	Standard CPU for demanding applications and communication tasks	1	1	1	--	6 MB	10 ns
CPU 1517-3 PN/DP	Standard CPU for demanding applications and communication tasks	1	1	1	--	10 MB	2 ns
CPU 1518-4 PN/DP	Standard CPU for high-performance applications, demanding communication tasks and very short reaction times	1	1	1	1	24 MB	1 ns
CPU 1518-4 PN/DP MFP	Standard CPU for high-performance applications, demanding communication tasks, very short reaction times and C/C++ blocks for the user program	1	1	1	1	74* MB	1 ns

* 50 MB of the integrated work memory is reserved for the function library of CPU runtime

Table 2- 2 Redundant CPUs

CPU	Performance segment	PROFIBUS interfaces	PROFINET IO RT/IRT interfaces	PROFINET IO RT interface	Basic PROFINET functionality	Work memory	Processing time for bit operations
CPU 1513R-1 PN	Redundant CPU for smaller to mid-range applications	--	1	--	--	1.8 MB	80 ns
CPU 1515R-2 PN	Redundant CPU for mid-range to large applications	--	1	--	1	3.5 MB	60 ns
CPU 1517H-3 PN	Redundant CPU for demanding applications and communication tasks	--	1	--	1	10 MB	4 ns
CPU 1518HF-4 PN	Fail-safe and redundant CPU for demanding applications and communication tasks	--	1	--	2	69 MB	4 ns

Table 2- 3 Compact CPUs

CPU	Performance segment	PROFIBUS interfaces	PROFINET IO RT/IRT interfaces	PROFINET IO RT interface	Basic PROFINET functionality	Work memory	Processing time for bit operations
CPU 1511C-1 PN	Compact CPU for small to mid-range applications	--	1	--	--	1.175 MB	60 ns
CPU 1512C-1 PN	Compact CPU for mid-range applications	--	1	--	--	1.25 MB	48 ns

Table 2- 4 Fail-safe CPUs

CPU	Performance segment	PROFIBUS interfaces	PROFINET IO RT/IRT interfaces	PROFINET IO RT interface	Basic PROFINET functionality	Work memory	Processing time for bit operations
CPU 1511F-1 PN	Fail-safe CPU for small to mid-range applications	--	1	--	--	1.225 MB	60 ns
CPU 1511TF-1 PN	Fail-safe technology CPU for small to mid-range applications	--	1	--	--	1.225 MB	60 ns
CPU 1513F-1 PN	Fail-safe CPU for mid-range applications	--	1	--	--	1.95 MB	40 ns
CPU 1515F-2 PN	Fail-safe CPU for mid-range to large applications	--	1	1	--	3.75 MB	30 ns
CPU 1515TF-2 PN	Fail-safe technology CPU for demanding applications and communication tasks	--	1	1	--	3.75 MB	30 ns
CPU 1516F-3 PN/DP	Fail-safe CPU for demanding applications and communication tasks	1	1	1	--	6.5 MB	10 ns
CPU 1516TF-3 PN/DP	Fail-safe technology CPU for demanding applications and communication tasks	1	1	1	--	6.5 MB	10 ns
CPU 1517F-3 PN/DP	Fail-safe CPU for demanding applications and communication tasks	1	1	1	--	11 MB	2 ns
CPU 1517TF-3 PN/DP	Fail-safe technology CPU for demanding applications and communication tasks	1	1	1	--	11 MB	2 ns
CPU 1518F-4 PN/DP	Fail-safe CPU for high-performance applications, demanding communication tasks and very short reaction times	1	1	1	1	26 MB	1 ns

CPU	Performance segment	PROFIBUS interfaces	PROFINET IO RT/IRT interfaces	PROFINET IO RT interface	Basic PROFINET functionality	Work memory	Processing time for bit operations
CPU 1518F-4 PN/DP MFP	Fail-safe CPU for high-performance applications, demanding communication tasks, very short reaction times and C/C++ blocks for the user program	1	1	1	1	76* MB	1 ns
CPU 1518TF-4 PN/DP	Technology CPU for high-performance motion control applications with large quantities, demanding communication tasks and very short reaction times	1	1	1	1	69 MB	1 ns

* 50 MB of the integrated work memory is reserved for the function library of CPU runtime

Table 2- 5 Technology CPUs

CPU	Performance segment	PROFIBUS interfaces	PROFINET IO RT/IRT interfaces	PROFINET IO RT interface	Basic PROFINET functional-ity	Work memory	Pro-cessing time for bit oper-ations
CPU 1511T-1 PN	Technology CPU for small to mid-range applications	--	1	--	--	1.225 MB	60 ns
CPU 1515T-2 PN	Technology CPU for mid-range to large ap-plications	--	1	1	--	3.75 MB	30 ns
CPU 1516T-3 PN /DP	Technology CPU for high-end applications and communication tasks	1	1	1	--	6.5 MB	10 ns
CPU 1517T-3 PN/DP	Technology CPU for complex applications and communication tasks	1	1	1	--	11 MB	2 ns
CPU 1518T-4 PN/DP	Technology CPU for high-performance mo-tion control applications with large quantities, demanding communi-cation tasks and very short reaction times	1	1	1	1	69 MB	1 ns
CPU 1511TF-1 PN CPU 1515TF-2 PN CPU 1516TF-3 PN/DP CPU 1517TF-3 PN/DP CPU 1518TF-4 PN/DP	These CPUs are described in the fail-safe CPUs						

Performance segments of compact CPUs

The compact CPUs can be used for smaller to mid-range applications and have an integrated analog and digital on-board I/O as well as integrated technology functions. The following table shows the specific properties of the Compact CPUs.

	CPU 1511C-1 PN	CPU 1512C-1 PN
Integrated analog inputs/outputs	5 inputs/2 outputs	5 inputs/2 outputs
Integrated digital inputs/outputs	16 inputs/16 outputs	32 inputs/32 outputs
High-speed counters	6	6
Frequency meters	6 (max. 100 kHz)	6 (max. 100 kHz)
Period duration measurement	6 channels	6 channels
Pulse width modulation (PWM output)	Max. 4 (up to 100 kHz)	Max. 4 (up to 100 kHz)
Pulse Train Output (PTO output)	Max. 4 (up to 100 kHz)	Max. 4 (up to 100 kHz)
Frequency output	Up to 100 kHz	Up to 100 kHz

Integrated Motion Control technology functions

All CPUs of the SIMATIC S7-1500 automation system support motion control technology functions. STEP 7 provides PLCopen-standardized Motion Control instructions for configuring and connecting a drive to the CPU.

S7-1500 Motion Control supports the following technology objects:

- Speed-controlled axes
- Positioning axes
- Synchronous axes
- External encoders
- Cam
- Cam track
- Measuring input

The technology CPUs of the SIMATIC S7-1500-automation system offer enhanced Motion Control functions:

- Advanced synchronization functions
  - Synchronization with specification of the synchronous position
  - Actual value coupling
  - Shifting of the master value at the following axis
  - Camming
- Up to 4 encoder or measuring systems as actual position for position control
- Cam
- Kinematics for control of:
  - Cartesian portals
  - Roller pickers
  - Jointed-arm robots
  - Delta pickers
  - SCARA robots

Due to the supported technology functions, the S7-1500T CPUs are suitable for controlling packaging machines, converting applications, assembly automation, etc.

Additional integrated technology functions

For effective commissioning, diagnostics and fast optimization of drives and controls, the SIMATIC S7-1500 controller series offers extensive trace functions for all CPU tags.

In addition to drive integration, the SIMATIC S7-1500 controller series has a PID compact closed-loop controller; easy-to-configure blocks allow automatic optimization of the controller parameters for optimum control quality.

Other technology functions

Technology modules also implement functions such as high-speed counting, position detection, measuring functions and pulse generators (PTO, PWM and frequency output). With the CPU 1511C-1 PN and CPU 1512C-1 PN compact CPUs, these functions are already integrated and can be implemented without additional technology modules.

SIWAREX is a versatile and flexible weighing module which you can use as a static scale for operation.

Redundant CPUs

The CPUs of the S7-1500R/H redundant system offer a high degree of reliability and system availability. A redundant configuration of the most important automation components reduces the likelihood of production downtimes and the consequences of component errors.

The higher the risks and costs of a production downtime, the more worthwhile the use of a redundant system. The avoidance of production downtimes compensates for the generally higher investment costs.

Security Integrated

In conjunction with STEP 7, each CPU offers password-based know-how protection against unauthorized reading out or modification of the program blocks.

Copy protection provides reliable protection against unauthorized reproduction of program blocks. With copy protection, individual blocks on the SIMATIC memory card can be tied to its serial number so that the block can only be run if the configured memory card is inserted into the CPU.

In addition, you can assign various access rights to different user groups in the controller using four different authorization levels.

Improved manipulation protection allows changed or unauthorized transfers of engineering data to be detected by the controller.

The use of an Ethernet CP (CP 1543-1) provides you with additional access protection through a firewall or possibilities to establish secure VPN connections.

Safety Integrated

The fail-safe CPUs are intended for users who want to implement demanding standard and fail-safe applications both centrally and decentrally.

These fail-safe CPUs allow the processing of standard and safety programs on a single CPU. This allows fail-safe data to be evaluated in the standard user program. The integration also provides the system advantages and the extensive functionality of SIMATIC for fail-safe applications.

The fail-safe CPUs are certified for use in safety mode up to:

- Safety class (Safety Integrity Level) SIL 3 according to IEC 61508:2010
- Performance Level (PL) e and Category 4 according to ISO 13849-1:2015 or EN ISO 13849-1:2015

Additional password protection for F-configuration and F-program is set up for IT security.

Design and handling

All CPUs of the SIMATIC S7-1500 product series feature a display with plain text information. The display provides the user with information on the order numbers, firmware version, and serial number of all connected modules. In addition, the IP address of the CPU and other network settings can be adapted locally without a programming device. Error messages are shown on the display directly in plain text. When performing servicing, you can minimize plant downtimes by quickly accessing the diagnostics alarms. Detailed information about this and a multitude of other display functions is available in the SIMATIC S7-1500 Display Simulator (https://support.industry.siemens.com/cs/ww/en/view/109761758).

Uniform front connectors for all modules and integrated potential jumpers for flexible formation of potential groups simplify storage. Additional components such as circuit breakers, relays, etc., can be installed quickly and easily, since a DIN rail is implemented in the rail of the SIMATIC S7-1500. The CPUs of the SIMATIC S7-1500 product series can be expanded centrally and in a modular fashion with signal modules. Space-saving expansion enables flexible adaptation to each application.

The system cabling for digital signal modules enables fast and clear connection to sensors and actuators from the field (fully modular connection consisting of front connector modules, connection cables and I/O modules), as well as easy wiring inside the control cabinet (flexible connection consisting of front connectors with assembled single conductors).

System diagnostics and alarms

Integrated system diagnostics is activated by default for the CPUs. The different types of diagnostics are configured instead of programmed. System diagnostics information and alarms from the drives are displayed consistently and in plain text:

- On the CPU display
- In STEP 7
- On the HMI
- On the Web server

This information is available in RUN mode, but also in STOP mode of the CPU. The diagnostic information is updated automatically when you configure new hardware components.

The CPU is available as a central interrupt server in up to three project languages. The HMI takes over the display in the project languages defined for the CPU. If you require alarm texts in additional languages, you can load them into your HMI via the configured connection. The CPU, STEP 7 and your HMI ensure data consistency without additional engineering steps. The maintenance work is easier.

2.3 Hardware properties and firmware functions

The CPU 1512C-1 PN consists of a CPU part, an analog on-board I/O module (X10) and a digital on-board I/O module (X11 and X12). When configured in the TIA Portal, the compact CPU therefore occupies a single shared slot (slot 1).

The properties and functions of the CPU part and the analog and digital on-board I/O modules can be found in the subsections below. The **properties** describe the hardware features of the CPU part and the analog and digital on-board I/O modules. The **functions** describe the functions of the firmware of the CPU part and the analog and digital on-board I/O modules.

Article number

6ES7512-1CK01-0AB0

Accessories

The following accessories are included in the scope of delivery and can also be ordered separately as spare parts:

- 3 x front connector (push-in terminals) including cable ties
- 3 x shield clamp
- 3 x shield terminal
- 3 x infeed element (push-in terminals)
- 3 x labeling strip
- 3 x universal front cover

For more information on accessories, refer to the S7-1500, ET 200MP system manual (http://support.automation.siemens.com/WW/view/en/59191792).

2.3.1 Hardware properties of the CPU part

View of the CPU

The figure below shows the CPU part of the CPU 1512C-1 PN.

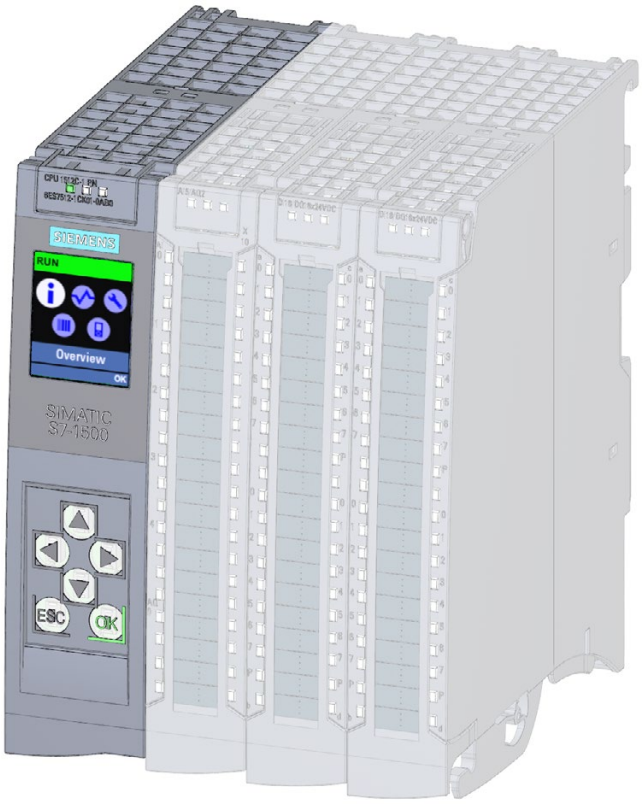

Figure 2-1 CPU 1512C-1 PN

Note

Protective film

Note that a protective film is attached to the display of the CPU when shipped from the factory. Remove the protective film if necessary.

Properties

The CPU 1512C-1 PN has the following technical properties:

Property	Description	Additional information
CPU display	All CPUs of the SIMATIC S7-1500 product series feature a display with plain text information. The display provides information on order numbers, firmware version and serial numbers of all connected modules. In addition, you can set the IP address of the CPU and carry out further network settings. The display shows occurring error messages directly in plain text. In addition to the functions listed here, a multitude of other functions that are described in the SIMATIC S7-1500 Display Simulator are shown on the display.	• S7-1500, ET 200MP system manual (http://support.automation.siemens.com/WW/view/en/59191792) • SIMATIC S7-1500 Display Simulator (https://support.industry.siemens.com/cs/ww/en/view/109761758)
Supply voltage	A 4-pole connection plug that is located at the front of the CPU supplies the 24 V DC supply voltage.	• Chapter Wiring (Page 79) • S7-1500, ET 200MP system manual (http://support.automation.siemens.com/WW/view/en/59191792)
PROFINET IO		
PROFINET interface (X1 P1 R and X1 P2 R)	The X1 interface has two ports (P1 R and P2 R). In addition to basic PROFINET functionality, its also supports PROFINET IO RT (real time) and IRT (isochronous real time), which means you can configure PROFINET IO communication or real-time settings on the interface. Port 1 and Port 2 can also be used as ring ports for the configuration of redundant ring structures in Ethernet (media redundancy). Basic PROFINET functionality comprises: • HMI communication • Communication with the configuration system • Communication with a higher-level network (backbone, router, Internet) • Communication with another machine or automation cell	PROFINET function manual (http://support.automation.siemens.com/WW/view/en/68039307)
Operation of the CPU as • IO controller • I-device	• **IO controller:** As an IO controller the CPU addresses the connected IO devices • **I-device:** As an I-device (intelligent IO device) the CPU is assigned to a higher-level IO controller and is used in the process as an intelligent pre-processing unit of sub-processes	

2.3.2 Firmware functions of the CPU part

Functions

The CPU 1512C-1 PN supports the following functions:

Function	Description	Additional information
Integrated system diagnostics	The system automatically generates the messages for the system diagnostics and outputs these messages via a programming device/PC, HMI device, the Web server or the integrated display. System diagnostics information is also available when the CPU is in STOP mode.	Diagnostics function manual (http://support.automation.siemens.com/WW/view/en/59192926)
Integrated Web server	The Web server lets you access the CPU data by means of a network. Evaluations, diagnostics, and modifications are thus possible over long distances. Monitoring and evaluation is possible without STEP 7; all you need is a Web browser. Make sure that you take appropriate measures (e.g. limiting network access, using firewalls) to protect the CPU from being compromised.	• Web server function manual (http://support.automation.siemens.com/WW/view/en/59193560) • Security with SIMATIC S7 controllers system manual (https://support.industry.siemens.com/cs/ww/en/view/90885010)
Integrated trace functionality	Trace functionality supports you in troubleshooting and/or optimizing the user program. You record device tags and evaluate the recordings with the trace and logic analyzer function. Tags are, for example, drive parameters or system and user tags of a CPU. The device saves the recordings. You can read out and permanently save the recordings with the configuration system (ES), if required. The trace and logic analyzer function is therefore suitable for monitoring highly dynamic processes. The trace record can also be displayed through the Web server.	Using the trace and logic analyzer function function manual (http://support.automation.siemens.com/WW/view/en/64897128)
OPC UA	With OPC UA, data is exchanged via an open and vendor-neutral communication protocol. The CPU can act as OPC UA server. The CPU can communicate with OPC UA clients as an OPC UA server. Through OPC UA Companion Specification, the methods can be specified uniformly and independently of manufacturers. The specified methods enable you to integrate devices from various manufacturers more easily into your plants and production processes.	Communication function manual (https://support.industry.siemens.com/cs/ww/en/view/59192925)
Configuration control	You can use configuration control to operate different real hardware configurations with a configured maximum configuration of the hardware. This means that, in series machine manufacturing in particular, you have the option of operating/configuring different configuration variants of a machine with a single project.	S7-1500, ET 200MP system manual (http://support.automation.siemens.com/WW/view/en/59191792)

Function	Description	Additional information
PROFINET IO		
RT (real time)	RT prioritizes PROFINET IO telegrams over standard telegrams. This ensures the required determinism in the automation technology. In this process the data is transferred via prioritized Ethernet telegrams.	PROFINET function manual (http://support.automation.siemens.com/WW/view/en/49948856)
IRT (isochronous real time)	A reserved bandwidth within the send clock is available for IRT data. The reserved bandwidth ensures that the IRT data can be transmitted in time-synchronized intervals, unaffected by other high network loading (e.g. TCP/IP communication or additional real time communication). Update times with maximum determinism can be realized through IRT. Isochronous applications are possible with IRT.	
Isochronous mode	The Isochronous mode system property acquires measured values and process data and processes the signals in a fixed system clock. Isochronous mode thus contributes to high control quality and hence to greater manufacturing precision. Isochronous mode reduces possible fluctuations of the process reaction times to a minimum. Time-assured processing makes higher machine cycles possible.	
MRP (Media Redundancy Protocol)	It is possible to establish redundant networks via the Media Redundancy Protocol. Redundant transmission links (ring topology) ensure that an alternative communication path is made available if a transmission link fails. The PROFINET devices that are part of this redundant network form an MRP domain. RT operation is possible with the use of MRP.	
MRPD (Media Redundancy with Planned Duplication)	The advantage of the MRP extension MRPD is that, in the event of a failure of a device or a line in the ring, all other devices continue to be supplied with IO data without interruption and with short update times. MRPD is based on IRT and MRP. To realize media redundancy with short update times, the PROFINET devices participating in the ring send their data in both directions. The devices receive this data at both ring ports so that there is no reconfiguration time.	
Shared device	The "Shared device" function allows you to divide the modules or submodules of an IO device up among different IO controllers. Numerous IO controllers are often used in larger or widely distributed systems. Without the "Shared device" function, each I/O module of an IO device is assigned to the same IO controller. If sensors that are physically close to each other must provide data to different IO controllers, several IO devices are required. The "Shared device" function allows the modules or submodules of an IO device to be divided up among different IO controllers, thus allowing flexible automation concepts. You can, for example, combine I/O modules that are physically close to each other in one IO device.	
PROFIenergy	PROFIenergy is a PROFINET-based data interface for switching off consumers centrally and with full coordination during pause times regardless of the manufacturer or device type. Through this, the process should only be provided with the energy that is absolutely required. The majority of the energy is saved by the process; the PROFINET device itself only contributes a few watts of savings potential.	

Function	Description	Additional information
Integrated technology		
Motion Control	S7-1500 CPUs support the controlled positioning and traveling of axes via S7-1500 Motion Control functions by means of the following technology objects: Speed-controlled axes, positioning axes, synchronized axes, external encoders, cams, cam tracks and measuring inputs. • Speed-controlled axis for controlling a drive with speed specification • Positioning axis for position-controlled positioning of a drive • Synchronous axis to interconnect with a master value. The axis is synchronized to the master axis position. • External encoder for detecting the actual position of an encoder and its use as a master value for synchronous operation • Cams, cam track for position-dependent generation of switching signals • Measuring input for fast, accurate and event-dependent sensing of actual positions	• Section Technology functions (Page 45) • S7-1500T Motion Control function manuals (https://support.industry.siemens.com/cs/ww/en/view/109751049)
Integrated closed-loop control functionality	• PID Compact (continuous PID controller) • PID 3Step (step controller for integrating actuators) • PID Temp (temperature controller for heating and cooling with two separate actuators)	PID control function manual (https://support.industry.siemens.com/cs/ww/en/view/108210036)

Function	Description	Additional information
Integrated safety		
Know-how protection	The know-how protection protects user blocks against unauthorized access and modifications.	S7-1500, ET 200MP system manual (http://support.automation.siemens.com/WW/view/en/59191792)
Copy protection	Copy protection links user blocks to the serial number of the SIMATIC memory card or to the serial number of the CPU. User programs cannot run without the corresponding SIMATIC memory card or CPU.	
Access protection	You can use authorization levels to assign separate rights to different users.	
Integrity protection	The CPUs dispose of integrity protection by default. Integrity protection identifies possible manipulations of engineering data on the SIMATIC memory card or during data transfer between TIA Portal and CPU. Integrity protection also checks the communication from a SIMATIC HMI system to the CPU for possible manipulations of engineering data. If integrity protection identifies the manipulation of engineering data, the user receives a corresponding message.	
Password provider	As an alternative to manual password input you can connect a password provider to STEP 7. A password provider offers the following advantages: • Convenient handling of passwords. STEP 7 reads the password automatically for the blocks. This saves you time. • Optimum block protection because the users do not know the password itself.	

2.3.3 Hardware properties of the analog on-board I/O module

View

The following figure shows the analog on-board I/O (X10) of the CPU 1512C-1 PN.

Figure 2-2 Analog on-board I/O

Properties of the analog inputs

The 5 inputs of the analog on-board I/O module have the following properties:

Property	Description	Additional information
Resolution: 16 bits including sign	A CPU processes information exclusively in digital format. An ADC (analog-to-digital converter) integrated into the analog on-board I/O module therefore converts the analog value into a bit pattern. For the CPU, this conversion always returns a 16-bit word for SIMATIC products. The ADC used digitalizes the analog signal and approximates its value with a stepped curve. The resolution specifies the number of increments of the analog value along this stepped curve here.	• Chapter Analog value processing • Analog value processing function manual (http://support.automation.siemens.com/WW/view/en/67989094)
Integrated types of measuring	Controllers are only capable of processing analog values in the form of bit patterns. For this purpose, transducers which can be connected to the analog module measure physical variables such as pressure or temperature. This analog value is measured by the analog input module in the form of the measurement types current, voltage or resistance. The analog on-board I/O module supports the following measurement types on the following channels. • Voltage measurement type can be set individually for channel 0 to 3 • Current measurement type can be set individually for channel 0 to 3 • Resistor measurement type can be set for channel 4 • Thermal resistor measurement type can be set for channel 4	
Configurable diagnostics	The analog on-board I/O module can diagnose errors. The module reports the diagnosed state to the CPU using a diagnostics error interrupt. Different types of diagnostics are available that you can parameterize channel-granularly.	Chapter Parameters of the analog on-board I/O (Page 122)
Hardware interrupt	You can react to process events (such as negative/positive exceeding of specific limits) through the configuration of a hardware interrupt. Hardware interrupts can be parameterized channel-granularly.	• Chapter Parameters of the analog on-board I/O (Page 122) • Chapter Structure of a data record for input channels of the analog on-board I/O (Page 168) • STEP 7 online help

Properties of the analog outputs

The 2 outputs of the analog on-board I/O module have the following properties:

Property	Description	Additional information
Resolution: 16 bits including sign	Once the CPU has processed the digital signal, a DAC (digital-to-analog converter) integrated in the analog on-board I/O module converts the output signal to an analog current or voltage value. The resulting value of the output signal corresponds to the output value with which the analog on-board I/O module controls the analog actuators.	• Chapter Analog value processing • Analog value processing function manual (http://support.automation.siemens.com/WW/view/en/67989094)
Integrated output types	With the selection of the type of output you specify whether the digital-to-analog converter is to convert the output signal into the type of output "Current" or "Voltage". The output can be selected by individual channel.	
Configurable diagnostics	The analog on-board I/O module can diagnose errors. The module reports the diagnosed state to the CPU using a diagnostics error interrupt. Different types of diagnostics are available that you can parameterize channel-granularly.	Chapter Parameters of the analog on-board I/O (Page 122)

2.3.4 Firmware functions of the analog on-board I/O module

Functions of the analog inputs

The 5 inputs of the analog on-board I/O module have the following functions:

Function	Description	Additional information
Reconfiguration in RUN	You have the option of reassigning parameters for the analog on-board I/O module in RUN (for example, measuring ranges of individual channels can be modified in RUN without affecting the other channels).	• Chapter Parameters of the analog on-board I/O (Page 122) • Chapter Parameter assignment and structure of the parameter data records of the analog on-board I/O (Page 167)
Support of the value status (Quality Information, QI)	Value status = 1 ("Good") indicates that the value of the assigned input at the terminal is valid. Value status = 0 ("Bad") indicates that the read value is not valid.	Chapter Address space of the analog on-board I/O (Page 116)

Functions of the analog outputs

The 2 outputs of the analog on-board I/O module have the following functions:

Function	Description	Additional information
Reconfiguration in RUN	You have the option of reassigning parameters for the analog on-board I/O module in RUN (for example, output ranges of individual channels can be modified in RUN without affecting the other channels).	• Chapter Parameters of the analog on-board I/O (Page 122) • Chapter Parameter assignment and structure of the parameter data records of the analog on-board I/O (Page 167)
Support of the value status (Quality Information, QI)	Value status = 1 ("Good") indicates that the process value specified by the user program is correctly output at the terminal. Value status = 0 ("Bad") indicates that the process value output at the hardware output is incorrect.	Chapter Address space of the analog on-board I/O (Page 116)

2.3.5 Hardware properties of the digital on-board I/O module

View

The following figure shows the digital on-board I/O (X11 and X12) of the CPU 1512C-1 PN.

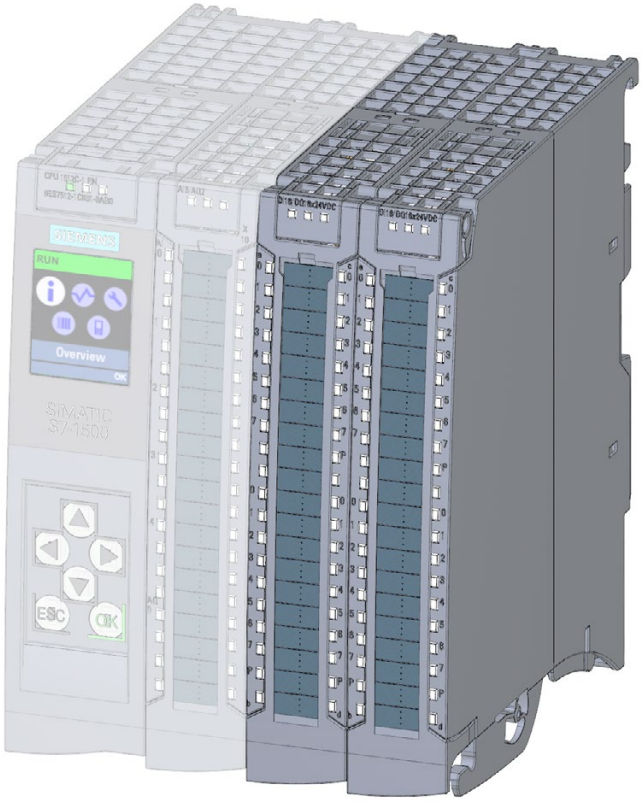

Figure 2-3 Digital on-board I/O

Properties of the digital inputs

The digital inputs of the digital on-board I/O module have the following properties:

Property	Description	Additional information
Standard and high-speed inputs	The digital on-board I/O module has 32 high-speed inputs for signals up to a max. of 100 kHz. The inputs can be used as standard inputs and as inputs for technology functions. The inputs have a rated input voltage of 24 V DC. The inputs are suitable for switches and 2-/3-/4-wire proximity switches.	Section Wiring (Page 79)
Configurable diagnostics	The digital on-board I/O module is able to diagnose errors. The module reports the diagnosed state to the CPU using a diagnostics error interrupt. You can parameterize the type of diagnostics channel-specifically.	Section Parameters of the digital on-board I/O (Page 125)
Hardware interrupt	You can react to process events (such as positive edge, negative edge) through the configuration of a hardware interrupt. Hardware interrupts can be parameterized channel-granularly.	Section Parameters of the digital on-board I/O (Page 125) Section Structure of a data record for input channels of the digital on-board I/O (Page 177) STEP 7 online help

Properties of the digital outputs

The digital outputs of the digital on-board I/O module have the following properties:

Property	Description	Additional information
Configurable diagnostics	The digital on-board I/O module is able to diagnose errors. The module reports the diagnosed state to the CPU using a diagnostics error interrupt. You can parameterize the type of diagnostics channel-specifically.	Section Interconnection overview of outputs (Page 113)
Standard and high-speed outputs		
Standard outputs	The digital on-board I/O module has 16 standard outputs.	Section Wiring (Page 79)
High-speed outputs	Of the 32 standard outputs you can also use 8 outputs as high-speed outputs for technology functions.	
Rated output voltage	The outputs have a rated output voltage of 24 V DC.	
Output frequencies and output currents	Rated output current as output for standard mode: 0.5 A per channel. As an output for technology functions, you can select between an output current of up to 0.5 A at an output frequency up to 10 kHz (load dependent) and a reduced output current of max. 0.1 A at an increased output frequency of up to 100 kHz.	Section Interconnection overview of outputs (Page 113)
Application	The outputs are suitable for, e.g. solenoid valves, DC contactors and indicator lights, or also for signal transmission or proportional valves.	
Driver blocks X11	The digital outputs of the digital onboard I/O X11 have driver blocks with parasitic diodes. In principle, parasitic diodes have an effect when switching off inductive loads such as freewheeling diodes. The shutdown voltage is limited to -0.8 V. Therefore, the demagnetization of inductive loads takes longer and can be approximately calculated using the following formula. **tau = L / R** (tau= time constant, L = inductance value, R = ohmic resistance value) After the expiration of a period of 5 * tau, the current has decreased in effect to 0 A due to the inductive load. The maximum value is derived from: tau = 1.15H / 48 Ohm = 24 ms. After 5 * 24 ms = 120 ms, the current has decreased in effect to 0 A. For comparison: With standard modules, inductive shutdown voltage is limited, for example, to Vcc -53 V (supply voltage – 53 V), which causes the current to decrease to 0 A after about 15 ms.	Section Terminal and block diagram of the digital on-board I/O (Page 92)
Driver blocks X12	The driver blocks of the outputs from the digital inboard I/O X12 have no freewheeling diodes. The cut-off voltage is -29 V. Inductive loads are therefore demagnetized faster than for X11. If ground is interrupted, no unwanted current flows through the digital outputs to the ground.	

Simultaneous use of technology and standard functions

You can use technology and standard functions at the same time, provided the hardware allows this. For example, all the digital inputs not assigned to the counting, measuring or position detection or PTO technology functions can be used as standard DI.

Inputs to which technology functions are assigned can be read. Outputs to which technology functions are assigned cannot be written.

See also

Parameter assignment and structure of the parameter data records of the digital on-board I/O (Page 176)

2.3.6 Firmware functions of the digital on-board I/O module

Functions of the digital inputs

The digital inputs of the digital on-board I/O module have the following functions:

Function	Description	Additional information
Technology functions	The high-speed digital inputs of the digital on-board I/O module support technology functions such as fast counting, measuring, position detection and pulse generators (PWM, PTO and frequency output). Due to the supported technology functions, the compact CPUs are suitable for controlling pumps, fans, mixers, conveyor belts, lifting platforms, gate control systems, building management systems, synchronized axes, etc.	Chapter Technology functions (Page 45)
Reconfiguration in RUN	You have the option of reassigning parameters for the digital on-board I/O module in RUN (for example, values for input delay of individual channels can be modified without affecting the other channels).	• Chapter Parameters of the digital on-board I/O (Page 125) • Chapter Parameter assignment and structure of the parameter data records of the digital on-board I/O (Page 176)
Support of the value status (Quality Information, QI)	Value status = 1 ("Good") indicates that the value of the assigned input at the terminal is valid. Value status = 0 ("Bad") indicates that no/too little supply voltage L+ is applied at the terminal and that the read value is therefore not valid.	Chapter Address space of the digital on-board I/O (Page 118)

Functions of the digital outputs

The digital outputs of the digital on-board I/O module have the following functions:

Function	Description	Additional information
Technology functions	The high-speed digital outputs of the digital on-board I/O module support technology functions such as fast counting, measuring, position detection and pulse generators (PWM, PTO and frequency output). Due to the supported technology functions, the compact CPUs are suitable for controlling pumps, fans, mixers, conveyor belts, lifting platforms, gate control systems, building management systems, synchronized axes, etc.	Chapter Technology functions (Page 45)
Reconfiguration in RUN	You have the option of reassigning parameters for the digital on-board I/O module in RUN (for example, behavior during CPU STOP, without affecting the other channels).	• Chapter Parameters of the digital on-board I/O (Page 125) • Chapter Parameter assignment and structure of the parameter data records of the digital on-board I/O (Page 176)
Support of the value status (Quality Information, QI)	Value status = 1 ("Good") indicates that the process value specified by the user program is correctly output at the terminal. Value status = 0 ("Bad") indicates that the process value output at the hardware output is incorrect or the channel is used for technology functions.	Chapter Address space of the digital on-board I/O (Page 118)

2.4 Operator controls and display elements

2.4.1 Front view with closed front panel

The following figure shows the front view of the CPU 1512C-1 PN.

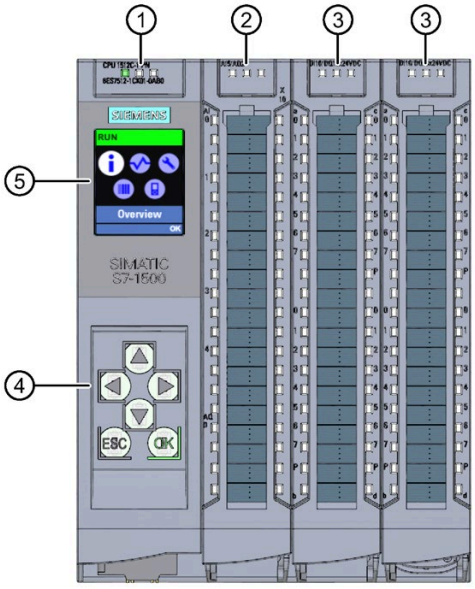

① LEDs for the current operating mode and diagnostics status of the CPU
② Status and error displays RUN/ERROR of the analog on-board I/O
③ Status and error displays RUN/ERROR of the digital on-board I/O
④ Control keys
⑤ Display

Figure 2-4 View of the CPU 1512C-1 PN with closed front panels (front)

Note

Temperature range for display

To increase its service life, the display switches off at a temperature below the permitted operating temperature of the device. When the display cools down again, it automatically switches itself on again. When the display is switched off, the LEDs continue to show the status of the CPU.

You can find additional information on the temperatures at which the display switches itself on and off in the Technical specifications (Page 140).

Removing and fitting the front panel or display

You can remove and fit the front panel or the display during operation.

WARNING

Personal injury and damage to property may occur

If you pull or plug the front panel of an S7-1500 automation system during operation, personal injury or damage to property can occur in zone 2 hazardous areas.

Before you remove or fit the front panel, switch off the power supply to the S7-1500 automation system in hazardous area zone 2.

Locking the front panel

You can lock the front panel to protect your CPU against unauthorized access.

You can attach a security seal or a padlock with a hoop diameter of 3 mm to the front panel.

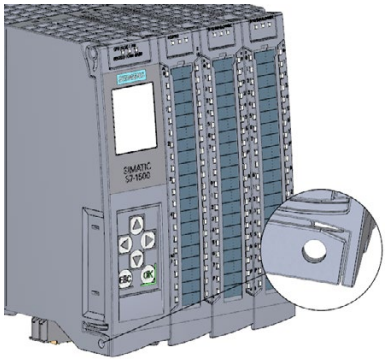

Figure 2-5 Locking latch on the CPU

In addition to the mechanical lock, you can also block access to a password-protected CPU on the display (local lock) and assign a password for the display. For more information on the display, the configurable protection levels and the local lock, refer to the S7-1500, ET 200MP (http://support.automation.siemens.com/WW/view/en/59191792) system manual.

Reference

You will find detailed information on the individual display options, a training course and a simulation of the available menu commands in the SIMATIC S7-1500 Display Simulator (https://support.industry.siemens.com/cs/ww/en/view/109761758).

2.4.2 Front view of the CPU without front panel and view from below

The following figure shows the operator control and connection elements of the CPU 1512C-1 PN with the front cover of the CPU open.

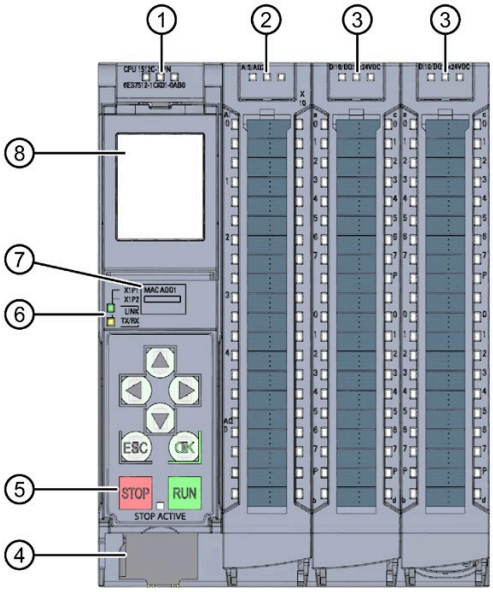

① LEDs for the current operating mode and diagnostics status of the CPU
② Status and error displays RUN/ERROR of the analog on-board I/O
③ Status and error displays RUN/ERROR of the digital on-board I/O
④ Connector for power supply
⑤ Operating modes with "STOP ACTIVE" LED
⑥ LEDs for the 2 ports (X1 P1 and X1 P2) of the PROFINET interface X1
⑦ MAC address
⑧ Display

Figure 2-6 View of the CPU 1512C-1 PN without front panel on the CPU (front)

Note

Removing the display

Only remove the display if it is faulty.

You can find information on removing and replacing displays in the S7-1500, ET 200MP system manual (http://support.automation.siemens.com/WW/view/en/59191792).

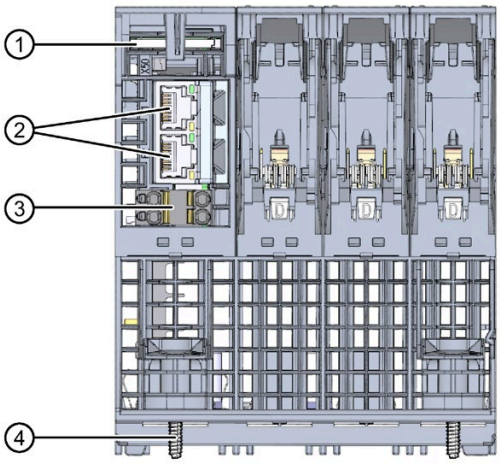

① Slot for the SIMATIC memory card
② PROFINET IO interface (X1) with 2 ports
③ Connection for supply voltage
④ Fastening screw

Figure 2-7 View of the CPU 1512C-1 PN – bottom

2.4.3 Rear view

The following figure shows the connection elements on the rear of the CPU 1512C-1 PN.

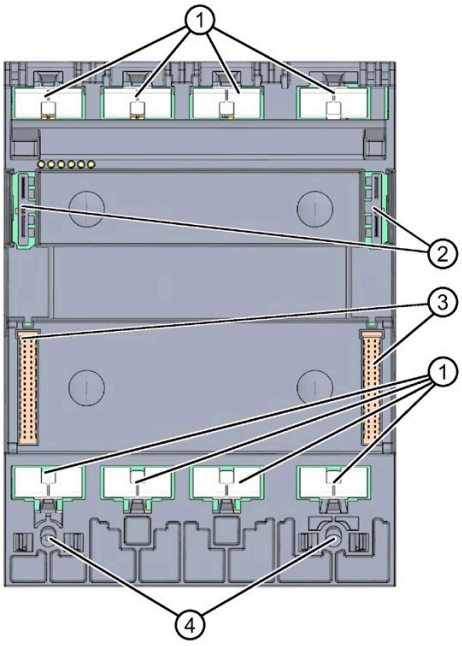

① Shield contact surfaces
② Plug-in connection for power supply
③ Plug-in connection for backplane bus
④ Fastening screws

Figure 2-8 View of the CPU 1512C-1 PN - rear

2.5 Operating mode buttons

You use the operating mode buttons to set the operating mode of the CPU.

The following table shows the meaning of the corresponding operation of the operating mode buttons.

Table 2- 6 Meaning of the operating mode buttons

Operation of the operating mode buttons	Meaning	Explanation
RUN	RUN mode	The CPU executes the user program.
STOP	STOP mode	The user program is not executed. (STOP ACTIVE LED lights up).
MRES 1. Press the operating mode button STOP. Result: The RUN/STOP LED lights up yellow. 2. Press the operating mode button STOP until the RUN/STOP LED lights up for the 2nd time and remains continuously lit (this takes three seconds). After this, release the button. 3. Press the operating mode button STOP again within the next three seconds.	Manual memory reset (with inserted SIMATIC memory card) or Reset to factory settings (without inserted SIMATIC memory card):	The CPU executes memory reset. or The CPU is reset to its factory settings. You can find additional information in the S7-1500/ET 200MP system manual (https://support.industry.siemens.com/cs/ww/en/view/59191792).

Technology functions 3

3.1 High-speed counters

Properties

The technology functions of the compact CPU have the following technical properties:

- 32 high-speed digital inputs (up to 100 kHz), isolated
  - 6 high-speed counters (High Speed Counter/HSC), which can all be used as A/B/N
- Interfaces
  - 24 V encoder signals of sourcing or push-pull encoders and sensors
  - 24 V encoder supply output, short-circuit-proof
  - Up to 2 additional digital inputs per high-speed counter for possible HSC DI functions (Sync, Capture, Gate)
  - 1 digital output per high-speed counter for fast reaction to the count
- Counting range: 32 bits
- Diagnostics and hardware interrupts can be configured
- Supported encoder/signal types
  - 24 V incremental encoder
    (with 2 tracks A and B, phase-shifted by 90°, up to 6 incremental encoders also with zero track N)
  - 24 V pulse encoder with direction signal
  - 24 V pulse encoder without direction signal
  - 24 V pulse encoder each for forward pulse & reverse pulse

The high-speed counters support reconfiguration in RUN. You can find additional information in section Parameter data records of the high-speed counters (Page 181).

3.1.1 Functions

3.1.1.1 Counting

Counting refers to the detection and adding up of events. The counters acquire and evaluate encoder signals and pulses. You can specify the count direction using encoder or pulse signals or through the user program.
You can control counting processes using the digital inputs. You can switch the digital outputs exactly at defined count values, regardless of the user program.
You can configure the response of the counters using the functionalities described below.

Counting limits

The counting limits define the count value range used. The counting limits are selectable and can be modified during runtime by the user program.
The highest counting limit that can be set is 2147483647 (2^{31}–1). The lowest counting limit that can be set is –2147483648 (–2^{31}).
You can configure the response of the counter at the counting limits:

- Continue or stop counting (automatic gate stop) on violation of a counting limit
- Set count value to start value or to opposite counting limit on violation of a counting limit

Start value

You can configure a start value within the counting limits. The start value can be modified during runtime by the user program.
Depending on the parameter assignment, the compact CPU can set the current count value to the start value during synchronization, during the Capture function, on violation of a counting limit or when the gate is opened.

Gate control

Opening and closing the hardware gate and software gate defines the period of time during which the counting signals are acquired.
The digital inputs of the digital on-board I/O control the hardware gate. The user program controls the software gate. You can enable the hardware gate using the parameter assignment. The software gate (bit in the control interface of the cyclic I/O data) cannot be disabled.

Capture

You can configure an external reference signal edge that triggers the saving of the current count value as a Capture value. The following external signals can trigger the Capture function:

- Rising or falling edge of a digital input
- Both edges of a digital input
- Rising edge of signal N at the encoder input

You can configure whether counting continues from the current count value or from the start value after the Capture function.

Hysteresis

You can specify hysteresis for the comparison values, within which a digital output is prevented from switching again. An encoder may stop at a certain position, and slight movements may make the count value fluctuate around this position. If a comparison value or a counting limit lies within this fluctuation range, the corresponding digital output will be switched on and off often if hysteresis is not used. The hysteresis prevents these unwanted switching operations.

Reference

For more information on the counter, refer to the S7-1500, ET 200MP, ET 200SP Counting, measurement and position detection function manual (http://support.automation.siemens.com/WW/view/en/59709820).

3.1.1.2 Measuring

Measuring functions

The following measuring functions are available:

Table 3- 1 Overview of available measuring functions

Measurement type	Description
Frequency measurement	A measuring interval calculates the average frequency based on the time sequence of the count pulses, and returns this frequency as a floating-point number in units of hertz.
Period measurement	A measuring interval calculates the average period duration based on the time sequence of the count pulses, and returns this period duration as a floating-point number in units of seconds.
Velocity measurement	A measuring interval calculates the average velocity based on the time sequence of the count pulses, and returns this velocity in the configured unit.

The measured value and count value are both available in the feedback interface.

Update time

You can configure the interval at which the compact CPU updates the measured values cyclically as the update time. Larger update times smooth uneven measured variables and increase the measuring accuracy.

Gate control

Opening and closing the hardware gate and software gate defines the period of time during which the count signals are acquired. The update time is asynchronous to the opening of the gate, which means that the update time is not started when the gate is opened. After the gate is closed, the last measured value calculated is still returned.

Measuring ranges

The measuring functions have the following measuring range limits:

Table 3- 2 Overview of low and high measuring range limits

Measurement type	Low measuring range limit	High measuring range limit
Frequency measurement	0.04 Hz	400 kHz *
Period measurement	2.5 µs *	25 s
Velocity measurement	Depending on the configured number of "increments per unit" and the "timebase for velocity measurement"	

* Applies to 24 V incremental encoder and "quadruple" signal evaluation

All measured values are returned as signed values. The sign indicates whether the count value increased or decreased during the relevant time period. For example, a value of -80 Hz means that the count value decreases at 80 Hz.

Reference

For more information on measuring, refer to the S7-1500, ET 200MP, ET 200SP Counting, measurement and position detection function manual (http://support.automation.siemens.com/WW/view/en/59709820).

3.1.1.3 Position detection for motion control

You can use the digital on-board I/O, e.g. with an incremental encoder, for position detection with S7-1500 Motion Control. The position input is based on the counting function, which evaluates the acquired encoder signals and provides them for S7-1500 Motion Control.

In the hardware configuration of the CPU 1512C-1 PN in STEP 7 (TIA Portal), select the "Position input for Motion Control" mode.

Reference

For a detailed description of the use of motion control and its configuration, refer to the S7-1500 Motion Control function manual (http://support.automation.siemens.com/WW/view/en/109749262). In the function module, the interface between the drives and encoders is referred to as a technology module (TM). In this context, a technology module (TM) also refers to the digital on-board I/O of the compact CPU described here.

3.1.1.4 Additional functions

Synchronization

You can configure an external reference signal edge to load the counter with the specified start value. The following external signals can trigger a synchronization:

- Rising or falling edge of a digital input
- Rising edge of signal N at the encoder input
- Rising edge of signal N at the encoder input depending on the level of the assigned digital input

Comparison values

The integrated counter supports 2 comparison values and digital output HSC DQ1. If the counter or measured value meets the set comparison condition, HSC DQ1 can be set in order to trigger direct control operations in the process.

Both comparison values can be set in the parameters and can be changed during runtime by the user program.

Hardware interrupts

If you have enabled a hardware interrupt in the hardware configuration, the counter can trigger a hardware interrupt in the CPU when a comparison event occurs, if there is overflow or underflow, at a zero crossing of the counter, and/or at a change of count direction (direction reversal). You can specify which events are to trigger a hardware interrupt during operation in the hardware configuration.

Diagnostics interrupts

If you have enabled a diagnostics interrupt in the hardware configuration, the counter can trigger a diagnostics interrupt if the supply voltage is missing, if there is an incorrect A/B count signal or lost hardware interrupt.

3.1.2 Configuring the high-speed counters

3.1.2.1 General

You configure the high-speed counters (HSC) in STEP 7 (TIA Portal).

The functions are controlled by the user program.

Reference

A detailed description of configuring the counting and measuring functions can be found in:

- S7-1500, ET 200MP, ET 200SP Counting, measurement and position detection (http://support.automation.siemens.com/WW/view/en/59709820) function manual
- in the STEP 7 online help under "Using technology functions > Counting, measuring and position detection > Counting, measuring and position detection (S7-1500)"

A detailed description of configuring Motion Control be found in:

- in the S7-1500/S7-1500T Motion Control (https://support.industry.siemens.com/cs/ww/en/view/109766459) function manual
- in the STEP 7 online help under "Using technology functions > Motion Control > Motion Control (S7-1500)"

3.1.2.2 Assignment of the control interface of the high-speed counters

The user program uses the control interface to influence the behavior of the high speed counter.

Note

Operation with High_Speed_Counter technology object

The High_Speed_Counter technology object is available for high-speed counting mode. We therefore recommend use of the High_Speed_Counter technology object instead of the control interface/feedback interface for controlling the high speed counter.

For information on configuring the technology object and programming the associated instruction, refer to the S7-1500, ET 200MP, ET 200SP Counting, measurement and position detection (http://support.automation.siemens.com/WW/view/en/59709820) function manual.

Control interface per channel

The following table shows the control interface assignment:

Table 3- 3 Assignment of the control interface

Offset from start address	Parameter	Meaning				
Bytes 0 to 3	Slot 0	Load value (meaning of the value is specified in LD_SLOT_0)				
Bytes 4 to 7	Slot 1	Load value (meaning of the value is specified in LD_SLOT_1)				
Byte 8	LD_SLOT_0*	Specifies the meaning of the value in Slot 0				
		Bit 3	**Bit 2**	**Bit 1**	**Bit 0**	
		0	0	0	0	No action, idle state
		0	0	0	1	Load counter
		0	0	1	0	Reserve
		0	0	1	1	Load start value
		0	1	0	0	Load comparison value 0
		0	1	0	1	Load comparison value 1
		0	1	1	0	Load low counting limit
		0	1	1	1	Load high counting limit
		1	0	0	0	Reserve
		to				
		1	1	1	1	
	LD_SLOT_1*	Specifies the meaning of the value in Slot 1				
		Bit 7	**Bit 6**	**Bit 5**	**Bit 4**	
		0	0	0	0	No action, idle state
		0	0	0	1	Load counter
		0	0	1	0	Reserve
		0	0	1	1	Load start value
		0	1	0	0	Load comparison value 0
		0	1	0	1	Load comparison value 1
		0	1	1	0	Load low counting limit
		0	1	1	1	Load high counting limit
		1	0	0	0	Reserve
		to				
		1	1	1	1	
Byte 9	EN_CAPTURE	Bit 7: Enable capture function				
	EN_SYNC_DN	Bit 6: Enable downward synchronization				
	EN_SYNC_UP	Bit 5: Enable upward synchronization				
	SET_DQ1	Bit 4: Set DQ1				
	SET_DQ0	Bit 3: Set DQ0				
	TM_CTRL_DQ1	Bit 2: Enable technological function DQ1				
	TM_CTRL_DQ0	Bit 1: Enable technological function DQ0				
	SW_GATE	Bit 0: Software gate				
Byte 10	SET_DIR	Bit 7: Count direction (with encoder without direction signal)				
	–	Bits 2 to 6: Reserve; bits must be set to 0				
	RES_EVENT	Bit 1: Reset of saved events				
	RES_ERROR	Bit 0: Reset of saved error states				
Byte 11	–	Bits 0 to 7: Reserve; bits must be set to 0				

* If values are loaded simultaneously via LD_SLOT_0 and LD_SLOT_1, the value from Slot 0 is taken first internally and then the value from Slot 1 . This may lead to unexpected intermediate states.

Reference

You can find a graphic representation of the processing of the various SLOT parameters in the section Handling the SLOT parameter (control interface) (Page 74).

3.1.2.3 Assignment of the feedback interface of the high-speed counters

The user program receives current values and status information from the high speed counter via the feedback interface.

Note

Operation with High_Speed_Counter technology object

The High_Speed_Counter technology object is available for high-speed counting mode. We therefore recommend use of the technology object High_Speed_Counter instead of the control interface/feedback interface for controlling the high speed counter.

For information on configuring the technology object and programming the associated instruction, refer to the S7-1500, ET 200MP, ET 200SP Counting, measurement and position detection (http://support.automation.siemens.com/WW/view/en/59709820) function manual.

Feedback interface per channel

The following table shows the feedback interface assignment:

Table 3- 4 Assignment of the feedback interface

Offset from start address	Parameter	Meaning
Bytes 0 to 3	COUNT VALUE	Current count value
Bytes 4 to 7	CAPTURED VALUE	Last Capture value acquired
Bytes 8 to 11	MEASURED VALUE	Current measured value
Byte 12	–	Bits 3 to 7: Reserve; set to 0
	LD_ERROR	Bit 2: Error when loading via control interface
	ENC_ERROR	Bit 1: Incorrect encoder signal
	POWER_ERROR	Bit 0: Incorrect supply voltage L+
Byte 13	–	Bits 6 to 7: Reserve; set to 0
	STS_SW_GATE	Bit 5: Software gate status
	STS_READY	Bit 4: Digital on-board I/O started up and parameters assigned
	LD_STS_SLOT_1	Bit 3: Load request for Slot 1 detected and executed (toggling)
	LD_STS_SLOT_0	Bit 2: Load request for Slot 0 detected and executed (toggling)
	RES_EVENT_ACK	Bit 1: Reset of event bits active
	–	Bit 0: Reserve; set to 0
Byte 14	STS_DI2	Bit 7: Reserve; set to 0
	STS_DI1	Bit 6: Status HSC DI1
	STS_DI0	Bit 5: Status HSC DI0
	STS_DQ1	Bit 4: Status HSC DQ1
	STS_DQ0	Bit 3: Status HSC DQ0
	STS_GATE	Bit 2: Internal gate status
	STS_CNT	Bit 1: Count pulse detected within last approx. 0.5 s
	STS_DIR	Bit 0: Direction of last count value change
Byte 15	STS_M_INTERVAL	Bit 7: Count pulse detected in previous measuring interval
	EVENT_CAP	Bit 6: Capture event has occurred
	EVENT_SYNC	Bit 5: Synchronization has occurred
	EVENT_CMP1	Bit 4: Comparison event for DQ1 has occurred
	EVENT_CMP0	Bit 3: Comparison event for DQ0 has occurred
	EVENT_OFLW	Bit 2: Overflow has occurred
	EVENT_UFLW	Bit 1: Underflow has occurred
	EVENT_ZERO	Bit 0: Zero crossing has occurred

3.2 Pulse generators

3.2.1 Operating modes

3.2.1.1 Operating mode: Pulse-width modulation (PWM)

Properties

The pulse-width modulation (PWM) mode of the compact CPU has the following technical properties:

	Minimum			Maximum		
	Standard output	**High-speed output deactivated**	**High-speed output activated**	**Standard output**	**High-speed output deactivated**	**High-speed output activated**
Pulse duration	400 µs with load > 0.1 A [1] 500 µs with load ≥ 2m A [1]	20 µs with load > 0.1 A [1] 40 µs with load ≥ 2m A [1]	2 µs [1]	10,000,000 µs (10 s)		
Period duration	10 ms [2]	100 µs [2]	10 µs			

[1] A lower value is theoretically possible but, depending on the connected load, the output voltage can no longer be output as complete rectangular pulse

[2] Load dependent

Principle of operation

With pulse width modulation, a signal with defined cycle duration and variable on-load factor is output at the digital output. The on-load factor is the relationship of the pulse duration to the cycle duration. In PWM mode, you can control the on-load factor and the cycle duration.

With pulse width modulation you vary the mean value of the output voltage. Depending on the connected load, you can control the load current or the power with this.

You can specify the pulse duration as one-hundredth of the period duration (0 bis 100), as one-thousandth (0 to 1000), as one ten-thousandth (0 to 10,000) or in S7 analog format.

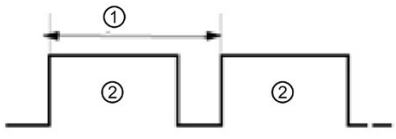

① Period duration

② Pulse duration

The pulse duration can be between 0 (no pulse, always off) and full-scale deflection (no pulse, period duration always on).

The PWM output can, for example, be used to control the speed of a motor from standstill to full speed or you can use it to control the position of a valve from closed to completely open.

You configure the pulse width modulation (PWM) mode in STEP 7 (TIA Portal).

The pulse width modulation mode has the following functions:

- When the option "High-speed output (0.1 A)" is activated, you can generate a minimum pulse duration of 2 µs at a current of 100 mA. If the option "High-speed output (0.1 A)" is not activated, you can generate a minimum pulse duration of 20 µs with a load > 0.1 A and a minimum pulse duration of 40 µs with a load of ≥ 2 mA and a current of maximum 0.5 A. If a standard output is used, you can generate a minimum pulse duration of 400 µs with a load of > 0.1 A and a minimum pulse duration of 500 µs with a load of ≥ 2 mA.
- You can control the pulse output (DQA) of the channel manually via the control and feedback interface.
- You can configure the reaction to CPU STOP. Upon change to CPU STOP, the pulse output (DQA) is set to the configured state.

Controller

For the pulse width modulation (PWM) mode, the user program directly accesses the control and feedback interface of the channel.

A reconfiguration via the instructions WRREC/RDREC and parameter assignment data record 128 is supported. You can find additional information in section Parameter data records (PWM) (Page 187)

You control the on-load factor (pulse-cycle ratio) of the pulse width via the OUTPUT_VALUE field of the control interface. Pulse width modulation generates continuous pulses based on this value. The period duration is adjustable.

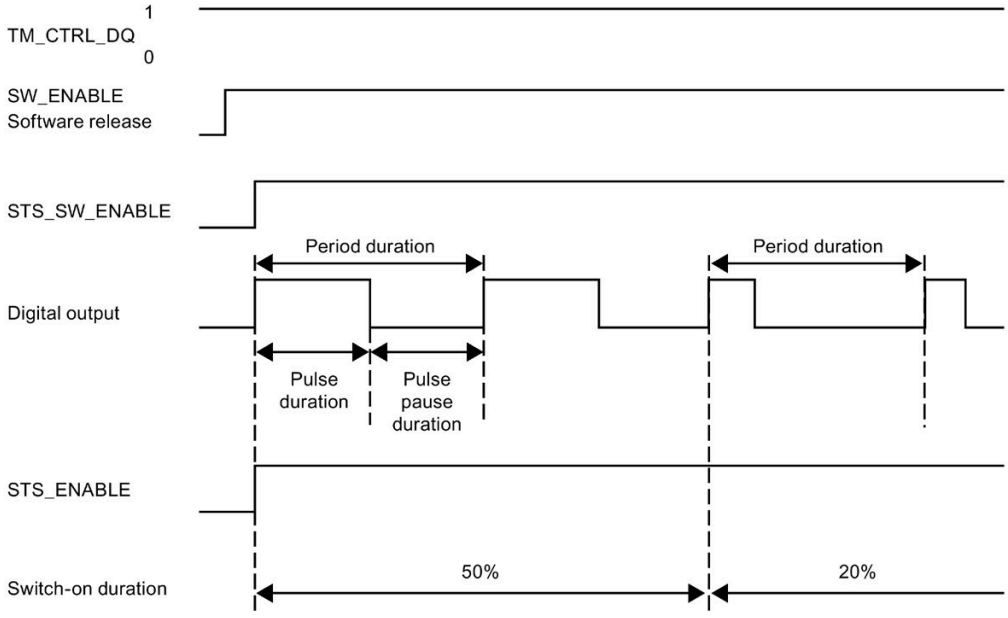

Figure 3-1 Pulse schematic

Starting the output sequence

The control program must output the enable for the output sequence with the help of the software enable (SW_ENABLE 0 → 1). The feedback bit STS_SW_ENABLE indicates that the software enable is pending at the PWM.

If the software enable is activated (rising edge), STS_ENABLE is set. The output sequence runs continuously, as long as SW_ENABLE is set.

Note

Output control signal TM_CTRL_DQ

- If TM_CTRL_DQ = 1, the technology function takes over the control and generates pulse sequences at the output PWM DQA.
- If TM_CTRL_DQ = 0, the user program takes over the control and the user can set the output PWM DQA directly via the control bit SET_DQA.

Canceling the output sequence

A deactivation of the software enable (SW_ENABLE = 1 → 0) cancels the current output sequence. The last cycle duration is not completed. STS_ENABLE and the digital output PWM DQA are immediately reset to 0.

A renewed pulse output is only possible after a restart of the output sequence.

Minimum pulse duration and minimum interpulse period

You assign the minimum pulse duration and the minimum interpulse period with the help of the parameter "Minimum pulse duration".

- A pulse duration determined by the technology function or PWM channel which is shorter than the minimum pulse duration will be suppressed.
- A pulse duration determined by the technology function or PWM channel which is longer than the cycle duration less the minimum interpulse period will be set to the value of the cycle duration (output switched on permanently).

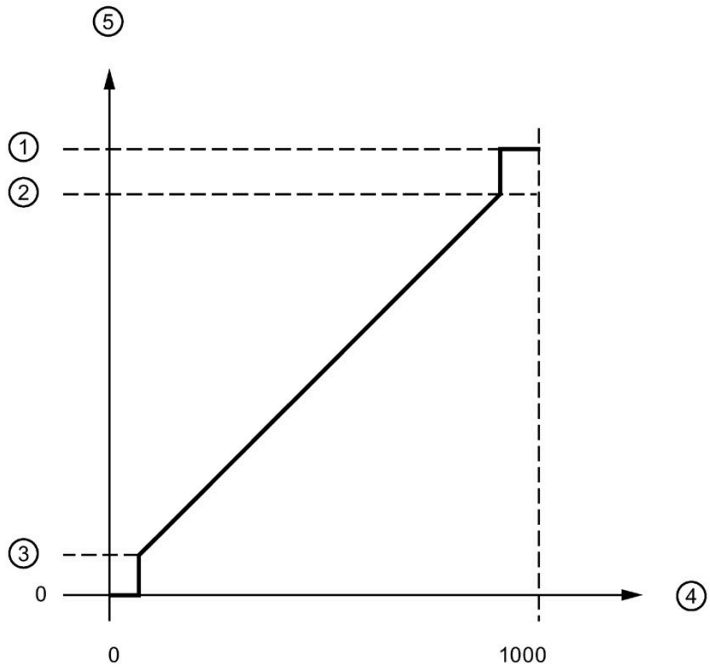

① Cycle duration
② Cycle duration minus minimum interpulse period
③ Minimum pulse duration
④ OUTPUT_VALUE (One tenth of a percent on-load factor)
⑤ Pulse duration

Figure 3-2 Minimum pulse duration and minimum interpulse period

Setting and changing the pulse on-load factor

OUTPUT_VALUE assigns the on-load factor for the current period duration. You select the range of the field OUTPUT_VALUE of the control interface with the "Output format" parameter.

- Output format per 100: Value range between 0 and 100
  Pulse duration = (OUTPUT_VALUE/100) x period duration.
- Output format 1/1000: Value range between 0 and 1 000
  Pulse duration = (OUTPUT_VALUE/1 000) x cycle duration.
- Output format 1/10000: Value range between 0 and 10 000
  Pulse duration = (OUTPUT_VALUE/10 000) x cycle duration.
- Output format "S7 analog output": Value range between 0 and 27,648
  Pulse duration = (OUTPUT_VALUE/27 648) x period duration.

You assign OUTPUT_VALUE directly via the control program. A new OUTPUT_VALUE is applied at the output when the next rising edge occurs.

Setting and changing the period duration

- Permanent updating
  The period duration is permanently controlled via the control interface. The MODE_SLOT bit must be set ("1" means permanent updating); LD_SLOT must be set to value 1 ("1" means period duration). Set the period value in the field SLOT. The unit is always a microsecond.
  - High-speed output activated: between 10 µs and 10 000 000 µs (10 s) in the field SLOT
  - High-speed output deactivated: between 100 µs and 10 000 000 µs (10 s) in the field SLOT
  - Standard output (100 Hz output): between 10 000 µs (10 ms) and 10 000 000 µs (10 s) in the field SLOT
- Individual updating
  Set the period duration in the configuration parameters. Alternatively, execute an individual updating via the control interface. MODE_SLOT must be deleted ("0" means individual updating); LD_SLOT must be set to value 1 ("1" means period duration). Set the period duration value in the field SLOT. The unit is always a microsecond.
  - High-speed output activated: between 10 µs and 10 000 000 µs (10 s) in the parameters
  - High-speed output deactivated: between 100 µs and 10 000 000 µs (10 s) in the parameters
  - Standard output (100 Hz output): between 10 000 µs (10 ms) and 10 000 000 µs (10 s) in the parameters

The new period duration is applied at the next rising edge of the output.

Setting the minimum pulse duration and the minimum interpulse period

You assign the minimum pulse duration and the minimum interpulse period as DWORD numerical value between 0 and 10 000 000 µs (10 s) with the help of the channel parameter configuration "Minimum pulse duration".

Parameters of the pulse width modulation (PWM) mode

Category	Parameter	Meaning	Value range	Default
Reaction to CPU STOP	Reaction to CPU STOP	The parameter "Output substitute value" generates a substitute value upon CPU STOP, which you can define with the parameter "Substitute value for pulse output (DQA)".	**Output substitute value**	Output substitute value
		The parameter "Continue operation" still generates the PWM output signal upon CPU STOP, which was generated before the CPU STOP.	**Continue operation**	
	Substitute value for pulse output (DQA)	If you have set the option "Output substitute value" for "Reaction to CPU STOP", the parameter "Substitute value for pulse output (DQA)" defines the substitute value to be used for the pulse output of the channel. If you have set the option "Continue operation" for "Reaction to CPU STOP", the parameter "Substitute value for pulse output (DQA)" cannot be selected	**0** (use substitute value 0)	0
			1 (use substitute value 1)	
Diagnostics interrupt	No supply voltage L+	The parameter "No supply voltage L+" activates the diagnostic interrupt of the channel in the case of no supply voltage L+	**Deactivated**	Deactivated
			Activated	
Parameter	High-speed output (0.1 A)	The "High-speed output (0.1 A)" parameter is used to specify whether you want to use the selected pulse output as high-speed output. Requirement for this is that the selected pulse output supports the operation as high-speed output.	**Deactivated** The output supports frequencies of up to 10 kHz (load dependent) and currents of up to 0.5 A or frequencies of up to 100 Hz and currents of up to 0.5 A depending on the performance capability of the selected output.	Deactivated
			Activated The output supports frequencies of up to 100 kHz and currents of up to 0.1 A.	
	Output format	Defines the format of the ratio value (on-load factor) in the field "OUTPUT_VALUE" of the control duration of the channel.	**S7 analog output** Interprets the ratio value in the field OUTPUT_VALUE" of the control interface 1/27648 of the current period duration. Supported value range from 0 to 27 648	Per 100

Category	Parameter	Meaning	Value range	Default
			Per 100 Interprets the ratio value in the field "OUTPUT_VALUE"of the control interface percentage value of the current period duration. Supported value range 0 to 100	
			Per 1,000 Interprets the ratio value in the field "OUTPUT_VALUE"of the control interface is a one-tenth percentage point of the current period duration. Supported value range from 0 to 1 000	
			Per 10,000 Interprets the ratio value in the field "OUTPUT_VALUE" of the control interface is a one-hundredth percentage point of the current period duration. Supported value range from 0 to 10 000	
	Minimum pulse duration	Defines the minimum pulse duration and the minimum interpulse period of the output signal of the channel. The channel suppresses all pulses and pauses that are below the specified value.	**0 µs to 10 000 000 µs (10 s)**	0 µs
	Period duration	Defines the period duration of the output signal of the channel in µs. In RUN, the user program can control the period duration via the control and feedback interface of the channel.	**x to 10 000 000 µs (10 s)** at 100 kHz hardware output (high-speed output (0.1 A) activated): 10 µs to 10 000 000 µs (10 s) at 10 kHz hardware output (high-speed output (0.1 A) deactivated): 100 µs to 10 000 000 µs (10 s) at 100 kHz hardware output (high-speed output (0.1 A) deactivated): 10 000 µs (10 ms) to 10 000 000 µs (10 s)	2 000 000 µs (2 s)
Hardware inputs / outputs	Pulse output (DQA)	The parameter "Pulse output (DQA)" defines the hardware output to use as pulse output channel.	For B: X11, terminal 21 (DQ0 / %Q4.0): 10 kHz / 0.5 A or 100 kHz / 0.1 A	Hardware output for the least significant address
			For B: X11, terminal 31 (DQ8 / %Q5.0): 100 Hz / 0.5 A	

Output signals for pulse width modulation (PWM) mode

Output signal	Meaning	Value range
Continuous pulse current at the digital output PWM DQA	A pulse is output at the digital output PWM DQA for the set on-load factor and cycle duration.	Continuous pulse current

3.2.1.2 Operating mode: Frequency output

In this operating mode you can assign a frequency value with high frequencies more precisely than by using period duration in PWM mode.

A rectangular signal with an assigned frequency and a constant on-load factor of 50 % is generated at the digital output.

The frequency output mode has the following functions:

- When the option "High-speed output (0.1 A)" is activated, you can generate a minimum pulse duration of 2 µs at a current of 100 mA. If the option "High-speed output (0.1 A)" is not activated, you can generate a minimum pulse duration of 20 µs with a load > 0.1 A and a minimum pulse duration of 40 µs with a load of ≥ 2 mA and a current of maximum 0.5 A.
  If you use a standard output, you can generate a minimum pulse duration of 400 µs with a load of > 0.1 A and a minimum pulse duration of 500 µs with a load of ≥ 2 mA and a current of max. 0.5 A.

	Minimum			Maximum		
	Standard output	High-speed output deactivated	High-speed output activated	Standard output	High-speed output deactivated	High-speed output activated
Frequency	0.1 Hz			100 Hz [1]	10 kHz [1]	100 kHz

[1] Load dependent

- You can control the pulse output (DQA) of the channel manually via the control and feedback interface.
- You can configure the reaction to CPU STOP. Upon change to CPU STOP, the pulse output (DQA) is set to the configured state.

Controller

For the frequency output mode, the user program directly accesses the control and feedback interface of the channel.

A reconfiguration via the instructions WRREC/RDREC and parameter assignment data record 128 is supported. You can find additional information in section Parameter data records (PWM) (Page 187).

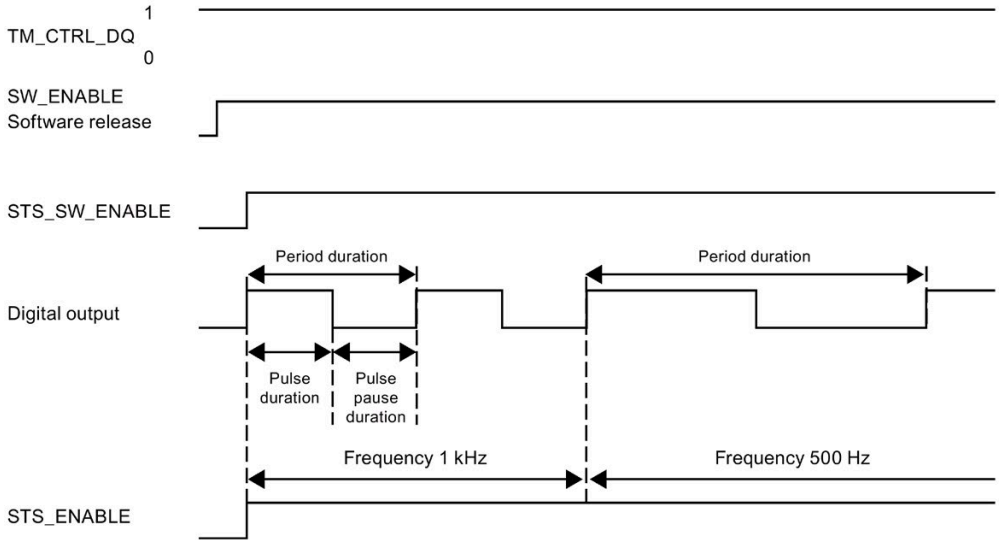

Figure 3-3 Pulse schematic

Starting the output sequence

The control program must initiate the enable for the output sequence with the help of the software enable (SW_ENABLE 0 → 1). The feedback bit STS_SW_ENABLE indicates that the software enable is pending at the pulse generator.

If the software enable is activated (rising edge), STS_ENABLE is set. The output sequence runs continuously, as long as SW_ENABLE is set.

Note

Output control signal TM_CTRL_DQ

- If TM_CTRL_DQ = 1, the technology function takes over the control and generates pulse sequences at the output PWM DQA.
- If TM_CTRL_DQ = 0, the user program takes over the control and the user can directly set the output PWM DQA via the control bit SET_DQA.

Canceling the output sequence

Deactivating the software enable (SW_ENABLE = 1 → 0) during the frequency output cancels the current output sequence. The last cycle duration is not completed. STS_ENABLE and the digital output PWM DQA are immediately reset to 0.

A renewed pulse output is only possible after a restart of the output sequence.

Setting and changing the output value (frequency)

You set the frequency with the OUTPUT_VALUE directly with the control program in the control interface. The value is specified in the real format and the unit is always "Hz". The possible range depends on the parameter "High-speed output (0.1 A)" as follows:

- High-speed pulse output deactivated
  - Frequency (OUTPUT_VALUE) 0.1 Hz to 10,000 Hz
- High-speed pulse output activated
  - Frequency (OUTPUT_VALUE) 0.1 Hz to 100,000 Hz
- Standard output (100 Hz output)
  - Frequency (OUTPUT_VALUE) 0.1 Hz to 100,000 Hz

The new frequency is applied at the start of the next period. The new frequency has no impact on the falling edge or the pulse-cycle ratio. However, the application can take up to 10 s depending on the previously set frequency.

Accuracy of the output frequency

The configured output frequency is output with a frequency-dependent accuracy at the digital output PWM DQA. You can find an overview of the accuracy as a function of the frequency used in the section Interconnection overview of outputs (Page 113).

Parameters of the frequency output mode

Category	Parameter	Meaning	Value range	Default
Reaction to CPU STOP	Reaction to CPU STOP	The parameter "Output substitute value" generates a substitute value upon CPU STOP, which you can define with the parameter "Substitute value for pulse output (DQA)".	**Output substitute value**	Output substitute value
		The parameter "Continue operation" still generates the frequency output signal upon CPU STOP, which was generated before the CPU STOP.	**Continue operation**	
	Substitute value for pulse output (DQA)	If you have set the option "Output substitute value" for "Reaction to CPU STOP", the parameter "Substitute value for pulse output (DQA)" defines the substitute value to be used for the pulse output of the channel. If you have set the option "Continue operation" for "Reaction to CPU STOP", the parameter "Substitute value for pulse output (DQA)" cannot be selected.	**0** (use substitute value 0)	0
			1 (use substitute value 1)	
Diagnostics interrupt	No supply voltage L+	The parameter "No supply voltage L+" activates the diagnostic interrupt of the channel in the case of no supply voltage L+	**Deactivated**	Deactivated
			Activated	
Parameter	High-speed output (0.1 A)	The "High-speed output (0.1 A)" parameter is used to specify whether you want to use the selected pulse output as high-speed output. Requirement for this is that the selected pulse output supports the operation as high-speed output.	**Deactivated** The output supports frequencies of up to 10 kHz (load dependent) and currents of up to 0.5 A or frequencies of up to 100 Hz and currents of up to 0.5 A depending on the performance capability of the selected output.	Deactivated
			Activated The output supports frequencies of up to 100 kHz and currents of up to 0.1 A.	
	Output format	Defines the value for the frequency output in the field "OUTPUT_VALUE" of the control duration of the channel.	**1 Hz** Interprets the value of the frequency output in the field "OUTPUT_VALUE" as frequency with the unit Hz.	1 Hz
Hardware inputs / outputs	Pulse output (DQA)	The parameter "Pulse output (DQA)" is used to define the hardware output that you want to use as pulse output channel.	For B: X11, terminal 21 (DQ0 / %Q4.0): 10 kHz / 0.5 A or 100 kHz / 0.1 A	Hardware output for the least significant address
			For B: X11, terminal 31 (DQ8 / %Q5.0): 100 Hz / 0.5 A	

Output signals for frequency output mode

Output signal	Meaning	Value range
Continuous pulse current at the digital output PWM DQA	A pulse for the assigned frequency is output at the digital output PWM DQA.	Continuous pulse current

3.2.1.3 Operating mode: PTO

The PTO (Pulse Train Output) mode can be used to output position information. This allows you to, for example, control stepper motor drives or simulate an incremental encoder. The frequency of the pulses represents the speed, while the number of pulses represents the distance. The direction can also be specified by using two signals per channel. You can use a PTO channel for setpoint output (drive) for an axis technology object.

PTO mode is divided into the following four signal types:

- PTO (pulse (A) and direction (B)): If you select the PTO signal type (pulse (A) and direction (B)), an output (A) controls the pulses and an output (B) controls the direction. B is 'High' (active) when pulses are generated in a negative direction. B is 'Low' (inactive) when pulses are generated in a positive direction.

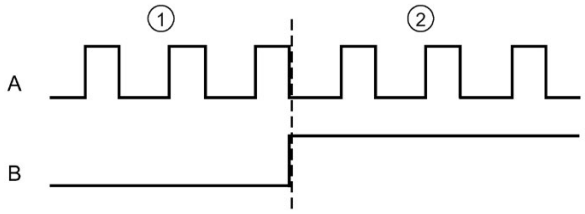

① Positive direction of rotation
② Negative direction of rotation

- PTO (Count Up (A) and Count Down (B)): When you select PTO when you select the PTO signal type (count up (A) and count down (B)), an output (A) outputs pulses for positive directions and another output (B) outputs pulses for negative directions.

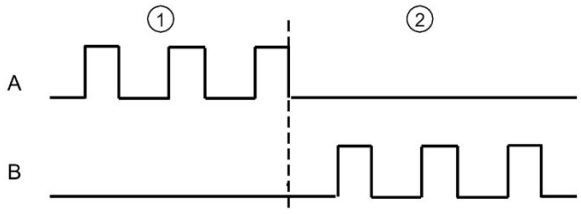

① Positive direction of rotation
② Negative direction of rotation

- PTO (A, B phase-shifted): When you select the PTO signal type (A, B phase-shifted), the two outputs pulses with the specified velocity, but phase-shifted by 90 degrees. This is a 1x combination in which the pulse shows the duration between two positive transitions of A. In this case the direction is determined based on the output which first changes from 0 to 1. With positive direction, A preceeds B. With negative direction B preceeds A.

  The number of generated pulses is based on the number of 0-to-1 transitions from phase A. The phase ratio determines the direction of motion:

PTO (A, B phase-shifted)	
Phase A precedes phase B (positive motion)	Phase A follows phase B (negative motion)
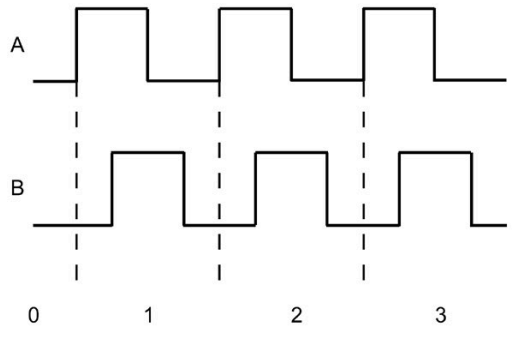	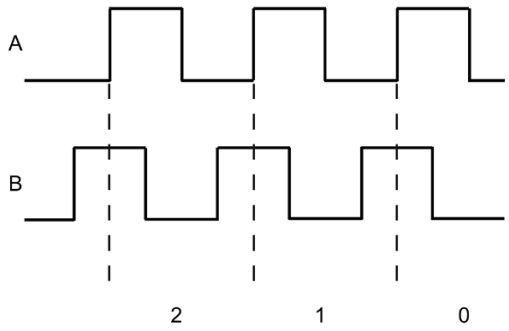
Number of pulses	Number of pulses

- PTO (A, B phase-shifted - quadruple): When you select the PTO signal type (A, B phase-shifted, quadruple), the two outputs transmit pulses with the specified velocity, but phase-shifted by 90 degrees. The quadruple signal type is a 4x configuration in which each edge transition corresponds to an increment. Therefore, a full period of the signal A contains four increments. In this way two outputs, each with 100 kHz signal frequency, can be used to output a control signal that supplies 400,000 increments per second. The direction is determined based on the output which first changes from 0 to 1. With positive direction, A preceeds B. With negative direction B preceeds A.

PTO (A, B phase-shifted - quadruple)	
Phase A precedes phase B (positive motion)	Phase A follows phase B (negative motion)
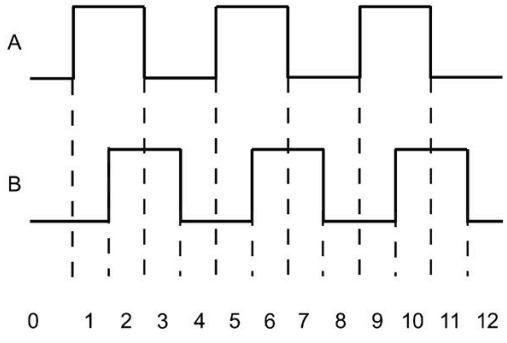	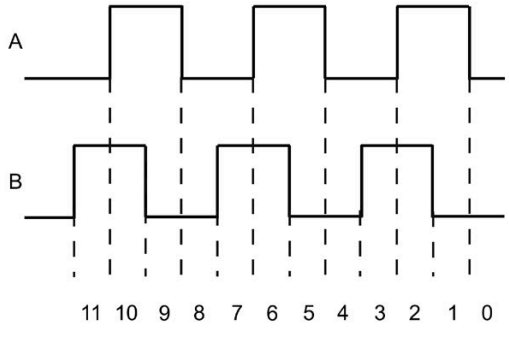
Number of pulses	Number of pulses

Parameters of PTO mode

Category	Parameter	Meaning	Value range	Default
Diagnostics interrupt	No supply voltage L+	With the parameter "No supply voltage L+" you activate the diagnostic interrupt of the channel in the case of no supply voltage L+.	Deactivated Activated	Deactivated
Data exchange with the drive	Reference speed	With the parameter "Reference speed" you define the reference value for the drive velocity. The drive velocity is defined as percentage value of the reference speed in the range from -200 % to +200 %.	Floating-point number: 1.0 bis 20,000.0 (rpm)	3,000.0 (rpm)
	Maximum speed	The parameter "Maximum speed" is used to define the required maximum speed for your application.	The supported value range depends on: • the signal type selected under "Operating mode" • the value defined under "Increments per revolution" • the value defined under "Reference speed" The low limit of the value range is: • for the signal type "PTO (A, B phase-shifted - quadruple)": 0.1 Hz * 60 s/min * 4) / Increments per revolution • for the non-quadruple PTO signal types: (0.1 Hz * 60 s/min) / increments per revolution The high limit of the value range is the minimum of the value: • 2 * reference speed and of the value: • for the signal type "PTO (A, B phase-shifted - quadruple)": (100 000 Hz * 60 s/min * 4) / Increments per revolution • for the non-quadruple PTO signal types: (100 000 Hz * 60 s/min) / Increments per revolution	3,000.0 (rpm)

Category	Parameter	Meaning	Value range	Default
	Increments per revolution	The "Increments per revolution" is used to define the number of increments per revolution (also in microstep mode), which is required by the drive for a revolution.	1 to 1,000,000	200
Fine resolution	Bits in incr. actual value (G1_XIST1)	The parameter defines the number of bits for the coding of the fine resolution in the current incremental value of G1_XIST1.	0	0
Stop behavior	Quick stop time	The parameter "Quick stop time" defines the time interval it should take for the drive to go from the maximum speed to a standstill (OFF3).	1 to 65 535 (ms)	1,000 (ms)
Hardware inputs / outputs	Reference switch input	The parameter "Reference switch input" defines the hardware input of the reference switch.	[Input address of the reference switch DI]	--
	Edge selection reference switch	The parameter "Edge selection reference switch" defines the edge type which is to be detected by the reference switch.	Rising edge Falling edge	Rising edge
	Measuring input	The parameter "Measuring input" defines the hardware input of the measuring input.	[Input address of the measuring input DI]	--
	"Drive ready" input	The parameter ""Drive ready" input" defines the hardware input of the input "Drive ready".	[Input addresses of the inputs "Drive ready" DIn]	--
	Pulse output A for "PTO (pulse (A) and direction (B))"	The parameter "Pulse output A" defines the hardware output for PTO signal A.	[Output address DQ for PTO signal A (output frequency 100 kHz)]	grayed out Read only access to the parameter
	Direction output B for "PTO (pulse (A) and direction B))"	The parameter "Direction output B" defines the hardware output for PTO signal B.	[Output address 1 of the DQ for PTO signal B (output frequency 100 kHz)] [Output address 2 of the DQ for PTO signal B (output frequency 100 Hz)]	Qn (output frequency 100 kHz)
	Clock generator forward (A) for "PTO (Count up (A) and Count down (B))"	The "Clock generator forward (A)" parameter defines the hardware output for PTO signal A.	[Output address DQ for PTO signal A (output frequency 100 kHz)]	grayed out Read only access to the parameter

Category	Parameter	Meaning	Value range	Default
	Clock generator backward (B) for "PTO (Count up (A) and Count down (B))"	The "Clock generator backward (B)" parameter defines the hardware output for PTO signal B.	[Output address 1 of the DQ for PTO signal B (output frequency 100 kHz)]	grayed out Read only access to the parameter
	Phase A for "PTO (A, B phase-shifted)" and "PTO (A, B phase-shifted, quadruple)"	The "Clock generator output (A)" parameter defines the hardware output for PTO signal A.	[Output address of the DQ for PTO signal A (output frequency 100 kHz)]	grayed out Read only access to the parameter
	Phase B for "PTO (A, B phase-shifted)" and "PTO (A, B phase-shifted, quadruple)"	The "Clock generator output (B)" parameter defines the hardware output for PTO signal B.	[Output address 1 of the DQ for PTO signal B (output frequency 100 kHz)]	grayed out Read only access to the parameter
	Drive enable output	The parameter "Drive enable output" defines the hardware output of the output "Drive enable output".	[Output addresses of the enable output DQn (output frequency 100 Hz)	--

Reaction of the PTO channel to CPU STOP

The PTO channel reacts to a change to CPU STOP with the removal of the drive enable (to the extent that the drive enable output is configured) and with output of the velocity setpoint 0 at the hardware outputs configured for the signal tracks A and B. The CPU STOP reaction of the PTO channels cannot be configured.

Note

Reaction to CPU STOP

Upon CPU STOP, the hardware outputs assigned for the PTO outputs A and B can switch to signal state 'High' (1) and/or remain there. A switching/remaining of the two hardware outputs to/in signal level 'Low' (0) is not guaranteed.

Controller

The pulse output channels for the four modes of the pulse generators (PTO) are controlled using Motion Control via the technology objects TO_SpeedAxis, TO_PositioningAxis and TO_SynchronousAxis. With these operating modes, the control and feedback interface of the channels is a partial implementation of the PROFIdrive interface "Telegram 3". For a detailed description of the use of motion control and its configuration, refer to the S7-1500/S7-1500T Motion Control function manual (https://support.industry.siemens.com/cs/ww/en/view/109766459) and the STEP 7 online help.

3.2.2 Functions

3.2.2.1 Function: High-speed output

The function "High-speed output (0.1 A)" enhances the signal clock of the digital outputs (DQ0 to DQ7). Less delay, fluctuation, jitter, and shorter rise and fall times, occur at the switching edges.

The function "High-speed output (0.1 A)" is suited for generating pulse signals in a more precise clock, but provides a lower maximum load current.

For the PWM and frequency output modes, select the high-speed output of the channel in STEP 7 (TIA Portal). You can also change the parameter assignment during runtime with the help of the program via the data record.

High-speed pulse output (high-speed output) is available for the following operating modes:

- PWM
- Frequency output
- PTO (the pulse outputs for the PTO mode are always "High-speed output (0.1 A)")

High-speed output

	Minimum		Maximum	
	High-speed output deactivated	**High-speed output activated**	**High-speed output deactivated**	**High-speed output activated**
Pulse duration	20 µs with load > 0.1 A [1)] 40 µs with load ≥ 2 mA [1)]	2 µs [1)]	10,000,000 µs (10 s)	
Period duration	100 µs [2)]	10 µs		
Frequency	0.1 Hz		10 kHz [2)]	100 kHz

1) A lower value is theoretically possible but, depending on the connected load, the output voltage can no longer be output as complete rectangular pulse

2) Load dependent

3.2.2.2 Function: Direct control of the pulse output (DQA)

Direct control of the pulse output (DQA)

In the modes "Pulse width modulation PWM" and "Frequency output", you can set the pulse output (DQA) of a pulse generator directly via the control program. Select the function for the DQ direct control by deleting the output control bit of the PWM channel (TM_CTRL_DQ = 0) in the control interface.

The direct control of the pulse output (DQA) can be helpful when commissioning a control system for automation.

When you select the direct control of the pulse output (DQA) during a pulse output sequence, the sequence continues to run in the background so that the output sequence is continued as soon as the channel takes control again (by setting TM_CTRL_DQ = 1).

You assign the status of the pulse output (DQA) using the control bits SET_DQA.

When you set TM_CTRL_DQ = 1, you deselect the direct control of the pulse output (DQA) and the channel takes over the processing. If the output sequence is still running (STS_ENABLE still active), the PWM channel takes over the control of the output again. If TM_CTRL_DQ = 1 and STS_ENABLE is not active, the module's channel also takes over processing, but then outputs "0".

Note

Output signal TM_CTRL_DQ of the PWM channel

- If TM_CTRL_DQ = 1, the technology function takes over the control and generates pulse sequences at the output PWM DQA.
- If TM_CTRL_DQ = 0, the user program takes over the control and the user can set the PWM DQA directly using the control bits SET_DQA.

3.2.3 Configuring the PWM and frequency output modes

3.2.3.1 Assignment of the control interface

The user program influences the behavior of the PWM channel through the control interface.

Control interface per channel

The following table shows the control interface assignment:

Table 3- 5 Assignment of the control interface

	7	6	5	4	3	2	1	0
Byte 0	OUTPUT_VALUE PWM: On-load factor * (Int) In PWM mode, the on-load factor uses only the two least significant bytes (byte 2 and byte 3). Frequency output: Frequency in Hz (Real)							
Byte 1								
Byte 2								
Byte 3								
Byte 4	SLOT							
Byte 5								
Byte 6								
Byte 7								
Byte 8	Reserved = 0			MODE_SLOT	LD_SLOT Specifies the meaning of the value under SLOT			
					0000: No action			
					0001: Period duration (PWM)			
					0010 to 1111: Reserved			
Byte 9	Reserved = 0		Reserved = 0	Reserved = 0	SET_DQA	Reserved = 0	TM_CTRL_DQ	SW_ENABLE
Byte 10	Reserved = 0							RES_ERROR
Byte 11	Reserved = 0							

* The terms "On-load factor", "Pulse duty factor" and "Duty factor" can be used synonymously

Use case

1. Transfer the control for the output to the PWM channel.
2. Set SW_ENABLE, in order that the output can be started.
3. Set the required on-load factor using OUTPUT_VALUE.
4. If necessary, change the period duration (cyclic or once). If you do not change the value, the period duration from the hardware configuration will be used.
5. With TM CTRL_DQ and SET_DQ set the output from the user program permanently to 1 or 0.
6. Acknowledge any errors that occur using RES_ERROR.

Additional parameters for the output sequence are defined before the start of an output sequence.

The data record of the parameter assignment is changed in the device configuration in STEP 7 (TIA Portal) or through WRREC execution.

Control interface parameters

OUTPUT_VALUE

The interpretation of the value OUTPUT_VALUE depends on the set operating mode. OUTPUT_VALUE is always updated. When an invalid value is detected (outside the permissible range), the error memory bit ERR_OUT_VAL is set until a valid value is detected. During the error condition the invalid value is ignored and the PWM channel continues with the last valid OUTPUT_VALUE. Note that, in the frequency output mode, it is also possible that no last valid value is available. In this case the pulse output returns the value 0, i.e. there is no pulse output.

Please note that the on-load factor is not checked in PWM mode. If the on-load factor is greater than the format permits, the PWM channel uses a ratio of 100 %. 0 % in effect for values < 0.

SLOT, MODE_SLOT and LD_SLOT

Use these control interface fields if you occasionally change the period duration in PWM mode before the start of the output sequence or during operation. You can find a description of the interaction between SLOT, MODE_SLOT and LD_SLOT under Handling the SLOT parameter (control interface) (Page 74)

SW_ENABLE

If 0 → 1, activate the output sequence.

TM_CTRL_DQ

- If 1, the output is controlled by the PWM channel and generates the pulse sequences
- If 0, the output is controlled directly by the program using the SET_DQA assignments

SET_DQA

- If 1, set the output A to 1, if TM_CTRL_DQ is inactive
- If 0, set the output A to 0, if TM_CTRL_DQ is inactive

RES_ERROR

Resetting the error bit memory ERR_LD in the feedback interface

3.2.3.2 Handling the SLOT parameter (control interface)

SLOT and MODE_SLOT

SLOT has the following operating modes.

- **Mode for individual update (MODE_SLOT = 0)**
  Use this mode if you occasionally change the specific parameters (such as period duration) before the start of the output sequence or during operation.
  - The value in SLOT is the always applied when the value changes in LD_SLOT.
  - The acknowledgment bit STS_LD_SLOT in the feedback interface is switched.
  - The value of LD_SLOT defines the interpretation of SLOT (see the table below "Interpretation of the SLOT parameter value").
  - If the LD_SLOT value is invalid, the setting of the feedback bit ERR_LD indicates a parameter assignment error. The user has to reset the error using the control bit RES_ERROR and enable the SLOT parameter again for the next value.
  - Changes made in this mode can be read back by the channel in the parameter assignment data record.
  - The current changes are entered in the data record 128 during the reading back of the parameter assignment data with RDREC from the user program. These changes are lost during a warm restart of the CPU.
- **Mode for cyclic updating (MODE_SLOT = 1)**
  Use this operating mode if the program is to continuously control another parameter in addition to the main parameter to be controlled.
  - The value in SLOT is transferred with each module cycle.
  - No acknowledgment bit is available.
  - The value of LD_SLOT defines the interpretation of SLOT (see the table below "Interpretation of the SLOT parameter value").
  - If the value in SLOT is not valid, the error ERR_SLOT_VAL occurs. The error is automatically reset as soon as a valid value is loaded.
  - In this mode the value in the parameter assignment data record is not updated. If LD_SLOT is changed in this mode, the last value applied from LD_SLOT is valid.
  - The mode for permanent updating can be stopped by setting LD_SLOT to 0 and MODE_SLOT to 0. By stopping the mode for permanent updating the changes made at the parameters during the permanent updating are retained until the next changes via SLOT (cyclic or once) or until the next STOP-RUN transition.

Interpretation of the SLOT parameter value

The value written in the SLOT parameter is displayed as in the table below depending on the LD_SLOT value and the mode is interpreted.

LD_SLOT	Meaning of SLOT value	Valid modes for using the SLOT value	SLOT data type
0	No action / idling	All operating modes	
1	Period duration	PWM	UDInt Permissible value range*: Minimum value: 10 µs, 100 µs or 10 000 µs (10 ms) Maximum value: 10 000 000 µs (10 s)

* The permissible value range depends on the selected hardware output and sometimes on the high-speed mode (high-speed/standard).

Individual updating of the parameter 'Period duration'

The following representation illustrates the workflow of the individual updating of the parameter 'Period duration'. The described workflow principle can also be used on the channels of the high-speed counters.

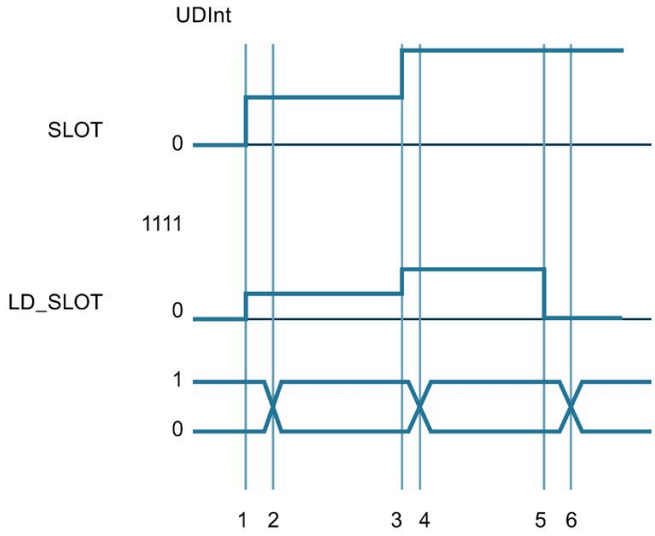

① User writes the first parameter in SLOT and specifies the first parameter in LD_SLOT

② Technology channel applies the first parameter and indicates the application by change in the bit STS_LD_SLOT

③ User writes the second parameter in SLOT and specifies the second parameter in LD_SLOT

④ Technology channel applies the second parameter and indicates the application by change in the bit STS_LD_SLOT

⑤ User writes 0 in LD_SLOT, (SLOT inactive)

⑥ Technology channels answers change in LD_SLOT with a change in STS_LD_SLOT

Figure 3-4 Individual updating

Note that the following requirements apply to the representation shown above:

- The value MODE_SLOT must be set to 0
- Errors or invalid values are shown in the feedback bit ERR_SLOT_VAL
- The error must be acknowledged

If MODE_SLOT 0 = 1, the following applies (for PWM mode only):

- The value in SLOT is continuously evaluated according to LD_SLOT
- STS_LD_SLOT does not change
- An error is automatically reset as soon as a valid value is set in SLOT

Cyclic updating of the parameter 'Period duration'

The following representation illustrates the execution of the cyclic updating of the parameter 'Period duration'. The described workflow principle can also be used on the channels of the high-speed counters.

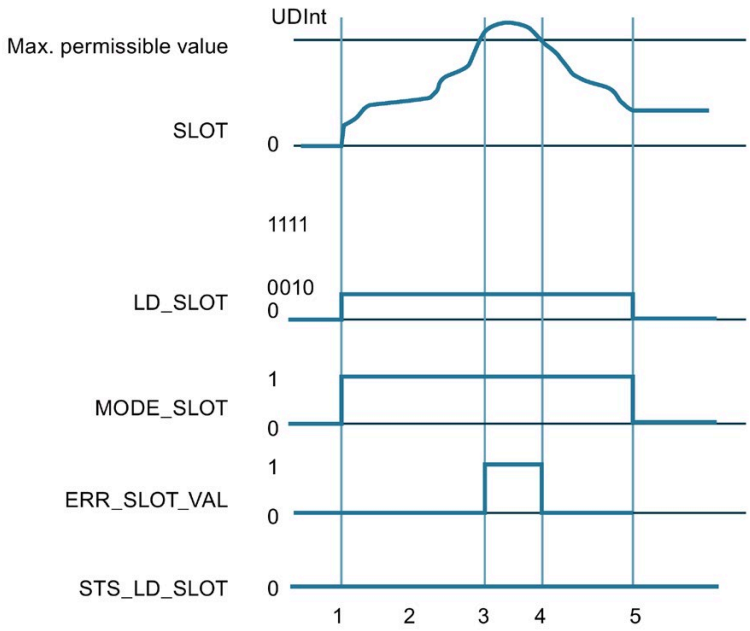

①
- User sets SLOT to the required parameter
- User sets MODE_SLOT to 1
- User sets LD_SLOT to the required value (1 for period duration)

② User changes value in SLOT continuously and technology channel evaluates continuously

③ Value in SLOT exceeds permitted limit, technology channel shows this ERR_SLOT_VAL and continues working with the last valid value

④ Value in SLOT again in permitted range, technology channel resets ERR_SLOT_VAL independently and continues working with the value in SLOT

⑤ User resets LD_SLOT and MODE_SLOT, technology channel continues to work with last value

Figure 3-5 Cyclic updating

3.2.3.3 Assignment of the feedback interface

The user program receives current values and status information from the pulse width modulation via the feedback interface.

Feedback interface per channel

The following table shows the feedback interface assignment:

Table 3- 6 Assignment of the feedback interface

	7	6	5	4	3	2	1	0
Byte 0	ERR_SLOT_VAL The valid in SLOT is invalid	ERR_OUT_VAL The value in OUTPUT_VALUE is invalid	Reserved = 0	Reserved = 0	ERR_PULSE	ERR_LD Error during loading via control interface	Reserved = 0	ERR_PWR missing supply voltage L+
Byte 1	Reserved = 0		STS_SW_ENABLE SW_ENABLE detected or feedback status SW_ENABLE	STS_READY Channel parameters assigned and ready	Reserved = 0	STS_LD_SLOT Load prompt detected and executed for Slot (toggling)	Reserved = 0	
Byte 2	Reserved = 0			Reserved = 0	Reserved = 0	Reserved = 0	STS_DQA	STS_ENABLE
Byte 3	Reserved = 0				Reserved = 0			

Feedback parameters

Table 3- 7 Status feedback

Feedback parameters	Meaning	Value range
STS_READY	The channel is correctly configured, is operating and supplying valid data.	0: Not ready to run 1: Ready to run
STS_SW_ENABLE	Current status of the software enable	0: SW_ENABLE is not active 1: SW_ENABLE detected
STS_LD_SLOT	Acknowledgment bit for each action of the SLOT in the SLOT mode for individual updating (for a description of the acknowledgment bit, refer to the section Handling the SLOT parameter (control interface) (Page 74)).	Each switching of this bit represents a successful LD_SLOT action.
STS_ENABLE	The output sequence is active. (STS_ENABLE always depends on the status of the software enable STS_SW_ENABLE ab)	0: No output sequence running 1: Output sequence running
STS_DQA	State of the pulse output (DQA)	0: Pulse output is not active 1: Pulse output is active

Feedback parameters	Meaning	Value range
ERR_PWR	No supply voltage L+	0: No error 1: Error
ERR_LD	Error during loading of a parameter value in the operating mode for individual updating	0: No error 1: Error
ERR_OUT_VAL	The value in OUTPUT_VALUE is invalid	0: No error 1: Error
ERR_SLOT_VAL	The value in SLOT is invalid, where MODE_SLOT = 1 (permanent updating)	0: No error 1: Error

Wiring

4

4.1 Supply voltage

24 V DC supply voltage (X80)

The connecting plug for the supply voltage is plugged in when the CPU ships from the factory.

The following table shows the signal names and the descriptions of the pin assignment of the 24 V DC supply voltage.

Table 4- 1 Pin assignment 24 V DC supply voltage

View Connector	Signal name [1]		Description
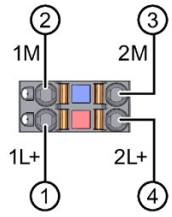	1	1L+	+ 24 V DC of the supply voltage
	2	1M	Ground of the supply voltage
	3	2M	Ground of the supply voltage for loop-through [2]
	4	2L+	+ 24 V DC of the supply voltage for loop-through [2]

[1] 1L+ and 2L+ as well as 1M and 2M are bridged internally

[2] Maximum 10 A permitted

If the CPU is supplied by a system power supply, it is not necessary to connect the 24 V supply.

4.2 PROFINET interfaces

PROFINET interface X1 with 2-port switch (X1 P1 R and X1 P2 R)

The assignment corresponds to the Ethernet standard for an RJ45 plug.

- When autonegotiation is deactivated, the RJ45 socket is allocated as a switch (MDI-X).
- When autonegotiation is activated, autocrossing is in effect and the RJ45 socket is allocated either as data terminal equipment (MDI) or a switch (MDI-X).

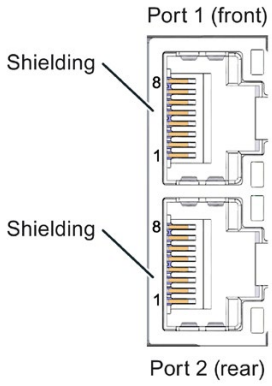

Figure 4-1 PROFINET ports

Note

You need a screwdriver (max. blade width 2.5 mm) to remove the PROFINET plug.

Remove display

You can find a description of how to remove and replace the display in the S7-1500, ET 200MP (http://support.automation.siemens.com/WW/view/en/59191792) system manual.

Reference

For more information on "Wiring the CPU" and "Accessories/spare parts", refer to the S7-1500, ET 200MP system manual (http://support.automation.siemens.com/WW/view/en/59191792).

Assignment of the MAC addresses

The CPU 1512C-1 PN has a PROFINET interface with two ports. The PROFINET interface itself has a MAC address, and each of the two PROFINET ports has its own MAC address. The CPU 1512C-1 PN therefore has three MAC addresses in total.

The MAC addresses of the PROFINET ports are needed for the LLDP protocol, for example for the neighborhood discovery function.

The number range of the MAC addresses is continuous. The first and last MAC address are lasered on the rating plate on the right side of each CPU 1512C-1 PN.

The table below shows how the MAC addresses are assigned.

Table 4- 2 Assignment of the MAC addresses

	Assignment	Labeling
MAC address 1	PROFINET interface X1 (visible in STEP 7 for accessible devices)	• Front, lasered • Right side, lasered (start of number range)
MAC address 2	Port X1 P1 R (required for LLDP, for example)	• Front and right side, not lasered
MAC address 3	Port X1 P2 R (required for LLDP, for example)	• Front, not lasered • Right side, lasered (end of number range)

4.3 Terminal and block diagrams

4.3.1 Block diagram of the CPU part

Block diagram

The following figure shows the block diagram of the CPU part.

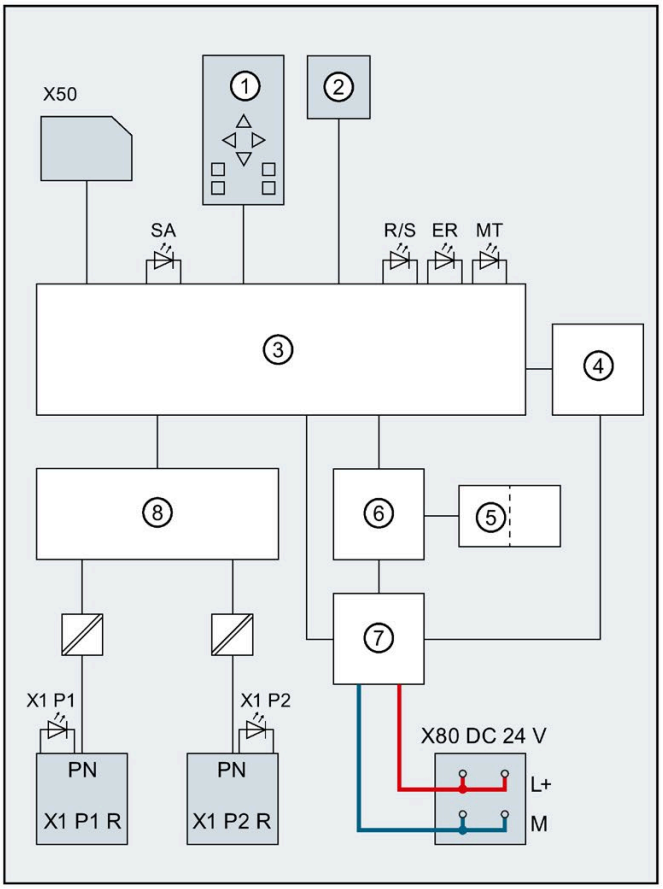

①	CPU with control and operating mode buttons	PN X1 P1 R	PROFINET interface X1 port 1
②	Display	PN X1 P2 R	PROFINET interface X1 Port 2
③	Electronics	L+	24 V DC supply voltage
④	Interface to on-board I/O	M	Ground
⑤	Interfaces to the backplane bus	SF	STOP ACTIVE LED (yellow)
⑥	Backplane bus interface	R/S	RUN/STOP LED (yellow/green)
⑦	Internal supply voltage	ER	ERROR LED (red)
⑧	2-port switch	MT	MAINT LED (yellow)
X50	SIMATIC memory card	X1 P1, X1 P2	Link TX/RX LED
X80 24 V DC	Infeed of supply voltage		

Figure 4-2 Block diagram of the CPU part

4.3.2 Terminal and block diagram of the analog on-board I/O

This section contains the block diagram of the analog on-board I/O (X10) and various wiring options.

For information on wiring the front connector, establishing the cable shield, etc., refer to the S7-1500, ET 200MP (http://support.automation.siemens.com/WW/view/en/59191792) system manual.

Note

You can use and combine the different wiring options for all channels. Note, however, that unneeded terminals of an analog input channel must not be connected.

Definition

U_n+/U_n-	Voltage input channel n (voltage only)
M_n+/M_n-	Measuring input channel n (only resistance-type transmitters or thermal resistors (RTD))
I_n+/I_n-	Current input channel n (current only)
$I_{c\,n}$+/$I_{c\,n}$-	Current output for RTD, channel n
QV_n	Voltage output channel
QI_n	Current output channel
M_{ANA}	Reference potential of the analog circuit
CHx	Channel or display of the channel status

Infeed element

The infeed element is inserted on the front connector and serves to shield the analog on-board I/O.

Note

The analog on-board I/O does not require power to be supplied by the infeed element. The infeed element is, however, necessary for shielding.

Wiring: Voltage measurement

The following figure shows the terminal assignment for voltage measurement at the channels available for this measurement type (channels 0 to 3).

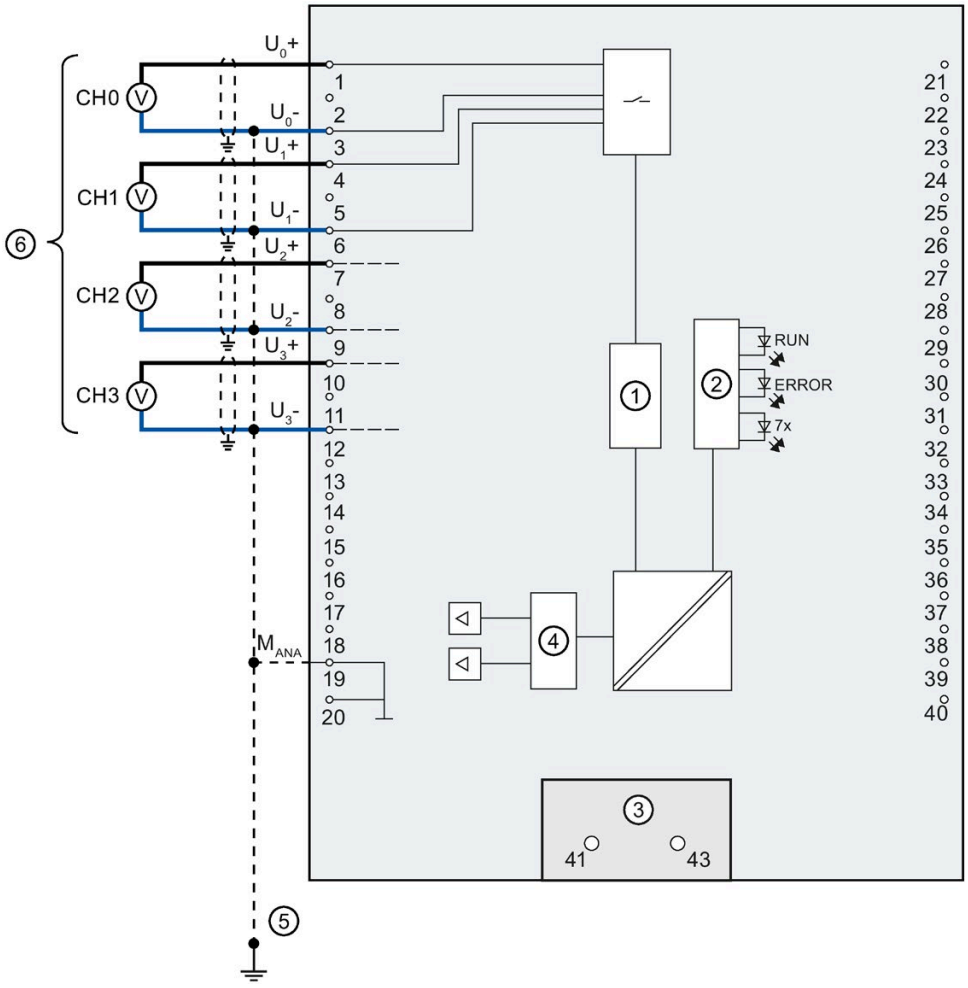

① Analog-to-digital converter (ADC)
② LED interface
③ Infeed element (for shielding only)
④ Digital-to-analog converter (DAC)
⑤ Equipotential bonding cable (optional)
⑥ Voltage measurement

Figure 4-3 Block diagram and terminal assignment for voltage measurement

Wiring: 4-wire measuring transducer for current measurement

The following figure shows the terminal assignment for current measurement with 4-wire measuring transducer at the channels available for this measurement type (channels 0 to 3).

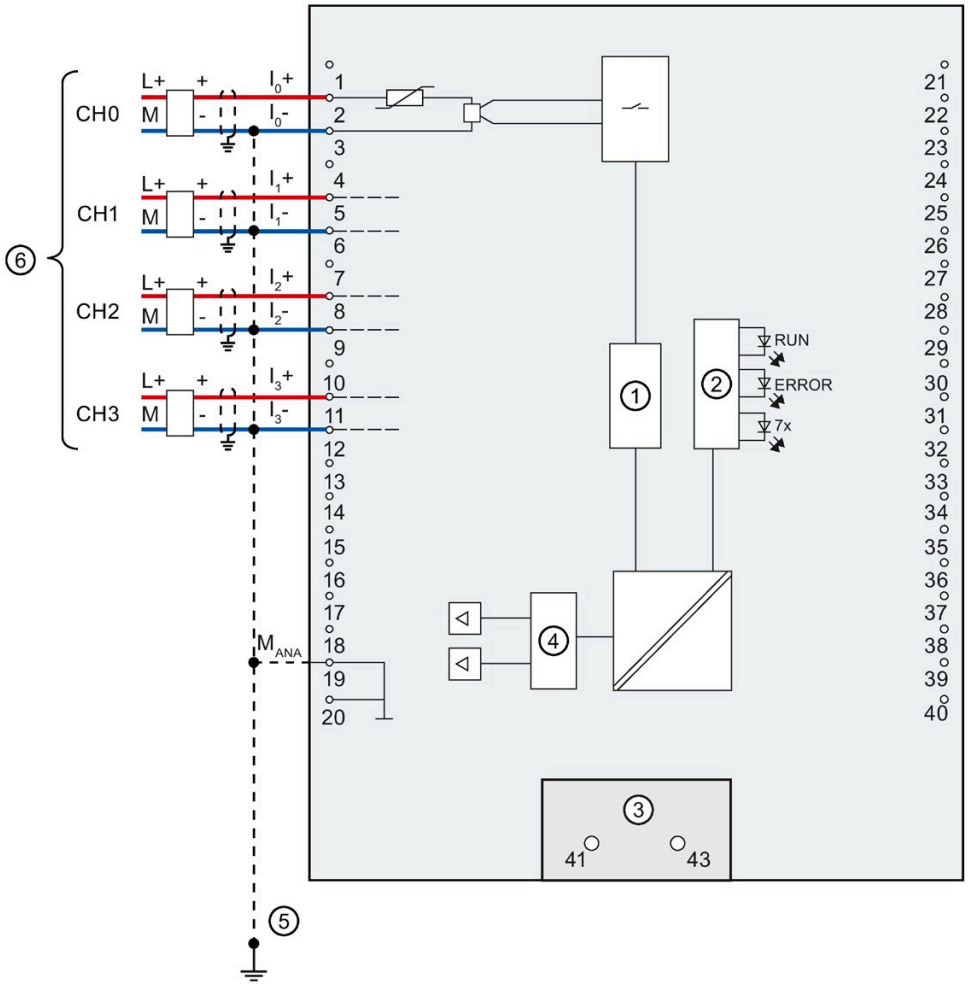

① Analog-to-digital converter (ADC)
② LED interface
③ Infeed element (for shielding only)
④ Digital-to-analog converter (DAC)
⑤ Equipotential bonding cable (optional)
⑥ Connector 4-wire measuring transducer

Figure 4-4 Block diagram and terminal assignment for current measurement with 4-wire measuring transducer

Wiring: 2-wire measuring transducer for current measurement

Alternatively to connecting a 4-wire transducer, you can also connect 2-wire transducers to channels 0 to 3. An external 24 V power supply is required to connect a 2-wire transducer to the analog on-board I/O of the compact CPU. Feed this voltage short-circuit proof to the 2-wire transducer. Use a fuse to protect the power supply unit.

NOTICE
Defective transducers Note that the analog input of the transducer is not protected against destruction in the event of a defect (short circuit). Take the necessary precautions against such cases.

The figure below shows an example of the connection of a 2-wire transducer to channel 0 (CH0) of the analog on-board I/O.

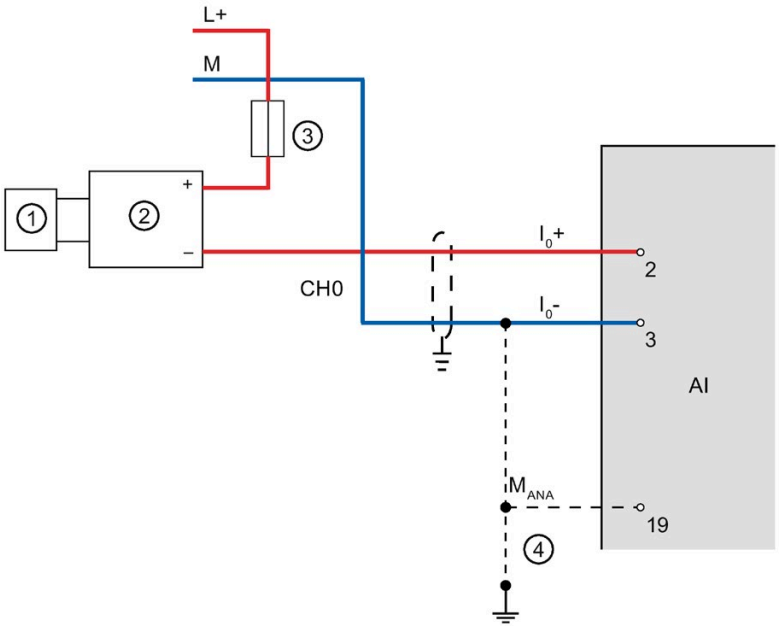

① Sensor (e.g. pressure gauge)
② 2-wire transducer
③ Fuse
④ Equipotential bonding cable (optional)

Figure 4-5 2-wire transducer at channel 0

Use the measurement type "Current (4-wire transducer)" and the measuring range 4 to 20 mA for the parameter assignment of the 2 wire transducer in STEP 7 (TIA Portal).

Wiring: 4-wire connection of resistance-type sensors or thermal resistors (RTD)

The following figure shows the terminal assignment for 4-wire connection of resistance-type sensors or thermal resistors at the channel available for this (channel 4).

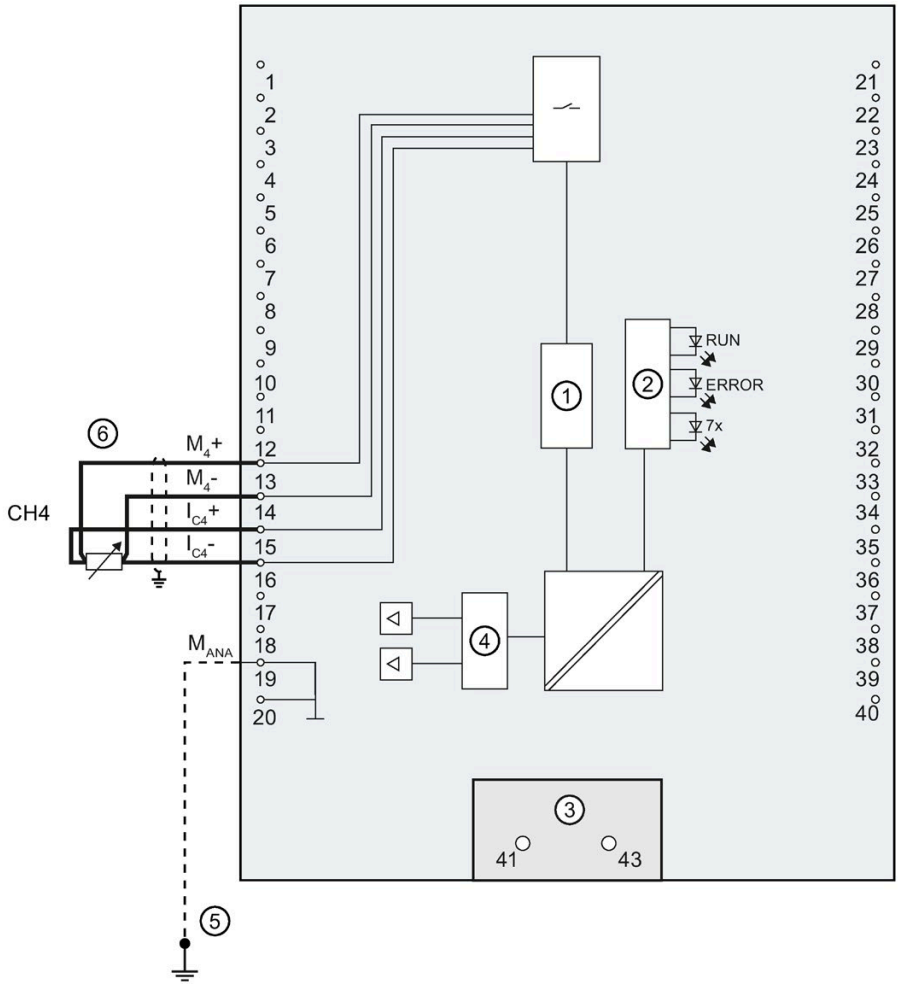

① Analog-to-digital converter (ADC)
② LED interface
③ Infeed element (for shielding only)
④ Digital-to-analog converter (DAC)
⑤ Equipotential bonding cable (optional)
⑥ 4-wire connection

Figure 4-6 Block diagram and terminal assignment for 4-wire connection

Wiring: 3-wire connection of resistance-type sensors or thermal resistors (RTD)

The following figure shows the terminal assignment for 3-wire connection of resistance-type sensors or thermal resistors at the channel available for this (channel 4).

Note

3-wire connection

Note that line resistances are not compensated with a 3-wire connection.

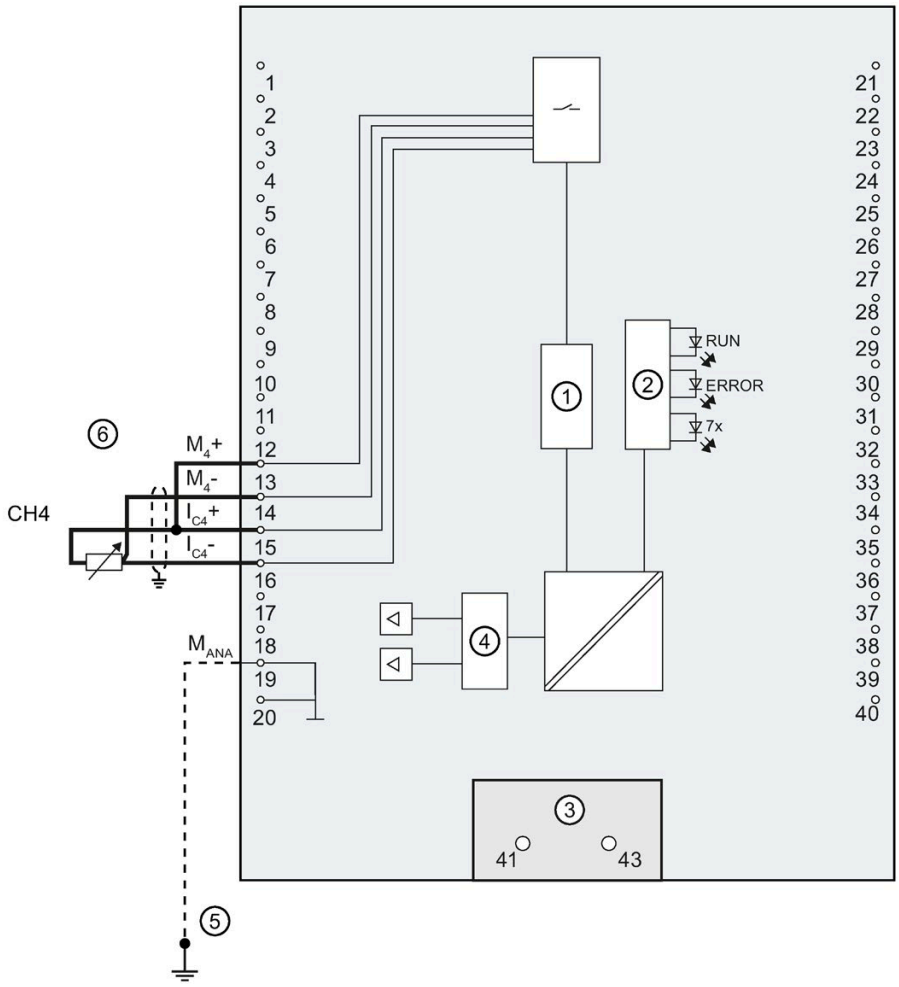

① Analog-to-digital converter (ADC)
② LED interface
③ Infeed element (for shielding only)
④ Digital-to-analog converter (DAC)
⑤ Equipotential bonding cable (optional)
⑥ 3-wire connection

Figure 4-7 Block diagram and terminal assignment for 3-wire connection

Wiring: 2-wire connection of resistance-type sensors or thermal resistors (RTD)

The following figure shows the terminal assignment for 2-wire connection of resistance-type sensors or thermal resistors at the channel available for this (channel 4).

Note

2-wire connection

Note that line resistances are not compensated with a 2-wire connection.

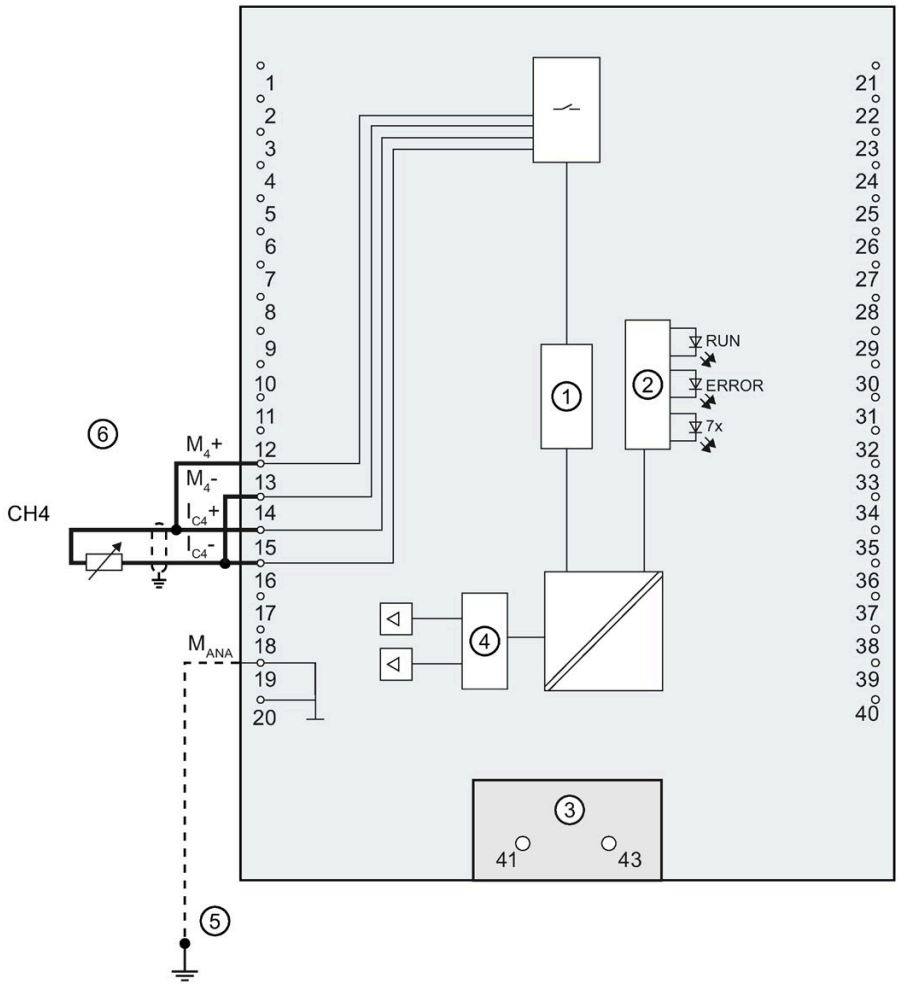

① Analog-to-digital converter (ADC)
② LED interface
③ Infeed element (for shielding only)
④ Digital-to-analog converter (DAC)
⑤ Equipotential bonding cable (optional)
⑥ 2-wire connection

Figure 4-8 Block diagram and terminal assignment for 2-wire connection

Wiring: Voltage output

The figure below shows the terminal assignment for the wiring of the voltage outputs with:

- 2-wire connection, no compensation for line resistances.

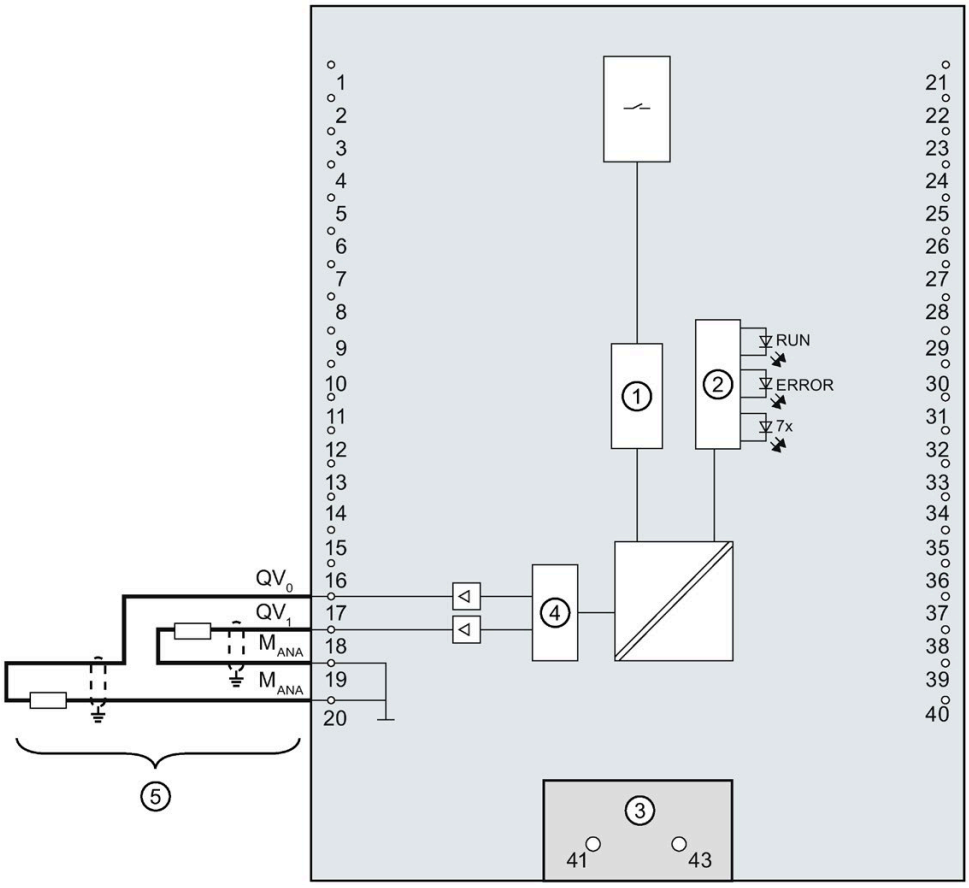

① Analog-to-digital converter (ADC)
② LED interface
③ Infeed element (for shielding only)
④ Digital-to-analog converter (DAC)
⑤ 2-wire connection CH0 and CH1

Figure 4-9 Block diagram and terminal assignment for voltage output

Note

M_{ANA} on terminals 19 and 20 is equivalent.

Wiring: Current output

The following figure shows an example of the terminal assignment for wiring current outputs.

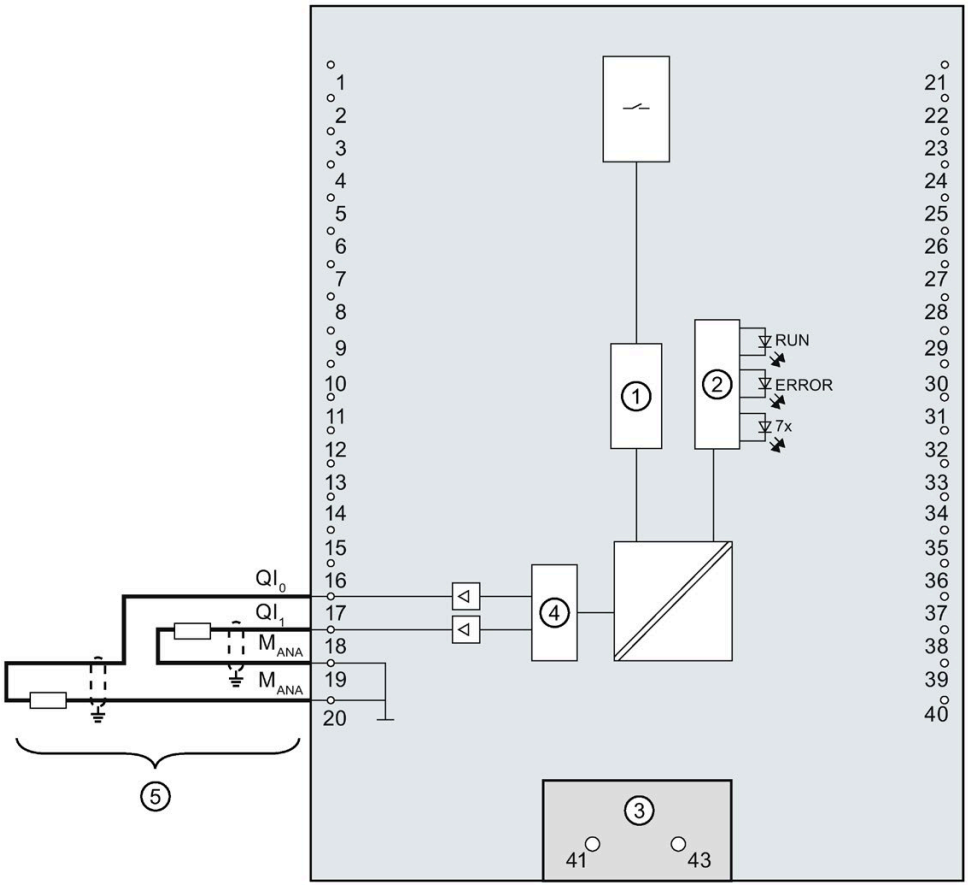

① Analog-to-digital converter (ADC)
② LED interface
③ Infeed element (for shielding only)
④ Digital-to-analog converter (DAC)
⑤ Current output CH0 and CH1

Figure 4-10 Block diagram and terminal assignment for current output

Note

M_{ANA} on terminals 19 and 20 is equivalent.

4.3.3 Terminal and block diagram of the digital on-board I/O

This section contains the block diagram of the digital on-board I/O (X11 and X12) with standard inputs and outputs and the encoder supply, as well as the rules for the correct wiring of the ground connections.

For information on wiring the front connector, establishing the cable shield, etc., refer to the S7-1500, ET 200MP (http://support.automation.siemens.com/WW/view/en/59191792) system manual.

Infeed element

The infeed element is inserted on the front connector and serves to shield the digital on-board I/O.

Note

The digital on-board I/O is supplied via the front connector terminals and therefore does not require power to be supplied by the infeed element. The infeed element is, however, necessary for shielding.

Output driver

The digital onboard I/O uses the following output drivers:

- X11, DQ0 to DQ7: Push-pull stage and freewheeling diode
- X11, DQ8 to DQ15: High-side switch and freewheeling diode
- X12 DQ0 to DQ7: High-side switch without freewheeling diode
- X12 DQ8 to DQ15: High-side switch without freewheeling diode

Block diagram and terminal assignment X11

The figure below shows you how to connect the digital on-board I/O X11 and the assignment of the channels to the addresses (input byte a and b, output byte c and d).

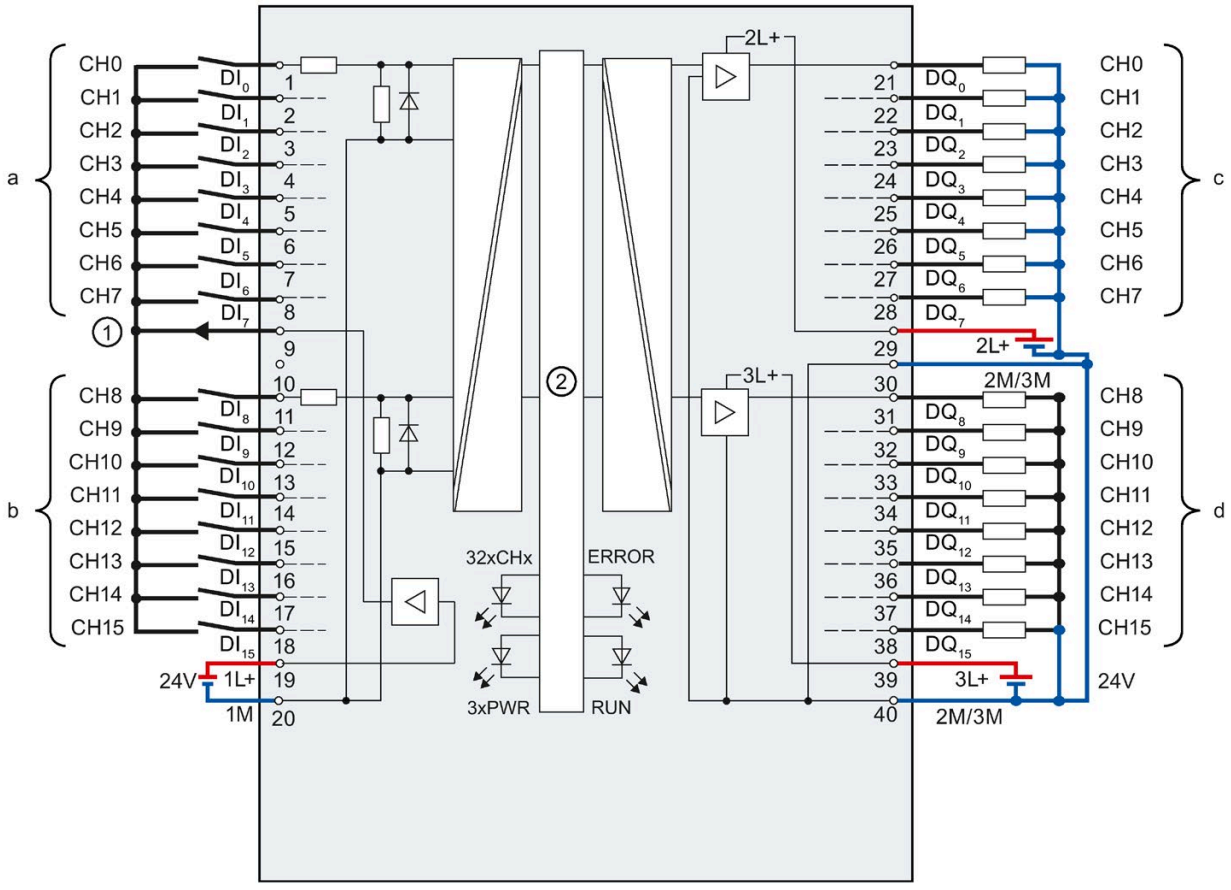

①	Encoder supply for the digital inputs
②	CPU interface
xL+	Connection for 24 V DC supply voltage
xM	Connection for ground
CHx	Channel or channel status LED (green)
RUN	Status display LED (green)
ERROR	Error display LED (red)
PWR	POWER supply voltage LED (green)

Figure 4-11 Block diagram and terminal assignment of the digital on-board I/O X11

Block diagram and terminal assignment X12

The figure below shows you how to connect the digital on-board I/O X12 and the assignment of the channels to the addresses (input byte a and b, output byte c and d).

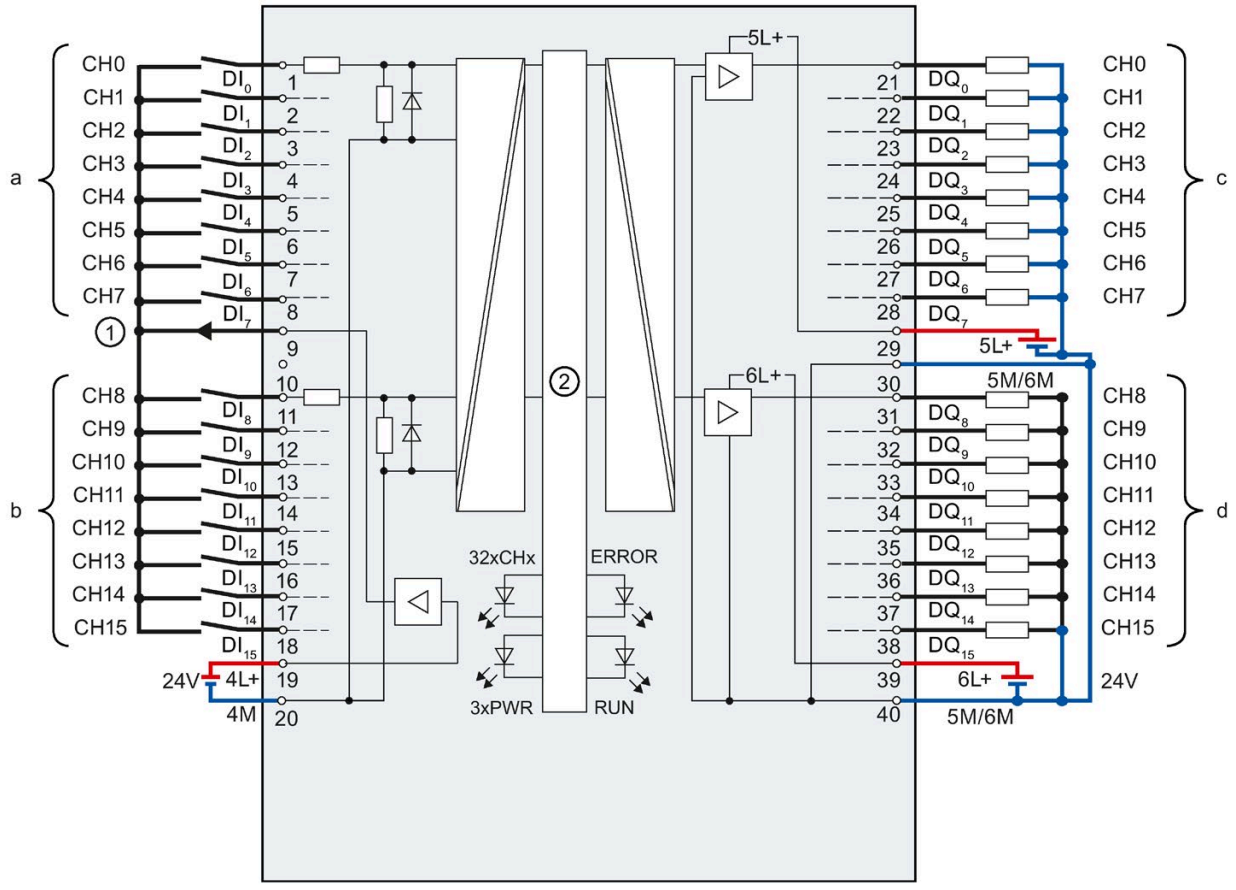

①	Encoder supply for the digital inputs
②	CPU interface
xL+	Connection for 24 V DC supply voltage
xM	Connection for ground
CHx	Channel or channel status LED (green)
RUN	Status display LED (green)
ERROR	Error display LED (red)
PWR	POWER supply voltage LED (green)

Figure 4-12 Block diagram and terminal assignment of the digital on-board I/O X12

Supply voltage using the digital on-board I/O X11 as an example

The inputs and outputs of the digital on-board I/O are divided into two load groups, which are supplied with 24 V DC.

The digital inputs DI0 to DI15 form a load group and are supplied via the connections 1L+ (terminal 19) and 1M (terminal 20).

The digital outputs DQ0 to DQ7 are supplied via the connection 2L+ (terminal 29). The digital outputs DQ8 to DQ15 are supplied via the connection 3L+ (terminal 39). Please note that the digital outputs DQ0 to DQ15 only have a common ground. In each case, they are led through to the two terminals 30 and 40 (2M/3M) and bridged in the module. The digital outputs form a common load group.

NOTICE

Polarity reversal of the supply voltage

An internal protective circuit protects the digital on-board I/O against destruction if the polarity of the supply voltage is reversed. In the case of polarity reversal of the supply voltage, however, unexpected states can occur at the digital outputs.

Response of the digital outputs to a wire break at ground connection of the outputs

Due to the characteristics of the output driver used in the module, approx. 25 mA supply current flows out through the outputs via a parasitic diode in the event of a ground wire break. This behavior can lead to non-set outputs also carrying high levels and emitting up to 25 mA output current. Depending on the type of load, 25 mA can be sufficient to control the load with high level. To prevent unintended switching of the digital outputs in the event of a ground wire break, follow these steps:

Wire to ground twice

Connect ground to terminal 30 and to terminal 40.

1. Route the first ground connection from terminal 30 to the central ground connection of the plant.

2. Route the second ground connection from terminal 40 to the central ground connection of the plant.

If terminal 30 or 40 are interrupted by a ground wire break, the outputs will continue to be supplied via the second, intact ground connection.

WARNING

Wire break at ground connection

Never bridge from terminal 30 to terminal 40 in the front connector and **never** lead only one wire to the central ground connection.

Connect terminal 30 and terminal 40 to a common ground point.

As a supplement to the block diagram and terminal assignment, the following figure shows the correct wiring of the outputs in order to prevent switching of the outputs in the event of a ground wire break.

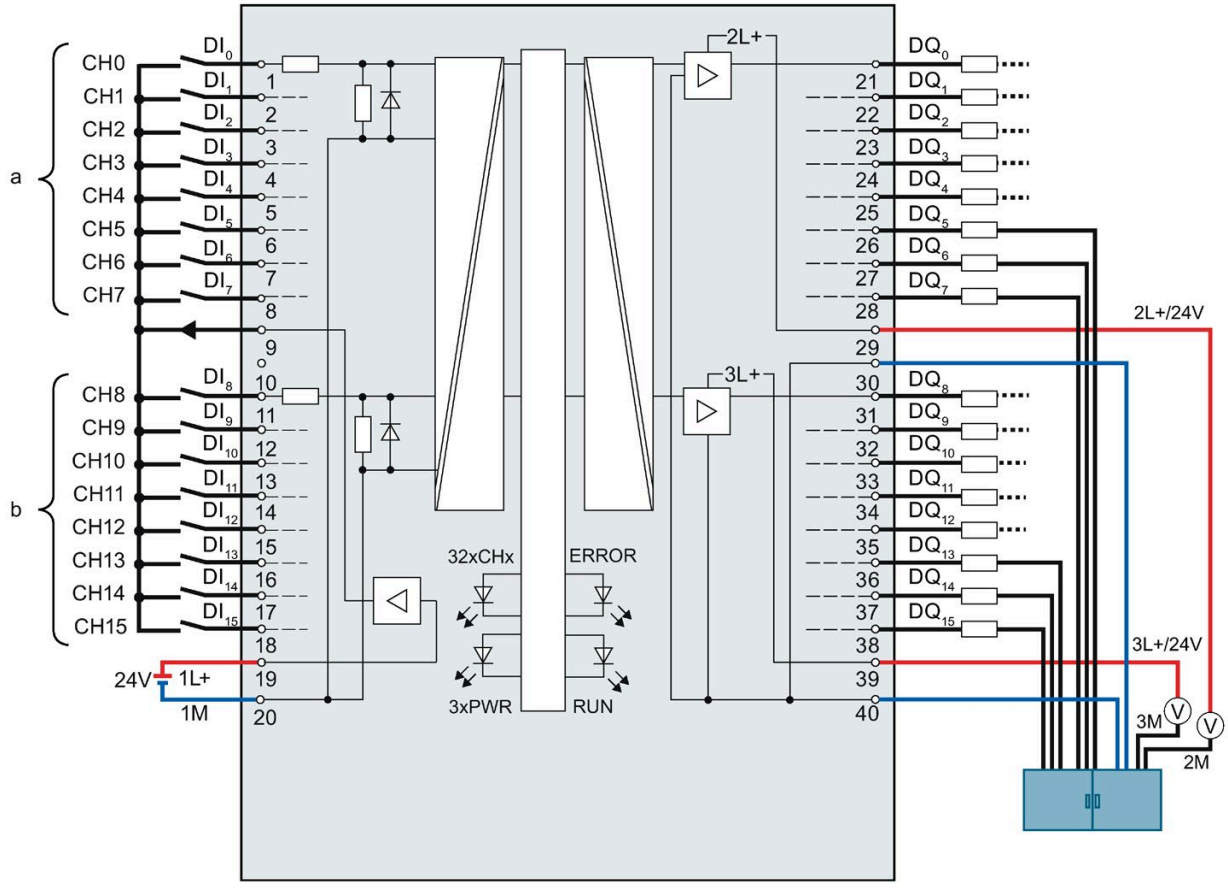

Figure 4-13 Correct wiring using the digital on-board I/O X11 as an example

The ground is supplied with a first cable from the central terminal block to terminal 30 of the module and additionally with a second cable also from the central terminal block to terminal 40 of the module.

At the digital outputs, each of the ground connections of the loads is connected with a separate cable for each load to the central terminal block.

The figure below shows the current flow with correct wiring.

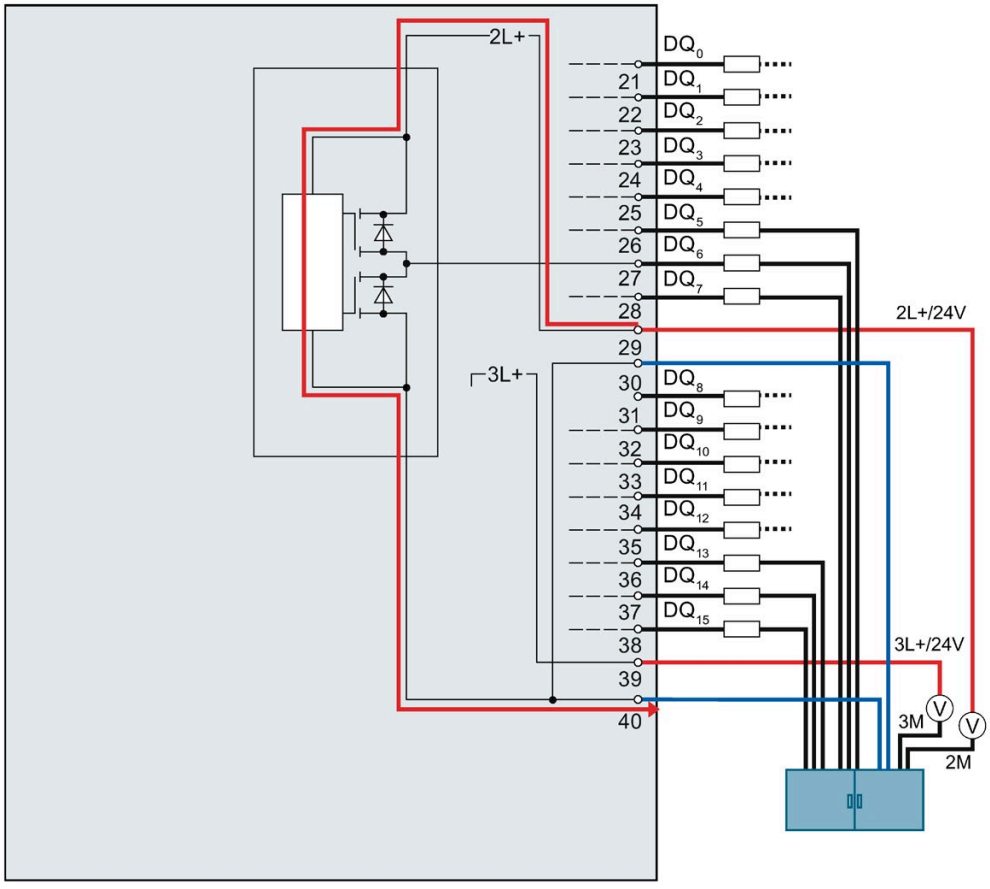

Figure 4-14 Current flow with correct wiring using the digital on-board I/O X11 as an example

With correct wiring, the supply current flows from the power supply 2L+ via terminal 29 to the module. In the module, the current flows via the output driver and exits the module via terminal 40.

The figure below shows the reaction to interruption of the first ground cable.

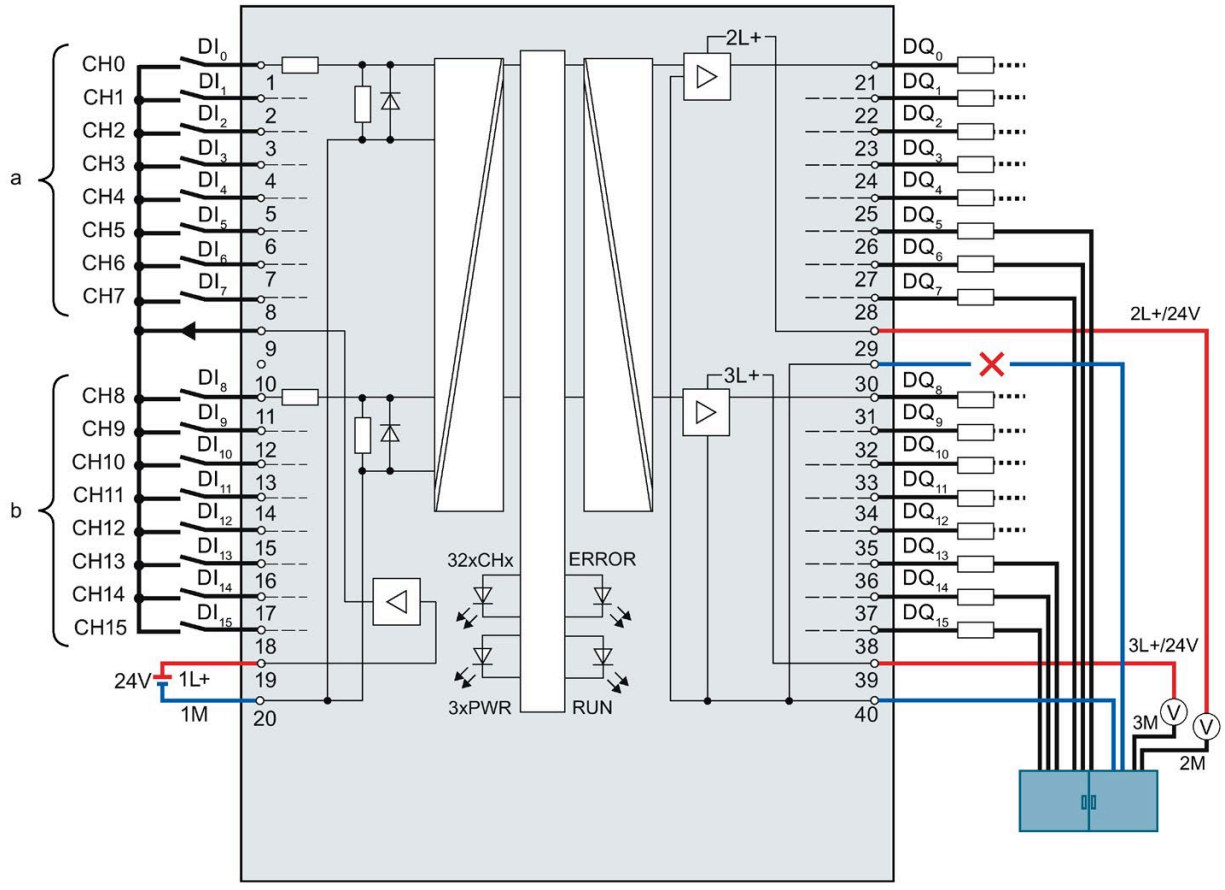

Figure 4-15 Interruption of the first ground cable using the digital on-board I/O X11 as an example

If a wire break occurs on the first ground cable from the central terminal block to terminal 30, the module can continue to operate without restrictions, as it is still connected to the ground via the second cable from the central terminal block to terminal 40.

The figure below shows the reaction to interruption of the second ground cable.

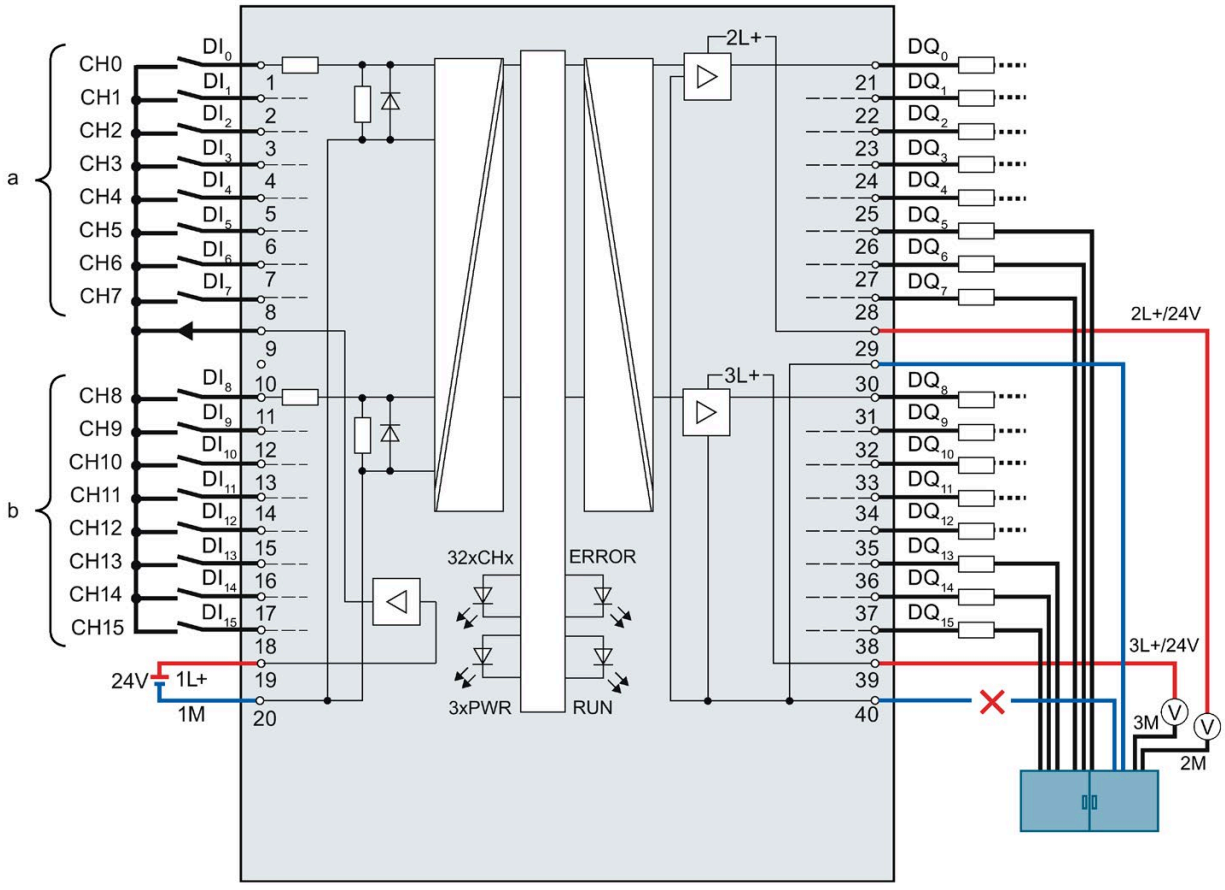

Figure 4-16 Interruption of the second ground cable using the digital on-board I/O X11 as an example

If a wire break occurs on the second ground cable from the central block terminal to terminal 30, the module can continue to operate without restrictions, as it is still connected to the ground via the first cable from the central terminal block to terminal 40.

The figure below shows the current flow upon interruption of both ground cables.

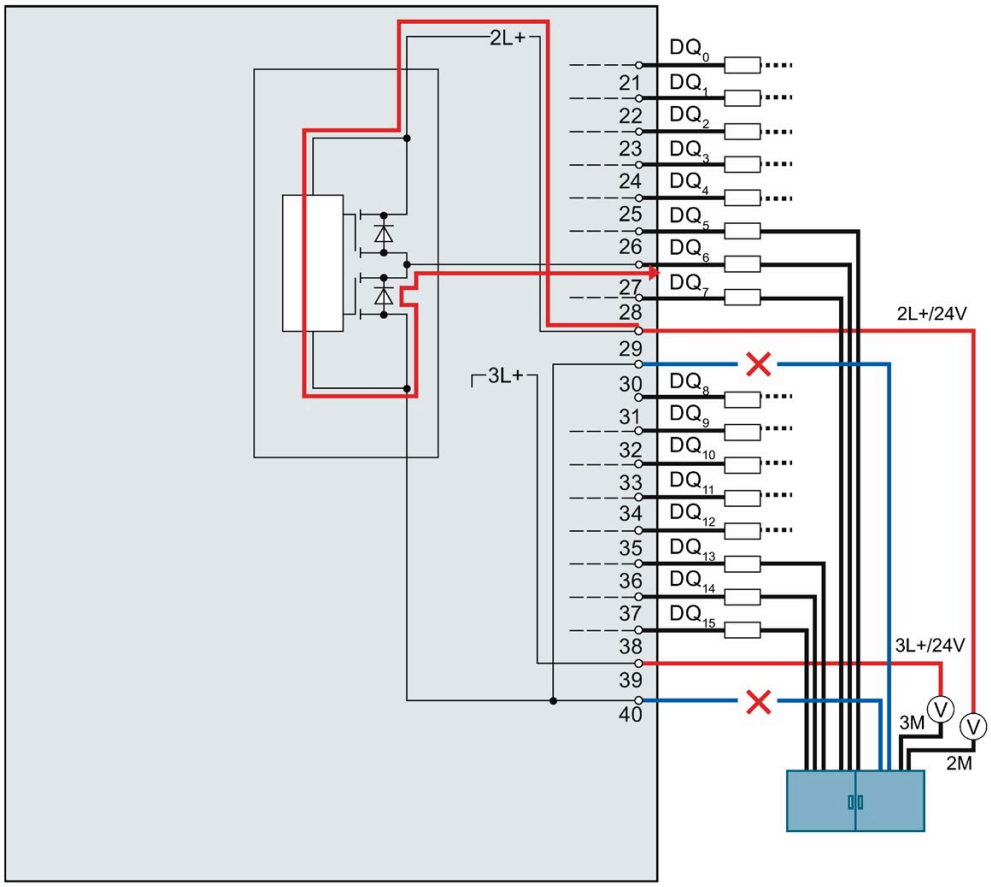

Figure 4-17 Current flow upon interruption of both ground cables using the digital on-board I/O X11 as an example

If a wire break occurs on the first and on the second ground cable from the central terminal block to the terminals 30 and 40 of the module, a malfunction occurs on the module. Both ground connections of the module are interrupted.

The supply current flows from the power supply 2L+ via terminal 29 to the module. In the module, the current flows via the output driver into the parasitic diode and exits the module via the output terminal, e.g. as shown in the figure via terminal 27. The supply current therefore flows via the connected load. The internal supply current is typically 25 mA.

WARNING

Interruption of both ground cables

If the ground terminals 30 and 40 are interrupted, the following incorrect response can occur:

The activated outputs, which are switched to high, start to switch back and forth between high and low. If the load connected at the output is sufficiently small, the output is continuously activated.

Faulty wiring

The following figure shows faulty wiring, which has a bridge on the front connector.

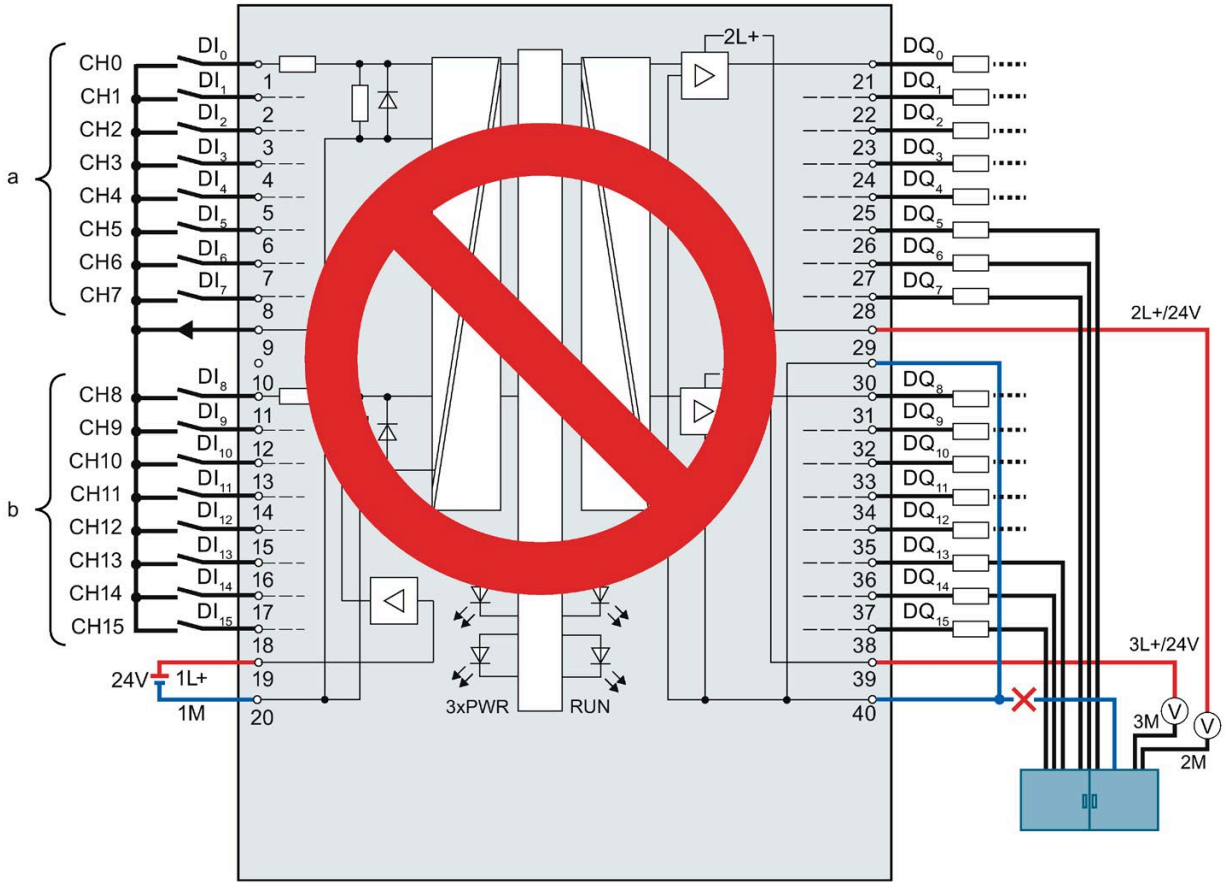

Figure 4-18 Faulty wiring using the digital on-board I/O X11 as an example: Bridge

Terminals 30 and 40 are connected in the front connector and only routed with one cable to the central terminal block. If this cable breaks, terminals 30 and 40 are no longer connected to the ground. The module's supply current flows out via the output terminal.

The figure below shows the current flow when the ground connections of the loads and the ground connection of terminal 30 are routed with a common cable to the central terminal block.

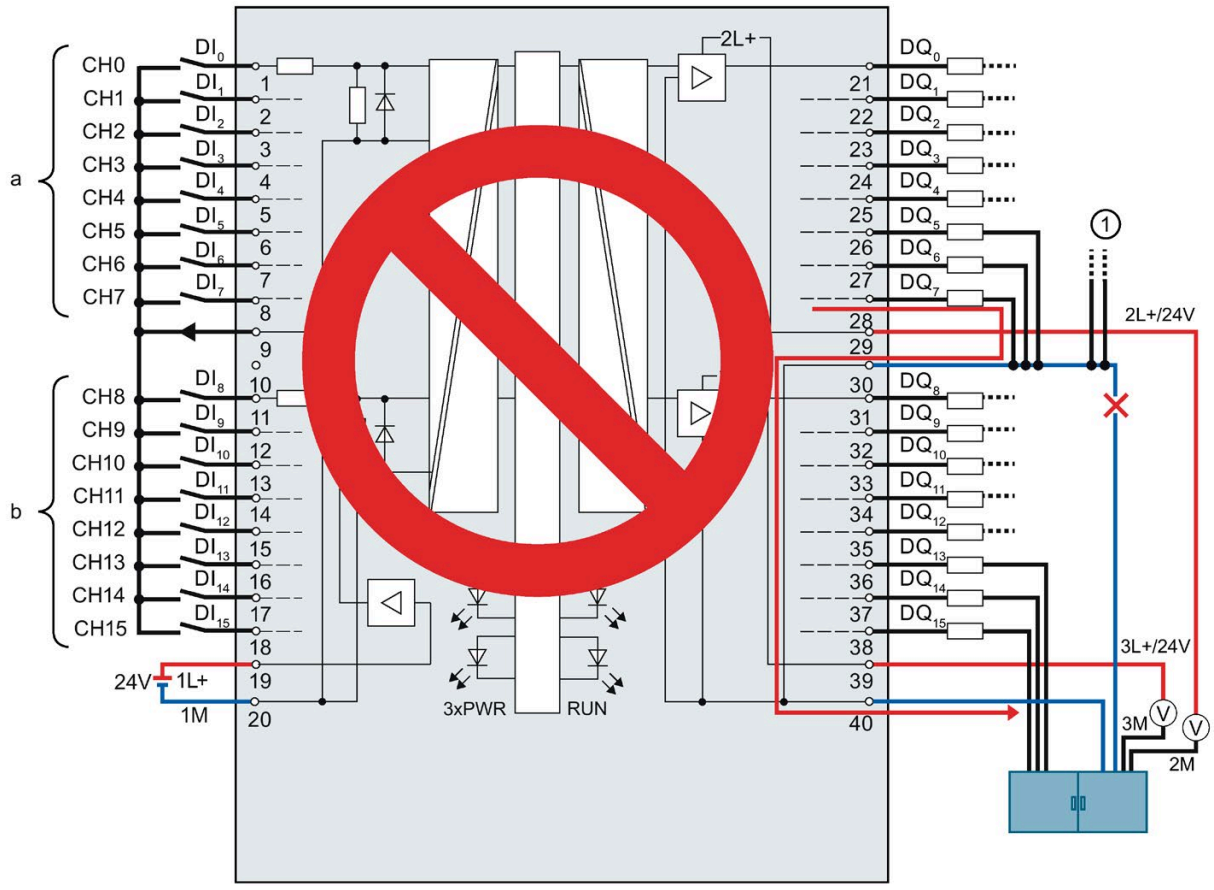

① Ground connections of other plant parts that can also carry large currents.

Figure 4-19 Faulty wiring using the digital on-board I/O X11 as an example: Common cable

If a break occurs in the common cable, the current of the outputs flows via terminal 30 to the module and via terminal 40 to the central terminal block. The current flows via the module.

WARNING

Current flow with faulty wiring

If a break occurs in the common cable, the current can be very high, depending on the plant, and lead to the destruction of the module.

The figure below shows the current flow with correct wiring when a potential difference exits between the grounding points.

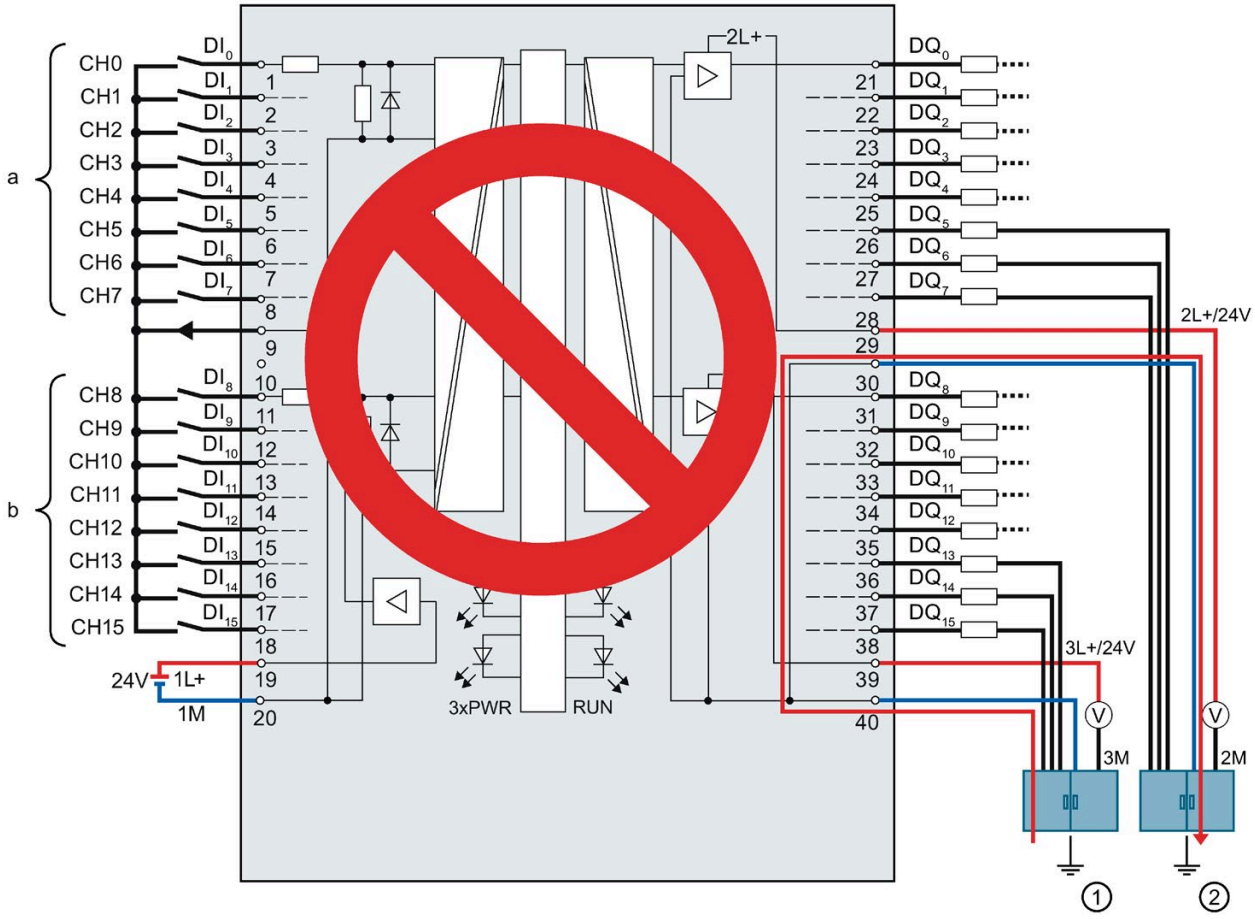

① Grounding point functional earth 1 (FE 1)

② Grounding point functional earth 2 (FE 2)

Figure 4-20 Potential difference using the digital on-board I/O X11 as an example

Equipotential bonding occurs via terminals 30 and 40. When a potential difference exists between the grounding points FE1 and FE2, the compensating current flows via terminals 30 and 40.

WARNING

Current flow with faulty wiring

In the event of a potential difference, the current can be very high, depending on the potential conditions, and lead to the destruction of the module.

Response of the digital outputs to a wire break at ground connection of the outputs (X12)

Due to the design of the module, in contrast to the digital onboard I/O X12, no supply current is discharged via the outputs if ground is interrupted in the digital onboard I/O X12, in contrast to the digital onboard I/O X11.

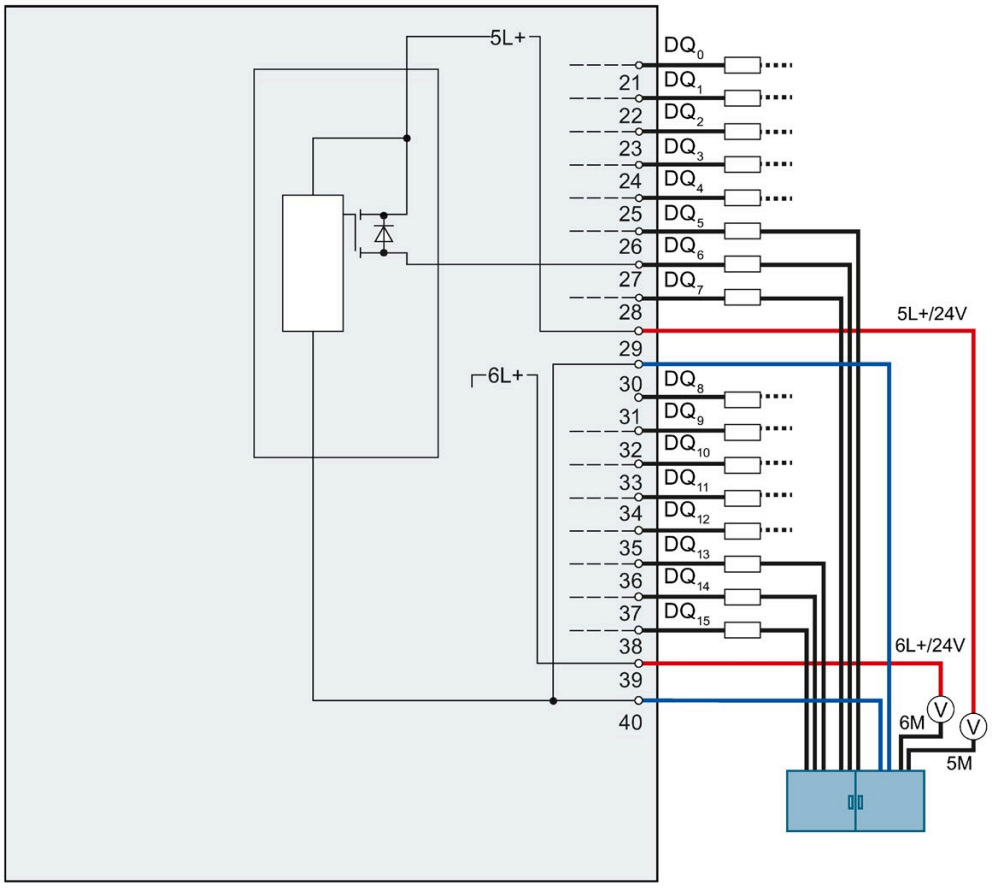

Figure 4-21 Internal circuitry of the digital onboard I/O X12

Input filter for digital inputs

To suppress disruptions, you can configure an input delay for the digital inputs.

You can specify the following values for the input delay:

- None
- 0.05 ms
- 0.1 ms
- 0.4 ms
- 1.6 ms
- 3.2 ms (default setting)
- 12.8 ms
- 20 ms

Note

Shielding

If you use standard digital inputs with "None" set as the input delay, you must use shielded cables. Shielding and the infeed element are recommended for use of standard digital inputs starting from an input delay of 0.05 ms but are not absolutely necessary.

4.3.4 Addresses of the high-speed counters

You connect the encoder signals, the digital input and output signals and the encoder supplies to the two 40-pin front connectors of the digital on-board I/O. For information on wiring the front connectors, establishing the cable shields, etc., refer to the S7-1500, ET 200MP (http://support.automation.siemens.com/WW/view/en/59191792) system manual.

Encoder signals

The 24 V encoder signals are designated with letters A, B and N. You can connect the following encoder types:

- Incremental encoder with signal N:

  Signals A, B and N are connected using the correspondingly marked connections. Signals A and B are the two incremental signals, phase-shifted by 90°. N is the zero mark signal that supplies a pulse per revolution.

- Incremental encoder without signal N:

  Signals A and B are connected using the correspondingly marked connections. Signals A and B are the two incremental signals, phase-shifted by 90°.

- Pulse encoder without direction signal:

  The count signal is connected to the A connection.

- Pulse encoder with direction signal:

  The count signal is connected to the A connection. The direction signal is connected to the B connection.

- Pulse encoder with up/down count signal:

  The up count signal is connected to the A connection. The down count signal is connected to the B connection.

You can connect the following encoders or sensors to the A, B and N inputs:

- Switching to P potential:
  The encoder or sensor switches the A, B and N inputs to 24 V DC.

  Note

  External load resistance

  Note that, depending on the characteristics of the signal source, effective load and height of the signal frequency, you may possibly require an external load resistance to limit the fall time of the signal from high level to low level.

  The specifications/technical data of the signal source (e.g. sensor) are decisive for the configuration of such a load resistance.

- Push-pull:
  The encoder or sensor switches the A, B and N inputs alternately to 24 V DC and to ground M.

Digital inputs HSC DI0 and HSC DI1

The digital inputs are logically assigned to the high-speed counters (HSC). For information on the possible assignment of the on-board I/O inputs to the high-speed counters, refer to table Interconnection overview of the inputs (Page 111). Up to two digital inputs are available for each high-speed counter (HSC DI0 and HSC DI1). You can use the digital inputs for the gate control (Gate), synchronization (Sync) and Capture functions. Alternatively, you can use one or more digital inputs as standard digital inputs without the functions mentioned and read the signal state of the respective digital input using the feedback interface.

Digital inputs that you do not use for high-speed counting are available for use as standard DIs.

Input addresses of the high-speed counters

You set the digital input addresses used by the high-speed counters (HSC) and the assignment of A/B/N, DI0, DI1 and DQ1 signals in STEP 7 (TIA Portal). You can enable and configure each HSC when you configure the compact CPU.

The compact CPU assigns the input addresses for the A/B/N signals automatically according to the configuration.

You specify the input addresses for DI0 and DI1 according to the table Interconnection overview of the inputs (Page 111). The interconnection produces a direct connection of the HSC to an input of the on-board I/O. The high-speed counter then uses this input as HSC DI0 or HSC DI1 ([DI] symbol). The [DI] symbols in the table identify the input addresses for HSC DI0 and HSC DI1 that are offered for selection in the hardware configuration.

Assignment of HSC addresses of inputs

You can find an overview of the options for interconnecting the inputs of the front connectors X11 and X12 in the section Interconnection overview of the inputs (Page 111).

Note

HSC compatibility mode

The displayed interconnection options in the section Interconnection overview of the inputs (Page 111) assume that the "Front connector assignment like CPU 1511C" option is disabled. If the option is enabled, the input signals are interconnected the same way as for the CPU 1511C-1 PN. In this case, the interconnection options of the CPU 1511C-1 PN manual apply.

Digital outputs HSC-DQ0 and HSC-DQ1

Two digital outputs are available for each high-speed counter. Digital output HSC-DQ0 is a logical output that cannot be interconnected with a digital output of the on-board I/O. Digital output HSC-DQ0 can only be used via the user program. HSC-DQ1 is a physical output that can be interconnected with a digital output of the on-board I/O.

The digital outputs are 24 V sourcing output switches relative to M and can be loaded with a rated load current of 0.1 A. The outputs used as standard outputs have a rated load current of 0.5 A. The digital outputs are protected against overload and short-circuit.

Note

It is possible to directly connect relays and contactors without external wiring. For information on the maximum possible operating frequencies and the inductance values of the inductive loads at the digital outputs, refer to the Technical specifications section.

The section Interconnection overview of outputs (Page 113) provides an overview of which digital outputs you can interconnect to which high-speed counters. Digital outputs to which no high-speed counter is interconnected can be used as standard outputs. The maximum output delay of each digital output used as standard output is 500 µs.

Shielding

Note

When you use digital inputs/outputs with technology functions, i.e. interconnect high-speed counters with the inputs/outputs, you must use shielded cables and the infeed element for shielding.

Reference

For more information on configuring the inputs of the high-speed counters, refer to the S7-1500, ET 200MP, ET 200SP Counting, measurement and position detection (http://support.automation.siemens.com/WW/view/en/59709820) function manual and the STEP 7 online help.

4.3.5 Addresses of the pulse generators in the Pulse Width Modulation (PWM) and Frequency Output modes

Configuring the outputs as pulse generators

If you configure the memory of the outputs of the CPU as pulse generators (for PWM or PTO), the corresponding addresses of the outputs are removed from the memory. You cannot use the addresses of the outputs for other purposes in your user program. When your user program writes a value to an output that you are using as a pulse generator, the CPU does not write this value to the physical output.

Assignment of the PWM addresses of the outputs

The section Interconnection overview of outputs (Page 113) provides an overview of which digital outputs you can interconnect to which PWM channels.

Note

The digital inputs and outputs assigned to PWM and PTO cannot be forced.

You assign the digital inputs and outputs to the pulse duration modulation (PWM) and the pulse train output (PTO) during the device configuration. If you assign digital inputs and outputs to these functions, the values of the addresses of the assigned digital inputs and outputs cannot be changed by the function for forcing in the watch table. Instead, you can force the output bit TM_CTRL_DQ to 0 and switch the output on or off with the bit SET_DQA (relevant for the PWM and Frequency Output modes).

For more information on forcing inputs and outputs, refer to the S7-1500, ET 200MP system manual (http://support.automation.siemens.com/WW/view/en/59191792).

4.3.6 Addresses of pulse generators in the PTO mode

You connect the encoder signals, the digital input and output signals and the encoder supplies to the two 40-pin front connectors of the digital on-board I/O. For information on wiring the front connectors and establishing the cable shield, refer to the S7-1500, ET 200MP system manual (http://support.automation.siemens.com/WW/view/en/59191792).

Encoder signals

In addition to supporting its outputs, each PTO channel also supports the three following optional inputs:

- Reference Switch (RS)
- Measuring Input (MI)
- Drive Ready (DR)

Input addresses of the pulse generators (PTO)

You make the settings of the digital input addresses used by the pulse generators (PTO) in the hardware configuration of STEP 7 (TIA Portal). When you configure the compact CPU you can individually activate and configure the four PTO channels.

Assignment of PTO addresses of inputs

A direct connection from the PTO to an input of the on-board I/O is established through the interconnection. You can find an overview of the options for interconnecting the inputs (DI0 to DI15) to the available PTO channels (PTO1 to PTO4) in the section Interconnection overview of the inputs (Page 111).

Assignment of the PTO addresses of the outputs

The section Interconnection overview of outputs (Page 113) provides an overview of which digital outputs you can interconnect to which PTO channels.

4.3.7 Interconnection overview of the inputs

Combined interconnection of the technology channels

In order that you can correctly divide the available inputs between the possible technology channels HSC and PTO, the following table provides you with an overview of the possible interconnections of the front connectors X11 and X12. This overview is a combination of interconnection options of technology channels for HSC and PTO.

Front connector	Terminal	Channel	PTO								High-speed counter (HSC)					
			PTO1		PTO2		PTO3		PTO4		HSC1		HSC2		HSC3	
X11	1	DI0	[DR]		[DR]		[DR]		[DR]		A					
	2	DI1	[DR]		[DR]		[DR]		[DR]		[B]					
	3	DI2	[DR]		[DR]		[DR]		[DR]		[N]					
	4	DI3	[DR]		[DR]		[DR]		[DR]				A			
	5	DI4	[DR]		[DR]		[DR]		[DR]				[B]			
	6	DI5	[DR]		[DR]		[DR]		[DR]				[N]			
	7	DI6	[DR]		[DR]		[DR]		[DR]						A	
	8	DI7	[DR]		[DR]		[DR]		[DR]						[B]	
	11	DI8	[DR]		[DR]		[DR]		[DR]			[DI]		[DI]	[N]	[DI]
	12	DI9	[DR]		[DR]		[DR]		[DR]			[DI]		[DI]		[DI]
	13	DI10	[DR]		[DR]		[DR]		[DR]			[DI]		[DI]		[DI]
	14	DI11	[DR]		[DR]		[DR]		[DR]			[DI]		[DI]		[DI]
	15	DI12	[DR]	[MI]	[DR]		[DR]		[DR]			[DI]		[DI]		[DI]
	16	DI13	[DR]	[RS]	[DR]	[MI]	[DR]		[DR]			[DI]		[DI]		[DI]
	17	DI14	[DR]		[DR]	[RS]	[DR]		[DR]			[DI]		[DI]		[DI]
	18	DI15	[DR]		[DR]		[DR]		[DR]			[DI]		[DI]		[DI]

[...] = Use is optional

[DR] = Drive Ready; [MI] = Measuring Input; [RS] = Reference Switch

[DI] stands for [HSC DI0/HSC DI1] = DI: Is used for the HSC functions: Gate, Sync and Capture

The assignment to [B] or [N] takes precedence over the assignment to HSC DI0 or HSC DI1. This means that input addresses that are assigned to count signal [B] or [N] based on the selected signal type cannot be used for other signals such as HSC DI0 or HSC DI1.

Front connector	Terminal	Channel	PTO								High-speed counter (HSC)					
			PTO1		PTO2		PTO3		PTO4		HSC4		HSC5		HSC6	
X12	1	DI0	[DR]		[DR]		[DR]		[DR]		A					
	2	DI1	[DR]		[DR]		[DR]		[DR]		[B]					
	3	DI2	[DR]		[DR]		[DR]		[DR]		[N]					
	4	DI3	[DR]		[DR]		[DR]		[DR]				A			
	5	DI4	[DR]		[DR]		[DR]		[DR]				[B]			
	6	DI5	[DR]		[DR]		[DR]		[DR]				[N]			
	7	DI6	[DR]		[DR]		[DR]		[DR]						A	
	8	DI7	[DR]		[DR]		[DR]		[DR]						[B]	
	11	DI8	[DR]		[DR]		[DR]		[DR]			[DI]		[DI]	[N]	[DI]
	12	DI9	[DR]		[DR]		[DR]		[DR]			[DI]		[DI]		[DI]
	13	DI10	[DR]		[DR]		[DR]		[DR]			[DI]		[DI]		[DI]
	14	DI11	[DR]		[DR]		[DR]		[DR]			[DI]		[DI]		[DI]
	15	DI12	[DR]		[DR]		[DR]	[MI]	[DR]			[DI]		[DI]		[DI]
	16	DI13	[DR]		[DR]		[DR]	[RS]	[DR]			[DI]		[DI]		[DI]
	17	DI14	[DR]		[DR]		[DR]		[DR]	[MI]		[DI]		[DI]		[DI]
	18	DI15	[DR]		[DR]		[DR]		[DR]	[RS]		[DI]		[DI]		[DI]

[...] = Use is optional

[DR] = Drive Ready; [MI] = Measuring Input; [RS] = Reference Switch

[DI] stands for [HSC DI0/HSC DI1] = DI: Is used for the HSC functions: Gate, Sync and Capture

The assignment to [B] or [N] takes precedence over the assignment to HSC DI0 or HSC DI1. This means that input addresses that are assigned to count signal [B] or [N] based on the selected signal type cannot be used for other signals such as HSC DI0 or HSC DI1.

4.3.8 Interconnection overview of outputs

Combined interconnection of the technology channels

The following table provides you with an overview of the possible interconnections of the front connectors X11 and X12 to allow you to correctly divide the available inputs between the possible technology channels HSC, PWM and PTO. This overview is a combination of interconnection options of technology channels for HSC, PWM and PTO.

	Hardware output			Standard DQ	PWM	PTO			HSC
Front connector	**Terminal**	**Channel**	**Output module**	**Configurable as standard DQ for channel**	**Configurable as PWM output for channel**	**Configurable as PTO output A for channel 1)**	**Configurable as PTO output B for channel 2)**	**Configurable as "Drive enable output" for channel**	**Can be used as HSC-DQ1 for channel**
X11	1	DQ 0	High-speed		PWM1	PTO1			
			Standard	DQ0	PWM1			[PTO 2/3/4]	
	2	DQ 1	High-speed				PTO1		[HSC1]
			Standard	DQ1				[PTO 1/2/3/4]	
	3	DQ 2	High-speed		PWM2	PTO2			
			Standard	DQ2	PWM2			[PTO 1/3/4]	
	4	DQ 3	High-speed				PTO2		HSC2
			Standard	DQ3				[PTO 1/2/3/4]	
	5	DQ 4	High-speed		PWM3	PTO3			[HSC3]
			Standard	DQ4	PWM3			[PTO 1/2/4]	
	6	DQ 5	High-speed				PTO3		[HSC4]
			Standard	DQ5				[PTO 1/2/3/4]	
	7	DQ 6	High-speed		PWM4	PTO4			HSC6
			Standard	DQ6	PWM4			[PTO 1/2/3]	
	8	DQ 7	High-speed				PTO4		[HSC5]
			Standard	DQ7				[PTO 1/2/3/4]	
	11	DQ 8	Standard	DQ8	PWM1			[PTO 1/2/3/4]	
	12	DQ 9		DQ9			PTO1*	[PTO 1/2/3/4]	[HSC1]
	13	DQ 10		DQ10	PWM2			[PTO 1/2/3/4]	
	14	DQ 11		DQ11			PTO2*	[PTO 1/2/3/4]	HSC2
	15	DQ 12		DQ12	PWM3			[PTO 1/2/3/4]	[HSC3]

	16	DQ 13		DQ13			PTO3*	[PTO 1/2/3/4]	[HSC4]
	17	DQ 14		DQ14	PWM4			[PTO 1/2/3/4]	HSC6
	18	DQ 15		DQ15			PTO4*	[PTO 1/2/3/4]	[HSC5]
X12	1	DQ 0	Standard	DQ0				[PTO 1/2/3/4]	
	2	DQ 1		DQ1				[PTO 1/2/3/4]	
	3	DQ 2		DQ2				[PTO 1/2/3/4]	
	4	DQ 3		DQ3				[PTO 1/2/3/4]	
	5	DQ 4		DQ4				[PTO 1/2/3/4]	
	6	DQ 5		DQ5				[PTO 1/2/3/4]	
	7	DQ 6		DQ6				[PTO 1/2/3/4]	
	8	DQ 7		DQ7				[PTO 1/2/3/4]	
	11	DQ 8		DQ8				[PTO 1/2/3/4]	
	12	DQ 9		DQ9				[PTO 1/2/3/4]	
	13	DQ 10		DQ10				[PTO 1/2/3/4]	
	14	DQ 11		DQ11				[PTO 1/2/3/4]	
	15	DQ 12		DQ12				[PTO 1/2/3/4]	
	16	DQ 13		DQ13				[PTO 1/2/3/4]	
	17	DQ 14		DQ14				[PTO 1/2/3/4]	
	18	DQ 15		DQ15				[PTO 1/2/3/4]	

* Only supports for PTO direction signal (signal type "pulse A and direction B")

1) "PTOx - Output A" stands for the signal types Pulse Output A or Pulse

2) "PTOx - Output B" stands for the Pulse output B or Direction signal types

Technical characteristics of the outputs

The following table shows an overview of the technical characteristics of the individual outputs.

	Frequency range (period duration)	DQ0 to DQ7		DQ8 to DQ15
		High-speed output (0.1 A) activated	**High-Speed output (0.1 A) deactivated**	**Standard output**
		max. 100 kHz	max. 10 kHz	max. 100 Hz
		max. 0.1 A	max. 0.5 A	max. 0.5 A
		Switching to P potential / sink output	Switching to P potential[1]	Switching to P potential[1]
Accuracy of the pulse duration	10 to <= 100 kHz (100 to > = 10 µs)	±100 ppm ±2 µs	---	---
	100 Hz to <10 kHz (10 ms to > 100 µs)		±100 ppm ±10 µs with load > 0.1 A ±100 ppm ±20 µs with load ≥ 2mA	
	10 to < 100 Hz (0.1 s to > 10 ms)			±100 ppm ±100 µs with load > 0.1 A ±100 ppm ±200 µs with load ≥ 2mA
	1 to <10 Hz (1 to > 0.1 s)	±150 ppm ±2 µs	±150 ppm ±10 µs with load > 0.1 A ±150 ppm ±20 µs with load ≥ 2mA	±150 ppm ±100 µs with load > 0.1 A ±150 ppm ±200 µs with load ≥ 2mA
	0.1 to < 1 Hz (10 to >1 s)	±600 ppm ±2 µs	±600 ppm ±10 µs with load > 0.1 A ±600 ppm ± 20 µs with load ≥ 2mA	±600 ppm ±100 µs with load > 0.1 A ±600 ppm ±200 µs with load ≥ 2mA
Accuracy of the frequency	---	± 100 ppm[2]	± 100 ppm[2]	± 100 ppm[2][3]
Minimum pulse duration		2 µs	20 µs with load > 0.1 A 40 µs with load ≥ 2 mA 20 µs with load < 240 Ω[1]	400 µs with load > 0.1 A 500 µs with load ≥ 2 mA 400 µs with load < 240 Ω[1]

[1] With sourcing outputs, it must be taken into consideration that falling edges can be delayed as compared to rising edges depending on the load. The on-load factor can therefore be falsified. Consider using a high-speed output if the load at the output is greater than 240 Ω.

[2] The frequency has a basic accuracy of ±100 ppm with a resolution of 0.3638 mHz.

[3] Standard outputs are affected by jitter during generation of frequencies. The set period duration is not adhered to in every period, but it is adhered to on average over several periods.

Parameters/address space

5

5.1 Address space of the analog on-board I/O

Address space of the analog input and output channels

The addresses are divided into five analog input channels and two analog output channels. STEP 7 (TIA Portal) assigns the addresses automatically. You can change the addresses in the hardware configuration of STEP 7 (TIA Portal), i.e. freely assign the start address. The addresses of the channels are based on the start address.

"IB x" stands, for example, for the start address input byte x. "QB x" stands, for example, for the start address output byte x.

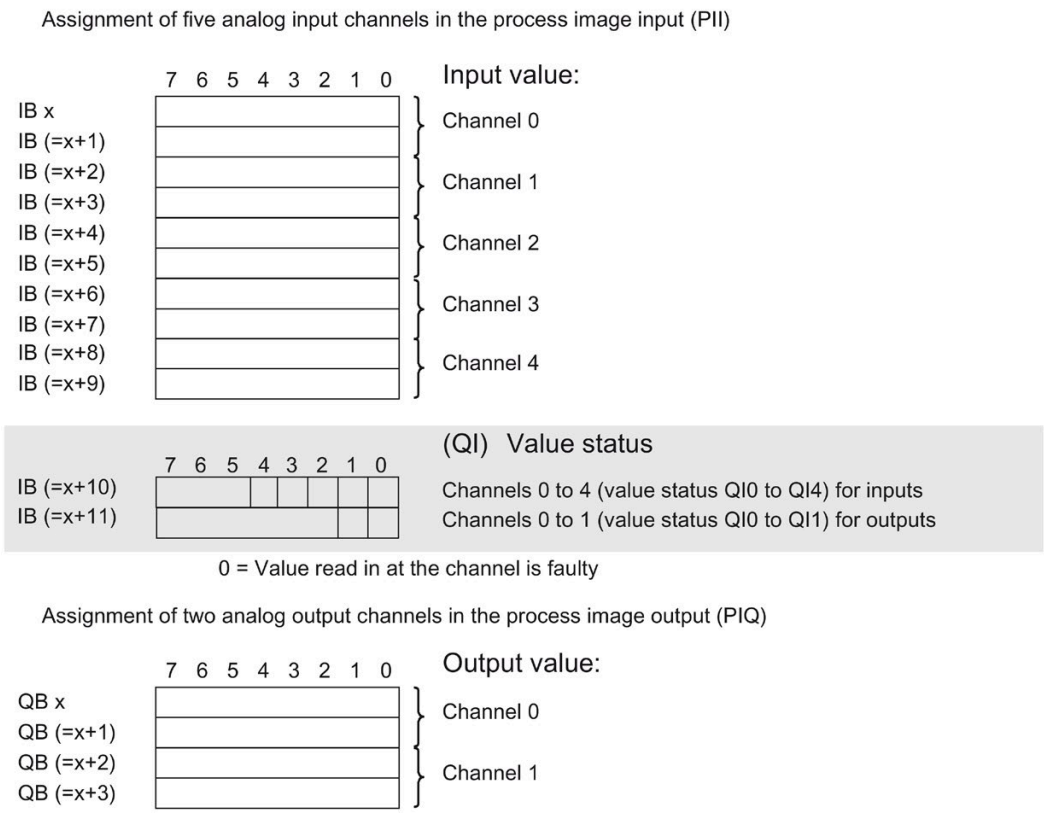

Figure 5-1 Address space seven-channel analog on-board I/O with value status

Value status (quality information, QI)

As of firmware version 2.0, the analog and digital on-board I/O support the value status as diagnostics option. You activate the use of the value status in the hardware configuration of STEP 7 (TIA Portal). Value status is deactivated by default.

When you activate the value status, the input area of the analog on-board I/O contains two additional bytes, which provide the QI bits to the five analog input channels and two analog output channels. You access the QI bits through the user program.

Value status of input channels

Value status = 1 ("Good") indicates that the value of the assigned input at the terminal is valid.

Value status = 0 ("Bad") indicates that the read value is not valid.

Possible cause for value status = 0:

- a channel has been deactivated
- a measured value was not updated after a parameter change
- a measured value is outside the low/high measuring range (overflow/underflow)
- Wire break has occurred (only for the "Voltage" measurement type in the measuring range "1 to 5 V" and for the "Current" measurement type in the measuring range "4 to 20 mA")

Value status of output channels

The value status = 1 ("Good") indicates that the process value specified by the user program is correctly output at the terminal.

The value status = 0 ("Bad") indicates that the process value output at the hardware output is incorrect.

Possible cause for value status = 0:

- a channel has been deactivated
- Outputs are inactive (for example, CPU in STOP)
- An output value is outside the lower/upper measuring range (overflow/underflow)
- Wire break has occurred (only for the "Current" output type)
- Short-circuit has occurred (only for the "Voltage" output type)

5.2 Address space of the digital on-board I/O

Address space of digital input and digital output channels

The addresses are divided into 2 x 16 digital input channels and 2 x 16 digital output channels. STEP 7 (TIA Portal) assigns the addresses automatically. You can change the addresses in the hardware configuration of STEP 7 (TIA Portal), i.e. freely assign the start address. The addresses of the channels are based on the start address.

The letters "a" to "d" are lasered on the on-board I/O. "IB a", for example, stands for start address input byte a. "QB x", for example, stands for start address output byte x.

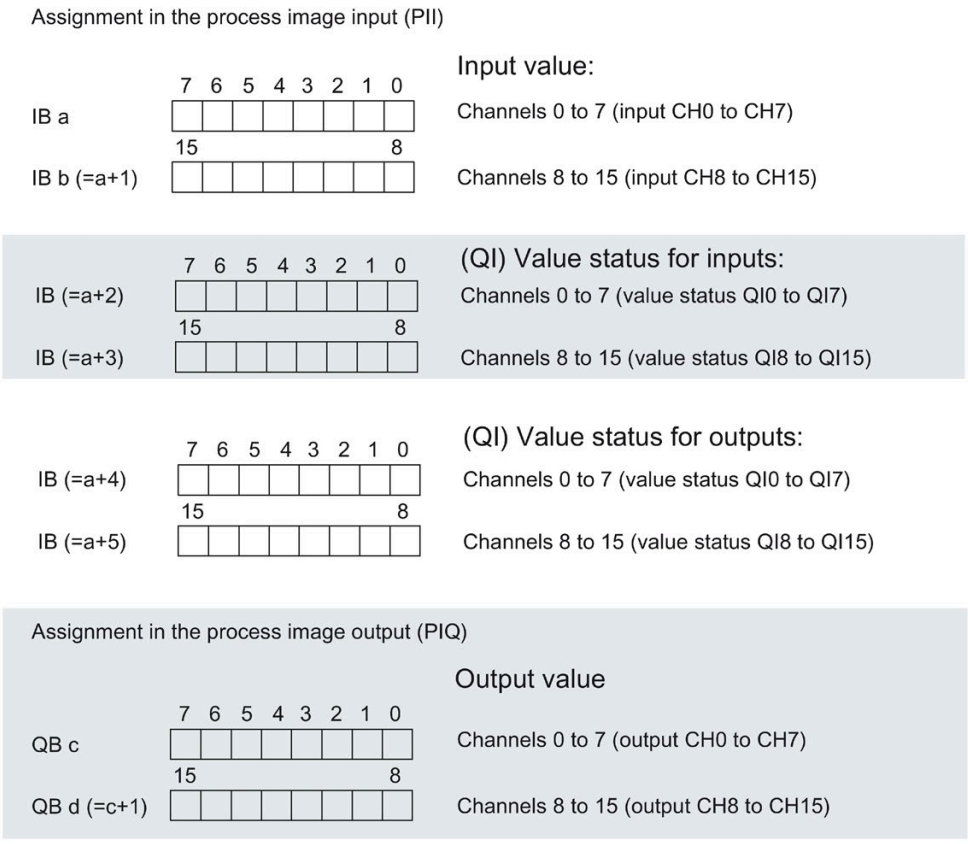

Figure 5-2 Address space of the submodule X11 of the 2 x 32-channel digital on-board I/O (16 digital inputs/16 digital outputs) with value status

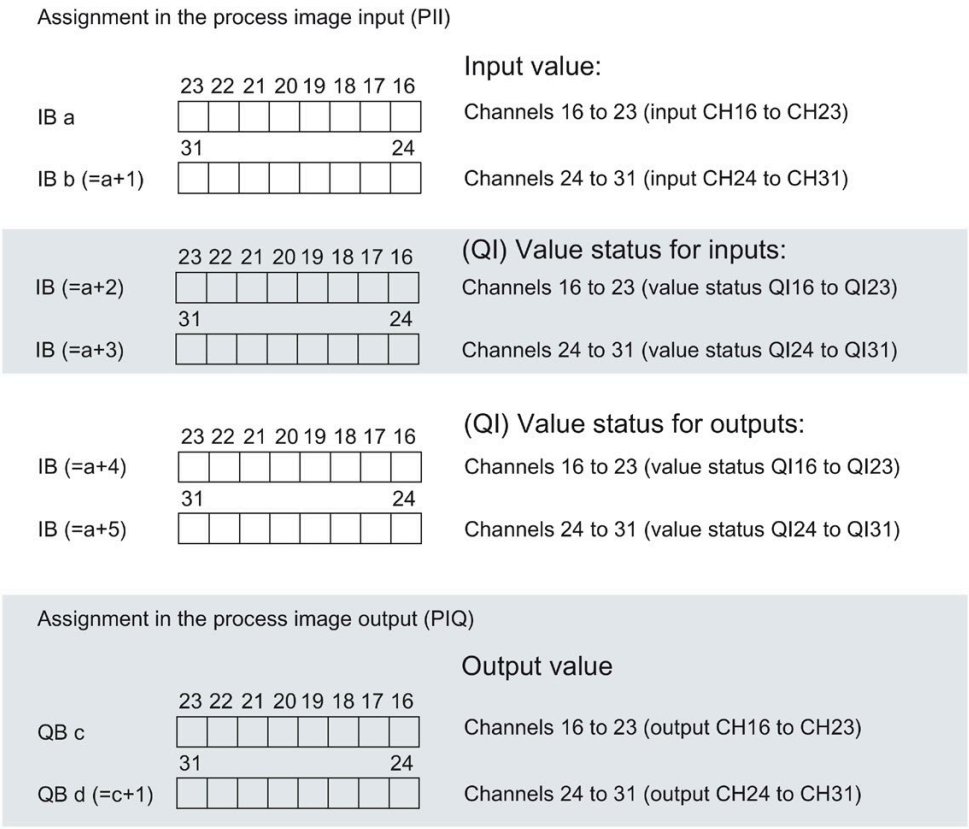

Figure 5-3 Address space of the submodule X12 of the 2 x 32-channel digital on-board I/O (16 digital inputs/16 digital outputs) with value status

Value status (quality information, QI)

As of firmware version 2.0, the analog and digital on-board I/O support the value status as diagnostics option. You activate the use of the value status in the hardware configuration of STEP 7 (TIA Portal). Value status is deactivated by default. You can activate/deactivate the value status of the digital on-board I/O for X11 and X12 independently of each other.

When you activate the value status, the input area of the digital on-board I/O (X11/X12) contains four additional bytes, which provide the QI bits to the 16 digital input channels and 16 digital output channels. You access the QI bits through the user program.

Value status of input channels

Value status = 1 ("Good") indicates that the value of the assigned input at the terminal is valid.

Value status = 0 ("Bad") indicates that no/or too little supply voltage L+ is applied at the terminal and that the read value is therefore not valid.

Value status of output channels

The value status = 1 ("Good") indicates that the process value specified by the user program is correctly output at the terminal.

The value status = 0 ("Bad") indicates that the process value output at the hardware output is incorrect or the channel is used for technology functions.

Possible cause for value status = 0:

- The supply voltage L+ is missing at the terminals or is not sufficient
- Outputs are inactive (for example, CPU in STOP)
- Technology functions (HSC, PWM or PTO) use the channel

Note

Behavior of the value status at the output channels for technology functions

The output channels return the value status 0 ("Bad") when a technology channel (HSC, PWM or PTO) is used. It does not matter in this context whether the output value is incorrect or not.

Address space of the high-speed counters

Table 5- 1 Size of the input and output addresses of the high-speed counters

	Inputs	Outputs
Size per high-speed counter (6x)	16 bytes	12 bytes

You can find a description of the control interface in the section Assignment of the control interface of the high-speed counters (Page 50). You can find a description of the feedback interface in the section Assignment of the feedback interface of the high-speed counters (Page 52).

Table 5- 2 Size of the input and output addresses in operating mode "Position input for Motion Control"

	Inputs	Outputs
Size per high-speed counter (6x)	16 bytes	4 bytes

5.3 Address space of the pulse generators

Address space of the pulse generators in the PWM, frequency output and PTO modes

Operating mode	Feedback interface (inputs)	Control interface (outputs)
PWM (4x)	4 bytes	12 bytes
Frequency output	4 bytes	12 bytes
PTO	18 bytes	10 bytes
Deactivated	4 bytes *	12 bytes *

* In "Deactivated" mode, the control interface is not evaluated and the feedback interface is set to 0 value

5.4 Measurement types and measuring ranges of the analog on-board I/O

Introduction

The analog on-board I/O is set to voltage measurement type and measuring range ±10 V by default for the inputs on channels 0 to 3. By default, channel 4 is set to resistance measuring type and measuring range 600 Ω. If you want to use another measurement type or measuring range, change the parameter settings of the analog on-board I/O with STEP 7 (TIA Portal).

Disable unused inputs to prevent disturbances that cause incorrect behavior (e.g. triggering of a hardware interrupt).

Measurement types and measuring ranges

The following table shows the measurement types, the measuring range and the possible channels.

Table 5- 3 Measurement types and measuring range

Measurement type	Measuring range	Channel
Voltage	0 to 10 V 1 to 5 V ±5 V ±10 V	0 to 3
Current 4WMT (4-wire measuring transducer)	0 to 20 mA 4 to 20 mA ±20 mA	0 to 3
Resistance	150 Ω 300 Ω 600 Ω	4
Thermal resistor RTD	Pt 100 Standard/Climate Ni 100 Standard/Climate	4
Deactivated	-	-

The tables of the input ranges, overflow, underrange, etc. can be found in the appendix .

5.5 Output type and output ranges of the analog on-board I/O

Introduction

The analog on-board I/O is set to voltage output type and output range ±10 V as default for the outputs. If you want to use another output range or output type, you need to change the parameter settings of the analog on-board I/O in STEP 7 (TIA Portal).

Output types and output ranges

The following table shows the output type and the corresponding output ranges.

Table 5- 4 Output type and output ranges

Output type	Output range
Voltage	1 to 5 V 0 to 10 V ±10 V
Current	0 to 20 mA 4 to 20 mA ±20 mA
Deactivated	-

5.6 Parameters of the analog on-board I/O

Parameters of the analog on-board I/O

You specify the properties of the analog on-board I/O during parameter assignment with STEP 7 (TIA Portal). The tables below list the parameters that can be set for inputs and outputs, respectively.

When parameters are assigned in the user program, they are transferred to the analog on-board I/O via data records with the WRREC instruction, see section Parameter assignment and structure of the parameter data records of the analog on-board I/O (Page 167).

Configurable parameters and default settings for inputs

Table 5- 5 Configurable "Diagnostics" parameters

Parameters [1]	Value range	Default	Reconfiguration in RUN
Diagnostics			
• Overflow	Yes/No	No	Yes
• Underflow	Yes/No	No	Yes
• Wire break [2]	Yes/No	No	Yes
• Current limit for wire break diagnostics	1.185 mA or 3.6 mA	1.185 mA	Yes

[1] All parameters can be set channel-selective

[2] Only for the "Voltage" measurement type in the measuring range 1 to 5 V and for the "Current" measurement type in the measuring range 4 to 20 mA

Table 5- 6 Configurable "Measuring" parameters

Parameters [1]	Value range	Default	Reconfiguration in RUN
Measuring			
• Measurement type	See section Measurement types and measuring ranges of the analog on-board I/O (Page 121)	Voltage (channels 0 to 3) Resistance (channel 4)	Yes
• Measuring range		±10 V (channels 0 to 3) 600 Ω (channel 4)	Yes
• Temperature coefficient	Pt: 0.003851 Pt: 0.003916 Pt: 0.003902 Pt: 0.003920 Ni: 0.006180 Ni: 0.006720	0.003851	Yes
• Temperature unit	• Kelvin (K) [2] • Fahrenheit (°F) • Celsius (°C)	°C	Yes
• Interference frequency suppression	400 Hz 60 Hz 50 Hz 10 Hz	50 Hz	Yes [3]
• Smoothing	None/weak/medium/strong	None	Yes

[1] All parameters can be set channel-selective

[2] Kelvin (K) is only possible for the "Standard range" measuring range and not for the "Climatic range" measuring range

[3] The interference frequency suppression must have the same value for all active input channels. This value can only be changed through reconfiguration in RUN with single channel parameter assignment (data records 0 to 4) if all other input channels are disabled.

Table 5- 7 Configurable "Hardware interrupt" parameters

Parameters [1]	Value range	Default	Reconfiguration in RUN
Hardware interrupts			
• Hardware interrupt low limit 1	Yes/No	No	Yes
• Hardware interrupt high limit 1	Yes/No	No	Yes
• Hardware interrupt low limit 2	Yes/No	No	Yes
• Hardware interrupt high limit 2	Yes/No	No	Yes

[1] All parameters can be set channel-selective

You can find an overview of the limits for the hardware interrupts in the section Structure of a data record for input channels of the analog on-board I/O (Page 168).

Configurable parameters and default settings for outputs

Table 5- 8 Configurable "Diagnostics" parameters

Parameters [1]	Value range	Default	Reconfiguration in RUN
Diagnostics			
• Wire break [2]	Yes/No	No	Yes
• Short-circuit to ground [3]	Yes/No	No	Yes
• Overflow	Yes/No	No	Yes
• Underflow	Yes/No	No	Yes

[1] All parameters can be set channel-selective

[2] Only for the "Current" output type

[3] Only for the "Voltage" output type

Table 5- 9 Configurable output parameters

Parameters [1]	Value range	Default	Reconfiguration in RUN
Output parameters			
• Output type	See section Output type and output ranges of the analog on-board I/O (Page 122)	Voltage	Yes
• Output range		±10 V	Yes
• Reaction to CPU STOP	• Turn off • Keep last value • Output substitute value	Turn off	Yes
• Substitute value	Must be within the permitted voltage/current output range. See "Valid substitute value for the output range" table in the section Structure of a data record for output channels of the analog on-board I/O (Page 173)	0	Yes

[1] All parameters can be set channel-selective

Short-circuit detection

The diagnostics for short circuit to ground can be configured for the voltage output type. Short-circuit detection is not possible for low output values. The output voltages must therefore be under -0.1 V or over +0.1 V.

Wire break detection

The diagnostics for wire break can be configured for the current output type. Wire break detection is not possible for low output values; the output currents must therefore be below -0.2 mA or above +0.2 mA.

5.7 Parameters of the digital on-board I/O

Parameters of the digital on-board I/O in standard mode

You specify the properties of the digital on-board I/O during the parameter assignment with STEP 7 (TIA Portal). The tables below list the parameters that can be set for inputs and outputs, respectively.

When parameters are assigned in the user program, they are transferred to the digital on-board I/O via data records with the WRREC instruction, see section Parameter assignment and structure of the parameter data records of the digital on-board I/O (Page 176).

The use of a digital input by a technology channel

When a digital input is in use by a technology channel (HSC, PTO or PWM) the corresponding digital input channel remains fully usable without any restriction.

Use of a digital output by a technology channel

When a digital output is in use by a technology channel (HSC, PTO or PWM) the following restrictions apply to the use of the corresponding digital output channel:

- Output values for the digital output channel are not effective. The output values are specified by the technology channel.
- The CPU STOP behavior configured for the digital output channel is not effective. The reaction of the output to CPU Stop is specified by the technology channel.
- With activated value status (Quality Information) for the DI16/DQ16 submodule, the QI-bit for the digital output channel shows the value 0 (= Status "Bad").
- The current state of the digital output is not returned to the process image output. In the PTO operating mode, you can only observe the switching operations of the assigned digital outputs directly at the output. In the PWM operating mode and with high-speed counters (HSC), you can observe the current state additionally via the feedback interface. Note, however, that high frequencies may no longer be observed under certain circumstances due to an excessively low sampling rate.

Configurable parameters and default settings for inputs

Table 5- 10 Configurable parameters for inputs

Parameters [1]	Value range	Default	Reconfiguration in RUN
Diagnostics			
• No supply voltage L+	Yes/No	No	Yes
Input delay	None, 0.05 ms, 0.1 ms, 0.4 ms, 1.6 ms, 3.2 ms, 12.8 ms, 20 ms	3.2 ms	Yes
Hardware interrupt			
• Rising edge	Yes/No	No	Yes
• Falling edge	Yes/No	No	Yes

[1] All parameters can be set channel-selective

Configurable parameters and default settings for outputs

Table 5- 11 Configurable parameters for outputs

Parameters [1]	Value range	Default	Reconfiguration in RUN
Diagnostics			
• Missing supply voltage L+	Yes/No	No	Yes
Reaction to CPU STOP When the digital output is controlled by a technology channel (HSC, PTO or PWM), this parameter is not effective. In this case the technology channel specifies the reaction of the digital output to CPU STOP.	• Turn off • Keep last value • Output substitute value 1	Turn off	Yes

[1] All parameters can be set channel-selective

Interrupts/diagnostics alarms

6

6.1 Status and error displays

6.1.1 Status and error displays of the CPU part

LED display

The figure below shows the LED displays of the CPU part.

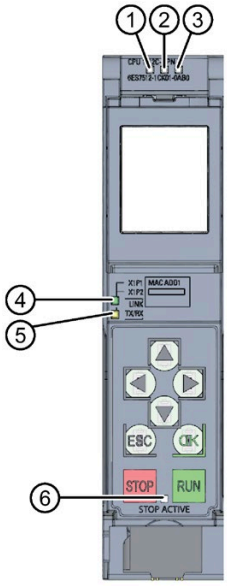

① RUN/STOP LED (yellow/green LED)
② ERROR LED (red LED)
③ MAINT LED (yellow LED)
④ LINK RX/TX LED for port X1 P1 (yellow/green LED)
⑤ LINK RX/TX LED for port X1 P2 (yellow/green LED)
⑥ STOP ACTIVE-LED (yellow LED)

Figure 6-1 LED display of the CPU 1512C-1 PN (without front panel)

Meaning of the RUN/STOP, ERROR and MAINT LEDs

The CPU has three LEDs for displaying the current operating mode and diagnostics status. The following table shows the meaning of the various combinations of colors for the RUN/STOP, ERROR and MAINT LEDs.

Table 6- 1 Meaning of the LEDs

RUN/STOP LED	ERROR LED	MAINT LED	Meaning
LED off	LED off	LED off	Missing or insufficient supply voltage on the CPU.
LED off	LED flashes red	LED off	An error has occurred.
LED lit green	LED off	LED off	CPU is in RUN mode.
LED lit green	LED flashes red	LED off	A diagnostics event is pending.
LED lit green	LED off	LED lit yellow	Maintenance demanded for the plant. The affected hardware must be checked/replaced within a short period of time.
			Active Force job
LED lit green	LED off	LED flashes yellow	Bad configuration
LED lit yellow	LED flashes red	LED off	A diagnostics event is pending.
LED lit yellow	LED off	LED flashes yellow	Firmware update successfully completed.
LED lit yellow	LED off	LED off	CPU is in STOP mode.
LED lit yellow	LED flashes red	LED flashes yellow	The program on the SIMATIC memory card is causing an error.
			Firmware update using SIMATIC memory card has failed.
			The CPU has detected an error state. Additional information is available via the CPU diagnostic buffer.
LED flashes yellow	LED off	LED off	CPU is performing internal activities during STOP, e.g. ramp-up after STOP.
			Download of the user program from the SIMATIC memory card
			CPU carries out a program with active breakpoint.
LED flashes yellow/green	LED off	LED off	Startup (transition from STOP → RUN)
LED flashes yellow/green	LED flashes red	LED flashes yellow	Startup (CPU booting)
			Test of LEDs during startup, inserting a module.
			LED flashing test

Meaning of LINK RX/TX LED

Each port has a LINK RX/TX LED. The table below shows the various "LED scenarios" of the CPU ports.

Table 6- 2 Meaning of the LED

LINK TX/RX LED	Meaning
LED off	There is no Ethernet connection between the PROFINET interface of the PROFINET device and the communication partner. No data is currently being sent/received via the PROFINET interface. There is no LINK connection.
LED flashes green	The "LED flashing test" is being performed.
LED lit green	There is an Ethernet connection between the PROFINET interface of your PROFINET device and a communication partner.
LED flashes yellow/green	Data is currently being received from or sent to a communications partner on Ethernet via the PROFINET interface of the PROFINET device.

Note

"LED" instruction

You can read the status (e.g. "On" or "Off") of LEDs of a CPU or a module using the "LED" instruction. Note, however, that it is not possible to read the LED status of the LINK RX/TX LEDs on all S7-1500 CPUs.

You can find additional information on the "LED" instruction in the STEP 7 online help.

Meaning of the STOP ACTIVE LED

The following table shows the meaning of the STOP ACTIVE LED for the CPU 1512C-1 PN.

Table 6- 3 Meaning of the LEDs

STOP ACTIVE LED	Meaning
LED lit yellow	The CPU is switched to "STOP" mode using the STOP button. • As long as the STOP ACTIVE LED is lit up, switching the CPU to RUN mode is only possible using the RUN button. • The CPU can then no longer be set to RUN mode via the display operation or via online functions. The state of the buttons is retained at power-off. If the CPU does not start up automatically after a power-on, you have to keep the STOP button pressed during start-up until the STOP ACTIVE LED is activated. • If an automatic start-up is to be reliably prevented after a power-up, the STOP button has to be kept pressed during the start-up of the CPU until the STOP ACTIVE LED is activated.
LED off	• The CPU is set to "STOP" mode using the display or programming device and not with the STOP button on the device. • The CPU is in RUN mode.

6.1.2 Status and error displays of the analog on-board I/O

LED displays

The figure below shows the LED displays (status and error displays) of the analog on-board I/O.

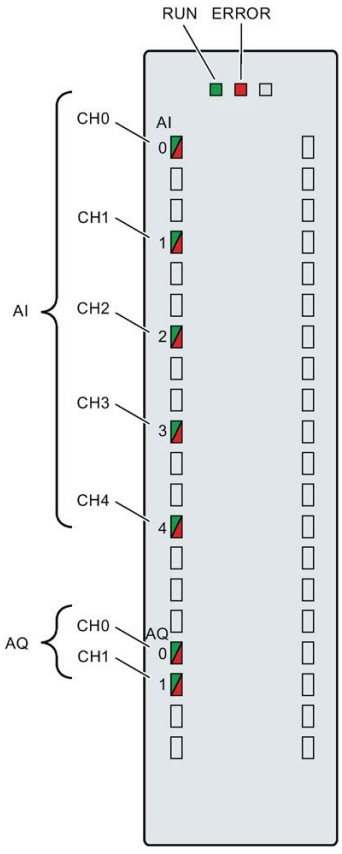

Figure 6-2 LED displays

Meaning of the LED displays

The following tables explain the meaning of the status and error displays. Corrective measures for diagnostic alarms can be found in the section Interrupts and diagnostics of the analog on-board I/O (Page 134).

Table 6- 4 RUN/ERROR status and error displays

LEDs		Meaning	Remedy
RUN	ERROR		
Off	Off	No voltage or voltage too low	• Turn on the CPU and/or the system power supply modules.
Flashes	Off	Analog on-board I/O starts up and flashes until valid parameter assignment.	---
On	Off	Parameters have been set for the analog on-board I/O.	
On	Flashes	Indicates module errors (at least one error is present on one channel, e.g. wire break).	Evaluate the diagnostics and eliminate the error (e.g. wire break).
Flashes	Flashes	Hardware defective.	Replace the compact CPU.

CHx LED

Table 6- 5 CHx status display

CHx LED	Meaning	Remedy
Off	Channel disabled.	---
On	Channel parameters set and OK.	---
On	Channel parameters set, channel error present. Diagnostics alarm: e.g. wire break	Check the wiring. Disable diagnostics.

Note

Maintenance LED

During ramp-up, the firmware of the CPU checks the consistency of the calibration data of the analog on-board I/O stored by the SIEMENS Production. The yellow MAINT LED lights up if the firmware detects an inconsistency (e.g. an invalid value) or missing calibration data. The MAINT-LED is located next the red ERROR-LED on the analog on-board I/O.

Note that the MAINT LED on the analog on-board I/O is only intended for troubleshooting by SIEMENS. In normal condition, the MAINT-LED should not light up. However, if the LED is lit up, please contact SIEMENS "mySupport" at Internet (https://support.industry.siemens.com/My/ww/en/).

6.1.3 Status and error displays of the digital on-board I/O

LED displays

The figure below shows an example of the LED displays (status and error displays) of the first module of the digital on-board I/O. Remedial measures for diagnostics alarms can be found in section Interrupts and diagnostics of the digital on-board I/O (Page 136).

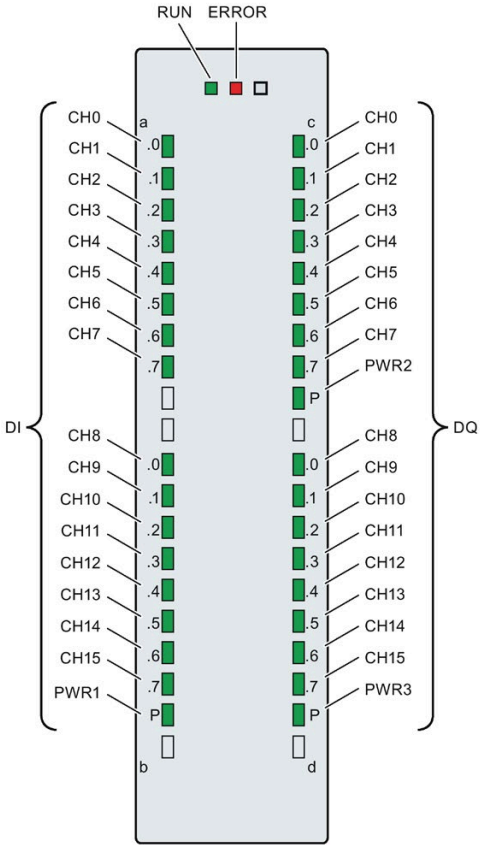

Figure 6-3 LED displays

Meaning of the LED displays

The following tables explain the meaning of the status and error displays.

RUN/ERROR LED

Table 6- 6 RUN/ERROR status and error displays

LED		Meaning	Remedy
RUN	ERROR		
□ Off	□ Off	No voltage or voltage too low	• Turn on the CPU. • Check whether too many modules are inserted.
☼ Flashes	□ Off	Digital on-board I/O starts up.	---
■ On	□ Off	Digital on-board I/O is ready for operation.	
■ On	☼ Flashes	A diagnostics interrupt is pending. Supply voltage missing.	Check supply voltage L+.

PWRx LED

Table 6- 7 PWRx status display

PWRx LED	Meaning	Remedy
□ Off	Supply voltage L+ to module too low or missing	Check supply voltage L+.
■ On	Supply voltage L+ is present and OK.	---

CHx LED

Table 6- 8 CHx status display

CHx LED	Meaning	Remedy
□ Off	0 = Status of the input/output signal.	---
■ On	1 = Status of the input/output signal.	---

Note

For the status display, the digital inputs only take into account the filter time of the corresponding DI and not the filter time of the A/B/N signals of the fast counters (HSC).

For example, a static signal may be displayed when the DI has a configured input delay of 3.2 ms, even though a 100 kHz counter on these inputs still detects edge transitions.

6.2 Interrupts and diagnostics

6.2.1 Interrupts and diagnostics of the CPU part

For information on the topic of "Interrupts", refer to the STEP 7 (TIA Portal) online help.

For information on "Diagnostics" and "System alarms", refer to the Diagnostics (http://support.automation.siemens.com/WW/view/en/59192926) function manual.

6.2.2 Interrupts and diagnostics of the analog on-board I/O

Diagnostics interrupt

The analog on-board I/O generates a diagnostics interrupt at the following events:

Table 6- 9 Diagnostics interrupt for inputs and outputs

Event	Diagnostics interrupt	
	Inputs	Outputs
Overflow	x	x
Underflow	x	x
Wire break	x [1]	x [2]
Short-circuit to ground	---	x [3]

[1] Possible for the voltage measuring range (1 to 5 V), current measuring range (4 to 20 mA)

[2] Possible for current output type

[3] Possible for voltage output type

Hardware interrupt for inputs

The compact CPU can generate a hardware interrupt for the following events:

- Below low limit 1
- Above high limit 1
- Below low limit 2
- Above high limit 2

You can find detailed information on the event in the hardware interrupt organization block with the "RALARM" (read additional interrupt information) instruction and in the STEP 7 (TIA Portal) online help.

The start information of the organization block includes information on which channel of the analog on-board I/O triggered the hardware interrupt. The figure below shows the assignment to the bits of double word 8 in local data.

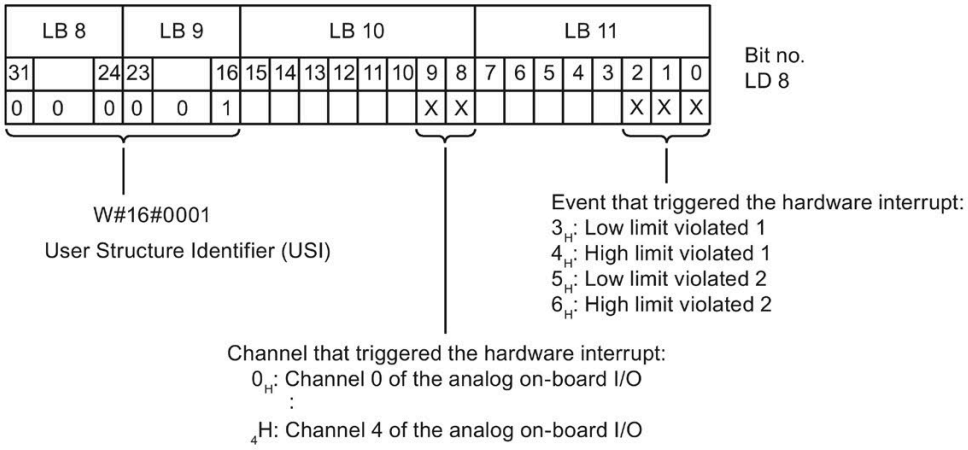

Figure 6-4 Start information of the organization block

Behavior when limits 1 and 2 are reached at the same time

If the two high limits 1 and 2 are reached at the same time, the analog on-board I/O always signals the hardware interrupt for high limit 1 first. The configured value for high limit 2 is irrelevant. After processing the hardware interrupt for high limit 1, the compact CPU triggers the hardware interrupt for high limit 2.

The analog on-board I/O behaves accordingly when the low limits are reached simultaneously. If the two low limits 1 and 2 are reached at the same time, the analog on-board I/O always signals the hardware interrupt for low limit 1 first. After processing the hardware interrupt for low limit 1, the analog on-board I/O triggers the hardware interrupt for low limit 2.

Structure of the additional interrupt information

Table 6- 10 Structure of USI = W#16#0001

Data block name		Contents	Comment	Bytes
USI (User Structure Identifier)		W#16#0001	Additional hardware interrupt information of the analog on-board I/O	2
The channel that triggered the hardware interrupt follows.				
	Channel	B#16#00 to B#16#n	Number of the event-triggering channel (n = number of analog on-board I/O channels -1)	1
It is followed by the event that triggered the hardware interrupt.				
	Event	B#16#03	Below low limit 1	1
		B#16#04	Above high limit 1	
		B#16#05	Below low limit 2	
		B#16#06	Above high limit 2	

Diagnostics alarms

A diagnostics alarm is output for each diagnostics event and the ERROR LED flashes on the analog on-board I/O. The diagnostics alarms can, for example, be read out in the diagnostics buffer of the CPU. You can evaluate the error codes with the user program.

Table 6- 11 Diagnostics alarms, their meaning and corrective measures

Diagnostics alarm	Error code	Meaning	Remedy
Wire break	6_H	Resistance of encoder circuit too high	Use a different encoder type or modify the wiring, for example, using cables with larger cross-section
		Interruption of the cable between the analog on-board I/O and sensor	Connect the cable
		Channel not connected (open)	• Disable diagnostics • Connect the channel
Overflow	7_H	Measuring range exceeded	Check the measuring range
		The output value set by the user program exceeds the valid rated range/overrange	Correct the output value
Underflow	8_H	Value below measuring range	Check the measuring range
		The output value set by the user program is below the valid rated range/underrange	Correct the output value
Short-circuit to ground	1_H	Overload at output	Eliminate overload
		Short-circuit of output Q_V to M_{ANA}	Eliminate the short-circuit

6.2.3 Interrupts and diagnostics of the digital on-board I/O

Diagnostics interrupt

A diagnostics alarm is output for each diagnostics event and the ERROR LED flashes on the digital on-board I/O. You can read out the diagnostics alarms, for example, in the diagnostics buffer of the CPU. You can evaluate the error codes with the user program.

Table 6- 12 Diagnostics alarms, their meaning and corrective measures

Diagnostics alarm	Error code	Meaning	Corrective measures
Load voltage missing	11_H	No supply voltage L+	Feed supply voltage L+
Hardware interrupt lost	16_H	The digital on-board I/O cannot trigger an interrupt because the previous interrupt was not acknowledged; possibly a configuration error	• Change the interrupt processing in the CPU and reconfigure the digital on-board I/O.

Diagnostic interrupts when using high-speed counters

Table 6- 13 Diagnostics alarms, their meaning and corrective measures

Diagnostics alarm	Error code	Meaning	Corrective measures
Illegal A/B signal ratio	500_H	• Time sequence of the A and B signals of the incremental encoder do not meet certain requirements. • Possible causes: – Signal frequency too high – Encoder is defective – Process wiring is incorrect	• Correct the process wiring • Check the encoder/sensor • Check the parameter assignment.

Hardware interrupt

The compact CPU can generate a hardware interrupt for the following events:

- Rising edge
- Falling edge

You will find detailed information on the event in the hardware interrupt organization block with the "RALRM" (read additional interrupt information) instruction and in the STEP 7 online help.

The start information of the organization block includes information on which channel triggered the hardware interrupt. The figure below shows the assignment to the bits of double word 8 in local data.

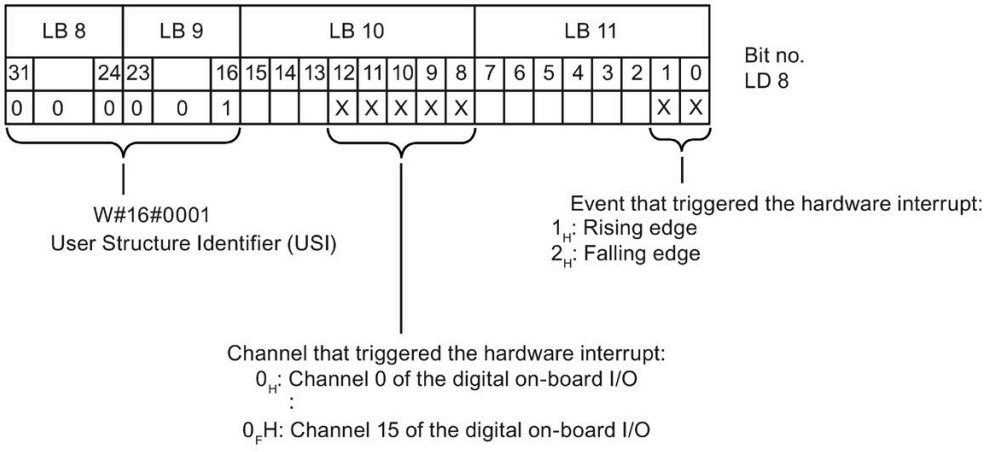

Figure 6-5 Start information of the organization block

Structure of the additional interrupt information

Table 6- 14 Structure of USI = W#16#0001

Data block name	Contents	Comment	Bytes
USI (User Structure Identifier)	W#16#0001	Additional interrupt information of the hardware interrupts of the digital on-board I/O	2
The channel that triggered the hardware interrupt follows.			
Channel	B#16#00 to B#16#0F	Number of the event-triggering channel (channel 0 to channel 15)	1
The error event that triggered the hardware interrupt follows.			
Event	B#16#01	Rising edge	1
	B#16#02	Falling edge	

Hardware interrupts when using the high-speed counters

Table 6- 15 Hardware interrupts and their meaning

Hardware interrupt	Event type number	Meaning
Opening of the internal gate (gate start)	1	When the internal gate is opened, the technology function triggers a hardware interrupt in the CPU.
Closing of the internal gate (gate stop)	2	When the internal gate is closed, the technology functions trigger a hardware interrupt in the CPU.
Overflow (high counting limit violated)	3	When the count value exceeds the high counting limit, the technology function triggers a hardware interrupt in the CPU.
Underflow (low counting limit violated)	4	When the count value falls below the low counting limit, the technology function triggers a hardware interrupt in the CPU.
Comparison event for DQ0 occurred	5	When a comparison event for DQ0 occurs due to the selected comparison condition, the technology function triggers a hardware interrupt in the CPU. When the change of the count value for an incremental or pulse encoder was not caused by a count pulse, the technology function does not trigger a hardware interrupt.
Comparison event for DQ1 occurred	6	When a comparison event for DQ1 occurs due to the selected comparison condition, the technology function triggers a hardware interrupt in the CPU. When the change of the count value for an incremental or pulse encoder was not caused by a count pulse, the technology function does not trigger a hardware interrupt.
Zero crossing	7	At a zero crossing of the counter or position value, the technology function triggers a hardware interrupt in the CPU.
New Capture value present[1)]	8	When the current counter or position value is saved as a Capture value, the technology function triggers a hardware interrupt in the CPU.
Synchronization of the counter by an external signal	9	At the synchronization of the counter by an N signal or edge at DI, the technology function triggers a hardware interrupt in the CPU.
Direction reversal[2)]	10	When the count value or position value changes direction, the technology function triggers a hardware interrupt in the CPU.

1) Can only be set in counting mode

2) Feedback bit STS_DIR is preset to "0". When the first count value or position value change occurs in the reverse direction directly after switching on the digital on-board I/O, a hardware interrupt is not triggered.

Technical specifications 7

Technical specifications of the CPU 1512C-1 PN

The following table shows the technical specifications as of 05/2021. You will find a data sheet including daily updated technical specifications on the Internet (https://support.industry.siemens.com/cs/ww/en/pv/6ES7512-1CK01-0AB0/td?dl=en).

Article number	6ES7512-1CK01-0AB0
General information	
Product type designation	CPU 1512C-1 PN
HW functional status	FS03
Firmware version	V2.9
Product function	
• I&M data	Yes; I&M0 to I&M3
• Isochronous mode	Yes; With minimum OB 6x cycle of 625 µs (distributed)
Engineering with	
• STEP 7 TIA Portal configurable/integrated from version	V17 (FW V2.9) / V15 (FW V2.5) or higher; with older TIA Portal versions configurable as 6ES7512-1CK00-0AB0
Configuration control	
via dataset	Yes
Display	
Screen diagonal [cm]	3.45 cm
Control elements	
Number of keys	8
Mode buttons	2
Supply voltage	
Type of supply voltage	24 V DC
permissible range, lower limit (DC)	19.2 V; 20.4 V DC, for supplying the digital inputs/outputs
permissible range, upper limit (DC)	28.8 V
Reverse polarity protection	Yes
Mains buffering	
• Mains/voltage failure stored energy time	5 ms; Refers to the power supply on the CPU section
• Repeat rate, min.	1/s
Input current	
Current consumption (rated value)	0.8 A; Without load; 18.8 A: CPU + load
Current consumption, max.	1 A; Without load; 19 A: CPU + load
Inrush current, max.	1.9 A; Rated value
I^2t	0.34 $A^2 \cdot s$

Article number	6ES7512-1CK01-0AB0
Digital inputs	
• from load voltage L+ (without load), max.	20 mA; per group
Digital outputs	
• from load voltage L+, max.	30 mA; Per group, without load
Output voltage	
Rated value (DC)	24 V
Encoder supply	
Number of outputs	2; One common 24 V encoder supply per 16 digital inputs
24 V encoder supply	
• 24 V	Yes; L+ (-0.8 V)
• Short-circuit protection	Yes
• Output current, max.	1 A
Power	
Infeed power to the backplane bus	10 W
Power consumption from the backplane bus (balanced)	9 W
Power loss	
Power loss, typ.	15.2 W
Memory	
Number of slots for SIMATIC memory card	1
SIMATIC memory card required	Yes
Work memory	
• integrated (for program)	250 kbyte
• integrated (for data)	1 Mbyte
Load memory	
• Plug-in (SIMATIC Memory Card), max.	32 Gbyte
Backup	
• maintenance-free	Yes
CPU processing times	
for bit operations, typ.	48 ns
for word operations, typ.	58 ns
for fixed point arithmetic, typ.	77 ns
for floating point arithmetic, typ.	307 ns
CPU-blocks	
Number of elements (total)	4 000; Blocks (OB, FB, FC, DB) and UDTs
DB	
• Number range	1 ... 60 999; subdivided into: number range that can be used by the user: 1 ... 59 999, and number range of DBs created via SFC 86: 60 000 ... 60 999
• Size, max.	1 Mbyte; For DBs with absolute addressing, the max. size is 64 KB

Article number	6ES7512-1CK01-0AB0
FB	
• Number range	0 ... 65 535
• Size, max.	250 kbyte
FC	
• Number range	0 ... 65 535
• Size, max.	250 kbyte
OB	
• Size, max.	250 kbyte
• Number of free cycle OBs	100
• Number of time alarm OBs	20
• Number of delay alarm OBs	20
• Number of cyclic interrupt OBs	20; With minimum OB 3x cycle of 500 µs
• Number of process alarm OBs	50
• Number of DPV1 alarm OBs	3
• Number of isochronous mode OBs	1
• Number of technology synchronous alarm OBs	2
• Number of startup OBs	100
• Number of asynchronous error OBs	4
• Number of synchronous error OBs	2
• Number of diagnostic alarm OBs	1
Nesting depth	
• per priority class	24
Counters, timers and their retentivity	
S7 counter	
• Number	2 048
Retentivity	
– adjustable	Yes
IEC counter	
• Number	Any (only limited by the main memory)
Retentivity	
– adjustable	Yes
S7 times	
• Number	2 048
Retentivity	
– adjustable	Yes
IEC timer	
• Number	Any (only limited by the main memory)

Article number	6ES7512-1CK01-0AB0
Retentivity	
– adjustable	Yes
Data areas and their retentivity	
Retentive data area (incl. timers, counters, flags), max.	128 kbyte; In total; available retentive memory for bit memories, timers, counters, DBs, and technology data (axes): 88 KB
Extended retentive data area (incl. timers, counters, flags), max.	1 Mbyte; When using PS 6 0W 24/48/60 V DC HF
Flag	
• Size, max.	16 kbyte
• Number of clock memories	8; 8 clock memory bit, grouped into one clock memory byte
Data blocks	
• Retentivity adjustable	Yes
• Retentivity preset	No
Local data	
• per priority class, max.	64 kbyte; max. 16 KB per block
Address area	
Number of IO modules	2 048; max. number of modules / submodules
I/O address area	
• Inputs	32 kbyte; All inputs are in the process image
• Outputs	32 kbyte; All outputs are in the process image
per integrated IO subsystem	
– Inputs (volume)	8 kbyte
– Outputs (volume)	8 kbyte
per CM/CP	
– Inputs (volume)	8 kbyte
– Outputs (volume)	8 kbyte
Subprocess images	
• Number of subprocess images, max.	32
Hardware configuration	
Number of distributed IO systems	32; A distributed I/O system is characterized not only by the integration of distributed I/O via PROFINET or PROFIBUS communication modules, but also by the connection of I/O via AS-i master modules or links (e.g. IE/PB-Link)
Number of DP masters	
• Via CM	6; A maximum of 6 CMs/CPs (PROFIBUS, PROFINET, Ethernet) can be inserted in total
Number of IO Controllers	
• integrated	1
• Via CM	6; A maximum of 6 CMs/CPs (PROFIBUS, PROFINET, Ethernet) can be inserted in total

Article number	6ES7512-1CK01-0AB0
Rack	
• Modules per rack, max.	32; CPU + 31 modules
• Number of lines, max.	1
PtP CM	
• Number of PtP CMs	the number of connectable PtP CMs is only limited by the number of available slots
Time of day	
Clock	
• Type	Hardware clock
• Backup time	6 wk; At 40 °C ambient temperature, typically
• Deviation per day, max.	10 s; Typ.: 2 s
Operating hours counter	
• Number	16
Clock synchronization	
• supported	Yes
• in AS, master	Yes
• in AS, slave	Yes
• on Ethernet via NTP	Yes
Digital inputs	
integrated channels (DI)	32
Digital inputs, parameterizable	Yes
Source/sink input	P-reading
Input characteristic curve in accordance with IEC 61131, type 3	Yes
Digital input functions, parameterizable	
• Gate start/stop	Yes
• Capture	Yes
• Synchronization	Yes
Input voltage	
• Type of input voltage	DC
• Rated value (DC)	24 V
• for signal "0"	-3 to +5V
• for signal "1"	+11 to +30V
Input current	
• for signal "1", typ.	2.5 mA

Article number	6ES7512-1CK01-0AB0
Input delay (for rated value of input voltage) for standard inputs	
– parameterizable	Yes; none / 0.05 / 0.1 / 0.4 / 1.6 / 3.2 / 12.8 / 20 ms
– at "0" to "1", min.	4 µs; for parameterization "none"
– at "0" to "1", max.	20 ms
– at "1" to "0", min.	4 µs; for parameterization "none"
– at "1" to "0", max.	20 ms
for interrupt inputs	
– parameterizable	Yes; Same as for standard inputs
for technological functions	
– parameterizable	Yes; Same as for standard inputs
Cable length	
• shielded, max.	1 000 m; 600 m for technological functions; depending on input frequency, encoder and cable quality; max. 50 m at 100 kHz
• unshielded, max.	600 m; for technological functions: No
Digital outputs	
Type of digital output	Transistor
integrated channels (DO)	32
Current-sourcing	Yes; Push-pull output
Short-circuit protection	Yes; electronic/thermal
• Response threshold, typ.	1.6 A with standard output, 0.5 A with high-speed output; see manual for details
Limitation of inductive shutdown voltage to	Connector X11: -0.8 V; connector X12: L+ (-53 V)
Controlling a digital input	Yes
Accuracy of pulse duration	Up to ±100 ppm ±2 µs at high-speed output; see manual for details
minimum pulse duration	2 µs; With High Speed output
Digital output functions, parameterizable	
• Switching tripped by comparison values	Yes; As output signal of a high-speed counter
• PWM output	Yes
– Number, max.	4
– Cycle duration, parameterizable	Yes
– ON period, min.	0 %
– ON period, max.	100 %
– Resolution of the duty cycle	0.0036 %; For S7 analog format, min. 40 ns
• Frequency output	Yes
Switching capacity of the outputs	
• with resistive load, max.	0.5 A; 0.1 A with high-speed output, i.e. when using a high-speed output; see manual for details
• on lamp load, max.	5 W; 1 W with high-speed output, i.e. when using a high-speed output; see manual for details

Article number	6ES7512-1CK01-0AB0
Load resistance range	
• lower limit	48 Ω; 240 ohms with high-speed output, i.e. when using a high-speed output; see manual for details
• upper limit	12 kΩ

Article number	6ES7512-1CK01-0AB0
Output voltage	
• Type of output voltage	DC
• for signal "0", max.	1 V; With high-speed output, i.e. when using a high-speed output; see manual for details
• for signal "1", min.	23.2 V; L+ (-0.8 V)
Output current	
• for signal "1" rated value	0.5 A; 0.1 A with high-speed output, i.e. when using a high-speed output, observe derating; see manual for details
• for signal "1" permissible range, min.	2 mA
• for signal "1" permissible range, max.	0.6 A; 0.12 A with high-speed output, i.e. when using a high-speed output, observe derating; see manual for details
• for signal "0" residual current, max.	0.5 mA
Output delay with resistive load	
• "0" to "1", max.	200 µs
• "1" to "0", max.	500 µs; Load-dependent
for technological functions	
– "0" to "1", max.	5 µs; Depending on the output used, see additional description in manual
– "1" to "0", max.	5 µs; Depending on the output used, see additional description in manual
Parallel switching of two outputs	
• for logic links	Yes; for technological functions: No
• for uprating	No
• for redundant control of a load	Yes; for technological functions: No
Switching frequency	
• with resistive load, max.	100 kHz; For high-speed output, 100 Hz for standard output
• with inductive load, max.	0.5 Hz; Acc. to IEC 60947-5-1, DC-13; observe derating curve
• on lamp load, max.	10 Hz
Total current of the outputs	
• Current per channel, max.	0.5 A; see additional description in the manual
• Current per group, max.	8 A; see additional description in the manual
• Current per power supply, max.	4 A; 2 power supplies for each group, current per power supply max. 4 A, see additional description in manual
for technological functions	
– Current per channel, max.	0.5 A; see additional description in the manual
Relay outputs	
• Number of relay outputs	0

Article number	6ES7512-1CK01-0AB0
Cable length	
• shielded, max.	1 000 m; 600 m for technological functions; depending on output frequency, load, and cable quality; max. 50 m at 100 kHz
• unshielded, max.	600 m; for technological functions: No
Analog inputs	
Number of analog inputs	5; 4x for U/I, 1x for R/RTD
• For current measurement	4; max.
• For voltage measurement	4; max.
• For resistance/resistance thermometer measurement	1
permissible input voltage for voltage input (destruction limit), max.	28.8 V
permissible input current for current input (destruction limit), max.	40 mA
Cycle time (all channels), min.	1 ms; Dependent on the parameterized interference frequency suppression; for details, see conversion procedure in manual
Technical unit for temperature measurement adjustable	Yes; °C/°F/K
Input ranges (rated values), voltages	
• 0 to +10 V	Yes; Physical measuring range: ± 10 V
– Input resistance (0 to 10 V)	100 kΩ
• 1 V to 5 V	Yes; Physical measuring range: ± 10 V
– Input resistance (1 V to 5 V)	100 kΩ
• -10 V to +10 V	Yes
– Input resistance (-10 V to +10 V)	100 kΩ
• -5 V to +5 V	Yes; Physical measuring range: ± 10 V
– Input resistance (-5 V to +5 V)	100 kΩ
Input ranges (rated values), currents	
• 0 to 20 mA	Yes; Physical measuring range: ± 20 mA
– Input resistance (0 to 20 mA)	50 Ω; Plus approx. 55 ohm for overvoltage protection by PTC
• -20 mA to +20 mA	Yes
– Input resistance (-20 mA to +20 mA)	50 Ω; Plus approx. 55 ohm for overvoltage protection by PTC
• 4 mA to 20 mA	Yes; Physical measuring range: ± 20 mA
– Input resistance (4 mA to 20 mA)	50 Ω; Plus approx. 55 ohm for overvoltage protection by PTC

Article number	6ES7512-1CK01-0AB0
Input ranges (rated values), resistance thermometer	
• Ni 100	Yes; Standard/climate
– Input resistance (Ni 100)	10 MΩ
• Pt 100	Yes; Standard/climate
– Input resistance (Pt 100)	10 MΩ
Input ranges (rated values), resistors	
• 0 to 150 ohms	Yes; Physical measuring range: 0 ... 600 ohms
– Input resistance (0 to 150 ohms)	10 MΩ
• 0 to 300 ohms	Yes; Physical measuring range: 0 ... 600 ohms
– Input resistance (0 to 300 ohms)	10 MΩ
• 0 to 600 ohms	Yes
– Input resistance (0 to 600 ohms)	10 MΩ
Cable length	
• shielded, max.	800 m; for U/I, 200 m for R/RTD
Analog outputs	
integrated channels (AO)	2
Voltage output, short-circuit protection	Yes
Cycle time (all channels), min.	1 ms; Dependent on the parameterized interference frequency suppression; for details, see conversion procedure in manual
Output ranges, voltage	
• 0 to 10 V	Yes
• 1 V to 5 V	Yes
• -10 V to +10 V	Yes
Output ranges, current	
• 0 to 20 mA	Yes
• -20 mA to +20 mA	Yes
• 4 mA to 20 mA	Yes
Load impedance (in rated range of output)	
• with voltage outputs, min.	1 kΩ
• with voltage outputs, capacitive load, max.	100 nF
• with current outputs, max.	500 Ω
• with current outputs, inductive load, max.	1 mH
Cable length	
• shielded, max.	200 m

Article number	6ES7512-1CK01-0AB0
Analog value generation for the inputs	
Integration and conversion time/resolution per channel	
• Resolution with overrange (bit including sign), max.	16 bit
• Integration time, parameterizable	Yes; 2.5 / 16.67 / 20 / 100 ms, acts on all channels
• Interference voltage suppression for interference frequency f1 in Hz	400 / 60 / 50 / 10
Smoothing of measured values	
• parameterizable	Yes
• Step: None	Yes
• Step: low	Yes
• Step: Medium	Yes
• Step: High	Yes
Analog value generation for the outputs	
Integration and conversion time/resolution per channel	
• Resolution with overrange (bit including sign), max.	16 bit
Settling time	
• for resistive load	1.5 ms
• for capacitive load	2.5 ms
• for inductive load	2.5 ms
Encoder	
Connection of signal encoders	
• for voltage measurement	Yes
• for current measurement as 4-wire transducer	Yes
• for resistance measurement with two-wire connection	Yes
• for resistance measurement with three-wire connection	Yes
• for resistance measurement with four-wire connection	Yes
Connectable encoders	
• 2-wire sensor	Yes
– permissible quiescent current (2-wire sensor), max.	1.5 mA

Article number	6ES7512-1CK01-0AB0
Encoder signals, incremental encoder (asymmetrical)	
• Input frequency, max.	100 kHz
• Counting frequency, max.	400 kHz; with quadruple evaluation
• Signal filter, parameterizable	Yes
• Incremental encoder with A/B tracks, 90° phase offset	Yes
• Incremental encoder with A/B tracks, 90° phase offset and zero track	Yes
• pulse encoder	Yes
• pulse encoder with direction	Yes
• pulse encoder with one impulse signal per count direction	Yes
Errors/accuracies	
Linearity error (relative to input range), (+/-)	0.1 %
Temperature error (relative to input range), (+/-)	0.005 %/K
Crosstalk between the inputs, max.	-60 dB
Repeat accuracy in steady state at 25 °C (relative to input range), (+/-)	0.05 %
Output ripple (relative to output range, bandwidth 0 to 50 kHz), (+/-)	0.02 %
Linearity error (relative to output range), (+/-)	0.15 %
Temperature error (relative to output range), (+/-)	0.005 %/K
Crosstalk between the outputs, max.	-80 dB
Repeat accuracy in steady state at 25 °C (relative to output range), (+/-)	0.05 %
Operational error limit in overall temperature range	
• Voltage, relative to input range, (+/-)	0.3 %
• Current, relative to input range, (+/-)	0.3 %
• Resistance, relative to input range, (+/-)	0.3 %
• Resistance thermometer, relative to input range, (+/-)	Pt100 Standard: ±2 K, Pt100 Climate: ±1 K, Ni100 Standard: ±1.2 K, Ni100 Climate: ±1 K
• Voltage, relative to output range, (+/-)	0.3 %
• Current, relative to output range, (+/-)	0.3 %

Article number	6ES7512-1CK01-0AB0
Basic error limit (operational limit at 25 °C)	
• Voltage, relative to input range, (+/-)	0.2 %
• Current, relative to input range, (+/-)	0.2 %
• Resistance, relative to input range, (+/-)	0.2 %
• Resistance thermometer, relative to input range, (+/-)	Pt100 Standard: ±1 K, Pt100 Climate: ±0.5 K, Ni100 Standard: ±0.6 K, Ni100 Climate: ±0.5 K
• Voltage, relative to output range, (+/-)	0.2 %
• Current, relative to output range, (+/-)	0.2 %
Interference voltage suppression for f = n x (f1 +/- 1 %), f1 = interference frequency	
• Series mode interference (peak value of interference < rated value of input range), min.	30 dB
• Common mode voltage, max.	10 V
• Common mode interference, min.	60 dB; at 400 Hz: 50 dB
Interfaces	
Number of PROFINET interfaces	1
1. Interface	
Interface types	
• RJ 45 (Ethernet)	Yes; X1
• Number of ports	2
• integrated switch	Yes
Protocols	
• IP protocol	Yes; IPv4
• PROFINET IO Controller	Yes
• PROFINET IO Device	Yes
• SIMATIC communication	Yes
• Open IE communication	Yes; Optionally also encrypted
• Web server	Yes
• Media redundancy	Yes

Article number	6ES7512-1CK01-0AB0
PROFINET IO Controller	
Services	
– PG/OP communication	Yes
– Isochronous mode	Yes
– Direct data exchange	Yes; Requirement: IRT and isochronous mode (MRPD optional)
– IRT	Yes
– PROFIenergy	Yes; per user program
– Prioritized startup	Yes; Max. 32 PROFINET devices
– Number of connectable IO Devices, max.	128; In total, up to 256 distributed I/O devices can be connected via AS-i, PROFIBUS or PROFINET
– Of which IO devices with IRT, max.	64
– Number of connectable IO Devices for RT, max.	128
– of which in line, max.	128
– Number of IO Devices that can be simultaneously activated/deactivated, max.	8; in total across all interfaces
– Number of IO Devices per tool, max.	8
– Updating times	The minimum value of the update time also depends on communication share set for PROFINET IO, on the number of IO devices, and on the quantity of configured user data
Update time for IRT	
– for send cycle of 250 µs	250 µs to 4 ms; Note: In the case of IRT with isochronous mode, the minimum update time of 625 µs of the isochronous OB is decisive
– for send cycle of 500 µs	500 µs to 8 ms; Note: In the case of IRT with isochronous mode, the minimum update time of 625 µs of the isochronous OB is decisive
– for send cycle of 1 ms	1 ms to 16 ms
– for send cycle of 2 ms	2 ms to 32 ms
– for send cycle of 4 ms	4 ms to 64 ms
– With IRT and parameterization of "odd" send cycles	Update time = set "odd" send clock (any multiple of 125 µs: 375 µs, 625 µs ... 3 875 µs)
Update time for RT	
– for send cycle of 250 µs	250 µs to 128 ms
– for send cycle of 500 µs	500 µs to 256 ms
– for send cycle of 1 ms	1 ms to 512 ms
– for send cycle of 2 ms	2 ms to 512 ms
– for send cycle of 4 ms	4 ms to 512 ms

Article number	6ES7512-1CK01-0AB0
PROFINET IO Device	
Services	
– PG/OP communication	Yes
– Isochronous mode	No
– IRT	Yes
– PROFIenergy	Yes; per user program
– Shared device	Yes
– Number of IO Controllers with shared device, max.	4
– activation/deactivation of I-devices	Yes; per user program
– Asset management record	Yes; per user program

Article number	6ES7512-1CK01-0AB0
Interface types	
RJ 45 (Ethernet)	
• 100 Mbps	Yes
• Autonegotiation	Yes
• Autocrossing	Yes
• Industrial Ethernet status LED	Yes
Protocols	
Number of connections	
• Number of connections, max.	128; via integrated interfaces of the CPU and connected CPs / CMs
• Number of connections reserved for ES/HMI/web	10
• Number of connections via integrated interfaces	88
• Number of S7 routing paths	16
Redundancy mode	
• H-Sync forwarding	Yes
Media redundancy	
– Media redundancy	only via 1st interface (X1)
– MRP	Yes
– MRP interconnection, supported	Yes; as MRP ring node according to IEC 62439-2 Edition 3.0
– MRPD	Yes; Requirement: IRT
– Switchover time on line break, typ.	200 ms; For MRP, bumpless for MRPD
– Number of stations in the ring, max.	50
SIMATIC communication	
• PG/OP communication	Yes; encryption with TLS V1.3 pre-selected
• S7 routing	Yes
• S7 communication, as server	Yes
• S7 communication, as client	Yes
• User data per job, max.	See online help (S7 communication, user data size)

Article number	6ES7512-1CK01-0AB0
Open IE communication	
• TCP/IP	Yes
– Data length, max.	64 kbyte
– several passive connections per port, supported	Yes
• ISO-on-TCP (RFC1006)	Yes
– Data length, max.	64 kbyte
• UDP	Yes
– Data length, max.	2 kbyte; 1 472 bytes for UDP broadcast
– UDP multicast	Yes; Max. 5 multicast circuits
• DHCP	Yes
• DNS	Yes
• SNMP	Yes
• DCP	Yes
• LLDP	Yes
• Encryption	Yes; Optional
Web server	
• HTTP	Yes; Standard and user pages
• HTTPS	Yes; Standard and user pages
OPC UA	
• Runtime license required	Yes; "Small" license required
• OPC UA Client	Yes
– Application authentication	Yes
– Security policies	Available security policies: None, Basic128Rsa15, Basic256Rsa15, Basic256Sha256
– User authentication	"anonymous" or by user name & password
– Number of connections, max.	4
– Number of nodes of the client interfaces, max.	1 000
– Number of elements for one call of OPC_UA_NodeGetHandleList/OPC_UA_ReadList/OPC_UA_WriteList, max.	300
– Number of elements for one call of OPC_UA_NameSpaceGetIndexList, max.	20
– Number of elements for one call of OPC_UA_MethodGetHandleList, max.	100
– Number of simultaneous calls of the client instructions per connection (except OPC_UA_ReadList,OPC_UA_WriteList,OPC_UA_MethodCall), max.	1

Article number	6ES7512-1CK01-0AB0
– Number of simultaneous calls of the client instructions OPC_UA_ReadList,OPC_UA_WriteList and OPC_UA_MethodCall, max.	5
– Number of registerable nodes, max.	5 000
– Number of registerable method calls of OPC_UA_MethodCall, max.	100
– Number of inputs/outputs when calling OPC_UA_MethodCall, max.	20
• OPC UA Server	Yes; Data access (read, write, subscribe), method call, custom address space
– Application authentication	Yes
– Security policies	Available security policies: None, Basic128Rsa15, Basic256Rsa15, Basic256Sha256
– User authentication	"anonymous" or by user name & password
– GDS support (certificate management)	Yes
– Number of sessions, max.	32
– Number of accessible variables, max.	50 000
– Number of registerable nodes, max.	10 000
– Number of subscriptions per session, max.	20
– Sampling interval, min.	100 ms
– Publishing interval, min.	500 ms
– Number of server methods, max.	20
– Number of inputs/outputs per server method, max.	20
– Number of monitored items, max.	1 000; for 1 s sampling interval and 1 s send interval
– Number of nodes for user-defined server interfaces, max.	1 000
• Alarms and Conditions	Yes
– Number of program alarms	100
– Number of alarms for system diagnostics	50
Further protocols	
• MODBUS	Yes; MODBUS TCP
Isochronous mode	
Equidistance	Yes

Article number	6ES7512-1CK01-0AB0
S7 message functions	
Number of login stations for message functions, max.	32
Program alarms	Yes
Number of configurable program messages, max.	5 000; Program messages are generated by the "Program_Alarm" block, ProDiag or GRAPH
Number of loadable program messages in RUN, max.	2 500
Number of simultaneously active program alarms	
• Number of program alarms	600
• Number of alarms for system diagnostics	100
• Number of alarms for motion technology objects	80
Test commissioning functions	
Joint commission (Team Engineering)	Yes; Parallel online access possible for up to 5 engineering systems
Status block	Yes; Up to 8 simultaneously (in total across all ES clients)
Single step	No
Number of breakpoints	8
Status/control	
• Status/control variable	Yes
• Variables	Inputs/outputs, memory bits, DBs, distributed I/Os, timers, counters
• Number of variables, max.	
– of which status variables, max.	200; per job
– of which control variables, max.	200; per job
Forcing	
• Forcing	Yes
• Forcing, variables	Peripheral inputs/outputs
• Number of variables, max.	200
Diagnostic buffer	
• present	Yes
• Number of entries, max.	1 000
– of which powerfail-proof	500
Traces	
• Number of configurable Traces	4; Up to 512 KB of data per trace are possible
Interrupts/diagnostics/status information	
Alarms	
• Diagnostic alarm	Yes
• Hardware interrupt	Yes

Article number	6ES7512-1CK01-0AB0
Diagnoses	
• Monitoring the supply voltage	Yes
• Wire-break	Yes; for analog inputs/outputs, see description in manual
• Short-circuit	Yes; for analog outputs, see description in manual
• A/B transition error at incremental encoder	Yes
Diagnostics indication LED	
• RUN/STOP LED	Yes
• ERROR LED	Yes
• MAINT LED	Yes
• STOP ACTIVE LED	Yes
• Monitoring of the supply voltage (PWR-LED)	Yes
• Channel status display	Yes
• for channel diagnostics	Yes; For analog inputs/outputs
• Connection display LINK TX/RX	Yes
Supported technology objects	
Motion Control	Yes; Note: The number of technology objects affects the cycle time of the PLC program; selection guide via the TIA Selection Tool
• Number of available Motion Control resources for technology objects	800
• Required Motion Control resources	
– per speed-controlled axis	40
– per positioning axis	80
– per synchronous axis	160
– per external encoder	80
– per output cam	20
– per cam track	160
– per probe	40
• Positioning axis	
– Number of positioning axes at motion control cycle of 4 ms (typical value)	5
– Number of positioning axes at motion control cycle of 8 ms (typical value)	10
Controller	
• PID_Compact	Yes; Universal PID controller with integrated optimization
• PID_3Step	Yes; PID controller with integrated optimization for valves
• PID-Temp	Yes; PID controller with integrated optimization for temperature

Article number	6ES7512-1CK01-0AB0
Counting and measuring	
• High-speed counter	Yes
Integrated Functions	
Counting functions	
• Continuous counting	Yes
• Counter response parameterizable	Yes
• Hardware gate via digital input	Yes
• Software gate	Yes
• Event-controlled stop	Yes
• Synchronization via digital input	Yes
• Counting range, parameterizable	Yes
Comparator	
– Number of comparators	2; per count channel; see manual for details
– Direction dependency	Yes
– Can be changed from user program	Yes
Position detection	
• Incremental acquisition	Yes
• Suitable for S7-1500 Motion Control	Yes
Measuring functions	
• Measuring time, parameterizable	Yes
• Dynamic measurement period adjustment	Yes
• Number of thresholds, parameterizable	2
Measuring range	
– Frequency measurement, min.	0.04 Hz
– Frequency measurement, max.	400 kHz; with quadruple evaluation
– Cycle duration measurement, min.	2.5 µs
– Cycle duration measurement, max.	25 s
Accuracy	
– Frequency measurement	100 ppm; depending on measuring interval and signal evaluation
– Cycle duration measurement	100 ppm; depending on measuring interval and signal evaluation
– Velocity measurement	100 ppm; depending on measuring interval and signal evaluation
Potential separation	
Potential separation digital inputs	
• between the channels	No
• between the channels, in groups of	16

Article number	6ES7512-1CK01-0AB0
Potential separation digital outputs	
• between the channels	No
• between the channels, in groups of	16
Potential separation channels	
• between the channels and backplane bus	Yes
• Between the channels and load voltage L+	No
Isolation	
Isolation tested with	707 V DC (type test)
Ambient conditions	
Ambient temperature during operation	
• horizontal installation, min.	-25 °C; No condensation
• horizontal installation, max.	60 °C; note derating data for onboard I/O in the manual. Display: 50 °C, at an operating temperature of typically 50 °C, the display is switched off
• vertical installation, min.	-25 °C; No condensation
• vertical installation, max.	40 °C; note derating data for onboard I/O in the manual. Display: 40 °C, at an operating temperature of typically 40 °C, the display is switched off
Ambient temperature during storage/transportation	
• min.	-40 °C
• max.	70 °C
Altitude during operation relating to sea level	
• Installation altitude above sea level, max.	5 000 m; Restrictions for installation altitudes > 2 000 m, see manual
Configuration	
Programming	
Programming language	
– LAD	Yes
– FBD	Yes
– STL	Yes
– SCL	Yes
– GRAPH	Yes
Know-how protection	
• User program protection/password protection	Yes
• Copy protection	Yes
• Block protection	Yes

Article number	6ES7512-1CK01-0AB0
Access protection	
• protection of confidential configuration data	Yes
• Password for display	Yes
• Protection level: Write protection	Yes
• Protection level: Read/write protection	Yes
• Protection level: Complete protection	Yes
Cycle time monitoring	
• lower limit	adjustable minimum cycle time
• upper limit	adjustable maximum cycle time
Dimensions	
Width	110 mm
Height	147 mm
Depth	129 mm
Weights	
Weight, approx.	1 360 g

Power reduction (derating) to total current of digital outputs (per power supply)

The following figure shows the load rating of the digital outputs in relation to the mounting position and the ambient temperature.

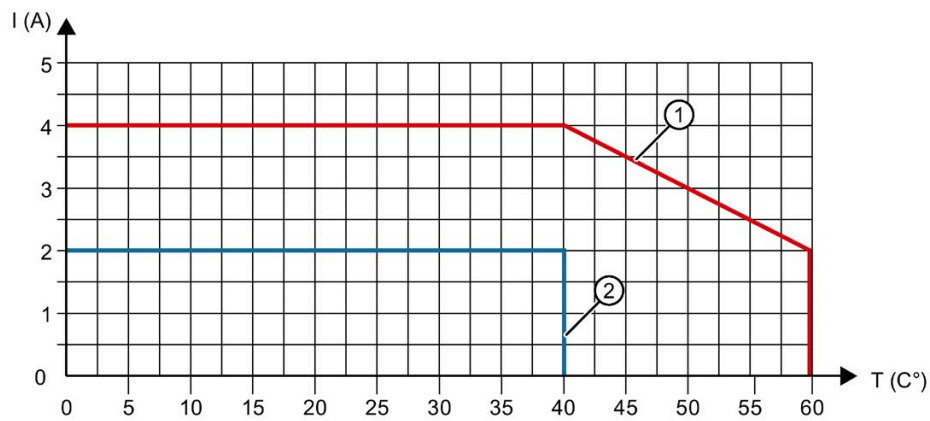

① Horizontal mounting position

② Vertical mounting position

Figure 7-1 Loading capacity of the digital outputs per mounting position

The following trends shows the load rating of the digital outputs when technology functions are used in dependence on the ambient temperature.

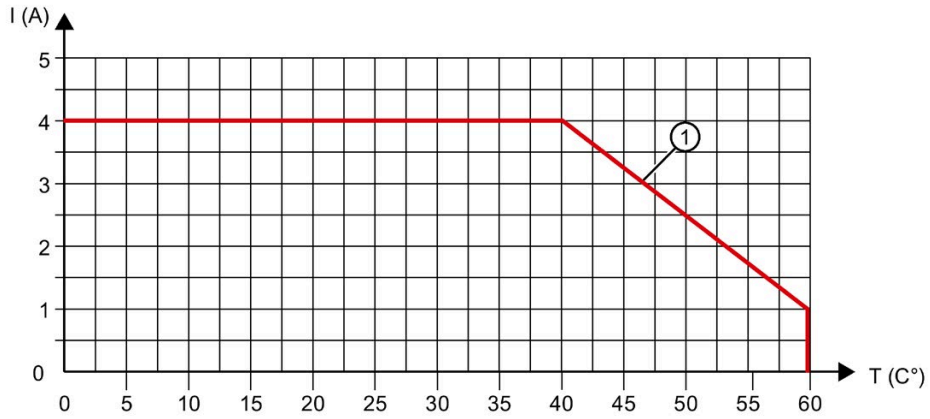

① Horizontal mounting position

Figure 7-2 Load rating of the digital outputs when technology functions are used

Power reduction (derating) to total current of digital inputs (per power supply)

The following figure shows the load rating of the current for encoder supplies of digital inputs.

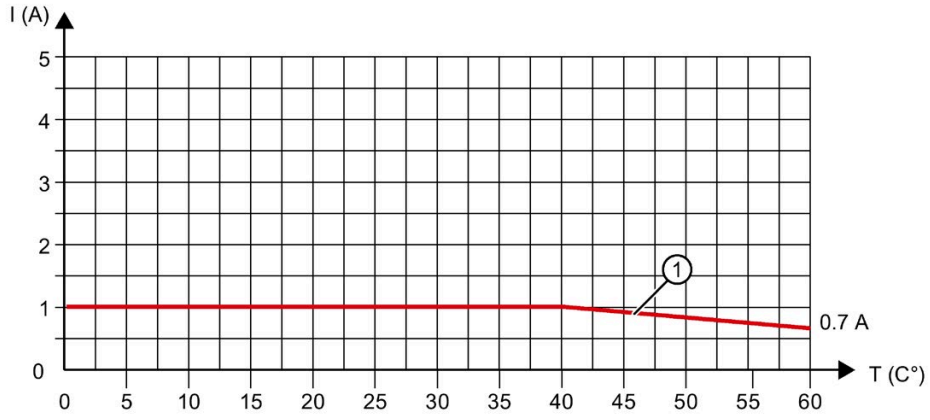

① Horizontal mounting position

Figure 7-3 Load rating of the current for encoder supplies of digital inputs

Simultaneity of digital inputs per group

If the maximum voltage at the inputs is 24 V, all the digital inputs may be simultaneously at high level (corresponds to 100% of the digital inputs).

If the maximum voltage at the inputs is 30 V, only 12 digital inputs of 16 digital inputs of one group may be simultaneously at high level (corresponds to 75% of the digital inputs).

General technical specifications

For information on the general technical specifications, such as standards and approvals, electromagnetic compatibility, protection class, etc., refer to the S7-1500, ET 200MP system manual (http://support.automation.siemens.com/WW/view/en/59191792).

Dimension drawings

A

This appendix contains the dimension drawings of the compact CPU installed on a mounting rail. You must take the dimensions into consideration for installation in cabinets, control rooms, etc.

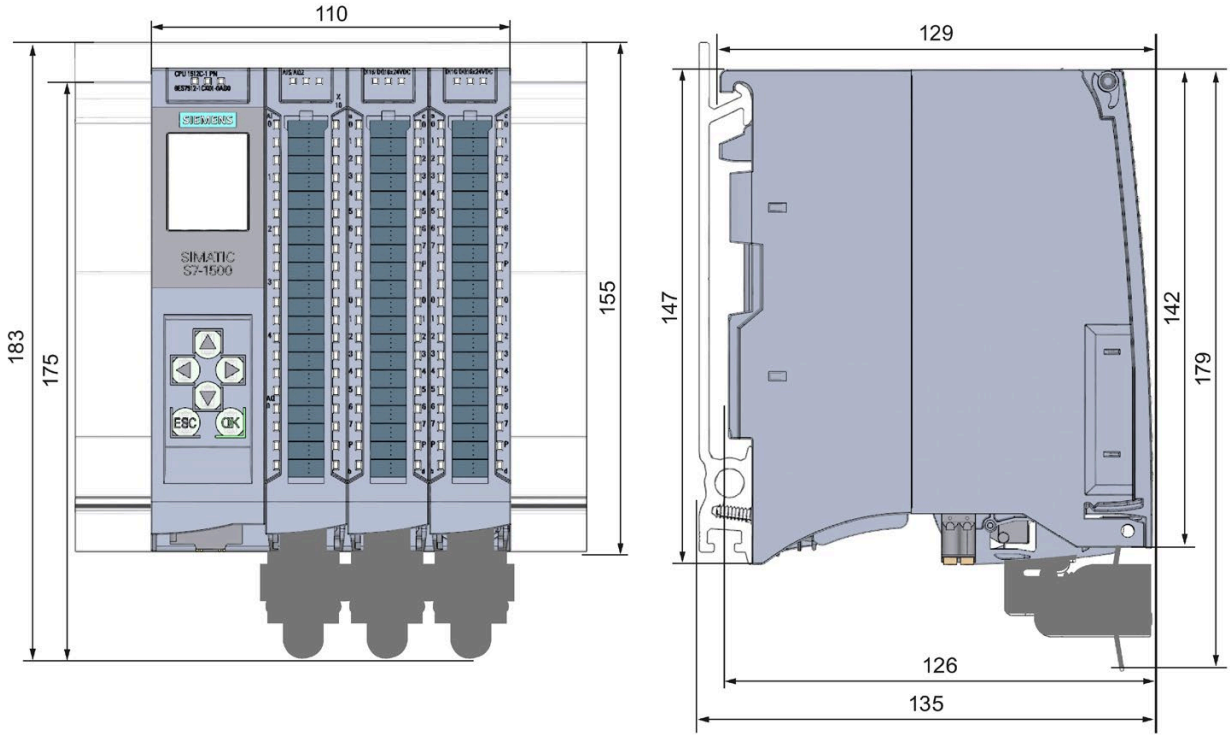

Figure A-1 Dimension drawing of CPU 1512C-1 PN – front and side views

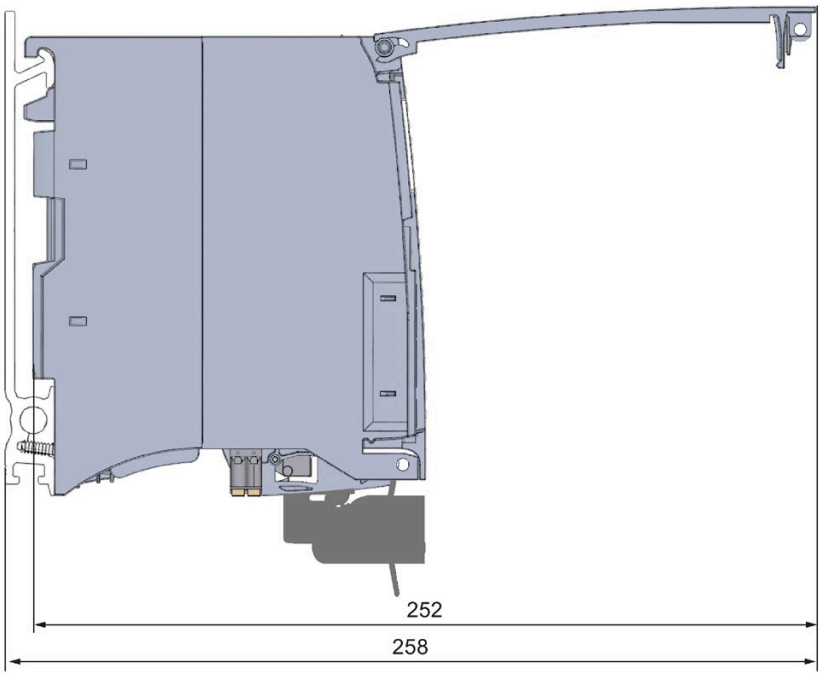

Figure A-2 Dimension drawing of CPU 1512C-1 PN – side view with front panel open

Parameter data records

B

B.1 Parameter assignment and structure of the parameter data records of the analog on-board I/O

Parameter assignment in the user program

You have the option of reassigning parameters for the analog on-board I/O in RUN (for example, measuring ranges of individual channels can be modified in RUN without affecting the other channels).

Changing parameters in RUN

The parameters are transferred to the analog on-board I/O via data records with the WRREC instruction. The parameters set with STEP 7 (TIA Portal) are not changed in the CPU, which means the parameters set in STEP 7 (TIA Portal) will be valid again after a restart.

The parameters are checked for plausibility by the analog on-board I/O only after the transfer.

Output parameter STATUS

If errors occur when transferring parameters with the "WRREC" instruction, the analog on-board I/O continues operation with the previous parameter assignment. However, a corresponding error code is written to the STATUS output parameter.

You will find a description of the "WRREC" instruction and the error codes in the STEP 7 (TIA Portal) online help.

B.2 Structure of a data record for input channels of the analog on-board I/O

Assignment of data record and channel

The parameters for the 5 analog input channels are located in data records 0 to 4 and are assigned as follows:

- Data record 0 for channel 0
- Data record 1 for channel 1
- Data record 2 for channel 2
- Data record 3 for channel 3
- Data record 4 for channel 4

Data record structure

The example in the figure below shows the structure of data record 0 for channel 0. The structure is identical for channels 1 to 4. The values in byte 0 and byte 1 are fixed and must not be changed.

You enable a parameter by setting the corresponding bit to "1".

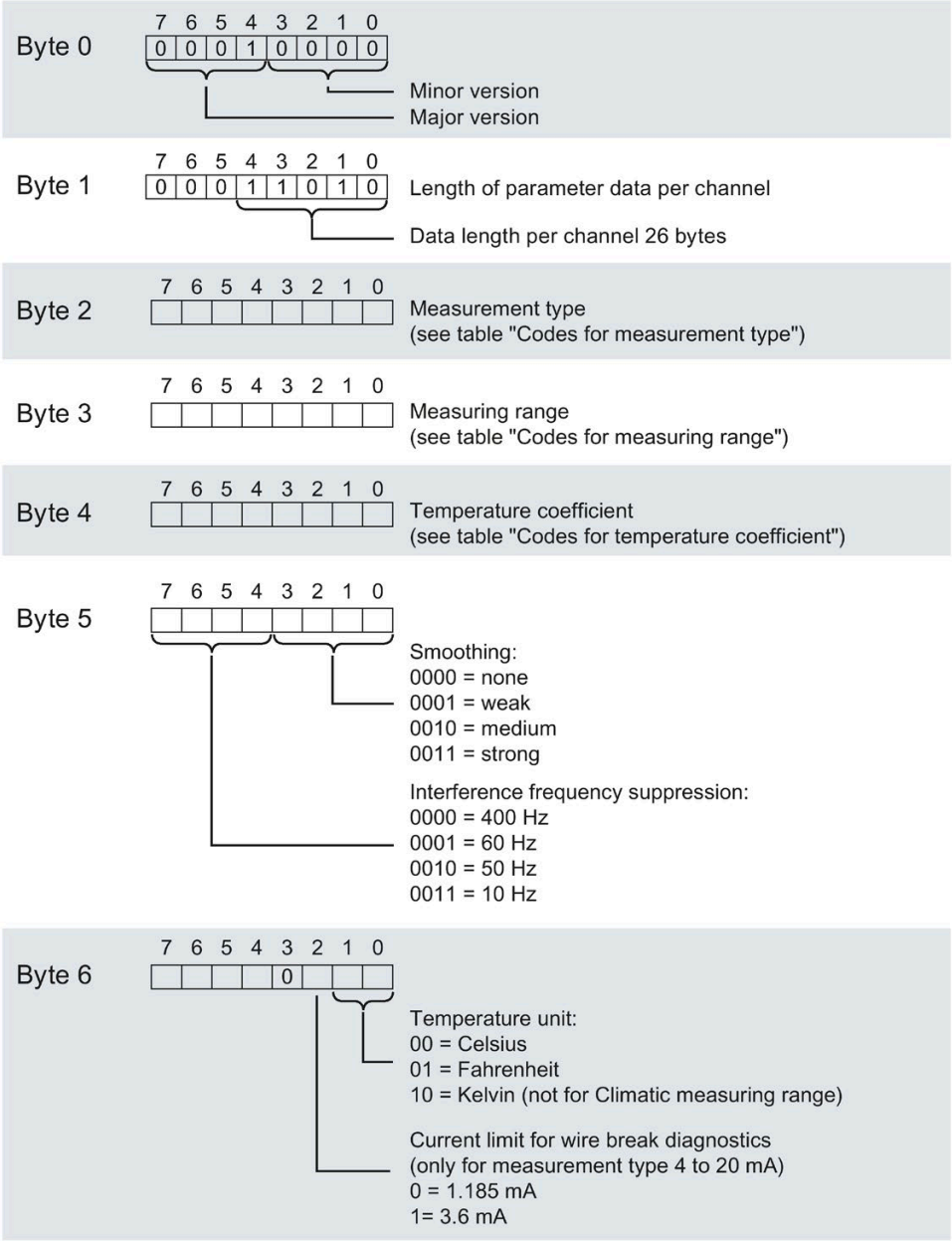

Figure B-1 Structure of data record 0: Bytes 0 to 6

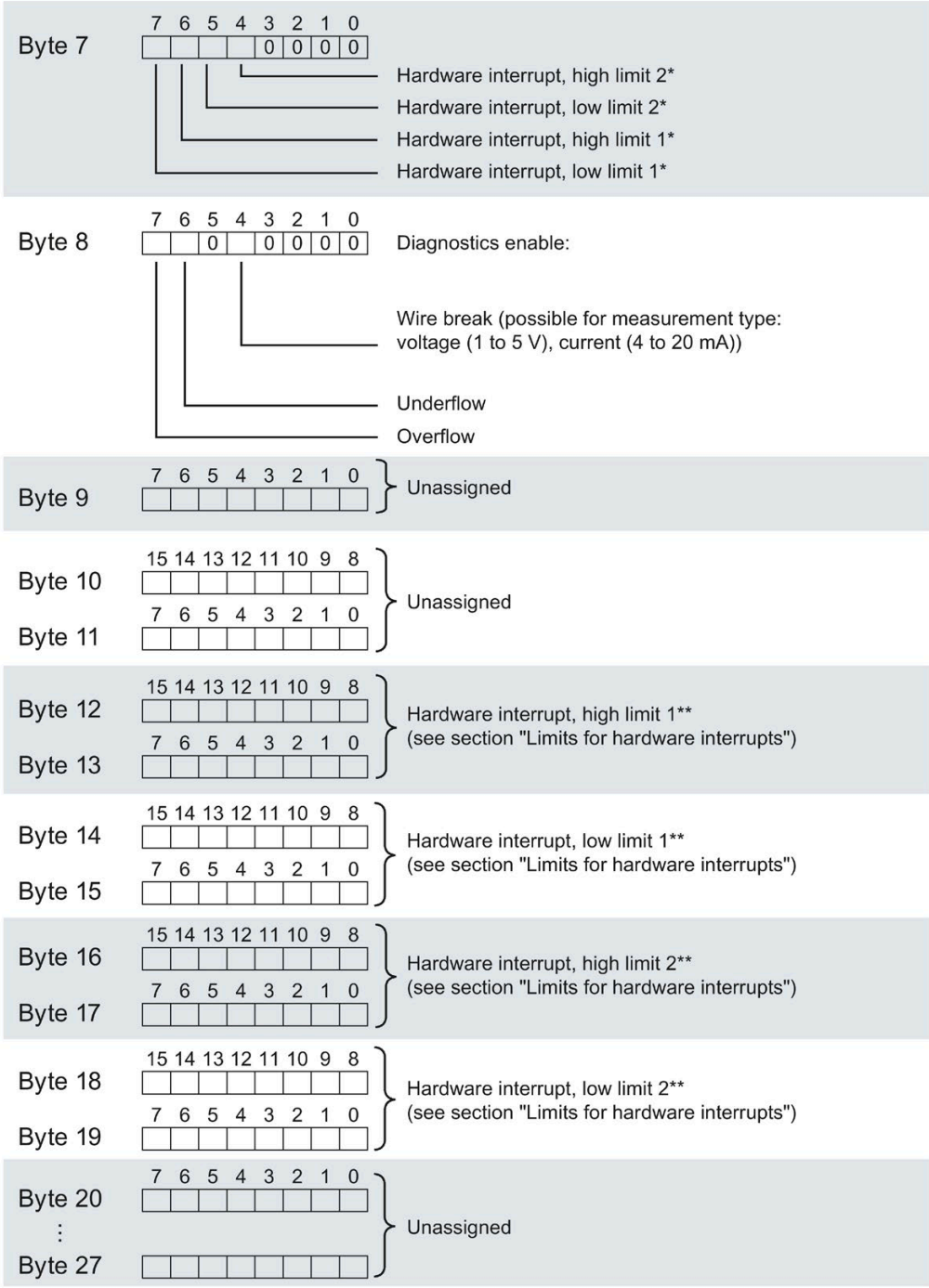

* Hardware interrupts may only be enabled via a data record if a hardware interrupt OB is assigned to the channel in STEP 7

** High limit must be greater than low limit

Figure B-2 Structure of data record 0: Bytes 7 to 27

Codes for measurement types

The following table contains all measurement types of the inputs of the analog on-board I/O with the corresponding codes. You must enter these codes in byte 2 of the data record for the corresponding channel (refer to the figure Structure of data record 0: Bytes 0 to 6).

Table B- 1 Codes for measurement type

Measurement type	Code
Deactivated	0000 0000
Voltage (valid for channels 0 to 3)	0000 0001
Current, 4-wire measuring transducer (valid for channels 0 to 3)	0000 0010
Resistance (valid for channel 4)	0000 0100
Thermal resistor linear (valid for channel 4)	0000 0111

Codes for measuring ranges

The following table contains all measuring ranges of the inputs of the analog on-board I/O with the corresponding codes. You must enter these codes in each case in byte 3 of the data record for the corresponding channel (refer to the figure Structure of data record 0: Bytes 0 to 6).

Table B- 2 Codes for measuring range

Measuring range	Code
Voltage	
±5 V	0000 1000
±10 V	0000 1001
1 to 5 V	0000 1010
0 to 10 V	0000 1011
Current, 4-wire measuring transducer	
0 to 20 mA	0000 0010
4 to 20 mA	0000 0011
±20 mA	0000 0100
Resistance	
150 Ω	0000 0001
300 Ω	0000 0010
600 Ω	0000 0011
Thermal resistor	
Pt 100 Climate	0000 0000
Ni 100 Climate	0000 0001
Pt 100 Standard	0000 0010
Ni 100 Standard	0000 0011

Codes for temperature coefficient

The following table lists all temperature coefficients for temperature measurement of the thermal resistors along with their codes. You must enter these codes in each case in byte 4 of the data record for the corresponding channel (refer to the figure Structure of data record 0: Bytes 0 to 6)

Table B- 3 Codes for temperature coefficient

Temperature coefficient	Code
Pt xxx	
0.003851	0000 0000
0.003916	0000 0001
0.003902	0000 0010
0.003920	0000 0011
Ni xxx	
0.006180	0000 1000
0.006720	0000 1001

Hardware interrupt limits

The values that can be set for hardware interrupts (high/low limit) must be within the nominal range and overrange/underrange of the relevant measuring range.

The following tables list the permitted hardware interrupt limits. The limits depend on the selected measurement type and measuring range.

Table B- 4 Voltage limits

Voltage		
±5 V, ±10 V	1 to 5 V, 0 to 10 V	
32510	32510	High limit
-32511	-4863	Low limit

Table B- 5 Current and resistance limits

Current		**Resistance**	
±20 mA	4 to 20 mA / 0 to 20 mA	(all configurable measuring ranges)	
32510	32510	32510	High limit
-32511	-4863	1	Low limit

Table B- 6 Limits for thermal resistor Pt 100 Standard and Pt 100 Climate

Thermal resistor						
Pt 100 Standard			Pt 100 Climate			
°C	°F	K	°C	°F	K	
9999	18319	12731	15499	31099	---	High limit
-2429	-4053	303	-14499	-22899	---	Low limit

Table B- 7 Limits for thermal resistor Ni 100 Standard and Ni 100 Climate

Thermal resistor						
Ni 100 Standard			Ni 100 Climate			
°C	°F	K	°C	°F	K	
2949	5629	5681	15499	31099	---	High limit
-1049	-1569	1683	-10499	-15699	---	Low limit

B.3 Structure of a data record for output channels of the analog on-board I/O

Assignment of data record and channel

The parameters for the 2 analog output channels are located in data records 64 and 65 and are assigned as follows:

- Data record 64 for channel 0
- Data record 65 for channel 1

Data record structure

The figure below shows the structure of data record 64 for channel 0 as an example. The structure is identical for channel 1. The values in byte 0 and byte 1 are fixed and must not be changed.

You enable a parameter by setting the corresponding bit to "1".

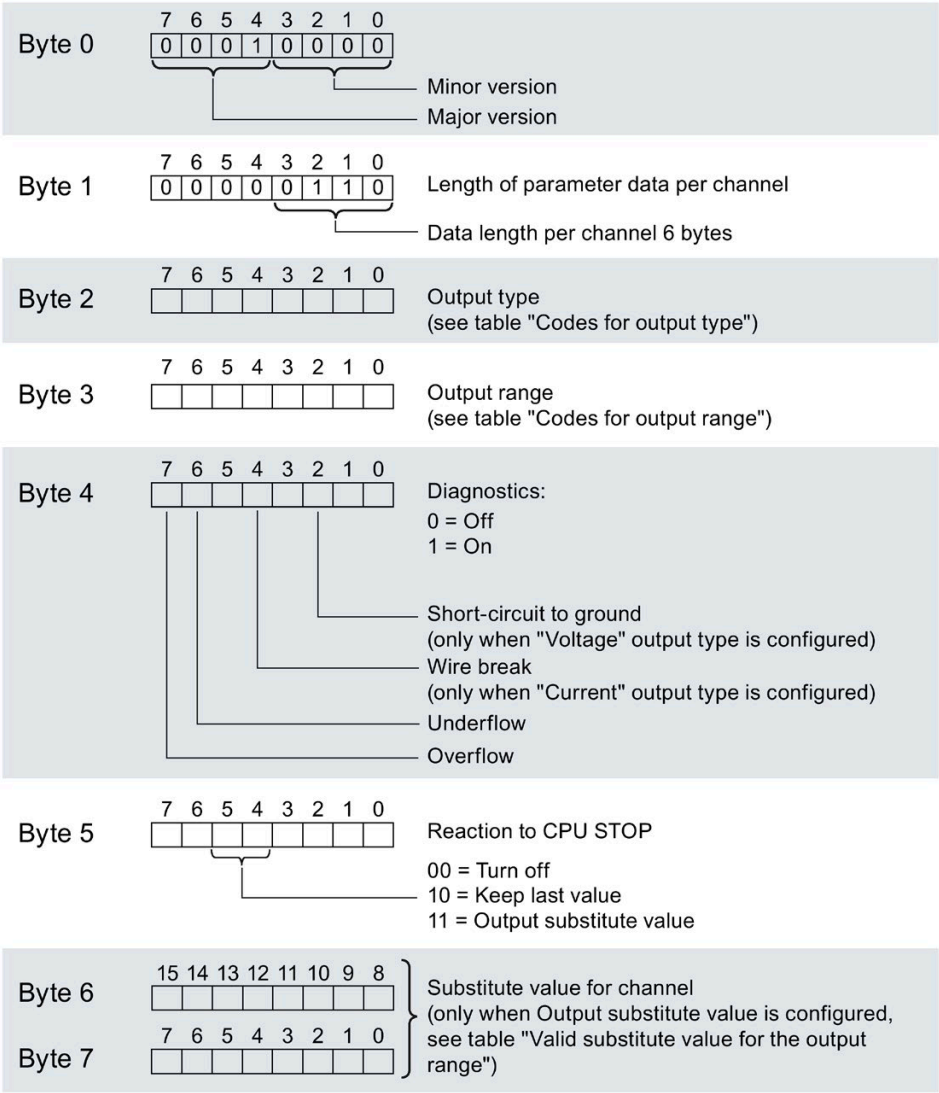

Figure B-3 Structure of data record 64: Bytes 0 to 7

Codes for output type

The following table contains all output types of the outputs of the analog on-board I/O with the corresponding codes. You must enter these codes in each case in byte 2 of the data record for the corresponding channel (see the previous figure).

Table B- 8 Codes for the output type

Output type	Code
Disabled	0000 0000
Voltage	0000 0001
Current	0000 0010

Codes for output ranges

The following table contains all output ranges for voltage and current of the outputs of the analog on-board I/O with the corresponding codes. You must enter these codes in each case in byte 3 of the corresponding data record (see previous figure).

Table B- 9 Codes for output range

Output range for voltage	Code
1 to 5 V	0000 0011
0 to 10 V	0000 0010
±10 V	0000 0000
Output range for current	**Code**
0 to 20 mA	0000 0001
4 to 20 mA	0000 0010
±20 mA	0000 0000

Permitted substitute values

The following table lists all output ranges for the permitted substitute values. You must enter these substitute values in each case in bytes 6 and 7 of the data record for the corresponding channel (see the previous figure). You can find the binary representation of the output ranges in the section Representation of output ranges (Page 203).

Table B- 10 Permitted substitute value for the output range

Output range	Permitted substitute value
±10 V	-32512 ... +32511
1 to 5 V	-6912 ... +32511
0 to 10 V	0 ... +32511
±20 mA	-32512 ... +32511
4 to 20 mA	-6912 ... +32511
0 to 20 mA	0 ... +32511

B.4 Parameter assignment and structure of the parameter data records of the digital on-board I/O

Parameter assignment in the user program

You have the option of reassigning parameters for the digital on-board I/O in RUN (for example, values for input delay of individual channels can be modified in RUN without affecting the other channels).

Changing parameters in RUN

The parameters are transferred to the digital on-board I/O via data records 0 to 15 with the WRREC instruction. The parameters set with STEP 7 (TIA Portal) are not changed in the CPU, which means the parameters set in STEP 7 (TIA Portal) will be valid again after a restart.

The parameters are only checked for plausibility after the transfer.

Output parameter STATUS

If errors occur when transferring parameters with the "WRREC" instruction, the digital on-board I/O continues operation with the previous parameter assignment. However, a corresponding error code is written to the STATUS output parameter.

You will find a description of the "WRREC" instruction and the error codes in the STEP 7 (TIA Portal) online help.

B.5 Structure of a data record for input channels of the digital on-board I/O

Assignment of data record and channel

The parameters per submodule for the 32 digital input channels are located in data records 0 to 15 and are assigned as follows:

First submodule (X11):

- Data record 0 for channel 0
- Data record 1 for channel 1
- ...
- Data record 14 for channel 14
- Data record 15 for channel 15

Second submodule (X12):

- Data record 0 for channel 0
- Data record 1 for channel 1
- ...
- Data record 14 for channel 14
- Data record 15 for channel 15

Data record structure

The example in the figure below shows the structure of data record 0 for channel 0. The structure is identical for channels 1 to 31. The values in byte 0 and byte 1 are fixed and must not be changed.

You enable a parameter by setting the corresponding bit to "1".

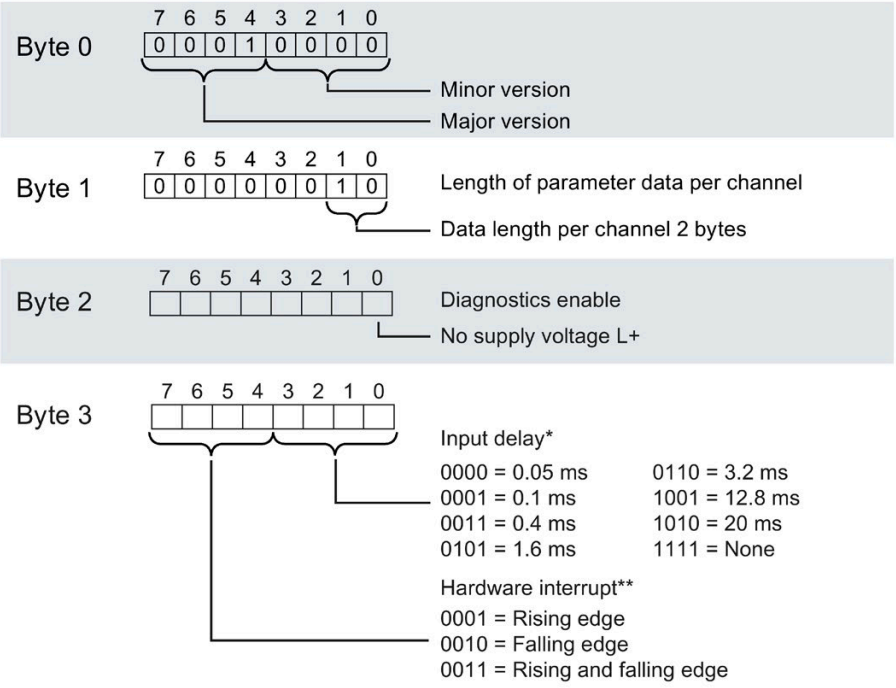

* 0.05 ms in isochronous mode (cannot be changed)

** Hardware interrupts can only be enabled via a data record if a hardware interrupt OB is assigned to the channel in STEP 7

Figure B-4 Structure of data record 0: Bytes 0 to 3

B.6 Structure of a data record for output channels of the digital on-board I/O

Assignment of data record and channel

The parameters per submodule for the 32 digital output channels are located in data records 64 to 79 and are assigned as follows:

First submodule (X11):

- Data record 64 for channel 0
- Data record 65 for channel 1
- ...
- Data record 78 for channel 14
- Data record 79 for channel 15

Second submodule (X12):

- Data record 64 for channel 0
- Data record 65 for channel 1
- ...
- Data record 78 for channel 14
- Data record 79 for channel 15

Data record structure

The example in the figure below shows the structure of data record 64 for channel 0. The structure is identical for channels 1 to 31. The values in byte 0 and byte 1 are fixed and must not be changed.

You enable a parameter by setting the corresponding bit to "1".

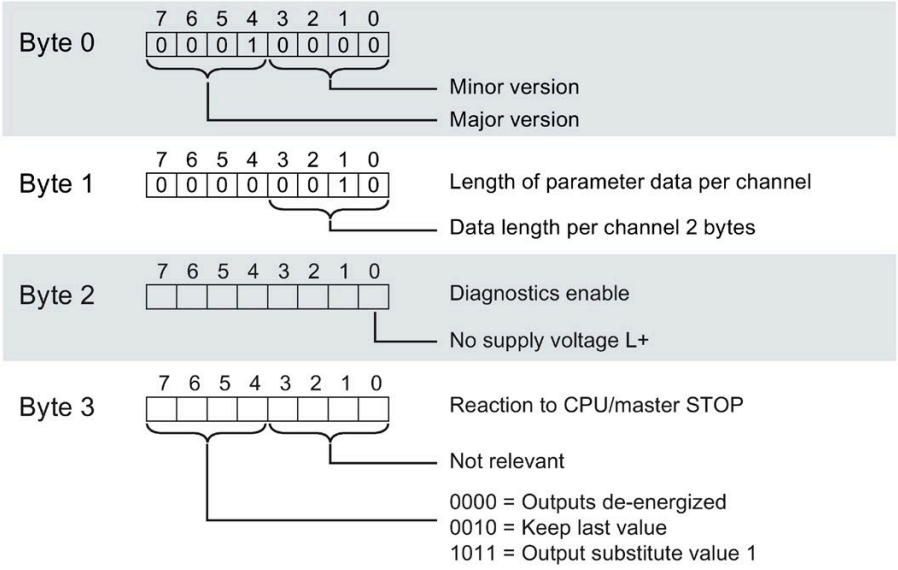

Figure B-5 Structure of data record 64: Bytes 0 to 3

B.7 Parameter data records of the high-speed counters

You can change the parameters of the High Speed Counter in RUN mode. The WRREC instruction is used to transfer the parameters to the High Speed Counter using data record 128.

If errors occur when transferring or validating parameters with the WRREC instruction, the High Speed Counter continues operation with the previous parameter assignment. The STATUS output parameter then contains a corresponding error code. If no error has occurred, the length of the data actually transferred is entered in the STATUS output parameter.

You will find a description of the "WRREC" instruction and the error codes in the STEP 7 (TIA Portal) online help.

Data record structure

The following table shows you the structure of data record 128 with the counter channel. The values in byte 0 to byte 3 are fixed and must not be changed. The value in byte 4 may only be changed by parameter reassignment and not in RUN mode.

Table B- 11 Parameter data record 128 - HSC parameter header

Bit → / Byte	7	6	5	4	3	2	1	0
0	Major Version = 1				Minor Version = 0			
1	Length of parameter data of the channel = 48							
2	Reserved = 0 [1]							
3								

[1] Reserved bits must be set to 0

Table B- 12 Parameter data record 128 - operating mode

Bit → / Byte	7	6	5	4	3	2	1	0
	Operating mode							
4	Reserved = 0 [1]				Operating mode:			
					0000_B: Deactivated			
					0001_B: Counting			
					0010_B: Measuring			
					0011 to 1111_B: Reserved			

[1] Reserved bits must be set to 0

Table B- 13 Parameter data record 128 - Basic parameters

Bit → / Byte	7	6	5	4	3	2	1	0
	Basic parameters							
5	Reserved = 0 [1]					Enable additional diagnostic interrupts[2]	Reaction to CPU STOP:	
							00B: Output substitute value	
							01B: Keep last value	
							10B: Continue operation	
							11B: Reserved	

[1] Reserved bits must be set to 0

[2] Must be set to 1 for the activation of the diagnostic interrupts "Missing supply voltage L+, "Illegal A/B signal ratio" and "Hardware interrupt lost"

Table B- 14 Parameter data record 128 - Counter inputs

Bit → / Byte	7	6	5	4	3	2	1	0
	Counter inputs							
6	Reserved = 0 [1]		Signal evaluation:		Signal type:			
			00B: Single		0000B: Pulse (A)			
			01B: Double		0001B: Pulse (A) and direction (B)			
			10B: Quadruple		0010B: Count up (A), count down (B)			
			11B: Reserved		0011B: Incremental encoder (A, B phase-shifted)			
					0100B: Incremental encoder (A, B, N)			
					0101 to 1111B: Reserved			
7	Reaction to signal N:		Invert direction	Reserved = 0 [1]	Filter frequency			
	00B: No reaction to signal N				0000B: 100 Hz			
					0001B: 200 Hz			
	01B: Synchronization at signal N				0010B: 500 Hz			
					0011B: 1 kHz			
	10B: Capture at signal N				0100B: 2 kHz			
	11B: Reserved				0101B: 5 kHz			
					0110B: 10 kHz			
					0111B: 20 kHz			
					1000B: 50 kHz			
					1001B: 100 kHz			
					1010B: Reserved			
					1011 to 1111B: Reserved			

[1] Reserved bits must be set to 0

Table B- 15 Parameter data record 128 - Hardware interrupts

Bit → / Byte	7	6	5	4	3	2	1	0
	Hardware interrupts[1]							
8	Reserved = 0 [1]	Reserved = 0 [1]	Reserved = 0 [1]	Direction reversal	Underflow (low counting limit violated)	Overflow (high counting limit violated)	Gate stop	Gate start
9	Synchronization of the counter by an external signal	New capture value available	Reserved = 0 [1]	Zero crossing	Reserved = 0 [1]	Comparison event for DQ1 occurred	Reserved = 0 [1]	Comparison event for DQ0 occurred

[1] Reserved bits must be set to 0

Table B- 16 Parameter data record 128 - Behavior DQ0/1

Bit → / Byte	7	6	5	4	3	2	1	0
	Behavior of DQ0/1							
10	Set output (DQ1):				Set output (DQ0):			
	0000_B: Use by user program				0000_B: Use by user program			
	0001_B: Counting: Between comparison value 1 and high limit; Measuring: Measured value >= Comparison value 1				0001_B: Counting: Between comparison value 0 and high limit; Measuring: Measured value >= Comparison value 0			
	0010_B: Counting: Between comparison value 1 and low limit; Measuring: Measured value <= Comparison value 1				0010_B: Counting: Between comparison value 0 and low limit; Measuring: Measured value <= Comparison value 0			
	0011_B: Counting: At comparison value 1 for one pulse duration; Measuring: Reserved				0011_B: Counting: At comparison value 0 for one pulse duration; Measuring: Reserved			
	0100_B: Between comparison value 0 and 1				0100_B: Reserved			
	0101_B: Counting: After set command from CPU until comparison value 1; Measuring: Reserved				0101_B: Counting: After set command from CPU until comparison value 0; Measuring: Reserved			
	0110_B: Counting: Reserved Measuring: Not between comparison value 0 and 1				0110 to 1111_B: Reserved			
	0111 to 1111_B: Reserved							
11	Count direction (DQ1):		Count direction (DQ0):		Reserved = 0 [1]		Substitute value for DQ1	Substitute value for DQ0
	00_B: Reserved		00_B: Reserved					
	01_B: Up		01_B: Up					
	10_B: Down		10_B: Down					
	11_B: In both directions		11_B: In both directions					

Bit → / Byte	7	6	5	4	3	2	1	0
12	Pulse duration (DQ0):							
13	WORD: Value range in ms/10: 0 to 65535_D							
14	Pulse duration (DQ1):							
15	WORD: Value range in ms/10: 0 to 65535_D							

1) Reserved bits must be set to 0

Table B- 17 Parameter data record 128 - Behavior DI0

Bit → / Byte	7	6	5	4	3	2	1	0
	Behavior of DI0							
16	Behavior of count value after Capture (DI0):	Edge selection (DI0):		Level selection (DI0):	Reserved = 0 1)	Set function of the DI (DI0):		
		00_B: Reserved				000_B: Gate start/stop (level-triggered)		
		01_B: On a rising edge		0_B: Active at high level		001_B: Gate start (edge-triggered)		
		10_B: On a falling edge				010_B: Gate stop (edge-triggered)		
	0_B: Continue counting	11_B: On rising and falling edge		1_B: Active at low level		011_B: Synchronization		
						100_B: Enable synchronization at signal N		
	1_B: Set to start value and continue counting					101_B: Capture		
						110_B: Digital input without function		
						111_B: Reserved		

1) Reserved bits must be set to 0

Table B- 18 Parameter data record 128 - Behavior DI1

Bit → / Byte	7	6	5	4	3	2	1	0
17	**Behavior of DI1**: See byte 16							
18	Reserved = 0 1)							
19	Sync option	Reserved = 0 1)			Reserved = 0 1)			
	0_B: Once							
	1_B: Periodically							

1) Reserved bits must be set to 0

Table B- 19 Parameter data record 128 - Behavior DI1

Bit → / Byte	7	6	5	4	3	2	1	0
	Values							
20-23	High counting limit: DWORD: Value range: –2147483648 to 2147483647$_D$ or 80000000 to 7FFFFFFF$_H$							
24-27	Comparison value 0: Counting mode: DWORD Value range: –2147483648 to 2147483647$_D$ or 80000000 to 7FFFFFFF$_H$; Measuring mode: REAL Floating-point number in the set unit of the measured variable							
28-31	Comparison value 1: Counting mode: DWORD Value range: –2147483648 to 2147483647$_D$: or 80000000 to 7FFFFFFF$_H$; Measuring mode: REAL Floating-point number in the set unit of the measured variable							
32-35	Start value: DWORD: Value range: –2147483648 to 2147483647$_D$ or 80000000 to 7FFFFFFF$_H$							
36-39	Low counting limit: DWORD: Value range: –2147483648 to 2147483647$_D$ or 80000000 to 7FFFFFFF$_H$							
40-43	Update time: DWORD: Value range in µs: 0 to 25000000$_D$							

Table B- 20 Parameter data record 128 - Counter behavior at limits and at gate start

Bit → / Byte	7	6	5	4	3	2	1	0
	Counter behavior at limits and at gate start							
44	Response to gate start:		Response to counting limit violation:			Reset at counting limit violation:		
	00$_B$: Set to start value		000$_B$: Stop counting			000$_B$: To other counting limit		
	01$_B$: Continue with current value		001$_B$: Continue counting			001$_B$: On start value		
	10 to 11$_B$: Reserved		010 to 111$_B$: Reserved			010 to 111$_B$: Reserved		

Table B- 21 Parameter data record 128 - Specify measured value

Bit → / Byte	7	6	5	4	3	2	1	0
	Specify measured value							
45	Reserved = 0 [1)]			Time base for velocity measurement:			Measured variable:	
				000$_B$: 1 ms			00$_B$: Frequency	
				001$_B$: 10 ms			01$_B$: Period duration	
				010$_B$: 100 ms			10$_B$: Velocity	
				011$_B$: 1 s			11$_B$: Reserved	
				100$_B$: 60 s/1 min				
				101 to 111$_B$: Reserved				

Bit → / Byte	7	6	5	4	3	2	1	0
46	Increments per unit:							
47	WORD: Value range: 1 to 65535_D							
48	Set hysteresis range: Value range: 0 to 255_D							
49	Use of HSC DI0 0_B: Not used 1_B: Used	Reserved = 0 [1)]		Selection HSC DI0 Value range (applicable if the CPU is configured with deactivated 'Front connector assignment like 1511C' setting): HSC1..3: 01000_B: Front connector X11, terminal 11 (DI8) 01001_B: Front connector X11, terminal 12 (DI9) 01010_B: Front connector X11, terminal 13 (DI10) 01011_B: Front connector X11, terminal 14 (DI11) 01100_B: Front connector X11, terminal 15 (DI12) 01101_B: Front connector X11, terminal 16 (DI13) 01110_B: Front connector X11, terminal 17 (DI14) 01111_B: Front connector X11, terminal 18 (DI15) HSC4..6: 11000_B: Front connector X12, terminal 11 (DI8) 11001_B: Front connector X12, terminal 12 (DI9) 11010_B: Front connector X12, terminal 13 (DI10) 11011_B: Front connector X12, terminal 14 (DI11) 11100_B: Front connector X12, terminal 15 (DI12) 11101_B: Front connector X12, terminal 16 (DI13) 11110_B: Front connector X12, terminal 17 (DI14) 11111_B: Front connector X12, terminal 18 (DI15) All other values: Reserved Note: If the CPU with enabled 'Front connector assignment like 1511C' setting is configured, the parameter data record definition of CPU 1511C applies. See device manual of CPU 1511C.				
50	Use of HSC DI1 0_B: Not used 1_B: Used	Reserved = 0 [1)]		Selection HSC DI1 Value range (applicable if the CPU is configured with deactivated 'Front connector assignment like 1511C' setting): HSC1..3: 01000_B: Front connector X11, terminal 11 (DI8) 01001_B: Front connector X11, terminal 12 (DI9) 01010_B: Front connector X11, terminal 13 (DI10) 01011_B: Front connector X11, terminal 14 (DI11) 01100_B: Front connector X11, terminal 15 (DI12) 01101_B: Front connector X11, terminal 16 (DI13) 01110_B: Front connector X11, terminal 17 (DI14) 01111_B: Front connector X11, terminal 18 (DI15) HSC4..6: 11000_B: Front connector X12, terminal 11 (DI8) 11001_B: Front connector X12, terminal 12 (DI9) 11010_B: Front connector X12, terminal 13 (DI10) 11011_B: Front connector X12, terminal 14 (DI11) 11100_B: Front connector X12, terminal 15 (DI12) 11101_B: Front connector X12, terminal 16 (DI13) 11110_B: Front connector X12, terminal 17 (DI14) 11111_B: Front connector X12, terminal 18 (DI15) All other values: Reserved Note: If the CPU with enabled 'Front connector assignment like 1511C' setting is configured, the parameter data record definition of CPU 1511C applies. See device manual of CPU 1511C.				

Bit → / Byte	7	6	5	4	3	2	1	0
51	Use of HSC DQ1 0B: Not used 1B: Used	Reserved = 0 [1]		Selection HSC DQ1 Value range: HSC1: 00001B: Front connector X11, terminal 22 (DQ1) 01001B: Front connector X11, terminal 32 (DQ9) HSC2: 00011B: Front connector X11, terminal 24 (DQ3) 01011B: Front connector X11, terminal 34 (DQ11) HSC3: 00100B: Front connector X11, terminal 25 (DQ4) 01100B: Front connector X11, terminal 35 (DQ12) HSC4: 00101B: Front connector X11, terminal 26 (DQ5) 01101B: Front connector X11, terminal 36 (DQ13) HSC5: 00111B: Front connector X11, terminal 28 (DQ7) 01111B: Front connector X11, terminal 38 (DQ15) HSC6: 00110B: Front connector X11, terminal 27 (DQ6) 01110B: Front connector X11, terminal 37 (DQ14) All other values: Reserved				

[1] Reserved bits must be set to 0

B.8 Parameter data records (PWM)

You have the option of reassigning the pulse width modulation parameters in RUN. The parameters are transferred with the instruction WRREC via the data record 128 to the PWM submodule.

If errors occur when transferring or validating parameters with the WRREC instruction, the module continues operation with the previous parameter assignment. The output parameter STATUS then contains a corresponding error code. If no error has occurred, the length of the data actually transferred is entered in the output parameter STATUS.

You can find a description of the "WRREC" instruction and the error codes in the STEP 7 (TIA Portal) online help.

Data record structure

The following table shows the structure of the data record 128 for the pulse width modulation. The values in byte 0 to byte 3 are fixed and must not be changed.

Table B- 22 Parameter data record 128

Bit → / Byte	7	6	5	4	3	2	1	0
0	Major Version = 1				Minor Version = 0			
1	Length of the parameter data of the channel in bytes = 12							
2	Reserved = 0 [1]							
3								
4	Current control	Dithering	High-speed output		Operating mode			
	0_B: Deactivated	0_B: Deactivated	0_B: Deactivated		0000_B: Reserved			
	1_B: Reserved	1_B: Reserved	01_B: Activated		0001_B: PWM (pulse-width modulation)			
			10_B-11_B: Reserved		0010_B: Reserved			
					0011_B: Reserved			
					0100_B: Frequency output			
					0110_B to 1110_B: Reserved			
					1111_B: Deactivated			
5	Reserved = 0 [1]			Reserved = 0 [1]		Diagnostics interrupt	Reaction to CPU STOP	
						0_B: Deactivated	00_B: DQ substitute value	
						1_B: Activated	01_B: Reserved	
							10_B: Operating mode for continuation of operation	
							11_B: Reserved	
6	Reserved = 0 [1]			Pulse output (DQA) selection Range of values for PWM1: 00000_B: Front connector X11, terminal 21 (DQ0) 01000_B: Front connector X11, terminal 31 (DQ8) Range of values for PWM2: 00010_B: Front connector X11, terminal 23 (DQ2) 01010_B: Front connector X11, terminal 33 (DQ10) Range of values for PWM3: 00100_B: Front connector X11, terminal 25 (DQ4) 01100_B: Front connector X11, terminal 35 (DQ12) Range of values for PWM4: 00110_B: Front connector X11, terminal 27 (DQ6) 01110_B: Front connector X11, terminal 37 (DQ14) All other values: Reserved				
7	Reserved = 0 [1]		Output format		Reserved = 0 [1]	Reserved = 0 [1]	Reserved = 0 [1]	Substitute value DQA
			PWM	Frequency output				0_B: 0 V
			00_B: S7 analog format	00_B: Reserved				1_B: 24 V

Bit → / Byte	7	6	5	4	3	2	1	0
			01_B: per 100 (%)	01_B: 1 Hz				
			10_B: per 1000	10_B: Reserved				
			11_B: per 10,000	11_B: Reserved				
8-11	DWORD minimum pulse duration							
	PWM: Minimum pulse duration (default = 0 µs)							
	Frequency output: Reserved							
12-15	DWORD period duration							
	PWM: Period duration Supported value range depending on configured values for "Pulse output (DQA)" and "High-speed output (0.1 A)" • for 100 kHz DQ (high-speed output activated): 10 µs to 10 000 000 µs (10 s) • for 10 kHz DQ (high-speed output deactivated): 100 µs to 10 000 000 µs (10 s) • for 100 Hz DQ (high-speed output deactivated): 10 000 µs (10 ms) to 10 000 000 µs (10 s) Default = 2 000 000 µs (2 s)							
	Frequency output: Reserved							

[1] Reserved bits must be set to 0

Analog value processing

C

C.1 Conversion method

Conversion

An integrated analog-to-digital converter converts the analog signal into a digital signal in order that the compact CPU can process the analog signal read in by an analog channel. Once the CPU has processed the digital signal, an integrated digital-to-analog converter converts the output signal into an analog current or voltage value.

Interference frequency suppression

The interference frequency suppression of the analog inputs suppresses the interference caused by the frequency of the AC voltage network used. The frequency of the AC voltage network may interfere with measured values, particularly for measurements within narrow voltage ranges.

You set the line frequency with which the plant operates (400, 60, 50 or 10 Hz) using the "Interference frequency suppression" parameter in STEP 7 (TIA Portal). The "Interference frequency suppression" parameter can only be set module-wide (for all input channels). The interference frequency suppression filters out the set interference frequency (400/60/50/10 Hz) as well as multiples of it. The selected interference frequency suppression also defines the integration time. The conversion time changes depending on the set interference frequency suppression.

For example, an interference frequency suppression of 50 Hz corresponds to an integration time of 20 ms. The analog on-board I/O supplies one measured value to the CPU every millisecond over a period of 20 ms. This measured value corresponds to the floating mean value of the last 20 measurements.

The following figure shows how this works using a 400 Hz interference frequency suppression as an example. A 400 Hz interference frequency suppression corresponds to an integration time of 2.5 ms. The analog on-board I/O supplies a measured value to the CPU every 1.25 milliseconds within the integration time.

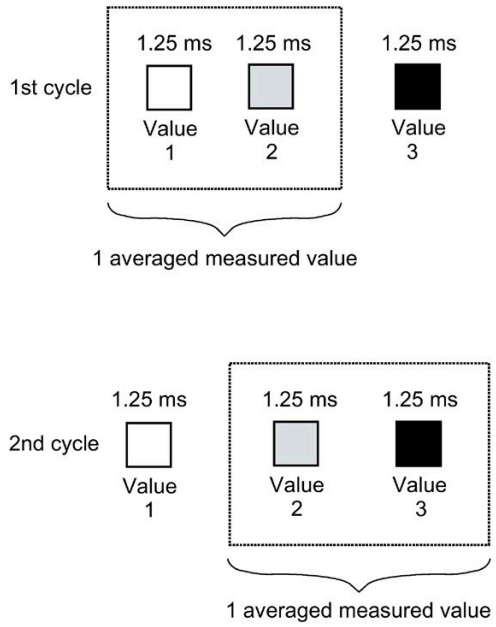

Figure C-1 Interference frequency suppression 400 Hz

The following figure shows how this works using a 60 Hz interference frequency suppression as an example. A 60 Hz interference frequency suppression corresponds to an integration time of 16.6 ms. The analog on-board I/O supplies a measured value to the CPU every 1.04 milliseconds within the integration time.

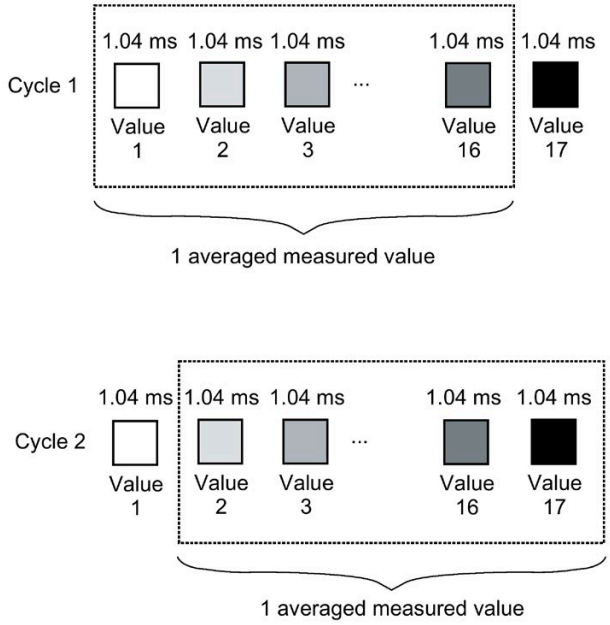

Figure C-2 Interference frequency suppression 60 Hz

The following figure shows how this works using a 50 Hz interference frequency suppression as an example. A 50 Hz interference frequency suppression corresponds to an integration time of 20 ms. The analog on-board I/O supplies a measured value to the CPU every millisecond within the integration time.

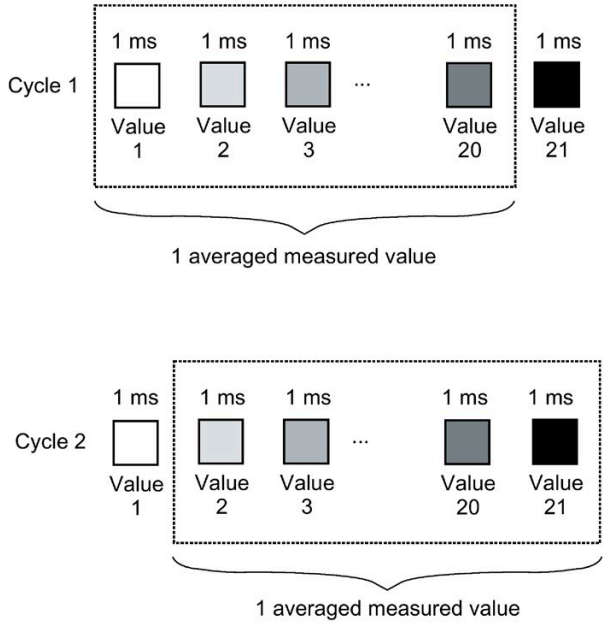

Figure C-3 Interference frequency suppression 50 Hz

The following figure shows how this works using a 10 Hz interference frequency suppression as an example. A 10 Hz interference frequency suppression corresponds to an integration time of 100 ms. The analog on-board I/O supplies a measured value to the CPU every millisecond within the integration time.

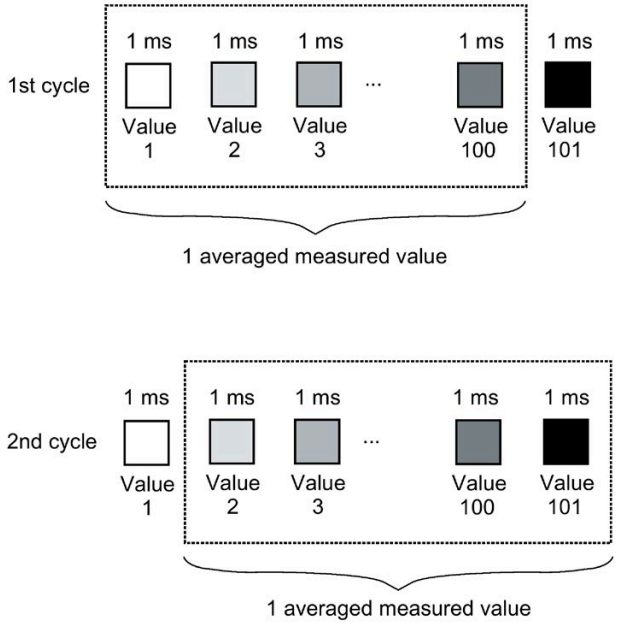

Figure C-4 Interference frequency suppression 10 Hz

The following table provides an overview of the configurable line frequencies, the integration time and the intervals within which measured values are supplied to the CPU.

Table C- 1 Overview of the configurable line frequencies

Interference frequency suppression	Integration time	Interval
400 Hz	2.5 ms	2 x 1.25 ms
60 Hz	16.6 ms	16 x 1.04 ms
50 Hz	20 ms	20 x 1 ms
10 Hz	100 ms	100 x 1 ms

Note

Basic error with an integration time of 2.5 ms.

With an integration time of 2.5 ms, the measured value is changed by the following values based on the additionally obtained basic error and noise:

- with "voltage", "current" and "resistance" by ±0.1 %
- with "Thermal resistor Pt 100 Standard" by ±0.4 K
- with "Thermal resistor Pt 100 Climatic" by ±0.3 K
- with "Thermal resistor Ni 100 Standard" by ±0.2 K
- with "Thermal resistor Ni 100 Climatic" by ±0.1 K

A detailed description of the basic and operating error is available in the function manual Analog value processing (http://support.automation.siemens.com/WW/view/en/67989094).

Smoothing

The individual measured values are smoothed by filtering. The smoothing can be set in 4 levels and channel-selective in STEP 7 (TIA Portal).

Smoothing time = Smoothing (k) x configured integration time

The following figure shows the time it takes for the smoothed analog value to reach approximately 100 % depending on the set smoothing. This is valid for all signal changes at the analog input.

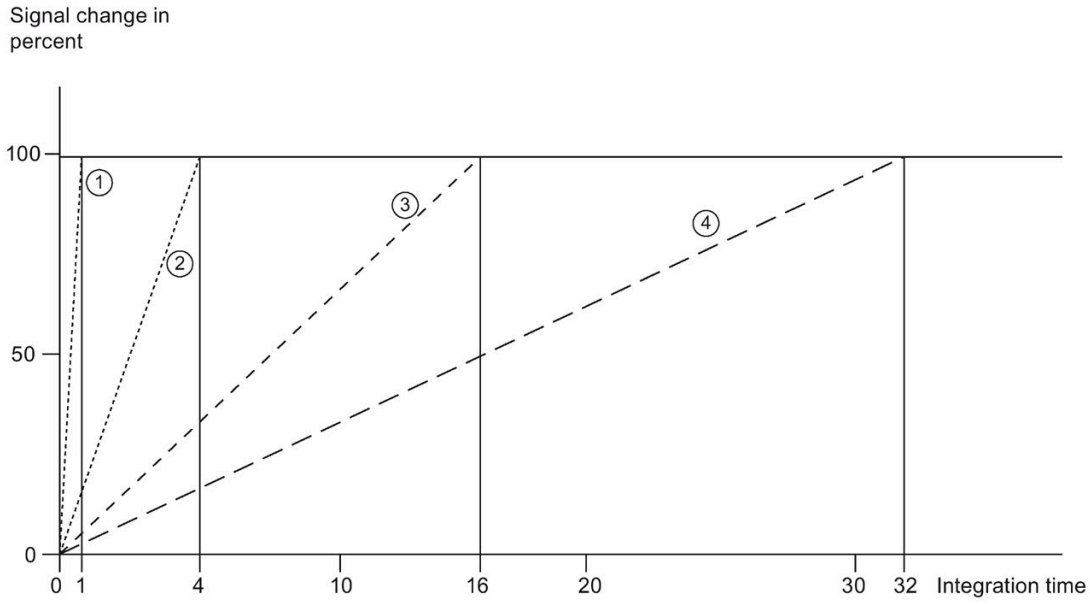

① None (smoothing = 1 x integration time)
② Weak (smoothing = 4 x integration time) *
③ Medium (smoothing = 16 x integration time) *
④ Strong (smoothing = 32 x integration time) *

* The smoothing time can increase by 1 x integration time.

Figure C-5 Smoothing time depending on the set smoothing level

The following table shows the time it takes for the smoothed analog value to reach approximately 100 % depending on the set smoothing and the set interference frequency suppression.

Table C- 2 Smoothing time depending on the set smoothing level and interference frequency suppression

Selection of the smoothing (mean value generation from scan values)	Interference frequency suppression/smoothing time			
	400 Hz	60 Hz	50 Hz	10 Hz
None	2.5 ms	16.6 ms	20 ms	100 ms
Weak	10 ms	66.4 ms	80 ms	400 ms
Medium	40 ms	265.6 ms	320 ms	1600 ms
Strong	80 ms	531.2 ms	640 ms	3200 ms

Cycle time

The cycle times (1 ms, 1.04 ms and 1.25 ms) result from the configured interference frequency suppression. The cycle time is independent of the number of configured analog channels. The values for the analog input channels are detected sequentially in each cycle.

Reference

For more information on conversion time, cycle time and conversion method, refer to the Analog value processing (http://support.automation.siemens.com/WW/view/en/67989094) function manual.

C.2 Representation of analog values

Introduction

The analog values for all measuring ranges that you can use with the analog on-board I/O are represented in this appendix.

For cross-product information on "analog value processing", refer to the Analog value processing (http://support.automation.siemens.com/WW/view/en/67989094) function manual.

Measured value resolution

Each analog value is entered left aligned into the tags. The bits marked with "x" are set to "0".

Note

This resolution does not apply to temperature values. The digitalized temperature values are the result of a conversion in the analog on-board I/O.

Table C- 3 Resolution of the analog values

Resolution in bits including sign	Values		Analog value	
	Decimal	Hexadecimal	High byte	Low byte
16	1	1H	Sign 0 0 0 0 0 0 0	0 0 0 0 0 0 0 1

C.3 Representation of input ranges

The tables below set out the digitized representation of the input ranges separately for bipolar and unipolar input ranges. The resolution is 16 bits.

Table C- 4 Bipolar input ranges

Dec. value	Measured value in %	Data word																Range
		2^{15}	2^{14}	2^{13}	2^{12}	2^{11}	2^{10}	2^{9}	2^{8}	2^{7}	2^{6}	2^{5}	2^{4}	2^{3}	2^{2}	2^{1}	2^{0}	
32767	>117.589	0	1	1	1	1	1	1	1	1	1	1	1	1	1	1	1	Overflow
32511	117.589	0	1	1	1	1	1	1	0	1	1	1	1	1	1	1	1	Overrange
27649	100.004	0	1	1	0	1	1	0	0	0	0	0	0	0	0	0	1	
27648	100.000	0	1	1	0	1	1	0	0	0	0	0	0	0	0	0	0	Nominal range
1	0.003617	0	0	0	0	0	0	0	0	0	0	0	0	0	0	0	1	
0	0.000	0	0	0	0	0	0	0	0	0	0	0	0	0	0	0	0	
-1	-0.003617	1	1	1	1	1	1	1	1	1	1	1	1	1	1	1	1	
-27648	-100.000	1	0	0	1	0	1	0	0	0	0	0	0	0	0	0	0	
-27649	-100.004	1	0	0	1	0	0	1	1	1	1	1	1	1	1	1	1	Underrange
-32512	-117.593	1	0	0	0	0	0	0	1	0	0	0	0	0	0	0	0	
-32768	<-117.593	1	0	0	0	0	0	0	0	0	0	0	0	0	0	0	0	Underflow

Table C- 5 Unipolar input ranges

Dec. value	Measured value in %	Data word																Range
		2^{15}	2^{14}	2^{13}	2^{12}	2^{11}	2^{10}	2^{9}	2^{8}	2^{7}	2^{6}	2^{5}	2^{4}	2^{3}	2^{2}	2^{1}	2^{0}	
32767	>117.589	0	1	1	1	1	1	1	1	1	1	1	1	1	1	1	1	Overflow
32511	117.589	0	1	1	1	1	1	1	0	1	1	1	1	1	1	1	1	Overrange
27649	100.004	0	1	1	0	1	1	0	0	0	0	0	0	0	0	0	1	
27648	100.000	0	1	1	0	1	1	0	0	0	0	0	0	0	0	0	0	Nominal range
1	0.003617	0	0	0	0	0	0	0	0	0	0	0	0	0	0	0	1	
0	0.000	0	0	0	0	0	0	0	0	0	0	0	0	0	0	0	0	
-1	-0.003617	1	1	1	1	1	1	1	1	1	1	1	1	1	1	1	1	Underrange
-4864	-17.593	1	1	1	0	1	1	0	1	0	0	0	0	0	0	0	0	
-32768	<-17.593	1	0	0	0	0	0	0	0	0	0	0	0	0	0	0	0	Underflow

C.3.1 Representation of analog values in voltage measuring ranges

The following tables list the decimal and hexadecimal values (codes) of the possible voltage measuring ranges.

Table C- 6 Voltage measuring ranges ±10 V, ±5 V

Values		Voltage measuring range		Range
dec.	**hex.**	**±10 V**	**±5 V**	
32767	7FFF	>11.759 V	>5.879 V	Overflow
32511	7EFF	11.759 V	5.879 V	Overrange
27649	6C01			
27648	6C00	10 V	5 V	Nominal range
20736	5100	7.5 V	3.75 V	
1	1	361.7 µV	180.8 µV	
0	0	0 V	0 V	
-1	FFFF			
-20736	AF00	-7.5 V	-3.75 V	
-27648	9400	-10 V	-5 V	
-27649	93FF			Underrange
-32512	8100	-11.759 V	-5.879 V	
-32768	8000	<-11.759 V	<-5.879 V	Underflow

Table C- 7 Voltage measuring range 1 to 5 V, 0 to 10 V

Values		Voltage measuring range		Range
dec.	**hex.**	**1 to 5 V**	**0 to 10 V**	
32767	7FFF	>5.704 V	>11.759 V	Overflow
32511	7EFF	5.704 V	11.759 V	Overrange
27649	6C01			
27648	6C00	5 V	10.0 V	Nominal range
20736	5100	4 V	7.5 V	
1	1	1 V + 144.7 µV	361.7 µV	
0	0	1 V	0 V	
-1	FFFF			Underrange
-4864	ED00	0.296 V	-1.759 V	
-32768	8000	< 0.296 V	< -1.759 V	Underflow

C.3.2 Representation of analog values in current measuring ranges

The following tables list the decimal and hexadecimal values (codes) of the possible current measuring ranges.

Table C- 8 Current measuring range ±20 mA

Values		Current measuring range	
dec.	**hex.**	**±20 mA**	
32767	7FFF	>23.52 mA	Overflow
32511	7EFF	23.52 mA	Overrange
27649	6C01		
27648	6C00	20 mA	Nominal range
20736	5100	15 mA	
1	1	723.4 nA	
0	0	0 mA	
-1	FFFF		
-20736	AF00	-15 mA	
-27648	9400	-20 mA	
-27649	93FF		Underrange
-32512	8100	-23.52 mA	
-32768	8000	<-23.52 mA	Underflow

Table C- 9 Current measuring ranges 0 to 20 mA and 4 to 20 mA

Values		Current measuring range		
dec.	**hex.**	**0 to 20 mA**	**4 to 20 mA**	
32767	7FFF	>23.52 mA	>22.81 mA	Overflow
32511	7EFF	23.52 mA	22.81 mA	Overrange
27649	6C01			
27648	6C00	20 mA	20 mA	Nominal range
20736	5100	15 mA	16 mA	
1	1	723.4 nA	4 mA + 578.7 nA	
0	0	0 mA	4 mA	
-1	FFFF			Underrange
-4864	ED00	-3.52 mA	1.185 mA	
-32768	8000	<-3.52 mA	<1.185 mA	Underflow

C.3.3 Representation of the analog values of resistance-type sensors/resistance-type thermometers

The following tables list the decimal and hexadecimal values (codes) of the possible resistance-type sensor ranges.

Table C- 10 Resistance-type sensors of 150 Ω, 300 Ω and 600 Ω

Values		Resistance-type sensor range			
dec.	**hex.**	**150 Ω**	**300 Ω**	**600 Ω**	
32767	7FFF	>176.38 Ω	>352.77 Ω	>705.53 Ω	Overflow
32511	7EFF	176.38 Ω	352.77 Ω	705.53 Ω	Overrange
27649	6C01				
27648	6C00	150 Ω	300 Ω	600 Ω	Nominal range
20736	5100	112.5 Ω	225 Ω	450 Ω	
1	1	5.43 mΩ	10.85 mΩ	21.70 mΩ	
0	0	0 Ω	0 Ω	0 Ω	

Table C- 11 Resistance-type thermometer Pt 100 Standard

Pt 100 Standard in °C (1 digit = 0.1°C)	**Values**		**Pt 100 Standard in °F (1 digit = 0.1 °F)**	**Values**		**Pt 100 Standard in K (1 digit = 0.1 K)**	**Values**		**Range**
	dec.	**hex.**		**dec.**	**hex.**		**dec.**	**hex.**	
> 1000.0	32767	7FFF	> 1832.0	32767	7FFF	> 1273.2	32767	7FFF	Overflow
1000.0 : 850.1	10000 : 8501	2710 : 2135	1832.0 : 1562.1	18320 : 15621	4790 : 3D05	1273.2 : 1123.3	12732 : 11233	31BC : 2BE1	Overrange
850.0 : -200.0	8500 : -2000	2134 : F830	1562.0 : -328.0	15620 : -3280	3D04 : F330	1123.2 : 73.2	11232 : 732	2BE0 : 2DC	Nominal range
-200.1 : -243.0	-2001 : -2430	F82F : F682	-328.1 : -405.4	-3281 : -4054	F32F : F02A	73.1 : 30.2	731 : 302	2DB : 12E	Underrange
< -243.0	-32768	8000	< -405.4	-32768	8000	< 30.2	32768	8000	Underflow

Table C- 12 Resistance-type thermometer Pt 100 Climate

Pt 100 Climate/ in °C (1 digit = 0.01 °C)	Values		Pt 100 Climate/ in °F (1 digit = 0.01 °F)	Values		Range
	dec.	hex.		dec.	hex.	
> 155.00	32767	7FFF	> 311.00	32767	7FFF	Overflow
155.00 : 130.01	15500 : 13001	3C8C : 32C9	311.00 : 266.01	31100 : 26601	797C : 67E9	Overrange
130.00 : -120.00	13000 : -12000	32C8 : D120	266.00 : -184.00	26600 : -18400	67E8 : B820	Nominal range
-120.01 : -145.00	-12001 : -14500	D11F : C75C	-184.01 : -229.00	-18401 : -22900	B81F : A68C	Underrange
< -145.00	-32768	8000	< -229.00	-32768	8000	Underflow

Table C- 13 Resistance-type thermometer Ni 100 standard

Ni 100 Standard in °C (1 digit = 0.1 °C)	Values		Ni 100 Standard in °F (1 digit = 0.1 °F)	Values		Ni 100 Standard in K (1 digit = 0.1 K)	Values		Range
	dec.	hex.		dec.	hex.		dec.	hex.	
> 295.0	32767	7FFF	> 563.0	32767	7FFF	> 568.2	32767	7FFF	Overflow
295.0 : 250.1	2950 : 2501	B86 : 9C5	563.0 : 482.1	5630 : 4821	15FE : 12D5	568.2 : 523.3	5682 : 5233	1632 : 1471	Overrange
250.0 : -60.0	2500 : -600	9C4 : FDA8	482.0 : -76.0	4820 : -760	12D4 : FD08	523.2 : 213.2	5232 : 2132	1470 : 854	Nominal range
-60.1 : -105.0	-601 : -1050	FDA7 : FBE6	-76.1 : -157.0	-761 : -1570	FD07 : F9DE	213.1 : 168.2	2131 : 1682	853 : 692	Underrange
< -105.0	-32768	8000	< -157.0	-32768	8000	< 168.2	32768	8000	Underflow

Table C- 14 Resistance-type thermometer Ni 100 Climate

Ni 100 Climate in °C (1 digit = 0.01 °C)	Values		Ni 100 Climate in °F (1 digit = 0.01 °F)	Values		Range
	dec.	hex.		dec.	hex.	
> 155.00	32767	7FFF	> 311.00	32767	7FFF	Overflow
155.00 : 130.01	15500 : 13001	3C8C : 32C9	311.00 : 266.01	31100 : 26601	797C : 67E9	Overrange
130.00 : -60.00	13000 : -6000	32C8 : E890	266.00 : -76.00	26600 : -7600	67E8 : E250	Nominal range
-60.01 : -105.00	-6001 : -10500	E88F : D6FC	-76.01 : -157.00	-7601 : -15700	E24F : C2AC	Underrange
< - 105.00	-32768	8000	< - 157.00	-32768	8000	Underflow

C.3.4 Measured values for wire break diagnostics

Measured values for "Wire break" diagnostics as a function of diagnostics enables

With suitable parameter assignment, events that occur trigger a diagnostics entry and a diagnostics interrupt.

Table C- 15 Measured values for wire break diagnostics

Format	Parameter assignment	Measured values		Explanation
S7	• "Wire break" diagnostics enabled • "Overflow/Underflow" diagnostics enabled or disabled ("Wire break" diagnostics has a higher priority than "Overflow/Underflow" diagnostics)	32767	$7FFF_H$	"Wire break" or "Cable break" diagnostics alarm
	• "Wire break" diagnostics disabled • "Overflow/Underflow" diagnostics enabled	-32767	8000_H	• Measured value after leaving the under-range • Diagnostics alarm "Low limit" violated
	• "Wire break" diagnostics disabled • "Overflow/Underflow" diagnostics disabled	-32767	8000_H	Measured value after leaving the underrange

C.4 Representation of output ranges

The tables below set out the digitalized representation of the output ranges separately for bipolar and unipolar ranges. The resolution is 16 bits.

Table C- 16 Bipolar output ranges

Dec. value	Output value in %	Data word																Range
		2^{15}	2^{14}	2^{13}	2^{12}	2^{11}	2^{10}	2^9	2^8	2^7	2^6	2^5	2^4	2^3	2^2	2^1	2^0	
32511	117.589	0	1	1	1	1	1	1	0	1	1	1	1	1	1	1	1	Maximum output value*
32511	117.589	0	1	1	1	1	1	1	0	1	1	1	1	1	1	1	1	Overrange
27649	100.004	0	1	1	0	1	1	0	0	0	0	0	0	0	0	0	1	
27648	100.000	0	1	1	0	1	1	0	0	0	0	0	0	0	0	0	0	Nominal range
1	0.003617	0	0	0	0	0	0	0	0	0	0	0	0	0	0	0	1	
0	0.000	0	0	0	0	0	0	0	0	0	0	0	0	0	0	0	0	
-1	-0.003617	1	1	1	1	1	1	1	1	1	1	1	1	1	1	1	1	
-27648	-100.000	1	0	0	1	0	1	0	0	0	0	0	0	0	0	0	0	
-27649	-100.004	1	0	0	1	0	0	1	1	1	1	1	1	1	1	1	1	Underrange
-32512	-117.593	1	0	0	0	0	0	0	1	0	0	0	0	0	0	0	0	
-32512	-117.593	1	0	0	0	0	0	0	1	0	0	0	0	0	0	0	0	Minimum output value**

* When values > 32511 are specified, the output value is limited to 117.589%.

** When values < -32512 are specified, the output value is limited to -117.593%.

Table C- 17 Unipolar output ranges

Dec. value	Output value in %	Data word																Range
		2^{15}	2^{14}	2^{13}	2^{12}	2^{11}	2^{10}	2^9	2^8	2^7	2^6	2^5	2^4	2^3	2^2	2^1	2^0	
32511	117.589	0	1	1	1	1	1	1	1	x	x	x	x	x	x	x	x	Maximum output value*
32511	117.589	0	1	1	1	1	1	1	0	1	1	1	1	1	1	1	1	Overrange
27649	100.004	0	1	1	0	1	1	0	0	0	0	0	0	0	0	0	1	
27648	100.000	0	1	1	0	1	1	0	0	0	0	0	0	0	0	0	0	Nominal range
1	0.003617	0	0	0	0	0	0	0	0	0	0	0	0	0	0	0	1	
0	0.000	0	0	0	0	0	0	0	0	0	0	0	0	0	0	0	0	
0	0	0	0	0	0	0	0	0	0	0	0	0	0	0	0	0	0	Minimum output value**

* When values > 32511 are specified, the output value is limited to 117.589%.

** When values < 0 are specified, the output value is limited to 0%.

C.4.1 Representation of analog values in the voltage output ranges

The tables below list the decimal and hexadecimal values (codes) of the possible voltage output ranges.

Table C- 18 Voltage output range ±10 V

Values			Voltage output range	Range
	dec.	**hex.**	**±10 V**	
>117.589%	>32511	>7EFF	11.76 V	Maximum output value
117.589%	32511	7EFF	11.76 V	Overrange
	27649	6C01		
100%	27648	6C00	10 V	Nominal range
75%	20736	5100	7.5 V	
0.003617%	1	1	361.7 µV	
0%	0	0	0 V	
	-1	FFFF	-361.7 µV	
-75%	-20736	AF00	-7.5 V	
-100%	-27648	9400	-10 V	
	-27649	93FF		Underrange
-117.593%	-32512	8100	-11.76 V	
<-117.593%	<-32512	< 8100	-11.76 V	Minimum output value

Table C- 19 Voltage output range 0 V to 10 V

Values			Voltage output range	Range
	dec.	**hex.**	**0 to 10 V**	
>117.589%	>32511	>7EFF	11.76 V	Maximum output value
117.589%	32511	7EFF	11.76 V	Overrange
	27649	6C01		
100%	27648	6C00	10 V	Nominal range
75%	20736	5100	7.5 V	
0.003617%	1	1	361.7 µV	
0%	0	0	0 V	
<0%	<0	<0	0 V	Minimum output value

Table C- 20 Voltage output range 1 V to 5 V

Values			Voltage output range	Range
	dec.	hex.	1 to 5 V	
>117.589%	>32511	>7EFF	5.70 V	Maximum output value
117.589%	32511	7EFF	5.70 V	Overrange
	27649	6C01		
100%	27648	6C00	5 V	Nominal range
75%	20736	5100	4 V	
0.003617%	1	1	1 V +144.7 µV	
0%	0	0	1 V	
	-1	FFFF	1 V -144.7 µV	Underrange
-25%	-6912	E500	0 V	
<-25%	<-6912	<E500	0 V	Minimum output value

C.4.2 Representation of analog values in the current output ranges

The tables below list the decimal and hexadecimal values (codes) of the possible current output ranges.

Table C- 21 Current output range ±20 mA

Values			Current output range	Range
	dec.	hex.	±20 mA	
>117.589%	>32511	>7EFF	23.52 mA	Maximum output value
117.589%	32511	7EFF	23.52 mA	Overrange
	27649	6C01		
100%	27648	6C00	20 mA	Nominal range
75%	20736	5100	15 mA	
0.003617%	1	1	723.4 mA	
0%	0	0	0 mA	
	-1	FFFF	-723.4 mA	
-75%	-20736	AF00	-15 mA	
-100%	-27648	9400	-20 mA	
	-27649	93FF		Underrange
-117.593%	-32512	8100	-23.52 mA	
<-117.593%	<-32512	<8100	-23.52 mA	Minimum output value

Table C- 22 Current output range 0 to 20 mA

Values			Current output range	Range
	dec.	**hex.**	**0 to 20 mA**	
>117.589%	>32511	>7EFF	23.52 mA	Maximum output value
117.589%	32511	7EFF	23.52 mA	Overrange
	27649	6C01		
100%	27648	6C00	20 mA	Nominal range
75%	20736	5100	15 mA	
0.003617%	1	1	723.4 mA	
0%	0	0	0 mA	
<0%	<0	<0	0 mA	Minimum output value

Table C- 23 Current output range 4 to 20 mA

Values			Current output range	Range
	dec.	**hex.**	**4 to 20 mA**	
>117.589%	>32511	>7EFF	22.81 mA	Maximum output value
117.589%	32511	7EFF	22.81 mA	Overrange
	27649	6C01		
100%	27648	6C00	20 mA	Nominal range
75%	20736	5100	16 mA	
0.003617%	1	1	4 mA	
0%	0	0	4 mA	
	-1	FFFF		Underrange
-25%	-6912	E500	0 mA	
<-25%	<-6912	<E500	0 mA	Minimum output value

SIEMENS

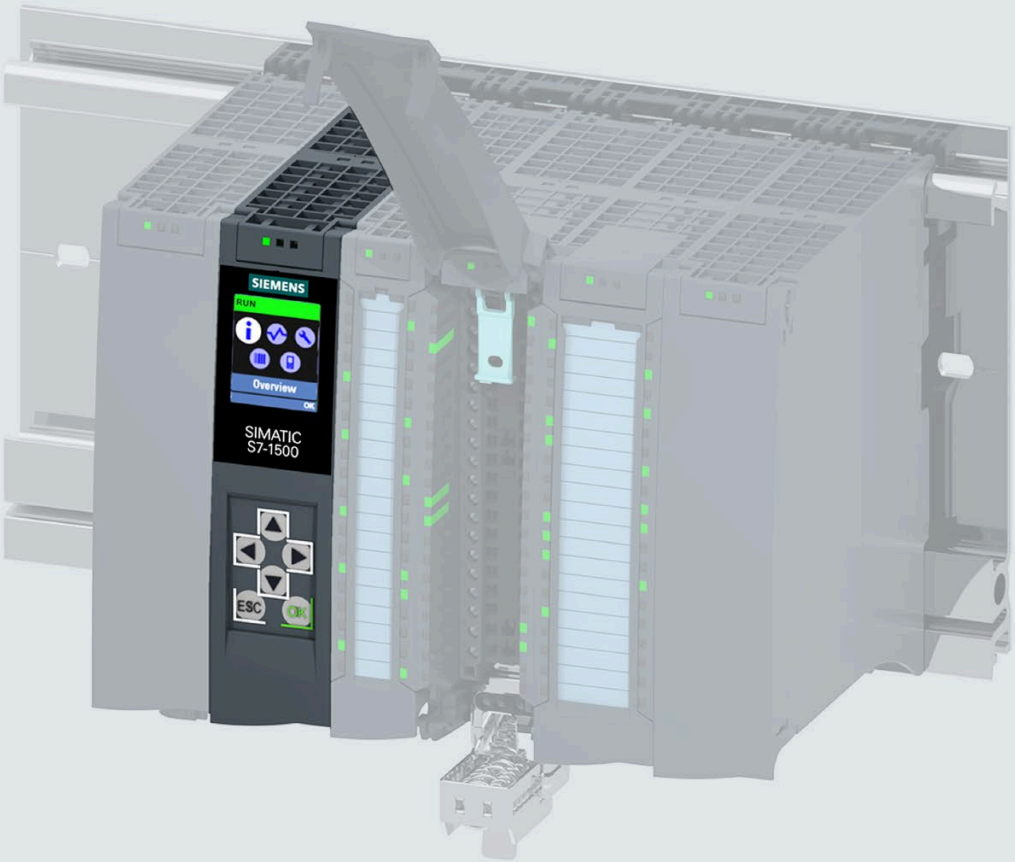

Manual

SIMATIC

S7-1500

CPU 1513-1 PN (6ES7513-1AL02-0AB0)

Edition 05/2021

support.industry.siemens.com

SIEMENS

SIMATIC

S7-1500
CPU 1513-1 PN
(6ES7513-1AL02-0AB0)

Equipment Manual

Preface

S7-1500 / ET 200MP Documentation Guide 1

Product overview 2

Connecting up 3

Interrupts, error messages, diagnostics and system alarms 4

Technical specifications 5

Dimensional drawing A

05/2021

A5E40881673-AB

Legal information

Warning notice system

This manual contains notices you have to observe in order to ensure your personal safety, as well as to prevent damage to property. The notices referring to your personal safety are highlighted in the manual by a safety alert symbol, notices referring only to property damage have no safety alert symbol. These notices shown below are graded according to the degree of danger.

⚠ DANGER
indicates that death or severe personal injury **will** result if proper precautions are not taken.

⚠ WARNING
indicates that death or severe personal injury **may** result if proper precautions are not taken.

⚠ CAUTION
indicates that minor personal injury can result if proper precautions are not taken.

NOTICE
indicates that property damage can result if proper precautions are not taken.

If more than one degree of danger is present, the warning notice representing the highest degree of danger will be used. A notice warning of injury to persons with a safety alert symbol may also include a warning relating to property damage.

Qualified Personnel

The product/system described in this documentation may be operated only by **personnel qualified** for the specific task in accordance with the relevant documentation, in particular its warning notices and safety instructions. Qualified personnel are those who, based on their training and experience, are capable of identifying risks and avoiding potential hazards when working with these products/systems.

Proper use of Siemens products

Note the following:

⚠ WARNING
Siemens products may only be used for the applications described in the catalog and in the relevant technical documentation. If products and components from other manufacturers are used, these must be recommended or approved by Siemens. Proper transport, storage, installation, assembly, commissioning, operation and maintenance are required to ensure that the products operate safely and without any problems. The permissible ambient conditions must be complied with. The information in the relevant documentation must be observed.

Trademarks

All names identified by ® are registered trademarks of Siemens AG. The remaining trademarks in this publication may be trademarks whose use by third parties for their own purposes could violate the rights of the owner.

Disclaimer of Liability

We have reviewed the contents of this publication to ensure consistency with the hardware and software described. Since variance cannot be precluded entirely, we cannot guarantee full consistency. However, the information in this publication is reviewed regularly and any necessary corrections are included in subsequent editions.

Siemens AG
Digital Industries
Postfach 48 48
90026 NÜRNBERG
GERMANY

A5E40881673-AB
Ⓟ 05/2021 Subject to change

Copyright © Siemens AG 2017 - 2021.
All rights reserved

Preface

Purpose of the documentation

This manual supplements the system manual of the S7-1500 automation system/ ET 200MP distributed I/O system as well as the function manuals. This manual contains a description of the module-specific information. The system-related functions are described in the system manual. All system-spanning functions are described in the function manuals.

The information provided in this manual and the system manual enables you to commission the CPU 1513-1 PN.

Conventions

STEP 7: In this documentation, "STEP 7" is used as a synonym for all versions of the configuration and programming software "STEP 7 (TIA Portal)".

Please also observe notes marked as follows:

Note

A note contains important information on the product described in the documentation, on the handling of the product or on the section of the documentation to which particular attention should be paid.

Security information

Siemens provides products and solutions with industrial security functions that support the secure operation of plants, systems, machines and networks.

In order to protect plants, systems, machines and networks against cyber threats, it is necessary to implement – and continuously maintain – a holistic, state-of-the-art industrial security concept. Siemens' products and solutions constitute one element of such a concept.

Customers are responsible for preventing unauthorized access to their plants, systems, machines and networks. Such systems, machines and components should only be connected to an enterprise network or the internet if and to the extent such a connection is necessary and only when appropriate security measures (e.g. firewalls and/or network segmentation) are in place.

For additional information on industrial security measures that may be implemented, please visit (https://www.siemens.com/industrialsecurity).

Siemens' products and solutions undergo continuous development to make them more secure. Siemens strongly recommends that product updates are applied as soon as they are available and that the latest product versions are used. Use of product versions that are no longer supported, and failure to apply the latest updates may increase customers' exposure to cyber threats.

To stay informed about product updates, subscribe to the Siemens Industrial Security RSS Feed visit (https://www.siemens.com/industrialsecurity).

Siemens Industry Online Support

You can find current information on the following topics quickly and easily here:

- **Product support**

  All the information and extensive know-how on your product, technical specifications, FAQs, certificates, downloads, and manuals.

- **Application examples**

  Tools and examples to solve your automation tasks – as well as function blocks, performance information and videos.

- **Services**

  Information about Industry Services, Field Services, Technical Support, spare parts and training offers.

- **Forums**

  For answers and solutions concerning automation technology.

- **mySupport**

  Your personal working area in Industry Online Support for messages, support queries, and configurable documents.

This information is provided by the Siemens Industry Online Support in the Internet (https://support.industry.siemens.com).

Industry Mall

The Industry Mall is the catalog and order system of Siemens AG for automation and drive solutions on the basis of Totally Integrated Automation (TIA) and Totally Integrated Power (TIP).

Catalogs for all the products in automation and drives are available on the Internet (https://mall.industry.siemens.com).

Table of contents

Preface **3**

1 S7-1500 / ET 200MP Documentation Guide **6**

2 Product overview **8**

2.1 New functions 8

2.2 Area of application of the SIMATIC S7-1500 CPUs 11

2.3 Hardware properties 19

2.4 Firmware functions 21

2.5 Operating and display elements 24

2.5.1 Front view of the CPU with closed front panel 24

2.5.2 Front view of the CPU without front panel and view from below 26

2.5.3 Rear view of the CPU 27

2.6 Operating mode buttons 28

3 Connecting up **29**

4 Interrupts, error messages, diagnostics and system alarms **33**

4.1 Status and error display of the CPU 33

5 Technical specifications **37**

A Dimensional drawing **49**

S7-1500 / ET 200MP Documentation Guide 1

The documentation for the SIMATIC S7-1500 automation system and the SIMATIC ET 200MP distributed I/O system is arranged into three areas.
This arrangement enables you to access the specific content you require.

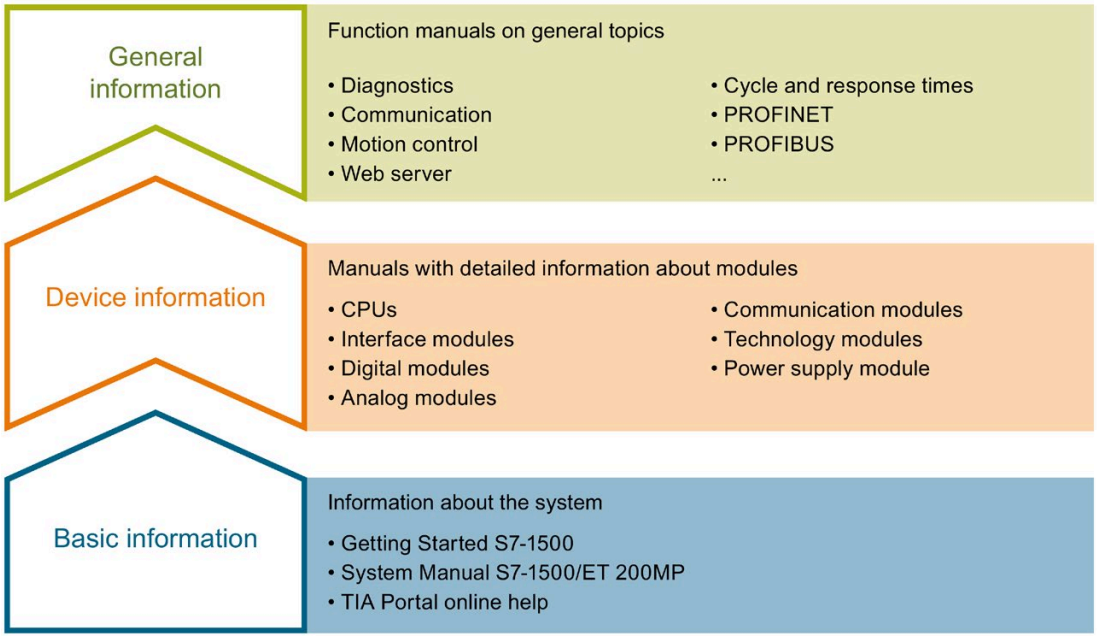

Basic information

The System Manual and Getting Started describe in detail the configuration, installation, wiring and commissioning of the SIMATIC S7-1500 and ET 200MP systems. The STEP 7 online help supports you in the configuration and programming.

Device information

Product manuals contain a compact description of the module-specific information, such as properties, wiring diagrams, characteristics and technical specifications.

General information

The function manuals contain detailed descriptions on general topics regarding the SIMATIC S7-1500 and ET 200MP systems, e.g. diagnostics, communication, motion control, Web server, OPC UA.

You can download the documentation free of charge from the Internet (https://support.industry.siemens.com/cs/ww/en/view/109742691).

Changes and supplements to the manuals are documented in a Product Information.

You can download the product information free of charge from the Internet (https://support.industry.siemens.com/cs/us/en/view/68052815).

Manual Collection S7-1500/ET 200MP

The Manual Collection contains the complete documentation on the SIMATIC S7-1500 automation system and the ET 200MP distributed I/O system gathered together in one file.

You can find the Manual Collection on the Internet (https://support.industry.siemens.com/cs/ww/en/view/86140384).

SIMATIC S7-1500 comparison list for programming languages

The comparison list contains an overview of which instructions and functions you can use for which controller families.

You can find the comparison list on the Internet (https://support.industry.siemens.com/cs/ww/en/view/86630375).

"mySupport"

With "mySupport", your personal workspace, you make the best out of your Industry Online Support.

In "mySupport", you can save filters, favorites and tags, request CAx data and compile your personal library in the Documentation area. In addition, your data is already filled out in support requests and you can get an overview of your current requests at any time.

You must register once to use the full functionality of "mySupport".

You can find "mySupport" on the Internet (https://support.industry.siemens.com/My/ww/en).

Application examples

The application examples support you with various tools and examples for solving your automation tasks. Solutions are shown in interplay with multiple components in the system - separated from the focus on individual products.

You will find the application examples on the Internet (https://support.industry.siemens.com/cs/ww/en/ps/ae).

Product overview

2

2.1 New functions

New functions of the CPU in firmware version V2.9

The following table provides an overview of the most important new functions of the CPU with firmware version V2.9.

New functions	Applications	Customer benefits	Where can I find information?
Communication of the CPU			
Secure PG/HMI communication	With STEP 7 and WinCC as of Version V17, SIMATIC S7-1500 CPUs and ET 200 CPUs from firmware version 2.9 support innovated and standardized secure PG/PC and HMI communication – referred to as Secure PG/HMI communication for short.	Secure and standardized creation or assignment of PLC communication certificates	Communication function manual (https://support.industry.siemens.com/cs/ww/en/view/59192925)
Protection of confidential configuration data	You have the option of assigning a password for protecting confidential configuration data of the respective CPU. This refers to data such as private keys that are required for the proper functioning of certificate-based protocols.	Additional password protection of confidential configuration data	
OPC UA: Alarms & Conditions	OPC UA clients from any manufacturer can subscribe to alarms of the CPU via OPC UA Alarms & Conditions.	Without further measures, alarms created once via OPC UA are available as events and alarms. The alarms can be displayed by any display device with corresponding OPC UA client functionality.	
OPC UA: Certificate management via Global Discovery Server (GDS)	Via GDS push management functions: • Automated update of OPC UA certificates of an S7-1500 CPU • Transfer of updated certificates and lists in RUN operating state of the CPU	The automation of the certificate management eliminates any manual work required for reconfiguring the CPU, for example, after a certificate has expired, and a new download to the CPU.	

New functions	Applications	Customer benefits	Where can I find information?
DHCP (Dynamic Host Configuration Protocol)	The CPU can use the DHCP communication protocol to assign the network configuration via a DHCP server. The CPU uses a client ID for identification on the DHCP server. The following parameters can be obtained: • IP Suite • DNS server • NTP server The CPU can also send its host name to the DHCP server.	With DHCP, you can integrate the CPU into an existing IT network without having to make additional changes to the PROFINET interface.	Communication function manual (https://support.industry.siemens.com/cs/ww/en/view/59192925)
MRP interconnection in PROFINET networks	The MRP interconnection procedure is an extension of MRP. MRP interconnection enables the redundant coupling of two or more rings with MRP in PROFINET networks.	There is no limit to the maximum number of 50 devices in a ring when setting up redundant network topologies. Monitoring of larger topologies with ring redundancy	PROFINET function manual (https://support.industry.siemens.com/cs/ww/en/view/49948856)
Web server of the CPU			
Web applications that can be loaded by the user	Additional methods to manage web applications via Web API You can use all available Web API methods within the web application	Web applications are also available in STOP mode of the CPU Reduced development times of web server user pages	Web server function manual (https://support.industry.siemens.com/cs/ww/en/view/59193560)
New Web API methods	Reading and changing the CPU operating state via Web API Ticket methods for transferring large amounts of data outside of the JSON RPC protocol	Additional applications for the web server	
Diagnostic information on motion control	Diagnostic information is available for all technology objects Improved display and grouping of the tags	Comprehensive diagnostic options by means of motion control applications are possible via the web server.	
Optimizations to the DNS (Domain Name System) functionality with OPC UA/Open User Communication and on the web server	The feedback messages of the OPC UA server with the "Application Name" can be sent via DNS. The NTP client of the CPU can address its relevant NTP servers via DNS. The Web server can be consistently reached via DNS addressing. DNS is taken into account during certificate handling.	A pool of NTP servers can be addressed.	Communication function manual (https://support.industry.siemens.com/cs/ww/en/view/59192925) Web server function manual (https://support.industry.siemens.com/cs/ww/en/view/59193560)
Technology functions of the CPU			
Axis functions	• Backlash compensation • Linear motor	The repeat accuracy of a movement is increased by compensation for the mechanical play of the real axis. Easier control of highly dynamic linear motors.	S7-1500T Motion Control function manuals (https://support.industry.siemens.com/cs/ww/en/view/109751049)

Reference

You can find an overview of all new functions, improvements and revisions in the respective firmware versions on the Internet (https://support.industry.siemens.com/cs/ww/en/view/109478459).

2.2 Area of application of the SIMATIC S7-1500 CPUs

Area of application

SIMATIC S7-1500 is the modular control system for a wide variety of automation applications in discrete automation.

SIMATIC S7-1500 is the cost-effective and convenient solution for a broad range of tasks and offers the following advantages:

- Modular, fanless design
- Simple realization of distributed structures
- User-friendly handling

Areas of application of the SIMATIC S7-1500 automation system include, for example:

- Special-purpose machines
- Textile machinery
- Packaging machines
- General mechanical engineering
- Controller engineering
- Machine tool engineering
- Installation engineering
- Electrical industry and crafts
- Automobile engineering
- Water/waste water
- Food & Beverage

Areas of application of the SIMATIC S7-1500R/H redundant system include, for example:

- Tunnels
- Airports (e.g. baggage conveyors)
- Subways
- Shipbuilding
- Wastewater treatment plants
- High-bay warehouses

Areas of application of the SIMATIC S7-1500T automation system for advanced motion control applications include, for example:

- Packaging machines
- Converting applications
- Assembly automation
- Pick-and-place automation
- Palletizers

You can choose between CPUs with various levels of performance and a comprehensive range of modules with many convenient functions. Fail-safe CPUs enable use in fail-safe applications. The modular design allows you to use only the modules that you need for your application. The controller can be retrofitted with additional modules at any time to expand its range of tasks.

High industrial suitability due to the high resistance to EMC, shock and vibration enable universal use of the SIMATIC S7-1500, S7-1500R/H and S7-1500T automation systems.

Performance segments of the CPUs

The CPUs can be used for smaller and mid-range applications, as well as for the high-end range of machine and plant automation.

Table 2- 1 Standard CPUs

CPU	Performance segment	PROFIBUS interfaces	PROFINET IO RT/IRT interfaces	PROFINET IO RT interface	Basic PROFINET functionality	Work memory	Processing time for bit operations
CPU 1511-1 PN	Standard CPU for small to mid-range applications	--	1	--	--	1.15 MB	60 ns
CPU 1513-1 PN	Standard CPU for mid-range applications	--	1	--	--	1.8 MB	40 ns
CPU 1515-2 PN	Standard CPU for mid-range to large applications	--	1	1	--	3.5 MB	30 ns
CPU 1516-3 PN/DP	Standard CPU for demanding applications and communication tasks	1	1	1	--	6 MB	10 ns
CPU 1517-3 PN/DP	Standard CPU for demanding applications and communication tasks	1	1	1	--	10 MB	2 ns
CPU 1518-4 PN/DP	Standard CPU for high-performance applications, demanding communication tasks and very short reaction times	1	1	1	1	24 MB	1 ns
CPU 1518-4 PN/DP MFP	Standard CPU for high-performance applications, demanding communication tasks, very short reaction times and C/C++ blocks for the user program	1	1	1	1	74* MB	1 ns

* 50 MB of the integrated work memory is reserved for the function library of CPU runtime

Table 2- 2 Redundant CPUs

CPU	Performance segment	PROFIBUS interfaces	PROFINET IO RT/IRT interfaces	PROFINET IO RT interface	Basic PROFINET functionality	Work memory	Processing time for bit operations
CPU 1513R-1 PN	Redundant CPU for smaller to mid-range applications	--	1	--	--	1.8 MB	80 ns
CPU 1515R-2 PN	Redundant CPU for mid-range to large applications	--	1	--	1	3.5 MB	60 ns
CPU 1517H-3 PN	Redundant CPU for demanding applications and communication tasks	--	1	--	1	10 MB	4 ns
CPU 1518HF-4 PN	Fail-safe and redundant CPU for demanding applications and communication tasks	--	1	--	2	69 MB	4 ns

Table 2- 3 Compact CPUs

CPU	Performance segment	PROFIBUS interfaces	PROFINET IO RT/IRT interfaces	PROFINET IO RT interface	Basic PROFINET functionality	Work memory	Processing time for bit operations
CPU 1511C-1 PN	Compact CPU for small to mid-range applications	--	1	--	--	1.175 MB	60 ns
CPU 1512C-1 PN	Compact CPU for mid-range applications	--	1	--	--	1.25 MB	48 ns

Table 2- 4 Fail-safe CPUs

CPU	Performance segment	PROFIBUS interfaces	PROFINET IO RT/IRT interfaces	PROFINET IO RT interface	Basic PROFINET function-ality	Work memory	Pro-cessing time for bit oper-ations
CPU 1511F-1 PN	Fail-safe CPU for small to mid-range applications	--	1	--	--	1.225 MB	60 ns
CPU 1511TF-1 PN	Fail-safe technology CPU for small to mid-range applica-tions	--	1	--	--	1.225 MB	60 ns
CPU 1513F-1 PN	Fail-safe CPU for mid-range applications	--	1	--	--	1.95 MB	40 ns
CPU 1515F-2 PN	Fail-safe CPU for mid-range to large applications	--	1	1	--	3.75 MB	30 ns
CPU 1515TF-2 PN	Fail-safe technology CPU for demanding applications and communication tasks	--	1	1	--	3.75 MB	30 ns
CPU 1516F-3 PN/DP	Fail-safe CPU for demanding applications and communi-cation tasks	1	1	1	--	6.5 MB	10 ns
CPU 1516TF-3 PN /DP	Fail-safe technology CPU for demanding applications and communication tasks	1	1	1	--	6.5 MB	10 ns
CPU 1517F-3 PN/DP	Fail-safe CPU for demanding applications and communi-cation tasks	1	1	1	--	11 MB	2 ns
CPU 1517TF-3 PN/DP	Fail-safe technology CPU for demanding applications and communication tasks	1	1	1	--	11 MB	2 ns
CPU 1518F-4 PN/DP	Fail-safe CPU for high-performance applications, demanding communication tasks and very short reaction times	1	1	1	1	26 MB	1 ns
CPU 1518F-4 PN/DP MFP	Fail-safe CPU for high-performance applications, demanding communication tasks, very short reaction times and C/C++ blocks for the user program	1	1	1	1	76* MB	1 ns
CPU 1518TF-4 PN/DP	Technology CPU for high-performance motion control applications with large quantities, demanding communication tasks and very short reaction times	1	1	1	1	69 MB	1 ns

* 50 MB of the integrated work memory is reserved for the function library of CPU runtime

Table 2- 5 Technology CPUs

CPU	Performance segment	PROFIBUS interfaces	PROFINET IO RT/IRT interfaces	PROFINET IO RT interface	Basic PROFINET functionality	Work memory	Processing time for bit operations
CPU 1511T-1 PN	Technology CPU for small to mid-range applications	--	1	--	--	1.225 MB	60 ns
CPU 1515T-2 PN	Technology CPU for mid-range to large applications	--	1	1	--	3.75 MB	30 ns
CPU 1516T-3 PN/DP	Technology CPU for high-end applications and communication tasks	1	1	1	--	6.5 MB	10 ns
CPU 1517T-3 PN/DP	Technology CPU for complex applications and communication tasks	1	1	1	--	11 MB	2 ns
CPU 1518T-4 PN/DP	Technology CPU for high-performance motion control applications with large quantities, demanding communication tasks and very short reaction times	1	1	1	1	69 MB	1 ns
CPU 1511TF-1 PN CPU 1515TF-2 PN CPU 1516TF-3 PN/DP CPU 1517TF-3 PN/DP CPU 1518TF-4 PN/DP	These CPUs are described in the fail-safe CPUs						

Performance segments of compact CPUs

The compact CPUs can be used for smaller to mid-range applications and have an integrated analog and digital on-board I/O as well as integrated technology functions. The following table shows the specific properties of the Compact CPUs.

	CPU 1511C-1 PN	CPU 1512C-1 PN
Integrated analog inputs/outputs	5 inputs/2 outputs	5 inputs/2 outputs
Integrated digital inputs/outputs	16 inputs/16 outputs	32 inputs/32 outputs
High-speed counters	6	6
Frequency meters	6 (max. 100 kHz)	6 (max. 100 kHz)
Period duration measurement	6 channels	6 channels
Pulse width modulation (PWM output)	Max. 4 (up to 100 kHz)	Max. 4 (up to 100 kHz)
Pulse Train Output (PTO output)	Max. 4 (up to 100 kHz)	Max. 4 (up to 100 kHz)
Frequency output	Up to 100 kHz	Up to 100 kHz

Integrated Motion Control technology functions

All CPUs of the SIMATIC S7-1500 automation system support motion control technology functions. STEP 7 provides PLCopen-standardized Motion Control instructions for configuring and connecting a drive to the CPU.

S7-1500 Motion Control supports the following technology objects:

- Speed-controlled axes
- Positioning axes
- Synchronous axes
- External encoders
- Cam
- Cam track
- Measuring input

The technology CPUs of the SIMATIC S7-1500-automation system offer enhanced Motion Control functions:

- Advanced synchronization functions
  - Synchronization with specification of the synchronous position
  - Actual value coupling
  - Shifting of the master value at the following axis
  - Camming
- Up to 4 encoder or measuring systems as actual position for position control
- Cam
- Kinematics for control of:
  - Cartesian portals
  - Roller pickers
  - Jointed-arm robots
  - Delta pickers
  - SCARA robots

Due to the supported technology functions, the S7-1500T CPUs are suitable for controlling packaging machines, converting applications, assembly automation, etc.

Additional integrated technology functions

For effective commissioning, diagnostics and fast optimization of drives and controls, the SIMATIC S7-1500 controller series offers extensive trace functions for all CPU tags.

In addition to drive integration, the SIMATIC S7-1500 controller series has a PID compact closed-loop controller; easy-to-configure blocks allow automatic optimization of the controller parameters for optimum control quality.

Other technology functions

Technology modules also implement functions such as high-speed counting, position detection, measuring functions and pulse generators (PTO, PWM and frequency output). With the CPU 1511C-1 PN and CPU 1512C-1 PN compact CPUs, these functions are already integrated and can be implemented without additional technology modules.

SIWAREX is a versatile and flexible weighing module which you can use as a static scale for operation.

Redundant CPUs

The CPUs of the S7-1500R/H redundant system offer a high degree of reliability and system availability. A redundant configuration of the most important automation components reduces the likelihood of production downtimes and the consequences of component errors.

The higher the risks and costs of a production downtime, the more worthwhile the use of a redundant system. The avoidance of production downtimes compensates for the generally higher investment costs.

Security Integrated

In conjunction with STEP 7, each CPU offers password-based know-how protection against unauthorized reading out or modification of the program blocks.

Copy protection provides reliable protection against unauthorized reproduction of program blocks. With copy protection, individual blocks on the SIMATIC memory card can be tied to its serial number so that the block can only be run if the configured memory card is inserted into the CPU.

In addition, you can assign various access rights to different user groups in the controller using four different authorization levels.

Improved manipulation protection allows changed or unauthorized transfers of engineering data to be detected by the controller.

The use of an Ethernet CP (CP 1543-1) provides you with additional access protection through a firewall or possibilities to establish secure VPN connections.

Safety Integrated

The fail-safe CPUs are intended for users who want to implement demanding standard and fail-safe applications both centrally and decentrally.

These fail-safe CPUs allow the processing of standard and safety programs on a single CPU. This allows fail-safe data to be evaluated in the standard user program. The integration also provides the system advantages and the extensive functionality of SIMATIC for fail-safe applications.

The fail-safe CPUs are certified for use in safety mode up to:

- Safety class (Safety Integrity Level) SIL 3 according to IEC 61508:2010
- Performance Level (PL) e and Category 4 according to ISO 13849-1:2015 or EN ISO 13849-1:2015

Additional password protection for F-configuration and F-program is set up for IT security.

Design and handling

All CPUs of the SIMATIC S7-1500 product series feature a display with plain text information. The display provides the user with information on the order numbers, firmware version, and serial number of all connected modules. In addition, the IP address of the CPU and other network settings can be adapted locally without a programming device. Error messages are shown on the display directly in plain text. When performing servicing, you can minimize plant downtimes by quickly accessing the diagnostics alarms. Detailed information about this and a multitude of other display functions is available in the SIMATIC S7-1500 Display Simulator (https://support.industry.siemens.com/cs/ww/en/view/109761758).

Uniform front connectors for all modules and integrated potential jumpers for flexible formation of potential groups simplify storage. Additional components such as circuit breakers, relays, etc., can be installed quickly and easily, since a DIN rail is implemented in the rail of the SIMATIC S7-1500. The CPUs of the SIMATIC S7-1500 product series can be expanded centrally and in a modular fashion with signal modules. Space-saving expansion enables flexible adaptation to each application.

The system cabling for digital signal modules enables fast and clear connection to sensors and actuators from the field (fully modular connection consisting of front connector modules, connection cables and I/O modules), as well as easy wiring inside the control cabinet (flexible connection consisting of front connectors with assembled single conductors).

System diagnostics and alarms

Integrated system diagnostics is activated by default for the CPUs. The different types of diagnostics are configured instead of programmed. System diagnostics information and alarms from the drives are displayed consistently and in plain text:

- On the CPU display
- In STEP 7
- On the HMI
- On the Web server

This information is available in RUN mode, but also in STOP mode of the CPU. The diagnostic information is updated automatically when you configure new hardware components.

The CPU is available as a central interrupt server in up to three project languages. The HMI takes over the display in the project languages defined for the CPU. If you require alarm texts in additional languages, you can load them into your HMI via the configured connection. The CPU, STEP 7 and your HMI ensure data consistency without additional engineering steps. The maintenance work is easier.

2.3 Hardware properties

Article number

6ES7513-1AL02-0AB0

View of the module

The following figure shows the CPU 1513-1 PN.

Figure 2-1 CPU 1513-1 PN

Note

Protective film

Note that a protective film is attached to the display of the CPU when shipped from the factory. Remove the protective film if necessary.

Properties

The CPU 1513-1 PN has the following technical properties:

Property	Description	Additional information
CPU display	All CPUs of the SIMATIC S7-1500 product series feature a display with plain text information. The display provides information on order numbers, firmware version and serial numbers of all connected modules. In addition, you can set the IP address of the CPU and carry out further network settings. The display shows occurring error messages directly in plain text. In addition to the functions listed here, a multitude of other functions that are described in the SIMATIC S7-1500 Display Simulator are shown on the display.	• S7-1500, ET 200MP system manual (http://support.automation.siemens.com/WW/view/en/59191792) • SIMATIC S7-1500 Display Simulator (https://support.industry.siemens.com/cs/ww/en/view/109761758)
Supply voltage	The 24 V DC supply voltage is fed in via a 4-pin plug located at the bottom of the CPU.	• Chapter Connecting up (Page 29) • S7-1500, ET 200MP system manual (http://support.automation.siemens.com/WW/view/en/59191792)
PROFINET IO		
PROFINET interface (X1 P1 R and X1 P2 R)	The interface has two ports. In addition to basic PROFINET functionality, its also supports PROFINET IO RT (real time) and IRT (isochronous real time).	PROFINET function manual (https://support.industry.siemens.com/cs/ww/en/view/49948856)
Operation of the CPU as • IO controller • I-device	• **IO controller:** As an IO controller the CPU addresses the connected IO devices • **I-device:** As an I-device (intelligent IO device) the CPU is assigned to a higher-level IO controller and is used in the process as an intelligent pre-processing unit of subprocesses	

Accessories

You can find information on "Accessories/spare parts" in the S7-1500, ET 200MP system manual (http://support.automation.siemens.com/WW/view/en/59191792).

2.4 Firmware functions

Functions

The CPU 1513-1 PN supports the following firmware functions:

Function	Description	Additional information
Integrated system diagnostics	The system automatically generates the messages for the system diagnostics and outputs these messages via a programming device/PC, HMI device, the Web server or the integrated display. System diagnostics information is also available when the CPU is in STOP mode.	Diagnostics function manual (https://support.industry.siemens.com/cs/ww/en/view/59192926)
Integrated Web server	The Web server lets you access the CPU data by means of a network. Evaluations, diagnostics, and modifications are thus possible over long distances. Monitoring and evaluation is possible without STEP 7; all you need is a Web browser. Make sure that you take appropriate measures (e.g. limiting network access, using firewalls) to protect the CPU from being compromised.	• Web server function manual (https://support.industry.siemens.com/cs/ww/en/view/59193560) • Security with SIMATIC S7 controllers system manual (https://support.industry.siemens.com/cs/ww/en/view/90885010)
Integrated trace functionality	Trace functionality supports you in troubleshooting and/or optimizing the user program. You record device tags and evaluate the recordings with the trace and logic analyzer function. Tags are, for example, drive parameters or system and user tags of a CPU. The device saves the recordings. You can read out and permanently save the recordings with the configuration system (ES), if required. The trace and logic analyzer function is therefore suitable for monitoring highly dynamic processes. The trace record can also be displayed through the Web server.	Using the trace and logic analyzer function function manual (https://support.industry.siemens.com/cs/ww/en/view/64897128)
OPC UA	With OPC UA, you can exchange data via an open and manufacturer-neutral communication protocol. The CPU can act as OPC UA server. The CPU as OPC UA server can communicate with OPC UA clients. The OPC UA Companion Specification allows methods to be specified uniformly and independently of the manufacturer. Using these specified methods, you can easily integrate devices from various manufacturers into your plants and production processes.	Communication function manual (https://support.industry.siemens.com/cs/ww/en/view/59192925)
Configuration control	You can use configuration control to operate different real hardware configurations with a configured maximum configuration of the hardware. This means that, in series machine manufacturing in particular, you have the option of operating/configuring different configuration variants of a machine with a single project.	S7-1500, ET 200MP system manual (https://support.industry.siemens.com/cs/ww/en/view/59191792)

Function	Description	Additional information
PROFINET IO		
RT (real time)	RT prioritizes PROFINET IO telegrams over standard telegrams. This ensures the required determinism in the automation technology. In this process the data is transferred via prioritized Ethernet telegrams.	PROFINET function manual (https://support.industry.siemens.com/cs/ww/en/view/49948856)
IRT (isochronous real time)	A reserved bandwidth within the send clock is available for IRT data. The reserved bandwidth ensures that the IRT data can be transmitted in time-synchronized intervals, unaffected by other high network loading (e.g. TCP/IP communication or additional real time communication). Update times with maximum determinism can be realized through IRT. Isochronous applications are possible with IRT.	
Isochronous mode	The Isochronous mode system property acquires measured values and process data and processes the signals in a fixed system clock. Isochronous mode thus contributes to high control quality and hence to greater manufacturing precision. Isochronous mode reduces possible fluctuations of the process reaction times to a minimum. Time-assured processing makes higher machine cycles possible.	
MRP (Media Redundancy Protocol)	It is possible to establish redundant networks via the Media Redundancy Protocol. Redundant transmission links (ring topology) ensure that an alternative communication path is made available if a transmission link fails. The PROFINET devices that are part of this redundant network form an MRP domain. RT operation is possible with the use of MRP.	
MRPD (Media Redundancy with Planned Duplication)	The advantage of the MRP extension MRPD is that, in the event of a failure of a device or a line in the ring, all other devices continue to be supplied with IO data without interruption and with short update times. MRPD is based on IRT and MRP. To realize media redundancy with short update times, the PROFINET devices participating in the ring send their data in both directions. The devices receive this data at both ring ports so that there is no reconfiguration time.	
Shared device	The "Shared device" function allows you to divide the modules or submodules of an IO device up among different IO controllers. Numerous IO controllers are often used in larger or widely distributed systems. Without the "Shared device" function, each I/O module of an IO device is assigned to the same IO controller. If sensors that are physically close to each other must provide data to different IO controllers, several IO devices are required. The "Shared device" function allows the modules or submodules of an IO device to be divided up among different IO controllers, thus allowing flexible automation concepts. You can, for example, combine I/O modules that are physically close to each other in one IO device.	
PROFIenergy	PROFIenergy is a PROFINET-based data interface for switching off consumers centrally and with full coordination during pause times regardless of the manufacturer or device type. Through this, the process should only be provided with the energy that is absolutely required. The majority of the energy is saved by the process; the PROFINET device itself only contributes a few watts of savings potential.	

Function	Description	Additional information
Integrated technology		
Motion Control	S7-1500 CPUs support the controlled positioning and traveling of axes via S7-1500 Motion Control functions by means of the following technology objects: Speed-controlled axes, positioning axes, synchronized axes, external encoders, cams, cam tracks and measuring inputs. • Speed-controlled axis for controlling a drive with speed specification • Positioning axis for position-controlled positioning of a drive • Synchronous axis to interconnect with a master value. The axis is synchronized to the master axis position. • External encoder for detecting the actual position of an encoder and its use as a master value for synchronous operation • Cams, cam track for position-dependent generation of switching signals • Measuring input for fast, accurate and event-dependent sensing of actual positions	S7-1500T Motion Control function manuals (https://support.industry.siemens.com/cs/ww/en/view/109751049)
Integrated closed-loop control functionality	• PID Compact (continuous PID controller) • PID 3Step (step controller for integrating actuators) • PID Temp (temperature controller for heating and cooling with two separate actuators)	PID control function manual (https://support.industry.siemens.com/cs/ww/en/view/108210036)
Integrated safety		
Know-how protection	The know-how protection protects user blocks against unauthorized access and modifications.	S7-1500, ET 200MP system manual (https://support.industry.siemens.com/cs/ww/en/view/59191792)
Copy protection	Copy protection links user blocks to the serial number of the SIMATIC memory card or to the serial number of the CPU. User programs cannot run without the corresponding SIMATIC memory card or CPU.	
Access protection	You can use authorization levels to assign separate rights to different users.	
Integrity protection	The CPUs dispose of integrity protection by default. Integrity protection identifies possible manipulations of engineering data on the SIMATIC memory card or during data transfer between TIA Portal and CPU. Integrity protection also checks the communication from a SIMATIC HMI system to the CPU for possible manipulations of engineering data. If integrity protection identifies the manipulation of engineering data, the user receives a corresponding message.	
Password provider	As an alternative to manual password input you can connect a password provider to STEP 7. A password provider offers the following advantages: • Convenient handling of passwords. STEP 7 reads the password automatically for the blocks. This saves you time. • Optimum block protection because the users do not know the password itself.	

2.5 Operating and display elements

2.5.1 Front view of the CPU with closed front panel

The following figure shows the front view of the CPU 1513-1 PN.

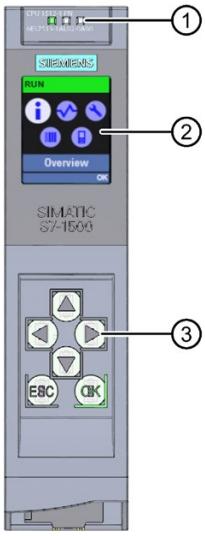

① LEDs for the current operating mode and diagnostics status of the CPU

② Display

③ Operator control buttons

Figure 2-2 View of the CPU 1513-1 PN (with front panel) – front

---

Note

Temperature range for display

To increase its service life, the display switches off at a temperature below the permitted operating temperature of the device. When the display cools down, it automatically switches itself on again. When the display is switched off, the LEDs continue to show the status of the CPU.

For more information on the temperatures at which the display switches itself on and off, refer to the Technical specifications (Page 37).

Removing and fitting the front panel or display

You can remove and fit the front panel or the display during operation.

WARNING

Personal injury and damage to property may occur

If you pull or plug the front panel of an S7-1500 automation system during operation, personal injury or damage to property can occur in zone 2 hazardous areas.

Before you remove or fit the front panel, always switch off the power supply to the S7-1500 automation system in hazardous area zone 2.

Locking the front panel

You can lock the front panel to protect your CPU against unauthorized access.

You can attach a security seal or a padlock with a diameter of 3 mm to the front panel.

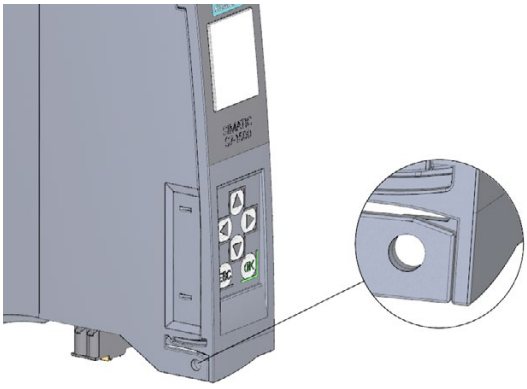

Figure 2-3 Locking latch on the CPU

In addition to the mechanical lock, you can also block access to a password-protected CPU on the display (local lock) and assign a password for the display. You can find additional information on the display, configurable protection levels and local locks in the S7-1500/ET 200MP (http://support.automation.siemens.com/WW/view/en/59191792) system manual.

Reference

You will find detailed information on the individual display options, a training course and a simulation of the available menu commands in the SIMATIC S7-1500 Display Simulator (https://support.industry.siemens.com/cs/ww/en/view/109761758).

2.5.2 Front view of the CPU without front panel and view from below

The following figure shows the operator controls and connection elements of the CPU 1513-1 PN.

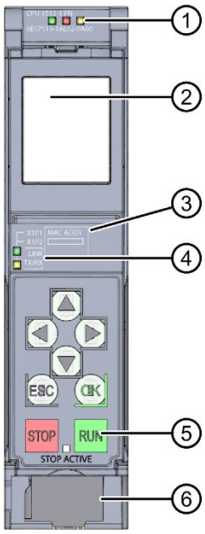

① LEDs for the current operating mode and diagnostic status of the CPU
② Display
③ MAC address
④ LED displays for the 2 ports of the PROFINET interface X1
⑤ Operating modes with "STOP ACTIVE" LED
⑥ Connector for power supply

Figure 2-4 View of the CPU 1513-1 PN (without front panel) – front

Note

Removing the display

Only remove the display if it is faulty.

You can find information on removing and replacing displays in the S7-1500, ET 200MP system manual (https://support.industry.siemens.com/cs/ww/en/view/59191792).

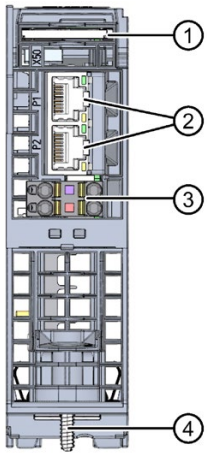

① Slot for the SIMATIC memory card
② PROFINET IO interface (X1) with 2 ports
③ Connection for supply voltage
④ Fixing screw

Figure 2-5 View of the CPU 1513-1 PN – bottom

2.5.3 Rear view of the CPU

The following figure shows the connection elements on the back of the CPU 1513-1 PN.

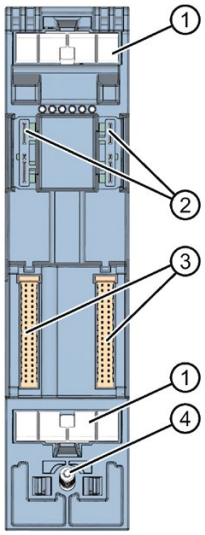

① Shield contact surface
② Plug-in connection for power supply
③ Plug-in connection for backplane bus
④ Fastening screw

Figure 2-6 View of the CPU 1513-1 PN - rear

2.6 Operating mode buttons

You use the operating mode buttons to set the operating mode of the CPU.

The following table shows the meaning of the corresponding operation of the operating mode buttons.

Table 2- 6 Meaning of the operating mode buttons

Operation of the operating mode buttons	Meaning	Explanation
RUN	RUN mode	The CPU is executing the user program.
STOP	STOP mode	The user program is not being executed. (STOP ACTIVE LED lights up).
MRES 1. Press the operating mode button STOP. Result: The RUN/STOP LED lights up yellow. 2. Press the operating mode button STOP until the RUN/STOP LED lights up for the 2nd time and remains continuously lit (this takes three seconds). After this, release the button. 3. Press the operating mode button STOP again within the next three seconds.	Manual memory reset (with inserted SIMATIC memory card) or Reset to factory settings (without inserted SIMATIC memory card):	The CPU executes memory reset. or The CPU is reset to its factory settings. You can find additional information in the S7-1500/ET 200MP system manual (https://support.industry.siemens.com/cs/ww/en/view/59191792).

Connecting up

3

This section provides information on the terminal assignment of the individual interfaces and the block diagram of the CPU 1513-1 PN.

24 V DC supply voltage (X80)

The connector for the power supply is plugged in when the CPU ships from the factory.

The following table shows the signal names and the descriptions of the pin assignment of the 24 V DC supply voltage.

Table 3- 1 Pin assignment 24 V DC supply voltage

View Connector	Signal name [1]		Description
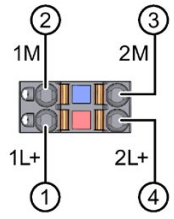	1	1L+	+ 24 V DC of the supply voltage
	2	1M	Ground of the supply voltage
	3	2M	Ground of the supply voltage for loop-through [2]
	4	2L+	+ 24 V DC of the supply voltage for loop-through [2]

[1] 1L+ and 2L+ as well as 1M and 2M are bridged internally

[2] Maximum 10 A permitted

If the CPU is supplied by a system power supply, it is not necessary to connect the 24 V supply.

PROFINET interface X1 with 2-port switch (X1 P1 R and X1 P2 R)

The assignment corresponds to the Ethernet standard for an RJ45 plug.

- When autonegotiation is deactivated, the RJ45 socket is allocated as a switch (MDI-X).
- When autonegotiation is activated, autocrossing is in effect and the RJ45 socket is allocated either as data terminal equipment (MDI) or a switch (MDI-X).

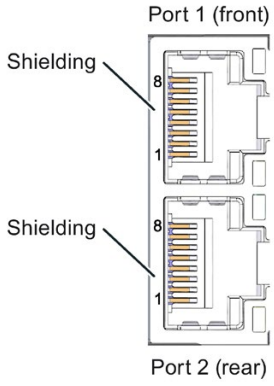

Figure 3-1 PROFINET ports

Note

You need a screwdriver (max. blade width 2.5 mm) to remove the PROFINET plug.

Remove display

You can find a description of how to remove and replace the display in the S7-1500, ET 200MP system manual (http://support.automation.siemens.com/WW/view/en/59191792).

Reference

You can find additional information on the topics of "Connecting the CPU" and "Accessories/spare parts" in the S7-1500, ET 200MP (http://support.automation.siemens.com/WW/view/en/59191792) system manual.

Assignment of the MAC addresses

The CPU 1513-1 PN has a PROFINET interface with two ports. The PROFINET interface itself has a MAC address, and each of the two PROFINET ports has its own MAC address. The CPU 1513-1 PN therefore has three MAC addresses in total.

The MAC addresses of the PROFINET ports are needed for the LLDP protocol, for example for the neighborhood discovery function.

The number range of the MAC addresses is sequential. The first and last MAC address are lasered on the rating plate on the right side of each CPU 1513-1 PN.

The table below shows how the MAC addresses are assigned.

Table 3- 2 Assignment of the MAC addresses

	Assignment	Labeling
MAC address 1	PROFINET interface X1 (visible in STEP 7 for accessible devices)	• Front, lasered • Right side, lasered (start of number range)
MAC address 2	Port X1 P1 R (required for LLDP, for example)	• Front and right side, not lasered
MAC address 3	Port X1 P2 R (required for LLDP, for example)	• Front, not lasered • Right side, lasered (end of number range)

Block diagram

The following figure shows the block diagram of the CPU 1513-1 PN.

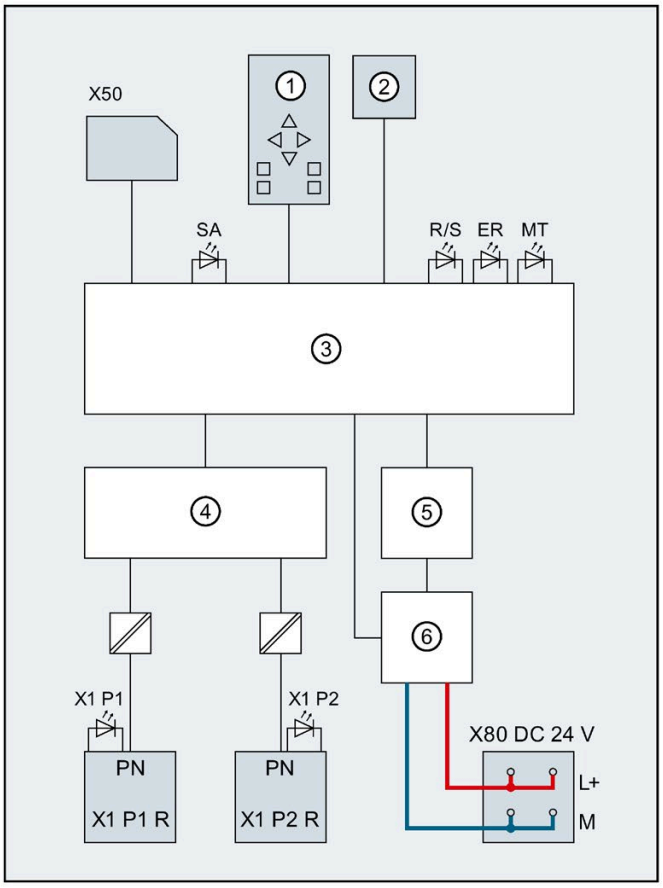

①	CPU with control and operating mode buttons	X80 24 V DC	Infeed of supply voltage
②	Display	L+	24 V DC supply voltage
③	Electronics	M	Ground
④	PROFINET 2-port switch	SF	STOP ACTIVE LED (yellow)
⑤	Backplane bus interface	R/S	RUN/STOP LED (yellow/green)
⑥	Internal supply voltage	ER	ERROR LED (red)
PN X1 P1 R	PROFINET interface X1 Port 1	MT	MAINT LED (yellow)
PN X1 P2 R	PROFINET interface X1 Port 2	X1 P1, X1 P2	LED Link TX/RX
X50	SIMATIC memory card		

Figure 3-2 Block diagram CPU 1513-1 PN

Interrupts, error messages, diagnostics and system alarms

4

The status and error displays of the CPU 1513-1 PN are described below.

You will find additional information on "Interrupts" in the STEP 7 online help.

You can find additional information on the topics of "Diagnostics" and "System alarms" in the Diagnostics (http://support.automation.siemens.com/WW/view/en/59192926) function manual.

4.1 Status and error display of the CPU

LED display

The figure below shows the CPU 1513-1 PN LEDs.

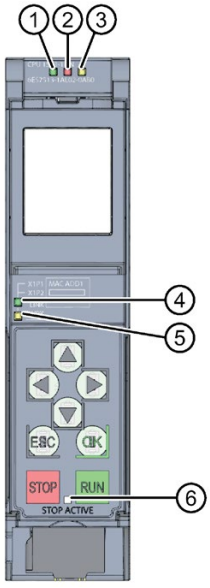

① RUN/STOP LED (yellow/green LED)
② ERROR LED (red LED)
③ MAINT LED (yellow LED)
④ LINK RX/TX LED for port X1 P1 (yellow/green LED)
⑤ LINK RX/TX LED for port X1 P2 (yellow/green LED)
⑥ STOP ACTIVE LED

Figure 4-1 LED display of the CPU 1513-1 PN (without front panel)

Meaning of the RUN/STOP, ERROR and MAINT LEDs

The CPU 1513-1 PN has three LEDs to signal the current operating status and diagnostics status. The following table shows the meaning of the various combinations of colors for the RUN/STOP, ERROR and MAINT LEDs.

Table 4- 1 Meaning of the LEDs

RUN/STOP LED	ERROR LED	MAINT LED	Meaning
LED off	LED off	LED off	Missing or insufficient power supply on the CPU.
LED off	LED flashes red	LED off	An error has occurred.
LED lit green	LED off	LED off	CPU is in RUN mode.
LED lit green	LED flashes red	LED off	A diagnostics event is pending.
LED lit green	LED off	LED lit yellow	Maintenance demanded for the plant. The affected hardware must be checked/replaced within a short period of time.
			Active Force job
LED lit green	LED off	LED flashes yellow	Bad configuration
LED lit yellow	LED flashes red	LED off	A diagnostics event is pending.
LED lit yellow	LED off	LED flashes yellow	Firmware update successfully completed.
LED lit yellow	LED off	LED off	CPU is in STOP mode.
LED lit yellow	LED flashes red	LED flashes yellow	The program on the SIMATIC memory card is causing an error.
			Firmware update using SIMATIC memory card has failed.
			The CPU has detected an error state. Additional information is available via the CPU diagnostic buffer.
LED flashes yellow	LED off	LED off	CPU is performing internal activities during STOP, e.g. startup after STOP.
			Download of the user program from the SIMATIC memory card
			CPU carries out a program with active breakpoint.
LED flashes yellow/green	LED off	LED off	Startup (transition from STOP → RUN)
LED flashes yellow/green	LED flashes red	LED flashes yellow	Startup (CPU booting)
			Test of LEDs during startup, inserting a module.
			LED flashing test

Meaning of LINK RX/TX LED

Each port has a LINK RX/TX-LED. The table below shows the various "LED scenarios" of the ports for the CPU 1513-1 PN.

Table 4- 2 Meaning of the LEDs

LINK TX/RX LED	Meaning
LED off	There is no Ethernet connection between the PROFINET interface of the PROFINET device and the communication partner. No data is currently being sent/received via the PROFINET interface. There is no LINK connection.
LED flashes green	The "LED flashing test" is being performed.
LED lit green	There is an Ethernet connection between the PROFINET interface of your PROFINET device and a communication partner.
LED flashes yellow/green	Data is currently being received from or sent to a communications partner on Ethernet via the PROFINET interface of the PROFINET device.

Note

"LED" instruction

You can read the status (e.g. "On" or "Off") of LEDs of a CPU or a module using the "LED" instruction. Note, however, that it is not possible to read the LED status of the LINK RX/TX LEDs on all S7-1500 CPUs.

You can find additional information on the "LED" instruction in the STEP 7 online help.

Meaning of the STOP ACTIVE LED

The following table shows the meaning of the STOP ACTIVE LED for the CPU 1513-1 PN.

Table 4- 3 Meaning of the LEDs

STOP ACTIVE LED	Meaning
LED lit yellow	The CPU is switched to "STOP" mode using the STOP button. • As long as the STOP ACTIVE LED is lit up, switching the CPU to RUN mode is only possible using the RUN button. • The CPU can then no longer be set to RUN mode via the display operation or via online functions. The state of the buttons is retained at power-off. If the CPU does not start up automatically after a power-on, you have to keep the STOP button pressed during start-up until the STOP ACTIVE LED is activated. • If an automatic start-up is to be reliably prevented after a power-up, the STOP button has to be kept pressed during the start-up of the CPU until the STOP ACTIVE LED is activated.
LED off	• The CPU is set to "STOP" mode using the display or programming device and not with the STOP button on the device. • The CPU is in RUN mode.

Technical specifications

5

The following table shows the technical specifications as of 05/2021. You can find a data sheet including daily updated technical specifications on the Internet (https://support.industry.siemens.com/cs/ww/en/pv/6ES7513-1AL02-0AB0/td?dl=en).

Article number	6ES7513-1AL02-0AB0
General information	
Product type designation	CPU 1513-1 PN
HW functional status	FS03
Firmware version	V2.9
Product function	
• I&M data	Yes; I&M0 to I&M3
• Isochronous mode	Yes; Distributed and central; with minimum OB 6x cycle of 500 µs (distributed) and 1 ms (central)
Engineering with	
• STEP 7 TIA Portal configurable/integrated from version	V17 (FW V2.9) / V15 (FW V2.5) or higher; with older TIA Portal versions configurable as 6ES7513-1AL01-0AB0
Configuration control	
via dataset	Yes
Display	
Screen diagonal [cm]	3.45 cm
Control elements	
Number of keys	8
Mode buttons	2
Supply voltage	
Type of supply voltage	24 V DC
permissible range, lower limit (DC)	19.2 V
permissible range, upper limit (DC)	28.8 V
Reverse polarity protection	Yes
Mains buffering	
• Mains/voltage failure stored energy time	5 ms
• Repeat rate, min.	1/s
Input current	
Current consumption (rated value)	0.7 A
Current consumption, max.	0.95 A
Inrush current, max.	1.9 A; Rated value
I^2t	0.02 $A^2 \cdot s$
Power	
Infeed power to the backplane bus	10 W
Power consumption from the backplane bus (balanced)	5.5 W
Power loss	
Power loss, typ.	5.7 W

Article number	6ES7513-1AL02-0AB0
Memory	
Number of slots for SIMATIC memory card	1
SIMATIC memory card required	Yes
Work memory	
• integrated (for program)	300 kbyte
• integrated (for data)	1.5 Mbyte
Load memory	
• Plug-in (SIMATIC Memory Card), max.	32 Gbyte
Backup	
• maintenance-free	Yes
CPU processing times	
for bit operations, typ.	40 ns
for word operations, typ.	48 ns
for fixed point arithmetic, typ.	64 ns
for floating point arithmetic, typ.	256 ns
CPU-blocks	
Number of elements (total)	4 000; Blocks (OB, FB, FC, DB) and UDTs
DB	
• Number range	1 ... 60 999; subdivided into: number range that can be used by the user: 1 ... 59 999, and number range of DBs created via SFC 86: 60 000 ... 60 999
• Size, max.	1.5 Mbyte; For DBs with absolute addressing, the max. size is 64 KB
FB	
• Number range	0 ... 65 535
• Size, max.	300 kbyte
FC	
• Number range	0 ... 65 535
• Size, max.	300 kbyte
OB	
• Size, max.	300 kbyte
• Number of free cycle OBs	100
• Number of time alarm OBs	20
• Number of delay alarm OBs	20
• Number of cyclic interrupt OBs	20; With minimum OB 3x cycle of 500 µs
• Number of process alarm OBs	50
• Number of DPV1 alarm OBs	3
• Number of isochronous mode OBs	2
• Number of technology synchronous alarm OBs	2
• Number of startup OBs	100

Article number	6ES7513-1AL02-0AB0
• Number of asynchronous error OBs	4
• Number of synchronous error OBs	2
• Number of diagnostic alarm OBs	1
Nesting depth	
• per priority class	24
Counters, timers and their retentivity	
S7 counter	
• Number	2 048
Retentivity	
– adjustable	Yes
IEC counter	
• Number	Any (only limited by the main memory)
Retentivity	
– adjustable	Yes
S7 times	
• Number	2 048
Retentivity	
– adjustable	Yes
IEC timer	
• Number	Any (only limited by the main memory)
Retentivity	
– adjustable	Yes
Data areas and their retentivity	
Retentive data area (incl. timers, counters, flags), max.	128 kbyte; In total; available retentive memory for bit memories, timers, counters, DBs, and technology data (axes): 88 KB
Extended retentive data area (incl. timers, counters, flags), max.	1.5 Mbyte; When using PS 6 0W 24/48/60 V DC HF
Flag	
• Size, max.	16 kbyte
• Number of clock memories	8; 8 clock memory bit, grouped into one clock memory byte
Data blocks	
• Retentivity adjustable	Yes
• Retentivity preset	No
Local data	
• per priority class, max.	64 kbyte; max. 16 KB per block
Address area	
Number of IO modules	2 048; max. number of modules / submodules

Article number	6ES7513-1AL02-0AB0
I/O address area	
• Inputs	32 kbyte; All inputs are in the process image
• Outputs	32 kbyte; All outputs are in the process image
per integrated IO subsystem	
– Inputs (volume)	8 kbyte
– Outputs (volume)	8 kbyte
per CM/CP	
– Inputs (volume)	8 kbyte
– Outputs (volume)	8 kbyte
Subprocess images	
• Number of subprocess images, max.	32
Hardware configuration	
Number of distributed IO systems	32; A distributed I/O system is characterized not only by the integration of distributed I/O via PROFINET or PROFIBUS communication modules, but also by the connection of I/O via AS-i master modules or links (e.g. IE/PB-Link)
Number of DP masters	
• Via CM	6; A maximum of 6 CMs (PROFINET + PROFIBUS) can be inserted in total
Number of IO Controllers	
• integrated	1
• Via CM	6; A maximum of 6 CMs (PROFINET + PROFIBUS) can be inserted in total
Rack	
• Modules per rack, max.	32; CPU + 31 modules
• Number of lines, max.	1
PtP CM	
• Number of PtP CMs	the number of connectable PtP CMs is only limited by the number of available slots
Time of day	
Clock	
• Type	Hardware clock
• Backup time	6 wk; At 40 °C ambient temperature, typically
• Deviation per day, max.	10 s; Typ.: 2 s
Operating hours counter	
• Number	16
Clock synchronization	
• supported	Yes
• in AS, master	Yes
• in AS, slave	Yes
• on Ethernet via NTP	Yes

Article number	6ES7513-1AL02-0AB0
Interfaces	
Number of PROFINET interfaces	1
1. Interface	
Interface types	
• RJ 45 (Ethernet)	Yes; X1
• Number of ports	2
• integrated switch	Yes
Protocols	
• IP protocol	Yes; IPv4
• PROFINET IO Controller	Yes
• PROFINET IO Device	Yes
• SIMATIC communication	Yes
• Open IE communication	Yes; Optionally also encrypted
• Web server	Yes
• Media redundancy	Yes
PROFINET IO Controller	
Services	
– PG/OP communication	Yes
– Isochronous mode	Yes
– Direct data exchange	Yes; Requirement: IRT and isochronous mode (MRPD optional)
– IRT	Yes
– PROFIenergy	Yes; per user program
– Prioritized startup	Yes; Max. 32 PROFINET devices
– Number of connectable IO Devices, max.	128; In total, up to 512 distributed I/O devices can be connected via AS-i, PROFIBUS or PROFINET
– Of which IO devices with IRT, max.	64
– Number of connectable IO Devices for RT, max.	128
– of which in line, max.	128
– Number of IO Devices that can be simultaneously activated/deactivated, max.	8; in total across all interfaces
– Number of IO Devices per tool, max.	8
– Updating times	The minimum value of the update time also depends on communication share set for PROFINET IO, on the number of IO devices, and on the quantity of configured user data

Article number	6ES7513-1AL02-0AB0
Update time for IRT	
– for send cycle of 250 µs	250 µs to 4 ms; Note: In the case of IRT with isochronous mode, the minimum update time of 500 µs of the isochronous OB is decisive
– for send cycle of 500 µs	500 µs to 8 ms
– for send cycle of 1 ms	1 ms to 16 ms
– for send cycle of 2 ms	2 ms to 32 ms
– for send cycle of 4 ms	4 ms to 64 ms
– With IRT and parameterization of "odd" send cycles	Update time = set "odd" send clock (any multiple of 125 µs: 375 µs, 625 µs ... 3 875 µs)
Update time for RT	
– for send cycle of 250 µs	250 µs to 128 ms
– for send cycle of 500 µs	500 µs to 256 ms
– for send cycle of 1 ms	1 ms to 512 ms
– for send cycle of 2 ms	2 ms to 512 ms
– for send cycle of 4 ms	4 ms to 512 ms
PROFINET IO Device	
Services	
– PG/OP communication	Yes
– Isochronous mode	No
– IRT	Yes
– PROFIenergy	Yes; per user program
– Shared device	Yes
– Number of IO Controllers with shared device, max.	4
– activation/deactivation of I-devices	Yes; per user program
– Asset management record	Yes; per user program
Interface types	
RJ 45 (Ethernet)	
• 100 Mbps	Yes
• Autonegotiation	Yes
• Autocrossing	Yes
• Industrial Ethernet status LED	Yes

Article number	6ES7513-1AL02-0AB0
Protocols	
Number of connections	
• Number of connections, max.	128; via integrated interfaces of the CPU and connected CPs / CMs
• Number of connections reserved for ES/HMI/web	10
• Number of connections via integrated interfaces	88
• Number of S7 routing paths	16
Redundancy mode	
• H-Sync forwarding	Yes
Media redundancy	
– Media redundancy	only via 1st interface (X1)
– MRP	Yes
– MRP interconnection, supported	Yes; as MRP ring node according to IEC 62439-2 Edition 3.0
– MRPD	Yes; Requirement: IRT
– Switchover time on line break, typ.	200 ms; For MRP, bumpless for MRPD
– Number of stations in the ring, max.	50
SIMATIC communication	
• PG/OP communication	Yes; encryption with TLS V1.3 pre-selected
• S7 routing	Yes
• S7 communication, as server	Yes
• S7 communication, as client	Yes
• User data per job, max.	See online help (S7 communication, user data size)
Open IE communication	
• TCP/IP	Yes
– Data length, max.	64 kbyte
– several passive connections per port, supported	Yes
• ISO-on-TCP (RFC1006)	Yes
– Data length, max.	64 kbyte
• UDP	Yes
– Data length, max.	2 kbyte; 1 472 bytes for UDP broadcast
– UDP multicast	Yes; Max. 5 multicast circuits
• DHCP	Yes
• DNS	Yes
• SNMP	Yes

Article number	6ES7513-1AL02-0AB0
• DCP	Yes
• LLDP	Yes
• Encryption	Yes; Optional
Web server	
• HTTP	Yes; Standard and user pages
• HTTPS	Yes; Standard and user pages
OPC UA	
• Runtime license required	Yes; "Small" license required
• OPC UA Client	Yes
– Application authentication	Yes
– Security policies	Available security policies: None, Basic128Rsa15, Basic256Rsa15, Basic256Sha256
– User authentication	"anonymous" or by user name & password
– Number of connections, max.	4
– Number of nodes of the client interfaces, max.	1 000
– Number of elements for one call of OPC_UA_NodeGetHandleList/OPC_UA_ReadList/OPC_UA_WriteList, max.	300
– Number of elements for one call of OPC_UA_NameSpaceGetIndexList, max.	20
– Number of elements for one call of OPC_UA_MethodGetHandleList, max.	100
– Number of simultaneous calls of the client instructions per connection (except OPC_UA_ReadList,OPC_UA_WriteList,OPC_UA_MethodCall), max.	1
– Number of simultaneous calls of the client instructions OPC_UA_ReadList,OPC_UA_WriteList and OPC_UA_MethodCall, max.	5
– Number of registerable nodes, max.	5 000
– Number of registerable method calls of OPC_UA_MethodCall, max.	100
– Number of inputs/outputs when calling OPC_UA_MethodCall, max.	20

Article number	6ES7513-1AL02-0AB0
• OPC UA Server	Yes; Data access (read, write, subscribe), method call, custom address space
– Application authentication	Yes
– Security policies	Available security policies: None, Basic128Rsa15, Basic256Rsa15, Basic256Sha256
– User authentication	"anonymous" or by user name & password
– GDS support (certificate management)	Yes
– Number of sessions, max.	32
– Number of accessible variables, max.	50 000
– Number of registerable nodes, max.	10 000
– Number of subscriptions per session, max.	20
– Sampling interval, min.	100 ms
– Publishing interval, min.	500 ms
– Number of server methods, max.	20
– Number of inputs/outputs per server method, max.	20
– Number of monitored items, max.	1 000; for 1 s sampling interval and 1 s send interval
– Number of nodes for user-defined server interfaces, max.	1 000
• Alarms and Conditions	Yes
– Number of program alarms	100
– Number of alarms for system diagnostics	50
Further protocols	
• MODBUS	Yes; MODBUS TCP
Isochronous mode	
Equidistance	Yes
S7 message functions	
Number of login stations for message functions, max.	32
Program alarms	Yes
Number of configurable program messages, max.	5 000; Program messages are generated by the "Program_Alarm" block, ProDiag or GRAPH
Number of loadable program messages in RUN, max.	2 500
Number of simultaneously active program alarms	
• Number of program alarms	600
• Number of alarms for system diagnostics	100
• Number of alarms for motion technology objects	80

Article number	6ES7513-1AL02-0AB0
Test commissioning functions	
Joint commission (Team Engineering)	Yes; Parallel online access possible for up to 5 engineering systems
Status block	Yes; Up to 8 simultaneously (in total across all ES clients)
Single step	No
Number of breakpoints	8
Status/control	
• Status/control variable	Yes
• Variables	Inputs/outputs, memory bits, DBs, distributed I/Os, timers, counters
• Number of variables, max.	
– of which status variables, max.	200; per job
– of which control variables, max.	200; per job
Forcing	
• Forcing	Yes
• Forcing, variables	Peripheral inputs/outputs
• Number of variables, max.	200
Diagnostic buffer	
• present	Yes
• Number of entries, max.	1 000
– of which powerfail-proof	500
Traces	
• Number of configurable Traces	4; Up to 512 KB of data per trace are possible
Interrupts/diagnostics/status information	
Diagnostics indication LED	
• RUN/STOP LED	Yes
• ERROR LED	Yes
• MAINT LED	Yes
• STOP ACTIVE LED	Yes
• Connection display LINK TX/RX	Yes

Article number	6ES7513-1AL02-0AB0
Supported technology objects	
Motion Control	Yes; Note: The number of technology objects affects the cycle time of the PLC program; selection guide via the TIA Selection Tool
• Number of available Motion Control resources for technology objects	800
• Required Motion Control resources	
– per speed-controlled axis	40
– per positioning axis	80
– per synchronous axis	160
– per external encoder	80
– per output cam	20
– per cam track	160
– per probe	40
• Positioning axis	
– Number of positioning axes at motion control cycle of 4 ms (typical value)	5
– Number of positioning axes at motion control cycle of 8 ms (typical value)	10
Controller	
• PID_Compact	Yes; Universal PID controller with integrated optimization
• PID_3Step	Yes; PID controller with integrated optimization for valves
• PID-Temp	Yes; PID controller with integrated optimization for temperature
Counting and measuring	
• High-speed counter	Yes
Standards, approvals, certificates	
Suitable for safety functions	No
Ambient conditions	
Ambient temperature during operation	
• horizontal installation, min.	-25 °C; No condensation
• horizontal installation, max.	60 °C; Display: 50 °C, at an operating temperature of typically 50 °C, the display is switched off
• vertical installation, min.	-25 °C; No condensation
• vertical installation, max.	40 °C; Display: 40 °C, at an operating temperature of typically 40 °C, the display is switched off
Ambient temperature during storage/transportation	
• min.	-40 °C
• max.	70 °C
Altitude during operation relating to sea level	
• Installation altitude above sea level, max.	5 000 m; Restrictions for installation altitudes > 2 000 m, see manual

Article number	6ES7513-1AL02-0AB0
Configuration	
Programming	
Programming language	
– LAD	Yes
– FBD	Yes
– STL	Yes
– SCL	Yes
– GRAPH	Yes
Know-how protection	
• User program protection/password protection	Yes
• Copy protection	Yes
• Block protection	Yes
Access protection	
• protection of confidential configuration data	Yes
• Password for display	Yes
• Protection level: Write protection	Yes
• Protection level: Read/write protection	Yes
• Protection level: Complete protection	Yes
Cycle time monitoring	
• lower limit	adjustable minimum cycle time
• upper limit	adjustable maximum cycle time
Dimensions	
Width	35 mm
Height	147 mm
Depth	129 mm
Weights	
Weight, approx.	405 g

General technical specifications

You can find information on the general technical specifications, such as standards and approvals, electromagnetic compatibility, protection class, etc., in the S7-1500, ET 200MP (http://support.automation.siemens.com/WW/view/en/59191792) system manual.

Dimensional drawing

A

This section includes a dimensional drawing of the module on a mounting rail and a dimensional drawing with the front panel open. Always observe the specified dimensions for installation in cabinets, control rooms, etc.

Dimensional drawings for CPU 1513-1 PN

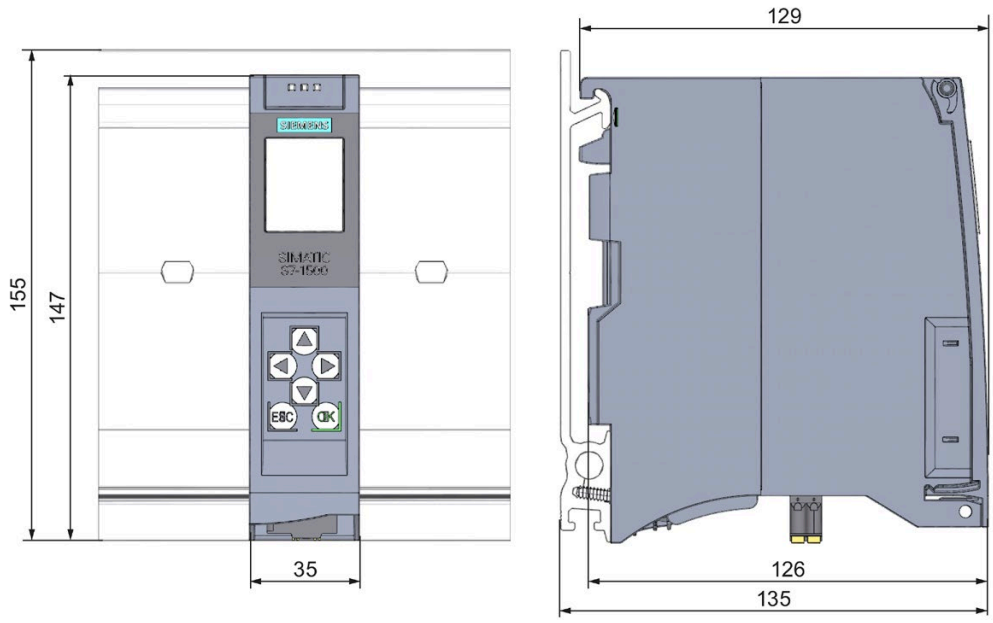

Figure A-1 Dimensional drawing of CPU 1513-1 PN, front and side views

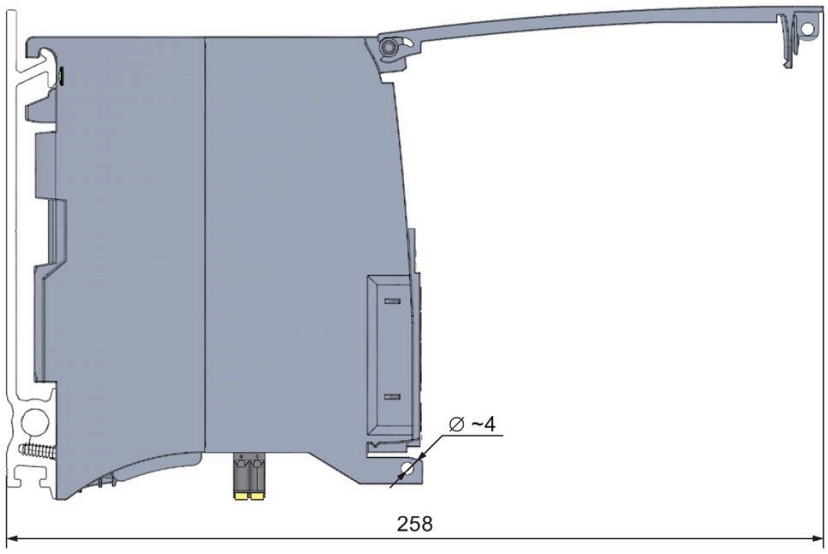

Figure A-2 Dimensional drawing of CPU 1513-1 PN, side view with front panel open

SIEMENS

Manual

SIMATIC

S7-1500R/H

CPU 1513R-1 PN
(6ES7513-1RL00-0AB0)

Edition 05/2021

support.industry.siemens.com

SIEMENS

SIMATIC

S7-1500R/H CPU 1513R-1 PN (6ES7513-1RL00-0AB0)

Equipment Manual

Preface

S7-1500R/H Documentation Guide 1

Product overview 2

Connecting 3

Interrupts, diagnostics, error messages and system events 4

Technical specifications 5

Dimension drawing A

05/2021

A5E42009333-AC

Legal information

Warning notice system

This manual contains notices you have to observe in order to ensure your personal safety, as well as to prevent damage to property. The notices referring to your personal safety are highlighted in the manual by a safety alert symbol, notices referring only to property damage have no safety alert symbol. These notices shown below are graded according to the degree of danger.

⚠ DANGER
indicates that death or severe personal injury **will** result if proper precautions are not taken.

⚠ WARNING
indicates that death or severe personal injury **may** result if proper precautions are not taken.

⚠ CAUTION
indicates that minor personal injury can result if proper precautions are not taken.

NOTICE
indicates that property damage can result if proper precautions are not taken.

If more than one degree of danger is present, the warning notice representing the highest degree of danger will be used. A notice warning of injury to persons with a safety alert symbol may also include a warning relating to property damage.

Qualified Personnel

The product/system described in this documentation may be operated only by **personnel qualified** for the specific task in accordance with the relevant documentation, in particular its warning notices and safety instructions. Qualified personnel are those who, based on their training and experience, are capable of identifying risks and avoiding potential hazards when working with these products/systems.

Proper use of Siemens products

Note the following:

⚠ WARNING
Siemens products may only be used for the applications described in the catalog and in the relevant technical documentation. If products and components from other manufacturers are used, these must be recommended or approved by Siemens. Proper transport, storage, installation, assembly, commissioning, operation and maintenance are required to ensure that the products operate safely and without any problems. The permissible ambient conditions must be complied with. The information in the relevant documentation must be observed.

Trademarks

All names identified by ® are registered trademarks of Siemens AG. The remaining trademarks in this publication may be trademarks whose use by third parties for their own purposes could violate the rights of the owner.

Disclaimer of Liability

We have reviewed the contents of this publication to ensure consistency with the hardware and software described. Since variance cannot be precluded entirely, we cannot guarantee full consistency. However, the information in this publication is reviewed regularly and any necessary corrections are included in subsequent editions.

Siemens AG
Digital Industries
Postfach 48 48
90026 NÜRNBERG
GERMANY

A5E42009333-AC
Ⓟ 03/2021 Subject to change

Copyright © Siemens AG 2018 - 2019.
All rights reserved

Preface

Purpose of the documentation

This manual supplements the system manual of the S7-1500R/H redundant system and the function manuals. This manual contains a description of the module-specific information. The system-related functions are described in the system manual. All system-spanning functions are described in the function manuals.

The information provided in this manual and the system manual enables you to commission the CPU 1513R-1 PN.

Conventions

STEP 7: In this documentation, "STEP 7" is used as a synonym for all versions of the configuration and programming software "STEP 7 (TIA Portal)".

Please also observe notes marked as follows:

Note

A note contains important information on the product described in the documentation, on the handling of the product or on the section of the documentation to which particular attention should be paid.

Recycling and disposal

For environmentally friendly recycling and disposal of your old equipment, contact a certified electronic waste disposal company and dispose of the equipment according to the applicable regulations in your country.

Security information

Siemens provides products and solutions with industrial security functions that support the secure operation of plants, systems, machines and networks.

In order to protect plants, systems, machines and networks against cyber threats, it is necessary to implement – and continuously maintain – a holistic, state-of-the-art industrial security concept. Siemens' products and solutions constitute one element of such a concept.

Customers are responsible for preventing unauthorized access to their plants, systems, machines and networks. Such systems, machines and components should only be connected to an enterprise network or the internet if and to the extent such a connection is necessary and only when appropriate security measures (e.g. firewalls and/or network segmentation) are in place.

For additional information on industrial security measures that may be implemented, please visit (https://www.siemens.com/industrialsecurity).

Siemens' products and solutions undergo continuous development to make them more secure. Siemens strongly recommends that product updates are applied as soon as they are available and that the latest product versions are used. Use of product versions that are no longer supported, and failure to apply the latest updates may increase customers' exposure to cyber threats.

To stay informed about product updates, subscribe to the Siemens Industrial Security RSS Feed visit (https://www.siemens.com/industrialsecurity).

Siemens Industry Online Support

You can find current information on the following topics quickly and easily here:

- **Product support**

  All the information and extensive know-how on your product, technical specifications, FAQs, certificates, downloads, and manuals.

- **Application examples**

  Tools and examples to solve your automation tasks – as well as function blocks, performance information and videos.

- **Services**

  Information about Industry Services, Field Services, Technical Support, spare parts and training offers.

- **Forums**

  For answers and solutions concerning automation technology.

- **mySupport**

  Your personal working area in Industry Online Support for messages, support queries, and configurable documents.

This information is provided by the Siemens Industry Online Support in the Internet (https://support.industry.siemens.com).

Industry Mall

The Industry Mall is the catalog and order system of Siemens AG for automation and drive solutions on the basis of Totally Integrated Automation (TIA) and Totally Integrated Power (TIP).

You can find catalogs for all automation and drive products on the Internet (https://mall.industry.siemens.com).

Table of contents

Preface **3**

1 S7-1500R/H Documentation Guide **7**

2 Product overview **9**

2.1 New functions in firmware version V2.9 9

2.2 Configuration and operating principle 13

2.3 Hardware properties 15

2.4 Firmware functions 18

2.5 Operator controls and display elements 20

2.5.1 Front view of the CPU with closed front panel 20

2.5.2 Front view of the CPU without front panel 22

2.5.3 Rear view of the CPU 23

2.6 Mode selector 24

3 Connecting **25**

3.1 Terminal assignment 25

4 Interrupts, diagnostics, error messages and system events **28**

4.1 Status and error display of the CPU 28

5 Technical specifications **33**

A Dimension drawing **41**

A.1 Dimension drawing 41

S7-1500R/H Documentation Guide

1

The documentation for the redundant S7-1500R/H system is divided into three areas. This division enables you to access the specific content you require.

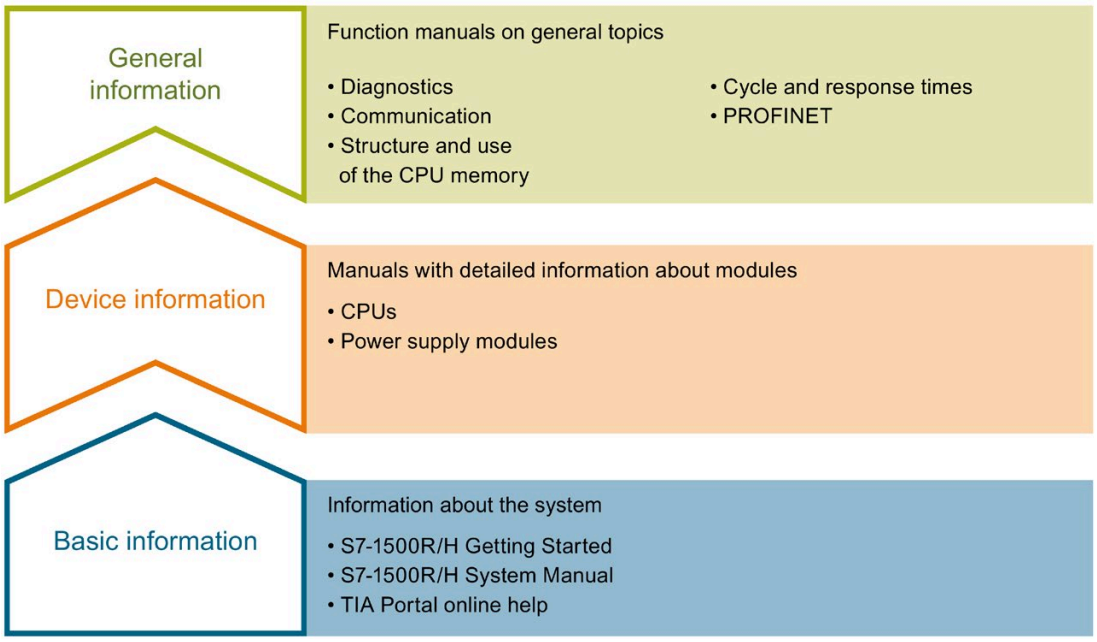

Basic information

The System Manual and Getting Started describe in detail the configuration, installation, wiring and commissioning of the redundant S7-1500R/H system. The STEP 7 online help supports you in the configuration and programming.

Device information

Product manuals contain a compact description of the module-specific information, such as properties, wiring diagrams, characteristics and technical specifications.

General information

The function manuals contain detailed descriptions on general topics regarding the redundant S7-1500R/H system, e.g. diagnostics, communication.

You can download the documentation free of charge from the Internet (https://support.industry.siemens.com/cs/ww/en/view/109742691).

Changes and supplements to the manuals are documented in a Product Information.

You can download the product information free of charge from the Internet (https://support.industry.siemens.com/cs/ww/en/view/109742691).

S7-1500/ET 200MP Manual Collection

The S7-1500/ET 200MP Manual Collection contains the complete documentation on the redundant S7-1500R/H system gathered together in one file.

You can find the Manual Collection on the Internet (https://support.industry.siemens.com/cs/ww/en/view/86140384).

SIMATIC S7-1500 comparison list for programming languages

The comparison list contains an overview of which instructions and functions you can use for which controller families.

You can find the comparison list on the Internet (https://support.industry.siemens.com/cs/ww/en/view/86630375).

"mySupport"

With "mySupport", your personal workspace, you make the best out of your Industry Online Support.

In "mySupport", you can save filters, favorites and tags, request CAx data and compile your personal library in the Documentation area. In addition, your data is already filled out in support requests and you can get an overview of your current requests at any time.

You must register once to use the full functionality of "mySupport".

You can find "mySupport" on the Internet (https://support.industry.siemens.com/My/ww/en/).

Application examples

The application examples support you with various tools and examples for solving your automation tasks. Solutions are shown in interplay with multiple components in the system - separated from the focus on individual products.

You will find the application examples on the Internet (https://support.industry.siemens.com/sc/ww/en/sc/2054).

Product overview

2

2.1 New functions in firmware version V2.9

This section contains an overview of the most important new firmware functions of the CPU since the last edition of the manual.

New functions of the CPU in firmware version V2.9

New functions	Customer benefits	Where can I find information?
Influence switchover time of switched S1 devices	As of FW version V2.9, you can influence the switchover time between disconnection and return of switched S1 devices after a failure/STOP of the primary CPU. This function offers the following advantages: • Optimization of the switchover time between disconnection and return of switched S1 devices	PROFINET function manual (http://support.automation.siemens.com/WW/view/en/49948856)
MRP interconnection	The MRP interconnection procedure is an extension of MRP. MRP interconnection enables the redundant coupling of 2 or more rings with MRP in PROFINET networks. MRP interconnection offers the following advantages: • When setting up redundant network topologies, there is no limitation to the maximum number of devices of 50 devices in a ring. • Monitoring of larger topologies with ring redundancy.	
Simulation of R/H-CPUs	PLCSIM Advanced V4.0 supports simulation of R/H-CPUs • Virtual commissioning of machines with R/H-CPUs in a system • Automatic testing of the STEP 7 user program The simulation offers the following advantages: • Early error detection and risk minimization • Reduced response times • No hardware costs	S7-PLCSIM Advanced Function Manual (https://support.industry.siemens.com/cs/ww/en/view/109773484)

New functions	Customer benefits	Where can I find information?
OB 72 (CPU redundancy error)	As of FW version V2.9, the operating system calls OB 72 on further events: • The R/H-system has entered RUN-Redundant system state and the synchronization of the two R/H-CPUs is possible redundantly. • The R/H-system has entered RUN-Redundant system state, but the synchronization of the two R/H-CPUs is not possible redundantly. • The R/H-system is still in RUN-Redundant system state and the synchronization of the two R/H-CPUs is possible redundantly now or again. • The R/H-system is still in RUN-Redundant system state, but the synchronization of the two R/H-CPUs is no longer possible redundantly.	S7-1500R/H System Manual (https://support.industry.siemens.com/cs/ww/en/view/109754833)
"RH_CTRL" instruction	As of FW version V2.9, the "RH_CTRL" instruction supports additional functions: • Request SYNCUP • Switch primary CPU to STOP mode (only in RUN-Redundant system state) • Switch backup CPU to STOP mode	
Instructions for recipe phases	As of FW version V2.9, the instructions for recipe phases supports: • RecipeExport (export recipe) • RecipeImport (import recipe)	Online help for STEP 7
Technology objects TO_BasicPos and SSI_Absolute_Encoder	Technology object "TO_BasicPos" You use the "TO_BasicPos" instruction to cyclically control a SINAMICS drive with the technology for SINAMICS S/G/V basic positioners. Technology object SSI_Absolute_Encoder You use the "SSI_Absolute_Encoder" instruction to control position detection and measuring functions of the TM PosInput technology module via the user program.	

New functions of the CPU in firmware version V2.8

New functions	Customer benefits	Where can I find information?
Download modified user program in RUN-Redundant system state	You can download a modified user program into the R/H CPUs in the RUN-Redundant system state. Advantage: The redundant system will remain consistently in the RUN-Redundant system state during the change to the user program. The system state will not switch to RUN-Rolo or SYNCUP.	S7-1500R/H System Manual (https://support.industry.siemens.com/cs/ww/en/view/109754833)
Backing up the configuration of the S7-1500R/H redundant system in runtime	You do not have to interrupt the process during a backup while the plant is running. Uninterrupted plant operation avoids high restart and material costs.	
Switched S1 device	The "Switched S1 device" function of the CPU enables operation of standard IO devices in the S7-1500R/H redundant system.	
Testing with breakpoints	When testing with breakpoints, you run a program from breakpoint to breakpoint in the STARTUP (startup OB) or RUN-Solo system state. Testing with breakpoints provides you with the following advantages: • Testing SCL and STL program code with the help of breakpoints • Localization of logic errors step by step • Simple and quick analysis of complex programs prior to actual commissioning • Recording of current values within individual executed loops • Using breakpoints for program validation is also possible in SCL or STL networks within LAD/FBD blocks.	
PID controller	PID controllers are built into all R/H-CPUs as standard. PID controllers measure the actual value of a physical variable, for example, temperature or pressure, and compare the actual value with the setpoint. Based on the resulting error signal, the controller calculates a manipulated variable that causes the process value to reach the setpoint as quickly and stably as possible. The PID controllers offer you the following advantages: • Simple configuration and programming through integrated editors and blocks • Simple simulation, visualization, commissioning and operation via PG and HMI • Automatic calculation of the control parameters and tuning during operation • No additional hardware and software required	• S7-1500R/H System Manual (https://support.industry.siemens.com/cs/ww/en/view/109754833) • PID Control Function Manual (https://support.industry.siemens.com/cs/ww/en/view/108210036)
Alarms in the user program	Alarms enable you to display events from process execution in the S7-1500R/H redundant system and to quickly identify, accurately locate, and correct errors.	Diagnostics function manual (https://support.industry.siemens.com/cs/ww/en/view/59192926)

Additional information

You can find an overview of all new functions, improvements and revisions in the respective firmware versions on the Internet (https://support.industry.siemens.com/cs/ww/en/view/109478459).

2.2 Configuration and operating principle

Structure

The S7-1500R redundant system consists of the following components:

- Two CPUs of the type CPU 1513R-1 PN
- Two SIMATIC memory cards
- PROFINET cable (redundancy connections, PROFINET ring)
- IO devices
- Load power supply (optional)

You mount the CPUs on a common mounting rail or spatially separated on two separate mounting rails. You connect the two CPUs and the IO devices in a PROFINET ring via the PROFINET cable.

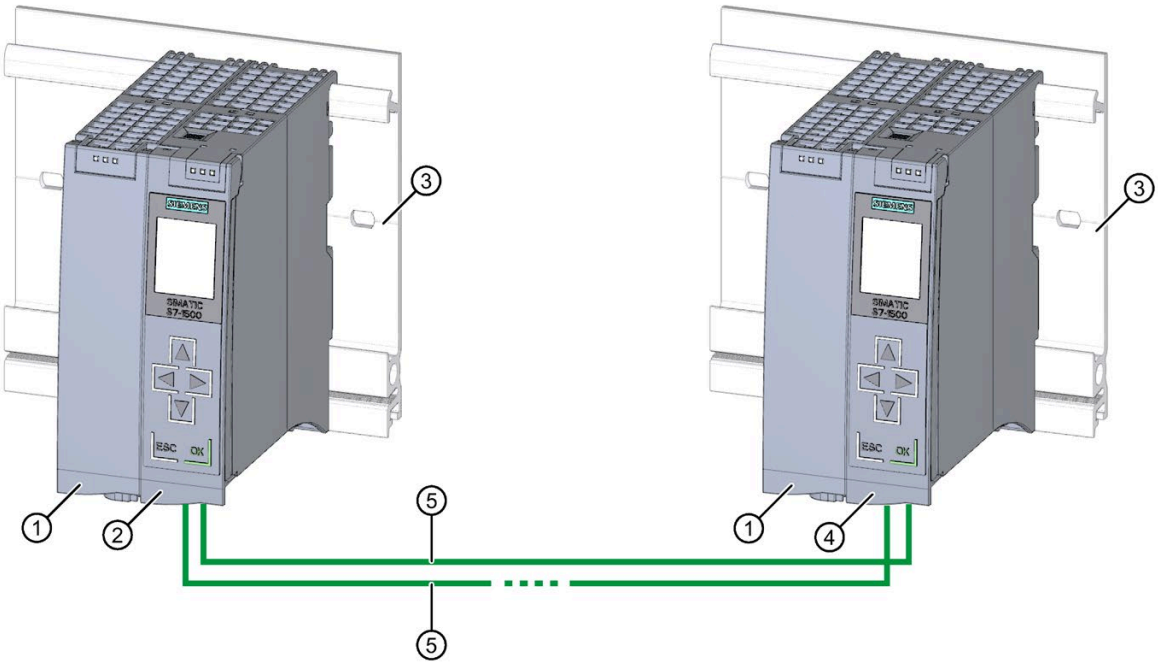

① Optional load current supply
② First CPU
③ Mounting rail with integrated DIN rail profile
④ Second CPU
⑤ PROFINET cable (redundancy connections, PROFINET ring)

Figure 2-1 Configuration example for S7-1500R

Note

Standard rail adapter

You mount the CPUs on a standardized 35 mm rail using the standard rail adapter.

You will find information on mounting the standard rail adapter in the S7-1500R/H redundant system (https://support.industry.siemens.com/cs/ww/en/view/109754833) System Manual.

Principle of operation

One of the two CPUs in the redundant system takes on the role of CPU for process control (primary CPU). The other CPU takes on the role of the following CPU (backup CPU). The assigned role of the CPUs can change during operation. Synchronization of all relevant data between primary CPU and backup CPU ensures fast switching between CPUs in the event of a primary CPU failure. If the primary CPU fails, the backup CPU retains control of the process as the new primary CPU at the point of interruption.

The redundancy connections are the PROFINET ring with MRP. The CPUs are synchronized via a PROFINET ring.

Additional information

You can find a detailed description of the operation and design of the CPUs in the system manual Redundant System S7-1500R/H (https://support.industry.siemens.com/cs/ww/en/view/109754833).

2.3 Hardware properties

Article number

6ES7513-1RL00-0AB0

View of the module

The figure below shows the CPU 1513R-1 PN.

Figure 2-2 CPU 1513R-1 PN

Note

Protective film

Note that there is a removable protective foil on the display when the CPUs are delivered.

Properties

CPU 1513R-1 PN has the following technical properties:

Property	Description	Additional information
CPU display	All CPUs of the redundant system S7 1500R/H have a display with plain text information. The display provides you with diagnostic messages as well as information about the article number, the firmware version and the serial number of the CPU. You can also view and assign the IP addresses, the PROFINET device name and the redundancy ID of the CPU. The system IP address cant be viewed via STEP 7 but not in the display. In addition to the functions listed here, a large number of other functions are available on the display. These additional functions are described in the SIMATIC S7 1500 Display Simulator.	• Redundant System S7-1500R/H (https://support.industry.siemens.com/cs/ww/en/view/109754833) System Manual • SIMATIC S7-1500 Display Simulator (https://support.industry.siemens.com/cs/ww/en/view/109761758)
Supply voltage	The 24 V DC supply voltage is fed via a 4-pin plug located on the front of the CPU.	• Section Connecting (Page 25) • Redundant System S7-1500R/H (https://support.industry.siemens.com/cs/ww/en/view/109754833) System Manual
PROFINET IO		
PROFINET IO interface (X1 P1 R and X1 P2 R)	The CPU has an X1 interface with two ports (X1 P1 R and X1 P2 R). • The PROFINET IO interface X1 (default P1 R) is used to set up the PROFINET ring with the two CPUs and the IO devices. • The PROFINET IO interface X1 (default P2 R) is used to make the connection between the two R-CPUs in the PROFINET ring. In the PROFINET ring, the synchronization frames between the CPUs are transmitted via the following connections: – The direct connection (X1 P2 R) – The indirect connection (X1 P1 R) via the IO devices • The interface supports PROFINET IO RT (Real-Time) and PROFINET basic functionality. Basic PROFINET functionality comprises: – HMI communication – Communication with the configuration system – Communication with a higher-level network (backbone, router, Internet) – Communication with another machine or automation cell	• Redundant System S7-1500R/H (https://support.industry.siemens.com/cs/ww/en/view/109754833) System Manual • Function manual PROFINET (https://support.industry.siemens.com/cs/ww/en/view/49948856)

Property	Description	Additional information
Operation of the CPUs as IO controllers	**IO controller:** As IO controllers the CPUs address the following configured IO devices: • IO devices with S2 system redundancy within the PROFINET ring • IO devices with S2 system redundancy that are decoupled from the PROFINET ring via a switch • Standard IO devices (switched S1 devices) Standard IO devices usually do not support H-Sync Forwarding. To avoid a cycle time increase when the PROFINET ring is interrupted, integrate the standard IO devices behind a switch and not in the PROFINET ring.	

Note

PROFINET basic functionality

CPU 1513R-1 PN has a PROFINET IO interface with two ports (X1 P1 R and X1 P2 R).

To connect an HMI device or PG/PC to the CPUs via Industrial Ethernet, build the PROFINET ring via the PROFINET X1 interface. Install a switch in the PROFINET ring. Make an Industrial Ethernet connection via the switch.

H-Sync Forwarding

H-Sync Forwarding enables a PROFINET device with MRP to forward synchronization data (synchronization frames) of an S7-1500R redundant system only within the PROFINET ring.

In addition, H-Sync Forwarding forwards the synchronization data even during reconfiguration of the PROFINET ring. H-Sync Forwarding avoids a cycle time increase if the PROFINET ring is interrupted.

Note

Support of H-Sync Forwarding

The technical specifications typically state whether a PROFINET device supports H-Sync Forwarding.

The GSD file will also indicate whether the device supports H-Sync Forwarding. The device supports H-Sync Forwarding when the "ApplicationClass" attribute contains the "HighAvailability" token.

You will find more information on H-Sync Forwarding in the system manual S7-1500R/H redundant system (https://support.industry.siemens.com/cs/ww/en/view/109754833).

Accessories

You can find information on the topic of "Accessories/spare parts" in the system manual for Redundant System S7-1500R/H (https://support.industry.siemens.com/cs/ww/en/view/109754833).

2.4 Firmware functions

Functions

CPU 1513R-1 PN supports the following firmware functions:

Function	Description	Additional information
CPU redundancy	There are two duplicate CPUs that synchronize their data via redundancy connections within a PROFINET ring. If one of the CPUs fails, the other CPU retains control of the process.	Redundant System S7-1500R/H (https://support.industry.siemens.com/cs/ww/en/view/109754833) System Manual
Integrated system diagnostics	The system automatically generates the messages for the system diagnostics and outputs these messages via a programming device/PC, HMI device or the integrated display. System diagnostics information is also available when the CPUs are in operating state STOP.	Function manual Diagnostics (https://support.industry.siemens.com/cs/ww/en/view/59192926)
Integrated trace functionality	Trace functionality supports you in troubleshooting and/or optimizing the user program. You record device tags and evaluate the recordings with the trace and logic analyzer function. Tags are, for example, drive parameters or system and user tags of a CPU. Trace and logic analyzer functions are suitable for monitoring highly dynamic processes. Note: Note that the S7-1500R/H redundant system supports recording of measurements. However, saving the measurements to the SIMATIC memory card is not supported.	Function manual Using the trace and logic analyzer function (https://support.industry.siemens.com/cs/ww/en/view/64897128)
PROFINET IO		
System redundancy S2	IO-Devices with S2 system redundancy enable uninterrupted operation during a primary backup switchover. If the role of the CPUs changes, the new primary CPU takes over the PROFINET IO communication.	• Redundant System S7-1500R/H (https://support.industry.siemens.com/cs/ww/en/view/109754833) System Manual • Function manual PROFINET (http://support.automation.siemens.com/WW/view/en/49948856)
Switched S1 device	The switched S1 device function of the CPU enables operation of standard IO devices in the S7-1500R/H redundant system.	Redundant System S7-1500R/H (https://support.industry.siemens.com/cs/ww/en/view/109754833) System Manual
RT (real time)	RT prioritizes PROFINET IO frames over standard frames. This ensures the required determinism in the automation technology. In this process the data is transferred via prioritized Ethernet frames.	Function manual PROFINET (http://support.automation.siemens.com/WW/view/en/49948856)
MRP (Media Redundancy Protocol)	The Media Redundancy Protocol enables the configuration of redundant networks. Redundant transmission links (ring topology) ensure that an alternative communication path is made available if a transmission link fails. Within the PROFINET ring, the R-CPUs assume the role of the MRP Manager following appropriate project configuration and all other devices in the ring assume the role of the MRP clients.	

Function	Description	Additional information
MRP interconnection	The process MRP interconnection is an enhancement of MRP and allows redundant coupling of two or more rings with MRP in PROFINET networks. MRP interconnection is - like MRP - specified in the standard IEC 62439-2 (Edition 3).	
PROFIenergy	PROFIenergy is a PROFINET-based data interface for switching off consumers centrally and with full coordination during pause times regardless of the manufacturer or device type. Through this, the process should only be provided with the energy that is absolutely required. Most of the energy is saved by the process. The PROFINET device itself only contributes a few watts to the savings potential.	
Integrated technology		
Integrated closed-loop control functionality	• PID Compact (continuous PID controller) • PID 3Step (step controller for integrating actuators) • PID Temp (temperature controller for heating and cooling with two separate actuators)	Function manual PID Control (https://support.industry.siemens.com/cs/ww/en/view/108210036)
Controlling, measuring and position detection	• TO_BasicPos (control of a SINAMICS drive) • SSI_Absolute_Encoder (control of position detection and measuring function of the TM PosInput technology module)	STEP 7 online help
Security Integrated		
Know-how protection	The know-how protection protects user blocks against unauthorized access and modifications.	Redundant System S7-1500R/H (https://support.industry.siemens.com/cs/ww/en/view/109754833) System Manual
Access protection	You can use authorization levels to assign separate rights to different user groups.	
Integrity protection	The CPUs dispose of integrity protection by default. Integrity protection identifies possible manipulations of engineering data on the SIMATIC memory card or during data transfer between STEP 7 and the CPUs. Integrity protection also checks the communication from a SIMATIC HMI system to the CPUs for possible manipulations of engineering data. If integrity protection identifies the manipulation of engineering data, the user receives a corresponding message.	
Password provider	As an alternative to manual password entry, you can link a password provider to STEP 7. A password provider offers the following advantages: • Convenient handling of passwords. STEP 7 automatically imports the password for the blocks. This saves you time. • Optimum block protection because the users do not know the password itself.	

2.5 Operator controls and display elements

2.5.1 Front view of the CPU with closed front panel

The figure below shows the front view of the CPU 1513R-1 PN.

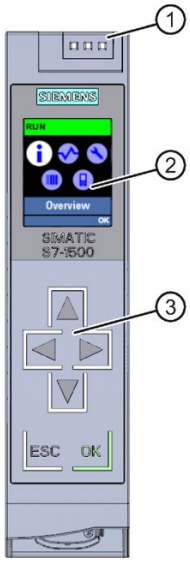

① LEDs for the current operating state and diagnostic status of the CPU

② Display

③ Control keys

Figure 2-3 View of the CPU 1513R-1 PN (with front panel) - front

---

Note

Temperature range for display

To increase its service life, the display switches off at a temperature below the permitted operating temperature of the device. When the display cools down, it automatically switches itself on again. When the display is switched off, the LEDs continue to show the status of the CPUs.

You can find additional information on the temperatures at which the display switches itself on and off in the Technical specifications (Page 33).

Pulling and plugging the front panel with display

You can pull and plug the front panel with display during operation.

WARNING

Personal injury and damage to property may occur

If you remove or attach the front panel of a redundant system S7-1500R/H during operation, personal injury or damage to property can occur in hazardous area zone 2.

Before you remove or fit the front panel, always switch off the power supply to the S7-1500R/H redundant system in hazardous area zone 2.

Locking the front panel

You can lock the front panel to protect the SIMATIC memory card and the mode selector of the CPU against unauthorized access.

You can attach a security seal or a padlock with a hoop diameter of 3 mm to the front panel.

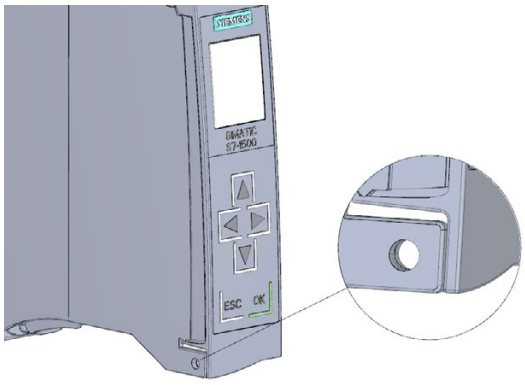

Figure 2-4 Locking latch on the CPU

In addition to the mechanical lock, you can also block access to a password-protected CPU on the display (local lock) and assign a password for the display. You can find additional information on the display, the configurable protection levels and the local lock in the system manual for Redundant System S7-1500R/H (https://support.industry.siemens.com/cs/ww/en/view/109754833).

Reference

You can find detailed information on the individual display options, a training course and a simulation of the available menu commands in the SIMATIC S7-1500 Display Simulator (https://support.industry.siemens.com/cs/ww/en/view/109761758).

2.5.2 Front view of the CPU without front panel

The figure below shows the operator controls and connection elements of the CPU 1513R-1 PN.

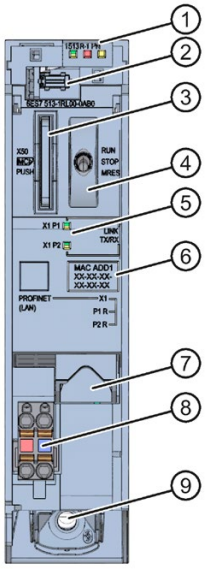

① LEDs for the current operating state and diagnostic status of the CPUs
② Display connector
③ Slot for the SIMATIC memory card
④ Mode selector
⑤ LEDs for the 2 ports of the PROFINET interface X1
⑥ MAC address of the X1 interface
⑦ PROFINET IO interface X1 with 2 ports
⑧ Connector for power supply
⑨ Fastening screw

Figure 2-5 View of the CPU 1513R-1 PN (without front panel) - front

2.5.3 Rear view of the CPU

The figure below shows the connection elements on the rear of the CPU 1513R-1 PN.

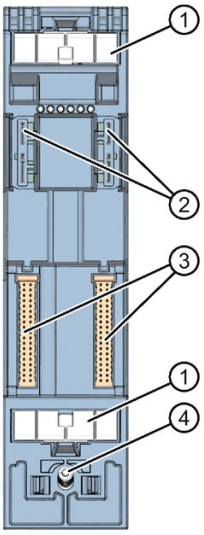

① Shield contact surface
② Plug-in connection for power supply
③ Plug-in connection for backplane bus
④ Fastening screw

Figure 2-6 View of the CPU 1513R-1 PN - rear

2.6 Mode selector

You use the mode selector to:

- Request a change to a specific operating state
- Disable or enable the change of a specific operating state

  (if, for example, the mode selector is set to STOP, you cannot switch the CPU to RUN via a communication task configured in the TIA Portal or via the display)

The following table shows the position of the switch and the corresponding meaning.

Table 2- 1 Mode switch settings

Position	Meaning	Explanation
RUN	RUN operating state	The CPU has permission to go to RUN.
STOP	STOP operating state	The CPU does not have permission to go to RUN.
MRES	Memory reset	Position for CPU memory reset.

Reference

You can find a brief overview of the various operating states and system states in the section Status and error display of the CPU (Page 28).

You can find a detailed description of the operating states and system states in the system manual for S7-1500R/H Redundant System (https://support.industry.siemens.com/cs/ww/en/view/109754833).

Connecting

3

3.1 Terminal assignment

This section provides information on the terminal assignment of the individual interfaces and the block diagram of the CPU 1513R-1 PN.

24 V DC supply voltage (X80)

The connector for the power supply is plugged in when the CPU ships from the factory.

The following table shows the signal names and the descriptions of the pin assignment of the 24 V DC supply voltage.

Table 3- 1 Pin assignment 24 V DC supply voltage

View Connector	Signal name [1]		Description
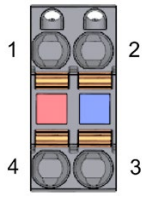	1	1L+	+ 24 V DC of the supply voltage
	2	1M	Ground of the supply voltage
	3	2M	Ground of the supply voltage for loop-through [2]
	4	2L+	+ 24 V DC of the supply voltage for loop-through [2]

[1] 1L+ and 2L+ as well as 1M and 2M are bridged internally.

[2] Maximum 10 A permitted

You can find information on the various supply options in the system manual for Redundant System S7-1500R/H (https://support.industry.siemens.com/cs/ww/en/view/109754833).

PROFINET interface X1 with 2-port switch (X1 P1 R and X1 P2 R)

The assignment corresponds to the Ethernet standard for a RJ45 connector.

- When autonegotiation is deactivated, the RJ45 socket is allocated as a switch (MDI-X).
- When autonegotiation is activated, autocrossing is in effect and the RJ45 socket is allocated either as data terminal equipment (MDI) or a switch (MDI-X).

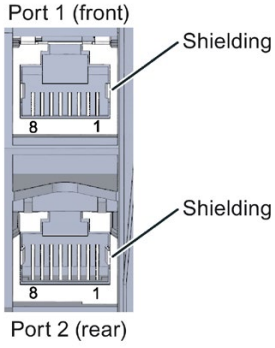

Figure 3-1 Interface assignments

Additional information

You can find additional information on the topic of "Connecting the CPU" and on the topic "Accessories/spare parts" in the system manual for Redundant System S7-1500R/H (https://support.industry.siemens.com/cs/ww/en/view/109754833).

Assignment of the MAC addresses

CPU 1513R-1 PN has a PROFINET interface with two ports for each CPU. The PROFINET interface itself has a MAC address, and each of the two PROFINET ports has its own MAC address. There are a total of six MAC addresses for the two CPUs of the CPU 1513R-1 PN.

The MAC addresses of the PROFINET ports are needed for the LLDP protocol, for example for the neighborhood discovery function.

The number range of the MAC addresses is sequential. The first and last MAC addresses are printed on the rating plate on the right side of each CPU 1513R-1 PN.

The table below shows how the MAC addresses are assigned.

Table 3- 2 Assignment of MAC addresses using the example of a single CPU

	Assignment	Labeling
MAC address 1	PROFINET interface X1 (visible in STEP 7 for accessible devices)	• Front printed • Right-side printed (start of number range)
MAC address 2	Port X1 P1 R (required for LLDP, for example)	---
MAC address 3	Port X1 P2 R (required for LLDP, for example)	• Right-side printed (end of number range)

Block diagram

The following figure shows the block diagram of the CPU 1513R-1 PN.

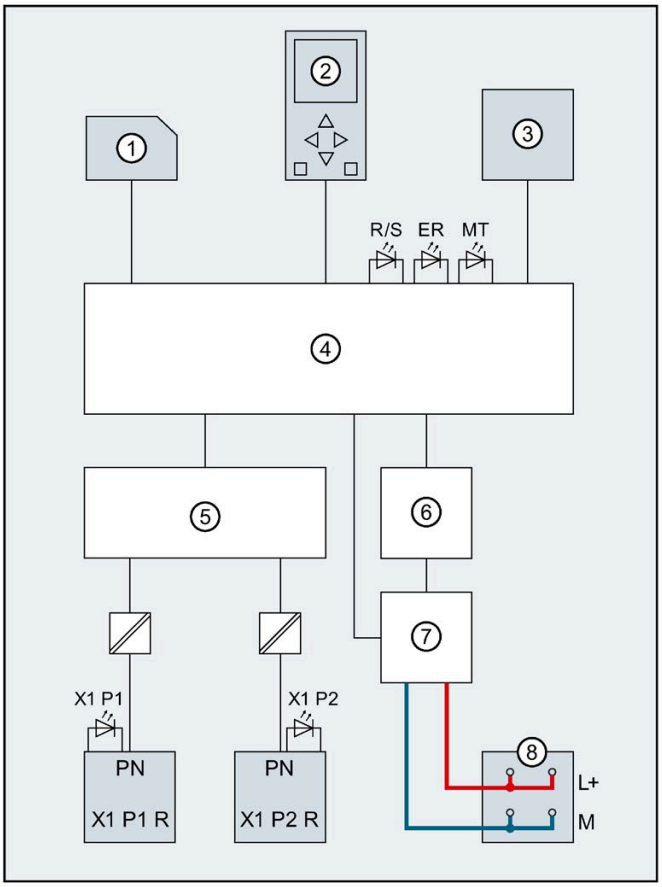

①	SIMATIC memory card (X50)	PN X1 P1 R	PROFINET interface X1 port 1
②	Display	PN X1 P2 R	PROFINET interface X1 port 2
③	Mode selector RUN/STOP/MRES	L+	24 V DC supply voltage
④	Electronics	M	Ground
⑤	PROFINET 2-port switch	R/S	RUN/STOP LED (yellow/green)
⑥	Backplane bus connection (connection to backplane bus not configurable)	ER	ERROR LED (red)
⑦	Internal supply voltage	MT	MAINT LED (yellow)
⑧	Supply of the 24 V DC supply voltage (X80)	X1 P1, X1 P2	LED Link TX/RX

Figure 3-2 Block diagram of the CPU 1513R-1 PN

Interrupts, diagnostics, error messages and system events

4

4.1 Status and error display of the CPU

The LED displays of the CPU are described below.

You can find more detailed information on "Interrupts" in the STEP 7 online help.

You can find additional information on the topic of "Diagnostics" and "System events" in the Diagnostics (https://support.industry.siemens.com/cs/ww/en/view/59192926) function manual and in the system manual Redundant System S7-1500R/H (https://support.industry.siemens.com/cs/ww/en/view/109754833).

You can find additional information on the topic of "Operating states and system states" as well as various failure scenarios in the system manual for S7-1500R/H Redundant System (https://support.industry.siemens.com/cs/ww/en/view/109754833).

LED display

The figure below shows the LED displays of the CPU 1513R-1 PN.

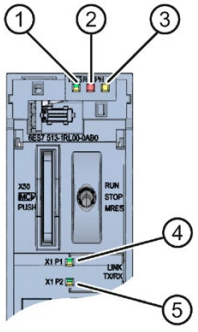

① RUN/STOP LED (yellow/green LED)

② ERROR LED (red LED)

③ MAINT LED (yellow LED)

④ LINK RX/TX LED for port X1 P1 (yellow/green LED)

⑤ LINK RX/TX LED for port X1 P2 (yellow/green LED)

Figure 4-1 LED display of the CPU 1513R-1 PN (without front panel)

LED displays depending on operating states and system states

CPU 1513R-1 PN has the following LEDs for displaying the current operating state and diagnostics status.

- RUN/STOP LED
- ERROR LED
- MAINT LED

The LEDs indicate the operating state of the respective CPU within the redundant system. Operating states describe the behavior of a single CPU at a specific time. The combination of the operating states of the CPUs forms the system state.

The following figure shows the possible operating states of the CPUs and the resulting system states.

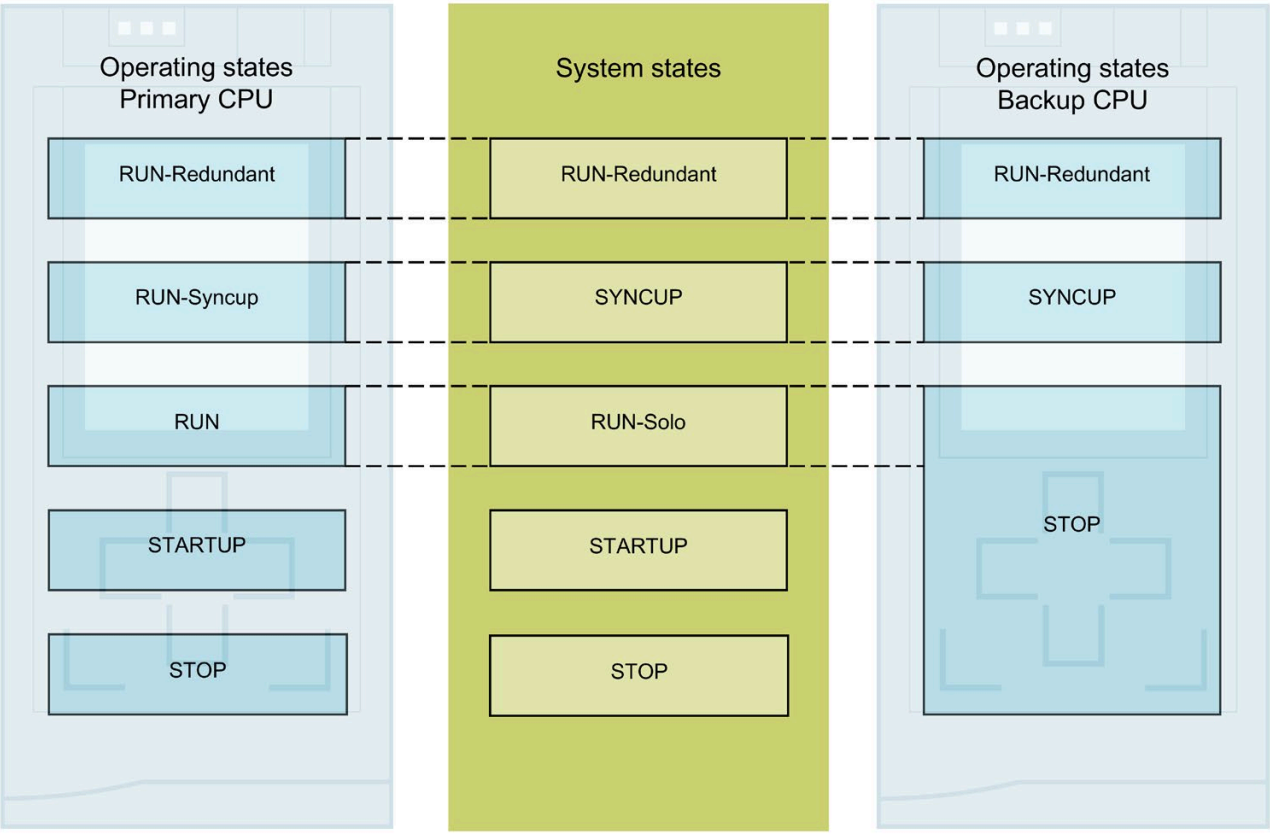

Figure 4-2 Operating states and system states

Meaning of the RUN/STOP, ERROR and MAINT LEDs

CPU 1513R-1 PN has three LEDs for displaying the current operating state and diagnostics status.

Note

LED patterns of the redundant system S7 1500R

Note that it is not always possible to:

- Determine the state of the CPU from the signal pattern
- Determine the state of the other CPU from the signal pattern

The "Meaning" column only shows a possible typical cause.

To investigate the cause of the signal pattern, use the diagnostic buffer and its display via:

- STEP 7
- HMI devices
- Displays of the CPUs

The following table shows the meaning of the various color combinations for the RUN/STOP, ERROR and MAINT LEDs.

Table 4- 1 Meaning of the LEDs

RUN/STOP LED	ERROR LED	MAINT LED	Meaning
LED off	LED off	LED off	Missing or insufficient supply voltage on the CPU.
LED flashes yellow/green	LED flashes red	LED flashes yellow	Startup (CPU booting)
			Test of LEDs during startup, inserting a module.
			LED flashing test
LED lit yellow	LED off	LED lit yellow	CPU is in operating state STOP.
			Completion of system initialization
LED flashes yellow	LED off	LED lit yellow	CPU executes internal activities in an operating state ≠ RUN-Redundant.
LED lit yellow	LED flashes red	LED flashes yellow	CPU defective Firmware update using SIMATIC Memory Card has failed.
LED lit yellow	LED off	LED flashes yellow	Firmware update successfully completed.
LED flashes yellow/green	LED off	LED lit yellow	The primary CPU is in operating state STARTUP. The backup CPU is in operating state SYNCUP. The backup CPU has not yet been restarted for SYNCUP during this phase.
LED flashes yellow	LED off	LED off	The CPU performs a warm restart.
LED lit green	LED off	LED lit yellow	Maintenance demanded for the plant. You need to check/replace the affected hardware within a short period of time.
			The primary CPU is in the RUN or RUN-Syncup operating state.
			Active Force job
LED lit green	LED off	LED off	The CPU is in operating state RUN-Redundant. There are no events, requirements, errors, etc.
LED lit green	LED flashes red	LED off	A diagnostic event is pending in operating state RUN-Redundant.
LED lit green	LED flashes red	LED lit yellow	A diagnostic event (e.g. failure of an IO device within the PROFINET ring or no access to SIMATIC memory card possible[1]) and maintenance is demanded (e.g. interruption of the PROFINET ring).

[1] If there is not enough storage space on a SIMATIC Memory Card or on both SIMATIC Memory Cards in RUN-Redundant, the write function is aborted, and the redundant system continues operation with the original configuration. The redundant system will remain in the RUN-Redundant system state.

Note

MAINT LED of the two CPUs

The MAINT LEDs of both CPUs only go out when the following conditions are fulfilled:

- The CPUs are in the RUN-Redundant system state.
- No maintenance is demanded.

Note

LED displays in redundant operating state

In the RUN-Redundant system state, the LED displays on both CPUs are identical (exception: you are performing an LED flash test on one CPU).

Meaning of LINK RX/TX LED

Each port has a LINK RX/TX LED. The table below shows the various LED patterns of the ports of the CPU 1513R-1 PN.

Table 4- 2 Meaning of LINK RX/TX LED

LINK TX/RX LED	Meaning
off	There is no Ethernet connection between the PROFINET interface of the PROFINET device and the communication partner. No data is currently being sent/received via the PROFINET interface. There is no LINK connection. The redundancy connections were interrupted.
Flashes green	The CPU performs an LED flash test.
Illuminated green	There is an Ethernet connection between the PROFINET interface of your PROFINET device and a communication partner. The redundancy connections are OK.
LED flashes yellow/green	Data is currently being received/sent by a communication partner via the PROFINET interface of the PROFINET device. Note that the human eye perceives this LED image as an LED that is lit yellow or flickering yellow.

Note

"LED" instruction

You can read the status (e.g. "On" or "Off") of LEDs of a CPU or a module using the "LED" instruction. Note, however, that it is not possible to read the LED status of the LINK RX/TX LEDs on all S7-1500 R/H CPUs.

You can find additional information on the "LED" instruction in the STEP 7 online help.

Technical specifications

5

The following table shows the technical specifications as of 05/2021. You can find a data sheet including daily updated technical specifications on the Internet (https://support.industry.siemens.com/cs/ww/en/pv/6ES7513-1RL00-0AB0/td?dl=en).

Article number	6ES7513-1RL00-0AB0
General information	
Product type designation	CPU 1513R-1 PN
HW functional status	FS01
Firmware version	V2.9
Product function	
• I&M data	Yes; I&M0 to I&M3
• Isochronous mode	No
Engineering with	
• STEP 7 TIA Portal configurable/integrated from version	V17 (FW V2.9) / V16 (FW V2.8) / V15.1 (FW V2.6)
Display	
Screen diagonal [cm]	3.45 cm
Control elements	
Number of keys	6
Mode selector switch	1
Supply voltage	
Type of supply voltage	24 V DC
permissible range, lower limit (DC)	19.2 V
permissible range, upper limit (DC)	28.8 V
Reverse polarity protection	Yes
Mains buffering	
• Mains/voltage failure stored energy time	5 ms
Input current	
Current consumption (rated value)	0.7 A
Inrush current, max.	1.9 A; Rated value
I^2t	0.02 $A^2 \cdot s$
Power loss	
Power loss, typ.	5.7 W
Memory	
Number of slots for SIMATIC memory card	1
SIMATIC memory card required	Yes
Work memory	
• integrated (for program)	300 kbyte
• integrated (for data)	1.5 Mbyte

Article number	6ES7513-1RL00-0AB0
Load memory	
• Plug-in (SIMATIC Memory Card), max.	32 Gbyte
Backup	
• maintenance-free	Yes
CPU processing times	
for bit operations, typ.	80 ns
for word operations, typ.	96 ns
for fixed point arithmetic, typ.	128 ns
for floating point arithmetic, typ.	512 ns
CPU-blocks	
Number of elements (total)	4 000; Blocks (OB, FB, FC, DB) and UDTs
DB	
• Number range	Number range: 1 to 59 999
• Size, max.	1.5 Mbyte; For non-optimized block accesses, the max. size of the DB is 64 KB
FB	
• Number range	0 ... 65 535
• Size, max.	300 kbyte
FC	
• Number range	0 ... 65 535
• Size, max.	300 kbyte
OB	
• Size, max.	300 kbyte
• Number of free cycle OBs	100
• Number of time alarm OBs	20
• Number of delay alarm OBs	20
• Number of cyclic interrupt OBs	20
• Number of process alarm OBs	50
• Number of startup OBs	100
• Number of asynchronous error OBs	4
• Number of synchronous error OBs	2
• Number of diagnostic alarm OBs	1
Nesting depth	
• per priority class	24

Article number	6ES7513-1RL00-0AB0
Counters, timers and their retentivity	
S7 counter	
• Number	2 048
Retentivity	
– adjustable	Yes
IEC counter	
• Number	Any (only limited by the main memory)
Retentivity	
– adjustable	Yes
S7 times	
• Number	2 048
Retentivity	
– adjustable	Yes
IEC timer	
• Number	Any (only limited by the main memory)
Retentivity	
– adjustable	Yes
Data areas and their retentivity	
Retentive data area (incl. timers, counters, flags), max.	128 kbyte
Flag	
• Size, max.	16 kbyte
• Number of clock memories	8; 8 clock memory bit, grouped into one clock memory byte
Data blocks	
• Retentivity adjustable	Yes
• Retentivity preset	No
Local data	
• per priority class, max.	64 kbyte; max. 16 KB per block
Address area	
Number of IO modules	2 048; max. number of modules / submodules
I/O address area	
• Inputs	32 kbyte; All inputs are in the process image
• Outputs	32 kbyte; All outputs are in the process image
per integrated IO subsystem	
– Inputs (volume)	8 kbyte
– Outputs (volume)	8 kbyte
Subprocess images	
• Number of subprocess images, max.	32
Hardware configuration	
Number of distributed IO systems	1

Article number	6ES7513-1RL00-0AB0
Number of IO Controllers	
• integrated	1
Time of day	
Clock	
• Type	Hardware clock
• Backup time	6 wk; At 40 °C ambient temperature, typically
• Deviation per day, max.	10 s; Typ.: 2 s
Operating hours counter	
• Number	16
Clock synchronization	
• supported	Yes
• on Ethernet via NTP	Yes
Interfaces	
Number of PROFINET interfaces	1
1. Interface	
Interface types	
• RJ 45 (Ethernet)	Yes; X1
• Number of ports	2
• integrated switch	Yes
Protocols	
• IP protocol	Yes; IPv4
• PROFINET IO Controller	Yes
• PROFINET IO Device	No
• SIMATIC communication	Yes; Only Server
• Open IE communication	Yes
• Web server	No
• Media redundancy	Yes
PROFINET IO Controller	
Services	
– PG/OP communication	Yes
– Isochronous mode	No
– IRT	No
– PROFIenergy	Yes
– Number of connectable IO Devices, max.	64

Article number	6ES7513-1RL00-0AB0
Interface types	
RJ 45 (Ethernet)	
• 100 Mbps	Yes
• Autonegotiation	Yes
• Autocrossing	Yes
• Industrial Ethernet status LED	Yes
Protocols	
Number of connections	
• Number of connections, max.	88
• Number of connections reserved for ES/HMI/web	10
Redundancy mode	
Media redundancy	
– MRP	Yes; MRP Automanager according to IEC 62439-2 Edition 2.0
– MRP interconnection, supported	Yes; as MRP ring node according to IEC 62439-2 Edition 3.0
– MRPD	No
– Switchover time on line break, typ.	200 ms; PROFINET MRP
– Number of stations in the ring, max.	50; Only 16 are recommended, however
SIMATIC communication	
• PG/OP communication	Yes; encryption with TLS V1.3 pre-selected
• S7 routing	No
• S7 communication, as server	Yes
• S7 communication, as client	No
Open IE communication	
• TCP/IP	Yes
– Data length, max.	64 kbyte
– several passive connections per port, supported	Yes
• ISO-on-TCP (RFC1006)	Yes
– Data length, max.	64 kbyte
• UDP	Yes
– Data length, max.	2 kbyte; 1 472 bytes for UDP broadcast
– UDP multicast	Yes; Max. 5 multicast circuits
• DHCP	No
• DNS	Yes
• SNMP	Yes
• DCP	Yes

Article number	6ES7513-1RL00-0AB0
• LLDP	Yes
Web server	
• HTTP	No
• HTTPS	No
OPC UA	
• OPC UA Client	No
• OPC UA Server	No
Further protocols	
• MODBUS	Yes; MODBUS TCP
Isochronous mode	
Equidistance	No
S7 message functions	
Number of login stations for message functions, max.	32
Program alarms	Yes
Number of configurable program messages, max.	5 000; Program messages are generated by the "Program_Alarm" block, ProDiag or GRAPH
Number of loadable program messages in RUN, max.	2 500
Number of simultaneously active program alarms	
• Number of program alarms	300
• Number of alarms for system diagnostics	100
Test commissioning functions	
Joint commission (Team Engineering)	No
Status block	Yes; up to 8 simultaneously
Single step	No
Number of breakpoints	8; Breakpoints are only supported in RUN-Solo status
Status/control	
• Status/control variable	Yes
• Variables	Inputs/outputs, memory bits, DBs, distributed I/Os, timers, counters
• Number of variables, max.	
– of which status variables, max.	200; per job
– of which control variables, max.	200; per job
Forcing	
• Forcing	Yes
• Forcing, variables	Peripheral inputs/outputs
• Number of variables, max.	200

Article number	6ES7513-1RL00-0AB0
Diagnostic buffer	
• present	Yes
• Number of entries, max.	1 000
– of which powerfail-proof	500
Traces	
• Number of configurable Traces	4
• Memory size per trace, max.	512 kbyte
Interrupts/diagnostics/status information	
Diagnostics indication LED	
• RUN/STOP LED	Yes
• ERROR LED	Yes
• MAINT LED	Yes
• Connection display LINK TX/RX	Yes
Supported technology objects	
Motion Control	No
Controller	
• PID_Compact	Yes; Universal PID controller with integrated optimization
• PID_3Step	Yes; PID controller with integrated optimization for valves
• PID-Temp	Yes; PID controller with integrated optimization for temperature
Counting and measuring	Yes
• High-speed counter	No
Standards, approvals, certificates	
Suitable for safety functions	No
Ambient conditions	
Ambient temperature during operation	
• horizontal installation, min.	0 °C
• horizontal installation, max.	60 °C; Display: 50 °C, at an operating temperature of typically 50 °C, the display is switched off
• vertical installation, min.	0 °C
• vertical installation, max.	40 °C; Display: 40 °C, at an operating temperature of typically 40 °C, the display is switched off
Ambient temperature during storage/transportation	
• min.	-40 °C
• max.	70 °C
Altitude during operation relating to sea level	
• Installation altitude above sea level, max.	5 000 m; Restrictions for installation altitudes > 2 000 m, see manual

Article number	6ES7513-1RL00-0AB0
Configuration	
Programming	
Programming language	
– LAD	Yes
– FBD	Yes
– STL	Yes
– SCL	Yes
– CFC	No
– GRAPH	Yes
Know-how protection	
• User program protection/password protection	Yes
• Copy protection	No
• Block protection	Yes
Access protection	
• protection of confidential configuration data	Yes
• Password for display	Yes
• Protection level: Write protection	Yes
• Protection level: Read/write protection	Yes
• Protection level: Complete protection	Yes
Cycle time monitoring	
• lower limit	adjustable minimum cycle time
• upper limit	adjustable maximum cycle time
Dimensions	
Width	35 mm
Height	147 mm
Depth	129 mm
Weights	
Weight, approx.	430 g

General technical specifications

You can find information on the general technical specifications, such as standards and approvals, electromagnetic compatibility, protection class, etc. in the system manual for Redundant System S7-1500R/H (https://support.industry.siemens.com/cs/ww/en/view/109754833).

Dimension drawing

A

A.1 Dimension drawing

This section contains the dimensional drawing of the module on the mounting rail, as well as a dimensional drawing with the front panel open. Keep to the dimensions when installing in cabinets, control rooms, etc.

Dimension drawings of the CPU 1513R-1 PN

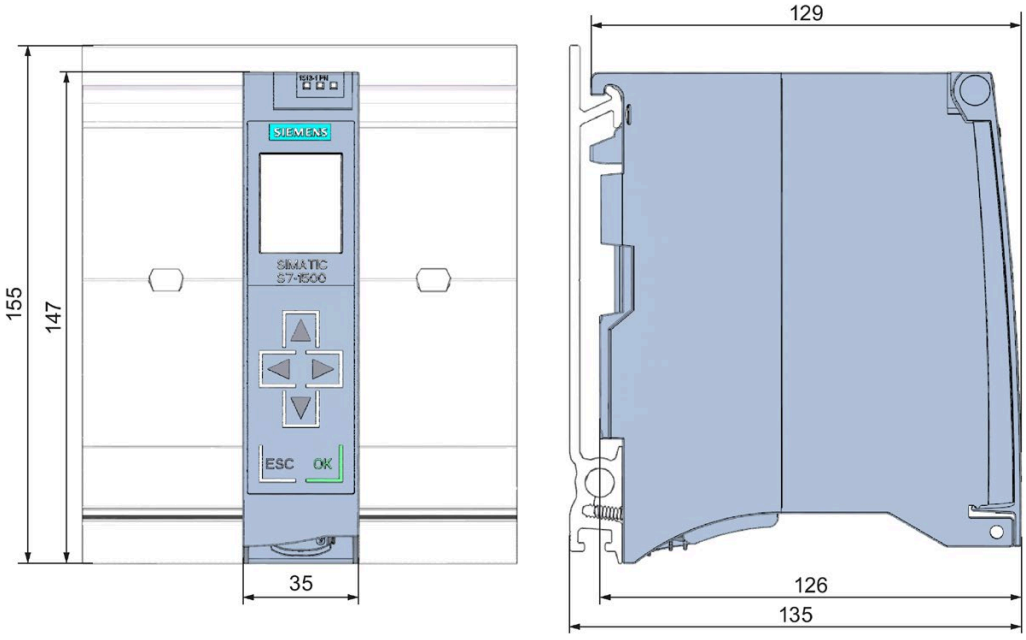

Figure A-1 Dimension drawing of the CPU 1513R-1 PN, front and side view

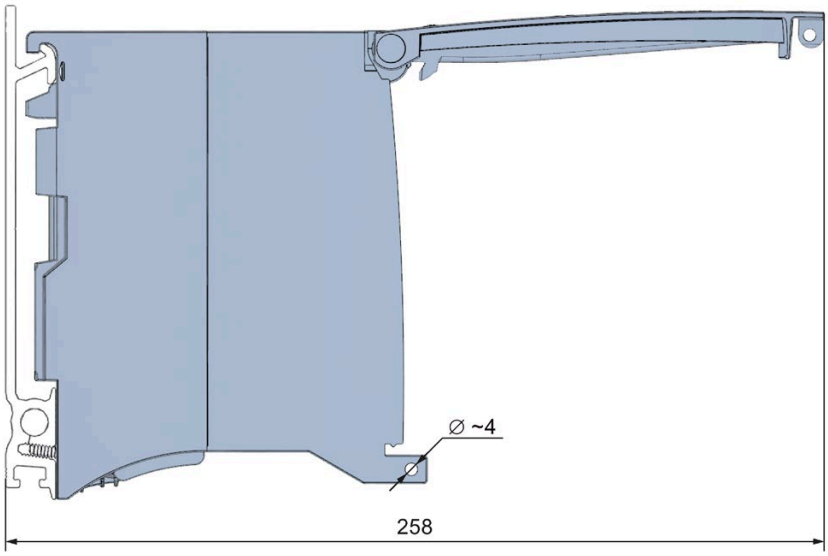

Figure A-2 Dimension drawing of the CPU 1513R-1 PN, side view with front panel open

SIEMENS

Manual

SIMATIC

S7-1500

CPU 1515-2 PN (6ES7515-2AM02-0AB0)

Edition 05/2021

support.industry.siemens.com

SIEMENS

SIMATIC

S7-1500
CPU 1515-2 PN
(6ES7515-2AM02-0AB0)

Equipment Manual

Preface

S7-1500 / ET 200MP Documentation Guide 1

Product overview 2

Connecting up 3

Interrupts, error messages, diagnostics and system alarms 4

Technical specifications 5

Dimensional drawing A

05/2021

A5E46416198-AB

Legal information

Warning notice system

This manual contains notices you have to observe in order to ensure your personal safety, as well as to prevent damage to property. The notices referring to your personal safety are highlighted in the manual by a safety alert symbol, notices referring only to property damage have no safety alert symbol. These notices shown below are graded according to the degree of danger.

⚠ DANGER
indicates that death or severe personal injury **will** result if proper precautions are not taken.

⚠ WARNING
indicates that death or severe personal injury **may** result if proper precautions are not taken.

⚠ CAUTION
indicates that minor personal injury can result if proper precautions are not taken.

NOTICE
indicates that property damage can result if proper precautions are not taken.

If more than one degree of danger is present, the warning notice representing the highest degree of danger will be used. A notice warning of injury to persons with a safety alert symbol may also include a warning relating to property damage.

Qualified Personnel

The product/system described in this documentation may be operated only by **personnel qualified** for the specific task in accordance with the relevant documentation, in particular its warning notices and safety instructions. Qualified personnel are those who, based on their training and experience, are capable of identifying risks and avoiding potential hazards when working with these products/systems.

Proper use of Siemens products

Note the following:

⚠ WARNING
Siemens products may only be used for the applications described in the catalog and in the relevant technical documentation. If products and components from other manufacturers are used, these must be recommended or approved by Siemens. Proper transport, storage, installation, assembly, commissioning, operation and maintenance are required to ensure that the products operate safely and without any problems. The permissible ambient conditions must be complied with. The information in the relevant documentation must be observed.

Trademarks

All names identified by ® are registered trademarks of Siemens AG. The remaining trademarks in this publication may be trademarks whose use by third parties for their own purposes could violate the rights of the owner.

Disclaimer of Liability

We have reviewed the contents of this publication to ensure consistency with the hardware and software described. Since variance cannot be precluded entirely, we cannot guarantee full consistency. However, the information in this publication is reviewed regularly and any necessary corrections are included in subsequent editions.

Siemens AG
Digital Industries
Postfach 48 48
90026 NÜRNBERG
GERMANY

A5E46416198-AB
Ⓟ 05/2021 Subject to change

Copyright © Siemens AG 2019 - 2021.
All rights reserved

Preface

Purpose of the documentation

This manual supplements the system manual of the S7-1500 automation system/ ET 200MP distributed I/O system as well as the function manuals. This manual contains a description of the module-specific information. The system-related functions are described in the system manual. All system-spanning functions are described in the function manuals.

The information provided in this manual and the system manual enables you to commission the CPU 1515-2 PN.

Conventions

STEP 7: In this documentation, "STEP 7" is used as a synonym for all versions of the configuration and programming software "STEP 7 (TIA Portal)".

Please also observe notes marked as follows:

Note

A note contains important information on the product described in the documentation, on the handling of the product or on the section of the documentation to which particular attention should be paid.

Recycling and disposal

For environmentally friendly recycling and disposal of your old equipment, contact a certified electronic waste disposal company and dispose of the equipment according to the applicable regulations in your country.

Security information

Siemens provides products and solutions with industrial security functions that support the secure operation of plants, systems, machines and networks.

In order to protect plants, systems, machines and networks against cyber threats, it is necessary to implement – and continuously maintain – a holistic, state-of-the-art industrial security concept. Siemens' products and solutions constitute one element of such a concept.

Customers are responsible for preventing unauthorized access to their plants, systems, machines and networks. Such systems, machines and components should only be connected to an enterprise network or the internet if and to the extent such a connection is necessary and only when appropriate security measures (e.g. firewalls and/or network segmentation) are in place.

For additional information on industrial security measures that may be implemented, please visit (https://www.siemens.com/industrialsecurity).

Siemens' products and solutions undergo continuous development to make them more secure. Siemens strongly recommends that product updates are applied as soon as they are available and that the latest product versions are used. Use of product versions that are no longer supported, and failure to apply the latest updates may increase customers' exposure to cyber threats.

To stay informed about product updates, subscribe to the Siemens Industrial Security RSS Feed visit (https://www.siemens.com/industrialsecurity).

Siemens Industry Online Support

You can find current information on the following topics quickly and easily here:

- **Product support**

  All the information and extensive know-how on your product, technical specifications, FAQs, certificates, downloads, and manuals.

- **Application examples**

  Tools and examples to solve your automation tasks – as well as function blocks, performance information and videos.

- **Services**

  Information about Industry Services, Field Services, Technical Support, spare parts and training offers.

- **Forums**

  For answers and solutions concerning automation technology.

- **mySupport**

  Your personal working area in Industry Online Support for messages, support queries, and configurable documents.

This information is provided by the Siemens Industry Online Support in the Internet (https://support.industry.siemens.com).

Industry Mall

The Industry Mall is the catalog and order system of Siemens AG for automation and drive solutions on the basis of Totally Integrated Automation (TIA) and Totally Integrated Power (TIP).

You can find catalogs for all automation and drive products on the Internet.

Table of contents

Preface **3**

1 S7-1500 / ET 200MP Documentation Guide **7**

2 Product overview **9**

2.1 New functions 9

2.2 Area of application of the SIMATIC S7-1500 CPUs 11

2.3 Hardware properties 20

2.4 Firmware functions 22

2.5 Operating and display elements 26

2.5.1 Front view of the CPU with closed front panel 26

2.5.2 Front view of the CPU without front panel or display and view from below 28

2.5.3 Rear view of the CPU 30

2.6 Operating mode buttons 31

3 Connecting up **32**

4 Interrupts, error messages, diagnostics and system alarms **36**

4.1 Status and error display of the CPU 36

5 Technical specifications **40**

A Dimensional drawing **54**

S7-1500 / ET 200MP Documentation Guide

1

The documentation for the SIMATIC S7-1500 automation system and the SIMATIC ET 200MP distributed I/O system is arranged into three areas.
This arrangement enables you to access the specific content you require.

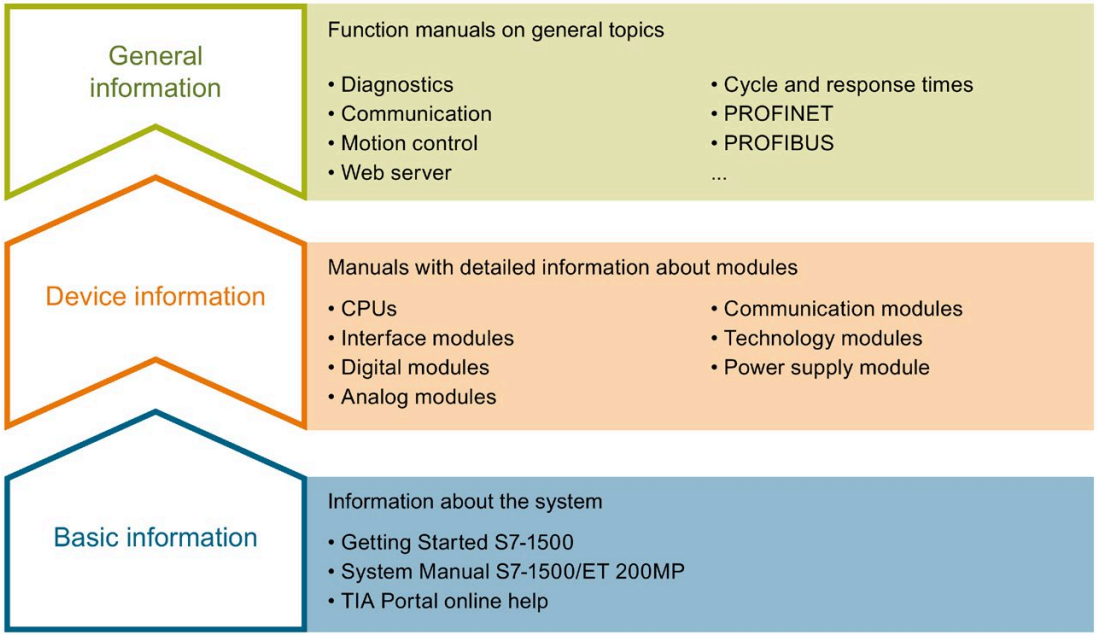

Basic information

The System Manual and Getting Started describe in detail the configuration, installation, wiring and commissioning of the SIMATIC S7-1500 and ET 200MP systems. The STEP 7 online help supports you in the configuration and programming.

Device information

Product manuals contain a compact description of the module-specific information, such as properties, wiring diagrams, characteristics and technical specifications.

General information

The function manuals contain detailed descriptions on general topics regarding the SIMATIC S7-1500 and ET 200MP systems, e.g. diagnostics, communication, motion control, Web server, OPC UA.

You can download the documentation free of charge from the Internet (https://support.industry.siemens.com/cs/ww/en/view/109742691).

Changes and supplements to the manuals are documented in a Product Information.

You can download the product information free of charge from the Internet (https://support.industry.siemens.com/cs/us/en/view/68052815).

Manual Collection S7-1500/ET 200MP

The Manual Collection contains the complete documentation on the SIMATIC S7-1500 automation system and the ET 200MP distributed I/O system gathered together in one file.

You can find the Manual Collection on the Internet (https://support.industry.siemens.com/cs/ww/en/view/86140384).

SIMATIC S7-1500 comparison list for programming languages

The comparison list contains an overview of which instructions and functions you can use for which controller families.

You can find the comparison list on the Internet (https://support.industry.siemens.com/cs/ww/en/view/86630375).

"mySupport"

With "mySupport", your personal workspace, you make the best out of your Industry Online Support.

In "mySupport", you can save filters, favorites and tags, request CAx data and compile your personal library in the Documentation area. In addition, your data is already filled out in support requests and you can get an overview of your current requests at any time.

You must register once to use the full functionality of "mySupport".

You can find "mySupport" on the Internet (https://support.industry.siemens.com/My/ww/en).

Application examples

The application examples support you with various tools and examples for solving your automation tasks. Solutions are shown in interplay with multiple components in the system - separated from the focus on individual products.

You will find the application examples on the Internet (https://support.industry.siemens.com/cs/ww/en/ps/ae).

Product overview

2

2.1 New functions

New functions of the CPU in firmware version V2.9

The following table provides an overview of the most important new functions of the CPU with firmware version V2.9.

New functions	Applications	Customer benefits	Where can I find information?
Communication of the CPU			
Secure PG/HMI communication	With STEP 7 and WinCC as of Version V17, SIMATIC S7-1500 CPUs and ET 200 CPUs from firmware version 2.9 support innovated and standardized secure PG/PC and HMI communication – referred to as Secure PG/HMI communication for short.	Secure and standardized creation or assignment of PLC communication certificates	Communication function manual (https://support.industry.siemens.com/cs/ww/en/view/59192925)
Protection of confidential configuration data	You have the option of assigning a password for protecting confidential configuration data of the respective CPU. This refers to data such as private keys that are required for the proper functioning of certificate-based protocols.	Additional password protection of confidential configuration data	
OPC UA: Alarms & Conditions	OPC UA clients from any manufacturer can subscribe to alarms of the CPU via OPC UA Alarms & Conditions.	Without further measures, alarms created once via OPC UA are available as events and alarms. The alarms can be displayed by any display device with corresponding OPC UA client functionality.	
OPC UA: Certificate management via Global Discovery Server (GDS)	Via GDS push management functions: • Automated update of OPC UA certificates of an S7-1500 CPU • Transfer of updated certificates and lists in RUN operating state of the CPU	The automation of the certificate management eliminates any manual work required for reconfiguring the CPU, for example, after a certificate has expired, and a new download to the CPU.	

New functions	Applications	Customer benefits	Where can I find information?
DHCP (Dynamic Host Configuration Protocol)	The CPU can use the DHCP communication protocol to assign the network configuration via a DHCP server. The CPU uses a client ID for identification on the DHCP server. The following parameters can be obtained: • IP Suite • DNS server • NTP server The CPU can also send its host name to the DHCP server.	With DHCP, you can integrate the CPU into an existing IT network without having to make additional changes to the PROFINET interface.	Communication function manual (https://support.industry.siemens.com/cs/ww/en/view/59192925)
MRP interconnection in PROFINET networks	The MRP interconnection procedure is an extension of MRP. MRP interconnection enables the redundant coupling of two or more rings with MRP in PROFINET networks.	There is no limit to the maximum number of 50 devices in a ring when setting up redundant network topologies. Monitoring of larger topologies with ring redundancy	PROFINET function manual (https://support.industry.siemens.com/cs/ww/en/view/49948856)
Web server of the CPU			
Web applications that can be loaded by the user	Additional methods to manage web applications via Web API You can use all available Web API methods within the web application	Web applications are also available in STOP mode of the CPU Reduced development times of web server user pages	Web server function manual (https://support.industry.siemens.com/cs/ww/en/view/59193560)
New Web API methods	Reading and changing the CPU operating state via Web API Ticket methods for transferring large amounts of data outside of the JSON RPC protocol	Additional applications for the web server	
Diagnostic information on motion control	Diagnostic information is available for all technology objects Improved display and grouping of the tags	Comprehensive diagnostic options by means of motion control applications are possible via the web server.	
Optimizations to the DNS (Domain Name System) functionality with OPC UA/Open User Communication and on the web server	The feedback messages of the OPC UA server with the "Application Name" can be sent via DNS. The NTP client of the CPU can address its relevant NTP servers via DNS. The Web server can be consistently reached via DNS addressing. DNS is taken into account during certificate handling.	A pool of NTP servers can be addressed.	Communication function manual (https://support.industry.siemens.com/cs/ww/en/view/59192925) Web server function manual (https://support.industry.siemens.com/cs/ww/en/view/59193560)
Technology functions of the CPU			
Axis functions	• Backlash compensation • Linear motor	The repeat accuracy of a movement is increased by compensation for the mechanical play of the real axis. Easier control of highly dynamic linear motors.	S7-1500T Motion Control function manuals (https://support.industry.siemens.com/cs/ww/en/view/109751049)

Reference

You can find an overview of all new functions, improvements and revisions in the respective firmware versions on the Internet (https://support.industry.siemens.com/cs/ww/en/view/109478459).

2.2 Area of application of the SIMATIC S7-1500 CPUs

Area of application

SIMATIC S7-1500 is the modular control system for a wide variety of automation applications in discrete automation.

SIMATIC S7-1500 is the cost-effective and convenient solution for a broad range of tasks and offers the following advantages:

- Modular, fanless design
- Simple realization of distributed structures
- User-friendly handling

Areas of application of the SIMATIC S7-1500 automation system include, for example:

- Special-purpose machines
- Textile machinery
- Packaging machines
- General mechanical engineering
- Controller engineering
- Machine tool engineering
- Installation engineering
- Electrical industry and crafts
- Automobile engineering
- Water/waste water
- Food & Beverage

Areas of application of the SIMATIC S7-1500R/H redundant system include, for example:

- Tunnels
- Airports (e.g. baggage conveyors)
- Subways
- Shipbuilding
- Wastewater treatment plants
- High-bay warehouses

Areas of application of the SIMATIC S7-1500T automation system for advanced motion control applications include, for example:

- Packaging machines
- Converting applications
- Assembly automation
- Pick-and-place automation
- Palletizers

You can choose between CPUs with various levels of performance and a comprehensive range of modules with many convenient functions. Fail-safe CPUs enable use in fail-safe applications. The modular design allows you to use only the modules that you need for your application. The controller can be retrofitted with additional modules at any time to expand its range of tasks.

High industrial suitability due to the high resistance to EMC, shock and vibration enable universal use of the SIMATIC S7-1500, S7-1500R/H and S7-1500T automation systems.

Performance segments of the CPUs

The CPUs can be used for smaller and mid-range applications, as well as for the high-end range of machine and plant automation.

Table 2- 1 Standard CPUs

CPU	Performance segment	PROFIBUS interfaces	PROFINET IO RT/IRT interfaces	PROFINET IO RT interface	Basic PROFINET functional-ity	Work memory	Pro-cessing time for bit oper-ations
CPU 1511-1 PN	Standard CPU for small to mid-range applica-tions	--	1	--	--	1.15 MB	60 ns
CPU 1513-1 PN	Standard CPU for mid-range applications	--	1	--	--	1.8 MB	40 ns
CPU 1515-2 PN	Standard CPU for mid-range to large applica-tions	--	1	1	--	3.5 MB	30 ns
CPU 1516-3 PN/DP	Standard CPU for de-manding applications and communication tasks	1	1	1	--	6 MB	10 ns
CPU 1517-3 PN/DP	Standard CPU for de-manding applications and communication tasks	1	1	1	--	10 MB	2 ns

CPU	Performance segment	PROFIBUS interfaces	PROFINET IO RT/IRT interfaces	PROFINET IO RT interface	Basic PROFINET functional-ity	Work memory	Pro-cessing time for bit oper-ations
CPU 1518-4 PN/DP	Standard CPU for high-performance applica-tions, demanding com-munication tasks and very short reaction times	1	1	1	1	24 MB	1 ns
CPU 1518-4 PN/DP MFP	Standard CPU for high-performance applica-tions, demanding com-munication tasks, very short reaction times and C/C++ blocks for the user program	1	1	1	1	74* MB	1 ns

* 50 MB of the integrated work memory is reserved for the function library of CPU runtime

Table 2- 2 Redundant CPUs

CPU	Performance segment	PROFIBUS interfaces	PROFINET IO RT/IRT interfaces	PROFINET IO RT interface	Basic PROFINET functional-ity	Work memory	Pro-cessing time for bit oper-ations
CPU 1513R-1 PN	Redundant CPU for smaller to mid-range applications	--	1	--	--	1.8 MB	80 ns
CPU 1515R-2 PN	Redundant CPU for mid-range to large applica-tions	--	1	--	1	3.5 MB	60 ns
CPU 1517H-3 PN	Redundant CPU for demanding applications and communication tasks	--	1	--	1	10 MB	4 ns
CPU 1518HF-4 PN	Fail-safe and redundant CPU for demanding applications and com-munication tasks	--	1	--	2	69 MB	4 ns

Table 2- 3 Compact CPUs

CPU	Performance segment	PROFIBUS interfaces	PROFINET IO RT/IRT interfaces	PROFINET IO RT interface	Basic PROFINET functionality	Work memory	Processing time for bit operations
CPU 1511C-1 PN	Compact CPU for small to mid-range applications	--	1	--	--	1.175 MB	60 ns
CPU 1512C-1 PN	Compact CPU for mid-range applications	--	1	--	--	1.25 MB	48 ns

Table 2- 4 Fail-safe CPUs

CPU	Performance segment	PROFIBUS interfaces	PROFINET IO RT/IRT interfaces	PROFINET IO RT interface	Basic PROFINET functionality	Work memory	Processing time for bit operations
CPU 1511F-1 PN	Fail-safe CPU for small to mid-range applications	--	1	--	--	1.225 MB	60 ns
CPU 1511TF-1 PN	Fail-safe technology CPU for small to mid-range applications	--	1	--	--	1.225 MB	60 ns
CPU 1513F-1 PN	Fail-safe CPU for mid-range applications	--	1	--	--	1.95 MB	40 ns
CPU 1515F-2 PN	Fail-safe CPU for mid-range to large applications	--	1	1	--	3.75 MB	30 ns
CPU 1515TF-2 PN	Fail-safe technology CPU for demanding applications and communication tasks	--	1	1	--	3.75 MB	30 ns
CPU 1516F-3 PN/DP	Fail-safe CPU for demanding applications and communication tasks	1	1	1	--	6.5 MB	10 ns
CPU 1516TF-3 PN/DP	Fail-safe technology CPU for demanding applications and communication tasks	1	1	1	--	6.5 MB	10 ns
CPU 1517F-3 PN/DP	Fail-safe CPU for demanding applications and communication tasks	1	1	1	--	11 MB	2 ns
CPU 1517TF-3 PN/DP	Fail-safe technology CPU for demanding applications and communication tasks	1	1	1	--	11 MB	2 ns

CPU	Performance segment	PROFIBUS interfaces	PROFINET IO RT/IRT interfaces	PROFINET IO RT interface	Basic PROFINET functionality	Work memory	Processing time for bit operations
CPU 1518F-4 PN/DP	Fail-safe CPU for high-performance applications, demanding communication tasks and very short reaction times	1	1	1	1	26 MB	1 ns
CPU 1518F-4 PN/DP MFP	Fail-safe CPU for high-performance applications, demanding communication tasks, very short reaction times and C/C++ blocks for the user program	1	1	1	1	76* MB	1 ns
CPU 1518TF-4 PN/DP	Technology CPU for high-performance motion control applications with large quantities, demanding communication tasks and very short reaction times	1	1	1	1	69 MB	1 ns

* 50 MB of the integrated work memory is reserved for the function library of CPU runtime

Table 2- 5 Technology CPUs

CPU	Performance segment	PROFIBUS interfaces	PROFINET IO RT/IRT interfaces	PROFINET IO RT interface	Basic PROFINET functionality	Work memory	Processing time for bit operations
CPU 1511T-1 PN	Technology CPU for small to mid-range applications	--	1	--	--	1.225 MB	60 ns
CPU 1515T-2 PN	Technology CPU for mid-range to large applications	--	1	1	--	3.75 MB	30 ns
CPU 1516T-3 PN/DP	Technology CPU for high-end applications and communication tasks	1	1	1	--	6.5 MB	10 ns
CPU 1517T-3 PN/DP	Technology CPU for complex applications and communication tasks	1	1	1	--	11 MB	2 ns

CPU	Performance segment	PROFIBUS interfaces	PROFINET IO RT/IRT interfaces	PROFINET IO RT interface	Basic PROFINET functional-ity	Work memory	Pro-cessing time for bit oper-ations
CPU 1518T-4 PN/DP	Technology CPU for high-performance mo-tion control applications with large quantities, demanding communi-cation tasks and very short reaction times	1	1	1	1	69 MB	1 ns
CPU 1511TF-1 PN CPU 1515TF-2 PN CPU 1516TF-3 PN/DP CPU 1517TF-3 PN/DP CPU 1518TF-4 PN/DP	These CPUs are described in the fail-safe CPUs						

Performance segments of compact CPUs

The compact CPUs can be used for smaller to mid-range applications and have an integrated analog and digital on-board I/O as well as integrated technology functions. The following table shows the specific properties of the Compact CPUs.

	CPU 1511C-1 PN	CPU 1512C-1 PN
Integrated analog inputs/outputs	5 inputs/2 outputs	5 inputs/2 outputs
Integrated digital inputs/outputs	16 inputs/16 outputs	32 inputs/32 outputs
High-speed counters	6	6
Frequency meters	6 (max. 100 kHz)	6 (max. 100 kHz)
Period duration measurement	6 channels	6 channels
Pulse width modulation (PWM output)	Max. 4 (up to 100 kHz)	Max. 4 (up to 100 kHz)
Pulse Train Output (PTO output)	Max. 4 (up to 100 kHz)	Max. 4 (up to 100 kHz)
Frequency output	Up to 100 kHz	Up to 100 kHz

Integrated Motion Control technology functions

All CPUs of the SIMATIC S7-1500 automation system support motion control technology functions. STEP 7 provides PLCopen-standardized Motion Control instructions for configuring and connecting a drive to the CPU.

S7-1500 Motion Control supports the following technology objects:

- Speed-controlled axes
- Positioning axes
- Synchronous axes
- External encoders
- Cam
- Cam track
- Measuring input

The technology CPUs of the SIMATIC S7-1500-automation system offer enhanced Motion Control functions:

- Advanced synchronization functions
  - Synchronization with specification of the synchronous position
  - Actual value coupling
  - Shifting of the master value at the following axis
  - Camming
- Up to 4 encoder or measuring systems as actual position for position control
- Cam
- Kinematics for control of:
  - Cartesian portals
  - Roller pickers
  - Jointed-arm robots
  - Delta pickers
  - SCARA robots

Due to the supported technology functions, the S7-1500T CPUs are suitable for controlling packaging machines, converting applications, assembly automation, etc.

Additional integrated technology functions

For effective commissioning, diagnostics and fast optimization of drives and controls, the SIMATIC S7-1500 controller series offers extensive trace functions for all CPU tags.

In addition to drive integration, the SIMATIC S7-1500 controller series has a PID compact closed-loop controller; easy-to-configure blocks allow automatic optimization of the controller parameters for optimum control quality.

Other technology functions

Technology modules also implement functions such as high-speed counting, position detection, measuring functions and pulse generators (PTO, PWM and frequency output). With the CPU 1511C-1 PN and CPU 1512C-1 PN compact CPUs, these functions are already integrated and can be implemented without additional technology modules.

SIWAREX is a versatile and flexible weighing module which you can use as a static scale for operation.

Redundant CPUs

The CPUs of the S7-1500R/H redundant system offer a high degree of reliability and system availability. A redundant configuration of the most important automation components reduces the likelihood of production downtimes and the consequences of component errors.

The higher the risks and costs of a production downtime, the more worthwhile the use of a redundant system. The avoidance of production downtimes compensates for the generally higher investment costs.

Security Integrated

In conjunction with STEP 7, each CPU offers password-based know-how protection against unauthorized reading out or modification of the program blocks.

Copy protection provides reliable protection against unauthorized reproduction of program blocks. With copy protection, individual blocks on the SIMATIC memory card can be tied to its serial number so that the block can only be run if the configured memory card is inserted into the CPU.

In addition, you can assign various access rights to different user groups in the controller using four different authorization levels.

Improved manipulation protection allows changed or unauthorized transfers of engineering data to be detected by the controller.

The use of an Ethernet CP (CP 1543-1) provides you with additional access protection through a firewall or possibilities to establish secure VPN connections.

Safety Integrated

The fail-safe CPUs are intended for users who want to implement demanding standard and fail-safe applications both centrally and decentrally.

These fail-safe CPUs allow the processing of standard and safety programs on a single CPU. This allows fail-safe data to be evaluated in the standard user program. The integration also provides the system advantages and the extensive functionality of SIMATIC for fail-safe applications.

The fail-safe CPUs are certified for use in safety mode up to:

- Safety class (Safety Integrity Level) SIL 3 according to IEC 61508:2010
- Performance Level (PL) e and Category 4 according to ISO 13849-1:2015 or EN ISO 13849-1:2015

Additional password protection for F-configuration and F-program is set up for IT security.

Design and handling

All CPUs of the SIMATIC S7-1500 product series feature a display with plain text information. The display provides the user with information on the order numbers, firmware version, and serial number of all connected modules. In addition, the IP address of the CPU and other network settings can be adapted locally without a programming device. Error messages are shown on the display directly in plain text. When performing servicing, you can minimize plant downtimes by quickly accessing the diagnostics alarms. Detailed information about this and a multitude of other display functions is available in the SIMATIC S7-1500 Display Simulator (https://support.industry.siemens.com/cs/ww/en/view/109761758).

Uniform front connectors for all modules and integrated potential jumpers for flexible formation of potential groups simplify storage. Additional components such as circuit breakers, relays, etc., can be installed quickly and easily, since a DIN rail is implemented in the rail of the SIMATIC S7-1500. The CPUs of the SIMATIC S7-1500 product series can be expanded centrally and in a modular fashion with signal modules. Space-saving expansion enables flexible adaptation to each application.

The system cabling for digital signal modules enables fast and clear connection to sensors and actuators from the field (fully modular connection consisting of front connector modules, connection cables and I/O modules), as well as easy wiring inside the control cabinet (flexible connection consisting of front connectors with assembled single conductors).

System diagnostics and alarms

Integrated system diagnostics is activated by default for the CPUs. The different types of diagnostics are configured instead of programmed. System diagnostics information and alarms from the drives are displayed consistently and in plain text:

- On the CPU display
- In STEP 7
- On the HMI
- On the Web server

This information is available in RUN mode, but also in STOP mode of the CPU. The diagnostic information is updated automatically when you configure new hardware components.

The CPU is available as a central interrupt server in up to three project languages. The HMI takes over the display in the project languages defined for the CPU. If you require alarm texts in additional languages, you can load them into your HMI via the configured connection. The CPU, STEP 7 and your HMI ensure data consistency without additional engineering steps. The maintenance work is easier.

2.3 Hardware properties

Article number

6ES7515-2AM02-0AB0

View of the module

The figure below shows the CPU 1515-2 PN.

Figure 2-1 CPU 1515-2 PN

Note

Protective film

Please note that the CPU is supplied with a removable protective film on the display.

Properties

The CPU 1515-2 PN has the following technical properties:

Property	Description	Additional information
CPU display	All CPUs of the SIMATIC S7-1500 product series feature a display with plain text information. The display provides information on order numbers, firmware version and serial numbers of all connected modules. In addition, you can set the IP address of the CPU and make further network settings. The display shows occurring error messages directly in plain text. In addition to the functions listed here, a multitude of other functions that are described in the SIMATIC S7-1500 Display Simulator are shown on the display.	• S7-1500, ET 200MP system manual (https://support.industry.siemens.com/cs/ww/en/view/59191792) • SIMATIC S7-1500 Display Simulator (https://support.industry.siemens.com/cs/ww/en/view/109761758)
Supply voltage	The 24 V DC supply voltage is fed in via a 4-pin plug located at the bottom of the CPU.	• Section Connecting up (Page 32) • S7-1500, ET 200MP system manual (https://support.industry.siemens.com/cs/ww/en/view/59191792)
PROFINET IO		
PROFINET interface (X1 P1R and X1 P2R)	The interface has two ports. In addition to basic PROFINET functionality, it also supports PROFINET IO RT (real time) and IRT (isochronous real time).	PROFINET (https://support.industry.siemens.com/cs/ww/es/view/49948856) function manual
PROFINET interface (X2 P1)	The interface has one port. In addition to basic PROFINET functionality, it also supports PROFINET IO RT (real time).	
Operation of the CPU as • IO controller • I-device	• **IO controller:** As an IO controller, the CPU addresses the connected IO devices • **I-device:** As an I-device (intelligent IO device), the CPU is assigned to a higher-level IO controller and is used in the process as an intelligent pre-processing unit of sub-processes	

Accessories

You can find information on "Accessories/spare parts" in the S7-1500, ET 200MP system manual (https://support.industry.siemens.com/cs/ww/en/view/59191792).

2.4 Firmware functions

Functions

The CPU 1515-2 PN supports the following firmware functions:

Function	Description	Additional information
Integrated system diagnostics	The system automatically generates the alarms for the system diagnostics and outputs these alarms via a programming device/PC, HMI device, the Web server or the integrated display. System diagnostics information is also available when the CPU is in STOP mode.	Diagnostics (https://support.industry.siemens.com/cs/ww/en/view/59192926) function manual
Integrated Web server	The Web server lets you access the CPU data by means of a network. Evaluations, diagnostics, and modifications are thus possible over long distances. Monitoring and evaluation is possible without STEP 7; all you need is a Web browser. Make sure that you take appropriate measures (e.g. limiting network access, using firewalls) to protect the CPU from being compromised.	• Web server function manual (https://support.industry.siemens.com/cs/ww/en/view/59193560) • Security with SIMATIC S7 controllers system manual (https://support.industry.siemens.com/cs/ww/en/view/90885010)
Integrated trace functionality	Trace functionality supports you in troubleshooting and/or optimizing the user program. You record device tags and evaluate the recordings with the trace and logic analyzer function. Tags are, for example, drive parameters or system and user tags of a CPU. The device saves the recordings. You can read out and permanently save the recordings with the configuration system (ES), if required. The trace and logic analyzer function is therefore suitable for monitoring highly dynamic processes. The trace recording can also be displayed through the Web server.	Using the trace and logic analyzer function (http://support.automation.siemens.com/WW/view/en/64897128) function manual
OPC UA	With OPC UA, data is exchanged via an open and vendor-neutral communication protocol. The CPU can act as OPC UA server. The CPU can communicate with OPC UA clients as an OPC UA server. In turn, the CPU can access an OPC UA server as OPC UA client, allow the OPC UA server to run methods and read out information from the OPC UA server. Through OPC UA Companion Specification, methods can be specified in a uniform and vendor-neutral way. The specified methods enable you to integrate devices from a wide range of manufacturers into your plants and production processes more easily.	Communication (https://support.industry.siemens.com/cs/ww/en/view/59192925) function manual
Configuration control	You can use configuration control to operate different real hardware configurations with a configured maximum configuration of the hardware. This means especially in series machine manufacturing you have the option of operating/configuring different configuration variants of a machine with a single project.	S7-1500, ET 200MP system manual (https://support.automation.siemens.com/WW/view/en/59191792)

Function	Description	Additional information
PROFINET IO		
RT (real time)	RT prioritizes PROFINET IO frames over standard frames. This ensures the required determinism in the automation technology. In this process, the data is transferred via prioritized Ethernet frames.	PROFINET (https://support.industry.siemens.com/cs/ww/en/view/49948856) function manual
IRT (isochronous real time)	A reserved bandwidth within the send clock is available for IRT data. The reserved bandwidth ensures that the IRT data can be transmitted in time-synchronized intervals, unaffected by other high network loads (e.g. TCP/IP communication or additional real time communication). Update times with maximum determinism can be realized through IRT. Isochronous applications are possible with IRT.	
Isochronous mode	The Isochronous mode system property records measured values and process data and processes the signals in a fixed system clock. Isochronous mode contributes to high control quality and hence to greater manufacturing precision. Isochronous mode reduces possible fluctuations of the process reaction times to a minimum. Time-assured processing makes higher machine cycles possible.	
MRP (Media Redundancy Protocol)	It is possible to establish redundant networks via the Media Redundancy Protocol. Redundant transmission links (ring topology) ensure that an alternative communication path is made available if a transmission link fails. The PROFINET devices that are part of this redundant network form an MRP domain. RT operation is possible with the use of MRP.	
MRPD (Media Redundancy with Planned Duplication)	The advantage of the MRP extension MRPD is that, in the event of a failure of a device or a line in the ring, all other devices continue to be supplied with IO data without interruption and with short update times. MRPD is based on IRT and MRP. To realize media redundancy with short update times, the PROFINET devices participating in the ring send their data in both directions. The devices receive this data at both ring ports so that there is no ring reconfiguration time.	
Shared device	The "Shared device" function allows you to divide the modules or submodules of an IO device up among different IO controllers. Numerous IO controllers are often used in larger or widely distributed systems. Without the "Shared device" function, each I/O module of an IO device is assigned to the same IO controller. If sensors that are physically close to each other must provide data to different IO controllers, several IO devices are required. The "Shared device" function allows the modules or submodules of an IO device to be divided up among different IO controllers, thus allowing flexible automation concepts. You can, for example, combine I/O modules that are physically close to each other in one IO device.	
PROFIenergy	PROFIenergy is a PROFINET-based data interface for switching off consumers centrally and with full coordination during pause times regardless of the manufacturer or device type. The goal is that the process is only provided with the energy that is absolutely required. Most of the energy is saved by the process. The PROFINET device itself only contributes a few watts to the savings potential.	

Function	Description	Additional information
Integrated technology		
Motion Control	S7-1500 CPUs support the controlled positioning and traveling of axes via S7-1500 Motion Control functions by means of the following technology objects: Speed-controlled axes, positioning axes, synchronized axes, external encoders, cams, cam tracks and measuring inputs • Speed-controlled axis for controlling a drive with speed specification • Positioning axis for positioning of a drive with closed-loop position control • Synchronous axis to interconnect with a master value. The axis is synchronized to the master axis position • External encoder for detecting the actual position of an encoder and its use as a master value for synchronous operation • Cams, cam track for position-dependent generation of switching signals • Measuring input for fast, accurate and event-dependent sensing of actual positions	S7-1500T Motion Control function manuals (https://support.industry.siemens.com/cs/ww/en/view/109751049)
Integrated closed-loop control functionality	• PID Compact (continuous PID controller) • PID 3Step (step controller for integrating actuators) • PID Temp (temperature controller for heating and cooling with two separate actuators)	PID control (https://support.industry.siemens.com/cs/ww/en/view/108210036) function manual

Function	Description	Additional information
Integrated safety		
Know-how protection	The know-how protection protects user blocks against unauthorized access and modifications.	S7-1500, ET 200MP (https://support.automation.siemens.com/WW/view/en/59191792) system manual
Copy protection	Copy protection links user blocks with the serial number of one or more SIMATIC memory cards or the serial number of one or more CPUs. User programs cannot run without the corresponding SIMATIC memory card or CPU.	
Access protection	You can use authorization levels to assign separate rights to different users.	
Integrity protection	The CPUs feature integrity protection by default. Integrity protection identifies possible manipulation of engineering data on the SIMATIC memory card or during data transfer between STEP 7 and the CPU. Integrity protection also checks the communication from a SIMATIC HMI system to the CPU for possible manipulation of engineering data. If integrity protection identifies the manipulation of engineering data, the user receives a corresponding message.	
Password provider	As an alternative to manual password input, you can connect a password provider to STEP 7. A password provider offers the following advantages: • Convenient handling of passwords. STEP 7 reads in the password automatically for the blocks. This saves you time. • Optimum block protection because the users themselves do not know the password.	

2.5 Operating and display elements

2.5.1 Front view of the CPU with closed front panel

The following figure shows the front view of the CPU 1515-2 PN.

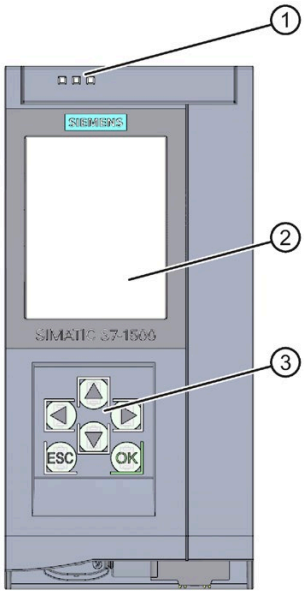

① LEDs for the current operating mode and diagnostic status of the CPU
② Display
③ Operator control buttons

Figure 2-2 View of the CPU 1515-2 PN (with front panel) - front

Note

Temperature range for display

To increase its service life, the display switches off at a temperature below the permitted operating temperature of the device. When the display cools down, it automatically switches itself on again. When the display is switched off, the LEDs continue to show the status of the CPU.

For more information on the temperatures at which the display switches itself on and off, refer to the Technical specifications (Page 40).

Removing and fitting the front panel or display

You can remove and fit the front panel or the display during operation.

WARNING

Personal injury and damage to property may occur

Personal injury or material damage can occur in zone 2 hazardous areas if you remove or fit the display while the S7-1500 automation system is running.

Before you remove or insert the display in zone 2 hazardous areas, always make sure that the power supply to the S7-1500 automation system is switched off.

Locking the front panel

You can lock the front panel to protect the SIMATIC memory card and the operating mode buttons of the CPU against unauthorized access.

You can attach a security seal or a padlock with a diameter of 3 mm to the front panel.

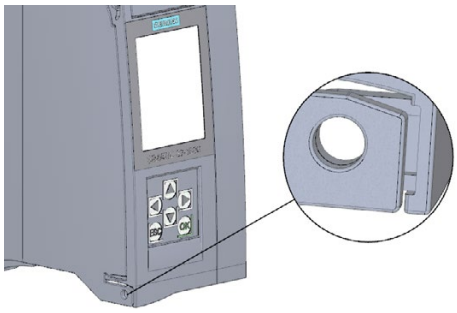

Figure 2-3 Locking latch on the CPU

In addition to the mechanical lock, you can also block access to a password-protected CPU on the display (local lock) and assign a password for the display. You can find additional information on the display, configurable protection levels and local locks in the S7-1500/ET 200MP (http://support.automation.siemens.com/WW/view/en/59191792) system manual.

Reference

You will find detailed information on the individual display options, a training course and a simulation of the available menu commands in the SIMATIC S7-1500 Display Simulator (https://support.industry.siemens.com/cs/ww/en/view/109761758).

2.5.2 Front view of the CPU without front panel or display and view from below

The following figure shows the operator controls and connection elements of the CPU 1515-2 PN.

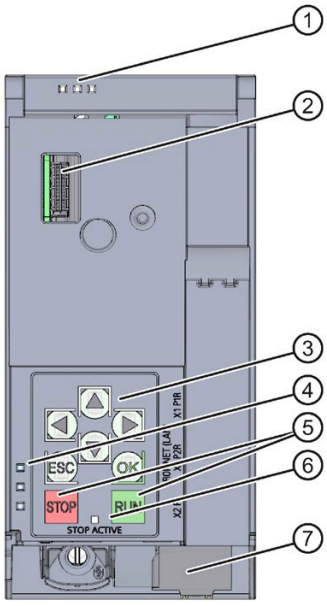

① LEDs for the current operating mode and diagnostic status of the CPU
② Connector for the display
③ Arrow keys
④ LED displays for the PROFINET interface
⑤ STOP and RUN operating mode buttons
⑥ STOP-ACTIVE LED
⑦ Connector for the supply voltage

Figure 2-4 View of the CPU 1515-2 PN (without front panel or display) - front

Note

Removing the display

Only remove the display if it is faulty.

You can find information on removing and replacing displays in the S7-1500, ET 200MP system manual (http://support.automation.siemens.com/WW/view/en/59191792).

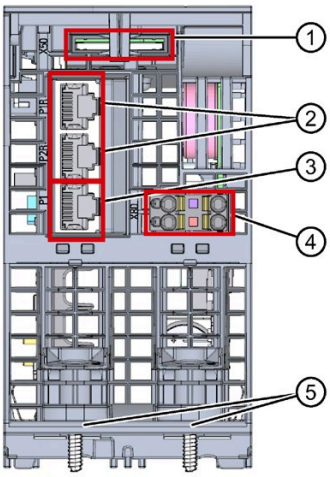

① Slot for the SIMATIC memory card
② PROFINET IO interface (X1) with 2 ports
③ PROFINET IO interface (X2) with 1 port
④ Connector for supply voltage
⑤ Fastening screw

Figure 2-5 View of the CPU 1515-2 PN - bottom

2.5.3 Rear view of the CPU

The following figure shows the connection elements on the rear of the CPU 1515-2 PN.

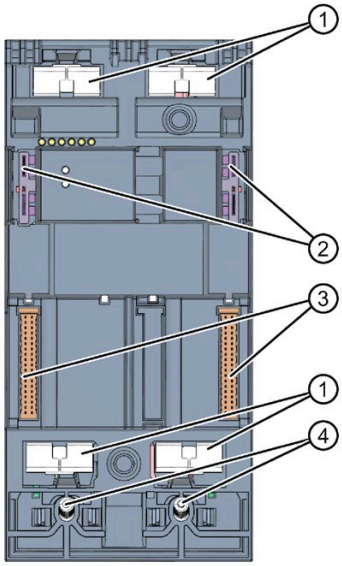

① Shield contact surfaces
② Plug-in connection for power supply
③ Plug-in connection for backplane bus
④ Fixing screws

Figure 2-6 View of the CPU 1515-2 PN - rear

2.6 Operating mode buttons

You use the operating mode buttons to:

- Request a change to a specific operating state
- Disable or enable the change to a specific operating state

  (if the operating mode button STOP is active, for example, you cannot switch the CPU to RUN via a communication task configured in the TIA Portal or the display)

The following table shows the meaning of the corresponding operation of the operating mode buttons.

Table 2- 6 Meaning of the operating mode buttons

Operation of the operating mode buttons	Meaning	Explanation
RUN	RUN mode	The CPU has permission to go to RUN.
STOP	STOP mode	The CPU does not have permission to go to RUN.
1. Press the operating mode button STOP. Result: The RUN/STOP LED lights up yellow. 2. Press the operating mode button STOP until the RUN/STOP LED lights up for the 2nd time and remains continuously lit (this takes three seconds). After this, release the button. 3. Press the operating mode button STOP again within the next three seconds.	Manual memory reset (with SIMATIC memory card inserted) or Reset to factory settings (without inserted SIMATIC memory card)	The CPU is executing a memory reset. or The CPU is being reset to factory settings. You can find additional information in the S7-1500/ET 200MP system manual (https://support.industry.siemens.com/cs/ww/en/view/59191792).

Connecting up

3

This section provides information on the terminal assignment of the individual interfaces and the block diagram of the CPU 1515-2 PN.

24 V DC supply voltage (X80)

The connector for the power supply is plugged in when the CPU ships from the factory.

The following table shows the signal names and the descriptions of the pin assignment for a 24 V DC supply voltage.

Table 3- 1 Pin assignment 24 V DC supply voltage

View Connector	Signal name [1]		Designation
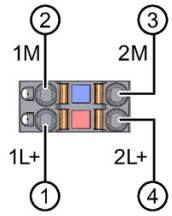	1	1L+	+ 24 V DC of the supply voltage
	2	1M	Ground of the supply voltage
	3	2M	Ground of the supply voltage for loop-through [2]
	4	2L+	+ 24 V DC of the supply voltage for loop-through [2]

[1] 1L+ and 2L+ as well as 1M and 2M are bridged internally

[2] Maximum 10 A permitted

If the CPU is supplied by a system power supply, it is not necessary to connect the 24 V supply.

PROFINET interface X1 with 2-port switch (X1 P1R and X1 P2R)

The assignment corresponds to the Ethernet standard for an RJ45 plug.

- When autonegotiation is deactivated, the RJ45 socket is allocated as a switch (MDI-X).
- When autonegotiation is activated, autocrossing is in effect and the RJ45 socket is allocated either as data terminal equipment (MDI) or a switch (MDI-X).

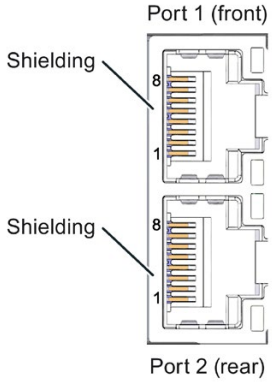

PROFINET interface X2 with 1 port (X2 P1)

The assignment corresponds to the Ethernet standard for an RJ45 plug.

Autocrossing is always active on X2. This means the RJ45 socket is allocated either as data terminal equipment (MDI) or a switch (MDI-X).

Removing the PROFINET plug

You need a screwdriver (max. blade width 2.5 mm) to remove the PROFINET plug.

Removing the display

You can find a description of how to remove and replace the display in the S7-1500, ET 200MP (http://support.automation.siemens.com/WW/view/en/59191792) system manual.

Reference

You can find additional information on the topics of "Connecting the CPU" and "Accessories/spare parts" in the S7-1500, ET 200MP (http://support.automation.siemens.com/WW/view/en/59191792) system manual.

Assignment of the MAC addresses

CPU 1515-2 PN has two PROFINET interfaces, with the first interface having two ports. The PROFINET interfaces each have a MAC address, and each of the PROFINET ports has its own MAC address. The CPU 1515-2 PN therefore has five MAC addresses in total.

The MAC addresses of the PROFINET ports are needed for the LLDP protocol, for example for the neighborhood discovery function.

The number range of the MAC addresses is sequential. The first and last MAC addresses are printed on the rating plate on the right side of each CPU 1515-2 PN.

The table below shows how the MAC addresses are assigned.

Table 3- 2 Assignment of the MAC addresses

	Assignment	**Labeling**
MAC address 1	PROFINET interface X1 (visible in STEP 7 in accessible devices)	• Front printed • Right side printed (start of number range)
MAC address 2	Port X1 P1R (required for LLDP, for example)	---
MAC address 3	Port X1 P2R (required for LLDP, for example)	---
MAC address 4	PROFINET interface X2 (visible in STEP 7 in accessible devices)	Front printed
MAC address 5	Port X2 P1 (required for LLDP, for example)	Right side printed (end of number range)

Block diagram

The following figure shows the block diagram of the CPU 1515-2 PN.

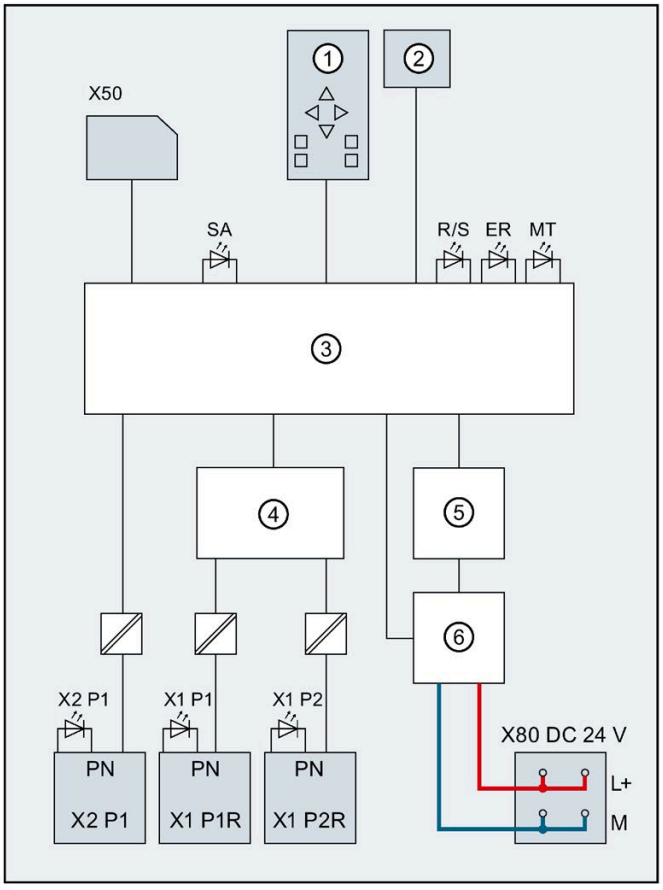

①	CPU with control and operating mode buttons	X50	SIMATIC memory card
②	Display	X80 24 V DC	Infeed of supply voltage
③	Electronics	L+	24 V DC supply voltage
④	PROFINET 2-port switch	M	Ground
⑤	Backplane bus interface	SA	STOP-ACTIVE LED (yellow)
⑥	Internal supply voltage	R/S	RUN/STOP LED (yellow/green)
PN X1 P1R	PROFINET interface X1 port 1	ER	ERROR LED (red)
PN X1 P2R	PROFINET interface X1 port 2	MT	MAINT LED (yellow)
PN X2 P1	PROFINET interface X2 port 1	X1 P1, X1 P2, X2 P1	LED Link TX/RX

Figure 3-1 Block diagram of the CPU 1515-2 PN

Interrupts, error messages, diagnostics and system alarms

4

The LED displays of the CPU 1515-2 PN are described below.

You will find additional information on "Interrupts" in the STEP 7 online help.

You can find additional information on the topics of "Diagnostics" and "System alarms" in the Diagnostics (http://support.automation.siemens.com/WW/view/en/59192926) function manual.

4.1 Status and error display of the CPU

LED display

The figure below shows the CPU 1515-2 PN LEDs.

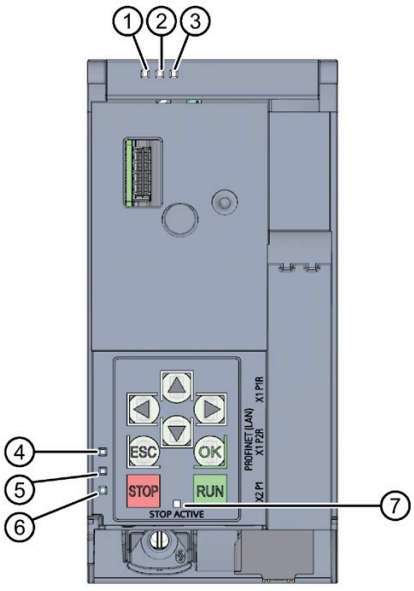

① RUN/STOP LED (green/yellow LED)
② ERROR LED (red LED)
③ MAINT LED (yellow LED)
④ LINK RX/TX LED for port X1 P1 (yellow/green LED)
⑤ LINK RX/TX LED for port X1 P2 (yellow/green LED)
⑥ LINK RX/TX LED for port X2 P1 (yellow/green LED)
⑦ STOP-ACTIVE LED

Figure 4-1 LED displays of the CPU 1515-2 PN (without front panel and display)

Meaning of the RUN/STOP, ERROR and MAINT LEDs

The CPU 1515-2 PN has three LEDs for displaying the current operating state and diagnostic status. The following table shows the meaning of the various combinations of colors for the RUN/STOP, ERROR and MAINT LEDs.

Table 4- 1 Meaning of the LEDs

RUN/STOP LED	ERROR LED	MAINT LED	Meaning
LED off	LED off	LED off	Missing or insufficient power supply on the CPU.
LED off	LED flashes red	LED off	An error has occurred.
LED lit green	LED off	LED off	CPU is in RUN mode. There are no events, requirements, errors, etc.
LED lit green	LED flashes red	LED off	A diagnostics event is pending.
LED lit green	LED off	LED lit yellow	Maintenance demanded for the plant. You need to check/replace the affected hardware within a short period of time.
			Active Force job
LED lit green	LED off	LED flashes yellow	Bad configuration
LED lit yellow	LED flashes red	LED off	A diagnostics event is pending.
LED lit yellow	LED off	LED flashes yellow	Firmware update successfully completed.
LED lit yellow	LED off	LED off	CPU is in STOP mode.
LED lit yellow	LED flashes red	LED flashes yellow	The program on the SIMATIC memory card is causing an error.
			Firmware update using SIMATIC memory card has failed.
			The CPU has detected an error state. Additional information is available via the CPU diagnostic buffer.
LED flashes yellow	LED off	LED off	CPU is performing internal activities during STOP, e.g. startup after STOP.
			Download of the user program from the SIMATIC memory card
			CPU is executing a program with active breakpoint.
LED flashes yellow/green	LED off	LED off	Startup (transition from STOP → RUN)
LED flashes yellow/green	LED flashes red	LED flashes yellow	Startup (CPU booting)
			Test of LEDs during startup, inserting a module.
			LED flashing test

Meaning of LINK RX/TX LED

Each port has a LINK RX/TX LED. The table below shows the various "LED scenarios" of the CPU 1515-2 PN ports.

Table 4- 2 Meaning of the LED

LINK TX/RX LED	Meaning
LED off	There is no Ethernet connection between the PROFINET interface of the PROFINET device and the communication partner. No data is currently being sent/received via the PROFINET interface. There is no LINK connection.
LED flashes green	The CPU is performing an "LED flash test".
LED lit green	There is an Ethernet connection between the PROFINET interface of your PROFINET device and a communication partner.
LED flashes yellow/green	Data is currently being received/sent by a communication partner in the Ethernet via the PROFINET interface of the PROFINET device.

Note

"LED" instruction

You can read the status (e.g. "On" or "Off") of LEDs of a CPU or a module using the "LED" instruction. Note, however, that it is not possible to read the LED status of the LINK RX/TX LEDs on all S7-1500 CPUs.

You can find additional information on the "LED" instruction in the STEP 7 online help.

Meaning of STOP-ACTIVE LED

The following table shows the meaning of the STOP-ACTIVE LED of the CPU 1515-2 PN.

Table 4- 3 Meaning of the LED

STOP-ACTIVE LED	Meaning
■ LED lit yellow	The CPU has been switched to STOP mode using the STOP button. • As long as the STOP-ACTIVE LED is lit up, switching the CPU to RUN mode is only possible using the RUN button. • The CPU can then no longer be set to RUN mode via display operation or via online functions. The state of the buttons is retained at power-off. If the CPU does not start up automatically after a power-on, you have to keep the STOP button pressed during startup until the STOP-ACTIVE LED is activated. • If an automatic startup is to be reliably prevented after a power-on, the STOP button has to be kept pressed during the startup of the CPU until the STOP-ACTIVE LED is activated.
□ LED off	• The CPU has been set to STOP mode using the display or programming device/PC and not with the STOP button on the device. • The CPU is in RUN mode.

Technical specifications

5

The following table shows the technical specifications as of 05/2021. You can find a data sheet including daily updated technical specifications on the Internet (https://support.industry.siemens.com/cs/ww/en/pv/6ES7515-2AM02-0AB0/td?dl=en).

Article number	6ES7515-2AM02-0AB0
General information	
Product type designation	CPU 1515-2 PN
HW functional status	FS01
Firmware version	V2.9
Product function	
• I&M data	Yes; I&M0 to I&M3
• Isochronous mode	Yes; Distributed and central; with minimum OB 6x cycle of 500 µs (distributed) and 1 ms (central)
Engineering with	
• STEP 7 TIA Portal configurable/integrated from version	V17 (FW V2.9) / V16 (FW V2.8) or higher; with older TIA Portal versions configurable as 6ES7515-2AM01-0AB0
Configuration control	
via dataset	Yes
Display	
Screen diagonal [cm]	6.1 cm
Control elements	
Number of keys	8
Mode buttons	2
Supply voltage	
Type of supply voltage	24 V DC
permissible range, lower limit (DC)	19.2 V
permissible range, upper limit (DC)	28.8 V
Reverse polarity protection	Yes
Mains buffering	
• Mains/voltage failure stored energy time	5 ms
• Repeat rate, min.	1/s
Input current	
Current consumption (rated value)	0.8 A
Current consumption, max.	1.1 A
Inrush current, max.	2.4 A; Rated value
I^2t	0.02 $A^2 \cdot s$
Power	
Infeed power to the backplane bus	12 W
Power consumption from the backplane bus (balanced)	6.2 W
Power loss	
Power loss, typ.	6.3 W

Article number	6ES7515-2AM02-0AB0
Memory	
Number of slots for SIMATIC memory card	1
SIMATIC memory card required	Yes
Work memory	
• integrated (for program)	500 kbyte
• integrated (for data)	3 Mbyte
Load memory	
• Plug-in (SIMATIC Memory Card), max.	32 Gbyte
Backup	
• maintenance-free	Yes
CPU processing times	
for bit operations, typ.	30 ns
for word operations, typ.	36 ns
for fixed point arithmetic, typ.	48 ns
for floating point arithmetic, typ.	192 ns
CPU-blocks	
Number of elements (total)	8 000; Blocks (OB, FB, FC, DB) and UDTs
DB	
• Number range	1 ... 60 999; subdivided into: number range that can be used by the user: 1 ... 59 999, and number range of DBs created via SFC 86: 60 000 ... 60 999
• Size, max.	3 Mbyte; For DBs with absolute addressing, the max. size is 64 KB
FB	
• Number range	0 ... 65 535
• Size, max.	500 kbyte
FC	
• Number range	0 ... 65 535
• Size, max.	500 kbyte
OB	
• Size, max.	500 kbyte
• Number of free cycle OBs	100
• Number of time alarm OBs	20
• Number of delay alarm OBs	20
• Number of cyclic interrupt OBs	20; With minimum OB 3x cycle of 500 µs
• Number of process alarm OBs	50
• Number of DPV1 alarm OBs	3
• Number of isochronous mode OBs	2
• Number of technology synchronous alarm OBs	2
• Number of startup OBs	100

Article number	6ES7515-2AM02-0AB0
• Number of asynchronous error OBs	4
• Number of synchronous error OBs	2
• Number of diagnostic alarm OBs	1
Nesting depth	
• per priority class	24
Counters, timers and their retentivity	
S7 counter	
• Number	2 048
Retentivity	
– adjustable	Yes
IEC counter	
• Number	Any (only limited by the main memory)
Retentivity	
– adjustable	Yes
S7 times	
• Number	2 048
Retentivity	
– adjustable	Yes
IEC timer	
• Number	Any (only limited by the main memory)
Retentivity	
– adjustable	Yes
Data areas and their retentivity	
Retentive data area (incl. timers, counters, flags), max.	512 kbyte; In total; available retentive memory for bit memories, timers, counters, DBs, and technology data (axes): 472 KB
Extended retentive data area (incl. timers, counters, flags), max.	3 Mbyte; When using PS 6 0W 24/48/60 V DC HF
Flag	
• Size, max.	16 kbyte
• Number of clock memories	8; 8 clock memory bit, grouped into one clock memory byte
Data blocks	
• Retentivity adjustable	Yes
• Retentivity preset	No
Local data	
• per priority class, max.	64 kbyte; max. 16 KB per block
Address area	
Number of IO modules	8 192; max. number of modules / submodules

Article number	6ES7515-2AM02-0AB0
I/O address area	
• Inputs	32 kbyte; All inputs are in the process image
• Outputs	32 kbyte; All outputs are in the process image
per integrated IO subsystem	
– Inputs (volume)	8 kbyte
– Outputs (volume)	8 kbyte
per CM/CP	
– Inputs (volume)	8 kbyte
– Outputs (volume)	8 kbyte
Subprocess images	
• Number of subprocess images, max.	32
Hardware configuration	
Number of distributed IO systems	64; A distributed I/O system is characterized not only by the integration of distributed I/O via PROFINET or PROFIBUS communication modules, but also by the connection of I/O via AS-i master modules or links (e.g. IE/PB-Link)
Number of DP masters	
• Via CM	8; A maximum of 8 CMs/CPs (PROFIBUS, PROFINET, Ethernet) can be inserted in total
Number of IO Controllers	
• integrated	2
• Via CM	8; A maximum of 8 CMs/CPs (PROFIBUS, PROFINET, Ethernet) can be inserted in total
Rack	
• Modules per rack, max.	32; CPU + 31 modules
• Number of lines, max.	1
PtP CM	
• Number of PtP CMs	the number of connectable PtP CMs is only limited by the number of available slots
Time of day	
Clock	
• Type	Hardware clock
• Backup time	6 wk; At 40 °C ambient temperature, typically
• Deviation per day, max.	10 s; Typ.: 2 s
Operating hours counter	
• Number	16
Clock synchronization	
• supported	Yes
• in AS, master	Yes
• in AS, slave	Yes
• on Ethernet via NTP	Yes

Article number	6ES7515-2AM02-0AB0
Interfaces	
Number of PROFINET interfaces	2
1. Interface	
Interface types	
• RJ 45 (Ethernet)	Yes; X1
• Number of ports	2
• integrated switch	Yes
Protocols	
• IP protocol	Yes; IPv4
• PROFINET IO Controller	Yes
• PROFINET IO Device	Yes
• SIMATIC communication	Yes
• Open IE communication	Yes; Optionally also encrypted
• Web server	Yes
• Media redundancy	Yes
PROFINET IO Controller	
Services	
– PG/OP communication	Yes
– Isochronous mode	Yes
– Direct data exchange	Yes; Requirement: IRT and isochronous mode (MRPD optional)
– IRT	Yes
– PROFIenergy	Yes; per user program
– Prioritized startup	Yes; Max. 32 PROFINET devices
– Number of connectable IO Devices, max.	256; In total, up to 1 000 distributed I/O devices can be connected via AS-i, PROFIBUS or PROFINET
– Of which IO devices with IRT, max.	64
– Number of connectable IO Devices for RT, max.	256
– of which in line, max.	256
– Number of IO Devices that can be simultaneously activated/deactivated, max.	8; in total across all interfaces
– Number of IO Devices per tool, max.	8
– Updating times	The minimum value of the update time also depends on communication share set for PROFINET IO, on the number of IO devices, and on the quantity of configured user data

Article number	6ES7515-2AM02-0AB0
Update time for IRT	
– for send cycle of 250 µs	250 µs to 4 ms; Note: In the case of IRT with isochronous mode, the minimum update time of 500 µs of the isochronous OB is decisive
– for send cycle of 500 µs	500 µs to 8 ms
– for send cycle of 1 ms	1 ms to 16 ms
– for send cycle of 2 ms	2 ms to 32 ms
– for send cycle of 4 ms	4 ms to 64 ms
– With IRT and parameterization of "odd" send cycles	Update time = set "odd" send clock (any multiple of 125 µs: 375 µs, 625 µs ... 3 875 µs)
Update time for RT	
– for send cycle of 250 µs	250 µs to 128 ms
– for send cycle of 500 µs	500 µs to 256 ms
– for send cycle of 1 ms	1 ms to 512 ms
– for send cycle of 2 ms	2 ms to 512 ms
– for send cycle of 4 ms	4 ms to 512 ms
PROFINET IO Device	
Services	
– PG/OP communication	Yes
– Isochronous mode	No
– IRT	Yes
– PROFIenergy	Yes; per user program
– Shared device	Yes
– Number of IO Controllers with shared device, max.	4
– activation/deactivation of I-devices	Yes; per user program
– Asset management record	Yes; per user program
2. Interface	
Interface types	
• RJ 45 (Ethernet)	Yes; X2
• Number of ports	1
• integrated switch	No

Article number	6ES7515-2AM02-0AB0
Protocols	
• IP protocol	Yes; IPv4
• PROFINET IO Controller	Yes
• PROFINET IO Device	Yes
• SIMATIC communication	Yes
• Open IE communication	Yes; Optionally also encrypted
• Web server	Yes
• Media redundancy	No
PROFINET IO Controller	
Services	
– PG/OP communication	Yes
– Isochronous mode	No
– Direct data exchange	No
– IRT	No
– PROFIenergy	Yes; per user program
– Prioritized startup	No
– Number of connectable IO Devices, max.	32; In total, up to 1 000 distributed I/O devices can be connected via AS-i, PROFIBUS or PROFINET
– Number of connectable IO Devices for RT, max.	32
– of which in line, max.	32
– Number of IO Devices that can be simultaneously activated/deactivated, max.	8; in total across all interfaces
– Number of IO Devices per tool, max.	8
– Updating times	The minimum value of the update time also depends on communication share set for PROFINET IO, on the number of IO devices, and on the quantity of configured user data
Update time for RT	
– for send cycle of 1 ms	1 ms to 512 ms

Article number	6ES7515-2AM02-0AB0
PROFINET IO Device	
Services	
– PG/OP communication	Yes
– Isochronous mode	No
– IRT	No
– PROFIenergy	Yes; per user program
– Prioritized startup	No
– Shared device	Yes
– Number of IO Controllers with shared device, max.	4
– activation/deactivation of I-devices	Yes; per user program
– Asset management record	Yes; per user program
Interface types	
RJ 45 (Ethernet)	
• 100 Mbps	Yes
• Autonegotiation	Yes
• Autocrossing	Yes
• Industrial Ethernet status LED	Yes
Protocols	
Number of connections	
• Number of connections, max.	192; via integrated interfaces of the CPU and connected CPs / CMs
• Number of connections reserved for ES/HMI/web	10
• Number of connections via integrated interfaces	108
• Number of S7 routing paths	16
Redundancy mode	
• H-Sync forwarding	Yes
Media redundancy	
– Media redundancy	only via 1st interface (X1)
– MRP	Yes
– MRP interconnection, supported	Yes; as MRP ring node according to IEC 62439-2 Edition 3.0
– MRPD	Yes; Requirement: IRT
– Switchover time on line break, typ.	200 ms; For MRP, bumpless for MRPD
– Number of stations in the ring, max.	50

Article number	6ES7515-2AM02-0AB0
SIMATIC communication	
• PG/OP communication	Yes; encryption with TLS V1.3 pre-selected
• S7 routing	Yes
• S7 communication, as server	Yes
• S7 communication, as client	Yes
• User data per job, max.	See online help (S7 communication, user data size)
Open IE communication	
• TCP/IP	Yes
– Data length, max.	64 kbyte
– several passive connections per port, supported	Yes
• ISO-on-TCP (RFC1006)	Yes
– Data length, max.	64 kbyte
• UDP	Yes
– Data length, max.	2 kbyte; 1 472 bytes for UDP broadcast
– UDP multicast	Yes; Max. 5 multicast circuits
• DHCP	Yes
• DNS	Yes
• SNMP	Yes
• DCP	Yes
• LLDP	Yes
• Encryption	Yes; Optional
Web server	
• HTTP	Yes; Standard and user pages
• HTTPS	Yes; Standard and user pages

Article number	6ES7515-2AM02-0AB0
OPC UA	
• Runtime license required	Yes; "Medium" license required
• OPC UA Client	Yes
– Application authentication	Yes
– Security policies	Available security policies: None, Basic128Rsa15, Basic256Rsa15, Basic256Sha256
– User authentication	"anonymous" or by user name & password
– Number of connections, max.	10
– Number of nodes of the client interfaces, max.	2 000
– Number of elements for one call of OPC_UA_NodeGetHandleList/OPC_UA_ReadList/OPC_UA_WriteList, max.	300
– Number of elements for one call of OPC_UA_NameSpaceGetIndexList, max.	20
– Number of elements for one call of OPC_UA_MethodGetHandleList, max.	100
– Number of simultaneous calls of the client instructions per connection (except OPC_UA_ReadList,OPC_UA_WriteList,OPC_UA_MethodCall), max.	1
– Number of simultaneous calls of the client instructions OPC_UA_ReadList,OPC_UA_WriteList and OPC_UA_MethodCall, max.	5
– Number of registerable nodes, max.	5 000
– Number of registerable method calls of OPC_UA_MethodCall, max.	100
– Number of inputs/outputs when calling OPC_UA_MethodCall, max.	20
• OPC UA Server	Yes; Data access (read, write, subscribe), method call, custom address space
– Application authentication	Yes
– Security policies	Available security policies: None, Basic128Rsa15, Basic256Rsa15, Basic256Sha256
– User authentication	"anonymous" or by user name & password
– GDS support (certificate management)	Yes
– Number of sessions, max.	48
– Number of accessible variables, max.	100 000
– Number of registerable nodes, max.	20 000
– Number of subscriptions per session, max.	20
– Sampling interval, min.	100 ms

Article number	6ES7515-2AM02-0AB0
– Publishing interval, min.	200 ms
– Number of server methods, max.	50
– Number of inputs/outputs per server method, max.	20
– Number of monitored items, max.	2 000; for 1 s sampling interval and 1 s send interval
– Number of nodes for user-defined server interfaces, max.	5 000
• Alarms and Conditions	Yes
– Number of program alarms	200
– Number of alarms for system diagnostics	100
Further protocols	
• MODBUS	Yes; MODBUS TCP
Isochronous mode	
Equidistance	Yes
S7 message functions	
Number of login stations for message functions, max.	64
Program alarms	Yes
Number of configurable program messages, max.	10 000; Program messages are generated by the "Program_Alarm" block, ProDiag or GRAPH
Number of loadable program messages in RUN, max.	5 000
Number of simultaneously active program alarms	
• Number of program alarms	800
• Number of alarms for system diagnostics	200
• Number of alarms for motion technology objects	160
Test commissioning functions	
Joint commission (Team Engineering)	Yes; Parallel online access possible for up to 8 engineering systems
Status block	Yes; Up to 8 simultaneously (in total across all ES clients)
Single step	No
Number of breakpoints	8
Status/control	
• Status/control variable	Yes
• Variables	Inputs/outputs, memory bits, DBs, distributed I/Os, timers, counters
• Number of variables, max.	
– of which status variables, max.	200; per job
– of which control variables, max.	200; per job

Article number	6ES7515-2AM02-0AB0
Forcing	
• Forcing	Yes
• Forcing, variables	Peripheral inputs/outputs
• Number of variables, max.	200
Diagnostic buffer	
• present	Yes
• Number of entries, max.	3 200
– of which powerfail-proof	500
Traces	
• Number of configurable Traces	4; Up to 512 KB of data per trace are possible
Interrupts/diagnostics/status information	
Diagnostics indication LED	
• RUN/STOP LED	Yes
• ERROR LED	Yes
• MAINT LED	Yes
• STOP ACTIVE LED	Yes
• Connection display LINK TX/RX	Yes
Supported technology objects	
Motion Control	Yes; Note: The number of technology objects affects the cycle time of the PLC program; selection guide via the TIA Selection Tool
• Number of available Motion Control resources for technology objects	2 400
• Required Motion Control resources	
– per speed-controlled axis	40
– per positioning axis	80
– per synchronous axis	160
– per external encoder	80
– per output cam	20
– per cam track	160
– per probe	40
• Positioning axis	
– Number of positioning axes at motion control cycle of 4 ms (typical value)	7
– Number of positioning axes at motion control cycle of 8 ms (typical value)	14

Article number	6ES7515-2AM02-0AB0
Controller	
• PID_Compact	Yes; Universal PID controller with integrated optimization
• PID_3Step	Yes; PID controller with integrated optimization for valves
• PID-Temp	Yes; PID controller with integrated optimization for temperature
Counting and measuring	
• High-speed counter	Yes
Standards, approvals, certificates	
Suitable for safety functions	No
Ambient conditions	
Ambient temperature during operation	
• horizontal installation, min.	-25 °C; No condensation
• horizontal installation, max.	60 °C; Display: 50 °C, at an operating temperature of typically 50 °C, the display is switched off
• vertical installation, min.	-25 °C; No condensation
• vertical installation, max.	40 °C; Display: 40 °C, at an operating temperature of typically 40 °C, the display is switched off
Ambient temperature during storage/transportation	
• min.	-40 °C
• max.	70 °C
Altitude during operation relating to sea level	
• Installation altitude above sea level, max.	5 000 m; Restrictions for installation altitudes > 2 000 m, see manual
Configuration	
Programming	
Programming language	
– LAD	Yes
– FBD	Yes
– STL	Yes
– SCL	Yes
– GRAPH	Yes
Know-how protection	
• User program protection/password protection	Yes
• Copy protection	Yes
• Block protection	Yes

Article number	6ES7515-2AM02-0AB0
Access protection	
• protection of confidential configuration data	Yes
• Password for display	Yes
• Protection level: Write protection	Yes
• Protection level: Read/write protection	Yes
• Protection level: Complete protection	Yes
Cycle time monitoring	
• lower limit	adjustable minimum cycle time
• upper limit	adjustable maximum cycle time
Dimensions	
Width	70 mm
Height	147 mm
Depth	129 mm
Weights	
Weight, approx.	830 g

General technical specifications

You can find information on the general technical specifications, such as standards and approvals, electromagnetic compatibility, protection class, etc., in the S7-1500, ET 200MP (http://support.automation.siemens.com/WW/view/en/59191792) system manual.

Dimensional drawing

A

This section contains the dimensional drawing of the module on the mounting rail, as well as a dimensional drawing with the front panel open. Always observe the specified dimensions for installation in cabinets, control rooms, etc.

Dimensional drawings for CPU 1515-2 PN

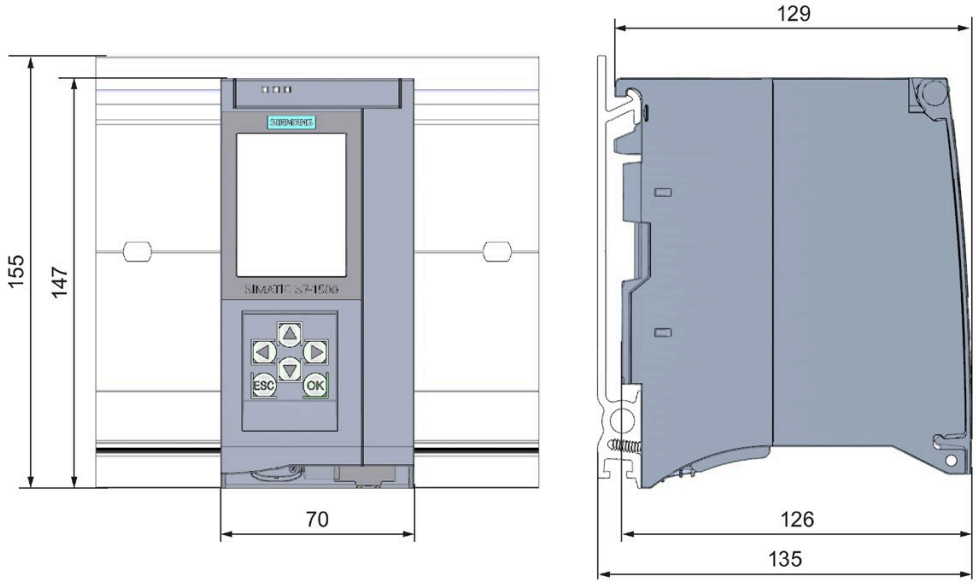

Figure A-1 Dimensional drawing of the CPU 1515-2 PN

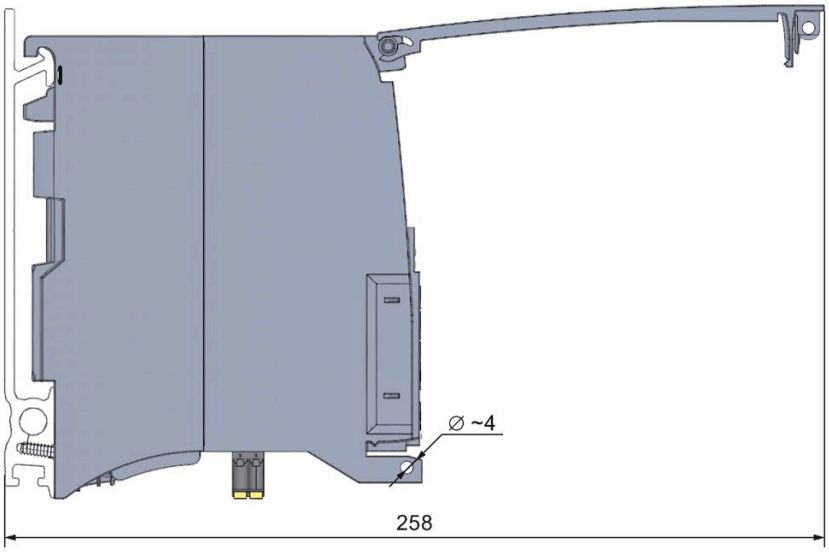

Figure A-2 CPU with open front panel

SIEMENS

Manual

SIMATIC

S7-1500R/H

CPU 1515R-2 PN
(6ES7515-2RM00-0AB0)

Edition 05/2021

support.industry.siemens.com

SIEMENS

SIMATIC

S7-1500R/H CPU 1515R-2 PN (6ES7515-2RM00-0AB0)

Equipment Manual

Preface

S7-1500R/H Documentation Guide 1

Product overview 2

Connecting 3

Interrupts, diagnostics, error messages and system events 4

Technical specifications 5

Dimension drawing A

05/2021

A5E42009914-AC

Legal information

Warning notice system

This manual contains notices you have to observe in order to ensure your personal safety, as well as to prevent damage to property. The notices referring to your personal safety are highlighted in the manual by a safety alert symbol, notices referring only to property damage have no safety alert symbol. These notices shown below are graded according to the degree of danger.

⚠ DANGER
indicates that death or severe personal injury **will** result if proper precautions are not taken.

⚠ WARNING
indicates that death or severe personal injury **may** result if proper precautions are not taken.

⚠ CAUTION
indicates that minor personal injury can result if proper precautions are not taken.

NOTICE
indicates that property damage can result if proper precautions are not taken.

If more than one degree of danger is present, the warning notice representing the highest degree of danger will be used. A notice warning of injury to persons with a safety alert symbol may also include a warning relating to property damage.

Qualified Personnel

The product/system described in this documentation may be operated only by **personnel qualified** for the specific task in accordance with the relevant documentation, in particular its warning notices and safety instructions. Qualified personnel are those who, based on their training and experience, are capable of identifying risks and avoiding potential hazards when working with these products/systems.

Proper use of Siemens products

Note the following:

⚠ WARNING
Siemens products may only be used for the applications described in the catalog and in the relevant technical documentation. If products and components from other manufacturers are used, these must be recommended or approved by Siemens. Proper transport, storage, installation, assembly, commissioning, operation and maintenance are required to ensure that the products operate safely and without any problems. The permissible ambient conditions must be complied with. The information in the relevant documentation must be observed.

Trademarks

All names identified by ® are registered trademarks of Siemens AG. The remaining trademarks in this publication may be trademarks whose use by third parties for their own purposes could violate the rights of the owner.

Disclaimer of Liability

We have reviewed the contents of this publication to ensure consistency with the hardware and software described. Since variance cannot be precluded entirely, we cannot guarantee full consistency. However, the information in this publication is reviewed regularly and any necessary corrections are included in subsequent editions.

Siemens AG
Digital Industries
Postfach 48 48
90026 NÜRNBERG
GERMANY

A5E42009914-AC
Ⓟ 03/2021 Subject to change

Copyright © Siemens AG 2018 - 2019.
All rights reserved

Preface

Purpose of the documentation

This manual supplements the system manual of the S7-1500R/H redundant system and the function manuals. This manual contains a description of the module-specific information. The system-related functions are described in the system manual. All system-spanning functions are described in the function manuals.

The information provided in this manual and the system manual enables you to commission the CPU 1515R-2 PN.

Conventions

STEP 7: In this documentation, "STEP 7" is used as a synonym for all versions of the configuration and programming software "STEP 7 (TIA Portal)".

Please also observe notes marked as follows:

Note

A note contains important information on the product described in the documentation, on the handling of the product or on the section of the documentation to which particular attention should be paid.

Recycling and disposal

For environmentally friendly recycling and disposal of your old equipment, contact a certified electronic waste disposal company and dispose of the equipment according to the applicable regulations in your country.

Security information

Siemens provides products and solutions with industrial security functions that support the secure operation of plants, systems, machines and networks.

In order to protect plants, systems, machines and networks against cyber threats, it is necessary to implement – and continuously maintain – a holistic, state-of-the-art industrial security concept. Siemens' products and solutions constitute one element of such a concept.

Customers are responsible for preventing unauthorized access to their plants, systems, machines and networks. Such systems, machines and components should only be connected to an enterprise network or the internet if and to the extent such a connection is necessary and only when appropriate security measures (e.g. firewalls and/or network segmentation) are in place.

For additional information on industrial security measures that may be implemented, please visit (https://www.siemens.com/industrialsecurity).

Siemens' products and solutions undergo continuous development to make them more secure. Siemens strongly recommends that product updates are applied as soon as they are available and that the latest product versions are used. Use of product versions that are no longer supported, and failure to apply the latest updates may increase customers' exposure to cyber threats.

To stay informed about product updates, subscribe to the Siemens Industrial Security RSS Feed visit (https://www.siemens.com/industrialsecurity).

Siemens Industry Online Support

You can find current information on the following topics quickly and easily here:

- **Product support**

  All the information and extensive know-how on your product, technical specifications, FAQs, certificates, downloads, and manuals.

- **Application examples**

  Tools and examples to solve your automation tasks – as well as function blocks, performance information and videos.

- **Services**

  Information about Industry Services, Field Services, Technical Support, spare parts and training offers.

- **Forums**

  For answers and solutions concerning automation technology.

- **mySupport**

  Your personal working area in Industry Online Support for messages, support queries, and configurable documents.

This information is provided by the Siemens Industry Online Support in the Internet (https://support.industry.siemens.com).

Industry Mall

The Industry Mall is the catalog and order system of Siemens AG for automation and drive solutions on the basis of Totally Integrated Automation (TIA) and Totally Integrated Power (TIP).

You can find catalogs for all automation and drive products on the Internet (https://mall.industry.siemens.com).

Table of contents

Preface **3**

1 S7-1500R/H Documentation Guide **7**

2 Product overview **9**

2.1 New functions in firmware version V2.9 9

2.2 Configuration and operating principle 12

2.3 Hardware properties 14

2.4 Firmware functions 17

2.5 Operator controls and display elements 19

2.5.1 Front view of the CPU with closed front panel 19

2.5.2 Front view of the CPU without front panel 21

2.5.3 Rear view of the CPU 22

2.6 Mode selector 23

3 Connecting **24**

3.1 Terminal assignment 24

4 Interrupts, diagnostics, error messages and system events **28**

4.1 Status and error display of the CPU 28

5 Technical specifications **33**

A Dimension drawing **42**

A.1 Dimension drawing 42

S7-1500R/H Documentation Guide

1

The documentation for the redundant S7-1500R/H system is divided into three areas. This division enables you to access the specific content you require.

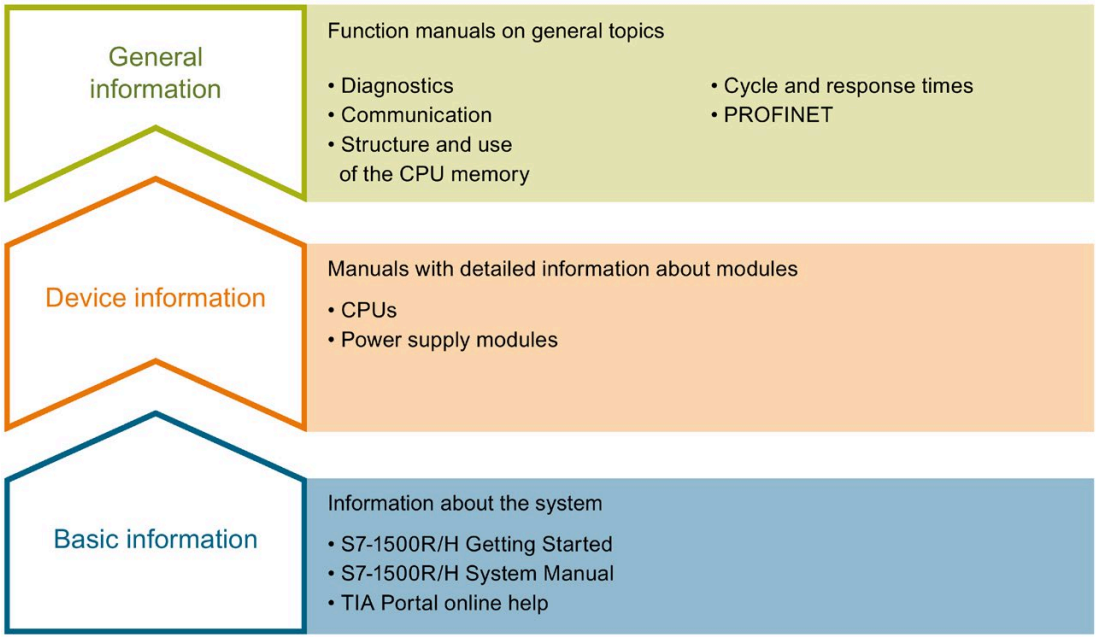

Basic information

The System Manual and Getting Started describe in detail the configuration, installation, wiring and commissioning of the redundant S7-1500R/H system. The STEP 7 online help supports you in the configuration and programming.

Device information

Product manuals contain a compact description of the module-specific information, such as properties, wiring diagrams, characteristics and technical specifications.

General information

The function manuals contain detailed descriptions on general topics regarding the redundant S7-1500R/H system, e.g. diagnostics, communication.

You can download the documentation free of charge from the Internet (https://support.industry.siemens.com/cs/ww/en/view/109742691).

Changes and supplements to the manuals are documented in a Product Information.

You can download the product information free of charge from the Internet (https://support.industry.siemens.com/cs/ww/en/view/109742691).

S7-1500/ET 200MP Manual Collection

The S7-1500/ET 200MP Manual Collection contains the complete documentation on the redundant S7-1500R/H system gathered together in one file.

You can find the Manual Collection on the Internet (https://support.industry.siemens.com/cs/ww/en/view/86140384).

SIMATIC S7-1500 comparison list for programming languages

The comparison list contains an overview of which instructions and functions you can use for which controller families.

You can find the comparison list on the Internet (https://support.industry.siemens.com/cs/ww/en/view/86630375).

"mySupport"

With "mySupport", your personal workspace, you make the best out of your Industry Online Support.

In "mySupport", you can save filters, favorites and tags, request CAx data and compile your personal library in the Documentation area. In addition, your data is already filled out in support requests and you can get an overview of your current requests at any time.

You must register once to use the full functionality of "mySupport".

You can find "mySupport" on the Internet (https://support.industry.siemens.com/My/ww/en/).

Application examples

The application examples support you with various tools and examples for solving your automation tasks. Solutions are shown in interplay with multiple components in the system - separated from the focus on individual products.

You will find the application examples on the Internet (https://support.industry.siemens.com/sc/ww/en/sc/2054).

Product overview

2

2.1 New functions in firmware version V2.9

This section contains an overview of the most important new firmware functions of the CPU since the last edition of the manual.

New functions of the CPU in firmware version V2.9

New functions	Customer benefits	Where can I find information?
Influence switchover time of switched S1 devices	As of FW version V2.9, you can influence the switchover time between disconnection and return of switched S1 devices after a failure/STOP of the primary CPU. This function offers the following advantages: • Optimization of the switchover time between disconnection and return of switched S1 devices	PROFINET function manual (http://support.automation.siemens.com/WW/view/en/49948856)
MRP interconnection	The MRP interconnection procedure is an extension of MRP. MRP interconnection enables the redundant coupling of 2 or more rings with MRP in PROFINET networks. MRP interconnection offers the following advantages: • When setting up redundant network topologies, there is no limitation to the maximum number of devices of 50 devices in a ring. • Monitoring of larger topologies with ring redundancy.	
Simulation of R/H-CPUs	PLCSIM Advanced V4.0 supports simulation of R/H-CPUs • Virtual commissioning of machines with R/H-CPUs in a system • Automatic testing of the STEP 7 user program The simulation offers the following advantages: • Early error detection and risk minimization • Reduced response times • No hardware costs	S7-PLCSIM Advanced Function Manual (https://support.industry.siemens.com/cs/ww/en/view/109773484)

New functions	Customer benefits	Where can I find information?
OB 72 (CPU redundancy error)	As of FW version V2.9, the operating system calls OB 72 on further events: • The R/H-system has entered RUN-Redundant system state and the synchronization of the two R/H-CPUs is possible redundantly. • The R/H-system has entered RUN-Redundant system state, but the synchronization of the two R/H-CPUs is not possible redundantly. • The R/H-system is still in RUN-Redundant system state and the synchronization of the two R/H-CPUs is possible redundantly now or again. • The R/H-system is still in RUN-Redundant system state, but the synchronization of the two R/H-CPUs is no longer possible redundantly.	S7-1500R/H System Manual (https://support.industry.siemens.com/cs/ww/en/view/109754833)
"RH_CTRL" instruction	As of FW version V2.9, the "RH_CTRL" instruction supports additional functions: • Request SYNCUP • Switch primary CPU to STOP mode (only in RUN-Redundant system state) • Switch backup CPU to STOP mode	
Instructions for recipe phases	As of FW version V2.9, the instructions for recipe phases supports: • RecipeExport (export recipe) • RecipeImport (import recipe)	Online help for STEP 7
Technology objects TO_BasicPos and SSI_Absolute_Encoder	Technology object "TO_BasicPos" You use the "TO_BasicPos" instruction to cyclically control a SINAMICS drive with the technology for SINAMICS S/G/V basic positioners. Technology object SSI_Absolute_Encoder You use the "SSI_Absolute_Encoder" instruction to control position detection and measuring functions of the TM PosInput technology module via the user program.	

New functions of the CPU in firmware version V2.8

New functions	Customer benefits	Where can I find information?
Download modified user program in RUN-Redundant system state	You can download a modified user program into the R/H CPUs in the RUN-Redundant system state. Advantage: The redundant system will remain consistently in the RUN-Redundant system state during the change to the user program. The system state will not switch to RUN-Rolo or SYNCUP.	S7-1500R/H System Manual (https://support.industry.siemens.com/cs/ww/en/view/109754833)
Backing up the configuration of the S7-1500R/H redundant system in runtime	You do not have to interrupt the process during a backup while the plant is running. Uninterrupted plant operation avoids high restart and material costs.	
Switched S1 device	The "Switched S1 device" function of the CPU enables operation of standard IO devices in the S7-1500R/H redundant system.	
Testing with breakpoints	When testing with breakpoints, you run a program from breakpoint to breakpoint in the STARTUP (startup OB) or RUN-Solo system state. Testing with breakpoints provides you with the following advantages: • Testing SCL and STL program code with the help of breakpoints • Localization of logic errors step by step • Simple and quick analysis of complex programs prior to actual commissioning • Recording of current values within individual executed loops • Using breakpoints for program validation is also possible in SCL or STL networks within LAD/FBD blocks.	
PID controller	PID controllers are built into all R/H-CPUs as standard. PID controllers measure the actual value of a physical variable, for example, temperature or pressure, and compare the actual value with the setpoint. Based on the resulting error signal, the controller calculates a manipulated variable that causes the process value to reach the setpoint as quickly and stably as possible. The PID controllers offer you the following advantages: • Simple configuration and programming through integrated editors and blocks • Simple simulation, visualization, commissioning and operation via PG and HMI • Automatic calculation of the control parameters and tuning during operation • No additional hardware and software required	• S7-1500R/H System Manual (https://support.industry.siemens.com/cs/ww/en/view/109754833) • PID Control Function Manual (https://support.industry.siemens.com/cs/ww/en/view/108210036)
Alarms in the user program	Alarms enable you to display events from process execution in the S7-1500R/H redundant system and to quickly identify, accurately locate, and correct errors.	Diagnostics function manual (https://support.industry.siemens.com/cs/ww/en/view/59192926)

Additional information

You can find an overview of all new functions, improvements and revisions in the respective firmware versions on the Internet (https://support.industry.siemens.com/cs/ww/en/view/109478459).

2.2 Configuration and operating principle

Structure

The S7-1500R redundant system consists of the following components:

- Two CPUs of the type CPU 1515R-2 PN
- Two SIMATIC memory cards
- PROFINET cable (redundancy connections, PROFINET ring)
- IO devices
- Load power supply (optional)

You mount the CPUs on a common mounting rail or spatially separated on two separate mounting rails. You connect the two CPUs and the IO devices in a PROFINET ring via the PROFINET cable.

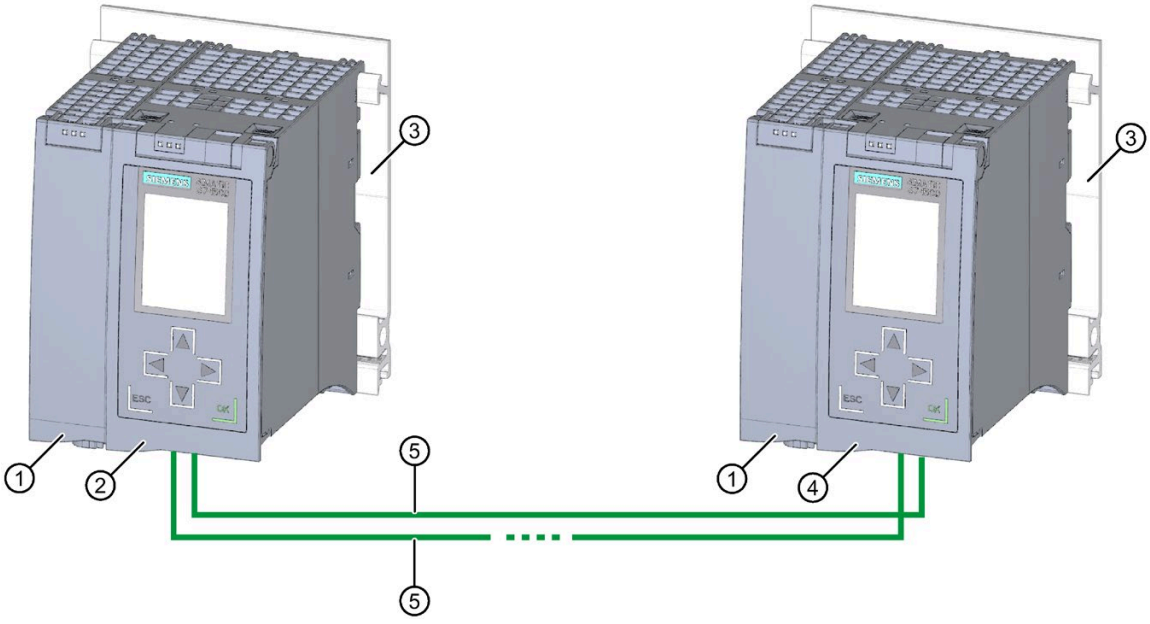

① Optional load current supply
② First CPU
③ Mounting rail with integrated DIN rail profile
④ Second CPU
⑤ PROFINET cable (redundancy connections, PROFINET ring)

Figure 2-1 Configuration example for S7-1500R

Note

Standard rail adapter

You mount the CPUs on a standardized 35 mm rail using the standard rail adapter.

You will find information on mounting the standard rail adapter in the S7-1500R/H redundant system (https://support.industry.siemens.com/cs/ww/en/view/109754833) System Manual.

Principle of operation

One of the two CPUs in the redundant system takes on the role of CPU for process control (primary CPU). The other CPU takes on the role of the following CPU (backup CPU). The assigned role of the CPUs can change during operation. Synchronization of all relevant data between primary CPU and backup CPU ensures fast switching between CPUs in the event of a primary CPU failure. If the primary CPU fails, the backup CPU retains control of the process as the new primary CPU at the point of interruption.

The redundancy connections are the PROFINET ring with MRP. The CPUs are synchronized via a PROFINET ring.

Additional information

You can find a detailed description of the operation and design of the CPUs in the system manual Redundant System S7-1500R/H (https://support.industry.siemens.com/cs/ww/en/view/109754833).

2.3 Hardware properties

Article number

6ES7515-2RM00-0AB0

View of the module

The figure below shows the CPU 1515R-2 PN.

Figure 2-2 CPU 1515R-2 PN

Note

Protective film

Note that there is a removable protective foil on the display when the CPUs are delivered.

Properties

CPU 1515R-2 PN has the following technical properties:

Property	Description	Additional information
CPU display	All CPUs of the redundant system S7 1500R/H have a display with plain text information. The display provides you with diagnostic messages as well as information about the article number, the firmware version and the serial number of the CPU. You can also view and assign the IP addresses, the PROFINET device name and the redundancy ID of the CPU. The system IP address can be viewed via STEP 7 but not in the display. In addition to the functions listed here, a large number of other functions are available on the display. These additional functions are described in the SIMATIC S7 1500 Display Simulator.	• Redundant System S7-1500R/H (https://support.industry.siemens.com/cs/ww/en/view/109754833) System Manual • SIMATIC S7-1500 Display Simulator (https://support.industry.siemens.com/cs/ww/en/view/109761758)
Supply voltage	The 24 V DC supply voltage is fed via a 4-pin plug located on the front of the CPU.	• Section Connecting (Page 24) • Redundant System S7-1500R/H (https://support.industry.siemens.com/cs/ww/en/view/109754833) System Manual
PROFINET IO		
PROFINET IO interface (X1 P1 R and X1 P2 R)	The CPU has an X1 interface with two ports (X1 P1 R and X1 P2 R). • The PROFINET IO interface X1 (default P1 R) is used to set up the PROFINET ring with the two CPUs and the IO devices. • The PROFINET IO interface X1 (default P2 R) is used to make the connection between the two R-CPUs in the PROFINET ring. In the PROFINET ring, the synchronization frames between the CPUs are transmitted via the following connections: – The direct connection (X1 P2 R) – The indirect connection (X1 P1 R) via the IO devices • The interface supports PROFINET IO RT (Real-Time) and PROFINET basic functionality. Basic PROFINET functionality comprises: – HMI communication – Communication with the configuration system – Communication with a higher-level network (backbone, router, Internet) – Communication with another machine or automation cell	• Redundant System S7-1500R/H (https://support.industry.siemens.com/cs/ww/en/view/109754833) System Manual • Function manual PROFINET (https://support.industry.siemens.com/cs/ww/en/view/49948856)

Property	Description	Additional information
PROFINET interface (X2 P1)	The CPU has an X2 interface with one port (X2 P1). The interface supports PROFINET basic functionality.	
Operation of the CPUs as IO controllers	**IO controller:** As IO controllers the CPUs address the following configured IO devices: • IO devices with S2 system redundancy within the PROFINET ring • IO devices with S2 system redundancy that are decoupled from the PROFINET ring via a switch • Standard IO devices (switched S1 devices) Standard IO devices usually do not support H-Sync Forwarding. To avoid a cycle time increase when the PROFINET ring is interrupted, integrate the standard IO devices behind a switch and not in the PROFINET ring.	

H-Sync Forwarding

H-Sync Forwarding enables a PROFINET device with MRP to forward synchronization data (synchronization frames) of an S7-1500R redundant system only within the PROFINET ring.

In addition, H-Sync Forwarding forwards the synchronization data even during reconfiguration of the PROFINET ring. H-Sync Forwarding avoids a cycle time increase if the PROFINET ring is interrupted.

Note

Support of H-Sync Forwarding

The technical specifications typically state whether a PROFINET device supports H-Sync Forwarding.

The GSD file will also indicate whether the device supports H-Sync Forwarding. The device supports H-Sync Forwarding when the "ApplicationClass" attribute contains the "HighAvailability" token.

You will find more information on H-Sync Forwarding in the system manual S7-1500R/H redundant system (https://support.industry.siemens.com/cs/ww/en/view/109754833).

Accessories

You can find information on the topic of "Accessories/spare parts" in the system manual for Redundant System S7-1500R/H (https://support.industry.siemens.com/cs/ww/en/view/109754833).

2.4 Firmware functions

Functions

CPU 1515R-2 PN supports the following firmware functions:

Function	Description	Additional information
CPU redundancy	There are two duplicate CPUs that synchronize their data via redundancy connections within a PROFINET ring. If one of the CPUs fails, the other CPU retains control of the process.	Redundant System S7-1500R/H (https://support.industry.siemens.com/cs/ww/en/view/109754833) System Manual
Integrated system diagnostics	The system automatically generates the messages for the system diagnostics and outputs these messages via a programming device/PC, HMI device or the integrated display. System diagnostics information is also available when the CPUs are in operating state STOP.	Function manual Diagnostics (https://support.industry.siemens.com/cs/ww/en/view/59192926)
Integrated trace functionality	Trace functionality supports you in troubleshooting and/or optimizing the user program. You record device tags and evaluate the recordings with the trace and logic analyzer function. Tags are, for example, drive parameters or system and user tags of a CPU. Trace and logic analyzer functions are suitable for monitoring highly dynamic processes. Note: Note that the S7-1500R/H redundant system supports recording of measurements. However, saving the measurements to the SIMATIC memory card is not supported.	Function manual Using the trace and logic analyzer function (https://support.industry.siemens.com/cs/ww/en/view/64897128)
PROFINET IO		
System redundancy S2	IO-Devices with S2 system redundancy enable uninterrupted operation during a primary backup switchover. If the role of the CPUs changes, the new primary CPU takes over the PROFINET IO communication.	• Redundant System S7-1500R/H (https://support.industry.siemens.com/cs/ww/en/view/109754833) System Manual • Function manual PROFINET (http://support.automation.siemens.com/WW/view/en/49948856)
Switched S1 device	The switched S1 device function of the CPU enables operation of standard IO devices in the S7-1500R/H redundant system.	Redundant System S7-1500R/H (https://support.industry.siemens.com/cs/ww/en/view/109754833) System Manual
RT (real time)	RT prioritizes PROFINET IO frames over standard frames. This ensures the required determinism in the automation technology. In this process the data is transferred via prioritized Ethernet frames.	Function manual PROFINET (http://support.automation.siemens.com/WW/view/en/49948856)
MRP (Media Redundancy Protocol)	The Media Redundancy Protocol enables the configuration of redundant networks. Redundant transmission links (ring topology) ensure that an alternative communication path is made available if a transmission link fails. Within the PROFINET ring, the R-CPUs assume the role of the MRP Manager following appropriate project configuration and all other devices in the ring assume the role of the MRP clients.	

Function	Description	Additional information
MRP interconnection	The process MRP interconnection is an enhancement of MRP and allows redundant coupling of two or more rings with MRP in PROFINET networks. MRP interconnection is - like MRP - specified in the standard IEC 62439-2 (Edition 3).	
PROFIenergy	PROFIenergy is a PROFINET-based data interface for switching off consumers centrally and with full coordination during pause times regardless of the manufacturer or device type. Through this, the process should only be provided with the energy that is absolutely required. Most of the energy is saved by the process. The PROFINET device itself only contributes a few watts to the savings potential.	
Integrated technology		
Integrated closed-loop control functionality	• PID Compact (continuous PID controller) • PID 3Step (step controller for integrating actuators) • PID Temp (temperature controller for heating and cooling with two separate actuators)	Function manual PID Control (https://support.industry.siemens.com/cs/ww/en/view/108210036)
Controlling, measuring and position detection	• TO_BasicPos (control of a SINAMICS drive) • SSI_Absolute_Encoder (control of position detection and measuring function of the TM PosInput technology module)	STEP 7 online help
Security Integrated		
Know-how protection	The know-how protection protects user blocks against unauthorized access and modifications.	Redundant System S7-1500R/H (https://support.industry.siemens.com/cs/ww/en/view/109754833) System Manual
Access protection	You can use authorization levels to assign separate rights to different user groups.	
Integrity protection	The CPUs dispose of integrity protection by default. Integrity protection identifies possible manipulations of engineering data on the SIMATIC memory card or during data transfer between STEP 7 and the CPUs. Integrity protection also checks the communication from a SIMATIC HMI system to the CPUs for possible manipulations of engineering data. If integrity protection identifies the manipulation of engineering data, the user receives a corresponding message.	
Password provider	As an alternative to manual password entry, you can link a password provider to STEP 7. A password provider offers the following advantages: • Convenient handling of passwords. STEP 7 automatically imports the password for the blocks. This saves you time. • Optimum block protection because the users do not know the password itself.	

2.5 Operator controls and display elements

2.5.1 Front view of the CPU with closed front panel

The figure below shows the front view of the CPU 1515R-2 PN.

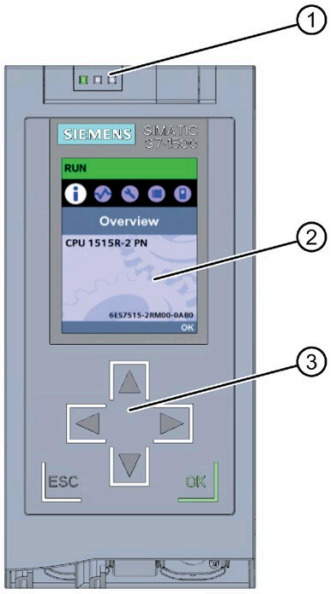

① LEDs for the current operating state and diagnostic status of the CPU
② Display
③ Control keys

Figure 2-3 View of the CPU 1515R-2 PN (with front panel) - front

---

Note

Temperature range for display

To increase its service life, the display switches off at a temperature below the permitted operating temperature of the device. When the display cools down, it automatically switches itself on again. When the display is switched off, the LEDs continue to show the status of the CPUs.

You can find additional information on the temperatures at which the display switches itself on and off in the Technical specifications (Page 33).

Pulling and plugging the front panel with display

You can pull and plug the front panel with display during operation.

WARNING

Personal injury and damage to property may occur

If you remove or attach the front panel of a redundant system S7-1500R/H during operation, personal injury or damage to property can occur in hazardous area zone 2.

Before you remove or fit the front panel, always switch off the power supply to the S7-1500R/H redundant system in hazardous area zone 2.

Locking the front panel

You can lock the front panel to protect the SIMATIC memory card and the mode selector of the CPU against unauthorized access.

You can attach a security seal or a padlock with a hoop diameter of 3 mm to the front panel.

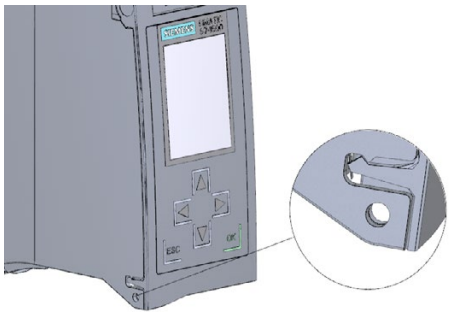

Figure 2-4 Locking latch on the CPU

In addition to the mechanical lock, you can also block access to a password-protected CPU on the display (local lock) and assign a password for the display. You can find additional information on the display, the configurable protection levels and the local lock in the system manual for Redundant System S7-1500R/H (https://support.industry.siemens.com/cs/ww/en/view/109754833).

Reference

You can find detailed information on the individual display options, a training course and a simulation of the available menu commands in the SIMATIC S7-1500 Display Simulator (https://support.industry.siemens.com/cs/ww/en/view/109761758).

2.5.2 Front view of the CPU without front panel

The figure below shows the operator controls and connection elements of the CPU 1515R-2 PN.

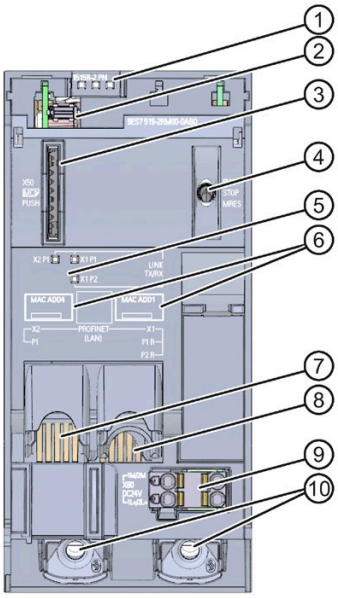

① LEDs for the current operating state and diagnostic status of the CPUs
② Display connector
③ Slot for the SIMATIC memory card
④ Mode selector
⑤ LED displays for the 3 ports of the PROFINET interfaces X1 and X2
⑥ MAC addresses of the interfaces
⑦ PROFINET IO interface X2 with 1 port
⑧ PROFINET IO interface X1 with 2 ports
⑨ Connector for power supply
⑩ Fixing screws

Figure 2-5 View of the CPU 1515R-2 PN (without front panel) - front

2.5.3 Rear view of the CPU

The figure below shows the connection elements on the rear of the CPU 1515R-2 PN.

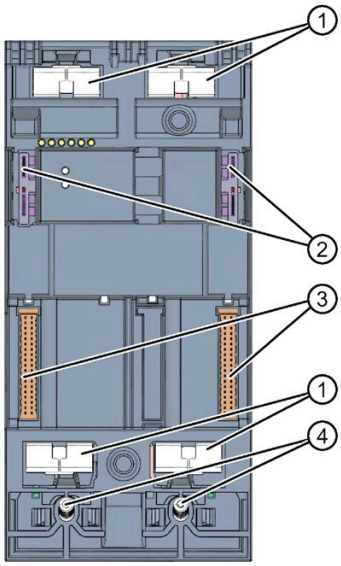

① Shield contact surfaces
② Plug-in connection for power supply
③ Plug-in connection for backplane bus
④ Fixing screws

Figure 2-6 View of the CPU 1515R-2 PN - rear

2.6 Mode selector

You use the mode selector to:

- Request a change to a specific operating state
- Disable or enable the change of a specific operating state

  (if, for example, the mode selector is set to STOP, you cannot switch the CPU to RUN via a communication task configured in the TIA Portal or via the display)

The following table shows the position of the switch and the corresponding meaning.

Table 2- 1 Mode switch settings

Position	Meaning	Explanation
RUN	RUN mode	The CPU has permission to go to RUN.
STOP	STOP mode	The CPU does not have permission to go to RUN.
MRES	Memory reset	Position for CPU memory reset.

Reference

You can find a brief overview of the various operating states and system states in the section Status and error display of the CPU (Page 28).

You can find a detailed description of the operating states and system states in the system manual for S7-1500R/H Redundant System (https://support.industry.siemens.com/cs/ww/en/view/109754833).

Connecting

3

3.1 Terminal assignment

This section provides information on the terminal assignment of the individual interfaces and the block diagram of the CPU 1515R-2 PN.

24 V DC supply voltage (X80)

The connector for the power supply is plugged in when the CPU ships from the factory.

The following table shows the signal names and the descriptions of the pin assignment of the 24 V DC supply voltage.

Table 3- 1 Pin assignment 24 V DC supply voltage

View Connector	Signal name [1]		Description
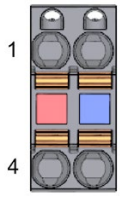	1	1L+	+ 24 V DC of the supply voltage
	2	1M	Ground of the supply voltage
	3	2M	Ground of the supply voltage for loop-through [2]
	4	2L+	+ 24 V DC of the supply voltage for loop-through [2]

[1] 1L+ and 2L+ as well as 1M and 2M are bridged internally.

[2] Maximum 10 A permitted

You can find information on the various supply options in the system manual for Redundant System S7-1500R/H (https://support.industry.siemens.com/cs/ww/en/view/109754833).

PROFINET interface X1 with 2-port switch (X1 P1 R and X1 P2 R)

The assignment corresponds to the Ethernet standard for a RJ45 connector.

- When autonegotiation is deactivated, the RJ45 socket is allocated as a switch (MDI-X).
- When autonegotiation is activated, autocrossing is in effect and the RJ45 socket is allocated either as data terminal equipment (MDI) or a switch (MDI-X).

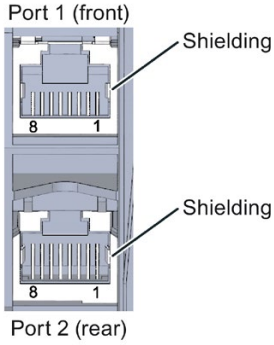

Figure 3-1 Interface assignments

PROFINET interface X2 with 1 port (X2 P1)

The assignment corresponds to the Ethernet standard for a RJ45 connector.

Autocrossing is always active on X2. This means the RJ45 socket is allocated either as data terminal equipment (MDI) or a switch (MDI-X).

Additional information

You can find additional information on the topic of "Connecting the CPU" and on the topic "Accessories/spare parts" in the system manual for Redundant System S7-1500R/H (https://support.industry.siemens.com/cs/ww/en/view/109754833).

Assignment of the MAC addresses

For each CPU, CPU 1515R-2 PN has:

- One PROFINET interface with two ports
- One PROFINET interface with one port

Each of the PROFINET interfaces has a MAC address and each of the PROFINET ports has its own MAC address. There are a total of ten MAC addresses for the two CPUs of the CPU 1515R-2 PN.

The MAC addresses of the PROFINET ports are needed for the LLDP protocol, for example for the neighborhood discovery function.

The number range of the MAC addresses is sequential. The first and last MAC addresses are printed on the rating plate on the right side of each CPU 1515R-2 PN.

The table below shows how the MAC addresses are assigned.

Table 3- 2 Assignment of MAC addresses using the example of a single CPU

	Assignment	Labeling
MAC address 1	PROFINET interface X1 (visible in STEP 7 for accessible devices)	• Front printed • Right-side printed (start of number range)
MAC address 2	Port X1 P1 R (required for LLDP, for example)	---
MAC address 3	Port X1 P2 R (required for LLDP, for example)	---
MAC address 4	PROFINET interface X2 (visible in STEP 7 for accessible devices)	• Front printed
MAC address 5	Port X2 P1 (required for LLDP, for example)	• Right-side printed (end of number range)

Block diagram

The following figure shows the block diagram of the CPU 1515R-2 PN.

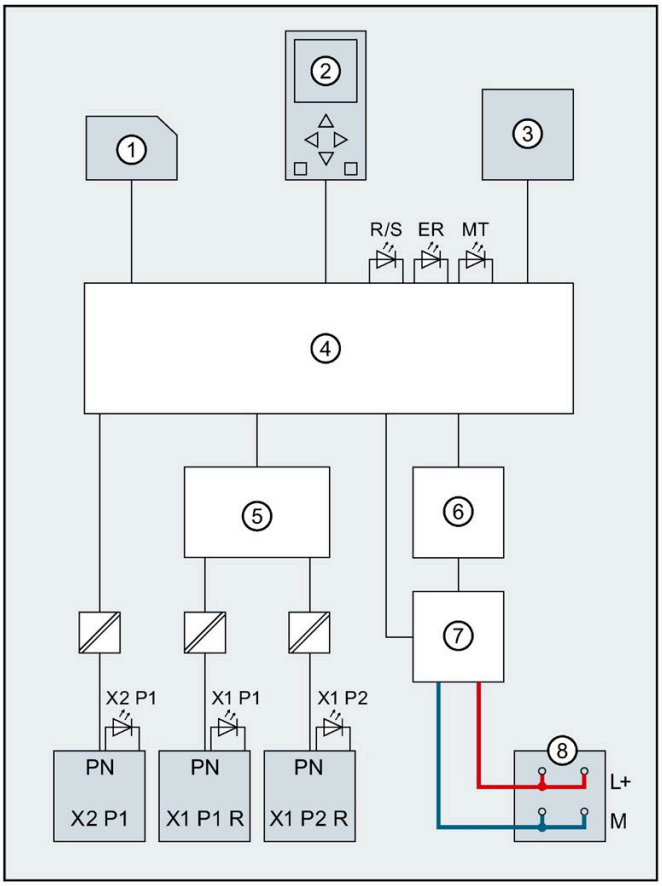

①	SIMATIC memory card (X50)	PN X1 P2 R	PROFINET interface X1 port 2
②	Display	PN X2 P1	PROFINET interface X2 port 1
③	Mode selector RUN/STOP/MRES	L+	24 V DC supply voltage
④	Electronics	M	Ground
⑤	PROFINET 2-port switch	R/S	RUN/STOP LED (yellow/green)
⑥	Backplane bus connection (connection to backplane bus not configurable)	ER	ERROR LED (red)
⑦	Internal supply voltage	MT	MAINT LED (yellow)
⑧	Supply of the 24 V DC supply voltage (X80)	X1 P1, X1 P2, X2 P1	LED Link TX/RX
PN X1 P1 R	PROFINET interface X1 port 1		

Figure 3-2 Block diagram of the CPU 1515R-2 PN

Interrupts, diagnostics, error messages and system events

4

4.1 Status and error display of the CPU

The LED displays of the CPU are described below.

You can find more detailed information on "Interrupts" in the STEP 7 online help.

You can find additional information on the topic of "Diagnostics" and "System events" in the Diagnostics (https://support.industry.siemens.com/cs/ww/en/view/59192926) function manual and in the system manual Redundant System S7-1500R/H (https://support.industry.siemens.com/cs/ww/en/view/109754833).

You can find additional information on the topic of "Operating states and system states" as well as various failure scenarios in the system manual for S7-1500R/H Redundant System (https://support.industry.siemens.com/cs/ww/en/view/109754833).

LED display

The figure below shows the LED displays of the CPU 1515R-2 PN.

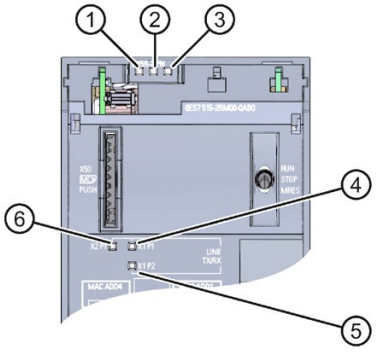

① RUN/STOP LED (yellow/green LED)
② ERROR LED (red LED)
③ MAINT LED (yellow LED)
④ LINK RX/TX LED for port X1 P1 (yellow/green LED)
⑤ LINK RX/TX LED for port X1 P2 (yellow/green LED)
⑥ LINK RX/TX LED for port X2 P1 (yellow/green LED)

Figure 4-1 LED display of the CPU 1515R-2 PN (without front panel)

LED displays depending on operating states and system states

CPU 1515R-2 PN has the following LEDs for displaying the current operating state and diagnostics status.

- RUN/STOP LED
- ERROR LED
- MAINT LED

The LEDs indicate the operating state of the respective CPU within the redundant system. Operating states describe the behavior of a single CPU at a specific time. The combination of the operating states of the CPUs forms the system state.

The following figure shows the possible operating states of the CPUs and the resulting system states.

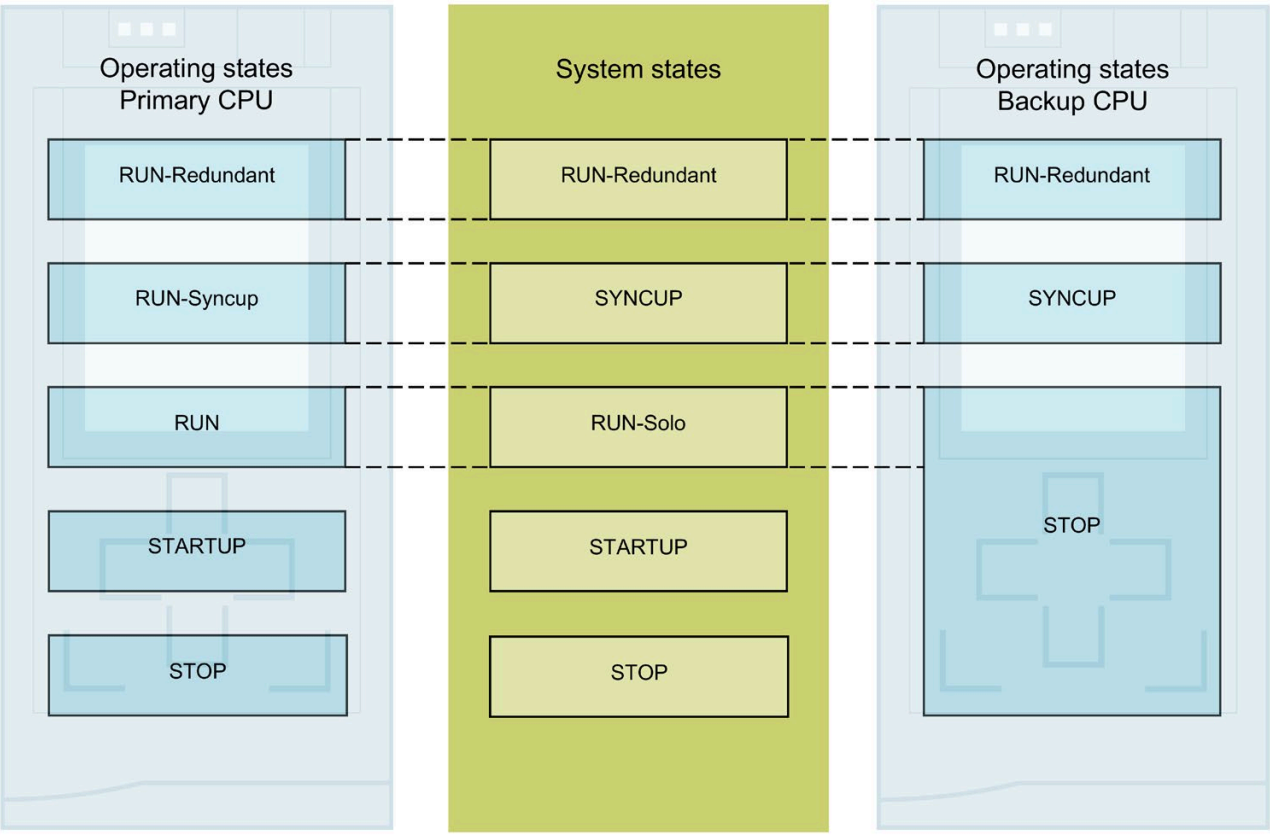

Figure 4-2 Operating states and system states

Meaning of the RUN/STOP, ERROR and MAINT LEDs

CPU 1515R-2 PN has the following LEDs for displaying the current operating state and diagnostics status.

Note

LED patterns of the redundant system S7 1500R

Note that it is not always possible to:

- Determine the state of the CPU from the signal pattern
- Determine the state of the other CPU from the signal pattern

The "Meaning" column only shows a possible typical cause.

To investigate the cause of the signal pattern, use the diagnostic buffer and its display via:

- STEP 7
- HMI devices
- Displays of the CPUs

The following table shows the meaning of the various color combinations for the RUN/STOP, ERROR and MAINT LEDs.

Table 4- 1 Meaning of the LEDs

RUN/STOP LED	ERROR LED	MAINT LED	Meaning
LED off	LED off	LED off	Missing or insufficient supply voltage on the CPU.
LED flashes yellow/green	LED flashes red	LED flashes yellow	Startup (CPU booting)
			Test of LEDs during startup, inserting a module.
			LED flashing test
LED lit yellow	LED off	LED lit yellow	CPU is in operating state STOP.
			Completion of system initialization
LED flashes yellow	LED off	LED lit yellow	CPU executes internal activities in an operating state ≠ RUN-Redundant.
LED lit yellow	LED flashes red	LED flashes yellow	CPU defective Firmware update using SIMATIC Memory Card has failed.
LED lit yellow	LED off	LED flashes yellow	Firmware update successfully completed.
LED flashes yellow/green	LED off	LED lit yellow	The primary CPU is in operating state STARTUP. The backup CPU is in operating state SYNCUP. The backup CPU has not yet been restarted for SYNCUP during this phase.
LED flashes yellow	LED off	LED off	The CPU performs a warm restart.
LED lit green	LED off	LED lit yellow	Maintenance demanded for the plant. You need to check/replace the affected hardware within a short period of time.
			The primary CPU is in the RUN or RUN-Syncup operating state.
			Active Force job
LED lit green	LED off	LED off	The CPU is in operating state RUN-Redundant. There are no events, requirements, errors, etc.
LED lit green	LED flashes red	LED off	A diagnostic event is pending in operating state RUN-Redundant.
LED lit green	LED flashes red	LED lit yellow	A diagnostic event (e.g. failure of an IO device within the PROFINET ring or no access to SIMATIC memory card possible[1]) and maintenance is demanded (e.g. interruption of the PROFINET ring).

[1] If there is not enough storage space on a SIMATIC Memory Card or on both SIMATIC Memory Cards in RUN-Redundant, the write function is aborted, and the redundant system continues operation with the original configuration. The redundant system will remain in the RUN-Redundant system state.

Note

MAINT LED of the two CPUs

The MAINT LEDs of both CPUs only go out when the following conditions are fulfilled:

- The CPUs are in the RUN-Redundant system state.
- No maintenance is demanded.

Note

LED displays in redundant mode

In the RUN-Redundant system state, the LED displays on both CPUs are identical (exception: you are performing an LED flash test on one CPU).

Meaning of LINK RX/TX LED

Each port has a LINK RX/TX LED. The table below shows the various LED patterns of the ports of the CPU 1515R-2 PN.

Table 4- 2 Meaning of LINK RX/TX LED

LINK TX/RX LED	Meaning
off	There is no Ethernet connection between the PROFINET interface of the PROFINET device and the communication partner. No data is currently being sent/received via the PROFINET interface. There is no LINK connection. The redundancy connections were interrupted.
Flashes green	The CPU performs an LED flash test.
Illuminated green	There is an Ethernet connection between the PROFINET interface of your PROFINET device and a communication partner. The redundancy connections are OK.
LED flashes yellow/green	Data is currently being received/sent by a communication partner via the PROFINET interface of the PROFINET device. Note that the human eye perceives this LED image as an LED that is lit yellow or flickering yellow.

Note

"LED" instruction

You can read the status (e.g. "On" or "Off") of LEDs of a CPU or a module using the "LED" instruction. Note, however, that it is not possible to read the LED status of the LINK RX/TX LEDs on all S7-1500 R/H CPUs.

You can find additional information on the "LED" instruction in the STEP 7 online help.

Technical specifications

5

The following table shows the technical specifications as of 05/2021. You can find a data sheet including daily updated technical specifications on the Internet (https://support.industry.siemens.com/cs/ww/en/pv/6ES7515-2RM00-0AB0/td?dl=en).

Article number	6ES7515-2RM00-0AB0
General information	
Product type designation	CPU 1515R-2 PN
HW functional status	FS01
Firmware version	V2.9
Product function	
• I&M data	Yes; I&M0 to I&M3
• Isochronous mode	No
Engineering with	
• STEP 7 TIA Portal configurable/integrated from version	V17 (FW V2.9) / V16 (FW V2.8) / V15.1 (FW V2.6)
Display	
Screen diagonal [cm]	6.1 cm
Control elements	
Number of keys	6
Mode selector switch	1
Supply voltage	
Type of supply voltage	24 V DC
permissible range, lower limit (DC)	19.2 V
permissible range, upper limit (DC)	28.8 V
Reverse polarity protection	Yes
Mains buffering	
• Mains/voltage failure stored energy time	5 ms
Input current	
Current consumption (rated value)	0.8 A
Inrush current, max.	2.4 A
I^2t	0.02 $A^2 \cdot s$
Power loss	
Power loss, typ.	6.3 W
Memory	
Number of slots for SIMATIC memory card	1
SIMATIC memory card required	Yes
Work memory	
• integrated (for program)	500 kbyte
• integrated (for data)	3 Mbyte

Article number	6ES7515-2RM00-0AB0
Load memory	
• Plug-in (SIMATIC Memory Card), max.	32 Gbyte
Backup	
• maintenance-free	Yes
CPU processing times	
for bit operations, typ.	60 ns
for word operations, typ.	72 ns
for fixed point arithmetic, typ.	96 ns
for floating point arithmetic, typ.	384 ns
CPU-blocks	
Number of elements (total)	8 000; Blocks (OB, FB, FC, DB) and UDTs
DB	
• Number range	Number range: 1 to 59 999
• Size, max.	3 Mbyte; For non-optimized block accesses, the max. size of the DB is 64 KB
FB	
• Number range	0 ... 65 535
• Size, max.	500 kbyte
FC	
• Number range	0 ... 65 535
• Size, max.	500 kbyte
OB	
• Size, max.	500 kbyte
• Number of free cycle OBs	100
• Number of time alarm OBs	20
• Number of delay alarm OBs	20
• Number of cyclic interrupt OBs	20
• Number of process alarm OBs	50
• Number of startup OBs	100
• Number of asynchronous error OBs	4
• Number of synchronous error OBs	2
• Number of diagnostic alarm OBs	1
Nesting depth	
• per priority class	24
Counters, timers and their retentivity	
S7 counter	
• Number	2 048
Retentivity	
– adjustable	Yes

Article number	6ES7515-2RM00-0AB0
IEC counter	
• Number	Any (only limited by the main memory)
Retentivity	
– adjustable	Yes
S7 times	
• Number	2 048
Retentivity	
– adjustable	Yes
IEC timer	
• Number	Any (only limited by the main memory)
Retentivity	
– adjustable	Yes
Data areas and their retentivity	
Retentive data area (incl. timers, counters, flags), max.	512 kbyte
Flag	
• Size, max.	16 kbyte
• Number of clock memories	8; 8 clock memory bit, grouped into one clock memory byte
Data blocks	
• Retentivity adjustable	Yes
• Retentivity preset	No
Local data	
• per priority class, max.	64 kbyte; max. 16 KB per block
Address area	
Number of IO modules	4 096; max. number of modules / submodules
I/O address area	
• Inputs	32 kbyte; All inputs are in the process image
• Outputs	32 kbyte; All outputs are in the process image
per integrated IO subsystem	
– Inputs (volume)	8 kbyte
– Outputs (volume)	8 kbyte
Subprocess images	
• Number of subprocess images, max.	32
Hardware configuration	
Number of distributed IO systems	1
Number of IO Controllers	
• integrated	1

Article number	6ES7515-2RM00-0AB0
Time of day	
Clock	
• Type	Hardware clock
• Backup time	6 wk; At 40 °C ambient temperature, typically
• Deviation per day, max.	10 s; Typ.: 2 s
Operating hours counter	
• Number	16
Clock synchronization	
• supported	Yes
• on Ethernet via NTP	Yes
Interfaces	
Number of PROFINET interfaces	2
1. Interface	
Interface types	
• RJ 45 (Ethernet)	Yes; X1
• Number of ports	2
• integrated switch	Yes
Protocols	
• IP protocol	Yes; IPv4
• PROFINET IO Controller	Yes
• PROFINET IO Device	No
• SIMATIC communication	Yes; Only Server
• Open IE communication	Yes
• Web server	No
• Media redundancy	Yes
PROFINET IO Controller	
Services	
– PG/OP communication	Yes
– Isochronous mode	No
– IRT	No
– PROFIenergy	Yes
– Number of connectable IO Devices, max.	64
– Updating times	The minimum value of the update time also depends on communication share set for PROFINET IO, on the number of IO devices, and on the quantity of configured user data
Update time for RT	
– for send cycle of 1 ms	1 ms to 512 ms

Article number	6ES7515-2RM00-0AB0
2. Interface	
Interface types	
• RJ 45 (Ethernet)	Yes; X2
• Number of ports	1
• integrated switch	No
Protocols	
• IP protocol	Yes; IPv4
• PROFINET IO Controller	No
• PROFINET IO Device	No
• SIMATIC communication	Yes; Only Server
• Open IE communication	Yes
• Web server	No
• Media redundancy	No
Interface types	
RJ 45 (Ethernet)	
• 100 Mbps	Yes
• Autonegotiation	Yes
• Autocrossing	Yes
• Industrial Ethernet status LED	Yes
Protocols	
Number of connections	
• Number of connections, max.	108
• Number of connections reserved for ES/HMI/web	10
• Number of S7 routing paths	16
Redundancy mode	
Media redundancy	
– MRP	Yes; MRP Automanager according to IEC 62439-2 Edition 2.0
– MRP interconnection, supported	Yes; as MRP ring node according to IEC 62439-2 Edition 3.0
– MRPD	No
– Switchover time on line break, typ.	200 ms; PROFINET MRP
– Number of stations in the ring, max.	50; Only 16 are recommended, however

Article number	6ES7515-2RM00-0AB0
SIMATIC communication	
• PG/OP communication	Yes; encryption with TLS V1.3 pre-selected
• S7 routing	Yes
• S7 communication, as server	Yes
• S7 communication, as client	No
Open IE communication	
• TCP/IP	Yes
– Data length, max.	64 kbyte
– several passive connections per port, supported	Yes
• ISO-on-TCP (RFC1006)	Yes
– Data length, max.	64 kbyte
• UDP	Yes
– Data length, max.	2 kbyte; 1 472 bytes for UDP broadcast
– UDP multicast	Yes; Max. 5 multicast circuits
• DHCP	No
• DNS	Yes
• SNMP	Yes
• DCP	Yes
• LLDP	Yes
Web server	
• HTTP	No
• HTTPS	No
OPC UA	
• OPC UA Client	No
• OPC UA Server	No
Further protocols	
• MODBUS	Yes; MODBUS TCP
Isochronous mode	
Equidistance	No

Article number	6ES7515-2RM00-0AB0
S7 message functions	
Number of login stations for message functions, max.	64
Program alarms	Yes
Number of configurable program messages, max.	10 000; Program messages are generated by the "Program_Alarm" block, ProDiag or GRAPH
Number of loadable program messages in RUN, max.	5 000
Number of simultaneously active program alarms	
• Number of program alarms	800
• Number of alarms for system diagnostics	200
Test commissioning functions	
Joint commission (Team Engineering)	No
Status block	Yes; up to 8 simultaneously
Single step	No
Number of breakpoints	8; Breakpoints are only supported in RUN-Solo status
Status/control	
• Status/control variable	Yes
• Variables	Inputs/outputs, memory bits, DBs, distributed I/Os, timers, counters
• Number of variables, max.	
– of which status variables, max.	200; per job
– of which control variables, max.	200; per job
Forcing	
• Forcing	Yes
• Forcing, variables	Peripheral inputs/outputs
• Number of variables, max.	200
Diagnostic buffer	
• present	Yes
• Number of entries, max.	3 200
– of which powerfail-proof	500
Traces	
• Number of configurable Traces	4
• Memory size per trace, max.	512 kbyte
Interrupts/diagnostics/status information	
Diagnostics indication LED	
• RUN/STOP LED	Yes
• ERROR LED	Yes
• MAINT LED	Yes
• Connection display LINK TX/RX	Yes

Article number	6ES7515-2RM00-0AB0
Supported technology objects	
Motion Control	No
Controller	
• PID_Compact	Yes; Universal PID controller with integrated optimization
• PID_3Step	Yes; PID controller with integrated optimization for valves
• PID-Temp	Yes; PID controller with integrated optimization for temperature
Counting and measuring	Yes
• High-speed counter	No
Standards, approvals, certificates	
Suitable for safety functions	No
Ambient conditions	
Ambient temperature during operation	
• horizontal installation, min.	0 °C
• horizontal installation, max.	60 °C; Display: 50 °C, at an operating temperature of typically 50 °C, the display is switched off
• vertical installation, min.	0 °C
• vertical installation, max.	40 °C; Display: 40 °C, at an operating temperature of typically 40 °C, the display is switched off
Ambient temperature during storage/transportation	
• min.	-40 °C
• max.	70 °C
Altitude during operation relating to sea level	
• Installation altitude above sea level, max.	5 000 m; Restrictions for installation altitudes > 2 000 m, see manual
Configuration	
Programming	
Programming language	
– LAD	Yes
– FBD	Yes
– STL	Yes
– SCL	Yes
– CFC	No
– GRAPH	Yes
Know-how protection	
• User program protection/password protection	Yes
• Copy protection	No
• Block protection	Yes

Article number	6ES7515-2RM00-0AB0
Access protection	
• protection of confidential configuration data	Yes
• Password for display	Yes
• Protection level: Write protection	Yes
• Protection level: Read/write protection	Yes
• Protection level: Complete protection	Yes
Cycle time monitoring	
• lower limit	adjustable minimum cycle time
• upper limit	adjustable maximum cycle time
Dimensions	
Width	70 mm
Height	147 mm
Depth	129 mm
Weights	
Weight, approx.	830 g

General technical specifications

You can find information on the general technical specifications, such as standards and approvals, electromagnetic compatibility, protection class, etc. in the system manual for Redundant System S7-1500R/H (https://support.industry.siemens.com/cs/ww/en/view/109754833).

Dimension drawing

A

A.1 Dimension drawing

This section contains the dimensional drawing of the module on the mounting rail, as well as a dimensional drawing with the front panel open. Keep to the dimensions when installing in cabinets, control rooms, etc.

Dimension drawings of the CPU 1515R-2 PN

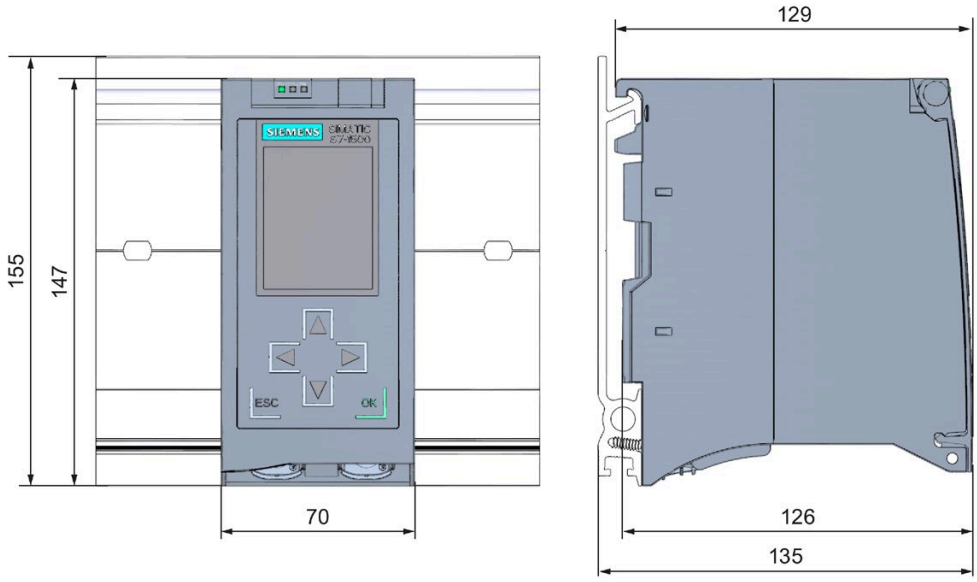

Figure A-1 Dimension drawing of the CPU 1515R-2 PN, front and side view

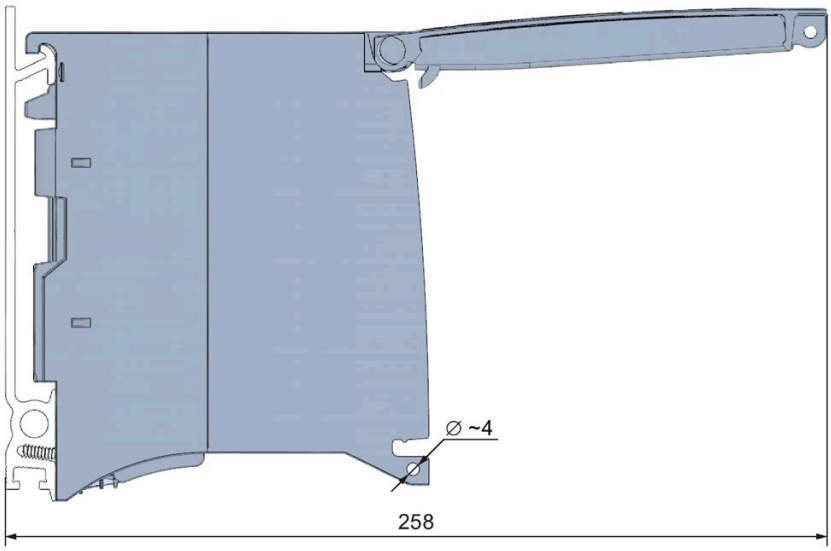

Figure A-2 Dimension drawing CPU 1515R-2 PN, side view with open front panel

SIEMENS

Manual

SIMATIC

S7-1500

CPU 1515T-2 PN (6ES7515-2TM01-0AB0)

Edition 05/2021

support.industry.siemens.com

SIEMENS

SIMATIC

S7-1500
CPU 1515T-2 PN
(6ES7515-2TM01-0AB0)

Equipment Manual

Preface

Documentation guide 1

Product overview 2

Wiring 3

Interrupts, error messages, diagnostics and system alarms 4

Technical specifications 5

Dimension drawing A

05/2021

A5E36284845-AC

Legal information

Warning notice system

This manual contains notices you have to observe in order to ensure your personal safety, as well as to prevent damage to property. The notices referring to your personal safety are highlighted in the manual by a safety alert symbol, notices referring only to property damage have no safety alert symbol. These notices shown below are graded according to the degree of danger.

⚠ DANGER
indicates that death or severe personal injury **will** result if proper precautions are not taken.

⚠ WARNING
indicates that death or severe personal injury **may** result if proper precautions are not taken.

⚠ CAUTION
indicates that minor personal injury can result if proper precautions are not taken.

NOTICE
indicates that property damage can result if proper precautions are not taken.

If more than one degree of danger is present, the warning notice representing the highest degree of danger will be used. A notice warning of injury to persons with a safety alert symbol may also include a warning relating to property damage.

Qualified Personnel

The product/system described in this documentation may be operated only by **personnel qualified** for the specific task in accordance with the relevant documentation, in particular its warning notices and safety instructions. Qualified personnel are those who, based on their training and experience, are capable of identifying risks and avoiding potential hazards when working with these products/systems.

Proper use of Siemens products

Note the following:

⚠ WARNING
Siemens products may only be used for the applications described in the catalog and in the relevant technical documentation. If products and components from other manufacturers are used, these must be recommended or approved by Siemens. Proper transport, storage, installation, assembly, commissioning, operation and maintenance are required to ensure that the products operate safely and without any problems. The permissible ambient conditions must be complied with. The information in the relevant documentation must be observed.

Trademarks

All names identified by ® are registered trademarks of Siemens AG. The remaining trademarks in this publication may be trademarks whose use by third parties for their own purposes could violate the rights of the owner.

Disclaimer of Liability

We have reviewed the contents of this publication to ensure consistency with the hardware and software described. Since variance cannot be precluded entirely, we cannot guarantee full consistency. However, the information in this publication is reviewed regularly and any necessary corrections are included in subsequent editions.

Siemens AG
Digital Industries
Postfach 48 48
90026 NÜRNBERG
GERMANY

A5E36284845-AC
Ⓟ 04/2021 Subject to change

Copyright © Siemens AG 2016 - 2021.
All rights reserved

Preface

Purpose of the documentation

This manual supplements the system manual of the S7-1500 automation system/ET 200MP distributed I/O system as well as the function manuals. This manual contains a description of the module-specific information. The system-related functions are described in the system manual. All system-spanning functions are described in the function manuals.

The information provided in this manual and the system manual enables you to commission the CPU 1515T-2 PN.

Conventions

STEP 7: In this documentation, "STEP 7" is used as a synonym for all versions of the configuration and programming software "STEP 7 (TIA Portal)".

Please also observe notes marked as follows:

Note

A note contains important information on the product described in the documentation, on the handling of the product or on the section of the documentation to which particular attention should be paid.

Recycling and disposal

For environmentally friendly recycling and disposal of your old equipment, contact a certified electronic waste disposal company and dispose of the equipment according to the applicable regulations in your country.

Security information

Siemens provides products and solutions with industrial security functions that support the secure operation of plants, systems, machines and networks.

In order to protect plants, systems, machines and networks against cyber threats, it is necessary to implement – and continuously maintain – a holistic, state-of-the-art industrial security concept. Siemens' products and solutions constitute one element of such a concept.

Customers are responsible for preventing unauthorized access to their plants, systems, machines and networks. Such systems, machines and components should only be connected to an enterprise network or the internet if and to the extent such a connection is necessary and only when appropriate security measures (e.g. firewalls and/or network segmentation) are in place.

For additional information on industrial security measures that may be implemented, please visit (https://www.siemens.com/industrialsecurity).

Siemens' products and solutions undergo continuous development to make them more secure. Siemens strongly recommends that product updates are applied as soon as they are available and that the latest product versions are used. Use of product versions that are no longer supported, and failure to apply the latest updates may increase customers' exposure to cyber threats.

To stay informed about product updates, subscribe to the Siemens Industrial Security RSS Feed visit (https://www.siemens.com/industrialsecurity).

Siemens Industry Online Support

You can find current information on the following topics quickly and easily here:

- **Product support**

  All the information and extensive know-how on your product, technical specifications, FAQs, certificates, downloads, and manuals.

- **Application examples**

  Tools and examples to solve your automation tasks – as well as function blocks, performance information and videos.

- **Services**

  Information about Industry Services, Field Services, Technical Support, spare parts and training offers.

- **Forums**

  For answers and solutions concerning automation technology.

- **mySupport**

  Your personal working area in Industry Online Support for messages, support queries, and configurable documents.

This information is provided by the Siemens Industry Online Support in the Internet (https://support.industry.siemens.com).

Industry Mall

The Industry Mall is the catalog and order system of Siemens AG for automation and drive solutions on the basis of Totally Integrated Automation (TIA) and Totally Integrated Power (TIP).

You can find catalogs for all automation and drive products on the Internet (https://mall.industry.siemens.com).

See also

Info Center (https://www.siemens.com/automation/infocenter)

Table of contents

Preface **3**

1 Documentation guide **7**

2 Product overview **9**

2.1 New functions 9

2.2 Applications of the S7-1500 CPU 14

2.3 Hardware properties 20

2.4 Firmware functions 23

2.5 Operator controls and display elements 27

2.5.1 Front view of the CPU with closed front panel 27

2.5.2 Front view of the CPU without front flap 29

2.5.3 Rear view of the CPU 30

2.6 Mode selector 30

3 Wiring **31**

4 Interrupts, error messages, diagnostics and system alarms **35**

4.1 Status and error displays of the CPU 35

5 Technical specifications **38**

A Dimension drawing **52**

Documentation guide

1

The documentation for the SIMATIC S7-1500 automation system and the SIMATIC ET 200MP distributed I/O system is arranged into three areas.
This arrangement enables you to access the specific content you require.

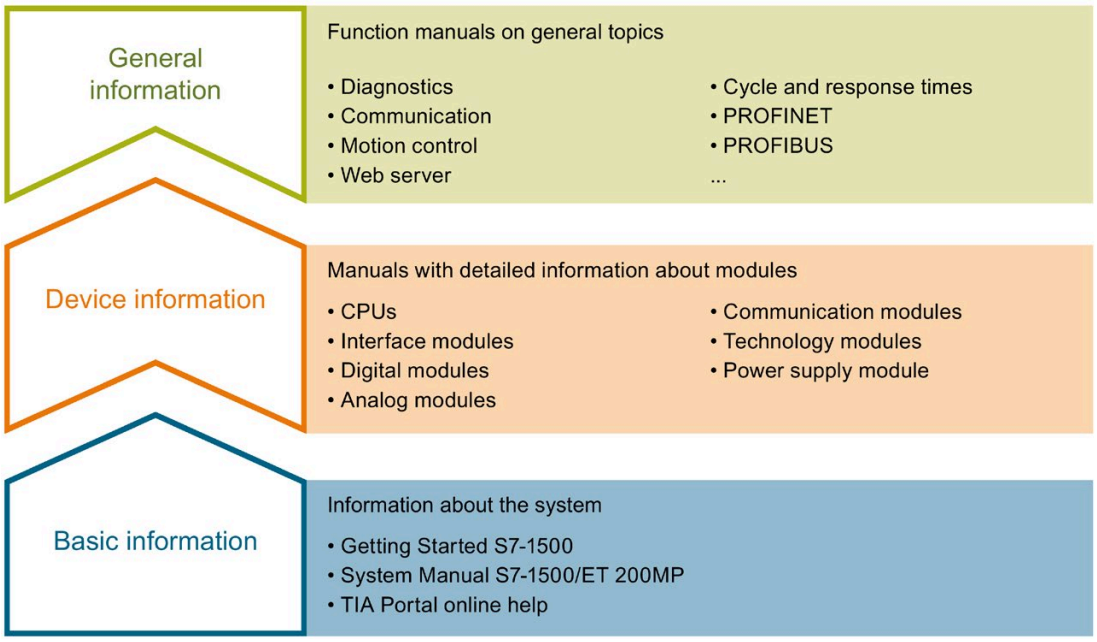

Basic information

The System Manual and Getting Started describe in detail the configuration, installation, wiring and commissioning of the SIMATIC S7-1500 and ET 200MP systems. The STEP 7 online help supports you in the configuration and programming.

Device information

Product manuals contain a compact description of the module-specific information, such as properties, wiring diagrams, characteristics and technical specifications.

General information

The function manuals contain detailed descriptions on general topics regarding the SIMATIC S7-1500 and ET 200MP systems, e.g. diagnostics, communication, motion control, Web server, OPC UA.

You can download the documentation free of charge from the Internet (https://support.industry.siemens.com/cs/ww/en/view/109742691).

Changes and supplements to the manuals are documented in a Product Information.

You can download the product information free of charge from the Internet (https://support.industry.siemens.com/cs/us/en/view/68052815).

Manual Collection S7-1500/ET 200MP

The Manual Collection contains the complete documentation on the SIMATIC S7-1500 automation system and the ET 200MP distributed I/O system gathered together in one file.

You can find the Manual Collection on the Internet (https://support.industry.siemens.com/cs/ww/en/view/86140384).

SIMATIC S7-1500 comparison list for programming languages

The comparison list contains an overview of which instructions and functions you can use for which controller families.

You can find the comparison list on the Internet (https://support.industry.siemens.com/cs/ww/en/view/86630375).

"mySupport"

With "mySupport", your personal workspace, you make the best out of your Industry Online Support.

In "mySupport", you can save filters, favorites and tags, request CAx data and compile your personal library in the Documentation area. In addition, your data is already filled out in support requests and you can get an overview of your current requests at any time.

You must register once to use the full functionality of "mySupport".

You can find "mySupport" on the Internet (https://support.industry.siemens.com/My/ww/en).

Application examples

The application examples support you with various tools and examples for solving your automation tasks. Solutions are shown in interplay with multiple components in the system - separated from the focus on individual products.

You will find the application examples on the Internet (https://support.industry.siemens.com/cs/ww/en/ps/ae).

Product overview

2

2.1 New functions

This section contains an overview of the most important firmware functions of the CPU assigned to your firmware version.

New functions of the CPU in firmware version V2.9

New functions	Applications	Customer benefits
Communication of the CPU		
OPC UA: Alarms & Conditions	OPC UA clients from any manufacturer can subscribe to alarms of the CPU via OPC UA Alarms & Conditions.	Without further measures, alarms created once via OPC UA are available as events and alarms. The alarms can be displayed by any display device with corresponding OPC UA client functionality.
OPC UA: Certificate management via Global Discovery Server (GDS)	Via GDS push management functions: • Automated update of OPC UA certificates of an S7-1500 CPU • Transfer of updated certificates and lists in RUN operating state of the CPU	The automation of the certificate management eliminates any manual work required for reconfiguring the CPU, for example, after a certificate has expired, and a new download to the CPU.
MRP interconnection in PROFINET networks	• The MRP interconnection procedure is an extension of MRP. • MRP interconnection enables the redundant coupling of two or more rings with MRP in PROFINET networks.	There is no limit to the maximum number of 50 devices in a ring when setting up redundant network topologies. Monitoring of larger topologies with ring redundancy
DHCP (Dynamic Host Configuration Protocol)	The CPU can use the DHCP communication protocol to assign the network configuration via a DHCP server. The CPU uses a client ID for identification on the DHCP server. The following parameters can be obtained: • IP Suite • DNS server • NTP server The CPU can also send its host name to the DHCP server.	With DHCP, you can integrate the CPU into an existing IT network without having to make additional changes to the PROFINET interface.

New functions	Applications	Customer benefits
Web server of the CPU		
Web applications that can be loaded by the user	• Additional methods to manage web applications via Web API • You can use all available Web API methods within the web application	Web applications are also available in STOP mode of the CPU Reduced development times of web server user pages
New Web API methods	• Reading and changing the CPU operating state via Web API • Ticket methods for transferring large amounts of data outside of the JSON RPC protocol	Additional applications for the web server
Optimizations to the DNS (Domain Name System) functionality with OPC UA/Open User Communication and on the web server	The feedback messages of the OPC UA server with the "Application Name" can be sent via DNS. The NTP client of the CPU can address its relevant NTP servers via DNS. The web server can be consistently reached via DNS addressing. DNS is taken into account during certificate handling.	A pool of NTP servers can be addressed.
Diagnostic information on motion control	Diagnostic information is available for all technology objects Improved display and grouping of the tags	Comprehensive diagnostic options by means of motion control applications are possible via the web server.
Technology functions of the CPU		
Axis functions	• Backlash compensation • Linear motor	The repeat accuracy of a movement is increased by compensation for the mechanical play of the real axis. Easier control of highly dynamic linear motors.
Synchronous operation functions (S7-1500T)	• A cross-PLC synchronous operation between technology objects with different technology versions on CPUs with different firmware versions is possible. • Desynchronization of gearing or camming at specified positions • Leading value or following value shift in gearing or camming • Cam with 10,000 points • Diagnostics of the cam	• More flexibility in modular machines and multi-axis machines (e.g. printing machines) • More synchronous operation functions • By shifting leading and following values, it is possible, for example, to correct print marks synchronously to the leading value. • More interpolation points allow for a more precise design of complex cams. • Detailed diagnostics of cams, both configured offline and created or modified online.
Kinematics functions (S7-1500T)	• Calibrating zones • Dynamic adaptation in the kinematics control panel • Simulation of kinematics motions	The functions expand the possibilities for realizing complex motion control applications with 2D, 3D and 4D kinematics.

New functions of the CPU in firmware version V2.8

New functions	Applications	Customer benefits
IP forwarding	IP forwarding forwards IP data through the CPU from one IP subnet to another IP subnet. During IP forwarding, the CPU automatically creates an IP route table from the IP configuration in STEP 7.	• Simplified integration of devices for remote access, e.g. for diagnostics during remote maintenance or firmware update • Simple access from the control level to the field level for configuration and parameter assignment of devices Example: You can access the web server of a drive connected to the X1 interface of the CPU from a computer connected to the X2 interface of the CPU.
Direct data exchange	In the case of direct data exchange, an S7-1500 CPU provides cyclic user data from the I/O area to one or more partners.	The "Direct data exchange" function enables deterministic, isochronous I/O communication between multiple S7-1500 CPUs.
API (Application Programming Interface)	The CPU has a web-based API (Application Programming Interface) as an interface for reading and writing CPU data. The API supports all conventional browsers and command line programs, such as cURL and Wget.	• Established standard mechanisms for creating web pages: Automation Web Programming commands (AWP commands) are no longer required for output of CPU data • No dependency between custom web pages and CPU program: No synchronization between user program and web server required by the SFC 99 instruction • Lower communication load: A smaller data packet is transferred between server and client (JSON instead of HTML of the custom web page generated by the CPU). This improves the communication performance. The CPU needs less runtime to generate the information and make it available. • Secure data traffic: API exclusively supports the "HTTPS" transfer protocol

New functions	Applications	Customer benefits
Technology functions of the CPU		
Axis functions	Organization block MC-PreInterpolator "MC_Stop" instruction	You can call motion control instructions at the same time as the MC_Interpolator. You can stop an axis and prevent new jobs to the axis.
Cross-PLC synchronous operation (S7-1500T)	Leading and following axes can be distributed over multiple controllers. Isochronous coupling between the leading axis and the following axis via PROFINET IO with IRT. Compensation of delay times for communication and different clock rates.	• Distribution of high axis configuration limits over different CPUs • Use on modular machines and multi-axis machines (e.g. printing machines) • Highly precise synchronous operation across devices
Kinematics functions	• Scara 2D is supported as predefined kinematics • New instructions for synchronous point-to-point movements, conveyor tracking, and calculation of the forward and backward transformation • Proactive motion preparation	The functions expand the possibilities for realizing complex motion control applications with 2D, 3D and 4D kinematics.
Project trace	Coordination of traces on different devices • Support of multiple CPUs • Support of different device types Visualization in a shared chart Support of alternative trigger sources	• Extensive trigger options for faster localization of sporadically occurring errors • Simple combination of related traces

New functions of the CPU in firmware version V2.6

New functions	Applications	Customer benefits
OPC UA client	In addition to the OPC UA server, an OPC UA client is integrated in the CPU. Using the corresponding OPC UA communication instructions, you can: • Call methods • Read and write data	You can perform, for example, vertical communication to MES systems/cloud services or IO controller-IO controller communication.
Isochronous mode for central I/O	Isochronous mode is also possible for modules that are inserted next to the CPU in a centralized configuration. In this way, you can implement the following functions, for example: • Dynamic control tasks • Measuring input • Output cam • Dosing processes, high-speed analog value acquisition with oversampling	• Optimized controls through constant, calculable dead times • Determinism, reliable reproducibility of response times • Consistent (simultaneous) reading in of input data • Consistent (simultaneous) output of output data

New functions of the CPU in firmware version V2.5

New functions	Applications	Customer benefits
New technology object, kinematics	Controlling of kinematics, such as • Cartesian portals • Roller pickers • Delta pickers • SCARA Motion specification of paths Individual motions and motion sequences Kinematics 2D, 3D, with and without orientation axis	You can realize complex Motion Control applications for controlling 2D, 3D and 4D kinematics.
Additional instructions for torque control	You can apply an additives setpoint torque in the drive. You can predetermine torque limits in the drive cyclically. The torque actual value of the drive can be evaluated directly in the TO-DB of the axis.	You can pre-control the torque precisely for the axes, for example at winders (predetermine traction torque and additionally torque limits in order to prevent tearing of the material). You can take the dynamic model of the kinematics into consideration, pre-control the torque to be expected for each axis and thus improve the precision.
Data adaption for SINAMICS S210	You can also use data adaption for the new drive SINAMICS S210.	You gain time during the configuration of the technology objects and the drives.
MotionIn	Through additional instructions motion setpoints can be specified cyclically via the application.	This means that specific technological motion specifications are possible via the application (for example at winders).
Testing with breakpoints	Testing SCL and STL program code with the help of breakpoints. When testing with breakpoints, you execute a program from one breakpoint to another.	• Localization of logic errors step by step • Simple and quick analysis of complex programs prior to actual commissioning • Recording of current values within individual executed loops • Use of breakpoints for program validation also possible in SCL/STL networks within LAD/FBD blocks
Arithmetic functions for trace	In the case of completed measurements, you can combine the measured signals mathematically with each other and thus generate signals that were not recorded.	• Generation of unavailable information • Post-processing of measurements • Measurement of signal paths (e.g. mean value)

New functions	Applications	Customer benefits
Importing and exporting ASCII files	Using the FileReadC function, you can read out a binary file (ASCII file) in the user program which was stored on the SIMATIC memory card of the CPU via the web server. Using the FileWriteC function, you can store a binary file (ASCII file) on the memory card of the CPU using the user program; this file can be read via the web server.	Complex file structures are used in free ASCII format on the SIMATIC memory card, e.g. to: • Read in recipes for which CSV is not flexible enough • Read in complex parameter assignments or configuration files • Output complex files for documentation
Sending encrypted emails	It is possible to send encrypted emails via the integrated interfaces of the CPU	High security through encrypted transmission of data

Reference

You can find an overview of all new functions, improvements and revisions in the respective firmware versions on the Internet (https://support.industry.siemens.com/cs/ww/en/view/109478459).

2.2 Applications of the S7-1500 CPU

Area of application

SIMATIC S7-1500 is the modular control system for a wide variety of automation applications in discrete automation.

The modular and fanless design, simple implementation of distributed structures, and user-friendly operation make SIMATIC S7-1500 the economic and convenient solution for a variety of tasks.

Areas of application of the SIMATIC S7-1500 are, for example:

- Special-purpose machines
- Textile machinery
- Packaging machines
- General mechanical engineering
- Controller engineering
- Machine tool engineering
- Installation engineering
- Electrical industry and crafts
- Automobile engineering
- Water/waste water
- Food & Beverage

Additional areas of application of the SIMATIC S7-1500T with extended Motion Control functions are, for example:

- Packaging machines
- Converting application
- Assembly automation

Several CPUs with various levels of performance and a comprehensive range of modules with many convenient features are available. Fail-safe CPUs enable use in fail-safe applications. The modular design allows you to use only the modules that you need for your application. The controller can be retrofitted with additional modules at any time to expand its range of tasks.

High industrial capability from the high resistance to EMC, shock and vibration enable universal use of the SIMATIC S7-1500.

Performance segments of standard CPUs

The CPUs can be used for smaller and mid-range applications, as well as for the high-end range of machine and plant automation.

Table 2- 1 Standard CPUs

CPU	Performance segment	PROFIBUS interfaces	PROFINET IO RT/IRT interfaces	PROFINET IO RT interface	PROFINET basic functionality	Work memory	Processing time for bit operations
CPU 1511-1 PN	Standard CPU for small to mid-range applications	--	1	--	--	1.15 MB	60 ns
CPU 1513-1 PN	Standard CPU for mid-range applications	--	1	--	--	1.8 MB	40 ns
CPU 1515-2 PN	Standard CPU for mid-range to large applications	--	1	1	--	3.5 MB	30 ns
CPU 1516-3 PN/DP	Standard CPU for high-end applications and communication tasks	1	1	1	--	6 MB	10 ns
CPU 1517-3 PN/DP	Standard CPU for high-end applications and communication tasks	1	1	1	--	10 MB	2 ns
CPU 1518-4 PN/DP	Standard CPU for high-performance applications, demanding communication tasks and very short reaction times	1	1	1	1	24 MB	1 ns
CPU 1518-4 PN/DP MFP	Standard CPU for high-performance applications, demanding communication tasks, very short reaction times and C/C++ blocks for the user program	1	1	1	1	74* MB	1 ns

Performance segments of compact CPUs

The compact CPUs can be used for smaller to mid-range applications and have an integrated analog and digital on-board I/O as well as integrated technology functions.

Table 2- 2 Compact CPUs

CPU	Performance segment	PROFIBUS interfaces	PROFINET IO RT/IRT interfaces	PROFINET IO RT interface	PROFINET basic functionality	Work memory	Processing time for bit operations
CPU 1511C-1 PN	Compact CPU for small to mid-range applications	--	1	--	--	1.175 MB	60 ns
CPU 1512C-1 PN	Compact CPU for mid-range applications	--	1	--	--	1.25 MB	48 ns

The following table shows the specific properties of the Compact CPUs.

	CPU 1511C-1 PN	CPU 1512C-1 PN
Integrated analog inputs/outputs	5 inputs/2 outputs	5 inputs/2 outputs
Integrated digital inputs/outputs	16 inputs/16 outputs	32 inputs/32 outputs
High-speed counters	6	6
Frequency meters	6 (max. 100 kHz)	6 (max. 100 kHz)
Period duration measurement	6 channels	6 channels
Pulse width modulation (PWM output)	Max. 4 (up to 100 kHz)	Max. 4 (up to 100 kHz)
Pulse Train Output (PTO output)	Max. 4 (up to 100 kHz)	Max. 4 (up to 100 kHz)
Frequency output	Up to 100 kHz	Up to 100 kHz

Performance segments of technology CPUs

The technology CPUs can be used for low and mid-range applications, as well as for the high-end range of machine and plant automation. Because of their extended motion control functions, they are primarily used for drive control.

Table 2- 3 Technology CPUs

CPU	Performance segment	PROFIBUS interfaces	PROFINET IO RT/IRT interfaces	PROFINET IO RT interface	PROFINET basic functionality	Work memory	Processing time for bit operations
CPU 1511T-1 PN	Technology CPU for small to mid-range motion control applications	--	1	--	--	1.225 MB	60 ns
CPU 1515T-2 PN	Technology CPU for mid-range to large motion control applications	--	1	1	--	3.75 MB	30 ns
CPU 1516T-3 PN/DP	Technology CPU for high-end motion control applications and communication tasks	1	1	1	--	6.5 MB	10 ns
CPU 1517T-3 PN/DP	Technology CPU for high-end motion control applications and communication tasks	1	1	1	--	11 MB	2 ns
CPU 1518T-4 PN/DP	Technology CPU for high-performance motion control applications with large quantities, demanding communication tasks and very short reaction times	1	1	1	1	60 MB	1 ns
CPU 1511TF-1 PN CPU 1515TF-2 PN CPU 1516TF-3 PN/DP CPU 1517TF-3 PN/DP CPU 1518TF-4 PN/DP	These CPUs are described in the fail-safe CPUs.						

Performance segments of fail-safe CPUs

The fail-safe CPUs are intended for users who want to implement demanding standard and fail-safe applications both centrally and decentrally.

These fail-safe CPUs allow the processing of standard and safety programs on a single CPU. This allows fail-safe data to be evaluated in the standard user program. The integration thereby provides the system advantages and the extensive functionality of SIMATIC for fail-safe applications.

The fail-safe CPUs are certified for use in safety mode up to:

- Safety class (Safety Integrity Level) SIL 3 according to IEC 61508:2010
- Performance Level (PL) e and Category 4 according to ISO 13849-1:2006 or according to EN ISO 13849-1:2008

Additional password protection for F-configuration and F-program is set up for IT security.

Table 2- 4 Fail-safe CPUs

CPU	Performance segment	PROFIBUS interfaces	PROFINET IO RT/IRT interfaces	PROFINET IO RT interface	PROFINET basic functionality	Work memory	Processing time for bit operations
CPU 1511F-1 PN	Fail-safe CPU for small to mid-range applications	--	1	--	--	1.225 MB	60 ns
CPU 1511TF-1 PN	Fail-safe technology CPU for small to mid-range applications	--	1	--	--	1.225 MB	60 ns
CPU 1513F-1 PN	Fail-safe CPU for mid-range applications	--	1	--	--	1.95 MB	40 ns
CPU 1515F-2 PN	Fail-safe CPU for mid-range to large applications	--	1	1	--	3.75 MB	30 ns
CPU 1515TF-2 PN	Fail-safe technology CPU for demanding applications and communication tasks	--	1	1	--	3.75 MB	30 ns
CPU 1516F-3 PN/DP	Fail-safe CPU for demanding applications and communication tasks	1	1	1	--	6.5 MB	10 ns
CPU 1516TF-3 PN/DP	Fail-safe technology CPU for demanding applications and communication tasks	1	1	1	--	6.5 MB	10 ns
CPU 1517F-3 PN/DP	Fail-safe CPU for demanding applications and communication tasks	1	1	1	--	11 MB	2 ns
CPU 1517TF-3 PN/DP	Fail-safe technology CPU for demanding applications and communication tasks	1	1	1	--	11 MB	2 ns

CPU	Performance segment	PROFIBUS interfaces	PROFINET IO RT/IRT interfaces	PROFINET IO RT interface	PROFINET basic functionality	Work memory	Processing time for bit operations
CPU 1518F-4 PN/DP	Fail-safe CPU for high-performance applications, demanding communication tasks and very short reaction times	1	1	1	1	26 MB	1 ns
CPU 1518F-4 PN/DP MFP	Fail-safe CPU for high-performance applications, demanding communication tasks, very short reaction times and C/C++ blocks for the user program	1	1	1	1	76* MB	1 ns
CPU 1518TF-4 PN/DP	Technology CPU for high-performance motion control applications with large quantities, demanding communication tasks and very short reaction times	1	1	1	1	60 MB	1 ns

* 50 MB of the integrated work memory is reserved for the function library of CPU runtime

In addition to the CPUs, further components such as SINAMICS drives dispose of integrated safety functions. Additional information about integrated safety functions in drives can be found in the manuals for the respective products.

Design and handling

All CPUs of the SIMATIC S7-1500 product series feature a display with plain text information. The display provides the user with information on the order numbers, firmware version, and serial number of all connected modules. In addition, the IP address of the CPU and other network settings can be adapted locally without a programming device. Error messages are immediately shown on the display in plain text. In the case of servicing, plant downtimes are minimized by quick access to diagnostics alarms. Detailed information about this and a multitude of other display functions is available in the SIMATIC S7-1500 Display Simulator (https://support.industry.siemens.com/cs/ww/en/view/109761758).

Uniform front connectors for all modules and integrated potential bridges for flexible formation of potential groups simplifies storage. Additional components such as circuit breakers, relays, etc., can be installed quickly and easily, since a DIN rail is implemented in the rail of the S7-1500. The CPUs of the SIMATIC S7-1500 product series can be expanded centrally and in a modular fashion with signal modules. Space-saving expansion enables flexible adaptation to each application.

The system cabling for digital signal modules enables fast and clear connection to sensors and actuators from the field (fully modular connection consisting of front connector modules, connection cables and I/O modules), as well as easy wiring inside the control cabinet (flexible connection consisting of front connectors with assembled single conductors).

System diagnostics and alarms

Integrated system diagnostics is activated by default for the CPUs. The different types of diagnostics are configured instead of programmed. System diagnostics information is shown uniformly and in plain text on the display of the CPU, in STEP 7, on the HMI and on the web server, even for alarms related to drives. This information is available in RUN mode, but also in STOP mode of the CPU. The diagnostic information is updated automatically when you configure new hardware components.

The CPU is available as a central interrupt server in up to three project languages. The HMI takes over the display in the project languages specified for the CPU. If you require message texts in additional languages, you can load these via the configured connection to your HMI. The CPU, STEP 7 and your HMI guarantee data consistency without additional engineering steps. The maintenance work is easier.

2.3 Hardware properties

Article number

6ES7515-2TM01-0AB0

View of the module

The following figure shows the CPU 1515T-2 PN.

Figure 2-1 CPU1515T-2 PN

Note

Protective film

Note that a protective film is attached to the display of the CPU when shipped from the factory. Remove the protective film if necessary.

Properties

The CPU 1515T-2 PN has the following properties:

Property	Description	Additional information
CPU display	All CPUs of the SIMATIC S7-1500 product series feature a display with plain text information. The display provides information on order numbers, firmware version and serial numbers of all connected modules. In addition, you can set the IP address of the CPU and carry out further network settings. The display shows occurring error messages directly in plain text. In addition to the functions listed here, a multitude of other functions that are described in the SIMATIC S7-1500 Display Simulator are shown on the display.	• S7-1500, ET 200MP system manual (https://support.automation.siemens.com/WW/view/en/59191792) • SIMATIC S7-1500 Display Simulator (https://support.industry.siemens.com/cs/ww/en/view/109761758)
Supply voltage	The 24 V DC supply voltage is supplied via a 4-pole connection plug that is located at the front of the CPU.	• Chapter Wiring (Page 31) • S7-1500, ET 200MP system manual (https://support.automation.siemens.com/WW/view/en/59191792)
PROFINET IO		
PROFINET interface (X1 P1 R, X1 P2 R)	The interface has two ports. In addition to basic PROFINET functionality, its also supports PROFINET IO RT (real time) and IRT (isochronous real time).	PROFINET function manual (https://support.industry.siemens.com/cs/ww/en/view/49948856)
PROFINET interface (X2 P1)	The interface has two ports. In addition to basic PROFINET functionality, its also supports PROFINET IO RT (real time).	
Operation of the CPU as • IO controller • I-device	• **IO controller:** As an IO controller the CPU addresses the connected IO devices • **I-device:** As an I-device (intelligent IO device) the CPU is assigned to a higher-level IO controller and is used in the process as an intelligent pre-processing unit of sub-processes	

Note

Special consideration when PROFINET IO communication is configured on the 2nd PROFINET interface (X2 P1)

If you configure the PROFINET IO communication on the 2nd PROFINET interface (X2 P1) (operated as IO controller or IO device) of the CPU (as of firmware version 2.0), additional system load occurs. You can find additional information in the Cycle and Response Times (https://support.automation.siemens.com/WW/view/en/59193558) function manual.

Accessories

You can find information on "Accessories/spare parts" in the S7-1500, ET 200MP system manual (https://support.automation.siemens.com/WW/view/en/59191792).

2.4 Firmware functions

Functions

The CPU supports the following functions:

Function	Description	Additional information
Integrated system diagnostics	The system automatically generates the messages for the system diagnostics and outputs these messages via a programming device/PC, HMI device, the web server or the integrated display. System diagnostics information is also available when the CPU is in STOP mode.	Diagnostics function manual (https://support.automation.siemens.com/WW/view/en/59191792)
Integrated web server	The web server lets you access the CPU data by means of a network. Evaluations, diagnostics, and modifications are thus possible over long distances. Monitoring and evaluation is possible without STEP 7; all you need is a web browser. Make sure that you take appropriate measures (e.g. limiting network access, using firewalls) to protect the CPU from being compromised.	• Web server function manual (https://support.automation.siemens.com/WW/view/en/59193560) • Security with SIMATIC S7 controllers system manual (https://support.industry.siemens.com/cs/ww/en/view/90885010)
Integrated trace functionality	Trace functionality supports you in troubleshooting and/or optimizing the user program. You record device tags and evaluate the recordings with the trace and logic analyzer function. Tags are, for example, drive parameters or system and user tags of a CPU. The device saves the recordings. You can read out and permanently save the recordings with the configuration system (ES), if required. The trace and logic analyzer function is therefore suitable for monitoring highly dynamic processes. The trace record can also be displayed through the web server. With the project trace, you record the variables of multiple devices within a project, for example, a controller and a drive.	Using the trace and logic analyzer function function manual (https://support.automation.siemens.com/WW/view/en/64897128)
OPC UA	With OPC UA, you can exchange data via an open and manufacturer-neutral communication protocol. The CPU can act as OPC UA server. The CPU acting as the OPC UA server can communicate with OPC UA clients. The OPC UA Companion Specification allows methods to be specified uniformly and independently of the manufacturer. Using these specified methods, you can easily integrate devices from various manufacturers into your plants and production processes.	Communication function manual (https://support.industry.siemens.com/cs/ww/en/view/59192925)
Configuration control	You can use configuration control to operate different real hardware configurations with a configured maximum configuration of the hardware. This means that, in series machine manufacturing in particular, you have the option of operating/configuring different configuration variants of a machine with a single project.	S7-1500, ET 200MP system manual (https://support.automation.siemens.com/WW/view/en/59191792)

Function	Description	Additional information
PROFINET IO		
RT (real time)	RT prioritizes PROFINET IO telegrams over standard telegrams. This ensures the required determinism in the automation technology. In this process the data is transferred via prioritized Ethernet telegrams.	PROFINET function manual (https://support.automation.siemens.com/WW/view/en/49948856)
IRT (isochronous real time)	A reserved bandwidth within the send clock is available for IRT data. The reserved bandwidth ensures that the IRT data can be transmitted in time-synchronized intervals, unaffected by other high network loading (e.g. TCP/IP communication or additional real time communication). Update times with maximum determinism can be realized through IRT. Isochronous applications are possible with IRT.	
Isochronous mode	The Isochronous mode system property acquires measured values and process data and processes the signals in a fixed system clock. Isochronous mode thus contributes to high control quality and hence to greater manufacturing precision. Isochronous mode reduces possible fluctuations of the process reaction times to a minimum. Time-assured processing makes higher machine cycles possible.	
MRP (Media Redundancy Protocol)	It is possible to establish redundant networks via the Media Redundancy Protocol. Redundant transmission links (ring topology) ensure that an alternative communication path is made available if a transmission link fails. The PROFINET devices that are part of this redundant network form an MRP domain. RT operation is possible with the use of MRP.	
MRPD (Media Redundancy with Planned Duplication)	The advantage of the MRP extension MRPD is that, in the event of a failure of a device or a line in the ring, all other devices continue to be supplied with IO data without interruption and with short update times. MRPD is based on IRT and MRP. To realize media redundancy with short update times, the PROFINET devices participating in the ring send their data in both directions. The devices receive this data at both ring ports so that there is no reconfiguration time.	
Shared device	The "Shared device" function allows you to divide the modules or submodules of an IO device up among different IO controllers. Numerous IO controllers are often used in larger or widely distributed systems. Without the "Shared device" function, each I/O module of an IO device is assigned to the same IO controller. If sensors that are physically close to each other must provide data to different IO controllers, several IO devices are required. The "Shared device" function allows the modules or submodules of an IO device to be divided up among different IO controllers, thus allowing flexible automation concepts. You can, for example, combine I/O modules that are physically close to each other in one IO device.	
PROFIenergy	PROFIenergy is a PROFINET-based data interface for switching off consumers centrally and with full coordination during pause times regardless of the manufacturer or device type. Through this, the process should only be provided with the energy that is absolutely required. The majority of the energy is saved by the process; the PROFINET device itself only contributes a few watts of savings potential.	

Function	Description	Additional information
Integrated technology		
Motion Control	**All CPUs** support the S7-1500 Motion Control functions via the technology objects speed axes, positioning axes, synchronized axes, external encoders, cams, cam tracks and measuring inputs. • Speed-controlled axis for controlling a drive with speed specification • Positioning axis for position-controlled positioning of a drive • Synchronous axis to interconnect with a master value. The axis is synchronized to the master axis position. • External encoder for detecting the actual position of an encoder and its use as a master value for synchronous operation • Cams, cam track for position-dependent generation of switching signals • Measuring input for fast, accurate and event-dependent sensing of actual positions You program the technology objects with Motion Control instructions according to PLCopen.	Motion Control topic page
Extended Motion Control functions	**The technology CPUs** of the SIMATIC S7-1500 also support extended Motion Control functions with the additional technology objects cam, leading axis proxy and kinematics: • Advanced synchronization functions – Synchronization with specification of the synchronous position – Actual value coupling – Leading value or following value shift in gearing or camming – Camming – Synchronization to specified positions – Cross-PLC synchronous operation • Up to 4 encoders or measuring systems as actual position for position control • Controlling of kinematics, such as – Cartesian portals – Roller pickers – Delta pickers – SCARA	Motion Control topic page
Integrated closed-loop control functionality	• PID Compact (continuous PID controller) • PID 3Step (step controller for integrating actuators) • PID Temp (temperature controller for heating and cooling with two separate actuators)	PID control function manual (https://support.industry.siemens.com/cs/ww/en/view/108210036)

Function	Description	Additional information
Integrated safety		
Know-how protection	The know-how protection protects user blocks against unauthorized access and modifications.	S7-1500, ET 200MP system manual (https://support.automation.siemens.com/WW/view/en/59191792)
Copy protection	Copy protection links user blocks to the serial number of the SIMATIC memory card or to the serial number of the CPU. User programs cannot run without the corresponding SIMATIC memory card or CPU.	
Access protection	Extended access protection provides high-quality protection against unauthorized configuration changes. You can use authorization levels to assign separate rights to different user groups.	
Integrity protection	The CPUs dispose of integrity protection by default. Integrity protection identifies possible manipulations of engineering data on the SIMATIC memory card or during data transfer between TIA Portal and CPU. Integrity protection also checks the communication from a SIMATIC HMI system to the CPU for possible manipulations of engineering data. If integrity protection identifies the manipulation of engineering data, the user receives a corresponding message.	
Password provider	As an alternative to manual password input you can connect a password provider to STEP 7. A password provider offers the following advantages: • Convenient handling of passwords. STEP 7 reads the password automatically for the blocks. This saves you time. • Optimum block protection because the users do not know the password itself.	

See also

S7-1500 Motion Control function manual (https://support.automation.siemens.com/WW/view/en/109749262)

S7-1500T Motion Control function manual (https://support.industry.siemens.com/cs/ww/en/view/109781854)

S7-1500T Kinematics (https://support.industry.siemens.com/cs/ww/en/view/109766463)

Axis functions function manual (https://support.industry.siemens.com/cs/ww/en/view/109766462)

Measuring input and cam functions function manual (https://support.industry.siemens.com/cs/ww/en/view/109766466)

Synchronous operation functions function manual (https://support.industry.siemens.com/cs/ww/en/view/109766464)

2.5 Operator controls and display elements

2.5.1 Front view of the CPU with closed front panel

The figure below shows the front view of the CPU 1515T-2 PN.

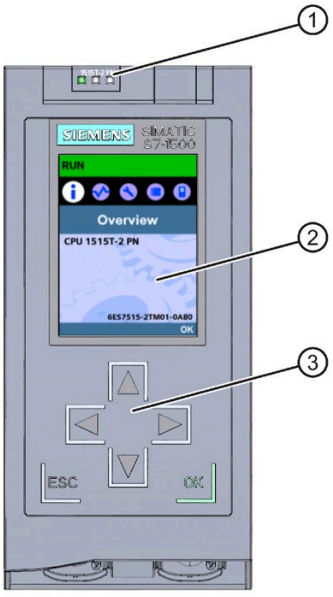

① LEDs for the current operating mode and diagnostics status of the CPU

② Display

③ Operator control buttons

Figure 2-2 View of the CPU 1515T-2 PN (with front panel) - front

---

Note

Temperature range for display

To increase its service life, the display switches off at a temperature below the permitted operating temperature of the device. When the display cools down, it automatically switches itself on again. When the display is switched off, the LEDs continue to show the status of the CPU.

For more information on the temperatures at which the display switches itself on and off, refer to the Technical specifications (Page 38).

Removing and attaching the front panel with display

You can remove and attach the front panel with display during operation.

WARNING

Personal injury and damage to property may occur

If you pull or plug the front panel of an S7-1500 automation system during operation, personal injury or damage to property can occur in zone 2 hazardous areas.

Before you remove or fit the front panel, always switch off the power supply to the S7-1500 automation system in hazardous area zone 2.

Locking the front panel

You can lock the front panel to protect your CPU against unauthorized access.

You can attach a security seal or a padlock with a diameter of 3 mm to the front panel.

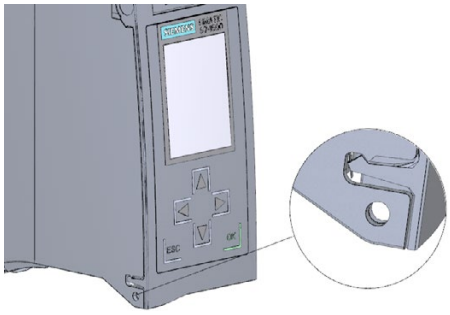

In addition to the mechanical lock, you can also block access to a password-protected CPU on the display (local lock) and assign a password for the display. You can find additional information on the display, configurable protection levels and local locks in the S7-1500/ET 200MP (http://support.automation.siemens.com/WW/view/en/59191792) system manual.

Reference

You can find detailed information on the individual display options, a training course and a simulation of the available menu commands in the SIMATIC S7-1500 Display Simulator (https://support.industry.siemens.com/cs/ww/en/view/109761758).

2.5.2 Front view of the CPU without front flap

The figure below shows the operator controls and connection elements of the CPU 1515T-2 PN.

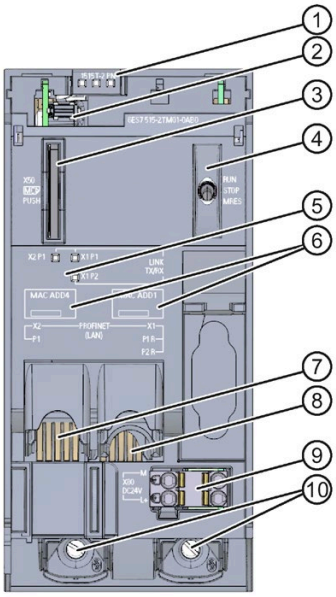

① LEDs for the current operating mode and diagnostics status of the CPU
② Display connection
③ Slot for the SIMATIC memory card
④ Mode selector
⑤ LEDs for the 3 ports of the PROFINET interfaces X1 and X2
⑥ MAC addresses of the interfaces
⑦ PROFINET IO interface (X2) with 1 port
⑧ PROFINET IO interface (X1) with 2 ports
⑨ Connection for supply voltage
⑩ Fixing screws

Figure 2-3 View of the CPU 1515T-2 PN (without front panel) - front

2.5.3 Rear view of the CPU

The following figure shows the connection elements on the rear of the CPU 1515T-2 PN.

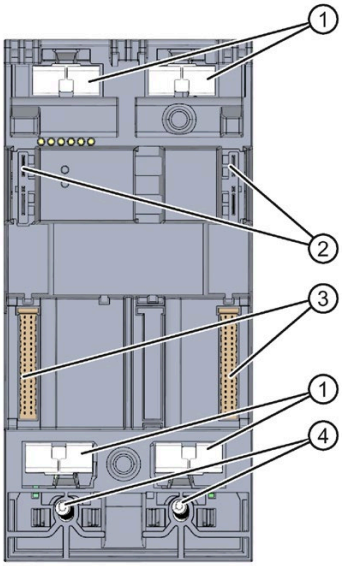

① Shield contact surfaces
② Plug-in connection for power supply
③ Plug-in connection for backplane bus
④ Fixing screws

Figure 2-4 View of the CPU 1515T-2 PN - rear

2.6 Mode selector

You use the mode switches to set the operating mode of the CPU.

The following table shows the meaning of the corresponding operation of the operating mode buttons.

Table 2- 5 Meaning of the mode switches

Operation of the mode switch	Meaning	Explanation
RUN	RUN mode	The CPU is executing the user program.
STOP	STOP mode	The user program is not executed. (STOP ACTIVE LED lights up)
MRES	Memory reset	Position for CPU memory reset.

Wiring

3

This section provides information on the pin assignment of the individual interfaces and the block diagram of the CPU 1515T-2 PN.

24 V DC supply voltage (X80)

The connector for the power supply is plugged in when the CPU ships from the factory.

The following table shows the signal names and the descriptions of the pin assignment of the 24 V DC supply voltage.

Table 3- 1 Pin assignment 24 V DC supply voltage

View Connector	Signal name [1]		Description
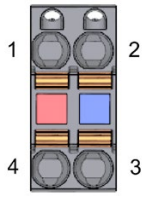	1	1L+	+ 24 V DC of the supply voltage
	2	1M	Ground of the supply voltage
	3	2M	Ground of the supply voltage for loop-through [2]
	4	2L+	+ 24 V DC of the supply voltage for loop-through [2]

[1] 1L+ and 2L+ as well as 1M and 2M are bridged internally

[2] Maximum 10 A permitted

If the CPU is supplied by a system power supply, it is not necessary to connect the 24 V supply.

PROFINET interface X1 with 2-port switch (X1 P1 R and X1 P2 R)

The assignment corresponds to the Ethernet standard for an RJ45 plug.

- When autonegotiation is deactivated, the RJ45 socket is allocated as a switch (MDI-X).
- When autonegotiation is activated, autocrossing is in effect and the RJ45 socket is allocated either as data terminal equipment (MDI) or a switch (MDI-X).

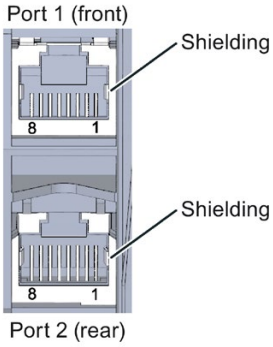

PROFINET interface X2 with 1 port (X2 P1)

The assignment corresponds to the Ethernet standard for an RJ45 plug.

Autocrossing is always active on X2. This means the RJ45 socket is allocated either as data terminal equipment (MDI) or a switch (MDI-X).

Reference

You can find additional information on the topics of "Connecting the CPU" and "Accessories/spare parts" in the S7-1500, ET 200MP (https://support.automation.siemens.com/WW/view/en/59191792) system manual.

Assignment of the MAC addresses

CPU 1515T-2 PN has two PROFINET interfaces, with the first interface having two ports. The PROFINET interfaces each have a MAC address, and each of the PROFINET ports has its own MAC address. The CPU 1515T-2 PNtherefore has five MAC addresses in total.

The MAC addresses of the PROFINET ports are needed for the LLDP protocol, for example for the neighborhood discovery function.

The number range of the MAC addresses is sequential. The first and last MAC addresses are lasered on the rating plate on the right side of each CPU 1515T-2 PN.

The table below shows how the MAC addresses are assigned.

Table 3- 2 Assignment of the MAC addresses

	Assignment	Labeling
MAC address 1	PROFINET interface X1 (visible in STEP 7 for accessible devices)	• Front, lasered • Right side, lasered (start of number range)
MAC address 2	Port X1 P1 R (required for LLDP, for example)	• Front and right side, not lasered
MAC address 3	Port X1 P2 R (required for LLDP, for example)	• Front and right side, not lasered
MAC address 4	PROFINET interface X2 (visible in STEP 7 for accessible devices)	• Front, lasered • Right side, not lasered
MAC address 5	Port X2 P1 (required for LLDP, for example)	• Front, not lasered • Right side, lasered (end of number range)

Block diagram

The figure below shows the block diagram of the CPU 1515T-2 PN.

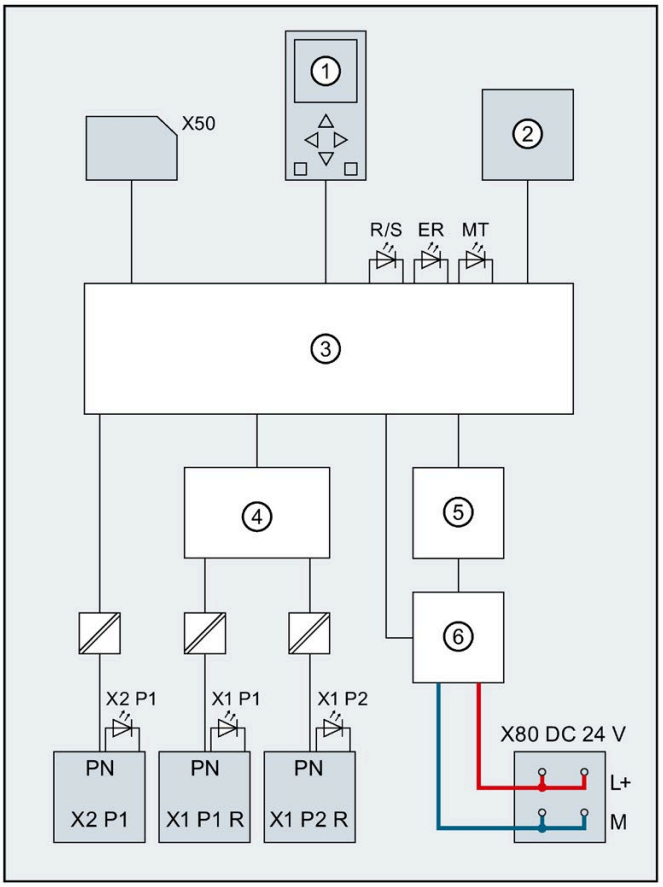

①	Display	PN X1 P1 R	PROFINET interface X1 Port 1
②	RUN/STOP/MRES mode selector	PN X1 P2 R	PROFINET interface X1 Port 2
③	Electronics	PN X2 P1	PROFINET interface X2 Port 1
④	PROFINET 2-port switch	L+	24 V DC supply voltage
⑤	Backplane bus interface	M	Ground
⑥	Internal supply voltage	R/S	RUN/STOP LED (yellow/green)
X50	SIMATIC memory card	ER	ERROR LED (red)
X80 24 V DC	Infeed of supply voltage	MT	MAINT LED (yellow)
		X1 P1, X1 P2, X2 P1	LED Link TX/RX

Figure 3-1 Block diagram of the CPU 1515T-2 PN

Interrupts, error messages, diagnostics and system alarms

4

The status and error displays of the CPU 1515T-2 PN are described below.

You can find additional information on the topic of "Interrupts" in the STEP 7 online help.

You can find additional information on the topic of "Diagnostics" and "System alarms" in the Diagnostics (https://support.automation.siemens.com/WW/view/en/59192926) function manual.

4.1 Status and error displays of the CPU

LED display

The figure below shows the LED displays of the CPU 1515T-2 PN.

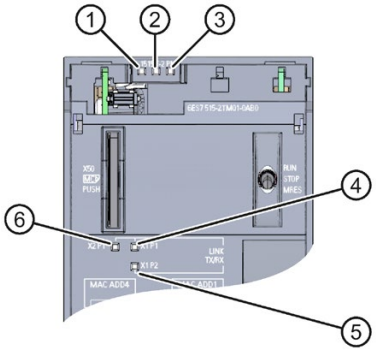

① RUN/STOP LED (yellow/green LED)
② ERROR LED (red LED)
③ MAINT LED (yellow LED)
④ LINK RX/TX LED for port X1 P1 (yellow/green LED)
⑤ LINK RX/TX LED for port X1 P2 (yellow/green LED)
⑥ LINK RX/TX LED for port X2 P1 (yellow/green LED)

Figure 4-1 LED display of the CPU 1515T-2 PN (without front panel)

Meaning of the RUN/STOP, ERROR and MAINT LEDs

The CPU 1515T-2 PN has three LEDs to signal the current operating status and diagnostics status. The following table shows the meaning of the various combinations of colors for the RUN/STOP, ERROR and MAINT LEDs.

Table 4- 1 Meaning of the LEDs

RUN/STOP LED	ERROR LED	MAINT LED	Meaning
LED off	LED off	LED off	Missing or insufficient power supply on the CPU.
LED off	LED flashes red	LED off	An error has occurred.
LED lit green	LED off	LED off	CPU is in RUN mode. There are no events, requirements, errors, etc.
LED lit green	LED flashes red	LED off	A diagnostics event is pending.
LED lit green	LED off	LED lit yellow	Maintenance demanded for the plant. The affected hardware must be checked/replaced within a short period of time.
			Active Force job
LED lit green	LED off	LED flashes yellow	Bad configuration
LED lit yellow	LED flashes red	LED off	A diagnostics event is pending.
LED lit yellow	LED off	LED flashes yellow	Firmware update successfully completed.
LED lit yellow	LED off	LED off	CPU is in STOP mode.
LED lit yellow	LED flashes red	LED flashes yellow	The program on the SIMATIC memory card is causing an error.
			Firmware update using SIMATIC memory card has failed.
			The CPU has detected an error state. Additional information is available via the CPU diagnostic buffer. CPU defective
LED flashes yellow	LED off	LED off	CPU is performing internal activities during STOP, e.g. startup after STOP.
			Download of the user program from the SIMATIC memory card
			CPU carries out a program with active breakpoint.
LED flashes yellow/green	LED off	LED off	Startup (transition from STOP → RUN)
LED flashes yellow/green	LED flashes red	LED flashes yellow	Startup (CPU booting)
			Test of LEDs during startup, inserting a module.
			LED flashing test

Meaning of LINK RX/TX LED

Each port has a LINK RX/TX LED. The table below shows the various "LED scenarios" of ports for the CPU 1515T-2 PN.

Table 4- 2 Meaning of the LED

LINK TX/RX LED	Meaning
LED off	There is no Ethernet connection between the PROFINET interface of the PROFINET device and the communication partner. No data is currently being sent/received via the PROFINET interface. There is no LINK connection.
LED flashes green	The "LED flashing test" is being performed.
LED lit green	There is an Ethernet connection between the PROFINET interface of your PROFINET device and a communication partner.
LED flashes yellow/green	Data is currently being received from or sent to a communications partner on Ethernet via the PROFINET interface of the PROFINET device.

Note

"LED" instruction

You can read the status (e.g. "On" or "Off") of LEDs of a CPU or a module using the "LED" instruction. Note, however, that it is not possible to read the LED status of the LINK RX/TX LEDs on all S7-1500 CPUs.

You can find additional information on the "LED" instruction in the STEP 7 online help.

Technical specifications

5

The following table shows the technical specifications as of 12/2017. You can find a data sheet including daily updated technical specifications on the Internet (https://support.industry.siemens.com/cs/ww/en/pv/6ES7515-2TM01-0AB0/td?dl=en).

Article number	6ES7515-2TM01-0AB0
General information	
Product type designation	CPU 1515T-2 PN
HW functional status	FS04
Firmware version	V2.9
Product function	
• I&M data	Yes; I&M0 to I&M3
• Isochronous mode	Yes; Distributed and central; with minimum OB 6x cycle of 500 µs (distributed) and 1 ms (central)
Engineering with	
• STEP 7 TIA Portal configurable/integrated from version	V17 (FW V2.9) / V14 (FW V2.0) or higher
Configuration control	
via dataset	Yes
Display	
Screen diagonal [cm]	6.1 cm
Control elements	
Number of keys	6
Mode selector switch	1
Supply voltage	
Type of supply voltage	24 V DC
permissible range, lower limit (DC)	19.2 V
permissible range, upper limit (DC)	28.8 V
Reverse polarity protection	Yes
Mains buffering	
• Mains/voltage failure stored energy time	5 ms
• Repeat rate, min.	1/s
Input current	
Current consumption (rated value)	0.8 A
Inrush current, max.	2.4 A; Rated value
I^2t	0.02 $A^2 \cdot s$
Power	
Infeed power to the backplane bus	12 W
Power consumption from the backplane bus (balanced)	6.2 W
Power loss	
Power loss, typ.	6.3 W

Article number	6ES7515-2TM01-0AB0
Memory	
Number of slots for SIMATIC memory card	1
SIMATIC memory card required	Yes
Work memory	
• integrated (for program)	750 kbyte
• integrated (for data)	3 Mbyte
Load memory	
• Plug-in (SIMATIC Memory Card), max.	32 Gbyte
Backup	
• maintenance-free	Yes
CPU processing times	
for bit operations, typ.	30 ns
for word operations, typ.	36 ns
for fixed point arithmetic, typ.	48 ns
for floating point arithmetic, typ.	192 ns
CPU-blocks	
Number of elements (total)	8 000; Blocks (OB, FB, FC, DB) and UDTs
DB	
• Number range	1 ... 60 999; subdivided into: number range that can be used by the user: 1 ... 59 999, and number range of DBs created via SFC 86: 60 000 ... 60 999
• Size, max.	3 Mbyte; For DBs with absolute addressing, the max. size is 64 KB
FB	
• Number range	0 ... 65 535
• Size, max.	500 kbyte
FC	
• Number range	0 ... 65 535
• Size, max.	500 kbyte
OB	
• Size, max.	500 kbyte
• Number of free cycle OBs	100
• Number of time alarm OBs	20
• Number of delay alarm OBs	20
• Number of cyclic interrupt OBs	20; With minimum OB 3x cycle of 500 µs
• Number of process alarm OBs	50
• Number of DPV1 alarm OBs	3
• Number of isochronous mode OBs	2
• Number of technology synchronous alarm OBs	2
• Number of startup OBs	100

Article number	6ES7515-2TM01-0AB0
• Number of asynchronous error OBs	4
• Number of synchronous error OBs	2
• Number of diagnostic alarm OBs	1
Nesting depth	
• per priority class	24
Counters, timers and their retentivity	
S7 counter	
• Number	2 048
Retentivity	
– adjustable	Yes
IEC counter	
• Number	Any (only limited by the main memory)
Retentivity	
– adjustable	Yes
S7 times	
• Number	2 048
Retentivity	
– adjustable	Yes
IEC timer	
• Number	Any (only limited by the main memory)
Retentivity	
– adjustable	Yes
Data areas and their retentivity	
Retentive data area (incl. timers, counters, flags), max.	512 kbyte; In total; available retentive memory for bit memories, timers, counters, DBs, and technology data (axes): 472 KB
Extended retentive data area (incl. timers, counters, flags), max.	3 Mbyte; When using PS 6 0W 24/48/60 V DC HF
Flag	
• Size, max.	16 kbyte
• Number of clock memories	8; 8 clock memory bit, grouped into one clock memory byte
Data blocks	
• Retentivity adjustable	Yes
• Retentivity preset	No
Local data	
• per priority class, max.	64 kbyte; max. 16 KB per block
Address area	
Number of IO modules	8 192; max. number of modules / submodules

Article number	6ES7515-2TM01-0AB0
I/O address area	
• Inputs	32 kbyte; All inputs are in the process image
• Outputs	32 kbyte; All outputs are in the process image
per integrated IO subsystem	
– Inputs (volume)	8 kbyte
– Outputs (volume)	8 kbyte
per CM/CP	
– Inputs (volume)	8 kbyte
– Outputs (volume)	8 kbyte
Subprocess images	
• Number of subprocess images, max.	32
Hardware configuration	
Number of distributed IO systems	64; A distributed I/O system is characterized not only by the integration of distributed I/O via PROFINET or PROFIBUS communication modules, but also by the connection of I/O via AS-i master modules or links (e.g. IE/PB-Link)
Number of DP masters	
• Via CM	8; A maximum of 8 CMs/CPs (PROFIBUS, PROFINET, Ethernet) can be inserted in total
Number of IO Controllers	
• integrated	2
• Via CM	8; A maximum of 8 CMs/CPs (PROFIBUS, PROFINET, Ethernet) can be inserted in total
Rack	
• Modules per rack, max.	32; CPU + 31 modules
• Number of lines, max.	1
PtP CM	
• Number of PtP CMs	the number of connectable PtP CMs is only limited by the number of available slots
Time of day	
Clock	
• Type	Hardware clock
• Backup time	6 wk; At 40 °C ambient temperature, typically
• Deviation per day, max.	10 s; Typ.: 2 s
Operating hours counter	
• Number	16
Clock synchronization	
• supported	Yes
• in AS, master	Yes
• in AS, slave	Yes
• on Ethernet via NTP	Yes

Article number	6ES7515-2TM01-0AB0
Interfaces	
Number of PROFINET interfaces	2
1. Interface	
Interface types	
• RJ 45 (Ethernet)	Yes; X1
• Number of ports	2
• integrated switch	Yes
Protocols	
• IP protocol	Yes; IPv4
• PROFINET IO Controller	Yes
• PROFINET IO Device	Yes
• SIMATIC communication	Yes
• Open IE communication	Yes; Optionally also encrypted
• Web server	Yes
• Media redundancy	Yes
PROFINET IO Controller	
Services	
– PG/OP communication	Yes
– Isochronous mode	Yes
– Direct data exchange	Yes; Requirement: IRT and isochronous mode (MRPD optional)
– IRT	Yes
– PROFIenergy	Yes; per user program
– Prioritized startup	Yes; Max. 32 PROFINET devices
– Number of connectable IO Devices, max.	256; In total, up to 1 000 distributed I/O devices can be connected via AS-i, PROFIBUS or PROFINET
– Of which IO devices with IRT, max.	64
– Number of connectable IO Devices for RT, max.	256
– of which in line, max.	256
– Number of IO Devices that can be simultaneously activated/deactivated, max.	8; in total across all interfaces
– Number of IO Devices per tool, max.	8
– Updating times	The minimum value of the update time also depends on communication share set for PROFINET IO, on the number of IO devices, and on the quantity of configured user data

Article number	6ES7515-2TM01-0AB0
Update time for IRT	
– for send cycle of 250 µs	250 µs to 4 ms; Note: In the case of IRT with isochronous mode, the minimum update time of 500 µs of the isochronous OB is decisive
– for send cycle of 500 µs	500 µs to 8 ms
– for send cycle of 1 ms	1 ms to 16 ms
– for send cycle of 2 ms	2 ms to 32 ms
– for send cycle of 4 ms	4 ms to 64 ms
– With IRT and parameterization of "odd" send cycles	Update time = set "odd" send clock (any multiple of 125 µs: 375 µs, 625 µs ... 3 875 µs)
Update time for RT	
– for send cycle of 250 µs	250 µs to 128 ms
– for send cycle of 500 µs	500 µs to 256 ms
– for send cycle of 1 ms	1 ms to 512 ms
– for send cycle of 2 ms	2 ms to 512 ms
– for send cycle of 4 ms	4 ms to 512 ms
PROFINET IO Device	
Services	
– PG/OP communication	Yes
– Isochronous mode	No
– IRT	Yes
– PROFIenergy	Yes; per user program
– Shared device	Yes
– Number of IO Controllers with shared device, max.	4
– activation/deactivation of I-devices	Yes; per user program
– Asset management record	Yes; per user program
2. Interface	
Interface types	
• RJ 45 (Ethernet)	Yes; X2
• Number of ports	1
• integrated switch	No

Article number	6ES7515-2TM01-0AB0
Protocols	
• IP protocol	Yes; IPv4
• PROFINET IO Controller	Yes
• PROFINET IO Device	Yes
• SIMATIC communication	Yes
• Open IE communication	Yes; Optionally also encrypted
• Web server	Yes
• Media redundancy	No
PROFINET IO Controller	
Services	
– PG/OP communication	Yes
– Isochronous mode	No
– Direct data exchange	No
– IRT	No
– PROFIenergy	Yes; per user program
– Prioritized startup	No
– Number of connectable IO Devices, max.	32; In total, up to 1 000 distributed I/O devices can be connected via AS-i, PROFIBUS or PROFINET
– Number of connectable IO Devices for RT, max.	32
– of which in line, max.	32
– Number of IO Devices that can be simultaneously activated/deactivated, max.	8; in total across all interfaces
– Number of IO Devices per tool, max.	8
– Updating times	The minimum value of the update time also depends on communication share set for PROFINET IO, on the number of IO devices, and on the quantity of configured user data
Update time for RT	
– for send cycle of 1 ms	1 ms to 512 ms

Article number	6ES7515-2TM01-0AB0
PROFINET IO Device	
Services	
– PG/OP communication	Yes
– Isochronous mode	No
– IRT	No
– PROFIenergy	Yes; per user program
– Prioritized startup	No
– Shared device	Yes
– Number of IO Controllers with shared device, max.	4
– activation/deactivation of I-devices	Yes; per user program
– Asset management record	Yes; per user program
Interface types	
RJ 45 (Ethernet)	
• 100 Mbps	Yes
• Autonegotiation	Yes
• Autocrossing	Yes
• Industrial Ethernet status LED	Yes
Protocols	
Number of connections	
• Number of connections, max.	192; via integrated interfaces of the CPU and connected CPs / CMs
• Number of connections reserved for ES/HMI/web	10
• Number of connections via integrated interfaces	108
• Number of S7 routing paths	16
Redundancy mode	
• H-Sync forwarding	Yes
Media redundancy	
– Media redundancy	only via 1st interface (X1)
– MRP	Yes; MRP Automanager according to IEC 62439-2 Edition 2.0, MRP Manager; MRP Client
– MRP interconnection, supported	Yes; as MRP ring node according to IEC 62439-2 Edition 3.0
– MRPD	Yes; Requirement: IRT
– Switchover time on line break, typ.	200 ms; For MRP, bumpless for MRPD
– Number of stations in the ring, max.	50

Article number	6ES7515-2TM01-0AB0
SIMATIC communication	
• PG/OP communication	Yes; encryption with TLS V1.3 pre-selected
• S7 routing	Yes
• S7 communication, as server	Yes
• S7 communication, as client	Yes
• User data per job, max.	See online help (S7 communication, user data size)
Open IE communication	
• TCP/IP	Yes
– Data length, max.	64 kbyte
– several passive connections per port, supported	Yes
• ISO-on-TCP (RFC1006)	Yes
– Data length, max.	64 kbyte
• UDP	Yes
– Data length, max.	2 kbyte; 1 472 bytes for UDP broadcast
– UDP multicast	Yes; Max. 5 multicast circuits
• DHCP	Yes
• DNS	Yes
• SNMP	Yes
• DCP	Yes
• LLDP	Yes
• Encryption	Yes; Optional
Web server	
• HTTP	Yes; Standard and user pages
• HTTPS	Yes; Standard and user pages

Article number	6ES7515-2TM01-0AB0
OPC UA	
• Runtime license required	Yes; "Medium" license required
• OPC UA Client	Yes
– Application authentication	Yes
– Security policies	Available security policies: None, Basic128Rsa15, Basic256Rsa15, Basic256Sha256
– User authentication	"anonymous" or by user name & password
– Number of connections, max.	10
– Number of nodes of the client interfaces, max.	2 000
– Number of elements for one call of OPC_UA_NodeGetHandleList/OPC_UA_ReadList/OPC_UA_WriteList, max.	300
– Number of elements for one call of OPC_UA_NameSpaceGetIndexList, max.	20
– Number of elements for one call of OPC_UA_MethodGetHandleList, max.	100
– Number of simultaneous calls of the client instructions per connection (except OPC_UA_ReadList,OPC_UA_WriteList,OPC_UA_MethodCall), max.	1
– Number of simultaneous calls of the client instructions OPC_UA_ReadList,OPC_UA_WriteList and OPC_UA_MethodCall, max.	5
– Number of registerable nodes, max.	5 000
– Number of registerable method calls of OPC_UA_MethodCall, max.	100
– Number of inputs/outputs when calling OPC_UA_MethodCall, max.	20
• OPC UA Server	Yes; Data access (read, write, subscribe), method call, custom address space
– Application authentication	Yes
– Security policies	Available security policies: None, Basic128Rsa15, Basic256Rsa15, Basic256Sha256
– User authentication	"anonymous" or by user name & password
– GDS support (certificate management)	Yes
– Number of sessions, max.	48
– Number of accessible variables, max.	100 000
– Number of registerable nodes, max.	20 000
– Number of subscriptions per session, max.	20
– Sampling interval, min.	100 ms

Article number	6ES7515-2TM01-0AB0
– Publishing interval, min.	200 ms
– Number of server methods, max.	50
– Number of inputs/outputs per server method, max.	20
– Number of monitored items, max.	2 000; for 1 s sampling interval and 1 s send interval
– Number of nodes for user-defined server interfaces, max.	5 000
• Alarms and Conditions	Yes
– Number of program alarms	200
– Number of alarms for system diagnostics	100
Further protocols	
• MODBUS	Yes; MODBUS TCP
Isochronous mode	
Equidistance	Yes
S7 message functions	
Number of login stations for message functions, max.	64
Program alarms	Yes
Number of configurable program messages, max.	10 000; Program messages are generated by the "Program_Alarm" block, ProDiag or GRAPH
Number of loadable program messages in RUN, max.	5 000
Number of simultaneously active program alarms	
• Number of program alarms	800
• Number of alarms for system diagnostics	200
• Number of alarms for motion technology objects	160
Test commissioning functions	
Joint commission (Team Engineering)	Yes; Parallel online access possible for up to 8 engineering systems
Status block	Yes; Up to 8 simultaneously (in total across all ES clients)
Single step	No
Number of breakpoints	8
Status/control	
• Status/control variable	Yes
• Variables	Inputs/outputs, memory bits, DBs, distributed I/Os, timers, counters
• Number of variables, max.	
– of which status variables, max.	200; per job
– of which control variables, max.	200; per job

Article number	6ES7515-2TM01-0AB0
Forcing	
• Forcing	Yes
• Forcing, variables	Peripheral inputs/outputs
• Number of variables, max.	200
Diagnostic buffer	
• present	Yes
• Number of entries, max.	3 200
– of which powerfail-proof	500
Traces	
• Number of configurable Traces	4; Up to 512 KB of data per trace are possible
Interrupts/diagnostics/status information	
Diagnostics indication LED	
• RUN/STOP LED	Yes
• ERROR LED	Yes
• MAINT LED	Yes
• Connection display LINK TX/RX	Yes
Supported technology objects	
Motion Control	Yes; Note: The number of technology objects affects the cycle time of the PLC program; selection guide via the TIA Selection Tool
• Number of available Motion Control resources for technology objects	2 400
• Required Motion Control resources	
– per speed-controlled axis	40
– per positioning axis	80
– per synchronous axis	160
– per external encoder	80
– per output cam	20
– per cam track	160
– per probe	40
• Number of available Extended Motion Control resources for technology objects	120
• Required Extended Motion Control resources	
– per cam (1 000 points and 50 segments)	2
– per cam (10 000 points and 50 segments)	20
– for each set of kinematics	30

Article number	6ES7515-2TM01-0AB0
– Per leading axis proxy	3
• Positioning axis	
– Number of positioning axes at motion control cycle of 4 ms (typical value)	7
– Number of positioning axes at motion control cycle of 8 ms (typical value)	14
Controller	
• PID_Compact	Yes; Universal PID controller with integrated optimization
• PID_3Step	Yes; PID controller with integrated optimization for valves
• PID-Temp	Yes; PID controller with integrated optimization for temperature
Counting and measuring	
• High-speed counter	Yes
Standards, approvals, certificates	
Suitable for safety functions	No
Ambient conditions	
Ambient temperature during operation	
• horizontal installation, min.	0 °C
• horizontal installation, max.	60 °C; Display: 50 °C, at an operating temperature of typically 50 °C, the display is switched off
• vertical installation, min.	0 °C
• vertical installation, max.	40 °C; Display: 40 °C, at an operating temperature of typically 40 °C, the display is switched off
Ambient temperature during storage/transportation	
• min.	-40 °C
• max.	70 °C
Altitude during operation relating to sea level	
• Installation altitude above sea level, max.	5 000 m; Restrictions for installation altitudes > 2 000 m, see manual
Configuration	
Programming	
Programming language	
– LAD	Yes
– FBD	Yes
– STL	Yes
– SCL	Yes
– GRAPH	Yes

Article number	6ES7515-2TM01-0AB0
Know-how protection	
• User program protection/password protection	Yes
• Copy protection	Yes
• Block protection	Yes
Access protection	
• protection of confidential configuration data	Yes
• Password for display	Yes
• Protection level: Write protection	Yes
• Protection level: Read/write protection	Yes
• Protection level: Complete protection	Yes
Cycle time monitoring	
• lower limit	adjustable minimum cycle time
• upper limit	adjustable maximum cycle time
Dimensions	
Width	70 mm
Height	147 mm
Depth	129 mm
Weights	
Weight, approx.	830 g

General technical specifications

You can find information on the general technical specifications, such as standards and approvals, electromagnetic compatibility, protection class, etc., in the S7-1500, ET 200MP system manual (https://support.automation.siemens.com/WW/view/en/59191792).

Dimension drawing

A

This section contains the dimensional drawing of the module on the mounting rail, as well as a dimensional drawing with the front panel open. Always observe the specified dimensions for installation in cabinets, control rooms, etc.

Dimensional drawings of the CPU 1515-2 PN

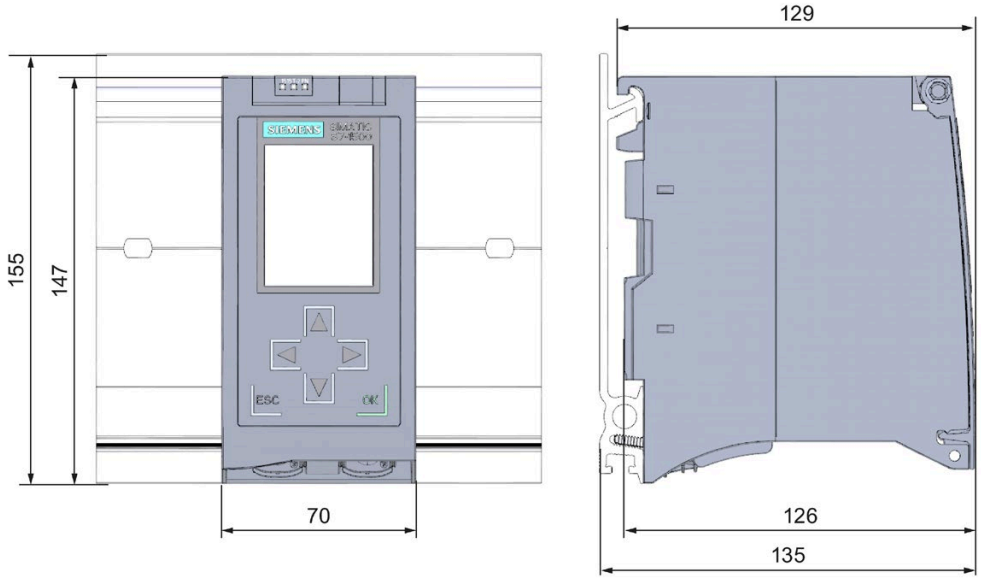

Figure A-1 Dimensional drawing of the CPU 1515T-2 PN, front and side view

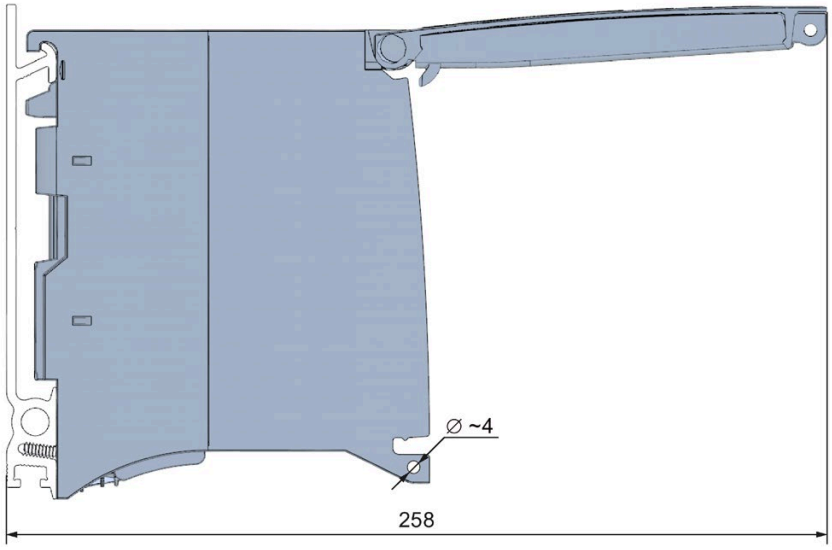

Figure A-2 Dimensional drawing of the CPU 1515T-2 PN, side view with open front panel

SIEMENS

Manual

SIMATIC

S7-1500

CPU 1516-3 PN/DP (6ES7516-3AN02-0AB0)

Edition 05/2021

support.industry.siemens.com

SIEMENS

SIMATIC

S7-1500
CPU 1516-3 PN/DP
(6ES7516-3AN02-0AB0)

Equipment Manual

Preface

S7-1500 / ET 200MP Documentation Guide 1

Product overview 2

Connecting up 3

Interrupts, error messages, diagnostics and system alarms 4

Technical specifications 5

Dimensional drawing A

05/2021

A5E46418484-AB

Legal information

Warning notice system

This manual contains notices you have to observe in order to ensure your personal safety, as well as to prevent damage to property. The notices referring to your personal safety are highlighted in the manual by a safety alert symbol, notices referring only to property damage have no safety alert symbol. These notices shown below are graded according to the degree of danger.

⚠ DANGER
indicates that death or severe personal injury **will** result if proper precautions are not taken.

⚠ WARNING
indicates that death or severe personal injury **may** result if proper precautions are not taken.

⚠ CAUTION
indicates that minor personal injury can result if proper precautions are not taken.

NOTICE
indicates that property damage can result if proper precautions are not taken.

If more than one degree of danger is present, the warning notice representing the highest degree of danger will be used. A notice warning of injury to persons with a safety alert symbol may also include a warning relating to property damage.

Qualified Personnel

The product/system described in this documentation may be operated only by **personnel qualified** for the specific task in accordance with the relevant documentation, in particular its warning notices and safety instructions. Qualified personnel are those who, based on their training and experience, are capable of identifying risks and avoiding potential hazards when working with these products/systems.

Proper use of Siemens products

Note the following:

⚠ WARNING
Siemens products may only be used for the applications described in the catalog and in the relevant technical documentation. If products and components from other manufacturers are used, these must be recommended or approved by Siemens. Proper transport, storage, installation, assembly, commissioning, operation and maintenance are required to ensure that the products operate safely and without any problems. The permissible ambient conditions must be complied with. The information in the relevant documentation must be observed.

Trademarks

All names identified by ® are registered trademarks of Siemens AG. The remaining trademarks in this publication may be trademarks whose use by third parties for their own purposes could violate the rights of the owner.

Disclaimer of Liability

We have reviewed the contents of this publication to ensure consistency with the hardware and software described. Since variance cannot be precluded entirely, we cannot guarantee full consistency. However, the information in this publication is reviewed regularly and any necessary corrections are included in subsequent editions.

Siemens AG
Digital Industries
Postfach 48 48
90026 NÜRNBERG
GERMANY

A5E46418484-AB
Ⓟ 05/2021 Subject to change

Copyright © Siemens AG 2019 - 2021.
All rights reserved

Preface

Purpose of the documentation

This manual supplements the system manual of the S7-1500 automation system/ET 200MP distributed I/O system as well as the function manuals. This manual contains a description of the module-specific information. The system-related functions are described in the system manual. All system-spanning functions are described in the function manuals.

The information provided in this manual and the system manual enables you to commission the CPU 1516-3 PN/DP.

Conventions

STEP 7: In this documentation, "STEP 7" is used as a synonym for all versions of the configuration and programming software "STEP 7 (TIA Portal)".

Please also observe notes marked as follows:

Note

A note contains important information on the product described in the documentation, on the handling of the product or on the section of the documentation to which particular attention should be paid.

Recycling and disposal

For environmentally friendly recycling and disposal of your old equipment, contact a certified electronic waste disposal company and dispose of the equipment according to the applicable regulations in your country.

Security information

Siemens provides products and solutions with industrial security functions that support the secure operation of plants, systems, machines and networks.

In order to protect plants, systems, machines and networks against cyber threats, it is necessary to implement – and continuously maintain – a holistic, state-of-the-art industrial security concept. Siemens' products and solutions constitute one element of such a concept.

Customers are responsible for preventing unauthorized access to their plants, systems, machines and networks. Such systems, machines and components should only be connected to an enterprise network or the internet if and to the extent such a connection is necessary and only when appropriate security measures (e.g. firewalls and/or network segmentation) are in place.

For additional information on industrial security measures that may be implemented, please visit (https://www.siemens.com/industrialsecurity).

Siemens' products and solutions undergo continuous development to make them more secure. Siemens strongly recommends that product updates are applied as soon as they are available and that the latest product versions are used. Use of product versions that are no longer supported, and failure to apply the latest updates may increase customers' exposure to cyber threats.

To stay informed about product updates, subscribe to the Siemens Industrial Security RSS Feed visit (https://www.siemens.com/industrialsecurity).

Siemens Industry Online Support

You can find current information on the following topics quickly and easily here:

- **Product support**

  All the information and extensive know-how on your product, technical specifications, FAQs, certificates, downloads, and manuals.

- **Application examples**

  Tools and examples to solve your automation tasks – as well as function blocks, performance information and videos.

- **Services**

  Information about Industry Services, Field Services, Technical Support, spare parts and training offers.

- **Forums**

  For answers and solutions concerning automation technology.

- **mySupport**

  Your personal working area in Industry Online Support for messages, support queries, and configurable documents.

This information is provided by the Siemens Industry Online Support in the Internet (http://www.siemens.com/automation/service&support).

Industry Mall

The Industry Mall is the catalog and order system of Siemens AG for automation and drive solutions on the basis of Totally Integrated Automation (TIA) and Totally Integrated Power (TIP).

You can find catalogs for all automation and drive products on the Internet.

Table of contents

Preface **3**

1 S7-1500 / ET 200MP Documentation Guide **7**

2 Product overview **9**

2.1 New functions 9

2.2 Area of application of the SIMATIC S7-1500 CPUs 11

2.3 Hardware properties 20

2.4 Firmware functions 22

2.5 Operating and display elements 26

2.5.1 Front view of the CPU with closed front panel 26

2.5.2 Front view of the CPU without front panel or display and view from below 28

2.5.3 Rear view of the CPU 30

2.6 Operating mode buttons 31

3 Connecting up **32**

4 Interrupts, error messages, diagnostics and system alarms **37**

4.1 Status and error display of the CPU 37

5 Technical specifications **41**

A Dimensional drawing **55**

S7-1500 / ET 200MP Documentation Guide

1

The documentation for the SIMATIC S7-1500 automation system and the SIMATIC ET 200MP distributed I/O system is arranged into three areas.
This arrangement enables you to access the specific content you require.

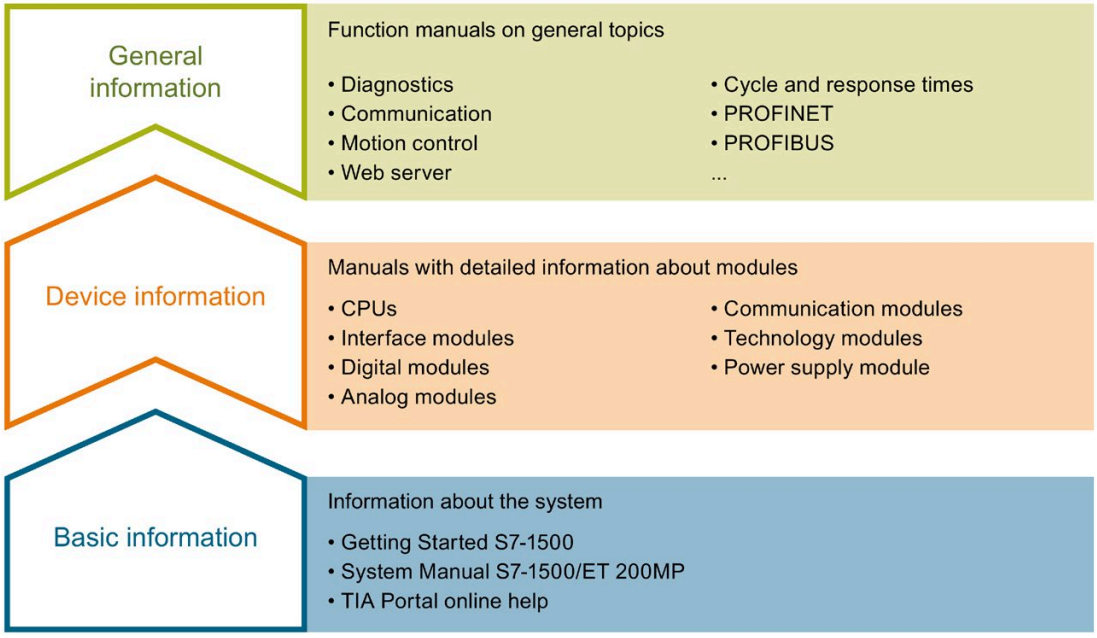

Basic information

The System Manual and Getting Started describe in detail the configuration, installation, wiring and commissioning of the SIMATIC S7-1500 and ET 200MP systems. The STEP 7 online help supports you in the configuration and programming.

Device information

Product manuals contain a compact description of the module-specific information, such as properties, wiring diagrams, characteristics and technical specifications.

General information

The function manuals contain detailed descriptions on general topics regarding the SIMATIC S7-1500 and ET 200MP systems, e.g. diagnostics, communication, motion control, Web server, OPC UA.

You can download the documentation free of charge from the Internet (https://support.industry.siemens.com/cs/ww/en/view/109742691).

Changes and supplements to the manuals are documented in a Product Information.

You can download the product information free of charge from the Internet (https://support.industry.siemens.com/cs/us/en/view/68052815).

Manual Collection S7-1500/ET 200MP

The Manual Collection contains the complete documentation on the SIMATIC S7-1500 automation system and the ET 200MP distributed I/O system gathered together in one file.

You can find the Manual Collection on the Internet (https://support.industry.siemens.com/cs/ww/en/view/86140384).

SIMATIC S7-1500 comparison list for programming languages

The comparison list contains an overview of which instructions and functions you can use for which controller families.

You can find the comparison list on the Internet (https://support.industry.siemens.com/cs/ww/en/view/86630375).

"mySupport"

With "mySupport", your personal workspace, you make the best out of your Industry Online Support.

In "mySupport", you can save filters, favorites and tags, request CAx data and compile your personal library in the Documentation area. In addition, your data is already filled out in support requests and you can get an overview of your current requests at any time.

You must register once to use the full functionality of "mySupport".

You can find "mySupport" on the Internet (https://support.industry.siemens.com/My/ww/en).

Application examples

The application examples support you with various tools and examples for solving your automation tasks. Solutions are shown in interplay with multiple components in the system - separated from the focus on individual products.

You will find the application examples on the Internet (https://support.industry.siemens.com/cs/ww/en/ps/ae).

Product overview

2

2.1 New functions

New functions of the CPU in firmware version V2.9

The following table provides an overview of the most important new functions of the CPU with firmware version V2.9.

New functions	Applications	Customer benefits	Where can I find information?
Communication of the CPU			
Secure PG/HMI communication	With STEP 7 and WinCC as of Version V17, SIMATIC S7-1500 CPUs and ET 200 CPUs from firmware version 2.9 support innovated and standardized secure PG/PC and HMI communication – referred to as Secure PG/HMI communication for short.	Secure and standardized creation or assignment of PLC communication certificates	Communication function manual (https://support.industry.siemens.com/cs/ww/en/view/59192925)
Protection of confidential configuration data	You have the option of assigning a password for protecting confidential configuration data of the respective CPU. This refers to data such as private keys that are required for the proper functioning of certificate-based protocols.	Additional password protection of confidential configuration data	
OPC UA: Alarms & Conditions	OPC UA clients from any manufacturer can subscribe to alarms of the CPU via OPC UA Alarms & Conditions.	Without further measures, alarms created once via OPC UA are available as events and alarms. The alarms can be displayed by any display device with corresponding OPC UA client functionality.	
OPC UA: Certificate management via Global Discovery Server (GDS)	Via GDS push management functions: • Automated update of OPC UA certificates of an S7-1500 CPU • Transfer of updated certificates and lists in RUN operating state of the CPU	The automation of the certificate management eliminates any manual work required for reconfiguring the CPU, for example, after a certificate has expired, and a new download to the CPU.	

New functions	Applications	Customer benefits	Where can I find information?
DHCP (Dynamic Host Configuration Protocol)	The CPU can use the DHCP communication protocol to assign the network configuration via a DHCP server. The CPU uses a client ID for identification on the DHCP server. The following parameters can be obtained: • IP Suite • DNS server • NTP server The CPU can also send its host name to the DHCP server.	With DHCP, you can integrate the CPU into an existing IT network without having to make additional changes to the PROFINET interface.	Communication function manual (https://support.industry.siemens.com/cs/ww/en/view/59192925)
MRP interconnection in PROFINET networks	The MRP interconnection procedure is an extension of MRP. MRP interconnection enables the redundant coupling of two or more rings with MRP in PROFINET networks.	There is no limit to the maximum number of 50 devices in a ring when setting up redundant network topologies. Monitoring of larger topologies with ring redundancy	PROFINET function manual (https://support.industry.siemens.com/cs/ww/en/view/49948856)
Web server of the CPU			
Web applications that can be loaded by the user	Additional methods to manage web applications via Web API You can use all available Web API methods within the web application	Web applications are also available in STOP mode of the CPU Reduced development times of web server user pages	Web server function manual (https://support.industry.siemens.com/cs/ww/en/view/59193560)
New Web API methods	Reading and changing the CPU operating state via Web API Ticket methods for transferring large amounts of data outside of the JSON RPC protocol	Additional applications for the web server	
Diagnostic information on motion control	Diagnostic information is available for all technology objects Improved display and grouping of the tags	Comprehensive diagnostic options by means of motion control applications are possible via the web server.	
Optimizations to the DNS (Domain Name System) functionality with OPC UA/Open User Communication and on the web server	The feedback messages of the OPC UA server with the "Application Name" can be sent via DNS. The NTP client of the CPU can address its relevant NTP servers via DNS. The Web server can be consistently reached via DNS addressing. DNS is taken into account during certificate handling.	A pool of NTP servers can be addressed.	Communication function manual (https://support.industry.siemens.com/cs/ww/en/view/59192925) Web server function manual (https://support.industry.siemens.com/cs/ww/en/view/59193560)
Technology functions of the CPU			
Axis functions	• Backlash compensation • Linear motor	The repeat accuracy of a movement is increased by compensation for the mechanical play of the real axis. Easier control of highly dynamic linear motors.	S7-1500T Motion Control function manuals (https://support.industry.siemens.com/cs/ww/en/view/109751049)

Reference

You can find an overview of all new functions, improvements and revisions in the respective firmware versions on the Internet (https://support.industry.siemens.com/cs/ww/en/view/109478459).

2.2 Area of application of the SIMATIC S7-1500 CPUs

Area of application

SIMATIC S7-1500 is the modular control system for a wide variety of automation applications in discrete automation.

SIMATIC S7-1500 is the cost-effective and convenient solution for a broad range of tasks and offers the following advantages:

- Modular, fanless design
- Simple realization of distributed structures
- User-friendly handling

Areas of application of the SIMATIC S7-1500 automation system include, for example:

- Special-purpose machines
- Textile machinery
- Packaging machines
- General mechanical engineering
- Controller engineering
- Machine tool engineering
- Installation engineering
- Electrical industry and crafts
- Automobile engineering
- Water/waste water
- Food & Beverage

Areas of application of the SIMATIC S7-1500R/H redundant system include, for example:

- Tunnels
- Airports (e.g. baggage conveyors)
- Subways
- Shipbuilding
- Wastewater treatment plants
- High-bay warehouses

Areas of application of the SIMATIC S7-1500T automation system for advanced motion control applications include, for example:

- Packaging machines
- Converting applications
- Assembly automation
- Pick-and-place automation
- Palletizers

You can choose between CPUs with various levels of performance and a comprehensive range of modules with many convenient functions. Fail-safe CPUs enable use in fail-safe applications. The modular design allows you to use only the modules that you need for your application. The controller can be retrofitted with additional modules at any time to expand its range of tasks.

High industrial suitability due to the high resistance to EMC, shock and vibration enable universal use of the SIMATIC S7-1500, S7-1500R/H and S7-1500T automation systems.

Performance segments of the CPUs

The CPUs can be used for smaller and mid-range applications, as well as for the high-end range of machine and plant automation.

Table 2- 1 Standard CPUs

CPU	Performance segment	PROFIBUS interfaces	PROFINET IO RT/IRT interfaces	PROFINET IO RT interface	Basic PROFINET functional-ity	Work memory	Pro-cessing time for bit oper-ations
CPU 1511-1 PN	Standard CPU for small to mid-range applica-tions	--	1	--	--	1.15 MB	60 ns
CPU 1513-1 PN	Standard CPU for mid-range applications	--	1	--	--	1.8 MB	40 ns
CPU 1515-2 PN	Standard CPU for mid-range to large applica-tions	--	1	1	--	3.5 MB	30 ns
CPU 1516-3 PN/DP	Standard CPU for de-manding applications and communication tasks	1	1	1	--	6 MB	10 ns
CPU 1517-3 PN/DP	Standard CPU for de-manding applications and communication tasks	1	1	1	--	10 MB	2 ns

CPU	Performance segment	PROFIBUS interfaces	PROFINET IO RT/IRT interfaces	PROFINET IO RT interface	Basic PROFINET functionality	Work memory	Processing time for bit operations
CPU 1518-4 PN/DP	Standard CPU for high-performance applications, demanding communication tasks and very short reaction times	1	1	1	1	24 MB	1 ns
CPU 1518-4 PN/DP MFP	Standard CPU for high-performance applications, demanding communication tasks, very short reaction times and C/C++ blocks for the user program	1	1	1	1	74* MB	1 ns

* 50 MB of the integrated work memory is reserved for the function library of CPU runtime

Table 2- 2 Redundant CPUs

CPU	Performance segment	PROFIBUS interfaces	PROFINET IO RT/IRT interfaces	PROFINET IO RT interface	Basic PROFINET functionality	Work memory	Processing time for bit operations
CPU 1513R-1 PN	Redundant CPU for smaller to mid-range applications	--	1	--	--	1.8 MB	80 ns
CPU 1515R-2 PN	Redundant CPU for mid-range to large applications	--	1	--	1	3.5 MB	60 ns
CPU 1517H-3 PN	Redundant CPU for demanding applications and communication tasks	--	1	--	1	10 MB	4 ns
CPU 1518HF-4 PN	Fail-safe and redundant CPU for demanding applications and communication tasks	--	1	--	2	69 MB	4 ns

Table 2- 3 Compact CPUs

CPU	Performance segment	PROFIBUS interfaces	PROFINET IO RT/IRT interfaces	PROFINET IO RT interface	Basic PROFINET functionality	Work memory	Processing time for bit operations
CPU 1511C-1 PN	Compact CPU for small to mid-range applications	--	1	--	--	1.175 MB	60 ns
CPU 1512C-1 PN	Compact CPU for mid-range applications	--	1	--	--	1.25 MB	48 ns

Table 2- 4 Fail-safe CPUs

CPU	Performance segment	PROFIBUS interfaces	PROFINET IO RT/IRT interfaces	PROFINET IO RT interface	Basic PROFINET functionality	Work memory	Processing time for bit operations
CPU 1511F-1 PN	Fail-safe CPU for small to mid-range applications	--	1	--	--	1.225 MB	60 ns
CPU 1511TF-1 PN	Fail-safe technology CPU for small to mid-range applications	--	1	--	--	1.225 MB	60 ns
CPU 1513F-1 PN	Fail-safe CPU for mid-range applications	--	1	--	--	1.95 MB	40 ns
CPU 1515F-2 PN	Fail-safe CPU for mid-range to large applications	--	1	1	--	3.75 MB	30 ns
CPU 1515TF-2 PN	Fail-safe technology CPU for demanding applications and communication tasks	--	1	1	--	3.75 MB	30 ns
CPU 1516F-3 PN/DP	Fail-safe CPU for demanding applications and communication tasks	1	1	1	--	6.5 MB	10 ns
CPU 1516TF-3 PN/DP	Fail-safe technology CPU for demanding applications and communication tasks	1	1	1	--	6.5 MB	10 ns
CPU 1517F-3 PN/DP	Fail-safe CPU for demanding applications and communication tasks	1	1	1	--	11 MB	2 ns
CPU 1517TF-3 PN/DP	Fail-safe technology CPU for demanding applications and communication tasks	1	1	1	--	11 MB	2 ns

CPU	Performance segment	PROFIBUS interfaces	PROFINET IO RT/IRT interfaces	PROFINET IO RT interface	Basic PROFINET functional-ity	Work memory	Pro-cessing time for bit oper-ations
CPU 1518F-4 PN/DP	Fail-safe CPU for high-performance applica-tions, demanding com-munication tasks and very short reaction times	1	1	1	1	26 MB	1 ns
CPU 1518F-4 PN/DP MFP	Fail-safe CPU for high-performance applica-tions, demanding com-munication tasks, very short reaction times and C/C++ blocks for the user program	1	1	1	1	76* MB	1 ns
CPU 1518TF-4 PN/DP	Technology CPU for high-performance mo-tion control applications with large quantities, demanding communi-cation tasks and very short reaction times	1	1	1	1	69 MB	1 ns

* 50 MB of the integrated work memory is reserved for the function library of CPU runtime

Table 2- 5 Technology CPUs

CPU	Performance segment	PROFIBUS interfaces	PROFINET IO RT/IRT interfaces	PROFINET IO RT interface	Basic PROFINET functional-ity	Work memory	Pro-cessing time for bit oper-ations
CPU 1511T-1 PN	Technology CPU for small to mid-range applications	--	1	--	--	1.225 MB	60 ns
CPU 1515T-2 PN	Technology CPU for mid-range to large ap-plications	--	1	1	--	3.75 MB	30 ns
CPU 1516T-3 PN/DP	Technology CPU for high-end applications and communication tasks	1	1	1	--	6.5 MB	10 ns
CPU 1517T-3 PN/DP	Technology CPU for complex applications and communication tasks	1	1	1	--	11 MB	2 ns

CPU	Performance segment	PROFIBUS interfaces	PROFINET IO RT/IRT interfaces	PROFINET IO RT interface	Basic PROFINET functional-ity	Work memory	Pro-cessing time for bit oper-ations
CPU 1518T-4 PN/DP	Technology CPU for high-performance mo-tion control applications with large quantities, demanding communi-cation tasks and very short reaction times	1	1	1	1	69 MB	1 ns
CPU 1511TF-1 PN CPU 1515TF-2 PN CPU 1516TF-3 PN/DP CPU 1517TF-3 PN/DP CPU 1518TF-4 PN/DP	These CPUs are described in the fail-safe CPUs						

Performance segments of compact CPUs

The compact CPUs can be used for smaller to mid-range applications and have an integrated analog and digital on-board I/O as well as integrated technology functions. The following table shows the specific properties of the Compact CPUs.

	CPU 1511C-1 PN	CPU 1512C-1 PN
Integrated analog inputs/outputs	5 inputs/2 outputs	5 inputs/2 outputs
Integrated digital inputs/outputs	16 inputs/16 outputs	32 inputs/32 outputs
High-speed counters	6	6
Frequency meters	6 (max. 100 kHz)	6 (max. 100 kHz)
Period duration measurement	6 channels	6 channels
Pulse width modulation (PWM output)	Max. 4 (up to 100 kHz)	Max. 4 (up to 100 kHz)
Pulse Train Output (PTO output)	Max. 4 (up to 100 kHz)	Max. 4 (up to 100 kHz)
Frequency output	Up to 100 kHz	Up to 100 kHz

Integrated Motion Control technology functions

All CPUs of the SIMATIC S7-1500 automation system support motion control technology functions. STEP 7 provides PLCopen-standardized Motion Control instructions for configuring and connecting a drive to the CPU.

S7-1500 Motion Control supports the following technology objects:

- Speed-controlled axes
- Positioning axes
- Synchronous axes
- External encoders
- Cam
- Cam track
- Measuring input

The technology CPUs of the SIMATIC S7-1500-automation system offer enhanced Motion Control functions:

- Advanced synchronization functions
  - Synchronization with specification of the synchronous position
  - Actual value coupling
  - Shifting of the master value at the following axis
  - Camming
- Up to 4 encoder or measuring systems as actual position for position control
- Cam
- Kinematics for control of:
  - Cartesian portals
  - Roller pickers
  - Jointed-arm robots
  - Delta pickers
  - SCARA robots

Due to the supported technology functions, the S7-1500T CPUs are suitable for controlling packaging machines, converting applications, assembly automation, etc.

Additional integrated technology functions

For effective commissioning, diagnostics and fast optimization of drives and controls, the SIMATIC S7-1500 controller series offers extensive trace functions for all CPU tags.

In addition to drive integration, the SIMATIC S7-1500 controller series has a PID compact closed-loop controller; easy-to-configure blocks allow automatic optimization of the controller parameters for optimum control quality.

Other technology functions

Technology modules also implement functions such as high-speed counting, position detection, measuring functions and pulse generators (PTO, PWM and frequency output). With the CPU 1511C-1 PN and CPU 1512C-1 PN compact CPUs, these functions are already integrated and can be implemented without additional technology modules.

SIWAREX is a versatile and flexible weighing module which you can use as a static scale for operation.

Redundant CPUs

The CPUs of the S7-1500R/H redundant system offer a high degree of reliability and system availability. A redundant configuration of the most important automation components reduces the likelihood of production downtimes and the consequences of component errors.

The higher the risks and costs of a production downtime, the more worthwhile the use of a redundant system. The avoidance of production downtimes compensates for the generally higher investment costs.

Security Integrated

In conjunction with STEP 7, each CPU offers password-based know-how protection against unauthorized reading out or modification of the program blocks.

Copy protection provides reliable protection against unauthorized reproduction of program blocks. With copy protection, individual blocks on the SIMATIC memory card can be tied to its serial number so that the block can only be run if the configured memory card is inserted into the CPU.

In addition, you can assign various access rights to different user groups in the controller using four different authorization levels.

Improved manipulation protection allows changed or unauthorized transfers of engineering data to be detected by the controller.

The use of an Ethernet CP (CP 1543-1) provides you with additional access protection through a firewall or possibilities to establish secure VPN connections.

Safety Integrated

The fail-safe CPUs are intended for users who want to implement demanding standard and fail-safe applications both centrally and decentrally.

These fail-safe CPUs allow the processing of standard and safety programs on a single CPU. This allows fail-safe data to be evaluated in the standard user program. The integration also provides the system advantages and the extensive functionality of SIMATIC for fail-safe applications.

The fail-safe CPUs are certified for use in safety mode up to:

- Safety class (Safety Integrity Level) SIL 3 according to IEC 61508:2010
- Performance Level (PL) e and Category 4 according to ISO 13849-1:2015 or EN ISO 13849-1:2015

Additional password protection for F-configuration and F-program is set up for IT security.

Design and handling

All CPUs of the SIMATIC S7-1500 product series feature a display with plain text information. The display provides the user with information on the order numbers, firmware version, and serial number of all connected modules. In addition, the IP address of the CPU and other network settings can be adapted locally without a programming device. Error messages are shown on the display directly in plain text. When performing servicing, you can minimize plant downtimes by quickly accessing the diagnostics alarms. Detailed information about this and a multitude of other display functions is available in the SIMATIC S7-1500 Display Simulator (https://support.industry.siemens.com/cs/ww/en/view/109761758).

Uniform front connectors for all modules and integrated potential jumpers for flexible formation of potential groups simplify storage. Additional components such as circuit breakers, relays, etc., can be installed quickly and easily, since a DIN rail is implemented in the rail of the SIMATIC S7-1500. The CPUs of the SIMATIC S7-1500 product series can be expanded centrally and in a modular fashion with signal modules. Space-saving expansion enables flexible adaptation to each application.

The system cabling for digital signal modules enables fast and clear connection to sensors and actuators from the field (fully modular connection consisting of front connector modules, connection cables and I/O modules), as well as easy wiring inside the control cabinet (flexible connection consisting of front connectors with assembled single conductors).

System diagnostics and alarms

Integrated system diagnostics is activated by default for the CPUs. The different types of diagnostics are configured instead of programmed. System diagnostics information and alarms from the drives are displayed consistently and in plain text:

- On the CPU display
- In STEP 7
- On the HMI
- On the Web server

This information is available in RUN mode, but also in STOP mode of the CPU. The diagnostic information is updated automatically when you configure new hardware components.

The CPU is available as a central interrupt server in up to three project languages. The HMI takes over the display in the project languages defined for the CPU. If you require alarm texts in additional languages, you can load them into your HMI via the configured connection. The CPU, STEP 7 and your HMI ensure data consistency without additional engineering steps. The maintenance work is easier.

2.3 Hardware properties

Article number

6ES7516-3AN02-0AB0

View of the module

The figure below shows the CPU 1516-3 PN/DP.

Figure 2-1 CPU 1516-3 PN/DP

Note

Protective film

Please note that the CPU is supplied with a removable protective film on the display.

Properties

The 1516-3 PN/DP has the following technical properties:

Property	Description	Additional information
CPU display	All CPUs of the SIMATIC S7-1500 product series feature a display with plain text information. The display provides information on order numbers, firmware version and serial numbers of all connected modules. In addition, you can set the IP address of the CPU and make further network settings. The display shows occurring error messages directly in plain text. In addition to the functions listed here, a multitude of other functions that are described in the SIMATIC S7-1500 Display Simulator are shown on the display.	• S7-1500, ET 200MP (http://support.automation.siemens.com/WW/view/en/59191792) system manual • SIMATIC S7-1500 Display Simulator (https://support.industry.siemens.com/cs/ww/en/view/109761758)
Supply voltage	The 24 V DC supply voltage is fed in via a 4-pin plug located at the bottom of the CPU.	• Section Connecting up (Page 32) • S7-1500, ET 200MP (http://support.automation.siemens.com/WW/view/en/59191792) system manual
PROFINET IO		
PROFINET interface (X1 P1R and X1 P2R)	The interface has two ports. In addition to basic PROFINET functionality, it also supports PROFINET IO RT (real time) and IRT (isochronous real time).	PROFINET (https://support.industry.siemens.com/cs/ww/en/view/49948856) function manual
PROFINET interface (X2 P1)	The interface has one port. In addition to basic PROFINET functionality, it also supports PROFINET IO RT (real time).	
Operation of the CPU as • IO controller • I-device	• **IO controller:** As an IO controller, the CPU addresses the connected IO devices • **I-device:** As an I-device (intelligent IO device), the CPU is assigned to a higher-level IO controller and is used in the process as an intelligent pre-processing unit of sub-processes	
PROFIBUS DP		
PROFIBUS interface (X3)	The interface is used for connecting to a PROFIBUS network.	PROFIBUS (https://support.industry.siemens.com/cs/ww/en/view/59193579) function manual
Operation of the CPU as a DP master	In the role as a DP master, the CPU addresses the connected DP slaves. It is not possible for the CPU to take the role of a DP slave.	

Accessories

You can find information on "Accessories/spare parts" in the S7-1500, ET 200MP system manual (http://support.automation.siemens.com/WW/view/en/59191792).

2.4 Firmware functions

Functions

The CPU 1516-3 PN/DP supports the following firmware functions:

Function	Description	Additional information
Integrated system diagnostics	The system automatically generates the alarms for the system diagnostics and outputs these alarms via a programming device/PC, HMI device, the Web server or the integrated display. System diagnostics information is also available when the CPU is in STOP mode.	Diagnostics (https://support.industry.siemens.com/cs/ww/en/view/59192926) function manual
Integrated Web server	The Web server lets you access the CPU data by means of a network. Evaluations, diagnostics, and modifications are thus possible over long distances. Monitoring and evaluation is possible without STEP 7; all you need is a Web browser. Make sure that you take appropriate measures (e.g. limiting network access, using firewalls) to protect the CPU from being compromised.	• Web server (https://support.industry.siemens.com/cs/ww/en/view/59193560) function manual • Security with SIMATIC S7 controllers (https://support.industry.siemens.com/cs/ww/en/view/90885010) system manual
Integrated trace functionality	Trace functionality supports you in troubleshooting and/or optimizing the user program. You record device tags and evaluate the recordings with the trace and logic analyzer function. Tags are, for example, drive parameters or system and user tags of a CPU. The device saves the recordings. You can read out and permanently save the recordings with the configuration system (ES), if required. The trace and logic analyzer function is therefore suitable for monitoring highly dynamic processes. The trace recording can also be displayed through the Web server.	Using the trace and logic analyzer function (http://support.automation.siemens.com/WW/view/en/64897128) function manual
OPC UA	With OPC UA, data is exchanged via an open and vendor-neutral communication protocol. The CPU can act as OPC UA server. The CPU can communicate with OPC UA clients as an OPC UA server. In turn, the CPU can access an OPC UA server as OPC UA client, allow the OPC UA server to run methods and read out information from the OPC UA server. Through OPC UA Companion Specification, methods can be specified in a uniform and vendor-neutral way. The specified methods enable you to integrate devices from a wide range of manufacturers into your plants and production processes more easily.	Communication (https://support.industry.siemens.com/cs/ww/en/view/59192925) function manual
Configuration control	You can use configuration control to operate different real hardware configurations with a configured maximum configuration of the hardware. This means especially in series machine manufacturing you have the option of operating/configuring different configuration variants of a machine with a single project.	S7-1500, ET 200MP (http://support.automation.siemens.com/WW/view/en/59191792) system manual

Function	Description	Additional information
PROFINET IO		
RT (real time)	RT prioritizes PROFINET IO frames over standard frames. This ensures the required determinism in the automation technology. In this process, the data is transferred via prioritized Ethernet frames.	PROFINET (https://support.industry.siemens.com/cs/ww/en/view/49948856) function manual
IRT (isochronous real time)	A reserved bandwidth within the send clock is available for IRT data. The reserved bandwidth ensures that the IRT data can be transmitted in time-synchronized intervals, unaffected by other high network loads (e.g. TCP/IP communication or additional real time communication). Update times with maximum determinism can be realized through IRT. Isochronous applications are possible with IRT.	
Isochronous mode	The Isochronous mode system property records measured values and process data and processes the signals in a fixed system clock. Isochronous mode contributes to high control quality and hence to greater manufacturing precision. Isochronous mode reduces possible fluctuations of the process reaction times to a minimum. Time-assured processing makes higher machine cycles possible.	
MRP (Media Redundancy Protocol)	It is possible to establish redundant networks via the Media Redundancy Protocol. Redundant transmission links (ring topology) ensure that an alternative communication path is made available if a transmission link fails. The PROFINET devices that are part of this redundant network form an MRP domain. RT operation is possible with the use of MRP.	
MRPD (Media Redundancy with Planned Duplication)	The advantage of the MRP extension MRPD is that, in the event of a failure of a device or a line in the ring, all other devices continue to be supplied with IO data without interruption and with short update times. MRPD is based on IRT and MRP. To realize media redundancy with short update times, the PROFINET devices participating in the ring send their data in both directions. The devices receive this data at both ring ports so that there is no ring reconfiguration time.	
Shared device	The "Shared device" function allows you to divide the modules or submodules of an IO device up among different IO controllers. Numerous IO controllers are often used in larger or widely distributed systems. Without the "Shared device" function, each I/O module of an IO device is assigned to the same IO controller. If sensors that are physically close to each other must provide data to different IO controllers, several IO devices are required. The "Shared device" function allows the modules or submodules of an IO device to be divided up among different IO controllers, thus allowing flexible automation concepts. You can, for example, combine I/O modules that are physically close to each other in one IO device.	
PROFIenergy	PROFIenergy is a PROFINET-based data interface for switching off consumers centrally and with full coordination during pause times regardless of the manufacturer or device type. The goal is that the process is only provided with the energy that is absolutely required. Most of the energy is saved by the process. The PROFINET device itself only contributes a few watts to the savings potential.	

Function	Description	Additional information
Integrated technology		
Motion Control	S7-1500 CPUs support the controlled positioning and traveling of axes via S7-1500 Motion Control functions by means of the following technology objects: Speed-controlled axes, positioning axes, synchronized axes, external encoders, cams, cam tracks and measuring inputs • Speed-controlled axis for controlling a drive with speed specification • Positioning axis for positioning of a drive with closed-loop position control • Synchronous axis to interconnect with a master value. The axis is synchronized to the master axis position • External encoder for detecting the actual position of an encoder and its use as a master value for synchronous operation • Cams, cam track for position-dependent generation of switching signals • Measuring input for fast, accurate and event-dependent sensing of actual positions	S7-1500T Motion Control function manuals (https://support.industry.siemens.com/cs/ww/en/view/109751049)
Integrated closed-loop control functionality	• PID Compact (continuous PID controller) • PID 3Step (step controller for integrating actuators) • PID Temp (temperature controller for heating and cooling with two separate actuators)	PID control (https://support.industry.siemens.com/cs/ww/en/view/108210036) function manual

Function	Description	Additional information
Integrated safety		
Know-how protection	The know-how protection protects user blocks against unauthorized access and modifications.	S7-1500, ET 200MP (http://support.automation.siemens.com/WW/view/en/59191792) system manual
Copy protection	Copy protection links user blocks with the serial number of one or more SIMATIC memory cards or the serial number of one or more CPUs. User programs cannot run without the corresponding SIMATIC memory card or CPU.	
Access protection	You can use authorization levels to assign separate rights to different users.	
Integrity protection	The CPUs feature integrity protection by default. Integrity protection identifies possible manipulation of engineering data on the SIMATIC memory card or during data transfer between STEP 7 and the CPU. Integrity protection also checks the communication from a SIMATIC HMI system to the CPU for possible manipulation of engineering data. If integrity protection identifies the manipulation of engineering data, the user receives a corresponding message.	
Password provider	As an alternative to manual password input, you can connect a password provider to STEP 7. A password provider offers the following advantages: • Convenient handling of passwords. STEP 7 reads in the password automatically for the blocks. This saves you time. • Optimum block protection because the users themselves do not know the password.	

2.5 Operating and display elements

2.5.1 Front view of the CPU with closed front panel

The following figure shows the front view of the CPU 1516-3 PN/DP.

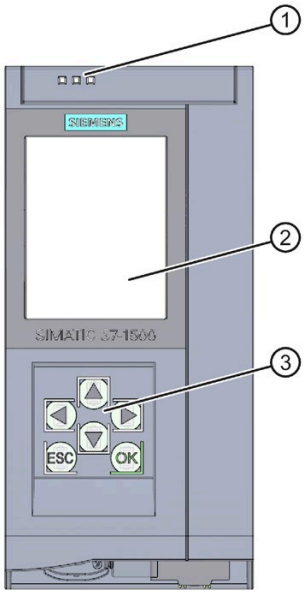

① LEDs for the current operating mode and diagnostic status of the CPU
② Display
③ Operator control buttons

Figure 2-2 View of the CPU 1516-3 PN DP (with front panel) - front

---

Note

Temperature range for display

To increase its service life, the display switches off at a temperature below the permitted operating temperature of the device. When the display cools down, it automatically switches itself on again. When the display is switched off, the LEDs continue to show the status of the CPU.

For more information on the temperatures at which the display switches itself on and off, refer to the Technical specifications (Page 41).

Removing and fitting the front panel or display

You can remove and fit the front panel or the display during operation.

WARNING

Personal injury and damage to property may occur

Personal injury or material damage can occur in zone 2 hazardous areas if you remove or fit the display while the S7-1500 automation system is running.

Before you remove or insert the display in zone 2 hazardous areas, always make sure that the power supply to the S7-1500 automation system is switched off.

Locking the front panel

You can lock the front panel to protect the SIMATIC memory card and the operating mode buttons of the CPU against unauthorized access.

You can attach a security seal or a padlock with a diameter of 3 mm to the front panel.

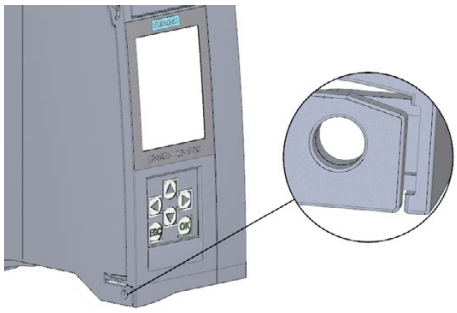

Figure 2-3 Locking latch on the CPU

In addition to the mechanical lock, you can also block access to a password-protected CPU on the display (local lock) and assign a password for the display. You can find additional information on the display, configurable protection levels and local locks in the S7-1500/ET 200MP (http://support.automation.siemens.com/WW/view/en/59191792) system manual.

Reference

You will find detailed information on the individual display options, a training course and a simulation of the available menu commands in the SIMATIC S7-1500 Display Simulator (https://support.industry.siemens.com/cs/ww/en/view/109761758).

2.5.2 Front view of the CPU without front panel or display and view from below

The following figure shows the operator controls and connection elements of the CPU 1516-3 PN/DP.

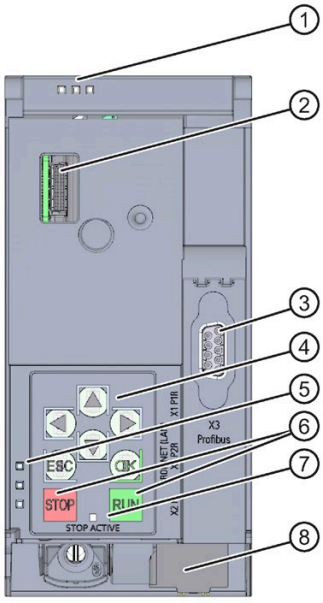

① LEDs for the current operating mode and diagnostic status of the CPU
② Connector for the display
③ PROFIBUS interface (X3)
④ Arrow keys
⑤ LED displays for the PROFINET interface
⑥ STOP and RUN operating mode buttons
⑦ STOP-ACTIVE LED
⑧ Connector for the supply voltage

Figure 2-4 View of the CPU 1516-3 PN/DP (without front panel or display) - front

Note

Removing the display

Only remove the display if it is faulty.

You can find information on removing and replacing displays in the S7-1500, ET 200MP system manual (http://support.automation.siemens.com/WW/view/en/59191792).

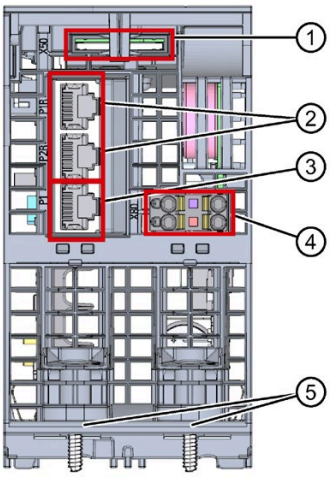

① Slot for the SIMATIC memory card
② PROFINET IO interface (X1) with 2 ports
③ PROFINET IO interface (X2) with 1 port
④ Connector for supply voltage
⑤ Fastening screw

Figure 2-5 View of the CPU 1516-3 PN/DP - bottom

2.5.3 Rear view of the CPU

The following figure shows the connection elements on the rear of the CPU 1516-3 PN/DP.

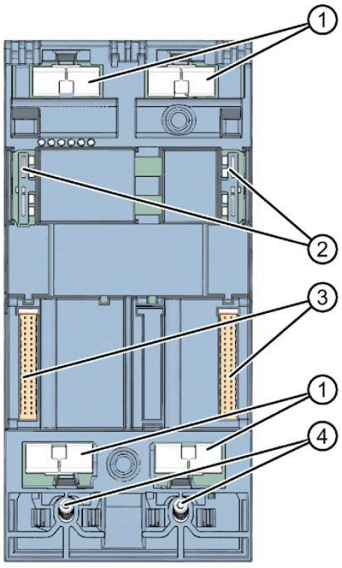

① Shield contact surfaces
② Plug-in connection for power supply
③ Plug-in connection for backplane bus
④ Fixing screws

Figure 2-6 View of the CPU 1516-3 PN/DP - rear

2.6 Operating mode buttons

You use the operating mode buttons to:

- Request a change to a specific operating state
- Disable or enable the change to a specific operating state

  (if the operating mode button STOP is active, for example, you cannot switch the CPU to RUN via a communication task configured in the TIA Portal or via the display)

The following table shows the meaning of the corresponding operation of the operating mode buttons.

Table 2- 6 Meaning of the operating mode buttons

Operation of the operating mode buttons	Meaning	Explanation
RUN	RUN mode	The CPU has permission to go to RUN.
STOP	STOP mode	The CPU does not have permission to go to RUN.
1. Press the operating mode button STOP. Result: The RUN/STOP LED lights up yellow. 2. Press the operating mode button STOP until the RUN/STOP LED lights up for the 2nd time and remains continuously lit (this takes three seconds). After this, release the button. 3. Press the operating mode button STOP again within the next three seconds.	Manual memory reset (with SIMATIC memory card inserted) or Reset to factory settings (without inserted SIMATIC memory card)	The CPU is executing a memory reset. or The CPU is being reset to factory settings. You can find additional information in the S7-1500/ET 200MP system manual (https://support.industry.siemens.com/cs/ww/en/view/59191792).

Connecting up

3

This section provides information on the terminal assignment of the individual interfaces and the block diagram of the CPU 1516-3 PN/DP.

24 V DC supply voltage (X80)

The connector for the power supply is plugged in when the CPU ships from the factory.

The following table shows the signal names and the descriptions of the pin assignment of the 24 V DC supply voltage.

Table 3- 1 Pin assignment 24 V DC supply voltage

View Connector	Signal name [1]		Description
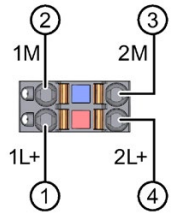	1	1L+	+ 24 V DC of the supply voltage
	2	1M	Ground of the supply voltage
	3	2M	Ground of the supply voltage for loop-through [2]
	4	2L+	+ 24 V DC of the supply voltage for loop-through [2]

[1] 1L+ and 2L+ as well as 1M and 2M are bridged internally

[2] Maximum 10 A permitted

If the CPU is supplied by a system power supply, it is not necessary to connect the 24 V supply.

PROFINET interface X1 with 2-port switch (X1 P1R and X1 P2R)

The assignment corresponds to the Ethernet standard for an RJ45 plug.

- When autonegotiation is deactivated, the RJ45 socket is allocated as a switch (MDI-X).
- When autonegotiation is activated, autocrossing is in effect and the RJ45 socket is allocated either as data terminal equipment (MDI) or a switch (MDI-X).

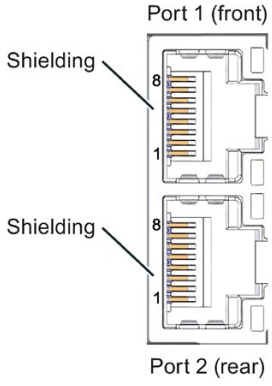

PROFINET interface X2 with 1 port (X2 P1)

The assignment corresponds to the Ethernet standard for an RJ45 plug.

Autocrossing is always active on X2. This means the RJ45 socket is allocated either as data terminal equipment (MDI) or a switch (MDI-X).

Removing the PROFINET plug

You need a screwdriver (max. blade width 2.5 mm) to remove the PROFINET plug.

PROFIBUS interface X3

The table below shows the terminal assignment of the PROFIBUS interface. The assignment corresponds to the standard assignment of an RS485 interface.

Table 3- 2 PROFIBUS interface terminal assignment

View	Signal name		Description
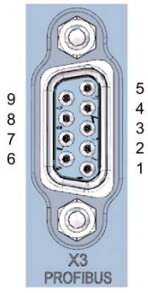	1	-	-
	2	-	-
	3	RxD/TxD-P	Data line B
	4	RTS	Request To Send
	5	M5V2	Data reference potential (from station)
	6	P5V2	Supply plus (from station)
	7	-	-
	8	RxD/TxD-N	Data line A
	9	-	-

Note

Supply of I/O devices

The CPU 1516-3 PN/DP does not provide a 24 V DC power supply on the PROFIBUS interface. I/O devices (for example, PC adapter USB 6ES7972-0CB20-0XA0) are only operational on the interface in conjunction with a plug-in power supply set for external power supply.

The innovative successor product, PC adapter USB A2, receives the required power supply via the USB port. This means it does not need a 24 V DC supply voltage and can be operated **without** a plug-in power supply set for external power supply.

Removing the display

You can find a description of how to remove and replace the display in the S7-1500, ET 200MP (http://support.automation.siemens.com/WW/view/en/59191792) system manual.

Reference

You can find additional information on the topics of "Connecting the CPU" and "Accessories/spare parts" in the S7-1500, ET 200MP (http://support.automation.siemens.com/WW/view/en/59191792) system manual.

Assignment of the MAC addresses

CPU 1516-3 PN/DP has two PROFINET interfaces, with the first interface having two ports. The PROFINET interfaces each have a MAC address, and each of the PROFINET ports has its own MAC address. The CPU 1516-3 PN/DP therefore has five MAC addresses in total.

The MAC addresses of the PROFINET ports are needed for the LLDP protocol, for example for the neighborhood discovery function.

The number range of the MAC addresses is sequential. The first and last MAC addresses are printed on the rating plate on the right side of each CPU 1516-3 PN/DP.

The table below shows how the MAC addresses are assigned.

Table 3- 3 Assignment of the MAC addresses

	Assignment	**Labeling**
MAC address 1	PROFINET interface X1 (visible in STEP 7 in accessible devices)	• Front printed • Right side printed (start of number range)
MAC address 2	Port X1 P1R (required for LLDP, for example)	---
MAC address 3	Port X1 P2R (required for LLDP, for example)	---
MAC address 4	PROFINET interface X2 (visible in STEP 7 in accessible devices)	Front printed
MAC address 5	Port X2 P1 (required for LLDP, for example)	Right side printed (end of number range)

Block diagram

The following figure shows the block diagram of the CPU 1516-3 PN/DP.

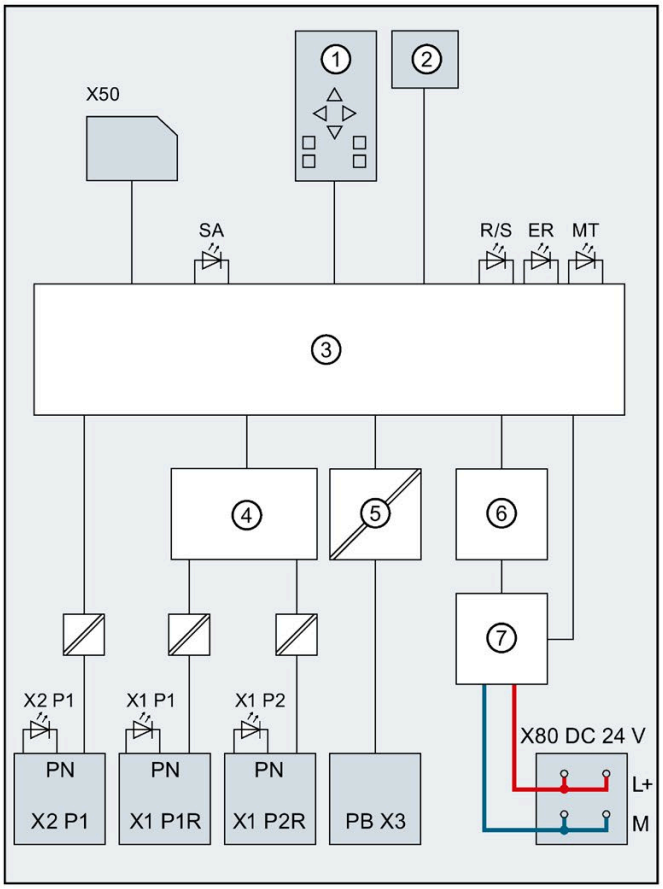

①	CPU with control and operating mode buttons	PN X1 P2 R	PROFINET interface X1 port 2
②	Display	PN X2 P1	PROFINET interface X2 port 1
③	Electronics	PB X3	PROFIBUS interface X3
④	PROFINET 2-port switch	L+	24 V DC supply voltage
⑤	PROFIBUS DP driver with electrical isolation	M	Ground
⑥	Backplane bus interface	SA	STOP-ACTIVE LED (yellow)
⑦	Internal supply voltage	R/S	RUN/STOP LED (yellow/green)
X50	SIMATIC memory card	ER	ERROR LED (red)
X80 24 V DC	Infeed of supply voltage	MT	MAINT LED (yellow)
PN X1 P1 R	PROFINET interface X1 port 1	X1 P1, X1 P2, X2 P1	LED Link TX/RX

Figure 3-1 Block diagram of the CPU 1516-3 PN/DP

Interrupts, error messages, diagnostics and system alarms

4

The LED displays of the CPU 1516-3 PN/DP are described below.

You will find additional information on "Interrupts" in the STEP 7 online help.

You can find additional information on the topics of "Diagnostics" and "System alarms" in the Diagnostics (http://support.automation.siemens.com/WW/view/en/59192926) function manual.

4.1 Status and error display of the CPU

LED display

The figure below shows the CPU 1516-3 PN/DP LEDs.

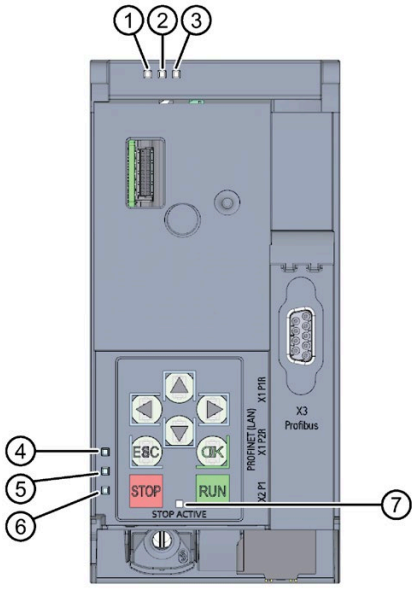

① RUN/STOP LED (green/yellow LED)
② ERROR LED (red LED)
③ MAINT LED (yellow LED)
④ LINK RX/TX LED for port X1 P1 (yellow/green LED)
⑤ LINK RX/TX LED for port X1 P2 (yellow/green LED)
⑥ LINK RX/TX LED for port X2 P1 (yellow/green LED)
⑦ STOP-ACTIVE LED

Figure 4-1 LED displays of the CPU 1516-3 PN/DP (without front panel and display)

Meaning of the RUN/STOP, ERROR and MAINT LEDs

The CPU 1516-3 PN/DP has three LEDs for displaying the current operating state and diagnostic status. The following table shows the meaning of the various combinations of colors for the RUN/STOP, ERROR and MAINT LEDs.

Table 4- 1 Meaning of the LEDs

RUN/STOP LED	ERROR LED	MAINT LED	Meaning
LED off	LED off	LED off	Missing or insufficient power supply on the CPU.
LED off	LED flashes red	LED off	An error has occurred.
LED lit green	LED off	LED off	CPU is in RUN mode. There are no events, requirements, errors, etc.
LED lit green	LED flashes red	LED off	A diagnostics event is pending.
LED lit green	LED off	LED lit yellow	Maintenance demanded for the plant. You need to check/replace the affected hardware within a short period of time.
			Active Force job
LED lit green	LED off	LED flashes yellow	Bad configuration
LED lit yellow	LED flashes red	LED off	A diagnostics event is pending.
LED lit yellow	LED off	LED flashes yellow	Firmware update successfully completed.
LED lit yellow	LED off	LED off	CPU is in STOP mode.
LED lit yellow	LED flashes red	LED flashes yellow	The program on the SIMATIC memory card is causing an error.
			Firmware update using SIMATIC memory card has failed.
			The CPU has detected an error state. Additional information is available via the CPU diagnostic buffer.
LED flashes yellow	LED off	LED off	CPU is performing internal activities during STOP, e.g. startup after STOP.
			Download of the user program from the SIMATIC memory card
			CPU is executing a program with active breakpoint.
LED flashes yellow/green	LED off	LED off	Startup (transition from STOP → RUN)
LED flashes yellow/green	LED flashes red	LED flashes yellow	Startup (CPU booting)
			Test of LEDs during startup, inserting a module.
			LED flashing test

Meaning of LINK RX/TX LED

Each port has a LINK RX/TX LED. The table below shows the various "LED scenarios" of the ports of the CPU 1516-3 PN/DP.

Table 4- 2 Meaning of the LED

LINK TX/RX LED	Meaning
LED off	There is no Ethernet connection between the PROFINET interface of the PROFINET device and the communication partner. No data is currently being sent/received via the PROFINET interface. There is no LINK connection.
LED flashes green	The CPU is performing an "LED flash test".
LED lit green	There is an Ethernet connection between the PROFINET interface of your PROFINET device and a communication partner.
LED flashes yellow/green	Data is currently being received/sent by a communication partner in the Ethernet via the PROFINET interface of the PROFINET device.

Note

"LED" instruction

You can read the status (e.g. "On" or "Off") of LEDs of a CPU or a module using the "LED" instruction. Note, however, that it is not possible to read the LED status of the LINK RX/TX LEDs on all S7-1500 CPUs.

You can find additional information on the "LED" instruction in the STEP 7 online help.

Meaning of STOP-ACTIVE LED

The following table shows the meaning of the STOP-ACTIVE LED for the CPU 1516-3 PN/DP.

Table 4- 3 Meaning of the LED

STOP-ACTIVE LED	Meaning
■ LED lit yellow	The CPU has been switched to STOP mode using the STOP button. • As long as the STOP-ACTIVE LED is lit, switching the CPU to RUN mode is only possible using the RUN button. • The CPU can then no longer be set to RUN mode via display operation or via online functions. The state of the buttons is retained at power-off. If the CPU should not start up automatically after a power-on, you have to keep the STOP button pressed during startup until the STOP-ACTIVE LED is activated. • If automatic startup is to be reliably prevented after a power-on, the STOP button has to be kept pressed during the startup of the CPU until the STOP-ACTIVE LED is activated.
□ LED off	• The CPU has been set to STOP mode using the display or programming device/PC and not with the STOP button on the device. • The CPU is in RUN mode.

Technical specifications

5

The following table shows the technical specifications as of 05/2021. You can find a data sheet including daily updated technical specifications on the Internet (https://support.industry.siemens.com/cs/ww/en/pv/6ES7516-3AN02-0AB0/td?dl=en).

Article number	6ES7516-3AN02-0AB0
General information	
Product type designation	CPU 1516-3 PN/DP
HW functional status	FS01
Firmware version	V2.9
Product function	
• I&M data	Yes; I&M0 to I&M3
• Isochronous mode	Yes; Distributed and central; with minimum OB 6x cycle of 375 µs (distributed) and 1 ms (central)
Engineering with	
• STEP 7 TIA Portal configurable/integrated from version	V17 (FW V2.9) / V16 (FW V2.8) or higher; with older TIA Portal versions configurable as 6ES7516-3AN01-0AB0
Configuration control	
via dataset	Yes
Display	
Screen diagonal [cm]	6.1 cm
Control elements	
Number of keys	8
Mode buttons	2
Supply voltage	
Type of supply voltage	24 V DC
permissible range, lower limit (DC)	19.2 V
permissible range, upper limit (DC)	28.8 V
Reverse polarity protection	Yes
Mains buffering	
• Mains/voltage failure stored energy time	5 ms
• Repeat rate, min.	1/s
Input current	
Current consumption (rated value)	0.85 A
Current consumption, max.	1.1 A
Inrush current, max.	2.4 A; Rated value
I^2t	0.02 $A^2 \cdot s$
Power	
Infeed power to the backplane bus	12 W
Power consumption from the backplane bus (balanced)	6.7 W
Power loss	
Power loss, typ.	7 W

Article number	6ES7516-3AN02-0AB0
Memory	
Number of slots for SIMATIC memory card	1
SIMATIC memory card required	Yes
Work memory	
• integrated (for program)	1 Mbyte
• integrated (for data)	5 Mbyte
Load memory	
• Plug-in (SIMATIC Memory Card), max.	32 Gbyte
Backup	
• maintenance-free	Yes
CPU processing times	
for bit operations, typ.	10 ns
for word operations, typ.	12 ns
for fixed point arithmetic, typ.	16 ns
for floating point arithmetic, typ.	64 ns
CPU-blocks	
Number of elements (total)	8 000; Blocks (OB, FB, FC, DB) and UDTs
DB	
• Number range	1 ... 60 999; subdivided into: number range that can be used by the user: 1 ... 59 999, and number range of DBs created via SFC 86: 60 000 ... 60 999
• Size, max.	5 Mbyte; For DBs with absolute addressing, the max. size is 64 KB
FB	
• Number range	0 ... 65 535
• Size, max.	1 Mbyte
FC	
• Number range	0 ... 65 535
• Size, max.	1 Mbyte
OB	
• Size, max.	1 Mbyte
• Number of free cycle OBs	100
• Number of time alarm OBs	20
• Number of delay alarm OBs	20
• Number of cyclic interrupt OBs	20; With minimum OB 3x cycle of 250 µs
• Number of process alarm OBs	50
• Number of DPV1 alarm OBs	3
• Number of isochronous mode OBs	3
• Number of technology synchronous alarm OBs	2
• Number of startup OBs	100

Article number	6ES7516-3AN02-0AB0
• Number of asynchronous error OBs	4
• Number of synchronous error OBs	2
• Number of diagnostic alarm OBs	1
Nesting depth	
• per priority class	24
Counters, timers and their retentivity	
S7 counter	
• Number	2 048
Retentivity	
– adjustable	Yes
IEC counter	
• Number	Any (only limited by the main memory)
Retentivity	
– adjustable	Yes
S7 times	
• Number	2 048
Retentivity	
– adjustable	Yes
IEC timer	
• Number	Any (only limited by the main memory)
Retentivity	
– adjustable	Yes
Data areas and their retentivity	
Retentive data area (incl. timers, counters, flags), max.	512 kbyte; In total; available retentive memory for bit memories, timers, counters, DBs, and technology data (axes): 472 KB
Extended retentive data area (incl. timers, counters, flags), max.	5 Mbyte; When using PS 6 0W 24/48/60 V DC HF
Flag	
• Size, max.	16 kbyte
• Number of clock memories	8; 8 clock memory bit, grouped into one clock memory byte
Data blocks	
• Retentivity adjustable	Yes
• Retentivity preset	No
Local data	
• per priority class, max.	64 kbyte; max. 16 KB per block
Address area	
Number of IO modules	8 192; max. number of modules / submodules

Article number	6ES7516-3AN02-0AB0
I/O address area	
• Inputs	32 kbyte; All inputs are in the process image
• Outputs	32 kbyte; All outputs are in the process image
per integrated IO subsystem	
– Inputs (volume)	8 kbyte
– Outputs (volume)	8 kbyte
per CM/CP	
– Inputs (volume)	8 kbyte
– Outputs (volume)	8 kbyte
Subprocess images	
• Number of subprocess images, max.	32
Hardware configuration	
Number of distributed IO systems	64; A distributed I/O system is characterized not only by the integration of distributed I/O via PROFINET or PROFIBUS communication modules, but also by the connection of I/O via AS-i master modules or links (e.g. IE/PB-Link)
Number of DP masters	
• integrated	1
• Via CM	8; A maximum of 8 CMs/CPs (PROFIBUS, PROFINET, Ethernet) can be inserted in total
Number of IO Controllers	
• integrated	2
• Via CM	8; A maximum of 8 CMs/CPs (PROFIBUS, PROFINET, Ethernet) can be inserted in total
Rack	
• Modules per rack, max.	32; CPU + 31 modules
• Number of lines, max.	1
PtP CM	
• Number of PtP CMs	the number of connectable PtP CMs is only limited by the number of available slots
Time of day	
Clock	
• Type	Hardware clock
• Backup time	6 wk; At 40 °C ambient temperature, typically
• Deviation per day, max.	10 s; Typ.: 2 s
Operating hours counter	
• Number	16

Article number	6ES7516-3AN02-0AB0
Clock synchronization	
• supported	Yes
• to DP, master	Yes
• in AS, master	Yes
• in AS, slave	Yes
• on Ethernet via NTP	Yes
Interfaces	
Number of PROFINET interfaces	2
Number of PROFIBUS interfaces	1
1. Interface	
Interface types	
• RJ 45 (Ethernet)	Yes; X1
• Number of ports	2
• integrated switch	Yes
Protocols	
• IP protocol	Yes; IPv4
• PROFINET IO Controller	Yes
• PROFINET IO Device	Yes
• SIMATIC communication	Yes
• Open IE communication	Yes; Optionally also encrypted
• Web server	Yes
• Media redundancy	Yes
PROFINET IO Controller	
Services	
– PG/OP communication	Yes
– Isochronous mode	Yes
– Direct data exchange	Yes; Requirement: IRT and isochronous mode (MRPD optional)
– IRT	Yes
– PROFIenergy	Yes; per user program
– Prioritized startup	Yes; Max. 32 PROFINET devices
– Number of connectable IO Devices, max.	256; In total, up to 1 000 distributed I/O devices can be connected via AS-i, PROFIBUS or PROFINET
– Of which IO devices with IRT, max.	64
– Number of connectable IO Devices for RT, max.	256
– of which in line, max.	256
– Number of IO Devices that can be simultaneously activated/deactivated, max.	8; in total across all interfaces

Article number	6ES7516-3AN02-0AB0
– Number of IO Devices per tool, max.	8
– Updating times	The minimum value of the update time also depends on communication share set for PROFINET IO, on the number of IO devices, and on the quantity of configured user data
Update time for IRT	
– for send cycle of 250 µs	250 µs to 4 ms; Note: In the case of IRT with isochronous mode, the minimum update time of 375 µs of the isochronous OB is decisive
– for send cycle of 500 µs	500 µs to 8 ms
– for send cycle of 1 ms	1 ms to 16 ms
– for send cycle of 2 ms	2 ms to 32 ms
– for send cycle of 4 ms	4 ms to 64 ms
– With IRT and parameterization of "odd" send cycles	Update time = set "odd" send clock (any multiple of 125 µs: 375 µs, 625 µs ... 3 875 µs)
Update time for RT	
– for send cycle of 250 µs	250 µs to 128 ms
– for send cycle of 500 µs	500 µs to 256 ms
– for send cycle of 1 ms	1 ms to 512 ms
– for send cycle of 2 ms	2 ms to 512 ms
– for send cycle of 4 ms	4 ms to 512 ms
PROFINET IO Device	
Services	
– PG/OP communication	Yes
– Isochronous mode	No
– IRT	Yes
– PROFIenergy	Yes; per user program
– Shared device	Yes
– Number of IO Controllers with shared device, max.	4
– activation/deactivation of I-devices	Yes; per user program
– Asset management record	Yes; per user program
2. Interface	
Interface types	
• RJ 45 (Ethernet)	Yes; X2
• Number of ports	1
• integrated switch	No

Article number	6ES7516-3AN02-0AB0
Protocols	
• IP protocol	Yes; IPv4
• PROFINET IO Controller	Yes
• PROFINET IO Device	Yes
• SIMATIC communication	Yes
• Open IE communication	Yes; Optionally also encrypted
• Web server	Yes
• Media redundancy	No
PROFINET IO Controller	
Services	
– PG/OP communication	Yes
– Isochronous mode	No
– Direct data exchange	No
– IRT	No
– PROFIenergy	Yes; per user program
– Prioritized startup	No
– Number of connectable IO Devices, max.	32; In total, up to 1 000 distributed I/O devices can be connected via AS-i, PROFIBUS or PROFINET
– Number of connectable IO Devices for RT, max.	32
– of which in line, max.	32
– Number of IO Devices that can be simultaneously activated/deactivated, max.	8; in total across all interfaces
– Number of IO Devices per tool, max.	8
– Updating times	The minimum value of the update time also depends on communication share set for PROFINET IO, on the number of IO devices, and on the quantity of configured user data
Update time for RT	
– for send cycle of 1 ms	1 ms to 512 ms

Article number	6ES7516-3AN02-0AB0
PROFINET IO Device	
Services	
– PG/OP communication	Yes
– Isochronous mode	No
– IRT	No
– PROFIenergy	Yes; per user program
– Prioritized startup	No
– Shared device	Yes
– Number of IO Controllers with shared device, max.	4
– activation/deactivation of I-devices	Yes; per user program
– Asset management record	Yes; per user program
3. Interface	
Interface types	
• RS 485	Yes; X3
• Number of ports	1
Protocols	
• PROFIBUS DP master	Yes
• PROFIBUS DP slave	No
• SIMATIC communication	Yes
PROFIBUS DP master	
• Number of connections, max.	48; for the integrated PROFIBUS DP interface
• Number of DP slaves, max.	125; In total, up to 1 000 distributed I/O devices can be connected via AS-i, PROFIBUS or PROFINET
Services	
– PG/OP communication	Yes
– Equidistance	Yes
– Isochronous mode	Yes
– Activation/deactivation of DP slaves	Yes
Interface types	
RJ 45 (Ethernet)	
• 100 Mbps	Yes
• Autonegotiation	Yes
• Autocrossing	Yes
• Industrial Ethernet status LED	Yes
RS 485	
• Transmission rate, max.	12 Mbit/s

Article number	6ES7516-3AN02-0AB0
Protocols	
Number of connections	
• Number of connections, max.	256; via integrated interfaces of the CPU and connected CPs / CMs
• Number of connections reserved for ES/HMI/web	10
• Number of connections via integrated interfaces	128
• Number of S7 routing paths	16
Redundancy mode	
• H-Sync forwarding	Yes
Media redundancy	
– Media redundancy	only via 1st interface (X1)
– MRP	Yes; MRP Automanager according to IEC 62439-2 Edition 2.0, MRP Manager; MRP Client
– MRP interconnection, supported	Yes; as MRP ring node according to IEC 62439-2 Edition 3.0
– MRPD	Yes; Requirement: IRT
– Switchover time on line break, typ.	200 ms; For MRP, bumpless for MRPD
– Number of stations in the ring, max.	50
SIMATIC communication	
• PG/OP communication	Yes; encryption with TLS V1.3 pre-selected
• S7 routing	Yes
• Data record routing	Yes
• S7 communication, as server	Yes
• S7 communication, as client	Yes
• User data per job, max.	See online help (S7 communication, user data size)
Open IE communication	
• TCP/IP	Yes
– Data length, max.	64 kbyte
– several passive connections per port, supported	Yes
• ISO-on-TCP (RFC1006)	Yes
– Data length, max.	64 kbyte
• UDP	Yes
– Data length, max.	2 kbyte; 1 472 bytes for UDP broadcast
– UDP multicast	Yes; Max. 5 multicast circuits
• DHCP	Yes
• DNS	Yes

Article number	6ES7516-3AN02-0AB0
• SNMP	Yes
• DCP	Yes
• LLDP	Yes
• Encryption	Yes; Optional
Web server	
• HTTP	Yes; Standard and user pages
• HTTPS	Yes; Standard and user pages
OPC UA	
• Runtime license required	Yes; "Medium" license required
• OPC UA Client	Yes
– Application authentication	Yes
– Security policies	Available security policies: None, Basic128Rsa15, Basic256Rsa15, Basic256Sha256
– User authentication	"anonymous" or by user name & password
– Number of connections, max.	10
– Number of nodes of the client interfaces, max.	2 000
– Number of elements for one call of OPC_UA_NodeGetHandleList/OPC_UA_ReadList/OPC_UA_WriteList, max.	300
– Number of elements for one call of OPC_UA_NameSpaceGetIndexList, max.	20
– Number of elements for one call of OPC_UA_MethodGetHandleList, max.	100
– Number of simultaneous calls of the client instructions per connection (except OPC_UA_ReadList,OPC_UA_WriteList,OPC_UA_MethodCall), max.	1
– Number of simultaneous calls of the client instructions OPC_UA_ReadList,OPC_UA_WriteList and OPC_UA_MethodCall, max.	5
– Number of registerable nodes, max.	5 000
– Number of registerable method calls of OPC_UA_MethodCall, max.	100
– Number of inputs/outputs when calling OPC_UA_MethodCall, max.	20

Article number	6ES7516-3AN02-0AB0
• OPC UA Server	Yes; Data access (read, write, subscribe), method call, custom address space
– Application authentication	Yes
– Security policies	Available security policies: None, Basic128Rsa15, Basic256Rsa15, Basic256Sha256
– User authentication	"anonymous" or by user name & password
– GDS support (certificate management)	Yes
– Number of sessions, max.	48
– Number of accessible variables, max.	100 000
– Number of registerable nodes, max.	20 000
– Number of subscriptions per session, max.	20
– Sampling interval, min.	100 ms
– Publishing interval, min.	200 ms
– Number of server methods, max.	50
– Number of inputs/outputs per server method, max.	20
– Number of monitored items, max.	2 000; for 1 s sampling interval and 1 s send interval
– Number of nodes for user-defined server interfaces, max.	5 000
• Alarms and Conditions	Yes
– Number of program alarms	200
– Number of alarms for system diagnostics	100
Further protocols	
• MODBUS	Yes; MODBUS TCP
Isochronous mode	
Equidistance	Yes
S7 message functions	
Number of login stations for message functions, max.	64
Program alarms	Yes
Number of configurable program messages, max.	10 000; Program messages are generated by the "Program_Alarm" block, ProDiag or GRAPH
Number of loadable program messages in RUN, max.	5 000
Number of simultaneously active program alarms	
• Number of program alarms	1 000
• Number of alarms for system diagnostics	200
• Number of alarms for motion technology objects	160

Article number	6ES7516-3AN02-0AB0
Test commissioning functions	
Joint commission (Team Engineering)	Yes; Parallel online access possible for up to 8 engineering systems
Status block	Yes; Up to 8 simultaneously (in total across all ES clients)
Single step	No
Number of breakpoints	8
Status/control	
• Status/control variable	Yes
• Variables	Inputs/outputs, memory bits, DBs, distributed I/Os, timers, counters
• Number of variables, max.	
– of which status variables, max.	200; per job
– of which control variables, max.	200; per job
Forcing	
• Forcing	Yes
• Forcing, variables	Peripheral inputs/outputs
• Number of variables, max.	200
Diagnostic buffer	
• present	Yes
• Number of entries, max.	3 200
– of which powerfail-proof	500
Traces	
• Number of configurable Traces	4; Up to 512 KB of data per trace are possible
Interrupts/diagnostics/status information	
Diagnostics indication LED	
• RUN/STOP LED	Yes
• ERROR LED	Yes
• MAINT LED	Yes
• STOP ACTIVE LED	Yes
• Connection display LINK TX/RX	Yes

Article number	6ES7516-3AN02-0AB0
Supported technology objects	
Motion Control	Yes; Note: The number of technology objects affects the cycle time of the PLC program; selection guide via the TIA Selection Tool
• Number of available Motion Control resources for technology objects	2 400
• Required Motion Control resources	
– per speed-controlled axis	40
– per positioning axis	80
– per synchronous axis	160
– per external encoder	80
– per output cam	20
– per cam track	160
– per probe	40
• Positioning axis	
– Number of positioning axes at motion control cycle of 4 ms (typical value)	7
– Number of positioning axes at motion control cycle of 8 ms (typical value)	14
Controller	
• PID_Compact	Yes; Universal PID controller with integrated optimization
• PID_3Step	Yes; PID controller with integrated optimization for valves
• PID-Temp	Yes; PID controller with integrated optimization for temperature
Counting and measuring	
• High-speed counter	Yes
Standards, approvals, certificates	
Suitable for safety functions	No
Ambient conditions	
Ambient temperature during operation	
• horizontal installation, min.	-25 °C; No condensation
• horizontal installation, max.	60 °C; Display: 50 °C, at an operating temperature of typically 50 °C, the display is switched off
• vertical installation, min.	-25 °C; No condensation
• vertical installation, max.	40 °C; Display: 40 °C, at an operating temperature of typically 40 °C, the display is switched off
Ambient temperature during storage/transportation	
• min.	-40 °C
• max.	70 °C

Article number	6ES7516-3AN02-0AB0
Altitude during operation relating to sea level	
• Installation altitude above sea level, max.	5 000 m; Restrictions for installation altitudes > 2 000 m, see manual
Configuration	
Programming	
Programming language	
– LAD	Yes
– FBD	Yes
– STL	Yes
– SCL	Yes
– GRAPH	Yes
Know-how protection	
• User program protection/password protection	Yes
• Copy protection	Yes
• Block protection	Yes
Access protection	
• protection of confidential configuration data	Yes
• Password for display	Yes
• Protection level: Write protection	Yes
• Protection level: Read/write protection	Yes
• Protection level: Complete protection	Yes
Cycle time monitoring	
• lower limit	adjustable minimum cycle time
• upper limit	adjustable maximum cycle time
Dimensions	
Width	70 mm
Height	147 mm
Depth	129 mm
Weights	
Weight, approx.	845 g

General technical specifications

You can find information on the general technical specifications, such as standards and approvals, electromagnetic compatibility, protection class, etc., in the S7-1500, ET 200MP System Manual (http://support.automation.siemens.com/WW/view/en/59191792).

Dimensional drawing

A

This section contains the dimensional drawing of the module on the mounting rail, as well as a dimensional drawing with the front panel open. Always observe the specified dimensions for installation in cabinets, control rooms, etc.

Dimensional drawings for CPU 1516-3 PN/DP

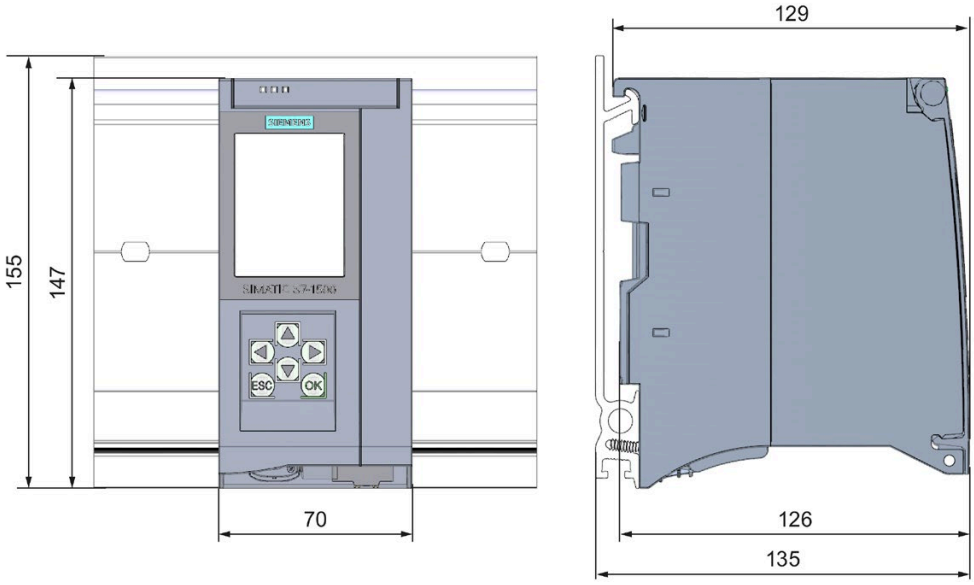

Figure A-1 Dimensional drawing of the CPU 1516-3 PN/DP

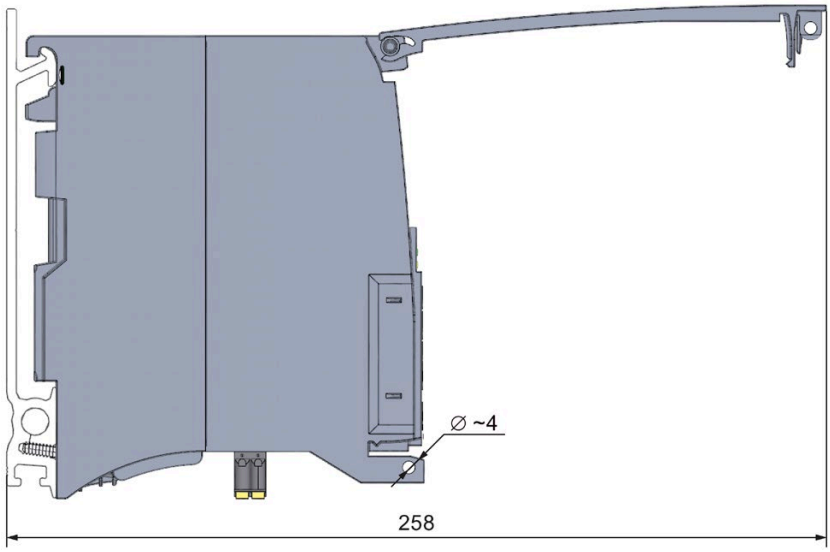

Figure A-2 CPU with open front panel

SIEMENS

Edition 11/2022

EQUIPMENT MANUAL

SIMATIC

S7-1500

CPU 1516T-3 PN/DP
6ES7516-3TN00-0AB0

support.industry.siemens.com

SIEMENS

SIMATIC

S7-1500
CPU 1516T-3 PN/DP
(6ES7516-3TN00-0AB0)

Equipment Manual

Introduction 1

Safety instructions 2

Product overview 3

Connecting up 4

Interrupts, error messages, diagnostics and system alarms 5

Technical specifications 6

Dimensional drawing A

11/2022
A5E40898375-AC

Legal information

Warning notice system

This manual contains notices you have to observe in order to ensure your personal safety, as well as to prevent damage to property. The notices referring to your personal safety are highlighted in the manual by a safety alert symbol, notices referring only to property damage have no safety alert symbol. These notices shown below are graded according to the degree of danger.

⚠ DANGER
indicates that death or severe personal injury **will** result if proper precautions are not taken.

⚠ WARNING
indicates that death or severe personal injury **may** result if proper precautions are not taken.

⚠ CAUTION
indicates that minor personal injury can result if proper precautions are not taken.

NOTICE
indicates that property damage can result if proper precautions are not taken.

If more than one degree of danger is present, the warning notice representing the highest degree of danger will be used. A notice warning of injury to persons with a safety alert symbol may also include a warning relating to property damage.

Qualified Personnel

The product/system described in this documentation may be operated only by **personnel qualified** for the specific task in accordance with the relevant documentation, in particular its warning notices and safety instructions. Qualified personnel are those who, based on their training and experience, are capable of identifying risks and avoiding potential hazards when working with these products/systems.

Proper use of Siemens products

Note the following:

⚠ WARNING
Siemens products may only be used for the applications described in the catalog and in the relevant technical documentation. If products and components from other manufacturers are used, these must be recommended or approved by Siemens. Proper transport, storage, installation, assembly, commissioning, operation and maintenance are required to ensure that the products operate safely and without any problems. The permissible ambient conditions must be complied with. The information in the relevant documentation must be observed.

Trademarks

All names identified by ® are registered trademarks of Siemens AG. The remaining trademarks in this publication may be trademarks whose use by third parties for their own purposes could violate the rights of the owner.

Disclaimer of Liability

We have reviewed the contents of this publication to ensure consistency with the hardware and software described. Since variance cannot be precluded entirely, we cannot guarantee full consistency. However, the information in this publication is reviewed regularly and any necessary corrections are included in subsequent editions.

Siemens AG
Digital Industries
Postfach 48 48
90026 NÜRNBERG
GERMANY

A5E40898375-AC
Ⓟ 10/2022 Subject to change

Copyright © Siemens AG 2017 - 2022.
All rights reserved

Table of contents

1 Introduction 5

1.1 Guide documentation S7-1500/ET 200MP 6
1.1.1 Information classes S7-1500/ET 200MP 6
1.1.2 SIMATIC Technical Documentation 7

2 Safety instructions 10

2.1 Security information 10

3 Product overview 11

3.1 New functions 11
3.2 Application 13
3.3 Hardware properties 19
3.4 Firmware functions 21
3.5 Operating and display elements 26
3.5.1 Front view of the CPU with closed front panel 26
3.5.2 Front view of the CPU without front flap 28
3.5.3 Rear view of the CPU 29
3.6 Mode selector switch 29

4 Connecting up 30

5 Interrupts, error messages, diagnostics and system alarms 34

5.1 Status and error display of the CPU 34

6 Technical specifications 37

A Dimensional drawing 38

Introduction

1

Purpose of the documentation

This manual supplements the system manual of the S7-1500 automation system/ET 200MP distributed I/O system as well as the function manuals. This manual contains a description of the module-specific information. The system-related functions are described in the system manual. All system-spanning functions are described in the function manuals.

The information provided in this equipment manual and the system manual enables you to commission the CPU .

Conventions

STEP 7: In this documentation, "STEP 7" is used as a synonym for all versions of the configuration and programming software "STEP 7 (TIA Portal)".

Please also observe notes marked as follows:

NOTE

A note contains important information on the product described in the documentation, on the handling of the product or on the section of the documentation to which particular attention should be paid.

Recycling and disposal

For environmentally friendly recycling and disposal of your old equipment, contact a certified electronic waste disposal company and dispose of the equipment according to the applicable regulations in your country.

Industry Mall

The Industry Mall is the catalog and order system of Siemens AG for automation and drive solutions on the basis of Totally Integrated Automation (TIA) and Totally Integrated Power (TIP).

You can find catalogs for all automation and drive products on the Internet (https://mall.industry.siemens.com).

1.1 Guide documentation S7-1500/ET 200MP

1.1.1 Information classes S7-1500/ET 200MP

The documentation for the SIMATIC S7-1500 automation system and the ET 200MP distributed I/O system is arranged into three areas.
This arrangement enables you to access the specific content you require. Changes and supplements to the manuals are documented in a Product Information.
You can download the documentation free of charge from the Internet (https://support.industry.siemens.com/cs/ww/en/view/109742691).

Basic information

The System Manual and Getting Started describe in detail the configuration, installation, wiring and commissioning of the SIMATIC S7-1500 and ET 200MP systems.
The STEP 7 online help supports you in the configuration and programming.
Examples:

- Getting Started S7-1500
- S7-1500/ET 200MP System Manual
- Online help TIA Portal

Device information

Equipment manuals contain a compact description of the module-specific information, such as properties, wiring diagrams, characteristics and technical specifications.
Examples:

- Equipment Manuals CPUs
- Equipment Manuals Interface Modules
- Equipment Manuals Digital Modules
- Equipment Manuals Analog Modules
- Equipment Manuals Communications Modules
- Equipment Manuals Technology Modules
- Equipment Manuals Power Supply Modules

General information

The function manuals contain detailed descriptions on general topics relating to the SIMATIC S7-1500 and ET 200MPsystems.
Examples:

- Function Manual Diagnostics
- Function Manual Communication
- Function Manual Motion Control
- Function Manual Web Server
- Function Manual Cycle and Response Times
- PROFINET Function Manual
- PROFIBUS Function Manual

Product Information

Changes and supplements to the manuals are documented in a Product Information. The Product Information takes precedence over the device and system manuals.
You can find the latest Product Information on the S7-1500 and ET 200MP systems on the Internet (https://support.industry.siemens.com/cs/de/en/view/68052815).

Manual Collection S7-1500/ET 200MP

The Manual Collection contains the complete documentation on the SIMATIC S7-1500 automation system and the ET 200MP distributed I/O system gathered together in one file.
You can find the Manual Collection on the Internet.
(https://support.industry.siemens.com/cs/ww/en/view/86140384)

SIMATIC S7-1500 comparison list for programming languages

The comparison list contains an overview of which instructions and functions you can use for which controller families.
You can find the comparison list on the Internet
(https://support.industry.siemens.com/cs/ww/en/view/86630375).

1.1.2 SIMATIC Technical Documentation

Additional SIMATIC documents will complete your information. You can find these documents and their use at the following links and QR codes.
The Industry Online Support gives you the option to get information on all topics. Application examples support you in solving your automation tasks.

Overview of the SIMATIC Technical Documentation

Here you will find an overview of the SIMATIC documentation available in Siemens Industry Online Support:

Industry Online Support International (https://support.industry.siemens.com/cs/ww/en/view/109742705)

Watch this short video to find out where you can find the overview directly in Siemens Industry Online Support and how to use Siemens Industry Online Support on your mobile device:

Quick introduction to the technical documentation of automation products per video (https://support.industry.siemens.com/cs/us/en/view/109780491)

YouTube video: Siemens Automation Products - Technical Documentation at a Glance (https://youtu.be/TwLSxxRQQsA)

mySupport

With "mySupport" you can get the most out of your Industry Online Support.

Registration	You must register once to use the full functionality of "mySupport". After registration, you can create filters, favorites and tabs in your personal workspace.
Support requests	Your data is already filled out in support requests, and you can get an overview of your current requests at any time.
Documentation	In the Documentation area you can build your personal library.
Favorites	You can use the "Add to mySupport favorites" to flag especially interesting or frequently needed content. Under "Favorites", you will find a list of your flagged entries.
Recently viewed articles	The most recently viewed pages in mySupport are available under "Recently viewed articles".
CAx data	The CAx data area gives you access to the latest product data for your CAx or CAe system. You configure your own download package with a few clicks: • Product images, 2D dimension drawings, 3D models, internal circuit diagrams, EPLAN macro files • Manuals, characteristics, operating manuals, certificates • Product master data

You can find "mySupport" on the Internet. (https://support.industry.siemens.com/My/ww/en)

Application examples

The application examples support you with various tools and examples for solving your automation tasks. Solutions are shown in interplay with multiple components in the system - separated from the focus on individual products.

You can find the application examples on the Internet.
(https://support.industry.siemens.com/cs/ww/en/ps/ae)

Safety instructions 2

2.1 Security information

Siemens provides products and solutions with industrial security functions that support the secure operation of plants, systems, machines and networks.

In order to protect plants, systems, machines and networks against cyber threats, it is necessary to implement – and continuously maintain – a holistic, state-of-the-art industrial security concept. Siemens' products and solutions constitute one element of such a concept.

Customers are responsible for preventing unauthorized access to their plants, systems, machines and networks. Such systems, machines and components should only be connected to an enterprise network or the internet if and to the extent such a connection is necessary and only when appropriate security measures (e.g. firewalls and/or network segmentation) are in place.

For additional information on industrial security measures that may be implemented, please visit (https://www.siemens.com/industrialsecurity).

Siemens' products and solutions undergo continuous development to make them more secure. Siemens strongly recommends that product updates are applied as soon as they are available and that the latest product versions are used. Use of product versions that are no longer supported, and failure to apply the latest updates may increase customers' exposure to cyber threats.

To stay informed about product updates, subscribe to the Siemens Industrial Security RSS Feed visit (https://www.siemens.com/cert).

Product overview

3

3.1 New functions

This section contains an overview of the most important new firmware functions of the CPU compared to the predecessor CPU (V2.9).

New functions of the CPU in firmware version V3.0

New functions	Applications	Customer benefits
Communication of the CPU		
SNMP network management protocol	A simple configuration option is available for using SNMP services. For new configurations, this is disabled by default in line with "Security-by-Default".	Can be enabled/disabled in the CPU properties. Community strings are configurable.
OPC UA server – Reading the diagnostic status of the own address space	By using the OPC UA instruction for reading ("OPC_UA_ReadList"), the own namespace of the OPC UA Server can be accessed. This allows you to read out the following statuses and react to them in the user program: • Status of the own OPC UA server • Status of the connections of OPC UA clients • Status of the session • Status of subscriptions	In this way, connection problems can be quickly detected, for example, and the plant availability can be increased.
OPC UA server – Time stamping of the source time of nodes	By using the OPC UA instruction for writing ("OPC_UA_WriteList"), it is possible to change the "SourceTimestamp" as well as the status code of an OPC UA variable (node).	Distinction between the "source" and "server" time possible
OPC UA server – Increase of the configuration limits	The following configuration limits have been increased: • Possible number of nodes in the server interface • Maximum possible number of subscriptions per session • For subscription, the recommendation for monitored values was increased	Further applications for CPUs as OPC UA servers
Web server of the CPU		
New Web API methods	Many new API methods extend your access options to the CPU via the Web API.	Additional applications for the web server
Dynamic management of certificates	The web server certificate for HTTPS communication can now also be managed via the OPC UA GDS mechanism, without separate download of the hardware configuration.	Flexible certificate management

New functions	Applications	Customer benefits
Allow data access only via Web API	They limit the functionality of the web server to the web API based functions. This means that only encrypted communication via HTTPS is possible.	Higher security of communication via web server
Technology functions of the CPU		
Axis functions	Save absolute encoder adjustment for device replacement	Saving the adjustment values with the "MC_SaveAbsoluteEncoderData" instruction saves having to perform the absolute encoder adjustment again after a device replacement.
	The "MC_Home" instruction supports the new "Incremental encoder adjustment" homing mode.	Extended scope of functions
	Active homing of absolute encoders is possible.	Extended scope of functions
	Absolute encoder adjustment/incremental encoder adjustment of non-operational encoders.	The function enables the transfer of actual values of the operational encoder to a non-operational encoder.
	The "MC_Power" instruction supports coasting-down.	Extended scope of functions "MC_Power" instruction
	The hardware limit switches are configurable as traversable/non-traversable.	Extended scope of functions
	For axes in a synchronous system, the dynamic filter enables dynamic adaptation of axes with higher dynamic responses to the axis with the lowest dynamic response.	With the dynamic filter, axes with different inertia can be adjusted to each other. Optimization of a synchronous system
	Stop superimposed movements on the axis with the instruction "MC_HaltSuperimposed"	Use the instruction to stop a superimposed motion independently of the basic motion.
	With the "MC_MotionInSuperimposed" instruction, you specify motion setpoints for the axis that are determined cyclically by the application for additional distance, velocity and acceleration and are additive to the basic motion.	By specifying superimposed motion setpoints, you can optimize the motion profile of a basic motion.
Synchronous operation functions	Velocity gearing	Via a variable gear ratio, synchronous axes can follow the velocity of a positioning axis.
	Synchronization in advance using leading value distance starting from current leading value position in camming	Extended scope of functions
Trace functionality of the CPU	The S7-1500 CPU supports up to 64 configured signals per trace.	Number of configurable signals per trace extended
	Long-term trace: The S7-1500 CPU supports cycle-granular recording of up to 64 different tags in a .csv file over a long period (e.g. hours, days).	Better diagnostic possibilities when analyzing the course of signals over a long period of time

Reference

You can find an overview of all new functions, improvements and revisions in the respective firmware versions on the Internet (https://support.industry.siemens.com/cs/ww/en/view/109478459).

3.2 Application

SIMATIC S7-1500 is the modular control system for a wide variety of automation applications in discrete automation.

SIMATIC S7-1500 is the cost-effective and convenient solution for a broad range of tasks and offers the following advantages:

- Modular, fanless design
- Simple realization of distributed structures
- User-friendly handling

Areas of application of the SIMATIC S7-1500 automation system include, for example:

- Special-purpose machines
- Textile machinery
- Packaging machines
- General mechanical engineering
- Controller engineering
- Machine tool engineering
- Installation engineering
- Electrical industry and crafts
- Automobile engineering
- Water/waste water
- Food & Beverage

Areas of application of the SIMATIC S7-1500R/H redundant system include, for example:

- Tunnels
- Airports (e.g. baggage conveyors)
- Subways
- Shipbuilding
- Wastewater treatment plants
- High-bay warehouses

Areas of application of the SIMATIC S7-1500T automation system for advanced motion control applications include, for example:

- Packaging machines
- Converting applications
- Assembly automation
- Pick-and-place automation
- Palletizers

Several CPUs with various levels of performance and a comprehensive range of modules with many convenient features are available. Fail-safe CPUs enable use in fail-safe applications. The modular design allows you to use only the modules that you need for your application. The controller can be retrofitted with additional modules at any time to expand its range of tasks.

High industrial suitability due to the high resistance to EMC, shock and vibration enable universal use of the SIMATIC S7-1500, S7-1500R/H and S7-1500T automation systems.

Performance segments of standard CPUs

The CPUs can be used for smaller and mid-range applications, as well as for the high-end range of machine and plant automation.

Table 3-1 Standard CPUs

CPU	Performance segment	PROFIBUS interfaces	PROFINET IO RT/IRT interfaces	PROFINET IO RT interface	Basic PROFINET functionality	Work memory	Processing time for bit operations
CPU 1511-1 - PN	Standard CPU for small to mid-range applications	--	1	--	--	1.8 MB	25 ns
CPU 1513-1 - PN	Standard CPU for mid-range applications	--	1	--	--	3.1 MB	25 ns
CPU 1515-2 - PN	Standard CPU for mid-range to large applications	--	1	1	--	5.5 MB	6 ns
CPU 1516-3 - PN/DP	Standard CPU for demanding applications and communication tasks	1	1	1	--	9.5 MB	6 ns
CPU 1517-3 - PN/DP	Standard CPU for demanding applications and communication tasks	1	1	1	--	10 MB	2 ns
CPU 1518-4 - PN/DP	Standard CPU for high-performance applications, demanding communication tasks and very short reaction times	1	1	1	1	66 MB	1 ns
CPU 1518-4 - PN/DP MFP	Standard CPU for high-performance applications, demanding communication tasks, very short reaction times and C/C++ blocks for the user program	1	1	1	1	116* MB	1 ns

* 50 MB of the integrated work memory is reserved for the function library of CPU runtime

Performance segments of redundant CPUs

The CPUs of the S7-1500R/H redundant system offer a high degree of reliability and system availability. A redundant configuration of the most important automation components reduces the likelihood of production downtimes and the consequences of component errors.

The higher the risks and costs of a production downtime, the more worthwhile the use of a redundant system. The avoidance of production downtimes compensates for the generally higher investment costs.

Table 3-2 Redundant CPUs

CPU	Performance segment	PROFIBUS interfaces	PROFINET IO RT/IRT interfaces	PROFINET IO RT interface	Basic PROFINET functionality	Work memory	Processing time for bit operations
CPU 1513R-1 PN	Redundant CPU for smaller to mid-range applications	--	1	--	--	3.1 MB	50 ns
CPU 1515R-2 PN	Redundant CPU for mid-range to large applications	--	1	--	1	5.5 MB	20 ns
CPU 1517H-3 PN	Redundant CPU for demanding applications and communication tasks	--	1	--	1	10 MB	4 ns
CPU 1518HF-4 PN	Fail-safe and redundant CPU for demanding applications and communication tasks	--	1	--	2	69 MB	4 ns

Performance segments of compact CPUs

The compact CPUs can be used for smaller to mid-range applications and have an integrated analog and digital on-board I/O as well as integrated technology functions.

Table 3-3 Compact CPUs

CPU	Performance segment	PROFIBUS interfaces	PROFINET IO RT/IRT interfaces	PROFINET IO RT interface	Basic PROFINET functionality	Work memory	Processing time for bit operations
CPU 1511C-1 PN	Compact CPU for small to mid-range applications	--	1	--	--	1.175 MB	60 ns
CPU 1512C-1 PN	Compact CPU for mid-range applications	--	1	--	--	1.25 MB	48 ns

The following table shows the specific properties of the Compact CPUs.

	CPU 1511C-1 PN	CPU 1512C-1 PN
Integrated analog inputs/outputs	5 inputs/2 outputs	5 inputs/2 outputs
Integrated digital inputs/outputs	16 inputs/16 outputs	32 inputs/32 outputs
High-speed counters	6	6
Frequency meters	6 (max. 100 kHz)	6 (max. 100 kHz)
Period duration measurement	6 channels	6 channels
Pulse width modulation (PWM output)	Max. 4 (up to 100 kHz)	Max. 4 (up to 100 kHz)
Pulse Train Output (PTO output)	Max. 4 (up to 100 kHz)	Max. 4 (up to 100 kHz)
Frequency output	Up to 100 kHz	Up to 100 kHz

Performance segments of technology CPUs

The technology CPUs can be used for low and mid-range applications, as well as for the high-end range of machine and plant automation. Because of their extended motion control functions, they are primarily used for drive control.

Table 3-4 Technology CPUs

CPU	Performance segment	PROFIBUS interfaces	PROFINET IO RT/IRT interfaces	PROFINET IO RT interface	Basic PROFINET functionality	Work memory	Processing time for bit operations
CPU 1511T-1 PN	Technology CPU for small to mid-range applications	--	1	--	--	1.95 MB	25 ns
CPU 1515T-2 PN	Technology CPU for mid-range to large applications	--	1	1	--	6 MB	6 ns
CPU 1516T-3 PN/-DP	Technology CPU for high-end applications and communication tasks	1	1	1	--	10.5 MB	6 ns
CPU 1517T-3 PN/-DP	Technology CPU for high-end applications and communication tasks	1	1	1	--	11 MB	2 ns
CPU 1518T-4 PN/DP	Technology CPU for high-performance motion control applications with large quantities, demanding communication tasks and very short reaction times	1	1	1	1	69 MB	1 ns
CPU 1511TF-1 PN CPU 1515TF-2 PN CPU 1516TF-3 P-N/DP CPU 1517TF-3 P-N/DP CPU 1518TF-4 PN/DP	These CPUs are described in the fail-safe CPUs.						

Performance segments of fail-safe CPUs

The fail-safe CPUs are intended for users who want to implement demanding standard and fail-safe applications both centrally and decentrally.

These fail-safe CPUs allow the processing of standard and safety programs on a single CPU. This allows fail-safe data to be evaluated in the standard user program. The integration also provides the system advantages and the extensive functionality of SIMATIC for fail-safe applications.

The fail-safe CPUs are certified for use in safety mode up to:

- Safety class (Safety Integrity Level) SIL 3 according to IEC 61508:2010
- Performance Level (PL) e and Category 4 according to ISO 13849-1:2015 or EN ISO 13849-1:2015

Additional password protection for F-configuration and F-program is set up for IT security.

Table 3-5 Fail-safe CPUs

CPU	Performance segment	PROFIBUS interfaces	PROFINET IO RT/IRT interfaces	PROFINET IO RT interface	Basic PROFINET functionality	Work memory	Processing time for bit operations
CPU 1511F-1 PN	Fail-safe CPU for small to mid-range applications	--	1	--	--	1.95 MB	25 ns
CPU 1511TF-1 PN	Fail-safe technology CPU for small to mid-range applications	--	1	--	--	1.95 MB	25 ns
CPU 1513F-1 PN	Fail-safe CPU for mid-range applications	--	1	--	--	3.4 MB	25 ns
CPU 1515F-2 PN	Fail-safe CPU for mid-range to large applications	--	1	1	--	6 MB	6 ns
CPU 1515TF-2 PN	Fail-safe technology CPU for high-end applications and communication tasks	--	1	1	--	6 MB	6 ns
CPU 1516F-3 PN/-DP	Fail-safe CPU for demanding applications and communication tasks	1	1	1	--	10.5 MB	6 ns
CPU 1516TF-3 P-N/DP	Fail-safe technology CPU for high-end applications and communication tasks	1	1	1	--	10.5 MB	6 ns
CPU 1517F-3 PN/-DP	Fail-safe CPU for demanding applications and communication tasks	1	1	1	--	11 MB	2 ns
CPU 1517TF-3 P-N/DP	Fail-safe technology CPU for high-end applications and communication tasks	1	1	1	--	11 MB	2 ns
CPU 1518F-4 PN/-DP	Fail-safe CPU for high-performance applications, demanding communication tasks and very short reaction times	1	1	1	1	69 MB	1 ns
CPU 1518F-4 PN/-DP MFP	Fail-safe CPU for high-performance applications, demanding communication tasks, very short reaction times and C/C++ blocks for the user program	1	1	1	1	119* MB	1 ns

* 50 MB of the integrated work memory is reserved for the function library of CPU runtime

CPU	Performance segment	PROFIBUS interfaces	PROFINET IO RT/IRT interfaces	PROFINET IO RT interface	Basic PROFINET functionality	Work memory	Processing time for bit operations
CPU 1518TF-4 PN/DP	Technology CPU for high-performance motion control applications with large quantities, demanding communication tasks and very short reaction times	1	1	1	1	69 MB	1 ns

* 50 MB of the integrated work memory is reserved for the function library of CPU runtime

In addition to the CPUs, further components such as SINAMICS drives dispose of integrated safety functions. Additional information about integrated safety functions in drives can be found in the manuals for the respective products.

Security Integrated

In conjunction with STEP 7, each CPU offers password-based know-how protection against unauthorized reading out or modification of the program blocks.

Copy protection provides reliable protection against unauthorized reproduction of program blocks. With copy protection, individual blocks on the SIMATIC memory card can be tied to its serial number so that the block can only be run if the configured memory card is inserted into the CPU.

In addition, various access rights can be assigned in the controller to different user groups using four different authorization levels.

Improved manipulation protection allows changed or unauthorized transfers of engineering data to be detected by the controller.

The use of an Ethernet CP (CP 1543-1) provides you with additional access protection through a firewall or possibilities to establish secure VPN connections.

Design and handling

All CPUs of the SIMATIC S7-1500 product series feature a display with plain text information. The display provides the user with information on the order numbers, firmware version, and serial number of all connected modules. In addition, the IP address of the CPU and other network settings can be adapted locally without a programming device. Error messages are shown on the display directly in plain text. When performing servicing, you can minimize plant downtimes by quickly accessing the diagnostics alarms. Detailed information about this and a multitude of other display functions is available in the SIMATIC S7-1500 Display Simulator (https://support.industry.siemens.com/cs/ww/en/view/109761758).

Uniform front connectors for all modules and integrated potential jumpers for flexible formation of potential groups simplify storage. Additional components such as circuit breakers, relays, etc., can be installed quickly and easily, since a DIN rail is implemented in the rail of the SIMATIC S7-1500. The CPUs of the SIMATIC S7-1500 product series can be expanded centrally and in a modular fashion with signal modules. Space-saving expansion enables flexible adaptation to each application.

The system cabling for digital signal modules enables fast and clear connection to sensors and actuators from the field (fully modular connection consisting of front connector modules,

connection cables and I/O modules), as well as easy wiring inside the control cabinet (flexible connection consisting of front connectors with assembled single conductors).

System diagnostics and alarms

Integrated system diagnostics is activated by default for the CPUs. The different types of diagnostics are configured instead of programmed. System diagnostics information and alarms from the drives are displayed consistently and in plain text:

- On the CPU display
- In STEP 7
- On the HMI
- On the Web server

This information is available in RUN mode, but also in STOP mode of the CPU. The diagnostic information is updated automatically when you configure new hardware components.

The CPU is available as a central interrupt server in up to three project languages. The HMI takes over the display in the project languages defined for the CPU. If you require alarm texts in additional languages, you can load them into your HMI via the configured connection. The CPU, STEP 7 and their HMI ensure data consistency without additional engineering steps. The maintenance work is easier.

3.3 Hardware properties

Article number

6ES7516-3TN00-0AB0

View of the module

The following figure shows the CPU 1516T-3 PN/DP.

Figure 3-1 CPU 1516T-3 PN/DP

NOTE

Protective film

Note that a protective film is attached to the display of the CPU when shipped from the factory. Remove the protective film if necessary.

Properties

The CPU 1516T-3 PN/DP has the following properties:

Property	Description	Additional information
CPU display	All CPUs of the SIMATIC S7-1500 product series feature a display with plain text information. The display provides information on order numbers, firmware version and serial numbers of all connected modules. In addition, you can set the IP address of the CPU and carry out further network settings. The display shows occurring error messages directly in plain text. In addition to the functions listed here, a multitude of other functions that are described in the SIMATIC S7-1500 Display Simulator are shown on the display.	• S7-1500, ET 200MP system manual (https://support.automation.siemens.com/WW/view/en/59191792) • SIMATIC S7-1500 Display Simulator (https://support.industry.siemens.com/cs/ww/en/view/109761758)

Property	Description	Additional information
Supply voltage	The 24 V DC supply voltage is supplied via a 4-pole connection plug that is located at the front of the CPU.	• Chapter Connecting up (Page 30) • S7-1500, ET 200MP system manual (https://support.automation.siemens.com/WW/view/en/59191792)
PROFIBUS DP		
PROFIBUS interface (X3)	The interface serves to connect to a PROFIBUS network.	PROFIBUS function manual (https://support.industry.siemens.com/cs/ww/en/view/59193579)
Operation of the CPU as DP master	In the role as a DP master, the CPU addresses the connected DP slaves. The CPU cannot assume the role of a DP slave.	
PROFINET IO		
PROFINET interface (X1 P1 R, X1 P2 R)	The interface has two ports. In addition to basic PROFINET functionality, its also supports PROFINET IO RT (real time) and IRT (isochronous real time).	PROFINET function manual (https://support.industry.siemens.com/cs/ww/en/view/49948856)
PROFINET interface (X2 P1)	The interface has two ports. In addition to basic PROFINET functionality, its also supports PROFINET IO RT (real time).	
Operation of the CPU as • IO controller • I-device	• **IO controller:** As an IO controller the CPU addresses the connected IO devices • **I-device:** As an I-device (intelligent IO device) the CPU is assigned to a higher-level IO controller and is used in the process as an intelligent pre-processing unit of sub-processes	

Accessories

You can find information on "Accessories/spare parts" in the S7-1500, ET 200MP system manual (https://support.automation.siemens.com/WW/view/en/59191792).

3.4 Firmware functions

Functions

The CPU supports the following functions:

Function	Description	Additional information
Integrated system diagnostics	The system automatically generates the messages for the system diagnostics and outputs these messages via a programming device/PC, HMI device, the web server or the integrated display. System diagnostics information is also available when the CPU is in STOP mode.	Diagnostics function manual (https://support.automation.siemens.com/WW/view/en/59191792)

Function	Description	Additional information
Integrated web server	The web server lets you access the CPU data by means of a network. Evaluations, diagnostics, and modifications are thus possible over long distances. Monitoring and evaluation is possible without STEP 7, only a web browser is required. Note that you must take appropriate measures to protect the CPU from compromise (such as restricting network access, using firewalls).	• Web server function manual (https://support.automation.siemens.com/WW/view/en/59193560) • Security with SIMATIC S7 controllers system manual (https://support.industry.siemens.com/cs/ww/en/view/90885010)
Integrated trace functionality	Trace functionality supports you in troubleshooting and/or optimizing the user program. You record device tags and evaluate the recordings with the trace and logic analyzer function. Tags are, for example, drive parameters or system and user tags of a CPU. The device saves the recordings. You can read out and permanently save the recordings with the configuration system (ES), if required. The trace and logic analyzer function is therefore suitable for monitoring highly dynamic processes. The trace record can also be displayed through the web server. With the project trace, you record the variables of multiple devices within a project, for example, a controller and a drive. With the long-term trace, you record up to 64 different tags for each cycle in a .csv file over a long period (e.g. hours, days).	Using the trace and logic analyzer function function manual (https://support.automation.siemens.com/WW/view/en/64897128)
OPC UA	With OPC UA, you can exchange data via an open and manufacturer-neutral communication protocol. The CPU can act as OPC UA server. The CPU acting as the OPC UA server can communicate with OPC UA clients. In turn, as an OPC UA client, the CPU can access an OPC UA server, allow the OPC UA server to run methods and read out information from the OPC UA server. Through OPC UA Companion Specification, methods can be specified in a uniform and vendor-neutral way. Using these specified methods, you can easily integrate devices from various manufacturers into your plants and production processes.	Communication function manual (https://support.industry.siemens.com/cs/ww/en/view/59192925)
Configuration control	You can use configuration control to operate different real hardware configurations with a configured maximum configuration of the hardware. This means especially in series machine manufacturing you have the option of operating/configuring different configuration variants of a machine with a single project.	System manual S7-1500/ET 200MP (https://support.automation.siemens.com/WW/view/en/59191792)
PROFINET IO		
RT (real time)	RT prioritizes PROFINET IO telegrams over standard telegrams. This ensures the required determinism in the automation technology. In this process the data is transferred via prioritized Ethernet telegrams.	PROFINET function manual (https://support.automation.siemens.com/WW/view/en/49948856)

Function	Description	Additional information
IRT (isochronous real time)	A reserved bandwidth within the send clock is available for IRT data. The reserved bandwidth ensures that the IRT data can be transmitted in time-synchronized intervals, unaffected by other high network loading (e.g. TCP/IP communication or additional real time communication). Update times with maximum determinism can be realized through IRT. Isochronous applications are possible with IRT.	
Isochronous mode	The Isochronous mode system property acquires measured values and process data and processes the signals in a fixed system clock. Isochronous mode thus contributes to high control quality and hence to greater manufacturing precision. Isochronous mode reduces possible fluctuations of the process reaction times to a minimum. Time-assured processing makes higher machine cycles possible.	
MRP (Media Redundancy Protocol)	It is possible to establish redundant networks via the Media Redundancy Protocol. Redundant transmission links (ring topology) ensure that an alternative communication path is made available if a transmission link fails. The PROFINET devices that are part of this redundant network form an MRP domain. RT operation is possible with the use of MRP.	
MRPD (Media Redundancy with Planned Duplication)	The advantage of the MRP extension MRPD is that, in the event of a failure of a device or a line in the ring, all other devices continue to be supplied with IO data without interruption and with short update times. MRPD is based on IRT and MRP. To realize media redundancy with short update times, the PROFINET devices participating in the ring send their data in both directions. The devices receive this data at both ring ports so that there is no reconfiguration time.	
Shared device	The "Shared device" function allows you to divide the modules or submodules of an IO device up among different IO controllers. Numerous IO controllers are often used in larger or widely distributed systems. Without the "Shared device" function, each I/O module of an IO device is assigned to the same IO controller. If sensors that are physically close to each other must provide data to different IO controllers, several IO devices are required. The "Shared device" function allows the modules or submodules of an IO device to be divided up among different IO controllers, thus allowing flexible automation concepts. You can, for example, combine I/O modules that are physically close to each other in one IO device.	
PROFIenergy	PROFIenergy is a PROFINET-based data interface for switching off consumers centrally and with full coordination during pause times regardless of the manufacturer or device type. The goal is that the process is only provided with the energy that is absolutely required. The majority of the energy is saved by the process; the PROFINET device itself only contributes a few watts of savings potential.	

Function	Description	Additional information
Integrated technology		
Motion Control	The CPUs support the S7-1500 Motion Control functions via the technology objects speed axes, positioning axes, synchronized axes, external encoders, cams, cam tracks and measuring probes. • Speed-controlled axis for controlling a drive with speed specification • Positioning axis for position-controlled positioning of a drive • Synchronous axis to interconnect with a master value. The axis is synchronized to the master axis position. • External encoder for detecting the actual position of an encoder and its use as a master value for synchronous operation • Cams, cam track for position-dependent generation of switching signals • Measuring input for fast, accurate and event-dependent sensing of actual positions You program the technology objects with Motion Control instructions according to PLCopen.	Motion Control topic page (https://support.industry.siemens.com/cs/ww/en/view/109751049)
Extended Motion Control functions	**The technology CPUs** of the SIMATIC S7-1500 also support extended Motion Control functions with the additional technology objects cam, leading axis proxy and kinematics: • Advanced synchronization functions – Synchronization with specification of the synchronous position – Actual value coupling – Leading value or following value shift in gearing or camming – Camming – Synchronization to specified positions – Cross-PLC synchronous operation – Velocity gearing • Up to 4 encoders or measuring systems as actual position for position control • Controlling of kinematics, such as – Cartesian portals – Roller pickers – Delta pickers – SCARA	Motion Control topic page (https://support.industry.siemens.com/cs/ww/en/view/109751049)
Integrated closed-loop control functionality	• PID Compact (continuous PID controller) • PID 3Step (step controller for integrating actuators) • PID Temp (temperature controller for heating and cooling with two separate actuators)	PID control function manual (https://support.industry.siemens.com/cs/ww/en/view/108210036)
Integrated safety		

Function	Description	Additional information
Know-how protection	The know-how protection protects user blocks against unauthorized access and modifications.	System manual S7-1500/ET 200MP (https://support.automation.siemens.com/WW/view/en/59191792)
Copy protection	Copy protection links user blocks to the serial number of the SIMATIC memory card or to the serial number of the CPU. User programs cannot run without the corresponding SIMATIC memory card or CPU.	
Access protection	Extended access protection provides high-quality protection against unauthorized configuration changes. You can use authorization levels to assign separate rights to different user groups.	
Integrity protection	The CPUs feature an integrity protection function by default. This helps to detect any manipulation of the engineering data on the SIMATIC Memory Card or during data transfer between the TIA Portal and the CPU, and to check communication from a SIMATIC HMI system to the CPU for possible manipulation of engineering data. The user receives a corresponding message about manipulation of engineering data detected by the integrity protection.	
Password provider	As an alternative to manual password input you can connect a password provider to STEP 7. A password provider offers the following advantages: • Convenient handling of passwords. STEP 7 reads the password automatically for the blocks. This saves you time. • Optimum block protection because the users do not know the password itself.	

3.5 Operating and display elements

3.5.1 Front view of the CPU with closed front panel

The figure below shows the front view of the CPU 1516T-3 PN/DP.

① LEDs for the current operating mode and diagnostics status of the CPU

② Display

③ Operator control buttons

Figure 3-2 View of the CPU 1516T-3 PN/DP (with front panel) – front

NOTE

Temperature range for display

To increase its service life, the display switches off at a temperature below the permitted operating temperature of the device. When the display cools down, it automatically switches itself on again. When the display is switched off, the LEDs continue to show the status of the CPU.

For more information on the temperatures at which the display switches itself on and off, refer to the Technical specifications (Page 37).

Removing and attaching the front panel with display

You can remove and attach the front panel with display during operation.

⚠ WARNING

Personal injury and damage to property may occur

If you pull or plug the front panel of an S7-1500 automation system during operation, personal injury or damage to property can occur in zone 2 hazardous areas.

Before you remove or fit the front panel, always switch off the power supply to the S7-1500 automation system in hazardous area zone 2.

Locking the front panel

You can lock the front panel to protect your CPU against unauthorized access.
You can attach a security seal or a padlock with a diameter of 3 mm to the front panel.

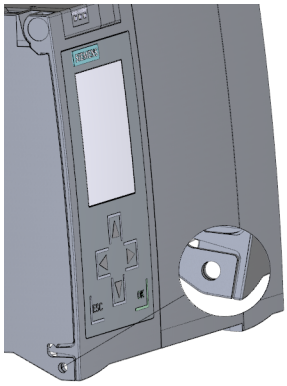

Figure 3-3 Locking latch on the CPU

In addition to the mechanical lock, you can also block access to a password-protected CPU on the display (local lock) and assign a password for the display. You can find additional information on the display, configurable protection levels and local locks in the S7-1500/ET 200MP (https://support.automation.siemens.com/WW/view/en/59191792) system manual.

Reference

You can find detailed information on the individual display options, a training course and a simulation of the available menu commands in the SIMATIC S7-1500 Display Simulator (https://support.industry.siemens.com/cs/ww/en/view/109761758).

3.5.2 Front view of the CPU without front flap

The figure below shows the operator controls and connection elements of the CPU 1516T-3 PN/DP.

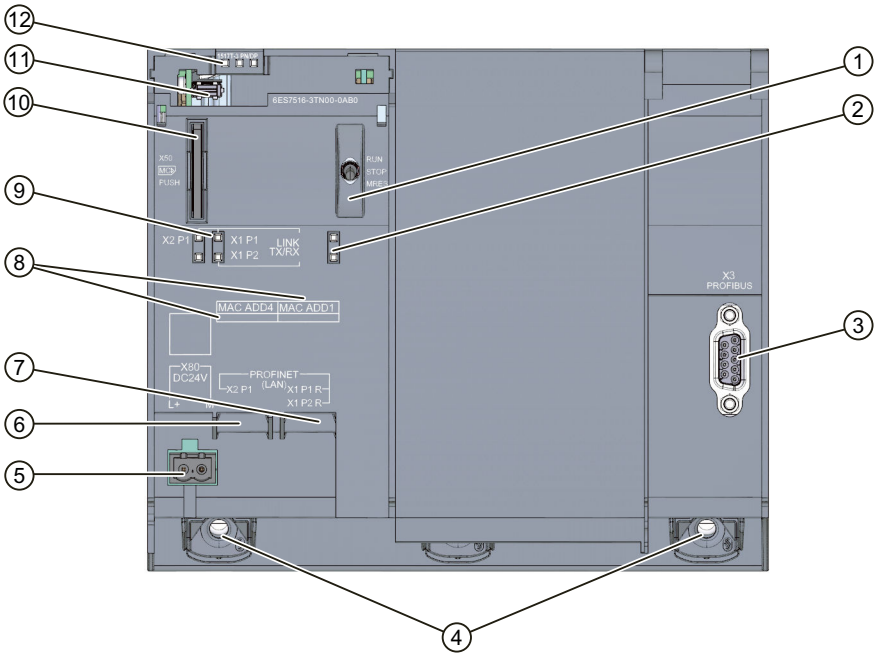

① Mode selector
② No function
③ PROFIBUS interface (X3)
④ Fixing screws
⑤ Connector for power supply
⑥ PROFINET IO interface (X2) with 1 port
⑦ PROFINET IO interface (X1) with 2 ports
⑧ MAC addresses of the interfaces
⑨ LEDs for the 3 ports of the PROFINET interfaces X1 and X2
⑩ Slot for the SIMATIC memory card
⑪ Display connection
⑫ LEDs for the current operating mode and diagnostics status of the CPU

Figure 3-4 View of the CPU 1516T-3 PN/DP (without front panel) – front

3.5.3 Rear view of the CPU

The following figure shows the connection elements on the back of the CPU 1516T-3 PN/DP.

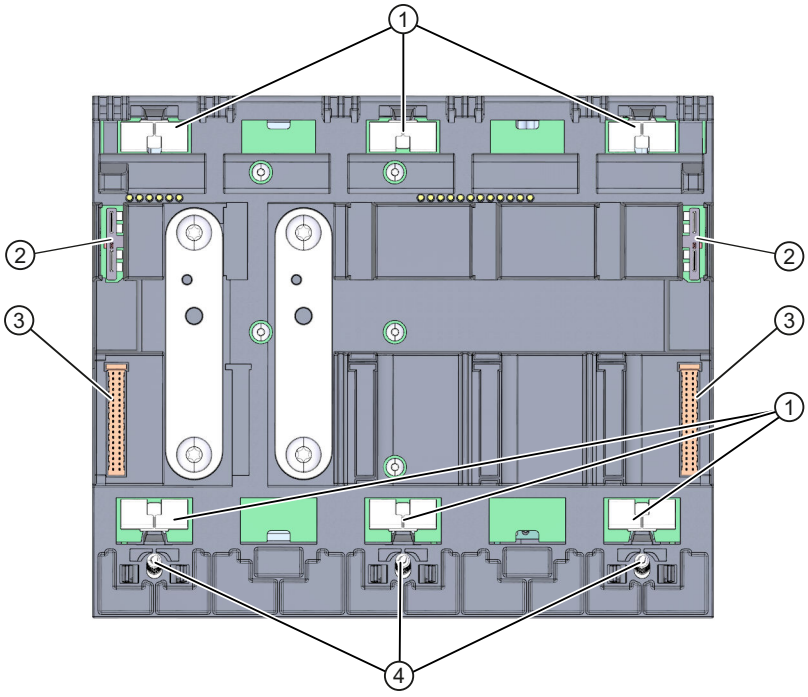

① Shield contact surfaces
② Plug-in connection for power supply
③ Plug-in connection for backplane bus
④ Fixing screws

Figure 3-5 View of the CPU 1516T-3 PN/DP – rear

3.6 Mode selector switch

You use the mode switches to set the operating mode of the CPU.
The following table shows the meaning of the corresponding operation of the operating mode buttons.

Table 3-6 Meaning of the mode switches

Operation of the mode switch	Meaning	Explanation
RUN	RUN mode	The CPU is executing the user program.
STOP	STOP mode	The user program is not being executed. (STOP ACTIVE LED lights up).
MRES	Memory reset	Position for CPU memory reset.

Connecting up

4

This section provides information on the pin assignment of the individual interfaces and the block diagram of the CPU 1516T-3 PN/DP.

24 V DC supply voltage (X80)

The connector for the power supply is plugged in when the CPU ships from the factory.
The following table shows the signal names and the descriptions of the pin assignment of the 24 V DC supply voltage.

Table 4-1 Pin assignment 24 V DC supply voltage

View Connector	Signal name [1]		Description
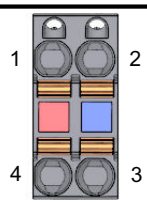	1	1L+	+ 24 V DC of the supply voltage
	2	1M	Ground of the supply voltage
	3	2M	Ground of the supply voltage for loop-through [2]
	4	2L+	+ 24 V DC of the supply voltage for loop-through [2]

[1] 1L+ and 2L+ as well as 1M and 2M are bridged internally

[2] Maximum 10 A permitted

If the CPU is supplied by a system power supply, it is not necessary to connect the 24 V supply.

PROFINET interface X1 with 2-port switch (X1 P1R and X1 P2R)

The assignment corresponds to the Ethernet standard for an RJ45 plug.

- When autonegotiation is deactivated, the RJ45 socket is allocated as a switch (MDI-X).
- When autonegotiation is activated, autocrossing is in effect and the RJ45 socket is allocated either as data terminal equipment (MDI) or a switch (MDI-X).

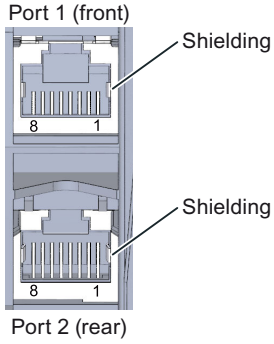

PROFINET interface X2 with 1 port (X2 P1)

The assignment corresponds to the Ethernet standard for an RJ45 plug.
Autocrossing is always active on X2. This means the RJ45 socket is allocated either as data terminal equipment (MDI) or a switch (MDI-X).

PROFIBUS interface X3

The table below shows the pin assignment of the PROFIBUS interface. The assignment corresponds to the standard assignment of an RS485 interface.

Table 4-2 PROFIBUS interface pin assignment

View	Signal name		Description
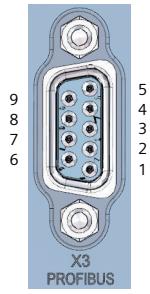	1	-	-
	2	-	-
	3	RxD/TxD-P	Data line B
	4	RTS	Request to send
	5	M5V2	Data reference potential (from station)
	6	P5V2	Supply plus (from station)
	7	-	-
	8	RxD/TxD-N	Data line A
	9	-	-

NOTE

Supply of I/O devices

The CPU 1516T-3 PN/DP does not provide a 24 V DC power supply on the PROFIBUS interface. I/O devices (for example, PC adapter USB 6ES7972-0CB20-0XA0) are only operational on the interface in conjunction with a plug-in power supply set for external power supply.

The innovative successor product, PC adapter USB A2, receives the required power supply via the USB port. This means it does not need a 24 V DC supply voltage and can be operated **without** a plug-in power supply set for external power supply.

Reference

You can find additional information on the topics of "Connecting the CPU" and "Accessories/spare parts" in the S7-1500, ET 200MP (https://support.automation.siemens.com/WW/view/en/59191792) system manual.

Assignment of the MAC addresses

CPU 1516T-3 PN/DP has two PROFINET interfaces, with the first interface having two ports. The PROFINET interfaces each have a MAC address, and each of the PROFINET ports has its own MAC address. The CPU 1516T-3 PN/DP therefore has five MAC addresses in total.

The MAC addresses of the PROFINET ports are needed for the LLDP protocol, for example for the neighborhood discovery function.

The number range of the MAC addresses is sequential. The first and last MAC addresses are lasered on the rating plate on the right side of each CPU 1516T-3 PN/DP.
The table below shows how the MAC addresses are assigned.

Table 4-3 Assignment of the MAC addresses

	Assignment	Labeling
MAC address 1	PROFINET interface X1 (visible in STEP 7 for accessible devices)	• Front, lasered • Right side, lasered (start of number range)
MAC address 2	Port X1 P1R (required for LLDP, for example)	• Front and right side, not lasered
MAC address 3	Port X1 P2R (required for LLDP, for example)	• Front and right side, not lasered
MAC address 4	PROFINET interface X2 (visible in STEP 7 for accessible devices)	• Front, lasered • Right side, not lasered
MAC address 5	Port X2 P1 (required for LLDP, for example)	• Front, not lasered • Right side, lasered (end of number range)

Block diagram

The figure below shows the block diagram of the CPU 1516T-3 PN/DP.

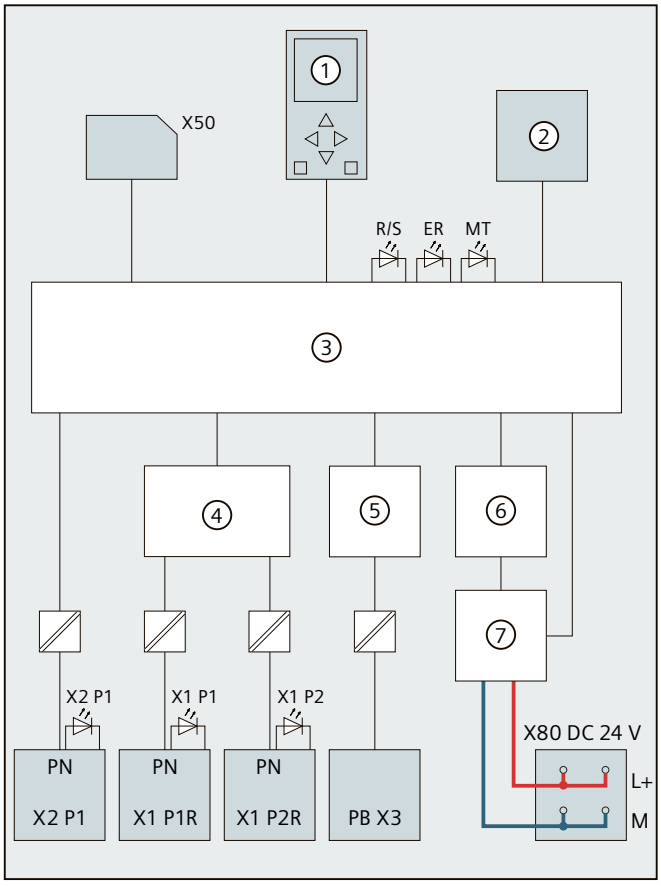

①	Display	PN X1 P1R	PROFINET interface X1 Port 1
②	RUN/STOP/MRES mode selector	PN X1 P2R	PROFINET interface X1 Port 2
③	Electronics	PN X2 P1	PROFINET interface X2 Port 1
④	PROFINET 2-port switch	PB X3	PROFIBUS interface X3
⑤	PROFIBUS DP driver	L+	24 V DC supply voltage
⑥	Backplane bus interface	M	Ground
⑦	Internal supply voltage	R/S	RUN/STOP LED (green/yellow)
X50	SIMATIC memory card	ER	ERROR LED (red)
X80 24 V DC	Infeed of supply voltage	MT	MAINT LED (yellow)
		X1 P1, X1 P2, X2 P1	LED Link TX/RX

Figure 4-1 Block diagram of the CPU 1516T-3 PN/DP

Interrupts, error messages, diagnostics and system alarms

5

The status and error displays of the CPU 1516T-3 PN/DP are described below.
You will find additional information on "Interrupts" in the STEP 7 online help.
You can find additional information on the topics of "Diagnostics" and "System alarms" in the Diagnostics (https://support.automation.siemens.com/WW/view/en/59192926) function manual.

5.1 Status and error display of the CPU

LED display

The figure below shows the LED displays of the CPU 1516T-3 PN/DP.

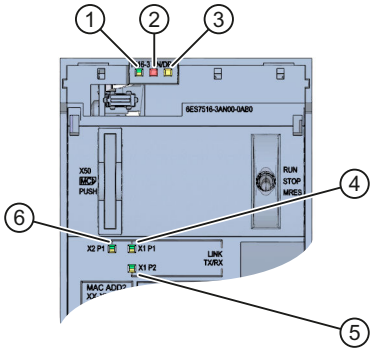

① RUN/STOP LED (yellow/green LED)
② ERROR LED (red LED)
③ MAINT LED (yellow LED)
④ LINK RX/TX LED for port X1 P1 (yellow/green LED)
⑤ LINK RX/TX LED for port X1 P2 (yellow/green LED)
⑥ LINK RX/TX LED for port X2 P1 (yellow/green LED)

Figure 5-1 LED display of the CPU 1516T-3 PN/DP (without front panel)

Meaning of the RUN/STOP, ERROR and MAINT LEDs

The CPU 1516T-3 PN/DP has three LEDs to signal the current operating status and diagnostics status. The following table shows the meaning of the various combinations of colors for the RUN/STOP, ERROR and MAINT LEDs.

Table 5-1 Meaning of the LEDs

RUN/STOP LED	ERROR LED	MAINT LED	Meaning
LED off	LED off	LED off	Missing or insufficient power supply on the CPU.

RUN/STOP LED	ERROR LED	MAINT LED	Meaning
LED off	LED flashes red	LED off	An error has occurred.
LED lit green	LED off	LED off	CPU is in RUN mode.
LED lit green	LED off	LED lit yellow	Maintenance demanded for the plant. The affected hardware must be checked/replaced within a short period of time.
			Active Force job
			OPC UA server of the CPU expects initial trust lists and CRLs via GDS Push function.
LED lit green	LED off	LED flashes yellow	Bad configuration
LED lit yellow	LED flashes red	LED off	A diagnostics event is pending.
LED lit yellow	LED off	LED flashes yellow	Firmware update using SIMATIC memory card successfully completed.
LED lit yellow	LED off	LED off	CPU is in STOP mode.
			CPU runs a program with active breakpoints. The program is at a breakpoint.
LED lit yellow	LED flashes red	LED flashes yellow	The program on the SIMATIC memory card is causing an error.
			Firmware update using SIMATIC memory card has failed.
			The CPU has detected an error state. Additional information is available via the CPU diagnostic buffer.
LED flashes yellow	LED off	LED off	CPU is performing internal activities during STOP, e.g. startup after STOP.
			Download of the user program from the SIMATIC memory card
			CPU carries out a program with active breakpoint. The program is presently moving from one breakpoint to another.
			Firmware update is being performed.
LED flashes yellow/green	LED off	LED off	Startup (transition from STOP → RUN)
LED flashes yellow/green	LED flashes red	LED flashes yellow	Startup (CPU booting)
			Test of LEDs during startup, inserting a module.
			LED flashing test

Meaning of LINK RX/TX LED

Each port has a LINK RX/TX LED. The table below shows the various "LED scenarios" of ports for the CPU 1516T-3 PN/DP.

Table 5-2 Meaning of the LED

LINK TX/RX LED	Meaning
LED off	There is no Ethernet connection between the PROFINET interface of the PROFINET device and the communication partner. No data is currently being sent/received via the PROFINET interface. There is no LINK connection.
LED flashes green	The "LED flashing test" is being performed.
LED lit green	There is an Ethernet connection between the PROFINET interface of your PROFINET device and a communication partner.
LED flashes yellow/green	Data is currently being received from or sent to a communications partner on Ethernet via the PROFINET interface of the PROFINET device.

NOTE

"LED" instruction

You can read the status (e.g. "On" or "Off") of LEDs of a CPU or a module using the "LED" instruction. Note, however, that it is not possible to read the LED status of the LINK RX/TX LEDs on all S7-1500 CPUs.

You can find additional information on the "LED" instruction in the STEP 7 online help.

Technical specifications 6

The following table shows the technical specifications as of 11/2022. You can find a data sheet including daily updated technical specifications on the Internet (https://support.industry.siemens.com/cs/ww/en/pv/6ES7516-3TN00-0AB0/td?dl=en).

General technical specifications

You can find information on the general technical specifications, such as standards and approvals, electromagnetic compatibility, protection class, etc., in the S7-1500, ET 200MP system manual (https://support.automation.siemens.com/WW/view/en/59191792).

Dimensional drawing

A

The dimensional drawing of the module on the mounting rail, as well as a dimensional drawing with open front cover, are provided in this section. Always observe the specified dimensions for installation in cabinets, control rooms, etc.

Dimensional drawings of the CPU 1516T-3 PN/DP

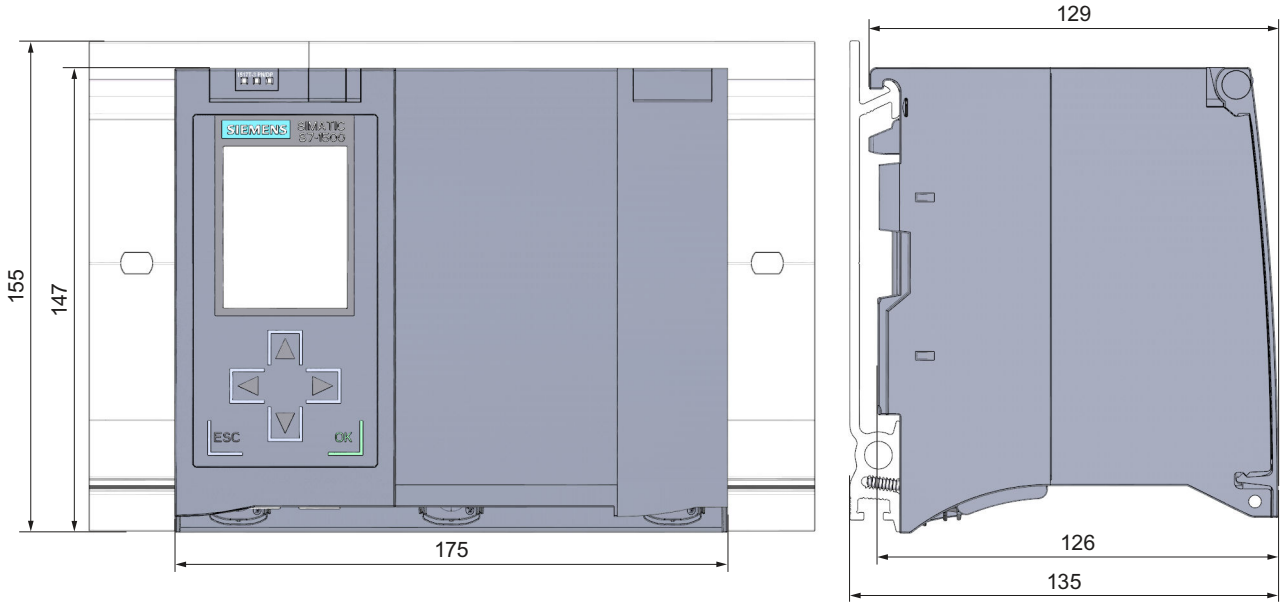

Figure A-1 Dimensional drawing of the CPU 1516T-3 PN/DP, front and side view

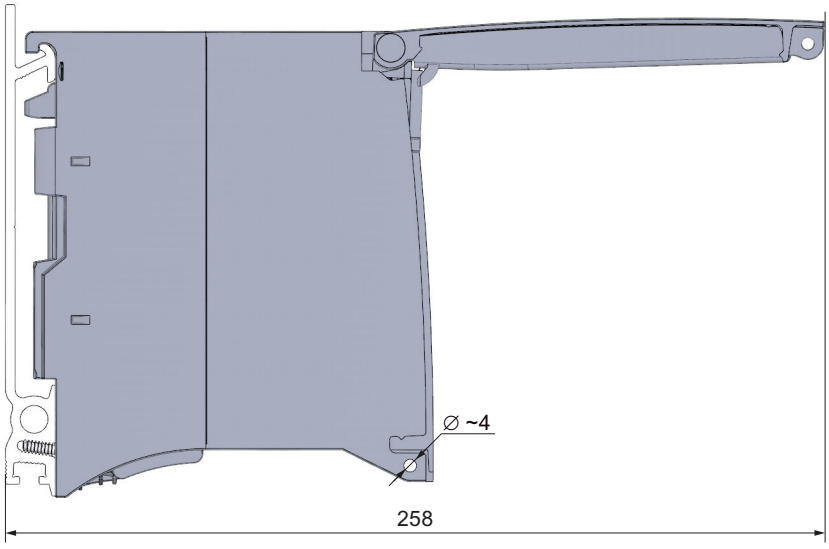

Figure A-2 Dimensional drawing of the CPU 1516T-3 PN/DP, side view with open front panel

SIEMENS

Edition 11/2022

EQUIPMENT MANUAL

SIMATIC

S7-1500

CPU 1517-3 PN/DP
6ES7517-3AP00-0AB0

support.industry.siemens.com

SIEMENS

SIMATIC

S7-1500
CPU 1517-3 PN/DP
(6ES7517-3AP00-0AB0)

Equipment Manual

Introduction 1

Safety instructions 2

Product overview 3

Wiring 4

Interrupts, error messages, diagnostics and system alarms 5

Technical specifications 6

Dimension drawing A

11/2022
A5E33594822-AE

Legal information

Warning notice system

This manual contains notices you have to observe in order to ensure your personal safety, as well as to prevent damage to property. The notices referring to your personal safety are highlighted in the manual by a safety alert symbol, notices referring only to property damage have no safety alert symbol. These notices shown below are graded according to the degree of danger.

⚠ DANGER
indicates that death or severe personal injury **will** result if proper precautions are not taken.

⚠ WARNING
indicates that death or severe personal injury **may** result if proper precautions are not taken.

⚠ CAUTION
indicates that minor personal injury can result if proper precautions are not taken.

NOTICE
indicates that property damage can result if proper precautions are not taken.

If more than one degree of danger is present, the warning notice representing the highest degree of danger will be used. A notice warning of injury to persons with a safety alert symbol may also include a warning relating to property damage.

Qualified Personnel

The product/system described in this documentation may be operated only by **personnel qualified** for the specific task in accordance with the relevant documentation, in particular its warning notices and safety instructions. Qualified personnel are those who, based on their training and experience, are capable of identifying risks and avoiding potential hazards when working with these products/systems.

Proper use of Siemens products

Note the following:

⚠ WARNING
Siemens products may only be used for the applications described in the catalog and in the relevant technical documentation. If products and components from other manufacturers are used, these must be recommended or approved by Siemens. Proper transport, storage, installation, assembly, commissioning, operation and maintenance are required to ensure that the products operate safely and without any problems. The permissible ambient conditions must be complied with. The information in the relevant documentation must be observed.

Trademarks

All names identified by ® are registered trademarks of Siemens AG. The remaining trademarks in this publication may be trademarks whose use by third parties for their own purposes could violate the rights of the owner.

Disclaimer of Liability

We have reviewed the contents of this publication to ensure consistency with the hardware and software described. Since variance cannot be precluded entirely, we cannot guarantee full consistency. However, the information in this publication is reviewed regularly and any necessary corrections are included in subsequent editions.

Siemens AG
Digital Industries
Postfach 48 48
90026 NÜRNBERG
GERMANY

A5E33594822-AE
Ⓟ 10/2022 Subject to change

Copyright © Siemens AG 2014 - 2022.
All rights reserved

Table of contents

1 Introduction 5

1.1 Guide documentation S7-1500/ET 200MP 6
1.1.1 Information classes S7-1500/ET 200MP 6
1.1.2 SIMATIC Technical Documentation 7

2 Safety instructions 10

2.1 Security information 10

3 Product overview 11

3.1 New functions 11
3.2 Application 12
3.3 Operating principle 19
3.4 Properties 19
3.5 Operating and display elements 24
3.5.1 Front view of the module with closed front panels 24
3.5.2 Front view of the module without front panels 26
3.5.3 Rear view of the module 27
3.6 Mode switch 27

4 Wiring 28

5 Interrupts, error messages, diagnostics and system alarms 32

5.1 Status and error display of the CPU 32

6 Technical specifications 35

A Dimension drawing 49

Introduction 1

Purpose of the documentation

This manual supplements the system manual of the S7-1500 automation system/ET 200MP distributed I/O system as well as the function manuals. This manual contains a description of the module-specific information. The system-related functions are described in the system manual. All system-spanning functions are described in the function manuals.

The information provided in this equipment manual and the system manual enables you to commission the CPU .

Conventions

STEP 7: In this documentation, "STEP 7" is used as a synonym for all versions of the configuration and programming software "STEP 7 (TIA Portal)".

Please also observe notes marked as follows:

NOTE

A note contains important information on the product described in the documentation, on the handling of the product or on the section of the documentation to which particular attention should be paid.

Recycling and disposal

For environmentally friendly recycling and disposal of your old equipment, contact a certified electronic waste disposal company and dispose of the equipment according to the applicable regulations in your country.

Industry Mall

The Industry Mall is the catalog and order system of Siemens AG for automation and drive solutions on the basis of Totally Integrated Automation (TIA) and Totally Integrated Power (TIP).

You can find catalogs for all automation and drive products on the Internet (https://mall.industry.siemens.com).

1.1 Guide documentation S7-1500/ET 200MP

1.1.1 Information classes S7-1500/ET 200MP

The documentation for the SIMATIC S7-1500 automation system and the ET 200MP distributed I/O system is arranged into three areas.
This arrangement enables you to access the specific content you require. Changes and supplements to the manuals are documented in a Product Information.
You can download the documentation free of charge from the Internet (https://support.industry.siemens.com/cs/ww/en/view/109742691).

Basic information

The System Manual and Getting Started describe in detail the configuration, installation, wiring and commissioning of the SIMATIC S7-1500 and ET 200MP systems.
The STEP 7 online help supports you in the configuration and programming.
Examples:

- Getting Started S7-1500
- S7-1500/ET 200MP System Manual
- Online help TIA Portal

Device information

Equipment manuals contain a compact description of the module-specific information, such as properties, wiring diagrams, characteristics and technical specifications.
Examples:

- Equipment Manuals CPUs
- Equipment Manuals Interface Modules
- Equipment Manuals Digital Modules
- Equipment Manuals Analog Modules
- Equipment Manuals Communications Modules
- Equipment Manuals Technology Modules
- Equipment Manuals Power Supply Modules

General information

The function manuals contain detailed descriptions on general topics relating to the SIMATIC S7-1500 and ET 200MPsystems.
Examples:

- Function Manual Diagnostics
- Function Manual Communication
- Function Manual Motion Control
- Function Manual Web Server
- Function Manual Cycle and Response Times
- PROFINET Function Manual
- PROFIBUS Function Manual

Product Information

Changes and supplements to the manuals are documented in a Product Information. The Product Information takes precedence over the device and system manuals.
You can find the latest Product Information on the S7-1500 and ET 200MP systems on the Internet (https://support.industry.siemens.com/cs/de/en/view/68052815).

Manual Collection S7-1500/ET 200MP

The Manual Collection contains the complete documentation on the SIMATIC S7-1500 automation system and the ET 200MP distributed I/O system gathered together in one file.
You can find the Manual Collection on the Internet.
(https://support.industry.siemens.com/cs/ww/en/view/86140384)

SIMATIC S7-1500 comparison list for programming languages

The comparison list contains an overview of which instructions and functions you can use for which controller families.
You can find the comparison list on the Internet
(https://support.industry.siemens.com/cs/ww/en/view/86630375).

1.1.2 SIMATIC Technical Documentation

Additional SIMATIC documents will complete your information. You can find these documents and their use at the following links and QR codes.
The Industry Online Support gives you the option to get information on all topics. Application examples support you in solving your automation tasks.

Overview of the SIMATIC Technical Documentation

Here you will find an overview of the SIMATIC documentation available in Siemens Industry Online Support:

Industry Online Support International (https://support.industry.siemens.com/cs/ww/en/view/109742705)

Watch this short video to find out where you can find the overview directly in Siemens Industry Online Support and how to use Siemens Industry Online Support on your mobile device:

Quick introduction to the technical documentation of automation products per video (https://support.industry.siemens.com/cs/us/en/view/109780491)

YouTube video: Siemens Automation Products - Technical Documentation at a Glance (https://youtu.be/TwLSxxRQQsA)

mySupport

With "mySupport" you can get the most out of your Industry Online Support.

Registration	You must register once to use the full functionality of "mySupport". After registration, you can create filters, favorites and tabs in your personal workspace.
Support requests	Your data is already filled out in support requests, and you can get an overview of your current requests at any time.
Documentation	In the Documentation area you can build your personal library.
Favorites	You can use the "Add to mySupport favorites" to flag especially interesting or frequently needed content. Under "Favorites", you will find a list of your flagged entries.
Recently viewed articles	The most recently viewed pages in mySupport are available under "Recently viewed articles".
CAx data	The CAx data area gives you access to the latest product data for your CAx or CAe system. You configure your own download package with a few clicks: • Product images, 2D dimension drawings, 3D models, internal circuit diagrams, EPLAN macro files • Manuals, characteristics, operating manuals, certificates • Product master data

You can find "mySupport" on the Internet. (https://support.industry.siemens.com/My/ww/en)

Application examples

The application examples support you with various tools and examples for solving your automation tasks. Solutions are shown in interplay with multiple components in the system - separated from the focus on individual products.

You can find the application examples on the Internet.
(https://support.industry.siemens.com/cs/ww/en/ps/ae)

Safety instructions 2

2.1 Security information

Siemens provides products and solutions with industrial security functions that support the secure operation of plants, systems, machines and networks.

In order to protect plants, systems, machines and networks against cyber threats, it is necessary to implement – and continuously maintain – a holistic, state-of-the-art industrial security concept. Siemens' products and solutions constitute one element of such a concept.

Customers are responsible for preventing unauthorized access to their plants, systems, machines and networks. Such systems, machines and components should only be connected to an enterprise network or the internet if and to the extent such a connection is necessary and only when appropriate security measures (e.g. firewalls and/or network segmentation) are in place.

For additional information on industrial security measures that may be implemented, please visit (https://www.siemens.com/industrialsecurity).

Siemens' products and solutions undergo continuous development to make them more secure. Siemens strongly recommends that product updates are applied as soon as they are available and that the latest product versions are used. Use of product versions that are no longer supported, and failure to apply the latest updates may increase customers' exposure to cyber threats.

To stay informed about product updates, subscribe to the Siemens Industrial Security RSS Feed visit (https://www.siemens.com/cert).

Product overview

3

3.1 New functions

This section contains an overview of the most important new firmware functions of the CPU compared to the predecessor CPU (V2.9).

New functions of the CPU in firmware version V3.0

New functions	Applications	Customer benefits
Communication of the CPU		
Network Management Protocol SNMP	A simple configuration option is available for using the SNMP services. For new configurations, this is disabled by default in terms of "Security-by-Default".	Can be enabled/disabled in the CPU properties. Community strings can be configured.
OPC UA server – Reading the diagnostic status of the own address space	By using the OPC UA instruction for reading ("OPC_UA_ReadList"), the own namespace of the OPC UA Server can be accessed. This allows you to read out the following statuses and react to them in the user program: • Status of the own OPC UA server • Status of the connections of OPC UA clients • Status of the session • Status of subscriptions	This allows connection problems to be quickly detected, for example, and plant availability to be increased.
OPC UA server – Time stamping of the source time of nodes	By using the OPC UA instruction for writing ("OPC_UA_WriteList") it is possible to change the "SourceTimestamp" as well as the status code of an OPC UA variable (node).	Distinction between the "source" and "server" time possible
OPC UA server – Increase of the quantity structures	The following quantity structures have been increased: • Possible number of nodes in the server interface • Maximum possible number of subscriptions per session • For subscription, the recommendation for observed values was increased.	Further applications for CPUs as OPC UA servers
Web server of the CPU		
New Web API methods:	Many new API methods extend your access options to the CPU via the Web API.	Additional applications for the web server
Dynamic management of certificates	The web server certificate for HTTPS communication can now also be managed via the OPC UA GDS mechanism, without separate download of the hardware configuration.	Flexible certificate management

New functions	Applications	Customer benefits
Allow data access only via Web API	They limit the functionality of the web server to the web API based functions. This means that only encrypted communication via HTTPS is possible.	Higher security of communication via web server
Technology functions of the CPU		
Axis functions	Save absolute encoder adjustment for device replacement	Saving the adjustment values with the "MC_SaveAbsoluteEncoderData" instruction saves having to perform the absolute encoder adjustment again after a device replacement.
	The "MC_Home" instruction supports the new "Incremental encoder adjustment" homing mode.	Extended scope of functions
	Active homing of absolute encoders is possible.	Extended scope of functions
	The "MC_Power" instruction supports coasting-down.	Extended scope of functions "MC_Power" instruction
	The hardware limit switches are configurable as traversable/non-traversable.	Extended scope of functions
	For axes in a synchronous system, the dynamic filter enables dynamic adaptation of axes with higher dynamic responses to the axis with the lowest dynamic response.	With the dynamic filter, axes with different inertia can be adjusted to each other. Optimization of a synchronous system
	Stop superimposed movements on the axis with the instruction "MC_HaltSuperimposed"	Use the instruction to stop a superimposed motion independently of the basic motion.
Trace functionality of the CPU	The S7-1500 CPU supports up to 64 configured signals per trace.	Number of configurable signals per trace
	Long-term trace: The S7-1500 CPU supports the cycle-granular recording of up to 64 different tags in a .csv file for a long time (hours, days, etc.)	Better diagnostic possibilities when analyzing the course of signals over a long period of time

Reference

You can find an overview of all new functions, improvements and revisions in the respective firmware versions on the Internet (https://support.industry.siemens.com/cs/ww/en/view/109478459).

3.2 Application

SIMATIC S7-1500 is the modular control system for a wide variety of automation applications in discrete automation.

SIMATIC S7-1500 is the cost-effective and convenient solution for a broad range of tasks and offers the following advantages:

- Modular, fanless design
- Simple realization of distributed structures
- User-friendly handling

Areas of application of the SIMATIC S7-1500 automation system include, for example:

- Special-purpose machines
- Textile machinery
- Packaging machines
- General mechanical engineering
- Controller engineering
- Machine tool engineering
- Installation engineering
- Electrical industry and crafts
- Automobile engineering
- Water/waste water
- Food & Beverage

Areas of application of the SIMATIC S7-1500R/H redundant system include, for example:

- Tunnels
- Airports (e.g. baggage conveyors)
- Subways
- Shipbuilding
- Wastewater treatment plants
- High-bay warehouses

Areas of application of the SIMATIC S7-1500T automation system for advanced motion control applications include, for example:

- Packaging machines
- Converting applications
- Assembly automation
- Pick-and-place automation
- Palletizers

Several CPUs with various levels of performance and a comprehensive range of modules with many convenient features are available. Fail-safe CPUs enable use in fail-safe applications. The modular design allows you to use only the modules that you need for your application. The controller can be retrofitted with additional modules at any time to expand its range of tasks.

High industrial suitability due to the high resistance to EMC, shock and vibration enable universal use of the SIMATIC S7-1500, S7-1500R/H and S7-1500T automation systems.

Performance segments of standard CPUs

The CPUs can be used for smaller and mid-range applications, as well as for the high-end range of machine and plant automation.

Table 3-1 Standard CPUs

CPU	Performance segment	PROFIBUS interfaces	PROFINET IO RT/IRT interfaces	PROFINET IO RT interface	Basic PROFINET functionality	Work memory	Processing time for bit operations
CPU 1511-1 - PN	Standard CPU for small to mid-range applications	--	1	--	--	1.8 MB	25 ns
CPU 1513-1 - PN	Standard CPU for mid-range applications	--	1	--	--	3.1 MB	25 ns
CPU 1515-2 - PN	Standard CPU for mid-range to large applications	--	1	1	--	5.5 MB	6 ns
CPU 1516-3 - PN/DP	Standard CPU for demanding applications and communication tasks	1	1	1	--	9.5 MB	6 ns
CPU 1517-3 - PN/DP	Standard CPU for demanding applications and communication tasks	1	1	1	--	10 MB	2 ns
CPU 1518-4 - PN/DP	Standard CPU for high-performance applications, demanding communication tasks and very short reaction times	1	1	1	1	66 MB	1 ns
CPU 1518-4 - PN/DP MFP	Standard CPU for high-performance applications, demanding communication tasks, very short reaction times and C/C++ blocks for the user program	1	1	1	1	116* MB	1 ns

* 50 MB of the integrated work memory is reserved for the function library of CPU runtime

Performance segments of redundant CPUs

The CPUs of the S7-1500R/H redundant system offer a high degree of reliability and system availability. A redundant configuration of the most important automation components reduces the likelihood of production downtimes and the consequences of component errors.

The higher the risks and costs of a production downtime, the more worthwhile the use of a redundant system. The avoidance of production downtimes compensates for the generally higher investment costs.

Table 3-2 Redundant CPUs

CPU	Performance segment	PROFIBUS interfaces	PROFINET IO RT/IRT interfaces	PROFINET IO RT interface	Basic PROFINET functionality	Work memory	Processing time for bit operations
CPU 1513R-1 PN	Redundant CPU for smaller to mid-range applications	--	1	--	--	3.1 MB	50 ns
CPU 1515R-2 PN	Redundant CPU for mid-range to large applications	--	1	--	1	5.5 MB	20 ns
CPU 1517H-3 PN	Redundant CPU for demanding applications and communication tasks	--	1	--	1	10 MB	4 ns
CPU 1518HF-4 PN	Fail-safe and redundant CPU for demanding applications and communication tasks	--	1	--	2	69 MB	4 ns

Performance segments of compact CPUs

The compact CPUs can be used for smaller to mid-range applications and have an integrated analog and digital on-board I/O as well as integrated technology functions.

Table 3-3 Compact CPUs

CPU	Performance segment	PROFIBUS interfaces	PROFINET IO RT/IRT interfaces	PROFINET IO RT interface	Basic PROFINET functionality	Work memory	Processing time for bit operations
CPU 1511C-1 PN	Compact CPU for small to mid-range applications	--	1	--	--	1.175 MB	60 ns
CPU 1512C-1 PN	Compact CPU for mid-range applications	--	1	--	--	1.25 MB	48 ns

The following table shows the specific properties of the Compact CPUs.

	CPU 1511C-1 PN	CPU 1512C-1 PN
Integrated analog inputs/outputs	5 inputs/2 outputs	5 inputs/2 outputs
Integrated digital inputs/outputs	16 inputs/16 outputs	32 inputs/32 outputs
High-speed counters	6	6
Frequency meters	6 (max. 100 kHz)	6 (max. 100 kHz)
Period duration measurement	6 channels	6 channels
Pulse width modulation (PWM output)	Max. 4 (up to 100 kHz)	Max. 4 (up to 100 kHz)
Pulse Train Output (PTO output)	Max. 4 (up to 100 kHz)	Max. 4 (up to 100 kHz)
Frequency output	Up to 100 kHz	Up to 100 kHz

Performance segments of technology CPUs

The technology CPUs can be used for low and mid-range applications, as well as for the high-end range of machine and plant automation. Because of their extended motion control functions, they are primarily used for drive control.

Table 3-4 Technology CPUs

CPU	Performance segment	PROFIBUS interfaces	PROFINET IO RT/IRT interfaces	PROFINET IO RT interface	Basic PROFINET functionality	Work memory	Processing time for bit operations
CPU 1511T-1 PN	Technology CPU for small to mid-range applications	--	1	--	--	1.95 MB	25 ns
CPU 1515T-2 PN	Technology CPU for mid-range to large applications	--	1	1	--	6 MB	6 ns
CPU 1516T-3 PN/-DP	Technology CPU for high-end applications and communication tasks	1	1	1	--	10.5 MB	6 ns
CPU 1517T-3 PN/-DP	Technology CPU for high-end applications and communication tasks	1	1	1	--	11 MB	2 ns
CPU 1518T-4 PN/DP	Technology CPU for high-performance motion control applications with large quantities, demanding communication tasks and very short reaction times	1	1	1	1	69 MB	1 ns
CPU 1511TF-1 PN CPU 1515TF-2 PN CPU 1516TF-3 P-N/DP CPU 1517TF-3 P-N/DP CPU 1518TF-4 PN/DP	These CPUs are described in the fail-safe CPUs.						

Performance segments of fail-safe CPUs

The fail-safe CPUs are intended for users who want to implement demanding standard and fail-safe applications both centrally and decentrally.

These fail-safe CPUs allow the processing of standard and safety programs on a single CPU. This allows fail-safe data to be evaluated in the standard user program. The integration also provides the system advantages and the extensive functionality of SIMATIC for fail-safe applications.

The fail-safe CPUs are certified for use in safety mode up to:

- Safety class (Safety Integrity Level) SIL 3 according to IEC 61508:2010
- Performance Level (PL) e and Category 4 according to ISO 13849-1:2015 or EN ISO 13849-1:2015

Additional password protection for F-configuration and F-program is set up for IT security.

Table 3-5 Fail-safe CPUs

CPU	Performance segment	PROFIBUS interfaces	PROFINET IO RT/IRT interfaces	PROFINET IO RT interface	Basic PROFINET functionality	Work memory	Processing time for bit operations
CPU 1511F-1 PN	Fail-safe CPU for small to mid-range applications	--	1	--	--	1.95 MB	25 ns
CPU 1511TF-1 PN	Fail-safe technology CPU for small to mid-range applications	--	1	--	--	1.95 MB	25 ns
CPU 1513F-1 PN	Fail-safe CPU for mid-range applications	--	1	--	--	3.4 MB	25 ns
CPU 1515F-2 PN	Fail-safe CPU for mid-range to large applications	--	1	1	--	6 MB	6 ns
CPU 1515TF-2 PN	Fail-safe technology CPU for high-end applications and communication tasks	--	1	1	--	6 MB	6 ns
CPU 1516F-3 PN/-DP	Fail-safe CPU for demanding applications and communication tasks	1	1	1	--	10.5 MB	6 ns
CPU 1516TF-3 P-N/DP	Fail-safe technology CPU for high-end applications and communication tasks	1	1	1	--	10.5 MB	6 ns
CPU 1517F-3 PN/-DP	Fail-safe CPU for demanding applications and communication tasks	1	1	1	--	11 MB	2 ns
CPU 1517TF-3 P-N/DP	Fail-safe technology CPU for high-end applications and communication tasks	1	1	1	--	11 MB	2 ns
CPU 1518F-4 PN/-DP	Fail-safe CPU for high-performance applications, demanding communication tasks and very short reaction times	1	1	1	1	69 MB	1 ns
CPU 1518F-4 PN/-DP MFP	Fail-safe CPU for high-performance applications, demanding communication tasks, very short reaction times and C/C++ blocks for the user program	1	1	1	1	119* MB	1 ns

* 50 MB of the integrated work memory is reserved for the function library of CPU runtime

CPU	Performance segment	PROFIBUS interfaces	PROFINET IO RT/IRT interfaces	PROFINET IO RT interface	Basic PROFINET functionality	Work memory	Processing time for bit operations
CPU 1518TF-4 PN/DP	Technology CPU for high-performance motion control applications with large quantities, demanding communication tasks and very short reaction times	1	1	1	1	69 MB	1 ns

* 50 MB of the integrated work memory is reserved for the function library of CPU runtime

In addition to the CPUs, further components such as SINAMICS drives dispose of integrated safety functions. Additional information about integrated safety functions in drives can be found in the manuals for the respective products.

Security Integrated

In conjunction with STEP 7, each CPU offers password-based know-how protection against unauthorized reading out or modification of the program blocks.

Copy protection provides reliable protection against unauthorized reproduction of program blocks. With copy protection, individual blocks on the SIMATIC memory card can be tied to its serial number so that the block can only be run if the configured memory card is inserted into the CPU.

In addition, various access rights can be assigned in the controller to different user groups using four different authorization levels.

Improved manipulation protection allows changed or unauthorized transfers of engineering data to be detected by the controller.

The use of an Ethernet CP (CP 1543-1) provides you with additional access protection through a firewall or possibilities to establish secure VPN connections.

Design and handling

All CPUs of the SIMATIC S7-1500 product series feature a display with plain text information. The display provides the user with information on the order numbers, firmware version, and serial number of all connected modules. In addition, the IP address of the CPU and other network settings can be adapted locally without a programming device. Error messages are shown on the display directly in plain text. When performing servicing, you can minimize plant downtimes by quickly accessing the diagnostics alarms. Detailed information about this and a multitude of other display functions is available in the SIMATIC S7-1500 Display Simulator (https://support.industry.siemens.com/cs/ww/en/view/109761758).

Uniform front connectors for all modules and integrated potential jumpers for flexible formation of potential groups simplify storage. Additional components such as circuit breakers, relays, etc., can be installed quickly and easily, since a DIN rail is implemented in the rail of the SIMATIC S7-1500. The CPUs of the SIMATIC S7-1500 product series can be expanded centrally and in a modular fashion with signal modules. Space-saving expansion enables flexible adaptation to each application.

The system cabling for digital signal modules enables fast and clear connection to sensors and actuators from the field (fully modular connection consisting of front connector modules,

connection cables and I/O modules), as well as easy wiring inside the control cabinet (flexible connection consisting of front connectors with assembled single conductors).

System diagnostics and alarms

Integrated system diagnostics is activated by default for the CPUs. The different types of diagnostics are configured instead of programmed. System diagnostics information and alarms from the drives are displayed consistently and in plain text:

- On the CPU display
- In STEP 7
- On the HMI
- On the Web server

This information is available in RUN mode, but also in STOP mode of the CPU. The diagnostic information is updated automatically when you configure new hardware components.

The CPU is available as a central interrupt server in up to three project languages. The HMI takes over the display in the project languages defined for the CPU. If you require alarm texts in additional languages, you can load them into your HMI via the configured connection. The CPU, STEP 7 and their HMI ensure data consistency without additional engineering steps. The maintenance work is easier.

3.3 Operating principle

Principle of operation

The CPU contains the operating system and executes the user program. The user program is located on the SIMATIC memory card and is processed in the work memory of the CPU.

The connection to the process is centralized or distributed via PROFINET or PROFIBUS with I/O modules.

The PROFINET interfaces on the CPU allow simultaneous communication with PROFINET devices, PROFINET controllers, HMI devices, programming devices, other controllers and other systems. CPU 1517-3 PN/DP supports operation as an IO controller and I-device.

Similarly to the PROFINET interface, the PROFIBUS interface available on the CPU allows communication with other devices. When you use the interface as PROFIBUS DP interface, the CPU on the PROFIBUS DP also assumes the role of a DP master.

3.4 Properties

Article number

6ES7517-3AP00-0AB0

View of the module

The following figure shows the CPU 1517-3 PN/DP.

Figure 3-1 CPU 1517-3 PN/DP

NOTE

Protective film

Note that a protective film is attached to the display of the CPU when shipped from the factory. Remove the protective film if necessary.

Properties

CPU 1517-3 PN/DP has the following technical properties:

- Communication:
  - Interfaces

    CPU 1517-3 PN/DP has three interfaces. Two interfaces for PROFINET and one for PROFIBUS.

    The **first PROFINET interface** (X1 P1, X1 P2) has two ports. In addition to PROFINET basic functionality, it also supports PROFINET IO RT (real-time) and IRT (isochronous real-time). PROFINET IO communication or real-time settings can be configured.

    Even with a send clock of 187.5 µs, IO communication and standard communication is possible via one cable.

    Port 1 and port 2 can also be used as ring ports for the configuration of redundant ring structures in Ethernet.

    The **second PROFINET interface (X2 P1)** has one port. In addition to PROFINET basic functionality, its also supports PROFINET IO RT (real-time). The basic functionality of PROFINET supports HMI communication, communication with the configuration

system, communication with a higher-level network (backbone, router, Internet) and communication with another machine or automation cell.

NOTE

IP subnets

The IP subnets of the two interfaces must be different. This means that the subnets of the IP addresses of the two interfaces must differ from each other.

The **third interface** (X3) is used to connect to a PROFIBUS network. When you use the interface as PROFIBUS DP interface, the CPU is the DP master in this case. The CPU cannot assume the role of a DP slave.

– OPC UA
  With OPC UA, data is exchanged via an open and vendor-neutral communication protocol. The CPU, as OPC UA server, can communicate with OPC UA clients such as HMI panels, SCADA systems, etc.

- Integrated Web server:
  A Web server is integrated in the CPU. You can read out the following information with the Web server:
  – Start page with general CPU information
  – Identification information
  – Contents of the diagnostics buffer
  – Query of module states
  – Firmware update
  – Alarms (without acknowledgment option)
  – Information about communication
  – PROFINET topology
  – Tag status, writing tags
  – Watch tables
  – Memory usage
  – User pages
  – Data logs (if used)
  – Online backup and restoration of the configuration.
  – Diagnostic information for the motion control technology objects
  – Display of trace recording stored on the SIMATIC memory card
  – Readout service data
  – Basic Web pages
  – Display of the Web server in 3 project languages, for example, comments and message texts
  – Recipes
  – User-defined Web pages
- Integrated technology:
  – Motion Control
    The Motion Control functionality uses technology objects to support speed-controlled axes, positioning axes, synchronous axes, external encoders, cams, cam tracks and measuring inputs, as well as PLCopen blocks for programming the motion control functionality.
    You can find a detailed description of the use of Motion Control and its configuration in

the S7-1500T Motion Control (https://support.industry.siemens.com/cs/ww/en/view/109751049) function manuals.

  - Integrated closed-loop control functionality
    - PID Compact (continuous PID controller)
    - PID 3Step (step controller for integrating actuators)
    - PID Temp (temperature controller for heating and cooling with two separate actuators)
- Trace functionality:
  - The trace functionality supports troubleshooting and optimization of the user program. You can find additional information on the trace functionality in the Using the Trace and Logic Analyzer (http://support.automation.siemens.com/WW/view/en/64897128) function manual.
- Integrated system diagnostics:
  - The alarms for the system diagnostics are automatically created by the system and displayed on a PG/PC, HMI device, Web server or the integrated display. System diagnostics information is also available when the CPU is in STOP mode.
- Integrated security:
  - Know-how protection
    The know-how protection protects user blocks against unauthorized access and modifications.
  - Copy protection
    Copy protection links user blocks to the serial number of the SIMATIC memory card or to the serial number of the CPU. User programs cannot run without the corresponding SIMATIC memory card or CPU.
  - Access protection
    Extended access protection provides high-quality protection against unauthorized configuration changes. You can use authorization levels to assign separate rights to different user groups.
  - Integrity protection
    The CPUs feature an integrity protection function by default. This helps to detect any manipulation of the engineering data on the SIMATIC Memory Card or during data transfer between the TIA Portal and the CPU, and to check communication from a SIMATIC HMI system to the CPU for possible manipulation of engineering data. The user receives a corresponding message about manipulation of engineering data detected by the integrity protection.
- Additional functions:
  - PROFIenergy
    You can find information on the topic of "PROFIenergy" in the PROFINET function manual (https://support.industry.siemens.com/cs/ww/en/view/49948856) and in the PROFINET specification on the Internet (http://www.profibus.com).
  - Shared device
    You can find information on the topic of "Shared device" in the PROFINET function manual (https://support.industry.siemens.com/cs/ww/en/view/49948856).

- Configuration control
  You can find information on the topic of "Configuration control" in the S7-1500, ET 200MP (http://support.automation.siemens.com/WW/view/en/59191792) system manual.
- Isochronous mode
  You can find information about the "Isochronous mode" topic in the PROFINET (https://support.industry.siemens.com/cs/ww/en/view/49948856) function manual.

Reference

You will find additional information on the topic of "Integrated security/Access protection" in the S7-1500, ET 200MP system manual (http://support.automation.siemens.com/WW/view/en/59191792).

3.5 Operating and display elements

3.5.1 Front view of the module with closed front panels

The following figure shows the front view of the CPU 1517-3 PN/DP.

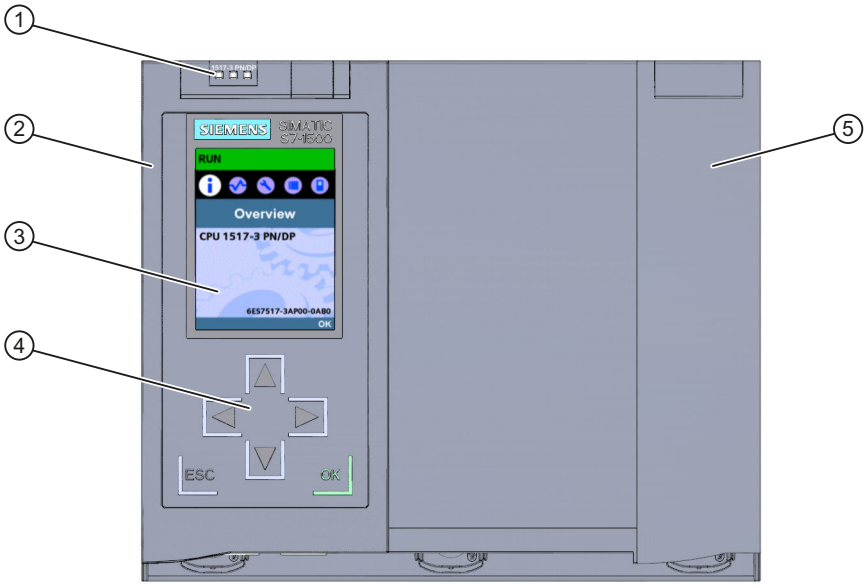

① LEDs for the current operating mode and diagnostics status of the CPU

② Front panel with display

③ Display

④ Operator control buttons

⑤ Front panel of the PROFIBUS interface

Figure 3-2 View of the CPU 1517-3 PN/DP (with front panels) - front

NOTE

Temperature range for display

To increase its service life, the display switches off at a temperature below the permitted operating temperature of the device. When the display cools down, it automatically switches itself on again. When the display is switched off, the LEDs continue to show the status of the CPU.

For more information on the temperatures at which the display switches itself on and off, refer to the Technical specifications (Page 35).

Removing and attaching the front panel with display

You can remove and attach the front panel with display during operation.

WARNING

Personal injury and damage to property may occur

If you pull or plug the front panel of an S7-1500 automation system during operation, personal injury or damage to property can occur in zone 2 hazardous areas.

Before you remove or fit the front panel, always switch off the power supply to the S7-1500 automation system in hazardous area zone 2.

Locking the front panel

You can lock the wide front panel with display as well as the narrow front panel of the PROFIBUS interface to protect your CPU against unauthorized access. You can attach a security seal or a padlock with a diameter of 3 mm to the front panels.

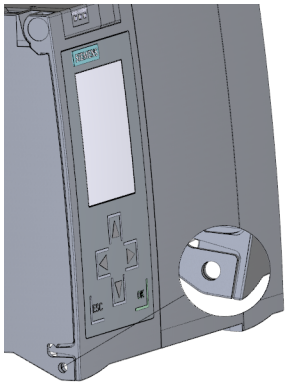

Figure 3-3 Locking latch on the CPU

In addition to the mechanical lock, you can also block access to a password-protected CPU on the display (local lock) and assign a password for the display. You can find additional information on the display, configurable protection levels and local locks in the S7-1500, ET 200MP (http://support.automation.siemens.com/WW/view/en/59191792) system manual.

Reference

You will find detailed information on the individual display options, a training course and a simulation of the available menu commands in the SIMATIC S7-1500 Display Simulator (https://support.industry.siemens.com/cs/ww/en/view/109761758).

3.5.2 Front view of the module without front panels

The following figure shows the operator controls and connection elements of the CPU 1517-3 PN/DP.

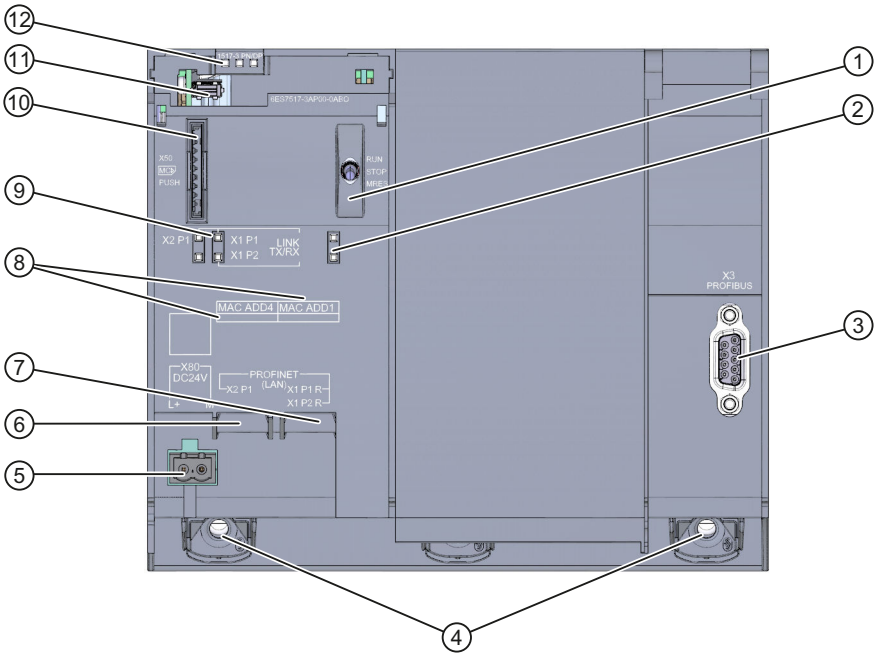

① Mode selector
② No function
③ PROFIBUS interface (X3)
④ Fixing screws
⑤ Connector for power supply
⑥ PROFINET IO interface (X2) with 1 port
⑦ PROFINET IO interface (X1) with 2 ports
⑧ MAC addresses of the interfaces
⑨ LEDs for the 3 ports of the PROFINET interfaces X1 and X2
⑩ Slot for the SIMATIC memory card
⑪ Display connector
⑫ LEDs for the current operating mode and diagnostic status of the CPU

Figure 3-4 View of the CPU 1517-3 PN/DP (without front panels) - front

3.5.3 Rear view of the module

The following figure shows the connection elements on the rear of the CPU 1517-3 PN/DP.

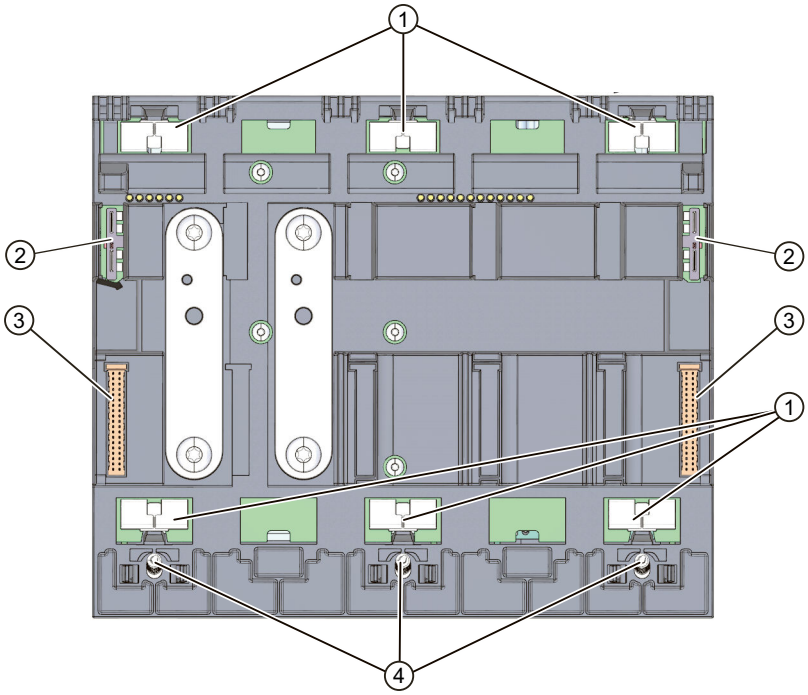

① Shield contact surfaces
② Plug-in connection for power supply
③ Plug-in connection for backplane bus
④ Fixing screws

Figure 3-5 View of the CPU 1517-3 PN/DP - rear

3.6 Mode switch

Use the mode switch to set the CPU operating mode.
The following table shows the position of the switch and the corresponding meaning.

Table 3-6 Mode switch settings

Position	Meaning	Explanation
RUN	RUN mode	The CPU is executing the user program.
STOP	STOP mode	The user program is not being executed.
MRES	Memory reset	Position for CPU memory reset.

Wiring

4

This section provides information on the terminal assignment of the individual interfaces and the block diagram of the CPU 1517-3 PN/DP.

24 V DC supply voltage (X80)

The connector for the power supply is plugged in when the CPU ships from the factory.
The following table shows the signal names and the descriptions of the pin assignment of the 24 V DC supply voltage.

Table 4-1 Pin assignment 24 V DC supply voltage

View Connector	Signal name [1]		Description
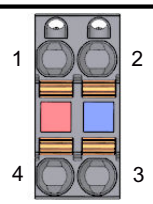	1	1L+	+ 24 V DC of the supply voltage
	2	1M	Ground of the supply voltage
	3	2M	Ground of the supply voltage for loop-through [2]
	4	2L+	+ 24 V DC of the supply voltage for loop-through [2]

[1] 1L+ and 2L+ as well as 1M and 2M are bridged internally

[2] Maximum 10 A permitted

If the CPU is supplied by a system power supply, it is not necessary to connect the 24 V supply.

PROFINET interface X1 with 2-port switch (X1 P1 R and X1 P2 R)

The assignment corresponds to the Ethernet standard for an RJ45 plug.

- When autonegotiation is deactivated, the RJ45 socket is allocated as a switch (MDI-X).
- When autonegotiation is activated, autocrossing is in effect and the RJ45 socket is allocated either as data terminal equipment (MDI) or a switch (MDI-X).

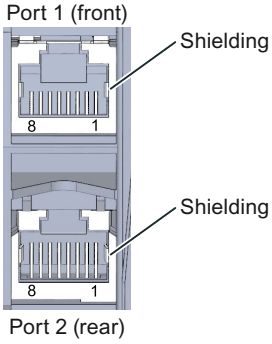

PROFINET interface X2 with 1 port (X2 P1)

The assignment corresponds to the Ethernet standard for an RJ45 plug.
Autocrossing is always active on X2. This means the RJ45 socket is allocated either as data terminal equipment (MDI) or a switch (MDI-X).

PROFIBUS interface X3

The table below shows the terminal assignment of the PROFIBUS interface. The assignment corresponds to the standard assignment of an RS485 interface.

Table 4-2 PROFIBUS interface terminal assignment

View	Signal name		Designation
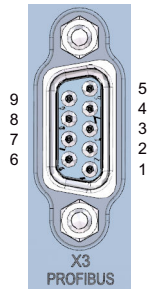	1	-	-
	2	-	-
	3	RxD/TxD-P	Data line B
	4	RTS	Request To Send
	5	M5V2	Data reference potential (from station)
	6	P5V2	Supply plus (from station)
	7	-	-
	8	RxD/TxD-N	Data line A
	9	-	-

NOTE

Supply of I/O devices

The CPU 1517-3 PN/DP does not provide a 24 V DC power supply on the PROFIBUS interface. I/O devices (for example, PC adapter USB) are therefore only operational on the interface in conjunction with a plug-in power supply set for external power supply.

The innovative successor product, PC adapter USB A2, receives the required power supply via the USB port. The USB A2 PC adapter therefore does not require a 24 V DC supply voltage and can be operated **without** a plug-in power supply set for external power supply.

Reference

You can find additional information on the topics of "Connecting the CPU" and "Accessories/spare parts" in the S7-1500, ET 200MP (http://support.automation.siemens.com/WW/view/en/59191792) system manual.

Assignment of the MAC addresses

CPU 1517-3 PN/DP has two PROFINET interfaces. The first interface has two ports. Each of the PROFINET interfaces has a MAC address and each of the PROFINET ports has its own MAC address. In total, the CPU 1517-3 PN/DP has five MAC addresses.

The MAC addresses of the PROFINET ports are needed for the LLDP protocol, for example for the neighborhood discovery function.

The number range of the MAC addresses is sequential. The first and last MAC address are lasered on the rating plate on the right side of each CPU 1517-3 PN/DP.
The table below shows how the MAC addresses are assigned.

Table 4-3 Assignment of the MAC addresses

	Assignment	Labeling
MAC address 1	PROFINET interface X1 (visible in STEP 7 for accessible devices)	• Front, lasered • Right side, lasered (start of number range)
MAC address 2	Port X1 P1 R (required for LLDP, for example)	• Front and right side, not lasered
MAC address 3	Port X1 P2 R (required for LLDP, for example)	• Front and right side, not lasered
MAC address 4	PROFINET interface X2 (visible in STEP 7 for accessible devices)	• Front, lasered • Right side, not lasered
MAC address 5	Port X2 P1 (required for LLDP, for example)	• Front, not lasered • Right side, lasered (start of number range)

Block diagram

The following figure shows the block diagram of the CPU 1517-3 PN/DP.

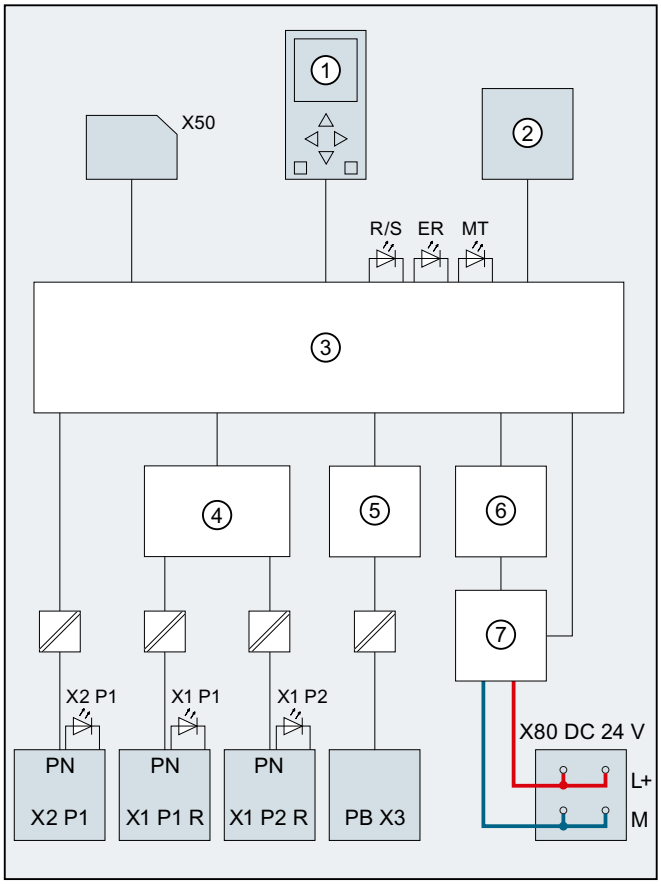

①	Display	PN X1 P1 R	PROFINET interface X1 Port 1
②	RUN/STOP/MRES mode selector	PN X1 P2 R	PROFINET interface X1 Port 2
③	Electronics	PN X2 P1	PROFINET interface X2 Port 1
④	PROFINET 2-port switch	PB X3	PROFIBUS interface X3
⑤	PROFIBUS DP driver	L+	24 V DC supply voltage
⑥	Backplane bus interface	M	Ground
⑦	Internal supply voltage	R/S	RUN/STOP LED (yellow/green)
X50	SIMATIC memory card	ER	ERROR LED (red)
X80 24 V DC	Infeed of supply voltage	MT	MAINT LED (yellow)
		X1 P1, X1 P2, X2 P1	LED Link TX/RX

Figure 4-1 Block diagram of the CPU 1517-3 PN/DP

Interrupts, error messages, diagnostics and system alarms

5

The status and error displays of the CPU 1517-3 PN/DP are described below.
You will find additional information on "Interrupts" in the STEP 7 online help.
You can find additional information on the topics of "Diagnostics" and "System alarms" in the Diagnostics (http://support.automation.siemens.com/WW/view/en/59192926) function manual.

5.1 Status and error display of the CPU

LED display

The figure below shows the CPU 1517-3 PN/DP LEDs.

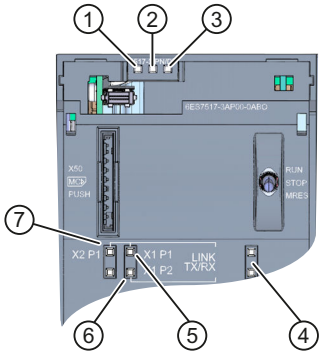

① RUN/STOP LED (yellow/green LED)
② ERROR LED (red LED)
③ MAINT LED (yellow LED)
④ No function
⑤ LINK RX/TX LED for port X1 P1 (yellow/green LED)
⑥ LINK RX/TX LED for port X1 P2 (yellow/green LED)
⑦ LINK RX/TX LED for port X2 P1 (yellow/green LED)

Figure 5-1 LED display of the CPU 1517-3 PN/DP (without front panel)

Meaning of the RUN/STOP, ERROR and MAINT LEDs

The CPU 1517-3 PN/DP has three LEDs to signal the current operating status and diagnostics status. The following table shows the meaning of the various combinations of colors for the RUN/STOP, ERROR and MAINT LEDs.

Table 5-1 Meaning of the LEDs

RUN/STOP LED	ERROR LED	MAINT LED	Meaning
LED off	LED off	LED off	Missing or insufficient power supply on the CPU.
LED off	LED flashes red	LED off	An error has occurred.
LED lit green	LED off	LED off	CPU is in RUN mode.
LED lit green	LED off	LED lit yellow	Maintenance demanded for the plant. The affected hardware must be checked/replaced within a short period of time.
			Active Force job
			OPC UA server of the CPU expects initial trust lists and CRLs via GDS Push function.
LED lit green	LED off	LED flashes yellow	Bad configuration
LED lit yellow	LED flashes red	LED off	A diagnostics event is pending.
LED lit yellow	LED off	LED flashes yellow	Firmware update using SIMATIC memory card successfully completed.
LED lit yellow	LED off	LED off	CPU is in STOP mode.
			CPU runs a program with active breakpoints. The program is at a breakpoint.
LED lit yellow	LED flashes red	LED flashes yellow	The program on the SIMATIC memory card is causing an error.
			Firmware update using SIMATIC memory card has failed.
			The CPU has detected an error state. Additional information is available via the CPU diagnostic buffer.
LED flashes yellow	LED off	LED off	CPU is performing internal activities during STOP, e.g. startup after STOP.
			Download of the user program from the SIMATIC memory card
			CPU carries out a program with active breakpoint. The program is presently moving from one breakpoint to another.
			Firmware update is being performed.
LED flashes yellow/green	LED off	LED off	Startup (transition from STOP → RUN)

RUN/STOP LED	ERROR LED	MAINT LED	Meaning
LED flashes yellow/green	LED flashes red	LED flashes yellow	Startup (CPU booting)
			Test of LEDs during startup, inserting a module.
			LED flashing test

Meaning of LINK RX/TX LED

Each port has a LINK RX/TX LED. The table below shows the various "LED scenarios" of ports for the CPU 1517-3 PN/DP.

Table 5-2 Meaning of the LEDs

LINK TX/RX LED	Meaning
LED off	There is no Ethernet connection between the PROFINET interface of the PROFINET device and the communication partner. No data is currently being sent/received via the PROFINET interface. There is no LINK connection.
LED flashes green	The "LED flashing test" is being performed.
LED lit green	There is an Ethernet connection between the PROFINET interface of your PROFINET device and a communication partner.
LED flashes yel-low/green	Data is currently being received from or sent to a communications partner on Ethernet via the PROFINET interface of the PROFINET device.

NOTE

"LED" instruction

You can read the status (e.g. "On" or "Off") of LEDs of a CPU or a module using the "LED" instruction. Note, however, that it is not possible to read the LED status of the LINK RX/TX LEDs on all S7-1500 CPUs.

You can find additional information on the "LED" instruction in the STEP 7 online help.

Technical specifications

6

The following table shows the technical specifications as of 11/2022. You can find a data sheet including daily updated technical specifications on the Internet (https://support.industry.siemens.com/cs/ww/en/pv/6ES7517-3AP00-0AB0/td?dl=en).

Article number	6ES7517-3AP00-0AB0
General information	
Product type designation	CPU 1517-3 PN/DP
HW functional status	FS11
Firmware version	V3.0
Product function	
• I&M data	Yes; I&M0 to I&M3
• Isochronous mode	Yes; Distributed and central; with minimum OB 6x cycle of 250 µs (distributed) and 1 ms (central)
Engineering with	
• STEP 7 TIA Portal configurable/integrated from version	V18 (FW V3.0); V13 Update 3 (FW V1.6) or higher
Configuration control	
via dataset	Yes
Display	
Screen diagonal [cm]	6.1 cm
Control elements	
Number of keys	6
Mode selector switch	1
Supply voltage	
Rated value (DC)	24 V
permissible range, lower limit (DC)	19.2 V
permissible range, upper limit (DC)	28.8 V
Reverse polarity protection	Yes
Mains buffering	
• Mains/voltage failure stored energy time	5 ms
• Repeat rate, min.	1/s
Input current	
Current consumption (rated value)	1.55 A
Current consumption, max.	1.9 A
Inrush current, max.	1.9 A; Rated value
I^2t	0.4 $A^2 \cdot s$
Power	
Infeed power to the backplane bus	12 W

Article number	6ES7517-3AP00-0AB0
Power consumption from the backplane bus (balanced)	30 W
Power loss	
Power loss, typ.	24 W
Memory	
Number of slots for SIMATIC memory card	1
SIMATIC memory card required	Yes
Work memory	
• integrated (for program)	2 Mbyte
• integrated (for data)	8 Mbyte
Load memory	
• Plug-in (SIMATIC Memory Card), max.	32 Gbyte
Backup	
• maintenance-free	Yes
CPU processing times	
for bit operations, typ.	2 ns
for word operations, typ.	3 ns
for fixed point arithmetic, typ.	3 ns
for floating point arithmetic, typ.	12 ns
CPU-blocks	
Number of elements (total)	12 000; Blocks (OB, FB, FC, DB) and UDTs
DB	
• Number range	1 ... 60 999; subdivided into: number range that can be used by the user: 1 ... 59 999, and number range of DBs created via SFC 86: 60 000 ... 60 999
• Size, max.	8 Mbyte; For DBs with absolute addressing, the max. size is 64 KB
FB	
• Number range	0 ... 65 535
• Size, max.	1 Mbyte
FC	
• Number range	0 ... 65 535
• Size, max.	1 Mbyte
OB	
• Size, max.	1 Mbyte
• Number of free cycle OBs	100
• Number of time alarm OBs	20
• Number of delay alarm OBs	20
• Number of cyclic interrupt OBs	20; with minimum OB 3x cycle of 100 µs
• Number of process alarm OBs	50

Article number	6ES7517-3AP00-0AB0
• Number of DPV1 alarm OBs	3
• Number of isochronous mode OBs	3
• Number of technology synchronous alarm OBs	2
• Number of startup OBs	100
• Number of asynchronous error OBs	4
• Number of synchronous error OBs	2
• Number of diagnostic alarm OBs	1
Nesting depth	
• per priority class	24
Counters, timers and their retentivity	
S7 counter	
• Number	2 048
Retentivity	
– adjustable	Yes
IEC counter	
• Number	Any (only limited by the main memory)
Retentivity	
– adjustable	Yes
S7 times	
• Number	2 048
Retentivity	
– adjustable	Yes
IEC timer	
• Number	Any (only limited by the main memory)
Retentivity	
– adjustable	Yes
Data areas and their retentivity	
Retentive data area (incl. timers, counters, flags), max.	768 kbyte; In total; available retentive memory for bit memories, timers, counters, DBs, and technology data (axes): 700 KB
Extended retentive data area (incl. timers, counters, flags), max.	8 Mbyte; When using PS 6 0W 24/48/60 V DC HF
Flag	
• Size, max.	16 kbyte
• Number of clock memories	8; 8 clock memory bit, grouped into one clock memory byte
Data blocks	
• Retentivity adjustable	Yes
• Retentivity preset	No
Local data	

Article number	6ES7517-3AP00-0AB0
• per priority class, max.	64 kbyte; max. 16 KB per block
Address area	
Number of IO modules	16 384; max. number of modules / submodules
I/O address area	
• Inputs	32 kbyte; All inputs are in the process image
• Outputs	32 kbyte; All outputs are in the process image
per integrated IO subsystem	
– Inputs (volume)	32 kbyte; Max. 32 KB via X1; max. 8 KB via X2 or X3
– Outputs (volume)	32 kbyte; Max. 32 KB via X1; max. 8 KB via X2 or X3
per CM/CP	
– Inputs (volume)	8 kbyte
– Outputs (volume)	8 kbyte
Subprocess images	
• Number of subprocess images, max.	32
Hardware configuration	
Number of distributed IO systems	64; A distributed I/O system is characterized not only by the integration of distributed I/O via PROFINET or PROFIBUS communication modules, but also by the connection of I/O via AS-i master modules or links (e.g. IE/PB-Link)
Number of DP masters	
• integrated	1
• Via CM	8; A maximum of 8 CMs/CPs (PROFIBUS, PROFINET, Ethernet) can be inserted in total
Number of IO Controllers	
• integrated	2
• Via CM	8; A maximum of 8 CMs/CPs (PROFIBUS, PROFINET, Ethernet) can be inserted in total
Rack	
• Modules per rack, max.	32; CPU + 31 modules
• Number of lines, max.	1
PtP CM	
• Number of PtP CMs	the number of connectable PtP CMs is only limited by the number of available slots
Time of day	
Clock	
• Type	Hardware clock
• Backup time	6 wk; At 40 °C ambient temperature, typically
• Deviation per day, max.	10 s; Typ.: 2 s
Operating hours counter	

Article number	6ES7517-3AP00-0AB0
• Number	16
Clock synchronization	
• supported	Yes
• to DP, master	Yes
• in AS, master	Yes
• in AS, slave	Yes
• on Ethernet via NTP	Yes
Interfaces	
Number of PROFINET interfaces	2
Number of PROFIBUS interfaces	1
1. Interface	
Interface types	
• RJ 45 (Ethernet)	Yes; X1
• Number of ports	2
• integrated switch	Yes
Protocols	
• IP protocol	Yes; IPv4
• PROFINET IO Controller	Yes
• PROFINET IO Device	Yes
• SIMATIC communication	Yes
• Open IE communication	Yes; Optionally also encrypted
• Web server	Yes
• Media redundancy	Yes
PROFINET IO Controller	
Services	
– PG/OP communication	Yes
– Isochronous mode	Yes
– Direct data exchange	Yes; Requirement: IRT and isochronous mode (MRPD optional)
– IRT	Yes
– PROFIenergy	Yes; per user program
– Prioritized startup	Yes; Max. 32 PROFINET devices
– Number of connectable IO Devices, max.	512; In total, up to 1 000 distributed I/O devices can be connected via AS-i, PROFIBUS or PROFINET
– Of which IO devices with IRT, max.	64
– Number of connectable IO Devices for RT, max.	512
– of which in line, max.	512

Article number	6ES7517-3AP00-0AB0
– Number of IO Devices that can be simultaneously activated/deactivated, max.	8; in total across all interfaces
– Number of IO Devices per tool, max.	8
– Updating times	The minimum value of the update time also depends on communication share set for PROFINET IO, on the number of IO devices, and on the quantity of configured user data
Update time for IRT	
– for send cycle of 250 µs	250 µs to 4 ms
– for send cycle of 500 µs	500 µs to 8 ms
– for send cycle of 1 ms	1 ms to 16 ms
– for send cycle of 2 ms	2 ms to 32 ms
– for send cycle of 4 ms	4 ms to 64 ms
– With IRT and parameterization of "odd" send cycles	Update time = set "odd" send clock (any multiple of 125 µs: 375 µs, 625 µs ... 3 875 µs)
Update time for RT	
– for send cycle of 250 µs	250 µs to 128 ms
– for send cycle of 500 µs	500 µs to 256 ms
– for send cycle of 1 ms	1 ms to 512 ms
– for send cycle of 2 ms	2 ms to 512 ms
– for send cycle of 4 ms	4 ms to 512 ms
PROFINET IO Device	
Services	
– PG/OP communication	Yes
– Isochronous mode	No
– IRT	Yes
– PROFIenergy	Yes; per user program
– Shared device	Yes
– Number of IO Controllers with shared device, max.	4
– activation/deactivation of I-devices	Yes; per user program
– Asset management record	Yes; per user program
2. Interface	
Interface types	
• RJ 45 (Ethernet)	Yes; X2
• Number of ports	1
• integrated switch	No
Protocols	
• IP protocol	Yes; IPv4

Article number	6ES7517-3AP00-0AB0
• PROFINET IO Controller	Yes
• PROFINET IO Device	Yes
• SIMATIC communication	Yes
• Open IE communication	Yes; Optionally also encrypted
• Web server	Yes
• Media redundancy	No
PROFINET IO Controller	
Services	
– PG/OP communication	Yes
– Isochronous mode	No
– Direct data exchange	No
– IRT	No
– PROFIenergy	Yes; per user program
– Prioritized startup	No
– Number of connectable IO Devices, max.	128; In total, up to 1 000 distributed I/O devices can be connected via AS-i, PROFIBUS or PROFINET
– Number of connectable IO Devices for RT, max.	128
– of which in line, max.	128
– Number of IO Devices that can be simultaneously activated/deactivated, max.	8; in total across all interfaces
– Number of IO Devices per tool, max.	8
– Updating times	The minimum value of the update time also depends on communication share set for PROFINET IO, on the number of IO devices, and on the quantity of configured user data
Update time for RT	
– for send cycle of 1 ms	1 ms to 512 ms
PROFINET IO Device	
Services	
– PG/OP communication	Yes
– Isochronous mode	No
– IRT	No
– PROFIenergy	Yes; per user program
– Prioritized startup	No
– Shared device	Yes
– Number of IO Controllers with shared device, max.	4
– activation/deactivation of I-devices	Yes; per user program
– Asset management record	Yes; per user program

Article number	6ES7517-3AP00-0AB0
3. Interface	
Interface types	
• RS 485	Yes; X3
• Number of ports	1
Protocols	
• PROFIBUS DP master	Yes
• PROFIBUS DP slave	No
• SIMATIC communication	Yes
PROFIBUS DP master	
• Number of connections, max.	48; for the integrated PROFIBUS DP interface
• Number of DP slaves, max.	125; In total, up to 1 000 distributed I/O devices can be connected via AS-i, PROFIBUS or PROFINET
Services	
– PG/OP communication	Yes
– Equidistance	Yes
– Isochronous mode	Yes
– Activation/deactivation of DP slaves	Yes
Interface types	
RJ 45 (Ethernet)	
• 100 Mbps	Yes
• Autonegotiation	Yes
• Autocrossing	Yes
• Industrial Ethernet status LED	Yes
RS 485	
• Transmission rate, max.	12 Mbit/s
Protocols	
PROFIsafe	No
Number of connections	
• Number of connections, max.	320; via integrated interfaces of the CPU and connected CPs / CMs
• Number of connections reserved for ES/HMI/web	10
• Number of connections via integrated interfaces	288
• Number of S7 routing paths	64; in total, only 16 S7-Routing connections are supported via PROFIBUS
Redundancy mode	
• H-Sync forwarding	Yes
Media redundancy	
– Media redundancy	only via 1st interface (X1)

Article number	6ES7517-3AP00-0AB0
– MRP	Yes; MRP Automanager according to IEC 62439-2 Edition 2.0, MRP Manager; MRP Client
– MRP interconnection, supported	Yes; as MRP ring node according to IEC 62439-2 Edition 3.0
– MRPD	Yes; Requirement: IRT
– Switchover time on line break, typ.	200 ms; For MRP, bumpless for MRPD
– Number of stations in the ring, max.	50
SIMATIC communication	
• PG/OP communication	Yes; encryption with TLS V1.3 pre-selected
• S7 routing	Yes
• Data record routing	Yes
• S7 communication, as server	Yes
• S7 communication, as client	Yes
• User data per job, max.	See online help (S7 communication, user data size)
Open IE communication	
• TCP/IP	Yes
– Data length, max.	64 kbyte
– several passive connections per port, supported	Yes
• ISO-on-TCP (RFC1006)	Yes
– Data length, max.	64 kbyte
• UDP	Yes
– Data length, max.	2 kbyte; 1 472 bytes for UDP broadcast
– UDP multicast	Yes; 128 multicast circuits (of which max. 5 via X1)
• DHCP	Yes
• DNS	Yes
• SNMP	Yes
• DCP	Yes
• LLDP	Yes
• Encryption	Yes; Optional
Web server	
• HTTP	Yes; Standard and user pages
• HTTPS	Yes; Standard and user pages
OPC UA	
• Runtime license required	Yes; "Large" license required
• OPC UA Client	Yes; Data Access (registered Read/Write), Method Call
– Application authentication	Yes

Article number	6ES7517-3AP00-0AB0
– Security policies	Available security policies: None, Basic128Rsa15, Basic256Rsa15, Basic256Sha256
– User authentication	"anonymous" or by user name & password
– Number of connections, max.	40
– Number of nodes of the client interfaces, max.	5 000
– Number of elements for one call of OPC_UA_NodeGetHandleList/OPC_UA_-ReadList/OPC_UA_WriteList, max.	300
– Number of elements for one call of OPC_UA_NameSpaceGetIndexList, max.	20
– Number of elements for one call of OPC_UA_MethodGetHandleList, max.	100
– Number of simultaneous calls of the client instructions per connection (except OPC_UA_ReadList,OPC_UA_WriteList, OPC_UA_MethodCall), max.	1
– Number of simultaneous calls of the client instructions OPC_UA_ReadList,OPC_UA_WriteList and OPC_UA_MethodCall, max.	5
– Number of registerable nodes, max.	5 000
– Number of registerable method calls of OPC_UA_MethodCall, max.	100
– Number of inputs/outputs when calling OPC_UA_MethodCall, max.	20
• OPC UA Server	Yes; Data Access (Read, Write, Subscribe), Method Call, Alarms & Condition (A&C), Custom Address Space
– Application authentication	Yes
– Security policies	available security policies: None, Basic128Rsa15, Basic256Rsa15, Basic256Sha256, Aes128Sha256RsaOaep, Aes256Sha256RsaPss
– User authentication	"anonymous" or by user name & password
– GDS support (certificate management)	Yes
– Number of sessions, max.	64
– Number of accessible variables, max.	200 000
– Number of registerable nodes, max.	50 000
– Number of subscriptions per session, max.	50
– Sampling interval, min.	10 ms
– Publishing interval, min.	10 ms
– Number of server methods, max.	100

Article number	6ES7517-3AP00-0AB0
– Number of inputs/outputs per server method, max.	20
– Number of monitored items, max.	10 000; for 1 s sampling interval and 1 s send interval
– Number of server interfaces, max.	10 of each "Server interfaces" / "Companion specification" type and 20 of the type "Reference namespace"
– Number of nodes for user-defined server interfaces, max.	30 000
• Alarms and Conditions	Yes
– Number of program alarms	400
– Number of alarms for system diagnostics	200
Further protocols	
• MODBUS	Yes; MODBUS TCP
Isochronous mode	
Equidistance	Yes
S7 message functions	
Number of login stations for message functions, max.	64
Program alarms	Yes
Number of configurable program messages, max.	10 000; Program messages are generated by the "Program_Alarm" block, ProDiag or GRAPH
Number of loadable program messages in RUN, max.	5 000
Number of simultaneously active program alarms	
• Number of program alarms	2 000
• Number of alarms for system diagnostics	1 000
• Number of alarms for motion technology objects	480
Test commissioning functions	
Joint commission (Team Engineering)	Yes; Parallel online access possible for up to 10 engineering systems
Status block	Yes; Up to 16 simultaneously (in total across all ES clients)
Single step	No
Number of breakpoints	20
Status/control	
• Status/control variable	Yes
• Variables	Inputs/outputs, memory bits, DBs, distributed I/Os, timers, counters
• Number of variables, max.	
– of which status variables, max.	200; per job
– of which control variables, max.	200; per job

Article number	6ES7517-3AP00-0AB0
Forcing	
• Forcing	Yes
• Forcing, variables	Peripheral inputs/outputs
• Number of variables, max.	200
Diagnostic buffer	
• present	Yes
• Number of entries, max.	3 200
– of which powerfail-proof	1 000
Traces	
• Number of configurable Traces	8; Up to 512 KB of data per trace are possible
Interrupts/diagnostics/status information	
Diagnostics indication LED	
• RUN/STOP LED	Yes
• ERROR LED	Yes
• MAINT LED	Yes
• Connection display LINK TX/RX	Yes
Supported technology objects	
Motion Control	Yes; Note: The number of technology objects affects the cycle time of the PLC program; selection guide via the TIA Selection Tool
• Number of available Motion Control resources for technology objects	10 240
• Required Motion Control resources	
– per speed-controlled axis	40
– per positioning axis	80
– per synchronous axis	160
– per external encoder	80
– per output cam	20
– per cam track	160
– per probe	40
• Positioning axis	
– Number of positioning axes at motion control cycle of 4 ms (typical value)	70
– Number of positioning axes at motion control cycle of 8 ms (typical value)	128
Controller	
• PID_Compact	Yes; Universal PID controller with integrated optimization
• PID_3Step	Yes; PID controller with integrated optimization for valves

Article number	6ES7517-3AP00-0AB0
• PID-Temp	Yes; PID controller with integrated optimization for temperature
Counting and measuring	
• High-speed counter	Yes
Standards, approvals, certificates	
Suitable for safety functions	No
Ambient conditions	
Ambient temperature during operation	
• horizontal installation, min.	0 °C
• horizontal installation, max.	60 °C; Display: 50 °C, at an operating temperature of typically 50 °C, the display is switched off
• vertical installation, min.	0 °C
• vertical installation, max.	40 °C; Display: 40 °C, at an operating temperature of typically 40 °C, the display is switched off
Ambient temperature during storage/transportation	
• min.	-40 °C
• max.	70 °C
Altitude during operation relating to sea level	
• Installation altitude above sea level, max.	5 000 m; Restrictions for installation altitudes > 2 000 m, see manual
configuration / header	
configuration / programming / header	
Programming language	
– LAD	Yes
– FBD	Yes
– STL	Yes
– SCL	Yes
– CFC	Yes
– GRAPH	Yes
Know-how protection	
• User program protection/password protection	Yes
• Copy protection	Yes
• Block protection	Yes
Access protection	
• protection of confidential configuration data	Yes
• Password for display	Yes
• Protection level: Write protection	Yes
• Protection level: Read/write protection	Yes

Article number	6ES7517-3AP00-0AB0
• Protection level: Complete protection	Yes
programming / cycle time monitoring / header	
• lower limit	adjustable minimum cycle time
• upper limit	adjustable maximum cycle time
Dimensions	
Width	175 mm
Height	147 mm
Depth	129 mm
Weights	
Weight, approx.	1 929 g

General technical specifications

You can find information on the general technical specifications, such as standards and approvals, electromagnetic compatibility, protection class, etc., in the S7-1500, ET 200MP (http://support.automation.siemens.com/WW/view/en/59191792) system manual.

Dimension drawing

A

This section contains the dimension drawing of the module on the mounting rail, as well as a dimension drawing with the front panel open. Always observe the specified dimensions for installation in cabinets, control rooms, etc.

Dimension drawings for CPU 1517-3 PN/DP

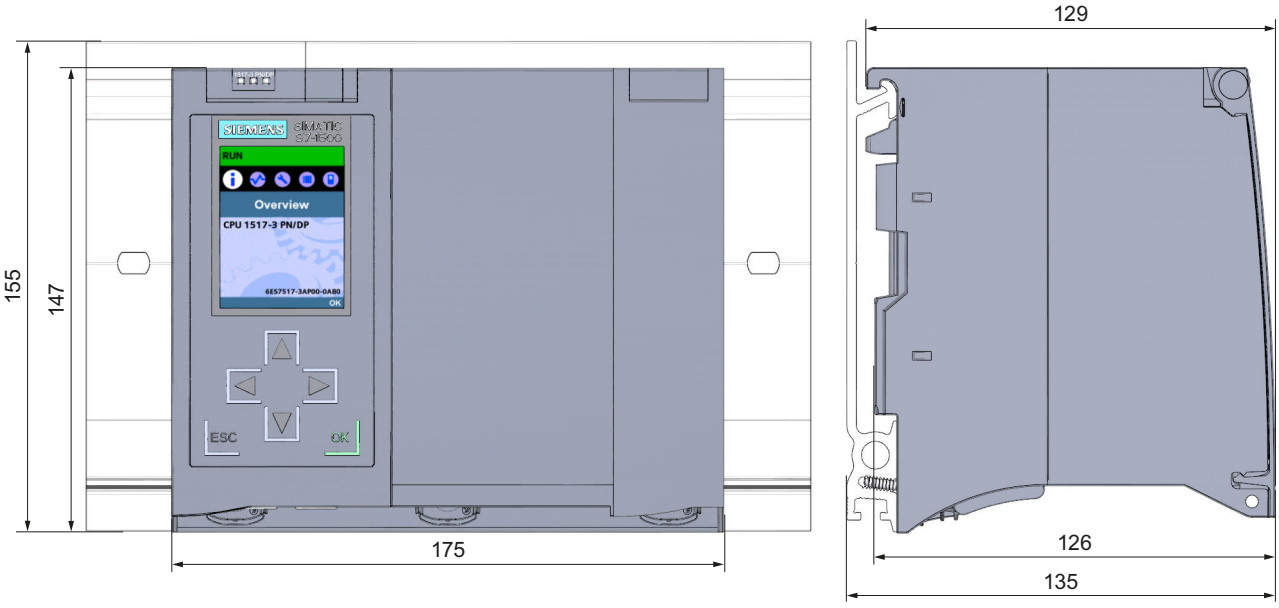

Figure A-1 Dimension drawing of CPU 1517-3 PN/DP, front and side views

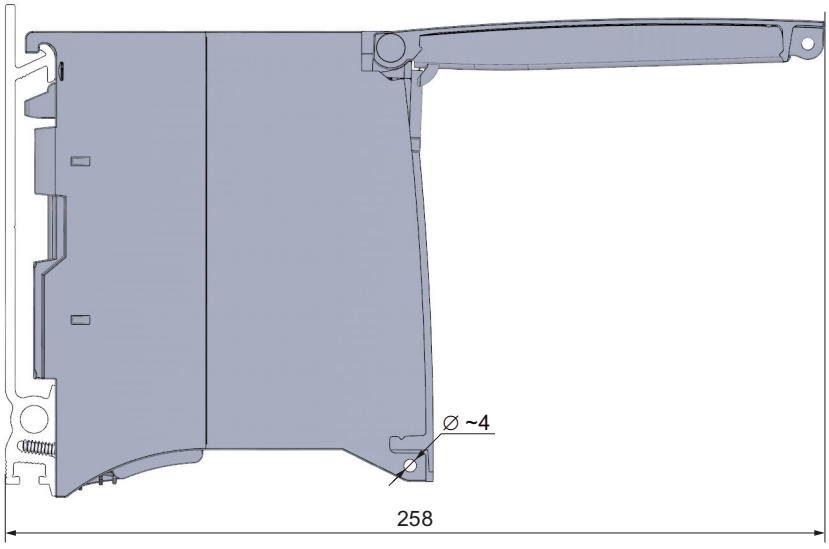

Figure A-2 Dimension drawing CPU 1517-3 PN/DP, side view with open front panel

SIEMENS

Edition 11/2022

EQUIPMENT MANUAL

SIMATIC

S7-1500

CPU 1517T-3 PN/DP
6ES7517-3TP00-0AB0

support.industry.siemens.com

SIEMENS

SIMATIC

S7-1500
CPU 1517T-3 PN/DP
(6ES7517-3TP00-0AB0)

Equipment Manual

Introduction 1

Safety instructions 2

Product overview 3

Wiring 4

Interrupts, error messages, diagnostics and system alarms 5

Technical specifications 6

Dimension drawing A

11/2022
A5E36285525-AD

Legal information

Warning notice system

This manual contains notices you have to observe in order to ensure your personal safety, as well as to prevent damage to property. The notices referring to your personal safety are highlighted in the manual by a safety alert symbol, notices referring only to property damage have no safety alert symbol. These notices shown below are graded according to the degree of danger.

⚠ DANGER
indicates that death or severe personal injury **will** result if proper precautions are not taken.

⚠ WARNING
indicates that death or severe personal injury **may** result if proper precautions are not taken.

⚠ CAUTION
indicates that minor personal injury can result if proper precautions are not taken.

NOTICE
indicates that property damage can result if proper precautions are not taken.

If more than one degree of danger is present, the warning notice representing the highest degree of danger will be used. A notice warning of injury to persons with a safety alert symbol may also include a warning relating to property damage.

Qualified Personnel

The product/system described in this documentation may be operated only by **personnel qualified** for the specific task in accordance with the relevant documentation, in particular its warning notices and safety instructions. Qualified personnel are those who, based on their training and experience, are capable of identifying risks and avoiding potential hazards when working with these products/systems.

Proper use of Siemens products

Note the following:

⚠ WARNING
Siemens products may only be used for the applications described in the catalog and in the relevant technical documentation. If products and components from other manufacturers are used, these must be recommended or approved by Siemens. Proper transport, storage, installation, assembly, commissioning, operation and maintenance are required to ensure that the products operate safely and without any problems. The permissible ambient conditions must be complied with. The information in the relevant documentation must be observed.

Trademarks

All names identified by ® are registered trademarks of Siemens AG. The remaining trademarks in this publication may be trademarks whose use by third parties for their own purposes could violate the rights of the owner.

Disclaimer of Liability

We have reviewed the contents of this publication to ensure consistency with the hardware and software described. Since variance cannot be precluded entirely, we cannot guarantee full consistency. However, the information in this publication is reviewed regularly and any necessary corrections are included in subsequent editions.

Siemens AG
Digital Industries
Postfach 48 48
90026 NÜRNBERG
GERMANY

A5E36285525-AD
Ⓟ 10/2022 Subject to change

Copyright © Siemens AG 2016 - 2022.
All rights reserved

Table of contents

1 Introduction 5

1.1 Guide documentation S7-1500/ET 200MP 6
1.1.1 Information classes S7-1500/ET 200MP 6
1.1.2 SIMATIC Technical Documentation 7

2 Safety instructions 10

2.1 Security information 10

3 Product overview 11

3.1 New functions 11
3.2 Application 13
3.3 Hardware properties 19
3.4 Firmware functions 21
3.5 Operator controls and display elements 26
3.5.1 Front view of the CPU with closed front flap 26
3.5.2 Front view of the CPU without front flaps 28
3.5.3 Rear view of the CPU 29
3.6 Mode selector 29

4 Wiring 30

5 Interrupts, error messages, diagnostics and system alarms 34

5.1 Status and error displays of the CPU 34

6 Technical specifications 37

A Dimension drawing 38

Introduction 1

Purpose of the documentation

This manual supplements the system manual of the S7-1500 automation system/ET 200MP distributed I/O system as well as the function manuals. This manual contains a description of the module-specific information. The system-related functions are described in the system manual. All system-spanning functions are described in the function manuals.

The information provided in this equipment manual and the system manual enables you to commission the CPU .

Conventions

STEP 7: In this documentation, "STEP 7" is used as a synonym for all versions of the configuration and programming software "STEP 7 (TIA Portal)".

Please also observe notes marked as follows:

NOTE

A note contains important information on the product described in the documentation, on the handling of the product or on the section of the documentation to which particular attention should be paid.

Recycling and disposal

For environmentally friendly recycling and disposal of your old equipment, contact a certified electronic waste disposal company and dispose of the equipment according to the applicable regulations in your country.

Industry Mall

The Industry Mall is the catalog and order system of Siemens AG for automation and drive solutions on the basis of Totally Integrated Automation (TIA) and Totally Integrated Power (TIP).

You can find catalogs for all automation and drive products on the Internet (https://mall.industry.siemens.com).

1.1 Guide documentation S7-1500/ET 200MP

1.1.1 Information classes S7-1500/ET 200MP

The documentation for the SIMATIC S7-1500 automation system and the ET 200MP distributed I/O system is arranged into three areas.
This arrangement enables you to access the specific content you require. Changes and supplements to the manuals are documented in a Product Information.
You can download the documentation free of charge from the Internet (https://support.industry.siemens.com/cs/ww/en/view/109742691).

Basic information

The System Manual and Getting Started describe in detail the configuration, installation, wiring and commissioning of the SIMATIC S7-1500 and ET 200MP systems.
The STEP 7 online help supports you in the configuration and programming.
Examples:

- Getting Started S7-1500
- S7-1500/ET 200MP System Manual
- Online help TIA Portal

Device information

Equipment manuals contain a compact description of the module-specific information, such as properties, wiring diagrams, characteristics and technical specifications.
Examples:

- Equipment Manuals CPUs
- Equipment Manuals Interface Modules
- Equipment Manuals Digital Modules
- Equipment Manuals Analog Modules
- Equipment Manuals Communications Modules
- Equipment Manuals Technology Modules
- Equipment Manuals Power Supply Modules

General information

The function manuals contain detailed descriptions on general topics relating to the SIMATIC S7-1500 and ET 200MPsystems.
Examples:

- Function Manual Diagnostics
- Function Manual Communication
- Function Manual Motion Control
- Function Manual Web Server
- Function Manual Cycle and Response Times
- PROFINET Function Manual
- PROFIBUS Function Manual

Product Information

Changes and supplements to the manuals are documented in a Product Information. The Product Information takes precedence over the device and system manuals.
You can find the latest Product Information on the S7-1500 and ET 200MP systems on the Internet (https://support.industry.siemens.com/cs/de/en/view/68052815).

Manual Collection S7-1500/ET 200MP

The Manual Collection contains the complete documentation on the SIMATIC S7-1500 automation system and the ET 200MP distributed I/O system gathered together in one file.
You can find the Manual Collection on the Internet.
(https://support.industry.siemens.com/cs/ww/en/view/86140384)

SIMATIC S7-1500 comparison list for programming languages

The comparison list contains an overview of which instructions and functions you can use for which controller families.
You can find the comparison list on the Internet
(https://support.industry.siemens.com/cs/ww/en/view/86630375).

1.1.2 SIMATIC Technical Documentation

Additional SIMATIC documents will complete your information. You can find these documents and their use at the following links and QR codes.
The Industry Online Support gives you the option to get information on all topics. Application examples support you in solving your automation tasks.

Overview of the SIMATIC Technical Documentation

Here you will find an overview of the SIMATIC documentation available in Siemens Industry Online Support:

Industry Online Support International (https://support.industry.siemens.com/cs/ww/en/view/109742705)

Watch this short video to find out where you can find the overview directly in Siemens Industry Online Support and how to use Siemens Industry Online Support on your mobile device:

Quick introduction to the technical documentation of automation products per video (https://support.industry.siemens.com/cs/us/en/view/109780491)

YouTube video: Siemens Automation Products - Technical Documentation at a Glance (https://youtu.be/TwLSxxRQQsA)

mySupport

With "mySupport" you can get the most out of your Industry Online Support.

Registration	You must register once to use the full functionality of "mySupport". After registration, you can create filters, favorites and tabs in your personal workspace.
Support requests	Your data is already filled out in support requests, and you can get an overview of your current requests at any time.
Documentation	In the Documentation area you can build your personal library.
Favorites	You can use the "Add to mySupport favorites" to flag especially interesting or frequently needed content. Under "Favorites", you will find a list of your flagged entries.
Recently viewed articles	The most recently viewed pages in mySupport are available under "Recently viewed articles".
CAx data	The CAx data area gives you access to the latest product data for your CAx or CAe system. You configure your own download package with a few clicks: • Product images, 2D dimension drawings, 3D models, internal circuit diagrams, EPLAN macro files • Manuals, characteristics, operating manuals, certificates • Product master data

You can find "mySupport" on the Internet. (https://support.industry.siemens.com/My/ww/en)

Application examples

The application examples support you with various tools and examples for solving your automation tasks. Solutions are shown in interplay with multiple components in the system - separated from the focus on individual products.

You can find the application examples on the Internet.
(https://support.industry.siemens.com/cs/ww/en/ps/ae)

Safety instructions 2

2.1 Security information

Siemens provides products and solutions with industrial security functions that support the secure operation of plants, systems, machines and networks.

In order to protect plants, systems, machines and networks against cyber threats, it is necessary to implement – and continuously maintain – a holistic, state-of-the-art industrial security concept. Siemens' products and solutions constitute one element of such a concept.

Customers are responsible for preventing unauthorized access to their plants, systems, machines and networks. Such systems, machines and components should only be connected to an enterprise network or the internet if and to the extent such a connection is necessary and only when appropriate security measures (e.g. firewalls and/or network segmentation) are in place.

For additional information on industrial security measures that may be implemented, please visit (https://www.siemens.com/industrialsecurity).

Siemens' products and solutions undergo continuous development to make them more secure. Siemens strongly recommends that product updates are applied as soon as they are available and that the latest product versions are used. Use of product versions that are no longer supported, and failure to apply the latest updates may increase customers' exposure to cyber threats.

To stay informed about product updates, subscribe to the Siemens Industrial Security RSS Feed visit (https://www.siemens.com/cert).

Product overview

3

3.1 New functions

This section contains an overview of the most important new firmware functions of the CPU compared to the predecessor CPU (V2.9).

New functions of the CPU in firmware version V3.0

New functions	Applications	Customer benefits
Communication of the CPU		
SNMP network management protocol	A simple configuration option is available for using SNMP services. For new configurations, this is disabled by default in line with "Security-by-Default".	Can be enabled/disabled in the CPU properties. Community strings are configurable.
OPC UA server – Reading the diagnostic status of the own address space	By using the OPC UA instruction for reading ("OPC_UA_ReadList"), the own namespace of the OPC UA Server can be accessed. This allows you to read out the following statuses and react to them in the user program: • Status of the own OPC UA server • Status of the connections of OPC UA clients • Status of the session • Status of subscriptions	In this way, connection problems can be quickly detected, for example, and the plant availability can be increased.
OPC UA server – Time stamping of the source time of nodes	By using the OPC UA instruction for writing ("OPC_UA_WriteList"), it is possible to change the "SourceTimestamp" as well as the status code of an OPC UA variable (node).	Distinction between the "source" and "server" time possible
OPC UA server – Increase of the configuration limits	The following configuration limits have been increased: • Possible number of nodes in the server interface • Maximum possible number of subscriptions per session • For subscription, the recommendation for monitored values was increased	Further applications for CPUs as OPC UA servers
Web server of the CPU		
New Web API methods	Many new API methods extend your access options to the CPU via the Web API.	Additional applications for the web server
Dynamic management of certificates	The web server certificate for HTTPS communication can now also be managed via the OPC UA GDS mechanism, without separate download of the hardware configuration.	Flexible certificate management

New functions	Applications	Customer benefits
Allow data access only via Web API	They limit the functionality of the web server to the web API based functions. This means that only encrypted communication via HTTPS is possible.	Higher security of communication via web server
Technology functions of the CPU		
Axis functions	Save absolute encoder adjustment for device replacement	Saving the adjustment values with the "MC_SaveAbsoluteEncoderData" instruction saves having to perform the absolute encoder adjustment again after a device replacement.
	The "MC_Home" instruction supports the new "Incremental encoder adjustment" homing mode.	Extended scope of functions
	Active homing of absolute encoders is possible.	Extended scope of functions
	Absolute encoder adjustment/incremental encoder adjustment of non-operational encoders.	The function enables the transfer of actual values of the operational encoder to a non-operational encoder.
	The "MC_Power" instruction supports coasting-down.	Extended scope of functions "MC_Power" instruction
	The hardware limit switches are configurable as traversable/non-traversable.	Extended scope of functions
	For axes in a synchronous system, the dynamic filter enables dynamic adaptation of axes with higher dynamic responses to the axis with the lowest dynamic response.	With the dynamic filter, axes with different inertia can be adjusted to each other. Optimization of a synchronous system
	Stop superimposed movements on the axis with the instruction "MC_HaltSuperimposed"	Use the instruction to stop a superimposed motion independently of the basic motion.
	With the "MC_MotionInSuperimposed" instruction, you specify motion setpoints for the axis that are determined cyclically by the application for additional distance, velocity and acceleration and are additive to the basic motion.	By specifying superimposed motion setpoints, you can optimize the motion profile of a basic motion.
Synchronous operation functions	Velocity gearing	Via a variable gear ratio, synchronous axes can follow the velocity of a positioning axis.
	Synchronization in advance using leading value distance starting from current leading value position in camming	Extended scope of functions
Trace functionality of the CPU	The S7-1500 CPU supports up to 64 configured signals per trace.	Number of configurable signals per trace extended
	Long-term trace: The S7-1500 CPU supports cycle-granular recording of up to 64 different tags in a .csv file over a long period (e.g. hours, days).	Better diagnostic possibilities when analyzing the course of signals over a long period of time

Reference

You can find an overview of all new functions, improvements and revisions in the respective firmware versions on the Internet (https://support.industry.siemens.com/cs/ww/en/view/109478459).

3.2 Application

SIMATIC S7-1500 is the modular control system for a wide variety of automation applications in discrete automation.

SIMATIC S7-1500 is the cost-effective and convenient solution for a broad range of tasks and offers the following advantages:

- Modular, fanless design
- Simple realization of distributed structures
- User-friendly handling

Areas of application of the SIMATIC S7-1500 automation system include, for example:

- Special-purpose machines
- Textile machinery
- Packaging machines
- General mechanical engineering
- Controller engineering
- Machine tool engineering
- Installation engineering
- Electrical industry and crafts
- Automobile engineering
- Water/waste water
- Food & Beverage

Areas of application of the SIMATIC S7-1500R/H redundant system include, for example:

- Tunnels
- Airports (e.g. baggage conveyors)
- Subways
- Shipbuilding
- Wastewater treatment plants
- High-bay warehouses

Areas of application of the SIMATIC S7-1500T automation system for advanced motion control applications include, for example:

- Packaging machines
- Converting applications
- Assembly automation
- Pick-and-place automation
- Palletizers

Several CPUs with various levels of performance and a comprehensive range of modules with many convenient features are available. Fail-safe CPUs enable use in fail-safe applications. The modular design allows you to use only the modules that you need for your application. The controller can be retrofitted with additional modules at any time to expand its range of tasks.

High industrial suitability due to the high resistance to EMC, shock and vibration enable universal use of the SIMATIC S7-1500, S7-1500R/H and S7-1500T automation systems.

Performance segments of standard CPUs

The CPUs can be used for smaller and mid-range applications, as well as for the high-end range of machine and plant automation.

Table 3-1 Standard CPUs

CPU	Performance segment	PROFIBUS interfaces	PROFINET IO RT/IRT interfaces	PROFINET IO RT interface	Basic PROFINET functionality	Work memory	Processing time for bit operations
CPU 1511-1 - PN	Standard CPU for small to mid-range applications	--	1	--	--	1.8 MB	25 ns
CPU 1513-1 - PN	Standard CPU for mid-range applications	--	1	--	--	3.1 MB	25 ns
CPU 1515-2 - PN	Standard CPU for mid-range to large applications	--	1	1	--	5.5 MB	6 ns
CPU 1516-3 - PN/DP	Standard CPU for demanding applications and communication tasks	1	1	1	--	9.5 MB	6 ns
CPU 1517-3 - PN/DP	Standard CPU for demanding applications and communication tasks	1	1	1	--	10 MB	2 ns
CPU 1518-4 - PN/DP	Standard CPU for high-performance applications, demanding communication tasks and very short reaction times	1	1	1	1	66 MB	1 ns
CPU 1518-4 - PN/DP MFP	Standard CPU for high-performance applications, demanding communication tasks, very short reaction times and C/C++ blocks for the user program	1	1	1	1	116* MB	1 ns

* 50 MB of the integrated work memory is reserved for the function library of CPU runtime

Performance segments of redundant CPUs

The CPUs of the S7-1500R/H redundant system offer a high degree of reliability and system availability. A redundant configuration of the most important automation components reduces the likelihood of production downtimes and the consequences of component errors.

The higher the risks and costs of a production downtime, the more worthwhile the use of a redundant system. The avoidance of production downtimes compensates for the generally higher investment costs.

Table 3-2 Redundant CPUs

CPU	Performance segment	PROFIBUS interfaces	PROFINET IO RT/IRT interfaces	PROFINET IO RT interface	Basic PROFINET functionality	Work memory	Processing time for bit operations
CPU 1513R-1 PN	Redundant CPU for smaller to mid-range applications	--	1	--	--	3.1 MB	50 ns
CPU 1515R-2 PN	Redundant CPU for mid-range to large applications	--	1	--	1	5.5 MB	20 ns
CPU 1517H-3 PN	Redundant CPU for demanding applications and communication tasks	--	1	--	1	10 MB	4 ns
CPU 1518HF-4 PN	Fail-safe and redundant CPU for demanding applications and communication tasks	--	1	--	2	69 MB	4 ns

Performance segments of compact CPUs

The compact CPUs can be used for smaller to mid-range applications and have an integrated analog and digital on-board I/O as well as integrated technology functions.

Table 3-3 Compact CPUs

CPU	Performance segment	PROFIBUS interfaces	PROFINET IO RT/IRT interfaces	PROFINET IO RT interface	Basic PROFINET functionality	Work memory	Processing time for bit operations
CPU 1511C-1 PN	Compact CPU for small to mid-range applications	--	1	--	--	1.175 MB	60 ns
CPU 1512C-1 PN	Compact CPU for mid-range applications	--	1	--	--	1.25 MB	48 ns

The following table shows the specific properties of the Compact CPUs.

	CPU 1511C-1 PN	CPU 1512C-1 PN
Integrated analog inputs/outputs	5 inputs/2 outputs	5 inputs/2 outputs
Integrated digital inputs/outputs	16 inputs/16 outputs	32 inputs/32 outputs
High-speed counters	6	6
Frequency meters	6 (max. 100 kHz)	6 (max. 100 kHz)
Period duration measurement	6 channels	6 channels
Pulse width modulation (PWM output)	Max. 4 (up to 100 kHz)	Max. 4 (up to 100 kHz)
Pulse Train Output (PTO output)	Max. 4 (up to 100 kHz)	Max. 4 (up to 100 kHz)
Frequency output	Up to 100 kHz	Up to 100 kHz

Performance segments of technology CPUs

The technology CPUs can be used for low and mid-range applications, as well as for the high-end range of machine and plant automation. Because of their extended motion control functions, they are primarily used for drive control.

Table 3-4 Technology CPUs

CPU	Performance segment	PROFIBUS interfaces	PROFINET IO RT/IRT interfaces	PROFINET IO RT interface	Basic PROFINET functionality	Work memory	Processing time for bit operations
CPU 1511T-1 PN	Technology CPU for small to mid-range applications	--	1	--	--	1.95 MB	25 ns
CPU 1515T-2 PN	Technology CPU for mid-range to large applications	--	1	1	--	6 MB	6 ns
CPU 1516T-3 PN/-DP	Technology CPU for high-end applications and communication tasks	1	1	1	--	10.5 MB	6 ns
CPU 1517T-3 PN/-DP	Technology CPU for high-end applications and communication tasks	1	1	1	--	11 MB	2 ns
CPU 1518T-4 PN/DP	Technology CPU for high-performance motion control applications with large quantities, demanding communication tasks and very short reaction times	1	1	1	1	69 MB	1 ns
CPU 1511TF-1 PN CPU 1515TF-2 PN CPU 1516TF-3 P-N/DP CPU 1517TF-3 P-N/DP CPU 1518TF-4 PN/DP	These CPUs are described in the fail-safe CPUs.						

Performance segments of fail-safe CPUs

The fail-safe CPUs are intended for users who want to implement demanding standard and fail-safe applications both centrally and decentrally.

These fail-safe CPUs allow the processing of standard and safety programs on a single CPU. This allows fail-safe data to be evaluated in the standard user program. The integration also provides the system advantages and the extensive functionality of SIMATIC for fail-safe applications.

The fail-safe CPUs are certified for use in safety mode up to:

- Safety class (Safety Integrity Level) SIL 3 according to IEC 61508:2010
- Performance Level (PL) e and Category 4 according to ISO 13849-1:2015 or EN ISO 13849-1:2015

Additional password protection for F-configuration and F-program is set up for IT security.

Table 3-5 Fail-safe CPUs

CPU	Performance segment	PROFIBUS interfaces	PROFINET IO RT/IRT interfaces	PROFINET IO RT interface	Basic PROFINET functionality	Work memory	Processing time for bit operations
CPU 1511F-1 PN	Fail-safe CPU for small to mid-range applications	--	1	--	--	1.95 MB	25 ns
CPU 1511TF-1 PN	Fail-safe technology CPU for small to mid-range applications	--	1	--	--	1.95 MB	25 ns
CPU 1513F-1 PN	Fail-safe CPU for mid-range applications	--	1	--	--	3.4 MB	25 ns
CPU 1515F-2 PN	Fail-safe CPU for mid-range to large applications	--	1	1	--	6 MB	6 ns
CPU 1515TF-2 PN	Fail-safe technology CPU for high-end applications and communication tasks	--	1	1	--	6 MB	6 ns
CPU 1516F-3 PN/-DP	Fail-safe CPU for demanding applications and communication tasks	1	1	1	--	10.5 MB	6 ns
CPU 1516TF-3 P-N/DP	Fail-safe technology CPU for high-end applications and communication tasks	1	1	1	--	10.5 MB	6 ns
CPU 1517F-3 PN/-DP	Fail-safe CPU for demanding applications and communication tasks	1	1	1	--	11 MB	2 ns
CPU 1517TF-3 P-N/DP	Fail-safe technology CPU for high-end applications and communication tasks	1	1	1	--	11 MB	2 ns
CPU 1518F-4 PN/-DP	Fail-safe CPU for high-performance applications, demanding communication tasks and very short reaction times	1	1	1	1	69 MB	1 ns
CPU 1518F-4 PN/-DP MFP	Fail-safe CPU for high-performance applications, demanding communication tasks, very short reaction times and C/C++ blocks for the user program	1	1	1	1	119* MB	1 ns

* 50 MB of the integrated work memory is reserved for the function library of CPU runtime

CPU	Performance segment	PROFIBUS interfaces	PROFINET IO RT/IRT interfaces	PROFINET IO RT interface	Basic PROFINET functionality	Work memory	Processing time for bit operations
CPU 1518TF-4 PN/DP	Technology CPU for high-performance motion control applications with large quantities, demanding communication tasks and very short reaction times	1	1	1	1	69 MB	1 ns

* 50 MB of the integrated work memory is reserved for the function library of CPU runtime

In addition to the CPUs, further components such as SINAMICS drives dispose of integrated safety functions. Additional information about integrated safety functions in drives can be found in the manuals for the respective products.

Security Integrated

In conjunction with STEP 7, each CPU offers password-based know-how protection against unauthorized reading out or modification of the program blocks.

Copy protection provides reliable protection against unauthorized reproduction of program blocks. With copy protection, individual blocks on the SIMATIC memory card can be tied to its serial number so that the block can only be run if the configured memory card is inserted into the CPU.

In addition, various access rights can be assigned in the controller to different user groups using four different authorization levels.

Improved manipulation protection allows changed or unauthorized transfers of engineering data to be detected by the controller.

The use of an Ethernet CP (CP 1543-1) provides you with additional access protection through a firewall or possibilities to establish secure VPN connections.

Design and handling

All CPUs of the SIMATIC S7-1500 product series feature a display with plain text information. The display provides the user with information on the order numbers, firmware version, and serial number of all connected modules. In addition, the IP address of the CPU and other network settings can be adapted locally without a programming device. Error messages are shown on the display directly in plain text. When performing servicing, you can minimize plant downtimes by quickly accessing the diagnostics alarms. Detailed information about this and a multitude of other display functions is available in the SIMATIC S7-1500 Display Simulator (https://support.industry.siemens.com/cs/ww/en/view/109761758).

Uniform front connectors for all modules and integrated potential jumpers for flexible formation of potential groups simplify storage. Additional components such as circuit breakers, relays, etc., can be installed quickly and easily, since a DIN rail is implemented in the rail of the SIMATIC S7-1500. The CPUs of the SIMATIC S7-1500 product series can be expanded centrally and in a modular fashion with signal modules. Space-saving expansion enables flexible adaptation to each application.

The system cabling for digital signal modules enables fast and clear connection to sensors and actuators from the field (fully modular connection consisting of front connector modules,

connection cables and I/O modules), as well as easy wiring inside the control cabinet (flexible connection consisting of front connectors with assembled single conductors).

System diagnostics and alarms

Integrated system diagnostics is activated by default for the CPUs. The different types of diagnostics are configured instead of programmed. System diagnostics information and alarms from the drives are displayed consistently and in plain text:

- On the CPU display
- In STEP 7
- On the HMI
- On the Web server

This information is available in RUN mode, but also in STOP mode of the CPU. The diagnostic information is updated automatically when you configure new hardware components.

The CPU is available as a central interrupt server in up to three project languages. The HMI takes over the display in the project languages defined for the CPU. If you require alarm texts in additional languages, you can load them into your HMI via the configured connection. The CPU, STEP 7 and their HMI ensure data consistency without additional engineering steps. The maintenance work is easier.

3.3 Hardware properties

Article number

6ES7517-3TP00-0AB0

View of the module

The following figure shows the CPU 1517T-3 PN/DP.

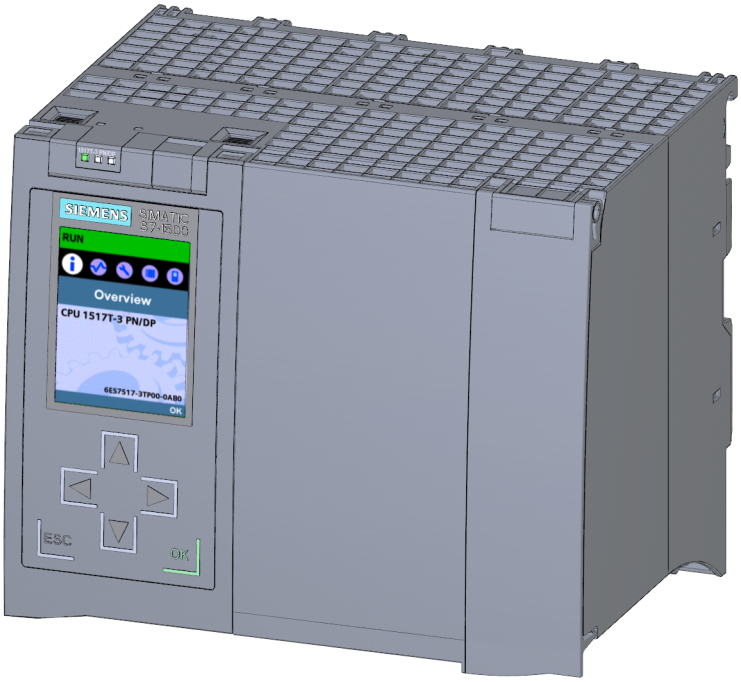

Figure 3-1 CPU 1517T-3 PN/DP

NOTE

Protective film

Note that a protective film is applied to the display in the delivery state of the CPU. Remove the protective film if necessary.

Properties

The CPU 1517T-3 PN/DP has the following properties:

Property	Description	Additional information
CPU display	All CPUs of the SIMATIC S7-1500 product series feature a display with plain text information. The display provides information on order numbers, firmware version and serial numbers of all connected modules. In addition, you can set the IP address of the CPU and carry out further network settings. The display shows occurring error messages directly in plain text. In addition to the functions listed here, a multitude of other functions that are described in the SIMATIC S7-1500 Display Simulator are shown on the display.	• S7-1500, ET 200MP system manual (https://support.automation.siemens.com/WW/view/en/59191792) • SIMATIC S7-1500 Display Simulator (https://support.industry.siemens.com/cs/ww/en/view/109761758)

Property	Description	Additional information
Supply voltage	The 24 V DC supply voltage is supplied via a 4-pole connection plug that is located at the front of the CPU.	• Chapter Wiring (Page 30) • S7-1500, ET 200MP system manual (https://support.automation.siemens.com/WW/view/en/59191792)
PROFIBUS DP		
PROFIBUS interface (X3)	The interface serves to connect to a PROFIBUS network.	PROFIBUS function manual (https://support.industry.siemens.com/cs/ww/en/view/59193579)
Operation of the CPU as DP master	In the role as a DP master, the CPU addresses the connected DP slaves. The CPU cannot assume the role of a DP slave.	
PROFINET IO		
PROFINET interface (X1 P1 R, X1 P2 R)	The interface has two ports. In addition to basic PROFINET functionality, its also supports PROFINET IO RT (real time) and IRT (isochronous real time).	PROFINET function manual (https://support.industry.siemens.com/cs/ww/en/view/49948856)
PROFINET interface (X2 P1)	The interface has two ports. In addition to basic PROFINET functionality, its also supports PROFINET IO RT (real time).	
Operation of the CPU as • IO controller • I-device	• **IO controller:** As an IO controller the CPU addresses the connected IO devices • **I-device:** As an I-device (intelligent IO device) the CPU is assigned to a higher-level IO controller and is used in the process as an intelligent pre-processing unit of sub-processes	

Accessories

You can find information on "Accessories/spare parts" in the S7-1500, ET 200MP system manual (https://support.automation.siemens.com/WW/view/en/59191792).

3.4 Firmware functions

Functions

The CPU supports the following functions:

Function	Description	Additional information
Integrated system diagnostics	The system automatically generates the messages for the system diagnostics and outputs these messages via a programming device/PC, HMI device, the web server or the integrated display. System diagnostics information is also available when the CPU is in STOP mode.	Diagnostics function manual (https://support.automation.siemens.com/WW/view/en/59191792)

Function	Description	Additional information
Integrated web server	The web server lets you access the CPU data by means of a network. Evaluations, diagnostics, and modifications are thus possible over long distances. Monitoring and evaluation is possible without STEP 7, only a web browser is required. Note that you must take appropriate measures to protect the CPU from compromise (such as restricting network access, using firewalls).	• Web server function manual (https://support.automation.siemens.com/WW/view/en/59193560) • Security with SIMATIC S7 controllers system manual (https://support.industry.siemens.com/cs/ww/en/view/90885010)
Integrated trace functionality	Trace functionality supports you in troubleshooting and/or optimizing the user program. You record device tags and evaluate the recordings with the trace and logic analyzer function. Tags are, for example, drive parameters or system and user tags of a CPU. The device saves the recordings. You can read out and permanently save the recordings with the configuration system (ES), if required. The trace and logic analyzer function is therefore suitable for monitoring highly dynamic processes. The trace record can also be displayed through the web server. With the project trace, you record the variables of multiple devices within a project, for example, a controller and a drive. With the long-term trace, you record up to 64 different tags for each cycle in a .csv file over a long period (e.g. hours, days).	Using the trace and logic analyzer function function manual (https://support.automation.siemens.com/WW/view/en/64897128)
OPC UA	With OPC UA, you can exchange data via an open and manufacturer-neutral communication protocol. The CPU can act as OPC UA server. The CPU acting as the OPC UA server can communicate with OPC UA clients. In turn, as an OPC UA client, the CPU can access an OPC UA server, allow the OPC UA server to run methods and read out information from the OPC UA server. Through OPC UA Companion Specification, methods can be specified in a uniform and vendor-neutral way. Using these specified methods, you can easily integrate devices from various manufacturers into your plants and production processes.	Communication function manual (https://support.industry.siemens.com/cs/ww/en/view/59192925)
Configuration control	You can use configuration control to operate different real hardware configurations with a configured maximum configuration of the hardware. This means especially in series machine manufacturing you have the option of operating/configuring different configuration variants of a machine with a single project.	System manual S7-1500/ET 200MP (https://support.automation.siemens.com/WW/view/en/59191792)
PROFINET IO		
RT (real time)	RT prioritizes PROFINET IO telegrams over standard telegrams. This ensures the required determinism in the automation technology. In this process the data is transferred via prioritized Ethernet telegrams.	PROFINET function manual (https://support.automation.siemens.com/WW/view/en/49948856)

Function	Description	Additional information
IRT (isochronous real time)	A reserved bandwidth within the send clock is available for IRT data. The reserved bandwidth ensures that the IRT data can be transmitted in time-synchronized intervals, unaffected by other high network loading (e.g. TCP/IP communication or additional real time communication). Update times with maximum determinism can be realized through IRT. Isochronous applications are possible with IRT.	
Isochronous mode	The Isochronous mode system property acquires measured values and process data and processes the signals in a fixed system clock. Isochronous mode thus contributes to high control quality and hence to greater manufacturing precision. Isochronous mode reduces possible fluctuations of the process reaction times to a minimum. Time-assured processing makes higher machine cycles possible.	
MRP (Media Redundancy Protocol)	It is possible to establish redundant networks via the Media Redundancy Protocol. Redundant transmission links (ring topology) ensure that an alternative communication path is made available if a transmission link fails. The PROFINET devices that are part of this redundant network form an MRP domain. RT operation is possible with the use of MRP.	
MRPD (Media Redundancy with Planned Duplication)	The advantage of the MRP extension MRPD is that, in the event of a failure of a device or a line in the ring, all other devices continue to be supplied with IO data without interruption and with short update times. MRPD is based on IRT and MRP. To realize media redundancy with short update times, the PROFINET devices participating in the ring send their data in both directions. The devices receive this data at both ring ports so that there is no reconfiguration time.	
Shared device	The "Shared device" function allows you to divide the modules or submodules of an IO device up among different IO controllers. Numerous IO controllers are often used in larger or widely distributed systems. Without the "Shared device" function, each I/O module of an IO device is assigned to the same IO controller. If sensors that are physically close to each other must provide data to different IO controllers, several IO devices are required. The "Shared device" function allows the modules or submodules of an IO device to be divided up among different IO controllers, thus allowing flexible automation concepts. You can, for example, combine I/O modules that are physically close to each other in one IO device.	
PROFIenergy	PROFIenergy is a PROFINET-based data interface for switching off consumers centrally and with full coordination during pause times regardless of the manufacturer or device type. The goal is that the process is only provided with the energy that is absolutely required. The majority of the energy is saved by the process; the PROFINET device itself only contributes a few watts of savings potential.	

Function	Description	Additional information
Integrated technology		
Motion Control	The CPUs support the S7-1500 Motion Control functions via the technology objects speed axes, positioning axes, synchronized axes, external encoders, cams, cam tracks and measuring probes. • Speed-controlled axis for controlling a drive with speed specification • Positioning axis for position-controlled positioning of a drive • Synchronous axis to interconnect with a master value. The axis is synchronized to the master axis position. • External encoder for detecting the actual position of an encoder and its use as a master value for synchronous operation • Cams, cam track for position-dependent generation of switching signals • Measuring input for fast, accurate and event-dependent sensing of actual positions You program the technology objects with Motion Control instructions according to PLCopen.	Motion Control topic page (https://support.industry.siemens.com/cs/ww/en/view/109751049)
Extended Motion Control functions	**The technology CPUs** of the SIMATIC S7-1500 also support extended Motion Control functions with the additional technology objects cam, leading axis proxy and kinematics: • Advanced synchronization functions – Synchronization with specification of the synchronous position – Actual value coupling – Leading value or following value shift in gearing or camming – Camming – Synchronization to specified positions – Cross-PLC synchronous operation – Velocity gearing • Up to 4 encoders or measuring systems as actual position for position control • Controlling of kinematics, such as – Cartesian portals – Roller pickers – Delta pickers – SCARA	Motion Control topic page (https://support.industry.siemens.com/cs/ww/en/view/109751049)
Integrated closed-loop control functionality	• PID Compact (continuous PID controller) • PID 3Step (step controller for integrating actuators) • PID Temp (temperature controller for heating and cooling with two separate actuators)	PID control function manual (https://support.industry.siemens.com/cs/ww/en/view/108210036)
Integrated safety		

Function	Description	Additional information
Know-how protection	The know-how protection protects user blocks against unauthorized access and modifications.	System manual S7-1500/ET 200MP (https://support.automation.siemens.com/WW/view/en/59191792)
Copy protection	Copy protection links user blocks to the serial number of the SIMATIC memory card or to the serial number of the CPU. User programs cannot run without the corresponding SIMATIC memory card or CPU.	
Access protection	Extended access protection provides high-quality protection against unauthorized configuration changes. You can use authorization levels to assign separate rights to different user groups.	
Integrity protection	The CPUs feature an integrity protection function by default. This helps to detect any manipulation of the engineering data on the SIMATIC Memory Card or during data transfer between the TIA Portal and the CPU, and to check communication from a SIMATIC HMI system to the CPU for possible manipulation of engineering data. The user receives a corresponding message about manipulation of engineering data detected by the integrity protection.	
Password provider	As an alternative to manual password input you can connect a password provider to STEP 7. A password provider offers the following advantages: • Convenient handling of passwords. STEP 7 reads the password automatically for the blocks. This saves you time. • Optimum block protection because the users do not know the password itself.	

3.5 Operator controls and display elements

3.5.1 Front view of the CPU with closed front flap

The figure below shows the front view of the CPU 1517T-3 PN/DP.

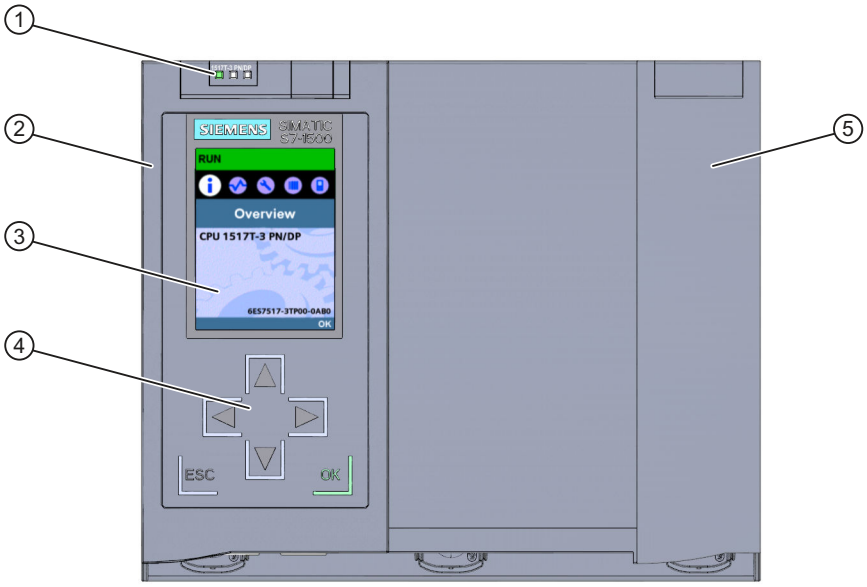

① LEDs for the current operating mode and diagnostics status of the CPU

② Front panel with display

③ Display

④ Operator control buttons

⑤ Front panel of the PROFIBUS interface

Figure 3-2 View of the CPU 1517T-3 PN/DP (with front panels) - front

NOTE

Temperature range for display

To increase its service life, the display switches off at a temperature below the permitted operating temperature of the device. When the display cools down, it automatically switches itself on again. When the display is switched off, the LEDs continue to show the status of the CPU.

For more information on the temperatures at which the display switches itself on and off, refer to the Technical specifications (Page 37).

Removing and attaching the front panel with display

You can remove and attach the front panel with display during operation.

WARNING

Personal injury and damage to property may occur

If you remove or attach the front panel of an S7-1500 automation system during operation, personal injury or damage to property can occur in zone 2 hazardous areas.

Before you remove or fit the front panel, always switch off the power supply to the S7-1500 automation system in hazardous area zone 2. The CPU maintains its operating mode.

Locking the front panel

You can lock the wide front panel with display as well as the narrow front panel of the PROFIBUS interface to protect your CPU against unauthorized access. You can attach a security seal or a padlock with a diameter of 3 mm to the front panels.

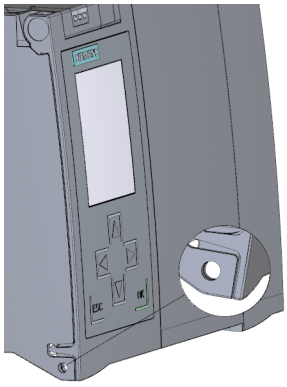

Figure 3-3 Locking latch on the CPU

In addition to the mechanical lock, you can also block access to a password-protected CPU on the display (local lock) and assign a password for the display. You can find additional information on the display, the configurable protection levels and local locking in the S7-1500, ET 200MP (http://support.automation.siemens.com/WW/view/en/59191792) system manual.

Reference

You can find detailed information on the individual display options, a training course and a simulation of the available menu commands in the SIMATIC S7-1500 Display Simulator (https://support.industry.siemens.com/cs/ww/en/view/109761758).

3.5.2 Front view of the CPU without front flaps

The figure below shows the operator controls and connection elements of the CPU 1517T-3 PN/DP.

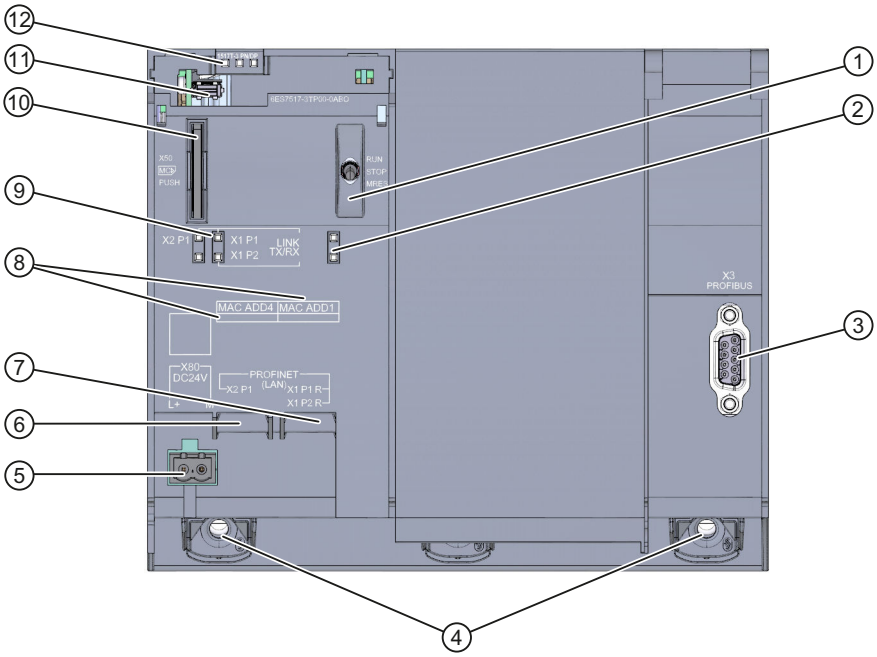

① Mode selector
② No function
③ PROFIBUS interface (X3)
④ Fixing screws
⑤ Connection for supply voltage
⑥ PROFINET IO interface (X2) with 1 port
⑦ PROFINET IO interface (X1) with 2 ports
⑧ MAC addresses of the interfaces
⑨ LEDs for the 3 ports of the PROFINET interfaces X1 and X2
⑩ Slot for the SIMATIC memory card
⑪ Display connection
⑫ LEDs for the current operating mode and diagnostics status of the CPU

Figure 3-4 View of the CPU 1517T-3 PN/DP (without front panels) - front

3.5.3 Rear view of the CPU

The following figure shows the connection elements on the rear of the CPU 1517T-3 PN/DP.

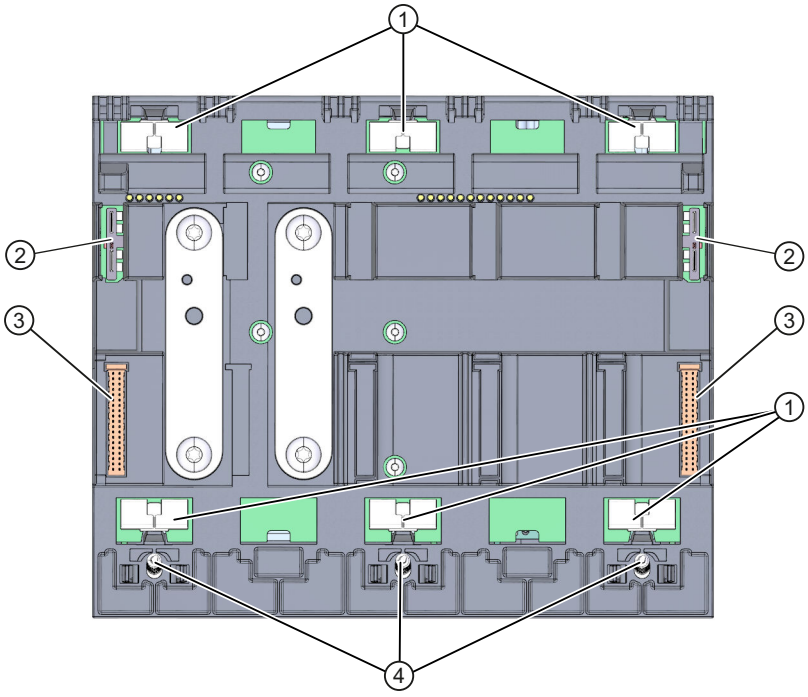

① Shield contact surfaces
② Plug-in connection for power supply
③ Plug-in connection for backplane bus
④ Fixing screws

Figure 3-5 View of the CPU 1517T-3 PN/DP - rear

3.6 Mode selector

You use the mode selector to set the operating mode of the CPU.
The following table shows the meaning of the corresponding operation of the operating mode buttons.

Table 3-6 Meaning of the mode switches

Operation of the mode switch	Meaning	Explanation
RUN	RUN mode	The CPU is executing the user program.
STOP	STOP mode	The user program is not executed. (STOP ACTIVE LED lights up).
MRES	Memory reset	Position for CPU memory reset.

Wiring

4

This section provides information on the pin assignment of the individual interfaces and the block diagram of the CPU 1517T-3 PN/DP.

24 V DC supply voltage (X80)

The connector for the power supply is plugged in when the CPU ships from the factory.
The following table shows the signal names and the descriptions of the pin assignment of the 24 V DC supply voltage.

Table 4-1 Pin assignment 24 V DC supply voltage

View Connector	Signal name [1]		Description
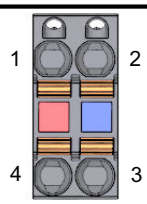	1	1L+	+ 24 V DC of the supply voltage
	2	1M	Ground of the supply voltage
	3	2M	Ground of the supply voltage for loop-through [2]
	4	2L+	+ 24 V DC of the supply voltage for loop-through [2]

[1] 1L+ and 2L+ as well as 1M and 2M are bridged internally

[2] Maximum 10 A permitted

If the CPU is supplied by a system power supply, it is not necessary to connect the 24 V supply.

PROFINET interface X1 with 2-port switch (X1 P1R and X1 P2R)

The assignment corresponds to the Ethernet standard for an RJ45 plug.

- When autonegotiation is deactivated, the RJ45 socket is allocated as a switch (MDI-X).
- When autonegotiation is activated, autocrossing is in effect and the RJ45 socket is allocated either as data terminal equipment (MDI) or a switch (MDI-X).

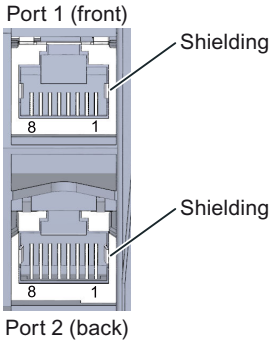

Figure 4-1 PROFINET

PROFINET interface X2 with 1 port (X2 P1)

The assignment corresponds to the Ethernet standard for an RJ45 plug.
Autocrossing is always active on X2. This means the RJ45 socket is allocated either as data terminal equipment (MDI) or a switch (MDI-X).

PROFIBUS interface X3

The table below shows the pin assignment of the PROFIBUS interface. The assignment corresponds to the standard assignment of an RS485 interface.

Table 4-2 PROFIBUS interface pin assignment

View	Signal name		Description
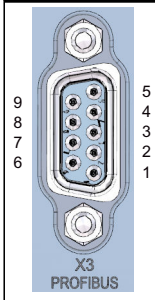 Figure	1	-	-
	2	-	-
	3	RxD/TxD-P	Data line B
	4	RTS	Request to send
	5	M5V2	Data reference potential (from station)
	6	P5V2	Supply plus (from station)
	7	-	-
	8	RxD/TxD-N	Data line A
	9	-	-

NOTE

Supply of I/O devices

The CPU 1517T-3 PN/DP does not provide a 24 V DC power supply on the PROFIBUS interface. I/O devices (for example, PC adapter USB) are therefore only operational on the interface in conjunction with a plug-in power supply set for external power supply.

The innovative successor product, PC adapter USB A2, receives the required power supply via the USB port. The USB A2 PC adapter therefore does not require a 24 V DC supply voltage and can be operated **without** a plug-in power supply set for external power supply.

Reference

You can find additional information on the topics of "Connecting the CPU" and "Accessories/spare parts" in the S7-1500, ET 200MP (https://support.automation.siemens.com/WW/view/en/59191792) system manual.

Assignment of the MAC addresses

CPU 1517T-3 PN/DP has two PROFINET interfaces. The first interface has two ports. The PROFINET interfaces each have a MAC address, and each of the PROFINET ports has its own MAC address. In total, the CPU 1517T-3 PN/DP has five MAC addresses.

The MAC addresses of the PROFINET ports are needed for the LLDP protocol, for example for the neighborhood discovery function.

The number range of the MAC addresses is sequential. The first and last MAC addresses are lasered on the rating plate on the right side of each CPU 1517T-3 PN/DP.

The table below shows how the MAC addresses are assigned.

Table 4-3 Assignment of the MAC addresses

	Assignment	Labeling
MAC address 1	PROFINET interface X1 (visible in STEP 7 for accessible devices)	• Front, lasered • Right side, lasered (start of number range)
MAC address 2	Port X1 P1R (required for LLDP, for example)	• Front and right side, not lasered
MAC address 3	Port X1 P2R (required for LLDP, for example)	• Front and right side, not lasered
MAC address 4	PROFINET interface X2 (visible in STEP 7 for accessible devices)	• Front, lasered • Right side, not lasered
MAC address 5	Port X2 P1 (required for LLDP, for example)	• Front, not lasered • Right side, lasered (start of number range)

Block diagram

The figure below shows the block diagram of the CPU 1517T-3 PN/DP.

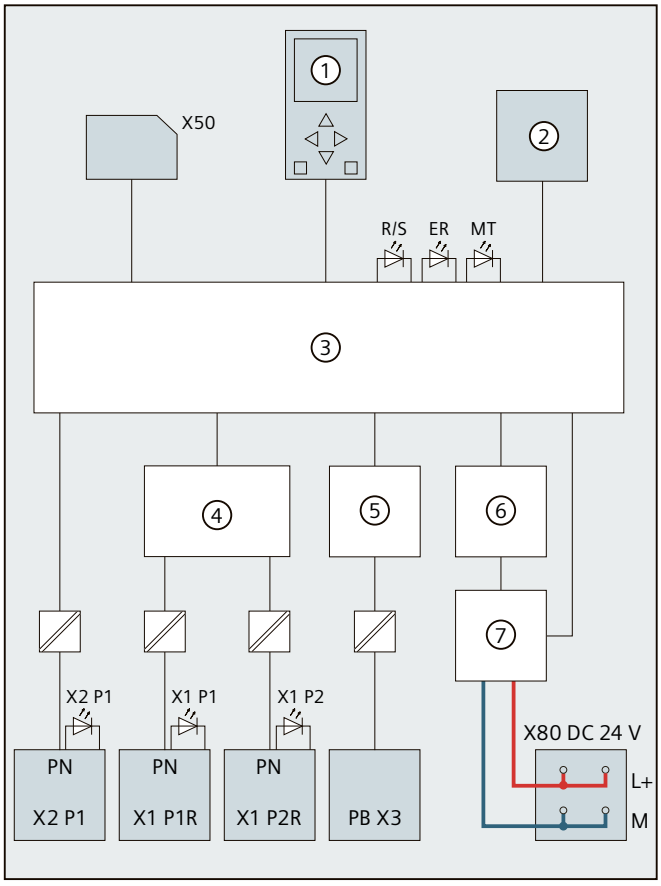

①	Display	PN X1 P1R	PROFINET interface X1 port 1
②	RUN/STOP/MRES mode selector	PN X1 P2R	PROFINET interface X1 port 2
③	Electronics	PN X2 P1	PROFINET interface X2 port 1
④	PROFINET 2-port switch	PB X3	PROFIBUS interface X3
⑤	PROFIBUS DP driver	L+	24 V DC supply voltage
⑥	Backplane bus interface	M	Ground
⑦	Internal supply voltage	R/S	RUN/STOP LED (green/yellow)
X50	SIMATIC memory card	ER	ERROR LED (red)
X80 24 V DC	Infeed of supply voltage	MT	MAINT LED (yellow)
		X1 P1, X1 P2, X2 P1	LED Link TX/RX

Figure 4-2 Block diagram of the CPU 1517T-3 PN/DP

Interrupts, error messages, diagnostics and system alarms

5

The status and error displays of the CPU 1517T-3 PN are described below.
You can find additional information on the topic of "Interrupts" in the STEP 7 online help.
You can find additional information on the topic of "Diagnostics" and "System alarms" in the Diagnostics (https://support.automation.siemens.com/WW/view/en/59192926) function manual.

5.1 Status and error displays of the CPU

LED display

The figure below shows the LED displays of the CPU 1517T-3 PN/DP.

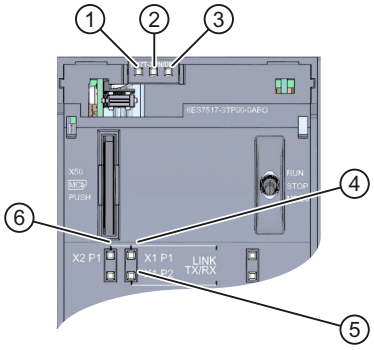

① RUN/STOP LED (yellow/green LED)
② ERROR LED (red LED)
③ MAINT LED (yellow LED)
④ No function
⑤ LINK RX/TX LED for port X1 P1 (yellow/green LED)
⑥ LINK RX/TX LED for port X1 P2 (yellow/green LED)
⑦ LINK RX/TX LED for port X2 P1 (yellow/green LED)

Figure 5-1 LED display of the CPU 1517T-3 PN/DP (without front panel)

Meaning of the RUN/STOP, ERROR and MAINT LEDs

The CPU 1517T-3 PN/DP has three LEDs to signal the current operating status and diagnostics status. The following table shows the meaning of the various combinations of colors for the RUN/STOP, ERROR and MAINT LEDs.

Table 5-1 Meaning of the LEDs

RUN/STOP LED	ERROR LED	MAINT LED	Meaning
LED off	LED off	LED off	Missing or insufficient power supply on the CPU.
LED off	LED flashes red	LED off	An error has occurred.
LED lit green	LED off	LED off	CPU is in RUN mode.
LED lit green	LED off	LED lit yellow	Maintenance demanded for the plant. The affected hardware must be checked/replaced within a short period of time.
			Active Force job
			OPC UA server of the CPU expects initial trust lists and CRLs via GDS Push function.
LED lit green	LED off	LED flashes yellow	Bad configuration
LED lit yellow	LED flashes red	LED off	A diagnostics event is pending.
LED lit yellow	LED off	LED flashes yellow	Firmware update using SIMATIC memory card successfully completed.
LED lit yellow	LED off	LED off	CPU is in STOP mode.
			CPU runs a program with active breakpoints. The program is at a breakpoint.
LED lit yellow	LED flashes red	LED flashes yellow	The program on the SIMATIC memory card is causing an error.
			Firmware update using SIMATIC memory card has failed.
			The CPU has detected an error state. Additional information is available via the CPU diagnostic buffer.
LED flashes yellow	LED off	LED off	CPU is performing internal activities during STOP, e.g. startup after STOP.
			Download of the user program from the SIMATIC memory card
			CPU carries out a program with active breakpoint. The program is presently moving from one breakpoint to another.
			Firmware update is being performed.
LED flashes yellow/green	LED off	LED off	Startup (transition from STOP → RUN)

RUN/STOP LED	ERROR LED	MAINT LED	Meaning
LED flashes yellow/green	LED flashes red	LED flashes yellow	Startup (CPU booting)
			Test of LEDs during startup, inserting a module.
			LED flashing test

Meaning of LINK RX/TX LED

Each port has a LINK RX/TX LED. The table below shows the various "LED scenarios" of ports for the CPU 1517T-3 PN/DP.

Table 5-2 Meaning of the LED

LINK TX/RX LED	Meaning
LED off	There is no Ethernet connection between the PROFINET interface of the PROFINET device and the communication partner. No data is currently being sent/received via the PROFINET interface. There is no LINK connection.
LED flashes green	The "LED flashing test" is being performed.
LED lit green	There is an Ethernet connection between the PROFINET interface of your PROFINET device and a communication partner.
LED flashes yellow/green	Data is currently being received from or sent to a communications partner on Ethernet via the PROFINET interface of the PROFINET device.

NOTE

"LED" instruction

You can read the status (e.g. "On" or "Off") of LEDs of a CPU or a module using the "LED" instruction. Note, however, that it is not possible to read the LED status of the LINK RX/TX LEDs on all S7-1500 CPUs.

You can find additional information on the "LED" instruction in the STEP 7 online help.

Technical specifications

6

The following table shows the technical specifications as of 11/2022. You can find a data sheet including daily updated technical specifications on the Internet (https://support.industry.siemens.com/cs/ww/en/pv/6ES7517-3TP00-0AB0/td?dl=en).

General technical specifications

You can find information on the general technical specifications, such as standards and approvals, electromagnetic compatibility, protection class, etc., in the S7-1500, ET 200MP system manual (https://support.automation.siemens.com/WW/view/en/59191792).

Dimension drawing

A

This section contains the dimension drawing of the module on the mounting rail, as well as a dimension drawing with the front panel open. Always observe the specified dimensions for installation in cabinets, control rooms, etc.

Dimension drawings for CPU 1517-3 PN/DP

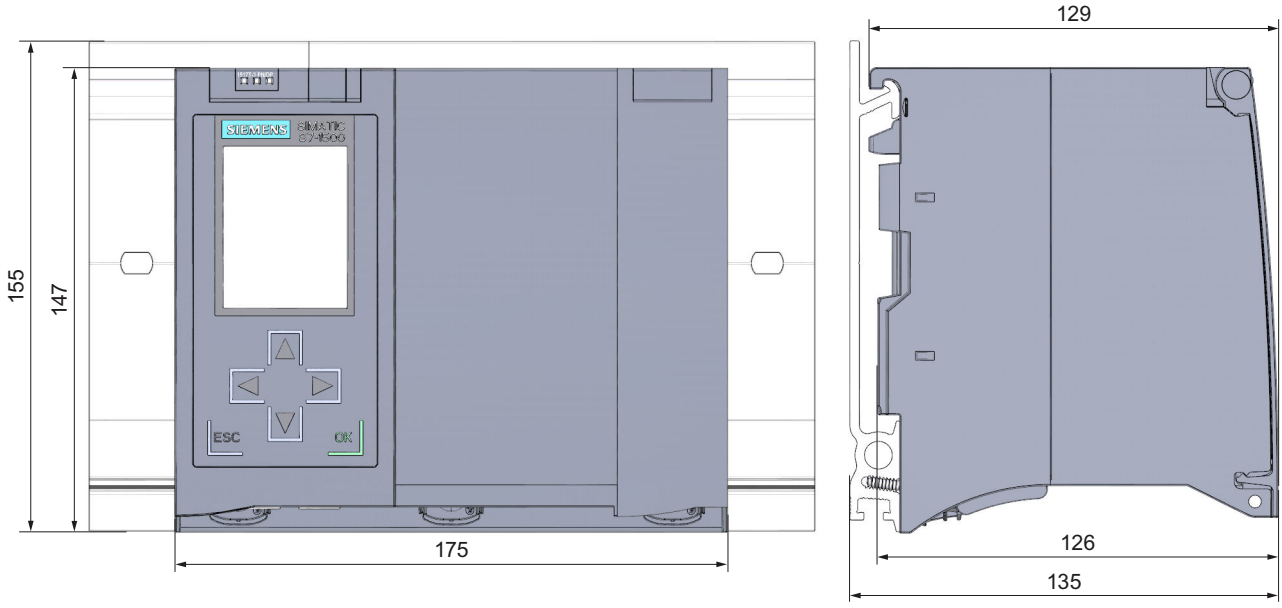

Figure A-1 Dimension drawing of the CPU 1517T-3 PN/DP, front and side view

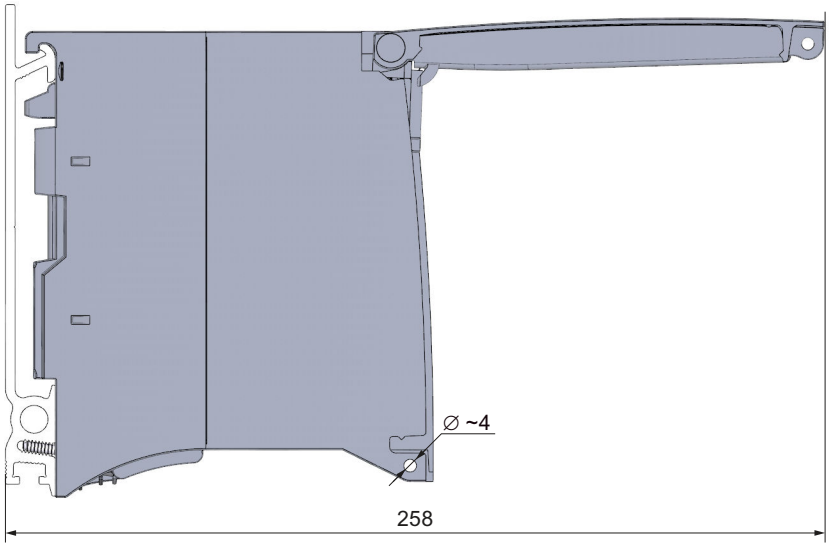

Figure A-2 Dimension drawing of the CPU 1517T-3 PN/DP, side view with open front panel

SIEMENS

Edition 11/2022

EQUIPMENT MANUAL

SIMATIC

S7-1500R/H

CPU 1517H-3 PN
6ES7517-3HP00-0AB0

support.industry.siemens.com

SIEMENS

SIMATIC

S7-1500R/H CPU 1517H-3 PN (6ES7517-3HP00-0AB0)

Equipment Manual

Introduction 1

Safety instructions 2

Product overview 3

Connecting 4

Interrupts, diagnostics, error messages and system events 5

Technical specifications 6

Dimension drawing A

11/2022

A5E42011886-AD

Legal information

Warning notice system

This manual contains notices you have to observe in order to ensure your personal safety, as well as to prevent damage to property. The notices referring to your personal safety are highlighted in the manual by a safety alert symbol, notices referring only to property damage have no safety alert symbol. These notices shown below are graded according to the degree of danger.

⚠ DANGER
indicates that death or severe personal injury **will** result if proper precautions are not taken.

⚠ WARNING
indicates that death or severe personal injury **may** result if proper precautions are not taken.

⚠ CAUTION
indicates that minor personal injury can result if proper precautions are not taken.

NOTICE
indicates that property damage can result if proper precautions are not taken.

If more than one degree of danger is present, the warning notice representing the highest degree of danger will be used. A notice warning of injury to persons with a safety alert symbol may also include a warning relating to property damage.

Qualified Personnel

The product/system described in this documentation may be operated only by **personnel qualified** for the specific task in accordance with the relevant documentation, in particular its warning notices and safety instructions. Qualified personnel are those who, based on their training and experience, are capable of identifying risks and avoiding potential hazards when working with these products/systems.

Proper use of Siemens products

Note the following:

⚠ WARNING
Siemens products may only be used for the applications described in the catalog and in the relevant technical documentation. If products and components from other manufacturers are used, these must be recommended or approved by Siemens. Proper transport, storage, installation, assembly, commissioning, operation and maintenance are required to ensure that the products operate safely and without any problems. The permissible ambient conditions must be complied with. The information in the relevant documentation must be observed.

Trademarks

All names identified by ® are registered trademarks of Siemens AG. The remaining trademarks in this publication may be trademarks whose use by third parties for their own purposes could violate the rights of the owner.

Disclaimer of Liability

We have reviewed the contents of this publication to ensure consistency with the hardware and software described. Since variance cannot be precluded entirely, we cannot guarantee full consistency. However, the information in this publication is reviewed regularly and any necessary corrections are included in subsequent editions.

Siemens AG
Digital Industries
Postfach 48 48
90026 NÜRNBERG
GERMANY

A5E42011886-AD
Ⓟ 10/2022 Subject to change

Copyright © Siemens AG 2018 - 2022.
All rights reserved

Table of contents

1 Introduction 5

1.1 S7-1500R/H Documentation Guide 6
1.1.1 Information classes S7-1500R/H 6
1.1.2 SIMATIC Technical Documentation 7

2 Safety instructions 9

2.1 Security information 9

3 Product overview 10

3.1 New functions 10
3.2 Configuration and operating principle 14
3.3 Hardware properties 15
3.4 Firmware functions 18
3.5 Operator controls and display elements 20
3.5.1 Front view of the CPU with closed front flap 20
3.5.2 Front view of the CPU without front flaps 22
3.5.3 Rear view of the CPU 23
3.5.4 Bottom view 24
3.6 Mode selector 24

4 Connecting 26

4.1 Terminal assignment 26

5 Interrupts, diagnostics, error messages and system events 30

5.1 Status and error display of the CPU 30

6 Technical specifications 35

A Dimension drawing 44

Introduction 1

Purpose of the documentation

This manual supplements the system manual of the S7-1500R/H redundant system and the function manuals. This manual contains a description of the module-specific information. The system-related functions are described in the system manual. All system-spanning functions are described in the function manuals.

The information provided in this manual and the system manual enables you to commission the CPU 1517H-3 PN.

Conventions

STEP 7: In this documentation, "STEP 7" is used as a synonym for all versions of the configuration and programming software "STEP 7 (TIA Portal)".

Please also observe notes marked as follows:

NOTE

A note contains important information on the product described in the documentation, on the handling of the product or on the section of the documentation to which particular attention should be paid.

Recycling and disposal

For environmentally friendly recycling and disposal of your old equipment, contact a certified electronic waste disposal company and dispose of the equipment according to the applicable regulations in your country.

Industry Mall

The Industry Mall is the catalog and order system of Siemens AG for automation and drive solutions on the basis of Totally Integrated Automation (TIA) and Totally Integrated Power (TIP).

You can find catalogs for all automation and drive products on the Internet (https://mall.industry.siemens.com).

1.1 S7-1500R/H Documentation Guide

1.1.1 Information classes S7-1500R/H

The documentation for the redundant S7-1500R/H system is arranged into three areas.
This arrangement enables you to access the specific content you require.
You can download the documentation free of charge from the Internet (https://support.industry.siemens.com/cs/ww/en/view/109742691).

Basic information

The System Manual and Getting Started describe in detail the configuration, installation, wiring and commissioning of the redundant S7-1500R/H system.
The STEP 7 online help supports you in the configuration and programming.
Examples:

- Getting Started S7-1500R/H
- System manual S7-1500R/H
- Online help TIA Portal

Device information

Equipment manuals contain a compact description of the module-specific information, such as properties, wiring diagrams, characteristics and technical specifications.
Examples:

- Equipment Manuals CPUs
- Equipment Manuals Power Supply Modules

General information

The function manuals contain detailed descriptions on general topics relating to the redundant S7-1500R/H system.
Examples:

- Function Manual Diagnostics
- Function Manual Communication
- Function manual Structure and Use of the CPU Memory
- Function Manual Cycle and Response Times
- PROFINET Function Manual

Product Information

Changes and supplements to the manuals are documented in a Product Information. The Product Information takes precedence over the device and system manuals.
You can find the latest Product Information on the redundant S7-1500R/H system on the Internet. (https://support.industry.siemens.com/cs/ww/en/view/109742691)

Manual Collection S7-1500/ET 200MP

The Manual Collection S7-1500/ET 200MP contains the complete documentation on the redundant S7-1500R/H system gathered together in one file.
You can find the Manual Collection on the Internet.
(https://support.industry.siemens.com/cs/ww/en/view/86140384)

SIMATIC S7-1500 comparison list for programming languages

The comparison list contains an overview of which instructions and functions you can use for which controller families.
You can find the comparison list on the Internet.
(https://support.industry.siemens.com/cs/ww/en/view/86630375)

1.1.2 SIMATIC Technical Documentation

Additional SIMATIC documents will complete your information. You can find these documents and their use at the following links and QR codes.
The Industry Online Support gives you the option to get information on all topics. Application examples support you in solving your automation tasks.

Overview of the SIMATIC Technical Documentation

Here you will find an overview of the SIMATIC documentation available in Siemens Industry Online Support:

Industry Online Support International
(https://support.industry.siemens.com/cs/ww/en/view/109742705)

Watch this short video to find out where you can find the overview directly in Siemens Industry Online Support and how to use Siemens Industry Online Support on your mobile device:

Quick introduction to the technical documentation of automation products per video (https://support.industry.siemens.com/cs/us/en/view/109780491)

YouTube video: Siemens Automation Products - Technical Documentation at a Glance (https://youtu.be/TwLSxxRQQsA)

mySupport

With "mySupport" you can get the most out of your Industry Online Support.

Registration	You must register once to use the full functionality of "mySupport". After registration, you can create filters, favorites and tabs in your personal workspace.

Support requests	Your data is already filled out in support requests, and you can get an overview of your current requests at any time.
Documentation	In the Documentation area you can build your personal library.
Favorites	You can use the "Add to mySupport favorites" to flag especially interesting or frequently needed content. Under "Favorites", you will find a list of your flagged entries.
Recently viewed articles	The most recently viewed pages in mySupport are available under "Recently viewed articles".
CAx data	The CAx data area gives you access to the latest product data for your CAx or CAe system. You configure your own download package with a few clicks: • Product images, 2D dimension drawings, 3D models, internal circuit diagrams, EPLAN macro files • Manuals, characteristics, operating manuals, certificates • Product master data

You can find "mySupport" on the Internet. (https://support.industry.siemens.com/My/ww/en)

Application examples

The application examples support you with various tools and examples for solving your automation tasks. Solutions are shown in interplay with multiple components in the system - separated from the focus on individual products.
You can find the application examples on the Internet.
(https://support.industry.siemens.com/cs/ww/en/ps/ae)

Safety instructions 2

2.1 Security information

Siemens provides products and solutions with industrial security functions that support the secure operation of plants, systems, machines and networks.

In order to protect plants, systems, machines and networks against cyber threats, it is necessary to implement – and continuously maintain – a holistic, state-of-the-art industrial security concept. Siemens' products and solutions constitute one element of such a concept.

Customers are responsible for preventing unauthorized access to their plants, systems, machines and networks. Such systems, machines and components should only be connected to an enterprise network or the internet if and to the extent such a connection is necessary and only when appropriate security measures (e.g. firewalls and/or network segmentation) are in place.

For additional information on industrial security measures that may be implemented, please visit (https://www.siemens.com/industrialsecurity).

Siemens' products and solutions undergo continuous development to make them more secure. Siemens strongly recommends that product updates are applied as soon as they are available and that the latest product versions are used. Use of product versions that are no longer supported, and failure to apply the latest updates may increase customers' exposure to cyber threats.

To stay informed about product updates, subscribe to the Siemens Industrial Security RSS Feed visit (https://www.siemens.com/cert).

Product overview

3

3.1 New functions

This section contains an overview of the most important new firmware functions of the CPU compared with the predecessor version CPU (V2.9).

New functions of the CPU in firmware version V3.0

New functions	Customer benefits	Where can I find information?
Support PROFINET system redundancy R1	As of FW version V3.0, the S7-1500H redundant system supports PROFINET system redundancy R1: • ET 200SP IM 155-6 PN R1 (6ES7155-6AU00-0HM0) • ET 200SP HA IM 155-6 PN HA (6DL1155-6AU00-0PM0) • ET 200iSP IM 152-1 PN (6ES7152-1BA00-0AB0) R1 devices are equipped with two interface modules compared to S2 devices. If one interface module fails, the R1 device can still be reached by the H-CPUs via the second interface module. Thus, R1 devices have a higher availability than S2 devices.	• S7-1500R/H System Manual (https://support.industry.siemens.com/cs/ww/en/view/109754833) • PROFINET Function Manual (http://support.automation.siemens.com/WW/view/en/49948856)
New configuration variants for S7-1500H	As of FW version V3.0, the S7-1500H redundant system supports additional configuration variants: • Configuration of PROFINET rings with R1 devices • Configuration of a line topology with S2 devices, switched S1 devices • Configuration of a line topology with R1 devices • Configuration of a combined topology with R1 devices, S2 devices • Configuration without additional devices This allows you to connect the S7-1500H redundant system to almost any network topology and solve complex automation tasks.	S7-1500R/H System Manual (https://support.industry.siemens.com/cs/ww/en/view/109754833)
OB 70	As of FW version V3.0, OB 70 (I/O redundancy error) is available for the diagnostics of R1 and S2 devices in S7-1500H systems.	S7-1500R/H System Manual (https://support.industry.siemens.com/cs/ww/en/view/109754833)

New functions	Customer benefits	Where can I find information?
Synchronization module up to 40 km	As of FW version V3.0, a new synchronization module Sync Module 1 GB FO 40 km is available. The synchronization module enables a distance of up to 40 km between the two H-CPUs via optical fibers. This allows you to use the S7-1500H redundant system for long tunnel installations.	S7-1500R/H System Manual (https://support.industry.siemens.com/cs/ww/en/view/109754833)
Data block functions	As of FW version V3.0, the instructions for the data block functions are supported: • CREATE_DB (create data block) • READ_DBL (read from data block in the load memory) • WRIT_DBL (write to data block in load memory) • DELETE_DB (delete data block)	STEP 7 online help
Network management protocol SNMP: A simple configuration option is now available for using SNMP services. For new configurations, this is disabled by default in accordance with "Security-by-Default".	Can be enabled/disabled in the CPU properties. Community strings can be configured.	Communication Function Manual (https://support.industry.siemens.com/cs/ww/en/view/59192925)
Trace: The S7-1500 CPU supports up to 64 configured signals per trace.	Number of configurable signals per trace extended	Using the Trace and Logic Analyzer Function Function Manual (http://support.automation.siemens.com/WW/view/en/64897128)

New functions of the CPU in firmware version V2.9

New functions	Customer benefits	Where can I find information?
Influence switchover time of switched S1 devices	As of FW version V2.9, you can influence the switchover time between disconnection and return of switched S1 devices after a failure/STOP of the primary CPU. This function offers the following advantages: • Optimization of the switchover time between disconnection and return of switched S1 devices	PROFINET Function Manual (http://support.automation.siemens.com/WW/view/en/49948856)
MRP interconnection	The MRP interconnection procedure is an extension of MRP. MRP interconnection enables the redundant coupling of 2 or more rings with MRP in PROFINET networks. MRP interconnection offers the following advantages: • When setting up redundant network topologies, there is no limitation to the maximum number of devices of 50 devices in a ring. • Monitoring of larger topologies with ring redundancy.	

New functions	Customer benefits	Where can I find information?
Simulation of R/H-CPUs	PLCSIM Advanced V4.0 supports simulation of R/H-CPUs • Virtual commissioning of machines with R/H-CPUs in a system • Automatic testing of the STEP 7 user program The simulation offers the following advantages: • Early error detection and risk minimization • Reduced response times • No hardware costs	S7-PLCSIM Advanced Function Manual (https://support.industry.siemens.com/cs/ww/en/view/109773484)
OB 72 (CPU redundancy error)	As of FW version V2.9, the operating system calls OB 72 on further events: • The R/H-system has entered RUN-Redundant system state and the synchronization of the two R/H-CPUs is possible redundantly. • The R/H-system has entered RUN-Redundant system state, but the synchronization of the two R/H-CPUs is not possible redundantly. • The R/H-system is still in RUN-Redundant system state and the synchronization of the two R/H-CPUs is possible redundantly now or again. • The R/H-system is still in RUN-Redundant system state, but the synchronization of the two R/H-CPUs is no longer possible redundantly.	S7-1500R/H System Manual (https://support.industry.siemens.com/cs/ww/en/view/109754833)
"RH_CTRL" instruction	As of FW version V2.9, the "RH_CTRL" instruction supports additional functions: • Request SYNCUP • Switch primary CPU to STOP mode (only in RUN-Redundant system state) • Switch backup CPU to STOP mode	
Instructions for recipe phases	As of FW version V2.9, the instructions for recipe phases supports: • RecipeExport (export recipe) • RecipeImport (import recipe)	STEP 7 online help
Technology objects TO_BasicPos and SSI_Absolute_Encoder	Technology object "TO_BasicPos" You use the "TO_BasicPos" instruction to cyclically control a SINAMICS drive with the technology for SINAMICS S/G/V basic positioners. Technology object SSI_Absolute_Encoder You use the "SSI_Absolute_Encoder" instruction to control position detection and measuring functions of the TM PosInput technology module via the user program.	

New functions of the CPU in firmware version V2.8

New functions	Customer benefits	Where can I find information?
Download modified user program in RUN-Redundant system state	You can download a modified user program into the R/H CPUs in the RUN-Redundant system state. Advantage: The redundant system will remain consistently in the RUN-Redundant system state during the change to the user program. The system state will not switch to RUN-Solo or SYNCUP.	S7-1500R/H System Manual (https://support.industry.siemens.com/cs/ww/en/view/109754833)
Backing up the configuration of the S7-1500R/H redundant system in runtime	You do not have to interrupt the process during a backup while the plant is running. Uninterrupted plant operation avoids high restart and material costs.	
Switched S1 device	The "Switched S1 device" function of the CPU enables operation of standard IO devices in the S7-1500R/H redundant system.	
Testing with breakpoints	When testing with breakpoints, you run a program from breakpoint to breakpoint in the STARTUP (startup OB) or RUN-Solo system state. Testing with breakpoints provides you with the following advantages: • Testing SCL and STL program code with the help of breakpoints • Localization of logic errors step by step • Simple and quick analysis of complex programs prior to actual commissioning • Recording of current values within individual executed loops • Using breakpoints for program validation is also possible in SCL or STL networks within LAD/FBD blocks.	
PID controller	PID controllers are built into all R/H-CPUs as standard. PID controllers measure the actual value of a physical variable, for example, temperature or pressure, and compare the actual value with the setpoint. Based on the resulting error signal, the controller calculates a manipulated variable that causes the process value to reach the setpoint as quickly and stably as possible. The PID controllers offer you the following advantages: • Simple configuration and programming through integrated editors and blocks • Simple simulation, visualization, commissioning and operation via PG and HMI • Automatic calculation of the control parameters and tuning during operation • No additional hardware and software required	• S7-1500R/H System Manual (https://support.industry.siemens.com/cs/ww/en/view/109754833) • PID Control Function Manual (https://support.industry.siemens.com/cs/ww/en/view/108210036)
Alarms in the user program	Alarms enable you to display events from process execution in the S7-1500R/H redundant system and to quickly identify, accurately locate, and correct errors.	Diagnostics Function Manual (https://support.industry.siemens.com/cs/ww/en/view/59192926)

Additional information

You can find an overview of all new functions, improvements and revisions in the respective firmware version on the Internet (https://support.industry.siemens.com/cs/ww/en/view/109478459).

3.2 Configuration and operating principle

Structure

The S7-1500H redundant system consists of the following components:

- Two CPUs of the type CPU 1517H-3 PN
- Two SIMATIC memory cards
- Four synchronization modules (two synchronization modules in each H-CPU)
- Two redundancy connections (two duplex fiber-optic cables)
- IO devices
- Load power supply (optional)

You mount the CPUs on a common mounting rail or spatially separated on two separate mounting rails. You connect the two CPUs with fiber-optic cables to two synchronization modules in each CPU.

You set up the PROFINET ring or the PROFINET network via the PROFINET interfaces X1 P1R and X1 P2R of the CPUs (as of FW version V3.0: e.g. as line or mixed topology).

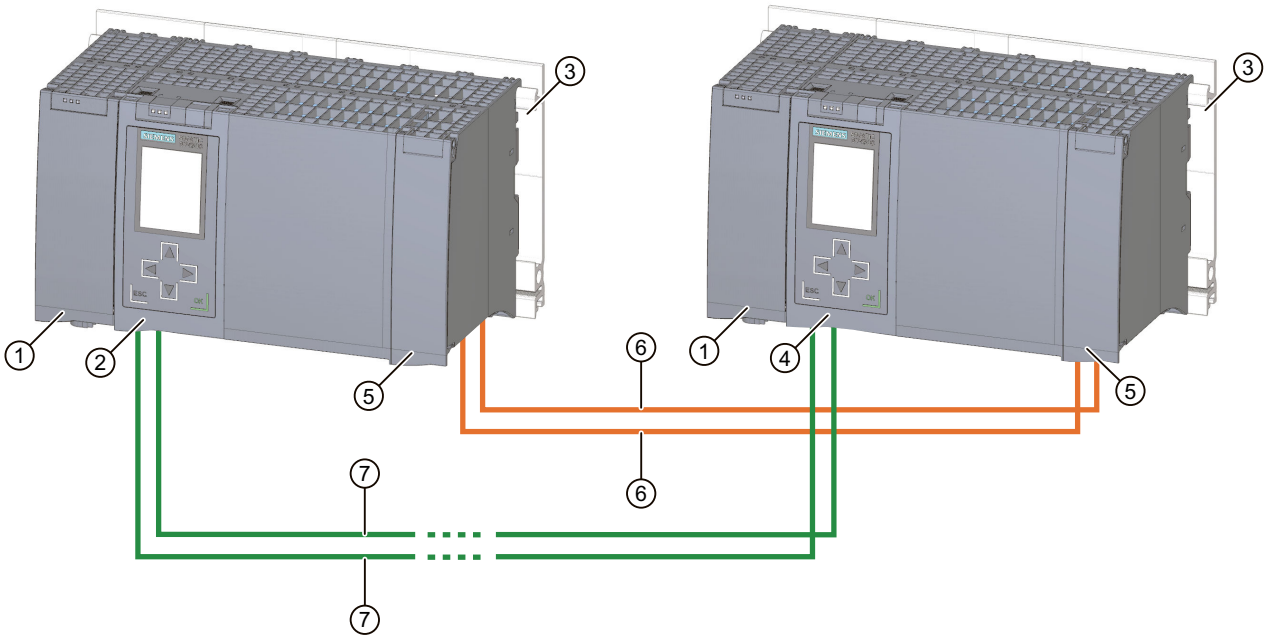

① Optional load current supply
② First CPU
③ Mounting rail with integrated DIN rail profile
④ Second CPU

⑤ Location of the synchronization modules (not visible in graphic)

⑥ Redundancy connections (fiber-optic cables)

⑦ PROFINET cable (PROFINET ring)

Figure 3-1 S7-1500H configuration example (with PROFINET ring)

NOTE

Standard rail adapter

You mount the CPUs on a standardized 35 mm rail using the standard rail adapter.

You can find information on mounting the standard rail adapter in the S7-1500R/H redundant system (https://support.industry.siemens.com/cs/ww/en/view/109754833) System Manual.

Principle of operation

One of the two CPUs in the redundant system takes on the role of CPU for process control (primary CPU). The other CPU takes on the role of the following CPU (backup CPU). The role of the CPUs can change during operation. All relevant data is synchronized from the primary CPU to the backup CPU via the fiber-optic cables of the redundancy connections. Synchronization between the primary CPU and backup CPU ensures fast switching between CPUs in the event of a primary CPU failure. If the primary CPU fails, the backup CPU retains control of the process as the new primary CPU at the point of interruption.

The redundancy connections consist of two fiber-optic cables, which directly connect the CPUs via plug-in synchronization modules.

Additional information

You can find a detailed description of the operation and design of the S7-1500H redundant system in the system manual for Redundant System S7-1500R/H (https://support.industry.siemens.com/cs/ww/en/view/109754833).

3.3 Hardware properties

Article number

6ES7517-3HP00-0AB0

View of the module

The figure below shows the CPU 1517H-3 PN.

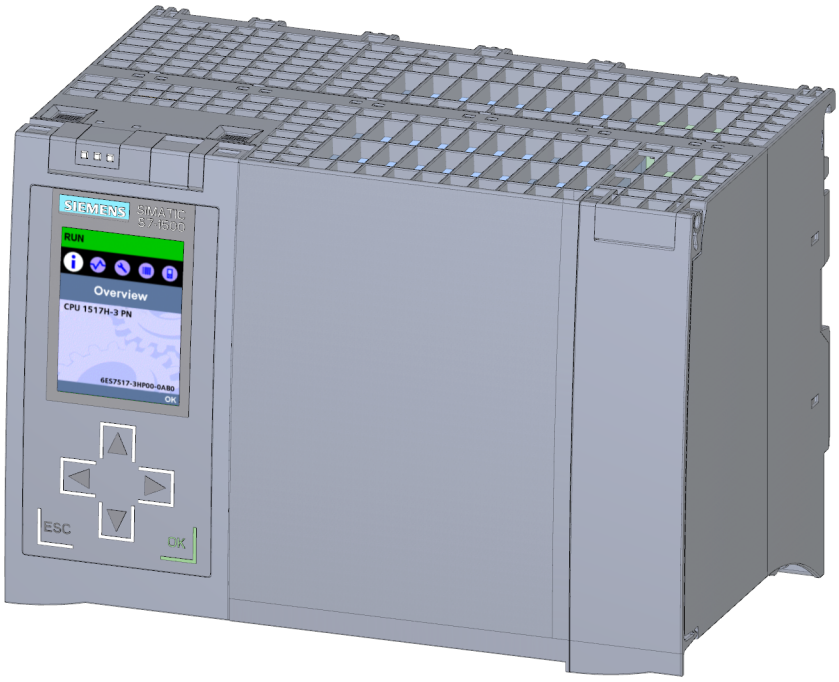

Figure 3-2 CPU 1517H-3 PN

NOTE
Protective film
Note that there is a removable protective film on the display when the CPUs are delivered.

Properties

CPU 1517H-3 PN has the following technical properties:

Property	Description	Additional information
CPU display	All CPUs of the redundant system S7 1500R/H have a display with plain text information. The display provides you with diagnostic messages as well as information about the article number, the firmware version and the serial number of the CPU. You can also view and assign the IP addresses, the PROFINET device name and the redundancy ID of the CPU. The system IP address can be viewed via STEP 7 but not in the display. In addition to the functions listed here, a large number of other functions are available on the display. These additional functions are described in the SIMATIC S7 1500 Display Simulator.	• Redundant System S7-1500R/H (https://support.industry.siemens.com/cs/ww/en/view/109754833) System Manual • SIMATIC S7-1500 Display Simulator (https://support.industry.siemens.com/cs/ww/en/view/109761758)

Property	Description	Additional information
Supply voltage	The 24 V DC supply voltage is fed via a 4-pin plug located on the front of the CPU.	• Section Connecting (Page 26) • Redundant System S7-1500R/H (https://support.industry.siemens.com/cs/ww/en/view/109754833) System Manual
PROFINET IO		
PROFINET IO interface (X1 P1R and X1 P2R)	The CPU has an X1 interface with two ports (X1 P1R and X1 P2R). • The PROFINET IO interface X1 (default P1R) is used to set up the PROFINET ring or PROFINET network (e.g. line topology, mixed topology) with the two CPUs and the IO devices. • The interface supports PROFINET IO RT (Real-Time) and PROFINET basic functionality. Basic PROFINET functionality comprises: – HMI communication – Communication with the configuration system – Communication with a higher-level network (backbone, router, Internet) – Communication with another machine or automation cell	• Redundant System S7-1500R/H (https://support.industry.siemens.com/cs/ww/en/view/109754833) System Manual • PROFINET Function Manual (https://support.industry.siemens.com/cs/ww/en/view/49948856)
PROFINET interface (X2 P1)	The CPU has an X2 interface with one port (X2 P1). The interface supports PROFINET basic functionality.	
H-Sync interfaces (X3 P1 and X4 P1)	Die CPU has an X3 interface with one port (X3 P1) and an X4 interface with one port (X4 P1). The X3 and X4 interfaces are reserved for the synchronization of the two CPUs.	
Synchronization modules	Make the redundancy connections between the two CPUs via the synchronization modules with fiber-optic cables. You plug each synchronization modules in the X3 and X4 interfaces.	
Fiber-optic cables	You connect the two synchronization modules in pairs to each CPU via a fiber-optic cable.	
Operation of the CPUs as IO controllers	**IO controller:** As IO controllers the CPUs address the following configured IO devices: • IO devices with system redundancy S2 • IO devices with system redundancy R1 (as of FW version V3.0) • Standard IO devices (switched S1 devices)	

Accessories

You can find information on the topic of "Accessories/spare parts" in the system manual for Redundant System S7-1500R/H (https://support.industry.siemens.com/cs/ww/en/view/109754833).

3.4 Firmware functions

Functions

CPU 1517H-3 PN supports the following firmware functions:

Function	Description	Additional information
CPU redundancy	There are two duplicate CPUs that synchronize their data via two duplex fiber-optic cables, which connect the CPUs directly to each other via plug-in synchronization modules. If one of the CPUs fails, the other CPU retains control of the process.	Redundant System S7-1500R/H (https://support.industry.siemens.com/cs/ww/en/view/109754833) System Manual
Integrated system diagnostics	The system automatically generates the messages for the system diagnostics and outputs these messages via a programming device/PC, HMI device or the integrated display. System diagnostics information is also available when the CPUs are in operating state STOP.	Diagnostics Function Manual (https://support.industry.siemens.com/cs/ww/en/view/59192926)
Integrated trace functionality	Trace functionality supports you in troubleshooting and/or optimizing the user program. You record device tags and evaluate the recordings with the trace and logic analyzer function. Tags are, for example, drive parameters or system and user tags of a CPU. Trace and logic analyzer functions are suitable for monitoring highly dynamic processes. Note: Note that the S7-1500R/H redundant system supports recording of measurements. However, saving the measurements to the SIMATIC memory card is not supported.	Function manual Using the trace and logic analyzer function (https://support.industry.siemens.com/cs/ww/en/view/64897128)
PROFINET IO		
System redundancy S2	IO-Devices with S2 system redundancy enable uninterrupted operation during a primary backup switchover. If the role of the CPUs changes, the new primary CPU takes over the PROFINET IO communication.	• Redundant System S7-1500R/H (https://support.industry.siemens.com/cs/ww/en/view/109754833) System Manual • PROFINET Function Manual (http://support.automation.siemens.com/WW/view/en/49948856)
System redundancy R1	IO devices with R1 system redundancy are equipped with two interface modules compared to S2 devices. If one interface module fails, the R1 device can still be reached by the H-CPUs via the second interface module. Thus, R1 devices have a higher availability than S2 devices.	
Switched S1 device	The switched S1 device function of the CPU enables operation of standard IO devices in the S7-1500R/H redundant system.	Redundant System S7-1500R/H (https://support.industry.siemens.com/cs/ww/en/view/109754833) System Manual
RT (real time)	RT prioritizes PROFINET IO frames over standard frames. This ensures the required determinism in the automation technology. In this process the data is transferred via prioritized Ethernet frames.	PROFINET Function Manual (http://support.automation.siemens.com/WW/view/en/49948856)

Function	Description	Additional information
MRP (Media Redundancy Protocol)	The Media Redundancy Protocol enables the configuration of redundant networks. Redundant transmission links (ring topology) ensure that an alternative communication path is made available if a transmission link fails. Within the PROFINET ring, the H-CPUs assume the role of the MRP Manager following appropriate project configuration and all other devices in the ring assume the role of the MRP clients.	
MRP interconnection	The process MRP interconnection is an enhancement of MRP and allows redundant coupling of two or more rings with MRP in PROFINET networks. MRP interconnection is - like MRP - specified in the standard IEC 62439-2 (Edition 3).	
PROFIenergy	PROFIenergy is a PROFINET-based data interface for switching off consumers centrally and with full coordination during pause times regardless of the manufacturer or device type. Through this, the process should only be provided with the energy that is absolutely required. Most of the energy is saved by the process. The PROFINET device itself only contributes a few watts to the savings potential.	
Integrated technology		
Integrated closed-loop control functionality	• PID Compact (continuous PID controller) • PID 3Step (step controller for integrating actuators) • PID Temp (temperature controller for heating and cooling with two separate actuators)	PID Control Function Manual (https://support.industry.siemens.com/cs/ww/en/view/108210036)
Controlling, measuring and position detection	• TO_BasicPos (control of a SINAMICS drive) • SSI_Absolute_Encoder (control of position detection and measuring function of the TM PosInput technology module)	STEP 7 online help
Security Integrated		
Know-how protection	The know-how protection protects user blocks against unauthorized access and modifications.	Redundant System S7-1500R/H (https://support.industry.siemens.com/cs/ww/en/view/109754833) System Manual
Access protection	You can use authorization levels to assign separate rights to different user groups.	
Integrity protection	The CPUs feature an integrity protection function by default. This helps to detect any manipulation of the engineering data on the SIMATIC Memory Card or during data transfer between the TIA Portal and the CPU, and to check communication from a SIMATIC HMI system to the CPU for possible manipulation of engineering data. The user receives a corresponding message about manipulation of engineering data detected by the integrity protection.	
Password provider	As an alternative to manual password entry, you can link a password provider to STEP 7. A password provider offers the following advantages: • Convenient handling of passwords. STEP 7 automatically imports the password for the blocks. This saves you time. • Optimum block protection because the users do not know the password itself.	

3.5 Operator controls and display elements

3.5.1 Front view of the CPU with closed front flap

The figure below shows the front view of the CPU 1517H-3 PN.

① LEDs for the current operating state and diagnostic status of the CPU

② Front panel with display

③ Display

④ Control keys

⑤ Front panel of the X3 and X4 interfaces

Figure 3-3 View of the CPU 1517R-3 PN (with front panel) - front

---

NOTE

Temperature range for display

To increase its service life, the display switches off at a temperature below the permitted operating temperature of the device. When the display cools down, it automatically switches itself on again. When the display is switched off, the LEDs continue to show the status of the CPU.

You can find additional information on the temperatures at which the display switches itself on and off in the Technical specifications (Page 35).

Pulling and plugging the front panel with display

You can pull and plug the front panel with display during operation.

WARNING

Personal injury and damage to property may occur

If you remove or attach the front panel of a redundant system S7-1500R/H during operation, personal injury or damage to property can occur in hazardous area zone 2.

Before you remove or fit the front panel, always switch off the power supply to the S7-1500R/H redundant system in hazardous area zone 2.

Locking the front panel

You can lock the front panel to protect the SIMATIC memory card and the mode selector of the CPU against unauthorized access.

You can attach a security seal or a padlock with a hoop diameter of 3 mm to the front panel.

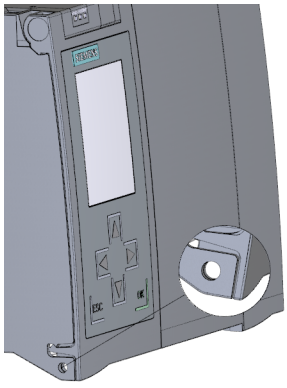

Figure 3-4 Locking latch on the CPU

In addition to the mechanical lock, you can also block access to a password-protected CPU on the display (local lock) and assign a password for the display. You can find additional information on the display, the configurable protection levels and the local lock in the system manual for Redundant System S7-1500R/H (https://support.industry.siemens.com/cs/ww/en/view/109754833).

Reference

You can find detailed information on the individual display options, a training course and a simulation of the available menu commands in the SIMATIC S7-1500 Display Simulator (https://support.industry.siemens.com/cs/ww/en/view/109761758).

3.5.2 Front view of the CPU without front flaps

The figure below shows the operator controls and connection elements of the CPU 1517H-3 PN.

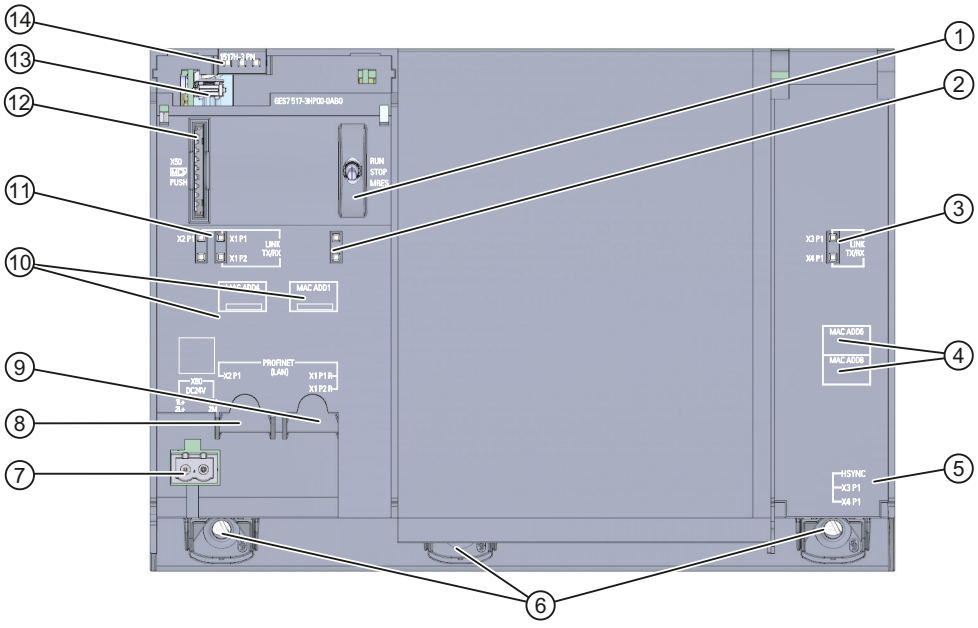

① Mode selector
② No function
③ LED displays for the ports of the X3 and X4 interfaces
④ MAC addresses of the X3 and X4 interfaces
⑤ H-Sync X3 and X4 interfaces with 1 port each (not visible in graphic)
⑥ Fixing screws
⑦ Connector for power supply
⑧ PROFINET IO interface X2 with 1 port
⑨ PROFINET IO interface X1 with 2 ports
⑩ MAC addresses of the X1 and X2 interfaces
⑪ LED displays for the ports of the X1 and X2 interfaces
⑫ Slot for the SIMATIC memory card
⑬ Display connector
⑭ LEDs for the current operating state and diagnostic status of the CPU

Figure 3-5 View of the CPU 1517H-3 PN (without front panels) - front

3.5.3 Rear view of the CPU

The figure below shows the connection elements on the rear of the CPU 1517H-3 PN.

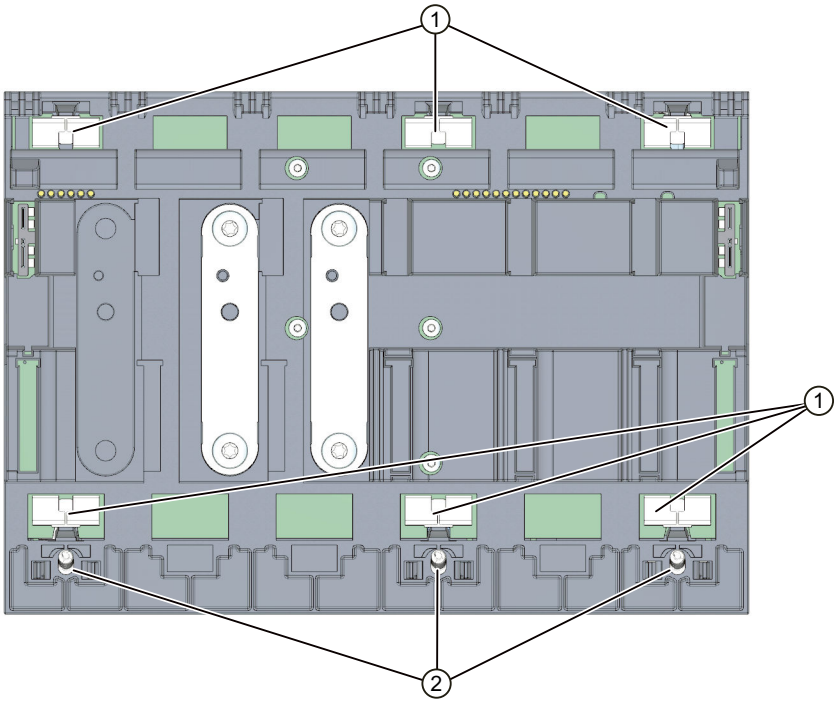

① Shield contact surfaces

② Fixing screws

Figure 3-6 View of the CPU 1517H-3 PN - rear

3.5.4 Bottom view

Interfaces and synchronization modules

The figure below shows the position of the interfaces on the underside of the CPU.

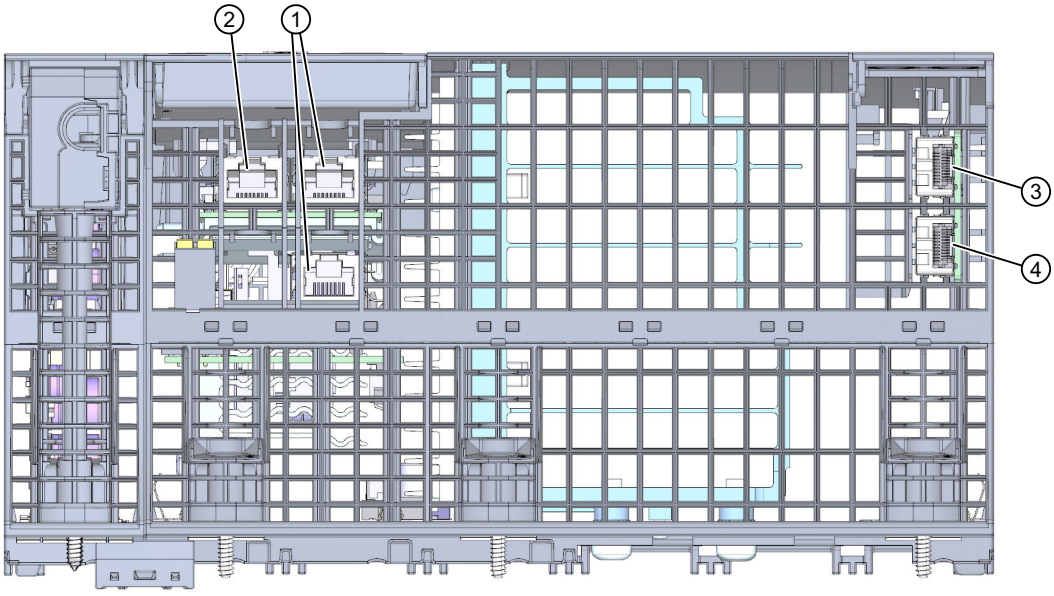

① PROFINET IO interface X1 with 2 ports
② PROFINET IO interface X2 with 1 port
③ H-Sync interface X3 (H-Sync channel 1) without synchronization module
④ H-Sync interface X4 (H-Sync channel 2) without synchronization module

Figure 3-7 Bottom view

3.6 Mode selector

You use the mode selector to:

- Request a change to a specific operating state
- Disable or enable the change of a specific operating state
  (if, for example, the mode selector is set to STOP, you cannot switch the CPU to RUN via a communication task configured in the TIA Portal or via the display)

The following table shows the position of the switch and the corresponding meaning.

Table 3-1 Mode switch settings

Position	Meaning	Explanation
RUN	RUN operating state	The CPU has permission to go to RUN.
STOP	STOP operating state	The CPU does not have permission to go to RUN.
MRES	Memory reset	Position for CPU memory reset.

Reference

You can find a brief overview of the various operating states and system states in the section Status and error display of the CPU (Page 30).
You can find a detailed description of the operating states and system states in the system manual for S7-1500R/H Redundant System (https://support.industry.siemens.com/cs/ww/en/view/109754833).

Connecting

4

4.1 Terminal assignment

This section provides information on the terminal assignment of the individual interfaces and the block diagram of the CPU 1517H-3 PN.

24 V DC supply voltage (X80)

The connector for the power supply is plugged in when the CPU ships from the factory.
The following table shows the signal names and the descriptions of the pin assignment of the 24 V DC supply voltage.

Table 4-1 Pin assignment 24 V DC supply voltage

View Connector	Signal name [1]		Description
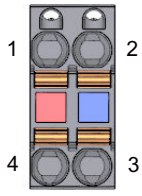	1	1L+	+ 24 V DC of the supply voltage
	2	1M	Ground of the supply voltage
	3	2M	Ground of the supply voltage for loop-through [2]
	4	2L+	+ 24 V DC of the supply voltage for loop-through [2]

[1] 1L+ and 2L+ as well as 1M and 2M are bridged internally

[2] Maximum 10 A permitted

You can find information on the various supply options in the system manual for Redundant System S7-1500R/H (https://support.industry.siemens.com/cs/ww/en/view/109754833).

PROFINET interface X1 with 2-port switch (X1 P1R and X1 P2R)

The assignment corresponds to the Ethernet standard for an RJ45 plug.

- When autonegotiation is deactivated, the RJ45 socket is allocated as a switch (MDI-X).
- When autonegotiation is activated, autocrossing is in effect and the RJ45 socket is allocated either as data terminal equipment (MDI) or a switch (MDI-X).

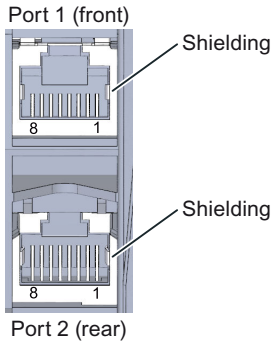

Figure 4-1 Interface assignments

PROFINET interface X2 with 1 port (X2 P1)

The assignment corresponds to the Ethernet standard for a RJ45 connector.

Autocrossing is always active on X2. This means the RJ45 socket is allocated either as data terminal equipment (MDI) or a switch (MDI-X).

H-Sync X3 interface with 1 port (X3 P1) and X4 with 1 port (X4 P1)

Make the redundancy connections between the two CPUs via the synchronization modules at the X3 P1 and X4 P1 interfaces (LC sockets). You interconnect the CPUs in pairs via the fiber-optic cables.

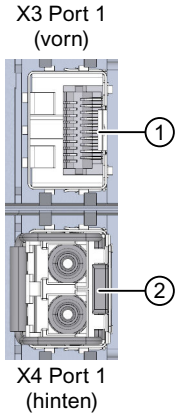

① Without synchronization module

② With synchronization module and removed dummy plug

Figure 4-2 Interface assignments

Additional information

You can find additional information on the topic of "Connecting the CPU" and on the topic "Accessories/spare parts" in the system manual for Redundant System S7-1500R/H (https://support.industry.siemens.com/cs/ww/en/view/109754833).

Assignment of the MAC addresses

For each CPU, CPU 1517H-3 PN has:

- One PROFINET interface with two ports
- One PROFINET interface with one port
- Two H-Sync interfaces with one port each

Each of the interfaces has a MAC address. Each port also has a separate MAC address. There are a total of eighteen MAC addresses for the two CPUs of the CPU 1517H-3 PN.

The MAC addresses of the ports are needed for the LLDP protocol, for example for the neighborhood discovery function.

The number range of the MAC addresses is sequential. The first and last MAC addresses are printed on the rating plate on the right side of each CPU 1517H-3 PN.

The table below shows how the MAC addresses are assigned.

Table 4-2 Distribution of the MAC addresses of a CPU

	Assignment	Labeling
MAC address 1	PROFINET interface X1 (visible in STEP 7 when devices are accessible)	• Front printed • Right-side printed (start of number range)
MAC address 2	Port X1 P1R (required for LLDP, for example)	---
MAC address 3	Port X1 P2R (required for LLDP, for example)	---
MAC address 4	PROFINET interface X2 (visible in STEP 7 when devices are accessible)	• Front printed
MAC address 5	Port X2 P1 (required for LLDP, for example)	---
MAC address 6	H-Sync interface X3	• Front printed
MAC address 7	Port X3 P1	---
MAC address 8	H-Sync interface X4	• Front printed
MAC address 9	Port X4 P1	• Right-side printed (end of number range)

Block diagram

The following figure shows the block diagram of the CPU 1517H-3 PN.

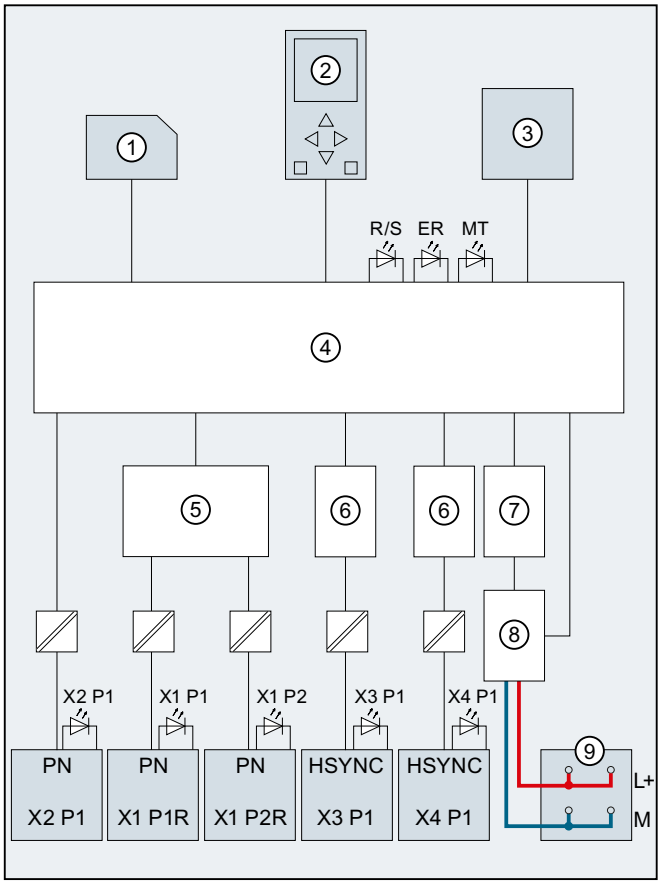

①	SIMATIC memory card (X50)	PN X1 P2R	PROFINET interface X1 port 2
②	Display	PN X2 P1	PROFINET interface X2 port 1
③	Mode selector RUN/STOP/MRES	HSYNC X3 P1	H-Sync interface X3 port 1
④	Electronics	HSYNC X4 P1	H-Sync interface X4 port 1
⑤	PROFINET 2-port switch	L+	24 V DC supply voltage
⑥	Synchronization interface	M	Ground
⑦	Backplane bus connection (connection to backplane bus not configurable)	R/S	RUN/STOP LED (yellow/green)
⑧	Internal supply voltage	ER	ERROR LED (red)
⑨	Supply of the 24 V DC supply voltage (X80)	MT	MAINT LED (yellow)
PN X1 P1R	PROFINET interface X1 port 1	X1 P1, X1 P2, X2 P1, X3 P1, X4 P1	LED Link TX/RX

Figure 4-3 Block diagram of the CPU 1517H-3 PN

Interrupts, diagnostics, error messages and system events

5

5.1 Status and error display of the CPU

The LED displays of the CPU are described below.
You can find more detailed information on "Interrupts" in the STEP 7 online help.
You can find additional information on the topic of "Diagnostics" and "System events" in the Diagnostics (https://support.industry.siemens.com/cs/ww/en/view/59192926) function manual and in the system manual Redundant System S7-1500R/H (https://support.industry.siemens.com/cs/ww/en/view/109754833).
You can find additional information on the topic of "Operating states and system states" as well as various failure scenarios in the system manual for S7-1500R/H Redundant System (https://support.industry.siemens.com/cs/ww/en/view/109754833).

LED display

The figure below shows the LED displays of the CPU 1517H-3 PN.

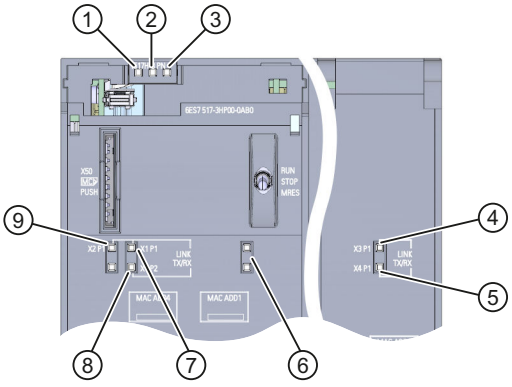

① RUN/STOP LED (yellow/green LED)
② ERROR LED (red LED)
③ MAINT LED (yellow LED)
④ LINK RX/TX LED for port X3 P1 (yellow/green LED)
⑤ LINK RX/TX LED for port X4 P1 (yellow/green LED)
⑥ No function
⑦ LINK RX/TX LED for port X1 P1 (yellow/green LED)
⑧ LINK RX/TX LED for port X1 P2 (yellow/green LED)
⑨ LINK RX/TX LED for port X2 P1 (yellow/green LED)

Figure 5-1 LED display of the CPU 1517H-3 PN (without front panel)

LED displays depending on operating states and system states

CPU 1517H-3 PN has the following LEDs for displaying the current operating state and diagnostics status.

- RUN/STOP LED
- ERROR LED
- MAINT LED

The LEDs indicate the operating state of the respective CPU within the redundant system. Operating states describe the behavior of a single CPU at a specific time. The combination of the operating states of the CPUs forms the system state.

The following figure shows the possible operating states of the CPUs and the resulting system states.

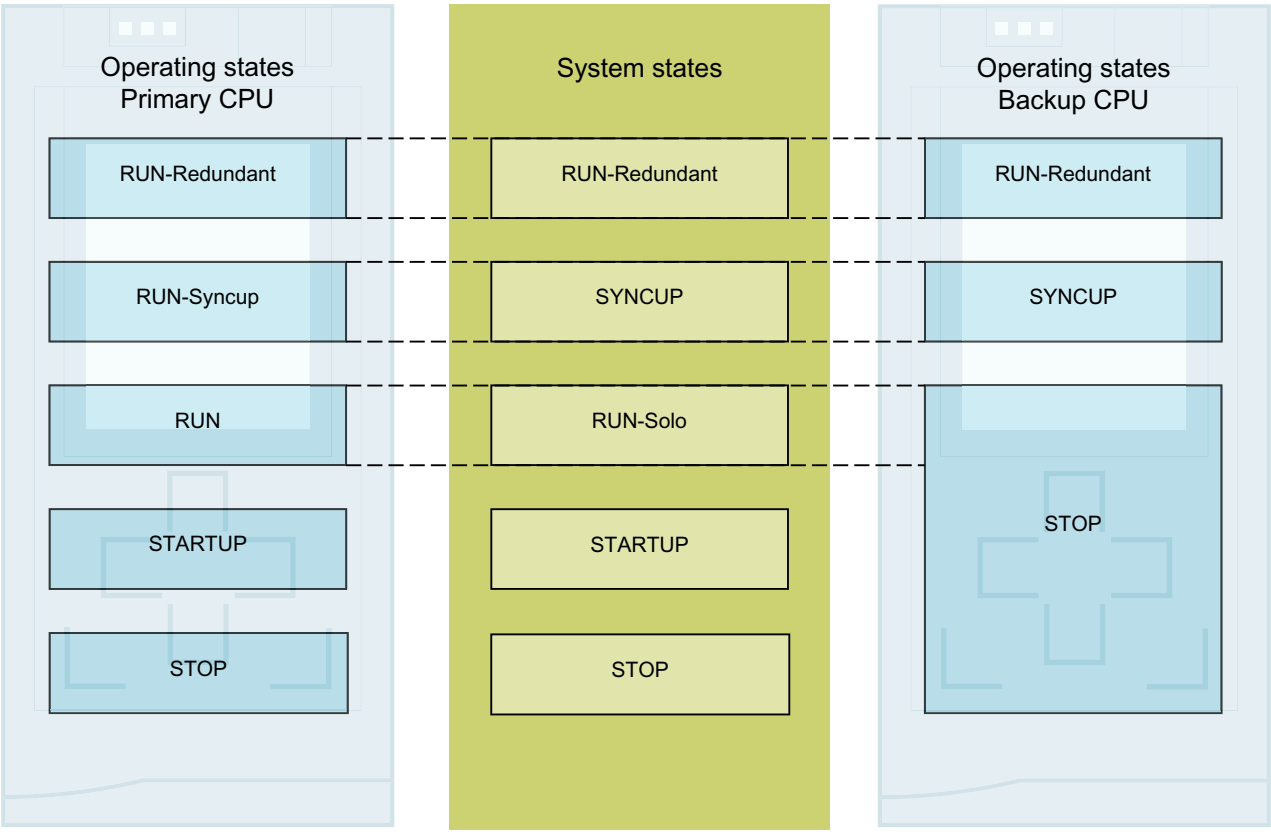

Figure 5-2 Operating states and system states

Meaning of the RUN/STOP, ERROR and MAINT LEDs

CPU 1517H-3 PN has the following LEDs for displaying the current operating state and diagnostics status.

NOTE

LED patterns of the S7-1500H redundant system

Note that it is not always possible to:

- Determine the state of the CPU from the signal pattern of individual LEDs
- Determine the state of the other CPU from the signal pattern of a CPU

The "Meaning" column only shows a possible typical cause.

To investigate the cause of the signal pattern, use the diagnostic buffer and its display via:

- STEP 7
- HMI devices
- Displays of the CPUs

The following table shows the meaning of the various color combinations for the RUN/STOP, ERROR and MAINT LEDs.

Table 5-1 Meaning of the LEDs

RUN/STOP LED	ERROR LED	MAINT LED	Meaning
LED off	LED off	LED off	Missing or insufficient supply voltage on the CPU.
LED flashes yellow/green	LED flashes red	LED flashes yellow	Startup (CPU booting)
			Test of LEDs during startup, inserting a module.
			LED flashing test
LED lit yellow	LED off	LED lit yellow	CPU is in operating state STOP.
			Completion of system initialization
LED flashes yellow	LED off	LED lit yellow	CPU executes internal activities in an operating state ≠ RUN-Redundant.
LED lit yellow	LED flashes red	LED flashes yellow	CPU defective Firmware update using SIMATIC Memory Card has failed.
LED lit yellow	LED off	LED flashes yellow	Firmware update successfully completed.
LED flashes yellow/green	LED off	LED lit yellow	The primary CPU is in STARTUP operating state. The backup CPU is in SYNCUP operating state.
LED flashes yellow	LED off	LED off	The CPU performs a warm restart.

[1] If there is not enough storage space on a SIMATIC Memory Card or on both SIMATIC Memory Cards in RUN-Redundant, the write function is aborted and the redundant system continues operation with the original configuration. The redundant system will remain in the RUN-Redundant system state.

RUN/STOP LED	ERROR LED	MAINT LED	Meaning
LED lit green	LED off	LED lit yellow	Maintenance demanded for the plant. You need to check/replace the affected hardware within a short period of time.
			The primary CPU is in the RUN or RUN-Syncup operating state.
			Active Force job
LED lit green	LED off	LED off	The CPU is in RUN-Redundant operating state. There are no events, requirements, errors, etc.
LED lit green	LED flashes red	LED off	A diagnostic event is pending in RUN-Redundant operating state.
LED lit green	LED flashes red	LED lit yellow	A diagnostic event (e.g. failure of an IO device within the PROFINET ring or no access to SIMATIC memory card possible[1)]) and maintenance is demanded (e.g. interruption of the PROFINET ring).

1) If there is not enough storage space on a SIMATIC Memory Card or on both SIMATIC Memory Cards in RUN-Redundant, the write function is aborted and the redundant system continues operation with the original configuration. The redundant system will remain in the RUN-Redundant system state.

NOTE

MAINT LED of the two CPUs

The MAINT LEDs of both CPUs only go out when the following conditions are fulfilled:

- The CPUs are in the RUN-Redundant system state.
- No maintenance is demanded.

NOTE

LED displays in redundant operating state

In the RUN-Redundant system state, the LED displays on both CPUs are identical (exception: you are performing an LED flash test on one CPU).

Meaning of LINK RX/TX LED

Each port of the X1, X2, X3 and X4 interfaces has a LINK RX/TX LED. The table below shows the various LED patterns of the ports of the CPU 1517H-3 PN.

Table 5-2 Meaning of LINK RX/TX LED

LINK TX/RX LED	Meaning
Off	There is no connection between the interface of the device and a communication partner. No data is currently being sent/received via the interface. There is no LINK connection. The redundancy connections were interrupted.

LINK TX/RX LED	Meaning
Flashes green	The CPU performs an LED flash test.
Illuminated green	There is a connection between the interface of the device and a communication partner. The redundancy connections are OK.
LED flashes yellow/green	Data is currently being received or sent by a communication partner via the interface of the device.

NOTE

"LED" instruction

You can read the status (e.g. "On" or "Off") of LEDs of a CPU or a module using the "LED" instruction. Note, however, that it is not possible to read the LED status of the LINK RX/TX LEDs on all S7-1500 R/H CPUs.

You can find additional information on the "LED" instruction in the STEP 7 online help.

Technical specifications

6

The following table shows the technical specifications as of 11/2022. You can find a data sheet including daily updated technical specifications on the Internet (https://support.industry.siemens.com/cs/ww/en/pv/6ES7517-3HP00-0AB0/td?dl=en).

Article number	6ES7517-3HP00-0AB0
General information	
Product type designation	CPU 1517H-3 PN
HW functional status	FS06
Firmware version	V3.0
Product function	
• I&M data	Yes; I&M0 to I&M3
• Isochronous mode	No
Engineering with	
• STEP 7 TIA Portal configurable/integrated from version	V18 (FW V3.0) / V15.1 (FW V2.6) or higher
Display	
Screen diagonal [cm]	6.1 cm
Control elements	
Number of keys	6
Mode selector switch	1
Supply voltage	
Rated value (DC)	24 V
permissible range, lower limit (DC)	19.2 V
permissible range, upper limit (DC)	28.8 V
Reverse polarity protection	Yes
Mains buffering	
• Mains/voltage failure stored energy time	5 ms
• Repeat rate, min.	1/s
Input current	
Current consumption (rated value)	1.5 A
Current consumption, max.	1.9 A
Inrush current, max.	1.9 A; Rated value
I^2t	0.4 $A^2 \cdot s$
Power loss	
Power loss, typ.	24 W
Memory	
Number of slots for SIMATIC memory card	1
SIMATIC memory card required	Yes

Article number	6ES7517-3HP00-0AB0
Work memory	
• integrated (for program)	2 Mbyte
• integrated (for data)	8 Mbyte
Load memory	
• Plug-in (SIMATIC Memory Card), max.	32 Gbyte
Backup	
• maintenance-free	Yes
CPU processing times	
for bit operations, typ.	4 ns
for word operations, typ.	6 ns
for fixed point arithmetic, typ.	6 ns
for floating point arithmetic, typ.	24 ns
CPU-blocks	
Number of elements (total)	12 000; Blocks (OB, FB, FC, DB) and UDTs
DB	
• Number range	Number range: 1 to 59 999
• Size, max.	8 Mbyte; For non-optimized block accesses, the max. size of the DB is 64 KB
FB	
• Number range	0 ... 65 535
• Size, max.	1 Mbyte
FC	
• Number range	0 ... 65 535
• Size, max.	1 Mbyte
OB	
• Size, max.	1 Mbyte
• Number of free cycle OBs	100
• Number of time alarm OBs	20
• Number of delay alarm OBs	20
• Number of cyclic interrupt OBs	20
• Number of process alarm OBs	50
• Number of DPV1 alarm OBs	3
• Number of startup OBs	100
• Number of asynchronous error OBs	4
• Number of synchronous error OBs	2
• Number of diagnostic alarm OBs	1
Nesting depth	
• per priority class	24
Counters, timers and their retentivity	

Article number	6ES7517-3HP00-0AB0
S7 counter	
• Number	2 048
Retentivity	
– adjustable	Yes
IEC counter	
• Number	Any (only limited by the main memory)
Retentivity	
– adjustable	Yes
S7 times	
• Number	2 048
Retentivity	
– adjustable	Yes
IEC timer	
• Number	Any (only limited by the main memory)
Retentivity	
– adjustable	Yes
Data areas and their retentivity	
Retentive data area (incl. timers, counters, flags), max.	768 kbyte; In total; available retentive memory for bit memories, timers, counters, DBs, and technology data (axes): 700 KB
Flag	
• Size, max.	16 kbyte
• Number of clock memories	8; 8 clock memory bit, grouped into one clock memory byte
Data blocks	
• Retentivity adjustable	Yes
• Retentivity preset	No
Local data	
• per priority class, max.	64 kbyte; max. 16 KB per block
Address area	
Number of IO modules	8 192; max. number of modules / submodules
I/O address area	
• Inputs	32 kbyte; All inputs are in the process image
• Outputs	32 kbyte; All outputs are in the process image
per integrated IO subsystem	
– Inputs (volume)	16 kbyte
– Outputs (volume)	16 kbyte
Subprocess images	
• Number of subprocess images, max.	32
Hardware configuration	

Article number	6ES7517-3HP00-0AB0
Number of distributed IO systems	1
Number of IO Controllers	
• integrated	1
Rack	
• Modules per rack, max.	1; CPU
Time of day	
Clock	
• Type	Hardware clock
• Backup time	6 wk; At 40 °C ambient temperature, typically
• Deviation per day, max.	10 s; Typ.: 2 s
Operating hours counter	
• Number	16
Clock synchronization	
• supported	Yes
• on Ethernet via NTP	Yes
Interfaces	
Number of PROFINET interfaces	2
1. Interface	
Interface types	
• RJ 45 (Ethernet)	Yes; X1
• Number of ports	2
• integrated switch	Yes
Protocols	
• IP protocol	Yes; IPv4
• PROFINET IO Controller	Yes
• PROFINET IO Device	No
• SIMATIC communication	Yes; Only Server
• Open IE communication	Yes
• Web server	No
• Media redundancy	Yes
PROFINET IO Controller	
Services	
– PG/OP communication	Yes
– Isochronous mode	No
– IRT	No
– PROFIenergy	Yes
– Number of connectable IO Devices, max.	256

Article number	6ES7517-3HP00-0AB0
– Updating times	The minimum value of the update time also depends on communication share set for PROFINET IO, on the number of IO devices, and on the quantity of configured user data
Update time for RT	
– for send cycle of 1 ms	1 ms to 512 ms
2. Interface	
Interface types	
• RJ 45 (Ethernet)	Yes; X2
• Number of ports	1
• integrated switch	No
Protocols	
• IP protocol	Yes; IPv4
• PROFINET IO Controller	No
• PROFINET IO Device	No
• SIMATIC communication	Yes; Only Server
• Open IE communication	Yes
• Web server	No
• Media redundancy	No
3. Interface	
Interface type	Pluggable synchronization submodule (FO)
Plug-in interface modules	Synchronization module 6ES7960-1CB00-0AA5, 6ES7960-1FB00-0AA5 or 6ES7 960-1FE00-0AA5
4. Interface	
Interface type	Pluggable synchronization submodule (FO)
Plug-in interface modules	Synchronization module 6ES7960-1CB00-0AA5, 6ES7960-1FB00-0AA5 or 6ES7960-1FE00-0AA5
Interface types	
RJ 45 (Ethernet)	
• 100 Mbps	Yes
• Autonegotiation	Yes
• Autocrossing	Yes
• Industrial Ethernet status LED	Yes
Protocols	
PROFIsafe	No
Number of connections	
• Number of connections, max.	288
• Number of connections reserved for ES/HMI/web	10
• Number of S7 routing paths	64
Redundancy mode	

Article number	6ES7517-3HP00-0AB0
• PROFINET system redundancy (S2)	Yes
• PROFINET system redundancy (R1)	Yes
Media redundancy	
– MRP	Yes; MRP Automanager according to IEC 62439-2 Edition 2.0
– MRP interconnection, supported	Yes; as MRP ring node according to IEC 62439-2 Edition 3.0
– MRPD	No
– Switchover time on line break, typ.	200 ms; PROFINET MRP
– Number of stations in the ring, max.	50
SIMATIC communication	
• PG/OP communication	Yes; encryption with TLS V1.3 pre-selected
• S7 routing	Yes
• S7 communication, as server	Yes
• S7 communication, as client	No
Open IE communication	
• TCP/IP	Yes
– Data length, max.	64 kbyte
– several passive connections per port, supported	Yes
• ISO-on-TCP (RFC1006)	Yes
– Data length, max.	64 kbyte
• UDP	Yes
– Data length, max.	2 kbyte; 1 472 bytes for UDP broadcast
– UDP multicast	Yes; 128 multicast circuits (of which max. 5 via X1)
• DHCP	No
• DNS	Yes
• SNMP	Yes
• DCP	Yes
• LLDP	Yes
Web server	
• HTTP	No
• HTTPS	No
OPC UA	
• OPC UA Client	No
• OPC UA Server	No
Further protocols	
• MODBUS	Yes; MODBUS TCP

Article number	6ES7517-3HP00-0AB0
S7 message functions	
Number of login stations for message functions, max.	64
Program alarms	Yes
Number of configurable program messages, max.	10 000; Program messages are generated by the "Program_Alarm" block, ProDiag or GRAPH
Number of loadable program messages in RUN, max.	5 000
Number of simultaneously active program alarms	
• Number of program alarms	2 000
• Number of alarms for system diagnostics	1 000
Test commissioning functions	
Joint commission (Team Engineering)	No
Status block	Yes; Up to 16 simultaneously
Single step	No
Number of breakpoints	20; Breakpoints are only supported in RUN-Solo status
Status/control	
• Status/control variable	Yes
• Variables	Inputs/outputs, memory bits, DBs, distributed I/Os, timers, counters
• Number of variables, max.	
– of which status variables, max.	200; per job
– of which control variables, max.	200; per job
Forcing	
• Forcing	Yes
• Forcing, variables	Peripheral inputs/outputs
• Number of variables, max.	200
Diagnostic buffer	
• present	Yes
• Number of entries, max.	3 200
– of which powerfail-proof	1 000
Traces	
• Number of configurable Traces	8
• Memory size per trace, max.	512 kbyte
Interrupts/diagnostics/status information	
Diagnostics indication LED	
• RUN/STOP LED	Yes
• ERROR LED	Yes
• MAINT LED	Yes
• Connection display LINK TX/RX	Yes

Article number	6ES7517-3HP00-0AB0
Supported technology objects	
Motion Control	No
Controller	
• PID_Compact	Yes; Universal PID controller with integrated optimization
• PID_3Step	Yes; PID controller with integrated optimization for valves
• PID-Temp	Yes; PID controller with integrated optimization for temperature
Counting and measuring	Yes
• High-speed counter	No
Standards, approvals, certificates	
Suitable for safety functions	No
Ambient conditions	
Ambient temperature during operation	
• horizontal installation, min.	0 °C
• horizontal installation, max.	60 °C; Display: 50 °C, at an operating temperature of typically 50 °C, the display is switched off
• vertical installation, min.	0 °C
• vertical installation, max.	40 °C; Display: 40 °C, at an operating temperature of typically 40 °C, the display is switched off
Ambient temperature during storage/transportation	
• min.	-40 °C
• max.	70 °C
Altitude during operation relating to sea level	
• Installation altitude above sea level, max.	5 000 m; Restrictions for installation altitudes > 2 000 m, see manual
configuration / header	
configuration / programming / header	
Programming language	
– LAD	Yes
– FBD	Yes
– STL	Yes
– SCL	Yes
– GRAPH	Yes
Know-how protection	
• User program protection/password protection	Yes
• Copy protection	No
• Block protection	Yes
Access protection	

Article number	6ES7517-3HP00-0AB0
• protection of confidential configuration data	Yes
• Password for display	Yes
• Protection level: Write protection	Yes
• Protection level: Read/write protection	Yes
• Protection level: Complete protection	Yes
programming / cycle time monitoring / header	
• lower limit	adjustable minimum cycle time
• upper limit	adjustable maximum cycle time
Dimensions	
Width	210 mm
Height	147 mm
Depth	129 mm
Weights	
Weight, approx.	2 094 g; Interface modules: 2x 18 g

General technical specifications

You can find information on the general technical specifications, such as standards and approvals, electromagnetic compatibility, protection class, etc. in the system manual for Redundant System S7-1500R/H (https://support.industry.siemens.com/cs/ww/en/view/109754833).

Dimension drawing

A

This section contains the dimension drawing of the module on the mounting rail, as well as a dimension drawing with the front panel open. Keep to the dimensions when installing in cabinets, control rooms, etc.

Dimension drawings of the CPU 1517H-3 PN

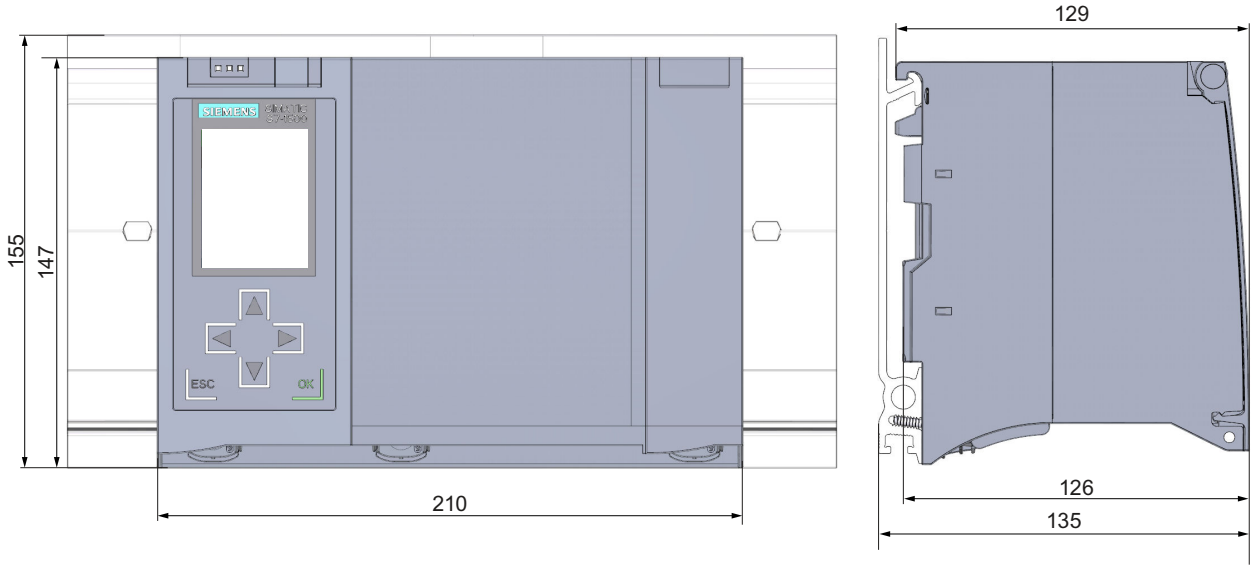

Figure A-1 Dimension drawing of the CPU 1517H-3 PN, front and side view

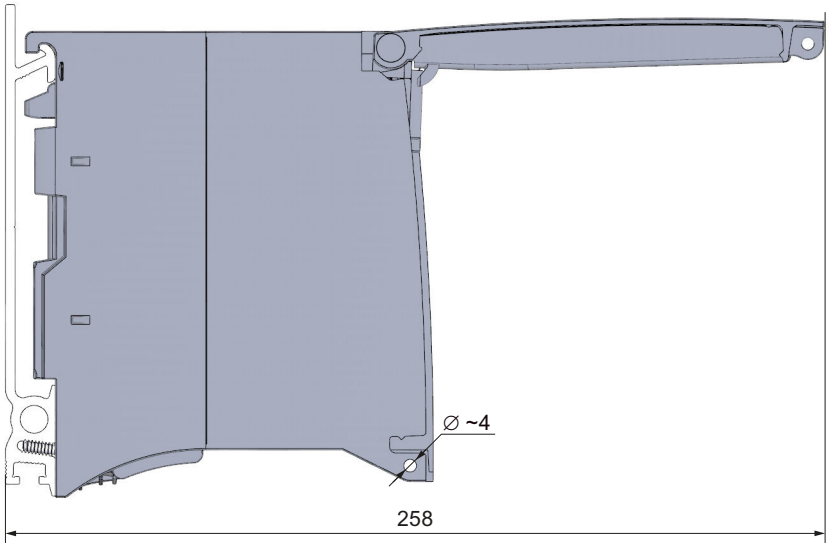

Figure A-2 Dimension drawing of the CPU 1517H-3 PN, side view with front panel open

SIEMENS

Edition 11/2022

EQUIPMENT MANUAL

SIMATIC

S7-1500

CPU 1518-4 PN/DP
6ES7518-4AP00-0AB0

support.industry.siemens.com

SIEMENS

SIMATIC

S7-1500
CPU 1518-4 PN/DP
(6ES7518-4AP00-0AB0)

Equipment Manual

Introduction 1

Safety instructions 2

Product overview 3

Connecting up 4

Interrupts, error messages, diagnostics and system alarms 5

Technical specifications 6

Dimensional drawing A

11/2022
A5E32334527-AE

Legal information

Warning notice system

This manual contains notices you have to observe in order to ensure your personal safety, as well as to prevent damage to property. The notices referring to your personal safety are highlighted in the manual by a safety alert symbol, notices referring only to property damage have no safety alert symbol. These notices shown below are graded according to the degree of danger.

⚠ DANGER
indicates that death or severe personal injury **will** result if proper precautions are not taken.

⚠ WARNING
indicates that death or severe personal injury **may** result if proper precautions are not taken.

⚠ CAUTION
indicates that minor personal injury can result if proper precautions are not taken.

NOTICE
indicates that property damage can result if proper precautions are not taken.

If more than one degree of danger is present, the warning notice representing the highest degree of danger will be used. A notice warning of injury to persons with a safety alert symbol may also include a warning relating to property damage.

Qualified Personnel

The product/system described in this documentation may be operated only by **personnel qualified** for the specific task in accordance with the relevant documentation, in particular its warning notices and safety instructions. Qualified personnel are those who, based on their training and experience, are capable of identifying risks and avoiding potential hazards when working with these products/systems.

Proper use of Siemens products

Note the following:

⚠ WARNING
Siemens products may only be used for the applications described in the catalog and in the relevant technical documentation. If products and components from other manufacturers are used, these must be recommended or approved by Siemens. Proper transport, storage, installation, assembly, commissioning, operation and maintenance are required to ensure that the products operate safely and without any problems. The permissible ambient conditions must be complied with. The information in the relevant documentation must be observed.

Trademarks

All names identified by ® are registered trademarks of Siemens AG. The remaining trademarks in this publication may be trademarks whose use by third parties for their own purposes could violate the rights of the owner.

Disclaimer of Liability

We have reviewed the contents of this publication to ensure consistency with the hardware and software described. Since variance cannot be precluded entirely, we cannot guarantee full consistency. However, the information in this publication is reviewed regularly and any necessary corrections are included in subsequent editions.

Siemens AG
Digital Industries
Postfach 48 48
90026 NÜRNBERG
GERMANY

A5E32334527-AE
Ⓟ 10/2022 Subject to change

Copyright © Siemens AG 2014 - 2022.
All rights reserved

Table of contents

1 Introduction 5

1.1 Guide documentation S7-1500/ET 200MP 6
1.1.1 Information classes S7-1500/ET 200MP 6
1.1.2 SIMATIC Technical Documentation 7

2 Safety instructions 10

2.1 Security information 10

3 Product overview 11

3.1 New functions 11
3.2 Application 12
3.3 How it works 19
3.4 Properties 19
3.5 Operating and display elements 24
3.5.1 Front view of the module with closed front panels 24
3.5.2 Front view of the module without front panels 26
3.5.3 Rear view of the module 27
3.6 Mode selector switch 27

4 Connecting up 28

5 Interrupts, error messages, diagnostics and system alarms 33

5.1 Status and error display of the CPU 33

6 Technical specifications 36

A Dimensional drawing 50

Introduction

1

Purpose of the documentation

This manual supplements the system manual of the S7-1500 automation system/ET 200MP distributed I/O system as well as the function manuals. This manual contains a description of the module-specific information. The system-related functions are described in the system manual. All system-spanning functions are described in the function manuals.

The information provided in this equipment manual and the system manual enables you to commission the CPU .

Conventions

STEP 7: In this documentation, "STEP 7" is used as a synonym for all versions of the configuration and programming software "STEP 7 (TIA Portal)".

Please also observe notes marked as follows:

NOTE

A note contains important information on the product described in the documentation, on the handling of the product or on the section of the documentation to which particular attention should be paid.

Recycling and disposal

For environmentally friendly recycling and disposal of your old equipment, contact a certified electronic waste disposal company and dispose of the equipment according to the applicable regulations in your country.

Industry Mall

The Industry Mall is the catalog and order system of Siemens AG for automation and drive solutions on the basis of Totally Integrated Automation (TIA) and Totally Integrated Power (TIP).

You can find catalogs for all automation and drive products on the Internet (https://mall.industry.siemens.com).

1.1 Guide documentation S7-1500/ET 200MP

1.1.1 Information classes S7-1500/ET 200MP

The documentation for the SIMATIC S7-1500 automation system and the ET 200MP distributed I/O system is arranged into three areas.
This arrangement enables you to access the specific content you require. Changes and supplements to the manuals are documented in a Product Information.
You can download the documentation free of charge from the Internet (https://support.industry.siemens.com/cs/ww/en/view/109742691).

Basic information

The System Manual and Getting Started describe in detail the configuration, installation, wiring and commissioning of the SIMATIC S7-1500 and ET 200MP systems.
The STEP 7 online help supports you in the configuration and programming.
Examples:

- Getting Started S7-1500
- S7-1500/ET 200MP System Manual
- Online help TIA Portal

Device information

Equipment manuals contain a compact description of the module-specific information, such as properties, wiring diagrams, characteristics and technical specifications.
Examples:

- Equipment Manuals CPUs
- Equipment Manuals Interface Modules
- Equipment Manuals Digital Modules
- Equipment Manuals Analog Modules
- Equipment Manuals Communications Modules
- Equipment Manuals Technology Modules
- Equipment Manuals Power Supply Modules

General information

The function manuals contain detailed descriptions on general topics relating to the SIMATIC S7-1500 and ET 200MPsystems.
Examples:

- Function Manual Diagnostics
- Function Manual Communication
- Function Manual Motion Control
- Function Manual Web Server
- Function Manual Cycle and Response Times
- PROFINET Function Manual
- PROFIBUS Function Manual

Product Information

Changes and supplements to the manuals are documented in a Product Information. The Product Information takes precedence over the device and system manuals.
You can find the latest Product Information on the S7-1500 and ET 200MP systems on the Internet (https://support.industry.siemens.com/cs/de/en/view/68052815).

Manual Collection S7-1500/ET 200MP

The Manual Collection contains the complete documentation on the SIMATIC S7-1500 automation system and the ET 200MP distributed I/O system gathered together in one file.
You can find the Manual Collection on the Internet.
(https://support.industry.siemens.com/cs/ww/en/view/86140384)

SIMATIC S7-1500 comparison list for programming languages

The comparison list contains an overview of which instructions and functions you can use for which controller families.
You can find the comparison list on the Internet
(https://support.industry.siemens.com/cs/ww/en/view/86630375).

1.1.2 SIMATIC Technical Documentation

Additional SIMATIC documents will complete your information. You can find these documents and their use at the following links and QR codes.
The Industry Online Support gives you the option to get information on all topics. Application examples support you in solving your automation tasks.

Overview of the SIMATIC Technical Documentation

Here you will find an overview of the SIMATIC documentation available in Siemens Industry Online Support:

Industry Online Support International (https://support.industry.siemens.com/cs/ww/en/view/109742705)

Watch this short video to find out where you can find the overview directly in Siemens Industry Online Support and how to use Siemens Industry Online Support on your mobile device:

Quick introduction to the technical documentation of automation products per video (https://support.industry.siemens.com/cs/us/en/view/109780491)

YouTube video: Siemens Automation Products - Technical Documentation at a Glance (https://youtu.be/TwLSxxRQQsA)

mySupport

With "mySupport" you can get the most out of your Industry Online Support.

Registration	You must register once to use the full functionality of "mySupport". After registration, you can create filters, favorites and tabs in your personal workspace.
Support requests	Your data is already filled out in support requests, and you can get an overview of your current requests at any time.
Documentation	In the Documentation area you can build your personal library.
Favorites	You can use the "Add to mySupport favorites" to flag especially interesting or frequently needed content. Under "Favorites", you will find a list of your flagged entries.
Recently viewed articles	The most recently viewed pages in mySupport are available under "Recently viewed articles".
CAx data	The CAx data area gives you access to the latest product data for your CAx or CAe system. You configure your own download package with a few clicks: • Product images, 2D dimension drawings, 3D models, internal circuit diagrams, EPLAN macro files • Manuals, characteristics, operating manuals, certificates • Product master data

You can find "mySupport" on the Internet. (https://support.industry.siemens.com/My/ww/en)

Application examples

The application examples support you with various tools and examples for solving your automation tasks. Solutions are shown in interplay with multiple components in the system - separated from the focus on individual products.

You can find the application examples on the Internet.
(https://support.industry.siemens.com/cs/ww/en/ps/ae)

Safety instructions 2

2.1 Security information

Siemens provides products and solutions with industrial security functions that support the secure operation of plants, systems, machines and networks.

In order to protect plants, systems, machines and networks against cyber threats, it is necessary to implement – and continuously maintain – a holistic, state-of-the-art industrial security concept. Siemens' products and solutions constitute one element of such a concept.

Customers are responsible for preventing unauthorized access to their plants, systems, machines and networks. Such systems, machines and components should only be connected to an enterprise network or the internet if and to the extent such a connection is necessary and only when appropriate security measures (e.g. firewalls and/or network segmentation) are in place.

For additional information on industrial security measures that may be implemented, please visit (https://www.siemens.com/industrialsecurity).

Siemens' products and solutions undergo continuous development to make them more secure. Siemens strongly recommends that product updates are applied as soon as they are available and that the latest product versions are used. Use of product versions that are no longer supported, and failure to apply the latest updates may increase customers' exposure to cyber threats.

To stay informed about product updates, subscribe to the Siemens Industrial Security RSS Feed visit (https://www.siemens.com/cert).

Product overview

3

3.1 New functions

This section contains an overview of the most important new firmware functions of the CPU compared to the predecessor CPU (V2.9).

New functions of the CPU in firmware version V3.0

New functions	Applications	Customer benefits
Communication of the CPU		
Network Management Protocol SNMP	A simple configuration option is available for using the SNMP services. For new configurations, this is disabled by default in terms of "Security-by-Default".	Can be enabled/disabled in the CPU properties. Community strings can be configured.
OPC UA server – Reading the diagnostic status of the own address space	By using the OPC UA instruction for reading ("OPC_UA_ReadList"), the own namespace of the OPC UA Server can be accessed. This allows you to read out the following statuses and react to them in the user program: • Status of the own OPC UA server • Status of the connections of OPC UA clients • Status of the session • Status of subscriptions	This allows connection problems to be quickly detected, for example, and plant availability to be increased.
OPC UA server – Time stamping of the source time of nodes	By using the OPC UA instruction for writing ("OPC_UA_WriteList") it is possible to change the "SourceTimestamp" as well as the status code of an OPC UA variable (node).	Distinction between the "source" and "server" time possible
OPC UA server – Increase of the quantity structures	The following quantity structures have been increased: • Possible number of nodes in the server interface • Maximum possible number of subscriptions per session • For subscription, the recommendation for observed values was increased.	Further applications for CPUs as OPC UA servers
Web server of the CPU		
New Web API methods:	Many new API methods extend your access options to the CPU via the Web API.	Additional applications for the web server
Dynamic management of certificates	The web server certificate for HTTPS communication can now also be managed via the OPC UA GDS mechanism, without separate download of the hardware configuration.	Flexible certificate management

New functions	Applications	Customer benefits
Allow data access only via Web API	They limit the functionality of the web server to the web API based functions. This means that only encrypted communication via HTTPS is possible.	Higher security of communication via web server
Technology functions of the CPU		
Axis functions	Save absolute encoder adjustment for device replacement	Saving the adjustment values with the "MC_SaveAbsoluteEncoderData" instruction saves having to perform the absolute encoder adjustment again after a device replacement.
	The "MC_Home" instruction supports the new "Incremental encoder adjustment" homing mode.	Extended scope of functions
	Active homing of absolute encoders is possible.	Extended scope of functions
	The "MC_Power" instruction supports coasting-down.	Extended scope of functions "MC_Power" instruction
	The hardware limit switches are configurable as traversable/non-traversable.	Extended scope of functions
	For axes in a synchronous system, the dynamic filter enables dynamic adaptation of axes with higher dynamic responses to the axis with the lowest dynamic response.	With the dynamic filter, axes with different inertia can be adjusted to each other. Optimization of a synchronous system
	Stop superimposed movements on the axis with the instruction "MC_HaltSuperimposed"	Use the instruction to stop a superimposed motion independently of the basic motion.
Trace functionality of the CPU	The S7-1500 CPU supports up to 64 configured signals per trace.	Number of configurable signals per trace
	Long-term trace: The S7-1500 CPU supports the cycle-granular recording of up to 64 different tags in a .csv file for a long time (hours, days, etc.)	Better diagnostic possibilities when analyzing the course of signals over a long period of time

Reference

You can find an overview of all new functions, improvements and revisions in the respective firmware versions on the Internet (https://support.industry.siemens.com/cs/ww/en/view/109478459).

3.2 Application

SIMATIC S7-1500 is the modular control system for a wide variety of automation applications in discrete automation.

SIMATIC S7-1500 is the cost-effective and convenient solution for a broad range of tasks and offers the following advantages:

- Modular, fanless design
- Simple realization of distributed structures
- User-friendly handling

Areas of application of the SIMATIC S7-1500 automation system include, for example:

- Special-purpose machines
- Textile machinery
- Packaging machines
- General mechanical engineering
- Controller engineering
- Machine tool engineering
- Installation engineering
- Electrical industry and crafts
- Automobile engineering
- Water/waste water
- Food & Beverage

Areas of application of the SIMATIC S7-1500R/H redundant system include, for example:

- Tunnels
- Airports (e.g. baggage conveyors)
- Subways
- Shipbuilding
- Wastewater treatment plants
- High-bay warehouses

Areas of application of the SIMATIC S7-1500T automation system for advanced motion control applications include, for example:

- Packaging machines
- Converting applications
- Assembly automation
- Pick-and-place automation
- Palletizers

Several CPUs with various levels of performance and a comprehensive range of modules with many convenient features are available. Fail-safe CPUs enable use in fail-safe applications. The modular design allows you to use only the modules that you need for your application. The controller can be retrofitted with additional modules at any time to expand its range of tasks.

High industrial suitability due to the high resistance to EMC, shock and vibration enable universal use of the SIMATIC S7-1500, S7-1500R/H and S7-1500T automation systems.

Performance segments of standard CPUs

The CPUs can be used for smaller and mid-range applications, as well as for the high-end range of machine and plant automation.

Table 3-1 Standard CPUs

CPU	Performance segment	PROFIBUS interfaces	PROFINET IO RT/IRT interfaces	PROFINET IO RT interface	Basic PROFINET functionality	Work memory	Processing time for bit operations
CPU 1511-1 - PN	Standard CPU for small to mid-range applications	--	1	--	--	1.8 MB	25 ns
CPU 1513-1 - PN	Standard CPU for mid-range applications	--	1	--	--	3.1 MB	25 ns
CPU 1515-2 - PN	Standard CPU for mid-range to large applications	--	1	1	--	5.5 MB	6 ns
CPU 1516-3 - PN/DP	Standard CPU for demanding applications and communication tasks	1	1	1	--	9.5 MB	6 ns
CPU 1517-3 - PN/DP	Standard CPU for demanding applications and communication tasks	1	1	1	--	10 MB	2 ns
CPU 1518-4 - PN/DP	Standard CPU for high-performance applications, demanding communication tasks and very short reaction times	1	1	1	1	66 MB	1 ns
CPU 1518-4 - PN/DP MFP	Standard CPU for high-performance applications, demanding communication tasks, very short reaction times and C/C++ blocks for the user program	1	1	1	1	116* MB	1 ns

* 50 MB of the integrated work memory is reserved for the function library of CPU runtime

Performance segments of redundant CPUs

The CPUs of the S7-1500R/H redundant system offer a high degree of reliability and system availability. A redundant configuration of the most important automation components reduces the likelihood of production downtimes and the consequences of component errors.

The higher the risks and costs of a production downtime, the more worthwhile the use of a redundant system. The avoidance of production downtimes compensates for the generally higher investment costs.

Table 3-2 Redundant CPUs

CPU	Performance segment	PROFIBUS interfaces	PROFINET IO RT/IRT interfaces	PROFINET IO RT interface	Basic PROFINET functionality	Work memory	Processing time for bit operations
CPU 1513R-1 PN	Redundant CPU for smaller to mid-range applications	--	1	--	--	3.1 MB	50 ns
CPU 1515R-2 PN	Redundant CPU for mid-range to large applications	--	1	--	1	5.5 MB	20 ns
CPU 1517H-3 PN	Redundant CPU for demanding applications and communication tasks	--	1	--	1	10 MB	4 ns
CPU 1518HF-4 PN	Fail-safe and redundant CPU for demanding applications and communication tasks	--	1	--	2	69 MB	4 ns

Performance segments of compact CPUs

The compact CPUs can be used for smaller to mid-range applications and have an integrated analog and digital on-board I/O as well as integrated technology functions.

Table 3-3 Compact CPUs

CPU	Performance segment	PROFIBUS interfaces	PROFINET IO RT/IRT interfaces	PROFINET IO RT interface	Basic PROFINET functionality	Work memory	Processing time for bit operations
CPU 1511C-1 PN	Compact CPU for small to mid-range applications	--	1	--	--	1.175 MB	60 ns
CPU 1512C-1 PN	Compact CPU for mid-range applications	--	1	--	--	1.25 MB	48 ns

The following table shows the specific properties of the Compact CPUs.

	CPU 1511C-1 PN	CPU 1512C-1 PN
Integrated analog inputs/outputs	5 inputs/2 outputs	5 inputs/2 outputs
Integrated digital inputs/outputs	16 inputs/16 outputs	32 inputs/32 outputs
High-speed counters	6	6
Frequency meters	6 (max. 100 kHz)	6 (max. 100 kHz)
Period duration measurement	6 channels	6 channels
Pulse width modulation (PWM output)	Max. 4 (up to 100 kHz)	Max. 4 (up to 100 kHz)
Pulse Train Output (PTO output)	Max. 4 (up to 100 kHz)	Max. 4 (up to 100 kHz)
Frequency output	Up to 100 kHz	Up to 100 kHz

Performance segments of technology CPUs

The technology CPUs can be used for low and mid-range applications, as well as for the high-end range of machine and plant automation. Because of their extended motion control functions, they are primarily used for drive control.

Table 3-4 Technology CPUs

CPU	Performance segment	PROFIBUS interfaces	PROFINET IO RT/IRT interfaces	PROFINET IO RT interface	Basic PROFINET functionality	Work memory	Processing time for bit operations
CPU 1511T-1 PN	Technology CPU for small to mid-range applications	--	1	--	--	1.95 MB	25 ns
CPU 1515T-2 PN	Technology CPU for mid-range to large applications	--	1	1	--	6 MB	6 ns
CPU 1516T-3 PN/-DP	Technology CPU for high-end applications and communication tasks	1	1	1	--	10.5 MB	6 ns
CPU 1517T-3 PN/-DP	Technology CPU for high-end applications and communication tasks	1	1	1	--	11 MB	2 ns
CPU 1518T-4 PN/DP	Technology CPU for high-performance motion control applications with large quantities, demanding communication tasks and very short reaction times	1	1	1	1	69 MB	1 ns
CPU 1511TF-1 PN CPU 1515TF-2 PN CPU 1516TF-3 P-N/DP CPU 1517TF-3 P-N/DP CPU 1518TF-4 PN/DP	These CPUs are described in the fail-safe CPUs.						

Performance segments of fail-safe CPUs

The fail-safe CPUs are intended for users who want to implement demanding standard and fail-safe applications both centrally and decentrally.

These fail-safe CPUs allow the processing of standard and safety programs on a single CPU. This allows fail-safe data to be evaluated in the standard user program. The integration also provides the system advantages and the extensive functionality of SIMATIC for fail-safe applications.

The fail-safe CPUs are certified for use in safety mode up to:

- Safety class (Safety Integrity Level) SIL 3 according to IEC 61508:2010
- Performance Level (PL) e and Category 4 according to ISO 13849-1:2015 or EN ISO 13849-1:2015

Additional password protection for F-configuration and F-program is set up for IT security.

Table 3-5 Fail-safe CPUs

CPU	Performance segment	PROFIBUS interfaces	PROFINET IO RT/IRT interfaces	PROFINET IO RT interface	Basic PROFINET functionality	Work memory	Processing time for bit operations
CPU 1511F-1 PN	Fail-safe CPU for small to mid-range applications	--	1	--	--	1.95 MB	25 ns
CPU 1511TF-1 PN	Fail-safe technology CPU for small to mid-range applications	--	1	--	--	1.95 MB	25 ns
CPU 1513F-1 PN	Fail-safe CPU for mid-range applications	--	1	--	--	3.4 MB	25 ns
CPU 1515F-2 PN	Fail-safe CPU for mid-range to large applications	--	1	1	--	6 MB	6 ns
CPU 1515TF-2 PN	Fail-safe technology CPU for high-end applications and communication tasks	--	1	1	--	6 MB	6 ns
CPU 1516F-3 PN/-DP	Fail-safe CPU for demanding applications and communication tasks	1	1	1	--	10.5 MB	6 ns
CPU 1516TF-3 P-N/DP	Fail-safe technology CPU for high-end applications and communication tasks	1	1	1	--	10.5 MB	6 ns
CPU 1517F-3 PN/-DP	Fail-safe CPU for demanding applications and communication tasks	1	1	1	--	11 MB	2 ns
CPU 1517TF-3 P-N/DP	Fail-safe technology CPU for high-end applications and communication tasks	1	1	1	--	11 MB	2 ns
CPU 1518F-4 PN/-DP	Fail-safe CPU for high-performance applications, demanding communication tasks and very short reaction times	1	1	1	1	69 MB	1 ns
CPU 1518F-4 PN/-DP MFP	Fail-safe CPU for high-performance applications, demanding communication tasks, very short reaction times and C/C++ blocks for the user program	1	1	1	1	119* MB	1 ns

* 50 MB of the integrated work memory is reserved for the function library of CPU runtime

CPU	Performance segment	PROFIBUS interfaces	PROFINET IO RT/IRT interfaces	PROFINET IO RT interface	Basic PROFINET functionality	Work memory	Processing time for bit operations
CPU 1518TF-4 PN/DP	Technology CPU for high-performance motion control applications with large quantities, demanding communication tasks and very short reaction times	1	1	1	1	69 MB	1 ns

* 50 MB of the integrated work memory is reserved for the function library of CPU runtime

In addition to the CPUs, further components such as SINAMICS drives dispose of integrated safety functions. Additional information about integrated safety functions in drives can be found in the manuals for the respective products.

Security Integrated

In conjunction with STEP 7, each CPU offers password-based know-how protection against unauthorized reading out or modification of the program blocks.

Copy protection provides reliable protection against unauthorized reproduction of program blocks. With copy protection, individual blocks on the SIMATIC memory card can be tied to its serial number so that the block can only be run if the configured memory card is inserted into the CPU.

In addition, various access rights can be assigned in the controller to different user groups using four different authorization levels.

Improved manipulation protection allows changed or unauthorized transfers of engineering data to be detected by the controller.

The use of an Ethernet CP (CP 1543-1) provides you with additional access protection through a firewall or possibilities to establish secure VPN connections.

Design and handling

All CPUs of the SIMATIC S7-1500 product series feature a display with plain text information. The display provides the user with information on the order numbers, firmware version, and serial number of all connected modules. In addition, the IP address of the CPU and other network settings can be adapted locally without a programming device. Error messages are shown on the display directly in plain text. When performing servicing, you can minimize plant downtimes by quickly accessing the diagnostics alarms. Detailed information about this and a multitude of other display functions is available in the SIMATIC S7-1500 Display Simulator (https://support.industry.siemens.com/cs/ww/en/view/109761758).

Uniform front connectors for all modules and integrated potential jumpers for flexible formation of potential groups simplify storage. Additional components such as circuit breakers, relays, etc., can be installed quickly and easily, since a DIN rail is implemented in the rail of the SIMATIC S7-1500. The CPUs of the SIMATIC S7-1500 product series can be expanded centrally and in a modular fashion with signal modules. Space-saving expansion enables flexible adaptation to each application.

The system cabling for digital signal modules enables fast and clear connection to sensors and actuators from the field (fully modular connection consisting of front connector modules,

connection cables and I/O modules), as well as easy wiring inside the control cabinet (flexible connection consisting of front connectors with assembled single conductors).

System diagnostics and alarms

Integrated system diagnostics is activated by default for the CPUs. The different types of diagnostics are configured instead of programmed. System diagnostics information and alarms from the drives are displayed consistently and in plain text:

- On the CPU display
- In STEP 7
- On the HMI
- On the Web server

This information is available in RUN mode, but also in STOP mode of the CPU. The diagnostic information is updated automatically when you configure new hardware components.

The CPU is available as a central interrupt server in up to three project languages. The HMI takes over the display in the project languages defined for the CPU. If you require alarm texts in additional languages, you can load them into your HMI via the configured connection. The CPU, STEP 7 and their HMI ensure data consistency without additional engineering steps. The maintenance work is easier.

3.3 How it works

Principle of operation

The CPU contains the operating system and executes the user program. The user program is located on the SIMATIC memory card and is processed in the work memory of the CPU.

The connection to the process is centralized or distributed via PROFINET or PROFIBUS with I/O modules.

The PROFINET interfaces on the CPU allow simultaneous communication with PROFINET devices, PROFINET controllers, HMI devices, programming devices, other controllers and other systems. CPU 1518-4 PN/DP supports operation as an IO controller and I-device.

Similarly to the PROFINET interface, the PROFIBUS interface available on the CPU allows communication with other devices. When you use the interface as PROFIBUS DP interface, the CPU on the PROFIBUS DP also assumes the role of a DP master.

3.4 Properties

Article number

6ES7518-4AP00-0AB0

View of the module

The following figure shows the CPU 1518-4 PN/DP.

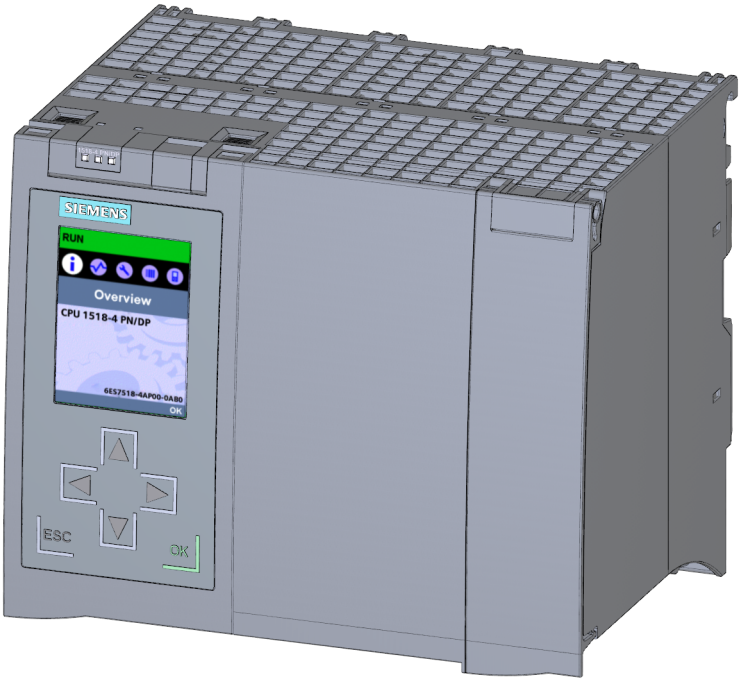

Figure 3-1 CPU 1518-4 PN/DP

NOTE

Protective film

Note that a protective film is applied to the display in the delivery state of the CPU. Remove the protective film if necessary.

Properties

CPU 1518-4 PN/DP has the following technical properties:

- Communication:
  - Interfaces

    CPU 1518-4 PN/DP has four interfaces. Three interfaces for PROFINET and one for PROFIBUS.

    The **first PROFINET interface** (X1 P1, X1 P2) has two ports. In addition to PROFINET basic functionality, it also supports PROFINET IO RT (real-time) and IRT (isochronous real-time). PROFINET IO communication or real-time settings can be configured.

    Even with a send clock of 125 µs, IO communication and standard communication is possible via one cable.

    Port 1 and port 2 can also be used as ring ports for the configuration of redundant ring structures in Ethernet.

    The **second PROFINET interface (X2 P1)** has one port. In addition to basic PROFINET functionality, its also supports PROFINET IO RT (real-time). The basic functionality of PROFINET supports HMI communication, communication with the configuration

system, communication with a higher-level network (backbone, router, Internet) and communication with another machine or automation cell.

The **third PROFINET interface** (X3 P1) has one port and supports PROFINET basic functionality, i.e. no IO controller / IO device role. The basic functionality of PROFINET supports HMI communication, communication with the configuration system, communication with a higher-level network (backbone, router, Internet) and communication with another machine or automation cell. As of firmware version V1.7, the third PROFINET interface supports a transmission rate of 1000 Mbps.

NOTE

IP subnets

The IP subnets of the three interfaces must be different. This means that the subnets of the IP addresses of the three interfaces must differ from each other.

The **fourth interface** (X4) is used to connect to a PROFIBUS network. When you use the interface as PROFIBUS DP interface, the CPU is the DP master in this case. The CPU cannot assume the role of a DP slave.

– OPC UA
  With OPC UA, data is exchanged via an open and vendor-neutral communication protocol. The CPU, as OPC UA server, can communicate with OPC UA clients such as HMI panels, SCADA systems, etc.

- Integrated Web server:
  A Web server is integrated in the CPU. You can read out the following information with the Web server:
  – Start page with general CPU information
  – Identification information
  – Contents of the diagnostics buffer
  – Querying module information
  – Firmware update
  – Alarms (without acknowledgment option)
  – Information about communication
  – PROFINET topology
  – Tag status, writing tags
  – Watch tables
  – Memory usage
  – User pages
  – Data logs (if used)
  – Online backup and restoration of the configuration.
  – Diagnostic information for the motion control technology objects
  – Display of trace recording stored on the SIMATIC memory card
  – Readout service data
  – Basic Web pages
  – Display of the Web server in 3 project languages, for example, comments and message texts
  – Recipes
  – User-defined Web pages

- Integrated technology:
  - Motion Control
    The Motion Control functionality uses technology objects to support speed-controlled axes, positioning axes, synchronous axes, external encoders, cams, cam tracks and measuring inputs, as well as PLCopen blocks for programming the motion control functionality.
    You can find a detailed description of the use of Motion Control and its configuration in the S7-1500T Motion Control (https://support.industry.siemens.com/cs/ww/en/view/109751049) function manuals.
  - Integrated closed-loop control functionality
    - PID Compact (continuous PID controller)
    - PID 3Step (step controller for integrating actuators)
    - PID Temp (temperature controller for heating and cooling with two separate actuators)
- Trace functionality:
  - The trace functionality supports troubleshooting and optimization of the user program. You can find additional information on the trace functionality in the Using the Trace and Logic Analyzer (http://support.automation.siemens.com/WW/view/en/64897128) function manual.
- Integrated system diagnostics:
  - The alarms for the system diagnostics are automatically created by the system and displayed on a PG/PC, HMI device, Web server or the integrated display. System diagnostics information is also available when the CPU is in STOP mode.
- Integrated security:
  - Know-how protection
    The know-how protection protects user blocks against unauthorized access and modifications.
  - Copy protection
    Copy protection links user blocks to the serial number of the SIMATIC memory card or to the serial number of the CPU. User programs cannot run without the corresponding SIMATIC memory card or CPU.
  - Access protection
    Extended access protection provides high-quality protection against unauthorized configuration changes. You can use authorization levels to assign separate rights to different user groups.
  - Integrity protection
    The CPUs feature an integrity protection function by default. This helps to detect any manipulation of the engineering data on the SIMATIC Memory Card or during data transfer between the TIA Portal and the CPU, and to check communication from a SIMATIC HMI system to the CPU for possible manipulation of engineering data. The user receives a corresponding message about manipulation of engineering data detected by the integrity protection.

- Additional functions:
  - PROFIenergy
    You can find information on the topic of "PROFIenergy" in the PROFINET function manual (https://support.industry.siemens.com/cs/ww/en/view/49948856) and in the PROFINET specification on the Internet (http://www.profibus.com).
  - Shared device
    You can find information on the topic of "Shared device" in the PROFINET function manual (https://support.industry.siemens.com/cs/ww/en/view/49948856).
  - Configuration control
    You can find information on the topic of "Configuration control" in the S7-1500, ET 200MP (http://support.automation.siemens.com/WW/view/en/59191792) system manual.
  - Isochronous mode
    You can find information about the "Isochronous mode" topic in the PROFINET (https://support.industry.siemens.com/cs/ww/en/view/49948856) function manual.

    NOTE
    Isochronous mode
    If you use high-speed OBs with cycle times of 125 µs, the creation by the system of several hundred DBs may have an effect on the jitter of an OB6x. To avoid possible impacts on the execution and processing times of high-speed OBs, use the CREATE_DB sparingly or not at all.

Reference

You can find additional information on the topic of "Integrated security/Access protection" in the S7-1500/ET 200MP (http://support.automation.siemens.com/WW/view/en/59191792) system manual.

3.5 Operating and display elements

3.5.1 Front view of the module with closed front panels

The following figure shows the front view of the CPU 1518-4 PN/DP.

① LEDs for the current operating mode and diagnostics status of the CPU

② Front panel with display

③ Display

④ Control keys

⑤ Front panel of the PROFIBUS interface

Figure 3-2 View of the CPU 1518-4 PN/DP (with front panels) - front

NOTE

Temperature range for display

To increase its service life, the display switches off at a temperature below the permitted operating temperature of the device. When the display cools down, it automatically switches itself on again. When the display is switched off, the LEDs continue to show the status of the CPU.

You can find additional information on the temperatures at which the display switches itself on and off in the technical specifications (Page 36).

Removing and fitting the front panel with display

You can remove and fit the front panel with display during operation.

WARNING

Personal injury and damage to property may occur

If you pull or plug the front panel of an S7-1500 automation system during operation, personal injury or damage to property can occur in zone 2 hazardous areas.

Before you remove or fit the front panel, always switch off the power supply to the S7-1500 automation system in hazardous area zone 2.

Locking the front panel

You can lock the wide front panel with display as well as the narrow front panel of the PROFIBUS interface to protect your CPU against unauthorized access. You can attach a security seal or a padlock with a diameter of 3 mm to the front panels.

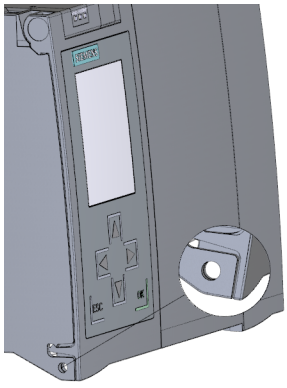

Figure 3-3 Locking latch on the CPU

In addition to the mechanical lock, you can also block access to a password-protected CPU on the display (local lock) and assign a password for the display. You can find additional information on the display, the configurable protection levels and local locking in the S7-1500, ET 200MP (http://support.automation.siemens.com/WW/view/en/59191792) system manual.

Reference

You can find detailed information on the individual display options, a training course and a simulation of the available menu commands in the SIMATIC S7-1500 Display Simulator (https://support.industry.siemens.com/cs/ww/en/view/109761758).

3.5.2 Front view of the module without front panels

The following figure shows the operator controls and connection elements of the CPU 1518-4 PN/DP.

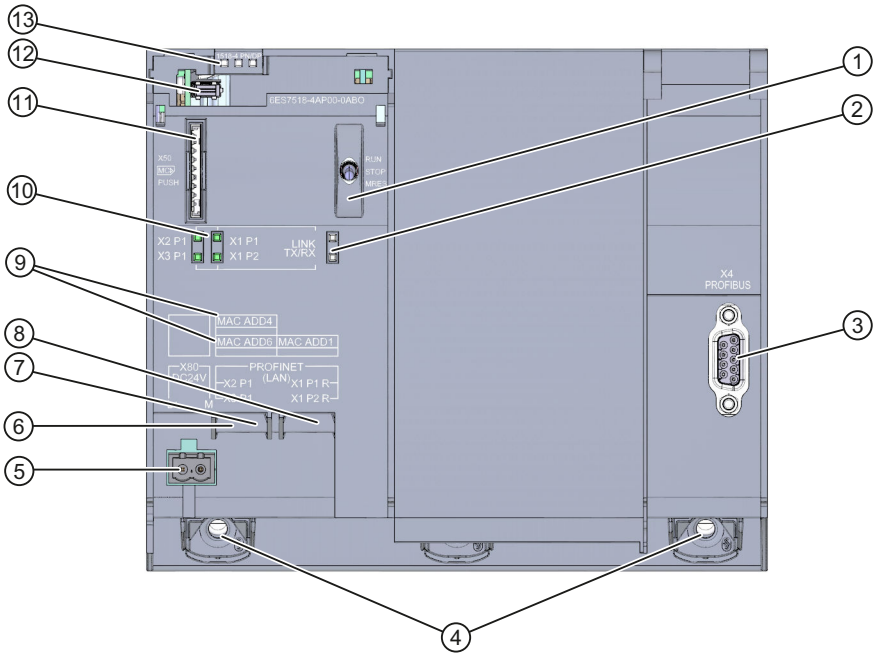

① Mode selector
② No function
③ PROFIBUS interface (X4)
④ Fixing screws
⑤ Connector for power supply
⑥ PROFINET IO interface (X3) with 1 port (back interface)
⑦ PROFINET IO interface (X2) with 1 port (front interface)
⑧ PROFINET IO interface (X1) with 2 ports
⑨ MAC addresses of the interfaces
⑩ LEDs for the 4 ports of the PROFINET interfaces X1, X2 and X3
⑪ Slot for the SIMATIC memory card
⑫ Display connector
⑬ LEDs for the current operating mode and diagnostic status of the CPU

Figure 3-4 View of the CPU 1518-4 PN/DP (without front panels) - front

3.5.3 Rear view of the module

The following figure shows the connection elements on the rear of the CPU 1518-4 PN/DP.

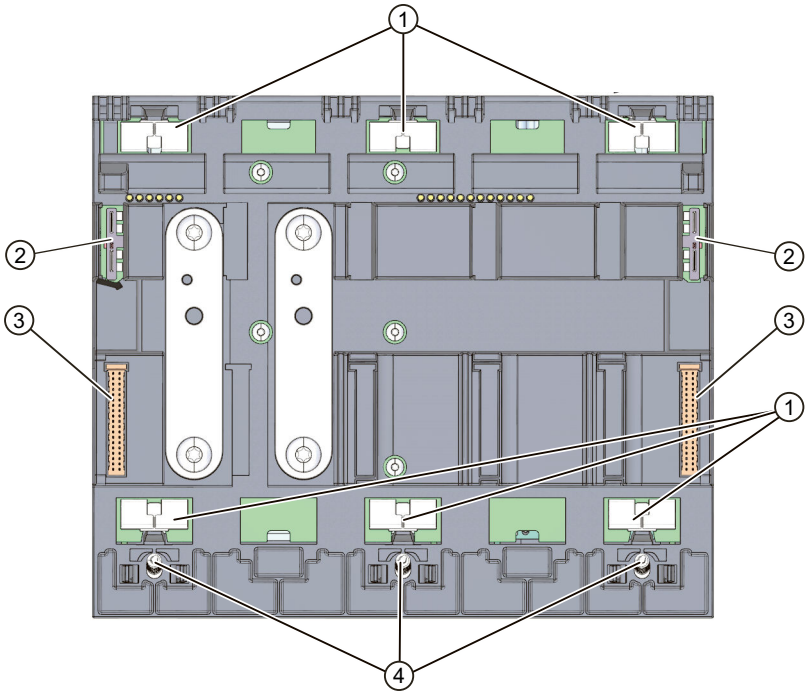

① Shield contact surfaces
② Plug-in connection for power supply
③ Plug-in connection for backplane bus
④ Fixing screws

Figure 3-5 View of the CPU 1518-4 PN/DP - rear

3.6 Mode selector switch

Use the mode switch to set the CPU operating mode.
The following table shows the position of the switch and the corresponding meaning.

Table 3-6 Mode switch settings

Position	Meaning	Explanation
RUN	RUN mode	The CPU is executing the user program.
STOP	STOP mode	The user program is not being executed.
MRES	Memory reset	Position for CPU memory reset.

Connecting up

4

This section provides information on the pin assignment of the individual interfaces and the block diagram of the CPU 1518-4 PN/DP.

24 V DC supply voltage (X80)

The connector for the supply voltage is plugged in when the CPU ships from the factory. The following table shows the signal names and the descriptions of the pin assignment of the 24 V DC supply voltage.

Table 4-1 Pin assignment 24 V DC supply voltage

View Connector	Signal name [1]		Description
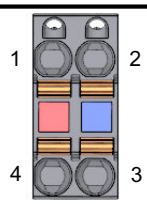	1	1L+	+ 24 V DC of the supply voltage
	2	1M	Ground of the supply voltage
	3	2M	Ground of the supply voltage for loop-through [2]
	4	2L+	+ 24 V DC of the supply voltage for loop-through [2]

[1] 1L+ and 2L+ as well as 1M and 2M are bridged internally

[2] Maximum 10 A permitted

If the CPU is supplied by a system power supply, it is not necessary to connect the 24 V supply.

PROFINET interface X1 with 2-port switch (X1 P1 R and X1 P2 R)

The assignment corresponds to the Ethernet standard for an RJ45 connector.

- When autonegotiation is deactivated, the RJ45 socket is allocated as a switch (MDI-X).
- When autonegotiation is activated, autocrossing is in effect and the RJ45 socket is allocated either as data terminal equipment (MDI) or a switch (MDI-X).

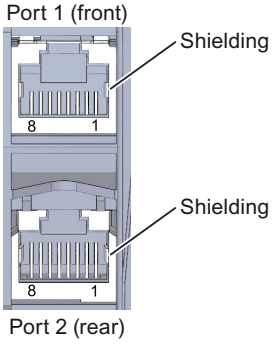

PROFINET interfaces X2 and X3 with 1 port (X2 P1 X3 P1)

The assignment corresponds to the Ethernet standard for an RJ45 connector.

- Autocrossing is always active on X2. This means the RJ45 socket is allocated either as data terminal equipment (MDI) or a switch (MDI-X).
- Autocrossing is always active on X3. This means the RJ45 socket is allocated either as data terminal equipment (MDI) or a switch (MDI-X).

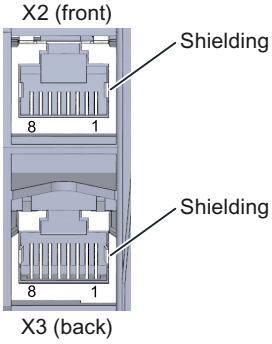

Figure 4-1 Interfaces X2 and X3

NOTE

PROFINET interface X3 with a transmission rate of 1000 Mbps

The PROFINET interface X3 supports a maximum transmission rate of 1000 Mbps.

Requirements:

- The CPU 1518-4 PN/DP has a firmware version of V1.7 or higher
- Devices on the PROFINET segment must support the 1000 Mbps transmission rate.
- The network infrastructure (network cables and outlets) must be category CAT 5e or better.
- The "Transmission rate" parameter in the properties of the port (X3) must be set as follows in STEP 7:
  - The "Autonegotiation" check box is selected
  - "Automatic" is selected in the drop-down list

PROFIBUS interface X4

The table below shows the pin assignment of the PROFIBUS interface. The assignment corresponds to the standard assignment of an RS485 interface.

Table 4-2 PROFIBUS interface pin assignment

View	Signal name		Designation
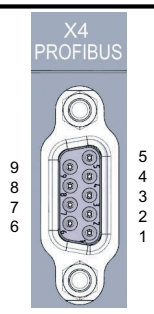	1	-	-
	2	-	-
	3	RxD/TxD-P	Data line B
	4	RTS	Request to send
	5	M5V2	Data reference potential (from station)
	6	P5V2	Supply plus (from station)
	7	-	-
	8	RxD/TxD-N	Data line A
	9	-	-

NOTE

Supply of I/O devices

CPU 1518-4 PN/DP does not provide a 24 V DC power supply on the PROFIBUS interface. I/O devices (for example, PC adapter USB 6ES7972-0CB20-0XA0) are only operational on the interface in conjunction with a plug-in power supply set for external power supply.

The innovated successor product, PC adapter USB A2, receives the required power supply via the USB port. This means it does not need a 24 V DC supply voltage and can be operated **without** a plug-in power supply set for external power supply.

Reference

You can find additional information on the topics of "Wiring the CPU" and "Accessories/spare parts" in the S7-1500, ET 200MP (http://support.automation.siemens.com/WW/view/en/59191792) system manual.

Assignment of the MAC addresses

CPU 1518-4 PN/DP has three PROFINET interfaces. The first interface is an interface with 2-port switch. The PROFINET interfaces each have a MAC address, and each of the PROFINET ports has its own MAC address. The CPU 1518-4 PN/DP therefore has seven MAC addresses in total.

The MAC addresses of the PROFINET ports are needed for the LLDP protocol, for example for the neighborhood discovery function.

The number range of the MAC addresses is sequential. The first and last MAC address are lasered on the rating plate on the right side of each CPU 1518-4 PN/DP.

The table below shows how the MAC addresses are assigned.

Table 4-3 Assignment of the MAC addresses

	Assignment	Labeling
MAC address 1	PROFINET interface X1 (visible in STEP 7 for accessible devices)	• Front, lasered • Right side, lasered (start of number range)
MAC address 2	Port X1 P1 R (required for LLDP, for example)	• Front and right side, not lasered
MAC address 3	Port X1 P2 R (required for LLDP, for example)	• Front and right side, not lasered
MAC address 4	PROFINET interface X2 (visible in STEP 7 for accessible devices)	• Front, lasered • Right side, not lasered
MAC address 5	Port X2 P1 (required for LLDP, for example)	• Front and right side, not lasered
MAC address 6	PROFINET interface X3 (visible in STEP 7 for accessible devices)	• Front, lasered • Right side, not lasered
MAC address 7	Port X3 P1 (required for LLDP, for example)	• Front, lasered • Right side, lasered (end of number range)

Block diagram

The following figure shows the block diagram of the CPU 1518-4 PN/DP.

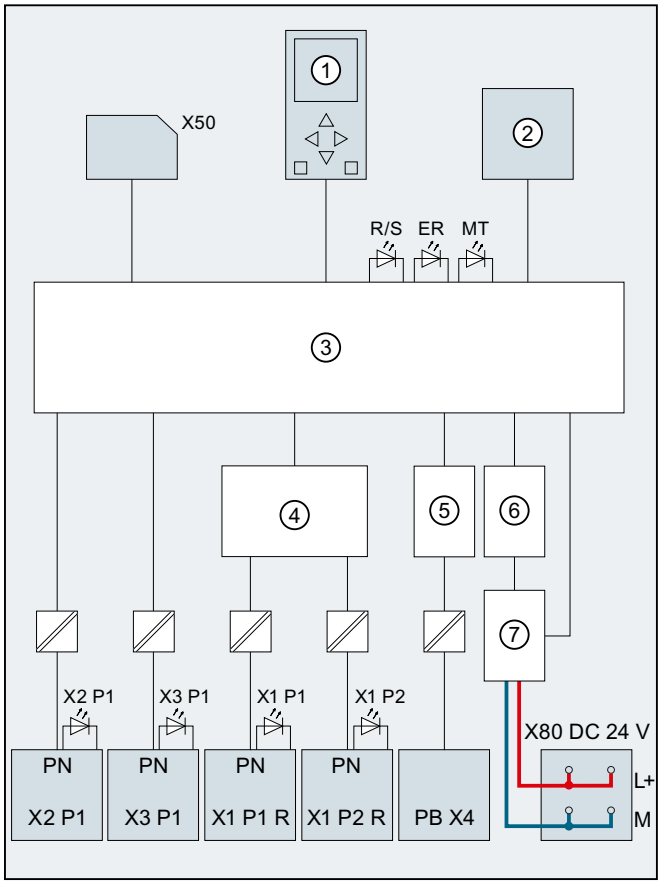

①	Display	PN X1 P2 R	PROFINET interface X1 Port 2
②	RUN/STOP/MRES mode selector	PN X2 P1	PROFINET interface X2 Port 1
③	Electronics	PN X3 P1	PROFINET interface X3 Port 1
④	PROFINET 2-port switch	PB X4	PROFIBUS interface X4
⑤	PROFIBUS DP driver	L+	24 V DC supply voltage
⑥	Backplane bus interface	M	Ground
⑦	Internal supply voltage	R/S	RUN/STOP LED (yellow/green)
X50	SIMATIC memory card	ER	ERROR LED (red)
X80 24 V DC	Infeed of supply voltage	MT	MAINT LED (yellow)
PN X1 P1 R	PROFINET interface X1 Port 1	X1 P1, X1 P2, X2 P1, X3 P1	LED Link TX/RX

Figure 4-2 Block diagram of the CPU 1518-4 PN/DP

Interrupts, error messages, diagnostics and system alarms

5

The status and error displays of the CPU 1518-4 PN/DP are described below.
You will find additional information on "Interrupts" in the STEP 7 online help.
You can find additional information on the topics of "Diagnostics" and "System alarms" in the Diagnostics (http://support.automation.siemens.com/WW/view/en/59192926) function manual.

5.1 Status and error display of the CPU

LED display

The figure below shows the LED displays of the CPU 1518-4 PN/DP.

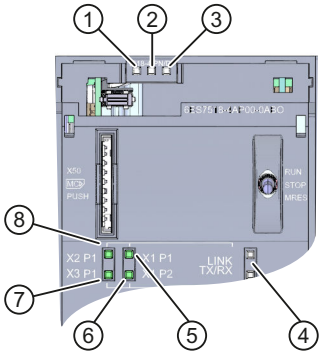

① RUN/STOP LED (yellow/green LED)
② ERROR LED (red LED)
③ MAINT LED (yellow LED)
④ No function
⑤ LINK RX/TX LED for port X1 P1 (yellow/green LED)
⑥ LINK RX/TX LED for port X1 P2 (yellow/green LED)
⑦ LINK RX/TX LED for port X3 P1 (yellow/green LED)
⑧ LINK RX/TX LED for port X2 P1 (yellow/green LED)

Figure 5-1 LED display of the CPU 1518-4 PN/DP (without front panel)

Meaning of the RUN/STOP, ERROR and MAINT LEDs

The CPU 1518-4 PN/DP has three LEDs for displaying the current operating mode and diagnostics status. The following table shows the meaning of the various combinations of colors for the RUN/STOP, ERROR and MAINT LEDs.

Table 5-1 Meaning of the LEDs

RUN/STOP LED	ERROR LED	MAINT LED	Meaning
LED off	LED off	LED off	Missing or insufficient supply voltage on the CPU.
LED off	LED flashes red	LED off	An error has occurred.
LED lit green	LED off	LED off	CPU is in RUN mode.
LED lit green	LED off	LED lit yellow	Maintenance demanded for the plant. The affected hardware must be checked/replaced within a short period of time.
			Active Force job
			OPC UA server of the CPU expects initial trust lists and CRLs via GDS Push function.
LED lit green	LED off	LED flashes yellow	Bad configuration
LED lit yellow	LED flashes red	LED off	A diagnostics event is pending.
LED lit yellow	LED off	LED flashes yellow	Firmware update using SIMATIC memory card successfully completed.
LED lit yellow	LED off	LED off	CPU is in STOP mode.
			CPU runs a program with active breakpoints. The program is at a breakpoint.
LED lit yellow	LED flashes red	LED flashes yellow	The program on the SIMATIC memory card is causing an error.
			Firmware update using SIMATIC memory card has failed.
			The CPU has detected an error state. Additional information is available via the CPU diagnostic buffer.
LED flashes yellow	LED off	LED off	CPU is performing internal activities during STOP, e.g. startup after STOP.
			Download of the user program from the SIMATIC memory card
			CPU carries out a program with active breakpoint. The program is presently moving from one breakpoint to another.
			Firmware update is being performed.
LED flashes yellow/green	LED off	LED off	Startup (transition from STOP → RUN)

RUN/STOP LED	ERROR LED	MAINT LED	Meaning
LED flashes yellow/green	LED flashes red	LED flashes yellow	Startup (CPU booting)
			Test of LEDs during startup, inserting a module.
			LED flashing test

Meaning of LINK RX/TX LED

Each port has a LINK RX/TX LED. The table below shows the various "LED scenarios" of the CPU 1518-4 PN/DP ports.

Table 5-2 Meaning of the LEDs

LINK TX/RX LED	Meaning
LED off	There is no Ethernet connection between the PROFINET interface of the PROFINET device and the communication partner. No data is currently being sent/received via the PROFINET interface. There is no LINK connection.
LED flashes green	The "LED flashing test" is being performed.
LED lit green	There is an Ethernet connection between the PROFINET interface of your PROFINET device and a communication partner.
LED flashes yel-low/green	Data is currently being received from or sent to a communications partner on Ethernet via the PROFINET interface of the PROFINET device.

NOTE

"LED" instruction

You can read the status (e.g. "On" or "Off") of LEDs of a CPU or a module using the "LED" instruction. Note, however, that it is not possible to read the LED status of the LINK RX/TX LEDs on all S7-1500 CPUs.

You can find additional information on the "LED" instruction in the STEP 7 online help.

Technical specifications 6

The following table shows the technical specifications as of 11/2022. You will find a data sheet including daily updated technical specifications on the Internet (https://support.industry.siemens.com/cs/ww/en/pv/6ES7518-4AP00-0AB0/td?dl=en).

Article number	6ES7518-4AP00-0AB0
General information	
Product type designation	CPU 1518-4 PN/DP
HW functional status	FS11
Firmware version	V3.0
Product function	
• I&M data	Yes; I&M0 to I&M3
• Isochronous mode	Yes; Distributed and central; with minimum OB 6x cycle of 125 µs (distributed) and 1 ms (central)
Engineering with	
• STEP 7 TIA Portal configurable/integrated from version	V18 (FW V3.0) / V13 (FW V1.5) or higher
Configuration control	
via dataset	Yes
Display	
Screen diagonal [cm]	6.1 cm
Control elements	
Number of keys	6
Mode selector switch	1
Supply voltage	
Rated value (DC)	24 V
permissible range, lower limit (DC)	19.2 V
permissible range, upper limit (DC)	28.8 V
Reverse polarity protection	Yes
Mains buffering	
• Mains/voltage failure stored energy time	5 ms
• Repeat rate, min.	1/s
Input current	
Current consumption (rated value)	1.55 A
Current consumption, max.	1.9 A
Inrush current, max.	1.9 A; Rated value
I^2t	0.4 $A^2 \cdot s$
Power	
Infeed power to the backplane bus	12 W

Article number	6ES7518-4AP00-0AB0
Power consumption from the backplane bus (balanced)	30 W
Power loss	
Power loss, typ.	24 W
Memory	
Number of slots for SIMATIC memory card	1
SIMATIC memory card required	Yes
Work memory	
• integrated (for program)	6 Mbyte
• integrated (for data)	60 Mbyte
Load memory	
• Plug-in (SIMATIC Memory Card), max.	32 Gbyte
Backup	
• maintenance-free	Yes
CPU processing times	
for bit operations, typ.	1 ns
for word operations, typ.	2 ns
for fixed point arithmetic, typ.	2 ns
for floating point arithmetic, typ.	6 ns
CPU-blocks	
Number of elements (total)	20 000; Blocks (OB, FB, FC, DB) and UDTs
DB	
• Number range	1 ... 60 999; subdivided into: number range that can be used by the user: 1 ... 59 999, and number range of DBs created via SFC 86: 60 000 ... 60 999
• Size, max.	16 Mbyte; For DBs with absolute addressing, the max. size is 64 KB
FB	
• Number range	0 ... 65 535
• Size, max.	1 Mbyte
FC	
• Number range	0 ... 65 535
• Size, max.	1 Mbyte
OB	
• Size, max.	1 Mbyte
• Number of free cycle OBs	100
• Number of time alarm OBs	20
• Number of delay alarm OBs	20
• Number of cyclic interrupt OBs	20; with minimum OB 3x cycle of 100 µs
• Number of process alarm OBs	50

Article number	6ES7518-4AP00-0AB0
• Number of DPV1 alarm OBs	3
• Number of isochronous mode OBs	3
• Number of technology synchronous alarm OBs	2
• Number of startup OBs	100
• Number of asynchronous error OBs	4
• Number of synchronous error OBs	2
• Number of diagnostic alarm OBs	1
Nesting depth	
• per priority class	24
Counters, timers and their retentivity	
S7 counter	
• Number	2 048
Retentivity	
– adjustable	Yes
IEC counter	
• Number	Any (only limited by the main memory)
Retentivity	
– adjustable	Yes
S7 times	
• Number	2 048
Retentivity	
– adjustable	Yes
IEC timer	
• Number	Any (only limited by the main memory)
Retentivity	
– adjustable	Yes
Data areas and their retentivity	
Retentive data area (incl. timers, counters, flags), max.	768 kbyte; In total; available retentive memory for bit memories, timers, counters, DBs, and technology data (axes): 700 KB
Extended retentive data area (incl. timers, counters, flags), max.	20 Mbyte; When using PS 6 0W 24/48/60 V DC HF
Flag	
• Size, max.	16 kbyte
• Number of clock memories	8; 8 clock memory bit, grouped into one clock memory byte
Data blocks	
• Retentivity adjustable	Yes
• Retentivity preset	No
Local data	

Article number	6ES7518-4AP00-0AB0
• per priority class, max.	64 kbyte; max. 16 KB per block
Address area	
Number of IO modules	16 384; max. number of modules / submodules
I/O address area	
• Inputs	32 kbyte; All inputs are in the process image
• Outputs	32 kbyte; All outputs are in the process image
per integrated IO subsystem	
– Inputs (volume)	32 kbyte; max. 32 KB via X1; max. 8 KB via X2 or X4
– Outputs (volume)	32 kbyte; max. 32 KB via X1; max. 8 KB via X2 or X4
per CM/CP	
– Inputs (volume)	8 kbyte
– Outputs (volume)	8 kbyte
Subprocess images	
• Number of subprocess images, max.	32
Hardware configuration	
Number of distributed IO systems	64; A distributed I/O system is characterized not only by the integration of distributed I/O via PROFINET or PROFIBUS communication modules, but also by the connection of I/O via AS-i master modules or links (e.g. IE/PB-Link)
Number of DP masters	
• integrated	1
• Via CM	8; A maximum of 8 CMs/CPs (PROFIBUS, PROFINET, Ethernet) can be inserted in total
Number of IO Controllers	
• integrated	2
• Via CM	8; A maximum of 8 CMs/CPs (PROFIBUS, PROFINET, Ethernet) can be inserted in total
Rack	
• Modules per rack, max.	32; CPU + 31 modules
• Number of lines, max.	1
PtP CM	
• Number of PtP CMs	the number of connectable PtP CMs is only limited by the number of available slots
Time of day	
Clock	
• Type	Hardware clock
• Backup time	6 wk; At 40 °C ambient temperature, typically
• Deviation per day, max.	10 s; Typ.: 2 s
Operating hours counter	

Article number	6ES7518-4AP00-0AB0
• Number	16
Clock synchronization	
• supported	Yes
• to DP, master	Yes
• in AS, master	Yes
• in AS, slave	Yes
• on Ethernet via NTP	Yes
Interfaces	
Number of PROFINET interfaces	3
Number of PROFIBUS interfaces	1
1. Interface	
Interface types	
• RJ 45 (Ethernet)	Yes; X1
• Number of ports	2
• integrated switch	Yes
Protocols	
• IP protocol	Yes; IPv4
• PROFINET IO Controller	Yes
• PROFINET IO Device	Yes
• SIMATIC communication	Yes
• Open IE communication	Yes; Optionally also encrypted
• Web server	Yes
• Media redundancy	Yes
PROFINET IO Controller	
Services	
– PG/OP communication	Yes
– Isochronous mode	Yes
– Direct data exchange	Yes; Requirement: IRT and isochronous mode (MRPD optional)
– IRT	Yes
– PROFIenergy	Yes; per user program
– Prioritized startup	Yes; Max. 32 PROFINET devices
– Number of connectable IO Devices, max.	512; In total, up to 1 000 distributed I/O devices can be connected via AS-i, PROFIBUS or PROFINET
– Of which IO devices with IRT, max.	64
– Number of connectable IO Devices for RT, max.	512
– of which in line, max.	512

Article number	6ES7518-4AP00-0AB0
– Number of IO Devices that can be simultaneously activated/deactivated, max.	8; in total across all interfaces
– Number of IO Devices per tool, max.	8
– Updating times	The minimum value of the update time also depends on communication share set for PROFINET IO, on the number of IO devices, and on the quantity of configured user data
Update time for IRT	
– for send cycle of 125 µs	125 µs
– for send cycle of 187.5 µs	187.5 µs
– for send cycle of 250 µs	250 µs to 4 ms
– for send cycle of 500 µs	500 µs to 8 ms
– for send cycle of 1 ms	1 ms to 16 ms
– for send cycle of 2 ms	2 ms to 32 ms
– for send cycle of 4 ms	4 ms to 64 ms
– With IRT and parameterization of "odd" send cycles	Update time = set "odd" send clock (any multiple of 125 µs: 375 µs, 625 µs ... 3 875 µs)
Update time for RT	
– for send cycle of 250 µs	250 µs to 128 ms
– for send cycle of 500 µs	500 µs to 256 ms
– for send cycle of 1 ms	1 ms to 512 ms
– for send cycle of 2 ms	2 ms to 512 ms
– for send cycle of 4 ms	4 ms to 512 ms
PROFINET IO Device	
Services	
– PG/OP communication	Yes
– Isochronous mode	No
– IRT	Yes; Minimum send cycle of 250 µs
– PROFIenergy	Yes; per user program
– Shared device	Yes
– Number of IO Controllers with shared device, max.	4
– activation/deactivation of I-devices	Yes; per user program
– Asset management record	Yes; per user program
2. Interface	
Interface types	
• RJ 45 (Ethernet)	Yes; X2
• Number of ports	1
• integrated switch	No

Article number	6ES7518-4AP00-0AB0
Protocols	
• IP protocol	Yes; IPv4
• PROFINET IO Controller	Yes
• PROFINET IO Device	Yes
• SIMATIC communication	Yes
• Open IE communication	Yes; Optionally also encrypted
• Web server	Yes
• Media redundancy	No
PROFINET IO Controller	
Services	
– PG/OP communication	Yes
– Isochronous mode	No
– Direct data exchange	No
– IRT	No
– PROFIenergy	Yes; per user program
– Prioritized startup	No
– Number of connectable IO Devices, max.	128; In total, up to 1 000 distributed I/O devices can be connected via AS-i, PROFIBUS or PROFINET
– Number of connectable IO Devices for RT, max.	128
– of which in line, max.	128
– Number of IO Devices that can be simultaneously activated/deactivated, max.	8; in total across all interfaces
– Number of IO Devices per tool, max.	8
– Updating times	The minimum value of the update time also depends on communication share set for PROFINET IO, on the number of IO devices, and on the quantity of configured user data
Update time for RT	
– for send cycle of 1 ms	1 ms to 512 ms
PROFINET IO Device	
Services	
– PG/OP communication	Yes
– Isochronous mode	No
– IRT	No
– PROFIenergy	Yes; per user program
– Prioritized startup	No
– Shared device	Yes
– Number of IO Controllers with shared device, max.	4

Article number	6ES7518-4AP00-0AB0
– activation/deactivation of I-devices	Yes; per user program
– Asset management record	Yes; per user program
3. Interface	
Interface types	
• RJ 45 (Ethernet)	Yes; X3
• Number of ports	1
• integrated switch	No
Protocols	
• IP protocol	Yes; IPv4
• PROFINET IO Controller	No
• PROFINET IO Device	No
• SIMATIC communication	Yes
• Open IE communication	Yes; Optionally also encrypted
• Web server	Yes
4. Interface	
Interface types	
• RS 485	Yes; X4
• Number of ports	1
Protocols	
• PROFIBUS DP master	Yes
• PROFIBUS DP slave	No
• SIMATIC communication	Yes
PROFIBUS DP master	
• Number of connections, max.	48; for the integrated PROFIBUS DP interface
• Number of DP slaves, max.	125; In total, up to 1 000 distributed I/O devices can be connected via AS-i, PROFIBUS or PROFINET
Services	
– PG/OP communication	Yes
– Equidistance	Yes
– Isochronous mode	Yes
– Activation/deactivation of DP slaves	Yes
Interface types	
RJ 45 (Ethernet)	
• 100 Mbps	Yes
• 1000 Mbps	Yes; Only possible at the X3 interface of the CPU 1518
• Autonegotiation	Yes
• Autocrossing	Yes
• Industrial Ethernet status LED	Yes

Article number	6ES7518-4AP00-0AB0
RS 485	
• Transmission rate, max.	12 Mbit/s
Protocols	
PROFIsafe	No
Number of connections	
• Number of connections, max.	384; via integrated interfaces of the CPU and connected CPs / CMs
• Number of connections reserved for ES/HMI/web	10
• Number of connections via integrated interfaces	320
• Number of S7 routing paths	64; in total, only 16 S7-Routing connections are supported via PROFIBUS
Redundancy mode	
• H-Sync forwarding	Yes
Media redundancy	
– Media redundancy	only via 1st interface (X1)
– MRP	Yes; MRP Automanager according to IEC 62439-2 Edition 2.0, MRP Manager; MRP Client
– MRP interconnection, supported	Yes; as MRP ring node according to IEC 62439-2 Edition 3.0
– MRPD	Yes; Requirement: IRT
– Switchover time on line break, typ.	200 ms; For MRP, bumpless for MRPD
– Number of stations in the ring, max.	50
SIMATIC communication	
• PG/OP communication	Yes; encryption with TLS V1.3 pre-selected
• S7 routing	Yes
• Data record routing	Yes
• S7 communication, as server	Yes
• S7 communication, as client	Yes
• User data per job, max.	See online help (S7 communication, user data size)
Open IE communication	
• TCP/IP	Yes
– Data length, max.	64 kbyte
– several passive connections per port, supported	Yes
• ISO-on-TCP (RFC1006)	Yes
– Data length, max.	64 kbyte
• UDP	Yes
– Data length, max.	2 kbyte; 1 472 bytes for UDP broadcast

Article number	6ES7518-4AP00-0AB0
– UDP multicast	Yes; 128 multicast circuits (of which max. 5 via X1)
• DHCP	Yes
• DNS	Yes
• SNMP	Yes
• DCP	Yes
• LLDP	Yes
• Encryption	Yes; Optional
Web server	
• HTTP	Yes; Standard and user pages
• HTTPS	Yes; Standard and user pages
OPC UA	
• Runtime license required	Yes; "Large" license required
• OPC UA Client	Yes; Data Access (registered Read/Write), Method Call
– Application authentication	Yes
– Security policies	Available security policies: None, Basic128Rsa15, Basic256Rsa15, Basic256Sha256
– User authentication	"anonymous" or by user name & password
– Number of connections, max.	40
– Number of nodes of the client interfaces, max.	5 000
– Number of elements for one call of OPC_UA_NodeGetHandleList/OPC_UA_-ReadList/OPC_UA_WriteList, max.	300
– Number of elements for one call of OPC_UA_NameSpaceGetIndexList, max.	20
– Number of elements for one call of OPC_UA_MethodGetHandleList, max.	100
– Number of simultaneous calls of the client instructions per connection (except OPC_UA_ReadList,OPC_UA_WriteList, OPC_UA_MethodCall), max.	1
– Number of simultaneous calls of the client instructions OPC_UA_ReadList,OPC_UA_WriteList and OPC_UA_MethodCall, max.	5
– Number of registerable nodes, max.	5 000
– Number of registerable method calls of OPC_UA_MethodCall, max.	100
– Number of inputs/outputs when calling OPC_UA_MethodCall, max.	20

Article number	6ES7518-4AP00-0AB0
• OPC UA Server	Yes; Data Access (Read, Write, Subscribe), Method Call, Alarms & Condition (A&C), Custom Address Space
– Application authentication	Yes
– Security policies	available security policies: None, Basic128Rsa15, Basic256Rsa15, Basic256Sha256, Aes128Sha256RsaOaep, Aes256Sha256RsaPss
– User authentication	"anonymous" or by user name & password
– GDS support (certificate management)	Yes
– Number of sessions, max.	64
– Number of accessible variables, max.	200 000
– Number of registerable nodes, max.	50 000
– Number of subscriptions per session, max.	50
– Sampling interval, min.	10 ms
– Publishing interval, min.	10 ms
– Number of server methods, max.	100
– Number of inputs/outputs per server method, max.	20
– Number of monitored items, max.	24 000; for 1 s sampling interval and 1 s send interval
– Number of server interfaces, max.	10 of each "Server interfaces" / "Companion specification" type and 20 of the type "Reference namespace"
– Number of nodes for user-defined server interfaces, max.	30 000
• Alarms and Conditions	Yes
– Number of program alarms	400
– Number of alarms for system diagnostics	200
Further protocols	
• MODBUS	Yes; MODBUS TCP
Isochronous mode	
Equidistance	Yes
S7 message functions	
Number of login stations for message functions, max.	64
Program alarms	Yes
Number of configurable program messages, max.	10 000; Program messages are generated by the "Program_Alarm" block, ProDiag or GRAPH
Number of loadable program messages in RUN, max.	5 000
Number of simultaneously active program alarms	
• Number of program alarms	4 000

Article number	6ES7518-4AP00-0AB0
• Number of alarms for system diagnostics	1 000
• Number of alarms for motion technology objects	480
Test commissioning functions	
Joint commission (Team Engineering)	Yes; Parallel online access possible for up to 10 engineering systems
Status block	Yes; Up to 16 simultaneously (in total across all ES clients)
Single step	No
Number of breakpoints	20
Status/control	
• Status/control variable	Yes
• Variables	Inputs/outputs, memory bits, DBs, distributed I/Os, timers, counters
• Number of variables, max.	
– of which status variables, max.	200; per job
– of which control variables, max.	200; per job
Forcing	
• Forcing	Yes
• Forcing, variables	Peripheral inputs/outputs
• Number of variables, max.	200
Diagnostic buffer	
• present	Yes
• Number of entries, max.	3 200
– of which powerfail-proof	1 000
Traces	
• Number of configurable Traces	8; Up to 512 KB of data per trace are possible
Interrupts/diagnostics/status information	
Diagnostics indication LED	
• RUN/STOP LED	Yes
• ERROR LED	Yes
• MAINT LED	Yes
• Connection display LINK TX/RX	Yes
Supported technology objects	
Motion Control	Yes; Note: The number of technology objects affects the cycle time of the PLC program; selection guide via the TIA Selection Tool
• Number of available Motion Control resources for technology objects	15 360
• Required Motion Control resources	
– per speed-controlled axis	40

Article number	6ES7518-4AP00-0AB0
– per positioning axis	80
– per synchronous axis	160
– per external encoder	80
– per output cam	20
– per cam track	160
– per probe	40
• Positioning axis	
– Number of positioning axes at motion control cycle of 4 ms (typical value)	140
– Number of positioning axes at motion control cycle of 8 ms (typical value)	192
Controller	
• PID_Compact	Yes; Universal PID controller with integrated optimization
• PID_3Step	Yes; PID controller with integrated optimization for valves
• PID-Temp	Yes; PID controller with integrated optimization for temperature
Counting and measuring	
• High-speed counter	Yes
Standards, approvals, certificates	
Suitable for safety functions	No
Ambient conditions	
Ambient temperature during operation	
• horizontal installation, min.	0 °C
• horizontal installation, max.	60 °C; Display: 50 °C, at an operating temperature of typically 50 °C, the display is switched off
• vertical installation, min.	0 °C
• vertical installation, max.	40 °C; Display: 40 °C, at an operating temperature of typically 40 °C, the display is switched off
Ambient temperature during storage/transportation	
• min.	-40 °C
• max.	70 °C
Altitude during operation relating to sea level	
• Installation altitude above sea level, max.	5 000 m; Restrictions for installation altitudes > 2 000 m, see manual
configuration / header	
configuration / programming / header	
Programming language	
– LAD	Yes
– FBD	Yes

Article number	6ES7518-4AP00-0AB0
– STL	Yes
– SCL	Yes
– CFC	Yes
– GRAPH	Yes
Know-how protection	
• User program protection/password protection	Yes
• Copy protection	Yes
• Block protection	Yes
Access protection	
• protection of confidential configuration data	Yes
• Password for display	Yes
• Protection level: Write protection	Yes
• Protection level: Read/write protection	Yes
• Protection level: Complete protection	Yes
programming / cycle time monitoring / header	
• lower limit	adjustable minimum cycle time
• upper limit	adjustable maximum cycle time
Dimensions	
Width	175 mm
Height	147 mm
Depth	129 mm
Weights	
Weight, approx.	2 079 g

General technical specifications

You can find information on the general technical specifications, such as standards and approvals, electromagnetic compatibility, protection class, etc., in the S7-1500, ET 200MP (http://support.automation.siemens.com/WW/view/en/59191792) system manual.

Dimensional drawing

A

This section contains the dimensional drawing of the module on the mounting rail, as well as a dimensional drawing with the front panel open. Keep to the dimensions when installing in cabinets, control rooms, etc.

Dimensional drawings for CPU 1518-4 PN/DP

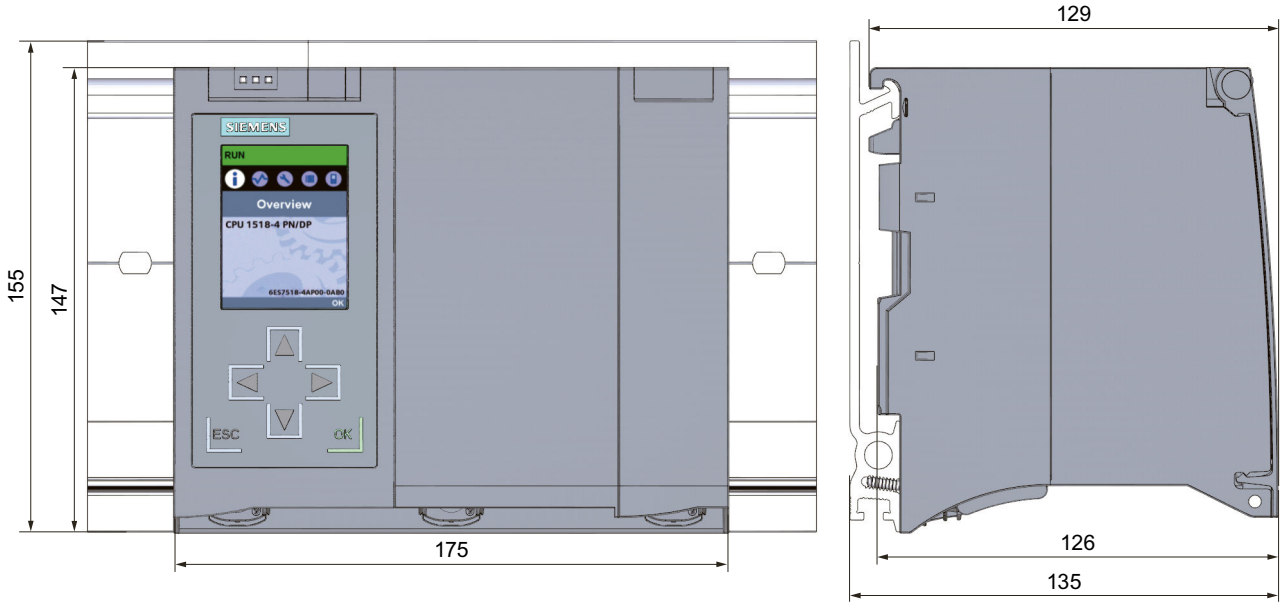

Figure A-1 Dimensional drawing of CPU 1518-4 PN/DP, front and side views

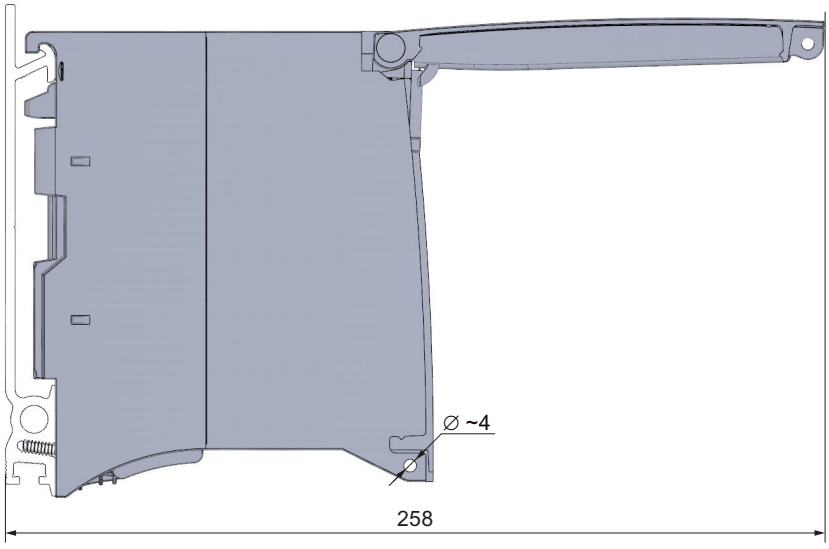

Figure A-2 Dimensional drawing CPU 1518-4 PN/DP, side view with open front panel

SIEMENS

Edition 11/2022

EQUIPMENT MANUAL

SIMATIC

S7-1500

CPU 1518-4 PN/DP MFP
6ES7518-4AX00-1AB0

support.industry.siemens.com

SIEMENS

SIMATIC

S7-1500
CPU 1518-4 PN/DP MFP
(6ES7518-4AX00-1AB0)

Equipment Manual

Introduction 1

Safety instructions 2

Product overview 3

Connecting up 4

Interrupts, error messages, diagnostics and system alarms 5

Technical specifications 6

Dimensional drawing A

11/2022
A5E40882737-AC

Legal information

Warning notice system

This manual contains notices you have to observe in order to ensure your personal safety, as well as to prevent damage to property. The notices referring to your personal safety are highlighted in the manual by a safety alert symbol, notices referring only to property damage have no safety alert symbol. These notices shown below are graded according to the degree of danger.

⚠ DANGER
indicates that death or severe personal injury **will** result if proper precautions are not taken.

⚠ WARNING
indicates that death or severe personal injury **may** result if proper precautions are not taken.

⚠ CAUTION
indicates that minor personal injury can result if proper precautions are not taken.

NOTICE
indicates that property damage can result if proper precautions are not taken.

If more than one degree of danger is present, the warning notice representing the highest degree of danger will be used. A notice warning of injury to persons with a safety alert symbol may also include a warning relating to property damage.

Qualified Personnel

The product/system described in this documentation may be operated only by **personnel qualified** for the specific task in accordance with the relevant documentation, in particular its warning notices and safety instructions. Qualified personnel are those who, based on their training and experience, are capable of identifying risks and avoiding potential hazards when working with these products/systems.

Proper use of Siemens products

Note the following:

⚠ WARNING
Siemens products may only be used for the applications described in the catalog and in the relevant technical documentation. If products and components from other manufacturers are used, these must be recommended or approved by Siemens. Proper transport, storage, installation, assembly, commissioning, operation and maintenance are required to ensure that the products operate safely and without any problems. The permissible ambient conditions must be complied with. The information in the relevant documentation must be observed.

Trademarks

All names identified by ® are registered trademarks of Siemens AG. The remaining trademarks in this publication may be trademarks whose use by third parties for their own purposes could violate the rights of the owner.

Disclaimer of Liability

We have reviewed the contents of this publication to ensure consistency with the hardware and software described. Since variance cannot be precluded entirely, we cannot guarantee full consistency. However, the information in this publication is reviewed regularly and any necessary corrections are included in subsequent editions.

Siemens AG
Digital Industries
Postfach 48 48
90026 NÜRNBERG
GERMANY

A5E40882737-AC
Ⓟ 10/2022 Subject to change

Copyright © Siemens AG 2017 - 2022.
All rights reserved

Table of contents

1 Introduction 5

1.1 Guide documentation S7-1500/ET 200MP 6
1.1.1 Information classes S7-1500/ET 200MP 6
1.1.2 SIMATIC Technical Documentation 7

2 Safety instructions 10

2.1 Security information 10

3 Product overview 11

3.1 New functions 11

3.2 Applications of the S7-1500 CPUs 12

3.3 Hardware properties 21

3.4 Firmware functions 24
3.4.1 Quick start instructions for commissioning C/C++ Runtime 27
3.4.2 Supplied libraries for C/C++ Runtime 32

3.5 Operating and display elements 33
3.5.1 Front view of the CPU with the front panel 33
3.5.2 Front view of the CPU without front panel 35
3.5.3 Rear view of the CPU 36

3.6 Mode selector switch 36

4 Connecting up 37

5 Interrupts, error messages, diagnostics and system alarms 43

5.1 Status and error display of the CPU 43

6 Technical specifications 46

A Dimensional drawing 60

Introduction 1

Purpose of the documentation

This manual supplements the system manual of the S7-1500 automation system / ET 200MP distributed I/O system as well as the function manuals. This manual contains a description of the module-specific information. The system-related functions are described in the system manual. All system-spanning functions are described in the function manuals.

The information provided in this manual and the system manual enables you to commission the CPU 1518-4 PN/DP MFP.

Basic knowledge required

To understand this documentation, you need to have general knowledge of automation engineering. You also need basic knowledge of the following topics:

- Knowledge of the industrial automation system SIMATIC
- Knowledge of working with STEP 7
- Knowledge of working with Linux systems
- Knowledge of programming with C/C++
- Working with the Eclipse development environment

Conventions

- STEP 7: In this documentation, "STEP 7" is used as a synonym for all versions of the configuration and programming software "STEP 7 (TIA Portal)".
- **ODK**: Open Development Kit
- **SO:** Shared Object
- **MFP**: Multifunctional platform

Please also observe notes marked as follows:

NOTE

A note contains important information on the product described in the documentation, on the handling of the product or on the section of the documentation to which particular attention should be paid.

Recycling and disposal

For environmentally friendly recycling and disposal of your old equipment, contact a certified electronic waste disposal company and dispose of the equipment according to the applicable regulations in your country.

Industry Mall

The Industry Mall is the catalog and order system of Siemens AG for automation and drive solutions on the basis of Totally Integrated Automation (TIA) and Totally Integrated Power (TIP).
You can find catalogs for all automation and drive products on the Internet (https://mall.industry.siemens.com).

1.1 Guide documentation S7-1500/ET 200MP

1.1.1 Information classes S7-1500/ET 200MP

The documentation for the SIMATIC S7-1500 automation system and the ET 200MP distributed I/O system is arranged into three areas.
This arrangement enables you to access the specific content you require. Changes and supplements to the manuals are documented in a Product Information.
You can download the documentation free of charge from the Internet (https://support.industry.siemens.com/cs/ww/en/view/109742691).

Basic information

The System Manual and Getting Started describe in detail the configuration, installation, wiring and commissioning of the SIMATIC S7-1500 and ET 200MP systems.
The STEP 7 online help supports you in the configuration and programming.
Examples:

- Getting Started S7-1500
- S7-1500/ET 200MP System Manual
- Online help TIA Portal

Device information

Equipment manuals contain a compact description of the module-specific information, such as properties, wiring diagrams, characteristics and technical specifications.
Examples:

- Equipment Manuals CPUs
- Equipment Manuals Interface Modules
- Equipment Manuals Digital Modules
- Equipment Manuals Analog Modules
- Equipment Manuals Communications Modules
- Equipment Manuals Technology Modules
- Equipment Manuals Power Supply Modules

General information

The function manuals contain detailed descriptions on general topics relating to the SIMATIC S7-1500 and ET 200MPsystems.
Examples:

- Function Manual Diagnostics
- Function Manual Communication
- Function Manual Motion Control
- Function Manual Web Server
- Function Manual Cycle and Response Times
- PROFINET Function Manual
- PROFIBUS Function Manual

Product Information

Changes and supplements to the manuals are documented in a Product Information. The Product Information takes precedence over the device and system manuals.
You can find the latest Product Information on the S7-1500 and ET 200MP systems on the Internet (https://support.industry.siemens.com/cs/de/en/view/68052815).

Manual Collection S7-1500/ET 200MP

The Manual Collection contains the complete documentation on the SIMATIC S7-1500 automation system and the ET 200MP distributed I/O system gathered together in one file.
You can find the Manual Collection on the Internet.
(https://support.industry.siemens.com/cs/ww/en/view/86140384)

SIMATIC S7-1500 comparison list for programming languages

The comparison list contains an overview of which instructions and functions you can use for which controller families.
You can find the comparison list on the Internet
(https://support.industry.siemens.com/cs/ww/en/view/86630375).

1.1.2 SIMATIC Technical Documentation

Additional SIMATIC documents will complete your information. You can find these documents and their use at the following links and QR codes.
The Industry Online Support gives you the option to get information on all topics. Application examples support you in solving your automation tasks.

Overview of the SIMATIC Technical Documentation

Here you will find an overview of the SIMATIC documentation available in Siemens Industry Online Support:

Industry Online Support International (https://support.industry.siemens.com/cs/ww/en/view/109742705)

Watch this short video to find out where you can find the overview directly in Siemens Industry Online Support and how to use Siemens Industry Online Support on your mobile device:

Quick introduction to the technical documentation of automation products per video (https://support.industry.siemens.com/cs/us/en/view/109780491)

YouTube video: Siemens Automation Products - Technical Documentation at a Glance (https://youtu.be/TwLSxxRQQsA)

mySupport

With "mySupport" you can get the most out of your Industry Online Support.

Registration	You must register once to use the full functionality of "mySupport". After registration, you can create filters, favorites and tabs in your personal workspace.
Support requests	Your data is already filled out in support requests, and you can get an overview of your current requests at any time.
Documentation	In the Documentation area you can build your personal library.
Favorites	You can use the "Add to mySupport favorites" to flag especially interesting or frequently needed content. Under "Favorites", you will find a list of your flagged entries.
Recently viewed articles	The most recently viewed pages in mySupport are available under "Recently viewed articles".
CAx data	The CAx data area gives you access to the latest product data for your CAx or CAe system. You configure your own download package with a few clicks: • Product images, 2D dimension drawings, 3D models, internal circuit diagrams, EPLAN macro files • Manuals, characteristics, operating manuals, certificates • Product master data

You can find "mySupport" on the Internet. (https://support.industry.siemens.com/My/ww/en)

Application examples

The application examples support you with various tools and examples for solving your automation tasks. Solutions are shown in interplay with multiple components in the system - separated from the focus on individual products.

You can find the application examples on the Internet.
(https://support.industry.siemens.com/cs/ww/en/ps/ae)

Safety instructions 2

2.1 Security information

Siemens provides products and solutions with industrial security functions that support the secure operation of plants, systems, machines and networks.

In order to protect plants, systems, machines and networks against cyber threats, it is necessary to implement – and continuously maintain – a holistic, state-of-the-art industrial security concept. Siemens' products and solutions constitute one element of such a concept.

Customers are responsible for preventing unauthorized access to their plants, systems, machines and networks. Such systems, machines and components should only be connected to an enterprise network or the internet if and to the extent such a connection is necessary and only when appropriate security measures (e.g. firewalls and/or network segmentation) are in place.

For additional information on industrial security measures that may be implemented, please visit (https://www.siemens.com/industrialsecurity).

Siemens' products and solutions undergo continuous development to make them more secure. Siemens strongly recommends that product updates are applied as soon as they are available and that the latest product versions are used. Use of product versions that are no longer supported, and failure to apply the latest updates may increase customers' exposure to cyber threats.

To stay informed about product updates, subscribe to the Siemens Industrial Security RSS Feed visit (https://www.siemens.com/cert).

Product overview

3

3.1 New functions

This section contains an overview of the most important new firmware functions of the CPU compared to the predecessor CPU (V2.9).

New functions of the CPU in firmware version V3.0

New functions	Applications	Customer benefits
Communication of the CPU		
Network Management Protocol SNMP	A simple configuration option is available for using the SNMP services. For new configurations, this is disabled by default in terms of "Security-by-Default".	Can be enabled/disabled in the CPU properties. Community strings can be configured.
OPC UA server – Reading the diagnostic status of the own address space	By using the OPC UA instruction for reading ("OPC_UA_ReadList"), the own namespace of the OPC UA Server can be accessed. This allows you to read out the following statuses and react to them in the user program: • Status of the own OPC UA server • Status of the connections of OPC UA clients • Status of the session • Status of subscriptions	This allows connection problems to be quickly detected, for example, and plant availability to be increased.
OPC UA server – Time stamping of the source time of nodes	By using the OPC UA instruction for writing ("OPC_UA_WriteList") it is possible to change the "SourceTimestamp" as well as the status code of an OPC UA variable (node).	Distinction between the "source" and "server" time possible
OPC UA server – Increase of the quantity structures	The following quantity structures have been increased: • Possible number of nodes in the server interface • Maximum possible number of subscriptions per session • For subscription, the recommendation for observed values was increased.	Further applications for CPUs as OPC UA servers
Web server of the CPU		
New Web API methods:	Many new API methods extend your access options to the CPU via the Web API.	Additional applications for the web server
Dynamic management of certificates	The web server certificate for HTTPS communication can now also be managed via the OPC UA GDS mechanism, without separate download of the hardware configuration.	Flexible certificate management

New functions	Applications	Customer benefits
Allow data access only via Web API	They limit the functionality of the web server to the web API based functions. This means that only encrypted communication via HTTPS is possible.	Higher security of communication via web server
Technology functions of the CPU		
Axis functions	Save absolute encoder adjustment for device replacement	Saving the adjustment values with the "MC_SaveAbsoluteEncoderData" instruction saves having to perform the absolute encoder adjustment again after a device replacement.
	The "MC_Home" instruction supports the new "Incremental encoder adjustment" homing mode.	Extended scope of functions
	Active homing of absolute encoders is possible.	Extended scope of functions
	The "MC_Power" instruction supports coasting-down.	Extended scope of functions "MC_Power" instruction
	The hardware limit switches are configurable as traversable/non-traversable.	Extended scope of functions
	For axes in a synchronous system, the dynamic filter enables dynamic adaptation of axes with higher dynamic responses to the axis with the lowest dynamic response.	With the dynamic filter, axes with different inertia can be adjusted to each other. Optimization of a synchronous system
	Stop superimposed movements on the axis with the instruction "MC_HaltSuperimposed"	Use the instruction to stop a superimposed motion independently of the basic motion.
Trace functionality of the CPU	The S7-1500 CPU supports up to 64 configured signals per trace.	Number of configurable signals per trace
	Long-term trace: The S7-1500 CPU supports the cycle-granular recording of up to 64 different tags in a .csv file for a long time (hours, days, etc.)	Better diagnostic possibilities when analyzing the course of signals over a long period of time

Reference

You can find an overview of all new functions, improvements and revisions in the respective firmware versions on the Internet (https://support.industry.siemens.com/cs/ww/en/view/109478459).

3.2 Applications of the S7-1500 CPUs

Application

SIMATIC S7-1500 is the modular control system for a wide variety of automation applications in discrete automation.

SIMATIC S7-1500 is the cost-effective and convenient solution for a broad range of tasks and offers the following advantages:

- Modular, fanless design
- Simple realization of distributed structures
- User-friendly handling

Areas of application of the SIMATIC S7-1500 automation system include, for example:

- Special-purpose machines
- Textile machinery
- Packaging machines
- General mechanical engineering
- Controller engineering
- Machine tool engineering
- Installation engineering
- Electrical industry and crafts
- Automobile engineering
- Water/waste water
- Food & Beverage

Areas of application of the SIMATIC S7-1500R/H redundant system include, for example:

- Tunnels
- Airports (e.g. baggage conveyors)
- Subways
- Shipbuilding
- Wastewater treatment plants
- High-bay warehouses

Areas of application of the SIMATIC S7-1500T automation system for advanced motion control applications include, for example:

- Packaging machines
- Converting applications
- Assembly automation
- Pick-and-place automation
- Palletizers

You can choose between CPUs with various levels of performance and a comprehensive range of modules with many convenient functions. Fail-safe CPUs enable use in fail-safe applications. The modular design allows you to use only the modules that you need for your application. The controller can be retrofitted with additional modules at any time to expand its range of tasks.

High industrial suitability due to the high resistance to EMC, shock and vibration enable universal use of the SIMATIC S7-1500, S7-1500R/H and S7-1500T automation systems.

Performance segments of standard CPUs

The CPUs can be used for smaller and mid-range applications, as well as for the high-end range of machine and plant automation.

Table 3-1 Standard CPUs

CPU	Performance segment	PROFIBUS interfaces	PROFINET IO RT/IRT interfaces	PROFINET IO RT interface	Basic PROFINET functionality	Work memory	Processing time for bit operations
CPU 1511-1 PN	Standard CPU for small to mid-range applications	--	1	--	--	1.8 MB	25 ns
CPU 1513-1 PN	Standard CPU for mid-range applications	--	1	--	--	3.1 MB	25 ns
CPU 1515-2 PN	Standard CPU for mid-range to large applications	--	1	1	--	5.5 MB	6 ns
CPU 1516-3 PN/DP	Standard CPU for high-end applications and communication tasks	1	1	1	--	9.5 MB	6 ns
CPU 1517-3 PN/DP	Standard CPU for high-end applications and communication tasks	1	1	1	--	10 MB	2 ns
CPU 1518-4 PN/DP	Standard CPU for high-performance applications, demanding communication tasks and very short reaction times	1	1	1	1	66 MB	1 ns
CPU 1518-4 PN/-DP MFP	Standard CPU for high-performance applications, demanding communication tasks, very short reaction times and C/C++ blocks for the user program	1	1	1	1	116* MB	1 ns

* 50 MB of the integrated work memory is reserved for the function library of CPU runtime

Performance segments of redundant CPUs

The CPUs of the S7-1500R/H redundant system offer a high degree of reliability and system availability. A redundant configuration of the most important automation components reduces the likelihood of production downtimes and the consequences of component errors.

The higher the risks and costs of a production downtime, the more worthwhile the use of a redundant system. The avoidance of production downtimes compensates for the generally higher investment costs.

Table 3-2 Redundant CPUs

CPU	Performance segment	PROFIBUS interfaces	PROFINET IO RT/IRT interfaces	PROFINET IO RT interface	Basic PROFINET functionality	Work memory	Processing time for bit operations
CPU 1513R-1 PN	Redundant CPU for smaller to mid-range applications	--	1	--	--	3.1 MB	50 ns
CPU 1515R-2 PN	Redundant CPU for mid-range to large applications	--	1	--	1	5.5 MB	20 ns
CPU 1517H-3 PN	Redundant CPU for demanding applications and communication tasks	--	1	--	1	10 MB	4 ns
CPU 1518HF-4 PN	Fail-safe and redundant CPU for demanding applications and communication tasks	--	1	--	2	69 MB	4 ns

Performance segments of compact CPUs

The compact CPUs can be used for smaller to mid-range applications and have an integrated analog and digital on-board I/O as well as integrated technology functions.

Table 3-3 Compact CPUs

CPU	Performance segment	PROFIBUS interfaces	PROFINET IO RT/IRT interfaces	PROFINET IO RT interface	Basic PROFINET functionality	Work memory	Processing time for bit operations
CPU 1511C-1 PN	Compact CPU for small to mid-range applications	--	1	--	--	1.175 MB	60 ns
CPU 1512C-1 PN	Compact CPU for mid-range applications	--	1	--	--	1.25 MB	48 ns

The following table shows the specific properties of the Compact CPUs.

	CPU 1511C-1 PN	CPU 1512C-1 PN
Integrated analog inputs/outputs	5 inputs/2 outputs	5 inputs/2 outputs
Integrated digital inputs/outputs	16 inputs/16 outputs	32 inputs/32 outputs
High-speed counters	6	6
Frequency meters	6 (max. 100 kHz)	6 (max. 100 kHz)
Period duration measurement	6 channels	6 channels

	CPU 1511C-1 PN	CPU 1512C-1 PN
Pulse width modulation (PWM output)	Max. 4 (up to 100 kHz)	Max. 4 (up to 100 kHz)
Pulse Train Output (PTO output)	Max. 4 (up to 100 kHz)	Max. 4 (up to 100 kHz)
Frequency output	Up to 100 kHz	Up to 100 kHz

Performance segments of technology CPUs

The technology CPUs can be used for low and mid-range applications, as well as for the high-end range of machine and plant automation. Because of their extended motion control functions, they are primarily used for drive control.

Table 3-4 Technology CPUs

CPU	Performance segment	PROFIBUS interfaces	PROFINET IO RT/IRT interfaces	PROFINET IO RT interface	Basic PROFINET functionality	Work memory	Processing time for bit operations
CPU 1511T-1 PN	Technology CPU for small to mid-range applications	--	1	--	--	1.95 MB	25 ns
CPU 1515T-2 PN	Technology CPU for mid-range to large applications	--	1	1	--	6 MB	6 ns
CPU 1516T-3 PN/-DP	Technology CPU for high-end applications and communication tasks	1	1	1	--	10.5 MB	6 ns
CPU 1517T-3 PN/DP	Technology CPU for high-end applications and communication tasks	1	1	1	--	11 MB	2 ns
CPU 1518T-4 PN/DP	Technology CPU for high-performance motion control applications with large quantities, demanding communication tasks and very short reaction times	1	1	1	1	69 MB	1 ns
CPU 1511TF-1 PN CPU 1515TF-2 PN CPU 1516TF-3 P-N/DP CPU 1517TF-3 PN/DP CPU 1518TF-4 PN/DP	These CPUs are described in the fail-safe CPUs.						

Performance segments of fail-safe CPUs

The fail-safe CPUs are intended for users who want to implement demanding standard and fail-safe applications both centrally and decentrally.

These fail-safe CPUs allow the processing of standard and safety programs on a single CPU. This allows fail-safe data to be evaluated in the standard user program. The integration also provides the system advantages and the extensive functionality of SIMATIC for fail-safe applications.

The fail-safe CPUs are certified for use in safety mode up to:

- Safety class (Safety Integrity Level) SIL 3 according to IEC 61508:2010
- Performance Level (PL) e and Category 4 according to ISO 13849-1:2015 or EN ISO 13849-1:2015

Additional password protection for F-configuration and F-program is set up for IT security.

Table 3-5 Fail-safe CPUs

CPU	Performance segment	PROFIBUS interfaces	PROFINET IO RT/IRT interfaces	PROFINET IO RT interface	Basic PROFINET functionality	Work memory	Processing time for bit operations
CPU 1511F-1 PN	Fail-safe CPU for smaller to medium-sized applications	--	1	--	--	1.95 MB	25 ns
CPU 1511TF-1 PN	Fail-safe technology CPU for small to mid-range applications	--	1	--	--	1.95 MB	25 ns
CPU 1513F-1 PN	Fail-safe CPU for medium-sized applications	--	1	--	--	3.4 MB	25 ns
CPU 1515F-2 PN	Fail-safe CPU for medium-sized to large applications	--	1	1	--	6 MB	6 ns
CPU 1515TF-2 PN	Fail-safe technology CPU for high-end applications and communication tasks	--	1	1	--	6 MB	6 ns
CPU 1516F-3 PN/DP	Fail-safe CPU for demanding applications and communications tasks	1	1	1	--	10.5 MB	6 ns
CPU 1516TF-3 P-N/DP	Fail-safe technology CPU for high-end applications and communication tasks	1	1	1	--	10.5 MB	6 ns
CPU 1517F-3 PN/DP	Fail-safe CPU for demanding applications and communications tasks	1	1	1	--	11 MB	2 ns
CPU 1517TF-3 PN/DP	Fail-safe technology CPU for high-end applications and communication tasks	1	1	1	--	11 MB	2 ns

* 50 MB of the integrated work memory is reserved for the function library of CPU runtime

CPU	Performance segment	PROFIBUS interfaces	PROFINET IO RT/IRT interfaces	PROFINET IO RT interface	Basic PROFINET functionality	Work memory	Processing time for bit operations
CPU 1518F-4 PN/DP	Fail-safe CPU for high-performance applications, demanding communication tasks and very short reaction times	1	1	1	1	69 MB	1 ns
CPU 1518F-4 PN/DP MFP	Fail-safe CPU for high-performance applications, demanding communication tasks, very short reaction times and C/C++ blocks for the user program	1	1	1	1	119* MB	1 ns
CPU 1518TF-4 PN/DP	Technology CPU for high-performance motion control applications with large quantities, demanding communication tasks and very short reaction times	1	1	1	1	69 MB	1 ns

* 50 MB of the integrated work memory is reserved for the function library of CPU runtime

In addition to the CPUs, further components such as SINAMICS drives dispose of integrated safety functions. Additional information about integrated safety functions in drives can be found in the manuals for the respective products.

Power segment of the CPU 1518-4 PN/DP MFP

The CPU 1518-4 PN/DP MFP can be used for the high-end area of machine and plant automation.

The CPU 1518-4 PN/DP MFP offers you the following options:

- Executing STEP 7 blocks of the "standard" user program
- Executing applications that were programmed in C/C++ with the Open Development Kit ODK
  - Run C/C++ code synchronously in the CPU cycle via the CPU function library
  - Run C/C++ applications as separate applications parallel to CPU runtime

The CPU 1518-4 PN/DP MFP is suitable for:

- Complex protocol connections according to IEC 61850 and SECS/GEM
- Database connections, for example, SQL databases
- Data preprocessing for preparing complex data, for example, for management decisions
- Executing complex algorithms, for example, for optimizing processes

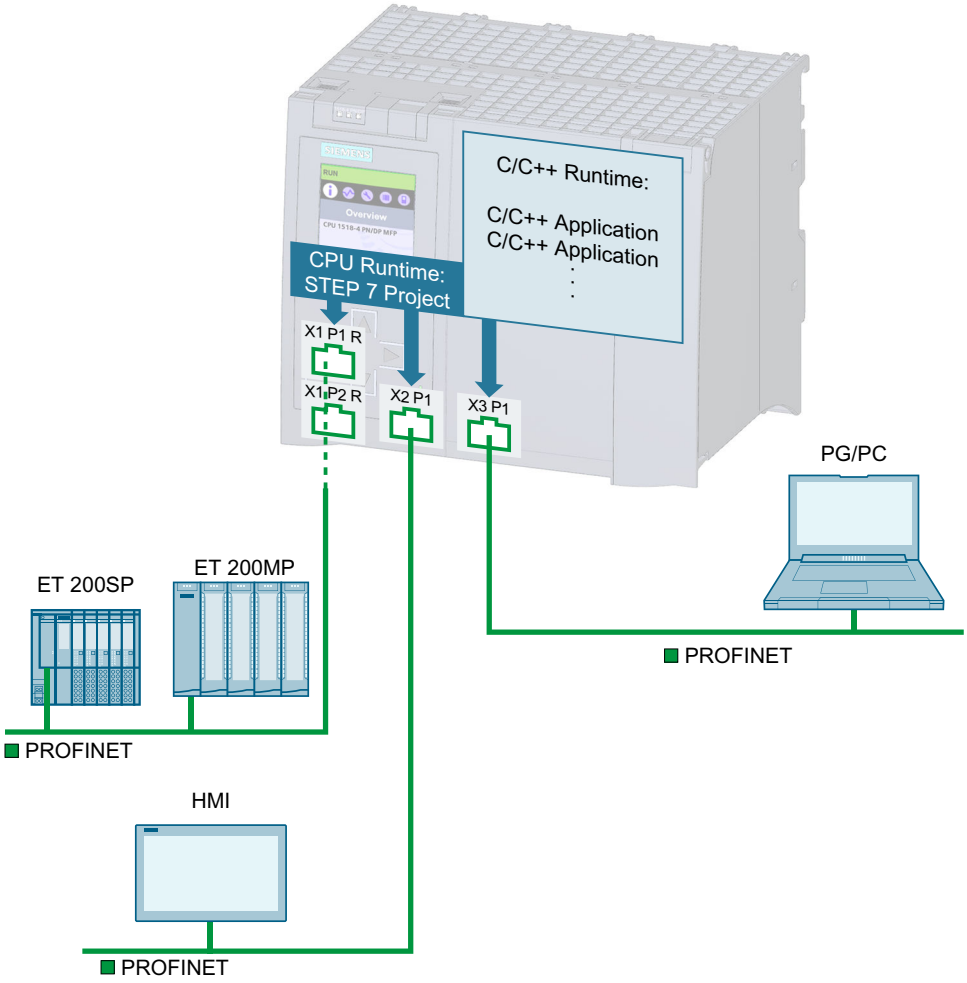

Figure 3-1 Overview of the performance segment

You create the C/C++ blocks (CPU function library for CPU Runtime) and C/C++-Runtime applications with the "Open Development Kit ODK 1500S" (ODK).

Employing the ODK enables you to use mechanisms from high-level programming languages (e.g. object-based) within a modern programming environment.

NOTE

To be able to use SIMATIC Industrial OS from firmware version V2.8.4 onwards, use the Open Development Kit 1500S Version V2.5 SP2 or higher. More information about the Open Development Kit 1500S Version V2.5 SP2 can be found on the Internet (https://support.industry.siemens.com/cs/ww/en/view/109782540).

With ODK, you program:

- Blocks in C/C++ that can be run synchronously in the execution cycle of the CPU (CPU function library for CPU Runtime)
- C/C++ Runtime applications running in SIMATIC S7-1500 MFP C/C++ Runtime, independent of the STEP 7 user program

You can use C/C++ Runtime applications to implement parallel processes to the STEP 7 user program, for example, for pre-processing or transmitting data via Industrial Ethernet. A CPU

can simultaneously perform more tasks, the complexity of functions is reduced and the time required for implementation decreased.

You can reuse existing C/C++ algorithms. To continue using existing technological know-how, you can integrate the existing C/C++ code via the Open Development Kit:

- In the runtime environment of the CPU or
- As C/C++ Runtime applications into the SIMATIC S7-1500 MFP C/C++ Runtime

Once you integrate the C/C++ sources, you can execute them on the CPU.

You can find a description of the Open Development Kit in the SIMATIC S7-1500 ODK 1500S (https://support.industry.siemens.com/cs/ww/en/ps/13914/man) Programming and Operating Manual, V2.5 and higher, edition 12/2017. The sections that describe the CPU function library for CPU Runtime and the C/C++ Runtime applications apply to the CPU 1518-4 PN/PN/DP MFP.

The work memory and the load memory of the CPU 1518-4 PN/DP MFP are divided as follows:

Work memory for:

- The STEP 7 user program
- for CPU function library for CPU Runtime
- for C/C++ Runtime applications

Load memory for:

- the STEP 7 user program including CPU function library for CPU Runtime
- for C/C++ Runtime applications

Security Integrated

In conjunction with STEP 7, each CPU offers password-based know-how protection against unauthorized reading out or modification of the program blocks.

Copy protection provides reliable protection against unauthorized reproduction of program blocks. With copy protection, individual blocks on the SIMATIC memory card can be tied to its serial number so that the block can only be run if the configured memory card is inserted into the CPU.

In addition, you can assign various access rights to different user groups in the controller using four different authorization levels.

Improved manipulation protection allows changed or unauthorized transfers of engineering data to be detected by the controller.

The use of an Ethernet CP (CP 1543-1) provides you with additional access protection through a firewall or possibilities to establish secure VPN connections.

Design and handling

All CPUs of the SIMATIC S7-1500 product series feature a display with plain text information. The display provides the user with information on the order numbers, firmware version, and serial number of all connected modules. In addition, the IP address of the CPU and other network settings can be adapted locally without a programming device. Errors messages are immediately shown on the display in plain text. When performing servicing, you can minimize plant downtimes by quickly accessing the diagnostics messages. Detailed information about this and a multitude of other display functions is available in the SIMATIC S7-1500 Display Simulator (https://support.industry.siemens.com/cs/ww/de/view/109761758/en).

Uniform front connectors for all modules and integrated potential jumpers for flexible formation of potential groups simplify storage. Additional components such as circuit breakers, relays, etc., can be installed quickly and easily because a DIN rail is implemented in the rail of the SIMATIC S7-1500. The CPUs of the SIMATIC S7-1500 product series can be expanded centrally and in a modular fashion with signal modules. Space-saving expansion enables flexible adaptation to each application.

The system cabling for digital signal modules enables fast and clear connection to sensors and actuators from the field (fully modular connection consisting of front connector modules, connection cables and I/O modules), as well as easy wiring inside the control cabinet (flexible connection consisting of front connectors with assembled single conductors).

System diagnostics and alarms

Integrated system diagnostics is activated by default for the CPUs. The different diagnostic types are configured instead of programmed. System diagnostics information and messages from the drives are displayed consistently in plain text in up to three languages:

- On the CPU display
- In STEP 7
- On the HMI
- On the Web server

This information is available in RUN mode, but also in STOP mode of the CPU. An automatic update of the diagnostics information is performed when you configure new hardware components.

The CPU is available as a central interrupt server in up to three project languages. The HMI takes over the display in the project languages defined for the CPU. If you require alarm texts in additional languages, you can load them into your HMI via the configured connection. The CPU, STEP 7 and your HMI ensure data consistency without additional engineering steps. The maintenance work is easier.

3.3 Hardware properties

Article number

6ES7518-4AX00-1AB0

View of the module

The figure below shows the CPU 1518-4 PN/DP MFP.

Figure 3-2 CPU 1518-4 PN/DP MFP

NOTE
Protective film
Note that there is a removable protective foil on the display when the CPUs are delivered.

Properties

The CPU 1518-4 PN/DP MFP has the following properties:

Property	Description	Additional information
CPU display	All CPUs of the SIMATIC S7-1500 product series feature a display with plain text information. The display provides information on order numbers, firmware version and serial numbers of all connected modules. In addition, you can set the IP address of the CPU and make additional network settings. The display shows error messages directly as plain text. In addition to the functions listed here, a multitude of other functions that are described in the SIMATIC S7-1500 Display Simulator are shown on the display.	• S7-1500, ET 200MP system manual (https://support.industry.siemens.com/cs/ww/en/view/59191792) • SIMATIC S7-1500 Display Simulator (https://support.industry.siemens.com/cs/ww/en/view/109761758)
Supply voltage	The 24 V DC supply voltage is fed via a 4-pin plug located on the front of the CPU.	• Section Connecting up (Page 37) • S7-1500, ET 200MP system manual (https://support.industry.siemens.com/cs/ww/en/view/59191792)

Property	Description	Additional information
PROFINET IO		
PROFINET interface (X1 P1 R and X1 P2 R)	The interface has two ports. In addition to basic PROFINET functionality, it also supports PROFINET IO RT (real time) and IRT (isochronous real time).	PROFINET function manual (https://support.industry.siemens.com/cs/ww/en/view/49948856)
PROFINET interface (X2 P1)	The interface has one port. In addition to basic PROFINET functionality, it also supports PROFINET IO RT (real time).	
PROFINET interface (X3 P1)	The interface is (typically) used to: • Link development tools for C/C++ applications • Connect the TIA Portal to the development of STEP 7 applications • Communicate to the "outside world" from C/C++ Runtime • Communicate internally between C/C++ and CPU Runtime (via virtual network)	SIMATIC S7-1500 ODK 1500S manual (https://support.industry.siemens.com/cs/ww/en/ps/13914/man)
Operation of the CPU as • IO controller • I-device	• **IO controller:** As an IO controller, the CPU addresses the connected IO devices • **I-device** As an I-device (intelligent IO device), the CPU is assigned to a higher-level IO controller and is used as an intelligent pre-processing unit for subroutines	PROFINET function manual (https://support.industry.siemens.com/cs/ww/en/view/49948856)
PROFIBUS DP		
PROFIBUS interface (X4)	The interface is used for connecting to a PROFIBUS network.	PROFIBUS (https://support.industry.siemens.com/cs/ww/en/view/59193579) function manual
Operation of the CPU as a DP master	In the role as a DP master, the CPU addresses the connected DP slaves. It is not possible for the CPU to take the role of a DP slave.	

Accessories

You can find information on "Accessories/spare parts" in the S7-1500, ET 200MP system manual (https://support.industry.siemens.com/cs/ww/en/view/59191792).

3.4 Firmware functions

Functions

CPU 1518-4 PN/DP MFP supports the following functions:

Function	Description	Additional information
C/C++ applications	The CPU 1518-4 PN/DP MFP can execute STEP 7 blocks as well as blocks and applications programmed with C/C++ (CPU function library) in the user program. You can create the CPU function library and Linux C/C++ Runtime application with the "ODK 1500S Open Development Kit" (ODK). Using the ODK provides you with the mechanisms of higher programming languages (e.g. object-oriented) within a modern programming environment. You can use Target 1500S for Simulink and ODK 1500S to create CPU function libraries in C/C++ for your complex open and closed-loop control.	S7-1500 Open Development Kit 1500S programming and operating manual (https://support.industry.siemens.com/cs/ww/en/view/109783714) SIMATIC S7-1500 Target 1500S for Simulink programming manual (https://support.industry.siemens.com/cs/ww/en/view/109741754)
Integrated system diagnostics	The system automatically generates the alarms for system diagnostics and outputs the alarms via a programming device/PC, HMI device, the web server or the integrated display. System diagnostics information is also available when the CPU is in STOP mode.	Diagnostics function manual (https://support.industry.siemens.com/cs/ww/en/view/59192926)
Integrated web server	The web server allows you to access CPU data over a network. Evaluations, diagnostics, and modifications are thus possible over long distances. Monitoring and evaluation is possible without STEP 7; only a web browser is required. Make sure that you take appropriate measures (e.g. limiting network access, using firewalls) to protect the CPU from being compromised.	• Web server function manual (https://support.industry.siemens.com/cs/ww/en/view/59193560) • Security for SIMATIC S7 Controllers system manual (https://support.industry.siemens.com/cs/ww/en/view/90885010)
Integrated trace functionality	The trace functionality supports the troubleshooting and/or optimization of the user program. You record device tags and evaluate the recordings with the trace and logic analyzer function. Tags are, for example, drive parameters or system and user tags of a CPU. The device saves the traces. If necessary, you can read the traces with the configuration system (ES) and save them permanently. Thus, the trace and logic analyzer function is suitable for monitoring highly dynamic processes. The trace recording can also be displayed via the web server.	Function manual for trace and logic analyzer function (https://support.industry.siemens.com/cs/ww/en/view/64897128)
OPC UA	With OPC UA, you can exchange data via an open and manufacturer-neutral communication protocol. The CPU can act as OPC UA server. The CPU acting as the OPC UA server can communicate with OPC UA clients. In turn, the CPU can access an OPC UA server as OPC UA client, allow the OPC UA server to run methods and read out information from the OPC UA server. The OPC UA Companion Specification allows methods to be specified uniformly and independently of the manufacturer. Using these specified methods, you can easily	Communication function manual (https://support.industry.siemens.com/cs/ww/en/view/59192925)

Function	Description	Additional information
	integrate devices from various manufacturers into your plants and production processes.	
Configuration control	You can use configuration control to operate different real hardware configurations with a configured maximum configuration of the hardware. This means especially in series machine manufacturing you have the option of operating/configuring different configuration variants of a machine with a single project.	S7-1500, ET 200MP system manual (https://support.industry.siemens.com/cs/ww/en/view/59191792)
PROFINET IO		
RT (real time)	RT prioritizes PROFINET IO message frames over standard message frames. This ensures the required determinism in the automation technology. The data is transferred via prioritized Ethernet frames.	PROFINET function manual (https://support.industry.siemens.com/cs/ww/en/view/49948856)
IRT (isochronous real time)	A reserved bandwidth is available within the send clock for the IRT data. The reserved bandwidth ensures that the IRT data can be transmitted in time-synchronized intervals, unaffected by other high network loads (e.g. TCP/IP communication or additional real time communication). IRT enables update times to be achieved with the highest deterministics. IRT makes isochronous applications possible.	
Isochronous mode	The clock synchronization system characteristic acquires measured values and process data and processes the signals within a fixed system clock. Isochronous mode thus contributes to high control quality and hence to greater manufacturing precision. Clock synchronization reduces possible fluctuations of the process reaction times to a minimum. Time-assured processing enables higher machine clocks to be achieve.	
MRP (Media Redundancy Protocol)	The Media Redundancy Protocol makes it possible to build redundant networks. Redundant transmission paths (ring topology) ensure that an alternative communication path is made available if one transmission path fails. The PROFINET devices that are part of this redundant network form an MRP domain. RT mode is possible when using MRP.	
MRPD (Media Redundancy with Planned Duplication)	The MRP extension, MRPD, has the advantage that if a device or a line in the ring fails, all other devices are continuously supplied with IO data without interruption and with fast update times. MRPD is based on IRT and MRP. To realize media redundancy with short update times, the PROFINET devices participating in the ring send their data in both directions. The devices receive this data at both ring ports so that there is no reconfiguration time.	
MRP interconnection	The MRP interconnection process is an enhancement of MRP and allows the redundant coupling of two or more rings with MRP in PROFINET networks. MRP interconnection is - like MRP - specified in the IEC 62439-2 standard (Edition 3).	

Function	Description	Additional information
Shared device	The "Shared device" function allows you to distribute the modules or submodules of an IO device to different IO controllers. Numerous IO controllers are often used in larger or widely distributed systems. Without the "Shared device" function, each I/O module of an IO device is assigned to the same IO controller. Therefore, if sensors close in distance to one another have to supply data to different IO controllers, several IO devices are required. The "Shared device" function allows you to distribute the modules or submodules of an IO device to different IO controllers, thus allowing flexible automation concepts. You can, for example, combine I/O modules lying near one other in one IO device.	PROFINET function manual (https://support.industry.siemens.com/cs/ww/en/view/49948856)
PROFIenergy	PROFIenergy is a PROFINET-based data interface for switching off consumers centrally and with full coordination during pause times regardless of the manufacturer or device type. Through this, the process should only be provided with the energy that is absolutely required. The majority of the energy is saved by the process; the PROFINET device itself only contributes a few watts of savings potential.	
Integrated technology		
Motion control	S7-1500 CPUs support the controlled positioning and traveling of axes via S7-1500 Motion Control functions by means of the following technology objects: Speed-controlled axes, positioning axes, synchronized axes, external encoders, cams, cam tracks and measuring inputs • Speed-controlled axis for controlling a drive with speed specification • Positioning axis for position-controlled positioning of a drive • Synchronous axis to interconnect with a master value. The axis follows the synchronous operation of the position of the leading axis • External encoder for detecting the actual position of an encoder and its use as a master value for synchronous operation • Cams, cam track for position-dependent generation of switching signals • Measuring input for fast, accurate and event-dependent sensing of actual positions	S7-1500T Motion Control function manuals (https://support.industry.siemens.com/cs/ww/en/view/109751049)
Integrated closed-loop control functionality	• PID Compact (continuous PID controller) • PID 3Step (step controller for integrating actuators) • PID Temp (temperature controller for heating and cooling with two separate actuators)	PID Control function manual (https://support.industry.siemens.com/cs/ww/en/view/108210036)
Integrated safety		

Function	Description	Additional information
Secure PG/HMI communication	With STEP 7 and WinCC, SIMATIC S7-1500 CPUs and ET 200 CPUs support innovated and standardized secure PG/PC and HMI communication – referred to as Secure PG/HMI communication for short.	Communication function manual (https://support.industry.siemens.com/cs/de/de/view/59192925/en)
Protection of confidential configuration data	You have the option of assigning a password for protecting confidential configuration data of the respective CPU. This refers to data such as private keys that are required for the proper functioning of certificate-based protocols.	
Integrity protection	The CPUs feature an integrity protection function by default. This helps to detect any manipulation of the engineering data on the SIMATIC Memory Card or during data transfer between the TIA Portal and the CPU, and to check communication from a SIMATIC HMI system to the CPU for possible manipulation of engineering data. The user receives a corresponding message about manipulation of engineering data detected by the integrity protection.	S7-1500, ET 200MP system manual (https://support.industry.siemens.com/cs/ww/en/view/59191792)
Know-how protection	The know-how protection protects user blocks against unauthorized access and modifications.	
Copy protection	Copy protection links user blocks with the serial number of one or more SIMATIC memory cards or the serial number of one or more CPUs. User programs cannot run without the corresponding SIMATIC memory card or CPU.	
Access protection	You can assign separate rights to different users via authorization levels.	
Password provider	As an alternative to manual password entry, you can link a password provider to STEP 7. A password provider provides the following advantages: • Convenient handling of passwords. STEP 7 automatically reads in the password for the blocks. This saves you time. • Optimal block protection, since the users do not know the password themselves.	

3.4.1 Quick start instructions for commissioning C/C++ Runtime

NOTE
Commissioning the C/C++ Runtime
You require experience in working with Linux systems to commission the C/C++ Runtime.

Two IP addresses of the PROFINET interface X3 P1
The PROFINET interface X3 P1 is (typically) used to:
- Link development tools for C/C++ Runtime applications
- Connect the TIA Portal
- Develop STEP 7 applications
- Communicate from C/C++ Runtime
- Communicate internally between C/C++ and CPU Runtime (via virtual network)

The PROFINET interface X3 P1 is split internally for the CPU Runtime and the C/C++ Runtime. Therefore, there is one IP address for the CPU and one IP address for the C/C++ Runtime.

- Set the IP address of the CPU in STEP 7.
  You can find additional information in the online help for STEP 7.
- Set the IP address of the C/C++ Runtime in the configuration file of the C/C++ Runtime (see the section "Initial commissioning").

Note the following restrictions when configuring the PROFINET interface X3 P1 with STEP 7:

- The configuration of the "Transmission rate/duplex" has no effect on the connection to the PROFINET interface X3 P1 and the C/C++ Runtime.
- The "Monitor" option is not supported.
- Topology configuration is not supported.

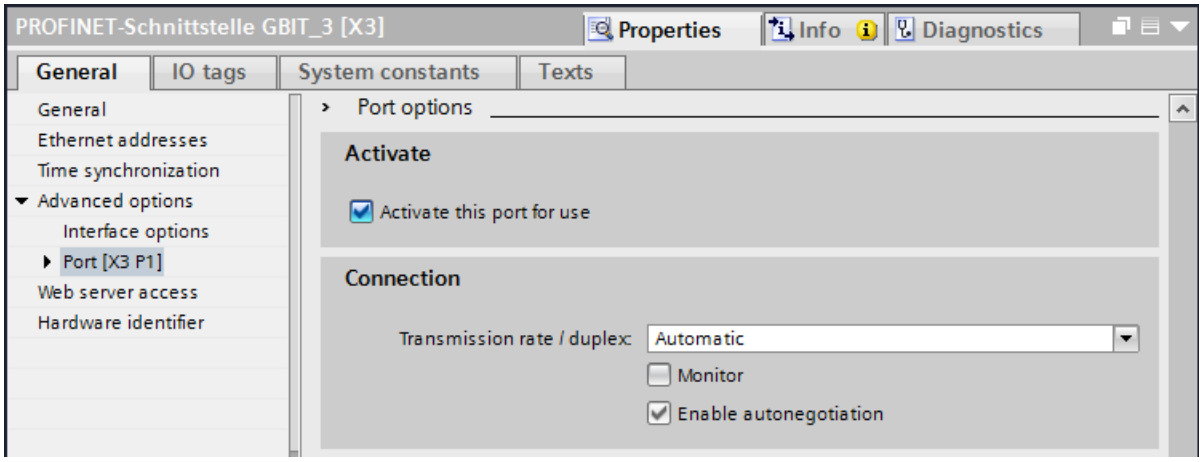

Figure 3-3 Port options in STEP 7

NOTE

Availability of the X3 interface

Interface X3 is available only after approximately 1 to 2 minutes after POWER ON of the CPU.

Initial commissioning

Minimum requirement

SIMATIC memory card with a capacity of at least 2 GB.

Procedure

Proceed as follows to commission the C/C++ Runtime:

1. Start a Secure Shell Client (e.g. PuTTY).
2. Connect the Secure Shell Client to the CPU 1518(F)-4 PN/DP MFP using the PuTTY configuration "CPU 1518MFP Linux Secure Connection" via the target address (default address: 192.168.15.18).
3. Type in the user name and password and establish a Secure Shell Connection.
   The default user name is "root". The default password is displayed under "Overview > MFP > Default Password".

4. Change the default password after the first startup of the CPU.
5. Change the IP address or configure DHCP using the "bridge.network" script in the "/etc/systemd/network" directory by entering the following commands in the given sequence.
   - "cd /etc/systemd/network" to switch to the specified directory.
   - "ls -l" to list all the files/directories in this directory.
   - "pico bridge.network" to open the script "bridge.network" in the Pico text editor.
   - Change the IP address settings in the script.
   - Press CTRL + X to exit the text editor.
   - Press CTRL + Y to select overwriting of the script.
   - Press ENTER to save the change and close the text editor.
6. Transfer your configuration to the memory card and load the "systemd networkd" module once again by calling "sync && systemctl restart systemd-networkd" as the root user.
7. Create your own user account in the Linux subsystem without root privileges. Work with this user account.

NOTE

Extending the service life of storage media

When you modify files in the Linux file system, use the "sync" command to write important data immediately to the containers of the memory card.

If you do not use the "sync" command, the changed data will be automatically transferred to the memory card with a delay of approximately 40 seconds. In this manner, you can extend the service life of your SIMATIC memory card.

You can find more information on configuring PuTTY and creating C/C++ Runtime applications in the SIMATIC S7-1500 ODK 1500S (https://support.industry.siemens.com/cs/ww/en/ps/13914/man) manual.

Security information

NOTE

- Follow the Principle of Least Privilege.
- Start your application as a user without root privileges.
- Configure the SSH server in Linux Runtime in such a way that it only permits certificate-based authentication. Disable password-based authentication for all users.
- Change the user passwords regularly and use secure passwords.

NOTE

IPv6 protocol

Note that for the CPU 1518(F)-4 PN/DP MFP, the IPv6 protocol is deactivated by default in the configuration file (/usr/share/netfilter-persistent/plugins.d/12-ipv6-disable). To use IPv6, remove this configuration file. Then carry out a restart so that the changes come into effect.

Ensure that your system is protected against unauthorized access by implementing appropriate protective measures, e.g. the use of firewalls. If you do not use the IPv6 protocol for communication, we recommend that you leave IPv6 deactivated.

Mass storage concept

Keep in mind the following information on the storage locations on the SIMATIC memory card.

The following C/C++ Runtime containers are available in the "/CppEnv1.MFP" directory on the SIMATIC memory card and are mounted in the file system in Linux as described:

- User.img (50 MB) → Mount point: "/home" (home directory of the user, for example, for C/C++ Runtime application)
- Data.img (200 MB) → mount point: "/" (root) as overlays

Performing bulk operations

To use the same C/C++ Runtime application for other CPUs, transfer the C/C++ Runtime application to the home directory. The home directory is available in the "User.img" file on the SIMATIC memory card.

To use the C/C++ Runtime application on other CPUs, copy the "User.img" file to the corresponding SIMATIC memory cards.

Work memory for C/C++ Runtime

The RAM is 1 GB including the RAM disk.

Procedure for updates

For firmware updates from versions V2.5.2 to V2.8.x, create a backup of containers on the SIMATIC memory card in the directory "/CppEnv1.MFP".

1. Carry out the operating system update to V2.8x. Format the SIMATIC memory card or delete the container from the folder "/CppEnv1.MFP".
2. After starting the Linux subsystem, configure the subsystem according to your requirements.
3. Copy your application into the "/home/user" directory, from where you then start the application.

ODK toolchain

NOTE

ODK toolchain

We recommend compiling the user applications with the refurbished ODK toolchain.

Please also read the entries 109782620 (https://support.industry.siemens.com/cs/ww/en/view/109782620)and 109782540 (https://support.industry.siemens.com/cs/ww/en/view/109782540) on the Internet with regard to the ODK toolchain.

Autostart of user programs

You can start applications automatically using systemd services. There are examples of this in the official systemd manual (https://www.freedesktop.org/software/systemd/man/systemd.service.html#Examples).

Special features

NOTE

Initial startup with an empty SIMATIC memory card

When the CPU starts up for the first time with an empty SIMATIC memory card, the card is prepared for use with C/C++ Runtime. This process takes up to three minutes. Do not turn off the CPU during this phase; the STOP LED flashes.

NOTE

Defective C/C++ Runtime containers

The three C/C++ Runtime containers are available in the "/CppEnv1.MFP" directory on the SIMATIC memory card.

If the C/C++ Runtime containers are damaged or lost when the CPU is switched off, a diagnostic entry is created in the diagnostic buffer of the CPU the next time the CPU is started up. C/C++ Runtime cannot be reached, and the ERROR LED is flashing.

If automatic repair of the containers by the automation system is not possible, the containers can no longer be used by the Linux file system. The automation system starts C++ Runtime in root mode.

A new logon with the standard user and password is possible. However, you cannot make any permanent changes to the automation system, e.g:

- Change the password
- Save data
- Change system settings

Solution:

- Copy a previously created backup copy of the C/C++ Runtime containers to the SIMATIC memory card.

  or
- Delete the affected C/C++ Runtime container from the SIMATIC memory card. The automation system then recreates the container during the next startup.

NOTE

Affecting the performance of the CPU

Depending on the type of programming, C/C++ Runtime applications, such as mass storage accesses to the SIMATIC memory card, can affect the performance of the CPU.

3.4.2 Supplied libraries for C/C++ Runtime

glibc : 2.24

```
The GNU C Library project provides the core libraries for the GNU
system and GNU/Linux systems, as well as many other systems that use
Linux as the kernel. These libraries provide critical APIs including
ISO C11, POSIX.1-2008, BSD, OS-specific APIs and more. These APIs
include such foundational facilities as open, read, write, malloc,
printf, getaddrinfo, dlopen, pthread_create, crypt, login, exit and
more.
```

libstdc++ : 6.2.0

```
The GNU Standard C++ Library is an ongoing project to implement the
ISO 14882 Standard C++ library as described in clauses 17 through 30
and annex D.
```

3.5 Operating and display elements

3.5.1 Front view of the CPU with the front panel

The figure below shows the front view of the CPU 1518-4 PN/DP MFP.

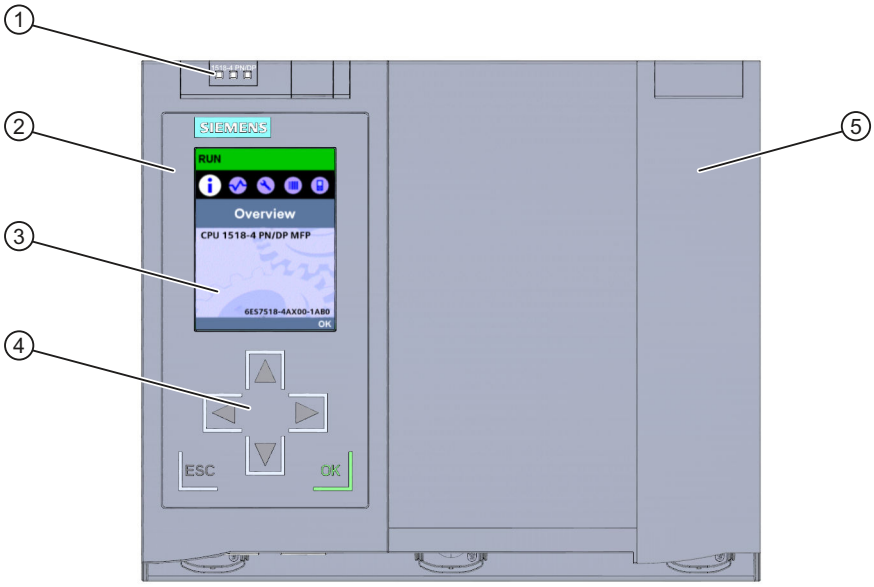

① LEDs for the current operating mode and diagnostic status of the CPU

② Front panel with display

③ Display

④ Operator control buttons

⑤ Front panel of the PROFIBUS interface

Figure 3-4 View of the CPU 1518-4 PN/DP MFP (with front panels) – front

NOTE

Temperature range for display

To increase its service life, the display switches off at a temperature below the permitted operating temperature of the device. When the display cools down again, it automatically switches itself on again. When the display is switched off, the LEDs continue to show the status of the CPU.

For more information on the temperatures at which the display switches itself on and off, refer to the Technical specifications (Page 46).

Pulling and plugging the front panel with display

You can pull and plug the front panel with display during operation.

WARNING

Personal injury and damage to property may occur

If you pull or plug the front panel of an S7-1500 automation system during operation, personal injury or damage to property can occur in zone 2 hazardous areas.

Before you remove or fit the front panel, always switch off the power supply to the S7-1500 automation system in hazardous area zone 2.

Locking the front panel

You can lock the front panels to protect the SIMATIC memory card and the mode selector of the CPU against unauthorized access.

You can attach a security seal or a padlock with a diameter of 3 mm to the front panels.

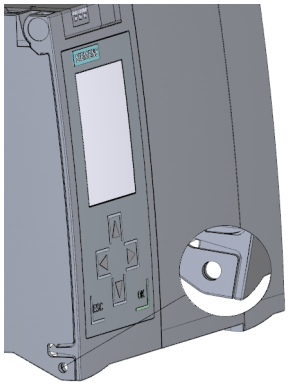

Figure 3-5 Locking latch on the CPU

In addition to the mechanical lock, you can also block access to a password-protected CPU on the display (local lock) and assign a password for the display. You can find additional information on the display, configurable protection levels and local locks in the S7-1500, ET 200MP (https://support.industry.siemens.com/cs/ww/en/view/59191792) system manual.

Reference

You will find detailed information on the individual display options, a training course and a simulation of the available menu commands in the SIMATIC S7-1500 Display Simulator (https://support.industry.siemens.com/cs/ww/en/view/109761758).

3.5.2 Front view of the CPU without front panel

The figure below shows the operator controls and connection elements of the CPU 1518-4 PN/DP MFP.

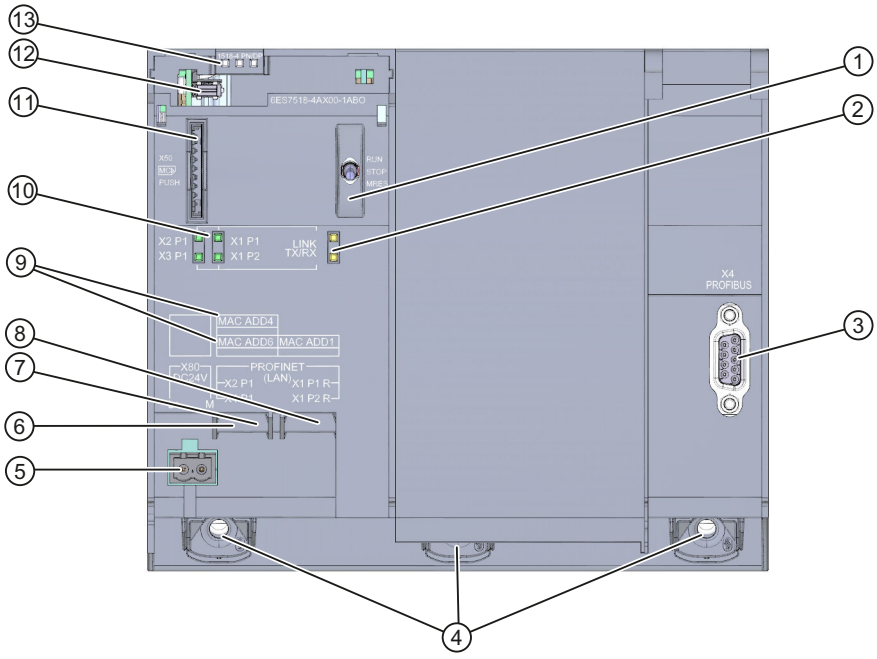

① Mode selector
② No function
③ PROFIBUS interface (X4)
④ Fixing screws
⑤ Connector for power supply
⑥ PROFINET IO interface (X3) with 1 port (back interface)
⑦ PROFINET IO interface (X2) with 1 port (front interface)
⑧ PROFINET IO interface (X1) with 2 ports
⑨ MAC addresses of the interfaces
⑩ LEDs for the 4 ports of the PROFINET interfaces X1, X2 and X3
⑪ Slot for the SIMATIC memory card
⑫ Display connector
⑬ LEDs for the current operating mode and diagnostic status of the CPU

Figure 3-6 View of the CPU 1518-4 PN/DP MFP (without front panels) – front

3.5.3 Rear view of the CPU

The following figure shows the connection elements on the rear of the CPU 1518-4 PN/DP MFP.

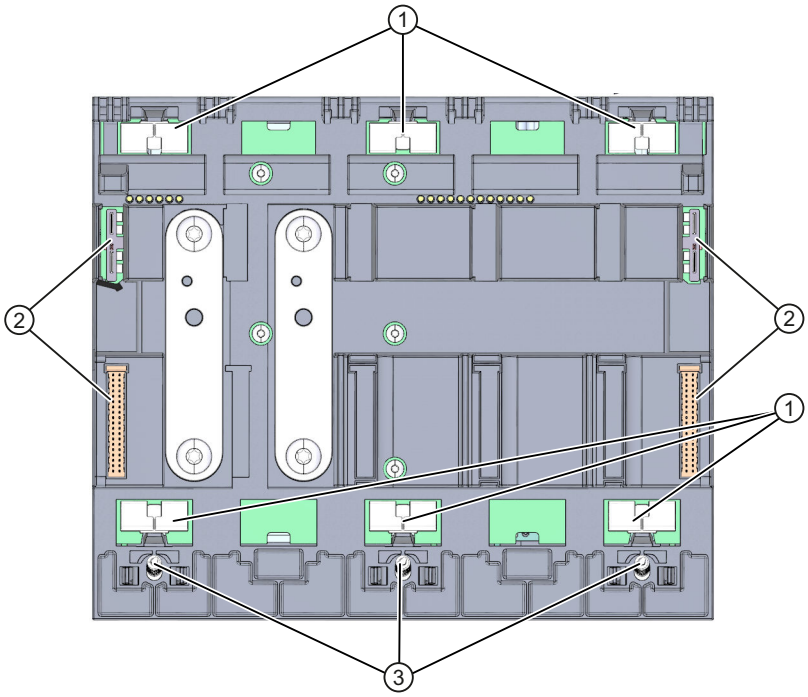

① Shield contact surfaces

② Backplane bus connector

③ Fixing screws

Figure 3-7 View of the CPU 1518-4 PN/DP MFP – rear

3.6 Mode selector switch

You use the mode selector to:

- Request a change to a specific operating state
- Disable or enable the change to a specific operating state
  (if, for example, the mode selector is set to STOP, you cannot switch the CPU to RUN via a communication task configured in the TIA Portal or via the display)

The following table shows the position of the switch and the corresponding meaning.

Table 3-6 Mode switch settings

Position	Meaning	Explanation
RUN	RUN mode	The CPU has permission to go to RUN.
STOP	STOP mode	The CPU does not have permission to go to RUN.
MRES	Memory reset	Position for CPU memory reset.

Connecting up

4

This section provides information on the terminal assignment of the individual interfaces and the block diagram of the CPU 1518-4 PN/DP MFP.

24 V DC supply voltage (X80)

The connector for the power supply is plugged in when the CPU ships from the factory.

The following table shows the signal names and the descriptions of the pin assignment for a 24 V DC supply voltage.

Table 4-1 Pin assignment 24 V DC supply voltage

View Connector	Signal name [1]		Designation
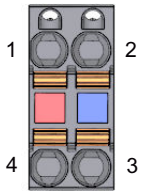	1	1L+	+ 24 V DC of the supply voltage
	2	1M	Ground of the supply voltage
	3	2M	Ground of the supply voltage for loop-through [2]
	4	2L+	+ 24 V DC of the supply voltage for loop-through [2]

[1] 1L+ and 2L+ as well as 1M and 2M are bridged internally.

[2] Maximum 10 A permitted

If the CPU is supplied by a system power supply, it is not necessary to connect the 24 V supply.

PROFINET interface X1 with 2-port switch (X1 P1 R and X1 P2 R)

The assignment corresponds to the Ethernet standard for a RJ45 connector.

- When autonegotiation is deactivated, the RJ45 socket is allocated as a switch (MDI-X).
- When autonegotiation is activated, autocrossing is in effect and the RJ45 socket is allocated either as data terminal equipment (MDI) or a switch (MDI-X).

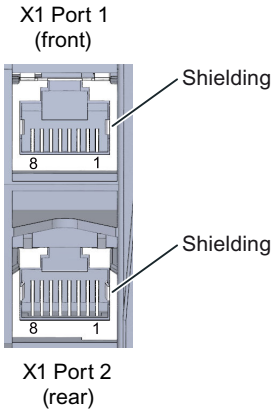

Figure 4-1 Interface assignment X1

PROFINET interface X2 and X3 with 1 port (X2 P1, X3 P1)

The assignment corresponds to the Ethernet standard for a RJ45 connector.

Autocrossing is always active on X2 and X3. This means the RJ45 socket is allocated either as data terminal equipment (MDI) or a switch (MDI-X).

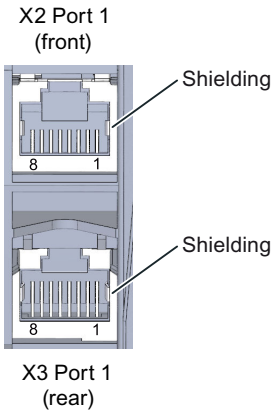

Figure 4-2 Interfaces X2 and X3

NOTE

PROFINET interface X3 with a transmission rate of 1000 Mbps

The PROFINET interface X3 supports a maximum transmission rate of 1000 Mbps.

Requirements:

- Devices on the PROFINET segment must support the 1000 Mbps transmission rate.
- The network infrastructure (network cables and outlets) must be category CAT 5e or higher.
- The "Transmission rate" parameter in the properties of the port (X3) must be set as follows in STEP 7:
  - The "Autonegotiation" check box is selected
  - "Automatic" is selected in the drop-down list

PROFIBUS interface X4

The table below shows the terminal assignment of the PROFIBUS interface. The assignment corresponds to the standard assignment of an RS485 interface.

Table 4-2 PROFIBUS interface terminal assignment

View	Signal name		Designation
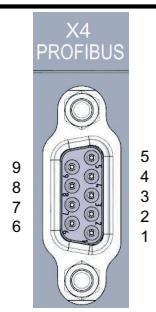	1	-	-
	2	-	-
	3	RxD/TxD-P	Data line B
	4	RTS	Request To Send
	5	M5V2	Data reference potential (from station)
	6	P5V2	Supply plus (from station)
	7	-	-
	8	RxD/TxD-N	Data line A
	9	-	-

NOTE

Supply of I/O devices

The CPU 1518-4 PN/DP MFP does not provide a 24 V DC power supply on the PROFIBUS interface. I/O devices (for example, PC adapter USB 6ES7972-0CB20-0XA0) are only operational on the interface in conjunction with a plug-in power supply set for external power supply.

The innovative successor product, PC adapter USB A2, receives the required power supply via the USB port. This means it does not need a 24 V DC supply voltage and can be operated **without** a plug-in power supply set for external power supply.

Reference

You can find additional information on the topics of "Connecting the CPU" and "Accessories/spare parts" in the S7-1500, ET 200MP (https://support.industry.siemens.com/cs/ww/en/view/59191792) system manual.

Assignment of the MAC addresses

The CPU 1518-4 PN/DP MFP has three PROFINET interfaces. The first interface is an interface with 2-port switch. The PROFINET interfaces each have a MAC address, and each of the PROFINET ports has its own MAC address. The CPU 1518-4 PN/DP MFP therefore has seven MAC addresses in total.

The MAC addresses of the PROFINET ports are needed for the LLDP protocol, for example for the neighborhood discovery function.

The number range of the MAC addresses is sequential. The first and last MAC addresses are lasered on the rating plate on the right side of each CPU 1518-4 PN/DP MFP.

The table below shows how the MAC addresses are assigned.

Table 4-3 Assignment of the MAC addresses

	Assignment	Labeling
MAC address 1	PROFINET interface X1 (visible in STEP 7 for accessible devices)	• Front printed • Right side printed (start of number range)
MAC address 2	Port X1 P1 R (required for LLDP, for example)	---
MAC address 3	Port X1 P2 R (required for LLDP, for example)	---
MAC address 4	PROFINET interface X2 (visible in STEP 7 for accessible devices)	Front printed
MAC address 5	Port X2 P1 (required for LLDP, for example)	---
MAC address 6	PROFINET interface X3 (visible in STEP 7 for accessible devices)	Front printed
MAC address 7	Port X3 P1 (for C/C++ Runtime applications)	• Front printed • Right side printed (end of number range)

Block diagram

The following figure shows the block diagram of the CPU 1518-4 PN/DP MFP.

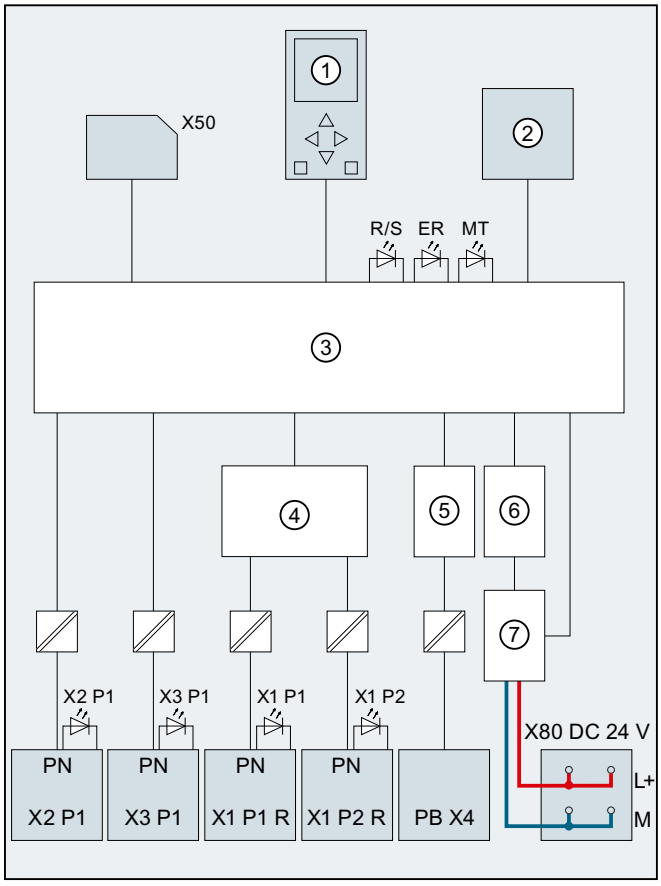

①	Display	PN X1 P2 R	PROFINET interface X1 Port 2
②	RUN/STOP/MRES mode selector	PN X2 P1	PROFINET interface X2 Port 1
③	Electronics	PN X3 P1	PROFINET interface X3 Port 1
④	PROFINET 2-port switch	PB X4	PROFIBUS interface X4
⑤	PROFIBUS DP driver	L+	24 V DC supply voltage
⑥	Backplane bus interface	M	Ground
⑦	Internal supply voltage	R/S	RUN/STOP LED (yellow/green)
X50	SIMATIC memory card	ER	ERROR LED (red)
X80 24 V DC	Infeed of supply voltage	MT	MAINT LED (yellow)
PN X1 P1 R	PROFINET interface X1 Port 1	X1 P1, X1 P2, X2 P1, X3 P1	LED Link TX/RX

Figure 4-3 Block diagram of the CPU 1518-4 PN/DP MFP

Interrupts, error messages, diagnostics and system alarms

5

The status and error displays of the CPU 1518-4 PN/DP MFP are described below.
You will find additional information on "Interrupts" in the STEP 7 online help.
You can find additional information on the topics of "Diagnostics" and "System alarms" in the Diagnostics (https://support.industry.siemens.com/cs/ww/en/view/59192926) function manual.

5.1 Status and error display of the CPU

LED display

The figure below shows the LED displays of the CPU 1518-4 PN/DP MFP.

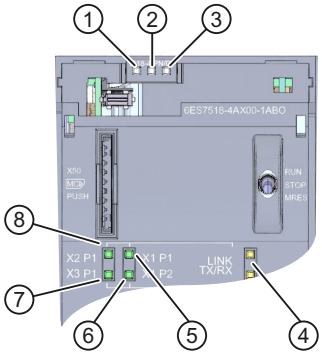

① RUN/STOP LED (yellow/green LED)
② ERROR LED (red LED)
③ MAINT LED (yellow LED)
④ No function
⑤ LINK RX/TX LED for port X1 P1 (yellow/green LED)
⑥ LINK RX/TX LED for port X1 P2 (yellow/green LED)
⑦ LINK RX/TX LED for port X3 P1 (yellow/green LED)
⑧ LINK RX/TX LED for port X2 P1 (yellow/green LED)

Figure 5-1 LED display of the CPU 1518-4 PN/DP MFP (without front panel)

Meaning of the RUN/STOP, ERROR and MAINT LEDs

The CPU 1518-4 PN/DP MFP has three LEDs for displaying the current operating mode and diagnostics status. The following table shows the meaning of the various combinations of colors for the RUN/STOP, ERROR and MAINT LEDs.

Table 5-1 Meaning of the LEDs

RUN/STOP LED	ERROR LED	MAINT LED	Meaning
LED off	LED off	LED off	Missing or insufficient power supply on the CPU.
LED off	LED flashes red	LED off	An error has occurred.
LED lit green	LED off	LED off	CPU is in RUN mode.
LED lit green	LED off	LED lit yellow	Maintenance demanded for the plant. You need to check/replace the affected hardware within a short period of time.
			Active Force job
			OPC UA server of the CPU expects initial trust lists and CRLs via GDS Push function.
LED lit green	LED off	LED flashes yellow	Bad configuration
LED lit yellow	LED flashes red	LED off	A diagnostics event is pending.
LED lit yellow	LED off	LED flashes yellow	Firmware update using SIMATIC memory card successfully completed.
LED lit yellow	LED off	LED off	CPU is in STOP mode.
			CPU runs a program with active breakpoints. The program is at a breakpoint.
LED lit yellow	LED flashes red	LED flashes yellow	The program on the SIMATIC memory card is causing an error.
			Firmware update using SIMATIC memory card has failed.
			The CPU has detected an error state. Additional information is available via the CPU diagnostic buffer.
LED flashes yellow	LED off	LED off	CPU is performing internal activities during STOP, e.g. startup after STOP.
			Download of the user program from the SIMATIC memory card
			CPU executes a program with an enabled breakpoint. The program is presently moving from one breakpoint to another.
			Firmware update is being performed.
LED flashes yellow/green	LED off	LED off	Startup (transition from STOP → RUN)

RUN/STOP LED	ERROR LED	MAINT LED	Meaning
LED flashes yellow/green	LED flashes red	LED flashes yellow	Startup (CPU booting)
			Test of LEDs during startup, inserting a module.
			LED flashing test

Meaning of LINK RX/TX LED

Each port has a LINK RX/TX LED. The table below shows the various "LED scenarios" of the CPU 1518-4 PN/DP MFP ports.

Table 5-2 Meaning of the LEDs

LINK TX/RX LED	Meaning
LED off	There is no Ethernet connection between the PROFINET interface of the PROFINET device and the communication partner. No data is currently being sent/received via the PROFINET interface. There is no LINK connection.
LED flashes green	The CPU is performing an "LED flash test".
LED lit green	There is an Ethernet connection between the PROFINET interface of your PROFINET device and a communication partner.
LED flashes yellow/green	Data is currently being received from or sent to a communications partner on Ethernet via the PROFINET interface of the PROFINET device.

NOTE

"LED" instruction

You can read the status (e.g. "On" or "Off") of LEDs of a CPU or a module using the "LED" instruction. Note, however, that it is not possible to read the LED status of the LINK RX/TX LEDs on all S7-1500 CPUs.

You can find additional information on the "LED" instruction in the STEP 7 online help.

Technical specifications

6

The following table shows the technical specifications as of 11/2022. You will find a data sheet including daily updated technical specifications on the Internet (https://support.industry.siemens.com/cs/ww/en/pv/6ES7518-4AX00-1AB0/td?dl=en).

Article number	6ES7518-4AX00-1AB0
General information	
Product type designation	CPU 1518-4 PN/DP MFP
HW functional status	FS04
Firmware version	V3.0
Product function	
• I&M data	Yes; I&M0 to I&M3
• Isochronous mode	Yes; Distributed and central; with minimum OB 6x cycle of 125 µs (distributed) and 1 ms (central)
Engineering with	
• STEP 7 TIA Portal configurable/integrated from version	V18 (FW V3.0); V15 (FW V2.5) or higher
Configuration control	
via dataset	Yes
Display	
Screen diagonal [cm]	6.1 cm
Control elements	
Number of keys	6
Mode selector switch	1
Supply voltage	
Rated value (DC)	24 V
permissible range, lower limit (DC)	19.2 V
permissible range, upper limit (DC)	28.8 V
Reverse polarity protection	Yes
Mains buffering	
• Mains/voltage failure stored energy time	5 ms
• Repeat rate, min.	1/s
Input current	
Current consumption (rated value)	1.7 A
Current consumption, max.	2 A
Inrush current, max.	2 A; Rated value
I^2t	0.4 $A^2 \cdot s$
Power	
Infeed power to the backplane bus	12 W

Article number	6ES7518-4AX00-1AB0
Power consumption from the backplane bus (balanced)	35 W
Power loss	
Power loss, typ.	29 W
Memory	
Number of slots for SIMATIC memory card	1
SIMATIC memory card required	Yes
Work memory	
• integrated (for program)	6 Mbyte
• integrated (for data)	60 Mbyte
• integrated (for CPU function library of CPU Runtime)	50 Mbyte; Note: The "CPU function library of the CPU" are C/C++ blocks for the user program that were created using the SIMATIC ODK 1500S or Target 1500S.
Working memory for additional functions	
• Integrated (for C/C++ Runtime application)	1 024 Mbyte
• available (for Linux runtime application)	1 Gbyte
Load memory	
• Plug-in (SIMATIC Memory Card), max.	32 Gbyte; the memory card must have at least 2 GB of space on it
Backup	
• maintenance-free	Yes
CPU processing times	
for bit operations, typ.	1 ns
for word operations, typ.	2 ns
for fixed point arithmetic, typ.	2 ns
for floating point arithmetic, typ.	6 ns
CPU-blocks	
Number of elements (total)	20 000; Blocks (OB, FB, FC, DB) and UDTs
DB	
• Number range	1 ... 60 999; subdivided into: number range that can be used by the user: 1 ... 59 999, and number range of DBs created via SFC 86: 60 000 ... 60 999
• Size, max.	16 Mbyte; For DBs with absolute addressing, the max. size is 64 KB
FB	
• Number range	0 ... 65 535
• Size, max.	1 Mbyte
FC	
• Number range	0 ... 65 535
• Size, max.	1 Mbyte
OB	

Article number	6ES7518-4AX00-1AB0
• Size, max.	1 Mbyte
• Number of free cycle OBs	100
• Number of time alarm OBs	20
• Number of delay alarm OBs	20
• Number of cyclic interrupt OBs	20; with minimum OB 3x cycle of 100 µs
• Number of process alarm OBs	50
• Number of DPV1 alarm OBs	3
• Number of isochronous mode OBs	3
• Number of technology synchronous alarm OBs	2
• Number of startup OBs	100
• Number of asynchronous error OBs	4
• Number of synchronous error OBs	2
• Number of diagnostic alarm OBs	1
Nesting depth	
• per priority class	24
Counters, timers and their retentivity	
S7 counter	
• Number	2 048
Retentivity	
– adjustable	Yes
IEC counter	
• Number	Any (only limited by the main memory)
Retentivity	
– adjustable	Yes
S7 times	
• Number	2 048
Retentivity	
– adjustable	Yes
IEC timer	
• Number	Any (only limited by the main memory)
Retentivity	
– adjustable	Yes
Data areas and their retentivity	
Retentive data area (incl. timers, counters, flags), max.	768 kbyte; In total; available retentive memory for bit memories, timers, counters, DBs, and technology data (axes): 700 KB
Extended retentive data area (incl. timers, counters, flags), max.	20 Mbyte; When using PS 6 0W 24/48/60 V DC HF
Flag	

Article number	6ES7518-4AX00-1AB0
• Size, max.	16 kbyte
• Number of clock memories	8; 8 clock memory bit, grouped into one clock memory byte
Data blocks	
• Retentivity adjustable	Yes
• Retentivity preset	No
Local data	
• per priority class, max.	64 kbyte; max. 16 KB per block
Address area	
Number of IO modules	16 384; max. number of modules / submodules
I/O address area	
• Inputs	32 kbyte; All inputs are in the process image
• Outputs	32 kbyte; All outputs are in the process image
per integrated IO subsystem	
– Inputs (volume)	32 kbyte; max. 32 KB via X1; max. 8 KB via X2 or X4
– Outputs (volume)	32 kbyte; max. 32 KB via X1; max. 8 KB via X2 or X4
per CM/CP	
– Inputs (volume)	8 kbyte
– Outputs (volume)	8 kbyte
Subprocess images	
• Number of subprocess images, max.	32
Hardware configuration	
Number of distributed IO systems	64; A distributed I/O system is characterized not only by the integration of distributed I/O via PROFINET or PROFIBUS communication modules, but also by the connection of I/O via AS-i master modules or links (e.g. IE/PB-Link)
Number of DP masters	
• integrated	1
• Via CM	8; A maximum of 8 CMs/CPs (PROFIBUS, PROFINET, Ethernet) can be inserted in total
Number of IO Controllers	
• integrated	2
• Via CM	8; A maximum of 8 CMs/CPs (PROFIBUS, PROFINET, Ethernet) can be inserted in total
Rack	
• Modules per rack, max.	32; CPU + 31 modules
• Number of lines, max.	1
PtP CM	
• Number of PtP CMs	the number of connectable PtP CMs is only limited by the number of available slots

Article number	6ES7518-4AX00-1AB0
Time of day	
Clock	
• Type	Hardware clock
• Backup time	6 wk; At 40 °C ambient temperature, typically
• Deviation per day, max.	10 s; Typ.: 2 s
Operating hours counter	
• Number	16
Clock synchronization	
• supported	Yes
• to DP, master	Yes
• in AS, master	Yes
• in AS, slave	Yes
• on Ethernet via NTP	Yes
Interfaces	
Number of PROFINET interfaces	3
Number of PROFIBUS interfaces	1
1. Interface	
Interface types	
• RJ 45 (Ethernet)	Yes; X1
• Number of ports	2
• integrated switch	Yes
Protocols	
• IP protocol	Yes; IPv4
• PROFINET IO Controller	Yes
• PROFINET IO Device	Yes
• SIMATIC communication	Yes
• Open IE communication	Yes; Optionally also encrypted
• Web server	Yes
• Media redundancy	Yes
PROFINET IO Controller	
Services	
– PG/OP communication	Yes
– Isochronous mode	Yes
– Direct data exchange	Yes; Requirement: IRT and isochronous mode (MRPD optional)
– IRT	Yes
– PROFIenergy	Yes; per user program
– Prioritized startup	Yes; Max. 32 PROFINET devices

Article number	6ES7518-4AX00-1AB0
– Number of connectable IO Devices, max.	512; In total, up to 1 000 distributed I/O devices can be connected via AS-i, PROFIBUS or PROFINET
– Of which IO devices with IRT, max.	64
– Number of connectable IO Devices for RT, max.	512
– of which in line, max.	512
– Number of IO Devices that can be simultaneously activated/deactivated, max.	8; in total across all interfaces
– Number of IO Devices per tool, max.	8
– Updating times	The minimum value of the update time also depends on communication share set for PROFINET IO, on the number of IO devices, and on the quantity of configured user data
Update time for IRT	
– for send cycle of 125 µs	125 µs
– for send cycle of 187.5 µs	187.5 µs
– for send cycle of 250 µs	250 µs to 4 ms
– for send cycle of 500 µs	500 µs to 8 ms
– for send cycle of 1 ms	1 ms to 16 ms
– for send cycle of 2 ms	2 ms to 32 ms
– for send cycle of 4 ms	4 ms to 64 ms
– With IRT and parameterization of "odd" send cycles	Update time = set "odd" send clock (any multiple of 125 µs: 375 µs, 625 µs ... 3 875 µs)
Update time for RT	
– for send cycle of 250 µs	250 µs to 128 ms
– for send cycle of 500 µs	500 µs to 256 ms
– for send cycle of 1 ms	1 ms to 512 ms
– for send cycle of 2 ms	2 ms to 512 ms
– for send cycle of 4 ms	4 ms to 512 ms
PROFINET IO Device	
Services	
– PG/OP communication	Yes
– Isochronous mode	No
– IRT	Yes; Minimum send cycle of 250 µs
– PROFIenergy	Yes; per user program
– Shared device	Yes
– Number of IO Controllers with shared device, max.	4
– activation/deactivation of I-devices	Yes; per user program
– Asset management record	Yes; per user program

Article number	6ES7518-4AX00-1AB0
2. Interface	
Interface types	
• RJ 45 (Ethernet)	Yes; X2
• Number of ports	1
• integrated switch	No
Protocols	
• IP protocol	Yes; IPv4
• PROFINET IO Controller	Yes
• PROFINET IO Device	Yes
• SIMATIC communication	Yes
• Open IE communication	Yes; Optionally also encrypted
• Web server	Yes
• Media redundancy	No
PROFINET IO Controller	
Services	
– PG/OP communication	Yes
– Isochronous mode	No
– Direct data exchange	No
– IRT	No
– PROFIenergy	Yes; per user program
– Prioritized startup	No
– Number of connectable IO Devices, max.	128; In total, up to 1 000 distributed I/O devices can be connected via AS-i, PROFIBUS or PROFINET
– Number of connectable IO Devices for RT, max.	128
– of which in line, max.	128
– Number of IO Devices that can be simultaneously activated/deactivated, max.	8; in total across all interfaces
– Number of IO Devices per tool, max.	8
– Updating times	The minimum value of the update time also depends on communication share set for PROFINET IO, on the number of IO devices, and on the quantity of configured user data
Update time for RT	
– for send cycle of 1 ms	1 ms to 512 ms
PROFINET IO Device	
Services	
– PG/OP communication	Yes
– Isochronous mode	No
– IRT	No

Article number	6ES7518-4AX00-1AB0
– PROFIenergy	Yes; per user program
– Prioritized startup	No
– Shared device	Yes
– Number of IO Controllers with shared device, max.	4
– activation/deactivation of I-devices	Yes; per user program
– Asset management record	Yes; per user program
3. Interface	
Interface types	
• RJ 45 (Ethernet)	Yes; X3
• Number of ports	1; C/C++ Runtime can also be reached via this port
• integrated switch	No
Protocols	
• IP protocol	Yes; IPv4
• PROFINET IO Controller	No
• PROFINET IO Device	No
• SIMATIC communication	Yes
• Open IE communication	Yes; Optionally also encrypted
• Web server	Yes
4. Interface	
Interface types	
• RS 485	Yes; X4
• Number of ports	1
Protocols	
• PROFIBUS DP master	Yes
• PROFIBUS DP slave	No
• SIMATIC communication	Yes
PROFIBUS DP master	
• Number of connections, max.	48; for the integrated PROFIBUS DP interface
• Number of DP slaves, max.	125; In total, up to 1 000 distributed I/O devices can be connected via AS-i, PROFIBUS or PROFINET
Services	
– PG/OP communication	Yes
– Equidistance	Yes
– Isochronous mode	Yes
– Activation/deactivation of DP slaves	Yes
Interface types	
RJ 45 (Ethernet)	

Article number	6ES7518-4AX00-1AB0
• 100 Mbps	Yes
• 1000 Mbps	Yes; Only possible at the X3 interface of the CPU 1518
• Autonegotiation	Yes
• Autocrossing	Yes
• Industrial Ethernet status LED	Yes
RS 485	
• Transmission rate, max.	12 Mbit/s
Protocols	
PROFIsafe	No
Number of connections	
• Number of connections, max.	384; via integrated interfaces of the CPU and connected CPs / CMs
• Number of connections reserved for ES/HMI/web	10
• Number of connections via integrated interfaces	320
• Number of S7 routing paths	64; in total, only 16 S7-Routing connections are supported via PROFIBUS
Redundancy mode	
• H-Sync forwarding	Yes
Media redundancy	
– Media redundancy	only via 1st interface (X1)
– MRP	Yes; MRP Automanager according to IEC 62439-2 Edition 2.0, MRP Manager; MRP Client
– MRP interconnection, supported	Yes; as MRP ring node according to IEC 62439-2 Edition 3.0
– MRPD	Yes; Requirement: IRT
– Switchover time on line break, typ.	200 ms; For MRP, bumpless for MRPD
– Number of stations in the ring, max.	50
SIMATIC communication	
• PG/OP communication	Yes; encryption with TLS V1.3 pre-selected
• S7 routing	Yes
• Data record routing	Yes
• S7 communication, as server	Yes
• S7 communication, as client	Yes
• User data per job, max.	See online help (S7 communication, user data size)
Open IE communication	
• TCP/IP	Yes
– Data length, max.	64 kbyte

Article number	6ES7518-4AX00-1AB0
– several passive connections per port, supported	Yes
• ISO-on-TCP (RFC1006)	Yes
– Data length, max.	64 kbyte
• UDP	Yes
– Data length, max.	2 kbyte; 1 472 bytes for UDP broadcast
– UDP multicast	Yes; 128 multicast circuits (of which max. 5 via X1)
• DHCP	Yes
• DNS	Yes
• SNMP	Yes; disconnected by default
• DCP	Yes
• LLDP	Yes
• Encryption	Yes; Optional
Web server	
• HTTP	Yes; Standard and user pages
• HTTPS	Yes; Standard and user pages
OPC UA	
• Runtime license required	Yes; "Large" license required
• OPC UA Client	Yes; Data Access (registered Read/Write), Method Call
– Application authentication	Yes
– Security policies	Available security policies: None, Basic128Rsa15, Basic256Rsa15, Basic256Sha256
– User authentication	"anonymous" or by user name & password
– Number of connections, max.	40
– Number of nodes of the client interfaces, max.	5 000
– Number of elements for one call of OPC_UA_NodeGetHandleList/OPC_UA_-ReadList/OPC_UA_WriteList, max.	300
– Number of elements for one call of OPC_UA_NameSpaceGetIndexList, max.	20
– Number of elements for one call of OPC_UA_MethodGetHandleList, max.	100
– Number of simultaneous calls of the client instructions per connection (except OPC_UA_ReadList,OPC_UA_WriteList, OPC_UA_MethodCall), max.	1

Article number	6ES7518-4AX00-1AB0
– Number of simultaneous calls of the client instructions OPC_UA_ReadList,OPC_UA_WriteList and OPC_UA_MethodCall, max.	5
– Number of registerable nodes, max.	5 000
– Number of registerable method calls of OPC_UA_MethodCall, max.	100
– Number of inputs/outputs when calling OPC_UA_MethodCall, max.	20
• OPC UA Server	Yes; Data Access (Read, Write, Subscribe), Method Call, Alarms & Condition (A&C), Custom Address Space
– Application authentication	Yes
– Security policies	available security policies: None, Basic128Rsa15, Basic256Rsa15, Basic256Sha256, Aes128Sha256RsaOaep, Aes256Sha256RsaPss
– User authentication	"anonymous" or by user name & password
– GDS support (certificate management)	Yes
– Number of sessions, max.	64
– Number of accessible variables, max.	200 000
– Number of registerable nodes, max.	50 000
– Number of subscriptions per session, max.	50
– Sampling interval, min.	10 ms
– Publishing interval, min.	10 ms
– Number of server methods, max.	100
– Number of inputs/outputs per server method, max.	20
– Number of monitored items, max.	24 000; for 1 s sampling interval and 1 s send interval
– Number of server interfaces, max.	10 of each "Server interfaces" / "Companion specification" type and 20 of the type "Reference namespace"
– Number of nodes for user-defined server interfaces, max.	30 000
• Alarms and Conditions	Yes
– Number of program alarms	400
– Number of alarms for system diagnostics	200
Further protocols	
• MODBUS	Yes; MODBUS TCP
Isochronous mode	
Equidistance	Yes
S7 message functions	

Article number	6ES7518-4AX00-1AB0
Number of login stations for message functions, max.	64
Program alarms	Yes
Number of configurable program messages, max.	10 000; Program messages are generated by the "Program_Alarm" block, ProDiag or GRAPH
Number of loadable program messages in RUN, max.	5 000
Number of simultaneously active program alarms	
• Number of program alarms	4 000
• Number of alarms for system diagnostics	1 000
• Number of alarms for motion technology objects	480
Test commissioning functions	
Joint commission (Team Engineering)	Yes; Parallel online access possible for up to 10 engineering systems
Status block	Yes; Up to 16 simultaneously (in total across all ES clients)
Single step	No
Number of breakpoints	20
Status/control	
• Status/control variable	Yes
• Variables	Inputs/outputs, memory bits, DBs, distributed I/Os, timers, counters
• Number of variables, max.	
– of which status variables, max.	200; per job
– of which control variables, max.	200; per job
Forcing	
• Forcing	Yes
• Forcing, variables	Peripheral inputs/outputs
• Number of variables, max.	200
Diagnostic buffer	
• present	Yes
• Number of entries, max.	3 200
– of which powerfail-proof	1 000
Traces	
• Number of configurable Traces	8; Up to 512 KB of data per trace are possible
Interrupts/diagnostics/status information	
Diagnostics indication LED	
• RUN/STOP LED	Yes
• ERROR LED	Yes
• MAINT LED	Yes

Article number	6ES7518-4AX00-1AB0
• Connection display LINK TX/RX	Yes
Supported technology objects	
Motion Control	Yes; Note: The number of technology objects affects the cycle time of the PLC program; selection guide via the TIA Selection Tool
• Number of available Motion Control resources for technology objects	15 360
• Required Motion Control resources	
– per speed-controlled axis	40
– per positioning axis	80
– per synchronous axis	160
– per external encoder	80
– per output cam	20
– per cam track	160
– per probe	40
• Positioning axis	
– Number of positioning axes at motion control cycle of 4 ms (typical value)	140
– Number of positioning axes at motion control cycle of 8 ms (typical value)	192
Controller	
• PID_Compact	Yes; Universal PID controller with integrated optimization
• PID_3Step	Yes; PID controller with integrated optimization for valves
• PID-Temp	Yes; PID controller with integrated optimization for temperature
Counting and measuring	
• High-speed counter	Yes
Standards, approvals, certificates	
Suitable for safety functions	No
Ambient conditions	
Ambient temperature during operation	
• horizontal installation, min.	0 °C
• horizontal installation, max.	60 °C; Display: 50 °C, at an operating temperature of typically 50 °C, the display is switched off
• vertical installation, min.	0 °C
• vertical installation, max.	40 °C; Display: 40 °C, at an operating temperature of typically 40 °C, the display is switched off
Ambient temperature during storage/transportation	
• min.	-40 °C
• max.	70 °C

Article number	6ES7518-4AX00-1AB0
Altitude during operation relating to sea level	
• Installation altitude above sea level, max.	5 000 m; Restrictions for installation altitudes > 2 000 m, see manual
configuration / header	
configuration / programming / header	
Programming language	
– LAD	Yes
– FBD	Yes
– STL	Yes
– SCL	Yes
– CFC	Yes
– GRAPH	Yes
Know-how protection	
• User program protection/password protection	Yes
• Copy protection	Yes
• Block protection	Yes
Access protection	
• protection of confidential configuration data	Yes
• Password for display	Yes
• Protection level: Write protection	Yes
• Protection level: Read/write protection	Yes
• Protection level: Complete protection	Yes
programming / cycle time monitoring / header	
• lower limit	adjustable minimum cycle time
• upper limit	adjustable maximum cycle time
Open Development interfaces	
• Size of ODK SO file, max.	9.8 Mbyte
Dimensions	
Width	175 mm
Height	147 mm
Depth	129 mm
Weights	
Weight, approx.	2 093 g

General technical specifications

You can find information on the general technical specifications, such as standards and approvals, electromagnetic compatibility, protection class, etc., in the S7-1500, ET 200MP (https://support.industry.siemens.com/cs/ww/en/view/59191792) system manual.

Dimensional drawing

A

This section contains the dimensional drawing of the module on the mounting rail, as well as a dimensional drawing with the front panel open. Keep to the dimensions when installing in cabinets, control rooms, etc.

Dimension drawings of the CPU 1518-4 PN/DP MFP

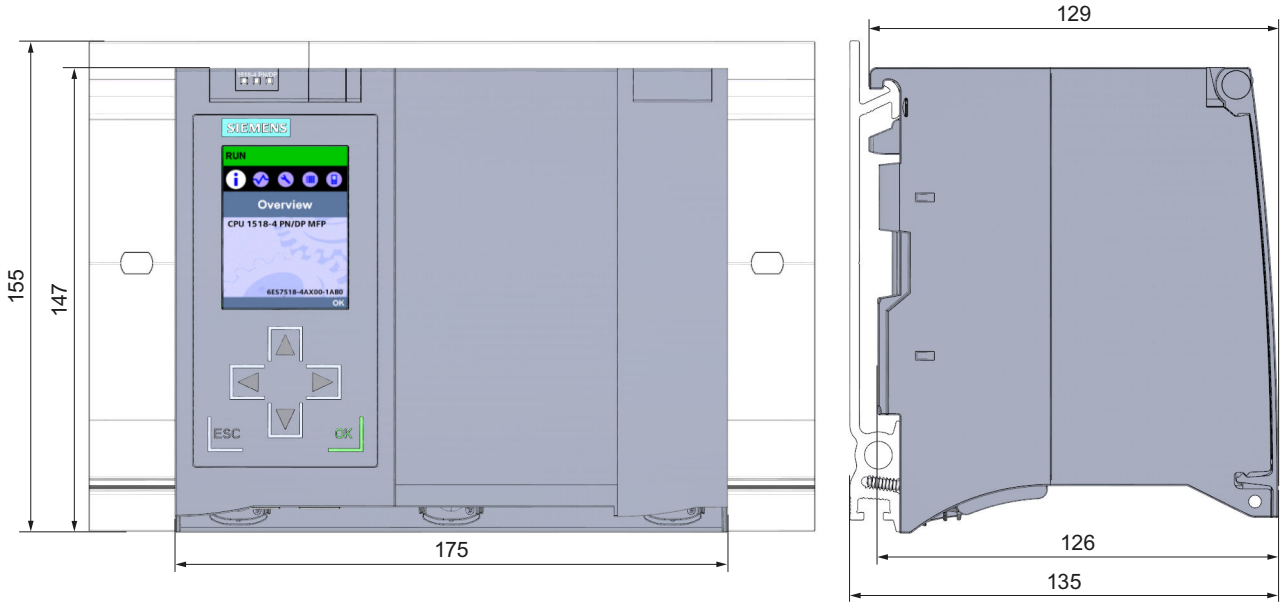

Figure A-1 Dimension drawing of the CPU 1518-4 PN/DP MFP, front and side view

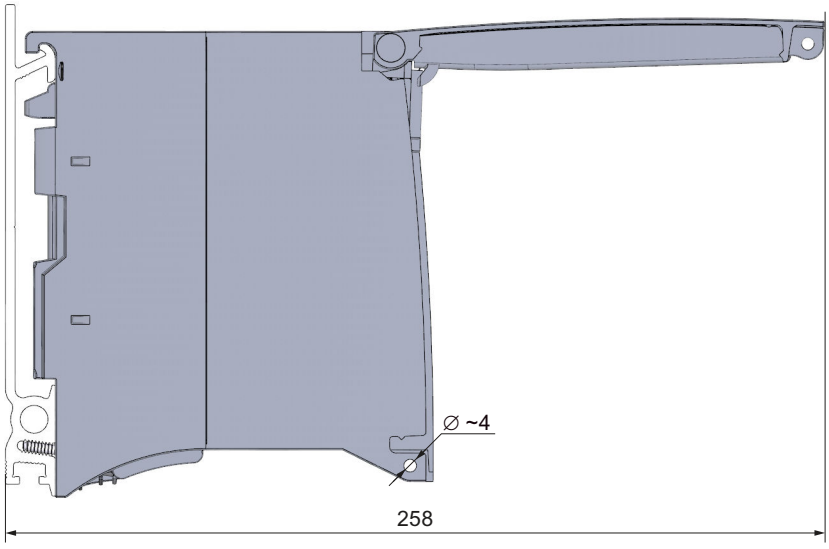

Figure A-2 Dimension drawing CPU 1518-4 PN/DP MFP, side view with open front panel

SIEMENS

Edition 11/2022

EQUIPMENT MANUAL

SIMATIC

S7-1500

CPU 1518T-4 PN/DP
6ES7518-4TP00-0AB0

support.industry.siemens.com

SIEMENS

SIMATIC

S7-1500
CPU 1518T-4 PN/DP
(6ES7518-4TP00-0AB0)

Equipment Manual

Introduction 1

Safety instructions 2

Product overview 3

Connecting 4

Interrupts, error messages and diagnostics and system alarms 5

Technical specifications 6

Dimension drawing A

11/2022
A5E50479758-AB

Legal information

Warning notice system

This manual contains notices you have to observe in order to ensure your personal safety, as well as to prevent damage to property. The notices referring to your personal safety are highlighted in the manual by a safety alert symbol, notices referring only to property damage have no safety alert symbol. These notices shown below are graded according to the degree of danger.

⚠ DANGER
indicates that death or severe personal injury **will** result if proper precautions are not taken.

⚠ WARNING
indicates that death or severe personal injury **may** result if proper precautions are not taken.

⚠ CAUTION
indicates that minor personal injury can result if proper precautions are not taken.

NOTICE
indicates that property damage can result if proper precautions are not taken.

If more than one degree of danger is present, the warning notice representing the highest degree of danger will be used. A notice warning of injury to persons with a safety alert symbol may also include a warning relating to property damage.

Qualified Personnel

The product/system described in this documentation may be operated only by **personnel qualified** for the specific task in accordance with the relevant documentation, in particular its warning notices and safety instructions. Qualified personnel are those who, based on their training and experience, are capable of identifying risks and avoiding potential hazards when working with these products/systems.

Proper use of Siemens products

Note the following:

⚠ WARNING
Siemens products may only be used for the applications described in the catalog and in the relevant technical documentation. If products and components from other manufacturers are used, these must be recommended or approved by Siemens. Proper transport, storage, installation, assembly, commissioning, operation and maintenance are required to ensure that the products operate safely and without any problems. The permissible ambient conditions must be complied with. The information in the relevant documentation must be observed.

Trademarks

All names identified by ® are registered trademarks of Siemens AG. The remaining trademarks in this publication may be trademarks whose use by third parties for their own purposes could violate the rights of the owner.

Disclaimer of Liability

We have reviewed the contents of this publication to ensure consistency with the hardware and software described. Since variance cannot be precluded entirely, we cannot guarantee full consistency. However, the information in this publication is reviewed regularly and any necessary corrections are included in subsequent editions.

Siemens AG
Digital Industries
Postfach 48 48
90026 NÜRNBERG
GERMANY

A5E50479758-AB
Ⓟ 10/2022 Subject to change

Copyright © Siemens AG 2021 - 2022.
All rights reserved

Table of contents

1 Introduction 5

1.1 Guide documentation S7-1500/ET 200MP 6
1.1.1 Information classes S7-1500/ET 200MP 6
1.1.2 SIMATIC Technical Documentation 7

2 Safety instructions 10

2.1 Security information 10

3 Product overview 11

3.1 New functions 11
3.2 Application 13
3.3 Hardware properties 19
3.4 Firmware functions 22
3.5 Operator controls and display elements 26
3.5.1 Front view of the module with closed front panels 26
3.5.2 Front view of the module without front panels 28
3.5.3 Rear view of the module 29
3.6 Mode selector switch 29

4 Connecting 30

5 Interrupts, error messages and diagnostics and system alarms 35

5.1 Status and error display of the CPU 35

6 Technical specifications 38

A Dimension drawing 52

Introduction

1

Purpose of the documentation

This manual supplements the system manual of the S7-1500 automation system/ET 200MP distributed I/O system as well as the function manuals. This manual contains a description of the module-specific information. The system-related functions are described in the system manual. All system-spanning functions are described in the function manuals.

The information provided in this equipment manual and the system manual enables you to commission the CPU .

Conventions

STEP 7: In this documentation, "STEP 7" is used as a synonym for all versions of the configuration and programming software "STEP 7 (TIA Portal)".

Please also observe notes marked as follows:

NOTE

A note contains important information on the product described in the documentation, on the handling of the product or on the section of the documentation to which particular attention should be paid.

Recycling and disposal

For environmentally friendly recycling and disposal of your old equipment, contact a certified electronic waste disposal company and dispose of the equipment according to the applicable regulations in your country.

Industry Mall

The Industry Mall is the catalog and order system of Siemens AG for automation and drive solutions on the basis of Totally Integrated Automation (TIA) and Totally Integrated Power (TIP).

You can find catalogs for all automation and drive products on the Internet (https://mall.industry.siemens.com).

1.1 Guide documentation S7-1500/ET 200MP

1.1.1 Information classes S7-1500/ET 200MP

The documentation for the SIMATIC S7-1500 automation system and the ET 200MP distributed I/O system is arranged into three areas.
This arrangement enables you to access the specific content you require. Changes and supplements to the manuals are documented in a Product Information.
You can download the documentation free of charge from the Internet (https://support.industry.siemens.com/cs/ww/en/view/109742691).

Basic information

The System Manual and Getting Started describe in detail the configuration, installation, wiring and commissioning of the SIMATIC S7-1500 and ET 200MP systems.
The STEP 7 online help supports you in the configuration and programming.
Examples:

- Getting Started S7-1500
- S7-1500/ET 200MP System Manual
- Online help TIA Portal

Device information

Equipment manuals contain a compact description of the module-specific information, such as properties, wiring diagrams, characteristics and technical specifications.
Examples:

- Equipment Manuals CPUs
- Equipment Manuals Interface Modules
- Equipment Manuals Digital Modules
- Equipment Manuals Analog Modules
- Equipment Manuals Communications Modules
- Equipment Manuals Technology Modules
- Equipment Manuals Power Supply Modules

General information

The function manuals contain detailed descriptions on general topics relating to the SIMATIC S7-1500 and ET 200MPsystems.
Examples:

- Function Manual Diagnostics
- Function Manual Communication
- Function Manual Motion Control
- Function Manual Web Server
- Function Manual Cycle and Response Times
- PROFINET Function Manual
- PROFIBUS Function Manual

Product Information

Changes and supplements to the manuals are documented in a Product Information. The Product Information takes precedence over the device and system manuals.
You can find the latest Product Information on the S7-1500 and ET 200MP systems on the Internet (https://support.industry.siemens.com/cs/de/en/view/68052815).

Manual Collection S7-1500/ET 200MP

The Manual Collection contains the complete documentation on the SIMATIC S7-1500 automation system and the ET 200MP distributed I/O system gathered together in one file.
You can find the Manual Collection on the Internet.
(https://support.industry.siemens.com/cs/ww/en/view/86140384)

SIMATIC S7-1500 comparison list for programming languages

The comparison list contains an overview of which instructions and functions you can use for which controller families.
You can find the comparison list on the Internet
(https://support.industry.siemens.com/cs/ww/en/view/86630375).

1.1.2 SIMATIC Technical Documentation

Additional SIMATIC documents will complete your information. You can find these documents and their use at the following links and QR codes.
The Industry Online Support gives you the option to get information on all topics. Application examples support you in solving your automation tasks.

Overview of the SIMATIC Technical Documentation

Here you will find an overview of the SIMATIC documentation available in Siemens Industry Online Support:

Industry Online Support International (https://support.industry.siemens.com/cs/ww/en/view/109742705)

Watch this short video to find out where you can find the overview directly in Siemens Industry Online Support and how to use Siemens Industry Online Support on your mobile device:

Quick introduction to the technical documentation of automation products per video (https://support.industry.siemens.com/cs/us/en/view/109780491)

YouTube video: Siemens Automation Products - Technical Documentation at a Glance (https://youtu.be/TwLSxxRQQsA)

mySupport

With "mySupport" you can get the most out of your Industry Online Support.

Registration	You must register once to use the full functionality of "mySupport". After registration, you can create filters, favorites and tabs in your personal workspace.
Support requests	Your data is already filled out in support requests, and you can get an overview of your current requests at any time.
Documentation	In the Documentation area you can build your personal library.
Favorites	You can use the "Add to mySupport favorites" to flag especially interesting or frequently needed content. Under "Favorites", you will find a list of your flagged entries.
Recently viewed articles	The most recently viewed pages in mySupport are available under "Recently viewed articles".
CAx data	The CAx data area gives you access to the latest product data for your CAx or CAe system. You configure your own download package with a few clicks: • Product images, 2D dimension drawings, 3D models, internal circuit diagrams, EPLAN macro files • Manuals, characteristics, operating manuals, certificates • Product master data

You can find "mySupport" on the Internet. (https://support.industry.siemens.com/My/ww/en)

Application examples

The application examples support you with various tools and examples for solving your automation tasks. Solutions are shown in interplay with multiple components in the system - separated from the focus on individual products.

You can find the application examples on the Internet.
(https://support.industry.siemens.com/cs/ww/en/ps/ae)

Safety instructions 2

2.1 Security information

Siemens provides products and solutions with industrial security functions that support the secure operation of plants, systems, machines and networks.

In order to protect plants, systems, machines and networks against cyber threats, it is necessary to implement – and continuously maintain – a holistic, state-of-the-art industrial security concept. Siemens' products and solutions constitute one element of such a concept.

Customers are responsible for preventing unauthorized access to their plants, systems, machines and networks. Such systems, machines and components should only be connected to an enterprise network or the internet if and to the extent such a connection is necessary and only when appropriate security measures (e.g. firewalls and/or network segmentation) are in place.

For additional information on industrial security measures that may be implemented, please visit (https://www.siemens.com/industrialsecurity).

Siemens' products and solutions undergo continuous development to make them more secure. Siemens strongly recommends that product updates are applied as soon as they are available and that the latest product versions are used. Use of product versions that are no longer supported, and failure to apply the latest updates may increase customers' exposure to cyber threats.

To stay informed about product updates, subscribe to the Siemens Industrial Security RSS Feed visit (https://www.siemens.com/cert).

Product overview

3

3.1 New functions

This section contains an overview of the most important new firmware functions of the CPU compared to the predecessor CPU (V2.9).

New functions of the CPU in firmware version V3.0

New functions	Applications	Customer benefits
Communication of the CPU		
SNMP network management protocol	A simple configuration option is available for using SNMP services. For new configurations, this is disabled by default in line with "Security-by-Default".	Can be enabled/disabled in the CPU properties. Community strings are configurable.
OPC UA server – Reading the diagnostic status of the own address space	By using the OPC UA instruction for reading ("OPC_UA_ReadList"), the own namespace of the OPC UA Server can be accessed. This allows you to read out the following statuses and react to them in the user program: • Status of the own OPC UA server • Status of the connections of OPC UA clients • Status of the session • Status of subscriptions	In this way, connection problems can be quickly detected, for example, and the plant availability can be increased.
OPC UA server – Time stamping of the source time of nodes	By using the OPC UA instruction for writing ("OPC_UA_WriteList"), it is possible to change the "SourceTimestamp" as well as the status code of an OPC UA variable (node).	Distinction between the "source" and "server" time possible
OPC UA server – Increase of the configuration limits	The following configuration limits have been increased: • Possible number of nodes in the server interface • Maximum possible number of subscriptions per session • For subscription, the recommendation for monitored values was increased	Further applications for CPUs as OPC UA servers
Web server of the CPU		
New Web API methods	Many new API methods extend your access options to the CPU via the Web API.	Additional applications for the web server
Dynamic management of certificates	The web server certificate for HTTPS communication can now also be managed via the OPC UA GDS mechanism, without separate download of the hardware configuration.	Flexible certificate management

New functions	Applications	Customer benefits
Allow data access only via Web API	They limit the functionality of the web server to the web API based functions. This means that only encrypted communication via HTTPS is possible.	Higher security of communication via web server
Technology functions of the CPU		
Axis functions	Save absolute encoder adjustment for device replacement	Saving the adjustment values with the "MC_SaveAbsoluteEncoderData" instruction saves having to perform the absolute encoder adjustment again after a device replacement.
	The "MC_Home" instruction supports the new "Incremental encoder adjustment" homing mode.	Extended scope of functions
	Active homing of absolute encoders is possible.	Extended scope of functions
	Absolute encoder adjustment/incremental encoder adjustment of non-operational encoders.	The function enables the transfer of actual values of the operational encoder to a non-operational encoder.
	The "MC_Power" instruction supports coasting-down.	Extended scope of functions "MC_Power" instruction
	The hardware limit switches are configurable as traversable/non-traversable.	Extended scope of functions
	For axes in a synchronous system, the dynamic filter enables dynamic adaptation of axes with higher dynamic responses to the axis with the lowest dynamic response.	With the dynamic filter, axes with different inertia can be adjusted to each other. Optimization of a synchronous system
	Stop superimposed movements on the axis with the instruction "MC_HaltSuperimposed"	Use the instruction to stop a superimposed motion independently of the basic motion.
	With the "MC_MotionInSuperimposed" instruction, you specify motion setpoints for the axis that are determined cyclically by the application for additional distance, velocity and acceleration and are additive to the basic motion.	By specifying superimposed motion setpoints, you can optimize the motion profile of a basic motion.
Synchronous operation functions	Velocity gearing	Via a variable gear ratio, synchronous axes can follow the velocity of a positioning axis.
	Synchronization in advance using leading value distance starting from current leading value position in camming	Extended scope of functions
Trace functionality of the CPU	The S7-1500 CPU supports up to 64 configured signals per trace.	Number of configurable signals per trace extended
	Long-term trace: The S7-1500 CPU supports cycle-granular recording of up to 64 different tags in a .csv file over a long period (e.g. hours, days).	Better diagnostic possibilities when analyzing the course of signals over a long period of time

Reference

You can find an overview of all new functions, improvements and revisions in the respective firmware versions on the Internet (https://support.industry.siemens.com/cs/ww/en/view/109478459).

3.2 Application

SIMATIC S7-1500 is the modular control system for a wide variety of automation applications in discrete automation.

SIMATIC S7-1500 is the cost-effective and convenient solution for a broad range of tasks and offers the following advantages:

- Modular, fanless design
- Simple realization of distributed structures
- User-friendly handling

Areas of application of the SIMATIC S7-1500 automation system include, for example:

- Special-purpose machines
- Textile machinery
- Packaging machines
- General mechanical engineering
- Controller engineering
- Machine tool engineering
- Installation engineering
- Electrical industry and crafts
- Automobile engineering
- Water/waste water
- Food & Beverage

Areas of application of the SIMATIC S7-1500R/H redundant system include, for example:

- Tunnels
- Airports (e.g. baggage conveyors)
- Subways
- Shipbuilding
- Wastewater treatment plants
- High-bay warehouses

Areas of application of the SIMATIC S7-1500T automation system for advanced motion control applications include, for example:

- Packaging machines
- Converting applications
- Assembly automation
- Pick-and-place automation
- Palletizers

Several CPUs with various levels of performance and a comprehensive range of modules with many convenient features are available. Fail-safe CPUs enable use in fail-safe applications. The modular design allows you to use only the modules that you need for your application. The controller can be retrofitted with additional modules at any time to expand its range of tasks.

High industrial suitability due to the high resistance to EMC, shock and vibration enable universal use of the SIMATIC S7-1500, S7-1500R/H and S7-1500T automation systems.

Performance segments of standard CPUs

The CPUs can be used for smaller and mid-range applications, as well as for the high-end range of machine and plant automation.

Table 3-1 Standard CPUs

CPU	Performance segment	PROFIBUS interfaces	PROFINET IO RT/IRT interfaces	PROFINET IO RT interface	Basic PROFINET functionality	Work memory	Processing time for bit operations
CPU 1511-1 - PN	Standard CPU for small to mid-range applications	--	1	--	--	1.8 MB	25 ns
CPU 1513-1 - PN	Standard CPU for mid-range applications	--	1	--	--	3.1 MB	25 ns
CPU 1515-2 - PN	Standard CPU for mid-range to large applications	--	1	1	--	5.5 MB	6 ns
CPU 1516-3 - PN/DP	Standard CPU for demanding applications and communication tasks	1	1	1	--	9.5 MB	6 ns
CPU 1517-3 - PN/DP	Standard CPU for demanding applications and communication tasks	1	1	1	--	10 MB	2 ns
CPU 1518-4 - PN/DP	Standard CPU for high-performance applications, demanding communication tasks and very short reaction times	1	1	1	1	66 MB	1 ns
CPU 1518-4 - PN/DP MFP	Standard CPU for high-performance applications, demanding communication tasks, very short reaction times and C/C++ blocks for the user program	1	1	1	1	116* MB	1 ns

* 50 MB of the integrated work memory is reserved for the function library of CPU runtime

Performance segments of redundant CPUs

The CPUs of the S7-1500R/H redundant system offer a high degree of reliability and system availability. A redundant configuration of the most important automation components reduces the likelihood of production downtimes and the consequences of component errors.

The higher the risks and costs of a production downtime, the more worthwhile the use of a redundant system. The avoidance of production downtimes compensates for the generally higher investment costs.

Table 3-2 Redundant CPUs

CPU	Performance segment	PROFIBUS interfaces	PROFINET IO RT/IRT interfaces	PROFINET IO RT interface	Basic PROFINET functionality	Work memory	Processing time for bit operations
CPU 1513R-1 PN	Redundant CPU for smaller to mid-range applications	--	1	--	--	3.1 MB	50 ns
CPU 1515R-2 PN	Redundant CPU for mid-range to large applications	--	1	--	1	5.5 MB	20 ns
CPU 1517H-3 PN	Redundant CPU for demanding applications and communication tasks	--	1	--	1	10 MB	4 ns
CPU 1518HF-4 PN	Fail-safe and redundant CPU for demanding applications and communication tasks	--	1	--	2	69 MB	4 ns

Performance segments of compact CPUs

The compact CPUs can be used for smaller to mid-range applications and have an integrated analog and digital on-board I/O as well as integrated technology functions.

Table 3-3 Compact CPUs

CPU	Performance segment	PROFIBUS interfaces	PROFINET IO RT/IRT interfaces	PROFINET IO RT interface	Basic PROFINET functionality	Work memory	Processing time for bit operations
CPU 1511C-1 PN	Compact CPU for small to mid-range applications	--	1	--	--	1.175 MB	60 ns
CPU 1512C-1 PN	Compact CPU for mid-range applications	--	1	--	--	1.25 MB	48 ns

The following table shows the specific properties of the Compact CPUs.

	CPU 1511C-1 PN	CPU 1512C-1 PN
Integrated analog inputs/outputs	5 inputs/2 outputs	5 inputs/2 outputs
Integrated digital inputs/outputs	16 inputs/16 outputs	32 inputs/32 outputs
High-speed counters	6	6
Frequency meters	6 (max. 100 kHz)	6 (max. 100 kHz)
Period duration measurement	6 channels	6 channels
Pulse width modulation (PWM output)	Max. 4 (up to 100 kHz)	Max. 4 (up to 100 kHz)
Pulse Train Output (PTO output)	Max. 4 (up to 100 kHz)	Max. 4 (up to 100 kHz)
Frequency output	Up to 100 kHz	Up to 100 kHz

Performance segments of technology CPUs

The technology CPUs can be used for low and mid-range applications, as well as for the high-end range of machine and plant automation. Because of their extended motion control functions, they are primarily used for drive control.

Table 3-4 Technology CPUs

CPU	Performance segment	PROFIBUS interfaces	PROFINET IO RT/IRT interfaces	PROFINET IO RT interface	Basic PROFINET functionality	Work memory	Processing time for bit operations
CPU 1511T-1 PN	Technology CPU for small to mid-range applications	--	1	--	--	1.95 MB	25 ns
CPU 1515T-2 PN	Technology CPU for mid-range to large applications	--	1	1	--	6 MB	6 ns
CPU 1516T-3 PN/-DP	Technology CPU for high-end applications and communication tasks	1	1	1	--	10.5 MB	6 ns
CPU 1517T-3 PN/-DP	Technology CPU for high-end applications and communication tasks	1	1	1	--	11 MB	2 ns
CPU 1518T-4 PN/DP	Technology CPU for high-performance motion control applications with large quantities, demanding communication tasks and very short reaction times	1	1	1	1	69 MB	1 ns
CPU 1511TF-1 PN CPU 1515TF-2 PN CPU 1516TF-3 P-N/DP CPU 1517TF-3 P-N/DP CPU 1518TF-4 PN/DP	These CPUs are described in the fail-safe CPUs.						

Performance segments of fail-safe CPUs

The fail-safe CPUs are intended for users who want to implement demanding standard and fail-safe applications both centrally and decentrally.

These fail-safe CPUs allow the processing of standard and safety programs on a single CPU. This allows fail-safe data to be evaluated in the standard user program. The integration also provides the system advantages and the extensive functionality of SIMATIC for fail-safe applications.

The fail-safe CPUs are certified for use in safety mode up to:

- Safety class (Safety Integrity Level) SIL 3 according to IEC 61508:2010
- Performance Level (PL) e and Category 4 according to ISO 13849-1:2015 or EN ISO 13849-1:2015

Additional password protection for F-configuration and F-program is set up for IT security.

Table 3-5 Fail-safe CPUs

CPU	Performance segment	PROFIBUS interfaces	PROFINET IO RT/IRT interfaces	PROFINET IO RT interface	Basic PROFINET functionality	Work memory	Processing time for bit operations
CPU 1511F-1 PN	Fail-safe CPU for small to mid-range applications	--	1	--	--	1.95 MB	25 ns
CPU 1511TF-1 PN	Fail-safe technology CPU for small to mid-range applications	--	1	--	--	1.95 MB	25 ns
CPU 1513F-1 PN	Fail-safe CPU for mid-range applications	--	1	--	--	3.4 MB	25 ns
CPU 1515F-2 PN	Fail-safe CPU for mid-range to large applications	--	1	1	--	6 MB	6 ns
CPU 1515TF-2 PN	Fail-safe technology CPU for high-end applications and communication tasks	--	1	1	--	6 MB	6 ns
CPU 1516F-3 PN/-DP	Fail-safe CPU for demanding applications and communication tasks	1	1	1	--	10.5 MB	6 ns
CPU 1516TF-3 P-N/DP	Fail-safe technology CPU for high-end applications and communication tasks	1	1	1	--	10.5 MB	6 ns
CPU 1517F-3 PN/-DP	Fail-safe CPU for demanding applications and communication tasks	1	1	1	--	11 MB	2 ns
CPU 1517TF-3 P-N/DP	Fail-safe technology CPU for high-end applications and communication tasks	1	1	1	--	11 MB	2 ns
CPU 1518F-4 PN/-DP	Fail-safe CPU for high-performance applications, demanding communication tasks and very short reaction times	1	1	1	1	69 MB	1 ns
CPU 1518F-4 PN/-DP MFP	Fail-safe CPU for high-performance applications, demanding communication tasks, very short reaction times and C/C++ blocks for the user program	1	1	1	1	119* MB	1 ns

* 50 MB of the integrated work memory is reserved for the function library of CPU runtime

CPU	Performance segment	PROFIBUS interfaces	PROFINET IO RT/IRT interfaces	PROFINET IO RT interface	Basic PROFINET functionality	Work memory	Processing time for bit operations
CPU 1518TF-4 PN/DP	Technology CPU for high-performance motion control applications with large quantities, demanding communication tasks and very short reaction times	1	1	1	1	69 MB	1 ns

* 50 MB of the integrated work memory is reserved for the function library of CPU runtime

In addition to the CPUs, further components such as SINAMICS drives dispose of integrated safety functions. Additional information about integrated safety functions in drives can be found in the manuals for the respective products.

Security Integrated

In conjunction with STEP 7, each CPU offers password-based know-how protection against unauthorized reading out or modification of the program blocks.

Copy protection provides reliable protection against unauthorized reproduction of program blocks. With copy protection, individual blocks on the SIMATIC memory card can be tied to its serial number so that the block can only be run if the configured memory card is inserted into the CPU.

In addition, various access rights can be assigned in the controller to different user groups using four different authorization levels.

Improved manipulation protection allows changed or unauthorized transfers of engineering data to be detected by the controller.

The use of an Ethernet CP (CP 1543-1) provides you with additional access protection through a firewall or possibilities to establish secure VPN connections.

Design and handling

All CPUs of the SIMATIC S7-1500 product series feature a display with plain text information. The display provides the user with information on the order numbers, firmware version, and serial number of all connected modules. In addition, the IP address of the CPU and other network settings can be adapted locally without a programming device. Error messages are shown on the display directly in plain text. When performing servicing, you can minimize plant downtimes by quickly accessing the diagnostics alarms. Detailed information about this and a multitude of other display functions is available in the SIMATIC S7-1500 Display Simulator (https://support.industry.siemens.com/cs/ww/en/view/109761758).

Uniform front connectors for all modules and integrated potential jumpers for flexible formation of potential groups simplify storage. Additional components such as circuit breakers, relays, etc., can be installed quickly and easily, since a DIN rail is implemented in the rail of the SIMATIC S7-1500. The CPUs of the SIMATIC S7-1500 product series can be expanded centrally and in a modular fashion with signal modules. Space-saving expansion enables flexible adaptation to each application.

The system cabling for digital signal modules enables fast and clear connection to sensors and actuators from the field (fully modular connection consisting of front connector modules,

connection cables and I/O modules), as well as easy wiring inside the control cabinet (flexible connection consisting of front connectors with assembled single conductors).

System diagnostics and alarms

Integrated system diagnostics is activated by default for the CPUs. The different types of diagnostics are configured instead of programmed. System diagnostics information and alarms from the drives are displayed consistently and in plain text:

- On the CPU display
- In STEP 7
- On the HMI
- On the Web server

This information is available in RUN mode, but also in STOP mode of the CPU. The diagnostic information is updated automatically when you configure new hardware components.

The CPU is available as a central interrupt server in up to three project languages. The HMI takes over the display in the project languages defined for the CPU. If you require alarm texts in additional languages, you can load them into your HMI via the configured connection. The CPU, STEP 7 and their HMI ensure data consistency without additional engineering steps. The maintenance work is easier.

3.3 Hardware properties

Article number

6ES7518-4TP00-0AB0

View of the module

The figure below shows the CPU 1518T-4 PN/DP.

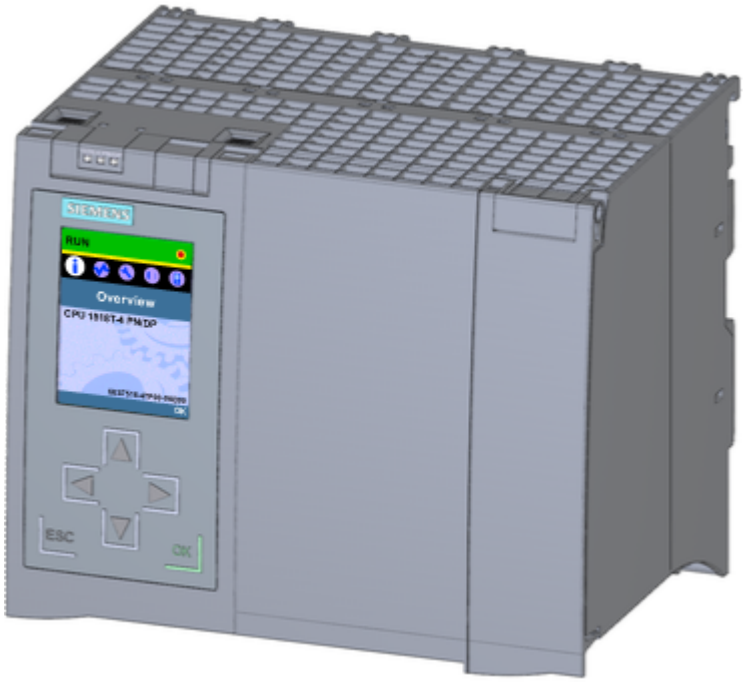

Figure 3-1 CPU 1518T-4 PN/DP

NOTE

Protective film

Note that a protective film is applied to the display in the delivery state of the CPU. Remove the protective film if necessary.

Properties

CPU 1518T-4 PN/DP has the following technical properties:

Property	Description	Additional information
CPU display	All CPUs of the SIMATIC S7-1500 product series feature a display with plain text information. The display provides information on order numbers, firmware version and serial numbers of all connected modules. In addition, you can set the IP address of the CPU and carry out further network settings. The display shows occurring error messages directly in plain text. In addition to the functions listed here, a multitude of other functions that are described in the SIMATIC S7-1500 Display Simulator are shown on the display.	• S7-1500, ET 200MP system manual (https://www.profibus.com) • SIMATIC S7-1500 Display Simulator (https://support.industry.siemens.com/cs/ww/en/view/109761758)
Supply voltage	The 24 V DC supply voltage is fed via a 4-pin plug located on the front of the CPU.	• Section Connecting (Page 30) • S7-1500, ET 200MP system manual (https://www.profibus.com)
PROFINET IO		

Property	Description	Additional information
1. PROFINET interface (X1 P1 R, X1 P2 R)	The first PROFINET interface (X1 P1, X1 P2) has two ports. In addition to PROFINET basic functionality, it also supports PROFINET IO RT (real-time) and IRT (isochronous real-time). PROFINET IO communication or real-time settings can be configured. Even with a send clock of 125 µs, IO communication and standard communication is possible via one cable. Port 1 and port 2 can also be used as ring ports for the configuration of redundant ring structures in Ethernet.	PROFINET function manual (https://support.industry.siemens.com/cs/ww/en/view/49948856)
2. PROFINET interface (X2 P1)	The 2nd PROFINET interface (X2 P1) has one port. In addition to the basic functionality of PROFINET, it also supports PROFINET IO RT (Real-time). PROFINET basic functionality supports HMI communication, communication with the configuration system, communication with a higher-level network (backbone, router, Internet) and communication with another machine or automation cell.	
PROFINET interface (X3 P1)	The interface has one port. In addition to basic PROFINET functionality, it also supports PROFINET IO RT (real time).	
Operation of the CPU as • IO controller • I-device	• **IO controller:** As an IO controller, the CPU addresses the connected IO devices • **I-device:** As an I-device (intelligent IO device), the CPU is assigned to a higher-level IO controller and is used in the process as an intelligent pre-processing unit of sub-processes	
PROFIBUS DP		
PROFIBUS interface (X4)	The interface is used for connecting to a PROFIBUS network.	PROFIBUS (https://www.profibus.com) function manual
Operation of the CPU as a DP master	In the role as a DP master, the CPU addresses the connected DP slaves. It is not possible for the CPU to take the role of a DP slave.	

Accessories

You can find more information on "Accessories/spare parts" in the S7-1500, ET 200MP system manual (https://support.automation.siemens.com/WW/view/en/59191792).

3.4 Firmware functions

Functions

The CPU supports the following functions:

Function	Description	Additional information
Integrated system diagnostics	The system automatically generates the messages for the system diagnostics and outputs these messages via a programming device/PC, HMI device, the web server or the integrated display. System diagnostics information is also available when the CPU is in STOP mode.	Diagnostics function manual (https://support.automation.siemens.com/WW/view/en/59191792)
Integrated web server	The web server lets you access the CPU data by means of a network. Evaluations, diagnostics, and modifications are thus possible over long distances. Monitoring and evaluation is possible without STEP 7, only a web browser is required. Note that you must take appropriate measures to protect the CPU from compromise (such as restricting network access, using firewalls).	• Web server function manual (https://support.automation.siemens.com/WW/view/en/59193560) • Security with SIMATIC S7 controllers system manual (https://support.industry.siemens.com/cs/ww/en/view/90885010)
Integrated trace functionality	Trace functionality supports you in troubleshooting and/or optimizing the user program. You record device tags and evaluate the recordings with the trace and logic analyzer function. Tags are, for example, drive parameters or system and user tags of a CPU. The device saves the recordings. You can read out and permanently save the recordings with the configuration system (ES), if required. The trace and logic analyzer function is therefore suitable for monitoring highly dynamic processes. The trace record can also be displayed through the web server. With the project trace, you record the variables of multiple devices within a project, for example, a controller and a drive. With the long-term trace, you record up to 64 different tags for each cycle in a .csv file over a long period (e.g. hours, days).	Using the trace and logic analyzer function function manual (https://support.automation.siemens.com/WW/view/en/64897128)
OPC UA	With OPC UA, you can exchange data via an open and manufacturer-neutral communication protocol. The CPU can act as OPC UA server. The CPU acting as the OPC UA server can communicate with OPC UA clients. In turn, as an OPC UA client, the CPU can access an OPC UA server, allow the OPC UA server to run methods and read out information from the OPC UA server. Through OPC UA Companion Specification, methods can be specified in a uniform and vendor-neutral way. Using these specified methods, you can easily integrate devices from various manufacturers into your plants and production processes.	Communication function manual (https://support.industry.siemens.com/cs/ww/en/view/59192925)

Function	Description	Additional information
Configuration control	You can use configuration control to operate different real hardware configurations with a configured maximum configuration of the hardware. This means especially in series machine manufacturing you have the option of operating/configuring different configuration variants of a machine with a single project.	System manual S7-1500/ET 200MP (https://support.automation.siemens.com/WW/view/en/59191792)
PROFINET IO		
RT (real time)	RT prioritizes PROFINET IO telegrams over standard telegrams. This ensures the required determinism in the automation technology. In this process the data is transferred via prioritized Ethernet telegrams.	PROFINET function manual (https://support.automation.siemens.com/WW/view/en/49948856)
IRT (isochronous real time)	A reserved bandwidth within the send clock is available for IRT data. The reserved bandwidth ensures that the IRT data can be transmitted in time-synchronized intervals, unaffected by other high network loading (e.g. TCP/IP communication or additional real time communication). Update times with maximum determinism can be realized through IRT. Isochronous applications are possible with IRT.	
Isochronous mode	The Isochronous mode system property acquires measured values and process data and processes the signals in a fixed system clock. Isochronous mode thus contributes to high control quality and hence to greater manufacturing precision. Isochronous mode reduces possible fluctuations of the process reaction times to a minimum. Time-assured processing makes higher machine cycles possible.	
MRP (Media Redundancy Protocol)	It is possible to establish redundant networks via the Media Redundancy Protocol. Redundant transmission links (ring topology) ensure that an alternative communication path is made available if a transmission link fails. The PROFINET devices that are part of this redundant network form an MRP domain. RT operation is possible with the use of MRP.	
MRPD (Media Redundancy with Planned Duplication)	The advantage of the MRP extension MRPD is that, in the event of a failure of a device or a line in the ring, all other devices continue to be supplied with IO data without interruption and with short update times. MRPD is based on IRT and MRP. To realize media redundancy with short update times, the PROFINET devices participating in the ring send their data in both directions. The devices receive this data at both ring ports so that there is no reconfiguration time.	
Shared device	The "Shared device" function allows you to divide the modules or submodules of an IO device up among different IO controllers. Numerous IO controllers are often used in larger or widely distributed systems. Without the "Shared device" function, each I/O module of an IO device is assigned to the same IO controller. If sensors that are physically close to each other must provide data to different IO controllers, several IO devices are required. The "Shared device" function allows the modules or submodules of an IO device to be divided up among different IO controllers, thus allowing flexible	

Function	Description	Additional information
	automation concepts. You can, for example, combine I/O modules that are physically close to each other in one IO device.	PROFINET function manual (https://support.automation.siemens.com/WW/view/en/49948856)
PROFIenergy	PROFIenergy is a PROFINET-based data interface for switching off consumers centrally and with full coordination during pause times regardless of the manufacturer or device type. The goal is that the process is only provided with the energy that is absolutely required. The majority of the energy is saved by the process; the PROFINET device itself only contributes a few watts of savings potential.	
Integrated technology		
Motion Control	The CPUs support the S7-1500 Motion Control functions via the technology objects speed axes, positioning axes, synchronized axes, external encoders, cams, cam tracks and measuring probes. • Speed-controlled axis for controlling a drive with speed specification • Positioning axis for position-controlled positioning of a drive • Synchronous axis to interconnect with a master value. The axis is synchronized to the master axis position. • External encoder for detecting the actual position of an encoder and its use as a master value for synchronous operation • Cams, cam track for position-dependent generation of switching signals • Measuring input for fast, accurate and event-dependent sensing of actual positions You program the technology objects with Motion Control instructions according to PLCopen.	Motion Control topic page (https://support.industry.siemens.com/cs/ww/en/view/109751049)
Extended Motion Control functions	**The technology CPUs** of the SIMATIC S7-1500 also support extended Motion Control functions with the additional technology objects cam, leading axis proxy and kinematics: • Advanced synchronization functions – Synchronization with specification of the synchronous position – Actual value coupling – Leading value or following value shift in gearing or camming – Camming – Synchronization to specified positions – Cross-PLC synchronous operation – Velocity gearing • Up to 4 encoders or measuring systems as actual position for position control • Controlling of kinematics, such as – Cartesian portals – Roller pickers – Delta pickers – SCARA	Motion Control topic page (https://support.industry.siemens.com/cs/ww/en/view/109751049)

Function	Description	Additional information
Integrated closed-loop control functionality	• PID Compact (continuous PID controller) • PID 3Step (step controller for integrating actuators) • PID Temp (temperature controller for heating and cooling with two separate actuators)	PID control function manual (https://support.industry.siemens.com/cs/ww/en/view/108210036)
Integrated safety		
Know-how protection	The know-how protection protects user blocks against unauthorized access and modifications.	System manual S7-1500/ET 200MP (https://support.automation.siemens.com/WW/view/en/59191792)
Copy protection	Copy protection links user blocks to the serial number of the SIMATIC memory card or to the serial number of the CPU. User programs cannot run without the corresponding SIMATIC memory card or CPU.	
Access protection	Extended access protection provides high-quality protection against unauthorized configuration changes. You can use authorization levels to assign separate rights to different user groups.	
Integrity protection	The CPUs feature an integrity protection function by default. This helps to detect any manipulation of the engineering data on the SIMATIC Memory Card or during data transfer between the TIA Portal and the CPU, and to check communication from a SIMATIC HMI system to the CPU for possible manipulation of engineering data. The user receives a corresponding message about manipulation of engineering data detected by the integrity protection.	
Password provider	As an alternative to manual password input you can connect a password provider to STEP 7. A password provider offers the following advantages: • Convenient handling of passwords. STEP 7 reads the password automatically for the blocks. This saves you time. • Optimum block protection because the users do not know the password itself.	

3.5 Operator controls and display elements

3.5.1 Front view of the module with closed front panels

The following figure shows the front view of the CPU 1518T-4 PN/DP.

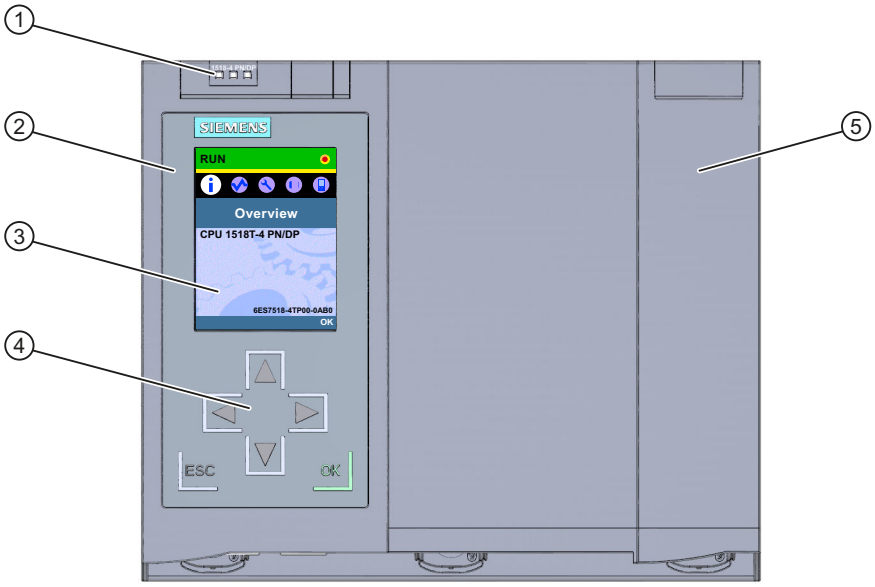

① LEDs for the current operating mode and diagnostics status of the CPU

② Front panel with display

③ Display

④ Control keys

⑤ Front panel of the PROFIBUS interface

Figure 3-2 View of the CPU 1518T-4 PN/DP (with front panels) – front

NOTE

Temperature range for display

To increase its service life, the display switches off at a temperature below the permitted operating temperature of the device. When the display cools down, it automatically switches itself on again. When the display is switched off, the LEDs continue to show the status of the CPU.

You can find additional information on the temperatures at which the display switches itself on and off in the technical specifications.

Removing and fitting the front panel with display

You can remove and fit the front panel with display during operation.

WARNING

Personal injury and damage to property may occur

If you pull or plug the front panel of an S7-1500 automation system during operation, personal injury or damage to property can occur in zone 2 hazardous areas.

Before you remove or fit the front panel, always switch off the power supply to the S7-1500 automation system in hazardous area zone 2.

Locking the front panel

You can lock the wide front panel with display as well as the narrow front panel of the PROFIBUS interface to protect your CPU against unauthorized access. You can attach a security seal or a padlock with a diameter of 3 mm to the front panels.

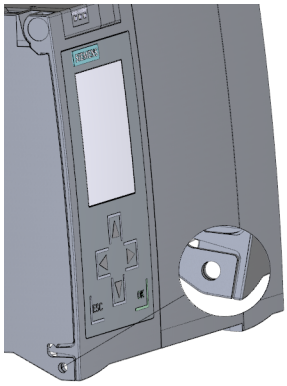

Figure 3-3 Locking latch on the CPU

In addition to the mechanical lock, you can also block access to a password-protected CPU on the display (local lock) and assign a password for the display. You can find additional information on the display, the configurable protection levels and local locking in the S7-1500, ET 200MP (https://support.automation.siemens.com/WW/view/en/59191792) system manual.

Reference

You can find detailed information on the individual display options, a training course and a simulation of the available menu commands in the SIMATIC S7-1500 Display Simulator (https://support.industry.siemens.com/cs/ww/en/view/109761758).

3.5.2 Front view of the module without front panels

The figure below shows the operator controls and connection elements of the CPU 1518T-4 PN/DP.

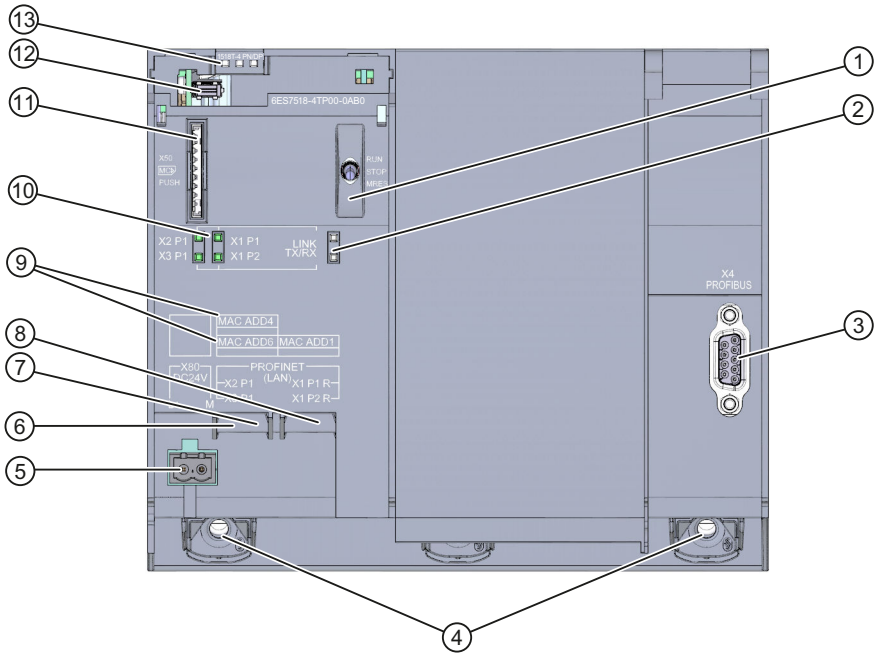

① Mode selector
② No function
③ PROFIBUS interface (X4)
④ Fixing screws
⑤ Connector for power supply
⑥ PROFINET IO interface (X3) with 1 port (back interface)
⑦ PROFINET IO interface (X2) with 1 port (front interface)
⑧ PROFINET IO interface (X1) with 2 ports
⑨ MAC addresses of the interfaces
⑩ LEDs for the 4 ports of the PROFINET interfaces X1, X2 and X3
⑪ Slot for the SIMATIC memory card
⑫ Display connector
⑬ LEDs for the current operating mode and diagnostic status of the CPU

Figure 3-4 View of the CPU 1518T-4 PN/DP (without front panels) – front

3.5.3 Rear view of the module

The following figure shows the connection elements on the rear of the CPU 1518T-4 PN/DP.

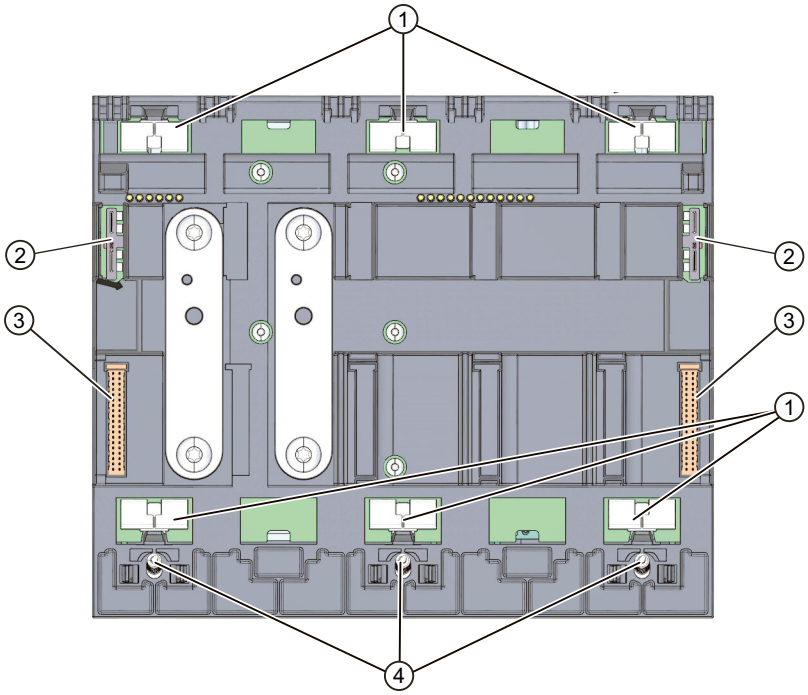

① Shield contact surfaces
② Plug-in connection for power supply
③ Plug-in connection for backplane bus
④ Fixing screws

Figure 3-5 View of the CPU 1518T-4 PN/DP – rear

3.6 Mode selector switch

You use the mode selector to:

- Request a change to a specific operating state
- Disable or enable the change to a specific operating state
  (if, for example, the mode selector is set to STOP, you cannot switch the CPU to RUN via a communication task configured in the TIA Portal or via the display)

The following table shows the position of the switch and the corresponding meaning.

Table 3-6 Mode switch settings

Position	Meaning	Explanation
RUN	RUN mode	The CPU has permission to go to RUN.
STOP	STOP mode	The CPU does not have permission to go to RUN.
MRES	Memory reset	Position for CPU memory reset.

Connecting

4

This section provides information on the terminal assignment of the individual interfaces and the block diagram of the CPU 1518T-4 PN/DP.

24 V DC supply voltage (X80)

The connector for the supply voltage is plugged in when the CPU ships from the factory. The following table shows the signal names and the descriptions of the pin assignment for a 24 V DC supply voltage.

Table 4-1 Pin assignment 24 V DC supply voltage

View Connector	Signal name [1]		Designation
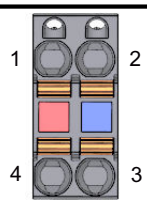	1	1L+	+ 24 V DC of the supply voltage
	2	1M	Ground of the supply voltage
	3	2M	Ground of the supply voltage for loop-through [2]
	4	2L+	+ 24 V DC of the supply voltage for loop-through [2]

[1] 1L+ and 2L+ as well as 1M and 2M are bridged internally

[2] Maximum 10 A permitted

If the CPU is supplied by a system power supply, it is not necessary to connect the 24 V supply.

PROFINET interface X1 with 2-port switch (X1 P1R and X1 P2R)

The assignment corresponds to the Ethernet standard for an RJ45 connector.

- When autonegotiation is deactivated, the RJ45 socket is allocated as a switch (MDI-X).
- When autonegotiation is activated, autocrossing is in effect and the RJ45 socket is allocated either as data terminal equipment (MDI) or a switch (MDI-X).

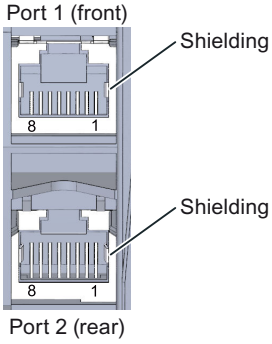

PROFINET interfaces X2 and X3 with 1 port (X2 P1 X3 P1)

The assignment corresponds to the Ethernet standard for an RJ45 connector.

- Autocrossing is always active on X2. This means the RJ45 socket is allocated either as data terminal equipment (MDI) or a switch (MDI-X).
- Autocrossing is always active on X3. This means the RJ45 socket is allocated either as data terminal equipment (MDI) or a switch (MDI-X).

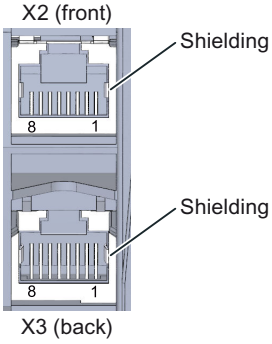

Figure 4-1 Interfaces X2 and X3

NOTE

PROFINET interface X3 with a transmission rate of 1000 Mbps

The PROFINET interface X3 supports a maximum transmission rate of 1000 Mbps.

Requirements:

- The CPU 1518T-4 PN/DP has a firmware version of V1.7 or higher
- Devices on the PROFINET segment must support the 1000 Mbps transmission rate.
- The network infrastructure (network cables and outlets) must be category CAT 5e or better.
- The "Transmission rate" parameter in the properties of the port (X3) must be set as follows in STEP 7:
  - The "Autonegotiation" check box is selected
  - "Automatic" is selected in the drop-down list

PROFIBUS interface X4

The table below shows the pin assignment of the PROFIBUS interface. The assignment corresponds to the standard assignment of an RS485 interface.

Table 4-2 PROFIBUS interface pin assignment

View	Signal name		Designation
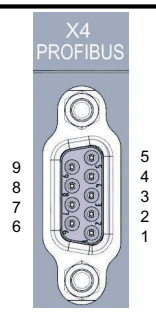	1	-	-
	2	-	-
	3	RxD/TxD-P	Data line B
	4	RTS	Request to send
	5	M5V2	Data reference potential (from station)
	6	P5V2	Supply plus (from station)
	7	-	-
	8	RxD/TxD-N	Data line A
	9	-	-

NOTE

Supply of I/O devices

The CPU 1518T-4 PN/DP does not provide a 24 V DC power supply on the PROFIBUS interface. I/O devices (for example, PC adapter USB 6ES7972-0CB20-0XA0) are only operational on the interface in conjunction with a plug-in power supply set for external power supply.

The innovated successor product, PC adapter USB A2, receives the required power supply via the USB port. This means it does not need a 24 V DC supply voltage and can be operated **without** a plug-in power supply set for external power supply.

Reference

You can find additional information on the topics of "Wiring the CPU" and "Accessories/spare parts" in the S7-1500, ET 200MP (https://support.automation.siemens.com/WW/view/en/59191792) system manual.

Assignment of the MAC addresses

CPU 1518T-4 PN/DP has three PROFINET interfaces. The first interface is an interface with 2-port switch. The PROFINET interfaces each have a MAC address, and each of the PROFINET ports has its own MAC address. The CPU 1518T-4 PN/DP therefore has seven MAC addresses in total.

The MAC addresses of the PROFINET ports are needed for the LLDP protocol, for example for the neighborhood discovery function.

The number range of the MAC addresses is sequential. The first and last MAC addresses are lasered on the rating plate on the right side of each CPU 1518T-4 PN/DP.

The table below shows how the MAC addresses are assigned.

Table 4-3 Assignment of the MAC addresses

	Assignment	Labeling
MAC address 1	PROFINET interface X1 (visible in STEP 7 for accessible devices)	• Front, lasered • Right side, lasered (start of number range)
MAC address 2	Port X1 P1R (required for LLDP, for example)	• Front and right side, not lasered
MAC address 3	Port X1 P2R (required for LLDP, for example)	• Front and right side, not lasered
MAC address 4	PROFINET interface X2 (visible in STEP 7 for accessible devices)	• Front, lasered • Right side, not lasered
MAC address 5	Port X2 P1 (required for LLDP, for example)	• Front and right side, not lasered
MAC address 6	PROFINET interface X3 (visible in STEP 7 for accessible devices)	• Front, lasered • Right side, not lasered
MAC address 7	Port X3 P1 (required for LLDP, for example)	• Front, lasered • Right side, lasered (end of number range)

Block diagram

The following figure shows the block diagram of the CPU 1518T-4 PN/DP.

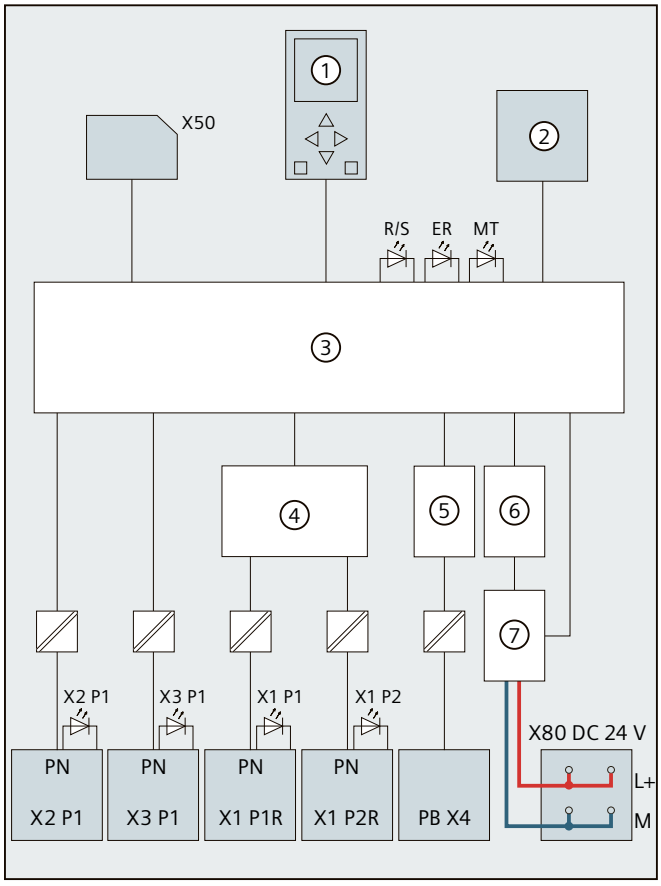

①	Display	PN X1 P2R	PROFINET interface X1 port 2
②	RUN/STOP/MRES mode selector	PN X2 P1	PROFINET interface X2 port 1
③	Electronics	PN X3 P1	PROFINET interface X3 port 1
④	PROFINET 2-port switch	PB X4	PROFIBUS interface X4
⑤	PROFIBUS DP driver	L+	24 V DC supply voltage
⑥	Backplane bus interface	M	Ground
⑦	Internal supply voltage	R/S	RUN/STOP LED (yellow/green)
X50	SIMATIC memory card	ER	ERROR LED (red)
X80 24 V DC	Infeed of supply voltage	MT	MAINT LED (yellow)
PN X1 P1R	PROFINET interface X1 Port 1	X1 P1, X1 P2, X2 P1, X3 P1	LED Link TX/RX

Figure 4-2 Block diagram of the CPU 1518T-4 PN/DP

Interrupts, error messages and diagnostics and system alarms

5

The status and error displays of the CPU 1518T-4 PN/DP are described below.
You will find additional information on "Interrupts" in the STEP 7 online help.
You can find additional information on the topics of "Diagnostics" and "System alarms" in the Diagnostics (https://support.automation.siemens.com/WW/view/en/59192926) function manual.

5.1 Status and error display of the CPU

LED display

The figure below shows the LED displays of the CPU 1518T-4 PN/DP.

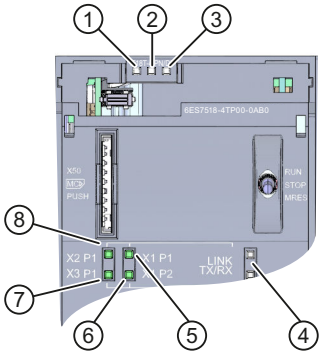

① RUN/STOP LED (yellow/green LED)
② ERROR LED (red LED)
③ MAINT LED (yellow LED)
④ No function
⑤ LINK RX/TX LED for port X1 P1 (yellow/green LED)
⑥ LINK RX/TX LED for port X1 P2 (yellow/green LED)
⑦ LINK RX/TX LED for port X3 P1 (yellow/green LED)
⑧ LINK RX/TX LED for port X2 P1 (yellow/green LED)

Figure 5-1 LED displays of the CPU 1518T-4 PN/DP (without front panel and display)

Meaning of the RUN/STOP, ERROR and MAINT LEDs

The CPU 1518T-4 PN/DP has three LEDs for displaying the current operating state and diagnostic status. The following table shows the meaning of the various combinations of colors for the RUN/STOP, ERROR and MAINT LEDs.

Table 5-1 Meaning of the LEDs

RUN/STOP LED	ERROR LED	MAINT LED	Meaning
LED off	LED off	LED off	Missing or insufficient power supply on the CPU.
LED off	LED flashes red	LED off	An error has occurred.
LED lit green	LED off	LED off	CPU is in RUN mode.
LED lit green	LED off	LED lit yellow	Maintenance demanded for the plant. You need to check/replace the affected hardware within a short period of time.
			Active Force job
			OPC UA server of the CPU expects initial trust lists and CRLs via GDS Push function.
LED lit green	LED off	LED flashes yellow	Bad configuration
LED lit yellow	LED flashes red	LED off	A diagnostics event is pending.
LED lit yellow	LED off	LED flashes yellow	Firmware update using SIMATIC memory card successfully completed.
LED lit yellow	LED off	LED off	CPU is in STOP mode.
			CPU runs a program with active breakpoints. The program is at a breakpoint.
LED lit yellow	LED flashes red	LED flashes yellow	The program on the SIMATIC memory card is causing an error.
			Firmware update using SIMATIC memory card has failed.
			The CPU has detected an error state. Additional information is available via the CPU diagnostic buffer.
LED flashes yellow	LED off	LED off	CPU is performing internal activities during STOP, e.g. startup after STOP.
			Download of the user program from the SIMATIC memory card
			CPU carries out a program with active breakpoint. The program is presently moving from one breakpoint to another.
			Firmware update is being performed.
LED flashes yellow/green	LED off	LED off	Startup (transition from STOP → RUN)

RUN/STOP LED	ERROR LED	MAINT LED	Meaning
LED flashes yellow/green	LED flashes red	LED flashes yellow	Startup (CPU booting)
			Test of LEDs during startup, inserting a module.
			LED flashing test

Meaning of LINK RX/TX LED

Each port has a LINK RX/TX LED. The table below shows the various "LED scenarios" of the CPU 1518T-4 PN/DP ports.

Table 5-2 Meaning of the LED

LINK TX/RX LED	Meaning
LED off	There is no Ethernet connection between the PROFINET interface of the PROFINET device and the communication partner. No data is currently being sent/received via the PROFINET interface. There is no LINK connection.
LED flashes green	The CPU is performing an "LED flash test".
LED lit green	There is an Ethernet connection between the PROFINET interface of your PROFINET device and a communication partner.
LED flashes yellow/green	Data is currently being received from or sent to a communications partner on Ethernet via the PROFINET interface of the PROFINET device.

NOTE

"LED" instruction

You can read the status (e.g. "On" or "Off") of LEDs of a CPU or a module using the "LED" instruction. Note, however, that it is not possible to read the LED status of the LINK RX/TX LEDs on all S7-1500 CPUs.

You can find additional information on the "LED" instruction in the STEP 7 online help.

Technical specifications 6

The following table shows the technical specifications as of 11/2022. You can find a data sheet including daily updated technical specifications on the Internet (https://support.industry.siemens.com/cs/ww/en/pv/6ES7518-4TP00-0AB0/td?dl=en).

Article number	6ES7518-4TP00-0AB0
General information	
Product type designation	CPU 1518T-4 PN/DP
HW functional status	FS11
Firmware version	V3.0
Product function	
• I&M data	Yes; I&M0 to I&M3
• Isochronous mode	Yes; Distributed and central; with minimum OB 6x cycle of 125 µs (distributed) and 1 ms (central)
Engineering with	
• STEP 7 TIA Portal configurable/integrated from version	V18 (FW V3.0) / V17 (FW V2.9)
Configuration control	
via dataset	Yes
Display	
Screen diagonal [cm]	6.1 cm
Control elements	
Number of keys	6
Mode selector switch	1
Supply voltage	
Rated value (DC)	24 V
permissible range, lower limit (DC)	19.2 V
permissible range, upper limit (DC)	28.8 V
Reverse polarity protection	Yes
Mains buffering	
• Mains/voltage failure stored energy time	5 ms
• Repeat rate, min.	1/s
Input current	
Current consumption (rated value)	1.55 A
Current consumption, max.	1.9 A
Inrush current, max.	1.9 A; Rated value
I^2t	0.4 $A^2 \cdot s$
Power	
Infeed power to the backplane bus	12 W

Article number	6ES7518-4TP00-0AB0
Power consumption from the backplane bus (balanced)	30 W
Power loss	
Power loss, typ.	24 W
Memory	
Number of slots for SIMATIC memory card	1
SIMATIC memory card required	Yes
Work memory	
• integrated (for program)	9 Mbyte
• integrated (for data)	60 Mbyte
Load memory	
• Plug-in (SIMATIC Memory Card), max.	32 Gbyte
Backup	
• maintenance-free	Yes
CPU processing times	
for bit operations, typ.	1 ns
for word operations, typ.	2 ns
for fixed point arithmetic, typ.	2 ns
for floating point arithmetic, typ.	6 ns
CPU-blocks	
Number of elements (total)	20 000; Blocks (OB, FB, FC, DB) and UDTs
DB	
• Number range	1 ... 60 999; subdivided into: number range that can be used by the user: 1 ... 59 999, and number range of DBs created via SFC 86: 60 000 ... 60 999
• Size, max.	16 Mbyte; For DBs with absolute addressing, the max. size is 64 KB
FB	
• Number range	0 ... 65 535
• Size, max.	1 Mbyte
FC	
• Number range	0 ... 65 535
• Size, max.	1 Mbyte
OB	
• Size, max.	1 Mbyte
• Number of free cycle OBs	100
• Number of time alarm OBs	20
• Number of delay alarm OBs	20
• Number of cyclic interrupt OBs	20; with minimum OB 3x cycle of 100 µs
• Number of process alarm OBs	50

Article number	6ES7518-4TP00-0AB0
• Number of DPV1 alarm OBs	3
• Number of isochronous mode OBs	3
• Number of technology synchronous alarm OBs	2
• Number of startup OBs	100
• Number of asynchronous error OBs	4
• Number of synchronous error OBs	2
• Number of diagnostic alarm OBs	1
Nesting depth	
• per priority class	24
Counters, timers and their retentivity	
S7 counter	
• Number	2 048
Retentivity	
– adjustable	Yes
IEC counter	
• Number	Any (only limited by the main memory)
Retentivity	
– adjustable	Yes
S7 times	
• Number	2 048
Retentivity	
– adjustable	Yes
IEC timer	
• Number	Any (only limited by the main memory)
Retentivity	
– adjustable	Yes
Data areas and their retentivity	
Retentive data area (incl. timers, counters, flags), max.	768 kbyte; In total; available retentive memory for bit memories, timers, counters, DBs, and technology data (axes): 700 KB
Extended retentive data area (incl. timers, counters, flags), max.	20 Mbyte; When using PS 6 0W 24/48/60 V DC HF
Flag	
• Size, max.	16 kbyte
• Number of clock memories	8; 8 clock memory bit, grouped into one clock memory byte
Data blocks	
• Retentivity adjustable	Yes
• Retentivity preset	No
Local data	

Article number	6ES7518-4TP00-0AB0
• per priority class, max.	64 kbyte; max. 16 KB per block
Address area	
Number of IO modules	16 384; max. number of modules / submodules
I/O address area	
• Inputs	32 kbyte; All inputs are in the process image
• Outputs	32 kbyte; All outputs are in the process image
per integrated IO subsystem	
– Inputs (volume)	32 kbyte; max. 32 KB via X1; max. 8 KB via X2 or X4
– Outputs (volume)	32 kbyte; max. 32 KB via X1; max. 8 KB via X2 or X4
per CM/CP	
– Inputs (volume)	8 kbyte
– Outputs (volume)	8 kbyte
Subprocess images	
• Number of subprocess images, max.	32
Hardware configuration	
Number of distributed IO systems	64; A distributed I/O system is characterized not only by the integration of distributed I/O via PROFINET or PROFIBUS communication modules, but also by the connection of I/O via AS-i master modules or links (e.g. IE/PB-Link)
Number of DP masters	
• integrated	1
• Via CM	8; A maximum of 8 CMs/CPs (PROFIBUS, PROFINET, Ethernet) can be inserted in total
Number of IO Controllers	
• integrated	2
• Via CM	8; A maximum of 8 CMs/CPs (PROFIBUS, PROFINET, Ethernet) can be inserted in total
Rack	
• Modules per rack, max.	32; CPU + 31 modules
• Number of lines, max.	1
PtP CM	
• Number of PtP CMs	the number of connectable PtP CMs is only limited by the number of available slots
Time of day	
Clock	
• Type	Hardware clock
• Backup time	6 wk; At 40 °C ambient temperature, typically
• Deviation per day, max.	10 s; Typ.: 2 s
Operating hours counter	

Article number	6ES7518-4TP00-0AB0
• Number	16
Clock synchronization	
• supported	Yes
• to DP, master	Yes
• in AS, master	Yes
• in AS, slave	Yes
• on Ethernet via NTP	Yes
Interfaces	
Number of PROFINET interfaces	3
Number of PROFIBUS interfaces	1
1. Interface	
Interface types	
• RJ 45 (Ethernet)	Yes; X1
• Number of ports	2
• integrated switch	Yes
Protocols	
• IP protocol	Yes; IPv4
• PROFINET IO Controller	Yes
• PROFINET IO Device	Yes
• SIMATIC communication	Yes
• Open IE communication	Yes; Optionally also encrypted
• Web server	Yes
• Media redundancy	Yes
PROFINET IO Controller	
Services	
– PG/OP communication	Yes
– Isochronous mode	Yes
– Direct data exchange	Yes; Requirement: IRT and isochronous mode (MRPD optional)
– IRT	Yes
– PROFIenergy	Yes; per user program
– Prioritized startup	Yes; Max. 32 PROFINET devices
– Number of connectable IO Devices, max.	512; In total, up to 1 000 distributed I/O devices can be connected via AS-i, PROFIBUS or PROFINET
– Of which IO devices with IRT, max.	64
– Number of connectable IO Devices for RT, max.	512
– of which in line, max.	512

Article number	6ES7518-4TP00-0AB0
– Number of IO Devices that can be simultaneously activated/deactivated, max.	8; in total across all interfaces
– Number of IO Devices per tool, max.	8
– Updating times	The minimum value of the update time also depends on communication share set for PROFINET IO, on the number of IO devices, and on the quantity of configured user data
Update time for IRT	
– for send cycle of 125 µs	125 µs
– for send cycle of 187.5 µs	187.5 µs
– for send cycle of 250 µs	250 µs to 4 ms
– for send cycle of 500 µs	500 µs to 8 ms
– for send cycle of 1 ms	1 ms to 16 ms
– for send cycle of 2 ms	2 ms to 32 ms
– for send cycle of 4 ms	4 ms to 64 ms
– With IRT and parameterization of "odd" send cycles	Update time = set "odd" send clock (any multiple of 125 µs: 375 µs, 625 µs ... 3 875 µs)
Update time for RT	
– for send cycle of 250 µs	250 µs to 128 ms
– for send cycle of 500 µs	500 µs to 256 ms
– for send cycle of 1 ms	1 ms to 512 ms
– for send cycle of 2 ms	2 ms to 512 ms
– for send cycle of 4 ms	4 ms to 512 ms
PROFINET IO Device	
Services	
– PG/OP communication	Yes
– Isochronous mode	No
– IRT	Yes; Minimum send cycle of 250 µs
– PROFIenergy	Yes; per user program
– Shared device	Yes
– Number of IO Controllers with shared device, max.	4
– activation/deactivation of I-devices	Yes; per user program
– Asset management record	Yes; per user program
2. Interface	
Interface types	
• RJ 45 (Ethernet)	Yes; X2
• Number of ports	1
• integrated switch	No

Article number	6ES7518-4TP00-0AB0
Protocols	
• IP protocol	Yes; IPv4
• PROFINET IO Controller	Yes
• PROFINET IO Device	Yes
• SIMATIC communication	Yes
• Open IE communication	Yes; Optionally also encrypted
• Web server	Yes
• Media redundancy	No
PROFINET IO Controller	
Services	
– PG/OP communication	Yes
– Isochronous mode	No
– Direct data exchange	No
– IRT	No
– PROFIenergy	Yes; per user program
– Prioritized startup	No
– Number of connectable IO Devices, max.	128; In total, up to 1 000 distributed I/O devices can be connected via AS-i, PROFIBUS or PROFINET
– Number of connectable IO Devices for RT, max.	128
– of which in line, max.	128
– Number of IO Devices that can be simultaneously activated/deactivated, max.	8; in total across all interfaces
– Number of IO Devices per tool, max.	8
– Updating times	The minimum value of the update time also depends on communication share set for PROFINET IO, on the number of IO devices, and on the quantity of configured user data
Update time for RT	
– for send cycle of 1 ms	1 ms to 512 ms
PROFINET IO Device	
Services	
– PG/OP communication	Yes
– Isochronous mode	No
– IRT	No
– PROFIenergy	Yes; per user program
– Prioritized startup	No
– Shared device	Yes
– Number of IO Controllers with shared device, max.	4

Article number	6ES7518-4TP00-0AB0
– activation/deactivation of I-devices	Yes; per user program
– Asset management record	Yes; per user program
3. Interface	
Interface types	
• RJ 45 (Ethernet)	Yes; X3
• Number of ports	1
• integrated switch	No
Protocols	
• IP protocol	Yes; IPv4
• PROFINET IO Controller	No
• PROFINET IO Device	No
• SIMATIC communication	Yes
• Open IE communication	Yes; Optionally also encrypted
• Web server	Yes
4. Interface	
Interface types	
• RS 485	Yes; X4
• Number of ports	1
Protocols	
• PROFIBUS DP master	Yes
• PROFIBUS DP slave	No
• SIMATIC communication	Yes
PROFIBUS DP master	
• Number of connections, max.	48; for the integrated PROFIBUS DP interface
• Number of DP slaves, max.	125; In total, up to 1 000 distributed I/O devices can be connected via AS-i, PROFIBUS or PROFINET
Services	
– PG/OP communication	Yes
– Equidistance	Yes
– Isochronous mode	Yes
– Activation/deactivation of DP slaves	Yes
Interface types	
RJ 45 (Ethernet)	
• 100 Mbps	Yes
• 1000 Mbps	Yes; Only possible at the X3 interface of the CPU 1518
• Autonegotiation	Yes
• Autocrossing	Yes
• Industrial Ethernet status LED	Yes

Article number	6ES7518-4TP00-0AB0
RS 485	
• Transmission rate, max.	12 Mbit/s
Protocols	
PROFIsafe	No
Number of connections	
• Number of connections, max.	384; via integrated interfaces of the CPU and connected CPs / CMs
• Number of connections reserved for ES/HMI/web	10
• Number of connections via integrated interfaces	320
• Number of S7 routing paths	64; in total, only 16 S7-Routing connections are supported via PROFIBUS
Redundancy mode	
• H-Sync forwarding	Yes
Media redundancy	
– Media redundancy	only via 1st interface (X1)
– MRP	Yes; MRP Automanager according to IEC 62439-2 Edition 2.0, MRP Manager; MRP Client
– MRP interconnection, supported	Yes; as MRP ring node according to IEC 62439-2 Edition 3.0
– MRPD	Yes; Requirement: IRT
– Switchover time on line break, typ.	200 ms; For MRP, bumpless for MRPD
– Number of stations in the ring, max.	50
SIMATIC communication	
• PG/OP communication	Yes; encryption with TLS V1.3 pre-selected
• S7 routing	Yes
• Data record routing	Yes
• S7 communication, as server	Yes
• S7 communication, as client	Yes
• User data per job, max.	See online help (S7 communication, user data size)
Open IE communication	
• TCP/IP	Yes
– Data length, max.	64 kbyte
– several passive connections per port, supported	Yes
• ISO-on-TCP (RFC1006)	Yes
– Data length, max.	64 kbyte
• UDP	Yes
– Data length, max.	2 kbyte; 1 472 bytes for UDP broadcast

Article number	6ES7518-4TP00-0AB0
– UDP multicast	Yes; 128 multicast circuits (of which max. 5 via X1)
• DHCP	Yes
• DNS	Yes
• SNMP	Yes
• DCP	Yes
• LLDP	Yes
• Encryption	Yes; Optional
Web server	
• HTTP	Yes; Standard and user pages
• HTTPS	Yes; Standard and user pages
OPC UA	
• Runtime license required	Yes; "Large" license required
• OPC UA Client	Yes; Data Access (registered Read/Write), Method Call
– Application authentication	Yes
– Security policies	Available security policies: None, Basic128Rsa15, Basic256Rsa15, Basic256Sha256
– User authentication	"anonymous" or by user name & password
– Number of connections, max.	40
– Number of nodes of the client interfaces, max.	5 000
– Number of elements for one call of OPC_UA_NodeGetHandleList/OPC_UA_-ReadList/OPC_UA_WriteList, max.	300
– Number of elements for one call of OPC_UA_NameSpaceGetIndexList, max.	20
– Number of elements for one call of OPC_UA_MethodGetHandleList, max.	100
– Number of simultaneous calls of the client instructions per connection (except OPC_UA_ReadList,OPC_UA_WriteList, OPC_UA_MethodCall), max.	1
– Number of simultaneous calls of the client instructions OPC_UA_ReadList,OPC_UA_WriteList and OPC_UA_MethodCall, max.	5
– Number of registerable nodes, max.	5 000
– Number of registerable method calls of OPC_UA_MethodCall, max.	100
– Number of inputs/outputs when calling OPC_UA_MethodCall, max.	20

Article number	6ES7518-4TP00-0AB0
• OPC UA Server	Yes; Data Access (Read, Write, Subscribe), Method Call, Alarms & Condition (A&C), Custom Address Space
– Application authentication	Yes
– Security policies	available security policies: None, Basic128Rsa15, Basic256Rsa15, Basic256Sha256, Aes128Sha256RsaOaep, Aes256Sha256RsaPss
– User authentication	"anonymous" or by user name & password
– GDS support (certificate management)	Yes
– Number of sessions, max.	64
– Number of accessible variables, max.	200 000
– Number of registerable nodes, max.	50 000
– Number of subscriptions per session, max.	50
– Sampling interval, min.	10 ms
– Publishing interval, min.	10 ms
– Number of server methods, max.	100
– Number of inputs/outputs per server method, max.	20
– Number of monitored items, max.	24 000; for 1 s sampling interval and 1 s send interval
– Number of server interfaces, max.	10 of each "Server interfaces" / "Companion specification" type and 20 of the type "Reference namespace"
– Number of nodes for user-defined server interfaces, max.	30 000
• Alarms and Conditions	Yes
– Number of program alarms	400
– Number of alarms for system diagnostics	200
Further protocols	
• MODBUS	Yes; MODBUS TCP
Isochronous mode	
Equidistance	Yes
S7 message functions	
Number of login stations for message functions, max.	64
Program alarms	Yes
Number of configurable program messages, max.	10 000; Program messages are generated by the "Program_Alarm" block, ProDiag or GRAPH
Number of loadable program messages in RUN, max.	5 000
Number of simultaneously active program alarms	
• Number of program alarms	4 000

Article number	6ES7518-4TP00-0AB0
• Number of alarms for system diagnostics	1 000
• Number of alarms for motion technology objects	480
Test commissioning functions	
Joint commission (Team Engineering)	Yes; Parallel online access possible for up to 10 engineering systems
Status block	Yes; Up to 16 simultaneously (in total across all ES clients)
Single step	No
Number of breakpoints	20
Status/control	
• Status/control variable	Yes
• Variables	Inputs/outputs, memory bits, DBs, distributed I/Os, timers, counters
• Number of variables, max.	
– of which status variables, max.	200; per job
– of which control variables, max.	200; per job
Forcing	
• Forcing	Yes
• Forcing, variables	Peripheral inputs/outputs
• Number of variables, max.	200
Diagnostic buffer	
• present	Yes
• Number of entries, max.	3 200
– of which powerfail-proof	1 000
Traces	
• Number of configurable Traces	8; Up to 512 KB of data per trace are possible
Interrupts/diagnostics/status information	
Diagnostics indication LED	
• RUN/STOP LED	Yes
• ERROR LED	Yes
• MAINT LED	Yes
• Connection display LINK TX/RX	Yes
Supported technology objects	
Motion Control	Yes; Note: The number of technology objects affects the cycle time of the PLC program; selection guide via the TIA Selection Tool
• Number of available Motion Control resources for technology objects	15 360
• Required Motion Control resources	
– per speed-controlled axis	40

Article number	6ES7518-4TP00-0AB0
– per positioning axis	80
– per synchronous axis	160
– per external encoder	80
– per output cam	20
– per cam track	160
– per probe	40
• Number of available Extended Motion Control resources for technology objects	512
• Required Extended Motion Control resources	
– per cam (1 000 points and 50 segments)	2
– per cam (10 000 points and 50 segments)	20
– for each set of kinematics	30
– Per leading axis proxy	3
• Positioning axis	
– Number of positioning axes at motion control cycle of 4 ms (typical value)	140
– Number of positioning axes at motion control cycle of 8 ms (typical value)	192
Controller	
• PID_Compact	Yes; Universal PID controller with integrated optimization
• PID_3Step	Yes; PID controller with integrated optimization for valves
• PID-Temp	Yes; PID controller with integrated optimization for temperature
Counting and measuring	
• High-speed counter	Yes
Standards, approvals, certificates	
Suitable for safety functions	No
Ambient conditions	
Ambient temperature during operation	
• horizontal installation, min.	0 °C
• horizontal installation, max.	60 °C; Display: 50 °C, at an operating temperature of typically 50 °C, the display is switched off
• vertical installation, min.	0 °C
• vertical installation, max.	40 °C; Display: 40 °C, at an operating temperature of typically 40 °C, the display is switched off
Ambient temperature during storage/transportation	
• min.	-40 °C

Article number	6ES7518-4TP00-0AB0
• max.	70 °C
Altitude during operation relating to sea level	
• Installation altitude above sea level, max.	5 000 m; Restrictions for installation altitudes > 2 000 m, see manual
configuration / header	
configuration / programming / header	
Programming language	
– LAD	Yes
– FBD	Yes
– STL	Yes
– SCL	Yes
– GRAPH	Yes
Know-how protection	
• User program protection/password protection	Yes
• Copy protection	Yes
• Block protection	Yes
Access protection	
• protection of confidential configuration data	Yes
• Password for display	Yes
• Protection level: Write protection	Yes
• Protection level: Read/write protection	Yes
• Protection level: Complete protection	Yes
programming / cycle time monitoring / header	
• lower limit	adjustable minimum cycle time
• upper limit	adjustable maximum cycle time
Dimensions	
Width	175 mm
Height	147 mm
Depth	129 mm
Weights	
Weight, approx.	2 079 g

General technical specifications

You can find information on the general technical specifications, such as standards and approvals, electromagnetic compatibility, protection class, etc., in the S7-1500, ET 200MP system manual (https://support.automation.siemens.com/WW/view/en/59191792).

Dimension drawing

A

This section contains the dimensional drawing of the module on the mounting rail, as well as a dimensional drawing with the front panel open. Keep to the dimensions when installing in cabinets, control rooms, etc.

Dimension drawings of the CPU 1518T-4 PN/DP

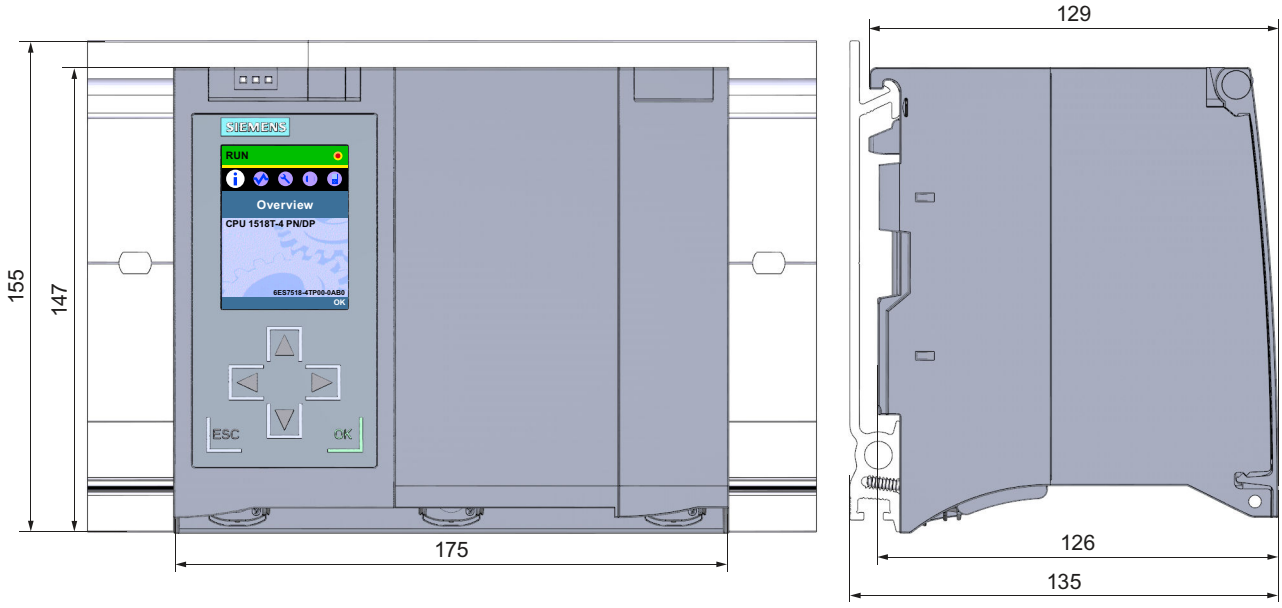

Figure A-1 Dimension drawing of the CPU 1518T-4 PN/DP, front and side view

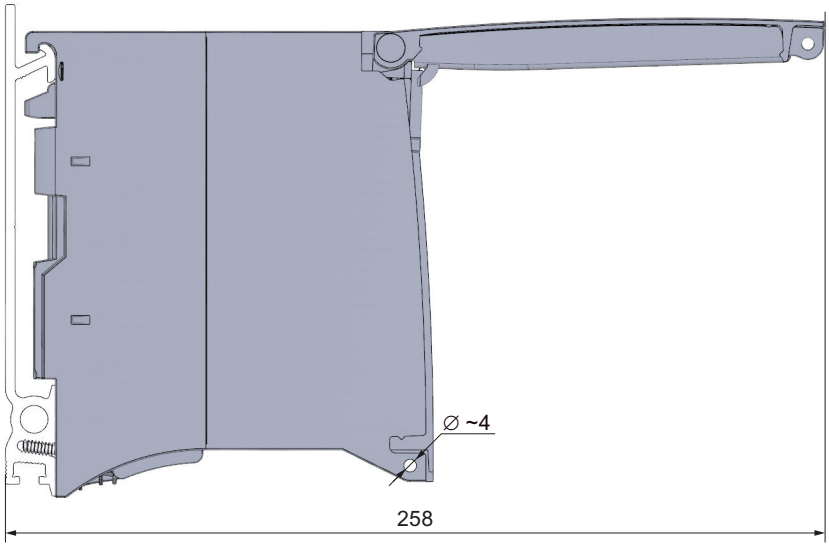

Figure A-2 Dimension drawing CPU 1518T-4 PN/DP, side view with open front panel

SIEMENS

Edition 11/2022

EQUIPMENT MANUAL

SIMATIC

S7-1500R/H

CPU 1518HF-4 PN
6ES7518-4JP00-0AB0

support.industry.siemens.com

SIEMENS

SIMATIC

S7-1500R/H CPU 1518HF-4 PN (6ES7518-4JP00-0AB0)

Equipment Manual

Introduction 1

Safety instructions 2

Product overview 3

Connecting 4

Alarm, error and system messages 5

Technical specifications 6

Dimension drawing A

11/2022

A5E49868646-AB

Legal information

Warning notice system

This manual contains notices you have to observe in order to ensure your personal safety, as well as to prevent damage to property. The notices referring to your personal safety are highlighted in the manual by a safety alert symbol, notices referring only to property damage have no safety alert symbol. These notices shown below are graded according to the degree of danger.

⚠ DANGER
indicates that death or severe personal injury **will** result if proper precautions are not taken.

⚠ WARNING
indicates that death or severe personal injury **may** result if proper precautions are not taken.

⚠ CAUTION
indicates that minor personal injury can result if proper precautions are not taken.

NOTICE
indicates that property damage can result if proper precautions are not taken.

If more than one degree of danger is present, the warning notice representing the highest degree of danger will be used. A notice warning of injury to persons with a safety alert symbol may also include a warning relating to property damage.

Qualified Personnel

The product/system described in this documentation may be operated only by **personnel qualified** for the specific task in accordance with the relevant documentation, in particular its warning notices and safety instructions. Qualified personnel are those who, based on their training and experience, are capable of identifying risks and avoiding potential hazards when working with these products/systems.

Proper use of Siemens products

Note the following:

⚠ WARNING
Siemens products may only be used for the applications described in the catalog and in the relevant technical documentation. If products and components from other manufacturers are used, these must be recommended or approved by Siemens. Proper transport, storage, installation, assembly, commissioning, operation and maintenance are required to ensure that the products operate safely and without any problems. The permissible ambient conditions must be complied with. The information in the relevant documentation must be observed.

Trademarks

All names identified by ® are registered trademarks of Siemens AG. The remaining trademarks in this publication may be trademarks whose use by third parties for their own purposes could violate the rights of the owner.

Disclaimer of Liability

We have reviewed the contents of this publication to ensure consistency with the hardware and software described. Since variance cannot be precluded entirely, we cannot guarantee full consistency. However, the information in this publication is reviewed regularly and any necessary corrections are included in subsequent editions.

Siemens AG
Digital Industries
Postfach 48 48
90026 NÜRNBERG
GERMANY

A5E49868646-AB
Ⓟ 10/2022 Subject to change

Copyright © Siemens AG 2021 - 2022.
All rights reserved

Table of contents

1 Introduction 5

1.1 S7-1500R/H Documentation Guide 6
1.1.1 Information classes S7-1500R/H 6
1.1.2 SIMATIC Technical Documentation 7

2 Safety instructions 9

2.1 Security information 9

3 Product overview 10

3.1 New functions 10
3.2 Configuration and operating principle 11
3.3 Hardware properties 13
3.4 Firmware functions 16
3.5 Operator controls and display elements 18
3.5.1 Front view of the CPU with closed front flap 18
3.5.2 Front view of the CPU without front flaps 20
3.5.3 Rear view of the CPU 21
3.5.4 Bottom view 22
3.6 Mode selector 22

4 Connecting 24

4.1 Terminal assignment 24

5 Alarm, error and system messages 29

5.1 Status and error display of the CPU 29

6 Technical specifications 34

A Dimension drawing 44

Introduction

1

Purpose of the documentation

This manual supplements the system manual of the S7-1500R/H redundant system and the function manuals. This manual contains a description of the module-specific information. The system-related functions are described in the system manual. All system-spanning functions are described in the function manuals.

The information provided in this manual and the system manual enables you to commission the CPU 1518HF-4 PN.

NOTE

When using CPU 1518HF-4 PN in Safety mode, note the description of the fail-safe system SIMATIC Safety SIMATIC Safety - Configuring and Programming (https://support.industry.siemens.com/cs/ww/en/view/54110126) programming and operating manual.

Conventions

STEP 7: In this documentation, "STEP 7" is used as a synonym for all versions of the configuration and programming software "STEP 7 (TIA Portal)".

Please also observe notes marked as follows:

NOTE

A note contains important information on the product described in the documentation, on the handling of the product or on the section of the documentation to which particular attention should be paid.

Recycling and disposal

For environmentally friendly recycling and disposal of your old equipment, contact a certified electronic waste disposal company and dispose of the equipment according to the applicable regulations in your country.

Industry Mall

The Industry Mall is the catalog and order system of Siemens AG for automation and drive solutions on the basis of Totally Integrated Automation (TIA) and Totally Integrated Power (TIP).

You can find catalogs for all automation and drive products on the Internet (https://mall.industry.siemens.com).

1.1 S7-1500R/H Documentation Guide

1.1.1 Information classes S7-1500R/H

The documentation for the redundant S7-1500R/H system is arranged into three areas.
This arrangement enables you to access the specific content you require.
You can download the documentation free of charge from the Internet (https://support.industry.siemens.com/cs/ww/en/view/109742691).

Basic information

The System Manual and Getting Started describe in detail the configuration, installation, wiring and commissioning of the redundant S7-1500R/H system.
The STEP 7 online help supports you in the configuration and programming.
Examples:

- Getting Started S7-1500R/H
- System manual S7-1500R/H
- Online help TIA Portal

Device information

Equipment manuals contain a compact description of the module-specific information, such as properties, wiring diagrams, characteristics and technical specifications.
Examples:

- Equipment Manuals CPUs
- Equipment Manuals Power Supply Modules

General information

The function manuals contain detailed descriptions on general topics relating to the redundant S7-1500R/H system.
Examples:

- Function Manual Diagnostics
- Function Manual Communication
- Function manual Structure and Use of the CPU Memory
- Function Manual Cycle and Response Times
- PROFINET Function Manual

Product Information

Changes and supplements to the manuals are documented in a Product Information. The Product Information takes precedence over the device and system manuals.
You can find the latest Product Information on the redundant S7-1500R/H system on the Internet. (https://support.industry.siemens.com/cs/ww/en/view/109742691)

Manual Collection S7-1500/ET 200MP

The Manual Collection S7-1500/ET 200MP contains the complete documentation on the redundant S7-1500R/H system gathered together in one file.
You can find the Manual Collection on the Internet.
(https://support.industry.siemens.com/cs/ww/en/view/86140384)

SIMATIC S7-1500 comparison list for programming languages

The comparison list contains an overview of which instructions and functions you can use for which controller families.
You can find the comparison list on the Internet.
(https://support.industry.siemens.com/cs/ww/en/view/86630375)

1.1.2 SIMATIC Technical Documentation

Additional SIMATIC documents will complete your information. You can find these documents and their use at the following links and QR codes.
The Industry Online Support gives you the option to get information on all topics. Application examples support you in solving your automation tasks.

Overview of the SIMATIC Technical Documentation

Here you will find an overview of the SIMATIC documentation available in Siemens Industry Online Support:

Industry Online Support International
(https://support.industry.siemens.com/cs/ww/en/view/109742705)

Watch this short video to find out where you can find the overview directly in Siemens Industry Online Support and how to use Siemens Industry Online Support on your mobile device:

Quick introduction to the technical documentation of automation products per video (https://support.industry.siemens.com/cs/us/en/view/109780491)

YouTube video: Siemens Automation Products - Technical Documentation at a Glance (https://youtu.be/TwLSxxRQQsA)

mySupport

With "mySupport" you can get the most out of your Industry Online Support.

Registration	You must register once to use the full functionality of "mySupport". After registration, you can create filters, favorites and tabs in your personal workspace.

Support requests	Your data is already filled out in support requests, and you can get an overview of your current requests at any time.
Documentation	In the Documentation area you can build your personal library.
Favorites	You can use the "Add to mySupport favorites" to flag especially interesting or frequently needed content. Under "Favorites", you will find a list of your flagged entries.
Recently viewed articles	The most recently viewed pages in mySupport are available under "Recently viewed articles".
CAx data	The CAx data area gives you access to the latest product data for your CAx or CAe system. You configure your own download package with a few clicks: • Product images, 2D dimension drawings, 3D models, internal circuit diagrams, EPLAN macro files • Manuals, characteristics, operating manuals, certificates • Product master data

You can find "mySupport" on the Internet. (https://support.industry.siemens.com/My/ww/en)

Application examples

The application examples support you with various tools and examples for solving your automation tasks. Solutions are shown in interplay with multiple components in the system - separated from the focus on individual products.
You can find the application examples on the Internet.
(https://support.industry.siemens.com/cs/ww/en/ps/ae)

Safety instructions 2

2.1 Security information

Siemens provides products and solutions with industrial security functions that support the secure operation of plants, systems, machines and networks.

In order to protect plants, systems, machines and networks against cyber threats, it is necessary to implement – and continuously maintain – a holistic, state-of-the-art industrial security concept. Siemens' products and solutions constitute one element of such a concept.

Customers are responsible for preventing unauthorized access to their plants, systems, machines and networks. Such systems, machines and components should only be connected to an enterprise network or the internet if and to the extent such a connection is necessary and only when appropriate security measures (e.g. firewalls and/or network segmentation) are in place.

For additional information on industrial security measures that may be implemented, please visit (https://www.siemens.com/industrialsecurity).

Siemens' products and solutions undergo continuous development to make them more secure. Siemens strongly recommends that product updates are applied as soon as they are available and that the latest product versions are used. Use of product versions that are no longer supported, and failure to apply the latest updates may increase customers' exposure to cyber threats.

To stay informed about product updates, subscribe to the Siemens Industrial Security RSS Feed visit (https://www.siemens.com/cert).

Product overview

3

3.1 New functions

This section contains an overview of the most important new firmware functions of the CPU since the last edition of the manual.

New functions of the CPU in firmware version V3.0

New functions	Customer benefits	Where can I find information?
Support PROFINET system redundancy R1	As of FW version V3.0, the S7-1500H redundant system supports PROFINET system redundancy R1: • ET 200SP IM 155-6 PN R1 (6ES7155-6AU00-0HM0) • ET 200SP HA IM 155-6 PN HA (6DL1155-6AU00-0PM0) • ET 200iSP IM 152-1 PN (6ES7152-1BA00-0AB0) R1 devices are equipped with two interface modules compared to S2 devices. If one interface module fails, the R1 device can still be reached by the H-CPUs via the second interface module. Thus, R1 devices have a higher availability than S2 devices.	• S7-1500R/H System Manual (https://support.industry.siemens.com/cs/ww/en/view/109754-833) • PROFINET Function Manual (http://support.automation.siemens.com/WW/view/en/49948856)
New configuration variants for S7-1500H	As of FW version V3.0, the S7-1500H redundant system supports additional configuration variants: • Configuration of PROFINET rings with R1 devices • Configuration of a line topology with S2 devices, switched S1 devices • Configuration of a line topology with R1 devices • Configuration of a combined topology with R1 devices, S2 devices • Configuration without additional devices This allows you to connect the S7-1500H redundant system to almost any network topology and solve complex automation tasks.	S7-1500R/H System Manual (https://support.industry.siemens.com/cs/ww/en/view/109754833)
OB 70	As of FW version V3.0, OB 70 (I/O redundancy error) is available for the diagnostics of R1 and S2 devices in S7-1500H systems.	S7-1500R/H System Manual (https://support.industry.siemens.com/cs/ww/en/view/109754833)

New functions	Customer benefits	Where can I find information?
Synchronization module up to 40 km	As of FW version V3.0, a new synchronization module Sync Module 1 GB FO 40 km is available. The synchronization module enables a distance of up to 40 km between the two H-CPUs via optical fibers. This allows you to use the S7-1500H redundant system for long tunnel installations.	S7-1500R/H System Manual (https://support.industry.siemens.com/cs/ww/en/view/109754833)
Data block functions	As of FW version V3.0, the instructions for the data block functions are supported: • CREATE_DB (create data block) • READ_DBL (read from data block in the load memory) • WRIT_DBL (write to data block in load memory) • DELETE_DB (delete data block)	STEP 7 online help
Network management protocol SNMP: A simple configuration option is now available for using SNMP services. For new configurations, this is disabled by default in accordance with "Security-by-Default".	Can be enabled/disabled in the CPU properties. Community strings can be configured.	Communication Function Manual (https://support.industry.siemens.com/cs/ww/en/view/59192925)
Trace: The S7-1500 CPU supports up to 64 configured signals per trace.	Number of configurable signals per trace extended	Using the Trace and Logic Analyzer Function Function Manual (http://support.automation.siemens.com/WW/view/en/64897128)

Additional information

You can find an overview of all new functions, improvements and revisions in the respective firmware version on the Internet (https://support.industry.siemens.com/cs/ww/en/view/109478459).

3.2 Configuration and operating principle

Structure

The S7-1500H redundant system consists of the following components:

- Two CPUs of the type CPU 1518HF-4 PN
- Two SIMATIC memory cards
- Four synchronization modules (two synchronization modules in each H-CPU)
- Two redundancy connections (two duplex fiber-optic cables)
- IO devices
- Load power supply (optional)

You mount the CPUs on a common mounting rail or spatially separated on two separate mounting rails. You connect the two CPUs with fiber-optic cables to two synchronization modules in each CPU.

You set up the PROFINET ring or the PROFINET network via the PROFINET interfaces X1 P1R and X1 P2R of the CPUs (as of FW version V3.0: e.g. as line or mixed topology).

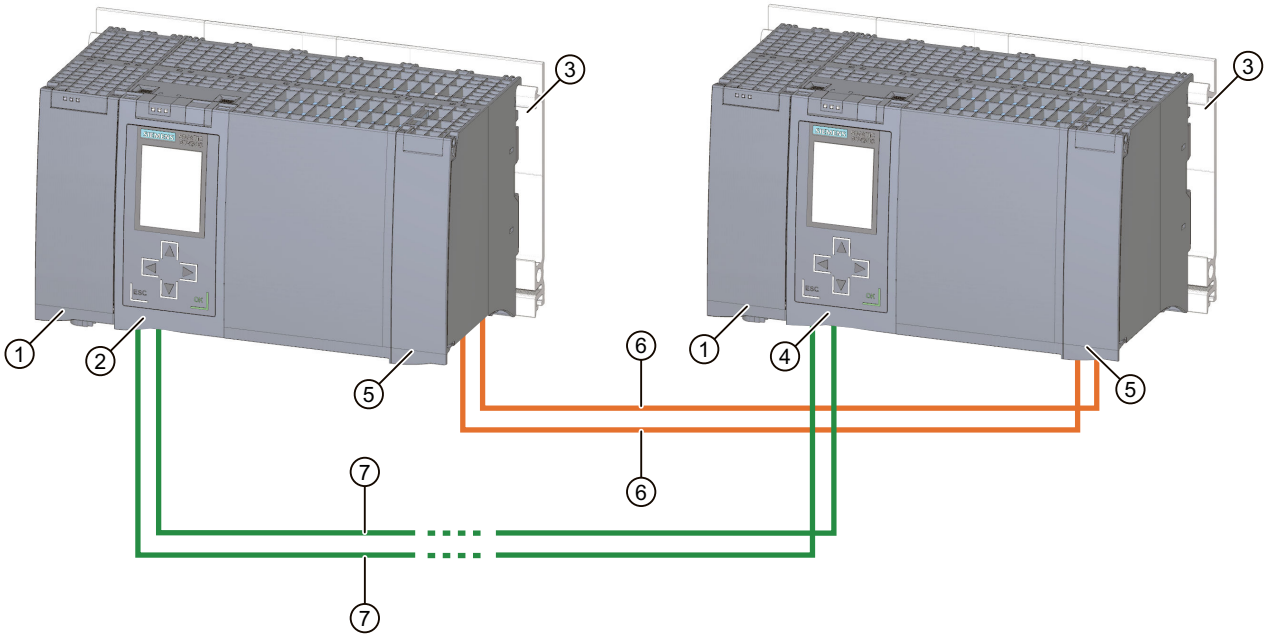

① Optional load current supply
② First CPU
③ Mounting rail with integrated DIN rail profile
④ Second CPU
⑤ Location of the synchronization modules (not visible in graphic)
⑥ Redundancy connections (fiber-optic cables)
⑦ PROFINET cable (PROFINET ring)

Figure 3-1 S7-1500H configuration example (with PROFINET ring)

NOTE

Standard rail adapter

You mount the CPUs on a standardized 35 mm rail using the standard rail adapter.

You can find information on mounting the standard rail adapter in the S7-1500R/H redundant system (https://support.industry.siemens.com/cs/ww/en/view/109754833) System Manual.

Principle of operation

One of the two CPUs in the redundant system takes on the role of CPU for process control (primary CPU). The other CPU takes on the role of the following CPU (backup CPU). The role of the CPUs can change during operation. All relevant data is synchronized from the primary CPU to the backup CPU via the fiber-optic cables of the redundancy connections. Synchronization between the primary CPU and backup CPU ensures fast switching between

CPUs in the event of a primary CPU failure. If the primary CPU fails, the backup CPU retains control of the process as the new primary CPU at the point of interruption.

The redundancy connections consist of two fiber-optic cables, which directly connect the CPUs via plug-in synchronization modules.

The integrated F functionality with Safety Integrated processes standard and safety programs. You can find more information in the SIMATIC Safety - Configuring and Programming (https://support.industry.siemens.com/cs/ww/en/view/54110126) programming and operating manual.

Additional information

You can find a detailed description of the operation and design of the S7-1500H redundant system in the system manual for Redundant System S7-1500R/H (https://support.industry.siemens.com/cs/ww/en/view/109754833).

3.3 Hardware properties

Article number

6ES7518-4JP00-0AB0

View of the module

The figure below shows CPU 1518HF-4 PN.

Figure 3-2 CPU 1518HF-4 PN

NOTE
Protective film
Note that there is a removable protective film on the display when the CPUs are delivered.

Properties

CPU 1518HF-4 PN has the following technical properties:

Property	Description	Additional information
CPU display	All CPUs of the redundant system S7 1500R/H have a display with plain text information. The display provides you with diagnostic messages as well as information about the article number, the firmware version and the serial number of the CPU. You can also view and assign the IP addresses, the PROFINET device name and the redundancy ID of the CPU. The system IP address can be viewed via STEP 7 but not in the display. In addition to the functions listed here, a large number of other functions are available on the display. These additional functions are described in the SIMATIC S7 1500 Display Simulator.	• Redundant System S7-1500R/H (https://support.industry.siemens.com/cs/ww/en/view/109754833) System Manual • SIMATIC S7-1500 Display Simulator (https://support.industry.siemens.com/cs/ww/en/view/109761758)

Property	Description	Additional information
Supply voltage	The 24 V DC supply voltage is fed via a 4-pin plug located on the front of the CPU.	• Section Connecting (Page 24) • Redundant System S7-1500R/H (https://support.industry.siemens.com/cs/ww/en/view/109754833) System Manual
PROFINET IO		
PROFINET IO interface (X1 P1R and X1 P2R)	The CPU has an X1 interface with two ports (X1 P1R and X1 P2R). • The PROFINET IO interface X1 (default P1R) is used to set up the PROFINET ring or PROFINET network (e.g. line topology, mixed topology) with the two CPUs and the IO devices. • The interface supports PROFINET IO RT (Real-Time) and PROFINET basic functionality. Basic PROFINET functionality comprises: – HMI communication – Communication with the configuration system – Communication with a higher-level network (backbone, router, Internet) – Communication with another machine or automation cell	• Redundant System S7-1500R/H (https://support.industry.siemens.com/cs/ww/en/view/109754833) System Manual • PROFINET Function Manual (https://support.industry.siemens.com/cs/ww/en/view/49948856)
PROFINET interface (X2 P1 and X3 P1)	Die CPU has an X2 interface with one port (X2 P1) and an X3 interface with one port (X3 P1). Interfaces X2 and X3 support the basic functions of PROFINET.	
H-Sync interfaces (X4 P1 and X5 P1)	Die CPU has an X4 interface with one port (X4 P1) and an X5 interface with one port (X5 P1). The X4 and X5 interfaces are reserved for the synchronization of the two CPUs.	
Synchronization modules	Make the redundancy connections between the two CPUs via the synchronization modules with fiber-optic cables. You plug each synchronization modules in the X4 and X5 interfaces.	
Fiber-optic cables	You connect the two synchronization modules in pairs to each CPU via a fiber-optic cable.	
Operation of the CPUs as IO controllers	**IO controller:** As IO controllers the CPUs address the following configured IO devices: • IO devices with system redundancy S2 • IO devices with system redundancy R1 (as of FW version V3.0) • Standard IO devices (switched S1 devices)	

Accessories

You can find information on the topic of "Accessories/spare parts" in the system manual for Redundant System S7-1500R/H (https://support.industry.siemens.com/cs/ww/en/view/109754833).

3.4 Firmware functions

Functions

CPU 1518HF-4 PN supports the following firmware functions:

Function	Description	Additional information
CPU redundancy	There are two duplicate CPUs that synchronize their data via two duplex fiber-optic cables, which connect the CPUs directly to each other via plug-in synchronization modules. If one of the CPUs fails, the other CPU retains control of the process.	Redundant System S7-1500R/H (https://support.industry.siemens.com/cs/ww/en/view/109754833) System Manual
Safety Integrated	The integrated F-functionality processes standard and safety programs. This allows fail-safe data to be evaluated in the standard user program. As a result of the integration, the system advantages and the extensive functionality of SIMATIC are also available for fail-safe applications. The F-CPU is certified for use in safety mode up to: • Safety Integrity Level SIL3 acc. to IEC 61508 • Performance Level (PL) e and Category 4 according to ISO 13849-1:2006 or according to EN ISO 13849-1 Additional password protection for F-configuration and F-program is set up for IT security.	SIMATIC Safety - Configuring and Programming (https://support.industry.siemens.com/cs/ww/en/view/54110126) programming and operating manual
Integrated system diagnostics	The system automatically generates the messages for the system diagnostics and outputs these messages via a programming device/PC, HMI device or the integrated display. System diagnostics information is also available when the CPUs are in operating state STOP.	Diagnostics Function Manual (https://support.industry.siemens.com/cs/ww/en/view/59192926)
Integrated trace functionality	Trace functionality supports you in troubleshooting and/or optimizing the user program. You record device tags and evaluate the recordings with the trace and logic analyzer function. Tags are, for example, drive parameters or system and user tags of a CPU. Trace and logic analyzer functions are suitable for monitoring highly dynamic processes. Note: Note that the S7-1500R/H redundant system supports recording of measurements. However, saving the measurements to the SIMATIC memory card is not supported.	Function manual Using the trace and logic analyzer function (https://support.industry.siemens.com/cs/ww/en/view/64897128)
PROFINET IO		
System redundancy S2	IO-Devices with S2 system redundancy enable uninterrupted operation during a primary backup switchover. If the role of the CPUs changes, the new primary CPU takes over the PROFINET IO communication.	• Redundant System S7-1500R/H (https://support.industry.siemens.com/cs/ww/en/view/109754833) System Manual • PROFINET Function Manual (https://support.industry.siemens.com/cs/ww/en/view/49948856)
System redundancy R1	IO devices with R1 system redundancy are equipped with two interface modules compared to S2 devices. If one interface module fails, the R1 device can still be reached by the H-CPUs via the second interface module. Thus, R1 devices have a higher availability than S2 devices.	

Function	Description	Additional information
Switched S1 device	The switched S1 device function of the CPU enables operation of standard IO devices in the S7-1500R/H redundant system.	Redundant System S7-1500R/H (https://support.industry.siemens.com/cs/ww/en/view/109754833) System Manual
RT (real time)	RT prioritizes PROFINET IO frames over standard frames. This ensures the required determinism in the automation technology. In this process the data is transferred via prioritized Ethernet frames.	PROFINET Function Manual (https://support.industry.siemens.com/cs/ww/en/view/49948856)
MRP (Media Redundancy Protocol)	The Media Redundancy Protocol enables the configuration of redundant networks. Redundant transmission links (ring topology) ensure that an alternative communication path is made available if a transmission link fails. Within the PROFINET ring, the H-CPUs assume the role of the MRP Manager following appropriate project configuration and all other devices in the ring assume the role of the MRP clients.	
MRP interconnection	The process MRP interconnection is an enhancement of MRP and allows redundant coupling of two or more rings with MRP in PROFINET networks. MRP interconnection is - like MRP - specified in the standard IEC 62439-2 (Edition 3).	
PROFIenergy	PROFIenergy is a PROFINET-based data interface for switching off consumers centrally and with full coordination during pause times regardless of the manufacturer or device type. Through this, the process should only be provided with the energy that is absolutely required. Most of the energy is saved by the process. The PROFINET device itself only contributes a few watts to the savings potential.	
Integrated technology		
Integrated closed-loop control functionality	• PID Compact (continuous PID controller) • PID 3Step (step controller for integrating actuators) • PID Temp (temperature controller for heating and cooling with two separate actuators)	PID Control Function Manual (https://support.industry.siemens.com/cs/ww/en/view/108210036)
Controlling, measuring and position detection	• TO_BasicPos (control of a SINAMICS drive) • SSI_Absolute_Encoder (control of position detection and measuring function of the TM PosInput technology module)	STEP 7 online help
Security Integrated		
Know-how protection	The know-how protection protects user blocks against unauthorized access and modifications.	Redundant System S7-1500R/H (https://support.industry.siemens.com/cs/ww/en/view/109754833) System Manual
Access protection	You can use authorization levels to assign separate rights to different user groups.	
Integrity protection	The CPUs feature an integrity protection function by default. This helps to detect any manipulation of the engineering data on the SIMATIC Memory Card or during data transfer between the TIA Portal and the CPU, and to check communication from a SIMATIC HMI system to the CPU for possible manipulation of engineering data. The user receives a corresponding message about manipula-	

Function	Description	Additional information
	tion of engineering data detected by the integrity protection.	Redundant System S7-1500R/H (https://support.industry.siemens.com/cs/ww/en/view/109754833) System Manual
Password provider	As an alternative to manual password entry, you can link a password provider to STEP 7. A password provider offers the following advantages: • Convenient handling of passwords. STEP 7 automatically imports the password for the blocks. This saves you time. • Optimum block protection because the users do not know the password itself.	

3.5 Operator controls and display elements

3.5.1 Front view of the CPU with closed front flap

The following figure shows the front view of the CPU 1518HF-4 PN.

① LEDs for the current operating state and diagnostic status of the CPU
② Front panel with display
③ Display
④ Control keys
⑤ Front panel of the X4 and X5 interfaces

Figure 3-3 View of CPU 1518HF-4 PN (with front panel) - front

NOTE

Temperature range for display

To increase its service life, the display switches off at a temperature below the permitted operating temperature of the device. When the display cools down, it automatically switches itself on again. When the display is switched off, the LEDs continue to show the status of the CPU.

For more information on the temperatures at which the display switches itself on and off, refer to the Technical specifications (Page 34).

Pulling and plugging the front panel with display

You can pull and plug the front panel with display during operation.

⚠ WARNING

Personal injury and damage to property may occur

If you remove or attach the front panel of a redundant system S7-1500R/H during operation, personal injury or damage to property can occur in hazardous area zone 2.

Before you remove or fit the front panel, always switch off the power supply to the S7-1500R/H redundant system in hazardous area zone 2.

Locking the front panel

You can lock the front panel to protect the SIMATIC memory card and the mode selector of the CPU against unauthorized access.

You can attach a security seal or a padlock with a hoop diameter of 3 mm to the front panel.

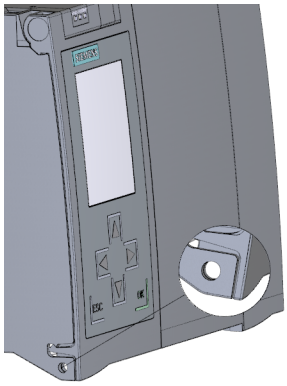

Figure 3-4 Locking latch on the CPU

In addition to the mechanical lock, you can also block access to a password-protected CPU on the display (local lock) and assign a password for the display. You can find additional information on the display, the configurable protection levels and the local lock in the system manual for Redundant System S7-1500R/H (https://support.industry.siemens.com/cs/ww/en/view/109754833).

Reference

You can find detailed information on the individual display options, a training course and a simulation of the available menu commands in the SIMATIC S7-1500 Display Simulator (https://support.industry.siemens.com/cs/ww/en/view/109761758).

3.5.2 Front view of the CPU without front flaps

The figure below shows the operator controls and connection elements of CPU 1518HF-4 PN.

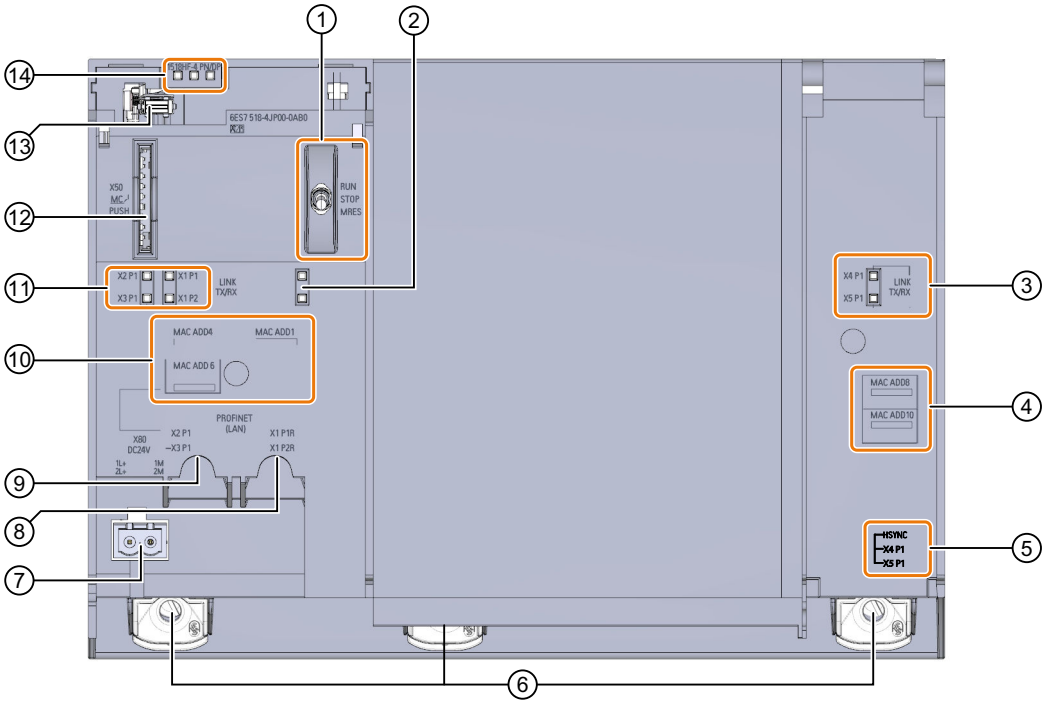

① Mode selector
② No function
③ LED displays for the ports of the X4 and X5 interfaces
④ MAC addresses of the X4 and X5 interfaces
⑤ H-Sync X4 and X5 interfaces with 1 port each (not visible in graphic)
⑥ Fixing screws
⑦ Connector for power supply
⑧ PROFINET IO interface X1 with 2 ports
⑨ PROFINET IO interface X2 and X3 each with 1 port
⑩ MAC addresses of the X1, X2 and X3 interfaces
⑪ LED displays for the ports of the X1, X2 and X3 interfaces
⑫ Slot for the SIMATIC memory card
⑬ Display connector
⑭ LEDs for the current operating state and diagnostic status of the CPU

Figure 3-5 View of CPU 1518HF-4 PN (without front panel) - front

3.5.3 Rear view of the CPU

The following figure shows the connection elements on the rear of CPU 1518HF-4 PN.

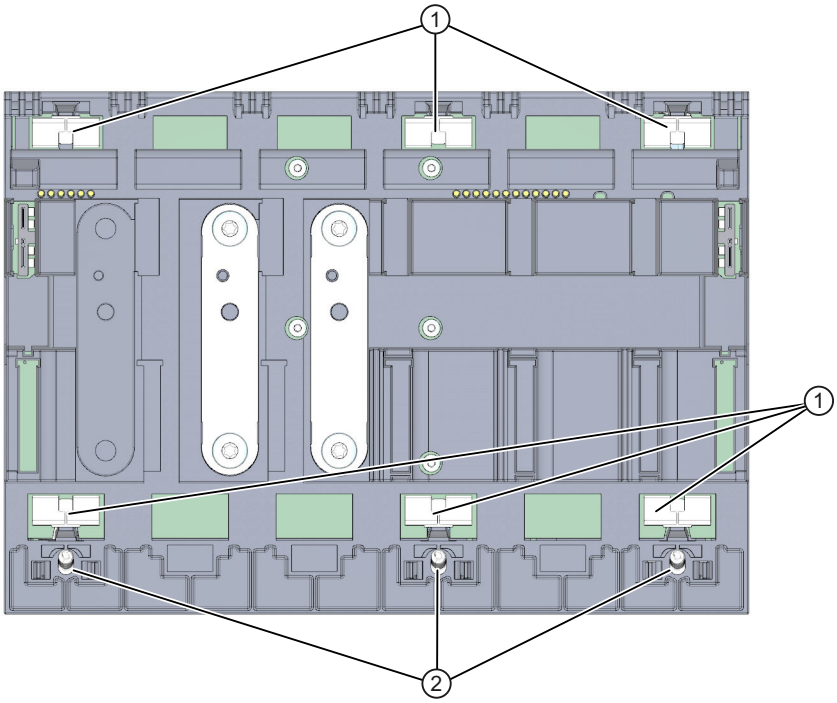

① Shield contact surfaces

② Fixing screws

Figure 3-6 View of CPU 1518HF-4 PN - rear

3.5.4 Bottom view

Interfaces and synchronization modules

The figure below shows the position of the interfaces on the underside of the CPU.

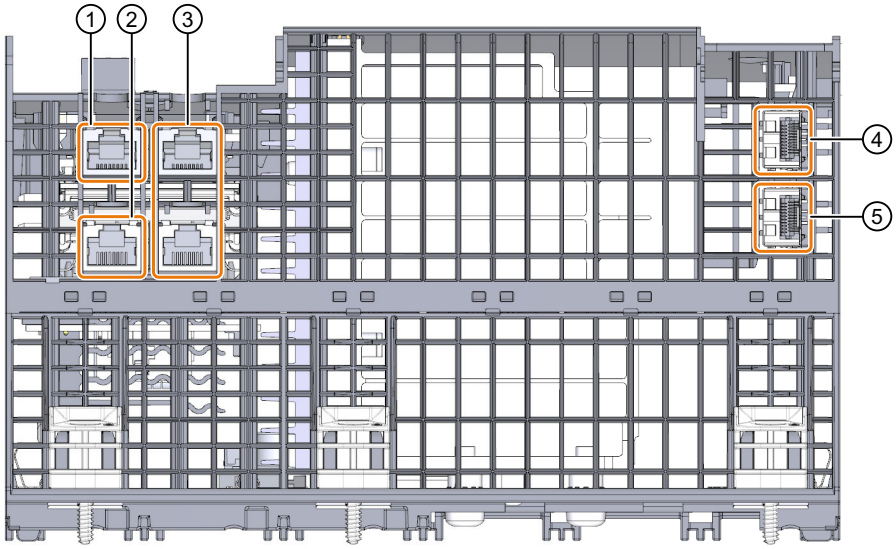

① PROFINET IO interface X2 with 1 port
② PROFINET IO interface X3 with 1 port
③ PROFINET IO interface X1 with 2 ports
④ H-Sync interface X4 (H-Sync channel 1) without synchronization module
⑤ H-Sync interface X5 (H-Sync channel 2) without synchronization module

Figure 3-7 Bottom view

3.6 Mode selector

You use the mode selector to:

- Request a change to a specific operating state
- Disable or enable the change of a specific operating state
  (if, for example, the mode selector is set to STOP, you cannot switch the CPU to RUN via a communication task configured in the TIA Portal or via the display)

The following table shows the position of the switch and the corresponding meaning.

Table 3-1 Mode switch settings

Position	Meaning	Explanation
RUN	RUN operating state	The CPU has permission to go to RUN.
STOP	STOP operating state	The CPU does not have permission to go to RUN.
MRES	Memory reset	Position for CPU memory reset.

Reference

You can find a brief overview of the various operating states and system states in the section Status and error display of the CPU (Page 29).
You can find a detailed description of the operating states and system states in the system manual for S7-1500R/H Redundant System (https://support.industry.siemens.com/cs/ww/en/view/109754833).

Connecting

4

4.1 Terminal assignment

This section provides information on the terminal assignment of the individual interfaces and the block diagram of the CPU 1518HF-4 PN.

24 V DC supply voltage (X80)

The connector for the power supply is plugged in when the CPU ships from the factory.
The following table shows the signal names and the descriptions of the pin assignment of the 24 V DC supply voltage.

Table 4-1 Pin assignment 24 V DC supply voltage

View Connector	Signal name [1]		Description
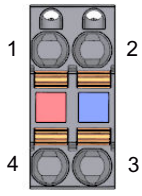	1	1L+	+ 24 V DC of the supply voltage
	2	1M	Ground of the supply voltage
	3	2M	Ground of the supply voltage for loop-through [2]
	4	2L+	+ 24 V DC of the supply voltage for loop-through [2]

[1] 1L+ and 2L+ as well as 1M and 2M are bridged internally

[2] Maximum 10 A permitted

You can find information on the various supply options in the system manual for Redundant System S7-1500R/H (https://support.industry.siemens.com/cs/ww/en/view/109754833).

PROFINET interface X1 with 2-port switch (X1 P1R and X1 P2R)

The assignment corresponds to the Ethernet standard for an RJ45 plug.

- When autonegotiation is deactivated, the RJ45 socket is allocated as a switch (MDI-X).
- When autonegotiation is activated, autocrossing is in effect and the RJ45 socket is allocated either as data terminal equipment (MDI) or a switch (MDI-X).

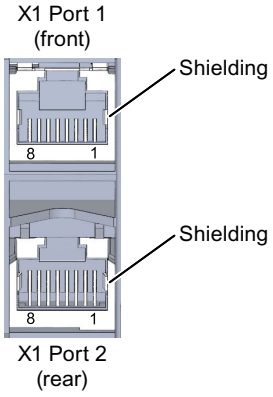

Figure 4-1 Interface assignment X1

PROFINET interface X2 with 1 port (X2 P1) and X3 with port (X3 P1)

The assignment corresponds to the Ethernet standard for a RJ45 connector.
Autocrossing is always active on X2 and X3. This means the RJ45 sockets are allocated either as data terminal equipment (MDI) or a switch (MDI-X).

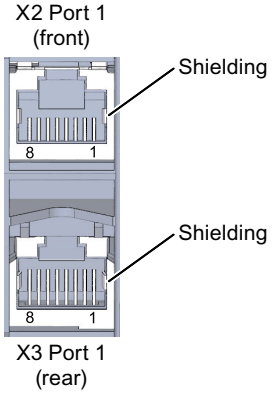

Figure 4-2 Interface assignment X2, X3

H-Sync X4 interface with 1 port (X4 P1) and X5 with 1 port (X5 P1)

Make the redundancy connections between the two CPUs via the synchronization modules at the X4 P1 and X5 P1 interfaces (LC sockets). You interconnect the CPUs in pairs via the fiber-optic cables.

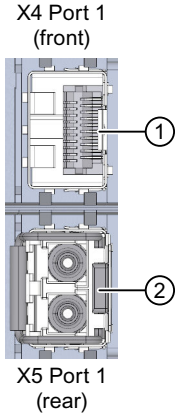

① Without synchronization module

② With synchronization module and removed dummy plug

Figure 4-3 Interface assignment X4, X5

Additional information

You can find additional information on the topic of "Connecting the CPU" and on the topic "Accessories/spare parts" in the system manual for Redundant System S7-1500R/H (https://support.industry.siemens.com/cs/ww/en/view/109754833).

Assignment of the MAC addresses

CPU 1518HF-4 PN has for each CPU:

- One PROFINET interface with two ports
- Two PROFINET interfaces with one port each
- Two H-Sync interfaces with one port each

Each of the interfaces has a MAC address. Each port also has a separate MAC address. There are a total of 22 MAC addresses for the two CPUs of the CPU 1518HF-4 PN.

The MAC addresses of the ports are needed for the LLDP protocol, for example for the neighborhood discovery function.

The number range of the MAC addresses is sequential. The first and last MAC addresses are printed on the rating plate on the right side of each CPU 1518HF-4 PN.

The table below shows how the MAC addresses are assigned.

Table 4-2 Distribution of the MAC addresses of a CPU

	Assignment	Labeling
MAC address 1	PROFINET interface X1 (visible in STEP 7 when devices are accessible)	• Front printed • Right-side printed (start of number range)

	Assignment	Labeling
MAC address 2	Port X1 P1R (required for LLDP, for example)	---
MAC address 3	Port X1 P2R (required for LLDP, for example)	---
MAC address 4	PROFINET interface X2 (visible in STEP 7 when devices are accessible)	• Front printed
MAC address 5	Port X2 P1 (required for LLDP, for example)	---
MAC address 6	PROFINET interface X3 (visible in STEP 7 when devices are accessible)	• Front printed
MAC address 7	Port X3 P1 (required for LLDP, for example)	---
MAC address 8	H-Sync interface X4	• Front printed
MAC address 9	Port X4 P1	---
MAC address 10	H-Sync interface X5	• Front printed
MAC address 11	Port X5 P1	• Right-side printed (end of number range)

Block diagram

The following figure shows the block diagram of CPU 1518HF-4 PN.

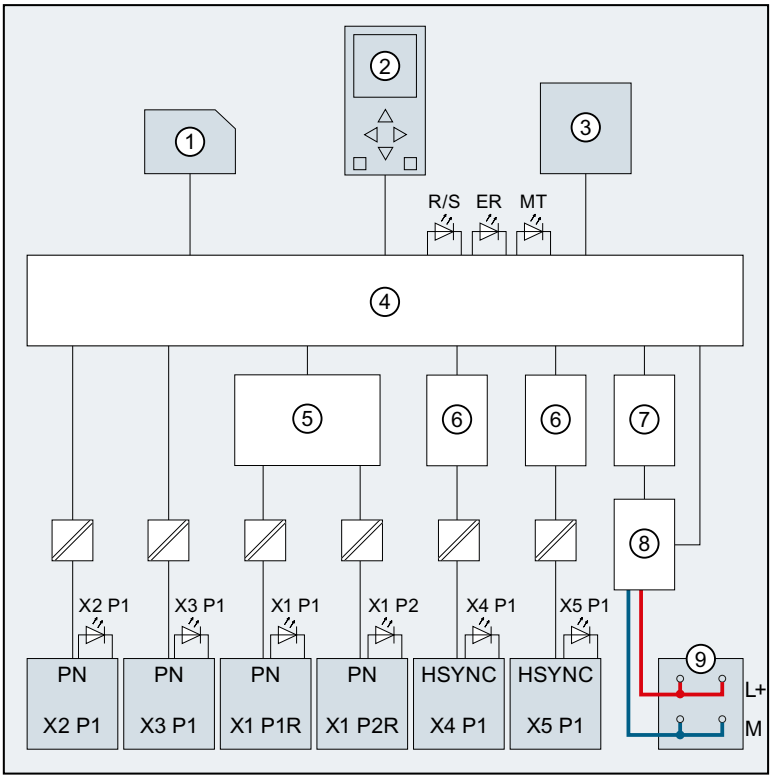

①	SIMATIC memory card (X50)	PN X2 P1	PROFINET interface X2 port 1
②	Display	PN X3 P1	PROFINET interface X3 Port 1
③	Mode selector RUN/STOP/MRES	HSYNC X4 P1	H-Sync interface X4 port 1
④	Electronics	HSYNC X5 P1	H-Sync interface X5 port 1

⑤	PROFINET 2-port switch	L+	24 V DC supply voltage
⑥	Synchronization interface	M	Ground
⑦	Backplane bus connection (connection to backplane bus not configurable)	R/S	RUN/STOP LED (yellow/green)
⑧	Internal supply voltage	ER	ERROR LED (red)
⑨	Supply of the 24 V DC supply voltage (X80)	MT	MAINT LED (yellow)
PN X1 P1R	PROFINET interface X1 port 1	X1 P1, X1 P2, X2 P1, X3 P1, X4 P1, X5 P1	LED Link TX/RX
PN X1 P2R	PROFINET interface X1 port 2		

Figure 4-4 Block diagram of CPU 1518HF-4 PN

Alarm, error and system messages

5

5.1 Status and error display of the CPU

The LED displays of the CPU are described below.
You can find more detailed information on "Interrupts" in the STEP 7 online help.
You can find additional information on the topic of "Diagnostics" and "System events" in the Diagnostics (https://support.industry.siemens.com/cs/ww/en/view/59192926) function manual and in the system manual Redundant System S7-1500R/H (https://support.industry.siemens.com/cs/ww/en/view/109754833).
You can find additional information on the topic of "Operating states and system states" as well as various failure scenarios in the system manual for S7-1500R/H Redundant System (https://support.industry.siemens.com/cs/ww/en/view/109754833).

LED display

The figure below shows the LED displays of the CPU 1518HF-4 PN.

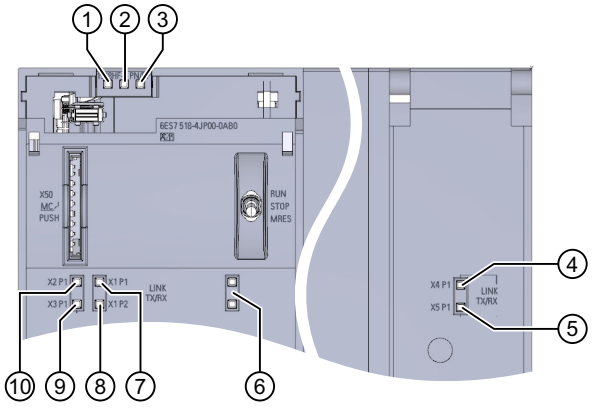

① RUN/STOP LED (yellow/green LED)
② ERROR LED (red LED)
③ MAINT LED (yellow LED)
④ LINK RX/TX LED for port X4 P1 (yellow/green LED)
⑤ LINK RX/TX LED for port X5 P1 (yellow/green LED)
⑥ No function
⑦ LINK RX/TX LED for port X1 P1 (yellow/green LED)
⑧ LINK RX/TX LED for port X1 P2 (yellow/green LED)
⑨ LINK RX/TX LED for port X3 P1 (yellow/green LED)
⑩ LINK RX/TX LED for port X2 P1 (yellow/green LED)

Figure 5-1 LED display of CPU 1518HF-4 PN (without front panel)

LED displays depending on operating states and system states

CPU 1518HF-4 PN has the following LEDs for displaying the current operating state and diagnostics status.

- RUN/STOP LED
- ERROR LED
- MAINT LED

The LEDs indicate the operating state of the respective CPU within the redundant system. Operating states describe the behavior of a single CPU at a specific time. The combination of the operating states of the CPUs forms the system state.

The following figure shows the possible operating states of the CPUs and the resulting system states.

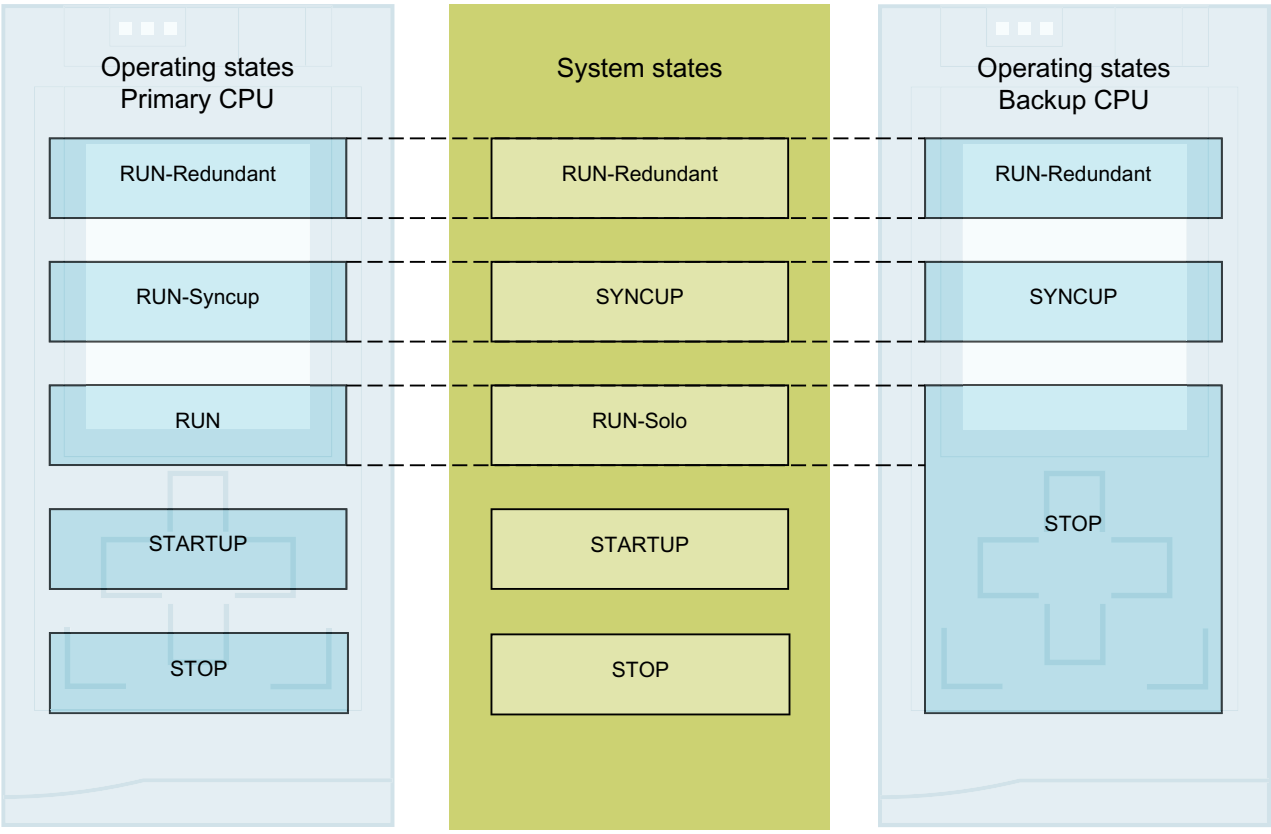

Figure 5-2 Operating states and system states

Meaning of the RUN/STOP, ERROR and MAINT LEDs

CPU 1518HF-4 PN has three LEDs for displaying the current operating state and diagnostics status.

NOTE

LED patterns of the S7-1500H redundant system

Note that it is not always possible to:

- Determine the state of the CPU from the signal pattern of individual LEDs
- Determine the state of the other CPU from the signal pattern of a CPU

The "Meaning" column only shows a possible typical cause.

To investigate the cause of the signal pattern, use the diagnostic buffer and its display via:

- STEP 7
- HMI devices
- Displays of the CPUs

The following table shows the meaning of the various color combinations for the RUN/STOP, ERROR and MAINT LEDs.

Table 5-1 Meaning of the LEDs

RUN/STOP LED	ERROR LED	MAINT LED	Meaning
LED off	LED off	LED off	Missing or insufficient supply voltage on the CPU.
LED flashes yellow/green	LED flashes red	LED flashes yellow	Startup (CPU booting)
			Test of LEDs during startup, inserting a module.
			LED flashing test
LED lit yellow	LED off	LED lit yellow	CPU is in operating state STOP.
			Completion of system initialization
LED flashes yellow	LED off	LED lit yellow	CPU executes internal activities in an operating state ≠ RUN-Redundant.
LED lit yellow	LED flashes red	LED flashes yellow	CPU defective Firmware update using SIMATIC Memory Card has failed.
LED lit yellow	LED off	LED flashes yellow	Firmware update successfully completed.
LED flashes yellow/green	LED off	LED lit yellow	The primary CPU is in STARTUP operating state. The backup CPU is in SYNCUP operating state.
LED flashes yellow	LED off	LED off	The CPU performs a warm restart.

1) If there is not enough storage space on a SIMATIC Memory Card or on both SIMATIC Memory Cards in RUN-Redundant, the write function is aborted and the redundant system continues operation with the original configuration. The redundant system will remain in the RUN-Redundant system state.

RUN/STOP LED	ERROR LED	MAINT LED	Meaning
LED lit green	LED off	LED lit yellow	Maintenance demanded for the plant. You need to check/replace the affected hardware within a short period of time.
			The primary CPU is in the RUN or RUN-Syncup operating state.
			Active Force job
			Warning limit for F-cycle violated
			Safety mode deactivated
LED lit green	LED off	LED off	The CPU is in RUN-Redundant operating state. There are no events, requirements, errors, etc.
LED lit green	LED flashes red	LED off	A diagnostic event is pending in RUN-Redundant operating state.
LED lit green	LED flashes red	LED lit yellow	A diagnostic event (e.g. failure of an IO device within the PROFINET ring or no access to SIMATIC memory card possible[1]) and maintenance is demanded (e.g. interruption of the PROFINET ring).

[1] If there is not enough storage space on a SIMATIC Memory Card or on both SIMATIC Memory Cards in RUN-Redundant, the write function is aborted and the redundant system continues operation with the original configuration. The redundant system will remain in the RUN-Redundant system state.

NOTE

MAINT LED of the two CPUs

The MAINT LEDs of both CPUs only go out when the following conditions are fulfilled:

- The CPUs are in the RUN-Redundant system state.
- No maintenance is demanded.

NOTE

LED displays in redundant operating state

In the RUN-Redundant system state, the LED displays on both CPUs are identical (exception: you are performing an LED flash test on one CPU).

Meaning of LINK RX/TX LED

Each port of the X1, X2, X3, X4 and X5 interfaces has a LINK RX/TX LED. The table below shows the various LED patterns of the CPU 1518HF-4 PN ports.

Table 5-2 Meaning of LINK RX/TX LED

LINK TX/RX LED	Meaning
Off	There is no connection between the interface of the device and a communication partner. No data is currently being sent/received via the interface. There is no LINK connection. The redundancy connections were interrupted.

LINK TX/RX LED	Meaning
Flashes green	The CPU performs an LED flash test.
Illuminated green	There is a connection between the interface of the device and a communication partner. The redundancy connections are OK.
LED flashes yellow/green	Data is currently being received or sent by a communication partner via the interface of the device.

NOTE

"LED" instruction

You can read the status (e.g. "On" or "Off") of LEDs of a CPU or a module using the "LED" instruction. Note, however, that it is not possible to read the LED status of the LINK RX/TX LEDs on all S7-1500 R/H CPUs.

You can find additional information on the "LED" instruction in the STEP 7 online help.

Technical specifications 6

The following table shows the technical specifications as of 11/2022. You can find a data sheet including daily updated technical specifications on the Internet (https://support.industry.siemens.com/cs/ww/en/pv/6ES7518-4JP00-0AB0/td?dl=en).

Article number	6ES7518-4JP00-0AB0
General information	
Product type designation	CPU 1518HF-4PN
HW functional status	FS02
Firmware version	V3.0
• FW update possible	Yes
Product function	
• I&M data	Yes; I&M0 to I&M3
• Isochronous mode	No
Engineering with	
• STEP 7 TIA Portal configurable/integrated from version	V18 (FW V3.0) / V17 (FW V2.9)
Display	
Screen diagonal [cm]	6.1 cm
Control elements	
Number of keys	6
Mode selector switch	1
Supply voltage	
Rated value (DC)	24 V
permissible range, lower limit (DC)	19.2 V
permissible range, upper limit (DC)	28.8 V
Reverse polarity protection	Yes
Mains buffering	
• Mains/voltage failure stored energy time	5 ms
• Repeat rate, min.	1/s
Input current	
Current consumption (rated value)	1.55 A
Current consumption, max.	1.95 A
Inrush current, max.	1.95 A; Rated value
I^2t	0.4 $A^2 \cdot s$
Power loss	
Power loss, typ.	24 W
Memory	
Number of slots for SIMATIC memory card	1

Article number	6ES7518-4JP00-0AB0
SIMATIC memory card required	Yes
Work memory	
• integrated (for program)	9 Mbyte
• integrated (for data)	60 Mbyte
Load memory	
• Plug-in (SIMATIC Memory Card), max.	32 Gbyte
Backup	
• maintenance-free	Yes
CPU processing times	
for bit operations, typ.	4 ns
for word operations, typ.	6 ns
for fixed point arithmetic, typ.	6 ns
for floating point arithmetic, typ.	24 ns
CPU-blocks	
Number of elements (total)	20 000; Blocks (OB, FB, FC, DB) and UDTs
DB	
• Number range	1 ... 60 999; subdivided into: number range that can be used by the user: 1 ... 59 999, and number range of DBs created via SFC 86: 60 000 ... 60 999
• Size, max.	16 Mbyte; For DBs with absolute addressing, the max. size is 64 KB
FB	
• Number range	0 ... 65 535
• Size, max.	1 Mbyte
FC	
• Number range	0 ... 65 535
• Size, max.	1 Mbyte
OB	
• Size, max.	1 Mbyte
• Number of free cycle OBs	100
• Number of time alarm OBs	20
• Number of delay alarm OBs	20
• Number of cyclic interrupt OBs	20; with minimum OB 3x cycle of 100 µs
• Number of process alarm OBs	50
• Number of DPV1 alarm OBs	3
• Number of startup OBs	100
• Number of asynchronous error OBs	4
• Number of synchronous error OBs	2
• Number of diagnostic alarm OBs	1

Article number	6ES7518-4JP00-0AB0
Nesting depth	
• per priority class	24; Up to 8 possible for F-blocks
Counters, timers and their retentivity	
S7 counter	
• Number	2 048
Retentivity	
– adjustable	Yes
IEC counter	
• Number	Any (only limited by the main memory)
Retentivity	
– adjustable	Yes
S7 times	
• Number	2 048
Retentivity	
– adjustable	Yes
IEC timer	
• Number	Any (only limited by the main memory)
Retentivity	
– adjustable	Yes
Data areas and their retentivity	
Retentive data area (incl. timers, counters, flags), max.	768 kbyte; In total; available retentive memory for bit memories, timers, counters, DBs, and technology data (axes): 700 KB
Flag	
• Size, max.	16 kbyte
• Number of clock memories	8; 8 clock memory bit, grouped into one clock memory byte
Data blocks	
• Retentivity adjustable	Yes
• Retentivity preset	No
Local data	
• per priority class, max.	64 kbyte; max. 16 KB per block
Address area	
Number of IO modules	8 192; max. number of modules / submodules
I/O address area	
• Inputs	32 kbyte; All inputs are in the process image
• Outputs	32 kbyte; All outputs are in the process image
per integrated IO subsystem	
– Inputs (volume)	16 kbyte
– Outputs (volume)	16 kbyte

Article number	6ES7518-4JP00-0AB0
Subprocess images	
• Number of subprocess images, max.	32
Hardware configuration	
Number of distributed IO systems	1
Number of IO Controllers	
• integrated	1
Rack	
• Modules per rack, max.	1; CPU
Time of day	
Clock	
• Type	Hardware clock
• Backup time	6 wk; At 40 °C ambient temperature, typically
• Deviation per day, max.	10 s; Typ.: 2 s
Operating hours counter	
• Number	16
Clock synchronization	
• supported	Yes
• on Ethernet via NTP	Yes
Interfaces	
Number of PROFINET interfaces	3
1. Interface	
Interface types	
• RJ 45 (Ethernet)	Yes; X1
• Number of ports	2
• integrated switch	Yes
Protocols	
• IP protocol	Yes; IPv4
• PROFINET IO Controller	Yes
• PROFINET IO Device	No
• SIMATIC communication	Yes; Only Server
• Open IE communication	Yes
• Web server	No
• Media redundancy	Yes
PROFINET IO Controller	
Services	
– PG/OP communication	Yes
– Isochronous mode	No
– IRT	No
– PROFIenergy	Yes; per user program

Article number	6ES7518-4JP00-0AB0
– Number of connectable IO Devices, max.	256
– Updating times	The minimum value of the update time also depends on communication share set for PROFINET IO, on the number of IO devices, and on the quantity of configured user data
Update time for RT	
– for send cycle of 1 ms	1 ms to 512 ms
2. Interface	
Interface types	
• RJ 45 (Ethernet)	Yes; X2
• Number of ports	1
• integrated switch	No
Protocols	
• IP protocol	Yes; IPv4
• PROFINET IO Controller	No
• PROFINET IO Device	No
• SIMATIC communication	Yes; Only Server
• Open IE communication	Yes
• Web server	No
• Media redundancy	No
3. Interface	
Interface types	
• RJ 45 (Ethernet)	Yes; X3
• Number of ports	1
• integrated switch	No
Protocols	
• IP protocol	Yes; IPv4
• SIMATIC communication	Yes; Only Server
• Open IE communication	Yes
• Web server	No
4. Interface	
Interface type	Pluggable synchronization submodule (FO)
Plug-in interface modules	Synchronization module 6ES7960-1CB00-0AA5, 6ES7960-1FB00-0AA5 or 6ES7960-1FE00-0AA5
5. Interface	
Interface type	Pluggable synchronization submodule (FO)
Plug-in interface modules	Synchronization module 6ES7960-1CB00-0AA5, 6ES7960-1FB00-0AA5 or 6ES7960-1FE00-0AA5
Interface types	
RJ 45 (Ethernet)	

Article number	6ES7518-4JP00-0AB0
• 100 Mbps	Yes
• 1000 Mbps	Yes; Only possible at the X3 interface of the CPU 1518
• Autonegotiation	Yes
• Autocrossing	Yes
• Industrial Ethernet status LED	Yes
Protocols	
PROFIsafe	Yes; V2.4 / V2.6
Number of connections	
• Number of connections, max.	320
• Number of connections reserved for ES/HMI/web	10
• Number of connections via integrated interfaces	320
• Number of S7 routing paths	64
Redundancy mode	
• PROFINET system redundancy (S2)	Yes
• PROFINET system redundancy (R1)	Yes
Media redundancy	
– Media redundancy	only via 1st interface (X1)
– MRP	Yes; MRP Automanager according to IEC 62439-2 Edition 2.0
– MRP interconnection, supported	Yes; as MRP ring node according to IEC 62439-2 Edition 3.0
– MRPD	No
– Switchover time on line break, typ.	200 ms; PROFINET MRP
– Number of stations in the ring, max.	50
SIMATIC communication	
• PG/OP communication	Yes; encryption with TLS V1.3 pre-selected
• S7 routing	Yes
• S7 communication, as server	Yes
• S7 communication, as client	No
Open IE communication	
• TCP/IP	Yes
– Data length, max.	64 kbyte
– several passive connections per port, supported	Yes
• ISO-on-TCP (RFC1006)	Yes
– Data length, max.	64 kbyte
• UDP	Yes

Article number	6ES7518-4JP00-0AB0
– Data length, max.	2 kbyte; 1 472 bytes for UDP broadcast
– UDP multicast	Yes; 128 multicast circuits (of which max. 5 via X1)
• DHCP	No
• DNS	Yes
• SNMP	Yes
• DCP	Yes
• LLDP	Yes
Web server	
• HTTP	No
• HTTPS	No
OPC UA	
• OPC UA Client	No
• OPC UA Server	No
Further protocols	
• MODBUS	Yes; MODBUS TCP
S7 message functions	
Number of login stations for message functions, max.	64
Program alarms	Yes
Number of configurable program messages, max.	10 000; Program messages are generated by the "Program_Alarm" block, ProDiag or GRAPH
Number of loadable program messages in RUN, max.	5 000
Number of simultaneously active program alarms	
• Number of program alarms	4 000
• Number of alarms for system diagnostics	1 000
Test commissioning functions	
Joint commission (Team Engineering)	No
Status block	Yes; Up to 16 simultaneously
Single step	No
Number of breakpoints	20; Breakpoints are only supported in RUN-Solo status
Status/control	
• Status/control variable	Yes; without fail-safe
• Variables	inputs/outputs, bit memories, DBs, peripheral I/Os (without fail-safe), times, counters
• Number of variables, max.	
– of which status variables, max.	200; per job
– of which control variables, max.	200; per job
Forcing	

Article number	6ES7518-4JP00-0AB0
• Forcing	Yes; without fail-safe
• Forcing, variables	peripheral inputs/outputs (without fail-safe)
• Number of variables, max.	200
Diagnostic buffer	
• present	Yes
• Number of entries, max.	3 200
– of which powerfail-proof	1 000
Traces	
• Number of configurable Traces	8
• Memory size per trace, max.	512 kbyte
Interrupts/diagnostics/status information	
Diagnostics indication LED	
• RUN/STOP LED	Yes
• ERROR LED	Yes
• MAINT LED	Yes
• Connection display LINK TX/RX	Yes
Supported technology objects	
Motion Control	No
Controller	
• PID_Compact	Yes; Universal PID controller with integrated optimization
• PID_3Step	Yes; PID controller with integrated optimization for valves
• PID-Temp	Yes; PID controller with integrated optimization for temperature
Counting and measuring	Yes
• High-speed counter	No
Standards, approvals, certificates	
Suitable for safety functions	Yes; e.g. emergency stop, acknowledgment button
Highest safety class achievable in safety mode	
• Performance level according to ISO 13849-1	PLe
• SIL acc. to IEC 61508	SIL 3
Probability of failure (for service life of 20 years and repair time of 100 hours)	
– Low demand mode: PFDavg in accordance with SIL3	< 2.00E-05
– High demand/continuous mode: PFH in accordance with SIL3	< 1.00E-09
Ambient conditions	
Ambient temperature during operation	

Article number	6ES7518-4JP00-0AB0
• horizontal installation, min.	0 °C
• horizontal installation, max.	60 °C; Display: 50 °C, at an operating temperature of typically 50 °C, the display is switched off
• vertical installation, min.	0 °C
• vertical installation, max.	40 °C; Display: 40 °C, at an operating temperature of typically 40 °C, the display is switched off
Ambient temperature during storage/transportation	
• min.	-40 °C
• max.	70 °C
Altitude during operation relating to sea level	
• Installation altitude above sea level, max.	5 000 m; Restrictions for installation altitudes > 2 000 m, see manual
configuration / header	
configuration / programming / header	
Programming language	
– LAD	Yes; incl. failsafe
– FBD	Yes; incl. failsafe
– STL	Yes
– SCL	Yes
– GRAPH	Yes
Know-how protection	
• User program protection/password protection	Yes
• Copy protection	No
• Block protection	Yes
Access protection	
• protection of confidential configuration data	Yes
• Password for display	Yes
• Protection level: Write protection	Yes
• Protection level: Read/write protection	Yes
• Protection level: Write protection for Failsafe	Yes
• Protection level: Complete protection	Yes
programming / cycle time monitoring / header	
• lower limit	adjustable minimum cycle time
• upper limit	adjustable maximum cycle time
Dimensions	
Width	210 mm
Height	147 mm

Article number	6ES7518-4JP00-0AB0
Depth	129 mm
Weights	
Weight, approx.	2 116 g

General technical specifications

You can find information on the general technical specifications, such as standards and approvals, electromagnetic compatibility, protection class, etc. in the system manual for Redundant System S7-1500R/H (https://support.industry.siemens.com/cs/ww/en/view/109754833).

Dimension drawing

A

This section contains the dimension drawing of the module on the mounting rail, as well as a dimension drawing with the front panel open. Keep to the dimensions when installing in cabinets, control rooms, etc.

Dimension drawings of the CPU 1518HF-4 PN

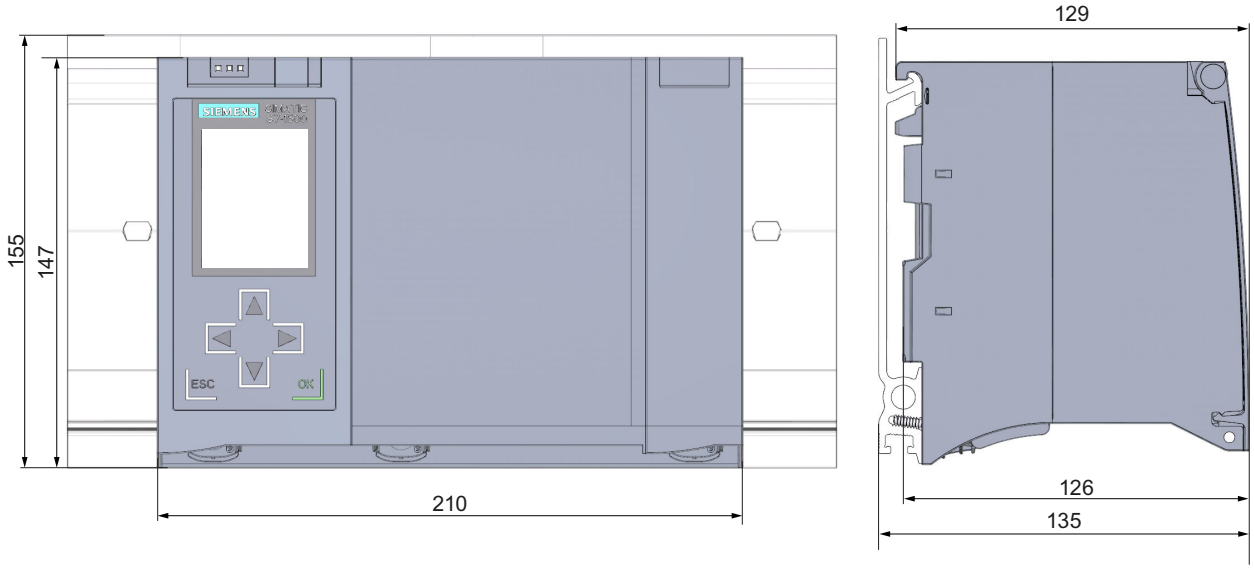

Figure A-1 Dimension drawing of the CPU 1518HF-4 PN, front and side view

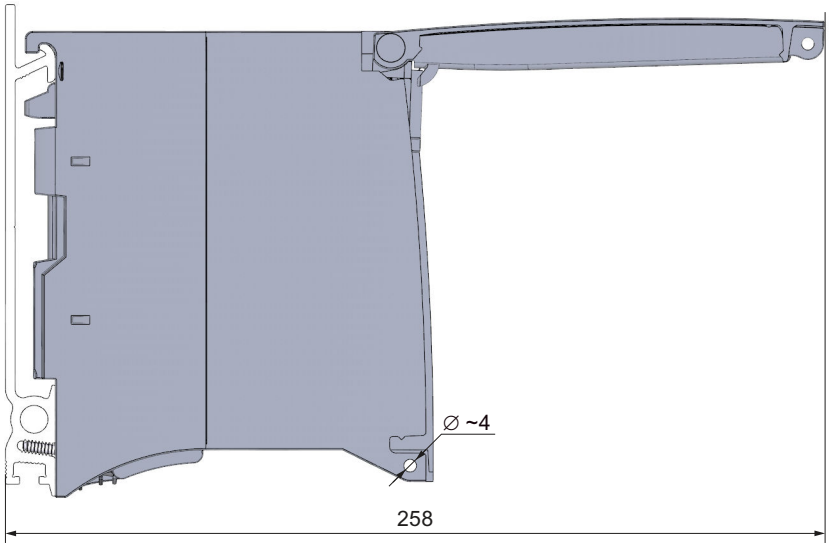

Figure A-2 Dimension drawing of the CPU 1518HF-4 PN, side view with front panel open

SIEMENS

SIMATIC S7-1200/S7-1500 F-CPUs

Product Information

Security information

Siemens provides products and solutions with industrial security functions that support the secure operation of plants, systems, machines and networks.

In order to protect plants, systems, machines and networks against cyber threats, it is necessary to implement – and continuously maintain – a holistic, state-of-the-art industrial security concept. Siemens' products and solutions constitute one element of such a concept.

Customers are responsible for preventing unauthorized access to their plants, systems, machines and networks. Such systems, machines and components should only be connected to an enterprise network or the internet if and to the extent such a connection is necessary and only when appropriate security measures (e.g. firewalls and/or network segmentation) are in place.

For additional information on industrial security measures that may be implemented, please visit (https://www.siemens.com/industrialsecurity).

Siemens' products and solutions undergo continuous development to make them more secure. Siemens strongly recommends that product updates are applied as soon as they are available and that the latest product versions are used. Use of product versions that are no longer supported, and failure to apply the latest updates may increase customers' exposure to cyber threats.

To stay informed about product updates, subscribe to the Siemens Industrial Security RSS Feed visit (https://www.siemens.com/industrialsecurity).

Content

Introduction

This Product Information contains important information on the F-CPUs specified in the section "Scope of validity". The Product Information is part of the product supplied. The information in this Product Information should be considered more up-to-date than other documentation if uncertainties arise.

Scope of validity

The statements in this product information apply to the F-CPUs listed below:

S7-1200 F-CPUs	S7-1500 F-CPUs		
• CPU 1212FC DC/DC/DC • CPU 1212FC DC/DC/Rly • CPU 1214FC DC/DC/DC • CPU 1214FC DC/DC/Rly • CPU 1215FC DC/DC/DC • CPU 1215FC DC/DC/Rly	• CPU 1511(T)F-1 PN • CPU 1513F-1 PN • CPU 1515(T)F-2 PN • CPU 1516(T)F-3 PN/DP • CPU 1517(T)F-3 PN/DP • CPU 1518(T)F-4 PN/DP (MFP/ODK) • CPU 1518HF-4 PN	• CPU 1510SP F-1 PN • CPU 1512SP F-1 PN • CPU 1514SP (T)F-2 PN • CPU 1513proF-2 PN • CPU 1516proF-2 PN	S7-1500 F-Software Controller • CPU 1505SP (T)F • CPU 1507S F • CPU 1508S F

© Siemens AG 2015 - 2022. All rights reserved

Areas of application

Main areas of application of the S7-1200/1500 F-CPUs are personal and machine safety and burner controls. In addition to the safety program, you can also program standard applications.

You can operate the S7-1200/1500 F-CPUs in safety or standard mode.

The installed *STEP 7 Safety* license is required for safety mode. If the license for *STEP 7 Safety* is not installed, you can use the S7-1200/1500 F-CPUs in standard mode. In standard mode, S7-1200/1500 F-CPUs behave like standard S7-1200/1500 CPUs.

Additional information on using the S7-1200/1500 F-CPUs in safety mode is available in the programming and operating manual "SIMATIC Safety - Configuring and Programming (http://support.automation.siemens.com/WW/view/en/54110126)".

Additional information on using the S7-1200 F-CPUs in standard mode is available in the "S7-1200 Programmable controller (https://support.industry.siemens.com/cs/ww/en/view/109772940)" system manual.

Additional information on using the S7-1500 F-CPUs in standard mode is available in the relevant manuals for the S7-1500 and the standard-T-CPUs S7-1500 at the following links:

- CPUs 151x (http://support.automation.siemens.com/WW/view/en/67295862/133300)
- CPUs 151xT (https://support.industry.siemens.com/cs/ww/en/ps/22057/man)
- CPUs 151xSP (http://support.automation.siemens.com/WW/view/en/90466439/133300)
- CPU 151xpro-2 PN (https://support.industry.siemens.com/cs/ww/en/ps/13906/man)
- S7-1500 Software Controller (https://support.industry.siemens.com/cs/ww/en/view/109782375)

You can find the latest firmware for the relevant F-CPU by searching for downloads with the respective article number in the Industry Online Support (https://support.industry.siemens.com).

Note

Observe any application-specific requirements, for example on mains buffering for power supplies/power packs.

PFD_{avg} and PFH values for F-CPUs

Below are the probability of failure on demand values (PFD_{avg}, PFH values) for the above-named F-CPUs with a mission time of 20 years and an MTTR of 100 hours:

Low demand mode low demand mode **According to IEC 61508:2010:** **PFD_{avg} = Average probability of dangerous failure on demand**	**High demand or continuous mode** high demand/continuous mode **According to IEC 61508:2010:** **PFH = Average frequency of a dangerous failure [h^{-1}]**
< 2E-05	< 1E-09 up to an operational altitude of 3 000 m or < 2E-09 at an operating altitude greater than 3 000 m up to 5 000 m

F-CPUs S7-1200/1500 for permissible ambient temperature and max. permissible installation height

CPU label	Article number	Ambient temperature		Installation altitude	
		Temperature range [°C]	From revision level	Max. altitude [m]	From revision level
S7-1200 F					
CPU 1212FC DC/DC/DC	6ES7212-1AF40-0XB0	0 to +55	FS 05	5 000	FS10 or higher
CPU 1212FC DC/DC/RLY	6ES7212-1HF40-0XB0	0 to +55	FS 05	2 000	FS 05 or higher
CPU 1214FC DC/DC/DC	6ES7214-1AF40-0XB0	0 to +55	FS 01	5 000	FS10 or higher
CPU 1214FC DC/DC/RLY	6ES7214-1HF40-0XB0	0 to +55	FS 01	2 000	FS01 or higher
CPU 1215FC DC/DC/DC	6ES7215-1AF40-0XB0	0 to +55	FS 01	5 000	FS10 or higher
CPU 1215FC DC/DC/RLY	6ES7215-1HF40-0XB0	0 to +55	FS 01	2 000	FS01 or higher
S7-1500 F					
CPU 1510SP F-1 PN	6ES7510-1SJ01-0AB0	-25 to +60	FS 01	5 000	FS03 or higher
CPU 1510SP F-1 PN	6ES7510-1SK03-0AB0	-30 to +60	FS 01	5 000	FS01 or higher
CPU 1512SP F-1 PN	6ES7512-1SK01-0AB0	-25 to +60	FS 01	5 000	FS03 or higher
CPU 1512SP F-1 PN	6ES7512-1SM03-0AB0	-30 to +60	FS 01	5 000	FS01 or higher
CPU 1514SP F-2 PN	6ES7514-2SN03-0AB0	-30 to +60	FS 01	5 000	FS01 or higher
CPU 1514SP TF-2 PN	6ES7514-2WN03-0AB0	-30 to +60	FS 01	5 000	FS01 or higher
CPU 1511F-1 PN	6ES7511-1FK01-0AB0	0 to +60	FS 01	5 000	FS03 or higher
CPU 1511F-1 PN	6ES7511-1FK02-0AB0	-25 to +60	FS 01	5 000	FS01 or higher
CPU 1511F-1 PN	6ES7511-1FL03-0AB0	-30 to +60	FS 01	5 000	FS01 or higher
CPU 1511TF-1 PN	6ES7511-1UK01-0AB0	0 to +60	FS 03	5 000	FS03 or higher
CPU 1511TF-1 PN	6ES7511-1UL03-0AB0	-30 to +60	FS 01	5 000	FS01 or higher
CPU 1513F-1 PN	6ES7513-1FL01-0AB0	0 to +60	FS 01	5 000	FS03 or higher
CPU 1513F-1 PN	6ES7513-1FL02-0AB0	-25 to +60	FS 01	5 000	FS01 or higher
CPU 1513F-1 PN	6ES7513-1FM03-0AB0	-30 to +60	FS 01	5 000	FS01 or higher
CPU 1515F-2 PN	6ES7515-2FM01-0AB0	0 to +60	FS 01	5 000	FS03 or higher
CPU 1515F-2 PN	6ES7515-2FM02-0AB0	-25 to +60	FS 01	5 000	FS01 or higher
CPU 1515F-2 PN	6ES7515-2FN03-0AB0	-30 to +60	FS 01	5 000	FS01 or higher
CPU 1515TF-2 PN	6ES7515-2UM01-0AB0	0 to +60	FS 03	5 000	FS03 or higher
CPU 1515TF-2 PN	6ES7515-2UN03-0AB0	-30 to +60	FS 01	5 000	FS01 or higher

CPU label	Article number	Ambient temperature		Installation altitude	
CPU 1516F-3 PN/DP	6ES7516-3FN01-0AB0	0 to +60	FS 01	5 000	FS03 or higher
CPU 1516F-3 PN/DP	6ES7516-3FN02-0AB0	-25 to +60	FS 01	5 000	FS01 or higher
CPU 1516F-3 PN/DP	6ES7516-3FP03-0AB0	-30 to +60	FS 01	5 000	FS01 or higher
CPU 1513proF-2 PN	6ES7513-2GL00-0AB0	-25 to +55	FS 01	5 000	FS01 or higher
CPU 1516proF-2 PN	6ES7516-2GN00-0AB0	-25 to +55	FS 01	5 000	FS02 or higher
S7-1500 F					
CPU 1516TF-3 PN/DP	6ES7516-3UN00-0AB0	0 to +60	FS 05	5 000	FS05 or higher
CPU 1517F-3 PN/DP	6ES7517-3FP00-0AB0	0 to +60	FS 01	5 000	FS05 or higher
CPU 1517TF-3 PN/DP	6ES7517-3UP00-0AB0	0 to +60	FS 04	5 000	FS05 or higher
CPU 1518F-4 PN/DP	6ES7518-4FP00-0AB0	0 to +60	FS 01	5 000	FS05 or higher
CPU 1518F-4 PN/DP ODK	6ES7518-4FP00-3AB0	0 to +60	FS 04	5 000	FS05 or higher
CPU 1518F-4 PN/DP MFP	6ES7518-4FX00-1AB0	0 to +60	FS 01	5 000	FS01 or higher
CPU 1518HF-4 PN	6ES7518-4JP00-0AB0	0 to +60	FS 01	5 000	FS01 or higher
CPU 1518TF-4 PN/DP	6ES7518-4UP00-0AB0	0 to +60	FS 10	5 000	FS10 or higher

Restrictions on the maximum specified ambient air temperature with reference to the installation altitude

Installation altitude	Derating factor for ambient air temperature [1]
-1 000 to 2 000 m	1.0
2 000 to 3 000 m	0.9
3 000 to 4 000 m	0.8
4 000 to 5 000 m	0.7

[1] The basic value for the application of the derating factor is the maximum permissible ambient temperature in °C for 2 000 m

Note

- Linear interpolation between altitudes is permissible.
- The derating factors compensate for the decreasing cooling effect of air at higher altitudes due to lower density.
- Pay attention to the mounting position of the respective module in the technical data. Based on the IEC 61131-2:2017 standard.
- Ensure that the power supply units used are also adequate for altitudes > 2 000 m.
- The displays of the S7-1500 CPUs are designed for an altitude of ≤ 3 000 m. If used at > 3 000 m, in rare cases, there can be problems in the representation of the CPU display; however, these do not have an effect on the functional safety of the F-CPU.
- The "Safety-oriented tripping of standard modules" function, as described on the SIEMENS Industry Online Support (https://support.industry.siemens.com/cs/ww/en/view/39198632) pages, is only approved up to max. 2 000 m.

Effects on the availability

The higher cosmic radiation present during operation at altitudes above 2 000 m will also start to have an effect on the failure rate of electronic components (the so-called soft error rate). In rare cases, this can result in a transition of the F-CPU into the safe state. However, the functional safety of the F-CPU is fully retained.

Currently valid markings and approvals

Note

Information on the components of the S7-1200/S7-1500

The currently valid markings and approvals are printed on the components of the S7-1500.

The F-CPUs are certified for use in safety mode up to 3 000 m or 5 000 m. All other markings and approvals are currently based on a height of up to 2 000 m.

Shipping and storage conditions

The S7-1200/S7-1500 fulfills the requirements according to IEC 61131-2 with regard to the shipping and storage conditions. The following information applies to modules shipped or stored in their original packaging.

Type of condition	Permissible range
Air pressure	from 1 140 to 540 hPa (corresponds to an altitude of -1 000 m to 5 000 m)

Overview of the work memory of F-CPUs compared with standard CPUs

CPU	Work memory	F-CPU	Work memory
CPU 1212C DC/DC/DC CPU 1212C DC/DC/Rly	100 KB	CPU 1212FC DC/DC/DC CPU 1212FC DC/DC/Rly	150 KB
CPU 1214C DC/DC/DC CPU 1214C DC/DC/Rly	150 KB	CPU 1214FC DC/DC/DC CPU 1214FC DC/DC/Rly	200 KB
CPU 1215C DC/DC/DC CPU 1215C DC/DC/Rly	200 KB	CPU 1215FC DC/DC/DC CPU 1215FC DC/DC/Rly	250 KB
CPU 1511-1 PN	300 KB	CPU 1511F-1 PN	450 KB
CPU 1511T-1 PN	450 KB	CPU 1511TF-1 PN	450 KB
CPU 1513-1 PN	600 KB	CPU 1513F-1 PN	900 KB
CPU 1510SP-1 PN	200 KB	CPU 1510SP F-1 PN	300 KB
CPU 1512SP-1 PN	400 KB	CPU 1512SP F-1 PN	600 KB
CPU 1514SP-2 PN	600 KB	CPU 1514SP F-2 PN	900 KB
CPU 1514SP T-2 PN	900 KB	CPU 1514SP TF-2 PN	900 KB
CPU 1515-2 PN	1 MB	CPU 1515F-2 PN	1.5 MB
CPU 1515T-2 PN	1.5 MB	CPU 1515TF-2 PN	1.5 MB
CPU 1516-3 PN/DP	2 MB	CPU 1516F-3 PN/DP	3 MB
CPU 1516T-3 PN/DP	3 MB	CPU 1516TF-3 PN/DP	3 MB
CPU 1517-3 PN/DP	2 MB	CPU 1517F-3 PN/DP	3 MB
CPU 1517T-3 PN/DP	3 MB	CPU 1517TF-3 PN/DP	3 MB
CPU 1518-4 PN/DP (MFP/ODK)	6 MB	CPU 1518F-4 PN/DP (MFP/ODK)	9 MB
CPU 1518T-4 PN/DP	9 MB	CPU 1518TF-4 PN/DP	9 MB
---	---	CPU 1518HF-4 PN	9 MB
CPU 1513pro-2 PN	300 KB	CPU 1513proF-2 PN	450 KB
CPU 1516pro-2 PN	1 MB	CPU 1516proF-2 PN	1.5 MB
CPU 1505SP	1 MB	CPU 1505SP (T)F	1.5 MB
CPU 1505SP T	1.5 MB	CPU 1505SP TF	1.5 MB
CPU 1507S	5 MB	CPU 1507S F	7.5 MB
CPU 1508S	10 MB	CPU 1508S F	12.5 MB

For (F-)CPUs from FW V3.0 (<= CPU 1516(F)-3 PN/DP) and (F-)CPUs S7-1200, the work memory was increased with TIA Portal V18.

Overview of the behavior of the F-CPUs regarding communication network disconnectors according to IEC 61784-3-3 (PROFIsafe standard)

F-CPU	Network disconnector according to IEC 61784-3-3	Remark
CPU 1212FC DC/DC/DC CPU 1212FC DC/DC/Rly	• Network disconnection between Ethernet X1 and CP/CM on the backplane bus.	see [1] and [2]
CPU 1214FC DC/DC/DC CPU 1214FC DC/DC/Rly		
CPU 1215FC DC/DC/DC CPU 1215FC DC/DC/Rly		
CPU 1511(T)F-1 PN		
CPU 1513F-1 PN		
CPU 1510SP F-1 PN		
CPU 1512SP F-1 PN		
CPU 1514SP (T)F-2 PN	• Network disconnection between Ethernet X1 and X2. • Network disconnection between Ethernet X1 and CP/CM on the backplane bus. • Network disconnection between Ethernet X2 and CP/CM on the backplane bus.	
CPU 1515(T)F-2 PN		
CPU 1516(T)F-3 PN/DP		
CPU 1517(T)F-3 PN/DP		
CPU 1513proF-2 PN		
CPU 1516proF-2 PN		
CPU 1518(T)F-4 PN/DP (ODK) CPU 1518HF-4 PN	• Network disconnection between Ethernet X1, X2 and X3. • Network disconnection between Ethernet X1 and CP/CM on the backplane bus. • Network disconnection between Ethernet X2 and CP/CM on the backplane bus. • Network disconnection between Ethernet X3 and CP/CM on the backplane bus.	
CPU 1518F-4 PN/DP MFP	**No**	
CPU 1505SP (T)F		
CPU 1507S F		
CPU 1508S F		

[1] Absolute network disconnector between socket A and B:

a) If A and B belong to different local Ethernet interfaces (for example, X1 and X2) and no bridging is implemented at communication level 2 for these interfaces.

a) If either A or B are part of a local Ethernet interface and the other is part of a backplane bus module with an Ethernet interface (CP, CM), and no bridging is implemented at communication level 2 for these interfaces.

[2] No network disconnector between socket A and B:

a) If A and B belong to the same local Ethernet interface (for example, X1).

b) If A and B both belong to a backplane bus module (CP, CM).

Even when using a communication network disconnector according to IEC 61784-3-3 (PROFIsafe standard), you must still ensure that the individual isolated networks are not connected by other standard components. See also this FAQ (https://support.industry.siemens.com/cs/ww/en/view/109740240).

Standard CPUs are generally not network disconnectors according to IEC 61784-3-3 (PROFIsafe standard).

Support of PROFIsafe V2 for PROFINET IO

Interfaces that support PROFINET IO also support PROFIsafe V2.

Support of PROFIsafe V2.4 for PROFIBUS DP

Interfaces that support PROFIBUS DP also support PROFIsafe V2.4 but not PROFIsafe V2.6.

Restriction with "CREAT_DB" and "DELETE_DB" instructions

F-DBs can neither be created nor deleted.

Restriction with "READ_DBL" and "WRIT_DBL" instructions

The destination address must not point to an F-DB.

Restrictions when configuring the retentive behavior of data blocks

The configuration of the retentive behavior of data blocks is not supported for F-DBs. This means that the actual values of the F-DBs will not be retentive in the event of POWER OFF/POWER ON and restart (STOP-RUN) of the F-CPU. The F-DBs retain the initial values from the load memory.

The "Retain" check box is grayed-out for all tags in F-DBs.

Configuration control (option handling) on an S7-1200 F-CPU

Configuration control (option handling) on an S7-1200 F-CPU is possible with central modules subject to the following limitation:

- The fail-safe S7-1200 modules cannot be swapped and must also always be physically inserted into their configured slot.

Position the fail-safe S7-1200 modules directly next to the F-CPU. Position the standard modules on the right next to the fail-safe S7-1200 modules.

Procedure for loading a configuration for firmware < V2.0 for S7-1500 F-CPUs

If you have loaded an S7-1500 F-CPU with a configuration for firmware as of V2.0 with configured protection level "Full access incl. fail-safe (no protection)" and you now want to load a configuration for firmware <= V1.8 to this F-CPU, you must observe the following:

When the configuration with firmware <= V1.8 is loaded to the F-CPU, you will be prompted to enter the password and the entered password will be identified as invalid.

As a remedy, format the SIMATIC Memory Card as described in the online help for STEP 7 under "Formatting an S7-1500 memory card". You can then load the configuration for firmware <= V1.8 to the F-CPU.

Procedure for loading a configuration for firmware V4.1 S7-1200 F-CPUs

If you have loaded an S7-1200 F-CPU with a configuration for firmware as of V4.5 with configured protection level "Full access incl. fail-safe (no protection)" and you now want to load a configuration for firmware 4.1 to this F-CPU, you must observe the following:

When the configuration with firmware V4.1 is loaded onto the F-CPU, you are prompted to enter the password and the entered password will be identified as invalid.

As a remedy, format the SIMATIC Memory Card if you are working with an external load memory (SIMATIC Memory Card). If you are working with the internal load memory, proceed as you would for a lost password. You can then load the configuration for firmware V4.1 to the F-CPU.

Migrating or upgrading to TIA Portal V17 or higher

When migrating or upgrading to TIA Portal V17 or higher and current firmware (S7-1500F V2.9/S7-1200F V4.5), we recommend that you create a new backup file.

If the existing backup file is still used, an access authorization for the F-CPU may be required when restoring the software and hardware configuration of the F-CPU.

Use of isochronous mode interrupt (F-)OBs

The number of isochronous mode interrupt (F-)OBs depends on the F-CPU used. You can obtain information in the technical specification of the F-CPU.

If the sum of the isochronous mode interrupt OBs and the isochronous mode interrupt F-OBs exceeds the number specified in the technical specifications of the F-CPU, it is no longer possible to load the standard user program in RUN.

F-diagnostic messages with an S7-1500 HF CPU

Note

On a redundant system S7-1500HF, F-diagnostic messages are entered duplicated on both HF-CPUs (primary and backup CPU).

If one of the two HF CPUs is not available (e.g. STOP, POWER OFF, etc.), then the F-diagnostics is simply entered on the accessible HF CPU only. When the redundant HF-CPU returns, the diagnostics is duplicated again.

Warnings S055, S090 and S091 with an S7-1500 HF CPU

The following update applies to warnings S055, S090 and S091:

You must perform program identification for all three warnings on both the primary **and** backup CPUs in the RUN-Redundant mode.
While doing so, you must ensure via the display, e.g. in TIA Portal, that you perform the program identification on both the primary and backup CPUs. You can recognize this in the project tree by the "P" or "B" icon in the online view.

TIA Portal with CFC

STEP 7 Safety and F-CPUs with active F-functionality are not supported. You can use either CFC or the F-capability on an F-CPU.

Also note the entry on the Internet (https://support.industry.siemens.com/cs/ww/en/view/109797803).

Resetting a (T)F-CPU to factory settings

If you want to reset a (T)F-CPU online to factory settings including formatting of the SIMATIC Memory Card and are logged in with the password for "Full access (no protection)", the message "The device could not be reset" may be displayed.

Follow these steps:

1. Go to "Online und diagnostics".
2. Format the SIMATIC Memory Card under "Functions" with "Format memory card".
3. Enter the password for "Full access incl. fail-safe (no protection)".

Alternatively, follow these steps:

1. Go to the "Online" menu command. Select "Delete access rights".
2. Go to "Online und diagnostics".
3. Under "Functions", go to "Reset to factory settings".
4. Select "Format memory card".
5. Click on "Reset PLC".
6. Enter the password for "Full access incl. fail-safe (no protection)".

Requirements for power supplies in the event of voltage interruption

Note

To ensure adherence to IEC 61131-2 and NAMUR Recommendation NE 21, only use power packs/power supply units (230 V AC → 24 V DC) with a mains buffering time of at least 20 ms. Observe the relevant requirement in your product standards (e.g. 30 ms for "burners" pursuant to EN 298) as regards possible voltage interruptions. The latest up-to-date information on PS components is available on the Internet (https://mall.industry.siemens.com).

These requirements, of course, also apply to power packs/power supply units not constructed using ET 200SP or S7-300-/400-/1500 technology.

Display (for S7-1500 F-CPUs with display)

S7-1500 F-CPUs with display show you the following in the "Overview" menu under "Fail-safe":

- Safety mode activated/deactivated
- Collective F-signature
- Last fail-safe change
- Version of *STEP 7 Safety* with which the safety program was compiled.
- Information on the F-runtime groups
  - Name of F-runtime group
  - F-runtime groups signature
  - Current cycle time
  - Max. cycle time
  - Current runtime
  - Max. runtime
  - For F-CPUs FW V3.0 or higher (<= CPU 1516F-3 PN/DP), also "Remaining runtime in deactivated safety mode" is displayed here.

The following is displayed for each F-I/O under "Fail-safe parameters":

- F-parameter signature (with addresses)
- Safety mode
- F-monitoring time
- F-source address
- F-destination address

The following additional menu command is displayed in the "Settings" menu under "Protection":

- Enable/disable F-password

Write access to F-blocks is not permitted.

Note
Controlling fail-safe inputs/outputs can result set the F-CPU to STOP.

Note
With the display firmware V2.5, the display is not refreshed and cannot be operated for a few minutes after loading program changes. Afterwards, the display restarts.

Note
In the case of a redundant S7-1500HF system, the display of the "Last fail-safe change" in the display and web server is only synchronized in the RUN-Redundant mode.

Web server

S7-1200/1500 F-CPUs show you the following on the start page of the Web server:

- Safety mode activated/deactivated
- Collective F-signature
- Last fail-safe change
- Version of *STEP 7 Safety* with which the safety program was compiled.
- Information on the F-runtime groups
  - Name of F-runtime group
  - Residual runtime in deactivated safety mode
  - F-runtime groups signature
  - Current cycle time
  - Max. cycle time
  - Current runtime
  - Max. runtime

The following is displayed for each F-I/O on the "Module Information" web page in the "Fail-safe" tab:

- F-parameter signature (with addresses)
- Safety mode
- F-monitoring time
- F-source address
- F-destination address

Write access to F-blocks is not permitted.

Note
Controlling fail-safe inputs/outputs can result set the F-CPU to STOP.

The following points relate to the S7-1500 F-Software Controller

The S7-1500 F Software Controller is a fail-safe software CPU that is used on the following devices and is also only approved for these devices:

S7-1500 F-Software Controller	Device
CPU 1505SP (T)F	• CPU 1515SP PC(2)[2]
CPU 1507S F	• IPC 227E[1] and IPC 277E[1] • IPC 427D[1] and IPC 477D[1] • IPC 427E[1] and IPC 477E[1] • IPC 627D[1] • IPC 627E, IPC 647E and IPC 677E • IPC 677D[1] • IPC 827D[1] • IPC 847E
CPU 1508S F	• IPC 427E[1] and IPC 477E[1] • IPC 627D[1] • IPC 677D[1] • IPC 627E, IPC 647E and IPC 677E • IPC 827D[1] • IPC 847E

[1] Can only be used when NVRAM is present (to be automatically allocated). These devices support Fast Commisioning mode.

[2] These devices support the Fast Commissioning mode.

The devices specified in the table above react in a fail-safe manner when the S7-1500 F-Software Controller and *STEP 7 Safety* are used, even in the case of elevated electromagnetic interference. Special type tests for functional safety are therefore not required for these devices – in contrast to F-I/O. With regard to availability, however, you must observe the application-specific requirements, especially the standards for burner control.

The yellow adhesive label with the TÜV SÜD test mark for functional safety included in the scope of delivery is exclusively intended for use in connection with S7-1500 F-Software Controllers (not included in the download version of the product package). You can use the adhesive label to mark the hardware on which the S7-1500 F-Software Controller is installed. You must remove the adhesive label when you uninstall the S7-1500 F-Software Controller.

Backup and restore

Backup and restoration of project data is not supported.

Passwords for protection levels

The PC station does not distinguish between the two passwords of protection levels "Full access incl. fail-safe (no protection)" and "Full access (no protection)". The S7-1500 F-Software Controller distinguishes between the two passwords of protection levels "Full access incl. fail-safe (no protection)" and "Full access (no protection)".

ENDIS_PW instruction

When the ENDIS_PW instruction is used on an IPC, you can be locked out of your system because an IPC has no mode selector. As a remedy, you can follow a procedure similar to that described in the online help for the ENDIS_PW instruction under "Preventing unintentional lockout of an S7-1200 CPU".

The following applies for PC stations up to and including V2.0: If an unintentional lockout occurs, you can remedy this only by uninstalling and installing the S7-1500 F-Software Controller.

The following applies to PC stations V2.1 or higher: Members of the Windows "Failsafe Operators" user group can bypass the lockout using the "Delete Configuration" function.

Note

The Windows user "Everyone" is not taken into consideration if it is in the "Failsafe Operators" Windows user group.

TPM functionality

The TPM functionality cannot be used for S7-1500 F-Software Controllers because it could result in a STOP.

Using EWF or UWF and the EWF or UWF Manager

You cannot select EWF or UWF and the EWF or UWF Manager for the CPU volume.

Other particularities

WARNING

You must limit access for the S7-1500 F-Software Controller through access protection to persons who are authorized to install or uninstall the software of the S7-1500 F-Software Controller.

The following warning applies to an S7-1500 F Software Controller on an IPC 627E, IPC 647E, IPC 677E or IPC 847E:

WARNING

When you download the safety program, you must perform a POWER OFF/POWER ON afterwards before you run a program identification for acceptance.

Note

For an S7-1500 F Software Controller on an IPC 627E, IPC 647E, IPC 677E or IPC 847E, you must use at least the BIOS version V25.02.10.

Note

With an S7-1500 F-Software Controller with a PC station up to and including V2.1, the "Delete Configuration" function is only offered on the PC-station panel when no access protection (no protection) is set up on the F-CPU.

With a PC station as of V2.2, it is checked whether the Windows user is a member of the "Failsafe Operators" Windows user group. If the logged-on Windows user is a member of the group, they can execute the "Delete Configuration" function even when the F-password is set. If the logged-on Windows user is not a member of the group, the PC station behaves as up to V2.1.

Note

If the S7-1500 F-Software Controller features an access protection, this is not deleted with "Delete Configuration" and is retained.

Note

Required BIOS version for CPU 1505SP F prior to V2.5

For use of the CPU 1505SP F, you require BIOS version V2.00_02.01 or higher.

Note

The CPU clock must not be changed in RUN because this would result in a STOP. You can prevent this by disabling the energy-saving function.

Note

Assignment of PROFIsafe addresses for F-modules via PROFIBUS on IPCs with S7-1500 F Software Controller prior to V2.5

If you want to assign PROFIsafe addresses to F-modules that are being operated via PROFIBUS on an IPC with an S7-1500 F-Software Controller, assign the PROFIsafe addresses to the F-modules and then perform a POWER OFF/POWER ON of the PROFIBUS station.

Note

Loading the safety program or activating safety mode for S7-1500 F Software Controller prior to V2.5

After loading the safety program or activating safety mode, close the panel and then open it again to update the display on the panel.

Note

Load safety program into an S7-1500 F-Software Controller (V21.8.3 or higher)

When you download the safety program to an IPC647E, IPC847E, IPC627E or IPC677E, the S7-1500 F Software Controller needs to restart in very rare cases.

Repeat the download after the restart to complete the loading successfully.

Note

If you execute an update for a S7-1500 F Software Controller with V2.0 to a version > 2.0, the value "Last fail-safe change" is set to the time of installation if a safety program is already installed on the S7-1500 F-Software Controller.

Note

The "Configuration file export" functionality requires the *STEP 7 Safety* add-on package as of V15 and an S7-1500 F Software Controller prior to V2.5 with Windows.

Siemens AG
Digital Industries
Postfach 48 48
90026 NÜRNBERG
GERMANY

F-CPUs
A5E35635424-AM, 11/2022

SIEMENS

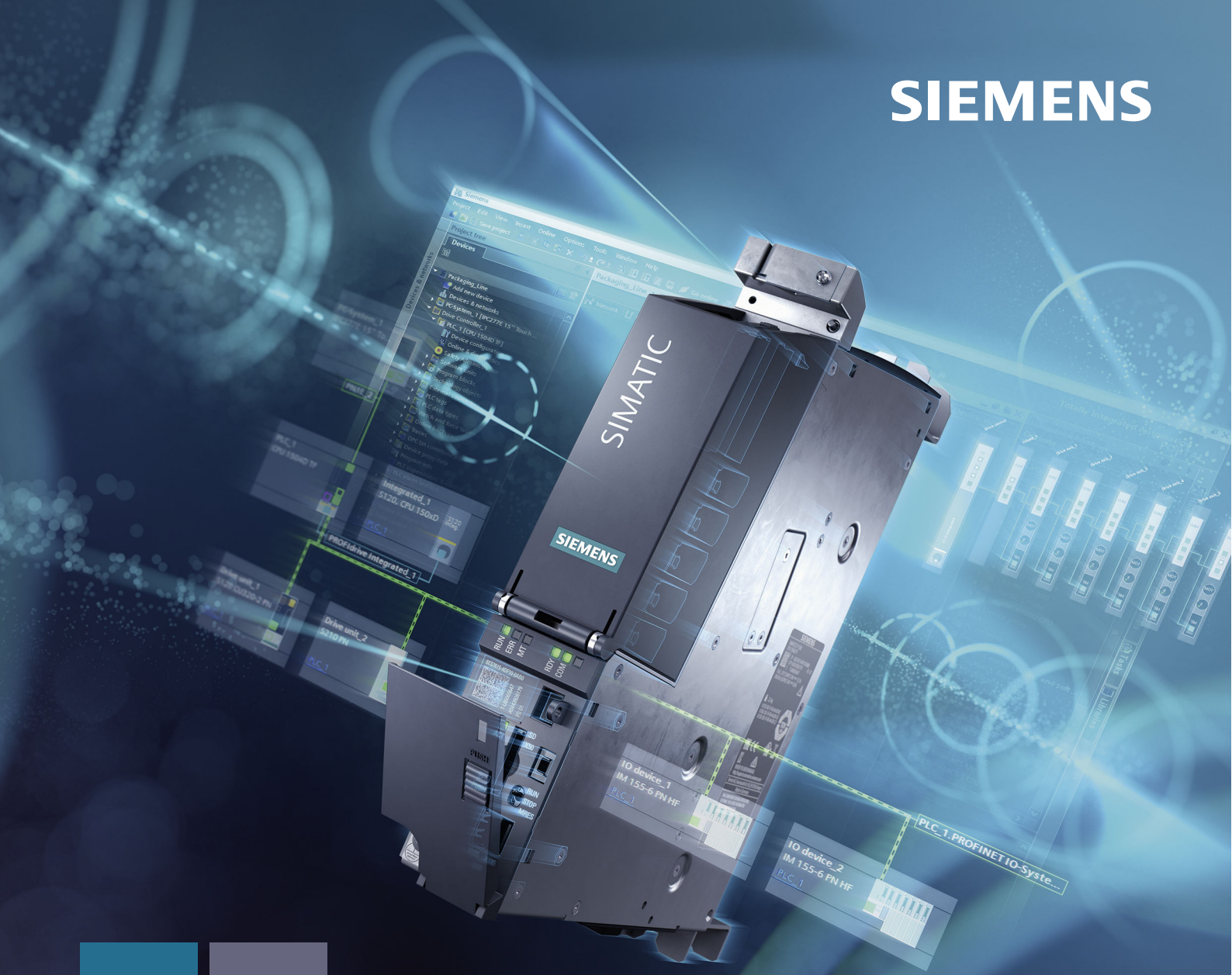

Edition 11/2022

EQUIPMENT MANUAL

SIMATIC

S7-1500

SIMATIC Drive Controller

support.industry.siemens.com

SIEMENS

SIMATIC

SIMATIC Drive Controller

Equipment Manual

Introduction 1

Safety information 2

Product overview 3

Connecting 4

Interrupts, diagnostics alarms, error messages and system alarms 5

Technical specifications 6

Dimension drawing A

11/2022

A5E46600370-AC

Legal information

Warning notice system

This manual contains notices you have to observe in order to ensure your personal safety, as well as to prevent damage to property. The notices referring to your personal safety are highlighted in the manual by a safety alert symbol, notices referring only to property damage have no safety alert symbol. These notices shown below are graded according to the degree of danger.

⚠ DANGER
indicates that death or severe personal injury **will** result if proper precautions are not taken.

⚠ WARNING
indicates that death or severe personal injury **may** result if proper precautions are not taken.

⚠ CAUTION
indicates that minor personal injury can result if proper precautions are not taken.

NOTICE
indicates that property damage can result if proper precautions are not taken.

If more than one degree of danger is present, the warning notice representing the highest degree of danger will be used. A notice warning of injury to persons with a safety alert symbol may also include a warning relating to property damage.

Qualified Personnel

The product/system described in this documentation may be operated only by **personnel qualified** for the specific task in accordance with the relevant documentation, in particular its warning notices and safety instructions. Qualified personnel are those who, based on their training and experience, are capable of identifying risks and avoiding potential hazards when working with these products/systems.

Proper use of Siemens products

Note the following:

⚠ WARNING
Siemens products may only be used for the applications described in the catalog and in the relevant technical documentation. If products and components from other manufacturers are used, these must be recommended or approved by Siemens. Proper transport, storage, installation, assembly, commissioning, operation and maintenance are required to ensure that the products operate safely and without any problems. The permissible ambient conditions must be complied with. The information in the relevant documentation must be observed.

Trademarks

All names identified by ® are registered trademarks of Siemens AG. The remaining trademarks in this publication may be trademarks whose use by third parties for their own purposes could violate the rights of the owner.

Disclaimer of Liability

We have reviewed the contents of this publication to ensure consistency with the hardware and software described. Since variance cannot be precluded entirely, we cannot guarantee full consistency. However, the information in this publication is reviewed regularly and any necessary corrections are included in subsequent editions.

Siemens AG
Digital Industries
Postfach 48 48
90026 NÜRNBERG
GERMANY

A5E46600370-AC
Ⓟ 10/2022 Subject to change

Copyright © Siemens AG 2019 - 2022.
All rights reserved

Table of contents

1 Introduction 6

1.1 SIMATIC Drive Controller documentation guide 8
1.1.1 Information classes SIMATIC Drive Controller 8
1.1.2 SIMATIC Technical Documentation 10

2 Safety information 12

2.1 Security information 12

3 Product overview 13

3.1 New functions 13

3.2 Application range 16
3.2.1 SIMATIC Drive Controller 16

3.3 Components and functionality 20

3.4 Hardware properties 23

3.5 Firmware functions of the CPU 26

3.6 Firmware functions of SINAMICS Integrated 30

3.7 Operator controls, displays and connection elements 32
3.7.1 View of SIMATIC Drive Controller with covers 32
3.7.2 View of SIMATIC Drive Controller without covers 33
3.7.3 Top view of SIMATIC Drive Controller 34
3.7.4 View of the SIMATIC Drive Controller from below 35
3.7.5 Covers 35
3.7.6 Nameplates 37

3.8 Mode selector 41

3.9 FUNCT button 42

4 Connecting 43

4.1 Supply voltage X124 43

4.2 PROFINET X150, X160 and X130 45

4.3 PROFIBUS X126 47

4.4 Digital inputs and outputs of X122, X132 and X142 48

4.5 DRIVE-CLiQ interfaces X100 to X103 52

4.6 Wiring and block diagrams 54
4.6.1 SIMATIC Drive Controller block diagram 54
4.6.2 Onboard digital inputs/digital outputs of X122, X132 and X142 55
4.6.3 DRIVE-CLiQ interfaces X100 to X103 56

5 Interrupts, diagnostics alarms, error messages and system alarms 58

5.1 Status and error displays 58
5.1.1 Overview 58
5.1.2 Status and error display of the CPU 59
5.1.3 Status and error display of SINAMICS Integrated 60
5.1.4 ACT LED and interface LEDs 62
5.1.5 7-segment display 63

5.2 Interrupts, diagnostics and system messages 64
5.2.1 Interrupts, diagnostics and system messages 64

6 Technical specifications 65

A Dimension drawing 82

Introduction 1

Purpose of the documentation

This equipment manual supplements the system manual of the SIMATIC Drive Controller family of controllers. It contains a concise description of the SIMATIC Drive Controller hardware and, in addition to the product overview, includes information on:

- Interfaces
- Wiring diagrams
- Display and operator controls
- Technical specifications

In the SIMATIC Drive Controller system manual, you will find information on configuring, installing, wiring and commissioning the SIMATIC Drive Controller, among other things.

All cross-system functions, such as motion control and communication functions, are described in the function manuals.

The information provided in this manual and the system manual enables you to commission the SIMATIC Drive Controller.

Conventions

STEP 7: In this documentation, "STEP 7" is used as a synonym for all versions of the configuration and programming software "STEP 7 (TIA Portal)".
Also take note of information labeled as follows:

NOTE

A note contains important information on the product described in the documentation, on the handling of the product or on the section of the documentation to which particular attention should be paid.

Special information

NOTE

Important note for maintaining the operational safety of your plant

Plants with safety-related features are subject to special operational safety requirements on the part of the operator. The supplier is also obliged to comply with special product monitoring measures. For this reason, we inform you in personal notifications about product developments and features that are (or could be) relevant to the operation of plants from a safety perspective.

By subscribing to the corresponding notifications, you will ensure that you are always up-to-date and able to make changes to your system when necessary.

Log onto Industry Online Support. Follow the links below, and right-click on "email on update":

SIMATIC S7-1500/SIMATIC S7-1500F (https://support.industry.siemens.com/cs/ww/en/ps/13716)

Distributed I/O (https://support.industry.siemens.com/cs/ww/en/ps/14029)

STEP 7 (TIA Portal) (https://support.industry.siemens.com/cs/ww/en/ps/14667)

SINAMICS S120 (https://support.industry.siemens.com/cs/ww/en/ps/13231)

SINAMICS Startdrive (https://support.industry.siemens.com/cs/ww/en/ps/13438)

Operator control and monitoring systems (https://support.industry.siemens.com/cs/ww/en/ps/14729)

Industrial communication (https://support.industry.siemens.com/cs/ww/en/ps/15247)

Safety systems – Safety Integrated (https://support.industry.siemens.com/cs/ww/en/ps/19902)

NOTE

When using F-CPUs in safety mode and fail-safe modules, note the description of the fail-safe system in the Programming and Operating Manual SIMATIC Safety - Configuring and Programming (https://support.industry.siemens.com/cs/ww/en/view/54110126).

Recycling and disposal

For environmentally friendly recycling and disposal of your old equipment, contact a certified electronic waste disposal company and dispose of the equipment according to the applicable regulations in your country.

Industry Mall

The Industry Mall is the catalog and order system of Siemens AG for automation and drive solutions on the basis of Totally Integrated Automation (TIA) and Totally Integrated Power (TIP).

You can find catalogs for all automation and drive products on the Internet (https://mall.industry.siemens.com).

Open-source software

Open-source software is used in the firmware of the SIMATIC Drive Controllers. The open-source software is provided free of charge. Siemens AG is liable for the product described, including the open-source software contained in it, pursuant to the conditions applicable to the product. Any and all liability is excluded:

- for use of the open-source software beyond the program sequence intended for the product by Siemens
- for defects caused by changes to the software

For legal reasons, Siemens AG is obliged to publish the original text of the license conditions and copyright notices. You can find it on the Internet in the FW downloads (https://support.industry.siemens.com/cs/de/en/view/109773914) and in the scope of supply of the SIMATIC Drive Controller for the firmware version that has been supplied (see the note on the type plate at the side).

NOTE

Management of the license conditions and copyright notices of firmware updates

The license conditions and copyright notices in the scope of delivery can change as a result of firmware updates. In order to avoid license violations by the reseller and the buyer, if there are firmware updates, you must pass on the license conditions and copyright notices of the firmware update to the buyer (for example, by saving them to the SIMATIC Memory Card).

1.1 SIMATIC Drive Controller documentation guide

1.1.1 Information classes SIMATIC Drive Controller

The documentation for the SIMATIC Drive Controller is divided into three areas.
This arrangement enables you to access the specific content you require.
You can download the documentation free of charge from the Internet (https://support.industry.siemens.com/cs/ww/en/view/109742691).

Basic information

The System Manual describes in detail the configuration, installation, wiring and commissioning of the SIMATIC Drive Controllers.
The STEP 7 online help supports you in the configuration and programming.
Examples:

- SIMATIC Drive Controller System Manual
- Online help TIA Portal

Device information

Equipment manuals contain a compact description of the module-specific information, such as properties, wiring diagrams, characteristics and technical specifications.
Examples:

- SIMATIC Drive Controller CPU 1504D TF
- SIMATIC Drive Controller CPU 1507D TF

General information

The function manuals contain detailed descriptions on general topics relating to the SIMATIC Drive Controller and the S7-1500 automation system.
Examples:

- Function Manual Diagnostics
- Function Manual Communication
- Function Manual Motion Control
- Function Manual Web Server
- Function Manual Cycle and Response Times
- PROFINET Function Manual
- PROFIBUS Function Manual

Product Information on the SIMATIC Drive Controller

The Product Information contains changes and supplements to the SIMATIC Drive Controllers documentation. The Product Information takes precedence over the device and system manuals. You can find the latest Product Information on the SIMATIC Drive Controller on the Internet (https://support.industry.siemens.com/cs/ww/en/view/109772684).

Manual Collection S7-1500/ET 200MP

The Manual Collection contains the complete documentation on the SIMATIC S7-1500 automation system and the SIMATIC Drive Controller distributed I/O system ET 200MP gathered together in one file.
You can find the Manual Collection on the Internet.
(https://support.industry.siemens.com/cs/ww/en/view/86140384)

SIMATIC S7-1500 comparison list for programming languages

The comparison list contains an overview of which instructions and functions you can use for which controller families.
You can find the comparison list on the Internet.
(https://support.industry.siemens.com/cs/ww/en/view/86630375)

SINAMICS documentation

The SINAMICS documentation contains detailed descriptions of the SINAMICS S120 drive control and SINAMICS S210 servo drive systems.
You can find the documentation by entering the manual title in the search box on the Internet (https://support.industry.siemens.com/cs/ww/en/ps/13229/man).
The SINAMICS Technical Documentation (https://support.industry.siemens.com/cs/ww/en/view/108993276) web page provides information on the following topics:

- Documentation overview
- Additional links for downloading documents
- Using documentation online (find and browse manual/information)

1.1.2 SIMATIC Technical Documentation

Additional SIMATIC documents will complete your information. You can find these documents and their use at the following links and QR codes.
The Industry Online Support gives you the option to get information on all topics. Application examples support you in solving your automation tasks.

Overview of the SIMATIC Technical Documentation

Here you will find an overview of the SIMATIC documentation available in Siemens Industry Online Support:

Industry Online Support International (https://support.industry.siemens.com/cs/ww/en/view/109742705)

Watch this short video to find out where you can find the overview directly in Siemens Industry Online Support and how to use Siemens Industry Online Support on your mobile device:

Quick introduction to the technical documentation of automation products per video (https://support.industry.siemens.com/cs/us/en/view/109780491)

YouTube video: Siemens Automation Products - Technical Documentation at a Glance (https://youtu.be/TwLSxxRQQsA)

mySupport

With "mySupport" you can get the most out of your Industry Online Support.

Registration	You must register once to use the full functionality of "mySupport". After registration, you can create filters, favorites and tabs in your personal workspace.

Support requests	Your data is already filled out in support requests, and you can get an overview of your current requests at any time.
Documentation	In the Documentation area you can build your personal library.
Favorites	You can use the "Add to mySupport favorites" to flag especially interesting or frequently needed content. Under "Favorites", you will find a list of your flagged entries.
Recently viewed articles	The most recently viewed pages in mySupport are available under "Recently viewed articles".
CAx data	The CAx data area gives you access to the latest product data for your CAx or CAe system. You configure your own download package with a few clicks: • Product images, 2D dimension drawings, 3D models, internal circuit diagrams, EPLAN macro files • Manuals, characteristics, operating manuals, certificates • Product master data

You can find "mySupport" on the Internet. (https://support.industry.siemens.com/My/ww/en)

Application examples

The application examples support you with various tools and examples for solving your automation tasks. Solutions are shown in interplay with multiple components in the system - separated from the focus on individual products.
You can find the application examples on the Internet.
(https://support.industry.siemens.com/cs/ww/en/ps/ae)

Safety information 2

2.1 Security information

Siemens provides products and solutions with industrial security functions that support the secure operation of plants, systems, machines and networks.

In order to protect plants, systems, machines and networks against cyber threats, it is necessary to implement – and continuously maintain – a holistic, state-of-the-art industrial security concept. Siemens' products and solutions constitute one element of such a concept.

Customers are responsible for preventing unauthorized access to their plants, systems, machines and networks. Such systems, machines and components should only be connected to an enterprise network or the internet if and to the extent such a connection is necessary and only when appropriate security measures (e.g. firewalls and/or network segmentation) are in place.

For additional information on industrial security measures that may be implemented, please visit (https://www.siemens.com/industrialsecurity).

Siemens' products and solutions undergo continuous development to make them more secure. Siemens strongly recommends that product updates are applied as soon as they are available and that the latest product versions are used. Use of product versions that are no longer supported, and failure to apply the latest updates may increase customers' exposure to cyber threats.

To stay informed about product updates, subscribe to the Siemens Industrial Security RSS Feed visit (https://www.siemens.com/cert).

Product overview

3

3.1 New functions

New functions of the SIMATIC Drive Controller in firmware version V3.0

The following table provides an overview of the important new functions of the SIMATIC Drive Controller with CPU firmware V3.0 and SINAMICS Integrated firmware V5.2 SP3.

New functions	Applications	Customer benefits
Communication of the CPU		
Network management protocol SNMP	A simple configuration option is now available for using SNMP services. For new configurations, this is disabled by default in line with "Security-by-Default".	Simpler configuration
OPC UA server – Reading the diagnostics status of the own address space	The own namespace of the OPC UA server can be accessed by using the OPC UA instruction for reading ("OPC_UA_ReadList"). This allows you to read out the following status and react to it in the user program: • Status of the own OPC UA server • Status of the connections of OPC UA clients • Status of the session • Status of subscriptions	This allows connection problems to be quickly detected, for example, and plant availability to be increased.
OPC UA server – Time stamping of the source time of nodes	By using the OPC UA instruction for writing ("OPC_UA_WriteList"), it is possible to change the "SourceTimestamp" as well as the status code of an OPC UA variable (node).	Distinction between the "source" and "server" time possible
OPC UA server – Increased configuration limits	The following configuration limits have been increased: • Possible number of nodes in the server interface • Maximum possible number of subscriptions per session • For subscription, the recommendation for monitored values was increased	Further applications for CPUs as OPC UA servers
Web server of the CPU		
New Web API methods	Many new API methods expand your access options to the CPU via the Web API.	Additional applications for the Web server
Dynamic management of certificates	The Web server certificate for HTTPS communication can now also be managed via the OPC UA GDS mechanism, without separate download of the hardware configuration.	Flexible certificate management

New functions	Applications	Customer benefits
Allow data access only via Web API	They limit the functionality of the Web server to the Web API based functions. This means that only encrypted communication via HTTPS is possible.	Higher security of communication via Web server
Technology functions of the CPU		
Axis functions	Save absolute encoder adjustment for device replacement	Saving the adjustment values with the "MC_SaveAbsoluteEncoderData" instruction saves having to perform the absolute encoder adjustment again after a device replacement.
	The "MC_Home" instruction supports the new "Incremental encoder adjustment" homing mode.	Extended scope of functions
	Active homing of absolute encoders is possible.	Extended scope of functions
	Absolute encoder adjustment/incremental encoder adjustment of non-operational encoders	The function makes it possible to transfer encoder actual values of the operative encoder to a non-operative encoder.
	The "MC_Power" instruction supports coasting down.	Extended scope of functions of the "MC_Power" instruction
	The hardware limit switches are configurable as traversable/non-traversable.	Extended scope of functions
	For axes in a synchronous system, the dynamic filter enables dynamic adaptation of axes with higher dynamic responses to the axis with the lowest dynamic response.	With the dynamic filter, axes with different inertia can be adjusted to each other. Optimization of a synchronous system
	Stop superimposed movements on the axis with the instruction "MC_HaltSuperimposed"	Use the instruction to stop a superimposed motion independently of the basic motion.
	With the "MC_MotionInSuperimposed" instruction, you can assign the axis cyclic applicative motion setpoints for additional distance, velocity and acceleration in addition to the basic motion.	With the specification of superimposed motion set values, you can optimize the motion profile of a basic motion.
Synchronous operation functions	Velocity gearing	By using a variable gear ratio, synchronous axes of the velocity can follow a positioning axis.
	Synchronization in advance using master value distance starting from current leading value position in the camming	Extended scope of functions
Trace functionality of the CPU	The S7-1500 CPU supports up to 64 configured signals per trace.	Number of configurable signals per trace increased
	Long-term trace: The S7-1500 CPU supports cycle-granular recording of up to 64 different tags in a .csv file over a prolonged period (for example, hours, days, etc.).	This results in significantly better diagnostic possibilities when analyzing the course of signals over a long period of time
SIMATIC Drive Controller		

New functions	Applications	Customer benefits
Larger code and data memory	Increasing the memory for more comprehensive user programs: • CPU 1504D TF: Code memory increased from 2 to 4 MB and data memory from 4 to 6 MB • CPU 1507D TF: Code memory increased from 6 to 15 MB and data memory from 20 to 40 MB	Extended areas of application
Increased configuration limits for motion control technologies:	Increased configuration limits for motion control technologies for CPU 1504D TF: • Motion control resources increased from 2,400 to 3,200 • Motion control resources increased from 120 to 160 • Typical number of positioning axes at 4 ms servo/IPO cycle and 35% CPU load through motion control increased from 10 to 12 axes	Extended areas of application
Support for TIA Portal option package Safe Kinematics with CPU 1507D TF (retroactively approved with Safe Kinematics from V17 and CPU firmware from V2.9 onwards)	Movements of predefined kinematics with up to 12 interpolating axes in a multi-dimensional space can be securely monitored	Monitoring whether kinematics zones exit the active work zone or enter the protection or signal zones: • Safe velocity monitoring • Safe zone monitoring • Safe orientation monitoring
Support for the supplementary software S7-1500T Motion Control KinPlus (only for CPU 1507D TF)	With S7-1500T Motion Control KinPlus, you can control Kinematics with up to 6 interpolating axes. • New pre-defined kinematics: – Cartesian portal 3D with 2 orientations – Delta picker 3D with 2 orientations – 6-axis articulated arm with central hand • User-defined kinematics 3D with 3 orientations	Extended areas of application through kinematics types with more than four kinematics axes
Extended version displays	Extended version display in the TIA Portal, Web server und diagnostic buffer export (for example, SINAMICS Integrated version)	The firmware version of the SINAMICS Integrated can also be determined without SINAMICS Startdrive. Thus, the SINAMICS Integrated version can also be determined if it is not possible to go online with SINAMICS Startdrive, for example because the configured firmware version is different from the firmware version of the device[1].
X142 technology I/Os, event/cycle duration measurement	Apart from the measurement method "Single period", there is also an additional measurement method "Multiple periods" available. The period duration is determined based on all periods in a measuring cycle, with the measuring cycle length corresponding to one application cycle (e.g. servo clock).	This method provides a more accurate measurement for short periods. In addition, measurement value variations are evened out.

New functions	Applications	Customer benefits
Firmware update SINAMICS Integrated via Web server	Firmware update of the SINAMICS Integrated via the Web server of the CPU.	Remote maintenance: Firmware updates possible via remote access.
SINAMICS licenses for SINAMICS Integrated	The following SINAMICS functions are supported in addition for SINAMICS Integrated: • Technology Extension DCDCCONV (DC-DC converter) • Technology Extension RAILCTRL (Rail Control, under development)	Extended areas of application: • Multi-carrier systems (MCS). Multi-carrier systems are transport systems with linear motors, which are used, for example, in packaging machines and assembly applications. • With the SINAMICS Technology Extension DCDCCONV, a Motor Module can be employed as a chopper converter.
New SINAMICS Integrated firmware	There is a new hotfix available for SINAMICS Integrated, based on V5.2 SP3	Optimizations and extended module spectrum (for example, SINAMICS S220 Smart Line Modules in mixed mode operation with SINAMICS S120 Motor Modules)
Achilles Level 2 Certification	Achilles Level 2 Certification for Communication Robustness	Greater safety of industrial plants

3.2 Application range

3.2.1 SIMATIC Drive Controller

Overview

The SIMATIC Drive Controller is a drive-based controller in the SIMATIC S7-1500 range.
A SIMATIC Drive Controller combines the following functionalities in a SINAMICS S120 Booksize Compact enclosure:

- Fail-safe SIMATIC S7-1500 technology CPU with integrated technology I/Os
- SINAMICS S120 drive control

The two components are referred to as "CPU" and "SINAMICS Integrated" in this documentation.
The integrated SINAMICS S120 drive control is based on a CU320-2 Control Unit. It can control

- a maximum of 6 servo drives,
- a maximum of 6 drives with vector control, or
- a maximum of 12 drives with U/f control

Fail-safe technology CPUs are available in two performance classes. Safety Integrated on the CPU side and drive side allows use in fail-safe applications.
The SIMATIC Drive Controller supports PROFINET and PROFIBUS DP communication.

Properties

Important properties of the SIMATIC Drive Controller:

- Fail-safe technology CPU including drive control with safety functions integrated in the drive
- Extremely compact because the CPU is integrated in the drive system without taking up any additional space
- Central data management with one memory card for CPU and SINAMICS Integrated

Easy handling

- Less cabling and installation effort thanks to SINAMICS Integrated
- Easy configuring in the hardware configuration of STEP 7
- Central license handling in the TIA Portal
- Easy and efficient commissioning and optimization of drives using the SINAMICS Startdrive engineering tool in the TIA Portal
- Optimization function for determining the optimal precontrol and gain (Kv factor) for the closed loop position control of the axis

Optimized for production machinery

- Performance classes and memory size optimized for production machinery
- Wide range of interfaces, consistent across performance range
- Technology I/Os onboard
  - 12 digital inputs and 16 user-configurable digital inputs/outputs
  - Up to 8 outputs configurable as high-speed outputs for ultra-short output delays and maximum switching precision, e.g. can be configured for output cam applications.
  - Up to 16 inputs configurable as measurement sensing inputs for position detection
  - Additional technology functions such as oversampling and event/period duration measurement

Areas of application

SIMATIC Drive Controllers are used, for example, in applications in which the SINAMICS S120 drive family is being used because of the need for:

- A highly dynamic, flexible multi-axis drive system:
  - Broad performance range
  - Comprehensive range of motors (including external drives, etc.)
  - Comprehensive control modes (servo, vector, U/f)
  - SINAMICS Technology Extensions
- Controlled infeed/regenerative feedback
  - For prevention of undesired harmonics
  - For a high level of robustness against line fluctuations
  - For energy recovery in braking mode

SIMATIC Drive Controllers are also used where there is a need for:

- Safety solutions for machine and operator protection
- A compact, space-saving design
- High performance for motion control and high-speed I/O
- Modular machine concepts with fast isochronous mode

Typical areas of application are:

- Multi-axis machines (e.g. printing and paper machines)
- High-performance applications with short machine cycles (e.g. packaging machines and handling applications)
- Compact machines in which there is limited room for the controller and drive system (e.g. control cabinets in the machine base)
- Distributed control and drive concepts
- Synchronization of multiple SIMATIC Drive Controller s using cross-PLC synchronous operation
- Safe monitoring of motion

SIMATIC Drive Controller performance classes

The SIMATIC Drive Controller contains a failsafe CPU from the SIMATIC S7-1500 family and a SINAMICS S120 drive control. Two performance classes are available.

Table 3-1 Overview of performance classes

Performance class	SIMATIC Drive Controller	Article number
Small to mid-range applications	CPU 1504D TF	6ES7615-4DF10-0AB0
High-performance applications	CPU 1507D TF	6ES7615-7DF10-0AB0

Performance features of the CPUs

The SIMATIC Drive Controller s differ in terms of the integrated CPU. The CPUs can be used for lower and mid-range applications all the way to the high-end range of machine and plant automation. The following table shows key performance characteristics of the SIMATIC Drive Controllers.

Table 3-2 Overview of SIMATIC Drive Controller performance features

Feature	1504D TF	1507D TF
Code work memory, max.	4 MB	15 MB
Data work memory, max.	6 MB	40 MB
Retentive data area (including timers, counters, bit memories)	768 KB	768 KB
Load memory/mass storage, max.	32 GB (with SIMATIC Memory Card)	32 GB (with SIMATIC Memory Card)
I/O address area, max.	32/32 KB	32/32 KB
Integrated interfaces	1 x PROFINET IO IRT (3-port switch) 1 x PROFINET IO RT 1 x PROFINET basic services (1000 Mbps) 1 x PROFIBUS DP 2 x USB 3.0[1)] 4 x DRIVE-CLiQ	1 x PROFINET IO IRT (3-port switch) 1 x PROFINET IO RT 1 x PROFINET basic services (1000 Mbps) 1 x PROFIBUS DP 2 x USB 3.0[1)] 4 x DRIVE-CLiQ
SINAMICS Integrated	On basis of CU320-2	On basis of CU320-2
Integrated inputs and outputs (onboard I/O)	CPU: 8 DI/DQ SINAMICS Integrated: 12 DI, 8 DI/DQ	CPU: 8 DI/DQ SINAMICS Integrated: 12 DI, 8 DI/DQ

Feature	1504D TF	1507D TF
Configuration control	X	X
CPU Web server	X	X
Isochronous mode[3]	PROFINET IO with IRT (X150) PROFIBUS DP (X126) SINAMICS Integrated Technology I/Os (X142)	PROFINET IO with IRT (X150) PROFIBUS DP (X126) SINAMICS Integrated Technology I/Os (X142)
Minimum cycle[5]	500 µs	250 µs
Technology Integrated	CPU: • Motion control • PID control Onboard I/O: • Event/period duration measurement • Pulse width modulation (PWM) • Timer DI/DQ • Oversampling DI/DQ	CPU: • Motion control • PID control Onboard I/O: • Event/period duration measurement • Pulse width modulation (PWM) • Timer DI/DQ • Oversampling DI/DQ
Number of positioning axes	Typical[2]: 12 Maximum: 40	Typical[2]: 55 Maximum: 160
Motion control resources[4]	3,200	12 800
Extended motion control resources[4]	160	420
Security Integrated	X	X
Integrated system diagnostics	X	X
Integrated safety functionality	X	X
Degree of protection	IP 20	IP 20

[1] Non-functional, no connection permitted

[2] With 4 ms servo/IPO cycle and 35% CPU load from motion control

[3] Besides the MC-Servo, only PROFINET interface X150 can also be operated isochronously with the clock system of SINAMICS Integrated and the X142 technology I/Os.
Isochronous coupling of PROFIBUS interface X126 with other clock systems is not possible. Additional drive systems must therefore be connected over the PROFINET interface (for details, see section Setting the clock system in the SIMATIC Drive Controller system manual (https://support.industry.siemens.com/cs/ww/en/view/109766665)).

[4] For information on the resources used by technology objects, see the S7-1500 Motion Control function manuals. (https://support.industry.siemens.com/cs/ww/en/view/109751049)

[5] Minimum supported cycle for PROFINET, SINAMICS Integrated, Technology I/Os (X142) and Servo/IPO. The use of clock cycles < 500 µs is only possible with CPU 1507D TF and is subject to restrictions (for details, see SIMATIC Drive Controller system manual (https://support.industry.siemens.com/cs/ww/en/view/109766665), section Configuring the clock system).

3.3 Components and functionality

Components of a SIMATIC Drive Controller system

A drive-based solution with the SIMATIC Drive Controller is made up of the following components:

- Power supply for SIMATIC Drive Controller and DRIVE-CLiQ components
- SIMATIC Drive Controller with fail-safe SIMATIC S7-1500 technology CPU and an integrated SINAMICS S120 drive control (based on CU320-2)
- SINAMICS S120 power units:
  - Line Modules
  - Motor Modules
- Sensor Modules (SMx)
- Terminal Modules (TM)
- Motors with/without DRIVE-CLiQ

NOTE

Use of SINAMICS S220 power units

From SINAMICS firmware V5.2 SP3 HF10 onwards, the use of SINAMICS S220 power units at the integrated SINAMICS S120 drive control of the SIMATIC Drive Controller is also possible. For more information on the currently available module range as well as compatibility information for use with SINAMICS S120 drive controls, see the publications on the SINAMICS S120/S220 drive system, for example (https://support.industry.siemens.com/cs/ww/en/view/109806050)

⚠ WARNING

Danger to life due to unsuitable firmware version

Operation of the SINAMICS S220 Booksize component with an unsuitable firmware version can lead to unsafe operational states, for example, overheating of converter components, unexpected acceleration of a motor or malfunctioning of the safety functions.
Use firmware V5.2 SP3 HF10 or later.

You can expand the drive configuration limits of a SIMATIC Drive Controller by connecting additional drive systems using PROFINET IO with IRT, e.g. SINAMICS S120 CU320-2 for control of multiple axes or the SINAMICS S210 single-axis servo converter system.

NOTE

The PROFIBUS interface cannot be connected to other clock systems. If you expand the drive configuration limits with distributed drive systems, those systems must be connected over the PROFINET IO interface X150. Besides the MC-Servo, only PROFINET interface X150 can also be coupled isochronously with the clock pulse system of SINAMICS Integrated and the X142 technology I/Os.

Configuration example

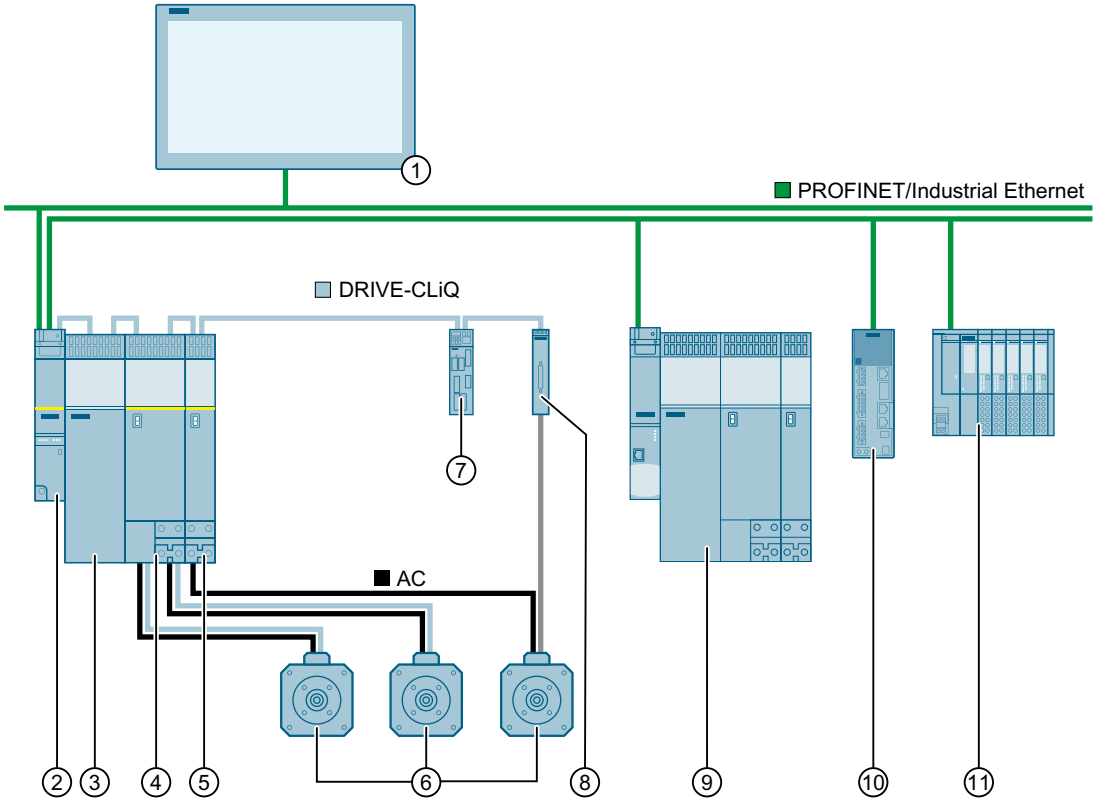

① HMI device
② SIMATIC Drive Controller
③ Line Module
④ SINAMICS S120 Double Motor Module
⑤ SINAMICS S120 Single Motor Module
⑥ SIMOTICS S servo motor
⑦ SINAMICS Terminal Module
⑧ SINAMICS Sensor Module SMC
⑨ SINAMICS S120 with CU320-2 for control of multiple axes
⑩ SINAMICS S210 single-axis servo converter system
⑪ ET 200SP I/O

Figure 3-1 Example: SIMATIC Drive Controller as a component in a system

Functionality

The SIMATIC Drive Controller combines the functionality of a SIMATIC S7-1500 TF-CPU and a SINAMICS S120 drive control based on CU320-2 in one compact device.

SIMATIC Drive Controllers are suitable for simple as well as complex motion control applications, including fail-safe applications when needed.

You can link and extend the SIMATIC Drive Controller , for example, with HMI and I/O systems using the wide range of communication interfaces. The drive control integrated in the SIMATIC Drive Controller (SINAMICS Integrated) supports the following control modes:

- Vector control
- Servo control
- U/f control

Vector control is recommended for drive solutions with continuous material webs, such as wire-drawing, film and paper machines. Servo control is suitable for clocked processes with precise yet highly dynamic position control with servo motors.

You interconnect all components of SINAMICS S120, including the motors and encoders, using DRIVE-CLiQ. You connect motors without a DRIVE-CLiQ interface, e.g. external motors or motors for retrofit applications, using Sensor Modules Cabinet-Mounted (SMC) or Sensor Modules External (SME).

Line Modules feed the power to the DC link. Optionally, Line Modules with controlled infeed/regenerative feedback ensure a constant DC-link voltage and high grid compatibility.

Motor Modules supply the motors with power from the DC link.

Terminal Modules are terminal extensions via DRIVE-CLiQ – for example, for drive-oriented digital or analog inputs/outputs.

NOTE

SINAMICS Integrated provides a functional subset of the SINAMICS S120 CU320-2 drive functions. The following functions/components are not supported by the integrated drive control of the SIMATIC Drive Controller, for example:

- Free function blocks (FBLOCKS)
- SINAMICS Web server
- Output frequencies > 550 Hz (High Output Frequency license)
- CU320-2 specific expansion modules, such as TB30

You can find additional information in the SIMATIC Drive Controller system manual (https://support.industry.siemens.com/cs/ww/en/view/109766665).

Additional information

You can find a description of the Control Units, power units and supplementary system components of SINAMICS S120 in the following manuals:

- SINAMICS S120 Control Units and Additional System Components (https://support.industry.siemens.com/cs/ww/en/view/109763286)
- SINAMICS S120 Booksize Power Units (https://support.industry.siemens.com/cs/en/en/view/109766188)
- SINAMICS S120 Booksize C/D-type Power Units (https://support.industry.siemens.com/cs/ww/en/view/109763283)
- SINAMICS S120 AC Drive (https://support.industry.siemens.com/cs/ww/en/view/109757057)

3.4 Hardware properties

Article numbers

SIMATIC Drive Controller with CPU 1504D TF: 6ES7615-4DF10-0AB0
SIMATIC Drive Controller with CPU 1507D TF: 6ES7615-7DF10-0AB0

Front and side views

The figure below shows the front view and side view of a SIMATIC Drive Controller.

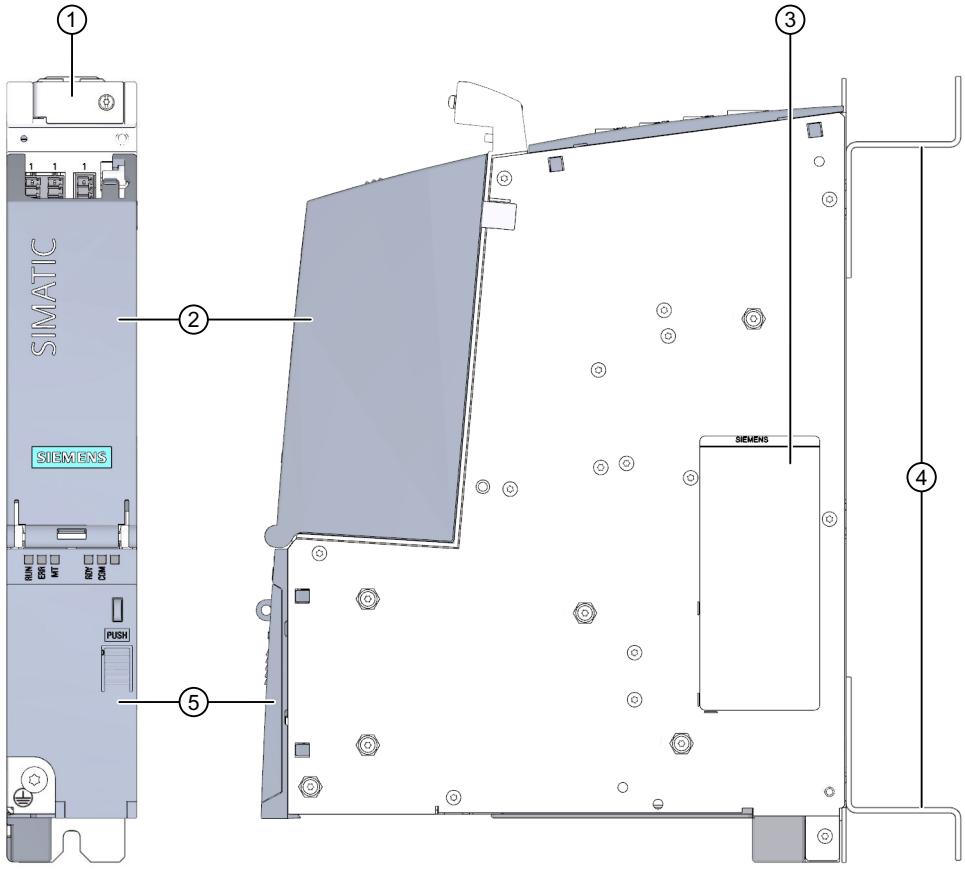

① Holding clamp of shield support
② Top cover
③ Side nameplate
④ Spacer
⑤ Bottom cover

Figure 3-2 SIMATIC Drive Controller front view and side view

Top view

The figure below shows the top view of a SIMATIC Drive Controller.

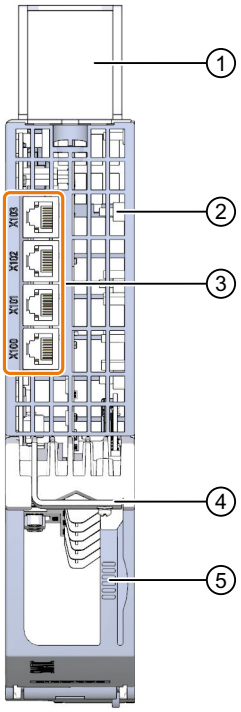

① Spacer
② Ventilation slots
③ DRIVE-CLiQ interfaces
④ Holding clamp of shield support
⑤ Release for top cover

Figure 3-3 SIMATIC Drive Controller top view

Properties

The SIMATIC Drive Controllers have the following properties:

Table 3-3 Hardware properties

Properties	Description	Additional information
Supply voltage (X124)	The 24 V DC supply voltage for the SIMATIC Drive Controller is fed via a 4-pin cable connector located on the front of the SIMATIC Drive Controller .	• Section Connecting (Page 43) • SIMATIC Drive Controller system manual (https://support.industry.siemens.com/cs/ww/en/view/109766665)
PROFINET IO		

Properties	Description	Additional information
PROFINET interface (X150 P1R, X150 P2R, X150 P3)	The interface has three ports. In addition to basic PROFINET functionality, it also supports PROFINET IO RT (Real-Time) and IRT (Isochronous Real-Time). The interface can be operated isochronously with the clock pulse system of SINAMICS Integrated and the X142 technology I/Os.	• Section Connecting (Page 43) • PROFINET function manual (https://support.industry.siemens.com/cs/ww/en/view/49948856)
PROFINET interface (X160 P1)	The interface has one port. In addition to basic PROFINET functionality, it also supports PROFINET IO RT (Real-Time).	
PROFINET interface (X130 P1)	The interface has one port. It supports basic PROFINET functionality.	
Operation of the CPU as • IO controller • I-device	• **IO controller:** As an IO controller the CPU controls the connected IO devices • **I-device:** As an I-device (intelligent IO device) the CPU is assigned to a higher-level IO controller and is thereby used as an intelligent pre-processing unit of sub-processes	
PROFIBUS DP		
PROFIBUS interface (X126)	The interface is used for connecting to a PROFIBUS network.	Section Connecting (Page 43) PROFIBUS function manual (https://support.industry.siemens.com/cs/ww/en/view/59193579)
Operation of the CPU as a DP master	As a DP master, the CPU addresses the connected DP slaves. The CPU cannot be a DP slave.	
Isochronous mode	The PROFIBUS interface can be operated isochronously. However, isochronous coupling with the clock pulse system of SINAMICS Integrated and the X142 technology I/Os is not possible.	
Additional interfaces		
USB 3.0 (X125, X135)	Non-functional, no connection permitted	-
DRIVE-CLiQ interfaces (X100 to X103)	The SIMATIC Drive Controller has four DRIVE-CLiQ interfaces. For each DRIVE-CLiQ interface, you have 24 V/450 mA available for connecting encoders and measuring systems.	Section Connecting (Page 43)
Integrated inputs and outputs		
12 DI (X122, X132)	The digital inputs are assigned to SINAMICS Integrated . You use the digital inputs, for example, for the control of Safety Integrated basic functions via a terminal. Alternatively, you assign the digital inputs to the CPU, by means of configuration with telegram 39x.	Section Connecting (Page 43)
8 DI/DQ (X122, X132)	The bidirectional digital inputs/outputs are assigned to SINAMICS Integrated . You use the digital inputs/outputs, for example, as measuring inputs via a PROFIdrive telegram. Alternatively, you assign the digital inputs/outputs to the CPU, by means of configuration with telegram 39x.	

Properties	Description	Additional information
8 DI/8 DQ (X142)	The bidirectional digital inputs/outputs are assigned to the CPU. You configure each of the digital inputs/outputs according to your task: • as a digital input or a digital output • as a timer input, e.g. for measurement sensing inputs • as a timer output, e.g. for output cam applications • as an oversampling input or an oversampling output • for event/period duration measurement • for pulse width modulation (PWM) • as a high-speed output	Section Connecting (Page 43)

Accessories/spare parts

The following accessories are included in the scope of delivery of the SIMATIC Drive Controller and can also be ordered as spare parts:

Table 3-4 Spare parts

Article	Article number
Bottom cover	6ES7615-0AC10-0AA0
Top cover	6ES7615-0AC10-1AA0
Spacer	6SL3064-1BB00-0AA0
Terminal kit • 3 x I/O connector for X122/X132/X142 • 1 x 24 V connector for X124 • 5 x DRIVE-CLiQ blanking cover	6SL3064-2CB00-0AA0

You can find additional information on accessories in the SIMATIC Drive Controller system manual (https://support.industry.siemens.com/cs/ww/en/view/109766665).

3.5 Firmware functions of the CPU

The integrated SIMATIC S7-1500 TF-CPU of the SIMATIC Drive Controller supports the following functions:

Functions

Function	Description	Additional information
Safety Integrated	The integrated F-CPU of the SIMATIC Drive Controller processes standard and safety programs on a single component. This allows fail-safe data to be evaluated in the standard user program. As a result of the integration, the system advantages and the extensive functionality of SIMATIC are also available for fail-safe applications.	SIMATIC Safety - Configuring and Programming programming and operating manual (https://support.industry.siemens.com/cs/ww/en/view/541101-26)

Function	Description	Additional information
	The F-CPU is certified for use in safety mode up to: • Safety class (Safety Integrity Level) SIL 3 according to IEC 61508:2010 • Performance Level (PL) e and Category 4 according to ISO 13849-1:2006 or according to EN ISO 13849-1:2008 An additional password protection for the F-configuration and safety program is set up for IT security. Besides the F-CPU, SINAMICS Integrated also has integrated safety functions.	Section Firmware functions of SINAMICS Integrated (Page 30)
CPU-integrated system diagnostics	The system automatically creates alarms for the system diagnostics of the CPU and outputs the alarms via a PG/PC, HMI device or Web server. System diagnostics information is also available when the CPU is in STOP mode.	Diagnostics function manual (https://support.industry.siemens.com/cs/ww/en/view/591929-26)
Integrated web server	The web server lets you access the CPU data over a network. Evaluations, diagnostics, and modifications are thus possible over long distances. Monitoring and evaluation is possible without STEP 7; all you need is a Web browser. Make sure that you take appropriate measures (e.g. limiting network access, using firewalls) to protect the CPU from being compromised.	• Web Server function manual (https://support.industry.siemens.com/cs/ww/en/view/591-93560) • Security with SIMATIC S7 Controller system manual (https://support.industry.siemens.com/cs/ww/en/view/908-85010)
Integrated trace functionality	Trace functionality supports you in troubleshooting and/or optimizing the user program. You record device tags and evaluate the recordings with the trace and logic analyzer function. Tags are, for example, drive parameters or system and user tags of a CPU. The device saves the recordings. You can read out and permanently save the recordings with the configuration system (ES), if required. The trace and logic analyzer function is therefore suitable for monitoring highly dynamic processes.	Using the Trace and Logic Analyzer Function function manual (https://support.industry.siemens.com/cs/ww/en/view/648971-28)
OPC UA	With OPC UA, you can exchange data via an open and manufacturer-neutral communication protocol. The CPU can act as an OPC UA DA server. The CPU acting as the OPC UA server can communicate with OPC UA clients. The OPC UA Companion Specification allows methods to be specified uniformly and independently of the manufacturer. Using these specified methods, you can easily integrate devices from various manufacturers into your plants and production processes.	Communication function manual (https://support.industry.siemens.com/cs/ww/en/view/591929-25)
Configuration control	You can use configuration control to operate different real hardware configurations with a configured maximum configuration of the hardware. This means especially in series machine manufacturing you have the option of operating/configuring different configuration variants of a machine with a single project.	SIMATIC Drive Controller system manual (https://support.industry.siemens.com/cs/ww/en/view/109766-665)

PROFINET IO

Function	Description	Additional information
RT (Real-Time)	RT prioritizes PROFINET IO telegrams over standard telegrams. This ensures the required determinism in the automation technology. In this process the data is transferred via prioritized Ethernet telegrams.	PROFINET function manual (https://support.industry.siemens.com/cs/ww/en/view/49948856)
IRT (Isochronous Real-Time)	A reserved bandwidth within the send clock is available for IRT data. The reserved bandwidth ensures that the IRT data can be transmitted in time-synchronized intervals, unaffected by other high network loading (e.g. TCP/IP communication or additional real time communication). Update times with maximum determinism can be realized through IRT. Isochronous applications are possible with IRT.	
Isochronous mode	With isochronous mode, measured values and process data are acquired and processed in a fixed system clock. Isochronous mode thus contributes to high control quality and hence to greater manufacturing precision. Isochronous mode reduces possible fluctuations of the process response times to a minimum. Time-assured processing makes higher machine cycles possible. With SIMATIC Drive Controller, the clock pulse systems of SINAMICS Integrated, PROFINET (X150) and the technology I/Os (X142) can be coupled together isochronously.	
MRP (Media Redundancy Protocol)	It is possible to establish redundant networks via the Media Redundancy Protocol. Redundant transmission links (ring topology) ensure that an alternative communication path is made available if a transmission link fails. The PROFINET devices that are part of this redundant network form an MRP domain. RT operation is possible with the use of MRP.	
MRPD (Media Redundancy with Planned Duplication)	The advantage of the MRP extension MRPD is that, in the event of a failure of a device or a line in the ring, all other devices continue to be supplied with IO data without interruption and with short update times. MRPD is based on IRT and MRP. To realize media redundancy with short update times, the PROFINET devices participating in the ring send their data in both directions. The devices receive this data at both ring ports. This eliminates the reconfiguration time of the ring.	
Shared device	The "Shared device" function allows you to divide the modules or submodules of an IO device up among different IO controllers. Numerous IO controllers are often used in larger or widely distributed systems. Without the "Shared device" function, each I/O module of an IO device is assigned to the same IO controller. If sensors that are physically close to each other must provide data to different IO controllers, several IO devices are required. The "Shared device" function allows the modules or submodules of an IO device to be divided up among different IO controllers, thus allowing flexible automation concepts. You can, for example, combine I/O modules that are physically close to each other in one IO device.	
PROFIenergy	The vendor- and device-neutral profile defined by the PNO allows you to significantly reduce your energy demand and costs. With PROFIenergy you switch off unneeded loads. Thus, energy costs drop noticeably during production breaks. PROFIenergy provides an easy, automated way of switching technologically-related plant parts off and on. Most of the energy savings comes from the process. The PROFINET device itself contributes only a few watts to the savings potential.	

Integrated technology

Function	Description	Additional information
Motion control	The CPU of the SIMATIC Drive Controller supports the S7-1500 Motion Control functions via the technology objects: speed axis, positioning axis, synchronous axis, external encoder, cam, cam track and measuring input. • Speed-controlled axis for controlling a drive with speed specification • Positioning axis for position-controlled positioning of a drive • Synchronous axis for interconnecting with a leading value. The axis follows the position of the leading axis in synchronous operation. • External encoder for detecting the actual position of an encoder and its use as a leading value for synchronous operation • Cam, cam track for position-dependent generation of switching signals • Measuring input for fast, accurate and event-dependent sensing of actual positions You program the technology objects with Motion Control instructions according to PLCopen.	S7-1500(T) Motion Control function manuals (https://support.industry.siemens.com/cs/de/en/view/109751049)
Extended motion control functions	The SIMATIC Drive Controller contains a SIMATIC S7-1500 technology CPU. The technology CPU provides extended motion control functions: • Extended synchronous operation functions – Synchronization with specification of the synchronous position – Actual value coupling – Offset of leading value on following axis – Camming – Velocity gearing • Up to four encoders or measuring systems as actual position for position control • Control of kinematics, such as – Cartesian portals – Roller pickers – Delta pickers – SCARA • Cross-PLC synchronous operation: Coupling between leading axis or external encoder and following axis via PROFINET IO with IRT	
Integrated closed-loop control functionality	• PID Compact (continuous PID controller) • PID 3Step (step controller for integrating actuators) • PID Temp (temperature controller for heating and cooling with two separate actuators)	PID Control function manual (https://support.industry.siemens.com/cs/ww/en/view/108210036)

Integrated safety

Function	Description	Additional information
Know-how protection	The know-how protection protects user blocks against unauthorized access and modifications.	SIMATIC Drive Controller system manual

Function	Description	Additional information
Copy protection	Copy protection links user blocks to the serial number of the SIMATIC Memory Card or to the serial number of the SIMATIC Drive Controller. User programs cannot run without the corresponding SIMATIC Memory Card or SIMATIC Drive Controller.	(https://support.industry.siemens.com/cs/ww/en/view/109766-665)
Access protection	Extended access protection provides high-quality protection against unauthorized configuration changes. You can use authorization levels to assign separate rights to different user groups.	
Integrity protection	The CPUs come with an integrity protection function as standard. This helps to detect any manipulation of the engineering data on the SIMATIC Memory Card or during data transfer between the TIA Portal and the CPU, and to check communication from a SIMATIC HMI system to the CPU for possible manipulation of engineering data. The user receives a corresponding message about manipulation of engineering data detected by the integrity protection.	
Password provider	As an alternative to manual password input you can connect a password provider to STEP 7. A password provider offers the following advantages: • Convenient handling of passwords. STEP 7 reads the password automatically for the blocks. This saves you time. • Optimum block protection because the users themselves do not know the password.	

3.6 Firmware functions of SINAMICS Integrated

The automatic speed control integrated in SIMATIC Drive Controller is based on the automatic speed control of the SINAMICS S120 Control Unit CU320-2 (firmware version V5.x).

SINAMICS Integrated provides a functional subset of the SINAMICS S120 CU320-2 drive functions. You can find details at the end of the section under "Unsupported functions and components".

The integrated drive control supports the following:

- Servo control, for maximum dynamic response
- Vector control, for maximum torque accuracy
- U/f control

You can expand the drive configuration limits of the SIMATIC Drive Controller using PROFINET IO IRT, for example with SINAMICS S120 Control Unit CU320-2.

SINAMICS Integrated safety functionality

SINAMICS Integrated of the SIMATIC Drive Controller supports the same Safety Integrated functions as SINAMICS S120 CU320-2.

- Safety Integrated Basic Functions
- Safety Integrated Extended Functions
- Safety Integrated Advanced Functions

The safety functions correspond to the functions pursuant to EN 61800-5-2 (if and to the extent that they are defined therein).

Supported SINAMICS functions requiring a license

SINAMICS Integrated only supports the following licensed functions and Technology Extensions (TEC) of a SINAMICS S120 CU320-2:

- Safety Integrated Extended Functions
- Safety Integrated Advanced Functions
- Detent torque compensation
- Advanced Position Control (APC)
- Technology Extension VIBX (Vibration Extinction)
- Technology Extension SERVCOUP (Servo Coupling)
- Technology Extension DCDCCONV (DC-DC converter)
- Technology Extension RAILCTRL (Rail Control, under development)
- DCB Extension Library
- Advanced Synchronous Reluctance Control
- Controller Parameter Adaption
- Dynamic network support
- Line droop control

PROFIdrive Integrated

Cyclic communication between CPU and SINAMICS Integrated is based on PROFIdrive mechanisms.
The communications services used for this are based on PROFIBUS DP and are processed over an internal, high-performance interface.

Unsupported functions and components

SINAMICS Integrated provides a functional subset of the SINAMICS S120 CU320-2 drive functions. The following functions/components are not supported by the integrated drive control of the SIMATIC Drive Controller:

- Free function blocks (FBLOCKS)
- SINAMICS Web server
- SIMOTION-specific or SINUMERIK-specific DRIVE-CLiQ components (e.g. TM17 Terminal Modules, HLA Hydraulic Drive, CX32-2 Controller Extension, NX10.3/NX15.3 Numeric Control Extensions)
- Expansion boards, e.g. TB30, CBE20, CBE30-2
- Hardware and functions not supported by SINAMICS Startdrive, see (https://support.industry.siemens.com/cs/ww/en/view/109761180)

In addition, not all licensed functions and Technology Extensions (TEC) of a SINAMICS S120 CU320-2 are available to the SINAMICS Integrated. For example, the High Output Frequency function for high output frequencies > 550 Hz is not available.

NOTE

Use of SINAMICS S120 CU320-2 Control Units

Additional CU320-2 Control Units on the SIMATIC Drive Controller have the full range of functions compared with SINAMICS Integrated.

Additional information

The Runtime licensing section in the SIMATIC Drive Controller system manual (https://support.industry.siemens.com/cs/ww/en/view/109766665) describes which licensed functions are available for CPUs and SINAMICS Integrated.
You can find a detailed description of the functions of SINAMICS S120 CU320-2 in the SINAMICS S120 Drive Functions (https://support.industry.siemens.com/cs/us/en/view/109754299) function manual.

3.7 Operator controls, displays and connection elements

3.7.1 View of SIMATIC Drive Controller with covers

The following figure shows the front view of the SIMATIC Drive Controllers.

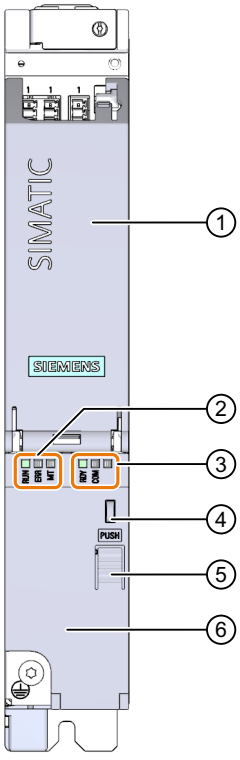

① Top cover
② 3 LEDs for CPU (RUN, ERR, MT)
③ 3 LEDs for SINAMICS Integrated (RDY, COM, third LED has no assigned function)
④ Rings for access security
⑤ Pushbutton for opening and closing the bottom cover
⑥ Bottom cover

Figure 3-4 SIMATIC Drive Controller front view

3.7.2 View of SIMATIC Drive Controller without covers

The figure below shows the operator controls and interfaces on the front of the SIMATIC Drive Controller.

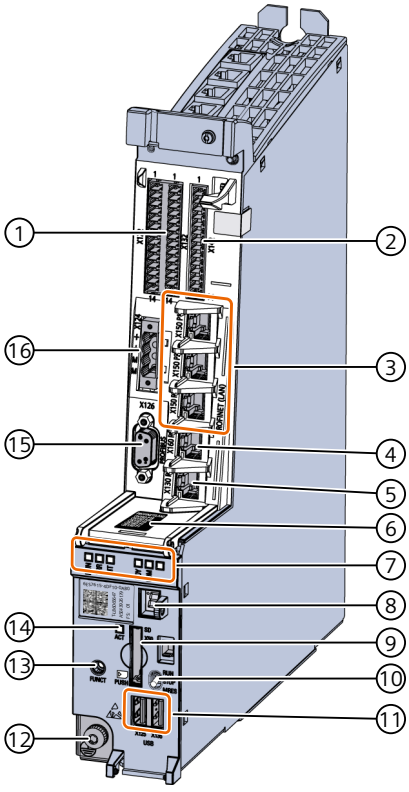

① X122, X132: 12 DI + 8 DI/DQ (assigned to SINAMICS Integrated)
② X142: 8 DI/DQ (assigned to CPU)
③ PROFINET IO IRT (X150), with 3 ports: P1R, P2R, P3
④ PROFINET IO RT (X160), with 1 port (P1)
⑤ Basic PROFINET services (X130), with 1 port (P1), 1000 Mbps
⑥ Interfaces board (X150, X160 and X130)
⑦ LED displays
⑧ 7-segment display, for service and diagnostics purposes
⑨ X50: Slot for SIMATIC Memory Card
⑩ Mode selector, see section Mode selector (Page 40)
⑪ X125, X135: 2 × USB 3.0 interface (no function, no connection permitted)
⑫ Protective conductor connection M5, Torx T25, tightening torque 3 Nm (26.6 lbf in)
⑬ FUNCT button for service and diagnostics purposes, see section FUNCT button (Page 41)
⑭ ACT LED: Display for access to SIMATIC Memory Card
⑮ X126: PROFIBUS DP interface
⑯ X124: Connection for the 24 V DC supply voltage

Figure 3-5 SIMATIC Drive Controller display and operator controls as well as interfaces

NOTE

Labeling of PROFINET interfaces X150, X160 and X130

Labeling of PROFINET interfaces X150, X160 and X130 (③, ④, ⑤) to the left next to the RJ45 sockets was replaced in 2021 by a label plate (⑥). During the transition phase, the SIMATIC Drive Controllers can also have both types of labeling.

NOTICE

Electrostatic discharge without grounding

If there is no grounding or incorrect grounding, electronic components in the device could be damaged by electrostatic discharges (ESD).

Open the cover only when you have grounded yourself using one of the following measures:

- Ground yourself on the cabinet or ground terminal.
- Wear an ESD wrist strap.
- Wear ESD shoes or ESD grounding strips in ESD areas with a conducting floor.

3.7.3 Top view of SIMATIC Drive Controller

The figure below shows the top of the SIMATIC Drive Controller with the four DRIVE-CLiQ interfaces X100 to X103.

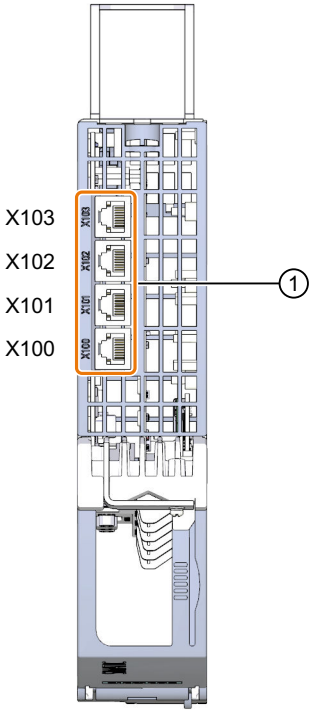

① X100 to X103: 4 × DRIVE-CLiQ interface

Figure 3-6 SIMATIC Drive Controller DRIVE-CLiQ interfaces

3.7.4 View of the SIMATIC Drive Controller from below

There is a DisplayPort interface (X140) and an X127 P1 interface sealed with a mechanical lock located on the underside of the SIMATIC Drive Controller.

- The X140 interface is used exclusively for service purposes by Siemens and cannot be used to connect a display.
- The X127 P1 interface is not available for the SIMATIC Drive Controller.

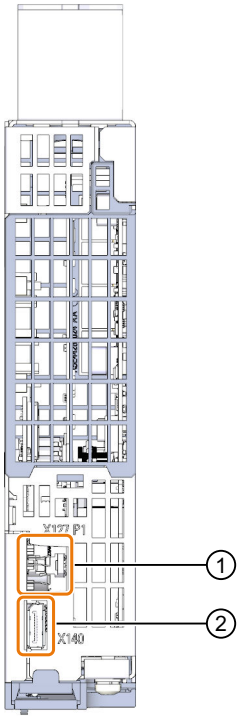

① X127 P1: Sealed interface

② X140: DisplayPort interface

Figure 3-7 SIMATIC Drive Controller view from below

3.7.5 Covers

The interfaces and operator controls on the front are concealed with covers. You must open the covers before you can connect cables to the interfaces or reach the operator controls of the Drive Controller.

NOTICE
Possible damage to electronic components (ESD) Electrostatic discharges can damage electronic components in the device. Open the cover only when you have grounded yourself using one of the following measures: • Ground yourself on the cabinet or ground terminal. • Wear an ESD wrist strap. • Wear ESD shoes or ESD grounding strips in ESD areas with a conducting floor.

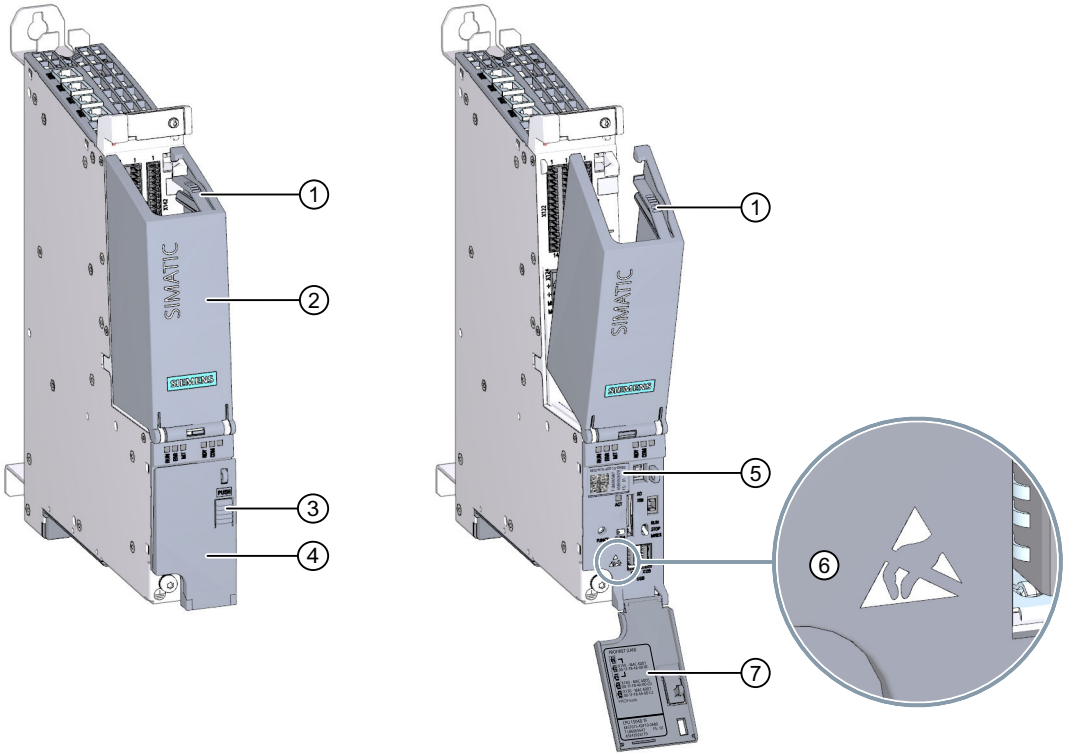

① Release catch for top cover
② Top cover
③ "PUSH" button to lock and unlock the bottom cover
④ Bottom cover
⑤ Front nameplate with Data Matrix Code
⑥ ESD symbol: Designates electrostatic sensitive devices
⑦ Label with MAC addresses and other information

Figure 3-8 SIMATIC Drive Controller covers

Opening the top cover

To open the top cover, follow these steps:

1. Undo the release catch ① on the inside of the cover ② by gently pressing down on it.
2. Fold down the cover ②.

NOTE

The layout and labeling of the interfaces is shown on the inside of the top cover.

Removing the top cover

To remove the top cover, follow these steps:

1. Open the top cover.
2. Release the cover by applying gentle pressure to the side of the hinge.
3. Swing the cover aside to remove it.

Opening the bottom cover

The operator controls of the SIMATIC Drive Controller and the slot for the SIMATIC memory card are located behind the bottom cover.

To open the bottom cover, follow these steps:

1. Press the "Push" button ③ to unlock the cover.
2. Fold down the cover ④.

The MAC addresses ⑥ of the SIMATIC Drive Controller and information about the device can be found on the inside of the bottom cover.

Closing the bottom cover

To close the bottom cover, follow these steps:

1. Tilt the cover up.
2. Press the "Push" button ③ to lock the cover.

Removing the bottom cover

To remove the bottom cover, follow these steps:

1. Open the bottom cover.
2. Release the cover by applying gentle pressure to the side of the hinge.
3. Swing the cover aside to remove it.

3.7.6 Nameplates

The nameplates of the SIMATIC Drive Controller are described below. The contents of the individual nameplate fields of the device may differ from the contents described in this manual (e.g. advanced product version, approvals and markings not yet granted).

Side nameplate

The figure below shows the side nameplate.

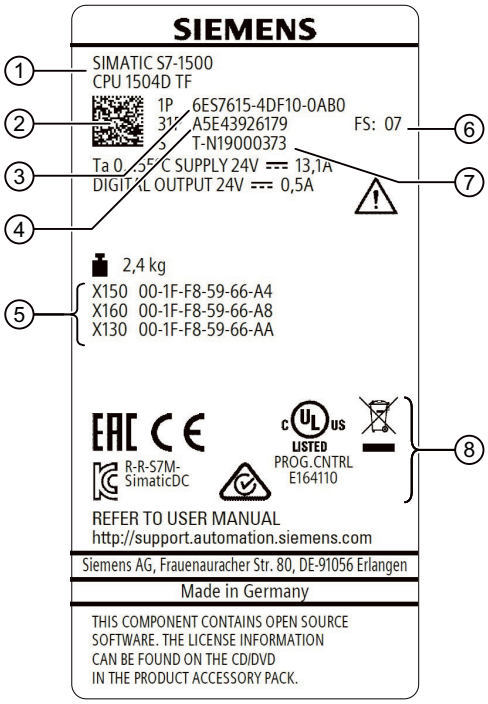

① Product name
② DMC (Data Matrix Code)
③ Article number
④ Material number
⑤ MAC addresses
⑥ Hardware functional status
⑦ Serial number
⑧ Approvals and markings

Figure 3-9 Side nameplate

Front nameplate

You will find the front nameplate when the bottom cover for the operator controls and displays is open. It contains information about the device and a Data Matrix Code with the MAC addresses of the SIMATIC Drive Controller.

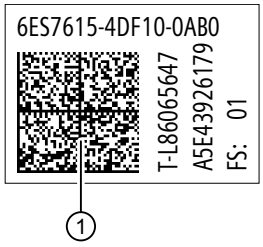

① Data Matrix Code

Figure 3-10 Front nameplate

Label on bottom cover

The inside of the bottom cover contains a label with the MAC addresses and additional device information of the SIMATIC Drive Controller.

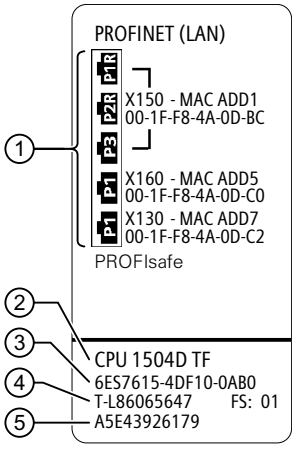

① MAC addresses

② Product name

③ Article number

④ Serial number and HW function version

⑤ Material number

Figure 3-11 Label with MAC addresses

Evaluation of Data Matrix Code

You can evaluate the Data Matrix Code (DMC) using an appropriate reader or a smartphone app. Suitable is, for example, the Industry Online Support Mobile App. (https://support.industry.siemens.com/cs/ww/en/sc/2067)

NOTE

Note that the 2D codes and their content may vary depending on the delivery state.

Table 3-5 Information on the nameplate

Nameplate	DMC data string	Feature	Property (example)
Front nameplate	1P6ES7615-4DF10-0AB0+	Article number (1P)	6ES7615-4DF10-0AB0
	ST-L86065647	Serial number (S)	T-L86065647
	1Z FS: 01	Functional version (1Z)	FS: 01
	SIMATIC S7-1500, CPU 1504D TF	Module name	SIMATIC S7-1500, CPU 1504D TF
	X150 00-1F-F8-4A-0D-BC	MAC address interface X150, X160, X130	X150 00-1F-F8-4A-0D-BC
	X160 00-1F-F8-4A-0D-C0		X160 00-1F-F8-4A-0D-C0
	X130 00-1F-F8-4A-0D-C2		X130 00-1F-F8-4A-0D-C2
Side nameplate	1P6ES7615-4DF10-0AB0+23S-001FF84A0DBC+ST-L86065647	Article number (1P)	6ES7615-4DF10-0AB0
		MAC address interface X150 (23S)	001FF84A0DBC
		Serial number (S)	T-L86065647

For detailed information on assigning the MAC address, refer to "MAC address assignment" in the section PROFINET X150, X160 and X130 (Page 45).

3.8 Mode selector

The mode selector is designed as a toggle switch. You use the mode selector to set the operating mode of the CPU.

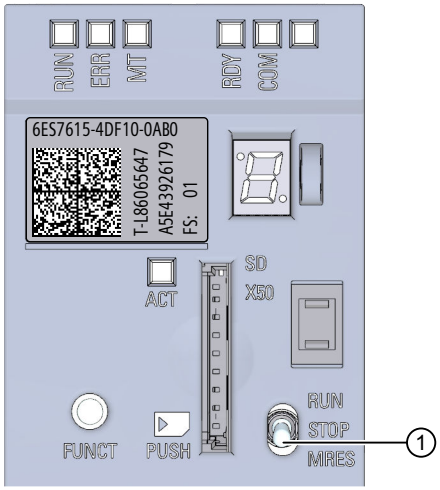

① Mode selector

Figure 3-12 Mode selector

The following table shows the meaning of the three switch positions along with an explanation.

Table 3-6 Mode selector switch positions

Switch position	Meaning	Explanation
RUN – latching	RUN mode	The CPU is running the user program
STOP – latching (center position)	STOP mode	The user program is not running.
MRES – not latching	Memory reset	Position for the memory reset of the CPU

3.9 FUNCT button

You can use the FUNCT button to select and initiate module functions.

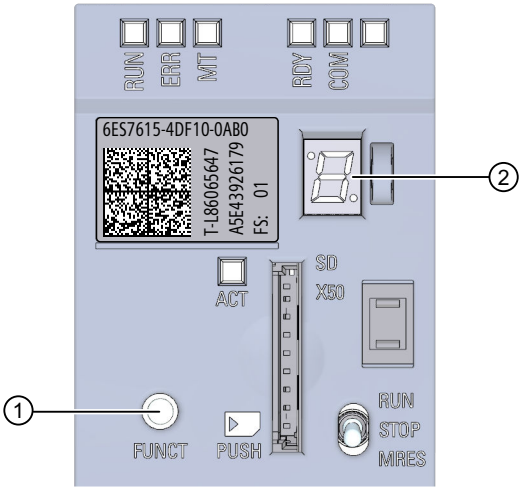

① FUNCT button

② 7-segment display

Figure 3-13 FUNCT button

The following functions are available via the FUNCT button:

- Function 1: Save service data on SIMATIC Memory Card
- Function 2: Switching the SIMATIC Memory Card from program card to firmware update card and performing a firmware update
- Function 3: Switching the SIMATIC Memory Card from firmware update card to program card

Functions 1 to 3 are selected via the FUNCT key. The selection is shown on the 7-segment display. You can only select functions after the CPU has started up.

Exception: The service data is saved to the SIMATIC Memory Card during startup of the SIMATIC Drive Controller using the FUNCT button.

Connecting

4

4.1 Supply voltage X124

24 V DC supply voltage (X124)

The SIMATIC Drive Controller is powered by an external 24 V DC power supply. Power supplies from the SITOP family, for example, can be used.

⚠ WARNING

Danger to life from hazardous voltage when an unsuitable power supply is connected

Design the 24 V direct voltage as protective extra-low voltage.

When an external 24 V DC power supply is connected, it must comply with the requirements for protective extra-low voltage (PELV) according to UL 61010. A backup fuse that reliably trips within 120 seconds in the event of a short-circuit at an ambient temperature of 0 °C must also be available.

When OVC III circuits up to 600 V AC (phase to neutral voltage) are the primary supply of the utilized power supply, ensure that the clearance between open contacts of the fuse or the single-fault-secure circuit is 3.0 mm according to UL 61010.

When using an external power supply, ensure that the trip rating of the utilized fuse corresponds to the maximum possible short-time short-circuit current of the utilized power supply.

NOTE

Ground potential and enclosure (PE) are connected to one another internally with low impedance. You must therefore observe the following:

- Insulation monitoring devices are not permitted in the 24 V power supply.
- If you are using external power supplies (e.g. SITOP), you must connect the ground potential to the protective conductor terminal (PELV).
- You must provide adequately dimensioned equipotential bonding connections between the 24 V power supply and all grounded, locally separate loads.

You can find information on equipotential bonding in the SIMATIC Drive Controller system manual (https://support.industry.siemens.com/cs/ww/en/view/109766665).

The following table shows the pin assignment of the 4-pin connector.

Table 4-1 Connector pin assignment for 24 V DC power supply

X124	Pin	Signal name	Meaning	Technical specifications
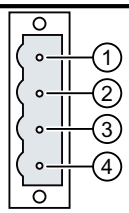	1	+	Power supply	24 V DC supply voltage (20.4 ... 28.8 V) Current consumption, max.: 13.1 A
	2	+		
	3	M	Ground	
	4	M		

The 24 V supply is looped through via the 24 V connector. In the connector, pin 1 is jumpered to pin 2 and pin 3 is jumpered to pin 4. The maximum current can be limited by the current carrying capacity of the cable. The current carrying capacity of the cable depends on the cabling method (e.g. in a cable duct, on a cable rack), among other things.

Select the permissible conductor cross-section in conformance with national rules (NEC, VDE, etc.) from the following table "Interface X124". The basis for this can be the output current of the 24 V DC supply or the overcurrent device used in the 24 V circuit. If the short-circuit current of the utilized 24 V power supply unit is greater than 50 A, an appropriate overcurrent device that limits the short-circuit current to this value must be used upstream of the product.

NOTE

- The 24 V DC cable must be approved for temperatures of up to 75 °C.
- The maximum permissible cable length is 10 m.

Characteristics of the X124 interface

Table 4-2 Interface X124

Properties		Version
Connector type		4-pin screw-type terminal
Number of connectable conductors		1
Connectable conductor types and conductor cross-sections		
	Solid	0.2 mm² ... 2.5 mm²
	Flexible	0.2 mm² ... 2.5 mm²
	Flexible with wire-end ferrule without plastic sleeve	0.2 mm² ... 2.5 mm²
	Flexible with wire-end ferrule with plastic sleeve	0.2 mm² ... 1.5 mm²
	AWG / kcmil	22 ... 12
Stripped length		6 ... 7 mm
Tool		Screwdriver 0.5 x 3 mm (M2.5)
Tightening torque		0.4 to 0.5 Nm (3.5 to 4.4 lbf in)

1) This value must be ensured for the current carrying capacity of the power cable.

Properties	Version
Max. current carrying capacity including loop-through	20 A [1] (15 A according to UL/CSA)

[1] This value must be ensured for the current carrying capacity of the power cable.

See also

SIMATIC Drive Controller block diagram (Page 53-54)

4.2 PROFINET X150, X160 and X130

PROFINET interface X150 with 3 ports (X150 P1R, X150 P2R, X150 P3)

The assignment corresponds to the Ethernet standard for an RJ45 connector.

- When autonegotiation is deactivated, the RJ45 socket is allocated as a switch (MDI-X).
- When autonegotiation is activated, autocrossing is in effect and the RJ45 socket is allocated either as data terminal equipment (MDI) or a switch (MDI-X).

PROFINET interface X160 with 1 port (X160 P1)

The assignment corresponds to the Ethernet standard for an RJ45 connector.

Autocrossing is always active on X160. This means the RJ45 socket is allocated either as data terminal equipment (MDI) or a switch (MDI-X).

PROFINET interface X130 with 1 port (X130 P1)

The assignment corresponds to the Ethernet standard for an RJ45 connector.

NOTE

PROFINET interface X130 with a transmission rate of 1000 Mbps

PROFINET interface X130 supports a maximum transmission rate of 1000 Mbps.

Requirements:

- Devices must support the 1000 Mbps transmission rate.
- The network infrastructure (network cables and outlets) must be category CAT 5e or better.
- For 1000 Mbps, you must use 8-wire cables (4x2) and the 1000 Mbit version of the 180° FastConnect plug. You can use the 145° FastConnect plugs for PROFINET interface X130 only with a max. transmission rate of 100 Mbps.

The "Transmission rate" parameter in the properties of the port (X130) must be set in STEP 7 as follows:

- The "Autonegotiation" check box is selected.
- "Automatic" is selected in the drop-down list.

Pin assignment of interfaces X150, X160, X130

Table 4-3 Pin assignment of interfaces X150, X160, X130

View	Pin	Assignment in 10/100 Mbit mode		Assignment in 1000 Mbit mode	
		Signal name	**Description**	**Signal name**	**Description**
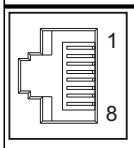	1	TXP	Transmit data +	DA+	Bidirectional pair A+
	2	TXN	Transmit data -	DA-	Bidirectional pair A-
	3	RXP	Receive data +	DB+	Bidirectional pair B+
	4	-	Reserved; no connection	DC+	Bidirectional pair C+
	5	-	Reserved; no connection	DC-	Bidirectional pair C-
	6	RXN	Receive data -	DB-	Bidirectional pair B-
	7	-	Reserved; no connection	DD+	Bidirectional pair D+
	8	-	Reserved; no connection	DD-	Bidirectional pair D-

Assignment of MAC addresses

The SIMATIC Drive Controller has three PROFINET interfaces. Interface X150 is an interface with 3-port switch. The PROFINET interfaces each have a MAC address, and each of the PROFINET ports has its own MAC address, resulting in a total of 8 MAC addresses for the SIMATIC Drive Controller.

The MAC addresses of the PROFINET ports are needed for the LLDP protocol, for example, for the neighbor discovery function. The number range of the MAC addresses is sequential.

You will find the MAC addresses of the SIMATIC Drive Controller at the following places:

- Side nameplate MAC addresses of the interfaces; the first MAC address is also contained in the Data Matrix Code
- Front nameplate: The MAC addresses of the interfaces are contained in the Data Matrix Code.
- On the inside of the bottom cover: MAC addresses of the interfaces

You can find detailed information on the nameplates in section Nameplates (Page 37).

The table below shows how the MAC addresses are assigned.

Table 4-4 Assignment of MAC addresses

	Assignment	Side nameplate	Front nameplate	Label on bottom cover
MAC address 1	PROFINET interface X150 (visible in STEP 7 in accessible devices)	MAC address labeled DMC with MAC addresses	DMC with MAC addresses	MAC address labeled

DMC: Data Matrix Code

"-" means: MAC address is not labeled or marked

	Assignment	Side nameplate	Front nameplate	Label on bottom cover
MAC address 2	Port X150 P1R (needed for LLDP, for example)	-	-	-
MAC address 3	Port X150 P2R (needed for LLDP, for example)	-	-	-
MAC address 4	Port X150 P3 (needed for LLDP, for example)	-	-	-
MAC address 5	PROFINET interface X160 (visible in STEP 7 in accessible devices)	MAC address labeled	DMC with MAC addresses	MAC address labeled
MAC address 6	Port X160 P1 (needed for LLDP, for example)	-	-	-
MAC address 7	PROFINET interface X130 (visible in STEP 7 in accessible devices)	MAC address labeled	DMC with MAC addresses	MAC address labeled
MAC address 8	Port X130 P1 (needed for LLDP, for example)	-	-	-

DMC: Data Matrix Code

"-" means: MAC address is not labeled or marked

See also

Covers (Page 35)

4.3 PROFIBUS X126

The SIMATIC Drive Controller has a PROFIBUS DP interface (X126).

Pin assignment of X126 interface

The table below shows the pin assignment of the PROFIBUS interface. The assignment corresponds to the standard assignment of an RS485 interface.

Table 4-5 Pin assignment of PROFIBUS interface

View	Pin	Signal name	Designation
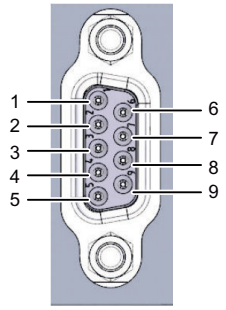	1	-	-
	2	-	-
	3	RxD/TxD-P	Data line B
	4	RTS	Request to send
	5	M5V2	Data reference potential (from station)
	6	P5V2	Supply plus (from station)
	7	-	-
	8	RxD/TxD-N	Data line A
	9	-	-

NOTE

Supply of I/O devices

The SIMATIC Drive Controller does not make a 24 V DC supply voltage available at the PROFIBUS interface. I/O devices (for example, PC adapter USB 6ES7972-0CB20-0XA0) are only operational on the interface in conjunction with a plug-in power supply set for external power supply.

The innovated successor product, PC adapter USB A2 (6GK1571-0BA00-0AA0), obtains the needed supply voltage via the USB port. For this reason, it does not need a 24 V DC power supply. You can operate the PC adapter USB A2 **without** a plug-in power supply set for external power supply.

4.4 Digital inputs and outputs of X122, X132 and X142

The digital inputs and digital outputs at the X122, X132 and X142 sockets are intended for connection of sensors and actuators.

Characteristics of X122, X132 and X142

Table 4-6 Interfaces X122, X132 and X142

Properties		Version
Connector type		Spring-loaded terminal, 14-pin
Number of connectable conductors		1
Connectable conductor types and conductor cross-sections		
•	Solid	0.2 mm² ... 1.5 mm²
•	Flexible	0.2 mm² ... 1.5 mm²

Properties		Version
•	Flexible with wire-end ferrule without plastic sleeve	0.25 mm² ... 1.5 mm²
•	Flexible with wire-end ferrule with plastic sleeve	0.25 mm² ... 0.75 mm²
•	AWG/kcmil	24 ... 16
Stripped length		10 mm
Current-carrying capacity (ground)		≤ 6 A

NOTE

The maximum permissible cable length is 30 m.

Breakdown into digital inputs and digital outputs

The figure below shows the breakdown of the X122/X132 and X142 interfaces into digital inputs and digital outputs.
The X122 and X132 interfaces are allocated to SINAMICS Integrated of the SIMATIC Drive Controller.
The X142 interface is allocated to the CPU of the SIMATIC Drive Controller.

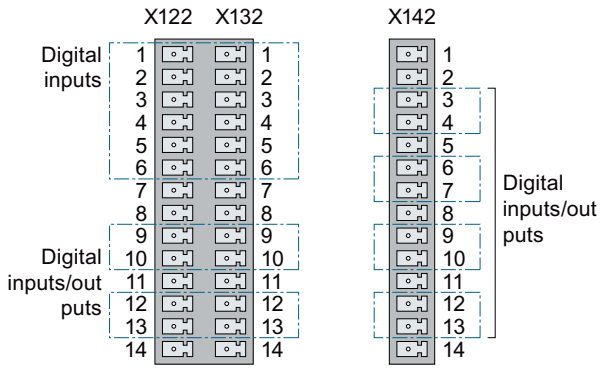

Figure 4-1 Interface assignment of X122/X132 and X142

Pin assignment of the X122 and X132 interfaces

Table 4-7 Digital inputs and digital inputs/outputs of X122

Pin	Designation [1)]	Signal type [2)]	Notes
1	DI0	I	Digital input 0
2	DI1	I	Digital input 1
3	DI2	I	Digital input 2
4	DI3	I	Digital input 3
5	DI16	I	Digital input 16

Pin	Designation [1]	Signal type [2]	Notes
6	DI17	I	Digital input 17
7	M1	GND	Ground for DI0 to DI3, DI16, DI17 (isolated from M)
8	M	GND	Ground
9	DI/DQ8	B	Digital input/output 8 (also usable as measurement sensing input)
10	DI/DQ9	B	Digital input/output 9 (also usable as measurement sensing input)
11	M	GND	Ground
12	DI/DQ10	B	Digital input/output 10 (also usable as measurement sensing input)
13	DI/DQ11	B	Digital input/output 11 (also usable as measurement sensing input)
14	M	GND	Ground

[1] DI: Digital input; DI/DQ: Bidirectional digital input/output; M: Electronic ground; M1: Ground reference
[2] B = Bidirectional; I = Input; GND = Reference potential (ground)

Table 4-8 Digital inputs and digital inputs/outputs of X132

Pin	Designation [1]	Signal type [2]	Notes
1	DI4	I	Digital input 4
2	DI5	I	Digital input 5
3	DI6	I	Digital input 6
4	DI7	I	Digital input 7
5	DI20	I	Digital input 20
6	DI21	I	Digital input 21
7	M2	GND	Ground for DI4 to DI7, DI20, DI21 (isolated from M)
8	M	GND	Ground
9	DI/DQ12	B	Digital input/output 12 (also usable as measurement sensing input)
10	DI/DQ13	B	Digital input/output 13 (also usable as measurement sensing input)
11	M	GND	Ground
12	DI/DQ14	B	Digital input/output 14 (also usable as measurement sensing input)
13	DI/DQ15	B	Digital input/output 15 (also usable as measurement sensing input)
14	M	GND	Ground

[1] DI: Digital input; DI/DQ: Bidirectional digital input/output; M: Electronic ground; M2: Ground reference
[2] B = Bidirectional; I = Input; GND = Reference potential (ground)

NOTE

An open input is interpreted as "low".
So that the digital inputs will function, connect terminal M1 or M2. The alternatives are as follows:

- Connect the coupled reference ground of the digital inputs to M1 or M2.
- Connect a jumper to terminal M and terminal M1 (or between M and M2).
  This removes the electrical isolation for these digital inputs.

Pin assignment of X142 interface

Pin	Designation [1]	Signal type [2]	Notes
1	–	–	Reserved
2	–	–	Reserved
3	DI/DQ0	B	Digital input/output 0
4	DI/DQ1	B	Digital input/output 1
5	M	GND	Ground for digital input/output
6	DI/DQ2	B	Digital input/output 2
7	DI/DQ3	B	Digital input/output 3
8	M	GND	Ground for digital input/output
9	DI/DQ4	B	Digital input/output 4
10	DI/DQ5	B	Digital input/output 5
11	M	GND	Ground for digital input/output
12	DI/DQ6	B	Digital input/output 6
13	DI/DQ7	B	Digital input/output 7
14	M	GND	Ground for digital input/output

[1] DI/DQ: Bidirectional digital input/output; M: Electronic ground
[2] B = Bidirectional; GND = Reference potential (ground)

Power supply for X142 digital inputs/outputs

If you use the X142 digital inputs/outputs partly as inputs and partly as outputs (mixed operation), you need to supply the digital inputs over the same power supply as the SIMATIC Drive Controller (X124 module supply).

This restriction does not apply if you operate the X142 digital inputs/outputs exclusively as inputs or as outputs.

The X122/X132 digital inputs/outputs are not affected by this restriction.

Digital outputs at the X142 interface

You configure each of the digital outputs as sourcing output or as high-speed output:

- Sourcing output: The digital output is a 24 V sourcing output in reference to M and can carry a rated load current of 0.5 A.
- High-speed output: The digital output is a high-speed push-pull switch and can carry a rated load current of 0.4 A. A push-pull switch is alternately switched to 24 V DC and ground. Very steep edges are possible as a result.

The digital outputs are protected against overload and short-circuit.
The direct connection of relays and contactors is possible without external wiring.

NOTICE

Overheating of unsuitable loads

A high-speed output generates edges that are very steep. This generates very powerful charge reversals for the connected load, which can overheat the load at very high switching frequencies. The connected load must therefore be suited for high input frequencies.

NOTE

If you use a digital output as a sourcing output, its switch-off response/switch-off edge is dependent on the connected load. Thus it is possible that very short pulses cannot be output correctly.

NOTE

For optimal interference immunity and high-accuracy signal acquisition, we recommend the use of shielded cables in the following cases:

- Very brief signal levels or very fast signal changes occur at the digital inputs, e.g. when used as timer DI/measurement sensing input, as oversampling DI or for event/period duration measurement
- An input delay of 1 µs is set for X142

4.5 DRIVE-CLiQ interfaces X100 to X103

You connect all the components of the SINAMICS S120 drive system including motors and encoders using the DRIVE-CLiQ interface.

Properties of a DRIVE-CLiQ interface

Table 4-9 DRIVE-CLiQ interfaces X100 to X103

Property	Version
Connector type	DRIVE-CLiQ connector (RJ45 socket)
Cable type, inside the control cabinet	DRIVE-CLiQ standard
Cable type, outside the control cabinet	MOTION CONNECT
Blanking plug for closing unused DRIVE-CLiQ interfaces	Blanking plugs are included in the scope of delivery of the SIMATIC Drive Controller. Additional blanking plugs are available as accessories.

NOTE

The maximum permissible cable length is 100 m.

Pin assignment of a DRIVE-CLiQ interface

Table 4-10 Pin assignment of DRIVE-CLiQ interfaces X100 to X103

View	Pin	Signal name	Type of signal	Meaning
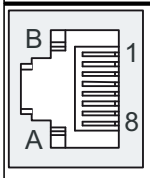	1	TXP	Output	Transmit data +
	2	TXN	Output	Transmit data -
	3	RXP	Input	Receive data +
	4	-	-	Reserved; no connection
	5	-	-	Reserved; no connection
	6	RXN	Input	Receive data -
	7	-	-	Reserved; no connection
	8	-	-	Reserved; no connection
	A	+ (24 V)	Voltage Output	Voltage supply for DRIVE-CLiQ, ≤ 450 mA
	B	M (0 V)	Voltage Output	Ground for 24 V

4.6 Wiring and block diagrams

4.6.1 SIMATIC Drive Controller block diagram

The figure below shows a simplified block diagram of the SIMATIC Drive Controller.

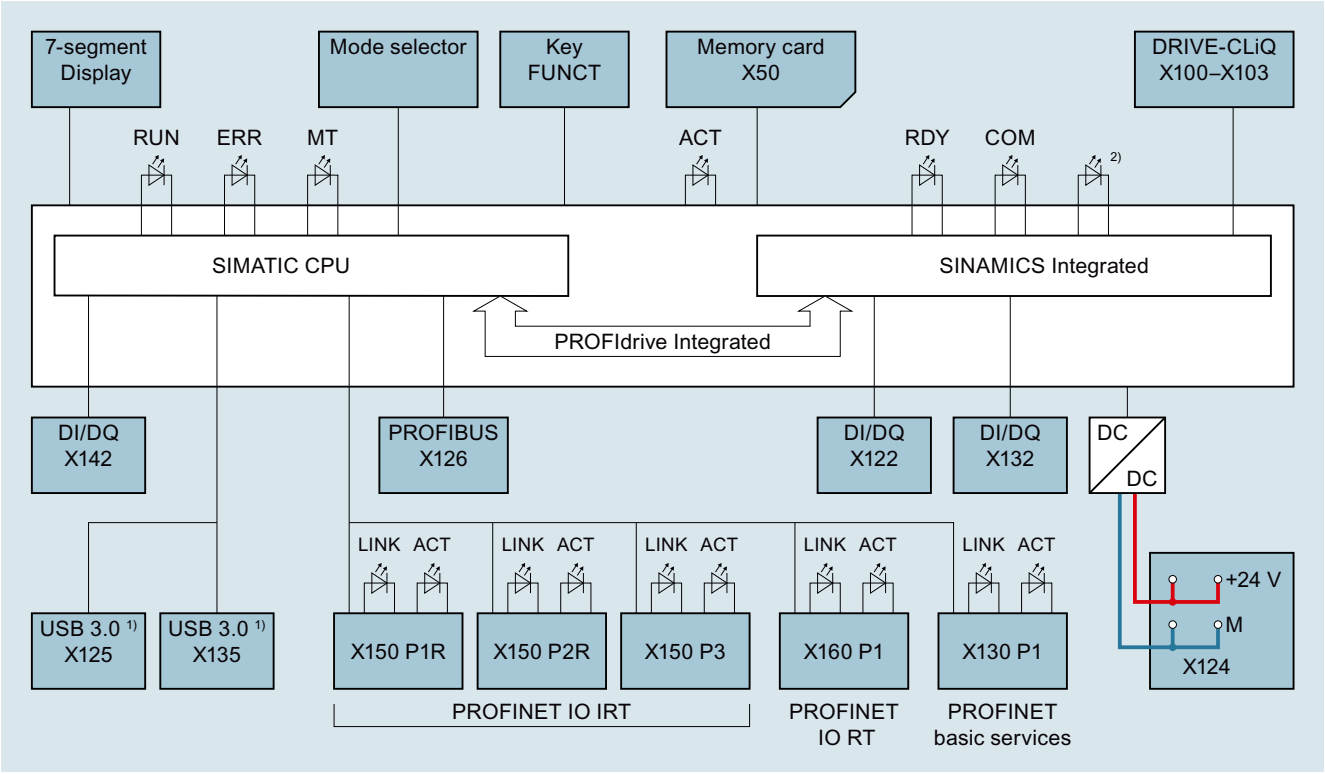

1) USB ports are non-functional, no connection permitted

2) No function (exception: lamp test at POWER ON)

Figure 4-2 SIMATIC Drive Controller block diagram

See also

Digital inputs and outputs of X122, X132 and X142 (Page 48)

4.6.2 Onboard digital inputs/digital outputs of X122, X132 and X142

The figure below shows the wiring and block diagram of the digital inputs and digital inputs/outputs of the SIMATIC Drive Controller.

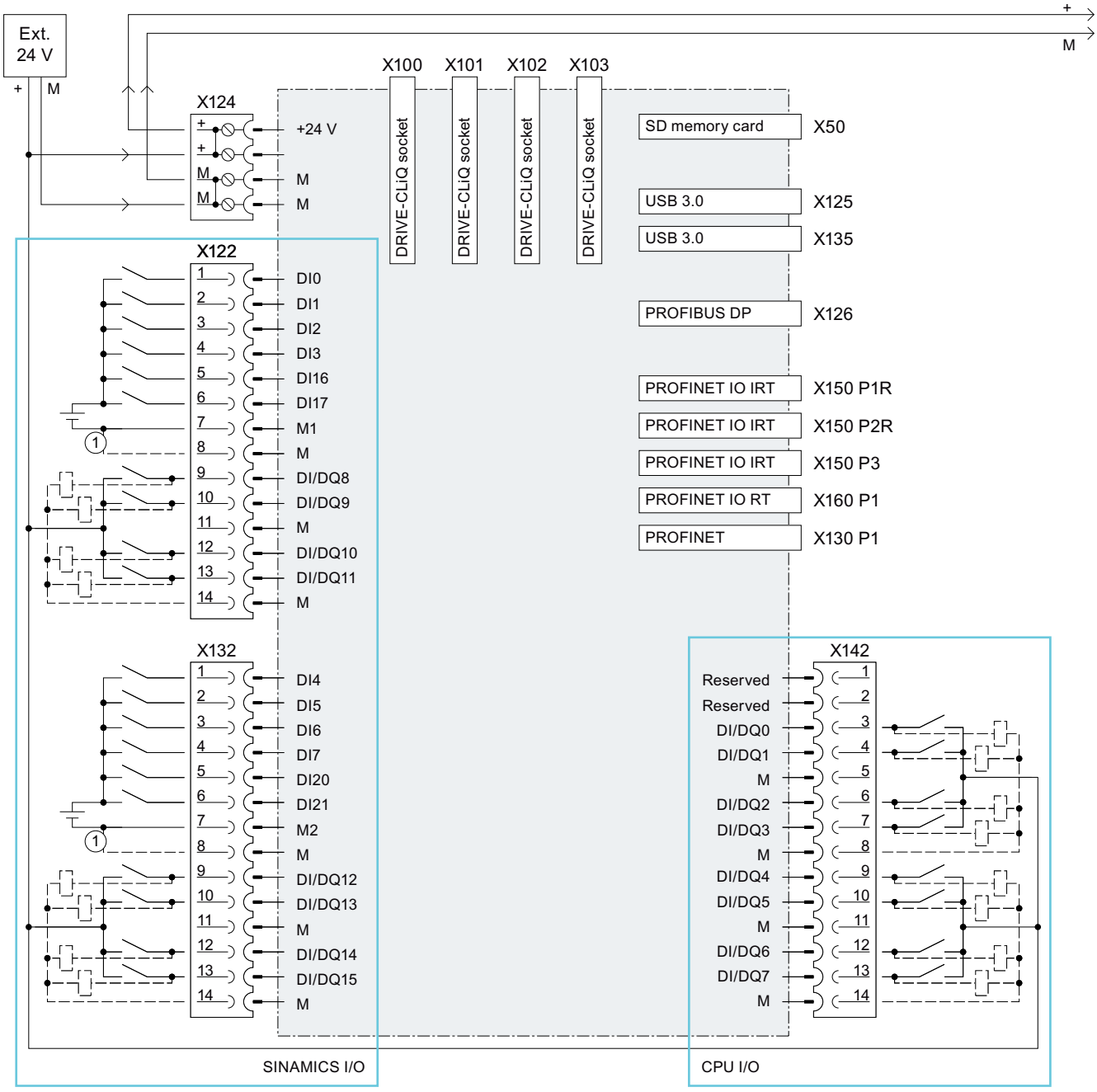

① Connection removes electrical isolation

Figure 4-3 Wiring and block diagram of onboard digital inputs and digital inputs/outputs

NOTE
Open input of digital inputs
An open input is interpreted as "low".
So that the digital inputs will function, connect terminal M1 or M2. The alternatives are as follows:

- Connect the coupled reference ground of the digital inputs to M1 or M2.
- Connect a jumper to terminal M and terminal M1 (or between M and M2). This removes the electrical isolation for these digital inputs.

The interfaces of the onboard I/O are described in section Digital inputs and outputs of X122, X132 and X142 (Page 48).

4.6.3 DRIVE-CLiQ interfaces X100 to X103

DRIVE-CLiQ wiring of an axis group

The figure below shows a possible DRIVE-CLiQ wiring of an axis group.

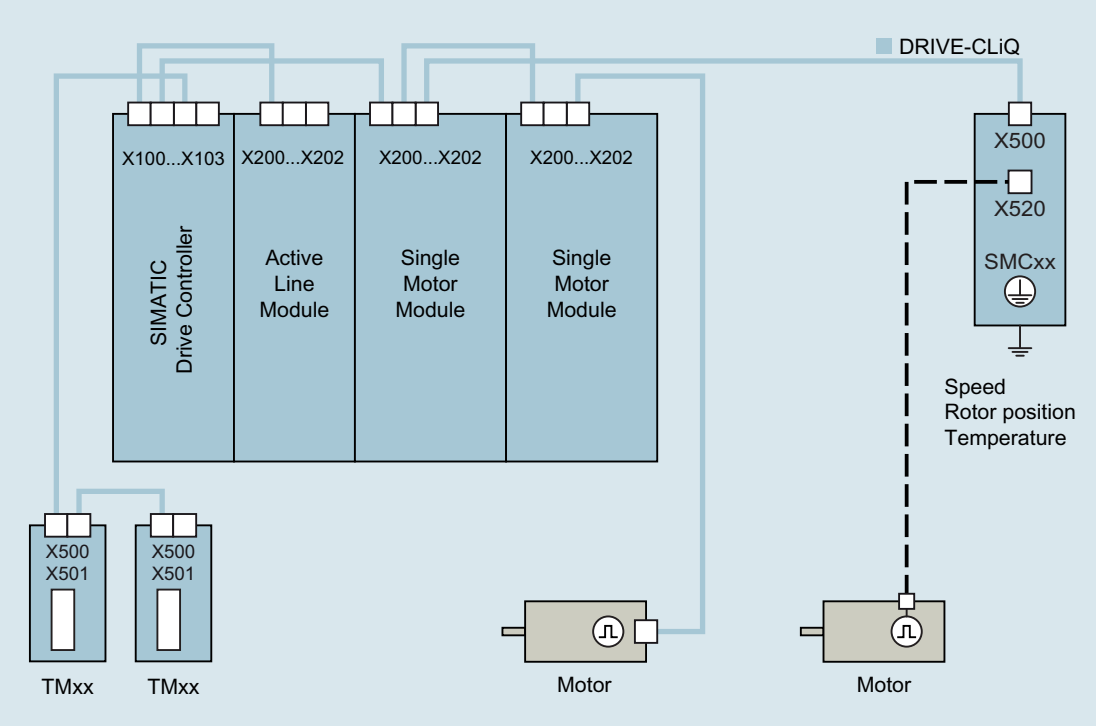

Figure 4-4 Example of a DRIVE-CLiQ wiring of an axis group

Wiring rules

Neither ring wiring nor double wiring of components is permitted in the DRIVE-CLiQ wiring. In the case of a Motor Module, you must connect the power cable to the motor and the associated encoder.

Further information

You can find more information on DRIVE-CLiQ wiring in the following:

- SIMATIC Drive Controller (https://support.industry.siemens.com/cs/ww/en/view/109766665) system manual, section "Connecting"
- SINAMICS S120 Drive Functions (https://support.industry.siemens.com/cs/us/en/view/109754299) function manual, section "Rules for wiring with DRIVE-CLiQ"

Interrupts, diagnostics alarms, error messages and system alarms

5

5.1 Status and error displays

5.1.1 Overview

Location of status displays

The figure below shows the location of the status displays on the SIMATIC Drive Controller. LEDs ① to ③ indicate the operating states of the CPU. LEDs ④ and ⑤ indicate the operating states of SINAMICS Integrated. The 7-segment display ⑦ shows additional status information in certain operating states. The ACT LED ⑧ indicates write/read accesses to the SIMATIC Memory Card.

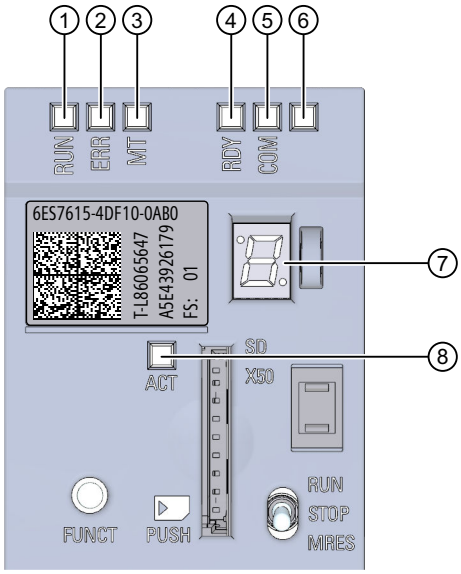

① RUN/STOP LED, green/yellow

② ERROR LED, red/yellow

③ MAINT LED, yellow

④ RDY LED, red/green/yellow

⑤ COM LED, red/green/yellow

⑥ No function

⑦ 7-segment display

⑧ ACT LED, yellow

Figure 5-1 SIMATIC Drive Controller status displays

LED display during reset

At POWER ON, the SIMATIC Drive Controller performs a reset. During the reset, all LEDs are lit yellow (lamp test).

5.1.2 Status and error display of the CPU

Meaning of the RUN/STOP, ERROR and MAINT LEDs

The SIMATIC Drive Controller has three LEDs for displaying the current operating state and the diagnostics status of the CPU. The following table shows the meaning of the various combinations of colors for the RUN/STOP, ERROR and MAINT LEDs.

Table 5-1 Meaning of the LEDs

RUN/STOP LED	ERROR LED	MAINT LED	Meaning
LED off	LED off	LED off	Missing or insufficient supply voltage on the CPU.
LED off	LED flashes red	LED off	An error has occurred.
LED lit green	LED off	LED off	CPU is in RUN mode.
LED lit green	LED flashes red	LED off	A diagnostics event is pending.
			Service data backup in RUN ended with error.
LED lit green	LED off	LED lit yellow	Maintenance demanded for the plant (e.g. Warning: CPU overtemperature). The affected hardware must be checked/replaced within a short period of time.
			Active Force job
			OPC UA server of the CPU expects initial trust lists and CRLs via GDS Push function.
LED lit green	LED off	LED flashes yellow	Bad configuration
LED lit yellow	LED off	LED flashes yellow	Firmware update was successfully completed.
LED lit yellow	LED off	LED off	CPU is in STOP mode.
			CPU runs a program with active breakpoints. The program is at a breakpoint.

RUN/STOP LED	ERROR LED	MAINT LED	Meaning
LED lit yellow	LED flashes red	LED flashes yellow	The program on the SIMATIC Memory Card is causing an error.
			Error state of the CPU Additional information is available via the CPU diagnostic buffer.
			Error during firmware update
			Update of an incompatible SINAMICS Integrated firmware was refused
LED lit yellow	LED flashes red	LED off	A diagnostics event is pending.
			Service data backup in STOP ended with error.
LED flashes yellow	LED off	LED off	CPU is performing internal activities during STOP, for example, ramp-up after STOP, firmware update.
			CPU stores service data
			Download of the user program from the SIMATIC Memory Card
			CPU runs a program with active break-point. The program is presently moving from one breakpoint to the next.
LED flashes yellow/green	LED off	LED off	Startup (transition from STOP → RUN)
LED flashes yellow/green	LED flashes red	LED flashes yellow	Startup (CPU booting)
			Test of LEDs during startup, inserting a module.
			LED flashing test
LED lit yellow	LED lit yellow	LED lit yellow	Lamp test at POWER ON Note: All six LEDs and the ACT-LED on the card slot are lit yellow.

5.1.3 Status and error display of SINAMICS Integrated

RDY LED states

Table 5-2 SINAMICS Integrated RDY LED

RDY LED	Meaning
LED off	Electronics power supply is missing or is outside the permissible tolerance range
LED lit green	The component is ready for operation. Cyclic DRIVE-CLiQ communication is active or SINAMICS Integrated is waiting for first commissioning.

RDY LED	Meaning
LED flashes green (0.5 Hz)	Commissioning/reset
LED lit yellow	System is booting and DRIVE-CLiQ communication is being established.
LED flashes yellow (2 Hz)	Firmware update of components is complete, waiting for POWER ON of the component. Remedy: Perform POWER ON of the respective component
LED flashes yellow (0.5 Hz)	Firmware update of the connected DRIVE-CLiQ components in progress.
LED lit red	Component has at least one fault.
LED flashes red (2 Hz)	General errors Remedy: Check parameter assignment/configuration
	Firmware could not be started. (for example, update error, drive firmware not compatible with CPU or missing, CRC check failed)
LED flashes green-yellow (2 Hz)	Component detection via LED is activated (p0124[0]). **Note** The two possibilities depend on the status of the LED at time of activation via p0124[0] = 1.
LED flashes red-yellow (2 Hz)	

COM LED states

Table 5-3 SINAMICS Integrated COM LED

COM LED	Meaning
LED off	Cyclic communication has not (yet) taken place. **Note** PROFIdrive is ready for communication when the SINAMICS Integrated is ready for operation (see RDY LED).
LED lit green	Cyclic communication is active. Synchronization complete.
LED flashes green (0.5 Hz)	Cyclic communication is not yet fully active. Possible causes: • The controller is not transferring setpoints. • In isochronous mode, synchronization is not yet complete.
LED flashes red (2 Hz)	Cyclic bus communication has been interrupted or could not be established. Remedy: Eliminate fault

5.1.4 ACT LED and interface LEDs

Meaning of ACT LED

The ACT LED is located next to the memory card slot and indicates write/read accesses to the SIMATIC memory card.

Table 5-4 ACT LED

ACT LED	Meaning
LED off	No access to the SIMATIC memory card
LED flickers yellow	Access to the SIMATIC memory card

If you remove the SIMATIC memory card during a write operation, the following problems may occur:

- The data content of a file is incomplete.
- The file is no longer readable or no longer exists.
- The entire data content is corrupted.

Regarding the removal of the SIMATIC memory card, note also the following FAQ on the Internet (https://support.industry.siemens.com/cs/ww/en/view/59457183).

Meaning of the LEDs of the PROFINET interface X130, X150, X160

For diagnostic purposes, each of the RJ45 sockets is equipped with a LINK LED and and ACTIVITY LED. The LEDs are used to display the following status information of the respective PROFINET interface.

Table 5-5 LEDs of PROFINET interface X130, X150, X160

RJ45 socket	LINK LED	ACTIVITY LED	Meaning
LINK 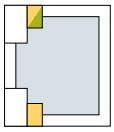 ACTIVITY	LED off	LED off	There is no communication connection between the PROFINET interface of the SIMATIC Drive Controller and the communication partner. No data is currently being sent/received via the PROFINET interface. There is no LINK connection.
	LED flashes green	–	The "LED flashing test" is being performed.
	LED lit green	–	A 10/100 Mbps communication connection exists between the PROFINET interface of the SIMATIC Drive Controller and a communication partner.

RJ45 socket	LINK LED	ACTIVITY LED	Meaning
LINK 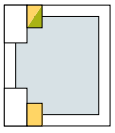 ACTIVITY	LED lit yellow	–	A 1000 Mbps communication connection exists between the PROFINET interface of the SIMATIC Drive Controller and a communication partner.
	LED lit green	LED flickers yellow	Data is currently being received/transmitted at 10/100 Mbps by a communication partner via the PROFINET interface of the SIMATIC Drive Controller.
	LED lit yellow	LED flickers yellow	Data is currently being received/transmitted at 1000 Mbps by a communication partner via the PROFINET interface of the SIMATIC Drive Controller.

See also

View of SIMATIC Drive Controller without covers (Page 32)

5.1.5 7-segment display

Status information via 7-segment display

In addition to the LED display, the 7-segment display indicates further status information during commissioning and cyclic operation.

Table 5-6 7-segment display

7-segment display	Meaning
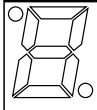	Missing or insufficient supply voltage on the CPU
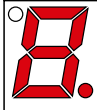	HW states before the start of the CPU firmware
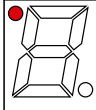	Startup of the CPU
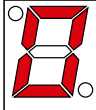	Startup of CPU complete (0 = STOP or RUN state)
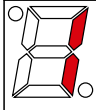	Function 1: Save service data on SIMATIC Memory Card
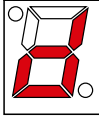	"Save service data" function active (d = data)

7-segment display	Meaning
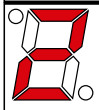	Function 2: Use the SIMATIC Memory Card as firmware update card and perform a firmware update
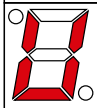	SIMATIC Memory Card is converted to firmware update card (U = Update)
	Function 3: Use the SIMATIC Memory Card as program card
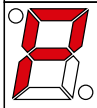	SIMATIC Memory Card is converted to program card (P = Program)
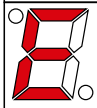	Exit function selection mode (E = Exit)
	Reset: At POWER ON, the SIMATIC Drive Controller performs a reset. During a reset, all segments including the two dots are briefly lit (lamp test).
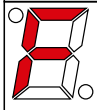	Error state (F = Fault) The function cannot be triggered using the FUNCT button, since one requirement is not fulfilled, for example: • No SIMATIC Memory Card inserted. • The write protection of the SIMATIC Memory Card has been set. • Switching the SIMATIC Memory Card to firmware update card is not possible, since the CPU is not in STOP operating mode. • Switching the SIMATIC Memory Card to firmware update card or program card using the FUNCT button is only possible between these two operating modes (not, for example, from DUMP or SET_PWD).

See also

View of SIMATIC Drive Controller without covers (Page 32)

5.2 Interrupts, diagnostics and system messages

5.2.1 Interrupts, diagnostics and system messages

For information on "Interrupts", refer to the STEP 7 online help.
For information on "Diagnostics" and "System alarms", refer to the Diagnostics (https://support.industry.siemens.com/cs/ww/en/view/59192926) function manual.

Technical specifications

6

Technical specifications of SIMATIC Drive Controller

The following table shows the technical specifications as of 11/2022. You will find a data sheet including daily updated technical specifications on the Internet:

- CPU 1504D TF (https://support.industry.siemens.com/cs/ww/en/pv/6ES7615-4DF10-0AB0/td?dl=de)
- CPU 1507D TF (https://support.industry.siemens.com/cs/ww/en/pv/6ES7615-7DF10-0AB0/td?dl=de)

Article number	6ES7615-4DF10-0AB0	6ES7615-7DF10-0AB0
General information		
Product type designation	CPU 1504D TF	CPU 1507D TF
HW functional status	FS11	
Firmware version	PLC: V3.0 / SINAMICS Integrated: V5.2 SP3	
Product function		
• I&M data	Yes; I&M0 to I&M3	
• Isochronous mode	Yes; With minimum OB 6x cycle of 500 µs	Yes; with minimum OB 6x cycle of 250 µs
Engineering with		
• STEP 7 TIA Portal configurable/integrated from version	V18 (FW V3.0) / V16 (FW V2.8) or higher	
Integrated drive control		
• Number of axes for servo control, max.	6	
• Number of axes for vector control, max.	6	
• Number of axes for V/f control, max.	12	
• Remark	alternative control modes; drive control based on SINAMICS S120 CU320-2 (firmware version V5.x); functional subset compared to CU320-2: no free function blocks, ... ; for details, see the manual	
Configuration control		
via dataset	Yes	
Control elements		
Number of keys	1; FUNCT button	
Mode selector switch	1	
Supply voltage		
Rated value (DC)	24 V	
permissible range, lower limit (DC)	20.4 V	
permissible range, upper limit (DC)	28.8 V	
Reverse polarity protection	Yes	
power supply according to NEC Class 2 required	No	
Mains buffering		
• Mains/voltage failure stored energy time	3 ms; Refers to the power supply on the CPU section	

Article number	6ES7615-4DF10-0AB0	6ES7615-7DF10-0AB0
• Repeat rate, min.	1 event every 10 s	
Input current		
Current consumption (rated value)	0.65 A; Without load on inputs/outputs, without supply via DRIVE-CLiQ/USB interface	
Current consumption, max.	13.1 A; With load	
Inrush current, max.	6 A; Rated value	
I^2t	0.62 $A^2 \cdot s$	
Power loss		
Power loss, typ.	52 W	
Memory		
Number of slots for SIMATIC memory card	1	
SIMATIC memory card required	Yes	
Work memory		
• integrated (for program)	4 Mbyte	15 Mbyte
• integrated (for data)	6 Mbyte	40 Mbyte
Load memory		
• Plug-in (SIMATIC Memory Card), required	12 Mbyte; Recommended at least when integrated drive is used	
• Plug-in (SIMATIC Memory Card), max.	32 Gbyte	
Backup		
• maintenance-free	Yes	
CPU-blocks		
Number of elements (total)	20 000; Blocks (OB, FB, FC, DB) and UDTs	
DB		
• Number range	1 ... 60 999; subdivided into: number range that can be used by the user: 1 ... 59 999, and number range of DBs created via SFC 86: 60 000 ... 60 999	
• Size, max.	6 Mbyte; For DBs with absolute addressing, the max. size is 64 KB	16 Mbyte; For DBs with absolute addressing, the max. size is 64 KB
FB		
• Number range	0 ... 65 535	
• Size, max.	1 Mbyte	
FC		
• Number range	0 ... 65 535	
• Size, max.	1 Mbyte	
OB		
• Size, max.	1 Mbyte	
• Number of free cycle OBs	100	
• Number of time alarm OBs	20	
• Number of delay alarm OBs	20	
• Number of cyclic interrupt OBs	20; with minimum OB 3x cycle of 100 µs	
• Number of process alarm OBs	50	

Article number	6ES7615-4DF10-0AB0	6ES7615-7DF10-0AB0
• Number of DPV1 alarm OBs	3	
• Number of isochronous mode OBs	3	
• Number of technology synchronous alarm OBs	2	
• Number of startup OBs	100	
• Number of asynchronous error OBs	4	
• Number of synchronous error OBs	2	
• Number of diagnostic alarm OBs	1	
Nesting depth		
• per priority class	24; Up to 8 possible for F-blocks	
Counters, timers and their retentivity		
S7 counter		
• Number	2 048	
Retentivity		
– adjustable	Yes	
IEC counter		
• Number	Any (only limited by the main memory)	
Retentivity		
– adjustable	Yes	
S7 times		
• Number	2 048	
Retentivity		
– adjustable	Yes	
IEC timer		
• Number	Any (only limited by the main memory)	
Retentivity		
– adjustable	Yes	
Data areas and their retentivity		
Retentive data area (incl. timers, counters, flags), max.	768 kbyte; In total; available retentive memory for bit memories, timers, counters, DBs, and technology data (axes): 700 KB	
Flag		
• Size, max.	16 kbyte	
• Number of clock memories	8; 8 clock memory bit, grouped into one clock memory byte	
Data blocks		
• Retentivity adjustable	Yes	
• Retentivity preset	No	
Local data		
• per priority class, max.	64 kbyte; max. 16 KB per block	
Address area		

Article number	6ES7615-4DF10-0AB0	6ES7615-7DF10-0AB0
Number of IO modules	16 384; max. number of modules / submodules	
I/O address area		
• Inputs	32 kbyte; All inputs are in the process image	
• Outputs	32 kbyte; All outputs are in the process image	
per integrated IO subsystem		
– Inputs (volume)	32 kbyte; Max. 32 KB via X150; max. 8 KB via X160 or X126	
– Outputs (volume)	32 kbyte; Max. 32 KB via X150; max. 8 KB via X160 or X126	
Subprocess images		
• Number of subprocess images, max.	32	
Hardware configuration		
Number of distributed IO systems	64; A distributed I/O system is characterized not only by the integration of distributed I/O via PROFINET or PROFIBUS, but also by the connection of I/O via AS-i master modules or links (e.g. IE/PB-Link)	
Number of DP masters		
• integrated	1	
• Via CM	Expansion via CMs / CPs (PROFIBUS, PROFINET, Ethernet) not possible; these CMs / CPs can only be operated in a central rack	
Number of IO Controllers		
• integrated	2	
• Via CM	Expansion via CMs / CPs (PROFIBUS, PROFINET, Ethernet) not possible; these CMs / CPs can only be operated in a central rack	
PtP CM		
• Number of PtP CMs	The number of connectable PtP CMs (distributed) is only limited by the number of available slots	
Time of day		
Clock		
• Type	Hardware clock	
• Backup time	6 wk; At 40 °C ambient temperature, typically	
• Deviation per day, max.	10 s; Typ.: 2.4 s	
Operating hours counter		
• Number	16	
Clock synchronization		
• supported	Yes	
• to DP, master	Yes	
• in AS, master	Yes	
• in AS, slave	Yes	
• on Ethernet via NTP	Yes	
Digital inputs		
integrated channels (DI)	28; max. depending on parameterization	
Digital inputs, parameterizable	Yes; 12 DI, 8 DI/DQ (X122/X132, SINAMICS Integrated) + 8 DI/DQ (X142, PLC)	

Article number	6ES7615-4DF10-0AB0	6ES7615-7DF10-0AB0
Source/sink input	P-reading	
Input characteristic curve in accordance with IEC 61131, type 3	Yes	
Digital input functions, parameterizable		
• Freely usable digital input	Yes; Max. 20 (X122/X132) + max. 8 (X142)	
• Probe	Yes; Max. 8 (X122/X132) + max. 8 (X142)	
• Digital input with time stamp	Yes; Max. 8 (X142); e.g. for probes	
• Counter	Yes; Max. 8 (X142); event/cycle duration measurement	
• Digital input with oversampling	Yes; Max. 8 (X142); 32-fold oversampling	
Input voltage		
• Type of input voltage	DC	
• Rated value (DC)	24 V	
• for signal "0"	-3 to +5V	
• for signal "1"	+15 to +30 V	
• permissible voltage at input, min.	-30 V	
• permissible voltage at input, max.	30 V	
Input current		
• for signal "1", typ.	4 mA	
Input delay (for rated value of input voltage)		
• Minimum pulse width for program reactions	5 µs for X122/X132/X142 (DI/DQ as DI; for X142 with filter setting 1 µs)	
for standard inputs		
– parameterizable	No; For X122/X132	
– with "0" to "1", typ.	For X122/X132: 10 µs (DI) / 5 µs (DI/DQ as DI)	
– with "1" to "0", typ.	For X122/X132: 30 µs (DI) / 5 µs (DI/DQ as DI)	
for interrupt inputs		
– parameterizable	Yes; identical to those for technological functions	
for technological functions		
– parameterizable	Yes; For X142, additionally adjustable input filter: 1 µs / 125 µs	
– with "0" to "1", typ.	5 µs; For X142; HW delay	
– with "1" to "0", typ.	5 µs; For X142; HW delay	
Cable length		
• shielded, max.	30 m; For technological functions: Shielding of the DI recommended depending on the requirements	
• unshielded, max.	30 m	
Digital outputs		
Type of digital output	Transistor	
integrated channels (DO)	16; max. depending on parameterization	
Current-sinking	Yes; With High Speed output	

Article number	6ES7615-4DF10-0AB0	6ES7615-7DF10-0AB0
Current-sourcing	Yes; Optionally as a P-switch or high-speed push-pull switch (high-speed output)	
Digital outputs, parameterizable	Yes; 8 DI/DQ (X122/X132, SINAMICS Integrated) + 8 DI/DQ (X142, PLC)	
Short-circuit protection	Yes; electronic/thermal	
• Response threshold, typ.	X122/X132: 1.4 A / X142: 0.9 A (high-speed output: 0.7 A)	
Limitation of inductive shutdown voltage to	X122/X132: max. -60 V / X142: max. -64.5 V	
Controlling a digital input	Yes	
minimum pulse duration	2 µs; For high-speed output, single pulse	
Digital output functions, parameterizable		
• Freely usable digital output	Yes; Max. 8 (X122/X132) + max. 8 (X142)	
• Digital output with time stamp	Yes; Max. 8 (X142); e.g. for output cams	
• PWM output	Yes; Max. 8 (X142)	
– Cycle duration, parameterizable	Yes; Base frequency 1 / 2 / 4 / 8 / 16 kHz; specification of interpulse period ratio over 32-bit pattern	
– ON period, min.	0 %	
– ON period, max.	100 %	
– Resolution of the duty cycle	3.125 %	
• Digital output with oversampling	Yes; Max. 8 (X142)	
Switching capacity of the outputs		
• with resistive load, max.	0.5 A; 0.4 A for high-speed output	
• on lamp load, max.	5 W	
Load resistance range		
• lower limit	48 Ω; with 24 V DC supply	
Output voltage		
• Type of output voltage	DC	
• Rated value (DC)	24 V	
• for signal "0", max.	28.8 V	
• for signal "1", min.	20.4 V	
Output current		
• for signal "1" rated value	0.5 A; 0.4 A for high-speed output	
• for signal "1" permissible range, min.	2 mA	
• for signal "1" permissible range, max.	0.6 A; 0.48 A for high-speed output	
Output delay with resistive load		
• "0" to "1", typ.	100 µs; For X122/X132; at 48 ohm load	
• "1" to "0", typ.	150 µs; For X122/X132; at 48 ohm load	
for technological functions		
– "0" to "1", typ.	1 µs; For X142	
– "1" to "0", typ.	1 µs; For X142 as a high-speed output; 150 µs for standard output	
Parallel switching of two outputs		

Article number	6ES7615-4DF10-0AB0	6ES7615-7DF10-0AB0
• for logic links	Yes; For technological functions and high-speed outputs: No	
• for uprating	No	
• for redundant control of a load	Yes; For technological functions and high-speed outputs: No	
Switching frequency		
• with resistive load, max.	35 kHz; With High Speed output, 1 kHz with standard output	
• with inductive load, max.	2 Hz; Max. 1 J per channel	
• on lamp load, max.	11 Hz	
Total current of the outputs		
• Current per module, max.	8 A	
Cable length		
• shielded, max.	30 m	
• unshielded, max.	30 m	
Interfaces		
Number of PROFINET interfaces	3	
Number of PROFIBUS interfaces	1	
Number of USB interfaces	2; USB 3.0 (without function, no connection permissible)	
Number of DRIVE-CLiQ interfaces	4; DRIVE-CLiQ interfaces (24 V / 450 mA per interface for connecting encoders/measuring systems)	
1. Interface		
Interface types		
• RJ 45 (Ethernet)	Yes; X150	
• Number of ports	3	
• integrated switch	Yes	
Protocols		
• IP protocol	Yes; IPv4	
• PROFINET IO Controller	Yes	
• PROFINET IO Device	Yes	
• SIMATIC communication	Yes	
• Open IE communication	Yes; Optionally also encrypted	
• Web server	Yes	
• Media redundancy	Yes	
PROFINET IO Controller		
Services		
– PG/OP communication	Yes	
– Isochronous mode	Yes	
– Direct data exchange	Yes; Requirement: IRT and isochronous mode (MRPD optional)	
– shortest clock pulse	500 µs	250 µs
– IRT	Yes	
– PROFIenergy	Yes; per user program	

Article number	6ES7615-4DF10-0AB0	6ES7615-7DF10-0AB0
– Prioritized startup	Yes; Max. 32 PROFINET devices	
– Number of connectable IO Devices, max.	256; In total, up to 1 000 distributed I/O devices can be connected via AS-i, PROFIBUS or PROFINET	
– Of which IO devices with IRT, max.	64	
– Number of connectable IO Devices for RT, max.	256	
– of which in line, max.	256	
– Number of IO Devices that can be simultaneously activated/deactivated, max.	8; in total across all interfaces	
– Number of IO Devices per tool, max.	8	
– Updating times	The minimum value of the update time also depends on communication share set for PROFINET IO, on the number of IO devices, and on the quantity of configured user data	
Update time for IRT		
– for send cycle of 250 µs		250 µs to 4 ms
– for send cycle of 500 µs	500 µs to 8 ms	
– for send cycle of 1 ms	1 ms to 16 ms	
– for send cycle of 2 ms	2 ms to 32 ms	
– for send cycle of 4 ms	4 ms to 64 ms	
– With IRT and parameterization of "odd" send cycles	Update time = set "odd" send clock (any multiple of 125 µs: 375 µs, 625 µs ... 3 875 µs)	
Update time for RT		
– for send cycle of 250 µs		250 µs to 128 ms
– for send cycle of 500 µs	500 µs to 256 ms	
– for send cycle of 1 ms	1 ms to 512 ms	
– for send cycle of 2 ms	2 ms to 512 ms	
– for send cycle of 4 ms	4 ms to 512 ms	
PROFINET IO Device		
Services		
– PG/OP communication	Yes	
– Isochronous mode	No	
– shortest clock pulse	500 µs	250 µs
– IRT	Yes	
– PROFIenergy	Yes; per user program	
– Shared device	Yes	
– Number of IO Controllers with shared device, max.	4	
– activation/deactivation of I-devices	Yes; per user program	
– Asset management record	Yes; per user program	
2. Interface		

Article number	6ES7615-4DF10-0AB0	6ES7615-7DF10-0AB0
Interface types		
• RJ 45 (Ethernet)	Yes; X160	
• Number of ports	1	
• integrated switch	No	
Protocols		
• IP protocol	Yes; IPv4	
• PROFINET IO Controller	Yes	
• PROFINET IO Device	Yes	
• SIMATIC communication	Yes	
• Open IE communication	Yes; Optionally also encrypted	
• Web server	Yes	
• Media redundancy	No	
PROFINET IO Controller		
Services		
– PG/OP communication	Yes	
– Isochronous mode	No	
– Direct data exchange	No	
– IRT	No	
– PROFIenergy	Yes; per user program	
– Prioritized startup	No	
– Number of connectable IO Devices, max.	128; In total, up to 1 000 distributed I/O devices can be connected via AS-i, PROFIBUS or PROFINET	
– Number of connectable IO Devices for RT, max.	128	
– of which in line, max.	128	
– Number of IO Devices that can be simultaneously activated/deactivated, max.	8; in total across all interfaces	
– Number of IO Devices per tool, max.	8	
– Updating times	The minimum value of the update time also depends on communication share set for PROFINET IO, on the number of IO devices, and on the quantity of configured user data	
Update time for RT		
– for send cycle of 1 ms	1 ms to 512 ms	
PROFINET IO Device		
Services		
– PG/OP communication	Yes	
– Isochronous mode	No	
– IRT	No	
– PROFIenergy	Yes; per user program	
– Prioritized startup	No	

Article number	6ES7615-4DF10-0AB0	6ES7615-7DF10-0AB0
– Shared device	Yes	
– Number of IO Controllers with shared device, max.	4	
– activation/deactivation of I-devices	Yes; per user program	
– Asset management record	Yes; per user program	
3. Interface		
Interface types		
• RJ 45 (Ethernet)	Yes; X130	
• Number of ports	1	
• integrated switch	No	
Protocols		
• IP protocol	Yes; IPv4	
• PROFINET IO Controller	No	
• PROFINET IO Device	No	
• SIMATIC communication	Yes	
• Open IE communication	Yes	
• Web server	Yes	
4. Interface		
Interface types		
• RS 485	Yes; X126	
• Number of ports	1	
Protocols		
• PROFIBUS DP master	Yes	
• PROFIBUS DP slave	No	
• SIMATIC communication	Yes	
PROFIBUS DP master		
• Number of connections, max.	48; for the integrated PROFIBUS DP interface	
• Number of DP slaves, max.	125; In total, up to 1 000 distributed I/O devices can be connected via AS-i, PROFIBUS or PROFINET	
Services		
– PG/OP communication	Yes	
– Equidistance	Yes	
– Isochronous mode	Yes	
– Activation/deactivation of DP slaves	Yes	
Interface types		
RJ 45 (Ethernet)		
• 100 Mbps	Yes	
• 1000 Mbps	Yes; Only at the X130 interface	
• Autonegotiation	Yes	

Article number	6ES7615-4DF10-0AB0	6ES7615-7DF10-0AB0
• Autocrossing	Yes	
• Industrial Ethernet status LED	Yes; LINK and ACTIVITY	
RS 485		
• Transmission rate, max.	12 Mbit/s	
Protocols		
PROFIsafe	Yes; V2.4 / V2.6	
Number of connections		
• Number of connections, max.	384; Via integrated interfaces of the CPU	
• Number of connections reserved for ES/HMI/web	10	
• Number of connections via integrated interfaces	320	
• Number of S7 routing paths	64; in total, only 16 S7-Routing connections are supported via PROFIBUS	
Redundancy mode		
• H-Sync forwarding	Yes	
Media redundancy		
– Media redundancy	only via interface X150	
– MRP	Yes; MRP Automanager according to IEC 62439-2 Edition 2.0, MRP Manager; MRP Client	
– MRP interconnection, supported	Yes; as MRP ring node according to IEC 62439-2 Edition 3.0	
– MRPD	Yes; Requirement: IRT	
– Switchover time on line break, typ.	200 ms; For MRP, bumpless for MRPD	
– Number of stations in the ring, max.	50	
SIMATIC communication		
• PG/OP communication	Yes; encryption with TLS V1.3 pre-selected	
• S7 routing	Yes	
• Data record routing	Yes	
• S7 communication, as server	Yes	
• S7 communication, as client	Yes	
• User data per job, max.	See online help (S7 communication, user data size)	
Open IE communication		
• TCP/IP	Yes	
– Data length, max.	64 kbyte	
– several passive connections per port, supported	Yes	
• ISO-on-TCP (RFC1006)	Yes	
– Data length, max.	64 kbyte	
• UDP	Yes	
– Data length, max.	2 kbyte; 1 472 bytes for UDP broadcast	

Article number	6ES7615-4DF10-0AB0	6ES7615-7DF10-0AB0
– UDP multicast	Yes; 128 multicast circuits (of which max. 5 via X150)	
• DHCP	Yes	
• DNS	Yes	
• SNMP	Yes; disconnected by default	
• DCP	Yes	
• LLDP	Yes	
• Encryption	Yes; Optional	
Web server		
• HTTP	Yes; Standard and user pages	
• HTTPS	Yes; Standard and user pages	
OPC UA		
• Runtime license required	Yes; "Small" license required	Yes; "Large" license required
• OPC UA Client	Yes; Data Access (registered Read/Write), Method Call	
– Application authentication	Yes	
– Security policies	Available security policies: None, Basic128Rsa15, Basic256Rsa15, Basic256Sha256	
– User authentication	"anonymous" or by user name & password	
– Number of connections, max.	40	
– Number of nodes of the client interfaces, max.	5 000	
– Number of elements for one call of OPC_UA_NodeGetHandleList/OPC_UA_ReadList/OPC_UA_WriteList, max.	300	
– Number of elements for one call of OPC_UA_NameSpaceGetIndexList, max.	20	
– Number of elements for one call of OPC_UA_MethodGetHandleList, max.	100	
– Number of simultaneous calls of the client instructions per connection (except OPC_UA_ReadList,OPC_UA_WriteList, OPC_UA_MethodCall), max.	1	
– Number of simultaneous calls of the client instructions OPC_UA_ReadList,OPC_UA_WriteList and OPC_UA_MethodCall, max.	5	
– Number of registerable nodes, max.	5 000	
– Number of registerable method calls of OPC_UA_MethodCall, max.	100	
– Number of inputs/outputs when calling OPC_UA_MethodCall, max.	20	
• OPC UA Server	Yes; Data Access (Read, Write, Subscribe), Method Call, Alarms & Condition (A&C), Custom Address Space	
– Application authentication	Yes	

Article number	6ES7615-4DF10-0AB0	6ES7615-7DF10-0AB0
– Security policies	Available security policies: None, Basic128Rsa15, Basic256Rsa15, Basic256Sha256	
– User authentication	"anonymous" or by user name & password	
– GDS support (certificate management)	Yes	
– Number of sessions, max.	64	
– Number of accessible variables, max.	200 000	
– Number of registerable nodes, max.	50 000	
– Number of subscriptions per session, max.	50	
– Sampling interval, min.	10 ms	
– Publishing interval, min.	10 ms	
– Number of server methods, max.	100	
– Number of inputs/outputs per server method, max.	20	
– Number of monitored items, max.	10 000; for 1 s sampling interval and 1 s send interval	
– Number of server interfaces, max.	10 of each "Server interfaces" / "Companion specification" type and 20 of the type "Reference namespace"	
– Number of nodes for user-defined server interfaces, max.	30 000	
• Alarms and Conditions	Yes	
– Number of program alarms	400	
– Number of alarms for system diagnostics	200	
Further protocols		
• MODBUS	Yes; MODBUS TCP	
Isochronous mode		
Equidistance	Yes	
Jitter, max.	1 µs	
S7 message functions		
Number of login stations for message functions, max.	64	
Program alarms	Yes	
Number of configurable program messages, max.	10 000; Program messages are generated by the "Program_Alarm" block, ProDiag or GRAPH	
Number of loadable program messages in RUN, max.	5 000	
Number of simultaneously active program alarms		
• Number of program alarms	4 000	
• Number of alarms for system diagnostics	1 000	
• Number of alarms for motion technology objects	480	
Test commissioning functions		
Joint commission (Team Engineering)	Yes; Parallel online access possible for up to 10 engineering systems	

Article number	6ES7615-4DF10-0AB0	6ES7615-7DF10-0AB0
Status block	Yes; Up to 16 simultaneously (in total across all ES clients)	
Single step	No	
Number of breakpoints	20	
Status/control		
• Status/control variable	Yes	
• Variables	inputs/outputs, bit memories, DBs, peripheral I/Os (without fail-safe), times, counters	
• Number of variables, max.		
– of which status variables, max.	200; per job	
– of which control variables, max.	200; per job	
Forcing		
• Forcing	Yes	
• Forcing, variables	peripheral inputs/outputs (without fail-safe)	
• Number of variables, max.	200	
Diagnostic buffer		
• present	Yes	
• Number of entries, max.	3 200	
– of which powerfail-proof	1 000	
Traces		
• Number of configurable Traces	8	
• Memory size per trace, max.	512 kbyte	
Interrupts/diagnostics/status information		
Diagnostics indication LED		
• RUN/STOP LED	Yes	
• ERROR LED	Yes	
• MAINT LED	Yes	
• ACT LED	Yes; For memory card access	
• RDY LED	Yes	
• COM LED	Yes	
• Connection display LINK TX/RX	Yes	
Supported technology objects		
Motion Control	Yes; Note: The number of technology objects affects the cycle time of the PLC program; selection guide via the TIA Selection Tool	
• Number of available Motion Control resources for technology objects	3 200	12 800
• Required Motion Control resources		
– per speed-controlled axis	40	
– per positioning axis	80	
– per synchronous axis	160	

Article number	6ES7615-4DF10-0AB0	6ES7615-7DF10-0AB0
– per external encoder	80	
– per output cam	20	
– per cam track	160	
– per probe	40	
• Number of available Extended Motion Control resources for technology objects	160	420
• Required Extended Motion Control resources		
– per cam (1 000 points and 50 segments)	2	
– per cam (10 000 points and 50 segments)	20	
– for each set of kinematics	30	
– Per leading axis proxy	3	
• Positioning axis		
– Number of positioning axes at motion control cycle of 4 ms (typical value)	12	55
– Number of positioning axes at motion control cycle of 8 ms (typical value)	24	110
Controller		
• PID_Compact	Yes; Universal PID controller with integrated optimization	
• PID_3Step	Yes; PID controller with integrated optimization for valves	
• PID-Temp	Yes; PID controller with integrated optimization for temperature	
Counting and measuring		
• High-speed counter	Yes	
Integrated Functions		
Counter		
• Number of counters	8; Event/cycle duration measurement	
• Counting frequency, max.	32 kHz	
Counting functions		
• Continuous counting	Yes	
Measuring functions		
Measuring range		
– Cycle duration measurement, min.	10 µs; 5 µs minimum pulse width	
– Cycle duration measurement, max.	178 s	
Accuracy		
– Cycle duration measurement	Sampling of the time period with 41.67 ns increments	
Potential separation		
Potential separation digital inputs		
• between the channels	Yes; 12 DI (X122/X132), in 2 groups of 6 DI each	
Potential separation digital outputs		
• between the channels	No; 8 DI/DQ (X122/X132) and 8 DI/DQ (X142)	

Article number	6ES7615-4DF10-0AB0	6ES7615-7DF10-0AB0
Isolation		
Isolation tested with	707 V DC (type test)	
Degree and class of protection		
IP degree of protection	IP20 control cabinet installation / open type	
Standards, approvals, certificates		
CE mark	Yes	
UKCA mark	Yes	
cULus	Yes	
RCM (formerly C-TICK)	Yes	
KC approval	Yes	
EAC (formerly Gost-R)	Yes	
Suitable for safety functions	Yes; e.g. emergency stop, acknowledgment button	
Highest safety class achievable in safety mode		
• Performance level according to ISO 13849-1	PLd (PLe if exclusively F-CPU is used)	
• SIL acc. to IEC 61508	SIL 2 (SIL 3 if exclusively F-CPU is used)	
Probability of failure (for service life of 20 years and repair time of 100 hours)		
– Low demand mode: PFDavg in accordance with SIL2	< 14.00E-04	
– Low demand mode: PFDavg in accordance with SIL3	< 2.00E-05 PLd (if exclusively F-CPU is used)	
– High demand/continuous mode: PFH in accordance with SIL2	< 14.00E-09	
– High demand/continuous mode: PFH in accordance with SIL3	if exclusively F-CPU is used: < 1.00E-09 (at a site altitude of up to 3000 m); < 2.00E-09 (at a site altitude of more than 3000 m and up to 4000 m)	
Ambient conditions		
Ambient temperature during operation		
• min.	0 °C	
• max.	55 °C	
Ambient temperature during storage/transportation		
• min.	-40 °C; Long-term storage: -25 °C	
• max.	70 °C; Long-term storage: +55 °C	
Altitude during operation relating to sea level		
• Installation altitude above sea level, max.	4 000 m; as of an altitude of 2000 m, the maximum ambient air temperature is reduced by 7 °C per 1000 m; see SINAMICS documentation for SINAMICS S120 drive components	
• Ambient air temperature-barometric pressure-altitude	Permissible air pressure: 620 hPa ... 1 060 hPa	
configuration / header		
configuration / programming / header		
Programming language		

Article number	6ES7615-4DF10-0AB0	6ES7615-7DF10-0AB0
– LAD	Yes; incl. failsafe	
– FBD	Yes; incl. failsafe	
– STL	Yes	
– SCL	Yes	
– CFC	No	
– GRAPH	Yes	
Know-how protection		
• User program protection/password protection	Yes	
• Copy protection	Yes	
• Block protection	Yes	
Access protection		
• protection of confidential configuration data	Yes	
• Protection level: Write protection	Yes; Specific write protection both for Standard and for Failsafe	
• Protection level: Read/write protection	Yes	
• Protection level: Write protection for Failsafe	Yes	
• Protection level: Complete protection	Yes	
programming / cycle time monitoring / header		
• lower limit	adjustable minimum cycle time	
• upper limit	adjustable maximum cycle time	
Dimensions		
Width	50 mm	
Height	300 mm	
Depth	226 mm; 270 mm with spacer (included in scope of supply)	
Weights		
Weight, approx.	2 400 g	
Other		
Note:	The SIMATIC Drive Controller deviates from the usual SIMATIC S7-1500 ambient conditions and specifications as well as the available approvals and certificates because of the drive design. For details, see the SIMATIC Drive Controller device and system manual. Operation is without fan.	

Dimension drawing

A

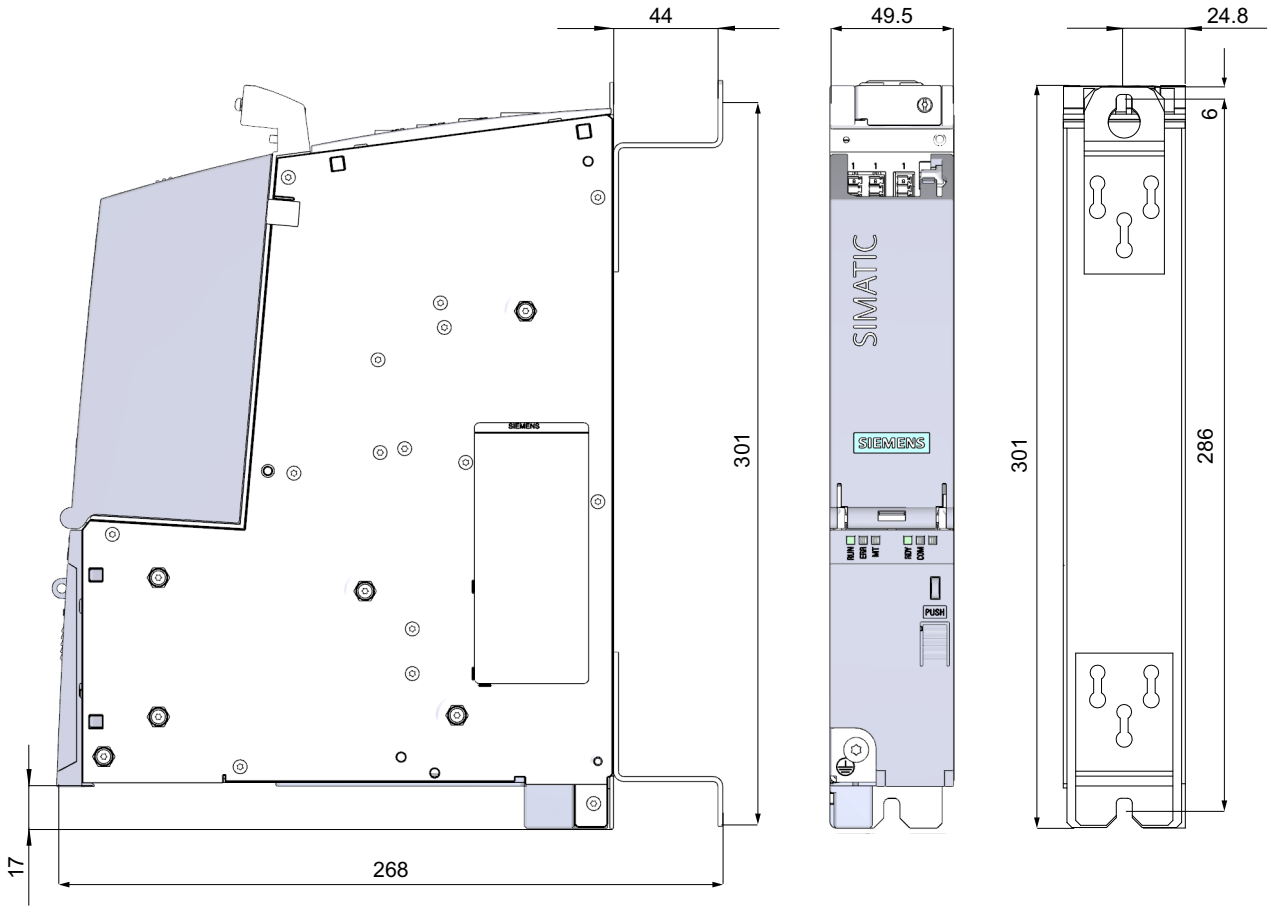

Figure A-1 Dimension drawing of SIMATIC Drive Controller

NOTE

If you install more than one SIMATIC Drive Controller or SINAMICS S120 CU320-2 side-by-side, use a horizontal spacing of 50 mm for the drilled holes to compensate for the tolerances.

SIEMENS

SIMATIC

ET 200MP
IM 155-5 DP ST interface module
(6ES7155-5BA00-0AB0)

Manual

Preface

Documentation guide 1

Product overview 2

Wiring 3

Interrupts, diagnostics, error and system messages 4

Technical specifications 5

Dimension drawing A

Response times B

08/2013

A5E32346748-AA

Legal information

Warning notice system

This manual contains notices you have to observe in order to ensure your personal safety, as well as to prevent damage to property. The notices referring to your personal safety are highlighted in the manual by a safety alert symbol, notices referring only to property damage have no safety alert symbol. These notices shown below are graded according to the degree of danger.

⚠ DANGER
indicates that death or severe personal injury **will** result if proper precautions are not taken.

⚠ WARNING
indicates that death or severe personal injury **may** result if proper precautions are not taken.

⚠ CAUTION
indicates that minor personal injury can result if proper precautions are not taken.

NOTICE
indicates that property damage can result if proper precautions are not taken.

If more than one degree of danger is present, the warning notice representing the highest degree of danger will be used. A notice warning of injury to persons with a safety alert symbol may also include a warning relating to property damage.

Qualified Personnel

The product/system described in this documentation may be operated only by **personnel qualified** for the specific task in accordance with the relevant documentation, in particular its warning notices and safety instructions. Qualified personnel are those who, based on their training and experience, are capable of identifying risks and avoiding potential hazards when working with these products/systems.

Proper use of Siemens products

Note the following:

⚠ WARNING
Siemens products may only be used for the applications described in the catalog and in the relevant technical documentation. If products and components from other manufacturers are used, these must be recommended or approved by Siemens. Proper transport, storage, installation, assembly, commissioning, operation and maintenance are required to ensure that the products operate safely and without any problems. The permissible ambient conditions must be complied with. The information in the relevant documentation must be observed.

Trademarks

All names identified by ® are registered trademarks of Siemens AG. The remaining trademarks in this publication may be trademarks whose use by third parties for their own purposes could violate the rights of the owner.

Disclaimer of Liability

We have reviewed the contents of this publication to ensure consistency with the hardware and software described. Since variance cannot be precluded entirely, we cannot guarantee full consistency. However, the information in this publication is reviewed regularly and any necessary corrections are included in subsequent editions.

Siemens AG
Industry Sector
Postfach 48 48
90026 NÜRNBERG
GERMANY

A5E32346748-AA
Ⓟ 08/2013 Technical data subject to change

Copyright © Siemens AG 2013.
All rights reserved

Preface

Purpose of the documentation

This technical manual supplements the ET 200MP distributed I/O system (http://support.automation.siemens.com/WW/view/en/59193214) system manual. Functions that generally relate to the system are described in this manual.

The information provided in this manual and in the system/function manuals support you in commissioning the system.

Conventions

Please also observe notes marked as follows:

Note

A note contains important information on the product, on the handling of the product and on the section of the documentation to which particular attention should be paid.

Security information

Siemens provides automation and drive products with industrial security functions that support the secure operation of plants or machines. They are an important component in a holistic industrial security concept. With this in mind, our products undergo continuous development. We therefore recommend that you keep yourself informed with respect to our product updates. Please find further information and newsletters on this subject at: (http://support.automation.siemens.com)

To ensure the secure operation of a plant or machine it is also necessary to take suitable preventive action (e.g. cell protection concept) and to integrate the automation and drive components into a state-of-the-art holistic industrial security concept for the entire plant or machine. Any third-party products that may be in use must also be taken into account. Please find further information at: (http://www.siemens.com/industrialsecurity)

Table of contents

Preface 3

1 Documentation guide 7

2 Product overview 9

2.1 Properties 9

3 Wiring 11

3.1 Terminal assignment 11

3.2 Block diagram 12

3.3 Setting the PROFIBUS DP address 12

4 Interrupts, diagnostics, error and system messages 15

4.1 Diagnostics via LED display 15

4.2 Alarms 17
4.2.1 Diagnostics alarms 17
4.2.2 Slave diagnostics 18
4.2.3 Station statuses 1 to 3 19
4.2.4 Master PROFIBUS address 20
4.2.5 Identifier-related diagnostics 21
4.2.6 Module status 22
4.2.7 Channel-specific diagnostics 23
4.2.8 Invalid configuration states of the ET 200MP on PROFIBUS DP 24

4.3 Interrupts 25
4.3.1 Evaluating interrupts of ET 200MP 31
4.3.2 Triggering of a diagnostic interrupt 31
4.3.3 Triggering of a hardware interrupt 32

5 Technical specifications 33

5.1 Technical specifications 33

A Dimension drawing 37

A.1 Dimension drawing IM 155-5 DP ST 37

B Response times 39

B.1 Response times of the ET 200MP 39

Documentation guide

1

Introduction

This modular documentation of the SIMATIC products covers diverse topics concerning your automation system.

The complete documentation for the ET 200MP distributed I/O system consists of a system manual, function manuals and product manuals.

The STEP 7 information system (Online Help) also helps you configure and program your automation system.

Overview of the documentation for the IM 155-5 DP ST interface module

Table 1- 1 Documentation for the IM 155-5 DP ST interface module

Topic	Documentation	Most important contents
System description	System manual ET 200MP distributed I/O system (http://support.automation.siemens.com/WW/view/en/59193214)	• Application planning • Installation • Wiring • Commissioning • Maintenance
Communication	Function manual: PROFIBUS with STEP 7 V12 (http://support.automation.siemens.com/WW/view/en/59193579)	• PROFIBUS basics • PROFIBUS functions • PROFIBUS diagnostics

SIMATIC manuals

All current manuals for the SIMATIC products are available for download free of charge from the Internet (http://www.siemens.com/automation/service&support).

Product overview

2

2.1 Properties

Order number

6ES7155-5BA00-0AB0

View of the module

Figure 2-1 View of the IM 155-5 DP ST interface module

Properties

- Technical properties
  - Connects the ET 200MP distributed I/O system with PROFIBUS DP
  - Bus connection via RS485 interface
  - 24V DC power supply (SELV/PELV)
  - Supports ET 200MP I/O modules
- Supported system functions
  - PROFIBUS DP
  - Identification data I&M 0 to 3
  - Operation as DPV1 slave
  - Firmware update via PROFIBUS DP. You can find additional information in the ET 200MP Distributed I/O System (http://support.automation.siemens.com/WW/view/en/59193214) system manual.

Maximum configuration

- 244 bytes I/O data per station
- The integrated power supply of the interface module feeds 14 W into the backplane bus. The interface module can supply up to 12 I/O modules. The exact number of operable modules is determined by the power budget (see relevant section in the ET 200MP distributed I/O system (http://support.automation.siemens.com/WW/view/en/59193214) system manual).

PROFIBUS connector

The 9-pin sub D PROFIBUS connector is included in the product package of the IM 155-5 DP ST interface module and available as accessory.

You can find additional information in the function manual, Designing interference-free controllers (http://support.automation.siemens.com/WW/view/en/59193566) in the section Connecting the bus shield for bus cables.

See also

GSD file (http://support.automation.siemens.com/WW/view/en/10805317/133300)

Wiring

3

3.1 Terminal assignment

24V DC power supply

Table 3- 1 Terminal assignment 24V DC power supply

View	Signal name[1]	Designation
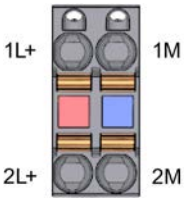	1L+	24 V DC
	2L+	24V DC (for looping through)[2]
	1M	Ground
	2M	Ground (for looping through)[2]

[1] 1L+and 2L+, as well as 1Mand 2Mare bridged internally.

[2] Permitted value 10 A

PROFIBUS DP with RS485 interface

The following table shows the signal names and the designations of the terminal assignment for the PROFIBUS DP interface.

Table 3- 2 Terminal assignment PROFIBUS DP with RS485 interface

View	Signal name		Designation
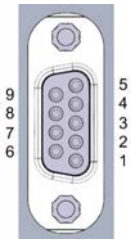	1	-	-
	2	-	-
	3	RxD/TxD-P	Data line B
	4	RTS	Request To Send
	5	M5V2	Ground (from station)
	6	P5V2	Supply plus (from station)
	7	-	-
	8	RxD/TxD-N	Data line A
	9	-	-

Additional information

You can find additional information on connecting the interface module and on the accessories in the ET 200MP Distributed I/O System (http://support.automation.siemens.com/WW/view/en/59193214) system manual.

3.2 Block diagram

Block diagram

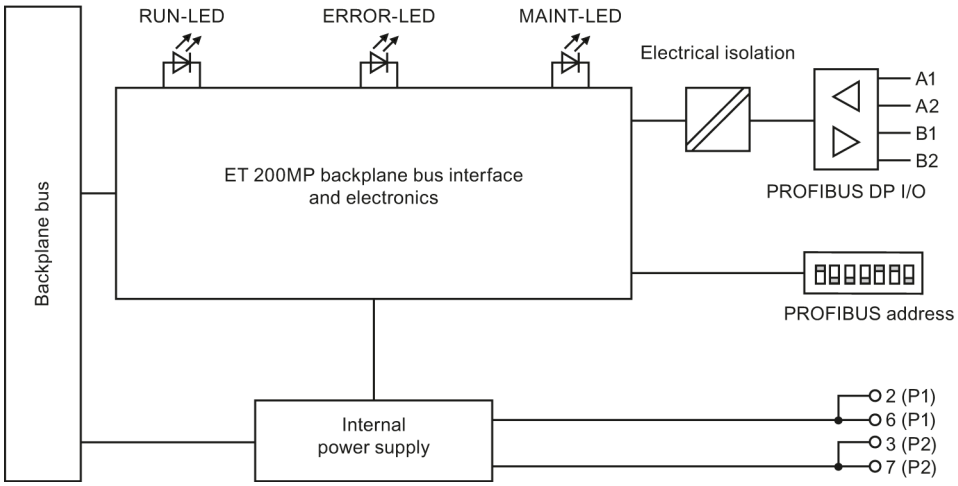

Figure 3-1 Block diagram of the IM155-5 DP ST interface module

3.3 Setting the PROFIBUS DP address

Introduction

Set the PROFIBUS DP address for the PROFIBUS DP on the IM 155-5 DP ST interface module. By setting the PROFIBUS DP address, you specify where the ET 200MP is to be addressed on the PROFIBUS DP.

Requirements

- Valid PROFIBUS DP addresses are 1 to 125.
- Each PROFIBUS DP address may be assigned only once on the PROFIBUS DP.
- The set PROFIBUS DP address must match the PROFIBUS DP address specified for the ET 200MP in the configuration software.

Required tools

Screwdriver 3 - 3.5 mm

Setting the PROFIBUS DP address

1. Open the front cover of the interface module.
2. Use a screwdriver to set the required PROFIBUS address via the DIP switch.
3. Close the front cover.

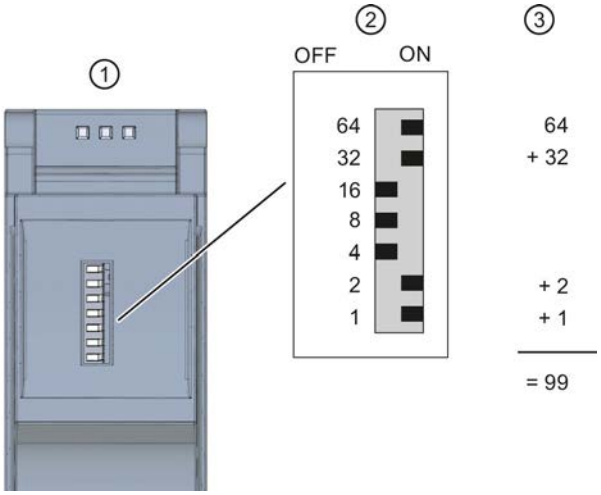

① Interface module IM 155-5 DP ST
② PROFIBUS DP address
③ Example: PROFIBUS DP address

Figure 3-2 Setting the PROFIBUS DP address

Note

Validity of the PROFIBUS DP address

The IM 155-5 DP ST interface module does not apply a configured PROFIBUS DP address until after a POWER OFF/POWER ON transition.

Changing the PROFIBUS DP address

You can change the PROFIBUS DP address in exactly the same way as you set it. A change to the PROFIBUS DP address only takes effect for the ET 200MP after a POWER OFF/POWER ON transition on the interface module.

Interrupts, diagnostics, error and system messages 4

4.1 Diagnostics via LED display

Introduction

Diagnostics by means of LED display is an initial tool for error localization. In order to localize errors still further, you usually need to evaluate the display of the module status in STEP 7 or the diagnostics buffer of the CPU. The diagnostics buffer contains plain text information on the error that has occurred. For example, you can find the number of the relevant error OB in the plain text information.

LED display

The figure below shows the LED display on the interface module.

① RUN (green)
② ERROR (red)
③ MAINT (yellow)

Figure 4-1 LED display on the interface module

Meaning of the RUN/ERROR/MAINT LED displays on the interface module

Table 4- 1 Meaning of the RUN/ERROR/MAINT LED displays on the interface module

LEDs			Meaning	Remedy
RUN	ERROR	MAINT		
Off	Off	Off	Supply voltage at interface module missing or too low	Check the supply voltage or switch it on on the interface module.
On	On	On	Test of LEDs during startup: The three LEDs light up simultaneously for approximately 0.25 s.	-
Flashes	Off	Off	Interface module is deactivated.	Activate the interface module with the configuration software or the user program.
			Interface module is not configured.	Configure the interface module with the configuration software.
			ET 200MP starts up.	-
			ET 200MP is configured.	
On	Not relevant	Not relevant	ET 200MP is currently exchanging data with the DP master.	-
Not relevant	Flashes	Not relevant	Group error and group error channels	Evaluate the diagnostics data and correct the error.
			The set configuration does not correspond to the actual configuration of the ET 200MP.	Check the configuration of the ET 200MP to determine whether a module is missing or faulty, or whether a non-configured module has been plugged in.
			Invalid configuration states	See section Invalid configuration states of the ET 200MP on PROFINET DP (Page 24).
On	On	Off	Invalid PROFIBUS address (0,126,127)	Set the configured PROFIBUS address at the DIP switch and then switch on the interface module again.

Note

Parameter assignment error in the I/O module

If incorrect parameters are assigned for an I/O module (for example, substitute value outside the value range), the I/O module switches to non-configured state. The RUN LED (green) flashes on the I/O module.

The IM 155-5 DP ST interface module does not indicate a parameter assignment error in the I/O module.

4.2 Alarms

4.2.1 Diagnostics alarms

Actions after a diagnostics alarm in DPV1 mode

The error is entered in the channel diagnostics in the diagnostics frame:

- In DPV1 mode, diagnostics can be reported as diagnostic interrupts.
- After a diagnostics alarm, this is
  - Entered as diagnostic interrupt block in the diagnostics frame.
  - Stored in the diagnostics buffer of the CPU.
- The ERROR LED of the interface module flashes.
- The diagnostic interrupt OB (OB 82) is called, if available.
- Acknowledgment of diagnostic interrupt (a new interrupt is then possible)

Maximum length of the diagnostics frame

The maximum frame length for the ET 200MP distributed I/O system with IM155-5 DP ST interface module (DPV1 mode) is 244 bytes.

Reading out the diagnostics data

Table 4- 2 Reading out the diagnostics data with STEP 7

Automation system with DP master	Application	See...
SIMATIC S7	Slave diagnostics data as plain text in the "DP slave diagnostics" tab in the STEP 7 user interface	"Diagnosing hardware" in the STEP 7 online help
	Instruction "DP NRM_DG" (SFC 13) Reading out slave diagnostics (store in the data area of the user program)	SFC, see STEP 7 online help
	Instruction "RD_REC" (SFC 59) Reading out data records of the S7 diagnostics data (store in the data area of the user program)	See System and Standard Functions reference manual
	Instruction "RDREC" (SFB 52) Reading data records from the DP slave	SFB, see STEP 7 online help (system functions/function blocks)
	Instruction "RALRM" (SFB 54) Receiving interrupts from the interrupt OBs	SFB, see STEP 7 online help (system functions/function blocks)

4.2.2 Slave diagnostics

The figure below shows the structure of the slave diagnostics.

Note

The length of the diagnostics frame for the IM 155-5 DP ST varies between 6 and 244 bytes, depending on the number of diagnostic entries actually present.

You can identify the length of the last received diagnostics frame in STEP 7 by referring to the RET_VAL parameter of the SFC 13.

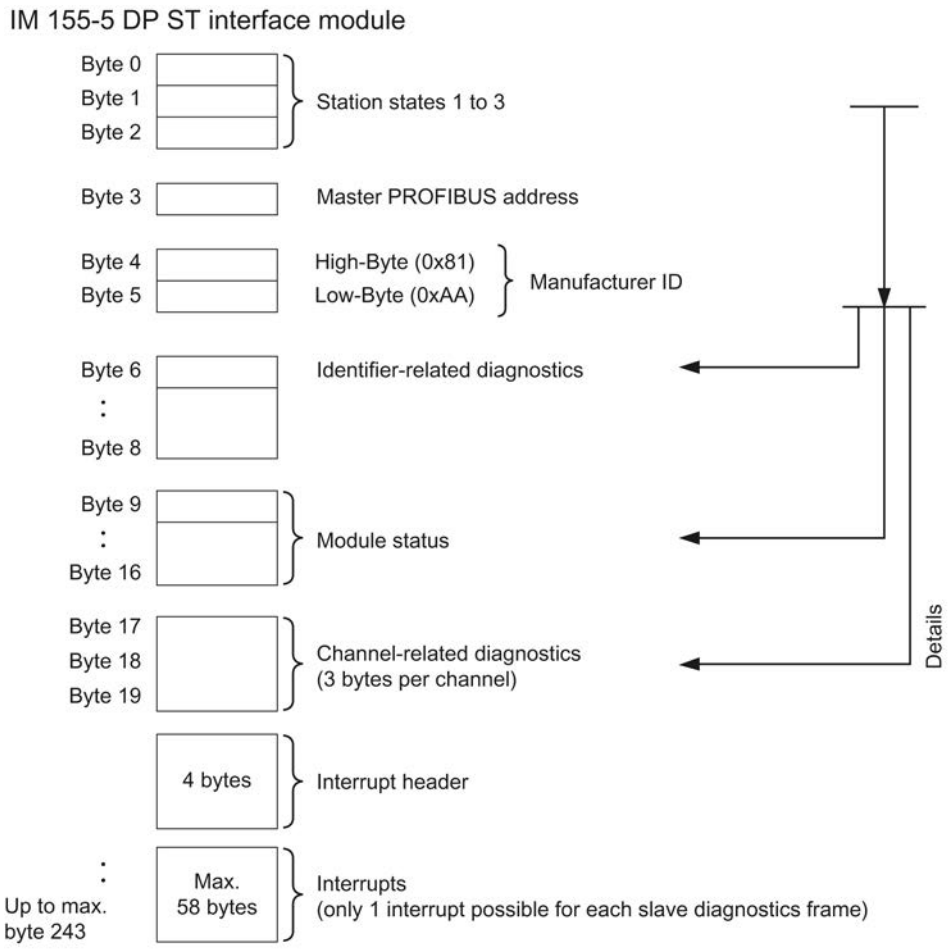

Figure 4-2 Configuration of the slave diagnostics DP

4.2.3 Station statuses 1 to 3

Station states 1 to 3 provide an overview of the status of a DP slave.

Structure of station status 1 (byte 0)

Table 4- 3 Structure of station status 1 (byte 0)

Bit	Meaning	Cause/Remedy
0	1: The DP slave is not responding to the DP master.	• Is the correct PROFIBUS address set on the DP slave? • Is the bus connector plugged in? • Is the DP slave connected to the voltage supply? • Is the RS485 repeater properly configured?
1	1: The DP slave is not yet ready to exchange data.	• Wait, the DP slave is currently starting up.
2	1: The configuration data transferred from the DP master to the DP slave does not match the DP slave configuration.	• Has the correct station type or the correct DP slave configuration been entered in the configuration software?
3	1: External diagnostics is available. (Group diagnostics display)	• Evaluate the ID-specific diagnostics, the module status, and/or the channel diagnostics. As soon as all errors have been eliminated, bit 3 is reset. The bit is set again when there is a new diagnostics alarm in the bytes of the above-mentioned diagnostics.
4	1: The required function is not supported by the DP slave (for example, changing the PROFIBUS address via software).	• Check the configuration.
5	1: The DP master cannot interpret the response of the DP slave.	• Check the bus configuration.
6	1: The DP slave type does not match the software configuration.	• Has the correct station type been specified in the configuration software?
7	1: Parameters have been assigned to the DP slave by a different DP master (not the one that currently has access to the DP slave).	• The bit is always 1, for example, if you access the DP slave with the programming device or another DP master. • The "master PROFIBUS address" diagnostic byte contains the PROFIBUS address of the DP master that assigned parameters to the DP slave.

Structure of station status 2 (byte 1)

Table 4- 4 Structure of station status 2 (byte 1)

Bit	Meaning	
0	1:	The DP slave parameters need to be reassigned.
1	1:	A diagnostics alarm is present. The DP slave cannot operate until the problem is eliminated (static diagnostics alarm).
2	1:	The bit on the DP slave is always "1".
3	1:	The watchdog is activated for this DP slave.
4	1:	The DP slave has received the "FREEZE" control command.[1]
5	1:	The DP slave has received the "SYNC" control command.[1]
6	0:	Bit is always "0".
7	1:	The DP slave is disabled, that is, it has been removed from the processing in progress.
[1] The bit is updated only if another diagnostics alarm changes also.		

Structure of station status 3 (byte 2)

Table 4- 5 Structure of station status 3 (byte 2)

Bit	Meaning	
0 to 6	0:	Bits are always set to "0".
7	1:	• There are more diagnostic alarms pending than the DP slave is able to store. • The DP master cannot enter all the diagnostics alarms sent by the DP slave in its (channel) diagnostics buffer.

4.2.4 Master PROFIBUS address

The master PROFIBUS address diagnostics byte contains the PROFIBUS address of the DP master:

- That assigned parameters to the DP slave
- That has read and write access to the DP slave

The master PROFIBUS address is located in byte 3 of the slave diagnostics.

If the DP slave parameters were not assigned by the DP master, the master PROFIBUS diagnostic byte address contains "0xFF".

4.2.5 Identifier-related diagnostics

The identifier-related diagnostics indicates whether or not modules of the ET 200MP distributed I/O system have errors. Identifier-related diagnostics starts at byte 6 and comprises 3 bytes.

The following figure shows the structure of the identifier-rated diagnostics of the IM 155-5 DP ST: interface module

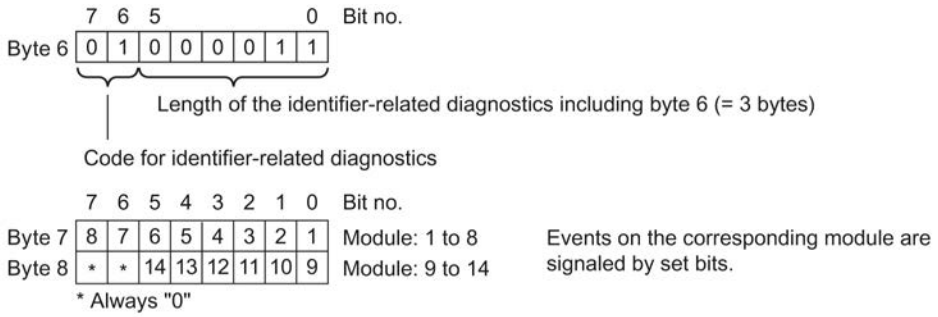

Figure 4-3 Structure of the identifier-related diagnostics

4.2.6 Module status

The module status indicates the status of the configured modules and provides more information on the identifier-related diagnostics with respect to the configuration. The module status begins after the identifier-related diagnostics and comprises 8 bytes.

The following figure shows the structure of the module status of the IM 155-5 DP ST interface module

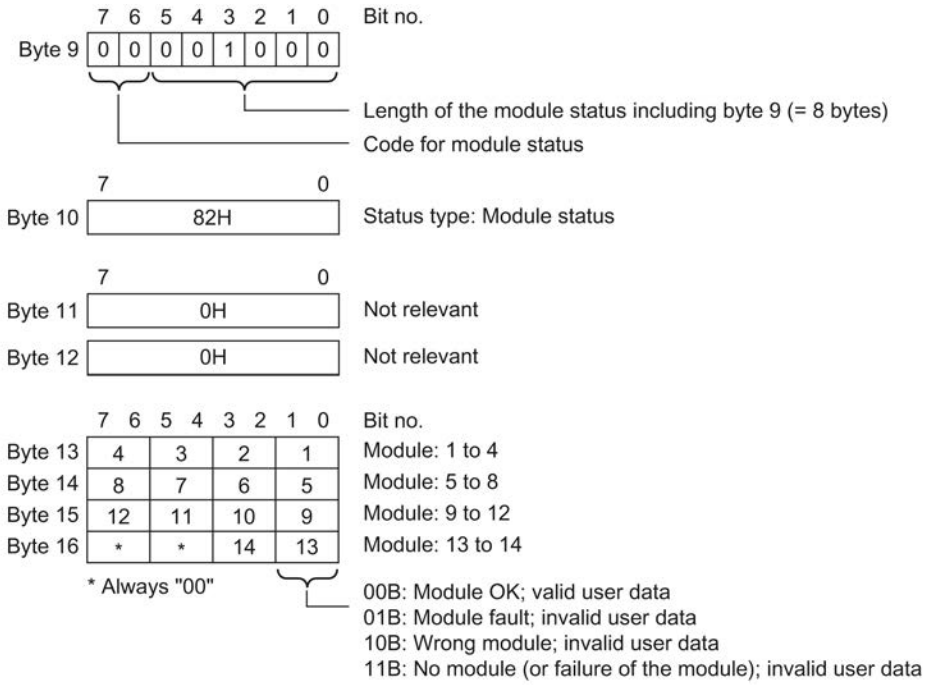

Figure 4-4 Module status structure

4.2.7 Channel-specific diagnostics

Channel-related diagnostics provide information about channel errors in modules and details of the identifier-related diagnostics. Channel-related diagnostic data starts after the module status. Channel-related diagnostics do not affect the module status.

The following figure shows the structure of the identifier-rated diagnostics of the IM 155-5 DP ST interface module

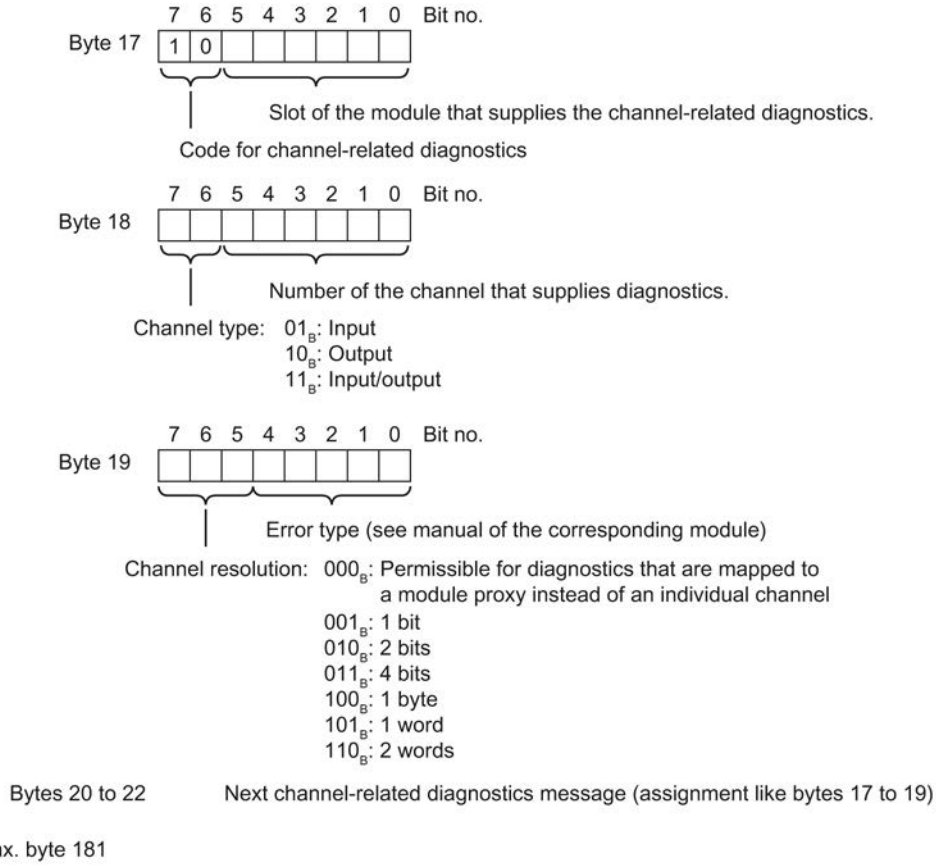

Figure 4-5 Structure of the channel diagnostics

4.2.8 Invalid configuration states of the ET 200MP on PROFIBUS DP

Invalid configuration states

The following tables shows invalid configuration states of the ET 200MP distributed I/O system. The incorrect configuration states lead to the failure of the interface module or prevent the exchange of user data with the I/O modules. Invalid configuration states are mapped to the module status of slot 1 (power status) or slot 2 (interface module).

Table 4- 6 Invalid configuration states on the ET 200MP

Invalid configuration states	Signaling	
	Module status	Slot
Power budget fault (overload)	Module fault (01)	Slot 1 (power status)
Power supply module detected	Wrong module (10)	Slot 1 (power status)
Permitted number of I/O modules exceeded	Module fault (01)	Slot 2 (interface module)
No U connector detected on an IM port	Module fault (01)	Slot 2 (interface module)
More than one bus master module (IM/CPU) detected	Module fault (01)	Slot 2 (interface module)
Communication has failed with slot x	Module fault (01)	Slot 2 (interface module)

You can find additional information on the module status in the section Module status (Page 22).

Additional information

You can find additional information on maximum configuration and on power budget in the ET 200MP Distributed I/O System (http://support.automation.siemens.com/WW/view/en/59193214) system manual.

4.3 Interrupts

Definition

The interrupt section of the slave diagnostic information indicates the interrupt type and the event that led to an interrupt being triggered. The interrupt section comprises a maximum 58 bytes.

Position in the diagnostic frame

The interrupt section is located after the channel diagnostics (only in DPV1 mode).

Example: If 3 channel-related diagnostic entries are pending, the interrupt section starts at byte 26.

Data record

The diagnostics data of a module can be up to 58 bytes in length and is located in data records 0 and 1:

- Data record 0 contains 4 bytes of diagnostic data describing the current state of an automation system. DS0 is part of the header information of OB 82 (local data bytes 8 to 11).
- Data record 1 contains the 4 bytes of diagnostic data that are also contained in data record 0, and additional 6 bytes DS1, and up to 8 channel diagnostic entries, each of which comprises 6 bytes in Siemens S7+ format.

DS0 and DS1 can be read with SFC 59 (RD_REC) or SFB 52 (RDREC).

List of Contents

The contents of the interrupt information depend on the interrupt type:

- For diagnostic interrupts, diagnostic data record 1 (up to 58 bytes) is sent as interrupt status information (starting at byte x+4).
- The status interruption for hardware interrupts is 4 bytes in length.

Structure of interrupts

The interrupt section for the ET 200MP distributed I/O system is structured as follows:

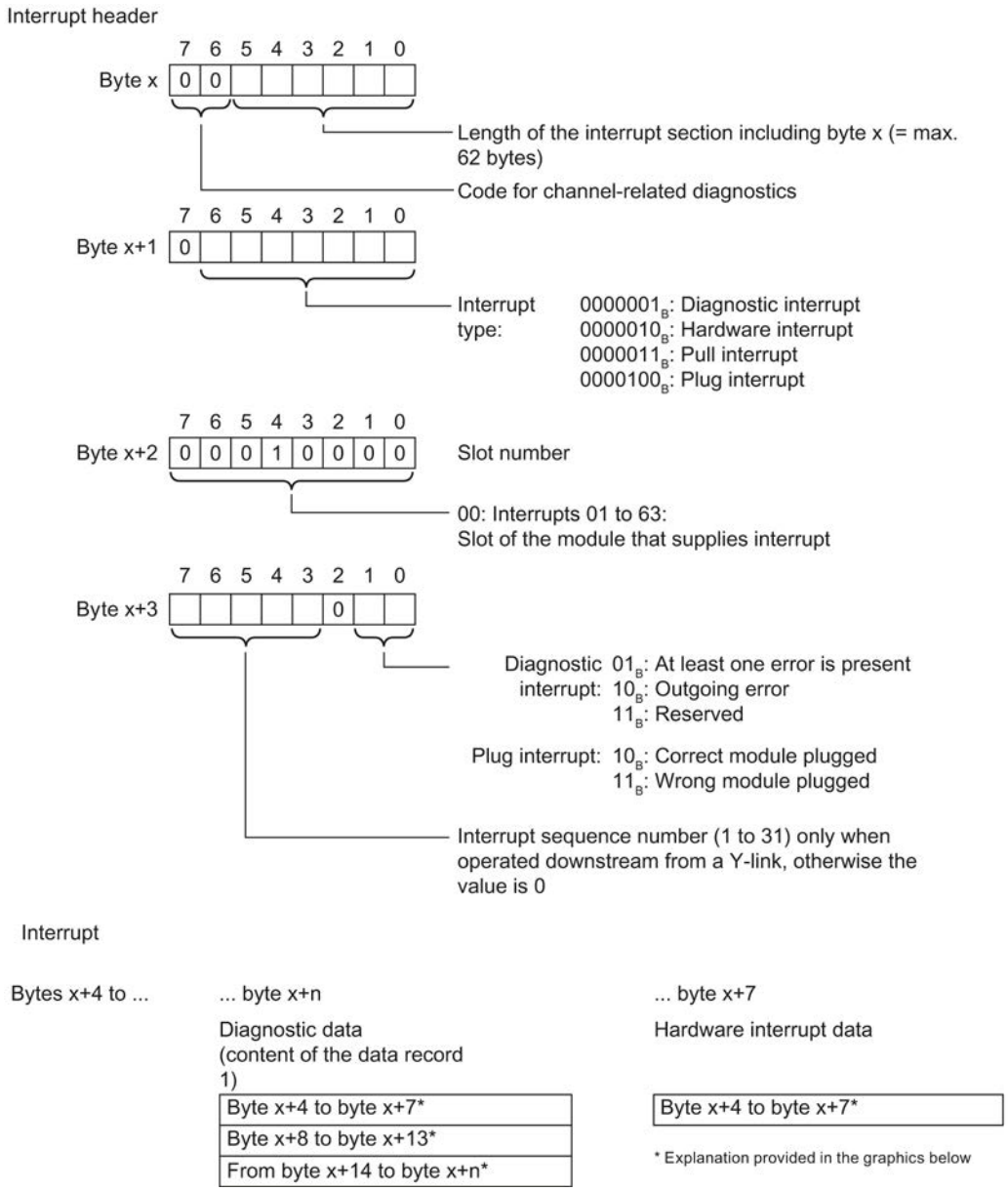

Figure 4-6 Structure of the interrupt status of the interrupt section

Diagnostic interrupt, byte x+4 to x+7 (DS 0)

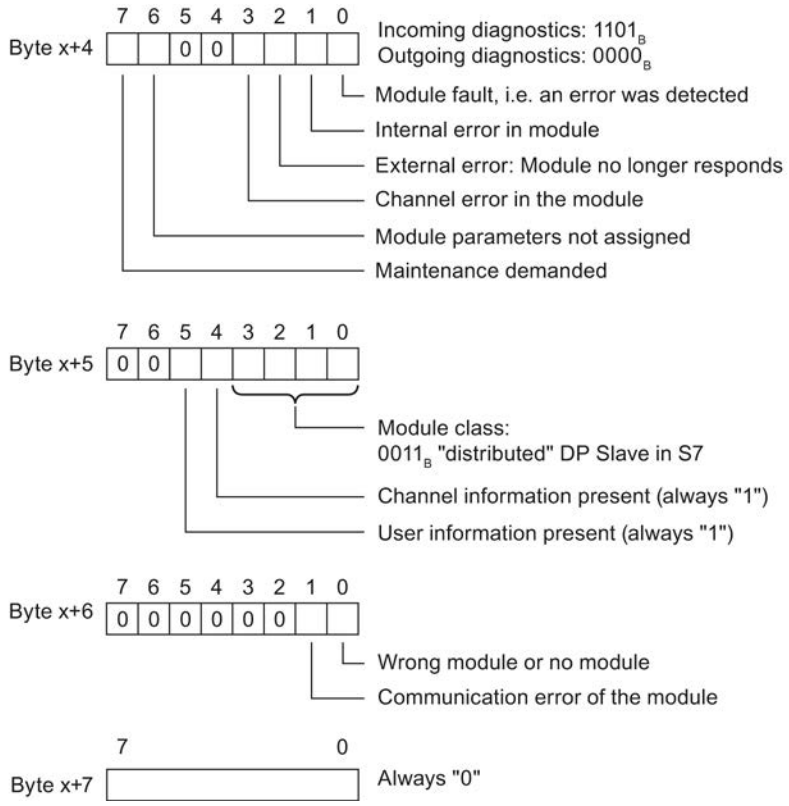

Figure 4-7 Structure of bytes x+4 to x+7 for diagnostic interrupt (DS 0)

Diagnostic interrupt from the modules, starting at byte x+8

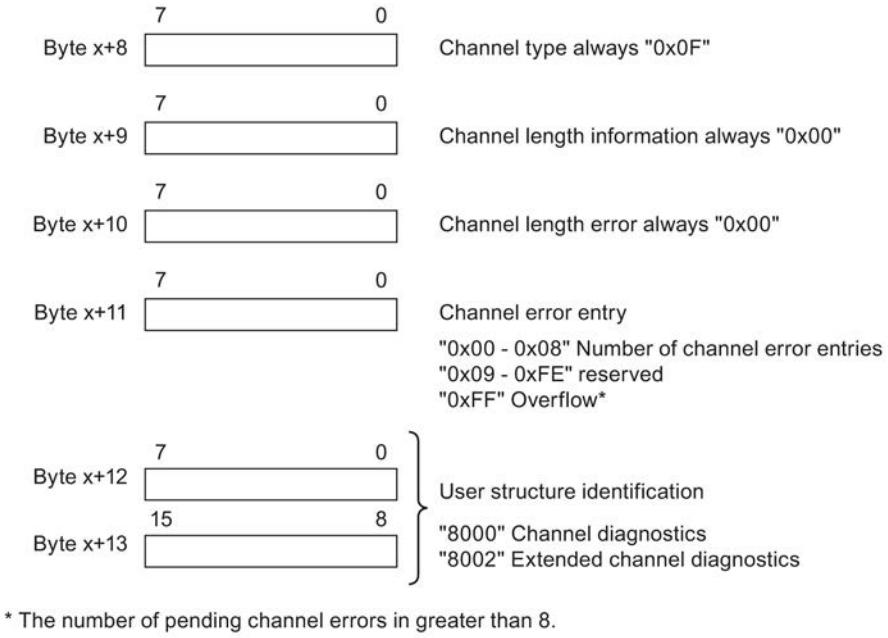

Figure 4-8 Structure starting at byte x+8

Diagnostic interrupt from the modules, starting at byte x+14

The channel error entries start at byte x+14. A channel error entry is 6 bytes long and can occur up to 8 times starting at byte x+14.

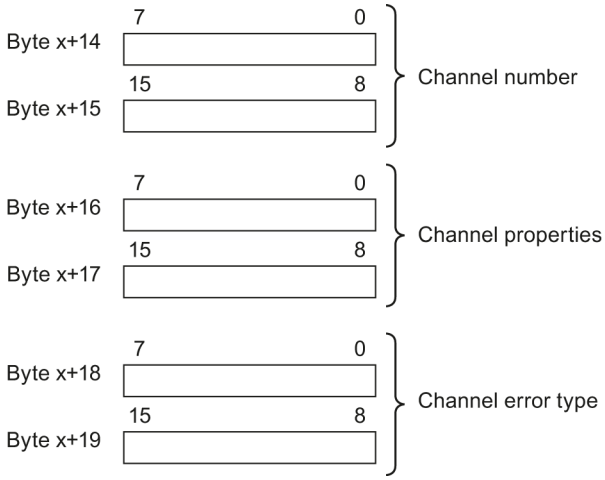

Figure 4-9 Structure starting at byte x+14

The following table explains the channel error entries.

	Description	
Channel number	0 to 0x7FFF: Channel number for channel error 0x8000: Entire submodule	
Channel properties	Bit 0 to 7	00_H: Free data type 01_H: bit 02_H: 2 bit 03_H: 4 bit 04_H: byte 05_H: word 06_H: Double word 07_H: 2 double word 08_H to FF_H: Reserve
	Bit 8	0_B: Single channel 1_B: Channel group
	Bit 9, 10	00_H: Diagnostics 01_H: Maintenance demanded 02_H: Maintenance required 03_H: Reserve
	Bit 11, 12	00_H: Channel error-free 01_H: Incoming diagnostics 02_H: Outgoing diagnostics 03_H: Outgoing diagnostics, but other diagnostics are also pending on this channel
	Bit 13 to 15	00_H: Reserve 01_H: Input channel 02_H: Output channel 03_H: Input/output channel
Channel error type	Refer to respective manual for explanation.	

Example of a Diagnostic Interrupt

Example:
The electronics module 16DI reports the diagnostic interrupt "Short circuit" on channel 2

	7	6	5	4	3	2	1	0	
Byte x	0	0	1	1	0	0	1	1	Length of the interrupt section = 20 bytes
Byte x+1	0	0	0	0	0	0	0	1	Diagnostic interrupt
Byte x+2	0	0	0	0	1	0	1	0	Slot number 10
Byte x+3	0	0	0	0	1	0	0	1	At least 1 error is present Interrupt sequence number = 1
Byte x+4	0	0	0	0	1	0	0	0	Channel error is present in module
Byte x+5	0	0	0	1	1	0	0	1	Digital electronic module Channel information present

Byte x+6 and x+7 always "0"

	7	6	5	4	3	2	1	0	
Byte x + 8	0	0	0	0	1	1	1	1	
Byte x+9	0	0	0	0	0	0	0	0	
Byte x+10	0	0	0	0	0	0	0	0	
Byte x+11	0	0	0	0	0	0	0	1	1 channel error entry

Byte x+12 to x+13 user identification
Byte x+14, x+15 channel number
Byte x+16, x+17 channel properties
Byte x+18, x+19 channel error type

Figure 4-10 Example of a Diagnostic Interrupt

Hardware interrupt of digital and analog input modules

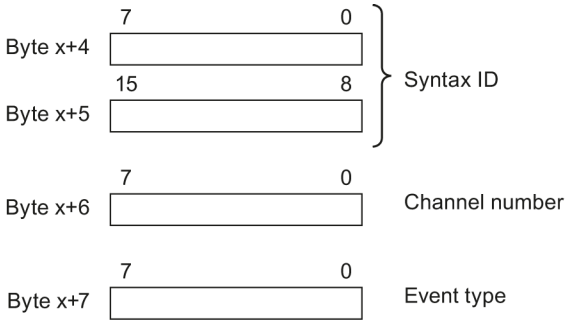

Figure 4-11 Structure as of Byte x+4 for hardware interrupt

4.3.1 Evaluating interrupts of ET 200MP

Introduction

With certain process states/errors, the DP slave in each case creates an interrupt block with the corresponding information in the diagnostics frame (DPV1 interrupt mechanism). Regardless of this, the diagnostic status of the DP slave is displayed in the identifier-related diagnostics, in the module status, and in the channel diagnostics.

Interrupts in DPV1 mode

The ET 200MP distributed I/O system supports the following interrupts:

- Diagnostic interrupts
- Hardware interrupts

4.3.2 Triggering of a diagnostic interrupt

Triggering a diagnostic interrupt

For an incoming or outgoing event (e.g. wire break on a channel of an I/O module), the module triggers a diagnostic interrupt if this is configured accordingly.

The CPU interrupts processing of the user program and processes the diagnostic interrupt OB (OB 82). The event that triggered the interrupt is entered in the start information of the diagnostic interrupt OB.

4.3.3 Triggering of a hardware interrupt

Triggering a hardware interrupt

When a hardware interrupt occurs, the CPU interrupts user program execution and processes the hardware interrupt block OB, e.g., OB 40. The event that triggered the interrupt is added to the start information of the hardware interrupt OB.

Note

Diagnostics "Hardware interrupt lost" (from I/O module)

Do not use hardware interrupts for functional purposes (e.g. cyclic generation of hardware interrupts).

If the hardware interrupt load is too high, hardware interrupts can get lost depending on the number of I/O modules and the communication load.

Technical specifications

5

5.1 Technical specifications

Technical specifications of the IM 155-5 DP ST

	6ES7155-5BA00-0AB0
General information	
Hardware version	01
Firmware version	V1.0.0
Vendor identifier (VendorID)	81AAh
Product function	
I&M data	Yes; IM0 to IM3
Engineering with	
STEP 7 TIA Portal can be configured/integrated as of version	V12.0 SP1
STEP 7 can be configured/integrated as of version	as of V5.5 SP3 / -
PROFIBUS as of GSD version/GSD revision	V1.0 / 5.1
Supply voltage	
Type of supply voltage	DC
Rated value (DC)	24 V
Valid range low limit (DC)	20.4 V
Valid range high limit (DC)	28.8 V
Reverse polarity protection	Yes
Power and voltage failure backup	
Power/voltage failure backup time	5 ms
Input current	
Current consumption (rated value)	0.2 A; at 24 V DC and without load
Current consumption, max.	1.2 A; at 20.4 V DC and max. load
Inrush current, max.	4 A
I^2t	0.09 A^2s
Power	
Incoming power to the backplane bus	14 W
Power loss	
Power loss, typ.	4 W; typical
Address area	
Address space per module	
Address space per module, max.	128 byte; per input/output
Address space per station	
Address space per station, max.	244 byte; per input/output

	6ES7155-5BA00-0AB0
Hardware configuration	
System power supply can be plugged in to left of IM	No
Number of permissible power segments	1
Modules per rack, max.	12; I/O modules
Interfaces	
Number of PROFIBUS interfaces	1
1. Interface	
Protocols	
• PROFIBUS DP slave	Yes
Interface hardware	
RS 485	
Transmission rate, max.	12 Mbps
Protocols	
PROFIBUS	
Services	
• SYNC capability	Yes
• FREECE capability	Yes
• DPV1	Yes
Interrupts/diagnostics/status information	
Status display	Yes
Interrupts	
Interrupts	Yes
Diagnostic alarms	
Diagnostic functions	Yes
Diagnostic indicator LED	
RUN LED	Yes; green LED
ERROR LED	Yes; red LED
MAINT LED	Yes; yellow LED
Electrical isolation	
between backplane bus and electronics	No
between PROFIBUS DP and all other circuit components	Yes
between supply and all other circuits	No
Permitted potential difference	
Between different circuits	75 V DC / 60 V AC
Insulation	
Insulation tested with	707 V DC (type test)

	6ES7155-5BA00-0AB0
Ambient conditions	
Operating temperature	
Horizontal installation, min.	0 °C
Horizontal installation, max.	60 °C
Vertical installation, min.	0 °C
Vertical installation, max.	40 °C
Dimensions	
Width	35 mm
Height	147 mm
Depth	129 mm
Weights	
Weight, approx.	360 g

Dimension drawing

A

A.1 Dimension drawing IM 155-5 DP ST

The dimensional drawing of the module on the mounting rail, as well as a dimensional drawing with open front panel, are provided in the appendix. Always observe the specified dimensions for installation in cabinets, control rooms, etc.

Dimensional drawings of the IM 155-5 DP ST interface module

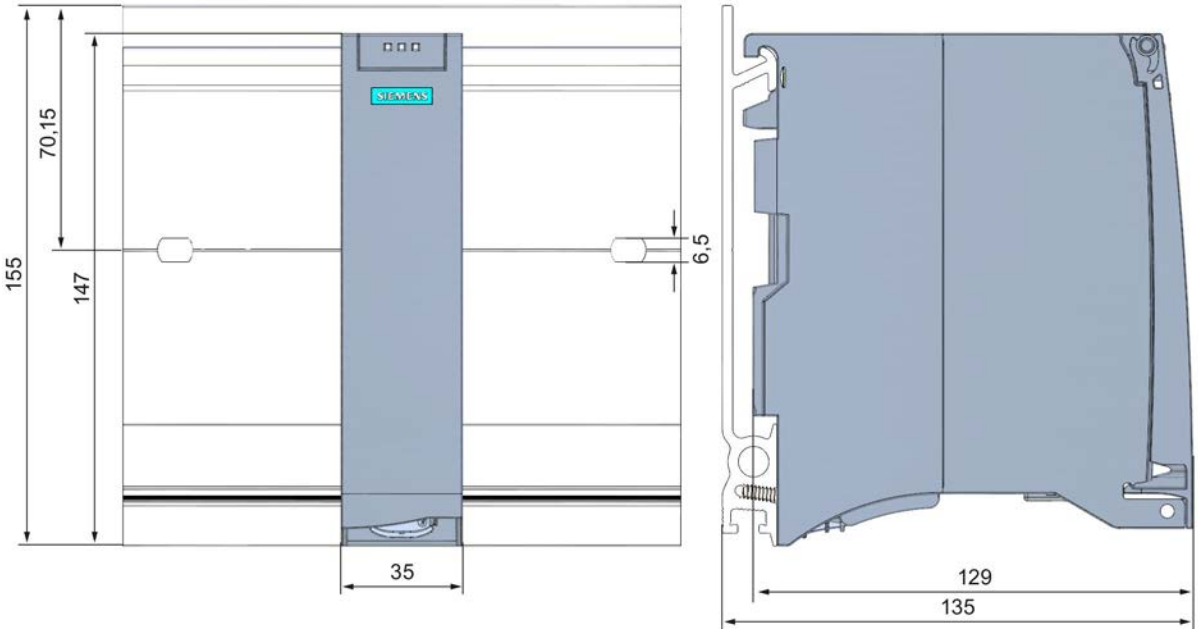

Figure A-1 Dimensional drawing of the IM 155-5 DP ST interface module, front and side views

Dimensional drawing of the IM 155-5 DP ST interface module, side view with open front cover

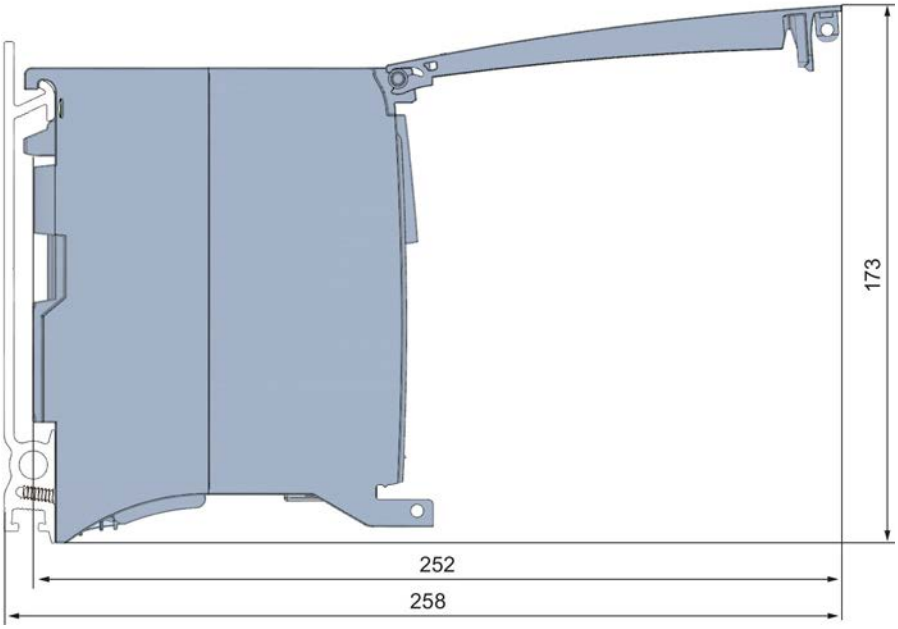

Figure A-2 Dimensional drawing of the IM 155-5 DP ST interface module, side view with open front cover

Response times

B

B.1 Response times of the ET 200MP

Introduction

The response time of the IM 155-5 DP ST is made up of:

- The minimum slave interval for the IM

plus

- The backplane bus cycle time.

Backplane bus cycle time

The backplane bus cycle time is the time the interface module requires to output new output data, read new input data and then copy it to the PROFIBUS send buffer.

The backplane bus cycle time in µs is made up as follows:

- (amount of output data in bytes) x 1.6958 + 77.786 (rounded)

plus

- (amount of input data in bytes) x 0.3481 + 33.587 (rounded)

plus

- Operating system processing time (500 µs).

Example configuration for the calculation of the backplane bus cycle time

The following are used in the example:

Table B- 1 Example configuration for the calculation of the backplane bus cycle time

I/O module	Output data in bytes	Input data in bytes
Analog output module AQ 4xU/I ST	8	-
Analog output module AQ 4xU/I ST with value status	8	1
Digital output module DQ 32x24VDC/0.5A ST with value status	4	4
Digital input module DI 32x24VDC HF	-	4
Analog input module AI 8xU/I/RTD/TC ST	-	16
Sum	20	25

SIEMENS

Manual

SIMATIC

S7-1500 / ET 200MP

Interface module IM 155-5 PN BA
(6ES7155-5AA00-0AA0)

Edition 08/2019

support.industry.siemens.com

SIEMENS

SIMATIC

ET 200MP
Interface module IM 155-5 PN BA (6ES7155-5AA00-0AA0)

Manual

Preface

S7-1500 / ET 200MP Documentation Guide 1

Product overview 2

Wiring 3

Interrupts and diagnostic, error, and system alarms 4

Technical specifications 5

Dimension drawing A

08/2019

A5E38017683-AB

Legal information

Warning notice system

This manual contains notices you have to observe in order to ensure your personal safety, as well as to prevent damage to property. The notices referring to your personal safety are highlighted in the manual by a safety alert symbol, notices referring only to property damage have no safety alert symbol. These notices shown below are graded according to the degree of danger.

⚠ DANGER

indicates that death or severe personal injury **will** result if proper precautions are not taken.

⚠ WARNING

indicates that death or severe personal injury **may** result if proper precautions are not taken.

⚠ CAUTION

indicates that minor personal injury can result if proper precautions are not taken.

NOTICE

indicates that property damage can result if proper precautions are not taken.

If more than one degree of danger is present, the warning notice representing the highest degree of danger will be used. A notice warning of injury to persons with a safety alert symbol may also include a warning relating to property damage.

Qualified Personnel

The product/system described in this documentation may be operated only by **personnel qualified** for the specific task in accordance with the relevant documentation, in particular its warning notices and safety instructions. Qualified personnel are those who, based on their training and experience, are capable of identifying risks and avoiding potential hazards when working with these products/systems.

Proper use of Siemens products

Note the following:

⚠ WARNING

Siemens products may only be used for the applications described in the catalog and in the relevant technical documentation. If products and components from other manufacturers are used, these must be recommended or approved by Siemens. Proper transport, storage, installation, assembly, commissioning, operation and maintenance are required to ensure that the products operate safely and without any problems. The permissible ambient conditions must be complied with. The information in the relevant documentation must be observed.

Trademarks

All names identified by ® are registered trademarks of Siemens AG. The remaining trademarks in this publication may be trademarks whose use by third parties for their own purposes could violate the rights of the owner.

Disclaimer of Liability

We have reviewed the contents of this publication to ensure consistency with the hardware and software described. Since variance cannot be precluded entirely, we cannot guarantee full consistency. However, the information in this publication is reviewed regularly and any necessary corrections are included in subsequent editions.

Siemens AG
Digital Industries
Postfach 48 48
90026 NÜRNBERG
GERMANY

A5E38017683-AB
℗ 08/2019 Subject to change

Copyright © Siemens AG 2017 - 2019.
All rights reserved

Preface

Siemens provides products and solutions with industrial security functions that support the secure operation of plants, systems, machines and networks.

In order to protect plants, systems, machines and networks against cyber threats, it is necessary to implement – and continuously maintain – a holistic, state-of-the-art industrial security concept. Siemens' products and solutions constitute one element of such a concept.

Customers are responsible for preventing unauthorized access to their plants, systems, machines and networks. Such systems, machines and components should only be connected to an enterprise network or the internet if and to the extent such a connection is necessary and only when appropriate security measures (e.g. firewalls and/or network segmentation) are in place.

For additional information on industrial security measures that can be implemented, please visit (https://www.siemens.com/industrialsecurity).

Siemens' products and solutions undergo continuous development to make them more secure. Siemens strongly recommends that product updates are applied as soon as they are available and that the latest product versions are used. Use of product versions that are no longer supported, and failure to apply the latest updates may increase customers' exposure to cyber threats.

To stay informed about product updates, subscribe to the Siemens Industrial Security RSS Feed visit (https://www.siemens.com/industrialsecurity).

Purpose of the documentation

This manual supplements the system manual S7-1500, ET 200MP automation system (https://support.industry.siemens.com/cs/ww/en/view/59191792). Functions that generally relate to the system are described in this manual.

The information provided in this manual and in the system/function manuals support you in commissioning the system.

Conventions

Please also observe notes marked as follows:

Note

A note contains important information on the product, on the handling of the product and on the section of the documentation to which particular attention should be paid.

Table of contents

Preface 3

1 S7-1500 / ET 200MP Documentation Guide 5

2 Product overview 7

2.1 Properties 7

2.2 Functions 9

3 Wiring 12

3.1 Terminal assignment 12

3.2 Block diagram 13

4 Interrupts and diagnostic, error, and system alarms 14

4.1 Status and error displays 14

4.2 Interrupts 17

4.2.1 Triggering of a diagnostic interrupt 18

4.2.2 Triggering of a hardware interrupt 18

4.3 Alarms 19

4.3.1 Diagnostic alarms 19

4.3.2 Channel diagnostics 20

4.3.3 Invalid configuration states of the ET 200MP on PROFINET IO 21

4.3.4 STOP of the IO controller and recovery of the IO device 21

5 Technical specifications 22

A Dimension drawing 26

S7-1500 / ET 200MP Documentation Guide

1

The documentation for the SIMATIC S7-1500 automation system and the SIMATIC ET 200MP distributed I/O system is arranged into three areas.
This arrangement enables you to access the specific content you require.

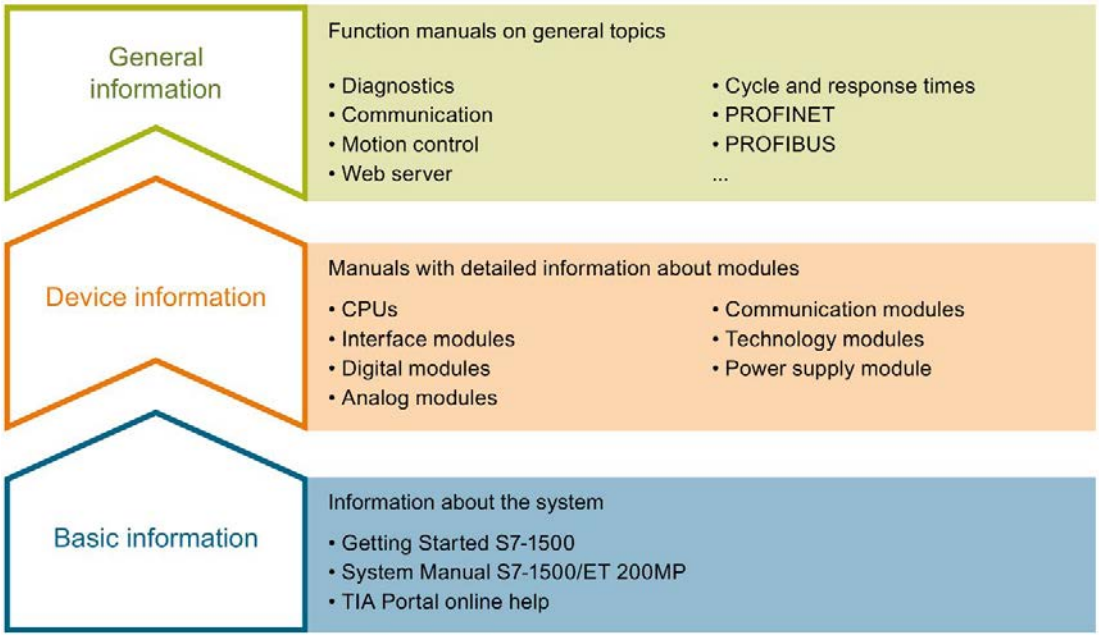

Basic information

The System Manual and Getting Started describe in detail the configuration, installation, wiring and commissioning of the SIMATIC S7-1500 and ET 200MP systems. The STEP 7 online help supports you in the configuration and programming.

Device information

Product manuals contain a compact description of the module-specific information, such as properties, wiring diagrams, characteristics and technical specifications.

General information

The function manuals contain detailed descriptions on general topics regarding the SIMATIC S7-1500 and ET 200MP systems, e.g. diagnostics, communication, motion control, Web server, OPC UA.

You can download the documentation free of charge from the Internet (https://support.industry.siemens.com/cs/ww/en/view/109742691).

Changes and supplements to the manuals are documented in a Product Information.

You can download the product information free of charge from the Internet (https://support.industry.siemens.com/cs/us/en/view/68052815).

Manual Collection S7-1500/ET 200MP

The Manual Collection contains the complete documentation on the SIMATIC S7-1500 automation system and the ET 200MP distributed I/O system gathered together in one file.

You can find the Manual Collection on the Internet (https://support.industry.siemens.com/cs/ww/en/view/86140384).

SIMATIC S7-1500 comparison list for programming languages

The comparison list contains an overview of which instructions and functions you can use for which controller families.

You can find the comparison list on the Internet (https://support.industry.siemens.com/cs/ww/en/view/86630375).

"mySupport"

With "mySupport", your personal workspace, you make the best out of your Industry Online Support.

In "mySupport", you can save filters, favorites and tags, request CAx data and compile your personal library in the Documentation area. In addition, your data is already filled out in support requests and you can get an overview of your current requests at any time.

You must register once to use the full functionality of "mySupport".

You can find "mySupport" on the Internet (https://support.industry.siemens.com/My/ww/en).

Application examples

The application examples support you with various tools and examples for solving your automation tasks. Solutions are shown in interplay with multiple components in the system - separated from the focus on individual products.

You will find the application examples on the Internet (https://support.industry.siemens.com/sc/ww/en/sc/2054).

Product overview 2

2.1 Properties

Article number

6ES7155-5AA00-0AA0

View of the module

Figure 2-1 View of the IM 155-5 PN BA interface module

Properties

- Technical properties
  - Connects the ET 200MP distributed I/O system with PROFINET IO
  - 24V DC power supply (SELV/PELV)
  - PROFINET IO connection using RJ45 bus connector
- Supported functions (Page 9)

Maximum configuration

The integrated power supply of the interface module feeds 14 W into the backplane bus. Up to 12 I/O modules can be supplied this way. The exact number of operable modules is determined by the power budget (see relevant section in the S7-1500, ET 200MP automation system (https://support.industry.siemens.com/cs/ww/en/view/59191792) system manual).

The interface module IM 155-5 PN BA does not support any additional power supply (PS) modules.

Maximum amount of I/O data

You can operate a maximum of 64 byte inputs and 64 byte outputs per station.

Accessories

A detailed list of the available accessories is available in the system manual S7-1500, ET 200MP automation system (https://support.industry.siemens.com/cs/ww/en/view/59191792).

2.2 Functions

PROFINET IO

The interface module supports the following PROFINET IO functions:

- Integrated switch with 2 ports
- Supported Ethernet services: ping, arp, SNMP, LLDP
- Port diagnostics
- Disabling ports
- Minimum update time 1 ms
- Device replacement without programming device
- Media redundancy (MRP)
- Shared device with two IO Controllers
- Module-internal Shared Input/Shared Output (MSI/MSO)
- Identification data I&M 0 to 3
- Firmware update via PROFINET IO
- Reset to factory settings via PROFINET IO
- Module division into submodules
- PROFIsafe (as of FW version V4.3.0)

Note

Docking system

The interface module IM155-5 PN BA cannot be used as a docking station. The use as a docking unit (function: IO devices changing during operation) in a docking system is supported.

Requirements

The following requirements apply for the usage of the PROFINET IO functions with the IM 155-5 PN BA interface module:

You use the following as the design software:

- STEP 7 (TIA Portal) as of V15.1 with HSP_V15_1_0187_001_ET200MP_PN_BA_4.3
- With GSD file: The usability of the PROFINET IO functions depends on the configuration software (Siemens and/or third party). Below, the usability of the PROFINET IO functions is described for STEP 7 only.
  - STEP 7 as of V5.5 SP3
  - STEP 7 (TIA Portal as of V15.1)

  The GSD file can be found on the Internet (https://support.industry.siemens.com/cs/ww/en/view/68189683).

  With GSD file no F-modules can be used.GSD

Cabling with fixed connection setting

If you set a fixed connection setting of the port in STEP 7, you should also deactivate "Autonegotiation/Autocrossover".

You can find additional information in the STEP 7 online help and

- as of STEP 7 V15, in the PROFINET with STEP 7 V15 (https://support.industry.siemens.com/cs/ww/en/view/49948856) function manual.

Device replacement without programming device

It is easy to replace IO devices that support this function:

- The device name does not have to be assigned with the programming device.

The replaced IO device is assigned the device name by the IO controller. The IO controller uses the configured topology and the neighboring relationships determined by the IO devices for this purpose. All involved devices must support the LLDP protocol (Link Layer Discovery Protocol). The configured target topology must match the actual topology.

IO devices that have been used in another configuration must be reset to the factory settings before they can be used again (see S7-1500, ET 200MP (https://support.industry.siemens.com/cs/ww/en/view/59191792) system manual).

You can find additional information in the STEP 7 online help and

- as of STEP 7 V15, in the PROFINET with STEP 7 V15 (https://support.industry.siemens.com/cs/ww/en/view/49948856) function manual.

Media redundancy

Function for safeguarding communication and system availability. A ring topology ensures that an alternative communication path is made available if a transmission link fails.

You can find additional information in the STEP 7 online help and

- as of STEP 7 V15, in the PROFINET with STEP 7 V15 (https://support.industry.siemens.com/cs/ww/en/view/49948856) function manual.

Shared device

IO device which makes its data available to multiple IO Controllers.

You can find additional information in the STEP 7 online help and

- as of STEP 7 V15, in the PROFINET with STEP 7 V15 (https://support.industry.siemens.com/cs/ww/en/view/49948856) function manual.

Submodules

The IM 155-5 PN BA interface module supports the module division of I/O modules into up to 9 submodules. This allows parts of an I/O module to be separately configured and assigned parameters.

It is possible to assign each of these submodules to different IO controllers.

The functions

- Firmware update
- Write I&M data
- Calibration

can only be executed if you have configured Submodule 1 during configuration.

Module-internal Shared Input/Shared Output (MSI/MSO)

The Module-internal Shared Input function allows an input module to make its input data available to a further IO Controller. Each controller has read access to the same channels.

The Module-internal Shared Output function allows an output module to make its output data available to a further IO Controller. One IO controller has write access. A further IO controller can have read access to the same channels.

You can find more information on this topic in the STEP 7 online help and

- As of STEP 7 V14, in the PROFINET with STEP 7 V14 (https://support.industry.siemens.com/cs/ww/en/view/49948856) function manual

Wiring

3

3.1 Terminal assignment

24 V DC supply voltage

The following table shows the signal names and the descriptions of the terminal assignment for a 24 V DC supply voltage.

Table 3- 1 Terminal assignment 24 V DC supply voltage

View	Signal name[1]	Description
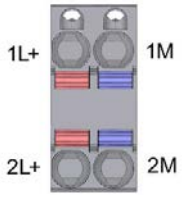	1L+	24 V DC
	2L+	24 V DC (for looping through)[2]
	1M	Ground
	2M	Ground (for looping through)[2]

[1] 1L+ and 2L+ as well as 1M and 2M are bridged internally.

[2] Maximum 10 A permitted.

PROFINET interface X1 Port 2

If autonegotiation is disabled, the RJ-45 socket (X1 Port 2) has the switch assignment (MDI-X).

Reference

You can find additional information on connecting the interface module and on the accessories (RJ45 bus connector) in the system manual S7-1500, ET 200MP automation system (https://support.industry.siemens.com/cs/ww/en/view/59191792).

3.2 Block diagram

Block diagram

The following figure shows the block diagram of the interface module IM 155-5 PN BA.

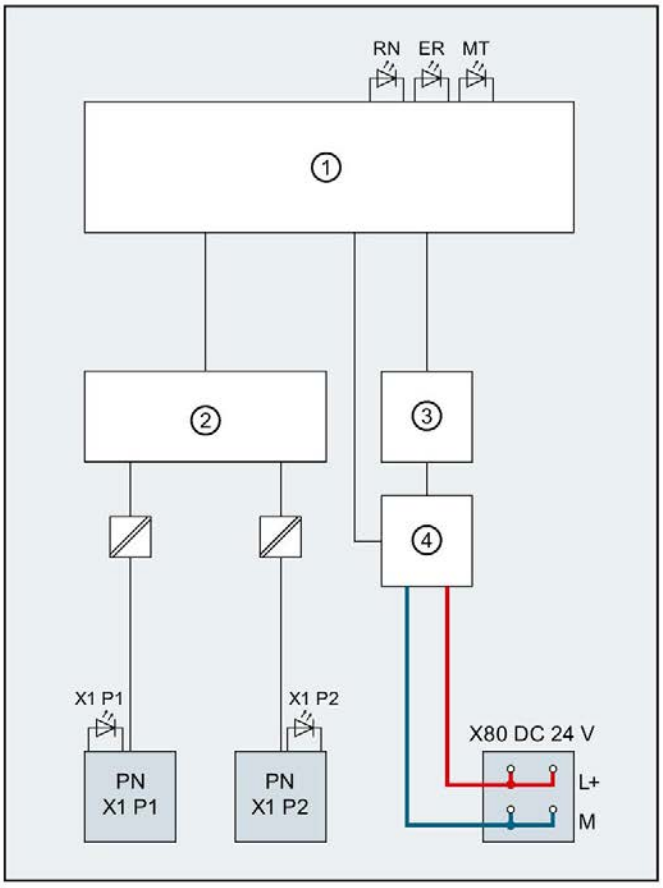

①	Electronics	L+	24 VDC supply voltage
②	PROFINET 2-port switch	M	Ground
③	Backplane bus interface	RN	LED RUN (green)
④	Internal supply voltage	ER	ERROR LED (red)
X80 24 VDC	Infeed of supply voltage	MT	MAINT LED (yellow)
PN X1 P1	PROFINET interface X1 Port 1	X1 P1, X1 P2	LED Link TX/RX (green/yellow)
PN X1 P2	PROFINET interface X1 Port 2		

Figure 3-1 Block diagram of the IM 155-5 PN BA interface module

Interrupts and diagnostic, error, and system alarms 4

4.1 Status and error displays

Introduction

Diagnostics by means of LED display is an initial tool for error localization. To further limit the error, you usually evaluate the display of the CPU, the display of the module status in STEP 7 or the diagnostics buffer of the CPU. The buffer contains plain text information on the error that has occurred. For example, you will find the number of the appropriate error OB there.

LED display

The figure below shows the LED display on the IM 155-5 PN BA interface module.

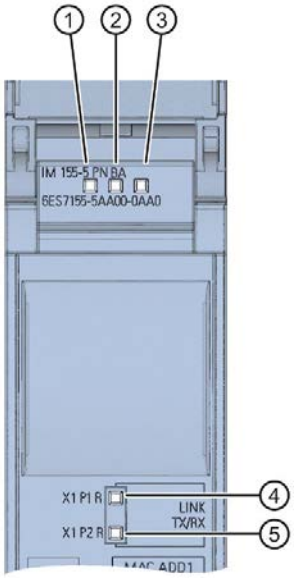

① RUN (green)
② ERROR (red)
③ MAINT (yellow)
④ P1 LINK/TX/RX (green/yellow)
⑤ P2 LINK/TX/RX (green/yellow)

Figure 4-1 LED display on the interface module

Meaning of the LEDs RUN / ERROR / MAINT

Table 4- 1 Meaning of the LEDs RUN / ERROR / MAINT

LEDs			Meaning	Remedy
RUN	ERROR	MAINT		
Off	Off	Off	Supply voltage not present at interface module or too small	Check the supply voltage or turn it on at the interface module.
On	On	On	Test of LEDs during startup: The three LEDs light up simultaneously for approximately 0.25 s.	---
Flashes	Off	Off	Interface module is deactivated.	Activate the interface module with the configuration software or the user program.
			Interface module is not configured.	Configure the interface module with the configuration software.
			ET 200MP starts up.	---
			ET 200MP is reset to factory settings.	
On	Not relevant	Not relevant	ET 200MP is currently exchanging data with the IO controller.	
Not relevant	Flashes	Not relevant	Group error and group error channels	Evaluate the diagnostics data and correct the error.
			The set configuration does not correspond to the actual configuration of the ET 200MP.	Check the design of the ET 200MP to see whether a module is missing or defective, or whether a non-configured module is inserted.
			Invalid configuration states	See chapter Invalid configuration states of the ET 200MP on PROFINET IO (Page 21)
			Parameter assignment error in the I/O module	Evaluate the display of the module status in STEP 7 and correct the error in the corresponding I/O module.
Flashes	Flashes	Flashes	"Node flash test" is performed. (The LEDs P1 and P2 of the PROFINET interface are also flashing.)	---
			Hardware or firmware defective. (The LEDs P1 and P2 of the PROFINET interface are not flashing.)	Replace the interface module.

Meaning of the LEDs P1 LINK/TX/RX, P2 LINK/TX/RX

Table 4- 2 Meaning of the LEDs P1 LINK/TX/RX, P2 LINK/TX/RX

LEDs P1 LINK/TX/RX, P2 LINK/TX/RX	Meaning	Remedy
□ Off	There is no Ethernet connection between the PROFINET interface of your PROFINET device and a communication partner (e.g. IO controller).	Check whether the bus cable to the switch/IO controller is interrupted.
■ On	There is an Ethernet connection between the PROFINET interface of your PROFINET device and a communication partner (e.g., IO controller).	---
■ flickers	There is active data traffic (sending/receiving) via the Ethernet connection.	---
☼ Flashes	"Node flash test" is performed. (The LEDs RUN/ERROR/MAINT are also flashing.)	---

4.2 Interrupts

Introduction

The I/O device generates interrupts as a reaction to specific error events. Interrupts are evaluated based on the I/O controller used.

Evaluating interrupts with I/O controllers

The ET 200MP distributed I/O system supports the following interrupts:

- Diagnostic interrupts
- Hardware interrupts

In the event of an interrupt, interrupt OBs are automatically called in the CPU of the IO controller.

Information on the cause and class of the error is already available, based on the OB number and start information.

Detailed information on the error event can be obtained in the error OB using the instruction "RALRM" (read additional interrupt information).

System diagnostics

In STEP 7 (TIA Portal) as of V14, innovative system diagnostics is available for devices of the S7-1500 automation system and ET 200MP. Independently of the cyclical user program, alarms are made available on the display of the S7-1500 CPU, to the S7-1500 CPU web server, to the HMI device and in STEP 7.

For additional information on the system diagnostics, refer to the System Diagnostics function manual. (https://support.industry.siemens.com/cs/ww/en/view/59192926).

4.2.1 Triggering of a diagnostic interrupt

Triggering of a diagnostic interrupt

For an incoming or outgoing event (e.g., wire break on a channel of an I/O module), the module triggers a diagnostic interrupt if this is configured accordingly in STEP 7 (TIA Portal).

The CPU interrupts user program execution and executes the diagnostic interrupt OB. The event that triggered the interrupt is entered in the start information of the diagnostic interrupt OB.

4.2.2 Triggering of a hardware interrupt

Triggering of a hardware interrupt

When a hardware interrupt occurs, the CPU interrupts execution of the user program and processes the hardware interrupt OB. The event that triggered the interrupt is entered in the start information of the hardware interrupt OB.

Note

Diagnostics "Hardware interrupt lost" (from I/O module)

Avoid creating hardware interrupts cyclically.

If the hardware interrupt load is too high, hardware interrupts can get lost depending on the number of I/O modules and the communication load.

4.3 Alarms

4.3.1 Diagnostic alarms

Requirement

In order to generate diagnostics, the IM 155-5 PN BA interface module parameters must have been assigned once.

Actions after a diagnostic alarm

There can be more than one diagnostic alarm at the same time. Actions initiated by diagnostic alarms:

- The ERROR LED of the interface module flashes.
- Diagnostic data is reported as diagnostic interrupts to the CPU of the IO controller and can be read via data records.
- Incoming diagnostic alarms are saved to the diagnostic buffer of the IO controller.
- The diagnostic interrupt OB is called.

You can find additional information in the STEP 7 online help.

Reading out the diagnostic data

Table 4- 3 Reading out the diagnostic data with STEP 7

Automation system with IO controller	Application	See...
SIMATIC S7	Diagnostic data as plain text in STEP 7 using online view and diagnostic view	STEP 7 online help PROFINET with STEP 7 V15 function manual (https://support.industry.siemens.com/cs/ww/en/view/49948856)
	Instruction "RDREC" Read data records from the IO device	
	Instruction "RALRM" Receive interrupts from the IO device	

Additional information on the data records for PROFINET IO

You can find the structure of the diagnostic data records and programming examples in the programming manual From PROFIBUS DP to PROFINET IO (https://support.industry.siemens.com/cs/ww/en/view/19289930) and in the application example on the Internet (https://support.industry.siemens.com/cs/ww/en/view/24000238).

Causes of error and troubleshooting

The error causes and corrective measures of the diagnostic alarms are described in the manuals for the I/O modules (https://support.industry.siemens.com/cs/ww/en/ps/14039/man) in the Interrupts/Diagnostic alarms section.

4.3.2 Channel diagnostics

Function

Channel diagnostics provides information about channel faults in modules.

Channel faults are mapped as channel diagnostic data in IO diagnostic data records.

The "RDREC" instruction is used to read the data record.

Structure of the diagnostic data records

The data records supported by the ET 200MP are based on the standard PROFINET IO - Application Layer Service Definition V2.3.

You can purchase the standard from the PROFIBUS User Organization on the Internet (https://www.profibus.com).

Codes of the extended channel diagnostics

With the IM 155-5 PN BA interface module, the following extended channel diagnostics are reported by the Interface module in slot 1:

Table 4- 4 Extended channel diagnostics IM 155-6 PN BA

ChannelError-Type	ExtendedChan-nel ErrorType	Associated value (AddValue)	Diagnostics
0x0601	0x0682	Slot	Communication has failed with slot <No.>
0x0602	0x0692	Slot	Permitted number of I/O modules exceeded
0x0602	0x0696	0	No U connector detected on an IM port
0x0602	0x0697	0	More than one bus master module (IM/CPU) detected
0x0610	0x06B1	1 (Interface module slot)	Power budget error (overload has been detected in at least one power segment)
0x0610	0x06B2	0	Error IM power supply: Power supply not active or power sup-ply active

Additional information

You can find additional information on maximum configuration, power budget and power segments in the S7-1500, ET 200MP automation system (https://support.industry.siemens.com/cs/ww/en/view/59191792) system manual.

4.3.3 Invalid configuration states of the ET 200MP on PROFINET IO

Invalid configuration states

The following invalid configuration states of the ET 200MP lead to a short failure of the ET 200MP IO device or prevent the exchange of user data with the I/O modules.

- Number of modules exceeds maximum configuration
- Faulty backplane bus (e.g., additional IM present).

Additional information

You can find additional information on maximum configuration and on power budget in the s7-1500, ET 200MP automation system (https://support.industry.siemens.com/cs/ww/en/view/59191792) system manual.

See also:

Status and error displays (Page 14)

4.3.4 STOP of the IO controller and recovery of the IO device

STOP of the SIMATIC IO controller

Diagnostic data received from the IO device while the IO controller is in STOP state does not initiate a call of the corresponding OBs when the IO controller goes into RUN. You have to read the data record $E00C_H$ using the "RDREC" in the startup OB. This record contains all diagnostic data for the slots assigned to an IO controller in an IO device.

Recovery of the SIMATIC IO device

If you want to read the diagnostic data in the STOP state of the IO controller, you have to read the $E00C_H$ data record using the "RDREC" instruction. This record contains all diagnostic data for the slots assigned to an IO controller in an IO device.

Technical specifications

5

Technical specifications of the IM 155-5 PN BA

Article number	6ES7155-5AA00-0AA0
General information	
Product type designation	IM 155-5 PN BA
HW functional status	FS02
Firmware version	V4.3.0
Vendor identification (VendorID)	0x002A
Device identifier (DeviceID)	0X0312
Product function	
• I&M data	Yes; I&M0 to I&M3
Engineering with	
• STEP 7 TIA Portal configurable/integrated as of version	V15.1 with HSP 187
• STEP 7 configurable/integrated as of version	V5.5 SP3 / -
• PROFINET as of GSD version/GSD revision	V2.3 / -
Configuration control	
via user data	No
via dataset	No
Supply voltage	
Rated value (DC)	24 V
permissible range, lower limit (DC)	20.4 V
permissible range, upper limit (DC)	28.8 V
Reverse polarity protection	Yes
Short-circuit protection	Yes
Mains buffering	
• Mains/voltage failure stored energy time	5 ms
Input current	
Current consumption (rated value)	1 A
Current consumption, max.	1.7 A
Inrush current, max.	2.8 A
I^2t	0.04 $A^2 \cdot s$
Power	
Infeed power to the backplane bus	14 W

Article number	6ES7155-5AA00-0AA0
Power loss	
Power loss, typ.	3 W
Address area	
Address space per module	
• Address space per module, max.	64 byte; per input / output
Address space per station	
• Address space per station, max.	64 byte; per input / output
Hardware configuration	
Integrated power supply	Yes
System power supply can be plugged in to left of IM	No
Number of permissible power segments	1
Rack	
• Modules per rack, max.	12; I/O modules
Submodules	
• Number of submodules per station, max.	108; 9 submodules / I/O modules
Interfaces	
Number of PROFINET interfaces	1; 2 ports (switch) RJ45
1. Interface	
Interface types	
• Number of ports	2
• integrated switch	Yes
• RJ 45 (Ethernet)	Yes
• BusAdapter (PROFINET)	No
Protocols	
• PROFINET IO Device	Yes
• Media redundancy	Yes
Interface types	
RJ 45 (Ethernet)	
• Transmission procedure	PROFINET with 100 Mbit/s full duplex (100BASE-TX)
• 100 Mbps	Yes
• Autonegotiation	Yes
• Autocrossing	Yes
Protocols	
PROFINET IO Device	
Services	
– Isochronous mode	No
– Open IE communication	Yes

Article number	6ES7155-5AA00-0AA0
– IRT	No
– PROFIenergy	No
– Prioritized startup	No
– Shared device	Yes
– Number of IO Controllers with shared device, max.	2
Redundancy mode	
• MRP	Yes
• MRPD	No
• PROFINET system redundancy (S2)	No
Open IE communication	
• TCP/IP	Yes
• SNMP	Yes
• LLDP	Yes
Isochronous mode	
Isochronous operation (application synchronized up to terminal)	No
Equidistance	No
Interrupts/diagnostics/status information	
Status indicator	Yes
Alarms	Yes
Diagnostics function	Yes
Diagnostics indication LED	
• RUN LED	Yes; Green LED
• ERROR LED	Yes; Red LED
• MAINT LED	Yes; Yellow LED
• Connection display LINK TX/RX	Yes; 2x green-yellow LEDs
Potential separation	
between backplane bus and electronics	No
between PROFINET and all other circuits	Yes; 1500 V AC
between supply and all other circuits	No
Permissible potential difference	
between different circuits	Safety extra low voltage SELV
Isolation	
Isolation tested with	707 V DC (type test)
Standards, approvals, certificates	
Network loading class	2

Article number	6ES7155-5AA00-0AA0
Ambient conditions	
Ambient temperature during operation	
• horizontal installation, min.	0 °C
• horizontal installation, max.	60 °C
• vertical installation, min.	0 °C
• vertical installation, max.	40 °C
Altitude during operation relating to sea level	
• Installation altitude above sea level, max.	5 000 m; Restrictions for installation altitudes > 2 000 m, see manual
Dimensions	
Width	35 mm
Height	147 mm
Depth	129 mm
Weights	
Weight, approx.	236 g

Dimension drawing

A

The dimensional drawing of the module on the mounting rail, as well as a dimensional drawing with open front panel, are provided in the appendix. Always observe the specified dimensions for installation in cabinets, control rooms, etc.

Dimension drawings of the IM 155-5 PN BA interface module

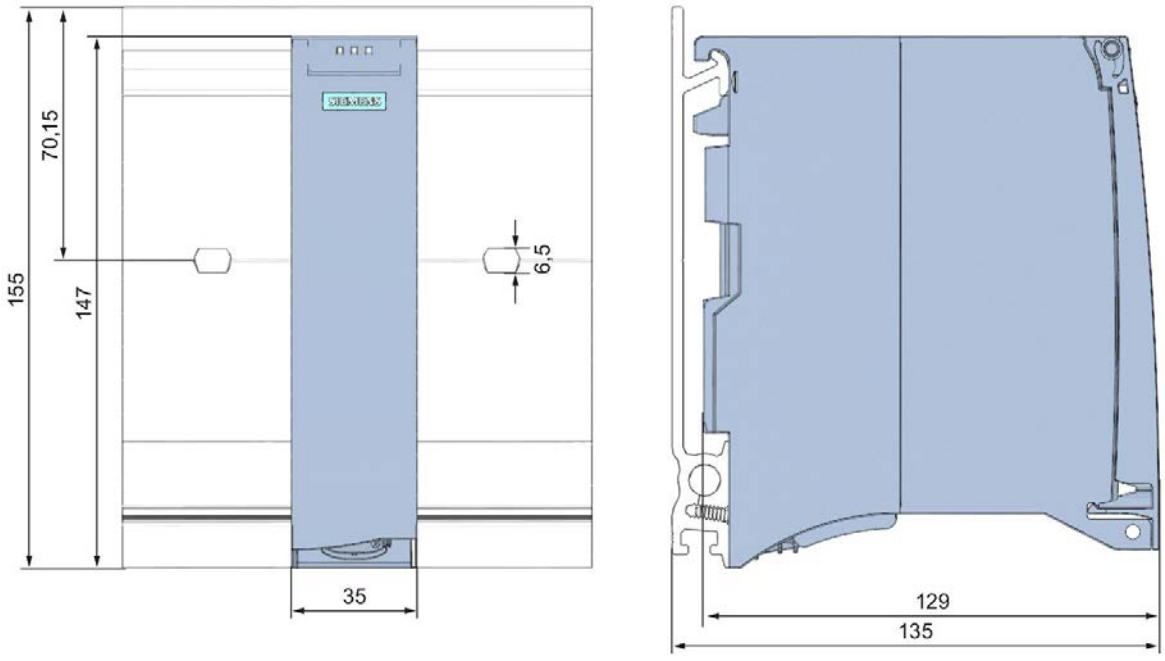

Figure A-1 Dimension drawing of the IM 155-5 PN BA interface module, front and side views

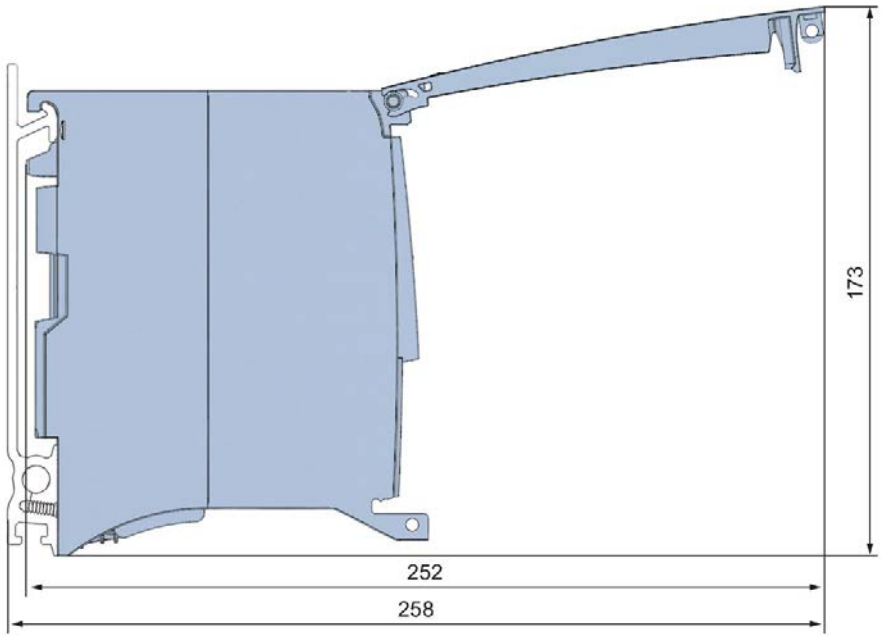

Figure A-2 Dimension drawing of theIM 155-5 PN BA interface module, side view with open front cover

SIEMENS

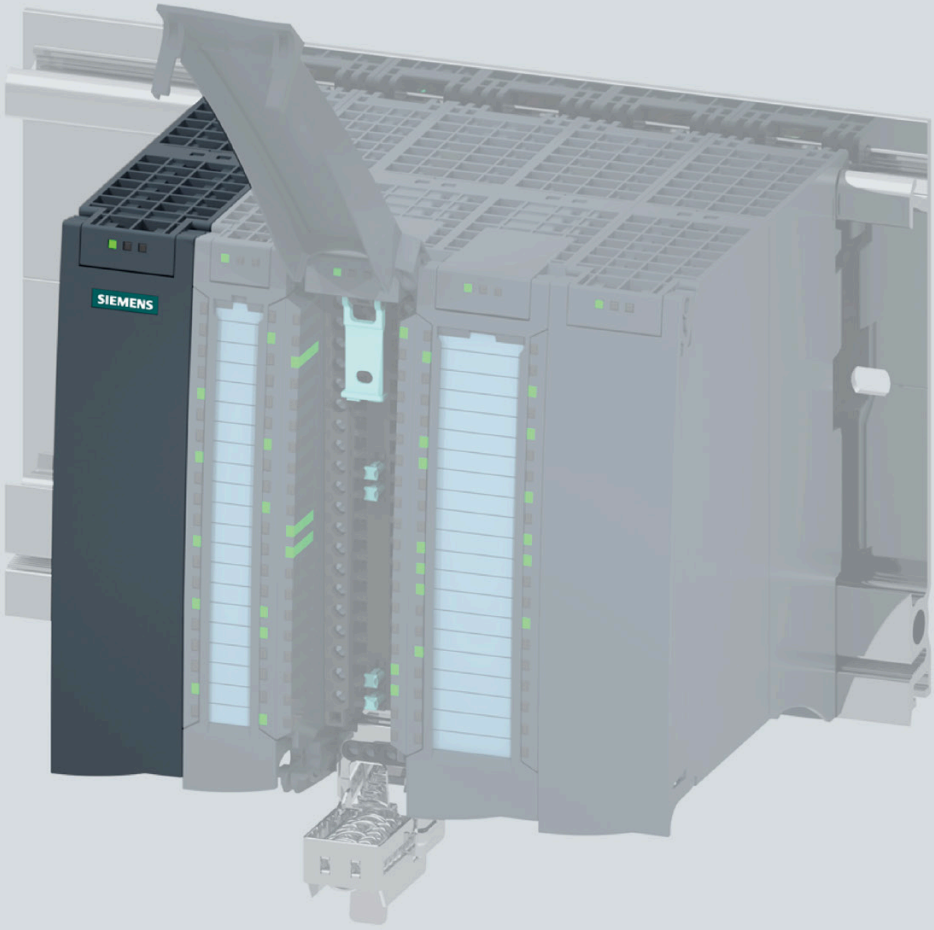

Manual

SIMATIC

ET 200MP

Interface module IM 155-5 PN HF
(6ES7155-5AA00-0AC0)

Edition 03/2020

support.industry.siemens.com

SIEMENS

SIMATIC

ET 200MP
IM 155-5 PN HF Interface Module
(6ES7155-5AA00-0AC0)

Equipment Manual

Preface

Guide to documentation 1

Product overview 2

Wiring 3

Parameter 4

Interrupts and diagnostic, error, and system alarms 5

Technical specifications 6

Dimension drawing A

Response times B

03/2020

A5E32840985-AC

Legal information

Warning notice system

This manual contains notices you have to observe in order to ensure your personal safety, as well as to prevent damage to property. The notices referring to your personal safety are highlighted in the manual by a safety alert symbol, notices referring only to property damage have no safety alert symbol. These notices shown below are graded according to the degree of danger.

⚠ DANGER

indicates that death or severe personal injury **will** result if proper precautions are not taken.

⚠ WARNING

indicates that death or severe personal injury **may** result if proper precautions are not taken.

⚠ CAUTION

indicates that minor personal injury can result if proper precautions are not taken.

NOTICE

indicates that property damage can result if proper precautions are not taken.

If more than one degree of danger is present, the warning notice representing the highest degree of danger will be used. A notice warning of injury to persons with a safety alert symbol may also include a warning relating to property damage.

Qualified Personnel

The product/system described in this documentation may be operated only by **personnel qualified** for the specific task in accordance with the relevant documentation, in particular its warning notices and safety instructions. Qualified personnel are those who, based on their training and experience, are capable of identifying risks and avoiding potential hazards when working with these products/systems.

Proper use of Siemens products

Note the following:

⚠ WARNING

Siemens products may only be used for the applications described in the catalog and in the relevant technical documentation. If products and components from other manufacturers are used, these must be recommended or approved by Siemens. Proper transport, storage, installation, assembly, commissioning, operation and maintenance are required to ensure that the products operate safely and without any problems. The permissible ambient conditions must be complied with. The information in the relevant documentation must be observed.

Trademarks

All names identified by ® are registered trademarks of Siemens AG. The remaining trademarks in this publication may be trademarks whose use by third parties for their own purposes could violate the rights of the owner.

Disclaimer of Liability

We have reviewed the contents of this publication to ensure consistency with the hardware and software described. Since variance cannot be precluded entirely, we cannot guarantee full consistency. However, the information in this publication is reviewed regularly and any necessary corrections are included in subsequent editions.

Siemens AG
Digital Industries
Postfach 48 48
90026 NÜRNBERG
GERMANY

A5E32840985-AC
℗ 03/2020 Subject to change

Copyright © Siemens AG 2014 - 2020.
All rights reserved

Preface

Purpose of the documentation

This manual supplements the system manual S7-1500, ET 200MP Automation system (https://support.industry.siemens.com/cs/ww/en/view/59191792). Functions that generally relate to the system are described in this manual.

The information provided in this manual and in the system/function manuals supports you in commissioning the system.

Conventions

Please also observe notes labeled as follows:

Note

A note contains important information on the product described in the documentation, on the handling of the product, or on the section of the documentation to which particular attention should be paid.

Recycling and disposal

For environmentally friendly recycling and disposal of your old equipment, contact a certified electronic waste disposal company and dispose of the equipment according to the applicable regulations in your country.

Security information

Siemens provides products and solutions with industrial security functions that support the secure operation of plants, systems, machines and networks.

In order to protect plants, systems, machines and networks against cyber threats, it is necessary to implement – and continuously maintain – a holistic, state-of-the-art industrial security concept. Siemens' products and solutions constitute one element of such a concept.

Customers are responsible for preventing unauthorized access to their plants, systems, machines and networks. Such systems, machines and components should only be connected to an enterprise network or the internet if and to the extent such a connection is necessary and only when appropriate security measures (e.g. firewalls and/or network segmentation) are in place.

For additional information on industrial security measures that may be implemented, please visit (https://www.siemens.com/industrialsecurity).

Siemens' products and solutions undergo continuous development to make them more secure. Siemens strongly recommends that product updates are applied as soon as they are available and that the latest product versions are used. Use of product versions that are no longer supported, and failure to apply the latest updates may increase customers' exposure to cyber threats.

To stay informed about product updates, subscribe to the Siemens Industrial Security RSS Feed visit (https://www.siemens.com/industrialsecurity).

Table of contents

Preface 3

1 Guide to documentation 7

2 Product overview 11

2.1 Properties 11

2.2 Functions 14
2.2.1 PROFINET IO 14
2.2.2 Configuration control (option handling) 20
2.2.3 System redundancy on S7-400H 20

3 Wiring 21

3.1 Pin assignment 21

3.2 Block diagram 22

4 Parameter 23

4.1 Parameters 23

4.2 Description of parameters 23
4.2.1 Connection to supply voltage L+ 23
4.2.2 Configuration control (option handling) 25

4.3 Configuration control (option handling) 25
4.3.1 Configuration control and control data record 25
4.3.2 Feedback data record 29
4.3.3 Configure configuration control without empty slots 31
4.3.4 Extending the configuration 33
4.3.5 Combining configurations 35

5 Interrupts and diagnostic, error, and system alarms 37

5.1 Status and error displays 37

5.2 Interrupts 40
5.2.1 Triggering of a diagnostic interrupt 41
5.2.2 Triggering of a hardware interrupt 41

5.3 Alarms 42
5.3.1 Diagnostic alarms 42
5.3.2 Maintenance events 44
5.3.3 Channel diagnostics 45
5.3.4 Invalid configuration states of the ET 200MP on PROFINET IO 50
5.3.5 STOP of the IO controller and recovery of the IO device 51

6 Technical specifications 52

A Dimension drawing 56

B Response times 58

B.1 Response times of the ET 200MP 58

Guide to documentation

1

The documentation for the SIMATIC S7-1500 automation system and the SIMATIC ET 200MP distributed I/O system is arranged into three areas.
This arrangement enables you to access the specific content you require.

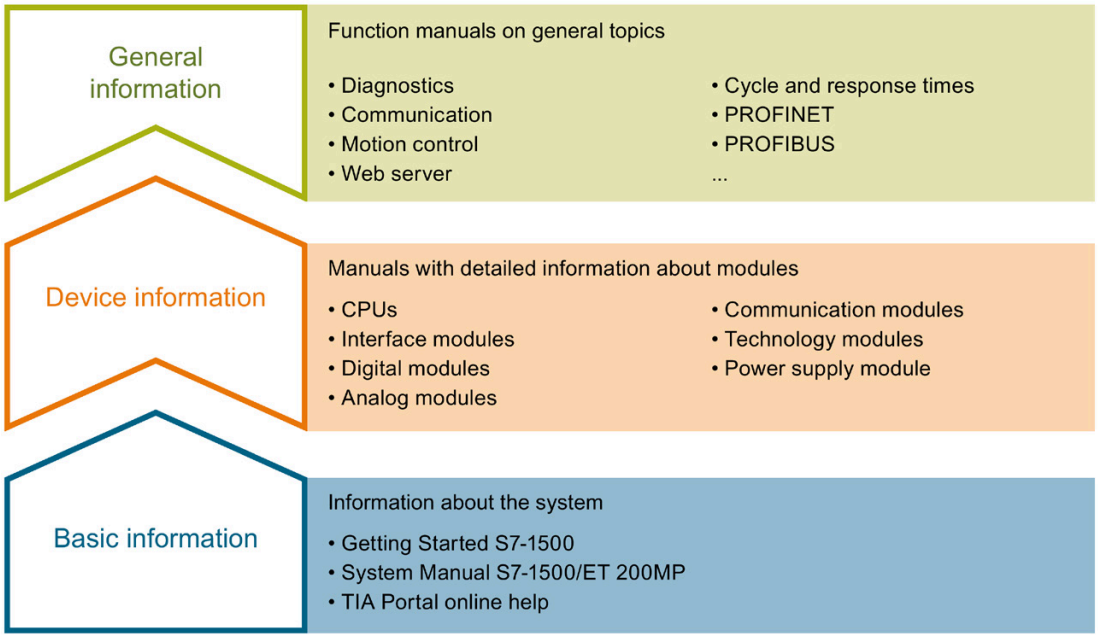

Basic information

The System Manual and Getting Started describe in detail the configuration, installation, wiring and commissioning of the SIMATIC S7-1500 and ET 200MP systems. The STEP 7 online help supports you in the configuration and programming.

Device information

Product manuals contain a compact description of the module-specific information, such as properties, wiring diagrams, characteristics and technical specifications.

General information

The function manuals contain detailed descriptions on general topics regarding the SIMATIC S7-1500 and ET 200MP systems, e.g. diagnostics, communication, motion control, Web server, OPC UA.

You can download the documentation free of charge from the Internet (https://support.industry.siemens.com/cs/ww/en/view/109742691).

Changes and supplements to the manuals are documented in a Product Information.

You can download the product information free of charge from the Internet (https://support.industry.siemens.com/cs/us/en/view/68052815).

Manual Collection S7-1500/ET 200MP

The Manual Collection contains the complete documentation on the SIMATIC S7-1500 automation system and the ET 200MP distributed I/O system gathered together in one file.

You can find the Manual Collection on the Internet (https://support.industry.siemens.com/cs/ww/en/view/86140384).

SIMATIC S7-1500 comparison list for programming languages

The comparison list contains an overview of which instructions and functions you can use for which controller families.

You can find the comparison list on the Internet (https://support.industry.siemens.com/cs/ww/en/view/86630375).

"mySupport"

With "mySupport", your personal workspace, you make the best out of your Industry Online Support.

In "mySupport", you can save filters, favorites and tags, request CAx data and compile your personal library in the Documentation area. In addition, your data is already filled out in support requests and you can get an overview of your current requests at any time.

You must register once to use the full functionality of "mySupport".

You can find "mySupport" on the Internet (https://support.industry.siemens.com/My/ww/en).

"mySupport" - Documentation

In the Documentation area in "mySupport" you can combine entire manuals or only parts of these to your own manual.
You can export the manual as PDF file or in a format that can be edited later.

You can find "mySupport" - Documentation on the Internet (http://support.industry.siemens.com/My/ww/en/documentation).

"mySupport" - CAx data

In the CAx data area in "mySupport", you can access the current product data for your CAx or CAe system.

You configure your own download package with a few clicks.

In doing so you can select:

- Product images, 2D dimension drawings, 3D models, internal circuit diagrams, EPLAN macro files
- Manuals, characteristics, operating manuals, certificates
- Product master data

You can find "mySupport" - CAx data on the Internet (http://support.industry.siemens.com/my/ww/en/CAxOnline).

Application examples

The application examples support you with various tools and examples for solving your automation tasks. Solutions are shown in interplay with multiple components in the system - separated from the focus on individual products.

You will find the application examples on the Internet (https://support.industry.siemens.com/sc/ww/en/sc/2054).

TIA Selection Tool

With the TIA Selection Tool, you can select, configure and order devices for Totally Integrated Automation (TIA).
This tool is the successor of the SIMATIC Selection Tool and combines the known configurators for automation technology into one tool.
With the TIA Selection Tool, you can generate a complete order list from your product selection or product configuration.

You can find the TIA Selection Tool on the Internet (http://w3.siemens.com/mcms/topics/en/simatic/tia-selection-tool).

SIMATIC Automation Tool

You can use the SIMATIC Automation Tool to perform commissioning and maintenance activities simultaneously on various SIMATIC S7 stations as a bulk operation independent of the TIA Portal.

General function overview:

- Network browsing and creation of a table showing the accessible devices in the network.
- Flashing of device LEDs or HMI display to locate a device
- Downloading of addresses (IP, subnet, gateway) to a device
- Downloading the PROFINET name (station name) to a device
- Placing a CPU in RUN or STOP mode
- Setting the time in a CPU to the current time of your PG/PC
- Downloading a new program to a CPU or an HMI device
- Downloading from CPU, downloading to CPU or deleting recipe data from a CPU
- Downloading from CPU or deleting data log data from a CPU
- Backup/restore of data from/to a backup file for CPUs and HMI devices
- Downloading service data from a CPU
- Reading the diagnostics buffer of a CPU
- Performing a CPU memory reset
- Resetting devices to factory settings
- Downloading a firmware update to a device

You can find the SIMATIC Automation Tool on the Internet (https://support.industry.siemens.com/cs/ww/en/view/98161300).

PRONETA

With SIEMENS PRONETA (PROFINET network analysis), you analyze the PROFINET network during commissioning. PRONETA features two core functions:

- The topology overview independently scans PROFINET network and all connected components.
- The IO check is a fast test of the wiring and the module configuration of a system.

You can find SIEMENS PRONETA on the Internet (https://support.industry.siemens.com/cs/ww/en/view/67460624).

SINETPLAN

SINETPLAN, the Siemens Network Planner, supports you in planning automation systems and networks based on PROFINET. The tool facilitates professional and predictive dimensioning of your PROFINET installation as early as in the planning stage. In addition, SINETPLAN supports you during network optimization and helps you to exploit network resources optimally and to plan reserves. This helps to prevent problems in commissioning or failures during productive operation even in advance of a planned operation. This increases the availability of the production plant and helps improve operational safety.

The advantages at a glance

- Network optimization thanks to port-specific calculation of the network load
- Increased production availability thanks to online scan and verification of existing systems
- Transparency before commissioning through importing and simulation of existing STEP 7 projects
- Efficiency through securing existing investments in the long term and optimal exploitation of resources

You can find SINETPLAN on the Internet (https://www.siemens.com/sinetplan).

Product overview

2

2.1 Properties

Order number

6ES7155-5AA00-0AC0

View of the module

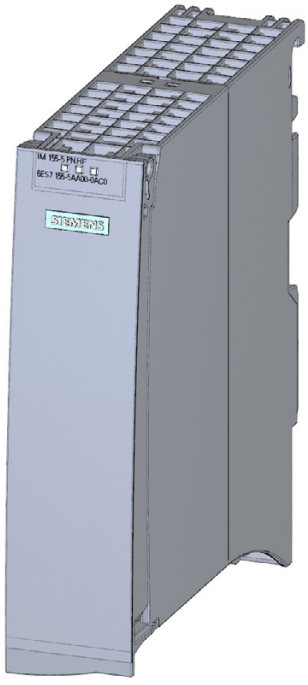

Figure 2-1 View of the IM 155-5 PN HF interface module

Properties

- Technical properties
  - Connects the ET 200MP distributed I/O system with PROFINET IO
  - 24 VDC supply voltage (SELV/PELV)
  - PROFINET IO connection using RJ45 bus connector
  - Pulling and plugging I/O modules on the active backplane bus (multi hot swapping)

    You can find additional information, in the Active backplane bus (https://support.industry.siemens.com/cs/ww/en/view/109769815)Equipment Manual.
- Supported functions (Page 14)

Maximum configuration

- 512 bytes I/O data per station
- The integrated power supply of the interface module feeds 14 W into the backplane bus. Up to 12 I/O modules can be supplied with this. The exact number of operable modules is determined by the power budget (see relevant section in the system manual S7-1500, ET 200MP Automation system (https://support.industry.siemens.com/cs/ww/en/view/59191792)).
- A maximum of one power supply module (PS) upstream from the interface module and two downstream from the interface module is possible.
- If you use a power supply module (PS) upstream from the interface module, the maximum possible configuration is a total of 32 modules (up to 30 modules downstream from the interface module).

Maximum amount of I/O data (PROFINET IO)

Maximum amount of I/O data

The sum of the gross data for all I/O controllers for input and output data must not exceed the following value:

- 4000 bytes

Maximum gross data length per IO controller (for input and output data):

Without system redundancy S2:

- 1020 bytes

With system redundancy S2:

- 2 x 1020 bytes

The actual gross data length for input and output data depends on the number and type of I/O modules used and is calculated as follows:

- Actual gross data length = net data length + number of I/O submodules (without user data, input or output data) + number of I/O modules (input and output data) + 4 bytes for interface module + 1 byte for active backplane bus

The result of the actual gross data length calculation applies to both input and output data.

Maximum gross data length per IO controller (for input and output data):

Without system redundancy S2:

- 512 bytes

With system redundancy S2:

- 2 x 512 bytes

2.2 Functions

2.2.1 PROFINET IO

Introduction

The interface module supports the following PROFINET IO functions:

- Integrated switch with 2 ports
- Supported Ethernet services: ping, arp, SNMP, LLDP
- Port diagnostics
- Deactivating ports
- Isochronous real-time communication (IRT)
- Minimum update time 250 µs
- Prioritized startup
- Device replacement without PG
- Media redundancy (MRP)
- Media redundancy with planned duplication (MRPD)
- Shared Device with up to four IO controllers
- Module-internal Shared Input/Shared Output (MSI/MSO)
- Isochronous mode of process data
- Identification data I&M 0 to 3
- Firmware update via PROFINET IO
- Reset to factory settings via PROFINET IO
- Configuration control (option handling)
- System redundancy on S7-400H
- System redundancy S2
- IO devices changing during operation ("alternative partners")
  - Docking station

Requirements

The table below shows the software requirements for a configuration with the IM 155-5 PN HF interface module:

Table 2- 1 Requirements

PROFINET IO function	Configuration software		
	with GSD file[1]		STEP 7 (TIA Portal) V13 or higher
	STEP 7 V5.5 SP3 or higher	STEP 7 (TIA Portal) V13 or higher	
Real-time communication	X	X	X
Isochronous real-time communication (IRT)	X	X	X
Prioritized startup	X	X	X
Device replacement without PG	X	X	X
Media redundancy (MRP)	X	X	X
Media redundancy with planned duplication (MRPD)	X	X	-
Shared Device • with up to two IO controllers • with up to four IO controllers	 X -	 X[2] X[2]	 - -
Isochronous mode	-	-	X
System redundancy on S7-400H	X	-	-
System redundancy S2	X	-	As of V15.1
IO devices changing during operation ("alternative partners") • Docking station	As of V5.6	As of V15.1	As of V15.1

[1] The usability of the PROFINET IO functions depends on the configuration software (Siemens and/or third party). Below, the usability of the PROFINET IO functions is described for STEP 7 only.

[2] No validity check of Shared Device projects

Isochronous real-time communication

Synchronized transmission method for cyclic exchange of IRT data between PROFINET devices. A reserved bandwidth is available in the send cycle for IRT data. The reserved bandwidth ensures that IRT data can be transferred at reserved synchronized intervals, without being influenced by other network loads (e.g., TCP/IP communication, or additional real-time communication).

A topological configuration is required for IRT.

Note

IO controller as sync master with IRT communication

We recommend operating the IO controller as sync master when configuring IRT communication.

Otherwise, IO devices with IRT and RT configuration could fail as a result of sync master failure.

You can find additional information on configuration of synchronized PROFINET devices in sync domains in the STEP 7 online help and

- As of STEP 7 V12, in the PROFINET with STEP 7 (http://support.automation.siemens.com/WW/view/en/49948856) function manual
- As of STEP 7 V5.5, in the PROFINET System Description (http://support.automation.siemens.com/WW/view/en/19292127) manual

Prioritized startup

Prioritized startup denotes the PROFINET functionality for accelerating the startup of IO devices operated in a PROFINET IO system with RT communication.

The function reduces the time that the correspondingly configured IO devices require to return to the cyclic user data exchange in the following cases:

- After the supply voltage has returned
- After a station has returned
- After activation of IO devices

Note

Dependency of the startup time

The startup time depends on the number and type of modules. You can optimize the startup time by

- Inserting no more than 12 I/O modules
- Inserting no power supply module.

The prioritized startup function with the requirements listed in the note above is not available for IRT communication and media redundancy.

You can find additional information in the STEP 7 online help and

- As of STEP 7 V12, in the PROFINET with STEP 7 (http://support.automation.siemens.com/WW/view/en/49948856) function manual
- As of STEP 7 V5.5, in the PROFINET System Description (http://support.automation.siemens.com/WW/view/en/19292127) manual

Cabling with fixed connection setting

If you set a fixed connection setting of the port in STEP 7, you should also deactivate "Autonegotiation/Autocrossover".

You can find additional information in the STEP 7 online help and

- As of STEP 7 V12, in the PROFINET with STEP 7 (http://support.automation.siemens.com/WW/view/en/49948856) function manual
- As of STEP 7 V5.5, in the PROFINET System Description (http://support.automation.siemens.com/WW/view/en/19292127) manual

Device replacement without PG

It is easy to replace IO devices that support this function:

- The device name does not have to be assigned with the PG.

The replaced IO device is assigned the device name by the IO controller. The IO controller uses the configured topology and the neighbor relationships determined by the IO devices for this purpose. All involved devices must support the LLDP protocol (Link Layer Discovery Protocol). The configured preset topology must match the actual topology.

IO devices that have been used in another configuration must be reset to the factory settings before they can be used again (see system manual S7-1500, ET 200MP Automation system (https://support.industry.siemens.com/cs/ww/en/view/59191792)).

You can find additional information in the STEP 7 online help and

- As of STEP 7 V12, in the PROFINET with STEP 7 (http://support.automation.siemens.com/WW/view/en/49948856) function manual
- As of STEP 7 V5.5, in the PROFINET System Description (http://support.automation.siemens.com/WW/view/en/19292127) manual

Media redundancy (MRP)

Function for safeguarding communication and plant availability. A ring topology ensures that an alternative communication path is made available if a transmission route fails.

You can find additional information in the STEP 7 online help and

- As of STEP 7 V12, in the PROFINET with STEP 7 (http://support.automation.siemens.com/WW/view/en/49948856) function manual
- As of STEP 7 V5.5, in the PROFINET System Description (http://support.automation.siemens.com/WW/view/en/19292127) manual

Media redundancy with planned duplication (MRPD)

If media redundancy is to be achieved in the case of short update times (together with IRT), you must use the MRP extension "Media redundancy with planned duplication (MRPD)".

You can find additional information in the STEP 7 online help and

- As of STEP 7 V12, in the PROFINET with STEP 7 (http://support.automation.siemens.com/WW/view/en/49948856) function manual
- As of STEP 7 V5.5, in the PROFINET System Description (http://support.automation.siemens.com/WW/view/en/19292127) manual

Shared Device

IO device that makes its data available to up to four IO controllers.

The interface module supports Shared Device operation at the submodule level. A prerequisite for using this function is that the I/O modules also support this.

Please note the following if **the Engineering System does not perform a validity check of the Shared Device projects**:

- Make sure that the configurations are consistent. In particular, the modules or submodules may only be assigned to one controller. Multiple assignment will result in an error; the module will only be available in the first controller.
- If you reconfigure Shared Device configurations without the validity check mentioned above, you have to commission the ET 200MP once again. This means that you have to reload the projects of all involved IO controllers to the specific CPU after reconfiguration and, if necessary, switch the interface module POWER OFF/POWER ON.

You can find additional information in the STEP 7 online help and

- As of STEP 7 V12, in the PROFINET with STEP 7 (http://support.automation.siemens.com/WW/view/en/49948856) function manual
- As of STEP 7 V5.5, in the PROFINET System Description (http://support.automation.siemens.com/WW/view/en/19292127) manual

Module-internal Shared Input/Shared Output (MSI/MSO)

The module-internal Shared Input function allows an input module to make its input data available to up to four IO controllers. Each controller has read access to the same channels.

The module-internal Shared Output function allows an output module to make its output data available to up to four IO controllers. One IO controller has write access. Up to three additional IO controllers can have read access to the same channels.

The combination of isochronous mode and Shared Device is not supported.

You can find additional information in the STEP 7 online help and

- As of STEP 7 V12, in the PROFINET with STEP 7 (http://support.automation.siemens.com/WW/view/en/49948856) function manual

Isochronous mode of process data

The process data, transmission cycles via PROFINET IO, and the user program are synchronized to achieve maximum deterministics. The input data and output data of distributed I/O devices in the plant are detected and output simultaneously. The isochronous PROFINET IO cycle forms the clock generator for this.

The combination of isochronous mode and Shared Device is not supported.

You can find additional information in the STEP 7 online help and

- As of STEP 7 V12, in the PROFINET with STEP 7 (http://support.automation.siemens.com/WW/view/en/49948856) function manual

System redundancy S2

An IO device with S2 system redundancy supports redundant ARs.

In a redundant system, an IO device with system redundancy S2 has a redundant AR for each of the two CPUs (IO controllers). If one CPU fails, the IO device with S2 system redundancy remains accessible to the remaining IO controller via the AR.

The interface module supports system redundancy S2 on S7-400H CPUs and on S7-1500R/H CPUs.

You can find additional information in the STEP 7 online help and

- As of STEP 7 V12, in the PROFINET with STEP 7 (http://support.automation.siemens.com/WW/view/en/49948856) function manual

IO devices changing during operation ("alternative partners") - docking station

You can use the PROFINET functionality "IO devices changing during operation" ("alternative partners"), e.g. for tool change for robots. Typical tools include:

- Welding guns
- Positioning tools for manufacturing parts

You can find additional information in the STEP 7 online help and

- As of STEP 7 V12, in the PROFINET with STEP 7 (http://support.automation.siemens.com/WW/view/en/49948856) function manual

2.2.2 Configuration control (option handling)

Properties

Configuration control allows you to prepare your distributed I/O system for future extensions or changes. Configuration control means that you can configure the planned maximum configuration of your distributed I/O system in advance and vary it later in a flexible manner by means of the user program.

Reference

You can find more information

- In chapter Configuration control (option handling) (Page 25)
- On the Internet (http://support.automation.siemens.com/WW/view/en/29430270)
- In the STEP 7 online help.

2.2.3 System redundancy on S7-400H

Interface to H-CPUs with system redundancy

When system redundancy is used, you can connect the IM 155-5 PN HF (6ES7155-5AA00-0AC0) interface module to CPUs 41x-5H PN/DP (version 6.0 or higher) of the S7-400.

These CPUs allow you to operate the interface module as a component of a redundant system.

Requirements for the IM 155-5 PN HF interface module:

- With STEP 7 V5.5 SP3 and higher, the IM 155-5 PN HF is configured as a system redundancy device.
- The connection setting (transmission medium/duplex) must be set to "Full duplex".

Examples of system redundancy can be found in the manual Fault-tolerant systems S7-400H (http://support.automation.siemens.com/WW/view/en/60458386).

Combination of system redundancy and Shared Device

The IM 155-5 PN HF interface module can be connected to up to four IO controllers but only to one H-CPU pair. As a result, a combination of system redundancy and Shared Device operation is not possible when redundancy operation is used exclusively.

However, you can operate some of the I/O modules of the interface module in system redundancy on the H-CPU pair and the other I/O modules with up to two additional IO controllers in Shared Device operation.

Wiring

3

3.1 Pin assignment

24 V DC supply voltage (X80)

Table 3- 1 Terminal assignment 24 V DC supply voltage

View Connector	Signal name [1]		Designation
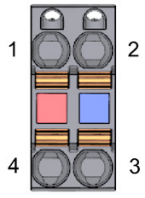	1	1L+	+ 24 V DC of the supply voltage
	2	1M	Ground of the supply voltage
	3	2M	Ground of the supply voltage for loop-through [2]
	4	2L+	+ 24 V DC of the supply voltage for loop-through [2]

[1] 1L+ and 2L+ as well as 1M and 2M are bridged internally

[2] Maximum 10 A permitted

PROFINET IO with RJ45

Table 3- 2 PROFINET IO pin assignment with RJ45

Bottom view IM	Signal name		Designation
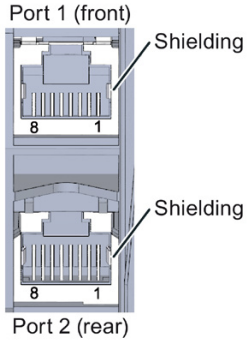	1	TD	Transmit data +
	2	TD_N	Transmit data -
	3	RD	Receive data +
	4	GND	Ground
	5	GND	Ground
	6	RD_N	Receive data -
	7	GND	Ground
	8	GND	Ground

Additional information

You can find additional information on connecting the interface module and on accessories (RJ45 bus connector) in the system manual S7-1500, ET 200MP Automation system (https://support.industry.siemens.com/cs/ww/en/view/59191792).

3.2 Block diagram

Block diagram

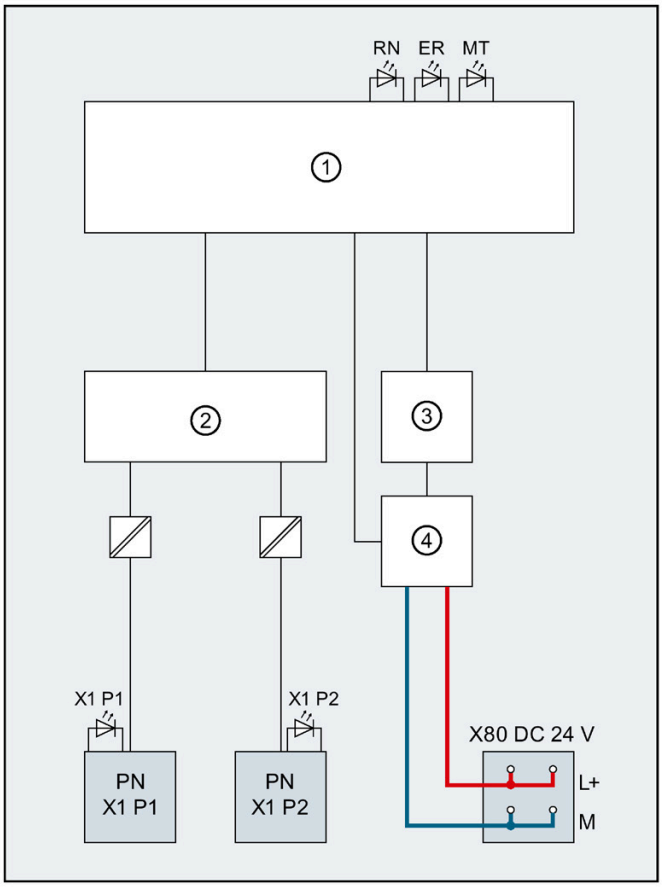

①	Electronics	L+	24 V DC supply voltage
②	PROFINET 2-port switch	M	Ground
③	Backplane bus interface	RN	RUN LED (green)
④	Internal supply voltage	ER	ERROR LED (red)
X80 24 V DC	Infeed of supply voltage	MT	MAINT LED (yellow)
PN X1 P1	PROFINET interface X1 port 1	X1 P1, X1 P2	Link TX/RX LED (green/yellow)
PN X1 P2	PROFINET interface X1 port 2		

Figure 3-1 Block diagram of the IM 155-5 PN HF interface module

Parameter 4

4.1 Parameters

Table 4- 1 Parameters for IM 155-5 PN HF interface module

Parameters	Value range	Default setting	Efficiency range
Connection to supply voltage L+	Connection/No connection	Connection	ET 200MP
Configuration control	Disable/enable	Disable	ET 200MP

4.2 Description of parameters

4.2.1 Connection to supply voltage L+

Parameter "Connection to supply voltage L+"

This parameter is used

- For diagnostics of the ET 200MP:

  If the actual configuration is different from the preset configuration of the interface module supply voltage set with this parameter, the ET 200MP generates a diagnostic alarm.

- To check the power budget for the configuration with STEP 7 V13:

  Depending on how the parameter is set, either the infeed power for the interface module into the backplane bus or the power consumption from the backplane bus is entered into the calculation of the power budget.

The default setting "Connection to supply voltage L+ " means that the front of the interface module is supplied with 24 VDC and feeds power into the backplane bus.

Note

We recommend that you always supply the front of the interface module with 24 VDC because if you then insert a power supply module (PS) **upstream** of the interface module, both the power of the power supply module (PS) and the power of the integrated power supply of the interface module are available for the I/O modules (power addition of PS infeed power + IM infeed power in power segment 1).

In this case, you do not have to change the default setting of the parameter in STEP 7.

The setting "No connection to supply voltage L+" means that the interface module is not supplied with 24 VDC on the front. This can only be the case when a power supply module (PS) is inserted upstream from the interface module and supplies the interface module and the downstream modules. In the case of an interface module without power supply, its power consumption from the backplane bus must be considered as consumer in the power budget and the power segments must be formed accordingly.

Reference

See the section on the power budget and the forming of power segments in the system manual S7-1500, ET 200MP Automation system (https://support.industry.siemens.com/cs/ww/en/view/59191792).

Requirement

In order to generate diagnostics, the IM 155-5 PN HF interface module parameters must have been assigned once.

See also

Diagnostic alarms (Page 42)

4.2.2 Configuration control (option handling)

"Configuration control" parameter

You can use this parameter to enable the configuration control function in the ET 200MP Distributed I/O System.

Note

If you configure the enable, the ET 200MP distributed I/O system requires a control data record 196 from the user program in order for the ET 200MP distributed I/O system to operate the I/O modules.

Reference

You can find more information on the control data record in chapter Configuration control (option handling) (Page 25) and in the STEP 7 online help.

4.3 Configuration control (option handling)

4.3.1 Configuration control and control data record

Operating principle

You can use the configuration control to operate different real configurations (options) with a single configuration of the ET 200MP distributed I/O system. This is made possible by a configurable assignment of configured station modules to actually existing ones.

We distinguish between the following procedures:

- Configuring configuration control without empty slots (option handling)
- Expanding configuration (step-by-step commissioning)

Requirements

Enable the "Configuration control" parameter during configuration for this function. Control takes place with control data record 196 to specify the required configuration.

Configuration control is not ready for operation without control data record:

- All I/O modules of the ET 200MP distributed I/O system fail (substitute value behavior, if configured).
- The interface module continues to exchange data.

Rules: Arrangement of the modules

The following table shows the slot number assignment:

Table 4- 2 Assignment of slot numbers

Slot	Modules	Note
0	Power supply module (optional)	Before the interface module
1	Interface module	Interface module (slot 1) is not an element of the configuration control, but rather controls this
2 - 31	I/O modules / max. 2 power supply modules, depending on the configuration variant	After the interface module

Control data record

A control data record 196 is defined for the configuration control that receives a slot assignment.

Table 4- 3 Control data record

Byte	Element	Code	Explanation
0	Block length	4 + number of slots	Header
1	Block ID	196	
2	Version	3	
3	Version	0	
4	Assignment of configured slot 0	Real slot 0	Control element Describes in each element which real slot in the device is assigned to the configured slot.
5	Assignment of configured slot 2	Real slot 2	
:	:	:	
4 + (max. slot - 1)	Assignment of configured maximum slot	Real maximum slot	

Control element

Each element must include the following information about the slot:

- Assignment of configured slot ⇔ real slot

Table 4- 4 Code of control element

Byte	Bit	Meaning
Assignment of configured slot (e.g. in byte 5)	0 to 7	01111111: Module not available 00000000 up to maximum slot: Real slot

Special features

Special features you have to observe:

- Configuration control is controlled by the interface module (slot 1/submodule 1). To address the available data records:
  - In STEP 7 V5.5: use the diagnostic address of the interface module.

    You can find it in the properties **header** of the interface module in the hardware configuration.
  - In STEP 7 (TIA Portal): use the HW ID of the interface module.

    You can find it in the **PLC tags > Default tag table > System constants**. The default name is "IM155-5PN[Head]". Use the associated "value" for addressing.

  You can find general information on writing a data record, for example, in the STEP 7 online help.
- The control data record is saved retentively in the interface module, so that it is not necessary to write the control data record 196 again at a restart if the configuration is unchanged.
- Slot entries outside the configured preset configuration are ignored.
- The control data record can be shortened. It must contain the entries up to the last slot of the current preset configuration.
- Each real slot may only exist once in the data record.
- A real slot may only be assigned to one configured slot.
- Power supply (PS) modules can also be subject to configuration control. Make sure to observe the information on maximum configuration (Page 11) and the section on the power budget in the system manual S7-1500, ET 200MP Automation system (https://support.industry.siemens.com/cs/ww/en/view/59191792). Particularly for a power supply (PS) module on slot 0, we recommend that you avoid reconfiguration.

Note

Modified configuration

When you write a control data record with modified configuration, there is a station failure followed by a restart of the station with the modified configuration.

Combination of configuration control and Shared Device

The configuration control function in a Shared Device is therefore only for the modules of the IO controller that has subscribed to the interface module.

Modules that are assigned to another IO controller or not assigned at all cannot be specified as real slots (Shared Device on module level). A one-to-one assignment is implicitly assumed for the modules. When using the active backplane bus, a configured empty slot behaves in the same way as a module that is not assigned to an IO controller.

If a module intended for configuration control is subscribed by additional controllers (Shared Device on submodule level), only a one-to-one assignment is permitted for this module. Such a module cannot be deselected by the control data record (0x7F code for this slot in the control data record). This means the combination of "Configuration control" and "Shared Device on submodule level" is possible to a limited extent.

Error messages

The following error messages are returned if an error occurs during writing of the control data record:

Table 4- 5 Error messages

Error code	Meaning
$80B1_H$	Invalid length
$80B5_H$	Configuration control not configured
$80B6_H$	Data record does not originate from the IO controller which subscribed to the interface module
$80B8_H$	Parameter error

A parameter error may be caused by:

- Incorrect block ID in the header (not equal to 196)
- Invalid version identification in the header
- A reserve bit was set
- A configured slot was assigned to an invalid real slot (see section **Combination of configuration control and Shared Device**)
- Several configured slots refer to the same real slot
- With Shared Device on submodule level: Violation of defined restrictions (see section **Combination of configuration control and Shared Device**)

4.3.2 Feedback data record

Feedback data record

The feedback data record provides information on the accuracy of the module assignment and gives you the chance to detect assignment errors in the control data record. The feedback data record is mapped by a separate data record 197.

The feedback data record exists only when configuration control is configured and always refers to the maximum quantity framework **without interface module**, i.e., 31 slots.

The following applies here:

- The power supply (PS) module is inserted in "Slot 0" **before** the interface module
- Starting from "Slot 2", a maximum of 30 modules follow **after** the interface module.

Partial reading of the feedback data record is possible.

Table 4- 6 Feedback data record

Byte	Element	Code	Meaning
0	Block length	66	Header
1	Block ID	197	
2	Version	2	
3		0	
4	Slot 0 status	0/1	Bit 0 = 1: • Configured module is inserted • Slot is marked as not available in the control data record Bit 0 = 0: • Module pulled • Wrong module inserted* Bits 1 to 15: Reserved
5	Reserved	0	
6	Slot 2 status	0/1	
7	Reserved	0	
:	:	:	
64	Slot n status	Maximum slot	
65	Reserved	0	

* Not possible if the slot is marked as not available.

Note

The data in the feedback data record are always mapped for all modules. In a Shared Device configuration it is therefore irrelevant which controller the respective modules are assigned to.

As long as no control data record was sent, a one-to-one module assignment is assumed for the compilation of data record 197 (preset configuration → actual configuration).

Error messages

The following error messages are returned if an error occurs during reading of the feedback data record:

Table 4- 7 Error messages

Error code	Meaning
$80B1_H$	Invalid length
$80B5_H$	Configuration control not configured
$80B8_H$	Parameter error

4.3.3 Configure configuration control without empty slots

Operating principle

The modules actually not required do not exist. The configuration is pushed together to the left in the direction of IM 155-5 PN HF.

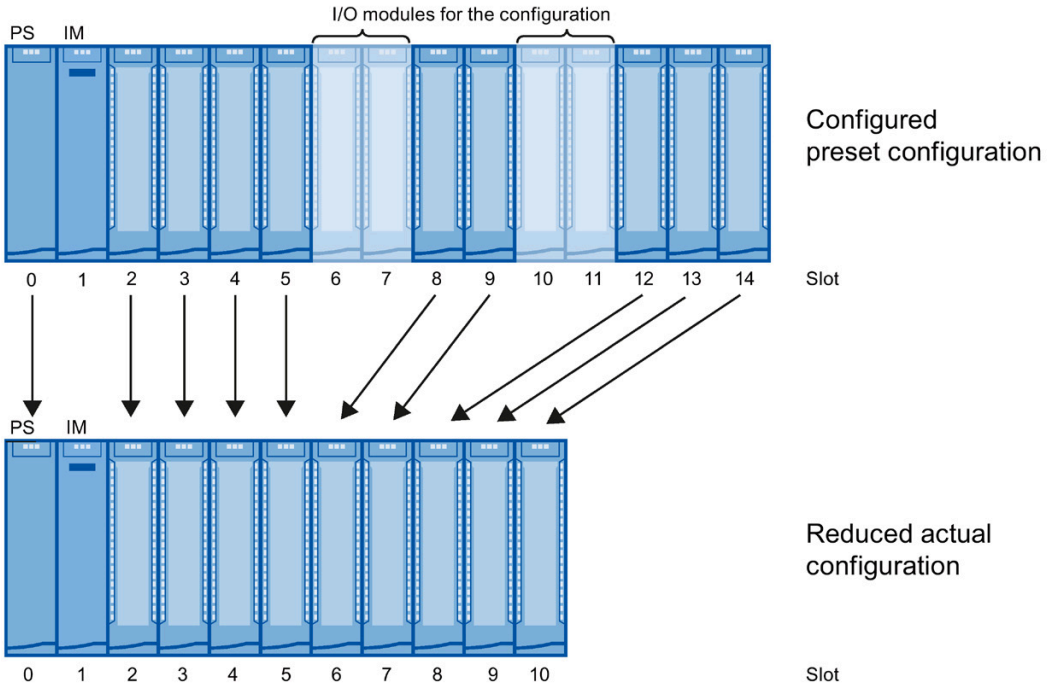

Figure 4-1 Configure configuration control without empty slots

Data record of the example

The following table shows the structure of the control data record for the above example.

Table 4- 8 Data record for example "Configure configuration control without empty slots"

Byte	Element	Code	Explanation
0	Block length	18	Header
1	Block ID	196	
2	Version	3	
3	Version	0	
4	Slot 0	00000000_B	The configured slot 0 is the real slot 0.
5	Slot 2	00000010_B	The configured slot 2 is the real slot 2.
6	Slot 3	00000011_B	The configured slot 3 is the real slot 3.
7	Slot 4	00000100_B	The configured slot 4 is the real slot 4.
8	Slot 5	00000101_B	The configured slot 5 is the real slot 5.
9	Slot 6	01111111_B	The configured slot 6 does not exist.
10	Slot 7	01111111_B	The configured slot 7 does not exist.
11	Slot 8	00000110_B	The configured slot 8 is the real slot 6.
12	Slot 9	00000111_B	The configured slot 9 is the real slot 7.
13	Slot 10	01111111_B	The configured slot 10 does not exist.
14	Slot 11	01111111_B	The configured slot 11 does not exist.
15	Slot 12	00001000_B	The configured slot 12 is the real slot 8.
16	Slot 13	00001001_B	The configured slot 13 is the real slot 9.
17	Slot 14	00001010_B	The configured slot 14 is the real slot 10.

4.3.4 Extending the configuration

Operating principle

You can add modules at the end of the configuration with this procedure. The configured configuration can also be extended from the center based on freely selectable slot assignment.

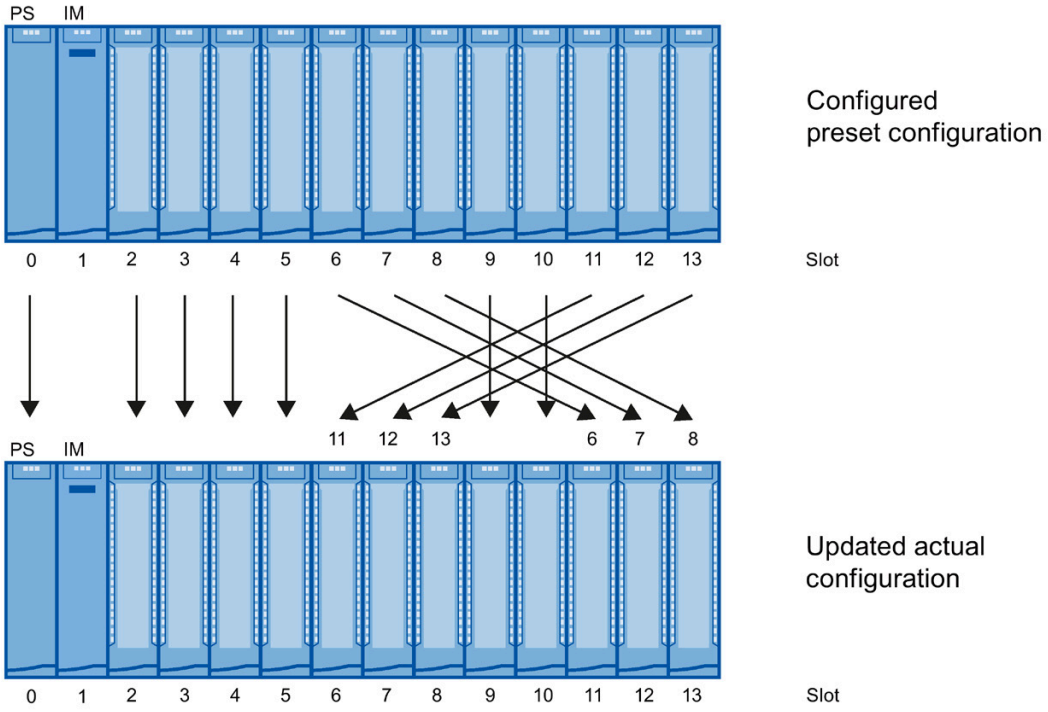

Figure 4-2 Extending the configuration

Data record of the example

The following table shows the structure of the control data record for the above example.

Table 4- 9 Data record for example "Extending the configuration"

Byte	Element	Code	Explanation
0	Block length	17	Header
1	Block ID	196	
2	Version	3	
3	Version	0	
4	Slot 0	00000000_B	The configured slot 0 is the real slot 0.
5	Slot 2	00000010_B	The configured slot 2 is the real slot 2.
6	Slot 3	00000011_B	The configured slot 3 is the real slot 3.
7	Slot 4	00000100_B	The configured slot 4 is the real slot 4.
8	Slot 5	00000101_B	The configured slot 5 is the real slot 5.
9	Slot 6	00001011_B	The configured slot 6 is the real slot 11.
10	Slot 7	00001100_B	The configured slot 7 is the real slot 12.
11	Slot 8	00001101_B	The configured slot 8 is the real slot 13.
12	Slot 9	00001001_B	The configured slot 9 is the real slot 9.
13	Slot 10	00001010_B	The configured slot 10 is the real slot 10.
14	Slot 11	00000110_B	The configured slot 11 is the real slot 6.
15	Slot 12	00000111_B	The configured slot 12 is the real slot 7.
16	Slot 13	00001000_B	The configured slot 13 is the real slot 8.

4.3.5 Combining configurations

Operating principle

You can combine the different procedures with configuration control.

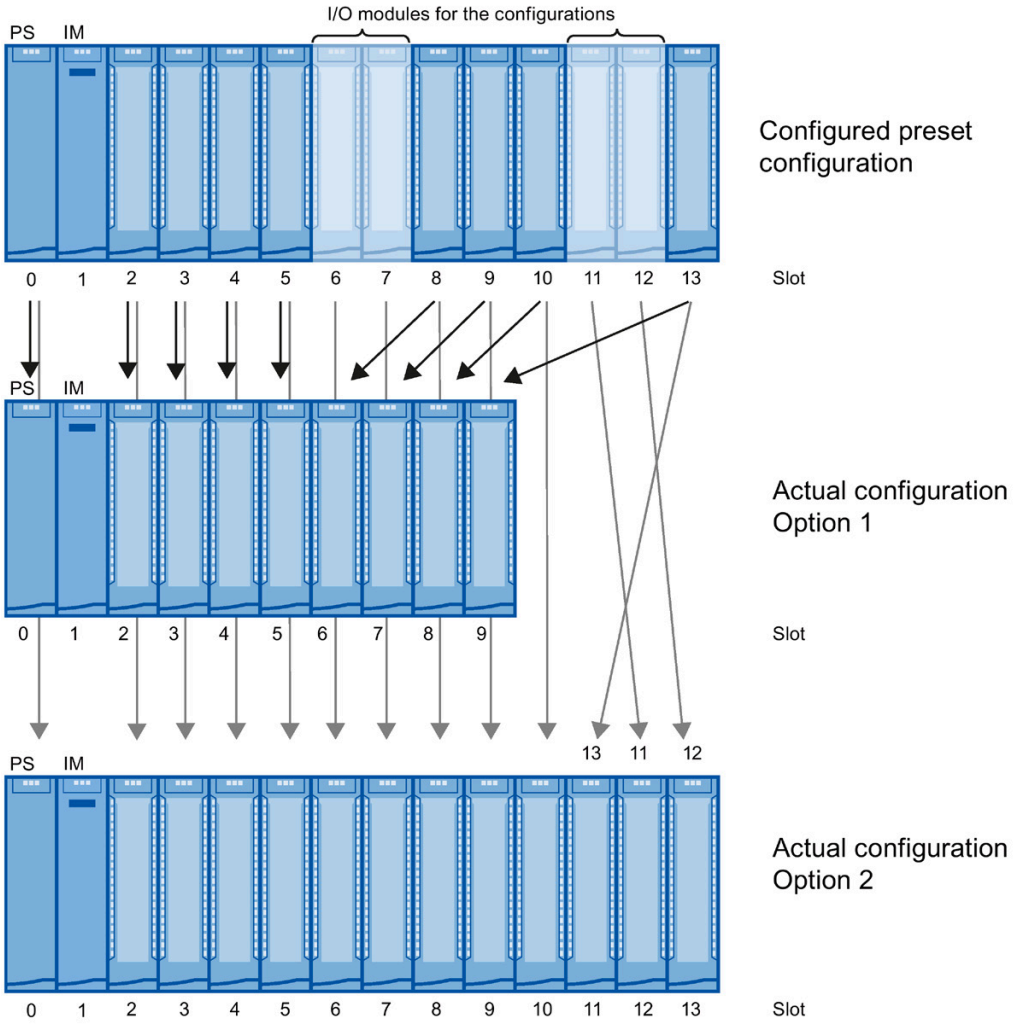

Figure 4-3 Combining configurations

Data record of the example

The following table shows the structure of the control data record for the above example.

Table 4- 10 Data record for example "Combining configurations"

Byte	Element	Code configuration 1	Code configuration 2	Explanation
0	Block length	17		Header
1	Block ID	196		
2	Version	3		
3	Version	0		
4	Slot 0	00000000_B	00000000_B	The configured slot 0 is the real slot 0.
5	Slot 2	00000010_B	00000010_B	The configured slot 2 is the real slot 2.
6	Slot 3	00000011_B	00000011_B	The configured slot 3 is the real slot 3.
7	Slot 4	00000100_B	00000100_B	The configured slot 4 is the real slot 4.
8	Slot 5	00000101_B	00000101_B	The configured slot 5 is the real slot 5.
9	Slot 6	01111111_B	00000110_B	The configured slot 6 does not exist (configuration 1). The configured slot 6 is the real slot 6 (configuration 2).
10	Slot 7	01111111_B	00000111_B	The configured slot 7 does not exist (configuration 1). The configured slot 7 is the real slot 7 (configuration 2).
11	Slot 8	00000110_B	00001000_B	The configured slot 8 is the real slot 6 (configuration 1). The configured slot 8 is the real slot 8 (configuration 2).
12	Slot 9	00000111_B	00001001_B	The configured slot 9 is the real slot 7 (configuration 1). The configured slot 9 is the real slot 9 (configuration 2).
13	Slot 10	00001000_B	00001010_B	The configured slot 10 is the real slot 8 (configuration 1). The configured slot 10 is the real slot 10 (configuration 2).
14	Slot 11	01111111_B	00001100_B	The configured slot 11 does not exist (configuration 1). The configured slot 11 is the real slot 12 (configuration 2).
15	Slot 12	01111111_B	00001101_B	The configured slot 12 does not exist (configuration 1). The configured slot 12 is the real slot 13 (configuration 2).
16	Slot 13	00001001_B	00001011_B	The configured slot 13 is the real slot 9 (configuration 1). The configured slot 13 is the real slot 11 (configuration 2).

Interrupts and diagnostic, error, and system alarms 5

5.1 Status and error displays

Introduction

Diagnostics by means of LED display is an initial tool for error localization. To narrow down the error, you usually evaluate the display of the CPU, the display of the module status in STEP 7 or the diagnostics buffer of the CPU. The buffer contains plain text information on the error that has occurred. For example, you will find the number of the appropriate error OB there.

LED display

The figure below shows the LED display on the IM 155-5 PN HF interface module.

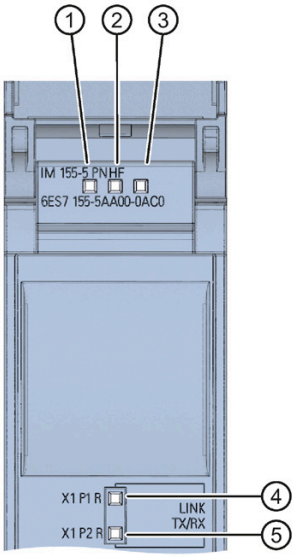

① RUN (green)
② ERROR (red)
③ MAINT (yellow)
④ P1 LINK/TX/RX (green/yellow)
⑤ P2 LINK/TX/RX (green/yellow)

Figure 5-1 LED display on the interface module

Meaning of the LEDs RUN/ ERROR/ MAINT

Table 5- 1 Meaning of the LEDs RUN/ ERROR/ MAINT

LEDs			Meaning	Remedy
RUN	ERROR	MAINT		
Off	Off	Off	Supply voltage not present or too low at interface module	Check the supply voltage or turn it on at the interface module.
On	On	On	Test of LEDs during startup: The three LEDs light up simultaneously for approximately 0.25 s.	---
Flashes	Off	Off	Interface module is deactivated.	Activate the interface module with the configuration software or the user program.
			Interface module is not configured.	Configure the interface module with the configuration software.
			ET 200MP is starting up.	---
			ET 200MP is being reset to factory settings.	
On	Not relevant	Not relevant	ET 200MP is currently exchanging data with the IO controller.	
Not relevant	Flashes	Not relevant	Group error and group error channels	Evaluate the diagnostics and correct the error.
			The set configuration does not correspond to the actual configuration of the ET 200MP.	Check the configuration of the ET 200MP to see whether a module is missing or defective, or whether a non-configured module is inserted.
			Invalid configuration states	See section Invalid configuration states of the ET 200MP on PROFINET IO (Page 50)
			Parameter assignment error in the I/O module	Evaluate the display of the module status in STEP 7 and correct the error in the corresponding I/O module.
Not relevant	Not relevant	On	Maintenance	See section Maintenance events (Page 44)
Flashes	Flashes	Flashes	"Node flash test" is being performed. (The LEDs P1 and P2 of the PROFINET interface are also flashing.)	---
			Hardware or firmware defective. (The LEDs P1 and P2 of the PROFINET interface are not flashing.)	Run a firmware update. If the error persists, contact Service & Support. Replace the interface module.

Meaning of the LEDs P1 LINK/TX/RX, P2 LINK/TX/RX

Table 5- 2 Meaning of the LEDs P1 LINK/TX/RX, P2 LINK/TX/RX

LEDs P1 LINK/TX/RX, P2 LINK/TX/RX	Meaning	Remedy
□ Off	There is no Ethernet connection between the PROFINET interface of your PROFINET device and a communication partner (e.g. IO controller).	Check whether the bus cable to the switch/IO controller is interrupted.
■ On	There is an Ethernet connection between the PROFINET interface of your PROFINET device and a communication partner (e.g., IO controller).	---
■ Flickers	There is active data traffic (sending/receiving) via the Ethernet connection.	---
☼ Flashes	"Node flash test" is being performed. (The LEDs RUN/ ERROR/ MAINT are also flashing.)	---

5.2 Interrupts

Introduction

The I/O device generates interrupts as a reaction to specific error events. Interrupts are evaluated based on the I/O controller used.

Evaluating interrupts with I/O controllers

The ET 200MP distributed I/O system supports the following interrupts:

- Diagnostic interrupts
- Hardware interrupts

In the event of an interrupt, interrupt OBs are automatically called in the CPU of the IO controller.

Information on the cause and class of the error is already available, based on the OB number and start information.

Detailed information on the error event can be obtained in the error OB using the instruction "RALRM" (read additional interrupt information).

System diagnostics

In STEP 7 (TIA Portal) as of V12, innovative system diagnostics is available for devices of the S7-1500 automation system and ET 200MP. Independently of the cyclical user program, alarms are made available on the display of the S7-1500 CPU, to the S7-1500 CPU web server, to the HMI device and in STEP 7.

For additional information on the system diagnostics, refer to the System diagnostics function manual (http://support.automation.siemens.com/WW/view/en/59192926).

5.2.1 Triggering of a diagnostic interrupt

Triggering of a diagnostic interrupt

For an incoming or outgoing event (e.g., wire break on a channel of an I/O module), the module triggers a diagnostic interrupt if this is configured accordingly in STEP 7 (TIA Portal).

The CPU interrupts user program execution and executes the diagnostic interrupt OB. The event that triggered the interrupt is entered in the start information of the diagnostic interrupt OB.

5.2.2 Triggering of a hardware interrupt

Triggering of a hardware interrupt

When a hardware interrupt occurs, the CPU interrupts execution of the user program and processes the hardware interrupt OB. The event that triggered the interrupt is entered in the start information of the hardware interrupt OB.

Note

Diagnostics "Hardware interrupt lost" (from I/O module)

Avoid creating hardware interrupts cyclically.

If the hardware interrupt load is too high, hardware interrupts can get lost depending on the number of I/O modules and the communication load.

5.3 Alarms

5.3.1 Diagnostic alarms

Actions after a diagnostic alarm

There can be more than one diagnostic alarm at the same time. Each diagnostic alarm initiates the following actions:

- The ERROR LED of the interface module flashes.
- Diagnostics are reported as diagnostic interrupts to the CPU of the IO controller and can be read via data records.
- Incoming diagnostic alarms are saved to the diagnostic buffer of the IO controller.
- The diagnostic interrupt OB is called. If the diagnostic interrupt OB is not available, the IO controller goes into STOP mode.

You can find additional information in the STEP 7 online help.

Reading out the diagnostics

Table 5- 3 Reading out the diagnostics with STEP 7

Automation system with IO controller	Application	See...
SIMATIC S7	Diagnostics as plain text in STEP 7 using online view and diagnostic view	Online help of STEP 7 and • As of STEP 7 V12 PROFINET with STEP 7 V12 function manual (http://support.automation.siemens.com/WW/view/en/49948856) • As of STEP 7 V5.5 PROFINET System Description (http://support.automation.siemens.com/WW/view/en/19292127) manual.
	Instruction "RDREC" Read data records from the IO device	
	Instruction "RALRM" Receive interrupts from the IO device	

Additional information on the data records for PROFINET IO

You can find the structure of the diagnostic data records and programming examples in the programming manual From PROFIBUS DP to PROFINET IO (http://support.automation.siemens.com/WW/view/en/19289930) and in the application example on the Internet (http://support.automation.siemens.com/WW/view/en/24000238).

Causes of error and corrective measures

The error causes and corrective measures of the diagnostic alarms are described in the manuals for the I/O modules (http://support.automation.siemens.com/WW/view/en/67296522/133300) in the Interrupts/Diagnostic alarms section.

See also

Channel diagnostics (Page 45)

5.3.2 Maintenance events

Triggering of a maintenance event

The PROFINET interface of the interface module supports the diagnostic concept and maintenance concept in PROFINET according to the IEC 61158-6-10 standard. The goal is to detect and remove potential problems as soon as possible.

For the interface module, maintenance events signal to the user when a network component must be checked or replaced.

The CPU interrupts user program execution and executes the diagnostic interrupt OB. The event that triggered the maintenance event is entered in the start information of the diagnostic interrupt OB.

The interface module signals a maintenance event to the higher-level diagnostic system in the case of the following events:

Table 5- 4 Triggering of a maintenance event

Maintenance alarm	Event	Meaning
Maintenance demanded MAINT LED is lit	Synchronization loss	• No synchronization frame received No synchronization frame was received by the sync master within the timeout period after parameter assignment or during operation. • Successive synchronization frames are located outside permitted limits (jitter)
	Maintenance event of an I/O module	The maintenance event of a power supply module is passed through.

System alarms in STEP 7

The maintenance information is generated in STEP 7 with the following system alarms:

- Maintenance demanded - indicated for each port by a yellow wrench icon in the device view or in the hardware configuration.

You can find additional information in the STEP 7 online help.

5.3.3 Channel diagnostics

Function

Channel diagnostics provides information about channel faults in modules.

Channel faults are mapped as channel diagnostics in IO diagnostic data records.

The "RDREC" instruction is used to read the data record.

Structure of the diagnostic data records

- As of firmware version V4.2: The IM 155-5 PN HF interface module maps channel faults by means of extended channel diagnostics.

  The data records supported by the ET 200MP are based on the standard PROFINET IO - Application Layer Service Definition V2.3.

- Firmware version lower than V4.2: The IM 155-5 PN HF interface module maps channel faults by means of manufacturer-specific diagnostic data records.

  The data records are based on the PROFINET IO standard - Application Layer Service Definition V2.2.

You can purchase the standards from the PROFIBUS User Organization on the Internet (http://www.profibus.com).

Coding of the extended channel diagnostics (as of firmware version V4.2)

With the IM 155-5 PN HF interface module, the following extended channel diagnostics are reported by the interface module in slot 1:

Table 5- 5 Manufacturer-specific diagnostics in the USI

ChannelError-Type	ExtendedChan-nel ErrorType	Associated value (AddValue)	Diagnostics
0x0601	0x0682	Slot	Communication with slot <No.> has failed
0x0602	0x0692	Slot	Permitted number of I/O modules exceeded
0x0602	0x069A	Slot	Interface module in incorrect slot
0x0602	0x069B	Slot	Permitted number of power supply modules exceeded
0x0602	0x0696	0	No U connector detected on an IM port
0x0602	0x0697	0	More than one bus master module (IM/CPU) detected
0x0610	0x06B1	Slot	Power budget error (overload has been detected in at least one power segment)
0x0610	0x06B2	0	Error IM power supply: Power supply not active or power sup-ply active

Structure of the manufacturer-specific diagnostic data records (firmware version lower than V4.2)

The structure of the diagnostic data records is differentiated by the BlockVersion. The following BlockVersion applies to the IM 155-5 PN HF interface modules:

Table 5- 6 Structure of the manufacturer-specific diagnostic data records

IM 155-5 PN HF interface module	BlockVersion
6ES7155-5AA00-0AC0	W#16#0101

Manufacturer-specific diagnostics in the User Structure Identifier (USI)

The following manufacturer-specific diagnostics are signaled in the USI with the IM 155-5 PN HF interface module:

Table 5- 7 Manufacturer-specific diagnostics in the USI

USI no. W#16#...	Diagnostics
0001	Power budget error (overload has been detected in at least one power segment)
0002	Permitted number of power supply modules exceeded
0003	Permitted number of I/O modules exceeded
0004	No U connector detected on an IM port
0005	More than one bus master module (IM/CPU) detected
0006	Communication with slot <No.> has failed
0007	Error IM power supply: Power supply not active or power supply active

Additional information

You can find additional information on maximum configuration, power budget and power segments in the system manual S7-1500, ET 200MP Automation system (https://support.industry.siemens.com/cs/ww/en/view/59191792).

Structure USI = W#16#0001

Table 5- 8 Structure of USI = W#16#0001

Data block name		Contents	Note	Bytes
USI		W#16#0001	Manufacturer-specific diagnostics in case of overload in an ET 200MP power segment	2
Followed by 3 reserved bytes				
	Reserved			1
	Reserved			1
	Reserved			1
The first power segment with overload starts at slot: <No.>				
	Slot	B#16#00 to B#16#1F		1

Structure USI = W#16#0002

Table 5- 9 Structure of the USI = W#16#0002

Data block name		Contents	Note	Bytes
USI		W#16#0002	Manufacturer-specific diagnostics if the permitted number of power supply modules is exceeded	2
Followed by 3 reserved bytes				
	Reserved			1
	Reserved			1
	Reserved			1
The first surplus module is located in slot: <No.>				
	Slot	B#16#00 to B#16#1F		1

USI structure = W#16#0003

Table 5- 10 USI structure = W#16#0003

Data block name		Contents	Note	Bytes
USI		W#16#0003	Manufacturer-specific diagnostics if the permitted number of I/O modules is exceeded	2
Followed by 3 reserved bytes				
	Reserved			1
	Reserved			1
	Reserved			1
The first surplus module is located in slot: <No.>				
	Slot	B#16#20 to B#16#FF		1

USI structure = W#16#0004

Table 5- 11 USI structure = W#16#0004

Data block name		Contents	Note	Bytes
USI		W#16#0004	Manufacturer-specific diagnostics if no U connector is detected on an IM port	2
Followed by 4 reserved bytes				
	Reserved			1
	Reserved			1
	Reserved			1
	Reserved			1

USI structure = W#16#0005

Table 5- 12 USI structure = W#16#0005

Data block name		Contents	Note	Bytes
USI		W#16#0005	Manufacturer-specific diagnostics if there is more than one bus master module (IM/CPU)	2
Followed by 4 reserved bytes				
	Reserved			1
	Reserved			1
	Reserved			1
	Reserved			1

USI structure = W#16#0006

Table 5- 13 USI structure = W#16#0006

Data block name		Contents	Note	Bytes
USI		W#16#0006	Manufacturer-specific diagnostics if the communication with a slot has failed	2
Followed by 3 reserved bytes				
	Reserved			1
	Reserved			1
	Reserved			1
Communication has failed with slot: <No.>				
	Slot	B#16#00 to B#16#1F		1

USI structure = W#16#0007

Table 5- 14 USI structure = W#16#0007

Data block name		Contents	Note	Bytes
USI		W#16#0007	Manufacturer-specific diagnostics if the configuration of the interface module power supply is different from the parameterized configuration	2
Followed by 3 reserved bytes				
	Reserved			1
	Reserved			1
	Reserved			1
Error IM power supply: Power supply <bit 0 in the least significant byte can be 0 or 1>				
	Power supply of the interface module	B#16#00	Power supply of the interface module is not active.	1
		B#16#01	Power supply of the interface module is active.	

5.3.4 Invalid configuration states of the ET 200MP on PROFINET IO

Invalid configuration states

The following invalid configuration states of the ET 200MP lead to a short failure of the ET 200MP IO device or prevent the exchange of user data with the I/O modules.

- More than two power supply modules (PS) inserted to the right of the interface module
- Number of modules exceeds maximum configuration
- Faulty backplane bus (e.g., additional IM present).
- I/O modules of a power segment consume more power than can be provided (overload). In the case of an overload, the interface module provides diagnostic information, cyclically checks the connection to the backplane bus and re-establishes it as soon as possible.

Additional information

You can find additional information on maximum configuration, power budget and power segments in the system manual S7-1500, ET 200MP Automation system (https://support.industry.siemens.com/cs/ww/en/view/59191792).

See also:

Status and error displays (Page 37)

5.3.5 STOP of the IO controller and recovery of the IO device

STOP of the SIMATIC IO controller

Diagnostics received from the IO device while the IO controller is in STOP state do not initiate a call of the corresponding OBs when the IO controller starts up. You have to read the data record $E00C_H$ using the "RDREC" instruction in the startup OB. This record contains all diagnostics for the slots assigned to an IO controller in an IO device.

Recovery of the SIMATIC IO device

If you want to read the diagnostics that occurred in the STOP state of the IO controller, you have to read the $E00C_H$ data record using the "RDREC" instruction. This record contains all diagnostics for the slots assigned to an IO controller in an IO device.

Technical specifications

6

Technical specifications of the IM 155-5 PN HF

The following table shows the technical specifications as of 03/2020. You will find a data sheet including daily updated technical specifications on the Internet (https://support.industry.siemens.com/cs/de/de/pv/6ES7155-5AA00-0AC0/td?dl=en).

Article number	6ES7155-5AA00-0AC0
General information	
Product type designation	IM 155-5 PN HF
HW functional status	FS03
Firmware version	V4.4
• FW update possible	Yes
Vendor identification (VendorID)	002AH
Device identifier (DeviceID)	0X0312
Product function	
• I&M data	Yes; I&M0 to I&M3
• Module swapping during operation (hot swapping)	Yes; In combination with active backplane bus
• Isochronous mode	Yes
Engineering with	
• STEP 7 TIA Portal configurable/integrated as of version	V16 with HSP 308
• STEP 7 configurable/integrated as of version	V5.5 SP3 / -
• PROFINET as of GSD version/GSD revision	V2.3 / -
Configuration control	
via user data	No
via dataset	Yes
Supply voltage	
Rated value (DC)	24 V
permissible range, lower limit (DC)	20.4 V
permissible range, upper limit (DC)	28.8 V
Reverse polarity protection	Yes
Short-circuit protection	Yes
Mains buffering	
• Mains/voltage failure stored energy time	5 ms

Article number	6ES7155-5AA00-0AC0
Input current	
Current consumption (rated value)	0.2 A
Current consumption, max.	1.2 A
Inrush current, max.	9 A
I^2t	0.09 $A^2 \cdot s$
Power	
Infeed power to the backplane bus	14 W
Power available from the backplane bus	2.3 W
Power loss	
Power loss, typ.	4.5 W
Address area	
Address space per module	
• Address space per module, max.	256 byte; per input / output
Address space per station	
• Address space per station, max.	512 byte; per input / output
Hardware configuration	
Integrated power supply	Yes
System power supply can be plugged in to left of IM	Yes
Number of permissible power segments	3
Rack	
• Modules per rack, max.	30; I/O modules
Submodules	
• Number of submodules per station, max.	256
Interfaces	
Number of PROFINET interfaces	1
1. Interface	
Interface types	
• Number of ports	2
• integrated switch	Yes
• RJ 45 (Ethernet)	Yes
Protocols	
• PROFINET IO Device	Yes
• Media redundancy	Yes
Interface types	
RJ 45 (Ethernet)	
• Transmission procedure	PROFINET with 100 Mbit/s full duplex (100BASE-TX)
• 100 Mbps	Yes
• Autonegotiation	Yes

Article number	6ES7155-5AA00-0AC0
• Autocrossing	Yes
Protocols	
PROFINET IO Device	
Services	
– Isochronous mode	Yes
– Open IE communication	Yes
– IRT	Yes
– PROFIenergy	No
– Prioritized startup	Yes
– Shared device	Yes
– Number of IO Controllers with shared device, max.	4
Redundancy mode	
• MRP	Yes
• MRPD	Yes
• PROFINET system redundancy (S2)	Yes
– on S7-1500R/H	Yes
– on S7-400H	Yes; With GSDML file as of STEP 7 V5.5 SP3
• Redundant PROFINET configuration (R1)	No
• H-Sync forwarding	Yes
Open IE communication	
• TCP/IP	Yes
• SNMP	Yes
• LLDP	Yes
Isochronous mode	
Isochronous operation (application synchronized up to terminal)	Yes
Equidistance	Yes
shortest clock pulse	250 µs
max. cycle	4 ms
Interrupts/diagnostics/status information	
Status indicator	Yes
Alarms	Yes
Diagnostics function	Yes
Diagnostics indication LED	
• RUN LED	Yes; green LED
• ERROR LED	Yes; red LED
• MAINT LED	Yes; Yellow LED

Article number	6ES7155-5AA00-0AC0
• Connection display LINK TX/RX	Yes; 2x green-yellow LEDs
Potential separation	
between backplane bus and electronics	No
between PROFINET and all other circuits	Yes; 1 500 V AC
between supply and all other circuits	No
Isolation	
Isolation tested with	707 V DC (type test)
Ambient conditions	
Ambient temperature during operation	
• horizontal installation, min.	0 °C
• horizontal installation, max.	60 °C
• vertical installation, min.	0 °C
• vertical installation, max.	40 °C
Altitude during operation relating to sea level	
• Installation altitude above sea level, max.	5 000 m; Restrictions for installation altitudes > 2 000 m, see manual
Connection method	
ET-Connection	
• via BU/BA Send	No
Dimensions	
Width	35 mm
Height	147 mm
Depth	129 mm
Weights	
Weight, approx.	350 g

Dimension drawing

A

The dimension drawing of the module on the mounting rail, as well as a dimension drawing with open front panel, are provided in the appendix. Always observe the specified dimensions for installation in cabinets, control rooms, etc.

Dimension drawings of the IM 155-5 PN HF interface module

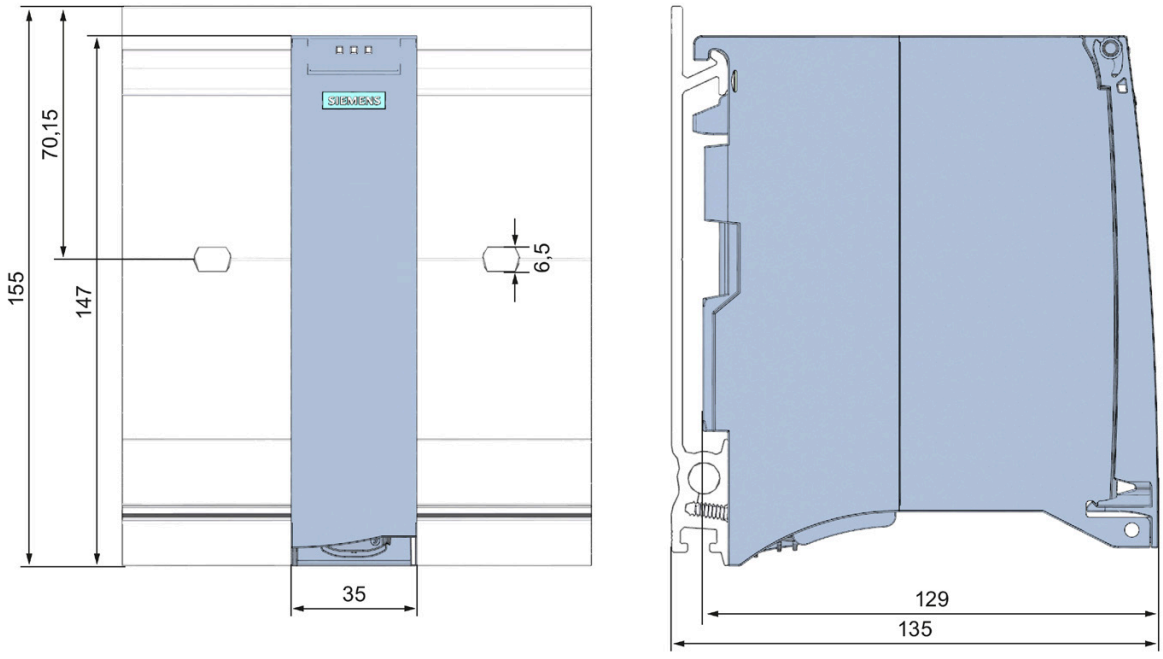

Figure A-1 Dimension drawing of the IM 155-5 PN HF interface module, front and side views

Dimension drawing of the IM 155-5 PN HF interface module, side view with open front cover

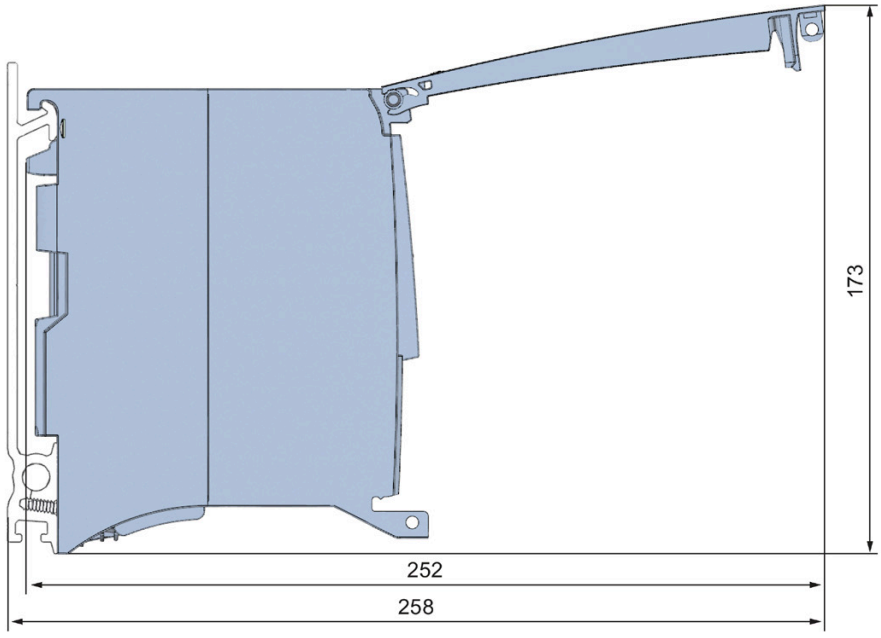

Figure A-2 Dimension drawing of the IM 155-5 PN HF interface module, side view with open front cover

Response times

B

B.1 Response times of the ET 200MP

Introduction

The response time of the IM 155-5 PN HF is made up of:

- The update time configured for the IM as IO device.

plus

- The backplane bus cycle time.

Note

Validity of the formula

The following formula does not apply to Shared Device mode.

Backplane bus cycle time

The backplane bus cycle time is the time the interface module requires to output new output data, read new input data and then copy them to the PROFINET send buffer.

The backplane bus cycle time in µs is made up as follows:

- (Number of output data in bytes + number of output addresses) x 0.0668 + 1.6131 (rounded up)

plus

- (Number of input data in bytes + number of input addresses) x 0.0959 + 2.5901 (rounded up)

plus

- Operating system processing time (500 µs).

Example configuration for the calculation of the backplane bus cycle time

The following are used in the example:

Table B- 1 Example configuration for the calculation of the backplane bus cycle time

I/O module	Output data in bytes	Input data in bytes	Number of output addresses	Number of input addresses
Analog output module AQ 4xU/I ST	8	-	1	-
Analog output module AQ 4xU/I ST with value status	8	1	1	1
Digital output module DQ 32x24VDC/0.5A ST with value status	4	4	1	1
Digital input module DI 32x24VDC HF	-	4	-	1
Analog input module AI 8xU/I/RTD/TC ST	-	16	-	1
Sum	20	25	3	4

Example calculation of the backplane bus cycle time

Backplane bus cycle time in µs:

- (20 + 3) x 0.0668 + 1.6131 = 3.1495 ≈ 4 µs (rounded up)

plus

- (25 + 4) x 0.0959 + 2.5901 = 5.3712 ≈ 6 µs (rounded up)

plus

- Operating system processing time 500 µs

Result of backplane bus cycle time

Backplane bus cycle time = 510 µs

Calculating the response time

It is necessary to differentiate between two cases when calculating the response time of the IM 155-5 PN HF:

- Case 1: The configured update time is greater than/equal to the backplane bus cycle time.

  Then:

  Response time in µs = backplane bus cycle time + configured update time

- Case 2: The configured update time is less than the backplane bus cycle time.

  Then:

  Response time in µs = backplane bus cycle time + (configured update time x (backplane bus cycle time / configured update time)).

  If the division of backplane bus cycle time / configured update time does not return an integer without remainder, an additional configured update time must be added next to the integer in the bracket.

Example calculation for case 1: The configured update time is greater than/equal to the backplane bus cycle time.

- Configured update time is, for example, 750 µs
- Backplane bus cycle time = 510 µs

Result of case 1

Response time of the IM 155-5 PN HF = 750 µs + 510 µs = **1260 µs**

Example calculation for case 2: The configured update time is less than the backplane bus cycle time.

- Configured update time is, for example, 500 µs
- Backplane bus cycle time = 510 µs

Result of case 2

Response time of the IM 155-5 PN HF = 510 µs + (500 µs x (510 µs / 500 µs) + 500 µs) = 510 µs + (500 µs x 1 + 500 µs) = 510 µs + 1000 µs = **1510 µs**

Reference

Additional information about performance measurements is available on the Internet (http://support.automation.siemens.com/WW/view/en/34677186/136000&cspltfrm=0&cssw=0&csbinh=5).

SIEMENS

Manual

SIMATIC

S7-1500/ET 200MP

Interface module
IM 155-5 PN ST (6ES7155-5AA01-0AB0)

Edition 11/2017

support.industry.siemens.com

SIEMENS

SIMATIC

ET 200MP
Interface module IM 155-5 PN ST (6ES7155-5AA01-0AB0)

Manual

Preface

Documentation guide 1

Product overview 2

Wiring 3

Parameter 4

Interrupts and diagnostic, error, and system alarms 5

Technical specifications 6

Dimension drawing A

Response times B

11/2017

A5E03612323-AC

Legal information

Warning notice system

This manual contains notices you have to observe in order to ensure your personal safety, as well as to prevent damage to property. The notices referring to your personal safety are highlighted in the manual by a safety alert symbol, notices referring only to property damage have no safety alert symbol. These notices shown below are graded according to the degree of danger.

⚠ DANGER

indicates that death or severe personal injury **will** result if proper precautions are not taken.

⚠ WARNING

indicates that death or severe personal injury **may** result if proper precautions are not taken.

⚠ CAUTION

indicates that minor personal injury can result if proper precautions are not taken.

NOTICE

indicates that property damage can result if proper precautions are not taken.

If more than one degree of danger is present, the warning notice representing the highest degree of danger will be used. A notice warning of injury to persons with a safety alert symbol may also include a warning relating to property damage.

Qualified Personnel

The product/system described in this documentation may be operated only by **personnel qualified** for the specific task in accordance with the relevant documentation, in particular its warning notices and safety instructions. Qualified personnel are those who, based on their training and experience, are capable of identifying risks and avoiding potential hazards when working with these products/systems.

Proper use of Siemens products

Note the following:

⚠ WARNING

Siemens products may only be used for the applications described in the catalog and in the relevant technical documentation. If products and components from other manufacturers are used, these must be recommended or approved by Siemens. Proper transport, storage, installation, assembly, commissioning, operation and maintenance are required to ensure that the products operate safely and without any problems. The permissible ambient conditions must be complied with. The information in the relevant documentation must be observed.

Trademarks

All names identified by ® are registered trademarks of Siemens AG. The remaining trademarks in this publication may be trademarks whose use by third parties for their own purposes could violate the rights of the owner.

Disclaimer of Liability

We have reviewed the contents of this publication to ensure consistency with the hardware and software described. Since variance cannot be precluded entirely, we cannot guarantee full consistency. However, the information in this publication is reviewed regularly and any necessary corrections are included in subsequent editions.

Siemens AG
Division Digital Factory
Postfach 48 48
90026 NÜRNBERG
GERMANY

A5E03612323-AC
℗ 09/2017 Subject to change

Copyright © Siemens AG 2013 - 2017.
All rights reserved

Preface

Purpose of the documentation

This manual supplements the system manual S7-1500, ET 200MP automation system (https://support.industry.siemens.com/cs/ww/en/view/59191792). Functions that generally relate to the system are described in this manual.

The information provided in this manual and in the system/function manuals support you in commissioning the system.

Conventions

Please also observe notes marked as follows:

Note

A note contains important information on the product, on the handling of the product and on the section of the documentation to which particular attention should be paid.

Security information

Siemens provides products and solutions with industrial security functions that support the secure operation of plants, systems, machines and networks.

In order to protect plants, systems, machines and networks against cyber threats, it is necessary to implement – and continuously maintain – a holistic, state-of-the-art industrial security concept. Siemens' products and solutions constitute one element of such a concept.

Customers are responsible for preventing unauthorized access to their plants, systems, machines and networks. Such systems, machines and components should only be connected to an enterprise network or the internet if and to the extent such a connection is necessary and only when appropriate security measures (e.g. firewalls and/or network segmentation) are in place.

For additional information on industrial security measures that may be implemented, please visit (http://www.siemens.com/industrialsecurity).

Siemens' products and solutions undergo continuous development to make them more secure. Siemens strongly recommends that product updates are applied as soon as they are available and that the latest product versions are used. Use of product versions that are no longer supported, and failure to apply the latest updates may increase customers' exposure to cyber threats.

To stay informed about product updates, subscribe to the Siemens Industrial Security RSS Feed under (http://www.siemens.com/industrialsecurity).

Table of contents

Preface 4

1 Documentation guide 6

2 Product overview 11

2.1 Properties 11

2.2 Functions 13
2.2.1 PROFINET IO 13
2.2.2 Configuration control (option handling) 19

3 Wiring 20

3.1 Terminal assignment 20

3.2 Block diagram 22

4 Parameter 23

4.1 Parameters 23

4.2 Description of parameters 24
4.2.1 Connection to supply voltage L+ 24
4.2.2 Configuration control 25

5 Interrupts and diagnostic, error, and system alarms 26

5.1 Status and error displays 26

5.2 Interrupts 29
5.2.1 Triggering of a diagnostic interrupt 29
5.2.2 Triggering of a hardware interrupt 30

5.3 Alarms 30
5.3.1 Diagnostic alarms 30
5.3.2 Maintenance events 32
5.3.3 Channel diagnostics 33
5.3.4 Invalid configuration states of the ET 200MP on PROFINET IO 38
5.3.5 STOP of the IO controller and recovery of the IO device 38

6 Technical specifications 39

A Dimension drawing 43

B Response times 45

B.1 Response times of the ET 200MP 45

Documentation guide

1

The documentation for the SIMATIC S7-1500 automation system and the SIMATIC ET 200MP distributed I/O system is arranged into three areas.
This arrangement enables you to access the specific content you require.

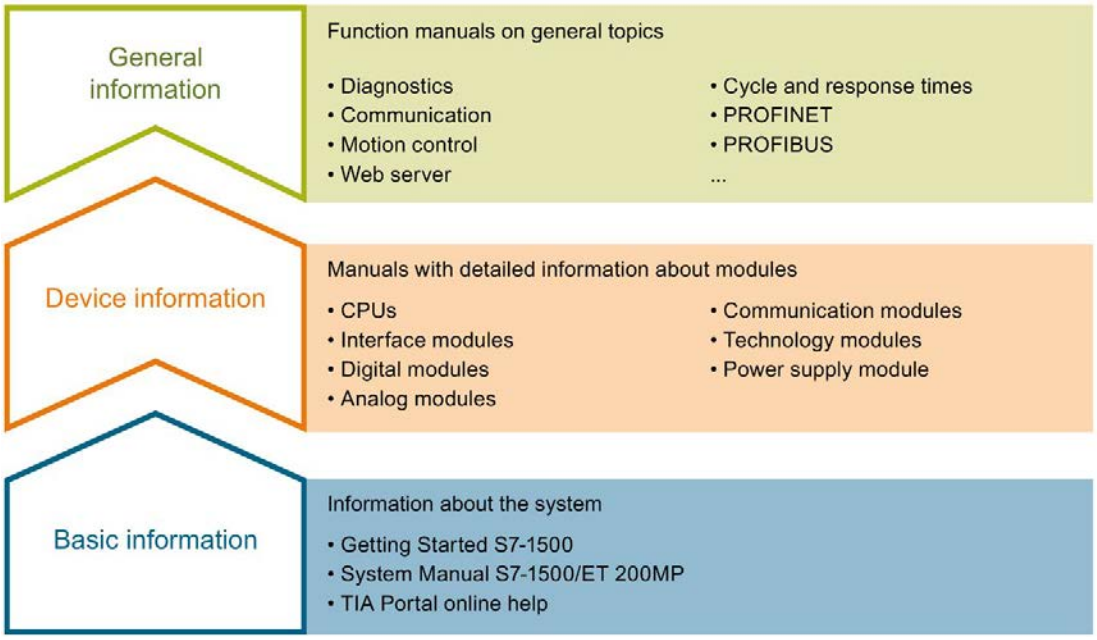

Basic information

The System Manual and Getting Started describe in detail the configuration, installation, wiring and commissioning of the SIMATIC S7-1500 and ET 200MP systems. The STEP 7 online help supports you in the configuration and programming.

Device information

Product manuals contain a compact description of the module-specific information, such as properties, wiring diagrams, characteristics and technical specifications.

General information

The function manuals contain detailed descriptions on general topics regarding the SIMATIC S7-1500 and ET 200MP systems, e.g. diagnostics, communication, motion control, Web server, OPC UA.

You can download the documentation free of charge from the Internet (http://w3.siemens.com/mcms/industrial-automation-systems-simatic/en/manual-overview/Pages/Default.aspx).

Changes and supplements to the manuals are documented in a Product Information.

You can download the product information free of charge from the Internet (https://support.industry.siemens.com/cs/us/en/view/68052815).

Manual Collection S7-1500/ET 200MP

The Manual Collection contains the complete documentation on the SIMATIC S7-1500 automation system and the ET 200MP distributed I/O system gathered together in one file.

You can find the Manual Collection on the Internet (https://support.industry.siemens.com/cs/ww/en/view/86140384).

SIMATIC S7-1500 comparison list for programming languages

The comparison list contains an overview of which instructions and functions you can use for which controller families.

You can find the comparison list on the Internet (https://support.industry.siemens.com/cs/ww/en/view/86630375).

"mySupport"

With "mySupport", your personal workspace, you make the best out of your Industry Online Support.

In "mySupport", you can save filters, favorites and tags, request CAx data and compile your personal library in the Documentation area. In addition, your data is already filled out in support requests and you can get an overview of your current requests at any time.

You must register once to use the full functionality of "mySupport".

You can find "mySupport" on the Internet (https://support.industry.siemens.com/My/ww/en).

"mySupport" - Documentation

In the Documentation area in "mySupport" you can combine entire manuals or only parts of these to your own manual.
You can export the manual as PDF file or in a format that can be edited later.

You can find "mySupport" - Documentation on the Internet (http://support.industry.siemens.com/My/ww/en/documentation).

"mySupport" - CAx data

In the CAx data area in "mySupport", you can access the current product data for your CAx or CAe system.

You configure your own download package with a few clicks.

In doing so you can select:

- Product images, 2D dimension drawings, 3D models, internal circuit diagrams, EPLAN macro files
- Manuals, characteristics, operating manuals, certificates
- Product master data

You can find "mySupport" - CAx data on the Internet (http://support.industry.siemens.com/my/ww/en/CAxOnline).

Application examples

The application examples support you with various tools and examples for solving your automation tasks. Solutions are shown in interplay with multiple components in the system - separated from the focus on individual products.

You will find the application examples on the Internet (https://support.industry.siemens.com/sc/ww/en/sc/2054).

TIA Selection Tool

With the TIA Selection Tool, you can select, configure and order devices for Totally Integrated Automation (TIA).
This tool is the successor of the SIMATIC Selection Tool and combines the known configurators for automation technology into one tool.
With the TIA Selection Tool, you can generate a complete order list from your product selection or product configuration.

You can find the TIA Selection Tool on the Internet (http://w3.siemens.com/mcms/topics/en/simatic/tia-selection-tool).

SIMATIC Automation Tool

You can use the SIMATIC Automation Tool to perform commissioning and maintenance activities simultaneously on various SIMATIC S7 stations as a bulk operation independent of the TIA Portal.

General function overview:

- Network browsing and creation of a table showing the accessible devices in the network.
- Flashing of device LEDs or HMI display to locate a device
- Downloading of addresses (IP, subnet, gateway) to a device
- Downloading the PROFINET name (station name) to a device
- Placing a CPU in RUN or STOP mode
- Setting the time in a CPU to the current time of your PG/PC
- Downloading a new program to a CPU or an HMI device
- Downloading from CPU, downloading to CPU or deleting recipe data from a CPU
- Downloading from CPU or deleting data log data from a CPU
- Backup/restore of data from/to a backup file for CPUs and HMI devices
- Downloading service data from a CPU
- Reading the diagnostics buffer of a CPU
- Performing a CPU memory reset
- Resetting devices to factory settings
- Downloading a firmware update to a device

You can find the SIMATIC Automation Tool on the Internet (https://support.industry.siemens.com/cs/ww/en/view/98161300).

PRONETA

With SIEMENS PRONETA (PROFINET network analysis), you analyze the PROFINET network during commissioning. PRONETA features two core functions:

- The topology overview independently scans PROFINET network and all connected components.
- The IO check is a fast test of the wiring and the module configuration of a system.

You can find SIEMENS PRONETA on the Internet (https://support.industry.siemens.com/cs/ww/en/view/67460624).

SINETPLAN

SINETPLAN, the Siemens Network Planner, supports you in planning automation systems and networks based on PROFINET. The tool facilitates professional and predictive dimensioning of your PROFINET installation as early as in the planning stage. In addition, SINETPLAN supports you during network optimization and helps you to exploit network resources optimally and to plan reserves. This helps to prevent problems in commissioning or failures during productive operation even in advance of a planned operation. This increases the availability of the production plant and helps improve operational safety.

The advantages at a glance

- Network optimization thanks to port-specific calculation of the network load
- Increased production availability thanks to online scan and verification of existing systems
- Transparency before commissioning through importing and simulation of existing STEP 7 projects
- Efficiency through securing existing investments in the long term and optimal exploitation of resources

You can find SINETPLAN on the Internet (https://www.siemens.com/sinetplan).

Product overview

2

2.1 Properties

Article number

6ES7155-5AA01-0AB0

View of the module

Figure 2-1 View of the IM 155-5 PN ST interface module

Properties

- Technical properties
  - Connects the ET 200MP distributed I/O system with PROFINET IO
  - 24V DC power supply (SELV/PELV)
  - PROFINET IO connection using RJ45 bus connector
- Supported functions (Page 13)

Maximum configuration

- 512 bytes I/O data per station
- The integrated power supply of the interface module feeds 14 W into the backplane bus. Up to 12 I/O modules can be supplied this way. The exact number of operable modules is determined by the power budget (see relevant section in the ET 200MP distributed I/O system (https://support.industry.siemens.com/cs/ww/en/view/59191792) system manual).
- A maximum of one power supply module (PS) upstream from the interface module and two downstream from the interface module is possible.
- If you use a power supply module (PS) upstream from the interface module, the maximum possible configuration is a total of 32 modules (up to 30 modules downstream from the interface module).

2.2 Functions

2.2.1 PROFINET IO

Introduction

The interface module supports the following PROFINET IO functions:

- Integrated switch with 2 ports
- Supported Ethernet services: ping, arp, SNMP, LLDP
- Port diagnostics
- Disabling ports
- Isochronous real-time communication
- Minimum update time 250 µs
- Prioritized startup
- Device replacement without PG (LLDP)
- Media redundancy (MRP)
- Shared device with up to two IO controllers
- Module-internal Shared Input/Shared Output (MSI/MSO)
- Isochronous mode of process data
- Identification data I&M 0 to 3
- Firmware update via PROFINET IO
- Reset to factory settings via PROFINET IO
- Configuration control (option handling)
- Module division into submodules

Note

Docking system

You cannot use the IM155-5 PN ST interface module as docking station. The use as a docking unit (function: IO devices changing during operation) in a docking system is supported.

Requirements

The following requirements apply to a configuration with the IM 155-5 PN ST interface module:

Table 2- 1 Requirements

PROFINET IO function	Configuration software		
	with GSD file[1]		STEP 7 (TIA Portal) as of V12
	STEP 7 as of V5.5 SP3	STEP 7 (TIA Portal) as of V12	
Real-time communication	X	X	X
Isochronous real-time communication	X	X	X
Prioritized startup	X	X	X
Device replacement without PG	X	X	X
Media redundancy	X	X	X
Shared device	X	X	X[2]
MSI/MSO	X	X	X[2]
Isochronous mode	-	-	X
Interface module; order number 6ES7155-5AA01-0AB0	X	X	X (STEP 7 V14 or higher with HSP 223)

[1] The usability of the PROFINET IO functions depends on the configuration software (Siemens and/or third party). Below, the usability of the PROFINET IO functions is described for STEP 7 only.

[2] Firmware version V2.0 or higher

Isochronous real-time communication

Synchronized communication protocol for cyclic exchange of IRT data between PROFINET devices. A reserved bandwidth is available in the send cycle for IRT data. The reserved bandwidth ensures that IRT data can be transferred at reserved synchronized intervals, without being influenced by other network loads (e.g., TCP/IP communication, or additional real-time communication).

A topological configuration is required for IRT.

Note

IO controller as sync master with IRT communication

We recommend operating the IO controller as sync master when configuring IRT communication.

Otherwise, IO devices with IRT and RT configuration could fail as a result of sync master failure.

You can find additional information on configuration of synchronized PROFINET devices in sync domains in the STEP 7 online help and

- as of STEP 7 V12, in the PROFINET with STEP 7 V14 (https://support.industry.siemens.com/cs/ww/en/view/49948856) function manual.
- as of STEP 7 V5.5 in the PROFINET System Description (http://support.automation.siemens.com/WW/view/en/19292127) manual.

Prioritized startup

Prioritized startup denotes the PROFINET functionality for accelerating the startup of IO devices operated in a PROFINET IO system with RT communication.

The function reduces the time that the correspondingly configured IO devices require to return to the cyclic user data exchange in the following cases:

- After the supply voltage has returned
- After a station has returned
- After activation of IO devices

Note

Dependency on the startup time

The startup time depends on the number and type of modules. You can optimize the startup time by

- inserting no more than 12 I/O modules
- inserting no power supply module.

The prioritized startup function with the requirements listed in the note above is not available for IRT communication and media redundancy.

You can find additional information in the STEP 7 online help and

- as of STEP 7 V12, in the PROFINET with STEP 7 V14 (https://support.industry.siemens.com/cs/ww/en/view/49948856) function manual.
- as of STEP 7 V5.5 in the PROFINET System Description (http://support.automation.siemens.com/WW/view/en/19292127) manual.

Cabling with fixed connection setting

If you set a fixed connection setting of the port in STEP 7, you should also deactivate "Autonegotiation/Autocrossover".

You can find additional information in the STEP 7 online help and

- as of STEP 7 V12, in the PROFINET with STEP 7 V14 (https://support.industry.siemens.com/cs/ww/en/view/49948856) function manual.
- as of STEP 7 V5.5 in the PROFINET System Description (http://support.automation.siemens.com/WW/view/en/19292127) manual.

Device replacement without PG

It is easy to replace IO devices that support this function:

- The device name does not have to be assigned with the PG.

The replaced IO device is assigned the device name by the IO controller. The IO controller uses the configured topology and the neighboring relationships determined by the IO devices for this purpose. All involved devices must support the LLDP protocol (Link Layer Discovery Protocol). The configured target topology must match the actual topology.

IO devices that have been used in another configuration must be reset to the factory settings before they can be used again (see S7-1500, ET 200MP (http://support.automation.siemens.com/WW/view/en/59191792) system manual).

You can find additional information in the STEP 7 online help and

- as of STEP 7 V12, in the PROFINET with STEP 7 V14 (https://support.industry.siemens.com/cs/ww/en/view/49948856) function manual.
- as of STEP 7 V5.5 in the PROFINET System Description (http://support.automation.siemens.com/WW/view/en/19292127) manual.

Media redundancy

Function for safeguarding communication and system availability. A ring topology ensures that an alternative communication path is made available if a transmission link fails.

You can find additional information in the STEP 7 online help and

- as of STEP 7 V12, in the PROFINET with STEP 7 V14 (https://support.industry.siemens.com/cs/ww/en/view/49948856) function manual.
- as of STEP 7 V5.5 in the PROFINET System Description (http://support.automation.siemens.com/WW/view/en/19292127) manual.

Shared device

IO device that makes its data available to up to two IO controllers.

As of firmware version V2.0, the interface module supports shared device functionality at the submodule level. A prerequisite for using this function is that the I/O modules also support this.

If **the engineering system performs no plausibility check of the shared device projects**, note the following:
If you reconfigure shared device configurations without the above mentioned plausibility check, you must recommission the ET 200MP. This means that you have to reload the projects of all involved IO controllers in the specific CPU after reconfiguration and, if necessary, switch the interface module POWER OFF/POWER ON.

You can find additional information in the STEP 7 online help and

- as of STEP 7 V5.5 in the PROFINET System Description (http://support.automation.siemens.com/WW/view/en/19292127) manual.

Module-internal Shared Input/Shared Output (MSI/MSO)

The Module-internal Shared Input function allows an input module to make its input data available to up to two additional IO controllers. Each controller has read access to the same channels.

The Module-internal Shared Output function allows an output module to make its output data available to up to two IO controllers. One IO controller has write access. A second IO controller can have read access to the same channels.

You can find more information on this topic in the STEP 7 online help and

- As of STEP 7 V14, in the PROFINET with STEP 7 V14 (https://support.industry.siemens.com/cs/ww/en/view/49948856) function manual.

Isochronous mode of process data

The process data, transmission cycles via PROFINET IO, and the user program are synchronized to achieve ultimate deterministic. The input data and output data of distributed I/O devices in the system are detected and output simultaneously. The isochronous PROFINET IO cycle forms the corresponding clock generator.

To ensure problem-free isochronous mode, we recommend that you do not use acyclical services and that you limit diagnostic interrupts to the most crucial ones.

You can find additional information in the STEP 7 online help and

- as of STEP 7 V12, in the PROFINET with STEP 7 V14 (https://support.industry.siemens.com/cs/ww/en/view/49948856) function manual.

Submodules

The IM 155-5 PN ST interface module supports the module division of I/O modules in up to 4 submodules. This allows parts of an I/O module to be separately configured and parameterized.

It is possible to assign each of these submodules to different IO controllers.

The functions:

- Firmware update
- Write I&M data
- Calibration

can only be executed if you have configured submodule 1 during configuration.

2.2.2 Configuration control (option handling)

Properties

Configuration control allows you to prepare your distributed I/O system for future extensions or changes. Configuration control means that you can configure the planned maximum configuration of your distributed I/O system in advance and vary it later in a flexible manner by means of the user program.

Reference

You can find more information

- in the S7-1500, ET 200MP system manual (http://support.automation.siemens.com/WW/view/en/59191792)
- on the Internet (http://support.automation.siemens.com/WW/view/en/29430270)
- in the STEP 7 online help.

Wiring 3

3.1 Terminal assignment

24V DC power supply

The following table shows the signal names and the descriptions of the pin assignment for a 24 V DC supply voltage.

Table 3- 1 Pin assignment 24 V DC supply voltage

View	Signal name[1]	Designation
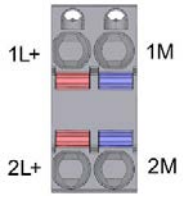	1L+	24 V DC
	2L+	24 V DC (for looping through)[2]
	1M	Ground
	2M	Ground (for looping through)[2]

[1] 1L+ and 2L+ as well as 1M and 2M are bridged internally.

[2] Maximum 10 A permitted.

PROFINET interface X1 with 2-port switch (X1 P1 R and X1 P2 R)

The pin assignment of the ports depends on the setting of the port option "Activate autonegotiation".

- Port P1 X1 R: When autonegotiation is deactivated, the RJ45 socket is allocated as data terminal equipment MDI (normal pin assignment).
- Port P2 X1 R: When autonegotiation is deactivated, the RJ45 socket is allocated as a switch MDI-X (crossed pin assignment).
- The following applies to both ports: When autonegotiation is activated, autocrossing is in effect and the RJ45 socket is allocated either as data terminal equipment MDI or a switch MDI-X.

The figure below shows the location of the PROFINET interface X1 and the connection socket for the 24 V DC supply voltage.

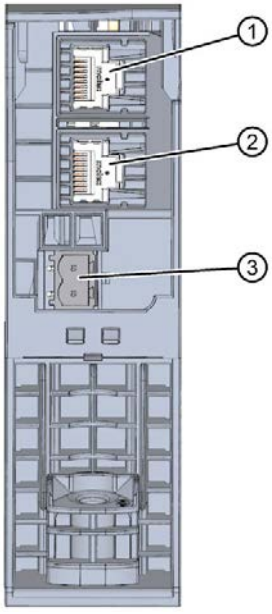

① Port P1 X1 R (front)
② Port P2 X1 R (rear)
③ Connection socket 24 V DC supply voltage

Figure 3-1 Location of the PROFINET ports and the 24 V DC connection socket (view from below)

Note

You need a screwdriver (max. blade width 2.5 mm) to remove the PROFINET plug.

Note

IM 155-5 PN ST interface module (6ES7155-5AA00-0AB0)

For the IM 155-5 PN ST with order number 6ES7155-5AA00-0AB0, note that the ports of the PROFINET interface X1 are offset by 90°.

Additional information

You can find additional information on connecting the interface module and on accessories (RJ45 bus connector) in the ET 200MP distributed I/O system (https://support.industry.siemens.com/cs/ww/en/view/59191792) system manual.

3.2 Block diagram

Block diagram

The following figure shows a block diagram of the IM 155-5 PN ST interface module.

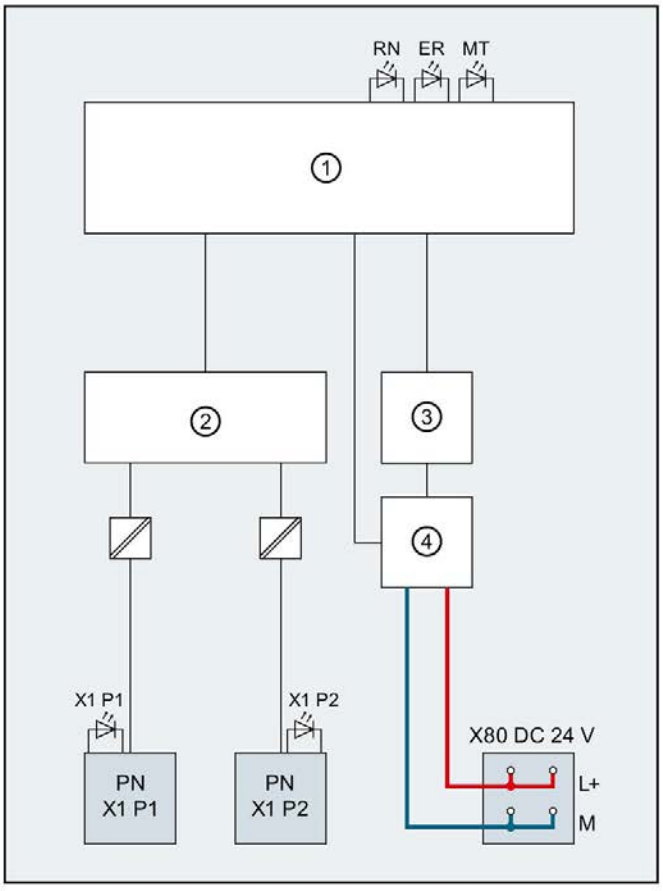

①	Electronics	L+	24 V DC supply voltage
②	PROFINET 2-port switch	M	Ground
③	Backplane bus interface	RN	RUN/STOP LED (yellow/green)
④	Internal supply voltage	ER	ERROR LED (red)
X80 24 V DC	Infeed of supply voltage	MT	MAINT LED (yellow)
PN X1 P1	PROFINET interface X1 Port 1	X1 P1, X1 P2	LED Link TX/RX
PN X1 P2	PROFINET interface X1 Port 2		

Figure 3-2 Block diagram of the IM 155-5 PN ST interface module

Parameter 4

4.1 Parameters

Table 4- 1 Parameters for IM 155-5 PN ST interface module

Parameters	Value range	Default setting	Efficiency range
Connection to supply voltage L+	Connection/No connection	Connection	ET 200MP
Configuration control	Disable/enable	Disable	ET 200MP

4.2 Description of parameters

4.2.1 Connection to supply voltage L+

Parameter "Connection to supply voltage L+"

This parameter is used

- for diagnostics of the ET 200MP:

  If the actual configuration is different from the required configuration of the interface module supply voltage set with this parameter, the ET 200MP generates a diagnostic alarm.

- to check the power budget for the configuration with STEP 7 V12:

  Depending on how the parameter is set, either the infeed power for the interface module into the backplane bus or the power consumption from the backplane bus is entered into the calculation of the power budget.

The default setting "Connection to supply voltage L+ " means that the front of the interface module is supplied with 24 V DC and feeds power into the backplane bus.

Note

We recommend that you always supply the front of the interface module with 24V DC because if you then insert a power supply module (PS) **upstream** of the interface module, both the power of the power supply module (PS) and the power of the integrated power supply of the interface module are available for the I/O modules (power addition of PS infeed power + IM infeed power in power segment 1).

In this case, you do not have to change the default of the parameter in STEP 7.

The setting "No connection to supply voltage L+ means that the interface module is not supplied with 24 V DC on the front. This can only be the case when a power supply module (PS) is inserted upstream from the interface module and the power supply modules (PS) supply the interface module and the downstream modules. In the case of an interface module without power supply, its power consumption from the backplane bus must be considered as consumer in the power budget and the power segments must be formed accordingly.

Reference

See the section on the power budget and the forming of power segments in the ET 200MP distributed I/O system (https://support.industry.siemens.com/cs/ww/en/view/59191792) System Manual.

Requirement

In order to generate a diagnostics, the IM 155-5 PN ST interface module must have been configured once.

See also

Diagnostic alarms (Page 30)

4.2.2 Configuration control

"Configuration control" parameter

You can use this parameter to enable the configuration control function in the ET 200MP distributed I/O system.

Note

If you configure the enable, the ET 200MP distributed I/O system requires a control data record 196 from the user program in order for the ET 200MP distributed I/O system to operate the I/O modules.

Reference

For more information on configuration control, refer to the S7-1500, ET 200MP system manual (https://support.industry.siemens.com/cs/ww/en/view/59191792) and to the STEP 7 online help.

Interrupts and diagnostic, error, and system alarms 5

5.1 Status and error displays

Introduction

Diagnostics by means of LED display is an initial tool for error localization. To further limit the error, you usually evaluate the display of the CPU, the display of the module status in STEP 7 or the diagnostics buffer of the CPU. The buffer contains plain text information on the error that has occurred. For example, you will find the number of the appropriate error OB there.

LED display

The figure below shows the LED display on the IM 155-5 PN ST interface module.

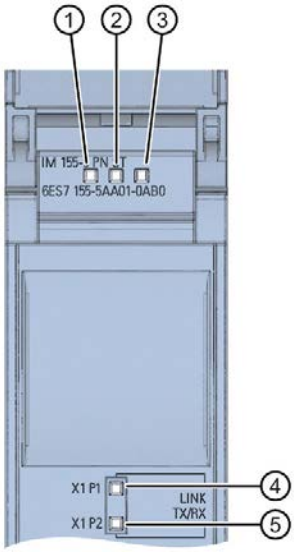

① RUN (green)
② ERROR (red)
③ MAINT (yellow)
④ P1 LINK/TX/RX (green/yellow)
⑤ P2 LINK/TX/RX (green/yellow)

Figure 5-1 LED display on the interface module

Meaning of the LEDs RUN/ ERROR/ MAINT

Table 5- 1 Meaning of the LEDs RUN/ ERROR/ MAINT

LEDs			Meaning	Remedy
RUN	ERROR	MAINT		
Off	Off	Off	Supply voltage not present at interface module or too small	Check the supply voltage or turn it on at the interface module.
On	On	On	Test of LEDs during startup: The three LEDs light up simultaneously for approximately 0.25 s.	---
Flashes	Off	Off	Interface module is deactivated.	Activate the interface module with the configuration software or the user program.
			Interface module is not configured.	Configure the interface module with the configuration software.
			ET 200MP starts up.	---
			ET 200MP is reset to factory settings.	
On	Not relevant	Not relevant	ET 200MP is currently exchanging data with the IO controller.	
Not relevant	Flashes	Not relevant	Group error and group error channels	Evaluate the diagnostics data and correct the error.
			The set configuration does not correspond to the actual configuration of the ET 200MP.	Check the design of the ET 200MP to see whether a module is missing or defective, or whether a non-configured module is inserted.
			Invalid configuration states	See chapter Invalid configuration states of the ET 200MP on PROFINET IO (Page 38)
			Parameter assignment error in the I/O module	Evaluate the display of the module status in STEP 7 and correct the error in the corresponding I/O module.
Not relevant	Not relevant	On	Maintenance	See chapter Maintenance events (Page 32)
Flashes	Flashes	Flashes	"Node flash test" is performed. (The LEDs P1 and P2 of the PROFINET interface are also flashing.)	---
			Hardware or firmware defective. (The LEDs P1 and P2 of the PROFINET interface are not flashing.)	Replace the interface module.

Meaning of the LEDs P1 LINK/TX/RX, P2 LINK/TX/RX

Table 5- 2 Meaning of the LEDs P1 LINK/TX/RX, P2 LINK/TX/RX

LEDs P1 LINK/TX/RX, P2 LINK/TX/RX	Meaning	Remedy
□ Off	There is no Ethernet connection between the PROFINET interface of your PROFINET device and a communication partner (e.g. IO controller).	Check whether the bus cable to the switch/IO controller is interrupted.
■ On	There is an Ethernet connection between the PROFINET interface of your PROFINET device and a communication partner (e.g., IO controller).	---
■ flickers	There is active data traffic (sending/receiving) via the Ethernet connection.	---
☼ Flashes	"Node flash test" is performed. (The LEDs RUN/ERROR/MAINT are also flashing.)	---

5.2 Interrupts

Introduction

The I/O device generates interrupts as a reaction to specific error events. Interrupts are evaluated based on the I/O controller used.

Evaluating interrupts with I/O controllers

The ET 200MP distributed I/O system supports the following interrupts:

- Diagnostic interrupts
- Hardware interrupts

In the event of an interrupt, interrupt OBs are automatically called in the CPU of the IO controller.

Information on the cause and class of the error is already available, based on the OB number and start information.

Detailed information on the error event can be obtained in the error OB using the instruction "RALRM" (read additional interrupt information).

System diagnostics

In STEP 7 (TIA Portal) as of V12, innovative system diagnostics is available for devices of the S7-1500 automation system and ET 200MP. Independently of the cyclical user program, alarms are made available on the display of the S7-1500 CPU, to the S7-1500 CPU web server, to the HMI device and in STEP 7.

For additional information on the system diagnostics, refer to the System Diagnostics function manual. (https://support.industry.siemens.com/cs/ww/en/view/59192926).

5.2.1 Triggering of a diagnostic interrupt

Triggering of a diagnostic interrupt

For an incoming or outgoing event (e.g., wire break on a channel of an I/O module), the module triggers a diagnostic interrupt if this is configured accordingly in STEP 7 (TIA Portal).

The CPU interrupts user program execution and executes the diagnostic interrupt OB. The event that triggered the interrupt is entered in the start information of the diagnostic interrupt OB.

5.2.2 Triggering of a hardware interrupt

Triggering of a hardware interrupt

When a hardware interrupt occurs, the CPU interrupts execution of the user program and processes the hardware interrupt OB. The event that triggered the interrupt is entered in the start information of the hardware interrupt OB.

Note

Diagnostics "Hardware interrupt lost" (from I/O module)

Avoid creating hardware interrupts cyclically.

If the hardware interrupt load is too high, hardware interrupts can get lost depending on the number of I/O modules and the communication load.

5.3 Alarms

5.3.1 Diagnostic alarms

Actions after a diagnostic alarm

There can be more than one diagnostic alarm at the same time. Actions initiated by diagnostic alarms:

- The ERROR LED of the interface module flashes.
- Diagnostic data is reported as diagnostic interrupts to the CPU of the IO controller and can be read via data records.
- Incoming diagnostic alarms are saved to the diagnostic buffer of the IO controller.
- The diagnostic interrupt OB is called. If the diagnostic interrupt OB is not available, the IO controller goes into STOP mode.

You can find additional information in the STEP 7 online help.

Reading out the diagnostic data

Table 5- 3 Reading out the diagnostic data with STEP 7

Automation system with IO controller	Application	See...
SIMATIC S7	Diagnostic data as plain text in STEP 7 using online view and diagnostic view	Online help of STEP 7 and • as of STEP 7 V12 PROFINET with STEP 7 V12 function manual (http://support.automation.siemens.com/WW/view/en/49948856) • as of STEP 7 V5.5 PROFINET System Description (https://support.industry.siemens.com/cs/ww/en/view/19292127) manual.
	Instruction "RDREC" Read data records from the IO device	
	Instruction "RALRM" Receive interrupts from the IO device	

Additional information on the data records for PROFINET IO

You can find the structure of the diagnostic data records and programming examples in the programming manual From PROFIBUS DP to PROFINET IO (https://support.industry.siemens.com/cs/ww/en/view/19289930) and in the application example on the Internet (https://support.industry.siemens.com/cs/ww/en/view/24000238).

Causes of error and troubleshooting

The causes of error and troubleshooting of the diagnostic alarms are described in the device manuals of the I/O modules in the section Interrupts/Diagnostic alarms.

See also

Channel diagnostics (Page 33)

5.3.2 Maintenance events

Triggering of a maintenance event

The PROFINET interface of the interface module supports the diagnostic concept and maintenance concept in PROFINET according to the IEC 61158-6-10 standard. The goal is to detect and remove potential problems as soon as possible.

For the interface module, maintenance events signal to the user when a network component must be checked or replaced.

The CPU interrupts user program execution and executes the diagnostic interrupt OB. The event that triggered the maintenance event is entered in the start information of the diagnostic interrupt OB.

The interface module signals a maintenance event to the higher-level diagnostic system in case of the following events:

Table 5- 4 Triggering of a maintenance event

Maintenance alarm	Event	Meaning
Maintenance demanded MAINT LED is lit	Synchronization loss	• No synchronization frame received No synchronization frame was received by the sync master within the timeout period after parameter assignment or during operation. • Successive synchronization frames are located outside permitted limits (jitter)
	Maintenance event of an I/O module	The maintenance event of a power supply module is passed through.

System alarms in STEP 7

The maintenance information is generated in STEP 7 with the following system alarms:

- Maintenance demanded - indicated for each port by a yellow wrench icon in the device view or in the hardware configuration.

You can find additional information in the STEP 7 online help.

5.3.3 Channel diagnostics

Function

Channel diagnostics provides information about channel faults in modules.

Channel faults are mapped as channel diagnostic data in IO diagnostic data records.

The "RDREC" instruction is used to read the data record.

Structure of the diagnostic data records

- Firmware version V4.0 or higher: The IM 155-5 PN ST interface module maps channel faults by means of extended channel diagnostics.

  The data records supported by the ET 200MP are based on the standard PROFINET IO - Application Layer Service Definition V2.3.

- Firmware version lower than V4.0: The IM 155-5 PN ST interface module maps channel faults by means of manufacturer-specific diagnostic data records.

  The data records are based on the PROFINET IO standard - Application Layer Service Definition V2.2.

You can purchase the standards from the PROFIBUS User Organization on the Internet (http://www.profibus.com).

Coding of the extended channel diagnostics (as of firmware version V4.0)

With the IM 155-5 PN ST interface module, the following extended channel diagnostics are reported by the Interface module in slot 1:

Table 5- 5 Manufacturer-specific diagnostics in the USI

ChannelError-Type	ExtendedChan-nel ErrorType	Associated value (AddValue)	Diagnostics
0x0601	0x0682	Slot	Communication with slot <No.> has failed
0x0602	0x0692	Slot	Permitted number of I/O modules exceeded
0x0602	0x069B	Slot	Permitted number of power supply modules exceeded
0x0602	0x0696	0	No U connector detected on an IM port
0x0602	0x0697	0	More than one bus master module (IM/CPU) detected
0x0610	0x06B1	Slot	Power budget error (overload has been detected in at least one power segment)
0x0610	0x06B2	0	Error IM power supply: Power supply not active or power sup-ply active

Structure of the manufacturer-specific diagnostic data records (firmware version lower than V4.0)

The structure of the diagnostic data records is differentiated by the BlockVersion. The following BlockVersion applies to the IM 155-5 PN ST interface modules:

Table 5- 6 Structure of the manufacturer-specific diagnostic data records

IM 155-5 PN ST interface module	BlockVersion
6ES7155-5AA00-0AB0	W#16#0101

Manufacturer-specific diagnostics in the User Structure Identifier (USI)

The following manufacturer-specific diagnostic data is signaled in the USI with the IM 155-5 PN ST interface module:

Table 5- 7 Manufacturer-specific diagnostics in the USI

USI no. W#16#...	Diagnostics
0001	Power budget error (overload has been detected in at least one power segment)
0002	Permitted number of power supply modules exceeded
0003	Permitted number of I/O modules exceeded
0004	No U connector detected on an IM port
0005	More than one bus master module (IM/CPU) detected
0006	Communication with slot <No.> has failed
0007	Error IM power supply: Power supply not active or power supply active

Structure USI = W#16#0001

Table 5- 8 Structure of USI = W#16#0001

Data block name		Contents	Note	Bytes
USI		W#16#0001	Manufacturer-specific diagnostic data in case of overload in an ET 200MP power segment	2
The first power segment with overload starts at slot: <No.>				
	Slot	B#16#00 to B#16#1F		1
Followed by 3 reserved bytes				
	Reserved			1
	Reserved			1
	Reserved			1

Structure USI = W#16#0002

Table 5- 9 Structure of the USI = W#16#0002

Data block name		Contents	Note	Bytes
USI		W#16#0002	Manufacturer-specific diagnostic data if the permitted number of power supply modules is exceeded	2
The first surplus module is located in slot: <No.>				
	Slot	B#16#00 to B#16#1F		1
Followed by 3 reserved bytes				
	Reserved			1
	Reserved			1
	Reserved			1

USI structure = W#16#0003

Table 5- 10 USI structure = W#16#0003

Data block name		Contents	Note	Bytes
USI		W#16#0003	Manufacturer-specific diagnostic data if the permitted number of I/O modules is exceeded	2
The first surplus module is located in slot: <No.>				
	Slot	B#16#20 to B#16#FF		1
Followed by 3 reserved bytes				
	Reserved			1
	Reserved			1
	Reserved			1

USI structure = W#16#0004

Table 5- 11 USI structure = W#16#0004

Data block name		Contents	Note	Bytes
USI		W#16#0004	Manufacturer-specific diagnostic data if no U connector is detected on an IM port	2
Followed by 4 reserved bytes				
	Reserved			1
	Reserved			1
	Reserved			1
	Reserved			1

USI structure = W#16#0005

Table 5- 12 USI structure = W#16#0005

Data block name		Contents	Note	Bytes
USI		W#16#0005	Manufacturer-specific diagnostic data if there is more than one bus master module (IM/CPU)	2
Followed by 4 reserved bytes				
	Reserved			1
	Reserved			1
	Reserved			1
	Reserved			1

USI structure = W#16#0006

Table 5- 13 USI structure = W#16#0006

Data block name		Contents	Note	Bytes
USI		W#16#0006	Manufacturer-specific diagnostic data if the communication with a slot has failed	2
Communication has failed with slot: <No.>				
	Slot	B#16#00 to B#16#1F		1
Followed by 3 reserved bytes				
	Reserved			1
	Reserved			1
	Reserved			1

USI structure = W#16#0007

Table 5- 14 USI structure = W#16#0007

Data block name		Contents	Note	Bytes
USI		W#16#0007	Manufacturer-specific diagnostic data if the configuration of the interface module power supply is different from the parameterized configuration	2
Error IM power supply: Power supply <bit 0 in the least significant byte can be 0 or 1>				
	Power supply of the interface module	B#16#00	Power supply of the interface module is not active.	1
		B#16#01	Power supply of the interface module is active.	
Followed by 3 reserved bytes				
	Reserved			1
	Reserved			1
	Reserved			1

Additional information

You can find additional information on maximum configuration, power budget and power segments in the ET 200MP Distributed I/O System (https://support.industry.siemens.com/cs/ww/en/view/59191792) system manual.

5.3.4 Invalid configuration states of the ET 200MP on PROFINET IO

Invalid configuration states

The following invalid configuration states of the ET 200MP lead to a short failure of the ET 200MP IO device or prevent the exchange of user data with the I/O modules.

- More than two power supply modules (PS) inserted to the right of the interface module
- Number of modules exceeds maximum configuration
- Faulty backplane bus (e.g., additional IM present).
- I/O modules of a power segment consume more power than can be provided (overload). In the case of an overload, the interface module provides diagnostic information, cyclically checks the connection to the backplane bus and re-establishes it as soon as possible.

Additional information

You can find additional information on maximum configuration, power budget and power segments in the ET 200MP distributed I/O system (https://support.industry.siemens.com/cs/ww/en/view/59191792) System Manual.

See also:

Status and error displays (Page 26)

5.3.5 STOP of the IO controller and recovery of the IO device

STOP of the SIMATIC IO controller

Diagnostic data received from the IO device while the IO controller is in STOP state does not initiate a call of the corresponding OBs when the IO controller goes into RUN. You have to read the data record $E00C_H$ using the "RDREC" in the startup OB. This record contains all diagnostic data for the slots assigned to an IO controller in an IO device.

Recovery of the SIMATIC IO device

If you want to read the diagnostic data in the STOP state of the IO controller, you have to read the $E00C_H$ data record using the "RDREC" instruction. This record contains all diagnostic data for the slots assigned to an IO controller in an IO device.

Technical specifications

6

Technical specifications of the IM 155-5 PN ST

Article number	6ES7155-5AA01-0AB0
General information	
Product type designation	IM 155-5 PN ST
HW functional status	FS01
Firmware version	V4.1.0
Vendor identification (VendorID)	0x002A
Device identifier (DeviceID)	0X0312
Product function	
• I&M data	Yes; I&M0 to I&M3
Engineering with	
• STEP 7 TIA Portal configurable/integrated as of version	V14 or higher with HSP 0223 / integrated with V15 or higher
• STEP 7 configurable/integrated as of version	GSDML V2.32
• PROFINET as of GSD version/GSD revision	V2.3 / -
Configuration control	
via user data	No
via dataset	Yes
Supply voltage	
Type of supply voltage	DC
Rated value (DC)	24 V
permissible range, lower limit (DC)	20.4 V
permissible range, upper limit (DC)	28.8 V
Reverse polarity protection	Yes
Short-circuit protection	Yes
Mains buffering	
• Mains/voltage failure stored energy time	10 ms
Input current	
Current consumption (rated value)	0.2 A
Current consumption, max.	1.2 A
Inrush current, max.	9 A
I^2t	0.09 $A^2 \cdot s$

Article number	6ES7155-5AA01-0AB0
Power	
Infeed power to the backplane bus	14 W
Power available from the backplane bus	2.3 W
Power loss	
Power loss, typ.	4.5 W
Address area	
Address space per module	
• Address space per module, max.	256 byte; per input / output
Address space per station	
• Address space per station, max.	512 byte; per input / output
Hardware configuration	
Integrated power supply	Yes
System power supply can be plugged in to left of IM	Yes
Number of permissible power segments	3
Rack	
• Modules per rack, max.	30; I/O modules
Interfaces	
Number of PROFINET interfaces	1
1. Interface	
Interface types	
• Number of ports	2
• integrated switch	Yes
• RJ 45 (Ethernet)	Yes
Functionality	
• PROFINET IO Device	Yes
• Media redundancy	Yes; PROFINET MRP
Interface types	
RJ 45 (Ethernet)	
• Transmission procedure	PROFINET with 100 Mbit/s full duplex (100BASE-TX)
• 100 Mbps	Yes
• Autonegotiation	Yes
• Autocrossing	Yes

Article number	6ES7155-5AA01-0AB0
PROFINET IO Device	
Services	
– Isochronous mode	Yes
– IRT	Yes
– MRP	Yes
– MRPD	No
– PROFINET system redundancy	No
– PROFIenergy	No
– Prioritized startup	Yes
– Shared device	Yes
– Number of IO Controllers with shared device, max.	2
Open IE communication	
• TCP/IP	Yes
• SNMP	Yes
• LLDP	Yes
Isochronous mode	
Isochronous operation (application synchronized up to terminal)	Yes
Equidistance	Yes
shortest clock pulse	250 µs
max. cycle	4 ms
Interrupts/diagnostics/status information	
Status indicator	Yes
Alarms	Yes
Diagnostic functions	Yes
Diagnostics indication LED	
• RUN LED	Yes; Green LED
• ERROR LED	Yes; Red LED
• MAINT LED	Yes; yellow LED
• Connection display LINK TX/RX	Yes; 2x green-yellow LEDs
Potential separation	
between backplane bus and electronics	No
between PROFINET and all other circuits	Yes
between supply and all other circuits	No
Isolation	
Isolation tested with	707 V DC (type test)

Article number	6ES7155-5AA01-0AB0
Ambient conditions	
Ambient temperature during operation	
• horizontal installation, min.	0 °C
• horizontal installation, max.	60 °C
• vertical installation, min.	0 °C
• vertical installation, max.	40 °C
Connection method	
ET-Connection	
• via BU/BA Send	No
Dimensions	
Width	35 mm
Height	147 mm
Depth	129 mm

Dimension drawing

A

The dimensional drawing of the module on the mounting rail, as well as a dimensional drawing with open front panel, are provided in the appendix. Always observe the specified dimensions for installation in cabinets, control rooms, etc.

Dimensional drawings of the IM 155-5 PN ST interface module

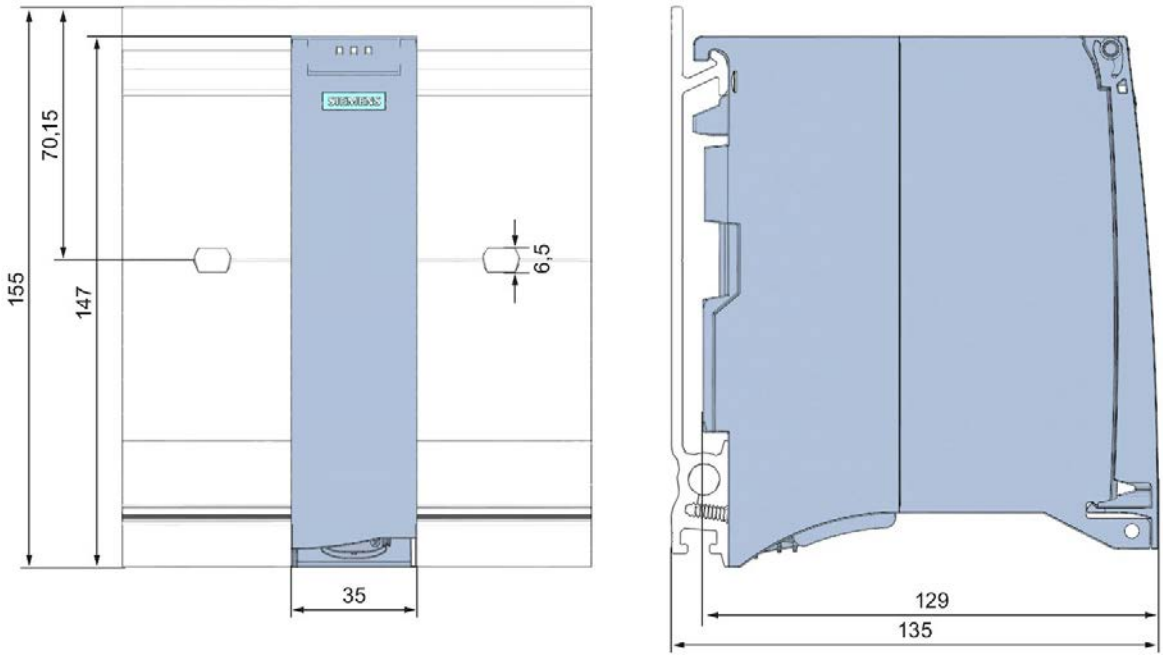

Figure A-1 Dimensional drawing of the IM 155-5 PN ST interface module, front and side views

Dimensional drawing of the IM 155-5 PN ST interface module, side view with open front cover

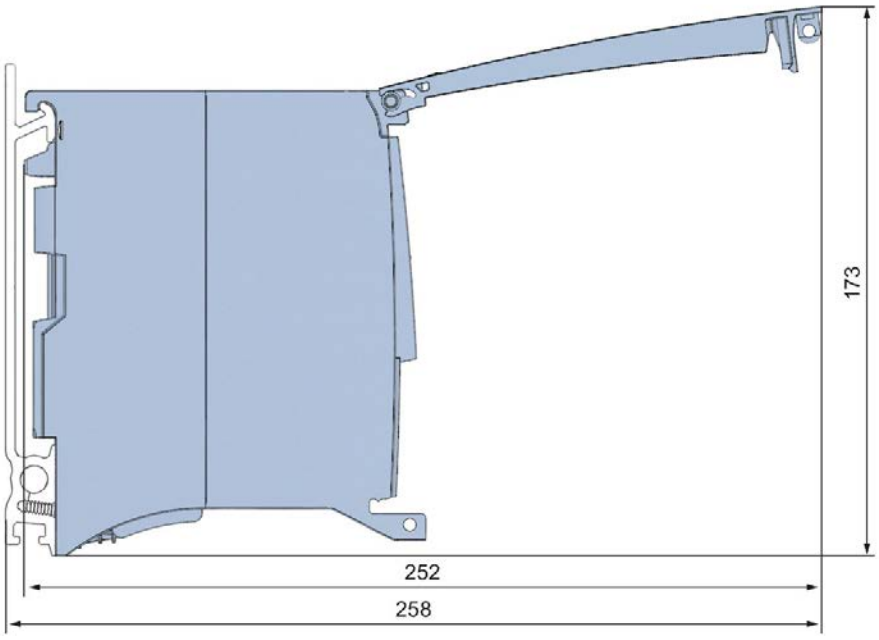

Figure A-2 Dimensional drawing of the IM 155-5 PN ST interface module, side view with open front cover

Response times

B

B.1 Response times of the ET 200MP

Introduction

The response time of the IM 155-5 PN ST is made up of:

- the update time configured for the IM as IO device.

plus

- the backplane bus cycle time.

Note

Validity of the formula

The following formula does not apply to shared device mode.

Backplane bus cycle time

The backplane bus cycle time is the time the interface module requires to output new output data, read new input data and then copy it to the PROFINET send buffer.

The backplane bus cycle time in µs is made up as follows:

- (number of output data in bytes + number of output addresses) x 0.0668 + 1.6131 (rounded)

plus

- (number of input data in bytes + number of input addresses) x 0.0959 + 2.5901 (rounded)

plus

- Operating system processing time (500 µs).

Example configuration for the calculation of the backplane bus cycle time

The following are used in the example:

Table B- 1 Example configuration for the calculation of the backplane bus cycle time

I/O module	Output data in bytes	Input data in bytes	Number of output addresses	Number of input addresses
Analog output module AQ 4xU/I ST	8	-	1	-
Analog output module AQ 4xU/I ST with value status	8	1	1	1
Digital output module DQ 32x24VDC/0.5A ST with value status	4	4	1	1
Digital input module DI 32x24VDC HF	-	4	-	1
Analog input module AI 8xU/I/RTD/TC ST	-	16	-	1
Sum	20	25	3	4

Example calculation of the backplane bus cycle time

Backplane bus cycle time in µs:

- (20 + 3) x 0.0668 + 1.6131 = 3.1495 ≈ 4 µs (rounded)

plus

- (25 + 4) x 0.0959 + 2.5901 = 5.3712 ≈ 6 µs (rounded)

plus

- Operating system processing time 500 µs

Result of backplane bus cycle time

Backplane bus cycle time = 510 µs

Calculating the response time

It is necessary to differentiate between two cases when calculating the response time of the IM 155-5 PN ST:

- Case 1: The configured update time is greater than/equal to the backplane bus cycle time.

  Then:

  Response time in µs = backplane bus cycle time + configured update time

- Case 2: The configured update time is less than the backplane bus cycle time.

  Then:

  Response time in µs = backplane bus cycle time + (configured update time x (backplane bus cycle time / configured update time)).

  If the division backplane cycle time / configured update time does not return an integer without remainder, an additional configured update time must be added next to the integer in the bracket.

Example calculation Case 1: The configured update time is greater than/equal to the backplane bus cycle time.

- Configured update time is, for example, 750 µs
- Backplane bus cycle time = 510 µs

Result of case 1

Response time of the IM 155-5 PN ST = 750 µs + 510 µs = **1260 µs**

Example calculation Case 2: The configured update time is less than the backplane bus cycle time.

- Configured update time is, for example, 500 µs
- Backplane bus cycle time = 510 µs

Result of case 2

Response time of the IM 155-5 PN ST = 510 µs + (500 µs x (510 µs / 500 µs) + 500 µs)) = 510 µs + (500 µs x 1 + 500 µs) = 510 µs + 1000 µs = **1510 µs**

Establishing the PROFINET response time for typical configurations on the PROFINET IO.

A typical PROFINET IO configuration consists of an IO controller with multiple IO devices that are connected by cable or IWLAN to the IO controller. Additional loads, such as programming devices (PGs), HMI devices (Panels) or additional S7 stations, can be present as data receiving stations on the PROFINET line.

You can find the measured values of the PROFINET response time for a typical configuration in this application example (https://support.industry.siemens.com/cs/ww/en/view/21869080).

SIEMENS

SIMATIC

S7-1500 / ET 200MP

Digital input module DI 32x24VDC BA (6ES7521-1BL10-0AA0)

Manual

Edition 12/2016

siemens.com

SIEMENS

SIMATIC

S7-1500/ET 200MP Digital input module DI 32x24VDC BA (6ES7521-1BL10-0AA0)

Manual

Preface

Documentation guide 1

Product overview 2

Wiring 3

Address space 4

Diagnostics alarms 5

Technical specifications 6

Dimensional drawing A

12/2016

A5E32363711-AD

Legal information

Warning notice system

This manual contains notices you have to observe in order to ensure your personal safety, as well as to prevent damage to property. The notices referring to your personal safety are highlighted in the manual by a safety alert symbol, notices referring only to property damage have no safety alert symbol. These notices shown below are graded according to the degree of danger.

⚠ DANGER

indicates that death or severe personal injury **will** result if proper precautions are not taken.

⚠ WARNING

indicates that death or severe personal injury **may** result if proper precautions are not taken.

⚠ CAUTION

indicates that minor personal injury can result if proper precautions are not taken.

NOTICE

indicates that property damage can result if proper precautions are not taken.

If more than one degree of danger is present, the warning notice representing the highest degree of danger will be used. A notice warning of injury to persons with a safety alert symbol may also include a warning relating to property damage.

Qualified Personnel

The product/system described in this documentation may be operated only by **personnel qualified** for the specific task in accordance with the relevant documentation, in particular its warning notices and safety instructions. Qualified personnel are those who, based on their training and experience, are capable of identifying risks and avoiding potential hazards when working with these products/systems.

Proper use of Siemens products

Note the following:

⚠ WARNING

Siemens products may only be used for the applications described in the catalog and in the relevant technical documentation. If products and components from other manufacturers are used, these must be recommended or approved by Siemens. Proper transport, storage, installation, assembly, commissioning, operation and maintenance are required to ensure that the products operate safely and without any problems. The permissible ambient conditions must be complied with. The information in the relevant documentation must be observed.

Trademarks

All names identified by ® are registered trademarks of Siemens AG. The remaining trademarks in this publication may be trademarks whose use by third parties for their own purposes could violate the rights of the owner.

Disclaimer of Liability

We have reviewed the contents of this publication to ensure consistency with the hardware and software described. Since variance cannot be precluded entirely, we cannot guarantee full consistency. However, the information in this publication is reviewed regularly and any necessary corrections are included in subsequent editions.

Siemens AG
Division Digital Factory
Postfach 48 48
90026 NÜRNBERG
GERMANY

A5E32363711-AD
℗ 12/2016 Subject to change

Copyright © Siemens AG 2014 - 2016.
All rights reserved

Preface

Purpose of the documentation

This manual supplements the S7-1500/ET 200MP (https://support.industry.siemens.com/cs/ww/en/view/59191792) system manual.

Functions that relate in general to the systems are described in this system manual.

The information provided in this manual and in the system/function manuals supports you in commissioning the systems.

Changes compared to previous version

Compared to the previous version, this manual contains the following change:

Schematic circuit diagram has been updated.

Conventions

The term "CPU" is used in this manual both for the CPUs of the S7-1500 automation system and for interface modules of the ET 200MP distributed I/O system.

Please also observe notes marked as follows:

Note

A note contains important information on the product described in the documentation, on the handling of the product or on the section of the documentation to which particular attention should be paid.

Security information

Siemens provides products and solutions with industrial security functions that support the secure operation of plants, systems, machines and networks.

In order to protect plants, systems, machines and networks against cyber threats, it is necessary to implement – and continuously maintain – a holistic, state-of-the-art industrial security concept. Siemens' products and solutions only form one element of such a concept.

Customer is responsible to prevent unauthorized access to its plants, systems, machines and networks. Systems, machines and components should only be connected to the enterprise network or the internet if and to the extent necessary and with appropriate security measures (e.g. use of firewalls and network segmentation) in place.

Additionally, Siemens' guidance on appropriate security measures should be taken into account. For more information about industrial security, please visit (http://www.siemens.com/industrialsecurity).

Siemens' products and solutions undergo continuous development to make them more secure. Siemens strongly recommends to apply product updates as soon as available and to always use the latest product versions. Use of product versions that are no longer supported, and failure to apply latest updates may increase customer's exposure to cyber threats.

To stay informed about product updates, subscribe to the Siemens Industrial Security RSS Feed under (http://www.siemens.com/industrialsecurity).

Open Source Software

Open-source software is used in the firmware of the I/O modules. Open Source Software is provided free of charge. We are liable for the product described, including the open-source software contained in it, pursuant to the conditions applicable to the product. Siemens accepts no liability for the use of the open source software over and above the intended program sequence, or for any faults caused by modifications to the software.

For legal reasons, we are obliged to publish the original text of the license conditions and copyright notices. Please read the information relating to this on the Internet (https://support.industry.siemens.com/cs/ww/en/view/109741045).

Table of contents

Preface 4
1 Documentation guide 7
2 Product overview 11
2.1 Properties 11
3 Wiring 13
3.1 Wiring and block diagram 13
4 Address space 14
4.1 Address space 14
5 Diagnostics alarms 18
5.1 Status and error displays 18
6 Technical specifications 20
A Dimensional drawing 23

Documentation guide

1

The documentation for the SIMATIC S7-1500 automation system, the CPU 1516pro-2 PN based on SIMATIC S7-1500 and the SIMATIC ET 200MP distributed I/O system is arranged into three areas.
This arrangement enables you to access the specific content you require.

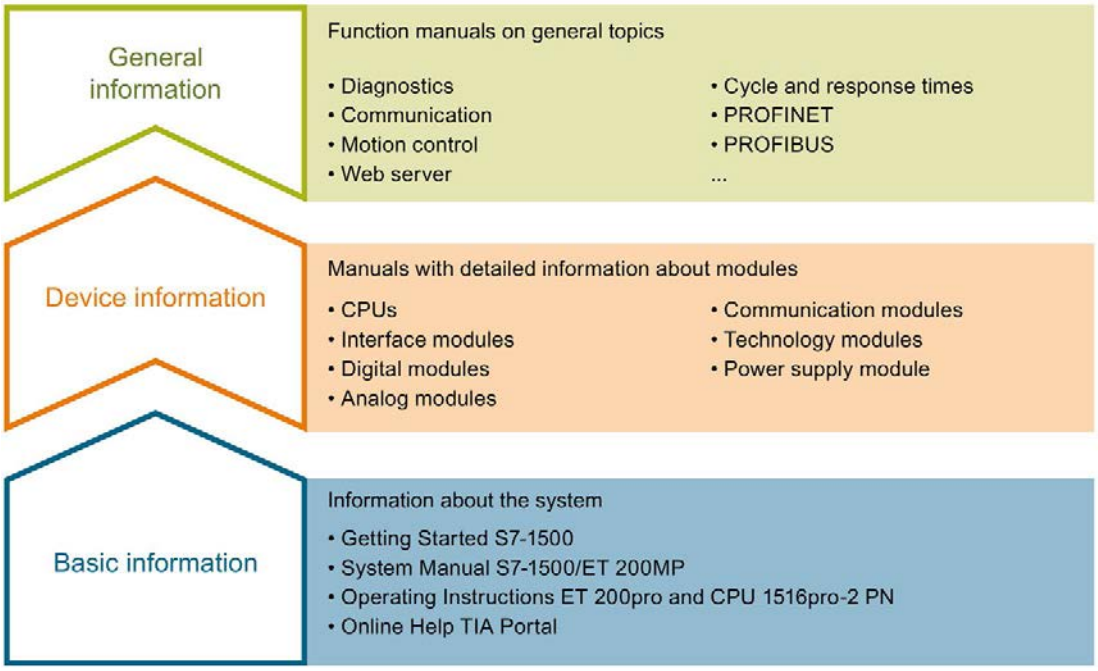

Basic information

The System Manual and Getting Started describe in detail the configuration, installation, wiring and commissioning of the SIMATIC S7-1500 and ET 200MP systems. For CPU 1516pro-2 PN you use the corresponding operating instructions. The STEP 7 online help supports you in the configuration and programming.

Device information

Product manuals contain a compact description of the module-specific information, such as properties, wiring diagrams, characteristics and technical specifications.

General information

The function manuals contain detailed descriptions on general topics regarding the SIMATIC S7-1500 and ET 200MP systems, e.g. diagnostics, communication, motion control, Web server, OPC UA.

You can download the documentation free of charge from the Internet (http://w3.siemens.com/mcms/industrial-automation-systems-simatic/en/manual-overview/Pages/Default.aspx).

Changes and supplements to the manuals are documented in a Product Information.

You can download the product information free of charge from the Internet (https://support.industry.siemens.com/cs/us/en/view/68052815).

Manual Collection S7-1500/ET 200MP

The Manual Collection contains the complete documentation on the SIMATIC S7-1500 automation system and the ET 200MP distributed I/O system gathered together in one file.

You can find the Manual Collection on the Internet (https://support.industry.siemens.com/cs/ww/en/view/86140384).

SIMATIC S7-1500 comparison list for programming languages

The comparison list contains an overview of which instructions and functions you can use for which controller families.

You can find the comparison list on the Internet (https://support.industry.siemens.com/cs/ww/en/view/86630375).

"mySupport"

With "mySupport", your personal workspace, you make the best out of your Industry Online Support.

In "mySupport", you can save filters, favorites and tags, request CAx data and compile your personal library in the Documentation area. In addition, your data is already filled out in support requests and you can get an overview of your current requests at any time.

You must register once to use the full functionality of "mySupport".

You can find "mySupport" on the Internet (https://support.industry.siemens.com/My/ww/en).

"mySupport" - Documentation

In the Documentation area in "mySupport" you can combine entire manuals or only parts of these to your own manual.
You can export the manual as PDF file or in a format that can be edited later.

You can find "mySupport" - Documentation on the Internet (http://support.industry.siemens.com/My/ww/en/documentation).

"mySupport" - CAx data

In the CAx data area in "mySupport", you can access the current product data for your CAx or CAe system.

You configure your own download package with a few clicks.

In doing so you can select:

- Product images, 2D dimension drawings, 3D models, internal circuit diagrams, EPLAN macro files
- Manuals, characteristics, operating manuals, certificates
- Product master data

You can find "mySupport" - CAx data on the Internet (http://support.industry.siemens.com/my/ww/en/CAxOnline).

Application examples

The application examples support you with various tools and examples for solving your automation tasks. Solutions are shown in interplay with multiple components in the system - separated from the focus on individual products.

You will find the application examples on the Internet (https://support.industry.siemens.com/sc/ww/en/sc/2054).

TIA Selection Tool

With the TIA Selection Tool, you can select, configure and order devices for Totally Integrated Automation (TIA).
This tool is the successor of the SIMATIC Selection Tool and combines the known configurators for automation technology into one tool.
With the TIA Selection Tool, you can generate a complete order list from your product selection or product configuration.

You can find the TIA Selection Tool on the Internet (http://w3.siemens.com/mcms/topics/en/simatic/tia-selection-tool).

SIMATIC Automation Tool

You can use the SIMATIC Automation Tool to run commissioning and maintenance activities simultaneously on various SIMATIC S7 stations as a bulk operation independently of the TIA Portal.

The SIMATIC Automation Tool provides a multitude of functions:

- Scanning of a PROFINET/Ethernet network and identification of all connected CPUs
- Address assignment (IP, subnet, gateway) and station name (PROFINET device) to a CPU
- Transfer of the date and the programming device/PC time converted to UTC time to the module
- Program download to CPU
- Operating mode switchover RUN/STOP
- Localization of the CPU by means of LED flashing
- Reading out CPU error information
- Reading the CPU diagnostic buffer
- Reset to factory settings
- Updating the firmware of the CPU and connected modules

You can find the SIMATIC Automation Tool on the Internet (https://support.industry.siemens.com/cs/ww/en/view/98161300).

PRONETA

With SIEMENS PRONETA (PROFINET network analysis), you analyze the PROFINET network during commissioning. PRONETA features two core functions:

- The topology overview independently scans PROFINET and all connected components.
- The IO check is a fast test of the wiring and the module configuration of a system.

You can find SIEMENS PRONETA on the Internet (https://support.industry.siemens.com/cs/ww/en/view/67460624).

Product overview 2

2.1 Properties

Part number:

6ES7521-1BL10-0AA0

View of the module

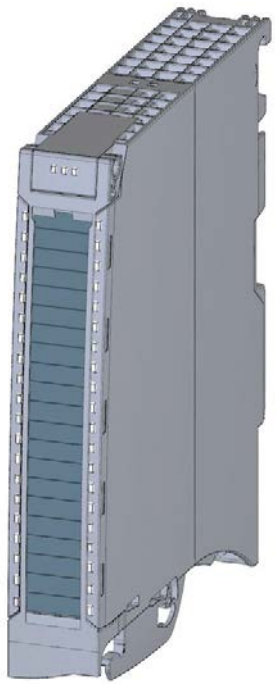

Figure 2-1 View of the DI 32x24VDC BA module

Properties

The module has the following technical properties:

- 32 digital inputs; electrically isolated in groups of 16
- Rated input voltage 24 VDC
- Suitable for switches and 2-/3-/4-wire proximity switches
- Hardware compatible with digital input module DI 16x24VDC BA (6ES7521-1BH10-0AA0)

The module supports the following functions:

Table 2- 1 Version dependencies of the module functions

Function	Firmware version of the module	Configuration software	
		STEP 7 (TIA Portal)	GSD file in STEP 7 (TIA Portal) V12 or higher, or STEP 7 V5.5 SP3 or higher
Firmware update	V1.0.0 or higher	V13 or higher	X
Identification data I&M0 to I&M3	V1.0.0 or higher	V13 or higher	X
Module-internal Shared Input (MSI)	V1.0.0 or higher	V13 Update 3 or higher (PROFINET IO only)	X (PROFINET IO only)
Configurable submodules / sub-modules for Shared Device	V1.0.0 or higher	V13 Update 3 or higher (PROFINET IO only)	X (PROFINET IO only)

You can configure the module with STEP 7 (TIA Portal) and with a GSD file.

Accessories

The following accessories are supplied with the module and can also be ordered separately as spare parts:

- Front connector (push-in terminals) including cable tie
- Labeling strips
- U connector
- Universal front door

You can find additional information on accessories in the S7-1500/ET 200MP (http://support.automation.siemens.com/WW/view/en/59191792) system manual.

Wiring 3

3.1 Wiring and block diagram

This section contains the block diagram of the module and outlines various wiring options.

You can find information on wiring the front connector, creating a cable shield, etc. in the Wiring section of the S7-1500/ET 200MP (http://support.automation.siemens.com/WW/view/en/59191792) system manual.

Wiring and block diagram

The figure below shows you how to wire the module and the assignment of the channels to the addresses (input byte a to input byte d).

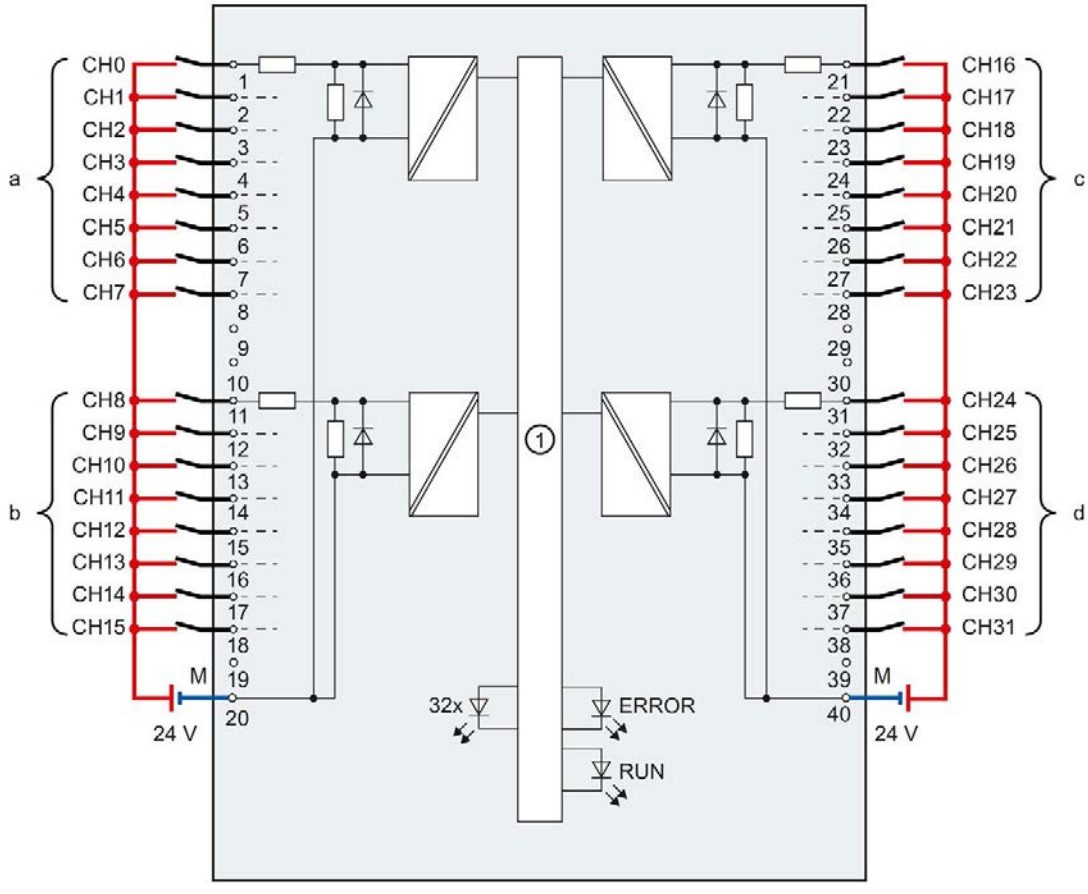

①	Backplane bus interface	CHx	Channel or channel status LED (green)
M	Ground	RUN	Status display LED (green)
		ERROR	Error display LED (red)

Figure 3-1 Block diagram and terminal assignment

Address space

4

4.1 Address space

The module can be configured in various ways in STEP 7. Depending on the configuration, additional/different addresses are assigned in the process image of the inputs.

Configuration options of DI 32x24VDC BA

You can configure the module with STEP 7 (TIA Portal) or with a GSD file.

When you configure the module by means of the GSD file, the configurations are available under different abbreviations/module names.

The following configurations are possible:

Table 4- 1 Configuration options

Configuration	Short designation/ module name in the GSD file	Configuration software, e.g., with STEP 7 (TIA Portal)	
		Integrated in hardware catalog STEP 7 (TIA Portal)	GSD file in STEP 7 (TIA Portal) V12 or higher or STEP 7 V5.5 SP3 or higher
1 x 32-channel without value status	DI 32x24VDC BA	V13 or higher	X
4 x 8-channel without value status	DI 32x24VDC BA S	V13 Update 3 or higher (PROFINET IO only)	X (PROFINET IO only)
1 x 32-channel with value status for module-internal Shared Input with up to 4 submodules	DI 32x24VDC BA MSI	V13 Update 3 or higher (PROFINET IO only)	X (PROFINET IO only)

Address space for configuration as 1 x 32-channel DI 32x24VDC BA

The figure below shows the address space assignment for configuration as a 1 x 32-channel module. You can freely assign the start address for the module. The addresses of the channels are derived from the start address.

The letters "a" to "d" are printed on the module. "IB a", for example, stands for module start address input byte a.

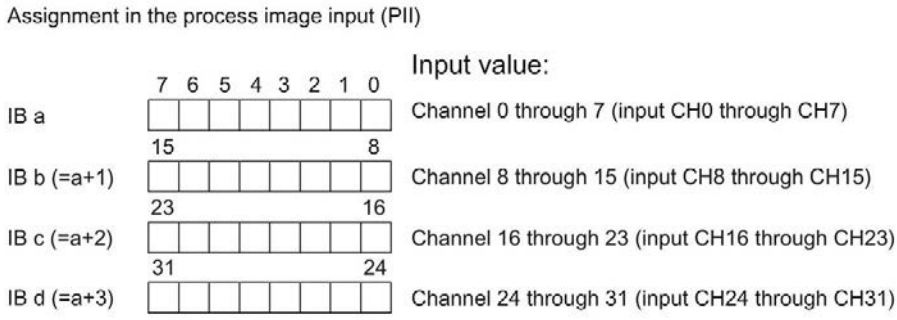

Figure 4-1 Address space for configuration as 1 x 32-channel DI 32x24VDC BA

Address space for configuration as 4 x 8-channel DI 32x24VDC BA S

For the configuration as a 4 x 8-channel module, the channels of the module are divided into multiple submodules. The submodules can be assigned to different IO controllers when the module is used in a shared device.

Unlike the 1 x 32-channel module configuration, each of the four submodules has a freely assignable start address.

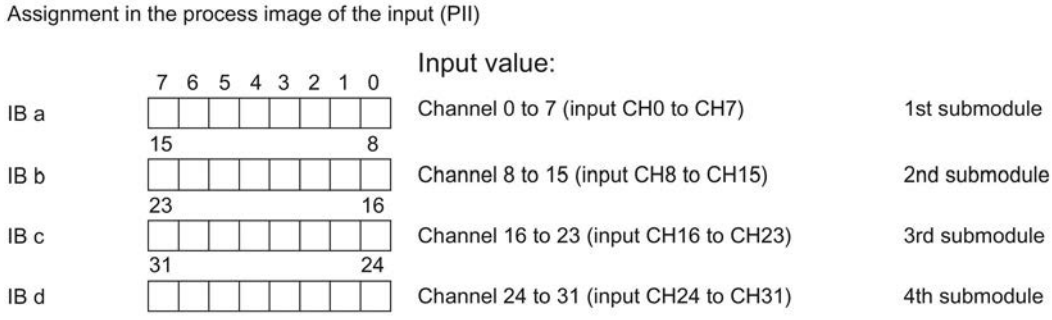

Figure 4-2 Address space for configuration as 4 x 8-channel DI 32x24VDC BA S

Address space for configuration as 1 x 32-channel DI 32x24VDC BA MSI

The channels 0 to 31 of the module are copied to up to 4 submodules with configuration 1 x 32-channel module (Module-internal Shared Input, MSI). Channels 0 to 31 are then available with identical input values in different submodules. These submodules can be assigned to up to four IO controllers when the module is used in a shared device. Each IO controller has read access to the same channels.

The number of usable IO controllers depends on the interface module used. Please observe the information in the manual for the particular interface module.

Value status (Quality Information, QI)

The meaning of the value status depends on the submodule involved.

For the 1st submodule (=basic submodule), the value status is not relevant.

For the 2nd to 4th submodule (=MSI submodule), the value status 0 indicates that the value is incorrect or the basic submodule has not yet been configured (not ready).

The figure below shows the assignment of the address space with submodules 1 and 2.

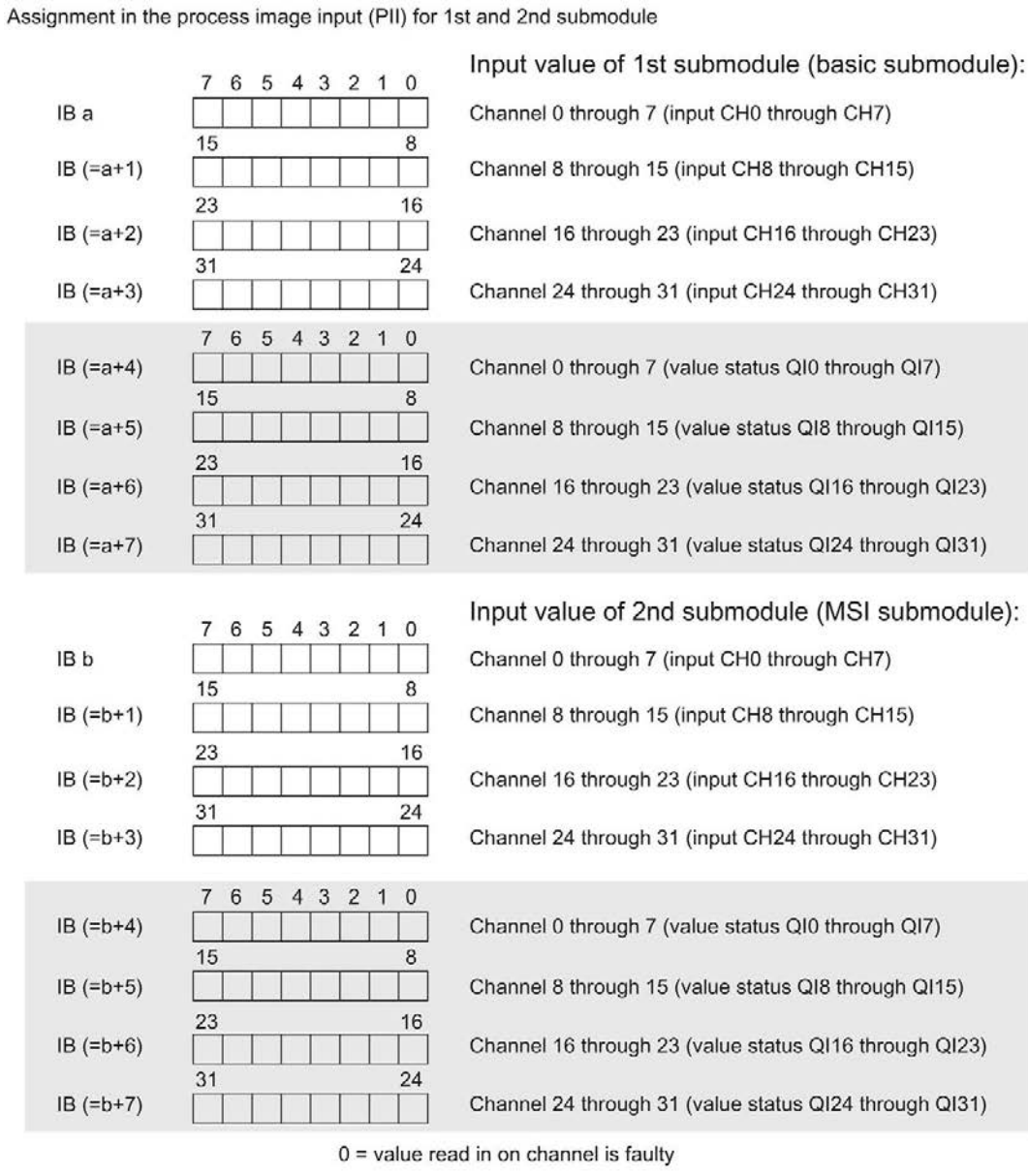

Figure 4-3 Address space for configuration as 1 x 32-channel DI 32x24VDC BA MSI with value status

The figure below shows the assignment of the address space with submodules 3 and 4.

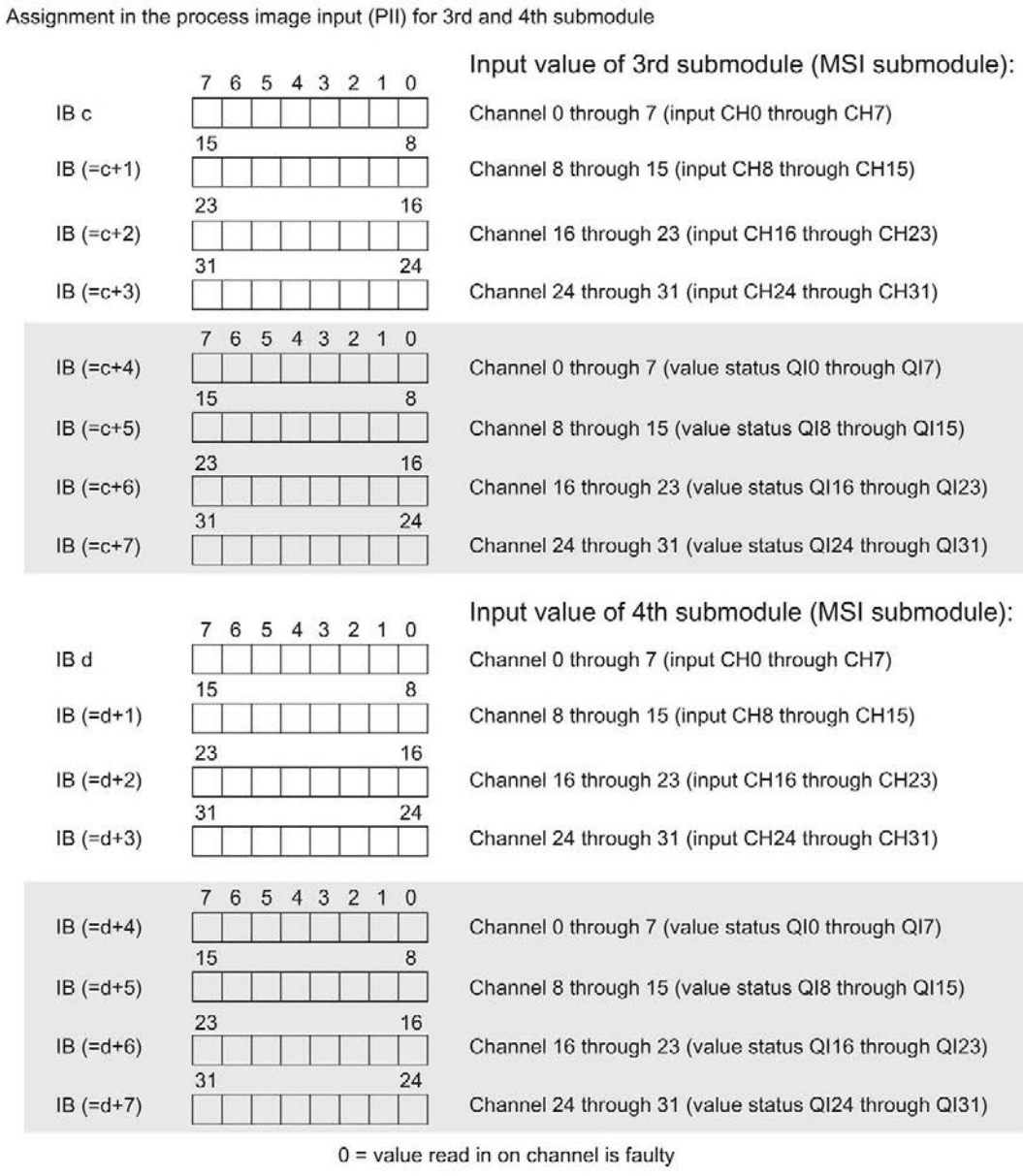

Figure 4-4 Address space for configuration as 1 x 32-channel DI 32x24VDC BA MSI with value status

Reference

You can find information on the module-internal shared input/shared output (MSI/MSO) function in the section Module-internal shared input/shared output (MSI/MSO) of the function manual PROFINET with STEP 7 V13 (https://support.industry.siemens.com/cs/ww/en/view/49948856).

Diagnostics alarms 5

The module has no selectable diagnostics. Diagnostics alarms, for example, cannot be output with STEP 7 (TIA Portal).

5.1 Status and error displays

LED displays

The figure below shows you the LED displays (status and error displays) of the DI 32x24VDC BA.

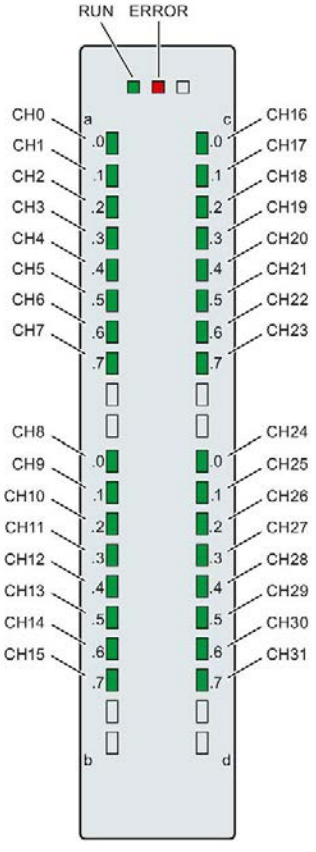

Figure 5-1 LED displays of the module DI 32x24VDC BA

Meaning of the LED displays

The tables below explain the meaning of the status and error displays.

LED RUN/ERROR

Table 5- 1 RUN/ERROR status and error displays

LED		Meaning	Remedy
RUN	ERROR		
□ Off	□ Off	Voltage missing or too low at backplane bus.	• Switch on the CPU and/or the system power supply modules. • Verify that the U connectors are inserted. • Check to see if too many modules are inserted.
☼ Flashes	□ Off	Module is starting up.	---
■ On	□ Off	Module is ready.	
☼ Flashes	☼ Flashes	Hardware defective.	Replace the module.

LED CHx

Table 5- 2 CHx status display

LED CHx	Meaning	Remedy
□ Off	0 = Status of the input signal.	---
■ On	1 = Status of the input signal.	---

Technical specifications 6

Technical specifications of the DI 32x24VDC BA

	6ES7521-1BL10-0AA0
General information	
Product type designation	DI 32x24VDC BA
Hardware functional status	FS01
Firmware version	V1.0.0
• FW update possible	Yes
Product function	
I&M data	Yes; I&M0 to I&M3
Engineering with	
STEP 7 TIA Portal can be configured/integrated as of version	V13 / V13
STEP 7 can be configured/integrated as of version	V5.5 SP3 / -
PROFIBUS as of GSD version/GSD revision	V1.0 / V5.1
PROFINET as of GSD version/GSD revision	V2.3 / -
Operating mode	
DI	Yes
Counters	No
MSI	Yes
Supply voltage	
Rated value (DC)	24 V
Valid range, low limit (DC)	20.4 V
Valid range, high limit (DC)	28.8 V
Power	
Power consumption from the backplane bus	1.05 W
Power loss	
Power loss, typ.	3 W
Digital inputs	
Number of inputs	32
Configurable digital inputs	No
Sinking/sourcing input	Sinking input
Input characteristic curve acc. to IEC 61131, type 3	Yes
Input voltage	
Type of input voltage	DC
Rated value (DC)	24 V
for signal "0"	-30 to +5 V
for signal "1"	+11 to +30 V

	6ES7521-1BL10-0AA0
Input current	
for signal "1", typ.	2.7 mA
Input delay (for rated value of input voltage)	
For standard inputs	
• Configurable	No
• with "0" to "1", min.	3 ms
• with "0" to "1", max.	4 ms
• with "1" to "0", min.	3 ms
• with "1" to "0", max.	4 ms
For interrupt inputs	
• Configurable	No
for technological functions	
• Configurable	No
Cable length	
shielded, max.	1000 m
unshielded, max.	600 m
Encoders	
Connectable encoders	
2-wire sensor	Yes
• Permitted quiescent current (2-wire sensor), max.	1.5 mA
Isochronous mode	
Isochronous mode (application synchronized up to terminal)	No
Interrupts/diagnostics/status information	
Diagnostics function	No
Interrupts	
Diagnostics interrupt	No
Hardware interrupt	No
Diagnostics alarms	
Monitoring of supply voltage	No
Wire break	No
Short-circuit	No
Diagnostics indicator LED	
RUN LED	Yes; green LED
ERROR LED	Yes; red LED
Monitoring of supply voltage (PWR LED)	No
Channel status display	Yes; green LED
For channel diagnostics	No
For module diagnostics	No
Electrical isolation	

	6ES7521-1BL10-0AA0
Electrical isolation of channels	
Between the channels	No
Between the channels, in groups of	16
Between the channels and backplane bus	Yes
Between the channels and power supply of the electronics	No
Isolation	
Isolation tested with	707 V DC (type test)
Ambient conditions	
Ambient temperature during operation	
Horizontal mounting position, min.	0 °C
Horizontal mounting position, max.	60 °C
Vertical mounting position, min.	0 °C
Vertical mounting position, max.	40 °C
Distributed mode	
Prioritized startup	Yes
Dimensions	
Width	25 mm
Height	147 mm
Depth	129 mm
Weights	
Weight, approx.	260 g
Miscellaneous	
Note:	Delivery includes 40-pin push-in front connector

Dimensional drawing

A

The dimensional drawing of the module on the mounting rail, as well as a dimensional drawing with open front cover, are provided in this appendix. Always observe the specified dimensions for installation in cabinets, control rooms, etc.

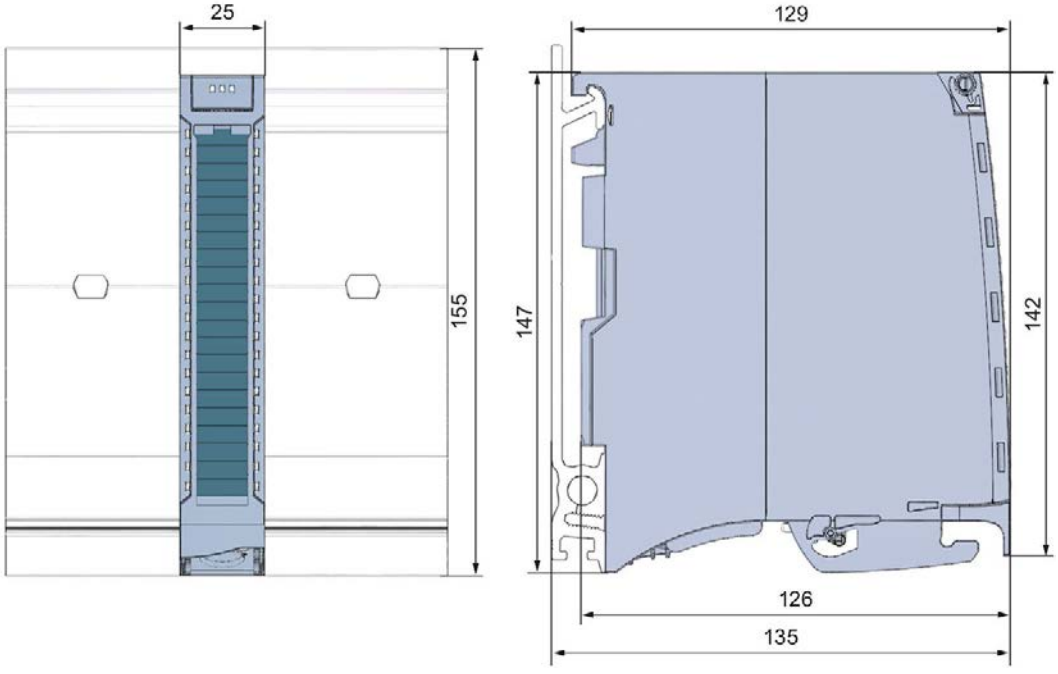

Figure A-1 Dimensional drawing of the DI 32x24VDC BA module

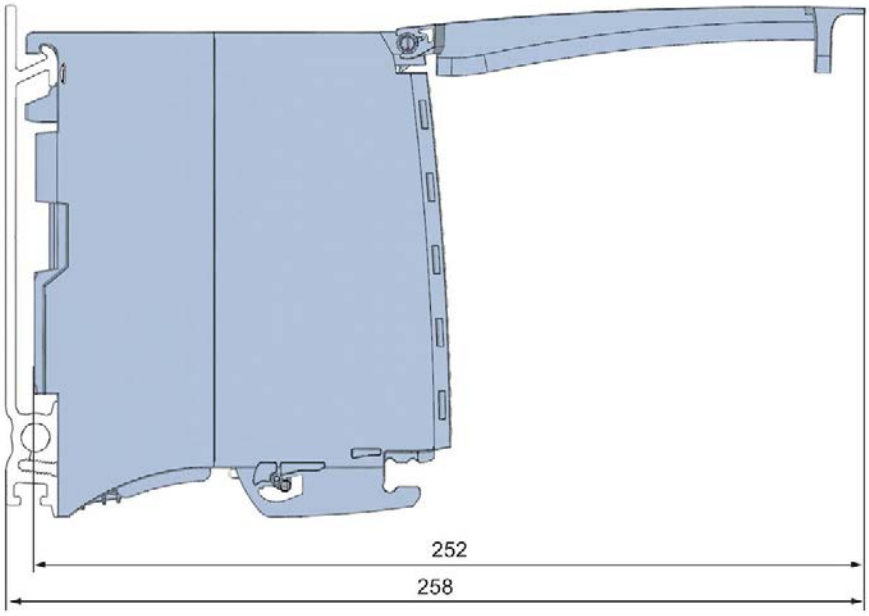

Figure A-2 Dimensional drawing of the DI 32x24VDC BA module, side view with open front cover

SIEMENS

Edition 05/2022

EQUIPMENT MANUAL

SIMATIC

S7-1500 / ET 200MP

Digital input module
DI 32x24VDC HF (6ES7521-1BL00-0AB0)

support.industry.siemens.com

SIEMENS

SIMATIC

S7-1500/ET 200MP DI 32x24VDC HF digital input module (6ES7521-1BL00-0AB0)

Equipment Manual

Preface

S7-1500/ET 200MP Documentation Guide 1

Product overview 2

Wiring 3

Parameters/address space 4

Interrupts/diagnostics alarms 5

Technical specifications 6

Dimensional drawing A

Parameter data records B

05/2022

A5E03485935-AH

Legal information

Warning notice system

This manual contains notices you have to observe in order to ensure your personal safety, as well as to prevent damage to property. The notices referring to your personal safety are highlighted in the manual by a safety alert symbol, notices referring only to property damage have no safety alert symbol. These notices shown below are graded according to the degree of danger.

⚠ DANGER
indicates that death or severe personal injury **will** result if proper precautions are not taken.

⚠ WARNING
indicates that death or severe personal injury **may** result if proper precautions are not taken.

⚠ CAUTION
indicates that minor personal injury can result if proper precautions are not taken.

NOTICE
indicates that property damage can result if proper precautions are not taken.

If more than one degree of danger is present, the warning notice representing the highest degree of danger will be used. A notice warning of injury to persons with a safety alert symbol may also include a warning relating to property damage.

Qualified Personnel

The product/system described in this documentation may be operated only by **personnel qualified** for the specific task in accordance with the relevant documentation, in particular its warning notices and safety instructions. Qualified personnel are those who, based on their training and experience, are capable of identifying risks and avoiding potential hazards when working with these products/systems.

Proper use of Siemens products

Note the following:

⚠ WARNING
Siemens products may only be used for the applications described in the catalog and in the relevant technical documentation. If products and components from other manufacturers are used, these must be recommended or approved by Siemens. Proper transport, storage, installation, assembly, commissioning, operation and maintenance are required to ensure that the products operate safely and without any problems. The permissible ambient conditions must be complied with. The information in the relevant documentation must be observed.

Trademarks

All names identified by ® are registered trademarks of Siemens AG. The remaining trademarks in this publication may be trademarks whose use by third parties for their own purposes could violate the rights of the owner.

Disclaimer of Liability

We have reviewed the contents of this publication to ensure consistency with the hardware and software described. Since variance cannot be precluded entirely, we cannot guarantee full consistency. However, the information in this publication is reviewed regularly and any necessary corrections are included in subsequent editions.

Siemens AG
Digital Industries
Postfach 48 48
90026 NÜRNBERG
GERMANY

A5E03485935-AH
Ⓟ 05/2022 Subject to change

Copyright © Siemens AG 2013 - 2022.
All rights reserved

Preface

Purpose of the documentation

This manual supplements the S7-1500/ET 200MP (https://support.industry.siemens.com/cs/ww/en/view/59191792) system manual.

Functions that relate in general to the systems are described in this system manual.

The information provided in this manual and in the system/function manuals supports you in commissioning the systems.

Changes compared to previous version

Compared to the previous version, this manual contains the following changes:

- Clock synchronization possible in counting mode. In the technical specifications, the counting frequency is increased from 3 kHz to 6 kHz.
- New licensing conditions and copyright information of the Open Source Software
- New technical specifications

Conventions

CPU: The term "CPU" is used in this manual both for the CPUs of the S7-1500 automation system and for interface modules of the ET 200MP distributed I/O system.

STEP 7: In this documentation, "STEP 7" is used as a synonym for all versions of the configuration and programming software "STEP 7 (TIA Portal)".

DI mode: DI 32x24VDC HF as digital input module with 32 digital inputs (channels 0 to 31).

Counting mode: DI 32x24VDC HF as digital input module with 2 counters (channels 0 and 1) and 30 digital inputs (channels 2 to 31).

Please also observe notes marked as follows:

Note

A note contains important information on the product described in the documentation, on the handling of the product or on the section of the documentation to which particular attention should be paid.

Recycling and disposal

For environmentally friendly recycling and disposal of your old equipment, contact a certified electronic waste disposal company and dispose of the equipment according to the applicable regulations in your country.

Siemens provides products and solutions with industrial security functions that support the secure operation of plants, systems, machines and networks.

In order to protect plants, systems, machines and networks against cyber threats, it is necessary to implement – and continuously maintain – a holistic, state-of-the-art industrial security concept. Siemens' products and solutions constitute one element of such a concept.

Customers are responsible for preventing unauthorized access to their plants, systems, machines and networks. Such systems, machines and components should only be connected to an enterprise network or the internet if and to the extent such a connection is necessary and only when appropriate security measures (e.g. firewalls and/or network segmentation) are in place.

For additional information on industrial security measures that may be implemented, please visit (https://www.siemens.com/industrialsecurity).

Siemens' products and solutions undergo continuous development to make them more secure. Siemens strongly recommends that product updates are applied as soon as they are available and that the latest product versions are used. Use of product versions that are no longer supported, and failure to apply the latest updates may increase customers' exposure to cyber threats.

To stay informed about product updates, subscribe to the Siemens Industrial Security RSS Feed visit (https://www.siemens.com/cert).

Open Source Software

Open-source software is used in the firmware of the product described. Open Source Software is provided free of charge. We are liable for the product described, including the open-source software contained in it, pursuant to the conditions applicable to the product. Siemens accepts no liability for the use of the open source software over and above the intended program sequence, or for any faults caused by modifications to the software.

For legal reasons, we are obliged to publish the original text of the license conditions and copyright notices. Please read the information relating to this on the Internet.

Table of contents

Preface **3**

1 S7-1500/ET 200MP Documentation Guide **6**

1.1 S7-1500 / ET 200MP Documentation Guide 6

1.2 SIMATIC Technical Documentation 8

1.3 Tool support 9
1.3.1 Tool support 10

2 Product overview **12**

2.1 Properties 12

2.2 Functions 15
2.2.1 Count 15

3 Wiring **17**

4 Parameters/address space **19**

4.1 Parameter 19
4.1.1 Parameters DI mode 20
4.1.2 Explanation of the parameters of the DI mode 21
4.1.3 Parameters of the Counting mode 22
4.1.4 Explanation of the parameters of the Counting mode 23

4.2 Address space 25
4.2.1 Address space DI mode 26
4.2.2 Address space Counting mode 30
4.2.3 Examples of counting 34

5 Interrupts/diagnostics alarms **39**

5.1 Status and error displays 39

5.2 Interrupts 41

5.3 Diagnostics alarms 43

6 Technical specifications **44**

A Dimensional drawing **48**

B Parameter data records **50**

B.1 Parameter assignment and structure of the parameter data records 50

B.2 Structure of the parameter data records DI mode 51

B.3 Structure of the parameter data records Counting mode 53

S7-1500/ET 200MP Documentation Guide

1

1.1 S7-1500 / ET 200MP Documentation Guide

The documentation for the SIMATIC S7-1500 automation system and the ET 200MP distributed I/O system is arranged into three areas.

This arrangement enables you to access the specific content you require. Changes and supplements to the manuals are documented in a Product Information.

You can download the documentation free of charge from the Internet (https://support.industry.siemens.com/cs/ww/en/view/109742691).

Basic information

The System Manual and Getting Started describe in detail the configuration, installation, wiring and commissioning of the SIMATIC S7-1500 and ET 200MP systems.

The STEP 7 online help supports you in the configuration and programming.

Examples:

- Getting Started S7-1500
- S7-1500/ET 200MP System Manual
- Online help TIA Portal

Device information

Equipment manuals contain a compact description of the module-specific information, such as properties, wiring diagrams, characteristics and technical specifications.

Examples:

- Equipment Manuals CPUs
- Equipment Manuals Interface Modules
- Equipment Manuals Digital Modules
- Equipment Manuals Analog Modules
- Equipment Manuals Communications Modules
- Equipment Manuals Technology Modules
- Equipment Manuals Power Supply Modules

General information

The function manuals contain detailed descriptions on general topics relating to the SIMATIC S7-1500 and ET 200MPsystems.

Examples:

- Function Manual Diagnostics
- Function Manual Communication
- Function Manual Motion Control
- Function Manual Web Server
- Function Manual Cycle and Response Times
- PROFINET Function Manual
- PROFIBUS Function Manual

Product Information

Changes and supplements to the manuals are documented in a Product Information. The Product Information takes precedence over the device and system manuals.

You can find the latest Product Information on the S7-1500 and ET 200MP systems on the Internet (https://support.industry.siemens.com/cs/de/en/view/68052815).

Manual Collection S7-1500/ET 200MP

The Manual Collection contains the complete documentation on the SIMATIC S7-1500 automation system and the ET 200MP distributed I/O system gathered together in one file.

You can find the Manual Collection on the Internet.
(https://support.industry.siemens.com/cs/ww/en/view/86140384)

SIMATIC S7-1500 comparison list for programming languages

The comparison list contains an overview of which instructions and functions you can use for which controller families.

You can find the comparison list on the Internet
(https://support.industry.siemens.com/cs/ww/en/view/86630375).

1.2 SIMATIC Technical Documentation

Additional SIMATIC documents will complete your information. You can find these documents and their use at the following links and QR codes.

The Industry Online Support gives you the option to get information on all topics. Application examples support you in solving your automation tasks.

Overview of the SIMATIC Technical Documentation

Here you will find an overview of the SIMATIC documentation available in SIOS:

Industry Online Support International (https://support.industry.siemens.com/cs/ww/en/view/109742705)

Watch this short video to find out where you can find the overview directly in SIOS and how to use SIOS on your mobile device:

Quick introduction to the technical documentation of automation products per video (https://support.industry.siemens.com/cs/us/en/view/109780491)

YouTube video: Siemens Automation Products - Technical Documentation at a Glance (https://youtu.be/TwLSxxRQQsA)

mySupport

With "mySupport" you can get the most out of your Industry Online Support.

Registration	You must register once to use the full functionality of "mySupport". After registration, you can create filters, favorites and tabs in your personal workspace.
Support requests	Your data is already filled out in support requests, and you can get an overview of your current requests at any time.
Documentation	In the Documentation area you can build your personal library.
Favorites	You can use the "Add to mySupport favorites" to flag especially interesting or frequently needed content. Under "Favorites", you will find a list of your flagged entries.
Recently viewed articles	The most recently viewed pages in mySupport are available under "Recently viewed articles".
CAx data	The CAx data area gives you access to the latest product data for your CAx or CAe system. You configure your own download package with a few clicks: • Product images, 2D dimension drawings, 3D models, internal circuit diagrams, EPLAN macro files • Manuals, characteristics, operating manuals, certificates • Product master data

You can find "mySupport" on the Internet. (https://support.industry.siemens.com/My/ww/en)

Application examples

The application examples support you with various tools and examples for solving your automation tasks. Solutions are shown in interplay with multiple components in the system - separated from the focus on individual products.

You can find the application examples on the Internet.
(https://support.industry.siemens.com/cs/ww/en/ps/ae)

1.3 Tool support

1.3.1 Tool support

The tools described below support you in all steps: from planning, over commissioning, all the way to analysis of your system.

TIA Selection Tool

The TIA Selection Tool tool supports you in the selection, configuration, and ordering of devices for Totally Integrated Automation (TIA).

As successor of the SIMATIC Selection Tools , it assembles the configuration editors for automation technology already familiar into a single tool.

With the TIA Selection Tool , you can generate a complete order list from your product selection or product configuration.

You can find the TIA Selection Tool on the Internet.
(https://support.industry.siemens.com/cs/ww/en/view/109767888)

SIMATIC Automation Tool

You can use the SIMATIC Automation Tool to perform commissioning and maintenance activities on various SIMATIC S7 stations as bulk operations independent of TIA Portal.

The SIMATIC Automation Tool offers a wide range of functions:

- Scanning of a PROFINET/Ethernet system network and identification of all connected CPUs
- Assignment of addresses (IP, subnet, Gateway) and device name (PROFINET device) to a CPU
- Transfer of the date and the programming device/PC time converted to UTC time to the module
- Program download to CPU
- RUN/STOP mode switchover
- CPU localization through LED flashing
- Reading out of CPU error information
- Reading the CPU diagnostic buffer
- Reset to factory settings
- Firmware update of the CPU and connected modules

You can find the SIMATIC Automation Tool on the Internet.
(https://support.industry.siemens.com/cs/ww/en/view/98161300)

PRONETA

SIEMENS PRONETA (PROFINET network analysis) is a commissioning and diagnostic tool for PROFINET networks. PRONETA Basic has two core functions:

- The "Network analysis" offers a quick overview of the PROFINET topology. It is possible to make simple parameter changes (for example, to the names and IP addresses of the devices). In addition, a quick and convenient comparison of the real configuration with a reference system is also possible.
- The "IO test" is a simple and rapid test of the wiring and the module configuration of a plant, including documentation of the test results.

You can find SIEMENS PRONETA Basic on the Internet:
(https://support.industry.siemens.com/cs/ww/en/view/67460624)

SIEMENS PRONETA Professional is a licensed product that offers you additional functions. It offers you simple asset management in PROFINET networks and supports operators of automation systems in automatic data collection/acquisition of the components used through various functions:

- The user interface (API) offers an access point to the automation cell to automate the scan functions using MQTT or a command line.
- With PROFIenergy diagnostics, you can quickly detect the current pause mode or the readiness for operation of devices that support PROFIenergy and change these as needed.
- The data record wizard supports PROFINET developers in reading and writing acyclic PROFINET data records quickly and easily without PLC and engineering.

You can find SIEMENS PRONETA Professional on the Internet:
(https://www.siemens.com/proneta-professional)

SINETPLAN

SINETPLAN, the Siemens Network Planner, supports you in planning automation systems and networks based on PROFINET. The tool facilitates professional and predictive dimensioning of your PROFINET installation as early as in the planning stage. In addition, SINETPLAN supports you during network optimization and helps you to exploit network resources optimally and to plan reserves. This helps to prevent problems in commissioning or failures during productive operation even in advance of a planned operation. This increases the availability of the production plant and helps improve operational safety.

The advantages at a glance

- Network optimization thanks to port-specific calculation of the network load
- Increased production availability thanks to online scan and verification of existing systems
- Transparency before commissioning through importing and simulation of existing STEP 7 projects
- Efficiency through securing existing investments in the long term and the optimal use of resources

You can find SINETPLAN on the Internet
(https://new.siemens.com/global/en/products/automation/industrial-communication/profinet/sinetplan.html).

Product overview

2

2.1 Properties

Article number:

6ES7521-1BL00-0AB0

View of the module

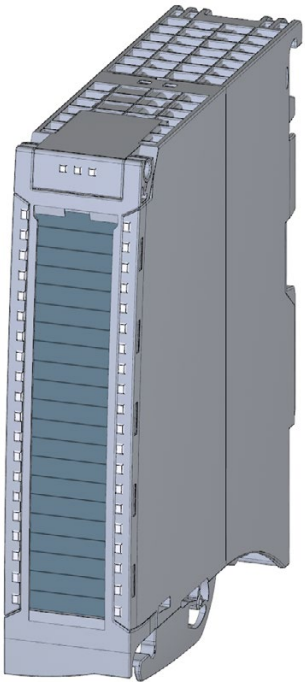

Figure 2-1 View of the DI 32x24VDC HF module

Properties

The module has the following technical properties:

- 32 digital inputs; electrically isolated in groups of 16
  - of which channel 0 and 1 optionally with counter function
- Rated input voltage 24 V DC
- Configurable input delay: 0.05 ms to 20 ms
- Configurable diagnostics (per channel)
- Configurable hardware interrupt (per channel)
- Suitable for switches and 2-/3-/4-wire proximity switches
- Hardware compatible with digital input module DI 16x24VDC HF (6ES7521-1BH00-0AB0)

The module supports the following functions:

Table 2- 1 Version dependencies of the module functions

Function	Firmware version of the module	Configuration software	
		STEP 7 (TIA Portal)	GSD file in STEP 7 (TIA Portal) V12 or higher, or STEP 7 V5.5 SP3 or higher
Firmware update	V1.0.0 or higher	V12 or higher	--- / X
Identification data I&M0 to I&M3	V1.0.0 or higher	V12 or higher	X
Parameter assignment in RUN	V1.0.0 or higher	V12 or higher	X
Isochronous mode	V1.0.0 or higher	V12 or higher	---
Module-internal Shared Input (MSI)	V2.0.0 or higher	V13 Update 3 or higher (PROFINET IO only)	X (PROFINET IO only)
Configurable submodules / submodules for Shared Device	V2.0.0 or higher	V13 Update 3 or higher (PROFINET IO only)	X (PROFINET IO only)
Channel 0 and 1 optionally with counter function*	V2.1.0 or higher	V13, SP1 with HSP 0118 or higher	X (PROFINET IO only)

* Requirement for counter function: Interface module IM 155-5 firmware version V3.0 or higher or CPU S7-15XX firmware version V1.7 or higher

You can configure the module with STEP 7 (TIA Portal) and with a GSD file.

Compatibility

The following table shows the compatibility of the modules and the dependencies between hardware functional status (FS) and firmware version (FW) used:

Hardware functional status	Firmware version	Note
FS01	V1.0.0 to V2.1.x	Upgrade possible between V1.0.0 to V2.1.x Downgrade possible from V2.1.x to V2.1.2 Downgrade possible from V2.1.1 to V1.0.0
FS02	V1.0.0 to V2.1.x	
FS03	V2.1.2 to V2.1.x	Upgrade to downgrade possible between V2.1.2 and V2.1.x
FS04	V2.2.0 or higher	Upgrade and downgrade possible between V2.2.0 and higher

Isochronous mode

When operating the following digital input modules, make sure that the digital input modules have at least one of the following firmware versions (FW) or higher. Otherwise, you may experience a high jitter in the application.

- For modules with functional status FS 03: FW V2.1.4

Accessories

The following accessories are supplied with the module and can also be ordered separately as spare parts:

- Labeling strips
- U connector
- Universal front door

Other components

The following component must be ordered separately:

Front connectors, including potential jumpers and cable ties

For more information on accessories, refer to the system manual S7-1500/ET 200MP (https://support.industry.siemens.com/cs/ww/en/view/59191792).

2.2 Functions

2.2.1 Count

Introduction

As of firmware version V2.1.0 of the module you have the option of using channels 0 and 1 in the "Count" mode. The other channels can be used as standard inputs (DI mode).

If do not use channels 0 and 1 in the "Count" mode, these channels can also be used as digital inputs. The two channels 0 and 1 can only be used as counter inputs together.

When counting, the edges of the digital input are acquired and evaluated accordingly e.g.:

- For counting single items up to a maximum limit
- For applications with repeating counting procedures

Reference

You will find the basics and additional information on the counting function in the function manual Counting, measuring and position detection (http://support.automation.siemens.com/WW/view/en/59709820).

Counting with channel 0 and channel 1

You control the counting function via the IO addresses of the module. These IO addresses are also known as the control interface (output addresses) and feedback interface (input addresses), see section Address space Counting mode (Page 30).

If you set the parameters of channels 0 and 1 for counting, you then have the following options:

- You influence the behavior if one of the counting limits is exceeded using
  - Stop counting.
  - Continue counting.
- The bit STS_DQ (bit in the feedback interface) signals that the counted value is in one of the following ranges depending on the parameter assignment:
  - Between a comparison value and the high counting limit.
  - Between a comparison value and the low counting limit.
- You can set a parameter for a hardware interrupt if a comparison event occurs for DQ.
- You can define counting limits and comparison values for counting from 0 ... 4294967295 (2^{32}-1).
- You can set start values or have the user program set load values for counting.

The count direction is only up.

Reference

You will find examples of counting with channels 0 and 1 in the section Examples of counting (Page 34)

Wiring

3

This section contains the block diagram of the module and outlines various wiring options.

You will find information on wiring the front connector, establishing a cable shield, etc in the system manual S7-1500/ET 200MP (http://support.automation.siemens.com/WW/view/en/59191792) in section Wiring.

Wiring and block diagram

The figure below shows you how to wire the module and the assignment of the channels to the addresses (input byte a to input byte d). You can set parameters so that channels 0 and 1 are used for counting. Channels 2 to 31 can continue to be used as digital inputs.

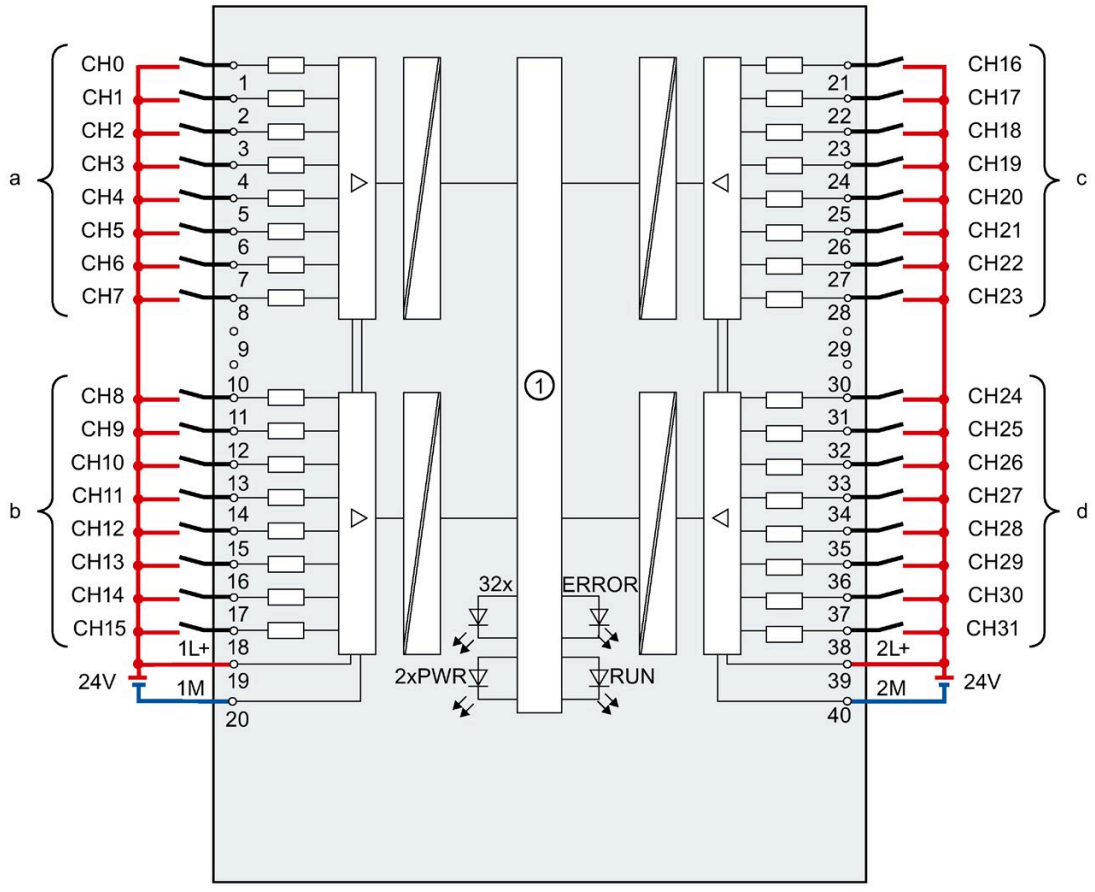

①	Backplane bus interface	CHx	Channel or channel status LED (green/red)
xL+	Supply voltage 24 V DC	RUN	Status display LED (green)
xM	Ground	ERROR	Error display LED (red)
		PWR	POWER supply voltage LED (green)

Figure 3-1 Block diagram and terminal assignment

Resistor circuitry of the encoders

To detect a wire break, it is necessary that enough quiescent current is flowing even when the encoder contacts are open. Connect a resistor of 25 kΩ to 45 kΩ with 0.25 W to the encoder contacts for this reason.

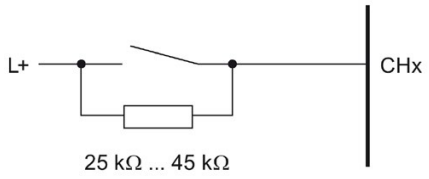

Figure 3-2 Resistor circuitry of the encoders

Tip: Using the potential jumpers

If you want to supply both load groups with the same potential (non-isolated), use the potential jumpers supplied with the front connector. This helps you to avoid having to terminate two wires to one terminal.

Proceed as follows:

1. Connect the 24 V DC supply voltage to terminals 19 and 20.
2. Insert the potential jumpers between terminals 19 and 39 (xL+) and between terminals 20 and 40 (xM).
3. Use the terminals 39 and 40 to distribute the potential to the next module

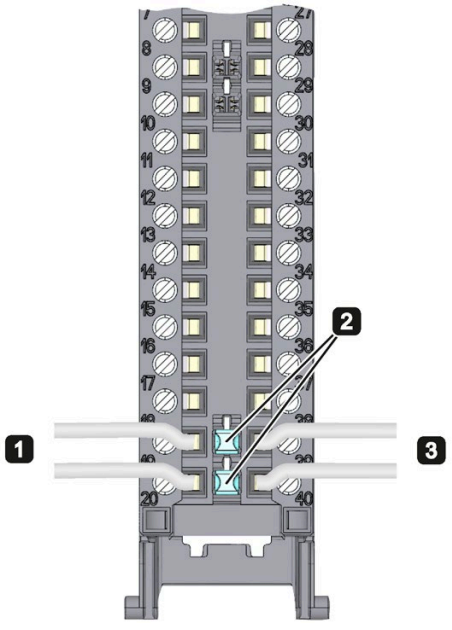

Figure 3-3 Using the potential jumpers

Note

Ensure that the maximum current load of 8 A per potential jumper is not exceeded.

Parameters/address space

4

4.1 Parameter

DI 32x24VDC HF parameters

When you assign the module parameters in STEP 7, you use various parameters to specify the module properties. The parameters that can be set depend on whether you use the module in standard mode or in counter mode. You will find the parameters in section Parameters DI mode (Page 20) or section Parameters of the Counting mode (Page 22). The effective range of the configurable parameters depends on the type of configuration. The following configurations are possible:

- Central operation with a S7-1500 CPU
- Distributed operation on PROFINET IO in an ET 200MP system
- Distributed operation on PROFIBUS DP in an ET 200MP system

For parameter reassignment in the user program, the parameters are transferred to the module with the WRREC instruction (parameter reassignment in RUN) using data records; see section Parameter assignment and structure of the parameter data records (Page 50).

4.1.1 Parameters DI mode

Parameters of the DI 32x24VDC HF in the DI mode

In the following table, you will find the parameters in the "DI mode". These parameters apply to channels 0 to 31.

Table 4- 1 Settable parameters and their defaults in the DI mode

Parameter	Range of values	Default setting	Parameter reassignment in RUN	Range of effectiveness with configuration software, e.g. STEP 7	
				Integrated in the hardware catalog as of STEP 7, V13 SP1 or GSD file PROFINET IO	GSD file PROFIBUS DP
Diagnostics					
• No supply voltage L+	Yes/No	No	Yes	Channel*	Channel group**
• Wire break	Yes/No	No	Yes	Channel	Channel group**
Input delay	0.05 ms, 0.1 ms, 0.4 ms, 1.6 ms, 3.2 ms, 12.8 ms, 20 ms	3.2 ms; for isochronous mode 0.05 ms (cannot be changed)	Yes	Channel	Channel group**
Hardware interrupt* **					
• Rising edge	Yes/No	No	Yes	Channel	Channel
• Falling edge	Yes/No	No	Yes	Channel	Channel
• Rising and falling edge	Yes/No	No	Yes	Channel	Channel

* If you enable diagnostics for multiple channels, you will receive an alarm surge on failure of the supply voltage because each enabled channel will detect this fault.

You can prevent this message burst by enabling diagnostics for one channel only.

** The scope can be assigned for each channel during parameter assignment in RUN.

*** For the configuration as a 4 x 8-channel module, a maximum of 16 hardware interrupts can be configured (channels 0 to 15).

4.1.2 Explanation of the parameters of the DI mode

No supply voltage L+

Enabling of the diagnostics, with missing or too little supply voltage L+.

Wire break

Enabling diagnostics if the line to the encoder is interrupted.

Input delay

This parameter can be used to suppress signal disruptions. Changes to the signal are only detected if they are constantly pending longer than the set input delay time.

Hardware interrupt

Specifies whether or not a hardware interrupt is disabled or with which of the following events a hardware interrupt is generated.

- Rising edge
- Falling edge
- Rising and falling edge

4.1.3 Parameters of the Counting mode

Parameters of the DI 32x24VDC HF Count in the Counting mode

If you want to use the module for counting, you need to set the module parameters as DI 32x24VDC HF Count. For channels 0 and channel 1, the following parameter settings are then possible. For channels 2 to 31, the parameter settings apply as with the DI 32x24VDC HF, , see section Parameters DI mode (Page 20).

Table 4- 2 Settable parameters and their defaults in the Counting mode

Parameter	Range of values	Default setting	Parameter reassignment in RUN	Range of effectiveness with configuration software, e.g. STEP 7	
				Integrated in the hardware catalog as of STEP 7, V13 SP1 with HSP 0118 or GSD file PROFINET IO	GSD file PROFIBUS DP
Diagnostics					
• No supply voltage L+	Yes/No	No	Yes	Channel*	---
• Wire break	Yes/No	No	Yes	Channel	---
Input delay	0.05 ms, 0.1 ms, 0.4 ms, 1.6 ms, 3.2 ms, 12.8 ms, 20 ms	3.2 ms; for isochronous mode 0.05 ms (cannot be changed)	Yes	Channel	---
Hardware interrupt	• Disable • Comparison event occurred for DQ	Disable	Yes	Channel	---
Set output DQ	• Between a comparison value and the high counting limit • Between a comparison value and the low counting limit	Between a comparison value and the high counting limit	Yes	Channel	---

Parameter	Range of values	Default setting	Parameter reassign-	Range of effectiveness with configuration software, e.g. STEP 7	
Edge selection	• On rising edge • On falling edge • On rising and falling edge	On rising edge	Yes	Channel	---
High counting limit	0 ... 4294967295	4294967295	Yes	Channel	---
Comparison value	0 ... 4294967295**	1	Yes	Channel	---
Start value	0 ... 4294967295**	0	Yes	Channel	---
Behavior when a counting limit is exceeded	• Stop counting • Continue counting	Stop counting	Yes	Channel	---

* If you enable diagnostics for multiple channels, you will receive an alarm storm on failure of the supply voltage because each enabled channel will detect this fault.
You can prevent this message burst by enabling diagnostics for one channel only.

** Comparison value or start value must be less than or equal to the value for the high counting limit.

4.1.4 Explanation of the parameters of the Counting mode

Missing supply voltage L+

Enabling of the diagnostics, with missing or too little supply voltage L+.

Wire break

Enabling diagnostics if the line to the encoder is interrupted.

Input delay

This parameter can be used to suppress signal disruptions. Changes to the signal are only detected if they are constantly pending longer than the set input delay time.

Hardware interrupt

Specifies whether or not a hardware interrupt is generated by the event "Comparison event occurred for DQ" (rising edge at STS_DQ).

Set output DQ

With this parameter, you specify the behavior of the STS_DQ bit in the feedback interface. You can assign this bit in the user program, for example, with a hardware output, see Address space Counting mode (Page 30).

Behavior	Meaning
Between a comparison value and the high counting limit	STS_DQ bit is set if the following condition is met: Comparison value < = counted value < = high counting limit
Between a comparison value and the low counting limit	STS_DQ bit is set if the following condition is met: Low counting limit < = counted value < = comparison value

Edge selection

With this parameter you specify which edge is used to count.

You can select the following options:

- On rising edge
- On falling edge
- On rising and falling edge

High counting limit

With this parameter you limit the counting range. You can enter a value up to 4294967295 (2^{32} - 1).

Comparison value

With this parameter you specify the count value at which the digital output DQ (STS_DQ bit of the feedback interface) switches due to the selected comparison event.

Start value

With this parameter, you specify the value at which counting begins and is continued if defined events occur. The following condition must be met:

Low counting limit < = start value < = high counting limit.

Behavior when a counting limit is exceeded

With this parameter, you specify the behavior if a counting limit is exceeded.

Behavior	Meaning
Stop counting	After a counting limit is exceeded, the counting procedure is aborted and the STS_GATE bit (internal gate) is reset. To restart the counting, the SW_GATE bit must be reset via the control interface and set again.
Continue counting	After a counting limit is exceeded, the counted value is set to the other counting limit and counting is continued.

4.2 Address space

The module can be configured differently in STEP 7; see following table. Depending on the configuration, additional/different addresses are assigned in the process image of the inputs.

The letters "a to d" are printed onto the module. "EB a" for example, stands for module start address input byte a.

Configuration options of DI 32x24VDC HF

You can configure the module with STEP 7 (TIA Portal) or with a GSD file.

When you configure the module by means of the GSD file, the configurations are available under different abbreviations/module names.

The following configurations are possible:

Table 4- 3 Configuration options

Configuration	Short designation/ module name in the GSD file	Configuration software, e.g., with STEP 7 (TIA Portal)	
		Integrated in hard-ware catalog STEP 7 (TIA Portal)	GSD file in STEP 7 (TIA Portal) V12 or higher or STEP 7 V5.5 SP3 or higher
1 x 32-channel without value status	DI 32x24VDC HF	V12 or higher	X
1 x 32-channel with value status	DI 32x24VDC HF QI	V12 or higher	X
4 x 8-channel without value status	DI 32x24VDC HF S	V13 update 3 or higher (PROFINET IO only)	X (PROFINET IO only)
4 x 8-channel with value status	DI 32x24VDC HF S QI	V13 update 3 or higher (PROFINET IO only)	X (PROFINET IO only)
1 x 32-channel with value status for module-internal Shared Input with up to 4 submodules	DI 32x24VDC HF MSI	V13 update 3 or higher (PROFINET IO only)	X (PROFINET IO only)
1 x 32 channel with value status (channel 0 and channel 1 for counting, channels 2 to 31 as digital inputs).	DI 32x24VDC HF Count	V13, SP1 with HSP 0118 or higher	X (PROFINET IO only)

Value status (Quality Information, QI)

The value status is always activated for the following module names:

- DI 32x24VDC HF QI
- DI 32x24VDC HF S QI
- DI 32x24VDC HF MSI
- DI 32x24VDC HF Count

An additional bit is assigned to each channel for the value status. The value status bit indicates if the read in digital value is valid. (0 = value is incorrect).

4.2.1 Address space DI mode

Address space for configuration as 32-channel DI 32x24VDC HF QI

The following figure shows the assignment of the address space for the configuration as a 32-channel module with value status. You can freely assign the start address for the module. The addresses of the channels are derived from the start address.

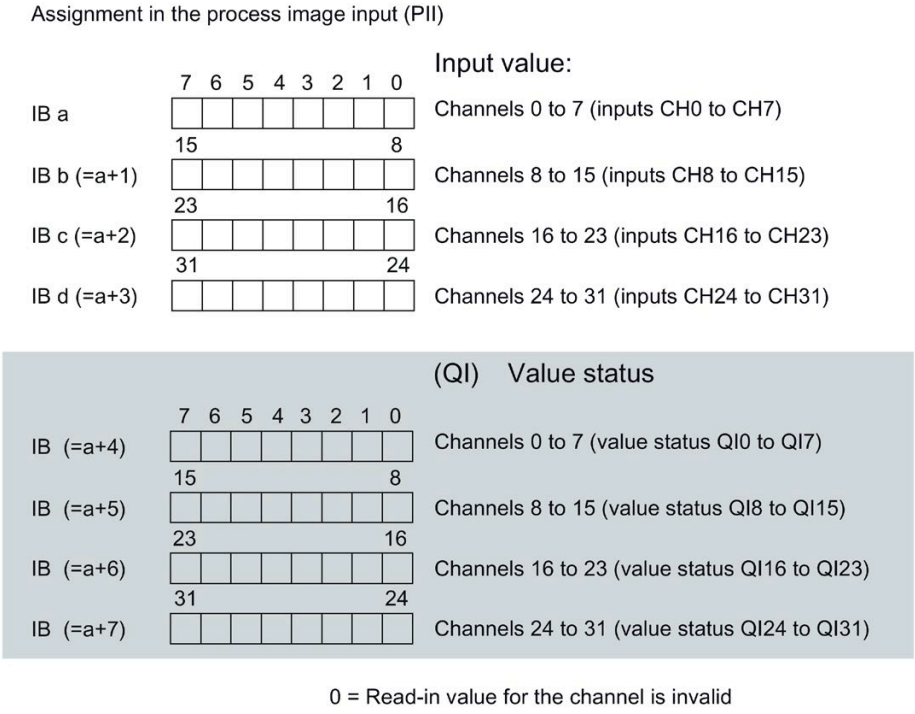

Figure 4-1 Address space for configuration as 32-channel DI 32x24VDC HF QI

Address space for configuration as 4 x 8-channel DI 32x24VDC HF S QI

For the configuration as a 4 x 8-channel module, the channels of the module are divided into four submodules. The submodules can be assigned to different IO controllers when the module is used in a shared device.

The number of I/O controllers depends on the interface module being used. Observe the information in the manual for the particular interface module.

Contrary to the 1 x 32-channel module configuration, each of the four submodules has a freely assignable start address.

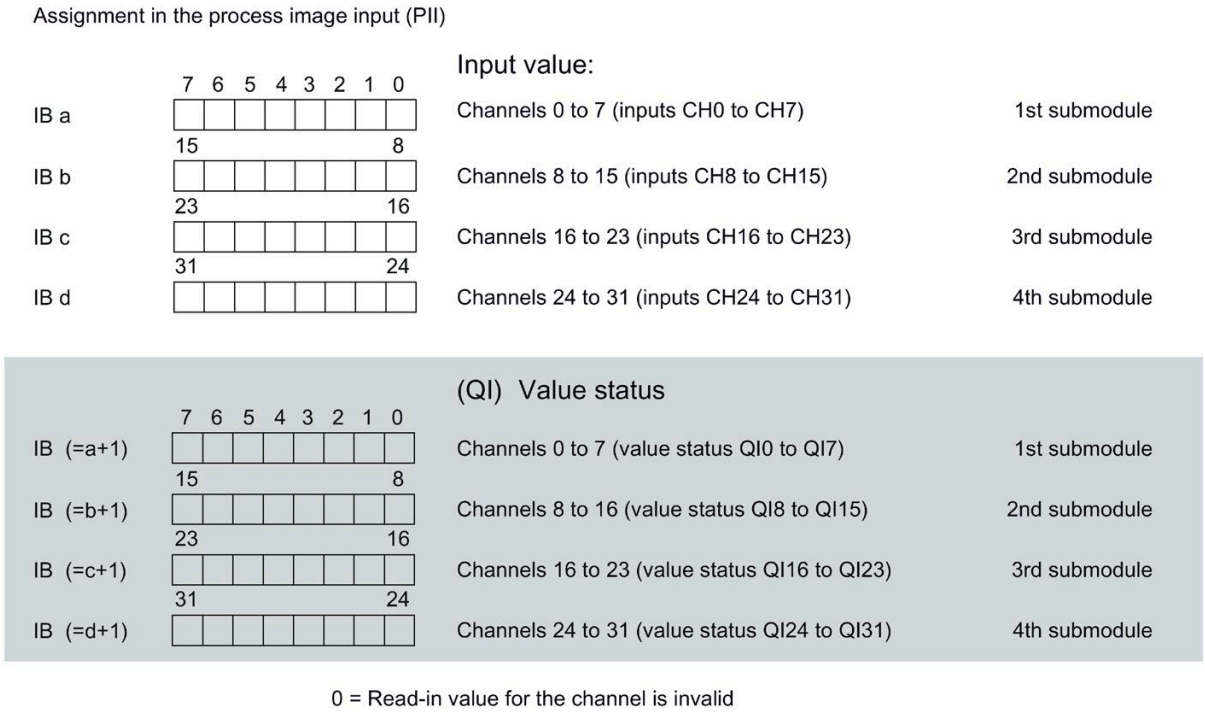

Figure 4-2 Address space for configuration as 4 x 8-channel DI 32x24VDC HF S QI

Address space for configuration as 1 x 32-channel DI 32x24VDC HF MSI

The channels 0 to 31 of the module are copied in up to four submodules with configuration 1 x 32-channel module (Module-internal shared input, MSI). Channels 0 to 31 are then available with identical input values in different submodules. These submodules can be assigned to up to four IO controllers when the module is used in a shared device. Each IO controller has read access to the same channels.

The number of I/O controllers depends on the interface module being used. Please observe the information in the manual for the particular interface module.

Value status (Quality Information, QI)

The meaning of the value status depends on the submodule on which it occurs.

For the first submodule (=basic submodule), the value status 0 indicates that the value is incorrect.

For the 2nd to 4th submodule (=MSI submodule), the value status 0 indicates that the value is incorrect or the basic submodule has not yet been configured (not ready).

The following figure shows the assignment of the address space with submodules 1 and 2 and the value status.

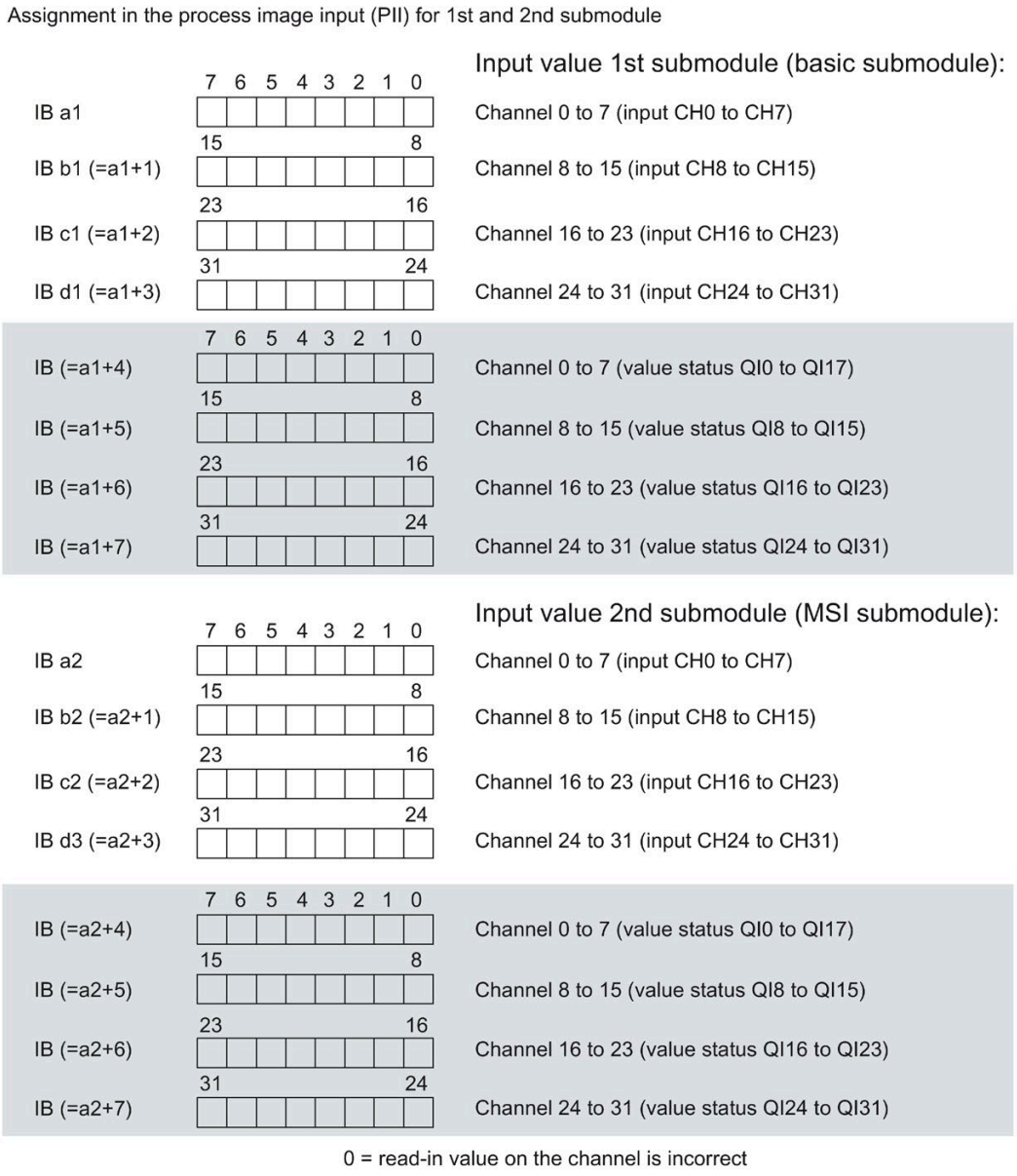

Figure 4-3 Address space for configuration as 1 x 32-channel DI 32x24VDC HF MSI with value status

The following figure shows the assignment of the address space with submodules 3 and 4 and the value status.

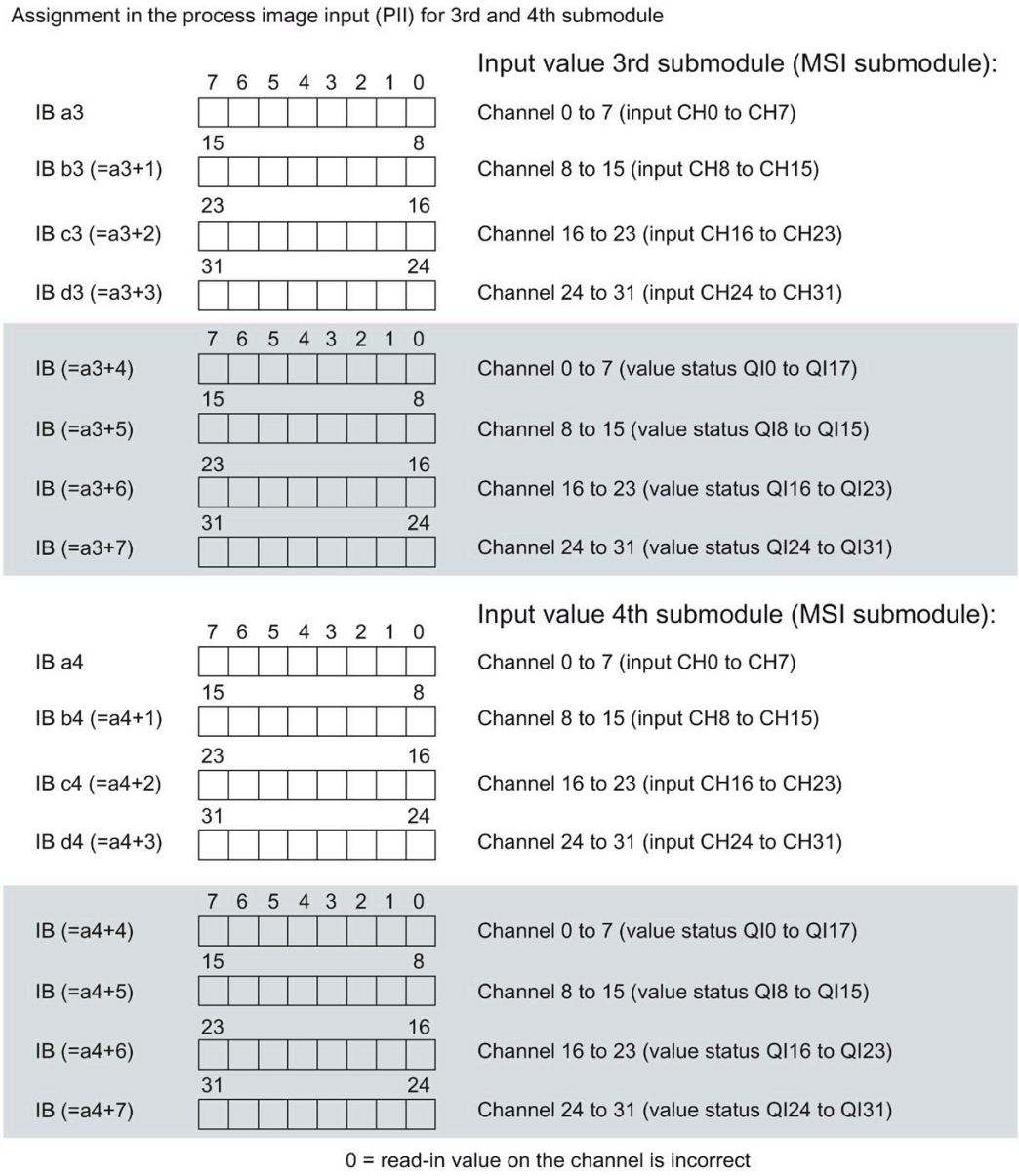

Figure 4-4 Address space for configuration as 1 x 32-channel DI 32x24VDC HF MSI with value status

Reference

You can find information on the module-internal shared input/shared output (MSI/MSO) function in the section Module-internal shared input/shared output (MSI/MSO) of the function manual PROFINET with STEP 7 V15 (http://support.automation.siemens.com/WW/view/en/49948856).

4.2.2 Address space Counting mode

Address space for configuration as 1 x 32-channel DI 32x24VDC Count

The address space of channel 0 and channel 1 used for counting consists of the control and feedback interface. The Count function is controlled directly via the two interfaces. With suitable parameter assignment, a hardware interrupt is triggered.

If you use the module in the "Counting mode" (channels 0 and 1), the module occupies the following address areas:

- 16 bytes in the process image output (control interface).
- 24 bytes in the process image input (feedback interface).

Control interface

The following figure shows the address assignment of the module in the process image output. You use the control interface for example to start the counter or to set the counter value. With the "SW gate" control bit you open and close the software gate of the corresponding channel.

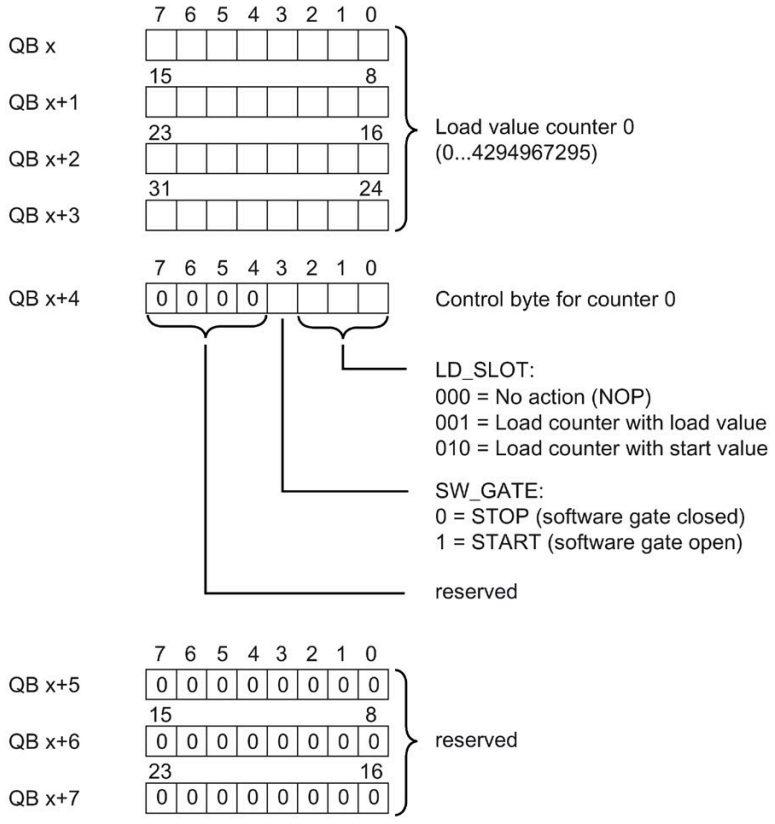

Figure 4-5 Assignment of the address space of the control interface of the DI 32x24VDC Count (bytes 0 to 7)

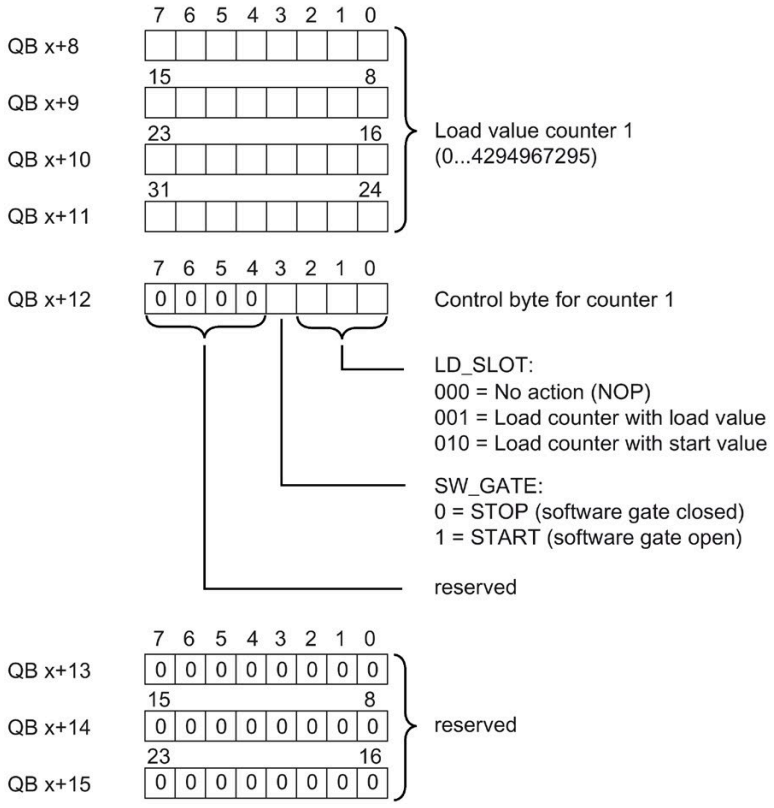

Figure 4-6 Assignment of the address space of the control interface of the DI 32x24VDC Count (bytes 8 to 15)

Feedback interface

The following figure shows the address assignment of the module in the process image input. The feedback interface for the counters (channels 0 and 1) begins at input byte x+8.

Via the feedback interface, the user program receives current counted values and status information from the module.

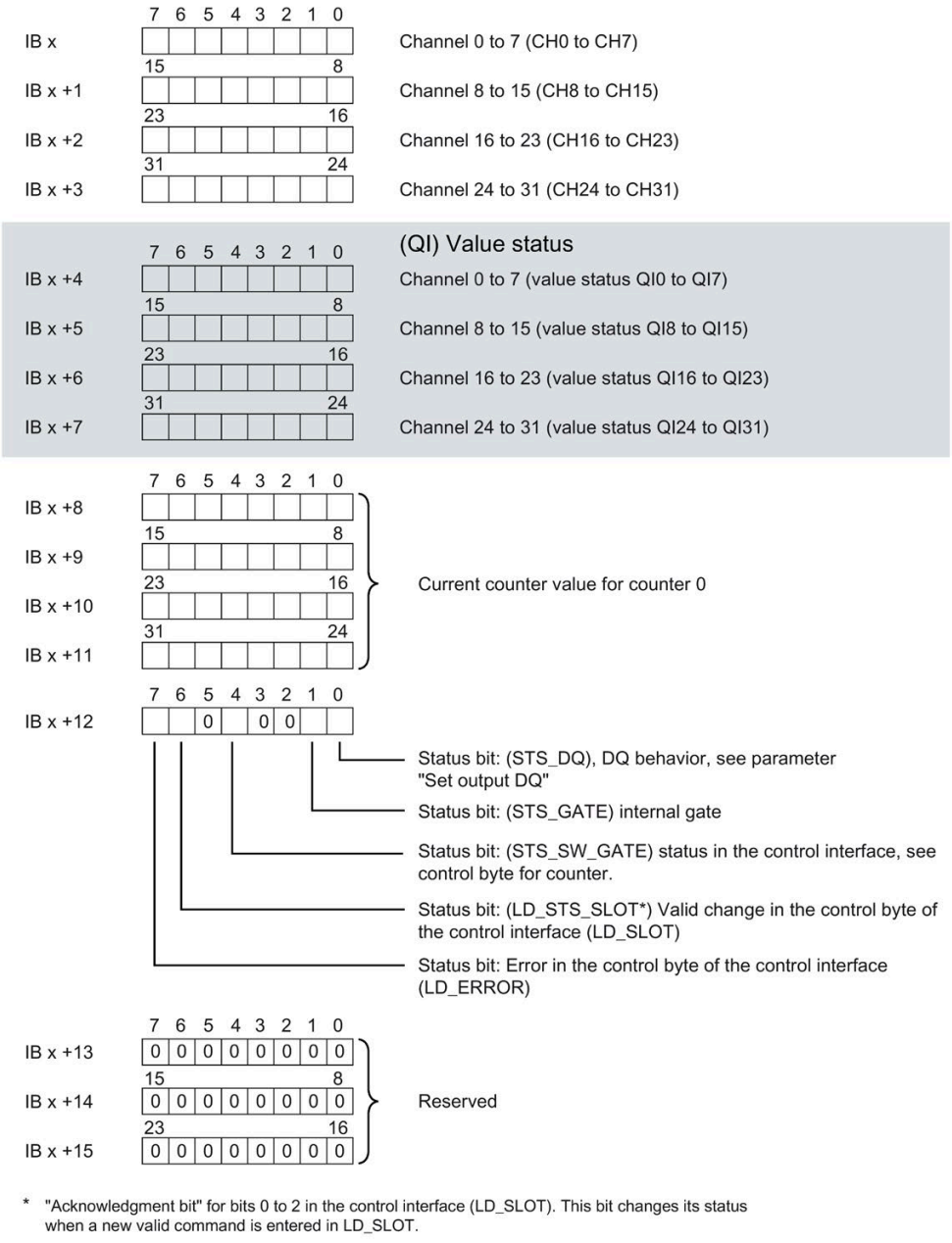

Figure 4-7 Assignment of the address space of the feedback interface of the DI 32x24VDC Count (bytes 0 to 15)

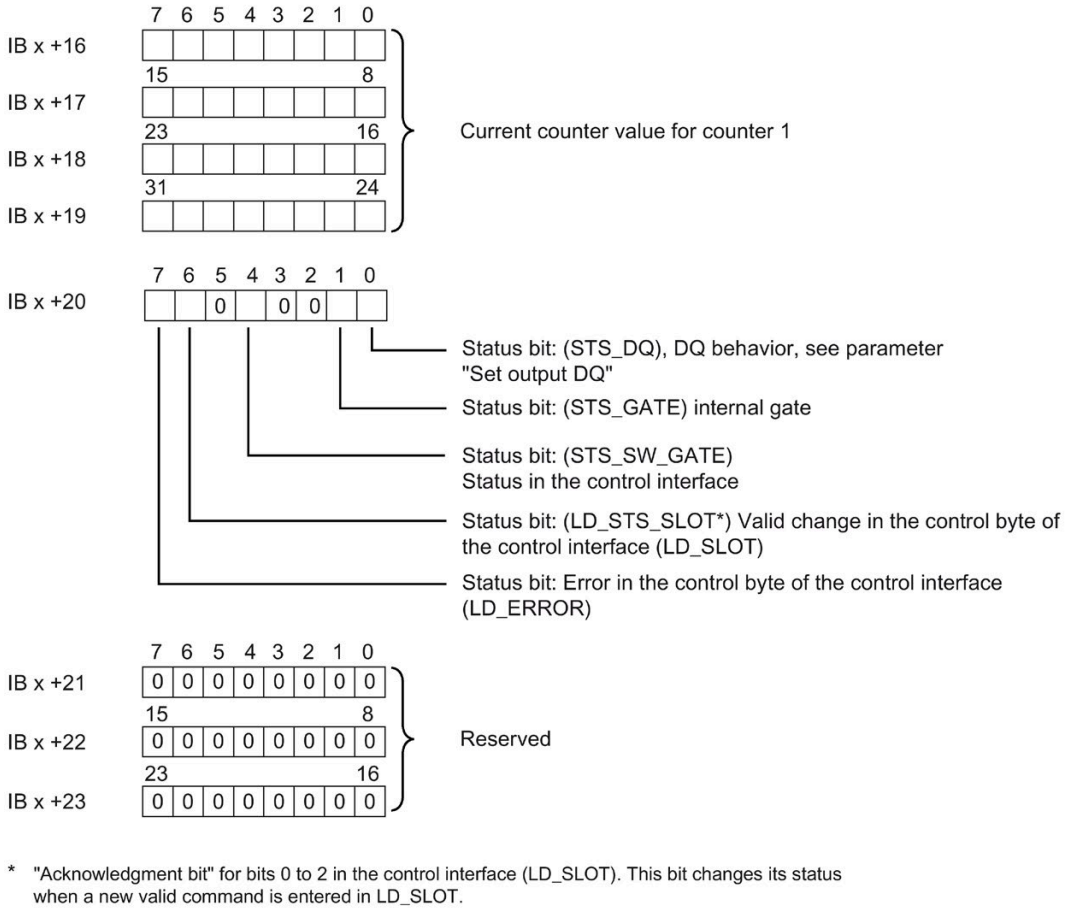

* "Acknowledgment bit" for bits 0 to 2 in the control interface (LD_SLOT). This bit changes its status when a new valid command is entered in LD_SLOT.

Figure 4-8 Assignment of the address space of the feedback interface of the DI 32x24VDC Count (bytes 16 to 23)

4.2.3 Examples of counting

In this section, you will find examples of the behavior of the counter and how you can specify this behavior. You specify the properties of the counter in the parameter assignment.

Behavior when a counting limit is exceeded - Stop counting

The following section describes the effects of the parameter "Behavior when a counting limit is exceeded = Stop counting". To control the counter, the bits of the control byte of the control interface are used, see section Address space Counting mode (Page 30)

Counting begins at the current counted value (the SW_GATE is set in the control byte). Bit sequence in the control byte of the control interface 0000 1000.

After the high counting limit is violated, counting is aborted (counting stops) and the counted value jumps to the low counting limit = 0. The STS_GATE bit is reset.

To restart the counting, the SW_GATE bit must be reset via the control interface and set again.

Whether or not counting is started again with the current counter value or with the start value depends on the command byte in the control interface.
Bit sequence in control byte of the control interface:

- bit 0 to 2 = "000" Start with current counter value
- bit 0 to 2 = "010" Start with start value

If the SW_GATE bit is reset in the control byte of the control interface before reaching the high counting limit, counting is stopped.

The following figure shows an example of the principle of stopping counting when a counting limit is exceeded.

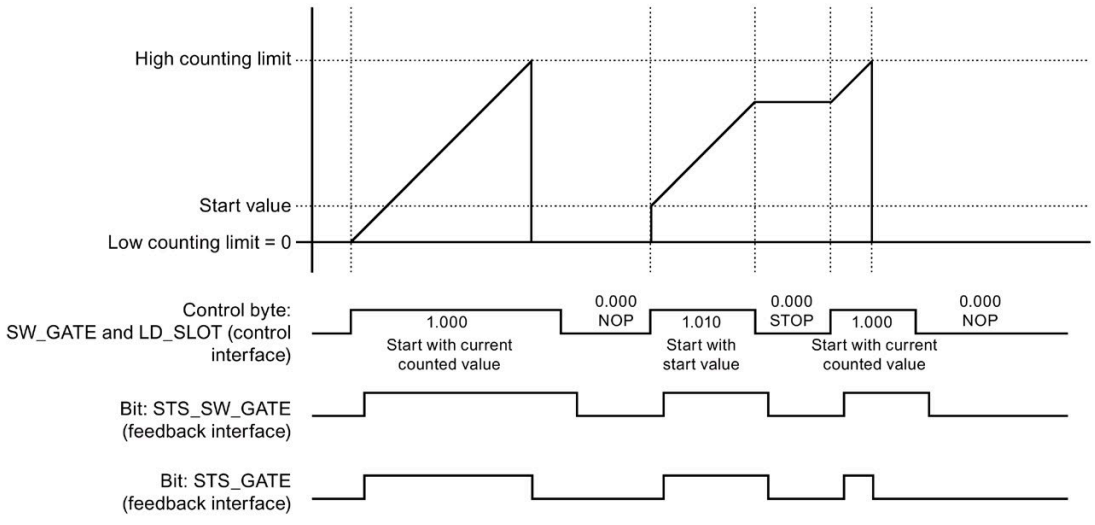

Figure 4-9 Principle: Stop counting

Behavior when a counting limit is exceeded - Continue counting

The following section describes the effects of the parameter "Behavior when a counting limit is exceeded = Continue counting". To control the counter, the bits of the control byte of the control interface are used, see section Address space Counting mode (Page 30), subsection Control interface.

Counting begins at the current counted value (the SW-GATE is set in the control byte). Bit sequence in the control byte of the control interface 0000 1000.

After the high counting limit is exceeded, the counted value jumps to the low counting limit = 0 and counting is continued.

If the SW_GATE bit is reset in the control byte of the control interface before reaching the high counting limit, counting is stopped.

The following figure shows an example of the principle of continuing counting when a counting limit is exceeded.

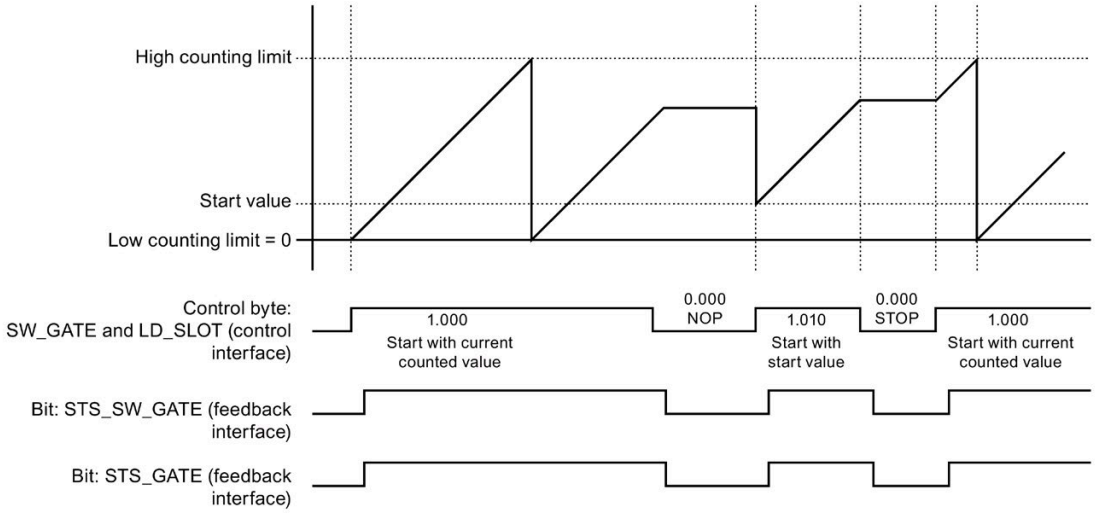

Figure 4-10 Principle: Continue counting

Set output DQ - behavior of the STS_DQ bit

The following section shows the behavior of the STS_DQ bit with the parameter assignment "Set output DQ = between comparison value and high counting limit".

The STS_DQ bit is set to 1

when the comparison value < = counted value <= high counting limit is reached.

As an option, a hardware interrupt can be enabled in the parameter assignment. This is generated with the parameter rising edge of the STS_DQ bit.

The following figure shows an example of the behavior of the STS_DQ bit between the comparison value and high counting limit.

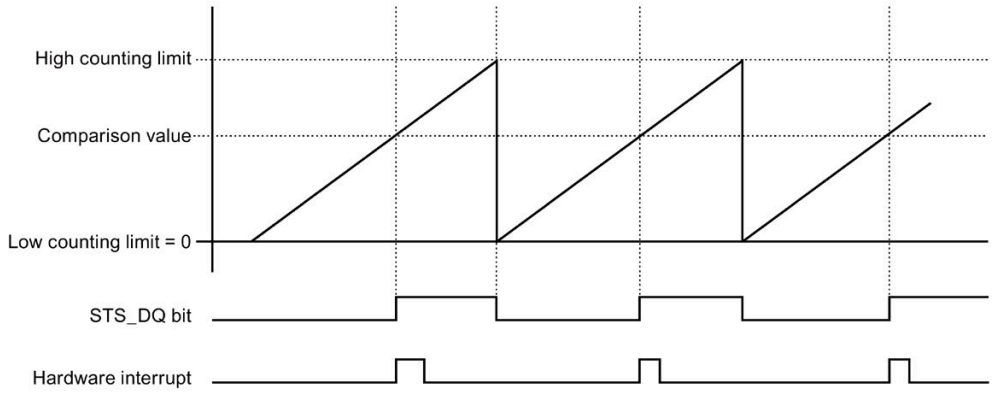

Figure 4-11 Behavior of the STS_DQ bit and hardware interrupt

The following section shows the behavior of the STS_DQ bit with the parameter assignment "Set output DQ = between low counting limit and comparison value".

The STS_DQ bit is set to 1

when the low counting limit < = counted value < = comparison value is reached.

As an option, a hardware interrupt can be enabled in the parameter assignment. This is generated with the parameter rising edge of the STS_DQ bit.

The following figure shows an example of the behavior of the STS_DQ bit between the low counting limit and comparison value.

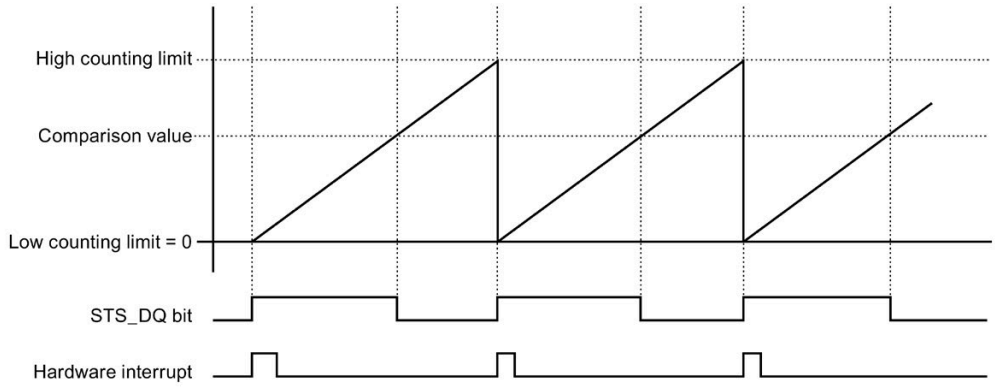

Figure 4-12 Behavior of the STS_DQ bit and hardware interrupt

Counting limits

The counting limits define the range of values of the counted value used. The counting limits can be set in the parameters and can be changed with the user program during runtime.

Configurable high counting limit: 4294967295 (2^{32} -1).

Low counting limit (not settable): 0

You can continue or terminate (automatic gate stop) counting if a counting limit is exceeded, see the parameter "Behavior when a counting limit is exceeded".

Start value/load value

The start value is specified in the parameter assignment with STEP 7 (TIA Portal). The load value can be changed by the user program. Both values must be between the low counting limit and high counting limit.

Comparison values

You specify a comparison value per channel that can control the feedback bit STS_DQ regardless of the user program. When the current counted value corresponds to the comparison condition set in the parameters, the feedback bit STS_DQ is set. You can use the feedback bit STS_DQ to control a digital output of a digital output module.

The comparison values can be set in the parameters and can be changed during runtime via the user program with parameter data record 0/1.

Gate control

The opening and closing of the software gate (SW-GATE) defines the time window in which the count signals are acquired. The software gate is controlled by the user program.

Reference

You can find additional information on the counting functionality in the function manual S7-1500, ET 200MP, ET 200SP counting, measuring and position detection (http://support.automation.siemens.com/WW/view/en/59709820).

Interrupts/diagnostics alarms

5

5.1 Status and error displays

LED displays

The following figure shows you the LED displays (status and error displays) of DI 32x24VDC HF.

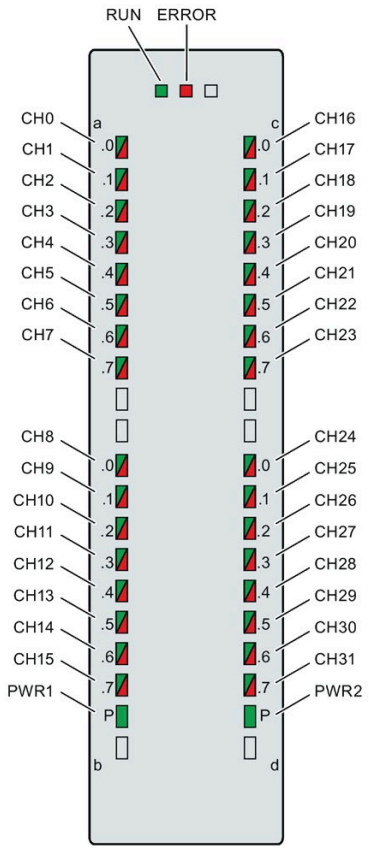

Figure 5-1 LED displays of the module DI 32x24VDC HF

Meaning of the LED displays

The following tables explain the meaning of the status and error displays. Remedial measures for diagnostic reports can be found in chapter Diagnostics alarms (Page 43).

RUN and ERROR LED

Table 5- 1 Status and error displays RUN and ERROR

LED		Meaning	Remedy
RUN	**ERROR**		
□ Off	□ Off	Voltage missing or too low at backplane bus	• Switch on the CPU and/or the system power supply modules. • Verify that the U connectors are inserted. • Check to see if too many modules are inserted.
☼ Flashes	□ Off	The module starts and flashes until the valid parameter assignment is set.	---
■ On	□ Off	Module is configured	
■ On	☼ Flashes	Indicates module errors (at least one error at one channel, e.g., wire break).	Evaluate the diagnostics data and eliminate the error (e.g., wire break).
☼ Flashes	☼ Flashes	Hardware defective	Replace the module.

PWR1 and PWR2 LED

Table 5- 2 PWR1 and PWR2 status indication

LED PWR1 / PWR2	Meaning	Remedy
□ Off	Supply voltage L+ too low or missing	Check supply voltage L+.
■ On	Supply voltage L+ is present and OK	---

CHx LED

Table 5- 3 CHx status display

LED CHx	Meaning	Remedy
□ Off	0 = Status of the input signal	---
■ On	1 = Status of the input signal	---
■ On	Diagnostics: Wire break	Check the wiring. When using simple switches, deactivate diagnostics or connect a resistor (25 kΩ ... 45 kΩ) to the encoder contacts.
	Supply voltage L+ too low or missing	Check supply voltage L+

5.2 Interrupts

Digital input module DI 32x24VDC HF supports diagnostic and hardware interrupts.

You can find detailed information on the error event in the error organization block with the "RALRM" instruction (read additional interrupt info) and in the STEP 7 online help.

Diagnostics interrupt

The module generates a diagnostic interrupt at the following events:

- Missing supply voltage L+
- Wire break
- Parameter assignment error

Hardware interrupt

The module generates a hardware interrupt at the following events:

- Rising edge
- Falling edge
- Rising and falling edge
- Comparison event occurred for DQ (only in "Counting mode")

The module channel that triggered the hardware interrupt is entered in the start information of the organization block. The figure below shows the assignment to the bits of the local data double word 8.

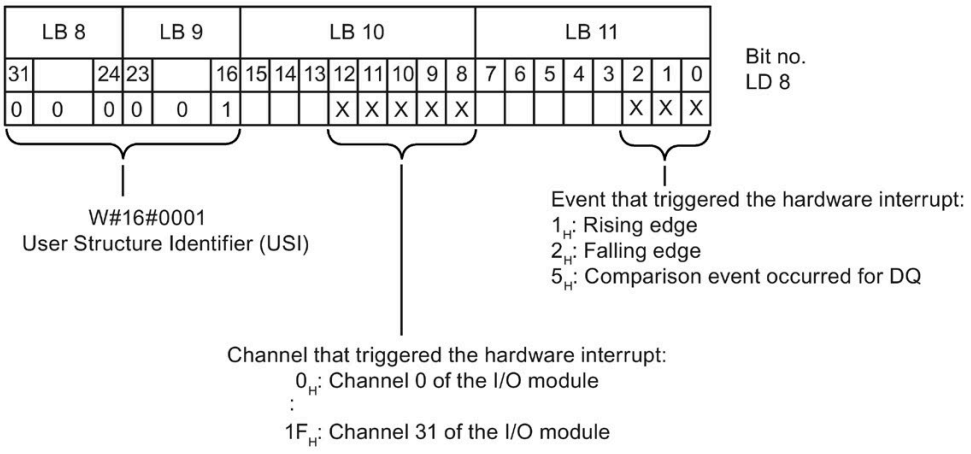

Figure 5-2 Start information of the organization block

Structure of the additional interrupt information

Table 5- 4 Structure of USI = W#16#0001

Data block name		Contents	Comment	Bytes
USI (User Structure Identifier)		W#16#0001	Additional interrupt info for hardware interrupts of the I/O module	2
The channel that triggered the hardware interrupt follows.				
	Channel	B#16#00 to B#16#1F	Number of the event-triggering channel (channel 0 to channel 31 of the module)	1
It follows the error event that triggered the hardware interrupt.				
	Event	B#16#01	Rising edge	1
		B#16#02	Falling edge	
		B#16#05	Comparison event occurred for DQ (only in "Counting mode")	

5.3 Diagnostics alarms

Diagnostics alarms

A diagnostics alarm is generated and the ERROR-LED flashes for each diagnostics event on the module. The diagnostics alarms can, for example, be read out in the diagnostics buffer of the CPU. You can evaluate the error codes with the user program.

If the module is operated distributed with PROFIBUS DP in an ET 200MP system, you have the option to read out diagnostics data with the instruction RDREC or RD_REC using data record 0 and 1. The structure of the data records is available on the Internet in the "Manual for interface module IM 155-5 DP ST (6ES7155-5BA00-0AB0)".

Table 5- 5 Diagnostics alarms, their meaning and corrective measures

Diagnostics alarm	Error code	Meaning	Corrective measures
Wire break*	6H	Impedance of encoder circuit too high	Use a different encoder type or modify the wiring, for example, using cables with larger cross-section
		Wire break between the module and sensor	Connect the cable
		Channel not connected (open)	• Disable diagnostics • Connect a resistor of 25 kΩ to 45 kΩ to the encoder contacts
Parameter assignment error	10H	• The module cannot evaluate parameters for the channel • Incorrect parameter assignment	Correct the parameter assignment
Load voltage missing	11H	Supply voltage L+ of the module is missing	Connect supply voltage L+ to module/channel
Hardware interrupt lost	16H	The module cannot trigger an interrupt because the previous interrupt was not acknowledged; possibly a configuration error	• Change interrupt processing in the CPU and, if necessary, edit the module parameters. • The error persists until the module is assigned new parameters

* If the supply voltage fails in case of a pending wire break diagnostics, the value status momentarily indicates an incorrect value.

Technical specifications 6

Technical specifications of the DI 32x24VDC HF

The following table shows the technical specifications as of 05/2022. You will find a data sheet including daily updated technical specifications on the Internet (https://support.industry.siemens.com/cs/ww/en/pv/6ES7521-1BL00-0AB0/td?dl=en).

Article number	6ES7521-1BL00-0AB0
General information	
Product type designation	DI 32x24VDC HF
HW functional status	from FS04
Firmware version	V2.2.1
• FW update possible	Yes
Product function	
• I&M data	Yes; I&M0 to I&M3
• Isochronous mode	Yes
• Prioritized startup	Yes
Engineering with	
• STEP 7 TIA Portal configurable/integrated from version	V13 SP1 / -
• STEP 7 configurable/integrated from version	V5.5 SP3 / -
• PROFIBUS from GSD version/GSD revision	V1.0 / V5.1
• PROFINET from GSD version/GSD revision	V2.3 / -
Operating mode	
• DI	Yes
• Counter	Yes
• Oversampling	No
• MSI	Yes
Supply voltage	
Rated value (DC)	24 V
permissible range, lower limit (DC)	19.2 V
permissible range, upper limit (DC)	28.8 V
Reverse polarity protection	Yes
Input current	
Current consumption, max.	40 mA; 20 mA per group with 24 V DC supply
Power	
Power available from the backplane bus	1.1 W
Power loss	
Power loss, typ.	4.2 W

Article number	6ES7521-1BL00-0AB0
Digital inputs	
Number of digital inputs	32
Digital inputs, parameterizable	Yes
Source/sink input	P-reading
Input characteristic curve in accordance with IEC 61131, type 3	Yes
Digital input functions, parameterizable	
• Gate start/stop	Yes
• Freely usable digital input	Yes
• Counter	
– Number, max.	2
– Counting frequency, max.	6 kHz; FS04 and FW V2.2.1 or higher
– Counting width	32 bit
– Counting direction up/down	Up
Input voltage	
• Rated value (DC)	24 V
• for signal "0"	-30 to +5 V
• for signal "1"	+11 to +30V
Input current	
• for signal "1", typ.	2.5 mA
Input delay (for rated value of input voltage) for standard inputs	
– parameterizable	Yes; 0.05 / 0.1 / 0.4 / 1.6 / 3.2 / 12.8 / 20 ms
– at "0" to "1", min.	0.05 ms
– at "0" to "1", max.	20 ms
– at "1" to "0", min.	0.05 ms
– at "1" to "0", max.	20 ms
for interrupt inputs	
– parameterizable	Yes
for technological functions	
– parameterizable	Yes
Cable length	
• shielded, max.	1 000 m
• unshielded, max.	600 m
Encoder	
Connectable encoders	
• 2-wire sensor	Yes
– permissible quiescent current (2-wire sensor), max.	1.5 mA

Article number	6ES7521-1BL00-0AB0
Isochronous mode	
Filtering and processing time (TCI), min.	80 µs; At 50 µs filter time
Bus cycle time (TDP), min.	250 µs
Interrupts/diagnostics/status information	
Diagnostics function	Yes
Alarms	
• Diagnostic alarm	Yes
• Hardware interrupt	Yes
Diagnoses	
• Monitoring the supply voltage	Yes
• Wire-break	Yes; to I < 350 µA
• Short-circuit	No
Diagnostics indication LED	
• RUN LED	Yes; green LED
• ERROR LED	Yes; red LED
• Monitoring of the supply voltage (PWR-LED)	Yes; green LED
• Channel status display	Yes; green LED
• for channel diagnostics	Yes; red LED
• for module diagnostics	Yes; red LED
Potential separation	
Potential separation channels	
• between the channels	Yes
• between the channels, in groups of	16
• between the channels and backplane bus	Yes
• between the channels and the power supply of the electronics	No
Isolation	
Isolation tested with	707 V DC (type test)
Standards, approvals, certificates	
Suitable for safety functions	No
Ambient conditions	
Ambient temperature during operation	
• horizontal installation, min.	-30 °C; From FS05
• horizontal installation, max.	60 °C
• vertical installation, min.	-30 °C; From FS05
• vertical installation, max.	40 °C
Altitude during operation relating to sea level	
• Installation altitude above sea level, max.	5 000 m; Restrictions for installation altitudes > 2 000 m, see manual

Article number	6ES7521-1BL00-0AB0
Dimensions	
Width	35 mm
Height	147 mm
Depth	129 mm
Weights	
Weight, approx.	260 g

Tolerances of the programmable input delay

Table 6- 1 Tolerances of the programmable input delay

Input delay	Tolerance range
0.05 ms	43 µs to 57 µs
0.1 ms	86 µs to 114 µs
0.4 ms	344 µs to 456 µs
1.6 ms	1.5 ms to 1.9 ms
3.2 ms (preset)	3 ms to 4 ms
12.8 ms	12 ms to 15 ms
20 ms	19 ms to 23 ms

Dimensional drawing

A

The dimensional drawing of the module on the mounting rail, as well as a dimensional drawing with open front cover, are provided in the appendix. Always observe the specified dimensions for installation in cabinets, control rooms, etc.

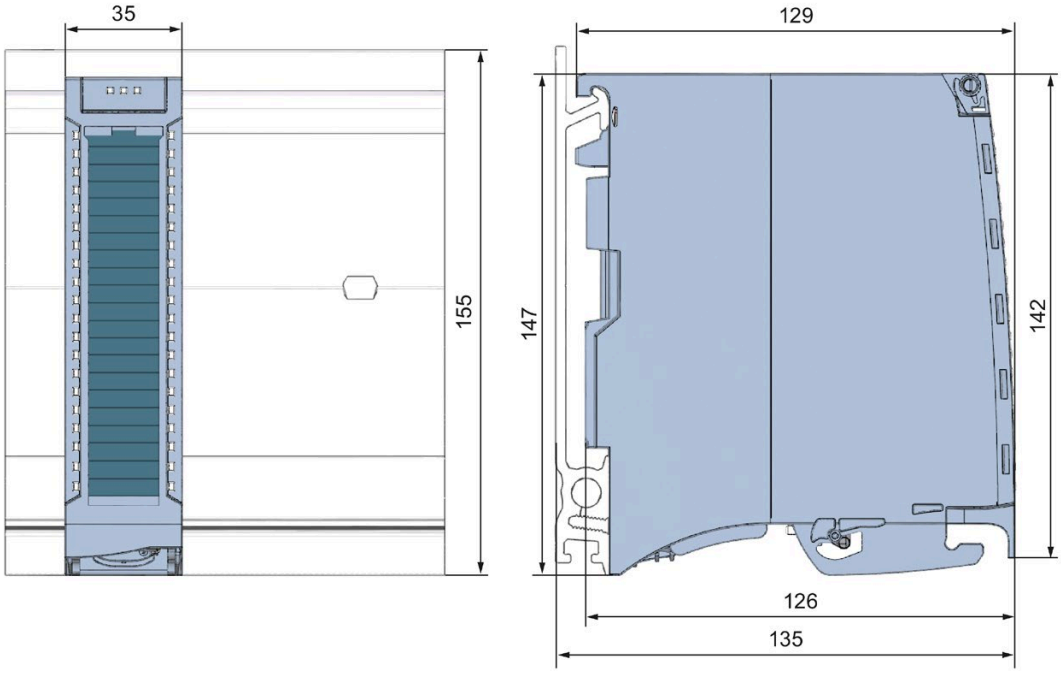

Figure A-1 Dimensional drawing of the DI 32x24VDC HF module

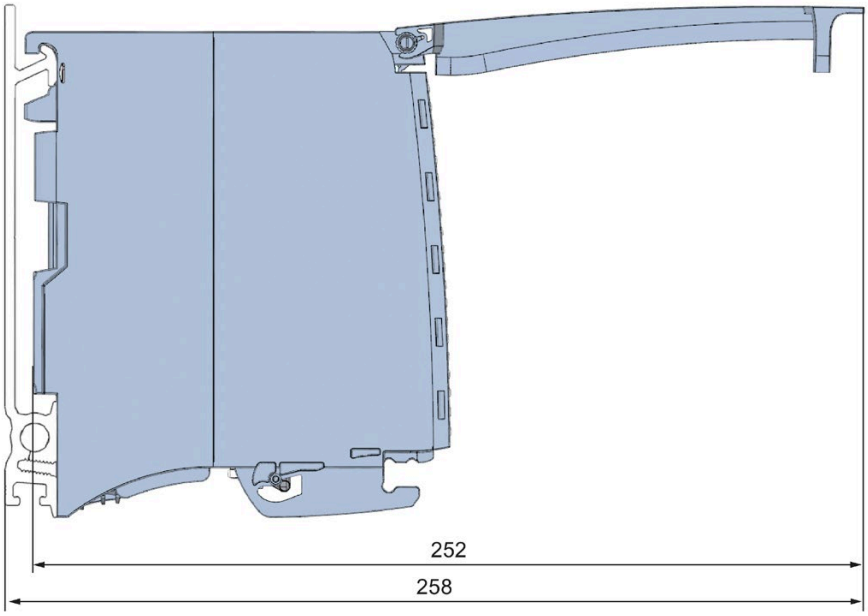

Figure A-2 Dimensional drawing of the DI 32x24VDC HF module, side view with open front cover

Parameter data records

B

B.1 Parameter assignment and structure of the parameter data records

The data records of the module have an identical structure, regardless of whether you configure the module with PROFIBUS DP or PROFINET IO.

Dependencies for configuration with GSD file

When configuring the module with a GSD file, remember that the settings of some parameters are dependent on each other. The parameters are only checked for plausibility by the module after the transfer to the module.

DI mode: no dependencies. You can assign the individual parameters in any combination.

Counting mode: The following table lists the parameters that depend on one another.

Table B- 1 Dependencies of parameters for configuration with GSD file

Device-specific parameters (GSD file)	Dependent parameters
Comparison value	0 ... high counting limit
Start value	0 ... high counting limit

Parameter assignment in the user program

You have the option to reconfigure the module in RUN (e.g. the input delay values of selected channels can be edited without having an effect on the other channels).

Parameter assignment in RUN

The WRREC instruction is used to transfer the parameters to the module using data records 0 to 31. The parameters set in STEP 7 do not change in the CPU, which means the parameters set in STEP 7 are still valid after a restart.

The parameters are only checked for plausibility by the module after the transfer.

Output parameter STATUS

The module ignores errors that occurred during the transfer of parameters with the WRREC instruction and continues operation with the previous parameter assignment. However, a corresponding error code is written to the STATUS output parameter.

The description of the WRREC instruction and the error codes is available in the STEP 7 online help.

Operation of the module behind a PROFIBUS DP interface module

If the module is operated behind a PROFIBUS DP interface module, the parameter data records 0 and 1 are not read back. You get the diagnostics data records 0 and 1 for the read back parameter data records 0 and 1. You can find more information in the Interrupts section of the PROFIBUS DP interface module device manual on the Internet (http://support.automation.siemens.com/WW/view/en/78324181).

B.2 Structure of the parameter data records DI mode

Assignment of data record and channel

For the configuration with 1 x 32 channels, the parameters are located in data records 0 to 31 and are assigned as follows:

- Data record 0 for channel 0
- Data record 1 for channel 1
- ...
- Data record 30 for channel 30
- Data record 31 for channel 31

For the configuration as a 4 x 8-channel module, the module has 4 submodules with eight channels each. The parameters for the channels are located in data records 0 to 7 and are assigned as follows:

- Data records 0 to 7 for channels 0 to 7 (submodule 1)
- Data records 0 to 7 for channels 8 to 15 (submodule 2)
- Data records 0 to 7 for channels 16 to 23 (submodule 3)
- Data records 0 to 7 for channels 24 to 31 (submodule 4)

Address the respective submodule for data record transfer.

Structure of a data record in the DI mode

The example in the following figure shows the structure of data record 0 for channel 0. The structure of channels 1 to 31 is identical. The values in byte 0 and byte 1 are fixed and may not be changed.

Enable a parameter by setting the corresponding bit to "1".

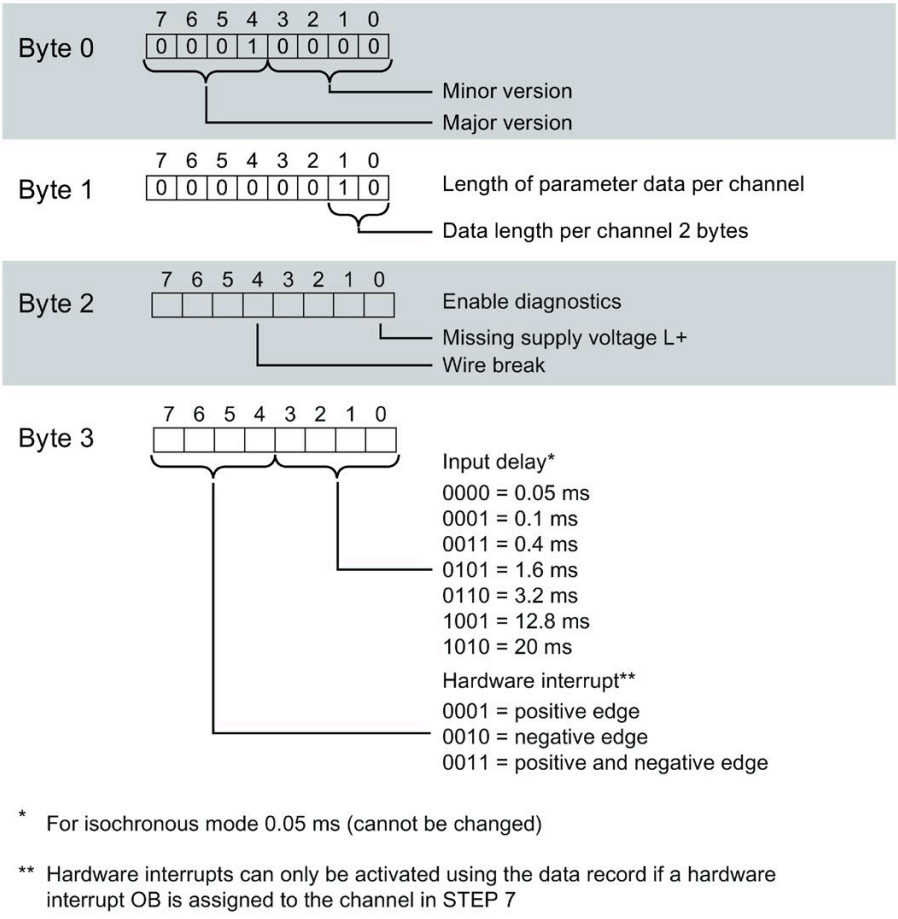

* For isochronous mode 0.05 ms (cannot be changed)

** Hardware interrupts can only be activated using the data record if a hardware interrupt OB is assigned to the channel in STEP 7

Figure B-1 Structure of data record 0: Bytes 0 to 3

B.3 Structure of the parameter data records Counting mode

Assignment of data record and channel

For the configuration with 1 x 32 channels, the parameters are located in data records 0 to 31 and are assigned as follows:

- Data record 0 for channel 0 with counting function
- Data record 1 for channel 1 with counting function
- Data record 2 for channel 2 (structure as in DI mode)
- ...
- Data record 30 for channel 30 (structure as in DI mode)
- Data record 31 for channel 31 (structure as in DI mode)

Structure of data record 0 of the Counting mode

The example in the figure below shows the structure of data record 0 for channel 0. The structure of channel 1 is identical, the values are located in data record 1.

The values in byte 0 and byte 1 are fixed and may not be changed.

Enable a parameter by setting the corresponding bit to "1".

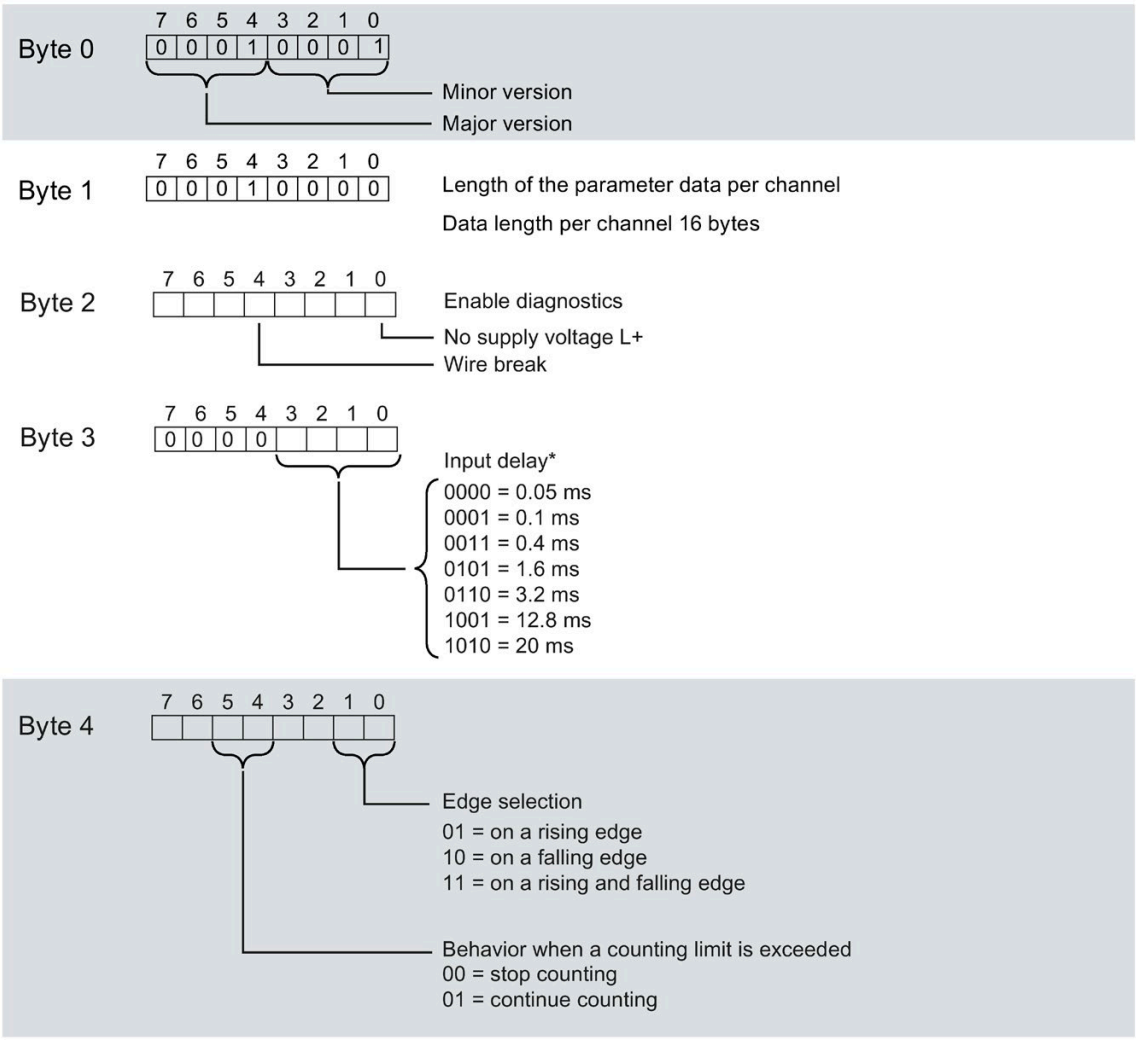

* In isochronous mode 0.05 ms (cannot be changed)

Figure B-2 Structure of data record 0: Bytes 0 to 4

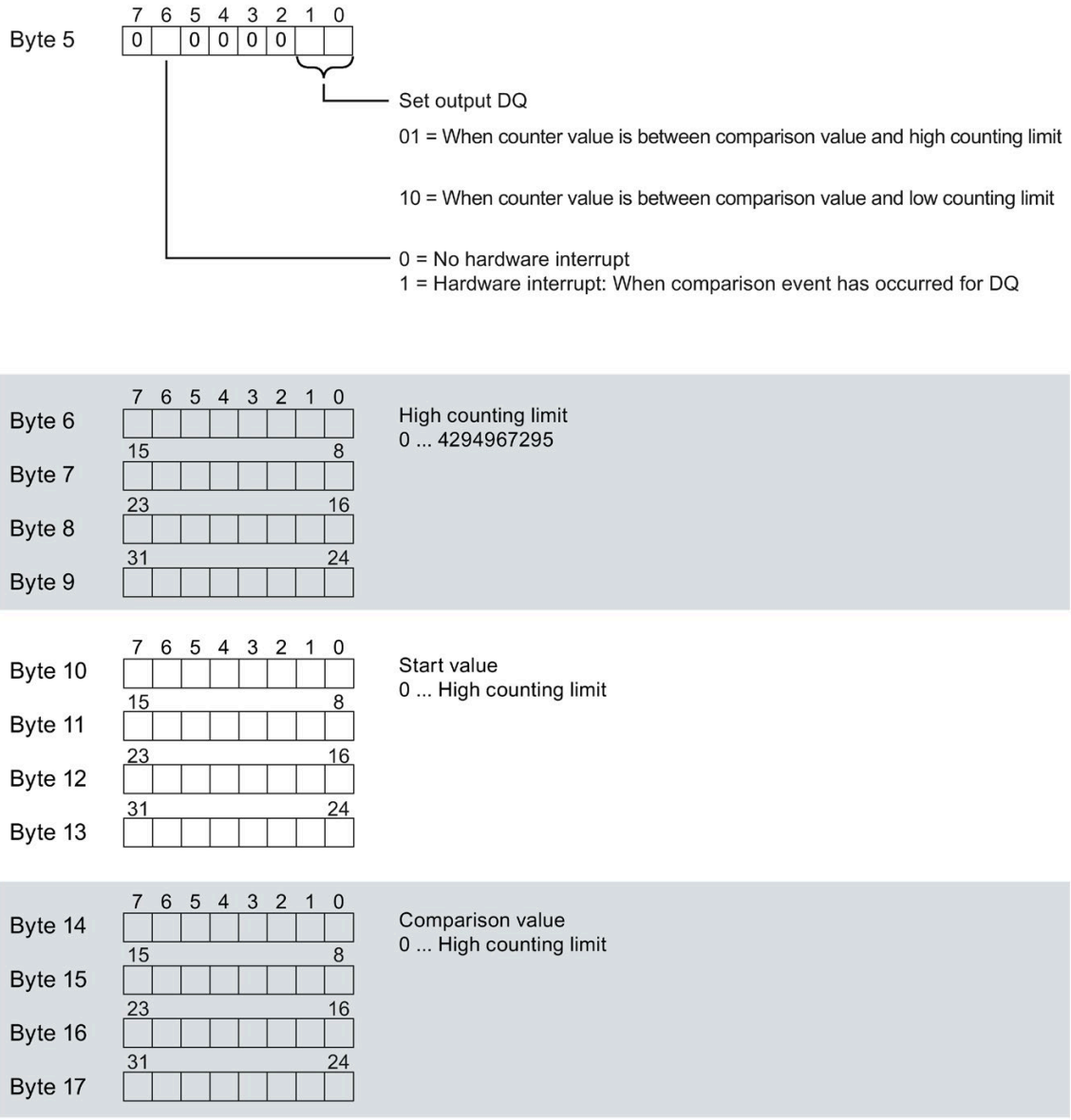

Figure B-3 Structure of data record 0: Bytes 5 to 17

Keep in mind that the counter is stopped and reset to the start value when you change count parameters.
Changing the parameters "Diagnostics" and "Hardware interrupts" does not have an effect on the counter.

Structure of data records 2 to 31

The structure of data records 2 to 31 for channels 2 to 31 is identical to the structure in the DI mode, see section Structure of the parameter data records DI mode (Page 51), figure Structure of data record 0: Bytes 0 to 3.

SIEMENS

SIMATIC

S7-1500 / ET 200MP

Digital input module DI 16x24VDC BA (6ES7521-1BH10-0AA0)

Manual

Edition 12/2016

siemens.com

SIEMENS

SIMATIC

S7-1500/ET 200MP Digital input module DI 16x24VDC BA (6ES7521-1BH10-0AA0)

Manual

Preface

Documentation guide 1

Product overview 2

Wiring 3

Address space 4

Diagnostics alarms 5

Technical specifications 6

Dimensional drawing A

12/2016

A5E32363114-AD

Legal information

Warning notice system

This manual contains notices you have to observe in order to ensure your personal safety, as well as to prevent damage to property. The notices referring to your personal safety are highlighted in the manual by a safety alert symbol, notices referring only to property damage have no safety alert symbol. These notices shown below are graded according to the degree of danger.

⚠ DANGER

indicates that death or severe personal injury **will** result if proper precautions are not taken.

⚠ WARNING

indicates that death or severe personal injury **may** result if proper precautions are not taken.

⚠ CAUTION

indicates that minor personal injury can result if proper precautions are not taken.

NOTICE

indicates that property damage can result if proper precautions are not taken.

If more than one degree of danger is present, the warning notice representing the highest degree of danger will be used. A notice warning of injury to persons with a safety alert symbol may also include a warning relating to property damage.

Qualified Personnel

The product/system described in this documentation may be operated only by **personnel qualified** for the specific task in accordance with the relevant documentation, in particular its warning notices and safety instructions. Qualified personnel are those who, based on their training and experience, are capable of identifying risks and avoiding potential hazards when working with these products/systems.

Proper use of Siemens products

Note the following:

⚠ WARNING

Siemens products may only be used for the applications described in the catalog and in the relevant technical documentation. If products and components from other manufacturers are used, these must be recommended or approved by Siemens. Proper transport, storage, installation, assembly, commissioning, operation and maintenance are required to ensure that the products operate safely and without any problems. The permissible ambient conditions must be complied with. The information in the relevant documentation must be observed.

Trademarks

All names identified by ® are registered trademarks of Siemens AG. The remaining trademarks in this publication may be trademarks whose use by third parties for their own purposes could violate the rights of the owner.

Disclaimer of Liability

We have reviewed the contents of this publication to ensure consistency with the hardware and software described. Since variance cannot be precluded entirely, we cannot guarantee full consistency. However, the information in this publication is reviewed regularly and any necessary corrections are included in subsequent editions.

Siemens AG
Division Digital Factory
Postfach 48 48
90026 NÜRNBERG
GERMANY

A5E32363114-AD
℗ 12/2016 Subject to change

Copyright © Siemens AG 2014 - 2016.
All rights reserved

Preface

Purpose of the documentation

This manual supplements the S7-1500/ET 200MP (https://support.industry.siemens.com/cs/ww/en/view/59191792) system manual.

Functions that relate in general to the systems are described in this system manual.

The information provided in this manual and in the system/function manuals supports you in commissioning the systems.

Changes compared to previous version

Compared to the previous version, this manual contains the following change:

Schematic circuit diagram has been updated.

Conventions

The term "CPU" is used in this manual both for the CPUs of the S7-1500 automation system and for interface modules of the ET 200MP distributed I/O system.

Please also observe notes marked as follows:

Note

A note contains important information on the product described in the documentation, on the handling of the product or on the section of the documentation to which particular attention should be paid.

Security information

Siemens provides products and solutions with industrial security functions that support the secure operation of plants, systems, machines and networks.

In order to protect plants, systems, machines and networks against cyber threats, it is necessary to implement – and continuously maintain – a holistic, state-of-the-art industrial security concept. Siemens' products and solutions only form one element of such a concept.

Customer is responsible to prevent unauthorized access to its plants, systems, machines and networks. Systems, machines and components should only be connected to the enterprise network or the internet if and to the extent necessary and with appropriate security measures (e.g. use of firewalls and network segmentation) in place.

Additionally, Siemens' guidance on appropriate security measures should be taken into account. For more information about industrial security, please visit (http://www.siemens.com/industrialsecurity).

Siemens' products and solutions undergo continuous development to make them more secure. Siemens strongly recommends to apply product updates as soon as available and to always use the latest product versions. Use of product versions that are no longer supported, and failure to apply latest updates may increase customer's exposure to cyber threats.

To stay informed about product updates, subscribe to the Siemens Industrial Security RSS Feed under (http://www.siemens.com/industrialsecurity).

Open Source Software

Open-source software is used in the firmware of the I/O modules. Open Source Software is provided free of charge. We are liable for the product described, including the open-source software contained in it, pursuant to the conditions applicable to the product. Siemens accepts no liability for the use of the open source software over and above the intended program sequence, or for any faults caused by modifications to the software.

For legal reasons, we are obliged to publish the original text of the license conditions and copyright notices. Please read the information relating to this on the Internet (https://support.industry.siemens.com/cs/ww/en/view/109741045).

Table of contents

Preface 4
1 Documentation guide 7
2 Product overview 11
2.1 Properties 11
3 Wiring 13
3.1 Wiring and block diagram 13
4 Address space 14
4.1 Address space 14
5 Diagnostics alarms 18
5.1 Status and error displays 18
6 Technical specifications 20
A Dimensional drawing 23

Documentation guide

1

The documentation for the SIMATIC S7-1500 automation system, the CPU 1516pro-2 PN based on SIMATIC S7-1500 and the SIMATIC ET 200MP distributed I/O system is arranged into three areas.
This arrangement enables you to access the specific content you require.

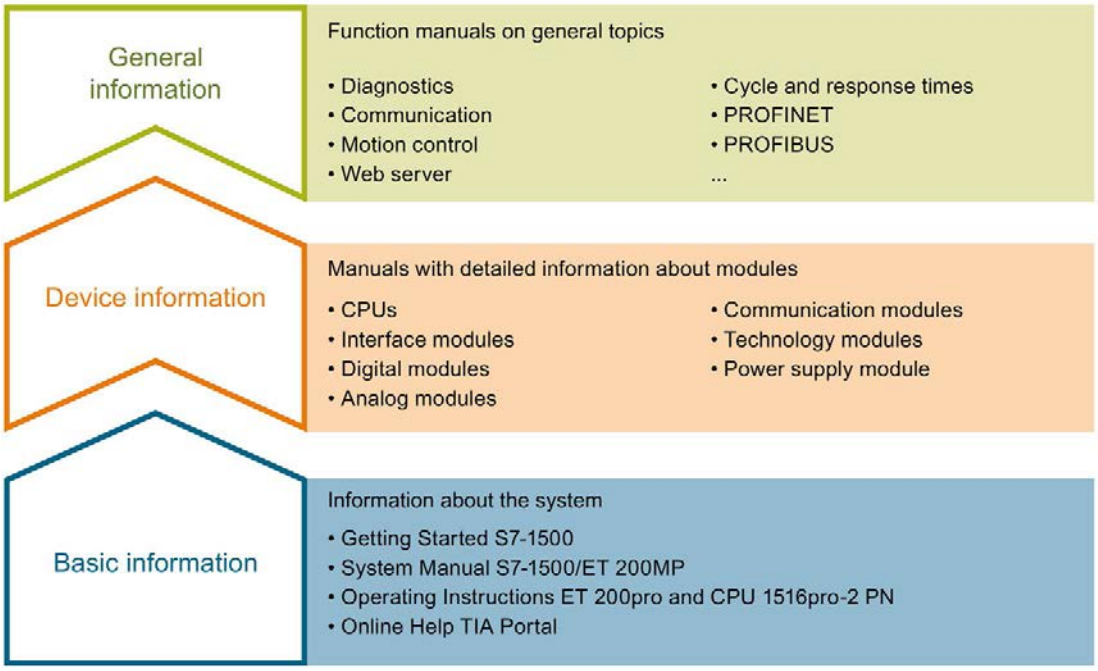

Basic information

The System Manual and Getting Started describe in detail the configuration, installation, wiring and commissioning of the SIMATIC S7-1500 and ET 200MP systems. For CPU 1516pro-2 PN you use the corresponding operating instructions. The STEP 7 online help supports you in the configuration and programming.

Device information

Product manuals contain a compact description of the module-specific information, such as properties, wiring diagrams, characteristics and technical specifications.

General information

The function manuals contain detailed descriptions on general topics regarding the SIMATIC S7-1500 and ET 200MP systems, e.g. diagnostics, communication, motion control, Web server, OPC UA.

You can download the documentation free of charge from the Internet (http://w3.siemens.com/mcms/industrial-automation-systems-simatic/en/manual-overview/Pages/Default.aspx).

Changes and supplements to the manuals are documented in a Product Information.

You can download the product information free of charge from the Internet (https://support.industry.siemens.com/cs/us/en/view/68052815).

Manual Collection S7-1500/ET 200MP

The Manual Collection contains the complete documentation on the SIMATIC S7-1500 automation system and the ET 200MP distributed I/O system gathered together in one file.

You can find the Manual Collection on the Internet (https://support.industry.siemens.com/cs/ww/en/view/86140384).

SIMATIC S7-1500 comparison list for programming languages

The comparison list contains an overview of which instructions and functions you can use for which controller families.

You can find the comparison list on the Internet (https://support.industry.siemens.com/cs/ww/en/view/86630375).

"mySupport"

With "mySupport", your personal workspace, you make the best out of your Industry Online Support.

In "mySupport", you can save filters, favorites and tags, request CAx data and compile your personal library in the Documentation area. In addition, your data is already filled out in support requests and you can get an overview of your current requests at any time.

You must register once to use the full functionality of "mySupport".

You can find "mySupport" on the Internet (https://support.industry.siemens.com/My/ww/en).

"mySupport" - Documentation

In the Documentation area in "mySupport" you can combine entire manuals or only parts of these to your own manual.
You can export the manual as PDF file or in a format that can be edited later.

You can find "mySupport" - Documentation on the Internet (http://support.industry.siemens.com/My/ww/en/documentation).

"mySupport" - CAx data

In the CAx data area in "mySupport", you can access the current product data for your CAx or CAe system.

You configure your own download package with a few clicks.

In doing so you can select:

- Product images, 2D dimension drawings, 3D models, internal circuit diagrams, EPLAN macro files
- Manuals, characteristics, operating manuals, certificates
- Product master data

You can find "mySupport" - CAx data on the Internet (http://support.industry.siemens.com/my/ww/en/CAxOnline).

Application examples

The application examples support you with various tools and examples for solving your automation tasks. Solutions are shown in interplay with multiple components in the system - separated from the focus on individual products.

You will find the application examples on the Internet (https://support.industry.siemens.com/sc/ww/en/sc/2054).

TIA Selection Tool

With the TIA Selection Tool, you can select, configure and order devices for Totally Integrated Automation (TIA).
This tool is the successor of the SIMATIC Selection Tool and combines the known configurators for automation technology into one tool.
With the TIA Selection Tool, you can generate a complete order list from your product selection or product configuration.

You can find the TIA Selection Tool on the Internet (http://w3.siemens.com/mcms/topics/en/simatic/tia-selection-tool).

SIMATIC Automation Tool

You can use the SIMATIC Automation Tool to run commissioning and maintenance activities simultaneously on various SIMATIC S7 stations as a bulk operation independently of the TIA Portal.

The SIMATIC Automation Tool provides a multitude of functions:

- Scanning of a PROFINET/Ethernet network and identification of all connected CPUs
- Address assignment (IP, subnet, gateway) and station name (PROFINET device) to a CPU
- Transfer of the date and the programming device/PC time converted to UTC time to the module
- Program download to CPU
- Operating mode switchover RUN/STOP
- Localization of the CPU by means of LED flashing
- Reading out CPU error information
- Reading the CPU diagnostic buffer
- Reset to factory settings
- Updating the firmware of the CPU and connected modules

You can find the SIMATIC Automation Tool on the Internet (https://support.industry.siemens.com/cs/ww/en/view/98161300).

PRONETA

With SIEMENS PRONETA (PROFINET network analysis), you analyze the PROFINET network during commissioning. PRONETA features two core functions:

- The topology overview independently scans PROFINET and all connected components.
- The IO check is a fast test of the wiring and the module configuration of a system.

You can find SIEMENS PRONETA on the Internet (https://support.industry.siemens.com/cs/ww/en/view/67460624).

Product overview 2

2.1 Properties

Part number:

6ES7521-1BH10-0AA0

View of the module

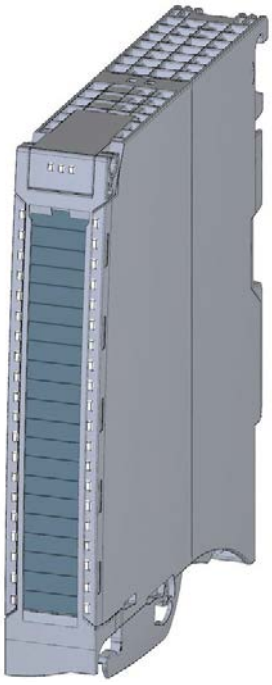

Figure 2-1 View of the DI 16x24VDC BA module

Properties

The module has the following technical properties:

- 16 digital inputs; electrically isolated in groups of 16
- Rated input voltage 24 VDC
- Suitable for switches and 2-/3-/4-wire proximity switches

The module supports the following functions:

Table 2- 1 Version dependencies of the module functions

Function	Firmware version of the module	Configuration software	
		STEP 7 (TIA Portal)	GSD file in STEP 7 (TIA Portal) V12 or higher, or STEP 7 V5.5 SP3 or higher
Firmware update	V1.0.0 or higher	V13 or higher	X
Identification data I&M0 to I&M3	V1.0.0 or higher	V13 or higher	X
Module internal shared input (MSI)	V1.0.0 or higher	V13 Update 3 or higher (PROFINET IO only)	X (PROFINET IO only)
Configurable submodules / sub-modules for Shared Device	V1.0.0 or higher	V13 Update 3 or higher (PROFINET IO only)	X (PROFINET IO only)

You can configure the module with STEP 7 (TIA Portal) and with a GSD file.

Accessories

The following accessories are supplied with the module and can also be ordered separately as spare parts:

- Front connector (push-in terminals) including cable tie
- Labeling strips
- U connector
- Universal front door

For more information on accessories, refer to the system manual S7-1500 automation system (http://support.automation.siemens.com/WW/view/en/59191792).

Wiring

3

3.1 Wiring and block diagram

This section contains the block diagram of the module and outlines various wiring options.

You can find information on wiring the front connector, creating a cable shield, etc. in the Wiring section of the S7-1500/ET 200MP (http://support.automation.siemens.com/WW/view/en/59191792) system manual.

Wiring and block diagram

The figure below shows you how to wire the module and the assignment of the channels to the addresses (input byte a to input byte b).

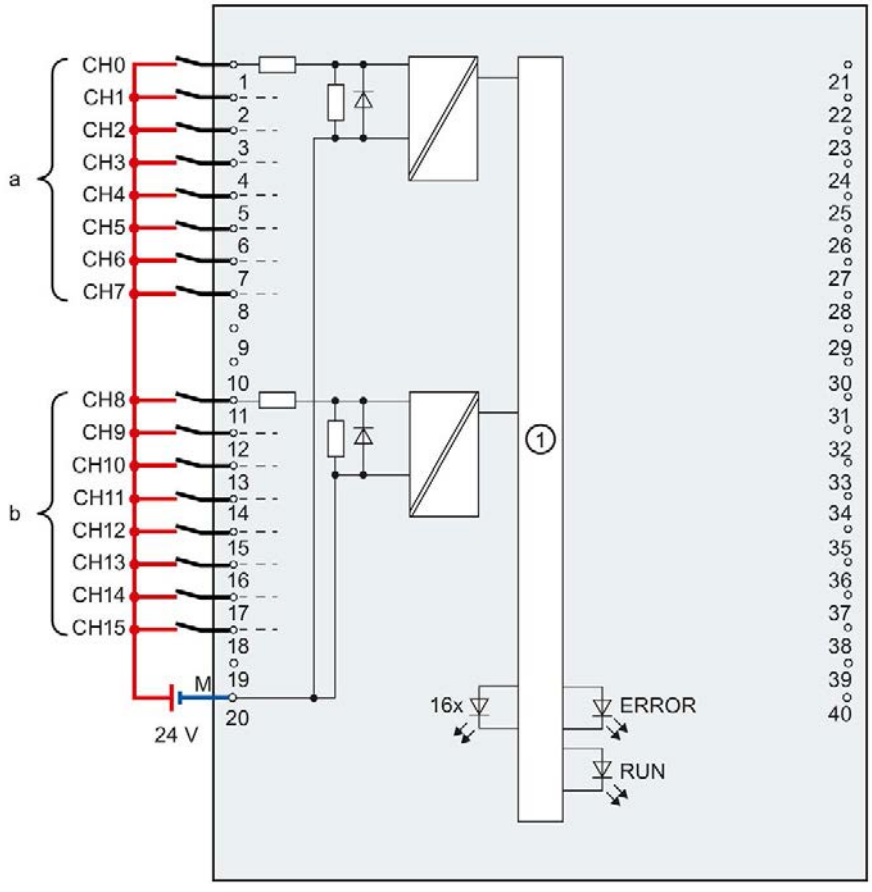

①	Backplane bus interface	CHx	Channel or channel status LED (green)
M	Ground	RUN	Status display LED (green)
		ERROR	Error display LED (red)

Figure 3-1 Block diagram and terminal assignment

Address space

4

4.1 Address space

The module can be configured in various ways in STEP 7. Depending on the configuration, additional/different addresses are assigned in the process image of the inputs.

Configuration options of DI 16x24VDC BA

You can configure the module with STEP 7 (TIA Portal) or with a GSD file.

When you configure the module by means of the GSD file, the configurations are available under different abbreviations/module names.

The following configurations are possible:

Table 4- 1 Configuration options

Configuration	Short designation/ module name in the GSD file	Configuration software, e.g., with STEP 7 (TIA Portal)	
		Integrated in hardware catalog STEP 7 (TIA Portal)	GSD file in STEP 7 (TIA Portal) V12 or higher or STEP 7 V5.5 SP3 or higher
1 x 16-channel without value status	DI 16x24VDC BA	V13 or higher	X
2 x 8-channel without value status	DI 16x24VDC BA S	V13 Update 3 or higher (PROFINET IO only)	X (PROFINET IO only)
1 x 16-channel with value status for module-internal Shared Input with up to 4 submodules	DI 16x24VDC BA MSI	V13 Update 3 or higher (PROFINET IO only)	X (PROFINET IO only)

Address space for configuration as 1 x 16-channel DI 16x24VDC BA

The figure below shows the address space assignment for configuration as a 1 x 16-channel module. You can freely assign the start address for the module. The addresses of the channels are derived from the start address.

The letters "a" through "b" are printed on the module. "IB a", for example, stands for module start address input byte a.

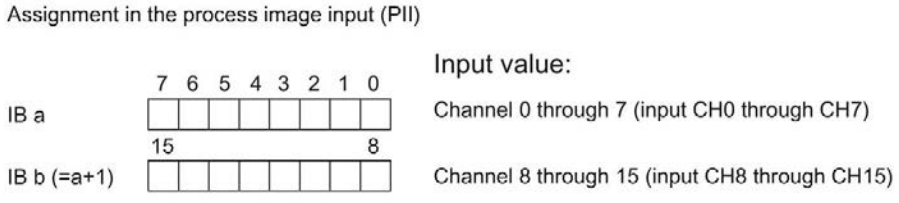

Figure 4-1 Address space for configuration as 1 x 16-channel DI 16x24VDC BA

Address space for configuration as 2 x 8-channel DI 16x24VDC BA S

For the configuration as a 2 x 8-channel module, the channels of the module are divided into multiple submodules. The submodules can be assigned to different IO controllers when the module is used in a shared device.

The number of usable IO controllers depends on the interface module used. Please observe the information in the manual for the particular interface module.

Contrary to the 1 x 16-channel module configuration, each of the two submodules has a freely assignable start address.

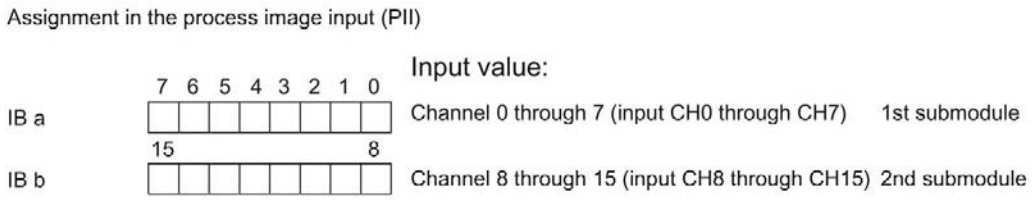

Figure 4-2 Address space for configuration as 2 x 8-channel DI 16x24VDC BA S

Address space for configuration as 1 x 16-channel DI 16x24VDC BA MSI

The channels 0 to 15 of the module are copied in up to four submodules with configuration 1 x 16-channel module (Module-internal shared input, MSI). Channels 0 to 15 are then available with identical input values in different submodules. These submodules can be assigned to up to four IO controllers when the module is used in a shared device. Each IO controller has read access to the same channels.

The number of usable IO controllers depends on the interface module used. Please observe the information in the manual for the particular interface module.

Value status (Quality Information, QI)

The meaning of the value status depends on the submodule involved.

For the 1st submodule (=basic submodule), the value status is not relevant.

For the 2nd to 4th submodule (=MSI submodule), the value status 0 indicates that the value is incorrect or the basic submodule has not yet been configured (not ready).

The figure below shows the assignment of the address space with submodules 1 and 2.

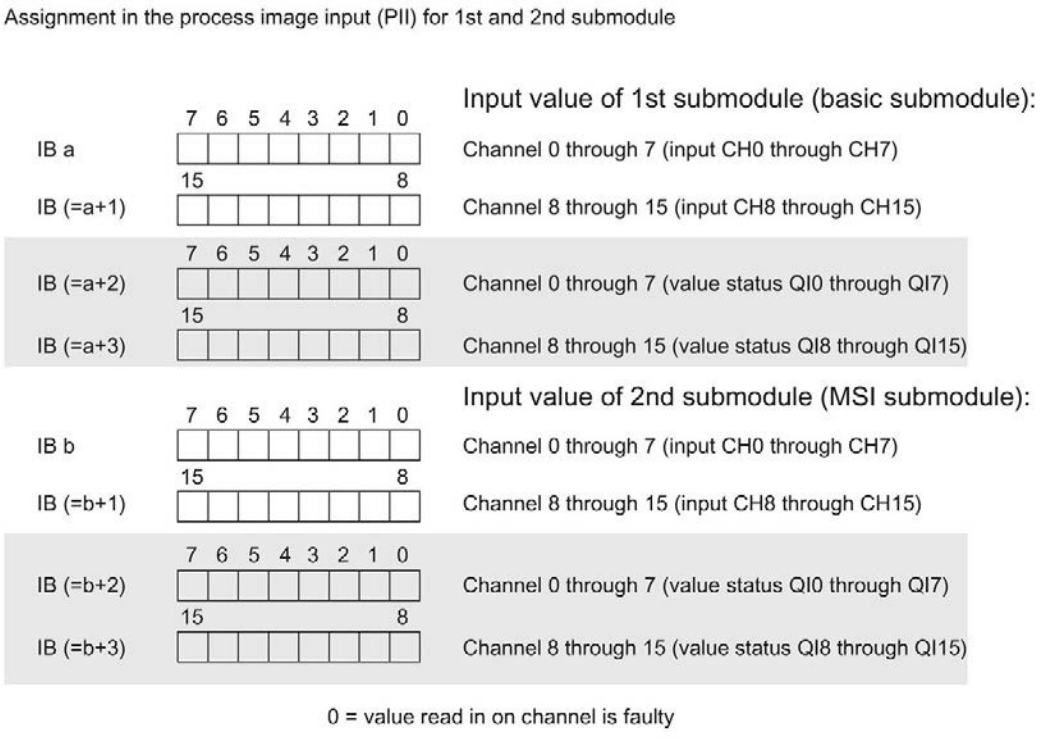

Figure 4-3 Address space for configuration as 1 x 16-channel DI 16x24VDC BA MSI with value status

The figure below shows the assignment of the address space with submodules 3 and 4.

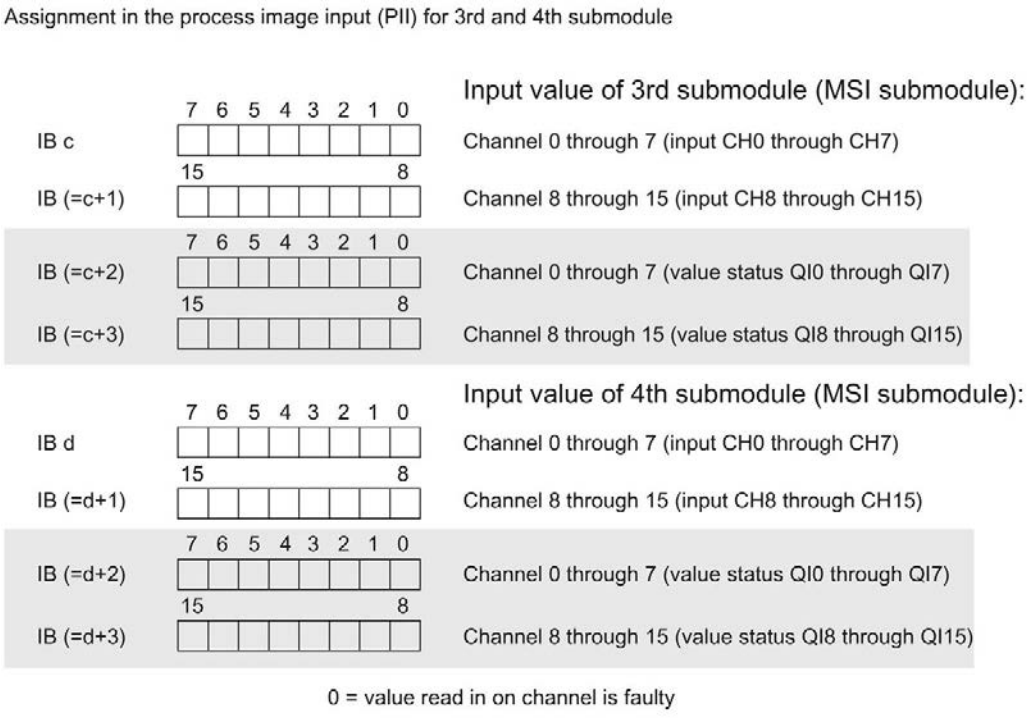

Figure 4-4 Address space for configuration as 1 x 16-channel DI 16x24VDC BA MSI with value status

Reference

You can find information on the module-internal shared input/shared output (MSI/MSO) function in the section Module-internal shared input/shared output (MSI/MSO) of the function manual PROFINET with STEP 7 V13 (https://support.industry.siemens.com/cs/ww/en/view/49948856).

Diagnostics alarms

5

The module has no selectable diagnostics. Diagnostics alarms, for example, cannot be output with STEP 7 (TIA Portal).

5.1 Status and error displays

LED displays

The figure below shows you the LED displays (status and error displays) of the DI 16x24VDC BA.

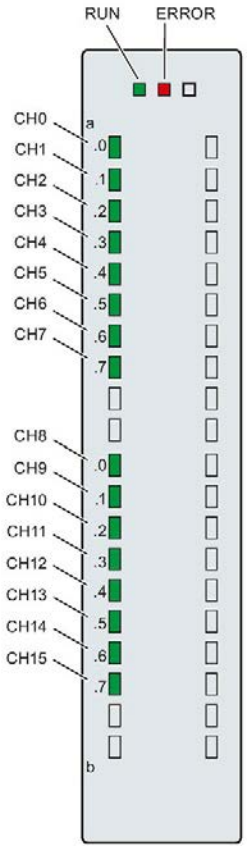

Figure 5-1 LED displays of the module DI 16x24VDC BA

Meaning of the LED displays

The tables below explain the meaning of the status and error displays.

LED RUN/ERROR

Table 5- 1 RUN/ERROR status and error displays

LED		Meaning	Remedy
RUN	ERROR		
□ Off	□ Off	Voltage missing or too low at back-plane bus.	• Switch on the CPU and/or the system power supply modules. • Verify that the U connectors are inserted. • Check to see if too many modules are inserted.
☼ Flashes	□ Off	Module is starting up.	---
■ On	□ Off	Module is ready.	
☼ Flashes	☼ Flashes	Hardware defective.	Replace the module.

LED CHx

Table 5- 2 CHx status display

LED CHx	Meaning	Remedy
□ Off	0 = Status of the input signal.	---
■ On	1 = Status of the input signal.	---

Technical specifications 6

Technical specifications of the DI 16x24VDC BA

	6ES7521-1BH10-0AA0
General information	
Product type designation	DI 16x24VDC BA
Hardware functional status	FS01
Firmware version	V1.0.0
• FW update possible	Yes
Product function	
I&M data	Yes; I&M0 to I&M3
Engineering with	
STEP 7 TIA Portal can be configured/integrated as of version	V13 / V13
STEP 7 can be configured/integrated as of version	V5.5 SP3 / -
PROFIBUS as of GSD version/GSD revision	V1.0 / V5.1
PROFINET as of GSD version/GSD revision	V2.3 / -
Operating mode	
DI	Yes
Counters	No
MSI	Yes
Supply voltage	
Rated value (DC)	24 V
Valid range, low limit (DC)	20.4 V
Valid range, high limit (DC)	28.8 V
Power	
Power consumption from the backplane bus	1.05 W
Power loss	
Power loss, typ.	1.8 W
Digital inputs	
Number of inputs	16
Configurable digital inputs	No
Sinking/sourcing input	Sinking input
Input characteristic curve acc. to IEC 61131, type 3	Yes
Input voltage	
Type of input voltage	DC
Rated value (DC)	24 V
for signal "0"	-30 to +5 V
for signal "1"	+11 to +30 V

	6ES7521-1BH10-0AA0
Input current	
for signal "1", typ.	2.7 mA
Input delay (for rated value of input voltage)	
For standard inputs	
• Configurable	No
• with "0" to "1", min.	3 ms
• with "0" to "1", max.	4 ms
• with "1" to "0", min.	3 ms
• with "1" to "0", max.	4 ms
For interrupt inputs	
• Configurable	No
for technological functions	
• Configurable	No
Cable length	
shielded, max.	1000 m
unshielded, max.	600 m
Encoders	
Connectable encoders	
2-wire sensor	Yes
• Permitted quiescent current (2-wire sensor), max.	1.5 mA
Isochronous mode	
Isochronous mode (application synchronized up to terminal)	No
Interrupts/diagnostics/status information	
Diagnostics function	No
Interrupts	
Diagnostics interrupt	No
Hardware interrupt	No
Diagnostics alarms	
Monitoring of supply voltage	No
Wire break	No
Short-circuit	No
Diagnostics indicator LED	
RUN LED	Yes; green LED
ERROR LED	Yes; red LED
Monitoring of supply voltage (PWR LED)	No
Channel status display	Yes; green LED
For channel diagnostics	No
For module diagnostics	No
Electrical isolation	

	6ES7521-1BH10-0AA0
Electrical isolation of channels	
Between the channels	No
Between the channels, in groups of	16
Between the channels and backplane bus	Yes
Isolation	
Isolation tested with	707 V DC (type test)
Ambient conditions	
Ambient temperature during operation	
Horizontal mounting position, min.	0 °C
Horizontal mounting position, max.	60 °C
Vertical mounting position, min.	0 °C
Vertical mounting position, max.	40 °C
Distributed mode	
Prioritized startup	Yes
Dimensions	
Width	25 mm
Height	147 mm
Depth	129 mm
Weights	
Weight, approx.	230 g
Miscellaneous	
Note:	Delivery includes 40-pin push-in front connector

Dimensional drawing

A

The dimensional drawing of the module on the mounting rail, as well as a dimensional drawing with open front cover, are provided in this appendix. Always observe the specified dimensions for installation in cabinets, control rooms, etc.

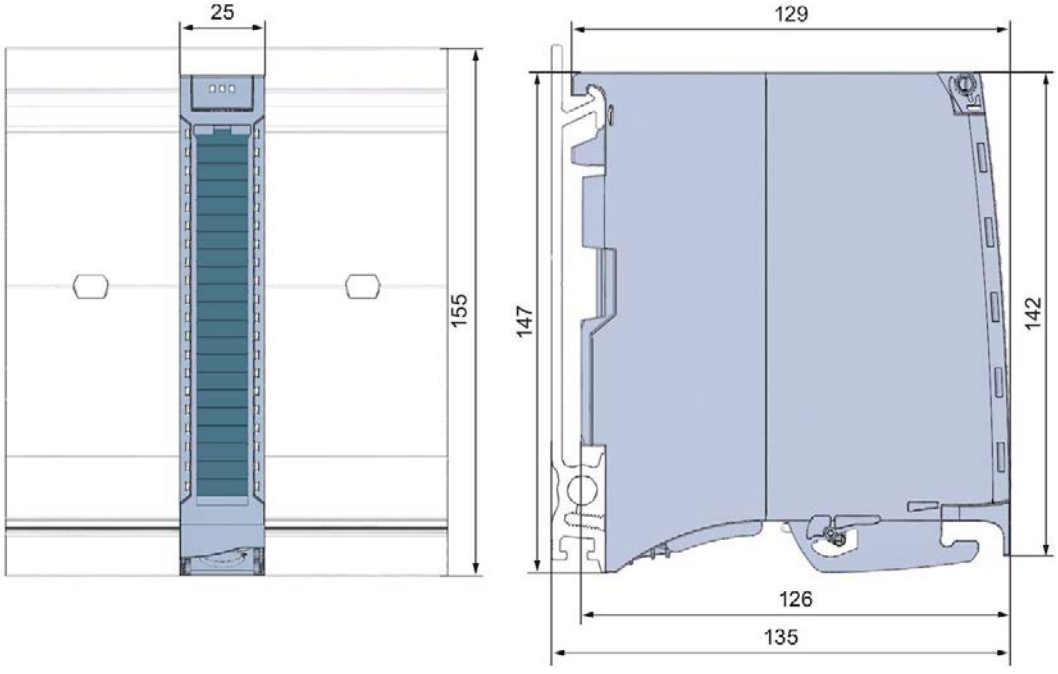

Figure A-1 Dimensional drawing of the DI 16x24VDC BA module

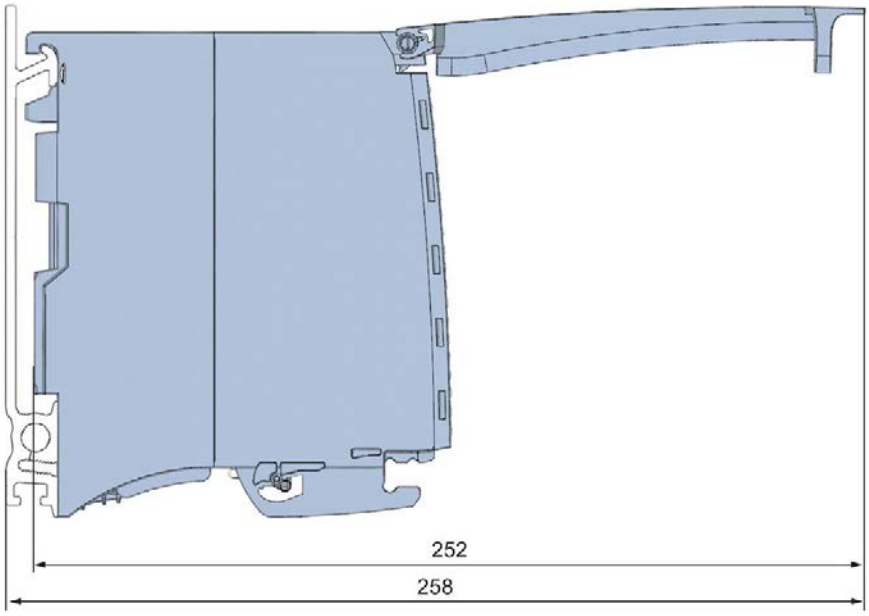

Figure A-2 Dimensional drawing of the DI 16x24VDC BA module, side view with open front cover

SIEMENS

Edition 05/2022

EQUIPMENT MANUAL

SIMATIC

S7-1500 / ET 200MP

Digital input module
DI 16x24VDC HF (6ES7521-1BH00-0AB0)

support.industry.siemens.com

SIEMENS

SIMATIC

S7-1500/ET 200MP DI 16x24VDC HF Digital Input Module (6ES7521-1BH00-0AB0)

Equipment Manual

Preface

S7-1500/ET 200MP Documentation Guide 1

Product overview 2

Wiring 3

Parameters/address space 4

Interrupts/diagnostics alarms 5

Technical specifications 6

Dimensional drawing A

Parameter data records B

05/2022

A5E03485952-AH

Legal information

Warning notice system

This manual contains notices you have to observe in order to ensure your personal safety, as well as to prevent damage to property. The notices referring to your personal safety are highlighted in the manual by a safety alert symbol, notices referring only to property damage have no safety alert symbol. These notices shown below are graded according to the degree of danger.

⚠ DANGER
indicates that death or severe personal injury **will** result if proper precautions are not taken.

⚠ WARNING
indicates that death or severe personal injury **may** result if proper precautions are not taken.

⚠ CAUTION
indicates that minor personal injury can result if proper precautions are not taken.

NOTICE
indicates that property damage can result if proper precautions are not taken.

If more than one degree of danger is present, the warning notice representing the highest degree of danger will be used. A notice warning of injury to persons with a safety alert symbol may also include a warning relating to property damage.

Qualified Personnel

The product/system described in this documentation may be operated only by **personnel qualified** for the specific task in accordance with the relevant documentation, in particular its warning notices and safety instructions. Qualified personnel are those who, based on their training and experience, are capable of identifying risks and avoiding potential hazards when working with these products/systems.

Proper use of Siemens products

Note the following:

⚠ WARNING
Siemens products may only be used for the applications described in the catalog and in the relevant technical documentation. If products and components from other manufacturers are used, these must be recommended or approved by Siemens. Proper transport, storage, installation, assembly, commissioning, operation and maintenance are required to ensure that the products operate safely and without any problems. The permissible ambient conditions must be complied with. The information in the relevant documentation must be observed.

Trademarks

All names identified by ® are registered trademarks of Siemens AG. The remaining trademarks in this publication may be trademarks whose use by third parties for their own purposes could violate the rights of the owner.

Disclaimer of Liability

We have reviewed the contents of this publication to ensure consistency with the hardware and software described. Since variance cannot be precluded entirely, we cannot guarantee full consistency. However, the information in this publication is reviewed regularly and any necessary corrections are included in subsequent editions.

Siemens AG
Digital Industries
Postfach 48 48
90026 NÜRNBERG
GERMANY

A5E03485952-AH
Ⓟ 05/2022 Subject to change

Copyright © Siemens AG 2013 - 2022.
All rights reserved

Preface

Purpose of the documentation

This manual supplements the S7-1500/ET 200MP (https://support.industry.siemens.com/cs/ww/en/view/59191792) system manual.

Functions that relate in general to the systems are described in this system manual.

The information provided in this manual and in the system/function manuals supports you in commissioning the systems.

Changes compared to previous version

Compared to the previous version, this manual contains the following changes:

- Clock synchronization possible in counting mode. In the technical specifications, the counting frequency is increased from 3 kHz to 6 kHz.
- New licensing conditions and copyright information of the Open Source Software
- New technical specifications

Conventions

CPU: The term "CPU" is used in this manual both for the CPUs of the S7-1500 automation system and for interface modules of the ET 200MP distributed I/O system.

STEP 7: In this documentation, "STEP 7" is used as a synonym for all versions of the configuration and programming software "STEP 7 (TIA Portal)".

DI mode: DI 16x24VDC HF as digital input module with 16 digital inputs (channels 0 to 15).

Counting mode: DI 16x24VDC HF as digital input module with 2 counters (channels 0 and 1) and 14 digital inputs (channels 2 to 15).

Please also observe notes marked as follows:

Note

A note contains important information on the product described in the documentation, on the handling of the product or on the section of the documentation to which particular attention should be paid.

Security information

Siemens provides products and solutions with industrial security functions that support the secure operation of plants, systems, machines and networks.

In order to protect plants, systems, machines and networks against cyber threats, it is necessary to implement – and continuously maintain – a holistic, state-of-the-art industrial security concept. Siemens' products and solutions constitute one element of such a concept.

Customers are responsible for preventing unauthorized access to their plants, systems, machines and networks. Such systems, machines and components should only be connected to an enterprise network or the internet if and to the extent such a connection is necessary and only when appropriate security measures (e.g. firewalls and/or network segmentation) are in place.

For additional information on industrial security measures that may be implemented, please visit (https://www.siemens.com/industrialsecurity).

Siemens' products and solutions undergo continuous development to make them more secure. Siemens strongly recommends that product updates are applied as soon as they are available and that the latest product versions are used. Use of product versions that are no longer supported, and failure to apply the latest updates may increase customers' exposure to cyber threats.

To stay informed about product updates, subscribe to the Siemens Industrial Security RSS Feed visit (https://www.siemens.com/cert).

Open Source Software

Open-source software is used in the firmware of the product described. Open Source Software is provided free of charge. We are liable for the product described, including the open-source software contained in it, pursuant to the conditions applicable to the product. Siemens accepts no liability for the use of the open source software over and above the intended program sequence, or for any faults caused by modifications to the software.

For legal reasons, we are obliged to publish the original text of the license conditions and copyright notices. Please read the information relating to this on the Internet.

Table of contents

Preface ... **3**

1 S7-1500/ET 200MP Documentation Guide ... **6**

1.1 S7-1500 / ET 200MP Documentation Guide ... 6

1.2 SIMATIC Technical Documentation ... 8

1.3 Tool support ... 9
1.3.1 Tool support ... 9

2 Product overview ... **12**

2.1 Properties ... 12

2.2 Functions ... 15
2.2.1 Count ... 15

3 Wiring ... **16**

4 Parameters/address space ... **18**

4.1 Parameter ... 18
4.1.1 Parameters ... 18
4.1.2 Parameters DI mode ... 19
4.1.3 Explanation of the parameters of the DI mode ... 20
4.1.4 Parameters of the Counting mode ... 21
4.1.5 Explanation of the parameters of the Counting mode ... 22

4.2 Address space ... 24
4.2.1 Address space DI mode ... 25
4.2.2 Address space Counting mode ... 28
4.2.3 Examples of counting ... 33

5 Interrupts/diagnostics alarms ... **38**

5.1 Status and error displays ... 38

5.2 Interrupts ... 40

5.3 Diagnostics alarms ... 42

6 Technical specifications ... **43**

A Dimensional drawing ... **47**

B Parameter data records ... **49**

B.1 Parameter assignment and structure of the parameter data records ... 49

B.2 Structure of the parameter data records DI mode ... 50

B.3 Structure of the parameter data records Counting mode ... 52

S7-1500/ET 200MP Documentation Guide

1

1.1 S7-1500 / ET 200MP Documentation Guide

The documentation for the SIMATIC S7-1500 automation system and the ET 200MP distributed I/O system is arranged into three areas.

This arrangement enables you to access the specific content you require. Changes and supplements to the manuals are documented in a Product Information.

You can download the documentation free of charge from the Internet (https://support.industry.siemens.com/cs/ww/en/view/109742691).

Basic information

The System Manual and Getting Started describe in detail the configuration, installation, wiring and commissioning of the SIMATIC S7-1500 and ET 200MP systems.

The STEP 7 online help supports you in the configuration and programming.

Examples:

- Getting Started S7-1500
- S7-1500/ET 200MP System Manual
- Online help TIA Portal

Device information

Equipment manuals contain a compact description of the module-specific information, such as properties, wiring diagrams, characteristics and technical specifications.

Examples:

- Equipment Manuals CPUs
- Equipment Manuals Interface Modules
- Equipment Manuals Digital Modules
- Equipment Manuals Analog Modules
- Equipment Manuals Communications Modules
- Equipment Manuals Technology Modules
- Equipment Manuals Power Supply Modules

General information

The function manuals contain detailed descriptions on general topics relating to the SIMATIC S7-1500 and ET 200MPsystems.

Examples:

- Function Manual Diagnostics
- Function Manual Communication
- Function Manual Motion Control
- Function Manual Web Server
- Function Manual Cycle and Response Times
- PROFINET Function Manual
- PROFIBUS Function Manual

Product Information

Changes and supplements to the manuals are documented in a Product Information. The Product Information takes precedence over the device and system manuals.

You can find the latest Product Information on the S7-1500 and ET 200MP systems on the Internet (https://support.industry.siemens.com/cs/de/en/view/68052815).

Manual Collection S7-1500/ET 200MP

The Manual Collection contains the complete documentation on the SIMATIC S7-1500 automation system and the ET 200MP distributed I/O system gathered together in one file.

You can find the Manual Collection on the Internet.
(https://support.industry.siemens.com/cs/ww/en/view/86140384)

SIMATIC S7-1500 comparison list for programming languages

The comparison list contains an overview of which instructions and functions you can use for which controller families.

You can find the comparison list on the Internet
(https://support.industry.siemens.com/cs/ww/en/view/86630375).

1.2 SIMATIC Technical Documentation

Additional SIMATIC documents will complete your information. You can find these documents and their use at the following links and QR codes.

The Industry Online Support gives you the option to get information on all topics. Application examples support you in solving your automation tasks.

Overview of the SIMATIC Technical Documentation

Here you will find an overview of the SIMATIC documentation available in SIOS:

Industry Online Support International (https://support.industry.siemens.com/cs/ww/en/view/109742705)

Watch this short video to find out where you can find the overview directly in SIOS and how to use SIOS on your mobile device:

Quick introduction to the technical documentation of automation products per video (https://support.industry.siemens.com/cs/us/en/view/109780491)

YouTube video: Siemens Automation Products - Technical Documentation at a Glance (https://youtu.be/TwLSxxRQQsA)

mySupport

With "mySupport" you can get the most out of your Industry Online Support.

Registration	You must register once to use the full functionality of "mySupport". After registration, you can create filters, favorites and tabs in your personal workspace.
Support requests	Your data is already filled out in support requests, and you can get an overview of your current requests at any time.
Documentation	In the Documentation area you can build your personal library.
Favorites	You can use the "Add to mySupport favorites" to flag especially interesting or frequently needed content. Under "Favorites", you will find a list of your flagged entries.
Recently viewed articles	The most recently viewed pages in mySupport are available under "Recently viewed articles".
CAx data	The CAx data area gives you access to the latest product data for your CAx or CAe system. You configure your own download package with a few clicks: • Product images, 2D dimension drawings, 3D models, internal circuit diagrams, EPLAN macro files • Manuals, characteristics, operating manuals, certificates • Product master data

You can find "mySupport" on the Internet. (https://support.industry.siemens.com/My/ww/en)

Application examples

The application examples support you with various tools and examples for solving your automation tasks. Solutions are shown in interplay with multiple components in the system - separated from the focus on individual products.

You can find the application examples on the Internet.
(https://support.industry.siemens.com/cs/ww/en/ps/ae)

1.3 Tool support

1.3.1 Tool support

The tools described below support you in all steps: from planning, over commissioning, all the way to analysis of your system.

TIA Selection Tool

The TIA Selection Tool tool supports you in the selection, configuration, and ordering of devices for Totally Integrated Automation (TIA).

As successor of the SIMATIC Selection Tools , it assembles the configuration editors for automation technology already familiar into a single tool.

With the TIA Selection Tool , you can generate a complete order list from your product selection or product configuration.

You can find the TIA Selection Tool on the Internet.
(https://support.industry.siemens.com/cs/ww/en/view/109767888)

SIMATIC Automation Tool

You can use the SIMATIC Automation Tool to perform commissioning and maintenance activities on various SIMATIC S7 stations as bulk operations independent of TIA Portal.

The SIMATIC Automation Tool offers a wide range of functions:

- Scanning of a PROFINET/Ethernet system network and identification of all connected CPUs
- Assignment of addresses (IP, subnet, Gateway) and device name (PROFINET device) to a CPU
- Transfer of the date and the programming device/PC time converted to UTC time to the module
- Program download to CPU
- RUN/STOP mode switchover
- CPU localization through LED flashing
- Reading out of CPU error information
- Reading the CPU diagnostic buffer
- Reset to factory settings
- Firmware update of the CPU and connected modules

You can find the SIMATIC Automation Tool on the Internet.
(https://support.industry.siemens.com/cs/ww/en/view/98161300)

PRONETA

SIEMENS PRONETA (PROFINET network analysis) is a commissioning and diagnostic tool for PROFINET networks. PRONETA Basic has two core functions:

- The "Network analysis" offers a quick overview of the PROFINET topology. It is possible to make simple parameter changes (for example, to the names and IP addresses of the devices). In addition, a quick and convenient comparison of the real configuration with a reference system is also possible.
- The "IO test" is a simple and rapid test of the wiring and the module configuration of a plant, including documentation of the test results.

You can find SIEMENS PRONETA Basic on the Internet:
(https://support.industry.siemens.com/cs/ww/en/view/67460624)

SIEMENS PRONETA Professional is a licensed product that offers you additional functions. It offers you simple asset management in PROFINET networks and supports operators of automation systems in automatic data collection/acquisition of the components used through various functions:

- The user interface (API) offers an access point to the automation cell to automate the scan functions using MQTT or a command line.
- With PROFIenergy diagnostics, you can quickly detect the current pause mode or the readiness for operation of devices that support PROFIenergy and change these as needed.
- The data record wizard supports PROFINET developers in reading and writing acyclic PROFINET data records quickly and easily without PLC and engineering.

You can find SIEMENS PRONETA Professional on the Internet:
(https://www.siemens.com/proneta-professional)

SINETPLAN

SINETPLAN, the Siemens Network Planner, supports you in planning automation systems and networks based on PROFINET. The tool facilitates professional and predictive dimensioning of your PROFINET installation as early as in the planning stage. In addition, SINETPLAN supports you during network optimization and helps you to exploit network resources optimally and to plan reserves. This helps to prevent problems in commissioning or failures during productive operation even in advance of a planned operation. This increases the availability of the production plant and helps improve operational safety.

The advantages at a glance

- Network optimization thanks to port-specific calculation of the network load
- Increased production availability thanks to online scan and verification of existing systems
- Transparency before commissioning through importing and simulation of existing STEP 7 projects
- Efficiency through securing existing investments in the long term and the optimal use of resources

You can find SINETPLAN on the Internet (https://new.siemens.com/global/en/products/automation/industrial-communication/profinet/sinetplan.html).

Product overview

2

2.1 Properties

Article number:

6ES7521-1BH00-0AB0

View of the module

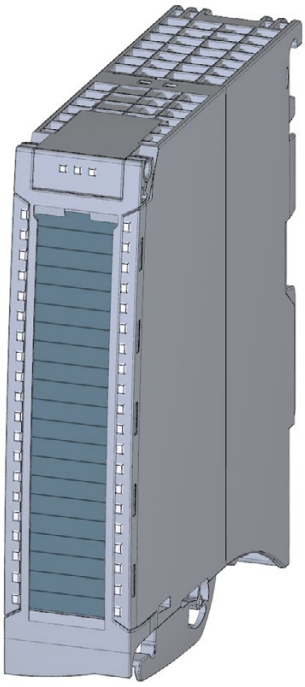

Figure 2-1 View of the DI 16x24VDC HF module

Properties

The module has the following technical properties:

- 16 digital inputs; electrically isolated in groups of 16
  - of which channel 0 and 1 optionally with counter function
- Rated input voltage 24 V DC
- Configurable input delay: 0.05 ms to 20 ms
- Configurable diagnostics (per channel)
- Configurable hardware interrupt (per channel)
- Suitable for switches and 2-/3-/4-wire proximity switches

The module supports the following functions:

Table 2- 1 Version dependencies of the module functions

Function	Firmware version of the module	Configuration software	
		STEP 7 (TIA Portal)	GSD file in STEP 7 (TIA Portal) V12 or higher, or STEP 7 V5.5 SP3 or higher
Firmware update	V1.0.0 or higher	V12 or higher	--- / X
Identification data I&M0 to I&M3	V1.0.0 or higher	V12 or higher	X
Parameter assignment in RUN	V1.0.0 or higher	V12 or higher	X
Isochronous mode	V1.0.0 or higher	V12 or higher	---
Module-internal Shared Input (MSI)	V2.0.0 or higher	V13 Update 3 or higher (PROFINET IO only)	X (PROFINET IO only)
Configurable submodules / submodules for Shared Device	V2.0.0 or higher	V13 Update 3 or higher (PROFINET IO only)	X (PROFINET IO only)
Channel 0 and 1 optionally with counter function*	V2.1.0 or higher	V13, SP1 with HSP 0118 or higher	X (PROFINET IO only)

* Requirement for counter function: Interface module IM 155-5 firmware version V3.0 or higher or CPU S7-15XX firmware version V1.7 or higher

You can configure the module with STEP 7 (TIA Portal) and with a GSD file.

Compatibility

The following table shows the compatibility of the modules and the dependencies between hardware functional status (FS) and firmware version (FW) used:

Hardware functional status	Firmware version	Note
FS01	V1.0.0 to V2.1.x	Upgrade possible between V1.0.0 to V2.1.x Downgrade possible from V2.1.x to V2.1.2 Downgrade possible from V2.1.1 to V1.0.0
FS02	V1.0.0 to V2.1.x	
FS03	V2.1.2 to V2.1.x	Upgrade to downgrade possible between V2.1.2 and V2.1.x
FS04	V2.2.0 or higher	Upgrade and downgrade possible between V2.2.0 and higher

Isochronous mode

When operating the following digital input modules, make sure that the digital input modules have at least one of the following firmware versions (FW) or higher. Otherwise, you may experience a high jitter in the application.

- For modules with functional status FS 03: FW V2.1.4
- For modules with functional status FS 04: FW V2.2.0

Accessories

The following accessories are supplied with the module and can also be ordered separately as spare parts:

- Labeling strips
- U connector
- Universal front door

Other components

The following component must be ordered separately:

Front connectors, including potential jumpers and cable ties

For more information on accessories, refer to the system manual S7-1500/ET 200MP (https://support.industry.siemens.com/cs/ww/en/view/59191792).

2.2 Functions

2.2.1 Count

Introduction

As of firmware version V2.1.0 of the module you have the option of using channels 0 and 1 in the "Count" mode. The other channels can be used as standard inputs (DI mode).

If do not use channels 0 and 1 in the "Count" mode, these channels can also be used as digital inputs. The two channels 0 and 1 can only be used as counter inputs together.

When counting, the edges of the digital input are acquired and evaluated accordingly e.g.:

- For counting single items up to a maximum limit
- For applications with repeating counting procedures

Reference

You will find the basics and additional information on the counting function in the function manual Counting, measuring and position detection (http://support.automation.siemens.com/WW/view/en/59709820).

Counting with channel 0 and channel 1

You control the counting function via the IO addresses of the module. These IO addresses are also known as the control interface (output addresses) and feedback interface (input addresses), see section AUTOHOTSPOT.

If you set the parameters of channels 0 and 1 for counting, you then have the following options:

- You influence the behavior if one of the counting limits is exceeded using
  - Stop counting.
  - Continue counting.
- The bit STS_DQ (bit in the feedback interface) signals that the counted value is in one of the following ranges depending on the parameter assignment:
  - Between a comparison value and the high counting limit.
  - Between a comparison value and the low counting limit.
- You can set a parameter for a hardware interrupt if a comparison event occurs for DQ.
- You can define counting limits and comparison values for counting from 0 ... 4294967295 (2^{32}-1).
- You can set start values or have the user program set load values for counting.

The count direction is only up.

Reference

You will find examples of counting with channels 0 and 1 in the section AUTOHOTSPOT

Wiring

3

This section contains the block diagram of the module and outlines various wiring options.

You can find information on wiring the front connector, creating a cable shield, etc. in the Wiring section of the S7-1500/ET 200MP (http://support.automation.siemens.com/WW/view/en/59191792) system manual.

Wiring and block diagram

The figure below shows you how to wire the module and the assignment of the channels to the addresses (input byte a to input byte b). You can set parameters so that channels 0 and 1 are used for counting. Channels 2 to 15 can continue to be used as digital inputs.

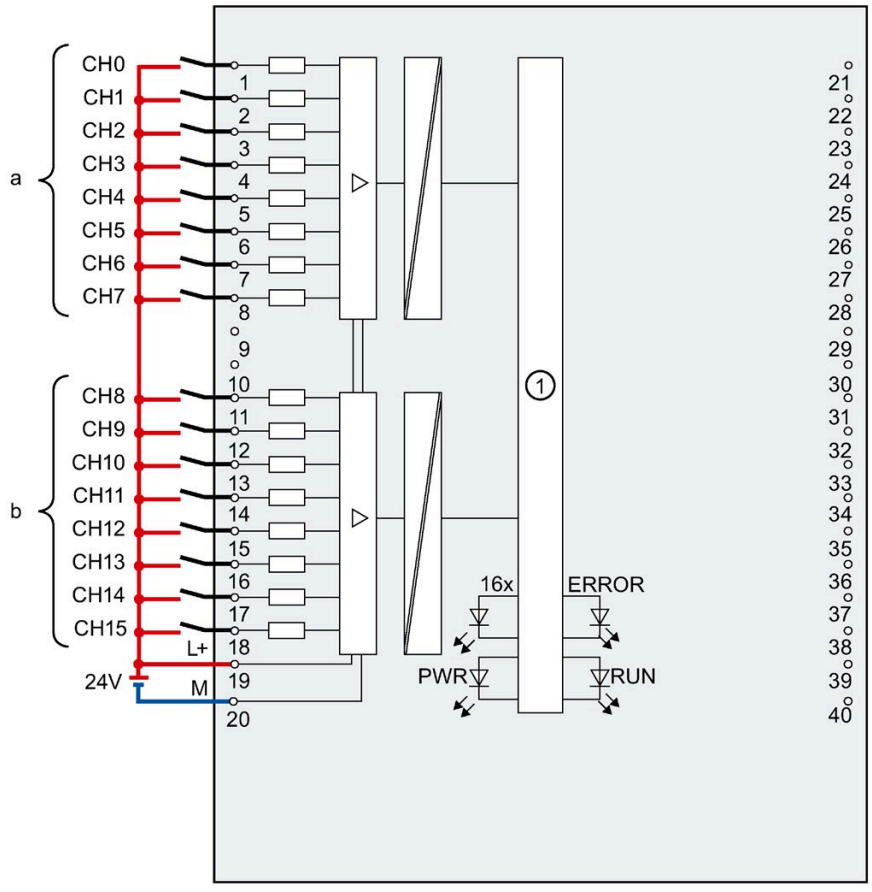

①	Backplane bus interface	CHx	Channel or channel status LED (green/red)
L+	Supply voltage 24 V DC	RUN	Status display LED (green)
M	Ground	ERROR	Error display LED (red)
		PWR	POWER supply voltage LED (green)

Figure 3-1 Block diagram and terminal assignment

Resistor circuitry of the encoders

To detect a wire break, it is necessary that enough quiescent current is flowing even when the encoder contacts are open. Connect a resistor of 25 kΩ to 45 kΩ with 0.25 W to the encoder contacts for this reason.

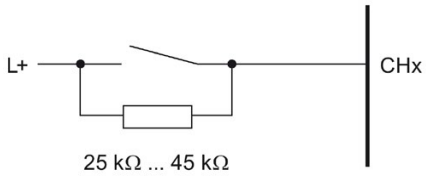

Figure 3-2 Resistor circuitry of the encoders

Tip: Using the potential jumpers

Use the potential jumpers supplied with the front connector if you want to distribute the 24V DC supply voltage to a neighboring module. This helps you to avoid having to terminate two wires to one terminal.

Proceed as follows:

1. Connect the 24 V DC supply voltage to terminals 19 and 20.
2. Insert the potential jumpers between terminals 19 and 39 (L+) and between terminals 20 and 40 (M).
3. Use the terminals 39 and 40 to distribute the potential to the next module

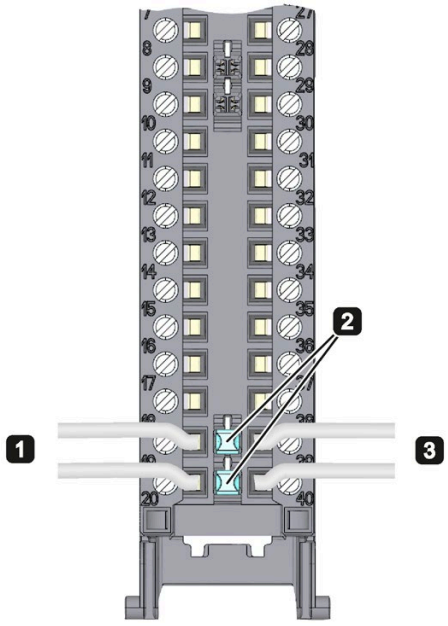

Figure 3-3 Using the potential jumpers

Note

Ensure that the maximum current load of 8 A per potential jumper is not exceeded.

Parameters/address space

4

4.1 Parameter

4.1.1 Parameters

DI 16x24VDC HF parameters

When you assign the module parameters in STEP 7, you use various parameters to specify the module properties. The parameters that can be set depend on whether you use the module in standard mode or in counter mode. You will find the parameters in section Parameters DI mode (Page 19) or section Parameters of the Counting mode (Page 21). The effective range of the configurable parameters depends on the type of configuration. The following configurations are possible:

- Central operation with a S7-1500 CPU
- Distributed operation on PROFINET IO in an ET 200MP system
- Distributed operation on PROFIBUS DP in an ET 200MP system

For parameter assignment in the user program, the parameters are transferred to the module using the WRREC instruction (parameter reassignment in RUN) and data records; see chapter Parameter assignment and structure of the parameter data records (Page 49).

4.1.2 Parameters DI mode

Parameters of the DI 16x24VDC HF in the DI mode

In the table below you will find the parameters in the DI mode. These parameters apply to channels 0 to 15.

Table 4- 1 Settable parameters and their defaults in the DI mode

Parameter	Range of values	Default setting	Parameter reassignment in RUN	Range of effectiveness with configuration software, e.g. STEP 7	
				Integrated in the hardware catalog as of STEP 7, V13 SP1 or GSD file PROFINET IO	GSD file PROFIBUS DP
Diagnostics					
• No supply voltage L+	Yes/No	No	Yes	Channel*	Channel group**
• Wire break	Yes/No	No	Yes	Channel	Channel group**
Input delay	0.05 ms, 0.1 ms, 0.4 ms, 1.6 ms, 3.2 ms, 12.8 ms, 20 ms	3.2 ms; for isochronous mode 0.05 ms (cannot be changed)	Yes	Channel	Channel group**
Hardware interrupt* **					
• Rising edge	Yes/No	No	Yes	Channel	Channel
• Falling edge	Yes/No	No	Yes	Channel	Channel
• Rising and falling edge	Yes/No	No	Yes	Channel	Channel

* If you enable diagnostics for multiple channels, you will receive an alarm surge on failure of the supply voltage because each enabled channel will detect this fault.

You can prevent this alarm surge by enabling diagnostics for one channel only.

** The scope can be assigned for each channel during parameter assignment in RUN.

*** For the configuration as a 4 x 8-channel module, a maximum of 16 hardware interrupts can be configured (channels 0 to 15).

4.1.3 Explanation of the parameters of the DI mode

No supply voltage L+

Enabling of the diagnostics, with missing or too little supply voltage L+.

Wire break

Enabling diagnostics if the line to the encoder is interrupted.

Input delay

This parameter can be used to suppress signal disruptions. Changes to the signal are only detected if they are constantly pending longer than the set input delay time.

Hardware interrupt

Specifies whether or not a hardware interrupt is disabled or with which of the following events a hardware interrupt is generated.

- Rising edge
- Falling edge
- Rising and falling edge

4.1.4 Parameters of the Counting mode

Parameters of the DI 16x24VDC HF Count in the Counting mode

If you want to use the module for counting, you need to set the module parameters as DI 16x24VDC HF Count. For channels 0 and channel 1, the following parameter settings are then possible. For channels 2 to 15, the parameter settings apply as with the DI 16x24VDC HF, , see section Parameters DI mode (Page 19).

Table 4- 2 Settable parameters and their defaults in the Counting mode

Parameter	Range of values	Default setting	Parameter reassignment in RUN	Range of effectiveness with configuration software, e.g. STEP 7	
				Integrated in the hardware catalog as of STEP 7, V13 SP1 with HSP 0118 or GSD file PROFINET IO	GSD file PROFIBUS DP
Diagnostics					
• No supply voltage L+	Yes/No	No	Yes	Channel*	---
• Wire break	Yes/No	No	Yes	Channel	---
Input delay	0.05 ms, 0.1 ms, 0.4 ms, 1.6 ms, 3.2 ms, 12.8 ms, 20 ms	3.2 ms; for isochronous mode 0.05 ms (cannot be changed)	Yes	Channel	---
Hardware interrupt	• Disable • Comparison event occurred for DQ	Disable	Yes	Channel	---
Set output DQ	• Between a comparison value and the high counting limit • Between a comparison value and the low counting limit	Between a comparison value and the high counting limit	Yes	Channel	---

Parameter	Range of values	Default setting	Parameter reassignment	Range of effectiveness with configuration software, e.g. STEP 7	
Edge selection	• On rising edge • On falling edge • On rising and falling edge	On rising edge	Yes	Channel	---
High counting limit	0 ... 4294967295	4294967295	Yes	Channel	---
Comparison value	0 ... 4294967295**	1	Yes	Channel	---
Start value	0 ... 4294967295**	0	Yes	Channel	---
Behavior when a counting limit is exceeded	• Stop counting • Continue counting	Stop counter	Yes	Channel	---

* If you enable diagnostics for multiple channels, you will receive an alarm surge on failure of the supply voltage because each enabled channel will detect this fault.

You can prevent this alarm surge by enabling diagnostics for one channel only.

** Comparison value or start value must be less than or equal to the value for the high counting limit.

4.1.5 Explanation of the parameters of the Counting mode

Missing supply voltage L+

Enabling of the diagnostics, with missing or too little supply voltage L+.

Wire break

Enabling diagnostics if the line to the encoder is interrupted.

Input delay

This parameter can be used to suppress signal disruptions. Changes to the signal are only detected if they are constantly pending longer than the set input delay time.

Hardware interrupt

Specifies whether or not a hardware interrupt is generated by the event "Comparison event occurred for DQ" (rising edge at STS_DQ).

Set output DQ

With this parameter, you specify the behavior of the STS_DQ bit in the feedback interface. You can assign this bit in the user program, for example, with a hardware output, see AUTOHOTSPOT.

Behavior	Meaning
Between a comparison value and the high counting limit	STS_DQ bit is set if the following condition is met: Comparison value < = counted value < = high counting limit
Between a comparison value and the low counting limit	STS_DQ bit is set if the following condition is met: Low counting limit < = counted value < = comparison value

Edge selection

With this parameter you specify which edge is used to count.

You can select the following options:

- On rising edge
- On falling edge
- On rising and falling edge

High counting limit

With this parameter you limit the counting range. You can enter a value up to 4294967295 (2^{32} - 1).

Comparison value

With this parameter you specify the count value at which the digital output DQ (STS_DQ bit of the feedback interface) switches due to the selected comparison event.

Start value

With this parameter, you specify the value at which counting begins and is continued if defined events occur. The following condition must be met:

Low counting limit < = start value < = high counting limit.

Behavior when a counting limit is exceeded

With this parameter, you specify the behavior if a counting limit is exceeded.

Behavior	Meaning
Stop counting	After a counting limit is exceeded, the counting procedure is aborted and the STS_GATE bit (internal gate) is reset. To restart the counting, the SW_GATE bit must be reset via the control interface and set again.
Continue counting	After a counting limit is exceeded, the counted value is set to the other counting limit and counting is continued.

4.2 Address space

The module can be configured differently in STEP 7; see following table. Depending on the configuration, additional/different addresses are assigned in the process image of the inputs.

The letters "a to b" are printed onto the module. "EB a" for example, stands for module start address input byte a.

Configuration options of DI 16x24VDC HF

You can configure the module with STEP 7 (TIA Portal) or with a GSD file.

When you configure the module by means of the GSD file, the configurations are available under different abbreviations/module names.

The following configurations are possible:

Table 4- 3 Configuration options

Configuration	Short designation/ module name in the GSD file	Configuration software, e.g., with STEP 7 (TIA Portal)	
		Integrated in hardware catalog STEP 7 (TIA Portal)	GSD file in STEP 7 (TIA Portal) V12 or higher or STEP 7 V5.5 SP3 or higher
1 x 16-channel without value status	DI 16x24VDC HF	V12 or higher	X
1 x 16-channel with value status	DI 16x24VDC HF QI	V12 or higher	X
2 x 8-channel without value status	DI 16x24VDC HF S	V13 Update 3 or higher (PROFINET IO only)	X (PROFINET IO only)
2 x 8-channel with value status	DI 16x24VDC HF S QI	V13 Update 3 or higher (PROFINET IO only)	X (PROFINET IO only)
1 x 16-channel with value status for module-internal shared input with up to 4 submodules	DI 16x24VDC HF MSI	V13 Update 3 or higher (PROFINET IO only)	X (PROFINET IO only)
1 x 16-channel with value status (channel 0 and channel 1 for counting, channels 2 to 15 as digital inputs)	DI 16x24VDC HF Count	V13, SP1 with HSP 0118 or higher	X (PROFINET IO only)

Value status (Quality Information, QI)

The value status is always activated for the following module names:

- DI 16x24VDC HF QI,
- DI 16x24VDC HF S QI
- DI 16x24VDC HF MSI
- DI 16x24VDC HF Count

An additional bit is assigned to each channel for the value status. The value status bit indicates if the read in digital value is valid. (0 = value is incorrect).

4.2.1 Address space DI mode

Address space for configuration as 16-channel DI 16x24VDC HF QI

The figure below shows the assignment of the address space for the configuration as a 16-channel module with value status. You can freely assign the start address for the module. The addresses of the channels are derived from the start address.

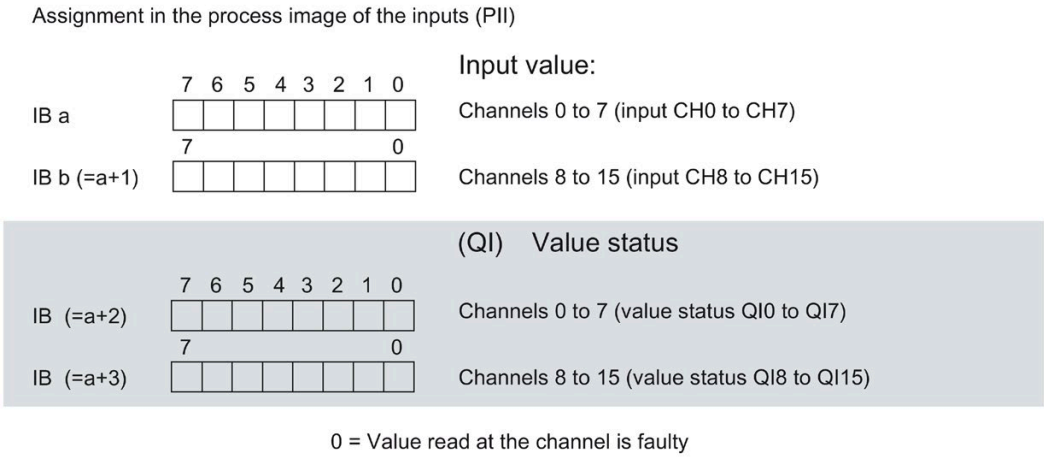

Figure 4-1 Address space for configuration as 16-channel DI 16x24VDC HF QI with value status

Address space for configuration as 2 x 8-channel DI 16x24VDC HF S QI

For the configuration as a 2 x 8-channel module, the channels of the module are divided into multiple submodules. The submodules can be assigned to different IO controllers when the module is used in a shared device.

The number of usable IO controllers depends on the interface module used. Please observe the information in the manual for the particular interface module.

Contrary to the 1 x 16-channel module configuration, each of the two submodules has a freely assignable start address.

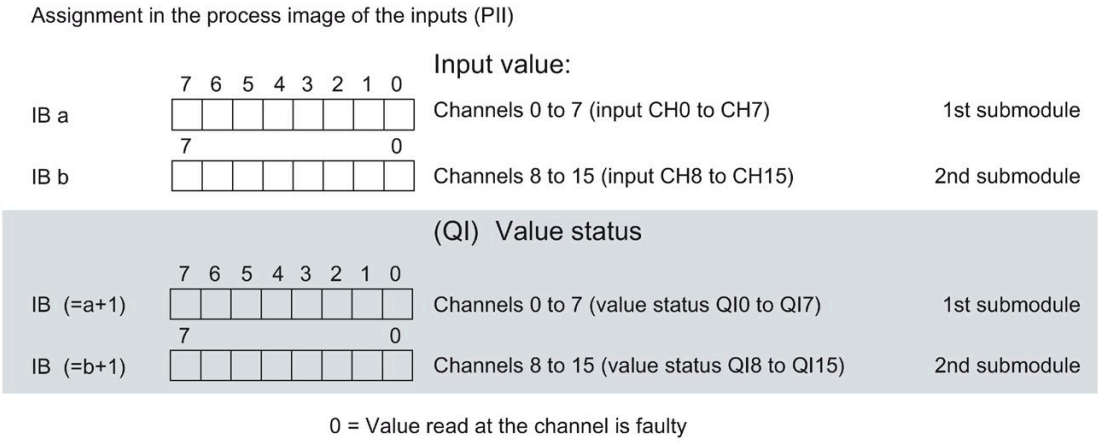

Figure 4-2 Address space for configuration as 2 x 8-channel DI 16x24VDC HF S QI

Address space for configuration as 1 x 16-channel DI 16x24VDC HF MSI

The channels 0 to 15 of the module are copied in up to four submodules with configuration 1 x 16-channel module (Module-internal shared input, MSI). Channels 0 to 15 are then available with identical input values in different submodules. These submodules can be assigned to up to four IO controllers when the module is used in a shared device. Each IO controller has read access to the same channels.

The number of IO controllers depends on the interface module being used. Please observe the information in the manual for the particular interface module.

Value status (Quality Information, QI)

The meaning of the value status depends on the submodule involved.

For the 1st submodule (= basic submodule), the value status 0 indicates that the value is incorrect.

For the 2nd to 4th submodule (=MSI submodule), the value status 0 indicates that the value is incorrect or the basic submodule has not yet been configured (not ready).

The following figure shows the assignment of the address space with submodules 1 and 2 and the value status.

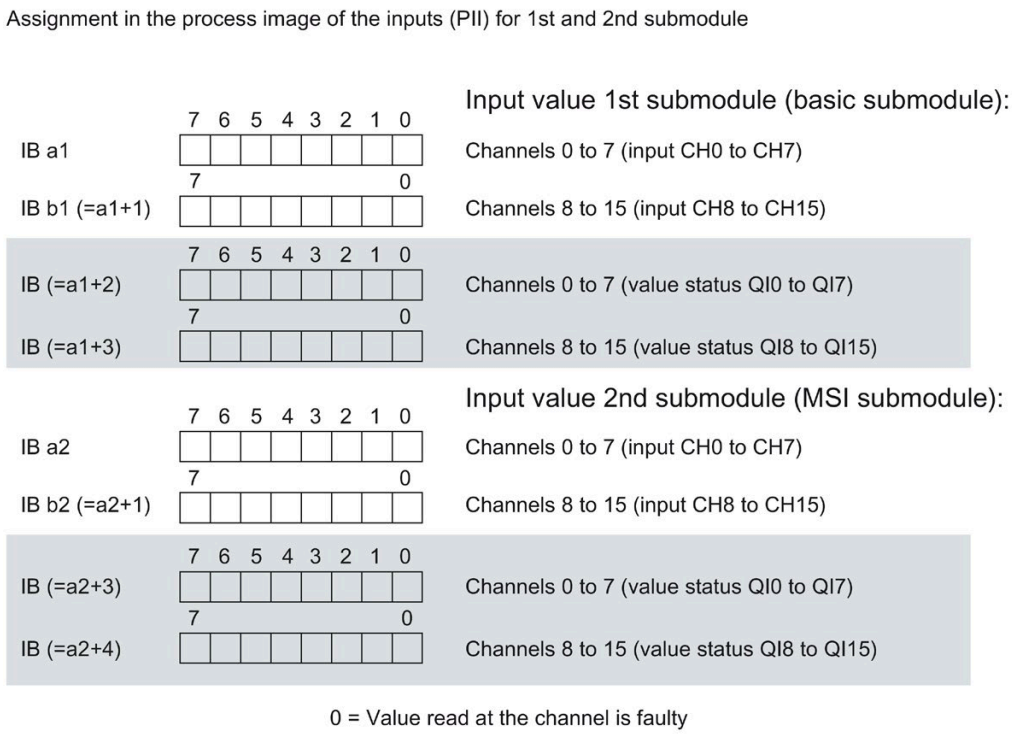

Figure 4-3 Address space for configuration as 1 x 16-channel DI 16x24VDC HF MSI

The following figure shows the assignment of the address space with submodules 3 and 4 and the value status.

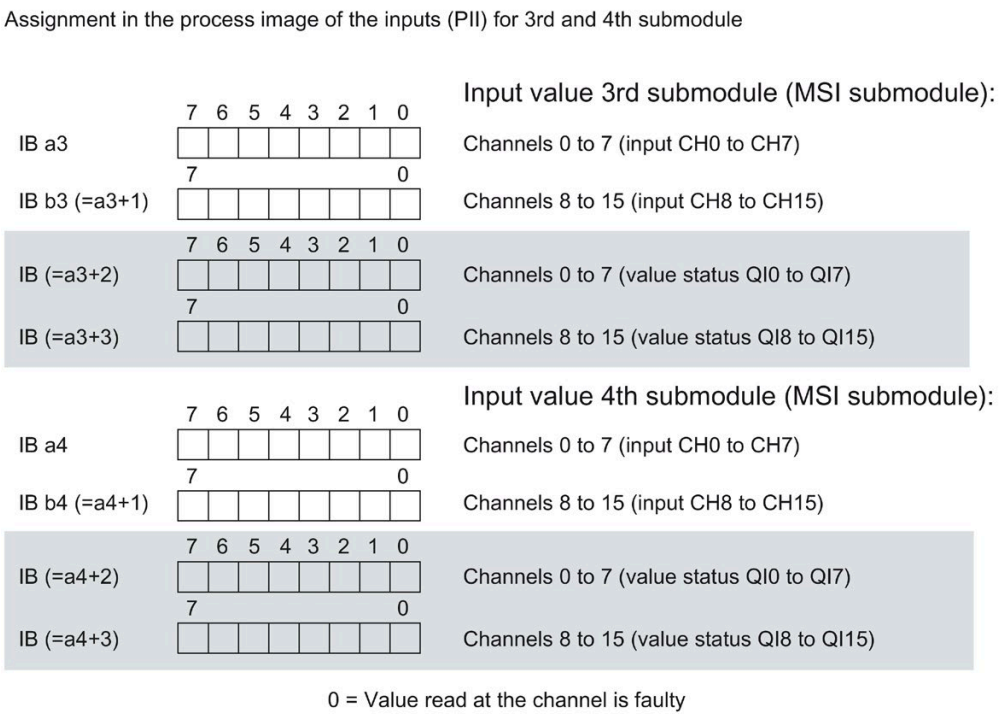

Figure 4-4 Address space for configuration as 1 x 16-channel DI 16x24VDC HF MSI

Reference

You can find information on the module-internal shared input/shared output (MSI/MSO) function in the section Module-internal shared input/shared output (MSI/MSO) of the function manual PROFINET with STEP 7 V13 (http://support.automation.siemens.com/WW/view/en/49948856).

4.2.2 Address space Counting mode

Address space for configuration as 1 x 16-channel DI 16x24VDC Count

The address space of channel 0 and channel 1 used for counting consists of the control and feedback interface. The Count function is controlled directly via the two interfaces. With suitable parameter assignment, a hardware interrupt is triggered.

If you use the module in the "Counting mode" (channels 0 and 1), the module occupies the following address areas:

- 16 bytes in the process image output (control interface).
- 20 bytes in the process image input (feedback interface).

Control interface

The figure below shows the address assignment of the module in the process image output. You use the control interface, for example, to start the counter or to set the counter value. With the "SW gate" control bit you open and close the software gate of the corresponding channel.

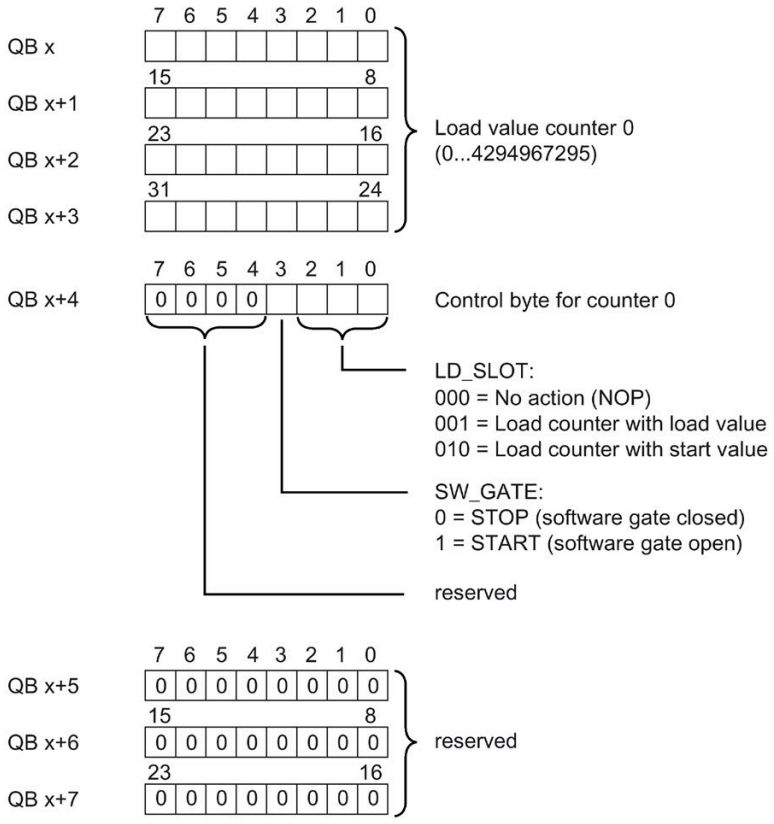

Figure 4-5 Assignment of the address space of the control interface of the DI 16x24VDC Count (bytes 0 to 7)

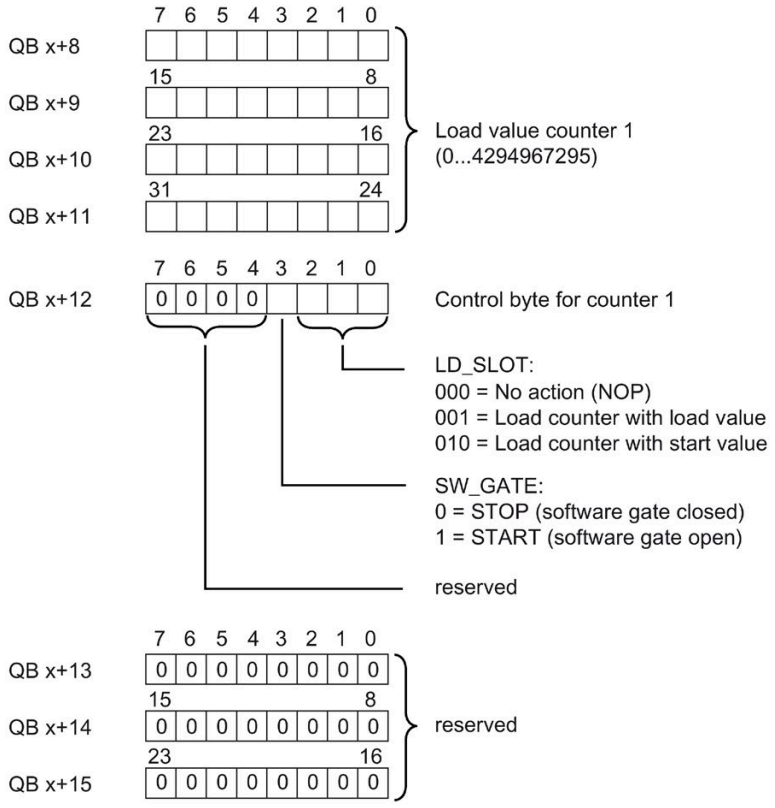

Figure 4-6 Assignment of the address space of the control interface of the DI 16x24VDC Count (bytes 8 to 15)

Feedback interface

The figure below shows the address assignment of the module in the process image input. The feedback interface for the counters (channels 0 and 1) begins at input byte x+4.

Via the feedback interface, the user program receives current counted values and status information from the module.

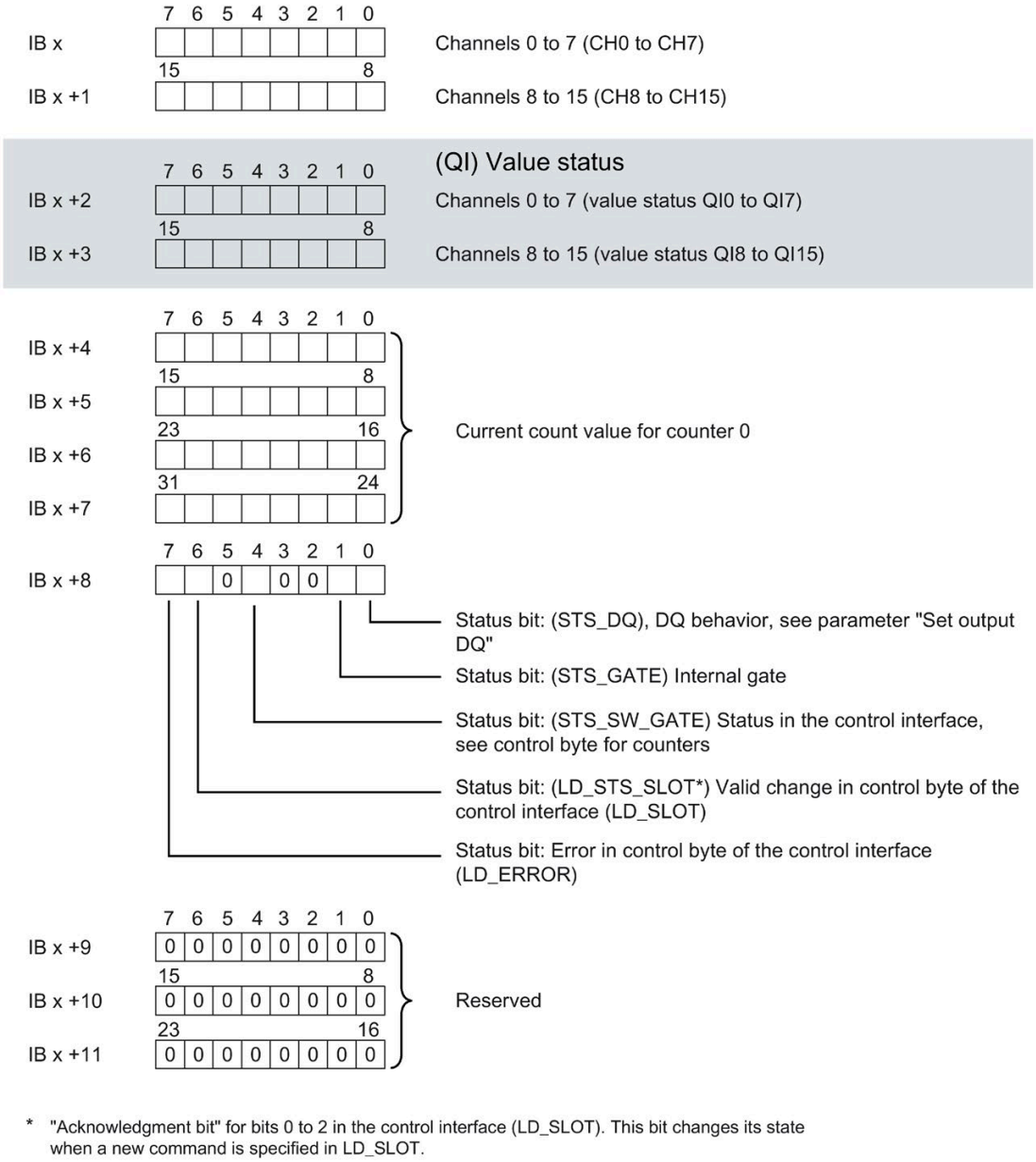

Figure 4-7 Assignment of the address space of the feedback interface of the DI 16x24VDC Count (bytes 0 to 11)

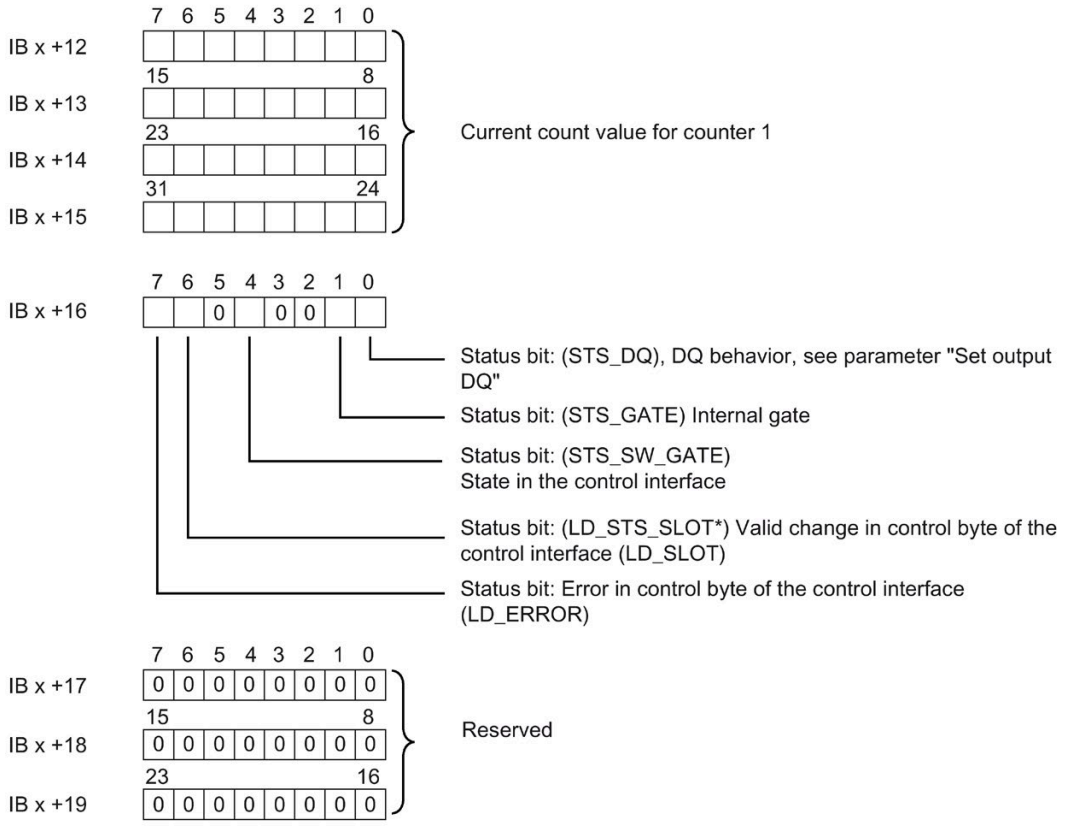

* "Acknowledgment bit" for bits 0 to 2 in the control interface (LD_SLOT). This bit changes its state when a new command is specified in LD_SLOT.

Figure 4-8 Assignment of the address space of the feedback interface of the DI 16x24VDC Count (bytes 12 to 19)

4.2.3 Examples of counting

In this section, you will find examples of the behavior of the counter and how you can specify this behavior. You specify the properties of the counter in the parameter assignment.

Behavior when a counting limit is exceeded - Stop counting

The following section describes the effects of the parameter "Behavior when a counting limit is exceeded = Stop counting". To control the counter, the bits of the control byte of the control interface are used, see section Address space Counting mode (Page 28)

Counting begins at the current counted value (the SW_GATE is set in the control byte). Bit sequence in the control byte of the control interface 0000 1000.

After the high counting limit is violated, counting is aborted (counting stops) and the counted value jumps to the low counting limit = 0. The STS_GATE bit is reset.

To restart the counting, the SW_GATE bit must be reset via the control interface and set again.

Whether or not counting is started again with the current counter value or with the start value depends on the command byte in the control interface.
Bit sequence in control byte of the control interface:

- bit 0 to 2 = "000" Start with current counter value
- bit 0 to 2 = "010" Start with start value

If the SW_GATE bit is reset in the control byte of the control interface before reaching the high counting limit, counting is stopped.

The following figure shows an example of the principle of stopping counting when a counting limit is exceeded.

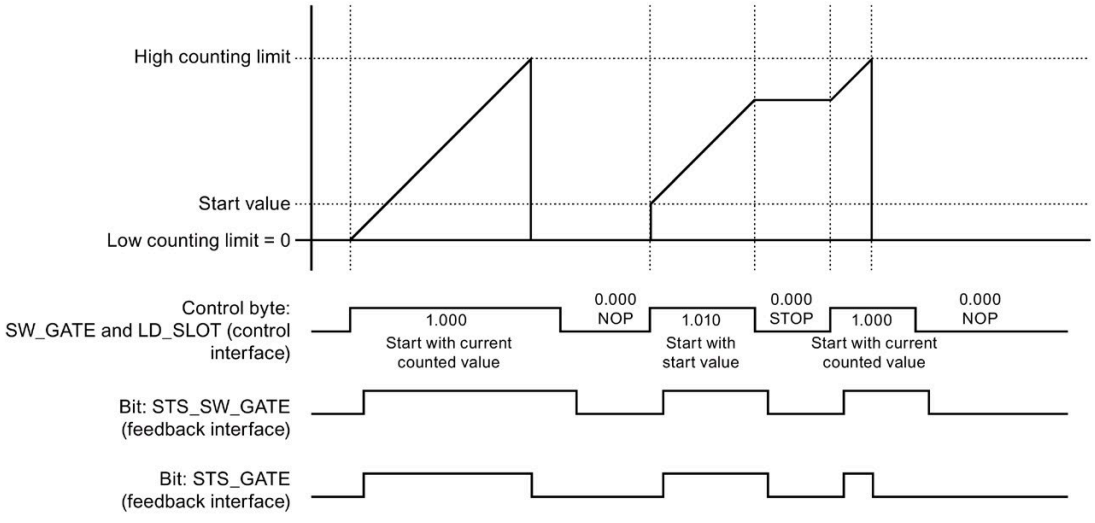

Figure 4-9 Principle: Stop counting

Behavior when a counting limit is exceeded - Continue counting

The following section describes the effects of the parameter "Behavior when a counting limit is exceeded = Continue counting". To control the counter, the bits of the control byte of the control interface are used, see section Address space Counting mode (Page 28), subsection Control interface.

Counting begins at the current counted value (the SW-GATE is set in the control byte). Bit sequence in the control byte of the control interface 0000 1000.

After the high counting limit is exceeded, the counted value jumps to the low counting limit = 0 and counting is continued.

If the SW_GATE bit is reset in the control byte of the control interface before reaching the high counting limit, counting is stopped.

The following figure shows an example of the principle of continuing counting when a counting limit is exceeded.

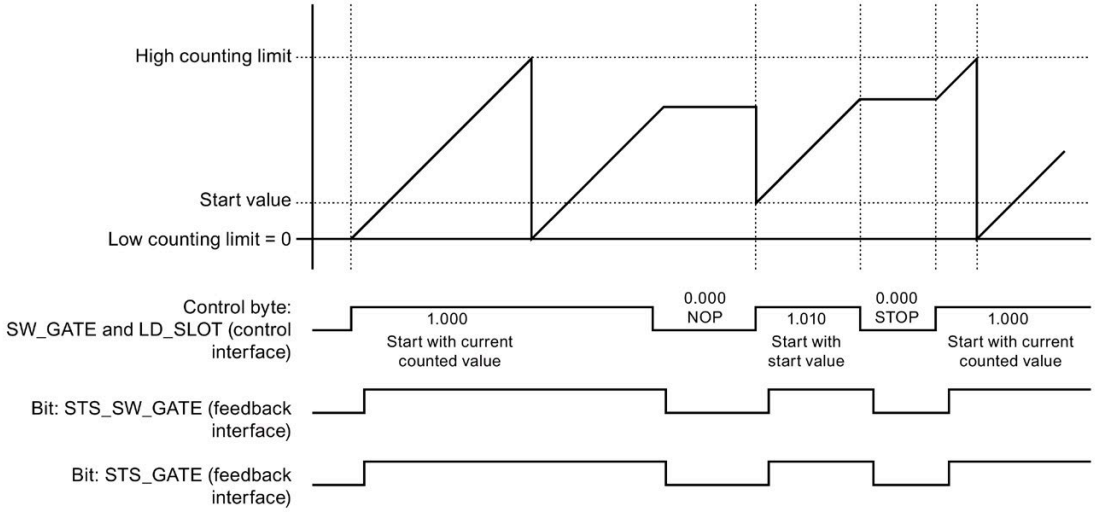

Figure 4-10 Principle: Continue counting

Set output DQ - behavior of the STS_DQ bit

The following section shows the behavior of the STS_DQ bit with the parameter assignment "Set output DQ = between comparison value and high counting limit".

The STS_DQ bit is set to 1

when the comparison value < = counted value <= high counting limit is reached.

As an option, a hardware interrupt can be enabled in the parameter assignment. This is generated with the parameter rising edge of the STS_DQ bit.

The following figure shows an example of the behavior of the STS_DQ bit between the comparison value and high counting limit.

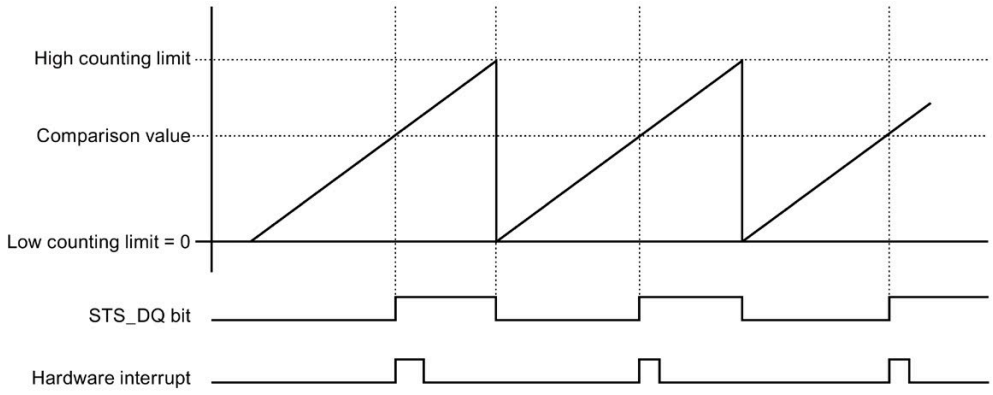

Figure 4-11 Behavior of the STS_DQ bit and hardware interrupt

The following section shows the behavior of the STS_DQ bit with the parameter assignment "Set output DQ = between low counting limit and comparison value".

The STS_DQ bit is set to 1

when the low counting limit < = counted value < = comparison value is reached.

As an option, a hardware interrupt can be enabled in the parameter assignment. This is generated with the parameter rising edge of the STS_DQ bit.

The following figure shows an example of the behavior of the STS_DQ bit between the low counting limit and comparison value.

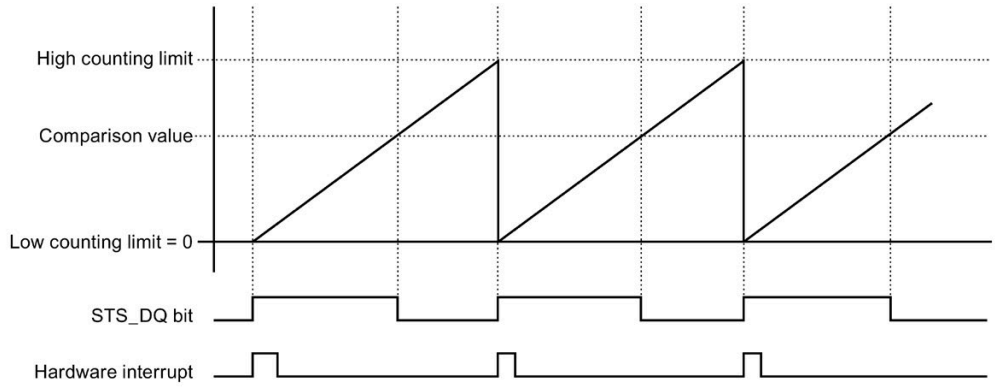

Figure 4-12 Behavior of the STS_DQ bit and hardware interrupt

Counting limits

The counting limits define the range of values of the counted value used. The counting limits can be set in the parameters and can be changed with the user program during runtime.

Configurable high counting limit: 4294967295 (2^{32}-1).

Low counting limit (not settable): 0

You can continue or terminate (automatic gate stop) counting if a counting limit is exceeded, see the parameter "Behavior when a counting limit is exceeded".

Start value/load value

The start value is specified in the parameter assignment with STEP 7 (TIA Portal). The load value can be changed by the user program. Both values must be between the low counting limit and high counting limit.

Comparison values

You specify a comparison value per channel that can control the feedback bit STS_DQ regardless of the user program. When the current counted value corresponds to the comparison condition set in the parameters, the feedback bit STS_DQ is set. You can use the feedback bit STS_DQ to control a digital output of a digital output module.

The comparison values can be set in the parameters and can be changed during runtime via the user program with parameter data record 0/1.

Gate control

The opening and closing of the software gate (SW-GATE) defines the time window in which the count signals are acquired. The software gate is controlled by the user program.

Reference

You can find additional information on the counting functionality in the function manual S7-1500, ET 200MP, ET 200SP counting, measuring and position detection (http://support.automation.siemens.com/WW/view/en/59709820).

Interrupts/diagnostics alarms

5

5.1 Status and error displays

LED displays

The following figure shows the LED displays (status and error displays) of DI 16x24VDC HF.

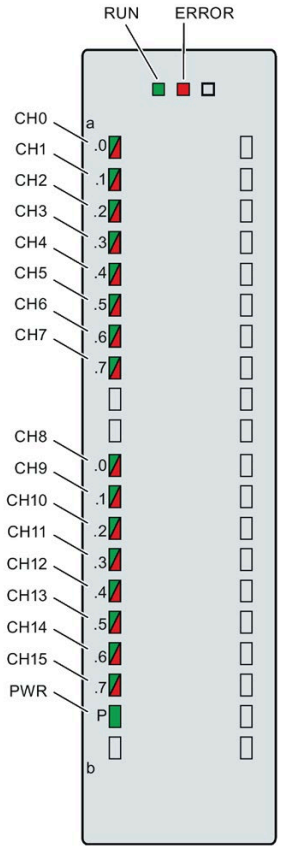

Figure 5-1 LED displays of the DI 16x24VDC HF module

Meaning of the LED displays

The following tables explain the meaning of the status and error displays. Remedial measures for diagnostic reports can be found in chapter Diagnostics alarms (Page 42).

RUN and ERROR LED

Table 5- 1 Status and error displays RUN and ERROR

LED		Meaning	Solution
RUN	ERROR		
Off	Off	Voltage missing or too low at backplane bus	• Switch on the CPU and/or the system power supply modules. • Verify that the U connectors are inserted. • Check whether too many modules are inserted.
Flashes	Off	The module starts and flashes until the valid parameter assignment is set.	---
On	Off	Module is configured	
On	Flashes	Indicates module errors (at least one error at one channel, e.g., wire break).	Evaluate the diagnostics data and eliminate the error (e.g., wire break).
Flashes	Flashes	Hardware defective	Replace the module.

PWR LED

Table 5- 2 PWR status display

LED PWR	Meaning	Solution
Off	Supply voltage L+ too low or missing	Check supply voltage L+.
On	Supply voltage L+ is present and OK	---

CHx LED

Table 5- 3 CHx status display

LED CHx	Meaning	Solution
□ Off	0 = Status of the input signal	---
■ On	1 = Status of the input signal	---
■ On	Diagnostics: Wire break	Check the wiring. When using simple switches, deactivate diagnostics or connect a resistor (25 kΩ ... 45 kΩ) to the encoder contacts.
	Supply voltage L+ too low or missing	Check supply voltage L+.

5.2 Interrupts

Digital input module DI 16x24VDC HF supports diagnostic and hardware interrupts.

You can find detailed information on the error event in the error organization block with the "RALRM" instruction (read additional interrupt info) and in the STEP 7 online help.

Diagnostics interrupt

The module generates a diagnostic interrupt at the following events:

- Missing supply voltage L+
- Wire break
- Parameter assignment error

Hardware interrupt

The module generates a hardware interrupt at the following events:

- Rising edge
- Falling edge
- Rising and falling edge
- Comparison event occurred for DQ (only in "Counting mode")

The module channel that triggered the hardware interrupt is entered in the start information of the organization block. The following figure shows the assignment to the bits of double word 8 in local data.

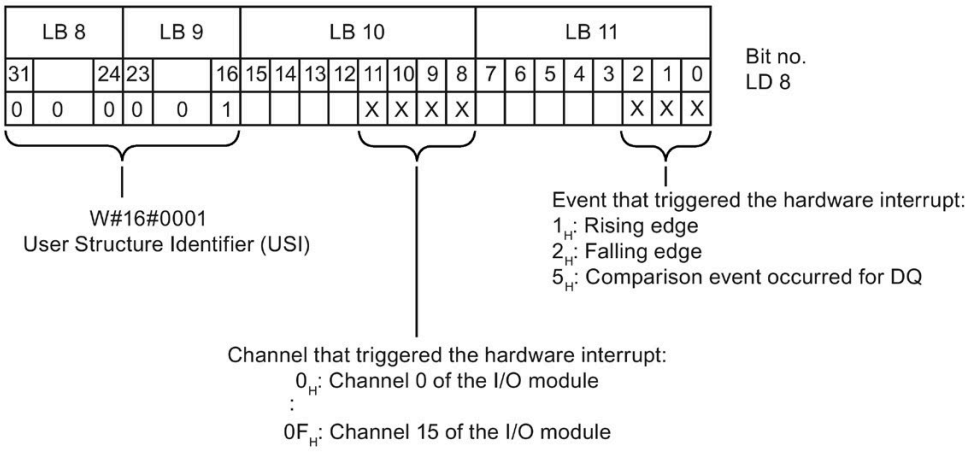

Figure 5-2 Start information of the organization block

Structure of the additional interrupt information

Table 5- 4 Structure of USI = W#16#0001

Data block name		Contents	Comment	Bytes
USI (User Structure Identifier)		W#16#0001	Additional interrupt info for hardware interrupts of the I/O module	2
The channel that triggered the hardware interrupt follows.				
	Channel	B#16#00 to B#16#0F	Number of the event-triggering channel (channel 0 to channel 15 of the module)	1
It follows the error event that triggered the hardware interrupt.				
	Event	B#16#01	Rising edge	1
		B#16#02	Falling edge	
		B#16#05	Comparison event occurred for DQ (only in "Counting mode")	

5.3 Diagnostics alarms

Diagnostics alarms

A diagnostics alarm is output for each diagnostics event and the ERROR LED flashes on the module. The diagnostics alarms can, for example, be read from the diagnostics buffer of the CPU. You can evaluate the error codes with the user program.

If the module is operated distributed with PROFIBUS DP in an ET 200MP system, you have the option to read out diagnostics data with the instruction RDREC or RD_REC using data record 0 and 1. The structure of the data records is available on the Internet in the "Manual for interface module IM 155-5 DP ST (6ES7155-5BA00-0AB0)".

Table 5- 5 Diagnostics alarms, their meaning and corrective measures

Diagnostics alarm	Error code	Meaning	Corrective measures
Wire break*	6_H	Impedance of encoder circuit too high	Use a different encoder type or modify the wiring, for example, using cables with larger cross-section
		Wire break between the module and sensor	Connect the cable
		Channel not connected (open)	• Disable diagnostics • Connect a resistor of 25 kΩ to 45 kΩ to the encoder contacts
Parameter assignment error	10_H	• The module cannot evaluate parameters for the channel • Incorrect parameter assignment	Correct the parameter assignment
Load voltage missing	11_H	Supply voltage L+ of the module is missing	Connect supply voltage L+ to module/channel
Hardware interrupt lost	16_H	The module cannot trigger an interrupt because the previous interrupt was not acknowledged; possibly a configuration error	• Change interrupt processing in the CPU and, if necessary, edit the module parameters. • The error persists until the module is assigned new parameters

* If the supply voltage fails in case of a pending wire break diagnostics, the value status momentarily indicates an incorrect value.

Technical specifications

6

Technical specifications of the DI 16x24VDC HF

The following table shows the technical specifications as of 05/2022. You will find a data sheet including daily updated technical specifications on the Internet (https://support.industry.siemens.com/cs/ww/en/pv/6ES7521-1BH00-0AB0/td?dl=en).

Article number	6ES7521-1BH00-0AB0
General information	
Product type designation	DI 16x24VDC HF
HW functional status	from FS04
Firmware version	V2.2.0
• FW update possible	Yes
Product function	
• I&M data	Yes; I&M0 to I&M3
• Isochronous mode	Yes
• Prioritized startup	Yes
Engineering with	
• STEP 7 TIA Portal configurable/integrated from version	V13 SP1 / -
• STEP 7 configurable/integrated from version	V5.5 SP3 / -
• PROFIBUS from GSD version/GSD revision	V1.0 / V5.1
• PROFINET from GSD version/GSD revision	V2.3 / -
Operating mode	
• DI	Yes
• Counter	Yes
• Oversampling	No
• MSI	Yes
Supply voltage	
Rated value (DC)	24 V
permissible range, lower limit (DC)	19.2 V
permissible range, upper limit (DC)	28.8 V
Reverse polarity protection	Yes
Input current	
Current consumption, max.	20 mA; with 24 V DC supply
Power	
Power available from the backplane bus	1.1 W
Power loss	
Power loss, typ.	2.6 W

Article number	6ES7521-1BH00-0AB0
Digital inputs	
Number of digital inputs	16
Digital inputs, parameterizable	Yes
Source/sink input	P-reading
Input characteristic curve in accordance with IEC 61131, type 3	Yes
Digital input functions, parameterizable	
• Gate start/stop	Yes
• Freely usable digital input	Yes
• Counter	
– Number, max.	2
– Counting frequency, max.	6 kHz
– Counting width	32 bit
– Counting direction up/down	Up
Input voltage	
• Rated value (DC)	24 V
• for signal "0"	-30 to +5 V
• for signal "1"	+11 to +30V
Input current	
• for signal "1", typ.	2.5 mA
Input delay (for rated value of input voltage) for standard inputs	
– parameterizable	Yes; 0.05 / 0.1 / 0.4 / 1.6 / 3.2 / 12.8 / 20 ms
– at "0" to "1", min.	0.05 ms
– at "0" to "1", max.	20 ms
– at "1" to "0", min.	0.05 ms
– at "1" to "0", max.	20 ms
for interrupt inputs	
– parameterizable	Yes
for technological functions	
– parameterizable	Yes
Cable length	
• shielded, max.	1 000 m
• unshielded, max.	600 m
Encoder	
Connectable encoders	
• 2-wire sensor	Yes
– permissible quiescent current (2-wire sensor), max.	1.5 mA

Article number	6ES7521-1BH00-0AB0
Isochronous mode	
Filtering and processing time (TCI), min.	80 µs; At 50 µs filter time
Bus cycle time (TDP), min.	250 µs
Interrupts/diagnostics/status information	
Diagnostics function	Yes
Alarms	
• Diagnostic alarm	Yes
• Hardware interrupt	Yes
Diagnoses	
• Monitoring the supply voltage	Yes
• Wire-break	Yes; to I < 350 µA
• Short-circuit	No
Diagnostics indication LED	
• RUN LED	Yes; green LED
• ERROR LED	Yes; red LED
• Monitoring of the supply voltage (PWR-LED)	Yes; green LED
• Channel status display	Yes; green LED
• for channel diagnostics	Yes; red LED
• for module diagnostics	Yes; red LED
Potential separation	
Potential separation channels	
• between the channels	No
• between the channels, in groups of	16
• between the channels and backplane bus	Yes
• between the channels and the power supply of the electronics	No
Isolation	
Isolation tested with	707 V DC (type test)
Standards, approvals, certificates	
Suitable for safety functions	No
Ambient conditions	
Ambient temperature during operation	
• horizontal installation, min.	-30 °C; From FS05
• horizontal installation, max.	60 °C
• vertical installation, min.	-30 °C; From FS05
• vertical installation, max.	40 °C
Altitude during operation relating to sea level	
• Installation altitude above sea level, max.	5 000 m; Restrictions for installation altitudes > 2 000 m, see manual

Article number	6ES7521-1BH00-0AB0
Dimensions	
Width	35 mm
Height	147 mm
Depth	129 mm
Weights	
Weight, approx.	240 g

Tolerances of the programmable input delay

Table 6- 1 Tolerances of the programmable input delay

Input delay	Tolerance range
0.05 ms	43 µs to 57 µs
0.1 ms	86 µs to 114 µs
0.4 ms	344 µs to 456 µs
1.6 ms	1.5 ms to 1.9 ms
3.2 ms (preset)	3 ms to 4 ms
12.8 ms	12 ms to 15 ms
20 ms	19 ms to 23 ms

Dimensional drawing

A

The dimensional drawing of the module on the mounting rail, as well as a dimensional drawing with open front cover, are provided in the appendix. Always observe the specified dimensions for installation in cabinets, control rooms, etc.

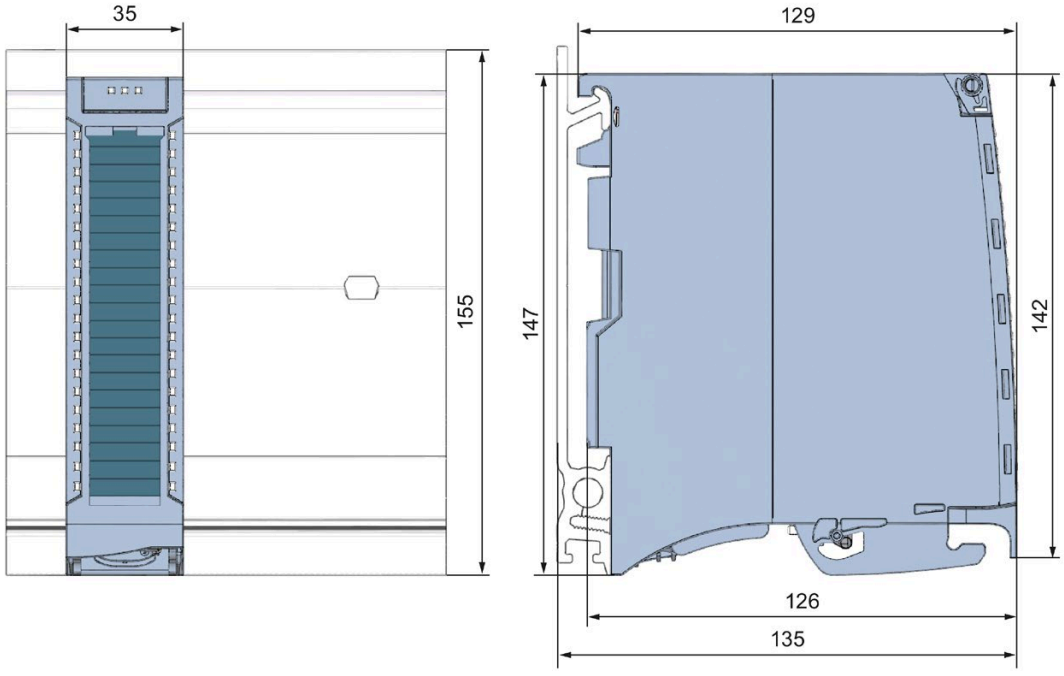

Figure A-1 Dimensional drawing of the DI 16x24VDC HF module

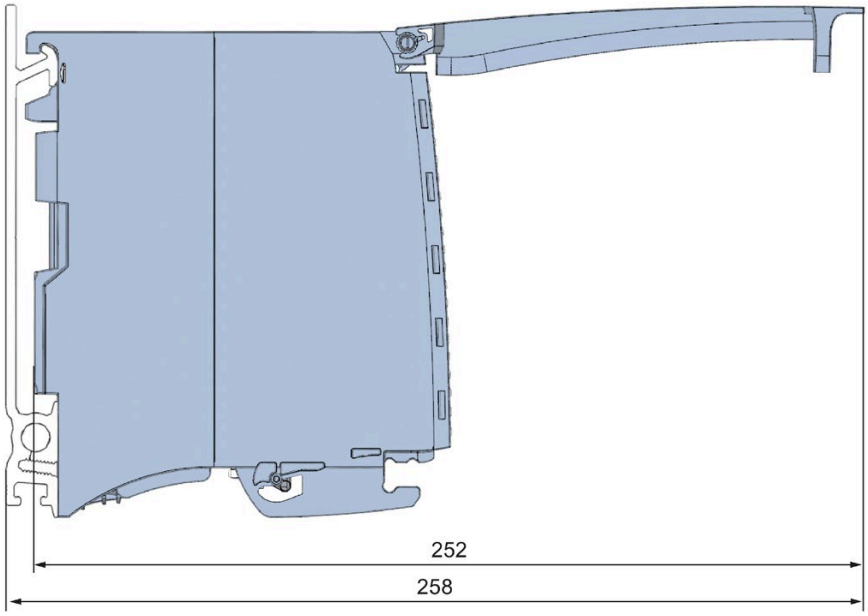

Figure A-2 Dimensional drawing of the DI 16x24VDC HF module, side view with open front cover

Parameter data records

B

B.1 Parameter assignment and structure of the parameter data records

The data records of the module have an identical structure, regardless of whether you configure the module with PROFIBUS DP or PROFINET IO.

Dependencies for configuration with GSD file

When configuring the module with a GSD file, remember that the settings of some parameters are dependent on each other. The parameters are only checked for plausibility by the module after the transfer to the module.

DI mode: no dependencies. You can assign the individual parameters in any combination.

Counting mode: The following table lists the parameters that depend on one another:

Table B- 1 Dependencies of parameters for configuration with GSD file

Device-specific parameters (GSD file)	Dependent parameters
Comparison value	0 ... high counting limit
Start value	0 ... high counting limit

Parameter assignment in the user program

You have the option to reconfigure the module in RUN (e.g. the input delay values of selected channels can be edited without having an effect on the other channels).

Parameter assignment in RUN

The WRREC instruction is used to transfer the parameters to the module using data records 0 to 15. The parameters set in STEP 7 do not change in the CPU, which means the parameters set in STEP 7 are still valid after a restart.

The parameters are only checked for plausibility by the module after the transfer.

Output parameter STATUS

The module ignores errors that occurred during the transfer of parameters with the WRREC instruction and continues operation with the previous parameter assignment. However, a corresponding error code is written to the STATUS output parameter.

The description of the WRREC instruction and the error codes is available in the STEP 7 online help.

Operation of the module behind a PROFIBUS DP interface module

If the module is operated behind a PROFIBUS DP interface module, the parameter data records 0 and 1 are not read back. You get the diagnostics data records 0 and 1 for the read back parameter data records 0 and 1. You can find more information in the Interrupts section of the PROFIBUS DP interface module device manual on the Internet (http://support.automation.siemens.com/WW/view/en/78324181).

B.2 Structure of the parameter data records DI mode

Assignment of data record and channel

For the configuration with 1 x 16 channels, the parameters are located in data records 0 to 15 and are assigned as follows:

- Data record 0 for channel 0
- Data record 1 for channel 1
- ...
- Data record 14 for channel 14
- Data record 15 for channel 15

For the configuration as a 2 x 8-channel module, the module has two submodules with eight channels each. The parameters for the channels are located in data records 0 to 7 and are assigned as follows:

- Data records 0 to 7 for channels 0 to 7 (submodule 1)
- Data records 0 to 7 for channels 8 to 15 (submodule 2)

Address the respective submodule for data record transfer.

Structure of a data record in the DI mode

The example in the figure below shows the structure of data record 0 for channel 0. The structure of channels 1 to 15 is identical. The values in byte 0 and byte 1 are fixed and may not be changed.

Enable a parameter by setting the corresponding bit to "1".

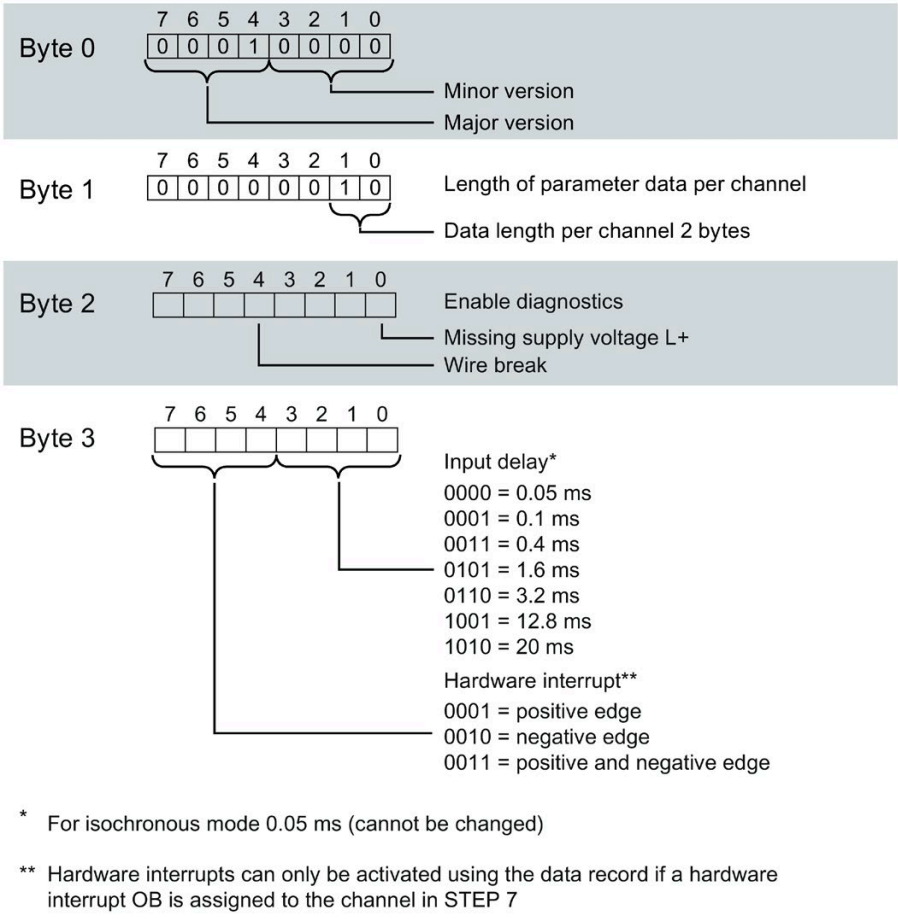

* For isochronous mode 0.05 ms (cannot be changed)

** Hardware interrupts can only be activated using the data record if a hardware interrupt OB is assigned to the channel in STEP 7

Figure B-1 Structure of data record 0: Bytes 0 to 3

B.3 Structure of the parameter data records Counting mode

Assignment of data record and channel

For the configuration with 1 x 16 channels, the parameters are located in data records 0 to 15 and are assigned as follows:

- Data record 0 for channel 0 with counting function
- Data record 1 for channel 1 with counting function
- Data record 2 for channel 2 (structure as in DI mode)
- ...
- Data record 14 for channel 14 (structure as in DI mode)
- Data record 15 for channel 15 (structure as in DI mode)

Structure of data record 0 of the Counting mode

The example in the figure below shows the structure of data record 0 for channel 0. The structure of channel 1 is identical, the values are located in data record 1.

The values in byte 0 and byte 1 are fixed and may not be changed.

Enable a parameter by setting the corresponding bit to "1".

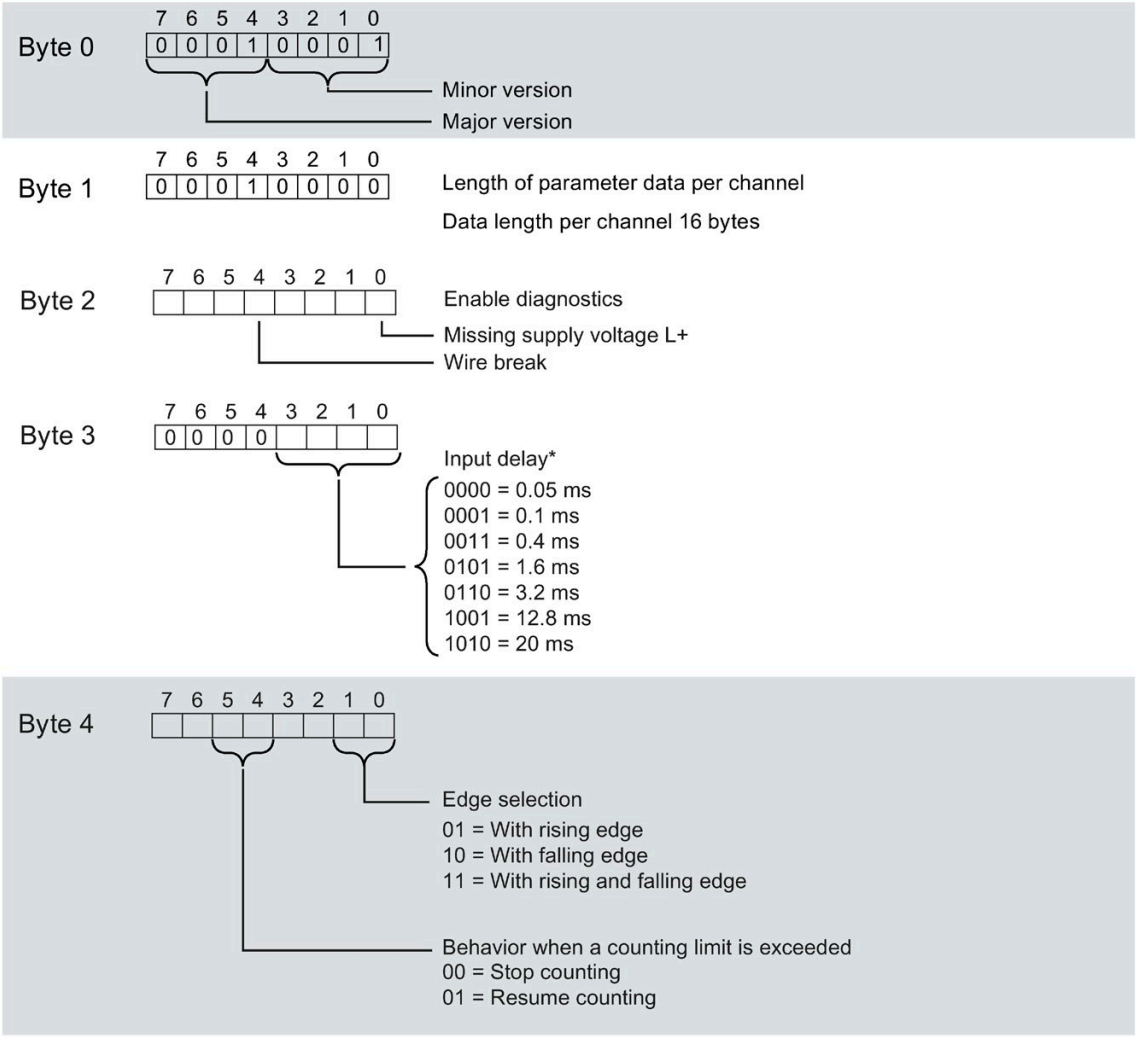

* For isochronous mode 0.05 ms (cannot be changed)

Figure B-2 Structure of data record 0: Bytes 0 to 4

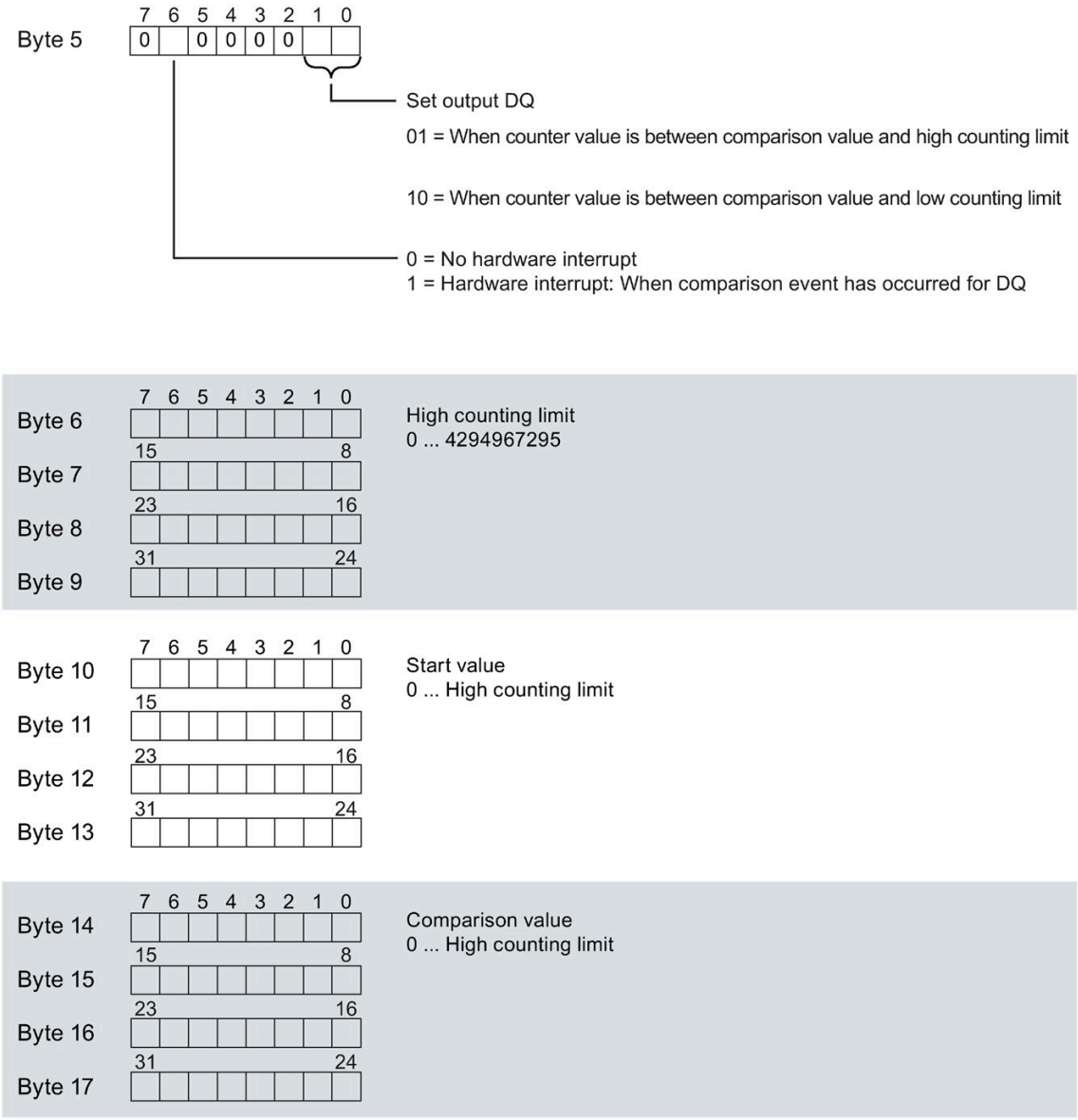

Figure B-3 Structure of data record 0: Bytes 5 to 17

Keep in mind that the counter is stopped and reset to the start value when you change count parameters.
Changing the parameters "Diagnostics" and "Hardware interrupts" does not have an effect on the counter.

Structure of data records 2 to 15

The structure of data records 2 to 15 for channels 2 to 15 is identical to the structure in the DI mode, see section Structure of the parameter data records DI mode (Page 50), figure Structure of data record 0: Bytes 0 to 3.

SIEMENS

SIMATIC

S7-1500 / ET 200MP

Digital input module DI 16x24VDC SRC BA (6ES7521-1BH50-0AA0)

Manual

Edition 09/2016

siemens.com

SIEMENS

SIMATIC

S7-1500/ET 200MP DI 16x24VDC SRC BA Digital Input Module (6ES7521-1BH50-0AA0)

Manual

Preface

Documentation guide 1

Product overview 2

Wiring 3

Address space 4

Diagnostic alarms 5

Technical specifications 6

Dimensional drawing A

09/2016

A5E03486159-AD

Legal information

Warning notice system

This manual contains notices you have to observe in order to ensure your personal safety, as well as to prevent damage to property. The notices referring to your personal safety are highlighted in the manual by a safety alert symbol, notices referring only to property damage have no safety alert symbol. These notices shown below are graded according to the degree of danger.

⚠ DANGER

indicates that death or severe personal injury **will** result if proper precautions are not taken.

⚠ WARNING

indicates that death or severe personal injury **may** result if proper precautions are not taken.

⚠ CAUTION

indicates that minor personal injury can result if proper precautions are not taken.

NOTICE

indicates that property damage can result if proper precautions are not taken.

If more than one degree of danger is present, the warning notice representing the highest degree of danger will be used. A notice warning of injury to persons with a safety alert symbol may also include a warning relating to property damage.

Qualified Personnel

The product/system described in this documentation may be operated only by **personnel qualified** for the specific task in accordance with the relevant documentation, in particular its warning notices and safety instructions. Qualified personnel are those who, based on their training and experience, are capable of identifying risks and avoiding potential hazards when working with these products/systems.

Proper use of Siemens products

Note the following:

⚠ WARNING

Siemens products may only be used for the applications described in the catalog and in the relevant technical documentation. If products and components from other manufacturers are used, these must be recommended or approved by Siemens. Proper transport, storage, installation, assembly, commissioning, operation and maintenance are required to ensure that the products operate safely and without any problems. The permissible ambient conditions must be complied with. The information in the relevant documentation must be observed.

Trademarks

All names identified by ® are registered trademarks of Siemens AG. The remaining trademarks in this publication may be trademarks whose use by third parties for their own purposes could violate the rights of the owner.

Disclaimer of Liability

We have reviewed the contents of this publication to ensure consistency with the hardware and software described. Since variance cannot be precluded entirely, we cannot guarantee full consistency. However, the information in this publication is reviewed regularly and any necessary corrections are included in subsequent editions.

Siemens AG
Division Digital Factory
Postfach 48 48
90026 NÜRNBERG
GERMANY

A5E03486159-AD
℗ 09/2016 Subject to change

Copyright © Siemens AG 2013 - 2016.
All rights reserved

Preface

Purpose of the documentation

This manual supplements the S7-1500/ET 200MP (https://support.industry.siemens.com/cs/ww/en/view/59191792) system manual.

Functions that relate in general to the systems are described in this system manual.

The information provided in this manual and in the system/function manuals supports you in commissioning the systems.

Changes compared to previous version

Compared to the previous version, this manual contains the following change:

Original texts of the license conditions and copyright notes for open-source software are available on the Internet as of 09/2016.

Conventions

The term "CPU" is used in this manual both for the CPUs of the S7-1500 automation system and for interface modules of the ET 200MP distributed I/O system.

Please also observe notes marked as follows:

Note

A note contains important information on the product described in the documentation, on the handling of the product or on the section of the documentation to which particular attention should be paid.

Security information

Siemens provides products and solutions with industrial security functions that support the secure operation of plants, systems, machines and networks.

In order to protect plants, systems, machines and networks against cyber threats, it is necessary to implement – and continuously maintain – a holistic, state-of-the-art industrial security concept. Siemens' products and solutions only form one element of such a concept.

Customer is responsible to prevent unauthorized access to its plants, systems, machines and networks. Systems, machines and components should only be connected to the enterprise network or the internet if and to the extent necessary and with appropriate security measures (e.g. use of firewalls and network segmentation) in place.

Additionally, Siemens' guidance on appropriate security measures should be taken into account. For more information about industrial security, please visit (http://www.siemens.com/industrialsecurity).

Siemens' products and solutions undergo continuous development to make them more secure. Siemens strongly recommends to apply product updates as soon as available and to always use the latest product versions. Use of product versions that are no longer supported, and failure to apply latest updates may increase customer's exposure to cyber threats.

To stay informed about product updates, subscribe to the Siemens Industrial Security RSS Feed under (http://www.siemens.com/industrialsecurity).

Open Source Software

Open-source software is used in the firmware of the I/O modules. Open Source Software is provided free of charge. We are liable for the product described, including the open-source software contained in it, pursuant to the conditions applicable to the product. Siemens accepts no liability for the use of the open source software over and above the intended program sequence, or for any faults caused by modifications to the software.

For legal reasons, we are obliged to publish the original text of the license conditions and copyright notices. Please read the information relating to this on the Internet (https://support.industry.siemens.com/cs/ww/en/view/109741045).

Table of contents

Preface 4
1 Documentation guide 7
2 Product overview 11
2.1 Properties 11
3 Wiring 13
4 Address space 15
4.1 Address space 15
5 Diagnostic alarms 19
5.1 Status and error displays 19
6 Technical specifications 21
A Dimensional drawing 24

Documentation guide

1

The documentation for the SIMATIC S7-1500 automation system, the CPU 1516pro-2 PN based on SIMATIC S7-1500 and the SIMATIC ET 200MP distributed I/O system is arranged into three areas.
This arrangement enables you to access the specific content you require.

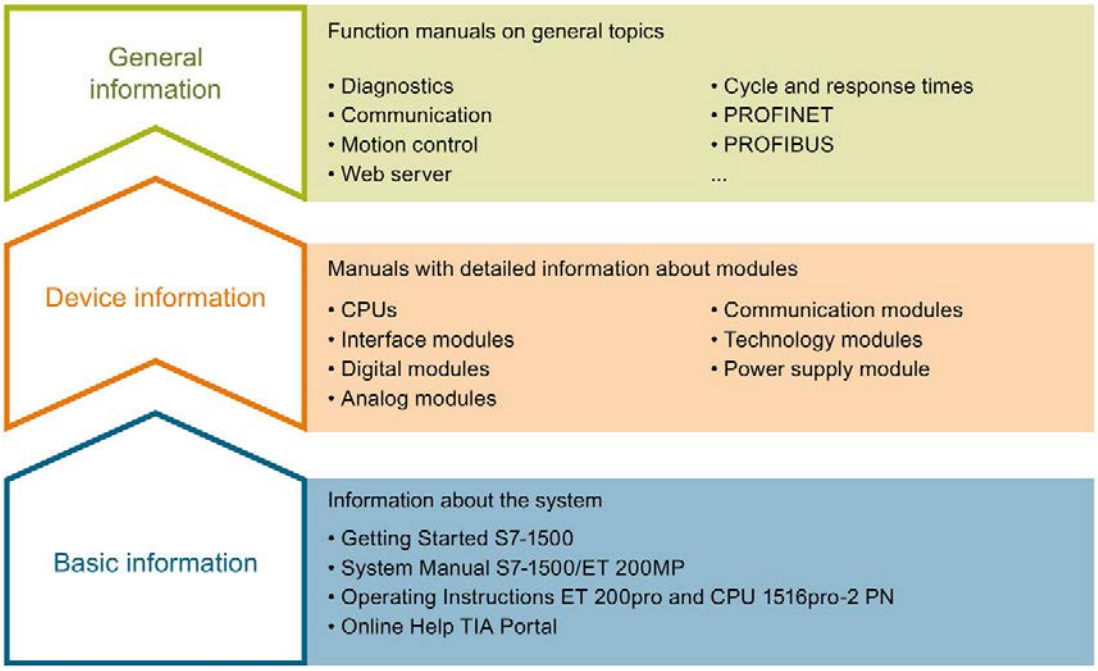

Basic information

The System Manual and Getting Started describe in detail the configuration, installation, wiring and commissioning of the SIMATIC S7-1500 and ET 200MP systems. For CPU 1516pro-2 PN you use the corresponding operating instructions. The STEP 7 online help supports you in the configuration and programming.

Device information

Product manuals contain a compact description of the module-specific information, such as properties, wiring diagrams, characteristics and technical specifications.

General information

The function manuals contain detailed descriptions on general topics regarding the SIMATIC S7-1500 and ET 200MP systems, e.g. diagnostics, communication, motion control, Web server, OPC UA.

You can download the documentation free of charge from the Internet (http://w3.siemens.com/mcms/industrial-automation-systems-simatic/en/manual-overview/Pages/Default.aspx).

Changes and supplements to the manuals are documented in a Product Information.

You can download the product information free of charge from the Internet (https://support.industry.siemens.com/cs/us/en/view/68052815).

Manual Collection S7-1500/ET 200MP

The Manual Collection contains the complete documentation on the SIMATIC S7-1500 automation system and the ET 200MP distributed I/O system gathered together in one file.

You can find the Manual Collection on the Internet (https://support.industry.siemens.com/cs/ww/en/view/86140384).

SIMATIC S7-1500 comparison list for programming languages

The comparison list contains an overview of which instructions and functions you can use for which controller families.

You can find the comparison list on the Internet (https://support.industry.siemens.com/cs/ww/en/view/86630375).

"mySupport"

With "mySupport", your personal workspace, you make the best out of your Industry Online Support.

In "mySupport", you can save filters, favorites and tags, request CAx data and compile your personal library in the Documentation area. In addition, your data is already filled out in support requests and you can get an overview of your current requests at any time.

You must register once to use the full functionality of "mySupport".

You can find "mySupport" on the Internet (https://support.industry.siemens.com/My/ww/en).

"mySupport" - Documentation

In the Documentation area in "mySupport" you can combine entire manuals or only parts of these to your own manual.
You can export the manual as PDF file or in a format that can be edited later.

You can find "mySupport" - Documentation on the Internet (http://support.industry.siemens.com/My/ww/en/documentation).

"mySupport" - CAx data

In the CAx data area in "mySupport", you can access the current product data for your CAx or CAe system.

You configure your own download package with a few clicks.

In doing so you can select:

- Product images, 2D dimension drawings, 3D models, internal circuit diagrams, EPLAN macro files
- Manuals, characteristics, operating manuals, certificates
- Product master data

You can find "mySupport" - CAx data on the Internet (http://support.industry.siemens.com/my/ww/en/CAxOnline).

Application examples

The application examples support you with various tools and examples for solving your automation tasks. Solutions are shown in interplay with multiple components in the system - separated from the focus on individual products.

You will find the application examples on the Internet (https://support.industry.siemens.com/sc/ww/en/sc/2054).

TIA Selection Tool

With the TIA Selection Tool, you can select, configure and order devices for Totally Integrated Automation (TIA).
This tool is the successor of the SIMATIC Selection Tool and combines the known configurators for automation technology into one tool.
With the TIA Selection Tool, you can generate a complete order list from your product selection or product configuration.

You can find the TIA Selection Tool on the Internet (http://w3.siemens.com/mcms/topics/en/simatic/tia-selection-tool).

SIMATIC Automation Tool

You can use the SIMATIC Automation Tool to run commissioning and maintenance activities simultaneously on various SIMATIC S7 stations as a bulk operation independently of the TIA Portal.

The SIMATIC Automation Tool provides a multitude of functions:

- Scanning of a PROFINET/Ethernet network and identification of all connected CPUs
- Address assignment (IP, subnet, gateway) and station name (PROFINET device) to a CPU
- Transfer of the date and the programming device/PC time converted to UTC time to the module
- Program download to CPU
- Operating mode switchover RUN/STOP
- Localization of the CPU by means of LED flashing
- Reading out CPU error information
- Reading the CPU diagnostic buffer
- Reset to factory settings
- Updating the firmware of the CPU and connected modules

You can find the SIMATIC Automation Tool on the Internet (https://support.industry.siemens.com/cs/ww/en/view/98161300).

PRONETA

With SIEMENS PRONETA (PROFINET network analysis), you analyze the PROFINET network during commissioning. PRONETA features two core functions:

- The topology overview independently scans PROFINET and all connected components.
- The IO check is a fast test of the wiring and the module configuration of a system.

You can find SIEMENS PRONETA on the Internet (https://support.industry.siemens.com/cs/ww/en/view/67460624).

Product overview

2

2.1 Properties

Article number

6ES7521-1BH50-0AA0

View of the module

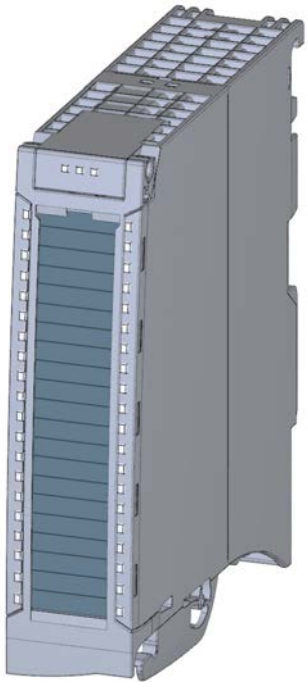

Figure 2-1 View of the DI 16x24VDC SRC BA module

Properties

The module has the following technical properties:

- 16 digital inputs; electrically isolated in groups of 16
- Reading M
- Rated input voltage 24 V DC
- Suitable for switches and 2-/3-/4-wire proximity switches

The module supports the following functions:

Table 2- 1 Version dependencies of the module functions

Function	Firmware version of the module	Configuration software	
		STEP 7 (TIA Portal)	GSD file in STEP 7 (TIA Portal) V12 or higher, or STEP 7 V5.5 SP3 or higher
Firmware update	V1.0.0 or higher	V12 or higher	X
Identification data I&M0 to I&M3	V1.0.0 or higher	V12 or higher	X
Module-internal Shared Input (MSI)	V2.0.0 or higher	V13 Update 3 or higher (PROFINET IO only)	X (PROFINET IO only)
Configurable submodules / submodules for Shared Device	V2.0.0 or higher	V13 Update 3 or higher (PROFINET IO only)	X (PROFINET IO only)
Configurable after interface module IM 155-5 DP ST	V2.0.0 or higher	V13 or higher	X

You can configure the module with STEP 7 (TIA Portal) and with a GSD file.

Accessories

The following accessories are supplied with the module and can also be ordered separately as spare parts:

- Labeling strips
- U connector
- Universal front door

Other components

The following component can be ordered separately:

Front connectors, including potential jumpers and cable ties

You can find additional information on accessories in the S7-1500/ET 200MP (http://support.automation.siemens.com/WW/view/en/59191792) system manual.

Wiring

3

This section contains the block diagram of the module and outlines various wiring options.

You can find information on wiring the front connector, creating a cable shield, etc. in the Wiring section of the S7-1500/ET 200MP (http://support.automation.siemens.com/WW/view/en/59191792) system manual.

Wiring and block diagram

The figure below shows you how to connect the module and channel addressing (input byte a to input byte b)

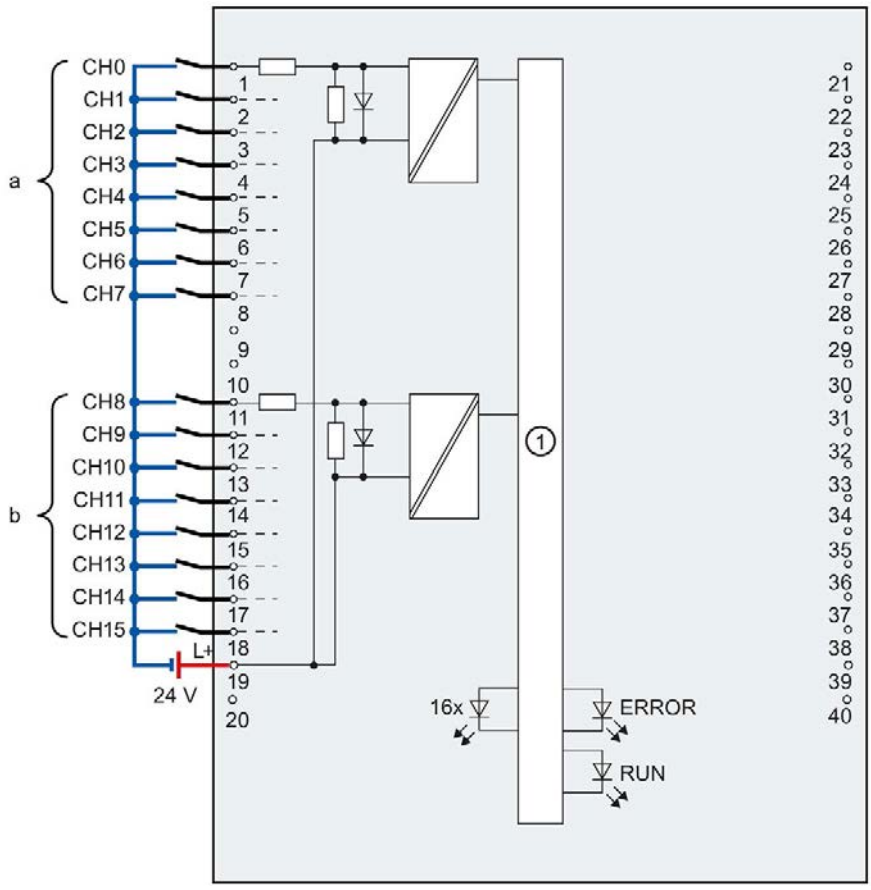

①	Backplane bus interface	CHx	Channel or channel status LED (green)
L+	Supply voltage 24 V DC	RUN	Status display LED (green)
		ERROR	Error display LED (red)

Figure 3-1 Block diagram and terminal assignment

Tip: Using the potential jumpers

Use the potential jumpers supplied with the front connector if you want to distribute the 24V DC supply voltage to a neighboring module. This helps you to avoid having to terminate two wires to one terminal.

Proceed as follows:

1. Connect the 24 V DC supply voltage to terminals 19 and 20.
2. Insert the potential jumpers between terminals 19 and 39 (L+) and between terminals 20 and 40 (M).
3. Use the terminals 39 and 40 to distribute the potential to the next module

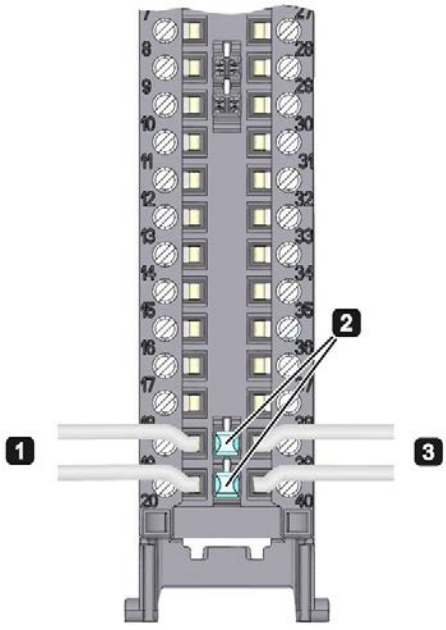

Figure 3-2 Using the potential jumpers

Note

Ensure that the maximum current load of 8 A per potential jumper is not exceeded.

Address space

4

4.1 Address space

The module can be configured differently in STEP 7; see following table. Depending on the configuration, additional/different addresses are assigned in the process image of the inputs.

Configuration options of DI 16x24VDC SRC BA

You can configure the module with STEP 7 (TIA Portal) or with a GSD file.

When you configure the module by means of the GSD file, the configurations are available under different abbreviations/module names.

The following configurations are possible:

Table 4- 1 Configuration options

Configuration	Short designation/ module name in the GSD file	Configuration software, e.g., with STEP 7 (TIA Portal)	
		Integrated in hardware catalog STEP 7 (TIA Portal)	GSD file in STEP 7 (TIA Portal) V12 or higher or STEP 7 V5.5 SP3 or higher
1 x 16-channel without value status	DI 16x24VDC SRC BA	V12 or higher	X
2 x 8-channel without value status	DI 16x24VDC SRC BA S	V13 Update 3 or higher (PROFINET IO only)	X (PROFINET IO only)
1 x 16-channel with value status for module-internal shared input with up to 4 submodules	DI 16x24VDC SRC BA MSI	V13 Update 3 or higher (PROFINET IO only)	X (PROFINET IO only)

Value status (Quality Information, QI)

The value status is always activated for the DI 16x24VDC SRC BA MSI module.

An additional bit is assigned to each channel for the value status. In contrast to the modules with diagnostics capability, the module only shows information regarding the parameter assignment of the first submodule (basic submodule) in the value status.

The module does not supply a value status for the read-in digital value.

Address space for configuration as DI 16x24VDC SRC BA

The following figure shows the address space allocation for the configuration as 16-channel module. You can freely assign the start address for the module. The addresses of the channels are derived from the start address.

The letters "a to d" are printed on the module - "EB a", for example, stands for module start address input byte a.

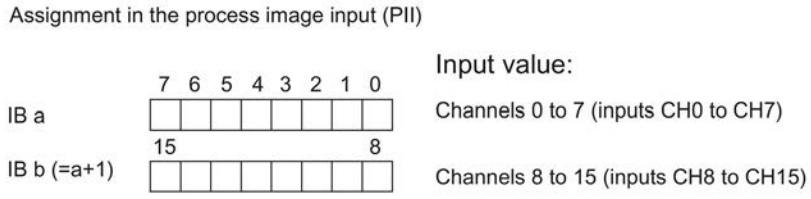

Figure 4-1 Address space for configuration as 16-channel DI 16x24VDC SRC BA

Address space for configuration as 2 x 8-channel DI 16x24VDC SRC BA S

For the configuration as a 2 x 8-channel module, the channels of the module are divided into multiple submodules. The submodules can be assigned to different IO controllers when the module is used in a shared device.

The number of usable IO controllers depends on the interface module used. Please observe the information in the manual for the particular interface module.

Contrary to the 1 x 16-channel module configuration, each of the two submodules has a freely assignable start address.

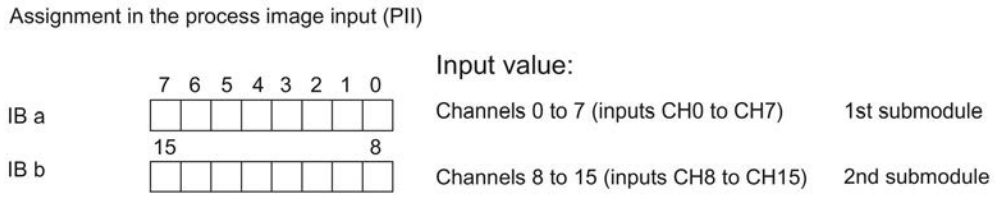

Figure 4-2 Address space for configuration as 2 x 8-channel DI 16x24VDC SRC BA

Address space for configuration as 1 x 16-channel DI 16x24VDC SRC BA MSI

The channels 0 to 15 of the module are copied in up to four submodules with configuration 1 x 16-channel module (Module-internal shared input, MSI). Channels 0 to 15 are then available with identical input values in different submodules. These submodules can be assigned to up to four IO controllers when the module is used in a shared device. Each IO controller has read access to the same channels.

The number of usable IO controllers depends on the interface module used. Please observe the information in the manual for the particular interface module.

Value status (Quality Information, QI)

The meaning of the value status depends on the submodule involved.

For the 1st submodule (=basic submodule), the value status is not relevant.

For the 2nd to 4th submodule (=MSI submodule), the value status 0 indicates that the basic submodule parameters have not yet been assigned (not ready).

The figure below shows the assignment of the address space with submodules 1 and 2.

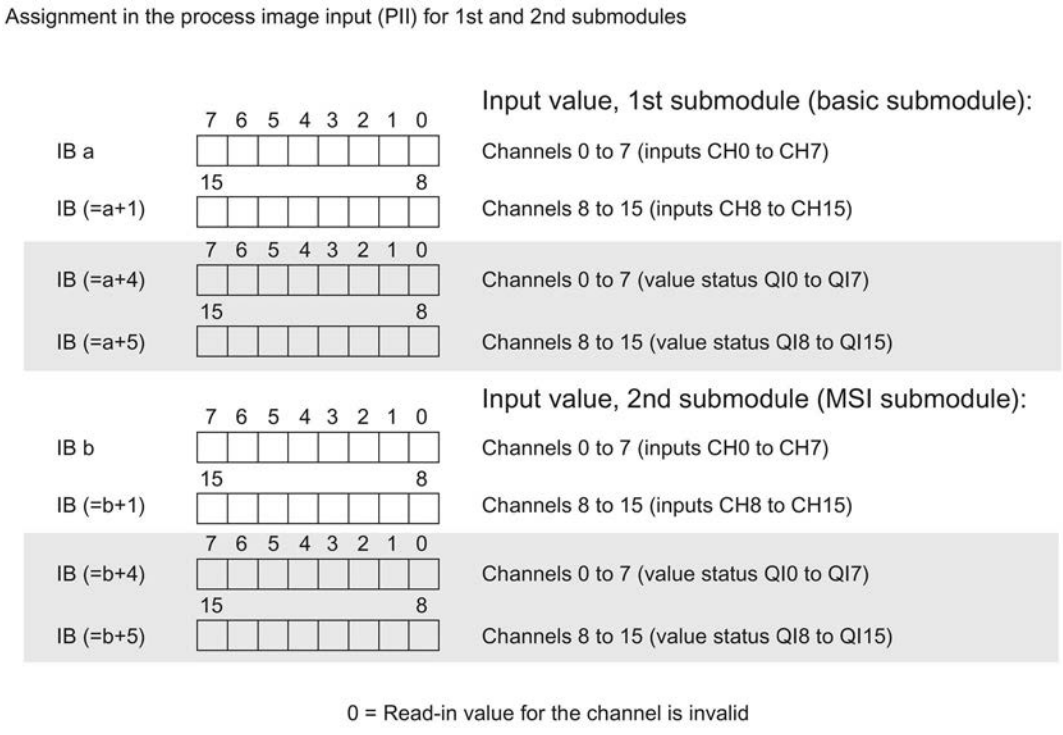

Figure 4-3 Address space for configuration as 1 x 16-channel DI 16x24VDC SRC BA MSI

The figure below shows the assignment of the address space with submodules 3 and 4.

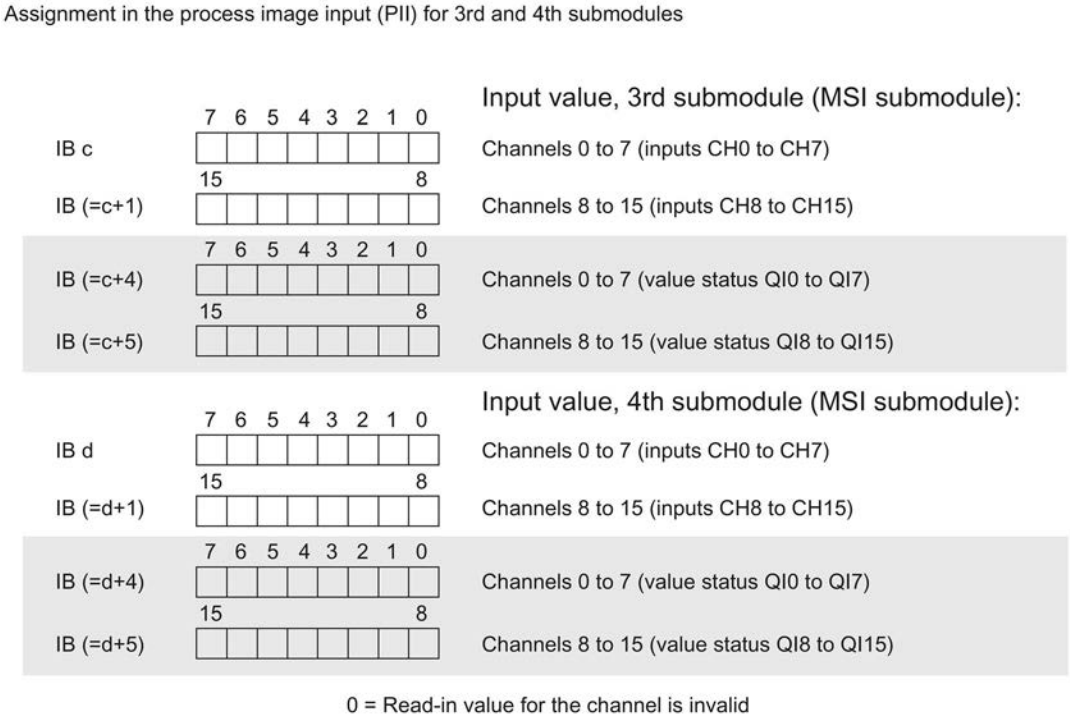

Figure 4-4 Address space for configuration as 1 x 16-channel DI 16x24VDC SRC BA MSI

Reference

You can find information on the module-internal shared input/shared output (MSI/MSO) function in the section Module-internal shared input/shared output (MSI/MSO) of the function manual PROFINET with STEP 7 V13 (https://support.industry.siemens.com/cs/ww/en/view/49948856).

Diagnostic alarms

5

5.1 Status and error displays

LED displays

The following figure shows the LED displays (status and error displays) of DI 16x24VDC SRC BA.

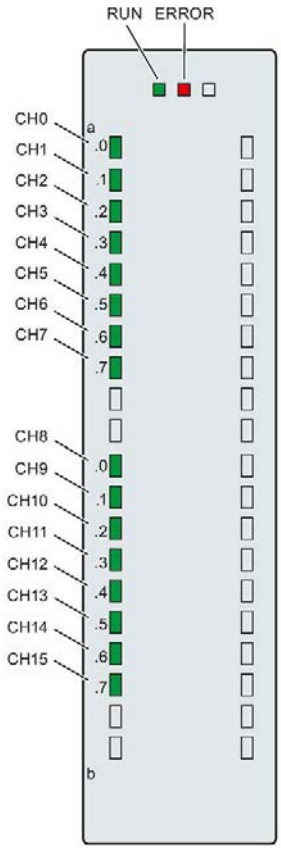

Figure 5-1 LED displays of the module DI 16x24VDC SRC BA

Meaning of the LED displays

The following table explains the meaning of the status and error displays.

RUN and ERROR LED

Table 5- 1 Status and error displays RUN and ERROR

LED		Meaning	Remedy
RUN	ERROR		
Off	Off	Voltage missing or too low at backplane bus	• Switch on the CPU and/or the system power supply modules. • Verify that the U connectors are inserted. • Check to see if too many modules are inserted.
Flashes	Off	Module starts up.	---
On	Off	Module is ready.	
Flashes	Flashes	Hardware defective.	Replace the module.

CHx LED

Table 5- 2 CHx status display

LED CHx	Meaning	Remedy
Off	0 = Status of the input signal	---
On	1 = Status of the input signal	---

Technical specifications

6

Technical specifications of the DI 16x24VDC SRC BA

	6ES7521-1BH50-0AA0
General information	
Product type designation	DI 16x24VDC SRC BA
Hardware functional status	FS01
Firmware version	V2.0.0
• FW update possible	Yes
Product function	
I&M data	Yes; I&M0 to I&M3
Engineering with	
STEP 7 TIA Portal can be configured/integrated as of version	V12 / V12
STEP 7 can be configured/integrated as of version	V5.5 SP3 / -
PROFIBUS as of GSD version/GSD revision	V1.0 / V5.1
PROFINET as of GSD version/GSD revision	V2.3 / -
Operating mode	
DI	Yes
Counters	No
MSI	Yes
Supply voltage	
Valid range, low limit (DC)	20.4 V
Valid range, high limit (DC)	28.8 V
Power	
Power consumption from the backplane bus	0.9 W
Power loss	
Power loss, typ.	2.8 W
Digital inputs	
Number of inputs	16
Configurable digital inputs	No
Sinking/sourcing input	reading m
Input characteristic curve acc. to IEC 61131, type 3	Yes
Input voltage	
Type of input voltage	DC
Rated value (DC)	24 V
for signal "0"	-5 to +30 V
for signal "1"	-11 to -30 V

	6ES7521-1BH50-0AA0
Input current	
for signal "1", typ.	4.5 mA
Input delay (for rated value of input voltage)	
For standard inputs	
• Configurable	No
• with "0" to "1", min.	3 ms
• with "0" to "1", max.	4 ms
• with "1" to "0", min.	3 ms
• with "1" to "0", max.	4 ms
For interrupt inputs	
• Configurable	No
for technological functions	
• Configurable	No
Cable length	
shielded, max.	1000 m
unshielded, max.	600 m
Encoders	
Connectable encoders	
2-wire sensor	Yes
• Permitted quiescent current (2-wire sensor), max.	1.5 mA
Isochronous mode	
Isochronous mode (application synchronized up to terminal)	No
Interrupts/diagnostics/status information	
Diagnostics function	No
Interrupts	
Diagnostics interrupt	No
Hardware interrupt	No
Diagnostics alarms	
Monitoring of supply voltage	No
Wire break	No
Short-circuit	No
Diagnostics indicator LED	
RUN LED	Yes; green LED
ERROR LED	Yes; red LED
Monitoring of supply voltage (PWR LED)	No
Channel status display	Yes; green LED
For channel diagnostics	No
For module diagnostics	No

	6ES7521-1BH50-0AA0
Electrical isolation	
Electrical isolation of channels	
Between the channels	No
Between the channels, in groups of	16
Between the channels and backplane bus	Yes
Isolation	
Isolation tested with	707 V DC (type test)
Ambient conditions	
Ambient temperature during operation	
Horizontal mounting position, min.	0 °C
Horizontal mounting position, max.	60 °C
Vertical mounting position, min.	0 °C
Vertical mounting position, max.	40 °C
Distributed mode	
Prioritized startup	Yes
Dimensions	
Width	35 mm
Height	147 mm
Depth	129 mm
Weights	
Weight, approx.	230 g

Dimensional drawing

A

The dimensional drawing of the module on the mounting rail, as well as a dimensional drawing with open front cover, are provided in the appendix. Always observe the specified dimensions for installation in cabinets, control rooms, etc.

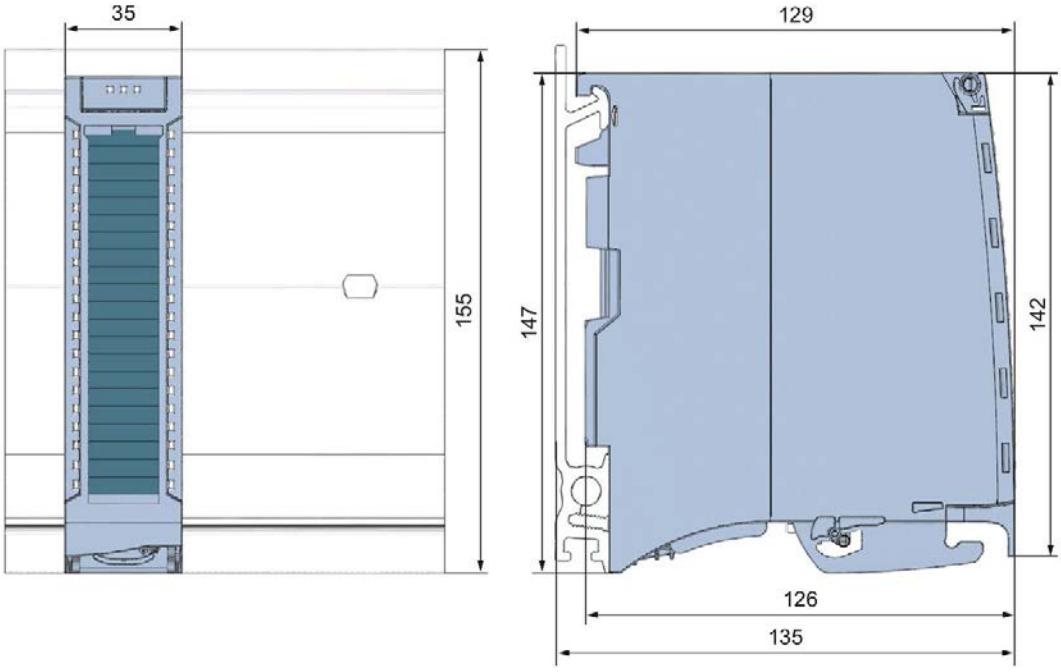

Figure A-1 Dimensional drawing of the DI 16x24VDC SRC BA module

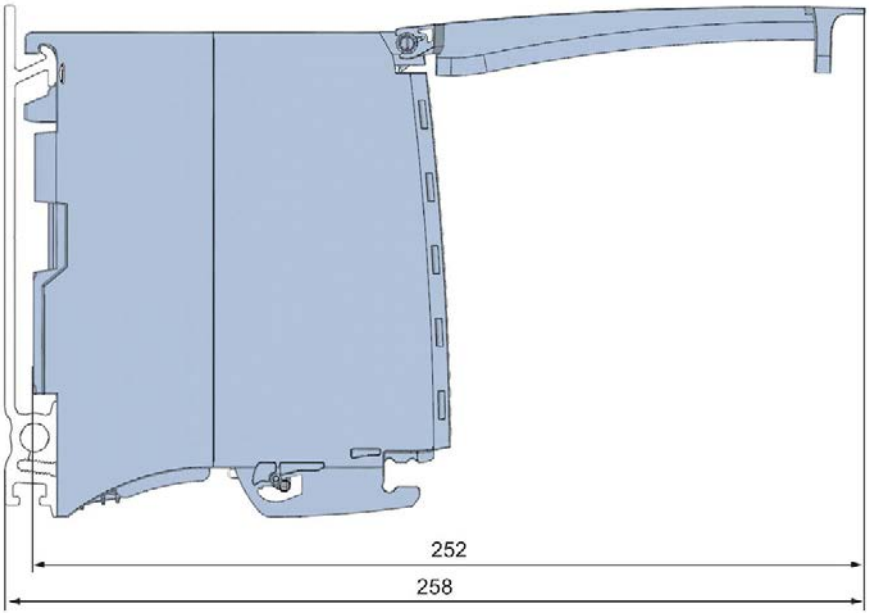

Figure A-2 Dimensional drawing of the DI 16x24VDC SRC BA module, side view with open front cover

SIEMENS

Manual

SIMATIC

S7-1500 / ET 200MP

Digital input module
DI 16xNAMUR HF
(6ES7521-7TH00-0AB0)

Edition 07/2021

support.industry.siemens.com

SIEMENS

SIMATIC

S7-1500/ET 200MP Digital Input Module DI 16xNAMUR HF (6ES7521-7TH00-0AB0)

Equipment Manual

Preface

Documentation guide 1

Product overview 2

Connecting 3

Parameters/address space 4

Interrupts/diagnostics alarms 5

Technical specifications 6

Dimension drawing A

Parameter data record B

07/2021

A5E50839840-AA

Legal information

Warning notice system

This manual contains notices you have to observe in order to ensure your personal safety, as well as to prevent damage to property. The notices referring to your personal safety are highlighted in the manual by a safety alert symbol, notices referring only to property damage have no safety alert symbol. These notices shown below are graded according to the degree of danger.

⚠ DANGER
indicates that death or severe personal injury **will** result if proper precautions are not taken.

⚠ WARNING
indicates that death or severe personal injury **may** result if proper precautions are not taken.

⚠ CAUTION
indicates that minor personal injury can result if proper precautions are not taken.

NOTICE
indicates that property damage can result if proper precautions are not taken.

If more than one degree of danger is present, the warning notice representing the highest degree of danger will be used. A notice warning of injury to persons with a safety alert symbol may also include a warning relating to property damage.

Qualified Personnel

The product/system described in this documentation may be operated only by **personnel qualified** for the specific task in accordance with the relevant documentation, in particular its warning notices and safety instructions. Qualified personnel are those who, based on their training and experience, are capable of identifying risks and avoiding potential hazards when working with these products/systems.

Proper use of Siemens products

Note the following:

⚠ WARNING
Siemens products may only be used for the applications described in the catalog and in the relevant technical documentation. If products and components from other manufacturers are used, these must be recommended or approved by Siemens. Proper transport, storage, installation, assembly, commissioning, operation and maintenance are required to ensure that the products operate safely and without any problems. The permissible ambient conditions must be complied with. The information in the relevant documentation must be observed.

Trademarks

All names identified by ® are registered trademarks of Siemens AG. The remaining trademarks in this publication may be trademarks whose use by third parties for their own purposes could violate the rights of the owner.

Disclaimer of Liability

We have reviewed the contents of this publication to ensure consistency with the hardware and software described. Since variance cannot be precluded entirely, we cannot guarantee full consistency. However, the information in this publication is reviewed regularly and any necessary corrections are included in subsequent editions.

Siemens AG
Digital Industries
Postfach 48 48
90026 NÜRNBERG
GERMANY

A5E50839840-AA
Ⓟ 07/2021 Subject to change

Copyright © Siemens AG 2021.
All rights reserved

Preface

Purpose of the documentation

This equipment manual supplements the S7-1500/ET 200MP (https://support.industry.siemens.com/cs/ww/en/view/59191792) system manual and the function manuals. This equipment manual contains a description of the module-specific information. The system-related functions are described in the system manual. All system-spanning functions are described in the function manuals.

The information of the present equipment manual and the system manual enables you to commissioning of the DI 16xNAMUR HF module.

Conventions

If the term "CPU" is used in the following, it applies both to central processing units of the S7-1500 automation system as well as the interface modules of the ET 200MP distributed I/O system.

Also read the notes marked as follows:

Note

A note contains important information on the product described in the documentation, on the handling of the product or on the section of the documentation to which particular attention should be paid.

Recycling and disposal

For environmentally friendly recycling and disposal of your old equipment, contact a certified electronic waste disposal company and dispose of the equipment according to the applicable regulations in your country.

Security information

Siemens provides products and solutions with industrial security functions that support the secure operation of plants, systems, machines and networks.

In order to protect plants, systems, machines and networks against cyber threats, it is necessary to implement – and continuously maintain – a holistic, state-of-the-art industrial security concept. Siemens' products and solutions constitute one element of such a concept.

Customers are responsible for preventing unauthorized access to their plants, systems, machines and networks. Such systems, machines and components should only be connected to an enterprise network or the internet if and to the extent such a connection is necessary and only when appropriate security measures (e.g. firewalls and/or network segmentation) are in place.

For additional information on industrial security measures that may be implemented, please visit (https://www.siemens.com/industrialsecurity).

Siemens' products and solutions undergo continuous development to make them more secure. Siemens strongly recommends that product updates are applied as soon as they are available and that the latest product versions are used. Use of product versions that are no longer supported, and failure to apply the latest updates may increase customers' exposure to cyber threats.

To stay informed about product updates, subscribe to the Siemens Industrial Security RSS Feed visit (https://www.siemens.com/industrialsecurity).

Siemens Industry Online Support

You can find current information on the following topics quickly and easily here:

- **Product support**

  All the information and extensive know-how on your product, technical specifications, FAQs, certificates, downloads, and manuals.

- **Application examples**

  Tools and examples to solve your automation tasks – as well as function blocks, performance information and videos.

- **Services**

  Information about Industry Services, Field Services, Technical Support, spare parts and training offers.

- **Forums**

  For answers and solutions concerning automation technology.

- **mySupport**

  Your personal working area in Industry Online Support for messages, support queries, and configurable documents.

This information is provided by the Siemens Industry Online Support in the Internet (https://support.industry.siemens.com).

Industry Mall

The Industry Mall is the catalog and order system of Siemens AG for automation and drive solutions on the basis of Totally Integrated Automation (TIA) and Totally Integrated Power (TIP).

You can find catalogs for all automation and drive products on the Internet (https://mall.industry.siemens.com).

Open-source software

Open-source software is used in the firmware of the product described. Open Source Software is provided free of charge. We are liable for the product described, including the open-source software contained in it, pursuant to the conditions applicable to the product. Siemens accepts no liability for the use of the open source software over and above the intended program sequence, or for any faults caused by modifications to the software.

For legal reasons, we are obliged to publish the original text of the license conditions and copyright notices. Please read the information relating to this on the Internet.

Table of contents

Preface **3**

1 Documentation guide **8**

2 Product overview **10**

2.1 Properties 10

2.2 Counting function 12

3 Connecting **14**

3.1 Pin assignment 14

3.2 Wiring and block diagram 16

4 Parameters/address space **19**

4.1 Parameters 19

4.2 Parameters DI mode 20

4.3 Explanation of the parameters of DI mode 21

4.4 Parameters of the Counting mode 23

4.5 Explanation of the parameters of the Counting mode 25

4.6 Pulse stretching 28

4.7 Chatter monitoring 30

4.8 Address space 32
4.8.1 Address space 32
4.8.2 Address space DI mode 33
4.8.3 Address space Counting mode 36

4.9 Examples of counting 39
4.9.1 Reaction to violation of a counting limit - Stop counting 39
4.9.2 Reaction to violation of a counting limit - Continue counting 41
4.9.3 Set output DQ - behavior of the STS_DQ bit 42
4.9.4 Counting once with direction setting via digital input 44
4.9.5 Counting once with hardware gate 45
4.9.6 Parameters 46

5 Interrupts/diagnostics alarms **47**

5.1 Status and error displays 47

5.2 Interrupts 49

5.3 Diagnostics alarms 51

6 Technical specifications **52**

6.1 Technical specifications 52

A Dimension drawing 57

A.1 Dimensional drawing 57

B Parameter data record 59

B.1 Parameter assignment and structure of the parameter data records 59

B.2 Structure of the parameter data records DI mode 60

B.3 Structure of the parameter data records Counting mode 63

Documentation guide

1

The documentation for the SIMATIC S7-1500 automation system and the SIMATIC ET 200MP distributed I/O system is arranged into three areas.
This arrangement enables you to access the specific content you require.

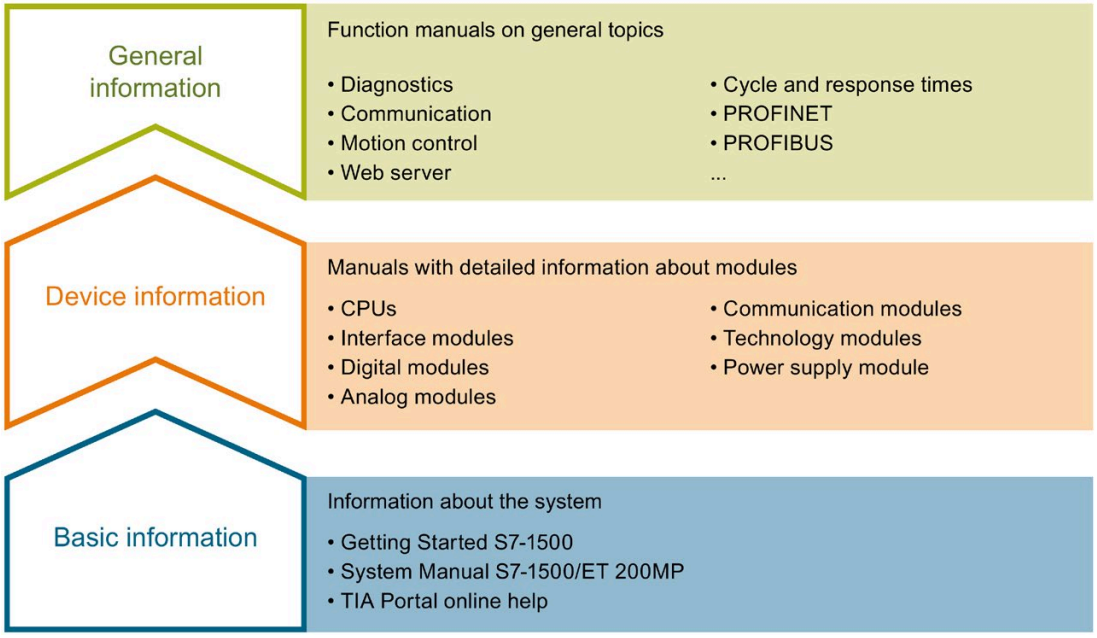

Basic information

The System Manual and Getting Started describe in detail the configuration, installation, wiring and commissioning of the SIMATIC S7-1500 and ET 200MP systems. The STEP 7 online help supports you in the configuration and programming.

Device information

Product manuals contain a compact description of the module-specific information, such as properties, wiring diagrams, characteristics and technical specifications.

General information

The function manuals contain detailed descriptions on general topics regarding the SIMATIC S7-1500 and ET 200MP systems, e.g. diagnostics, communication, motion control, Web server, OPC UA.

You can download the documentation free of charge from the Internet (https://support.industry.siemens.com/cs/ww/en/view/109742691).

Changes and supplements to the manuals are documented in a Product Information.

You can download the product information free of charge from the Internet (https://support.industry.siemens.com/cs/us/en/view/68052815).

Manual Collection S7-1500/ET 200MP

The Manual Collection contains the complete documentation on the SIMATIC S7-1500 automation system and the ET 200MP distributed I/O system gathered together in one file.

You can find the Manual Collection on the Internet (https://support.industry.siemens.com/cs/ww/en/view/86140384).

SIMATIC S7-1500 comparison list for programming languages

The comparison list contains an overview of which instructions and functions you can use for which controller families.

You can find the comparison list on the Internet (https://support.industry.siemens.com/cs/ww/en/view/86630375).

"mySupport"

With "mySupport", your personal workspace, you make the best out of your Industry Online Support.

In "mySupport", you can save filters, favorites and tags, request CAx data and compile your personal library in the Documentation area. In addition, your data is already filled out in support requests and you can get an overview of your current requests at any time.

You must register once to use the full functionality of "mySupport".

You can find "mySupport" on the Internet (https://support.industry.siemens.com/My/ww/en).

Application examples

The application examples support you with various tools and examples for solving your automation tasks. Solutions are shown in interplay with multiple components in the system - separated from the focus on individual products.

You will find the application examples on the Internet (https://support.industry.siemens.com/cs/ww/en/ps/ae).

Product overview

2

2.1 Properties

Part number:

6ES7521-7TH00-0AB0

View of the module

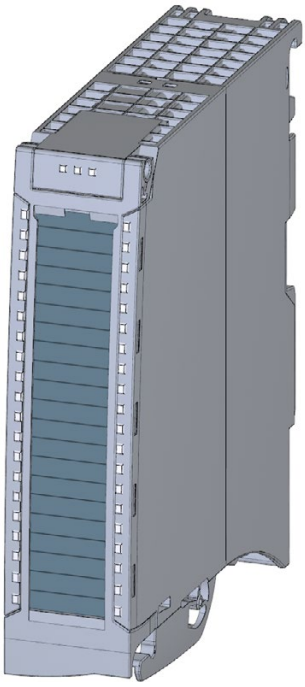

Figure 2-1 View of the module DI 16xNAMUR HF

Properties

The module has the following technical properties:

- 16 digital inputs; electrically isolated in groups of 8
  - Channel 0 to 3 in them have an optional counting function
- Nominal input voltage 8.2V DC (NAMUR)
- Configurable diagnostics (per channel)
- Configurable hardware interrupt (per channel)
- Pulse stretching
- Chatter monitoring

The module supports the following functions:

Table 2- 1 Version dependencies of the module functions

Function	Firmware version of the module	Configuration software	
		STEP 7 (TIA Portal) as of V17 with HSP 347	GSD file in STEP 7 (TIA Portal) as of V17 or STEP 7 as of V5.5 SP3 ???
Firmware update	As of V1.0.0	X	--- / X
Identification data I&M0 to I&M3	As of V1.0.0	X	X
Parameter assignment in RUN	As of V1.0.0	X	X
Isochronous mode	As of V1.0.0	X	X
Module internal Shared Input (MSI)	As of V1.0.0	X (PROFINET IO only)	X (PROFINET IO only)
Configurable submodules / submodules for Shared Device	As of V1.0.0	X (PROFINET IO only)	X (PROFINET IO only)
Counting function for 4 channels	As of V1.0.0	X	X

You can configure the module with STEP 7 (TIA Portal) and with a GSD file.

Accessories

The following accessories are supplied with the module and can also be ordered separately as spare parts:

- Shielding bracket
- Shield terminal
- Power supply element
- Labeling strips
- U connector
- Universal front cover

Other components

The following component must be ordered separately:

- Front connectors, including potential jumpers and cable ties

You can find additional information on accessories in the system manual S7-1500/ET 200MP (https://support.industry.siemens.com/cs/ww/en/view/59191792).

2.2 Counting function

Introduction

You can use the channels 0 to 3 in "counting" mode. The other channels can be used as standard inputs (DI mode).

If do not use channels 0 and 3 in "Count" mode, these channels can also be used as digital inputs. Channels 0 to 3 can only be used together as counting inputs.

When counting, the edges of the digital input are acquired and evaluated accordingly e.g.:

- For counting single items up to a maximum limit
- For applications with repeating counting procedures

Reference

You will find the basics and additional information on the counting function in the function manual Counting, measuring and position detection (https://support.industry.siemens.com/cs/ww/en/view/59709820).

Counting with channel 0 to channel 3

You control the counting function via the IO addresses of the module. These IO addresses are also known as the control interface (output addresses) and feedback interface (input addresses), see section Address space Counting mode (Page 36).

If you configure channels 0 to 3 for counting, you have the following options:

- You influence the behavior if one of the counting limits is exceeded using
  - Stop counting
  - Continue counting
- The bit STS_DQ (bit in the feedback interface) signals that the counted value is in one of the following ranges depending on the parameter assignment:
  - Between comparison value and high counting limit
  - Between comparison value and low counting limit
- You can set a parameter for a hardware interrupt if a comparison event occurs for DQ.
- You can define counting limits and comparison values for counting from 0 ... 4294967295 (2^{32}-1).
- You can set start values or have the user program set load values for counting.
- You can control the counting process through a software gate and/or a hardware gate.

The count direction is

- Up
- Down
- Optionally controllable via a digital input

Reference

Examples for counting with channel 0 to 3 can be found in the section Examples of counting (Page 39).

Connecting

3

3.1 Pin assignment

General pin assignment

Table 3- 1 Pin assignment for DI 16×NAMUR HF

Digital input designation		Counter designation		Pin	View	Pin	Sensor supply designation	
NAMUR input group 1	DI_0	Counter 0 to 3	Cn 0	1	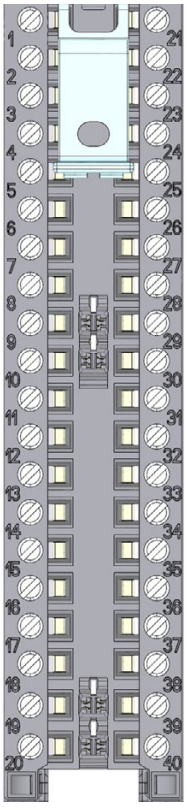	21	$1U_S$	8.2V sensor supply group 1
	DI_1		Cn 1	2		22	$1U_S$	
	DI_2		Cn 2	3		23	$1U_S$	
	DI_3		Cn 3	4		24	$1U_S$	
	DI_4	HW gates 0 to 3	HW gate 0	5		25	$1U_S$	
	DI_5		HW gate 1	6		26	$1U_S$	
	DI_6		HW gate 2	7		27	$1U_S$	
	DI_7		HW gate 3	8		28	$1U_S$	
	-		-	9		29	$1M_S$	Ground sensor supply group 1
	-		-	10		30	$2M_S$	Ground sensor supply group 2
NAMUR input group 2	DI_8	Count direction channel 0 to 3	Dir 0	11		31	$2U_S$	8.2V sensor supply group 2
	DI_9		Dir 1	12		32	$2U_S$	
	DI_{10}		Dir 2	13		33	$2U_S$	
	DI_{11}		Dir 3	14		34	$2U_S$	
	DI_{12}	-	-	15		35	$2U_S$	
	DI_{13}	-	-	16		36	$2U_S$	
	DI_{14}	-	-	17		37	$2U_S$	
	DI_{15}	-	-	18		38	$2U_S$	
	-		-	19		39	24 V DC	24 V module supply
	-		-	20		40	M	Ground module supply

Table 3- 2 Connections across all sensor types for DI 16×NAMUR HF

Connections for DI 16×NAMUR HF (6ES7521-7TH00-00)		
The figures below show the connections for input signal DI_0 for all sensor types.		
NAMUR sensors / IEC 60947-5-6 sensors 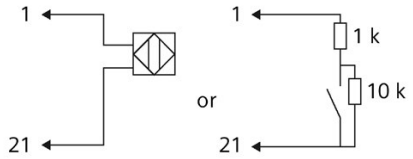	Single contact, unconnected (mechanical normally open contact with single contact) 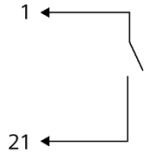	Single contact with 10 kΩ ±10% wired with 250 mW (mechanical normally open contact) 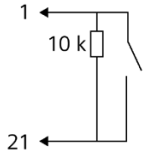

Firmware update

When updating the firmware, the L+ supply voltage must be applied to the module at the start and during the firmware update.

3.2 Wiring and block diagram

This section contains the block diagram of the module and outlines various wiring options.

You can find information on wiring the front connector, establishing a cable shield, etc. in the system manual S7-1500/ET 200MP (https://support.industry.siemens.com/cs/ww/en/view/59191792).

Wiring and block diagram for digital inputs

The figure below shows you how to wire the module and the assignment of the channels to the addresses (input byte a to input byte b).

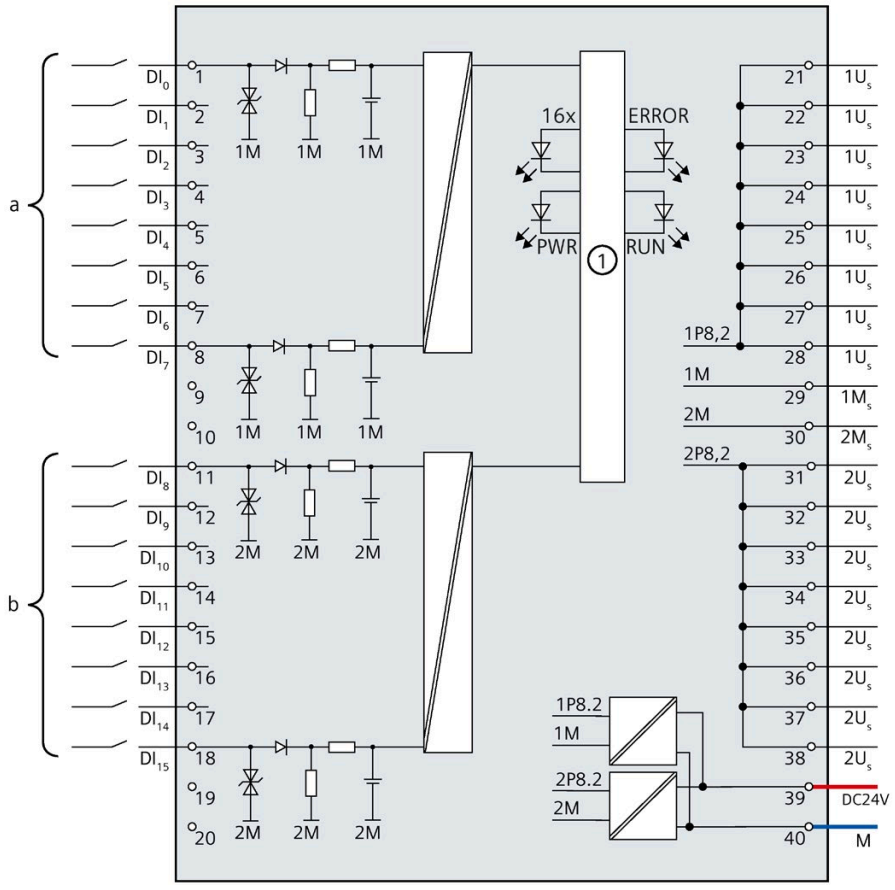

①	Backplane bus interface	ERROR	Error display LED (red)
24 V DC	Supply voltage 24 V DC	RUN	Status display LED (green)
M	Ground	PWR	POWER supply voltage LED (green)
1U	8.2V sensor supply group 1	2U	8.2V sensor supply group 2

Figure 3-1 Block diagram and pin assignment

Wiring and block diagram for counting inputs

The figure below shows you how to connect the module and map the channels to the addresses for the counting inputs (input byte a to input byte b).

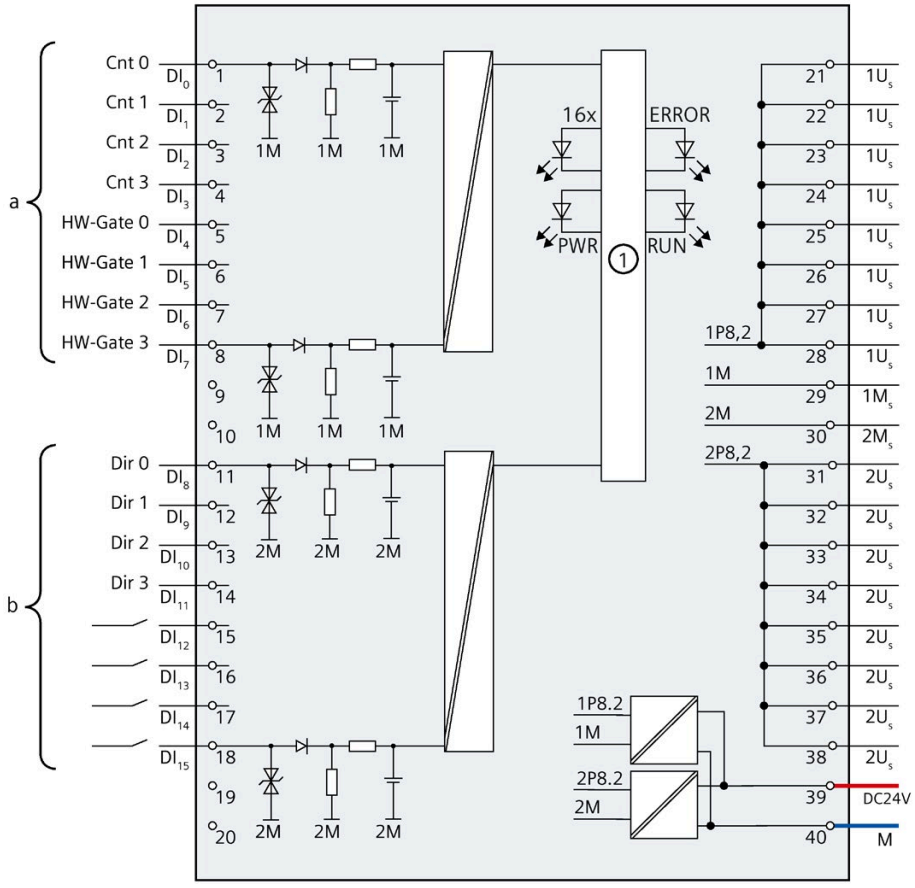

①	Backplane bus interface	ERROR	Error display LED (red)
24 V DC	Supply voltage 24 V DC	RUN	Status display LED (green)
M	Ground	PWR	POWER supply voltage LED (green)
1U	8.2V sensor supply group 1	2U	8.2V sensor supply group 2
Cn	Counter input	HW gate	HW gate input
Dir	Count direction channel		

Figure 3-2 Block diagram and pin assignment

Supply element, shielding bracket and shielding terminal

The supply element, shielding bracket and shielding terminal are supplied as part of the 16xNAMUR HF. You must connect your cable shield over the shielding terminal.

Tip: Using the potential jumpers

Use the potential jumpers supplied with the front connector if you want to loop-through the 24 V DC supply voltage to a neighboring module. This helps you to avoid having to terminate two wires to one terminal.

Proceed as follows:

1. Connect the 24 V DC supply voltage to terminals 39 and 40.
2. Insert the potential jumpers between terminals 19 and 39 (24 V DC) and 20 and 40 (M).
3. Use the terminals 19 (24 V DC) and 20 (M) to loop the potential on to the next module.

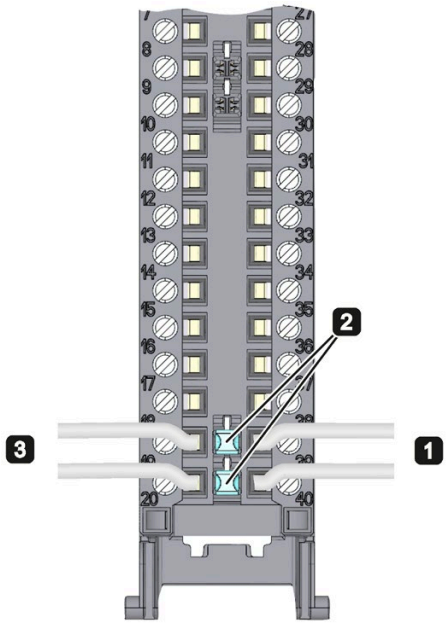

Figure 3-3 Potential jumpers

Note

Potential jumper

The maximum current carrying capacity per potential jumper must not exceed 8 A.

Note

Potential jumpers

Do not plug the potential jumpers supplied with the front connector between terminals 9 and 29 as well as 10 and 30.

Parameters/address space

4

4.1 Parameters

Parameters of the DI 16xNAMUR HF

Specify the module properties with the various parameters in the course of the parameter assignment of the module with STEP 7. The adjustable parameters depend on the functions of the module you use. You will find the parameters in section Parameters DI mode (Page 20) or section Parameters of the Counting mode (Page 23). The effective range of the configurable parameters depends on the type of configuration. The following configurations are possible:

- Central operation with an S7-1500 CPU
- Distributed operation on PROFINET IO in an ET 200MP system
- Distributed operation on PROFIBUS DP in an ET 200MP system

When assigning parameters in the user program, transfer the parameters to the module with the WRREC instruction (Configuration in RUN) via data records, see the section Parameter assignment and structure of the parameter data records (Page 59).

4.2 Parameters DI mode

Parameters of the DI 16xNAMUR HF in the DI operating mode

You can find the parameters in the DI mode in the table below. These parameters apply to channels 0 to 15.

Table 4- 1 Settable parameters and their defaults in the DI mode

Parameter	Range of values	Default setting	Parameter assignment in RUN	Effective range with configuration software, e.g. STEP 7	
				Integrated in the hardware catalog as of STEP 7, V13 SP1 or GSD file PROFINET IO	GSD file PROFIBUS DP
Diagnostics					
• No supply voltage L+	Yes/No	No	Yes	Channel*	Module**
• Short circuit "Sensor supply to M"	Yes/No	No	Yes	Channel*	Channel group**
• Wire break	Yes/No	No	Yes	Channel*	Channel group**
• Chatter error	Yes/No	No	Yes	Channel*	Channel group**
Input delay	0.05 ms, 0.1 ms, 0.4 ms, 1.6 ms, 3.2 ms, 12.8 ms, 20 ms	3.2 ms; for isochronous mode 0.05 ms (cannot be changed)	Yes	Channel	Channel group**
Hardware interrupt					
• Rising edge	Yes/No	No	Yes	Channel	Channel
• Falling edge	Yes/No	No	Yes	Channel	Channel
Pulse stretching*	None, 0.5 s, 1 s, 2 s, 0.05 s, 0.1 s, 0.2 s	None	Yes	Channel	Channel group **
Digital input	• Normal • Inverted	Normal	Yes	Channel	Channel group **

Parameter	Range of values	Default setting	Parameter assignment	Effective range with configuration software, e.g. STEP 7	
Chatter monitoring - number of signal changes **	• Disabled • 2 ... 32	Disabled	Yes	Channel	Channel group **
Chatter monitoring - Monitoring window**	• 0.5 s • 1 s ... 100 s	0.5 s	Yes	Channel	Channel group **

* If you enable diagnostics for multiple channels, you will receive an alarm surge on failure of the supply voltage because each enabled channel will detect this fault.

You can prevent this alarm surge by enabling diagnostics for one channel only.

** The scope can be assigned for each channel during parameter assignment in RUN.

4.3 Explanation of the parameters of DI mode

No supply voltage L+

Enabling of the diagnostics for no or insufficient supply voltage L+.

Wire break

Enabling diagnostics if the line to the sensor is interrupted.

Input delay

You can suppress signal interference with this parameter. Changes to the signal are only detected if they are constantly pending for longer than the set input delay time.

Hardware interrupt

Defines whether a hardware interrupt is disabled or for which of the following events the module generates a hardware interrupt:

- Rising edge
- Falling edge

Diagnostics: Chatter error

Enabling of the diagnostics alarm when a chatter error occurs.

Chatter monitoring detects and reports unusual process-related signal curves, such as excessive fluctuation of the input signal between "0" and "1". The occurrence of such signal changes is an indication of faulty sensors or process instabilities.

Chatter monitoring: Monitoring window

Chatter monitoring: Setting of the monitoring window

Each input channel has a configurable monitoring window. The first signal change of the input signal starts the monitoring window. If the monitoring window detects a chatter error, then the monitoring time is extended to three times the time. If the monitoring window does not detect a chatter error within this time, the monitoring time is reduced to the single time again.

Chatter monitoring: Number of signal changes

Chatter monitoring: Setting of the signal change

Settings for the tolerated number of signal changes during chatter monitoring within the monitoring window.

Number of signal changes = 0 deactivates the chatter monitoring function.

Pulse stretching

Sets whether and for how long pulse stretching is to take place.

Pulse stretching is a function used to change a digital input signal. A pulse at a digital input is stretched at least to the configured length. If the input pulse is already longer than the configured length, then the pulse is not stretched.

Inverted

NAMUR sensors supply an inverted signal. So that you can use the same logic for 24 VDC signals in the user program, parameter assignment via this function is recommended.

Specifies whether or not the input signal is to be inverted.

Inversion is only possible with the following sensor types:

- NAMUR sensor
- Single contact unwired
- Single contact with 10 kΩ

4.4 Parameters of the Counting mode

Parameters of DI 16xNAMUR HF Count in the counting mode

If you want to use the module for counting, configure the module as DI 16xNAMUR HF Count. The following parameter settings are then possible for channels 0 to 3. For channels 4 to 15, the parameter settings apply as for the DI 16xNAMUR HF, see section Parameters DI mode (Page 20).

Note

When using the counting function, the limit is 20 000 edges per second.

The maximum counting frequency is 20 kHz with the "Count at positive edge" and "Count at negative edge" parameter assignment.

If you use the parameter assignment "Count at positive and negative edge", the maximum counting frequency is 10 kHz.

Note that counting pulses are lost when the limits are exceeded. You then receive the diagnostics alarm "Hardware interrupts lost".

Table 4- 2 Settable parameters and their defaults in the Counting mode

Parameter	Range of values	Default setting	Parameter assignment in RUN	Effective range with configuration software, e.g. STEP 7	
				Integrated in hardware catalog from STEP 7, V17 with HSP 347 or GSD file PROFINET IO	GSD file PROFIBUS DP
Diagnostics					
• No supply voltage L+	Yes/No	No	Yes	Channel*	Module
• Wire break	Yes/No	No	Yes	Channel	Channel group
• Short circuit "Sensor supply to ground"	Yes/No	No	Yes	Channel	Channel group
Input delay	0.05 ms, 0.1 ms, 0.4 ms, 1.6 ms, 3.2 ms, 12.8 ms, 20 ms	3.2 ms; for isochronous mode 0.05 ms (cannot be changed)	Yes	Channel	0.05 ms ***

Parameter	Range of values	Default setting	Parameter assignment	Effective range with configuration software, e.g. STEP 7	
Hardware interrupt	• Disable • Comparison event occurred for DQ	Disable	Yes	Channel	---
Set output DQ	• Between comparison value and high counting limit • Between comparison value and low counting limit	Between comparison value and high counting limit	Yes	Channel	---
Edge selection	• On rising edge • On falling edge • On rising and falling edge	On rising edge	Yes	Channel	On rising edge ***
High counting limit	0 ... 4294967295	4294967295	Yes	Channel	4294967295 ***
Comparison value	0 ... 4294967295**	1	Yes	Channel	1 ***
Start value	0 ... 4294967295**	0	Yes	Channel	0 ***
Behavior when a counting limit is exceeded	• Stop counting • Continue counting	Continue running the counter	Yes	Channel	Continue running the counter ***
Count direction	• Up • Down • Controlled by digital input	Up	Yes	Channel	Up ***
Hardware gate	• Disabled • Enabled	Disabled	Yes	Channel	Disabled ***

* If you enable diagnostics for multiple channels, you will receive an alarm surge on failure of the supply voltage because each enabled channel will detect this fault.

You can prevent this alarm surge by enabling diagnostics for one channel only.

** Comparison value and start value must be less than or equal to the value for the high counting limit

*** Parameter selection is not possible

4.5 Explanation of the parameters of the Counting mode

No supply voltage L+

Enabling of the diagnostics for no or insufficient supply voltage L+.

Wire break

Enabling diagnostics if the line to the sensor is interrupted.

Input delay

You can suppress signal interference with this parameter. Changes to the signal are only detected if they are constantly pending for longer than the set input delay time.

Hardware interrupt

Defines whether or not the module generates a hardware interrupt at the "Comparison event for DQ" (positive edge at STS_DQ).

Set output DQ

With this parameter, you specify the behavior of the STS_DQ bit in the feedback interface. You can assign this bit in the user program, for example, with a hardware output, see Address space Counting mode (Page 36).

Behavior	Meaning
Between comparison value and high counting limit	STS_DQ bit is set if the following condition is met: Comparison value < = counted value < = high counting limit
Between comparison value and low counting limit	STS_DQ bit is set if the following condition is met: Low counting limit < = counted value < = comparison value

Edge selection

You use this parameter to define the edge by which the module counts.

You can select the following options:

- On rising edge
- On falling edge
- On rising and falling edge

Note

When using the counting function, the limit is 20 000 edges per second.

The maximum counting frequency is 20 kHz with the "Count at positive edge" and "Count at negative edge" parameter assignment.

If you use the parameter assignment "Count at positive and negative edge", the maximum counting frequency is 10 kHz.

Note that counting pulses are lost when the limits are exceeded. You then receive the diagnostics alarm "Hardware interrupts lost".

Note

If the "Reverse direction" option is selected in "Set function of DI" and the counting direction in the process changes, the counting edge is automatically adjusted (opposite edges).

High counting limit

With this parameter you limit the counting range. You can enter a value up to 4294967295 (2^{32} - 1).

Comparison value

With this parameter you specify the count value at which the digital output DQ (STS_DQ bit of the feedback interface) switches due to the selected comparison event.

Start value

You use this parameter to define the value at which the counting starts and continues counting at defined events. The following condition must be met:

Low counting limit < = start value < = high counting limit.

Behavior when a counting limit is exceeded

With this parameter, you specify the behavior if a counting limit is exceeded.

Behavior	Meaning
Stop counting	After a count limit is violated, the counting procedure is aborted and the STS_GATE bit (internal gate) is reset. To restart the counting process, you need to reset the SW_GATE bit via the control interface and set the counter value to the start value.
Continue counting	After a count limit is violated, the module sets the counted value to the other count limit and continues the count process.

Count direction

You use this parameter to define in which direction counting is performed.

Hardware gate

You use this parameter to define the one-time counting.

With the hardware gate, as with the software gate, you can start and stop the counting process with an external signal. If you use the hardware gate, the software gate must be enabled ("1").

The counting process stops when the high counting limit is violated. The counted value jumps to the low counting limit (=0).

Inverted

NAMUR sensors supply an inverted signal. So that you can use the same logic for 24 VDC signals in the user program, parameter assignment via this function is recommended.

Specifies whether or not the input signal is to be inverted.

Inversion is only possible with the following sensor types:

- NAMUR sensor
- Single contact unwired
- Single contact with 10 kΩ

Pulse stretching (only adjustable at channels 4 to 15)

Sets whether and for how long pulse stretching is to take place.

Pulse stretching is a function used to change a digital input signal. A pulse at a digital input is stretched at least to the configured length. If the input pulse is already longer than the configured length, then the pulse is not stretched.

Diagnostics: Chatter error (only adjustable at channels 4 to 15)

Enabling of the diagnostics alarm when a chatter error occurs.

Chatter monitoring detects and reports unusual process-related signal curves, such as excessive fluctuation of the input signal between "0" and "1". If signal characteristics like these occur, it is a sign that the sensors are faulty or that there are instabilities from a process engineering viewpoint.

Chatter monitoring: Monitoring window (only adjustable at channels 4 to 15)

Chatter monitoring: Setting of the monitoring window

Each input channel has a configurable monitoring window. The first signal change of the input signal starts the monitoring window. If the monitoring window detects a chatter error, then the monitoring time is extended to three times the time. If the monitoring window does not detect a chatter error within this time, the monitoring time is reduced to the single time again.

Chatter monitoring: Number of signal changes (only adjustable at channels 4 to 15)

Chatter monitoring: Setting of the signal change

Settings for the tolerated number of signal changes during chatter monitoring within the monitoring window.

Number of signal changes = 0 deactivates the chatter monitoring function.

4.6 Pulse stretching

Description

"Pulse stretching" is a function used to change a digital input signal. The function stretches a pulse at a digital input to at least the configured length. If the input pulse is already longer than the configured length, the function does not change the pulse.

The pulse-stretched signal is the input signal for the hardware interrupt.

Principle of pulse stretching

The following figure shows examples of whether and how the function changes input pulses.

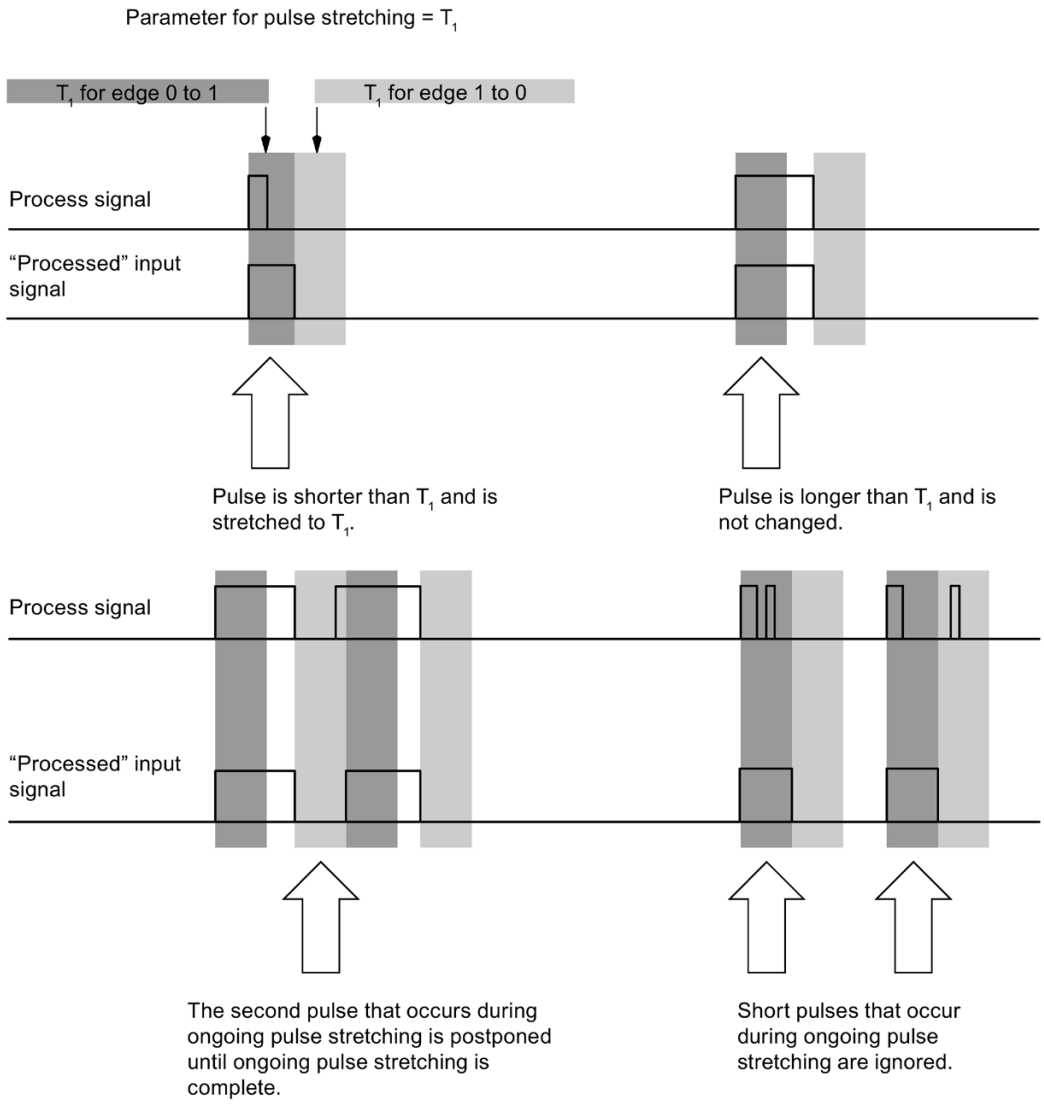

Figure 4-1 Principle of pulse stretching

Note

If you set pulse stretching for an input channel, this will also affect the chatter monitoring that is enabled for this channel. The "pulse-stretched" signal is the input signal for the chatter monitoring. You should therefore match the parameter settings for pulse stretching and chatter monitoring to one another. By selecting the appropriate values for the parameters you can adjust the functions optimally to your process.

Note

Pulse stretching in progress is reset in the event of an error in the value status (QI = 0, e.g. wire break).

4.7 Chatter monitoring

Description

The "Chatter monitoring" function detects and reports signal changes that are unexpected in process engineering, for example when an input signal fluctuates too often between "0" and "1". This period is known as the "monitoring window". If signal characteristics like these occur, it is a sign that the sensors are faulty or that there are instabilities from a process engineering viewpoint.

Activating chatter monitoring

You activate chatter monitoring by specifying a permitted number of input signal changes between "0" and "1" within the monitoring window. The number 0 disables the chatter monitoring function.

A chatter error detected by the chatter monitoring has a direct effect on the value status (QI).

Note

Chatter monitoring can only be used at digital inputs

The chatter monitoring can only be used at the digital inputs. Chatter monitoring cannot be enabled at the counter inputs.

Detecting a chatter error

Each input channel has a monitoring window that has been assigned parameters. The first signal change of the input signal starts the monitoring window. If the input signal within the monitoring window changes more often than the configured number of signal changes, the function detects a chatter error. In the event of a chatter error, the time is extended to three times the time. If the function does not detect a chatter error within the monitoring window, the monitoring window starts again at the next signal change.

Reporting a chatter error

If a chatter error occurs, the current signal state is entered in the process image and the value status of the signal is set to "invalid" (QI = 0). If "Chatter error" diagnostics is enabled, "Chatter error" is also entered as diagnostic information, triggering an incoming diagnostics interrupt.

You can evaluate and process the value status (QI) and the diagnostics information in the user program.

Resetting a chatter error

If no more chatter of the input signal is detected within triple the monitoring window, the function triggers an outgoing diagnostics interrupt. The status of the value of the current signal in the process image is set to "valid".

Note

Active chatter monitoring is reset if there is an error in the input signal (value status QI =0).

Principle

The following figure gives you another graphic illustration of the principle of chatter monitoring.

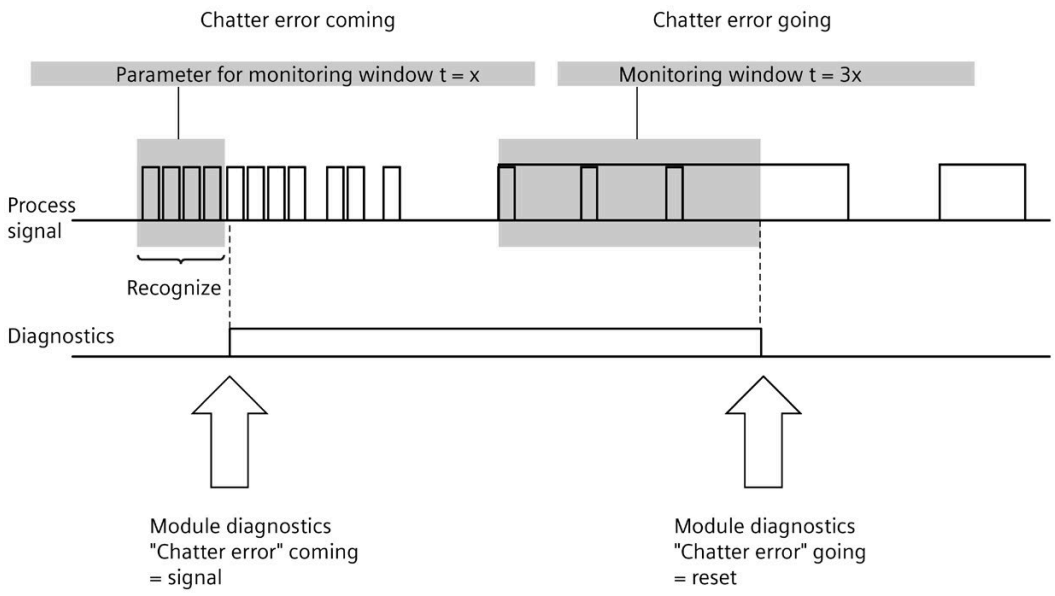

Figure 4-2 The principle of chatter monitoring

Chatter monitoring and "settling time" if a chatter error occurs

The signal changes...	Result
Once more than set in "Number of signal changes".	The monitoring time restarts.
Less often than set in "Number of signal changes".	The monitoring time does not restart. Instead it runs once from the start of the original chatter error detection. Even a change just before the time is up is tolerated.

4.8 Address space

4.8.1 Address space

You can configure the module differently in STEP 7, see the following table. Depending on the configuration, additional/different addresses are assigned in the process image of the inputs.

The letters "a" through "b" are printed on the module. "IB a" for example, stands for module start address input byte a.

Configuration options of the DI 16xNAMUR HF

You can configure the module with STEP 7 (TIA Portal) or with a GSD file.

When you configure the module by means of the GSD file, the configurations are available under different abbreviations/module names.

The following configurations are possible:

Table 4- 3 Configuration options

Configuration	Short designation/ module name in the GSD file	Configuration software, e.g., with STEP 7 (TIA Portal)	
		Integrated in the hardware catalog of STEP 7 (TIA Portal)	GSD file in STEP 7 (TIA Portal) as of V17 or STEP 7 as of V5.5 SP3 ????
1 x 16-channel without value status	DI 16xNAMUR HF	As of V17	X
1 x 16-channel with value status	DI 16xNAMUR HF QI	As of V17	X
2 x 8-channel without value status	DI 16xNAMUR HF S	As of V17 (PROFINET IO only)	X (PROFINET IO only)
2 x 8-channel with value status	DI 16xNAMUR HF S QI	As of V17 (PROFINET IO only)	X (PROFINET IO only)
1 x 16-channel with value status for module-internal shared input with up to 4 submodules	DI 16xNAMUR HF MSI	As of V17 (PROFINET IO only)	X (PROFINET IO only)
1x16-channel with value status (channels 0 to 3 for counting; channels 4 to 15 as digital inputs)	DI 16xNAMUR HF Count	As of V17	X (PROFINET IO only)

Value status (Quality Information, QI)

The value status is always activated for the following module names:

- DI 16xNAMUR HF QI,
- DI 16xNAMUR HF S QI
- DI 16xNAMUR HF MSI
- DI 16xNAMUR HF Count

An additional bit is assigned to each channel for the value status. The value status bit indicates if the read in digital value is valid. (0 = Value is incorrect).

4.8.2 Address space DI mode

Address space when configured as 16-channel DI 16xNAMUR HF QI

The figure below shows the assignment of the address space for the configuration as a 16-channel module with value status. You can freely assign the start address for the module. The addresses of the channels are derived from the start address.

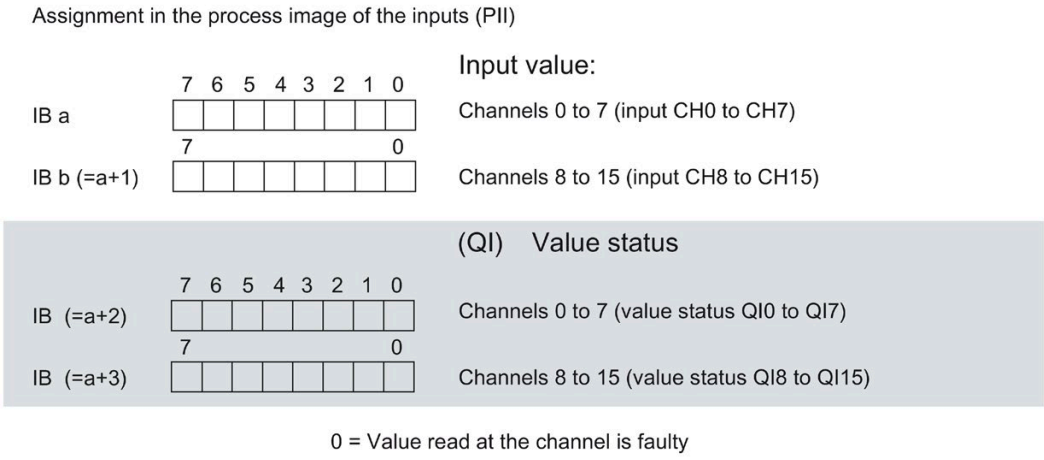

Figure 4-3 Address space when configured as 16-channel DI 16xNAMUR HF QI with value status

Address space when configured as 2 x 8-channel DI 16xNAMUR HF S QI

For the configuration as a 2 x 8-channel module, the channels of the module are divided into multiple submodules. These submodules can be assigned to different IO controllers when using the module in a shared device.

The number of usable IO controllers depends on the interface module used. Read the information in the equipment manual for the particular interface module.

Contrary to the 1 x 16-channel module configuration, each of the two submodules has a freely assignable start address.

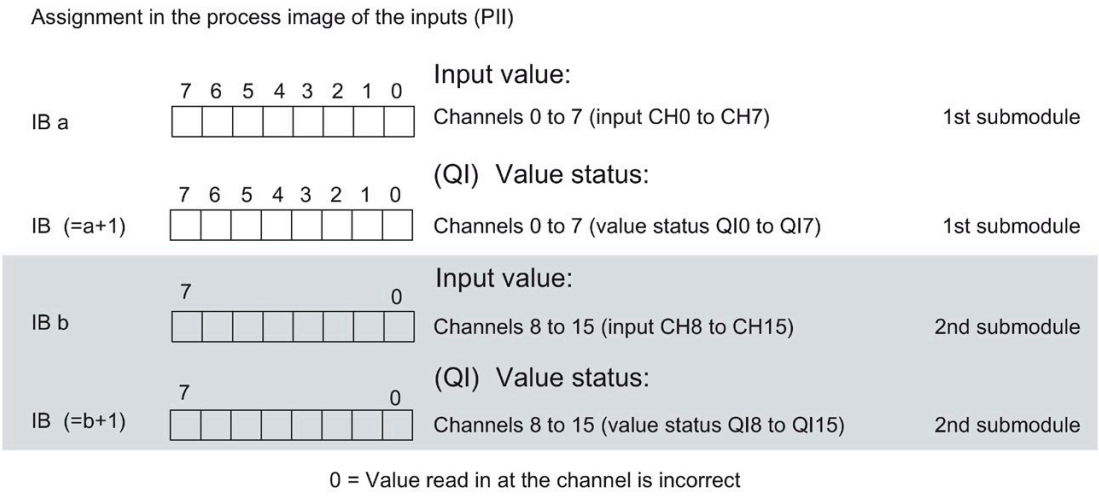

Figure 4-4 Address space when configured as 2 x 8-channel DI 16xNAMUR HF S QI

Address space when configured as 1 x 16-channel DI 16xNAMUR HF MSI

The channels 0 to 15 of the module are copied in up to four submodules with configuration 1 x 16-channel module (Module-internal shared input, MSI). Channels 0 to 15 are then available with identical input values in different submodules. These submodules can be assigned to up to four IO controllers when using the module in a shared device. Each IO controller has read access to the same channels.

The number of IO controllers depends on the interface module being used. Read the information in the equipment manual for the particular interface module.

Value status (Quality Information, QI)

The meaning of the value status depends on the submodule involved.

For the first submodule (=basic submodule), the value status 0 indicates that the value is incorrect.

For the 2nd to 4th submodule (=MSI submodule), the value status 0 indicates that the value is incorrect or the basic submodule has not yet been configured (not ready).

The following figure shows the assignment of the address space with submodules 1 and 2 and the value status.

Assignment in the process image of the inputs (PII) for 1st and 2nd submodule

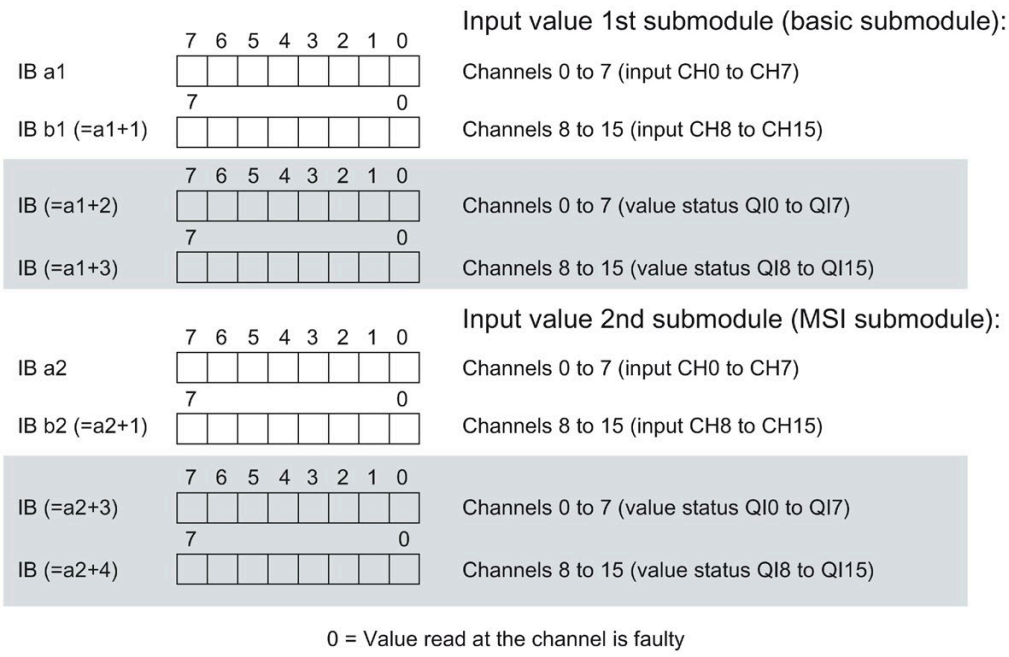

Figure 4-5 Address space when configured as 1 x 16-channel DI 16xNAMUR HF MSI

The following figure shows the assignment of the address space with submodules 3 and 4 and the value status.

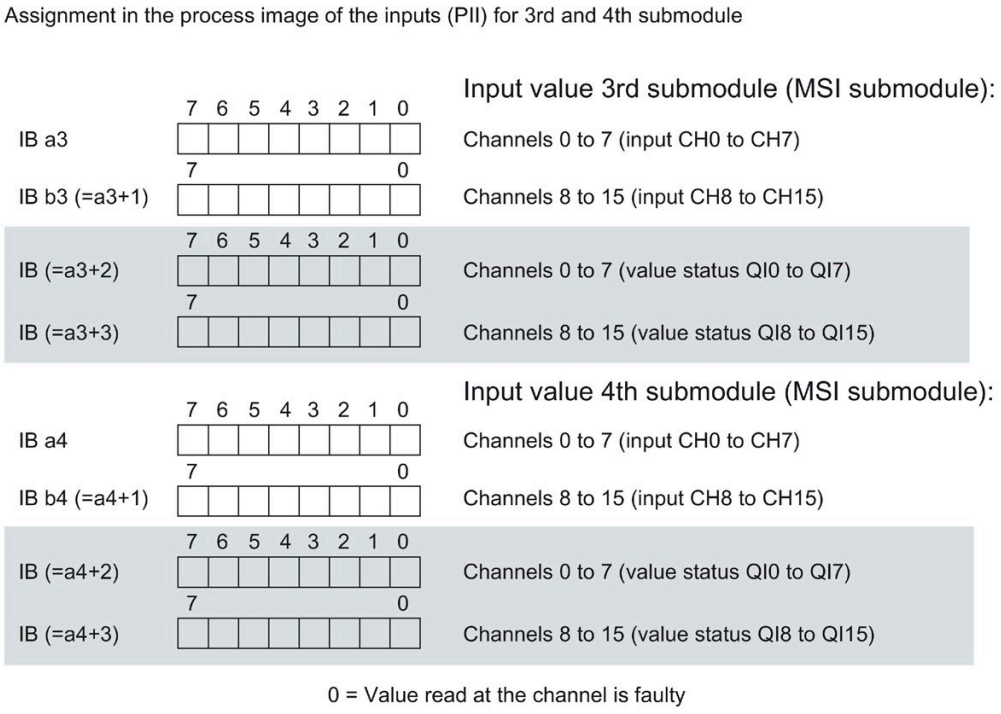

Figure 4-6 Address space when configured as 1 x 16-channel DI 16xNAMUR HF MSI

Reference

You can find information about the Module Internal Shared Input/Shared (MSI/MSO) function in the PROFINET (https://support.industry.siemens.com/cs/ww/en/view/49948856) function manual.

4.8.3 Address space Counting mode

Address space when configured as 1 x 16-channel DI 16xNAMUR HF Count

The address space from channel 0 to 3, which is used for counting, consists of the control and feedback interface. The "Counting" function is controlled directly via the two interfaces. With suitable parameter assignment, a hardware interrupt is triggered.

If you use the module in Count mode (channels 0 and 3), the module occupies the following address areas:

- 32 bytes in the process image output (control interface).
- 36 bytes in the process image of the inputs (feedback interface).

Control interface

The figure below shows the address assignment of the module in the process image output. You use the control interface, for example, to start the counter or to set the counter value. With the "SW gate" control bit, you open and close the software gate of the corresponding channel.

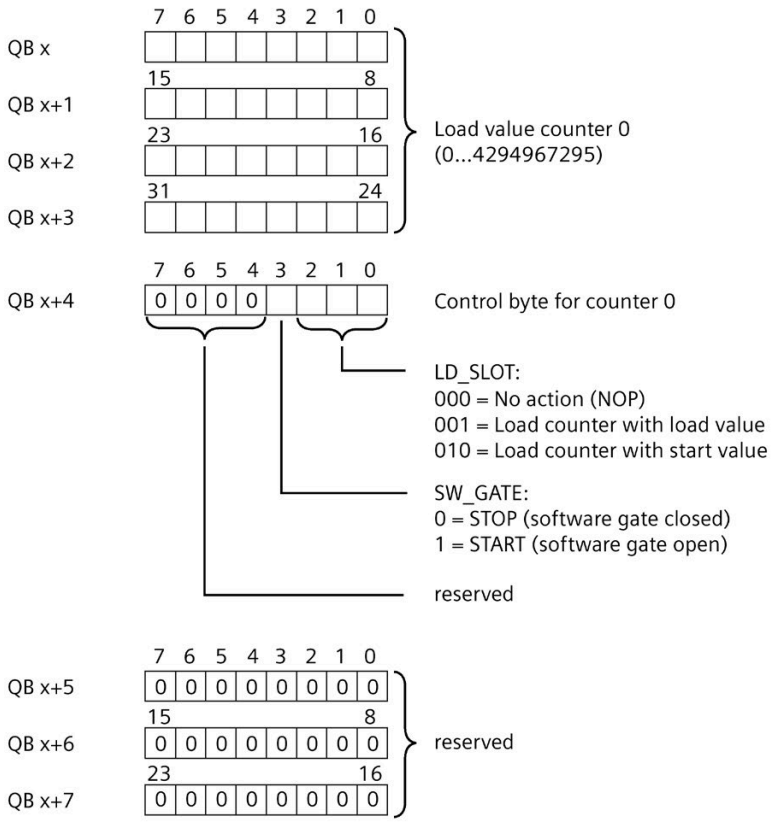

Figure 4-7 Assignment of the address space of the control interface of the DI 16xNAMUR HF Count (bytes 0 to 7)

The configuration is identical for counters 0 to 3:

- Counter 0: QB x to QB x+7
- Counter 1: QB x+8 to QB x+15
- Counter 2: QB x+16 to QB x+23
- Counter 3: QB x+24 to QB x+31

Feedback interface

The figure below shows the address assignment of the module in the process image of the inputs. The feedback interface for the counters (channels 0 to 3) starts from input byte x+4.

Via the feedback interface, the user program receives current counted values and status information from the module.

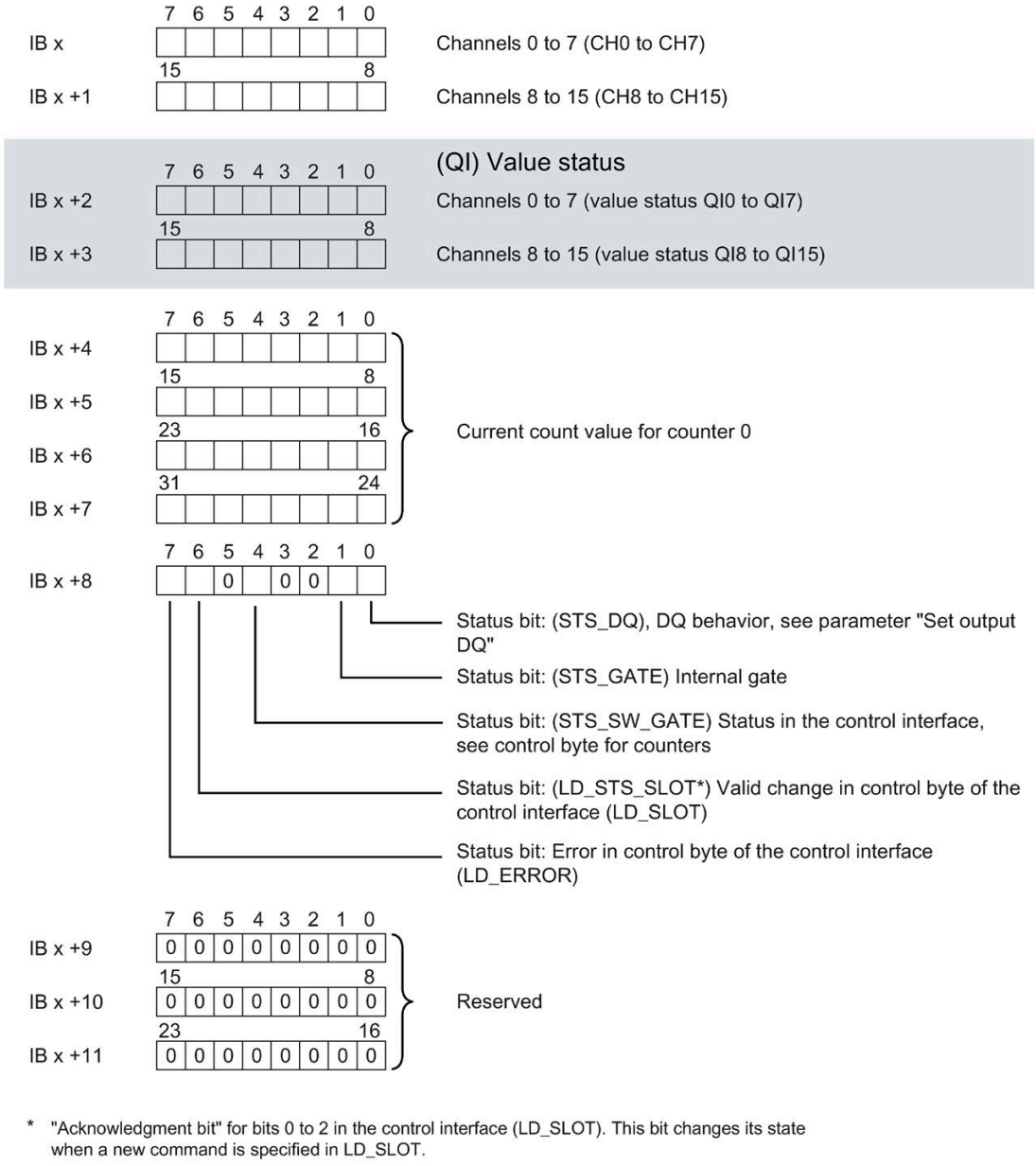

* "Acknowledgment bit" for bits 0 to 2 in the control interface (LD_SLOT). This bit changes its state when a new command is specified in LD_SLOT.

Figure 4-8 Assignment of the address space of the feedback interface of the DI 16xNAMUR HF Count (bytes 0 to 11)

The configuration is identical for counters 0 to 3:

- Counter 0: IB x+4 to IB x+11
- Counter 1: IB x+12 to IB x+19
- Counter 2: IB x+20 to IB x+27
- Counter 3: IB x+28 to IB x+35

4.9 Examples of counting

In this section, you can find examples of the behavior of the counter and how you can specify this behavior. You specify the properties of the counter in the parameter assignment.

See also

Address space Counting mode (Page 36)

4.9.1 Reaction to violation of a counting limit - Stop counting

Reaction to violation of a counting limit - Stop counting

The following section describes the effects of the parameter "Reaction to violation of a counting limit = Stop counting". To control the counter, the bits of the control byte of the control interface are used, see section Address space Counting mode (Page 36).

Counting begins at the current counted value (the SW_GATE is set in the control byte). The bit string in the control byte of the control interface is 0000 1000.

After the high counting limit is violated, counting is aborted (counting stops) and the counted value jumps to the low counting limit = 0. The STS_GATE bit is reset.

To restart the counting process, you need to reset the SW_GATE bit via the control interface and set it again. With hardware gate control, you need to reset the hardware gate and set it again.

Whether the counting process restarts with the current counter value or with the start value depends on the control byte in the control interface.
Bit string in the control byte of the control interface:

- bit 0 to 2 = "000" Start with current counter value
- bit 0 to 2 = "010" Start with start value

If the SW_GATE bit in the control byte of the control interface is reset before the high counting limit is reached, the counting process stops.

The following figure shows an example of the principle of stopping counting when a counting limit is exceeded.

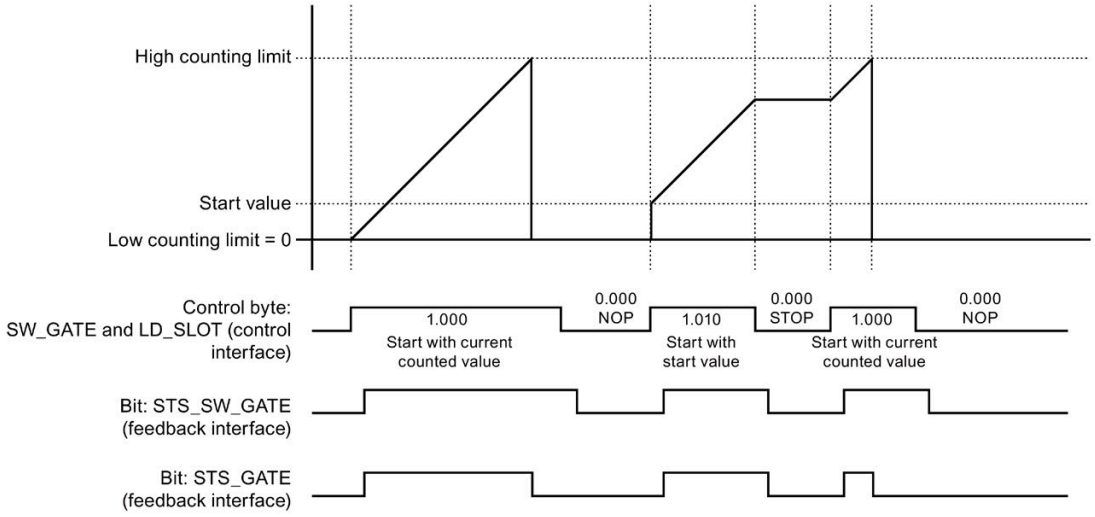

Figure 4-9 Principle: Stop counting

4.9.2 Reaction to violation of a counting limit - Continue counting

Reaction to violation of a counting limit - Continue counting

The following section describes the effects of the parameter "Behavior when a counting limit is exceeded = Continue counting". To control the counter, the bits of the control byte of the control interface are used, see section Address space Counting mode (Page 36), subsection Control interface.

Counting begins at the current counted value (the SW-GATE is set in the control byte). Bit string in the control byte of the control interface 0000 1000.

After the high counting limit is exceeded, the counted value jumps to the low counting limit = 0 and counting is continued.

If the SW_GATE bit is reset in the control byte of the control interface before reaching the high counting limit, counting is stopped.

The following figure shows an example of the principle of continuing counting when a counting limit is exceeded.

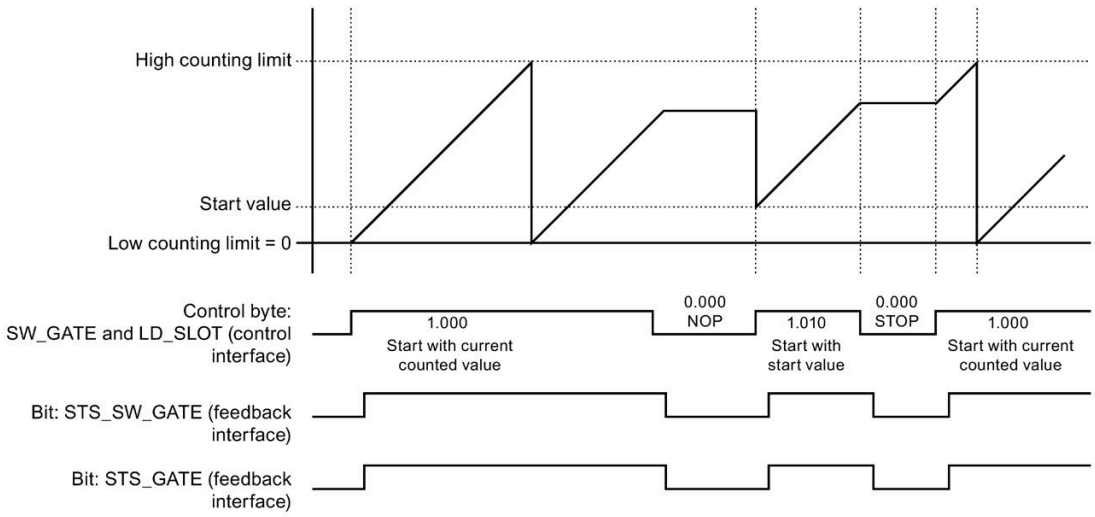

Figure 4-10 Principle: Continue counting

4.9.3 Set output DQ - behavior of the STS_DQ bit

Set output DQ - behavior of the STS_DQ bit

The following section shows the behavior of the STS_DQ bit with the parameter assignment "Set output DQ = Between comparison value and high counting limit".

The STS_DQ bit is set to 1 when the comparison value <= counted value <= high counting limit is reached.

Optionally, you can enable a hardware interrupt via the parameter assignment. This is generated with the parameter rising edge of the STS_DQ bit.

The following figure shows an example of the behavior of the STS_DQ bit between the comparison value and high counting limit.

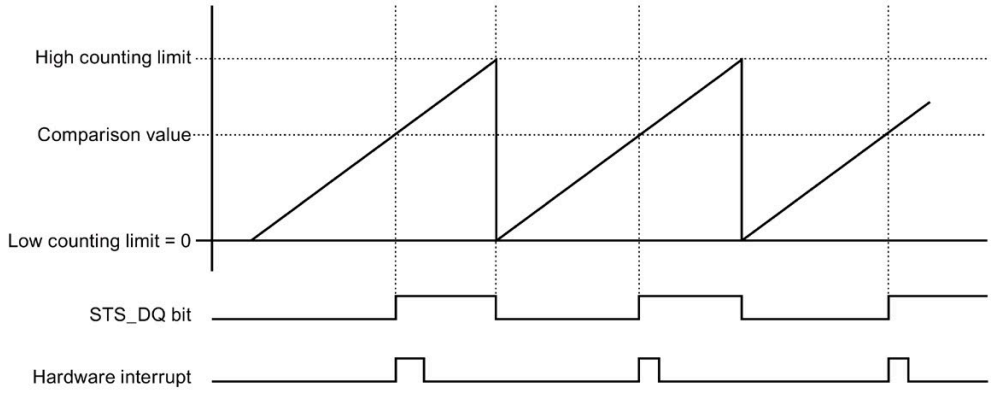

Figure 4-11 Behavior of the STS_DQ bit and hardware interrupt

The following section shows the behavior of the STS_DQ bit with the parameter assignment "Set output DQ = Between low counting limit and comparison value".

The STS_DQ bit is set to 1 when the low counting limit <= counted value <= comparison value is reached.

Optionally, you can enable a hardware interrupt via the parameter assignment. This is generated with the parameter rising edge of the STS_DQ bit.

The following figure shows an example of the behavior of the STS_DQ bit between the low counting limit and comparison value.

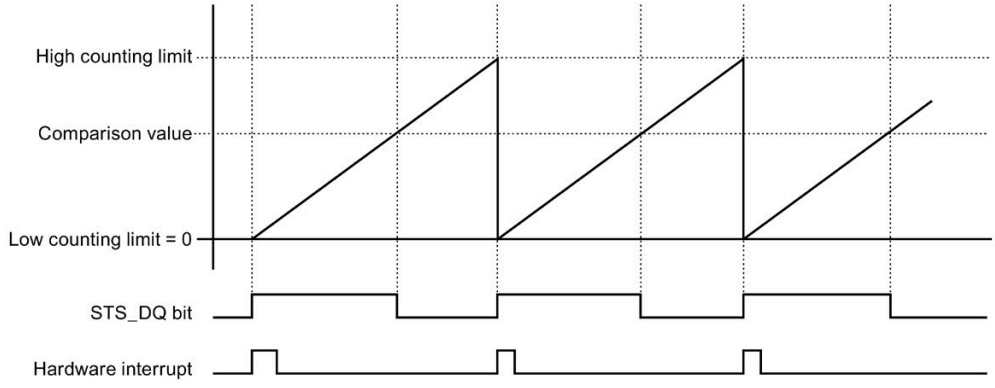

Figure 4-12 Behavior of the STS_DQ bit and hardware interrupt

4.9.4 Counting once with direction setting via digital input

Counting once with direction setting via digital input

The following section describes the direction setting via a digital input.

The "Digital input" count direction is set via the parameters. This means that the count direction is specified via the "Partner digital input".

Count direction:

- "0" up
- "1" down

The start command determines the behavior when starting the counter:

- The counting process starts with the current counter value.
- The counting process starts with the start value that was specified via parameter/command interface.

The following figure shows an example of the principle for counting with direction setting via a digital input.

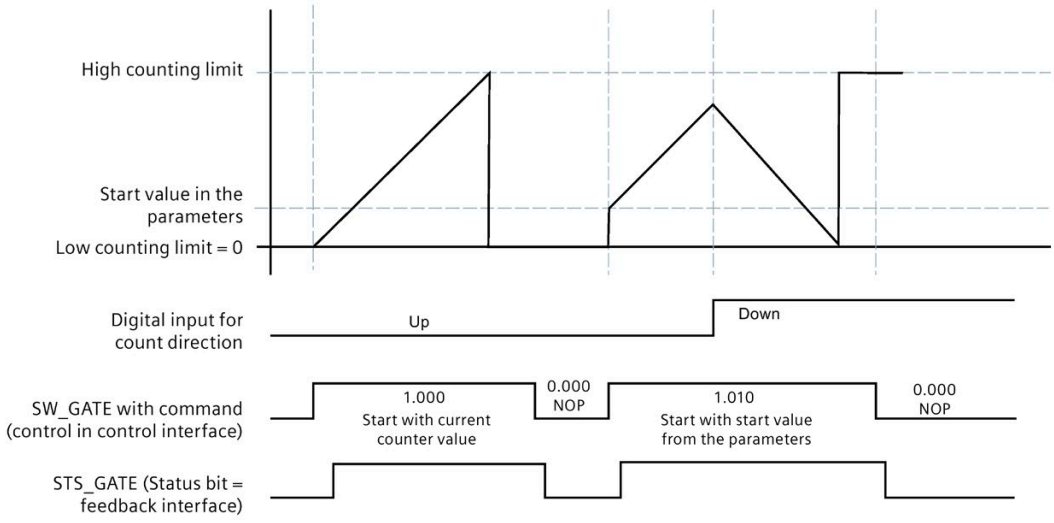

Figure 4-13 Principle: Counting with direction specification

4.9.5 Counting once with hardware gate

Counting once with hardware gate

The following section describes the one-time counting with hardware gate (HW_Gate).

The counting process stops when the high counting limit is violated. The counted value jumps to the low counting limit (=0).

When counting with hardware gate, the software gate (SW_Gate) and the hardware gate must be set (AND operation). When counting once, the software gate must be set and the hardware gate is used for control, i.e. the counter stops when the limit is reached and the counter only restarts when the hardware gate is reset and set again.

If the "SW_Gate" control bit or the hardware gate is reset before the high counting limit is reached, the counter stops.

The following figure shows an example of the principle for counting with hardware gate.

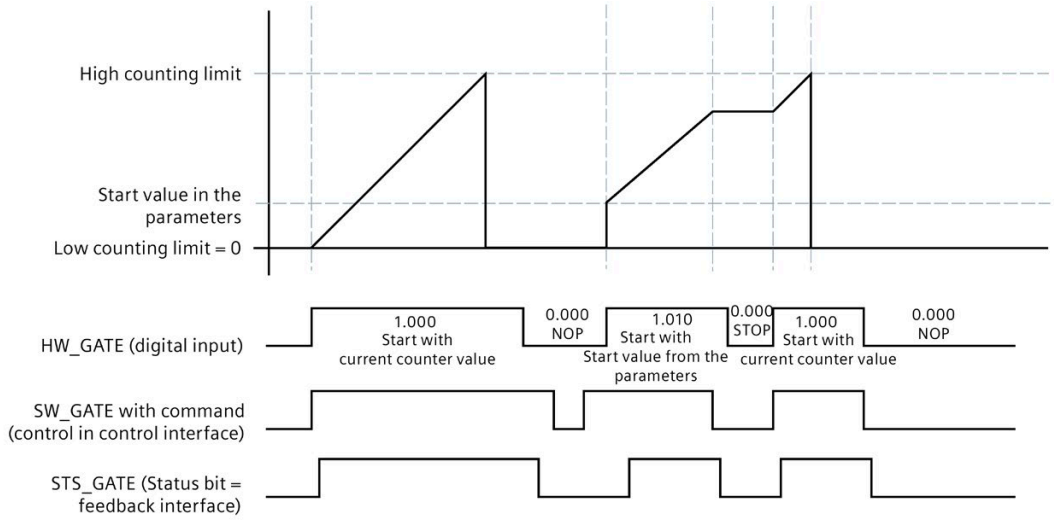

Figure 4-14 Principle: Counting with hardware gate

4.9.6 Parameters

Counting limits

The counting limits define the range of values of the counted value used. The counting limits can be set in the parameters and can be changed with the user program during runtime.

Configurable high counting limit: 4294967295 (2^{32}-1).

Low counting limit (not settable): 0

You can continue or terminate (automatic gate stop) counting if a counting limit is exceeded, see the parameter "Reaction to violation of a counting limit".

Start value/load value

The start value is specified in the parameter assignment with STEP 7 (TIA Portal). The load value can be changed by the user program. Both values must be between the low counting limit and high counting limit.

Comparison values

You specify a comparison value per channel that can control the feedback bit STS_DQ regardless of the user program. When the current counted value corresponds to the comparison condition set in the parameters, the feedback bit STS_DQ is set. You can use the feedback bit STS_DQ to control a digital output of a digital output module.

The comparison values can be set in the parameters and can be changed during runtime via the user program with parameter data record 0/1.

Gate control

The opening and closing of the software gate (SW-GATE) defines the time window in which the count signals are acquired. The software gate is controlled by the user program.

Hardware gate

Opening and closing of the hardware gate (HW-GATE) defines the time window in which the counting signals are acquired. The hardware gate is controlled by the user program.

Reference

You can find additional information on the counting functionality in the function manual S7-1500, ET 200MP, ET 200SP counting, measuring and position detection (https://support.industry.siemens.com/cs/ww/en/view/59709820).

Interrupts/diagnostics alarms

5

5.1 Status and error displays

LED displays

The following figure shows the LED displays (status and error displays) of the DI 16xNAMUR HF.

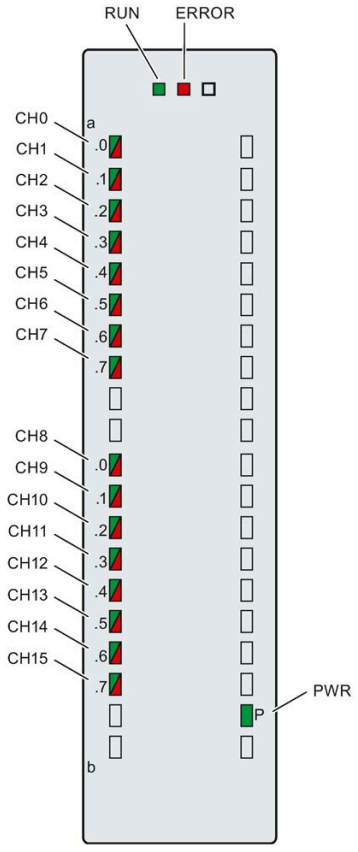

Figure 5-1 LED displays of the DI 16xNAMUR HF module

Meaning of the LED displays

The following tables explain the meaning of the status and error displays. Remedial measures for diagnostic reports can be found in chapter Diagnostics alarms (Page 51).

RUN and ERROR LED

Table 5- 1 Status and error displays RUN and ERROR

LED		Meaning	Solution
RUN	ERROR		
Off	Off	Voltage missing or too low at backplane bus	• Switch on the CPU and/or the system power supply modules. • Verify that the U connectors are inserted. • Check whether too many modules are inserted.
Flashes	Off	The module starts and flashes until the valid parameter assignment is set.	---
On	Off	Module is configured	
On	Flashes	Indicates module errors (at least one error is present on one channel, e.g. wire break).	Evaluate the diagnostics and eliminate the error (e.g. wire break).
Flashes	Flashes	Hardware defective	Replace the module.

PWR LED

Table 5- 2 PWR status display

PWR LED	Meaning	Solution
Off	Supply voltage L+ too low or missing	Check supply voltage L+.
On	Supply voltage L+ is present and OK	---

CHx LED

Table 5- 3 CHx status display

CHx LED	Meaning	Solution
□ Off	0 = Status of the input signal	---
■ On	1 = Status of the input signal	---
■ On	Diagnostics: Wire break	Check the wiring. When using simple switches, disable diagnostics or connect a resistor (10 kΩ) to the sensor contacts.
	Supply voltage L+ too low or missing or supply voltage short circuit	Check supply voltage L+.

5.2 Interrupts

The DI 16xNAMUR HF digital input module supports diagnostics interrupt and hardware interrupt.

Detailed information on the error event is available in the error organization block by executing the "RALRM" instruction (read additional interrupt information) and in the STEP 7 Online Help.

Diagnostics interrupt

The module generates a diagnostic interrupt at the following events:

- No supply voltage L+
- Wire break
- Parameter assignment error
- Short circuit sensor supply
- Chatter error

Hardware interrupt

The module generates a hardware interrupt at the following events:

- Rising edge
- Falling edge
- Rising and falling edge
- Comparison event occurred for DQ (only in "Counting mode")

The module channel that triggered the hardware interrupt is entered in the start information of the organization block. The following figure shows the assignment to the bits of double word 8 in local data.

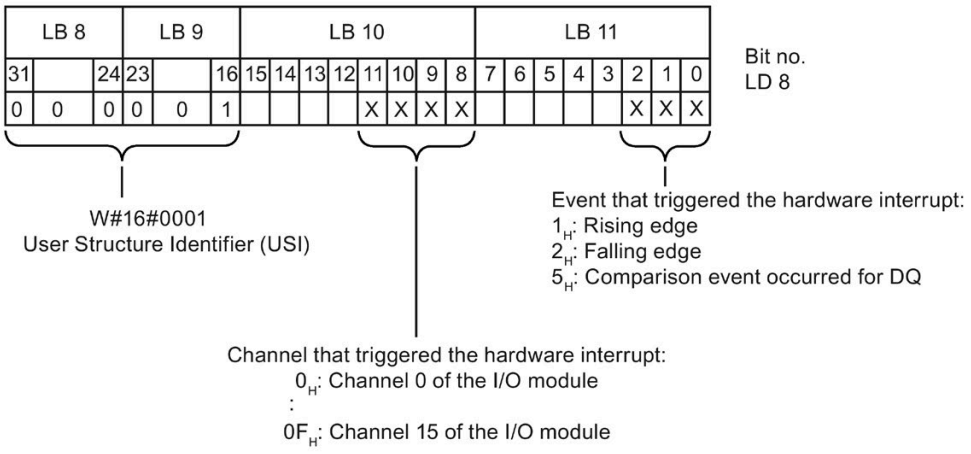

Figure 5-2 Start information of the organization block

Structure of the additional interrupt information

Table 5- 4 Structure of USI = W#16#0001

Data block name		Contents	Comment	Bytes
USI (User Structure Identifier)		W#16#0001	Additional interrupt info for hardware interrupts of the I/O module	2
The channel that triggered the hardware interrupt follows.				
	Channel	B#16#00 to B#16#0F	Number of the event-triggering channel (channel 0 to channel 15 of the module)	1
It follows the error event that triggered the hardware interrupt.				
	Event	B#16#01	Rising edge	1
		B#16#02	Falling edge	
		B#16#05	Comparison event occurred for DQ (only in "Counting mode")	

5.3 Diagnostics alarms

Diagnostics alarms

A diagnostics alarm is generated and the DIAG-LED flashes on the module for each diagnostics event. You can read out the diagnostics alarms in the diagnostics buffer of the CPU, for example. You can evaluate the fault codes with the user program.

Table 5- 5 Diagnostics alarms, meaning and corrective measures

Diagnostics alarm	Fault code	Meaning	Solution
Short circuit (NAMUR sensor supply only)	1H	Short circuit on signal line to sensor to ground	Correct the process wiring
		Impedance of sensor circuitry is too high	Use other sensor type or wire differently
		Load impedance too low	Use a sensor with a higher impedance
Wire break (NAMUR sensor only, sensor wired with 10 kΩ and single contact wired with 10 kΩ).	6H	Signal line to a sensor interrupted	Correct the process wiring
		Sensor defective	Replace the sensor
		Load impedance too high	Use a different sensor type or modify the wiring, for example, using cables with a larger cross-section
		Channel not connected (open)	Disable diagnostics, connect sensor contacts
No load voltage	11H	Supply voltage L+ of the module is missing	Connect supply voltage L+ to module/channel
Fault 1 in actuator/sensor = signal chatters	1DH	Chatter error: Signal chatters: too many signal changes within the monitoring window If the module no longer detects chattering of the input signal within the triple monitoring window, the module triggers an outgoing diagnostics interrupt. The status of the value of the current signal in the process image is set to "valid".	Verify the chatter monitoring parameters
			Check process wiring, if necessary change sensor

Technical specifications

6

6.1 Technical specifications

Technical specifications of DI 16xNAMUR HF

The following table shows the technical specifications as of 07/2021.

You can find a data sheet with the latest technical specifications on the Internet (https://support.industry.siemens.com/cs/ww/en/pv/6ES7521-7TH00-0AB0). Enter the article number or the short designation of the module on the website.

Article number	6ES7521-7TH00-0AB0
General information	
Product type designation	DI 16xNAMUR HF
HW functional status	From FS01
Firmware version	V1.0.0
• FW update possible	Yes
Product function	
• I&M data	Yes; I&M0 to I&M3
• Isochronous mode	Yes
• Prioritized startup	Yes
Engineering with	
• STEP 7 TIA Portal configurable/integrated from version	STEP 7 V17 or higher
• STEP 7 configurable/integrated from version	V5.5 SP3 / -
• PROFIBUS from GSD version/GSD revision	V1.0 / V5.1
• PROFINET from GSD version/GSD revision	V2.3 / -
Operating mode	
• DI	Yes
• Counter	Yes
• Oversampling	No
• MSI	Yes
Supply voltage	
Rated value (DC)	24 V
permissible range, lower limit (DC)	19.2 V
permissible range, upper limit (DC)	28.8 V
Reverse polarity protection	Yes
Input current	
Current consumption, max.	220 mA; with 19.2 V supply

Article number	6ES7521-7TH00-0AB0
Encoder supply	
Number of outputs	16; 2x 8.2 V DC
Short-circuit protection	Yes
NAMUR encoder supply	
• 8.2 V	Yes
• Short-circuit protection	Yes; Per group, electronic
• Output current, max.	100 mA; per group
• Output current per module, max.	200 mA
Power	
Power available from the backplane bus	0.6 W
Power loss	
Power loss, typ.	3.7 W
Digital inputs	
Number of digital inputs	16; NAMUR
Digital inputs, parameterizable	Yes
Source/sink input	P-reading
Pulse extension	Yes; 0.05 s, 0.1 s, 0.2 s, 0.5 s, 1 s, 2 s
Edge evaluation	Yes; rising edge, falling edge, edge change
Signal change flutter	Yes; 2 to 32 signal changes
Flutter observation window	Yes; 0.5 s, 1 s to 100 s in 1-s steps
Digital input functions, parameterizable	
• Gate start/stop	Yes; software/hardware gate
• Freely usable digital input	Yes
• Counter	
– Number, max.	4; See manual for details
– Counting frequency, max.	20 kHz; See manual for details
– Counting width	32 bit
– Counting direction up/down	Yes; forward / backward
Input voltage	
• Rated value (DC)	8.2 V
Input current	
• for signal "1", typ.	10 mA
for 10 k switched contact	
– for signal "0"	0.35 to 1.2 mA
– for signal "1"	2.1 ... 10 mA
for unswitched contact	
– for signal "0", max. (permissible quiescent current)	0.35 to 1.2 mA
– for signal "1"	2.1 ... 10 mA

Article number	6ES7521-7TH00-0AB0
for NAMUR encoders	
– for signal "0", min.	0.35 mA
– for signal "0", max.	1.2 mA
– for signal "1", min.	2.1 mA
– for signal "1", max.	10 mA
Input delay (for rated value of input voltage)	
for standard inputs	
– parameterizable	Yes; 0.05 / 0.1 / 0.4 / 1.6 / 3.2 / 12.8 / 20 ms
– at "0" to "1", min.	0.05 ms
– at "0" to "1", max.	20 ms
– at "1" to "0", min.	0.05 ms
– at "1" to "0", max.	20 ms
for interrupt inputs	
– parameterizable	Yes
for technological functions	
– parameterizable	Yes
for NAMUR inputs	
– at "0" to "1", max.	20 ms
– at "1" to "0", max.	20 ms
Cable length	
• shielded, max.	200 m; 200 m for technological functions; depending on input frequency, encoder and cable quality; max. 50 m at 20 kHz
Encoder	
Connectable encoders	
• NAMUR encoder/changeover contact according to EN 60947	Yes; no CO contact
• Single contact / changeover contact unconnected	Yes; no CO contact
• Single contact / changeover contact connected with 10 kΩ	Yes; no CO contact
• 2-wire sensor	Yes
– permissible quiescent current (2-wire sensor), max.	1.2 mA
Isochronous mode	
Filtering and processing time (TCI), min.	60 µs; At 50 µs filter time
Bus cycle time (TDP), min.	250 µs
Interrupts/diagnostics/status information	
Diagnostics function	Yes

Article number	6ES7521-7TH00-0AB0
Alarms	
• Diagnostic alarm	Yes
• Hardware interrupt	Yes
Diagnoses	
• Monitoring the supply voltage	Yes
• Monitoring of encoder power supply	Yes; short-circuit
• Wire-break	Yes; to I < 350 µA
• Short-circuit	No
Diagnostics indication LED	
• RUN LED	Yes; green LED
• ERROR LED	Yes; red LED
• Monitoring of the supply voltage (PWR-LED)	Yes; green LED
• Channel status display	Yes; green LED
• for channel diagnostics	Yes; red LED
• for module diagnostics	Yes; red LED
Potential separation	
Potential separation channels	
• between the channels	No
• between the channels, in groups of	8
• between the channels and backplane bus	Yes
• Between the channels and load voltage L+	Yes
• between the channels and the power supply of the electronics	No
Isolation	
Isolation tested with	707 V DC (type test)
Standards, approvals, certificates	
Suitable for safety functions	No
Ambient conditions	
Ambient temperature during operation	
• horizontal installation, min.	-30 °C
• horizontal installation, max.	60 °C
• vertical installation, min.	-30 °C
• vertical installation, max.	40 °C
Altitude during operation relating to sea level	
• Installation altitude above sea level, max.	5 000 m; Restrictions for installation altitudes > 2 000 m, see manual

Article number	6ES7521-7TH00-0AB0
Dimensions	
Width	35 mm
Height	147 mm
Depth	129 mm
Weights	
Weight, approx.	240 g

Tolerances of the programmable input delay

Input delay	Tolerance range
0.05 ms	43 µs to 57 µs
0.1 ms	86 µs to 114 µs
0.4 ms	344 µs to 456 µs
1.6 ms	1.5 ms to 1.9 ms
3.2 ms (preset)	3 ms to 4 ms
12.8 ms	12 ms to 15 ms
20 ms	19 ms to 23 ms

Dimension drawing

A

A.1 Dimensional drawing

The dimensional drawings of the module on the mounting rail, as well as a dimensional drawing with open front panel, are provided in the appendix. Always observe the specified dimensions for installation in cabinets, control rooms, etc.

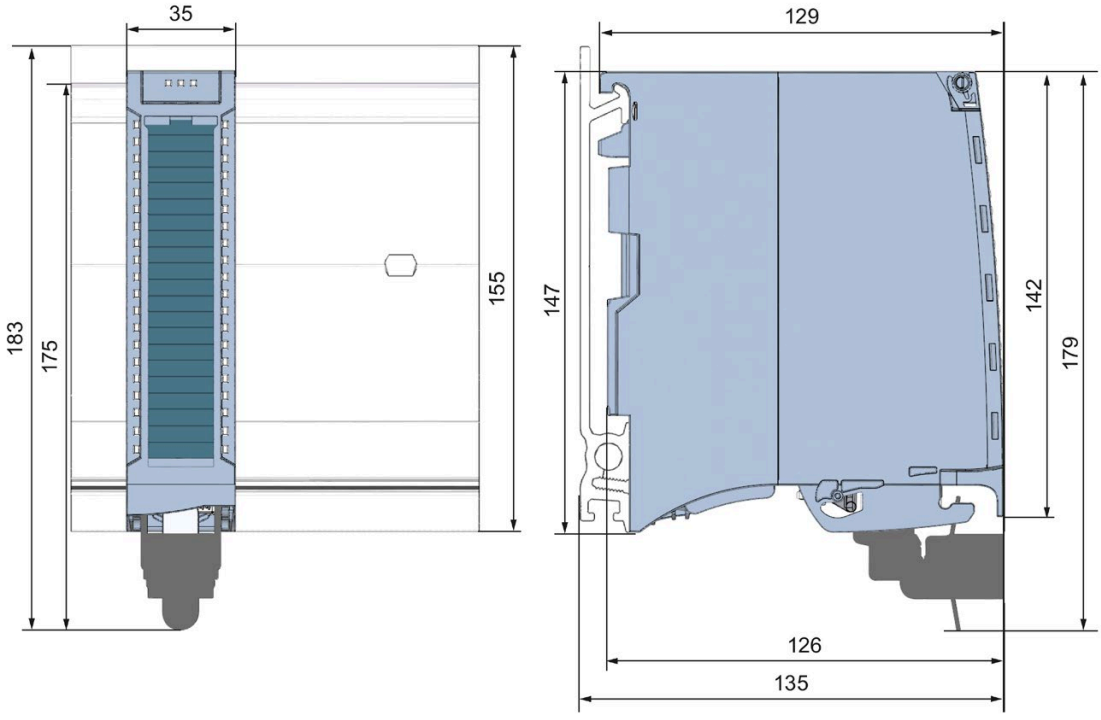

Figure A-1 Dimension drawing of the DI 16xNAMUR HF module

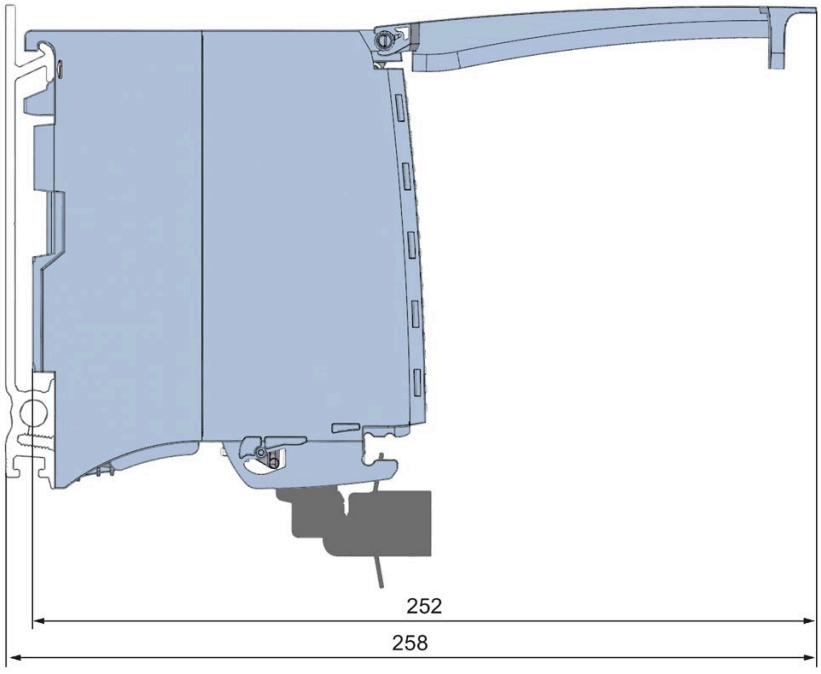

Figure A-2 Dimension drawing of the DI 16xNAMUR HF module in side view with open front cover

Parameter data record

B

B.1 Parameter assignment and structure of the parameter data records

The data records of the module have an identical structure, regardless of whether you configure the module with PROFIBUS DP or PROFINET IO.

Isochronous mode

In isochronous mode, you need to observe the following parameter rules:

- Input delay: 0.05 ms
- Diagnostics: Chatter monitoring: Disabled
- Pulse stretching: None
- Chatter monitoring: Disabled

Dependencies for configuration with GSD file

When configuring the module with a GSD file, note that the settings of some parameters are interdependent. The parameters are only checked for plausibility by the module after the transfer to the module.

DI mode: No dependencies. You can assign the individual parameters in any combination.

Counting mode: The following table lists the parameters that are mutually dependent:

Table B- 1 Dependencies of parameters for configuration with GSD file

Device-specific parameters (GSD file)	Dependent parameters
Comparison value	0 ... high counting limit
Start value	0 ... high counting limit

Parameter assignment in the user program

You have the option of to re-configuring the module in RUN, (e.g. change values for input delay of individual channels without this affecting the other channels).

Changing parameters in RUN

The WRREC instruction is used to transfer the parameters to the module using data records 0 to 15. Here, the parameters set with STEP 7 are not changed in the CPU, i.e. after a startup the parameters set with STEP 7 are valid again.

The parameters are only checked for plausibility by the module after the transfer.

Output parameter STATUS

If errors occur during the transfer of parameters with the WRREC instruction, the module continues operation with the previous parameter assignment. However, a corresponding error code is written to the STATUS output parameter.

You can find a description of the WRREC instruction and the error codes in the online help of STEP 7.

Operation of the module behind a PROFIBUS DP interface module

If the module is operated behind a PROFIBUS DP interface module, the parameter data records 0 and 1 cannot be read back. You obtain the diagnostics data records 0 and 1 with the read back parameter data records 0 and 1. You can find additional information in the equipment manual for the PROFIBUS DP interface module, section on interrupts on the Internet.

B.2 Structure of the parameter data records DI mode

Assignment of data record and channel

For the configuration with 1 x 16 channels, the parameters are located in data records 0 to 15 and are assigned as follows:

- Data record 0 for channel 0
- Data record 1 for channel 1
- ...
- Data record 14 for channel 14
- Data record 15 for channel 15

Structure of a data record in the DI mode

The figure below shows the structure of data record 0 for channel 0 as an example. The structure is identical for channels 1 to 15. The values in byte 0 and byte 1 are fixed and may not be changed.

Enable a parameter by setting the corresponding bit to "1".

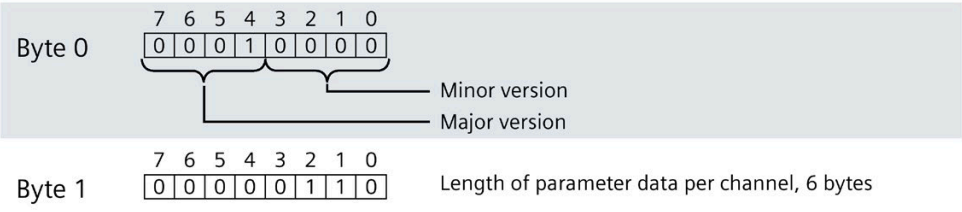

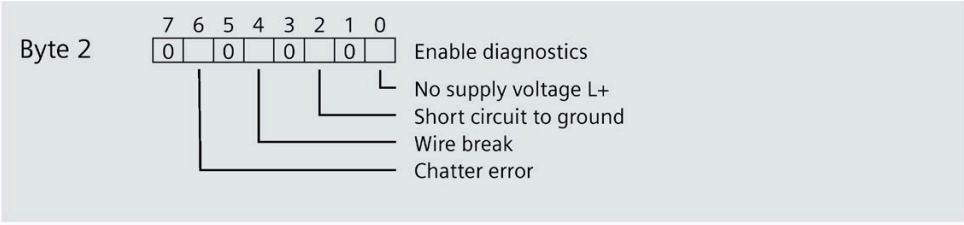
Byte 2
7 6 5 4 3 2 1 0
0 0 0 0
Enable diagnostics
No supply voltage L+
Short circuit to ground
Wire break
Chatter error

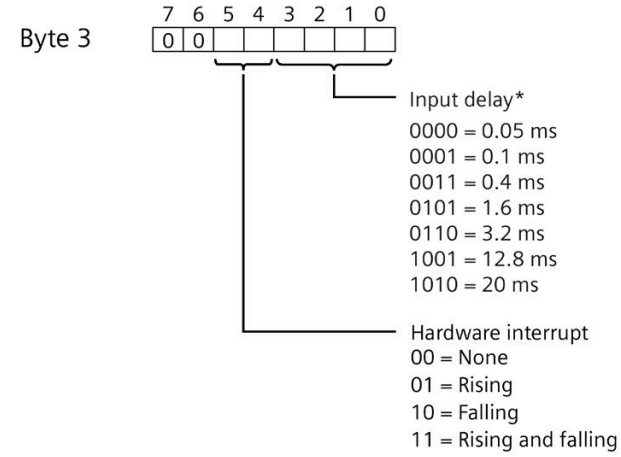
Byte 3
7 6 5 4 3 2 1 0
0 0
Input delay*
0000 = 0.05 ms
0001 = 0.1 ms
0011 = 0.4 ms
0101 = 1.6 ms
0110 = 3.2 ms
1001 = 12.8 ms
1010 = 20 ms
Hardware interrupt
00 = None
01 = Rising
10 = Falling
11 = Rising and falling

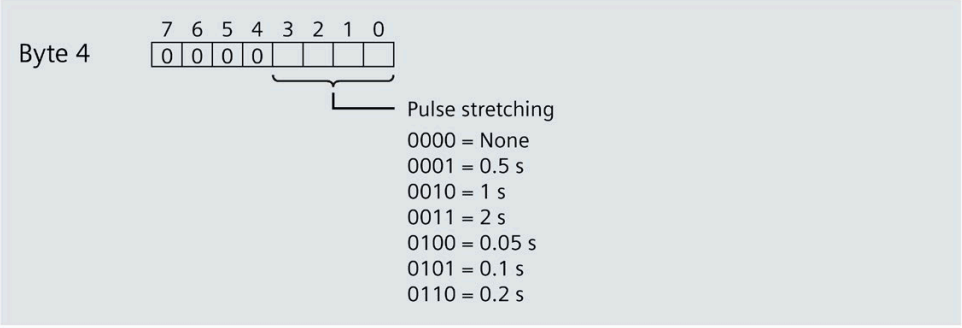
Byte 4
7 6 5 4 3 2 1 0
0 0 0 0
Pulse stretching
0000 = None
0001 = 0.5 s
0010 = 1 s
0011 = 2 s
0100 = 0.05 s
0101 = 0.1 s
0110 = 0.2 s

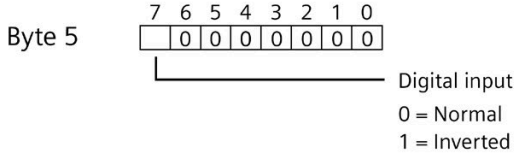
Byte 5
7 6 5 4 3 2 1 0
0 0 0 0 0 0 0
Digital input
0 = Normal
1 = Inverted

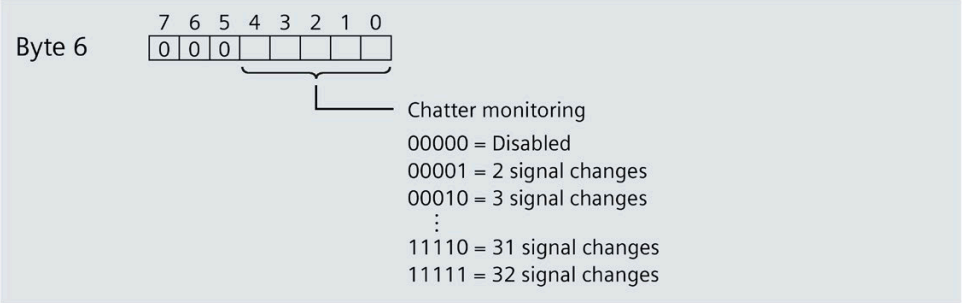
Byte 6
7 6 5 4 3 2 1 0
0 0 0
Chatter monitoring
00000 = Disabled
00001 = 2 signal changes
00010 = 3 signal changes
11110 = 31 signal changes
11111 = 32 signal changes

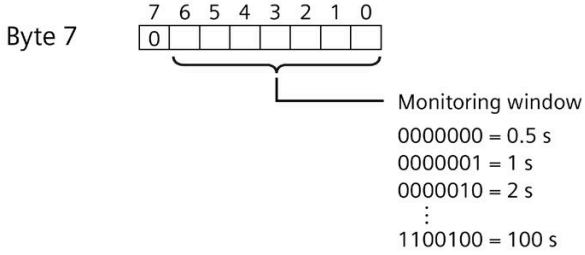
Byte 7
7 6 5 4 3 2 1 0
0
Monitoring window
0000000 = 0.5 s
0000001 = 1 s
0000010 = 2 s
1100100 = 100 s

B.3 Structure of the parameter data records Counting mode

Assignment of data record and channel

For the configuration with 1 x 16 channels, the parameters are located in data records 0 to 15 and are assigned as follows:

- Data record 0 for channel 0 with counting function
- Data record 1 for channel 1 with counting function
- Data record 2 for channel 2 with counting function
- Data record 3 for channel 3 with counting function
- Data record 4 for channel 4 (structure as in DI mode)
- ...
- Data record 14 for channel 14 (structure as in DI mode)
- Data record 15 for channel 15 (structure as in DI mode)

Structure of data record 0 of the Counting mode

The figure below shows the structure of data record 0 for channel 0 as an example. The structure is identical for channel 1 to 3, the values are in data record 1 to 3.

The values in byte 0 and byte 1 are fixed and may not be changed.

Enable a parameter by setting the corresponding bit to "1".

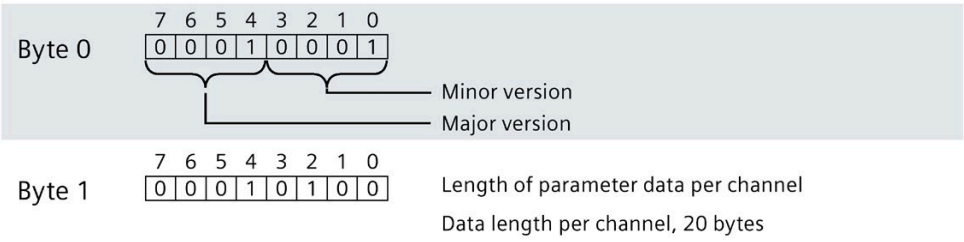

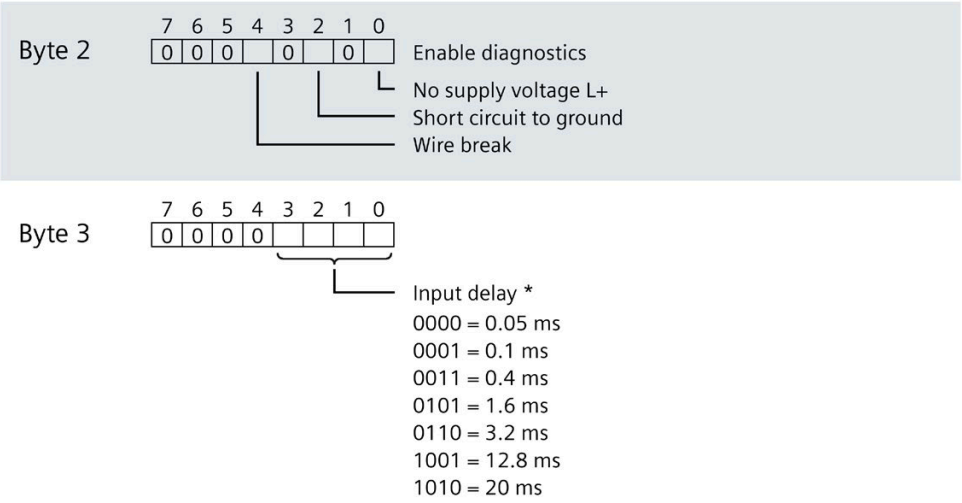
Byte 2
7 6 5 4 3 2 1 0
0 0 0 0 0
Enable diagnostics
No supply voltage L+
Short circuit to ground
Wire break
Byte 3
7 6 5 4 3 2 1 0
0 0 0 0
Input delay *
0000 = 0.05 ms
0001 = 0.1 ms
0011 = 0.4 ms
0101 = 1.6 ms
0110 = 3.2 ms
1001 = 12.8 ms
1010 = 20 ms

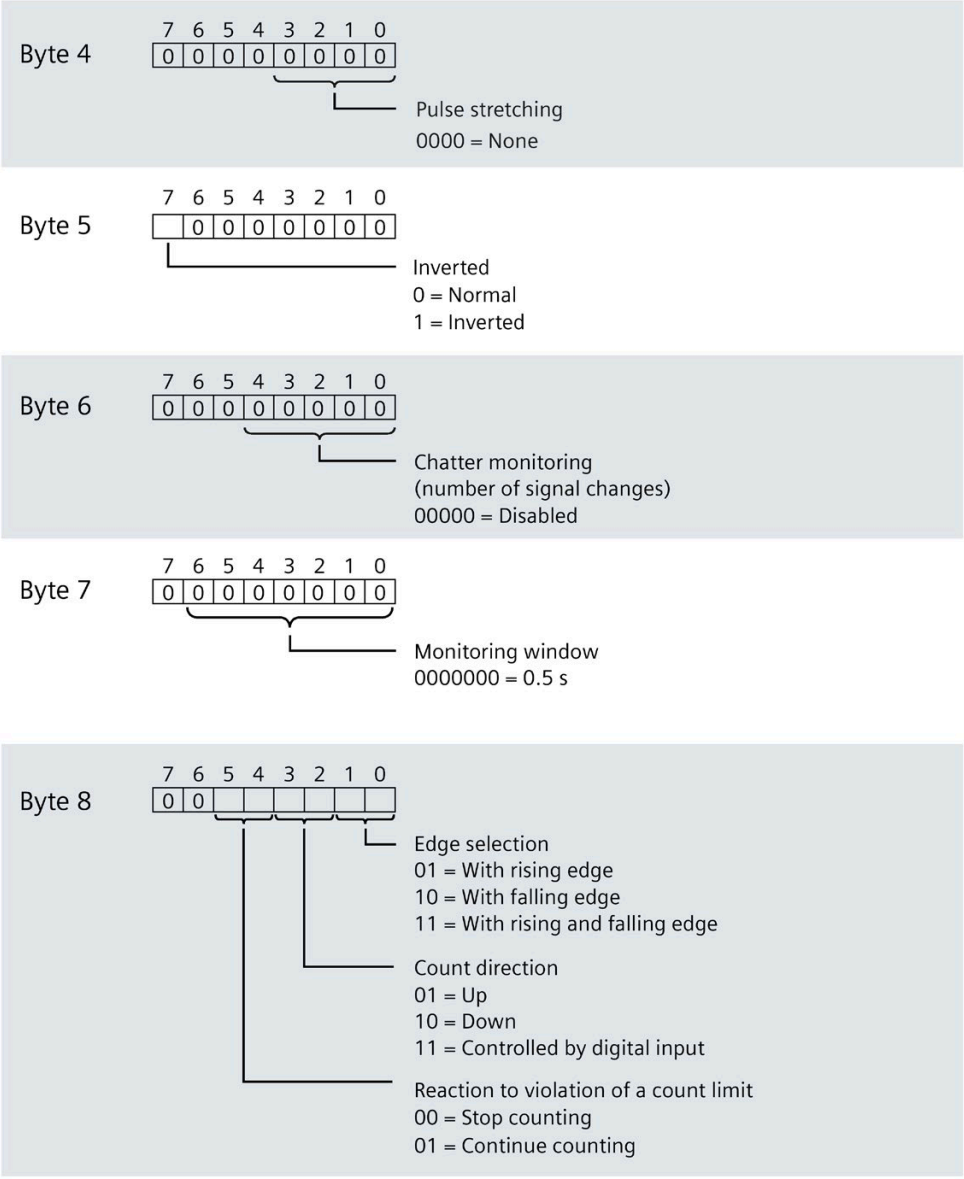
Byte 4
7 6 5 4 3 2 1 0
0 0 0 0 0 0 0 0
Pulse stretching
0000 = None
Byte 5
7 6 5 4 3 2 1 0
0 0 0 0 0 0 0
Inverted
0 = Normal
1 = Inverted
Byte 6
7 6 5 4 3 2 1 0
0 0 0 0 0 0 0 0
Chatter monitoring
(number of signal changes)
00000 = Disabled
Byte 7
7 6 5 4 3 2 1 0
0 0 0 0 0 0 0 0
Monitoring window
0000000 = 0.5 s
Byte 8
7 6 5 4 3 2 1 0
0 0
Edge selection
01 = With rising edge
10 = With falling edge
11 = With rising and falling edge
Count direction
01 = Up
10 = Down
11 = Controlled by digital input
Reaction to violation of a count limit
00 = Stop counting
01 = Continue counting

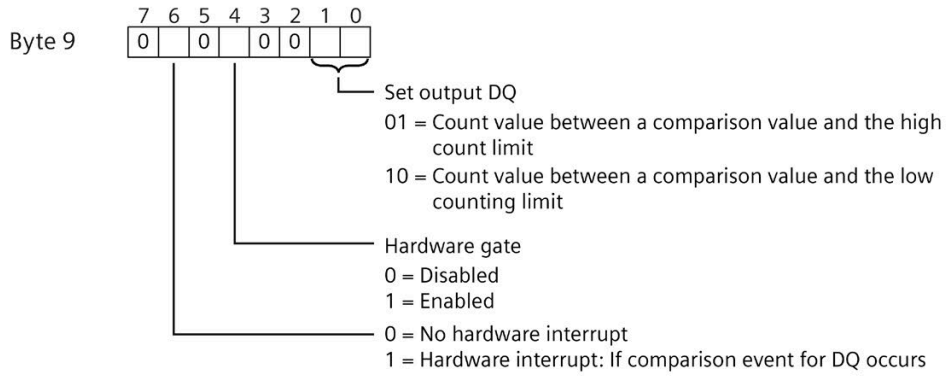

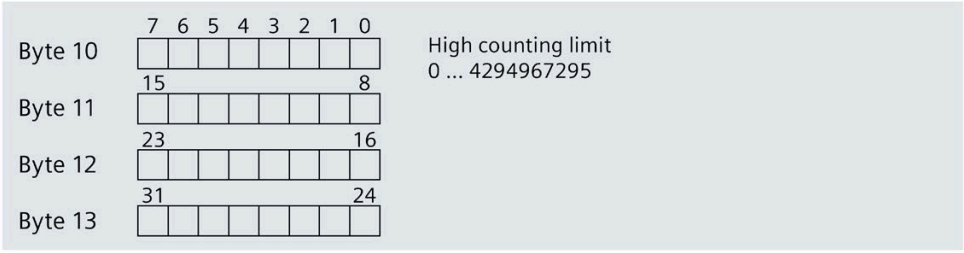

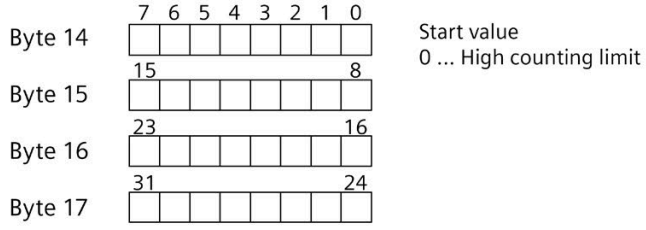

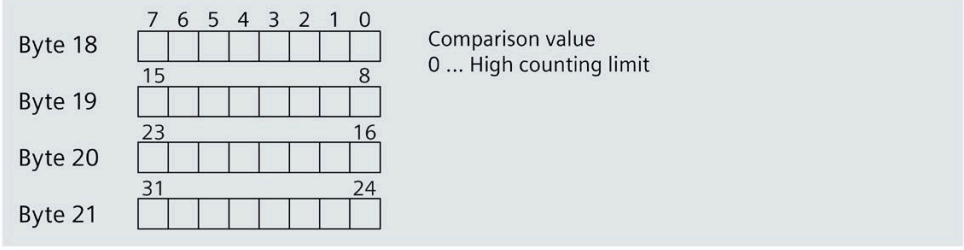

Keep in mind that the counter is stopped and reset to the start value when you change count parameters.
Changing the parameters "Diagnostics" and "Hardware interrupts" does not have an effect on the counter.

Structure of data records 4 to 15

The structure of data records 4 to 15 for channels 4 to 15 is identical to the structure in DI mode, see section Structure of the parameter data records DI mode (Page 60), figure Structure of data record 0: Bytes 0 to 3.

SIEMENS

Manual

SIMATIC

S7-1500 / ET 200MP

Digital input module
DI 64x24VDC SNK/SRC BA (6ES7521-1BP00-0AA0)

Edition 07/2020

support.industry.siemens.com

SIEMENS

SIMATIC

S7-1500/ET 200MP Digital input module DI 64x24VDC SNK/SRC BA (6ES7521-1BP00-0AA0)

Equipment Manual

Preface

S7-1500 / ET 200MP Documentation Guide 1

Product overview 2

Wiring 3

Address space 4

Diagnostic alarms 5

Technical specifications 6

Dimensional drawing A

07/2020

A5E48025116-AA

Legal information

Warning notice system

This manual contains notices you have to observe in order to ensure your personal safety, as well as to prevent damage to property. The notices referring to your personal safety are highlighted in the manual by a safety alert symbol, notices referring only to property damage have no safety alert symbol. These notices shown below are graded according to the degree of danger.

⚠ DANGER
indicates that death or severe personal injury **will** result if proper precautions are not taken.

⚠ WARNING
indicates that death or severe personal injury **may** result if proper precautions are not taken.

⚠ CAUTION
indicates that minor personal injury can result if proper precautions are not taken.

NOTICE
indicates that property damage can result if proper precautions are not taken.

If more than one degree of danger is present, the warning notice representing the highest degree of danger will be used. A notice warning of injury to persons with a safety alert symbol may also include a warning relating to property damage.

Qualified Personnel

The product/system described in this documentation may be operated only by **personnel qualified** for the specific task in accordance with the relevant documentation, in particular its warning notices and safety instructions. Qualified personnel are those who, based on their training and experience, are capable of identifying risks and avoiding potential hazards when working with these products/systems.

Proper use of Siemens products

Note the following:

⚠ WARNING
Siemens products may only be used for the applications described in the catalog and in the relevant technical documentation. If products and components from other manufacturers are used, these must be recommended or approved by Siemens. Proper transport, storage, installation, assembly, commissioning, operation and maintenance are required to ensure that the products operate safely and without any problems. The permissible ambient conditions must be complied with. The information in the relevant documentation must be observed.

Trademarks

All names identified by ® are registered trademarks of Siemens AG. The remaining trademarks in this publication may be trademarks whose use by third parties for their own purposes could violate the rights of the owner.

Disclaimer of Liability

We have reviewed the contents of this publication to ensure consistency with the hardware and software described. Since variance cannot be precluded entirely, we cannot guarantee full consistency. However, the information in this publication is reviewed regularly and any necessary corrections are included in subsequent editions.

Siemens AG
Digital Industries
Postfach 48 48
90026 NÜRNBERG
GERMANY

A5E48025116-AA
Ⓟ 07/2020 Subject to change

Copyright © Siemens AG 2020.
All rights reserved

Preface

Purpose of the documentation

This manual supplements the S7-1500/ET 200MP (https://support.industry.siemens.com/cs/ww/en/view/59191792) system manual.

Functions that relate in general to the systems are described in this system manual.

The information provided in this manual and in the system/function manuals supports you in commissioning the systems.

Conventions

The term "CPU" is used in this manual both for the CPUs of the S7-1500 automation system and for interface modules of the ET 200MP distributed I/O system.

Please also observe notes marked as follows:

Note

A note contains important information on the product described in the documentation, on the handling of the product or on the section of the documentation to which particular attention should be paid.

Security information

Siemens provides products and solutions with industrial security functions that support the secure operation of plants, systems, machines and networks.

In order to protect plants, systems, machines and networks against cyber threats, it is necessary to implement – and continuously maintain – a holistic, state-of-the-art industrial security concept. Siemens' products and solutions constitute one element of such a concept.

Customers are responsible for preventing unauthorized access to their plants, systems, machines and networks. Such systems, machines and components should only be connected to an enterprise network or the internet if and to the extent such a connection is necessary and only when appropriate security measures (e.g. firewalls and/or network segmentation) are in place.

For additional information on industrial security measures that may be implemented, please visit (https://www.siemens.com/industrialsecurity).

Siemens' products and solutions undergo continuous development to make them more secure. Siemens strongly recommends that product updates are applied as soon as they are available and that the latest product versions are used. Use of product versions that are no longer supported, and failure to apply the latest updates may increase customers' exposure to cyber threats.

To stay informed about product updates, subscribe to the Siemens Industrial Security RSS Feed visit (https://www.siemens.com/industrialsecurity).

Open Source Software

Open-source software is used in the firmware of the I/O modules. Open Source Software is provided free of charge. We are liable for the product described, including the open-source software contained in it, pursuant to the conditions applicable to the product. Siemens accepts no liability for the use of the open source software over and above the intended program sequence, or for any faults caused by modifications to the software.

For legal reasons, we are obliged to publish the original text of the license conditions and copyright notices. Please read the information relating to this on the Internet (https://support.industry.siemens.com/cs/ww/en/view/109757558).

Table of contents

Preface **3**

1 S7-1500 / ET 200MP Documentation Guide **6**

2 Product overview **8**

2.1 Properties 8

3 Wiring **10**

3.1 Wiring and block diagrams 10

3.2 Terminal assignment X10 and X11. 11

3.3 Connecting a module with a connection module 14

3.4 Wiring of the module 16

3.5 Fuse 18

4 Address space **20**

5 Diagnostic alarms **26**

5.1 Status and error displays 26

6 Technical specifications **28**

A Dimensional drawing **32**

S7-1500 / ET 200MP Documentation Guide

1

The documentation for the SIMATIC S7-1500 automation system and the SIMATIC ET 200MP distributed I/O system is arranged into three areas. This arrangement enables you to access the specific content you require.

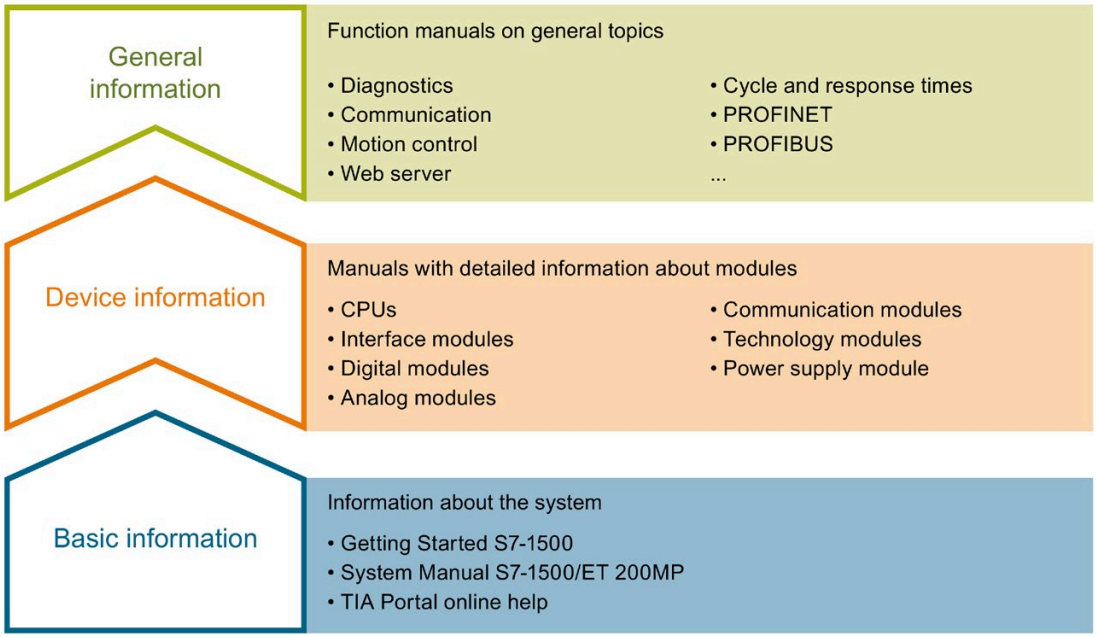

Basic information

The System Manual and Getting Started describe in detail the configuration, installation, wiring and commissioning of the SIMATIC S7-1500 and ET 200MP systems. The STEP 7 online help supports you in the configuration and programming.

Device information

Product manuals contain a compact description of the module-specific information, such as properties, wiring diagrams, characteristics and technical specifications.

General information

The function manuals contain detailed descriptions on general topics regarding the SIMATIC S7-1500 and ET 200MP systems, e.g. diagnostics, communication, motion control, Web server, OPC UA.

You can download the documentation free of charge from the Internet (https://support.industry.siemens.com/cs/ww/en/view/109742691).

Changes and supplements to the manuals are documented in a Product Information.

You can download the product information free of charge from the Internet (https://support.industry.siemens.com/cs/us/en/view/68052815).

Manual Collection S7-1500/ET 200MP

The Manual Collection contains the complete documentation on the SIMATIC S7-1500 automation system and the ET 200MP distributed I/O system gathered together in one file.

You can find the Manual Collection on the Internet (https://support.industry.siemens.com/cs/ww/en/view/86140384).

SIMATIC S7-1500 comparison list for programming languages

The comparison list contains an overview of which instructions and functions you can use for which controller families.

You can find the comparison list on the Internet (https://support.industry.siemens.com/cs/ww/en/view/86630375).

"mySupport"

With "mySupport", your personal workspace, you make the best out of your Industry Online Support.

In "mySupport", you can save filters, favorites and tags, request CAx data and compile your personal library in the Documentation area. In addition, your data is already filled out in support requests and you can get an overview of your current requests at any time.

You must register once to use the full functionality of "mySupport".

You can find "mySupport" on the Internet (https://support.industry.siemens.com/My/ww/en).

Application examples

The application examples support you with various tools and examples for solving your automation tasks. Solutions are shown in interplay with multiple components in the system - separated from the focus on individual products.

You will find the application examples on the Internet (https://support.industry.siemens.com/sc/ww/en/sc/2054).

Product overview

2

2.1 Properties

Article number

6ES7521-1BP00-0AA0

View of the module

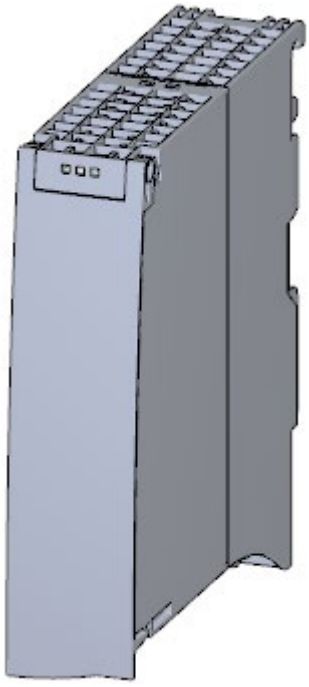

Figure 2-1 View of the DI 64x24VDC SNK/SRC BA module

Properties

The module has the following technical properties:

- 64 digital inputs; electrically isolated in 4 groups of 16
- Sourcing input or sinking input, depending on wiring
- Rated input voltage 24 V DC
- Suitable for switches and 2-/3-/4-wire proximity switches

The module supports the following functions:

Table 2- 1 Version dependencies of the module functions

Function	Firmware version of the module	Configuration software	
		STEP 7 (TIA Portal) as of V16 and HSP 0319	GSD file in STEP 7 (TIA Portal) V12 or higher, or STEP 7 V5.5 SP3 or higher
Firmware update	V1.0.0 or higher	X	--- / X
Identification data I&M0 to I&M3	V1.0.0 or higher	X	X
Module-internal Shared Input (MSI)	V1.0.0 or higher	X (PROFINET IO only)	X (PROFINET IO only)
Configurable submodules / submodules for Shared Device	V1.0.0 or higher	X (PROFINET IO only)	X (PROFINET IO only)

You can configure the module with STEP 7 (TIA Portal) and with a GSD file.

Accessories

The following accessories are supplied with the module and can be ordered as spare parts:

- U connector
- Universal front door with the article number: 6ES7 591-8AA00-0AA0

You can find additional information in the system manual S7-1500/ET 200MP (http://support.automation.siemens.com/WW/view/en/59191792).

Other components

The following must be ordered separately:

- SIMATIC TOP connect connection module
- Pre-fabricated connecting cable with IDC connectors

For additional information, see section Connecting a module with a connection module (Page 14)

Wiring

3

3.1 Wiring and block diagrams

This section contains the block diagram of the module and the terminal assignment.

Wiring and block diagram

The following figure shows the terminal assignment and the assignment of the channels.

- Inputs: Channel 0 to 31 to connector X10
- Inputs: Channel 32 to 63 to connector X11

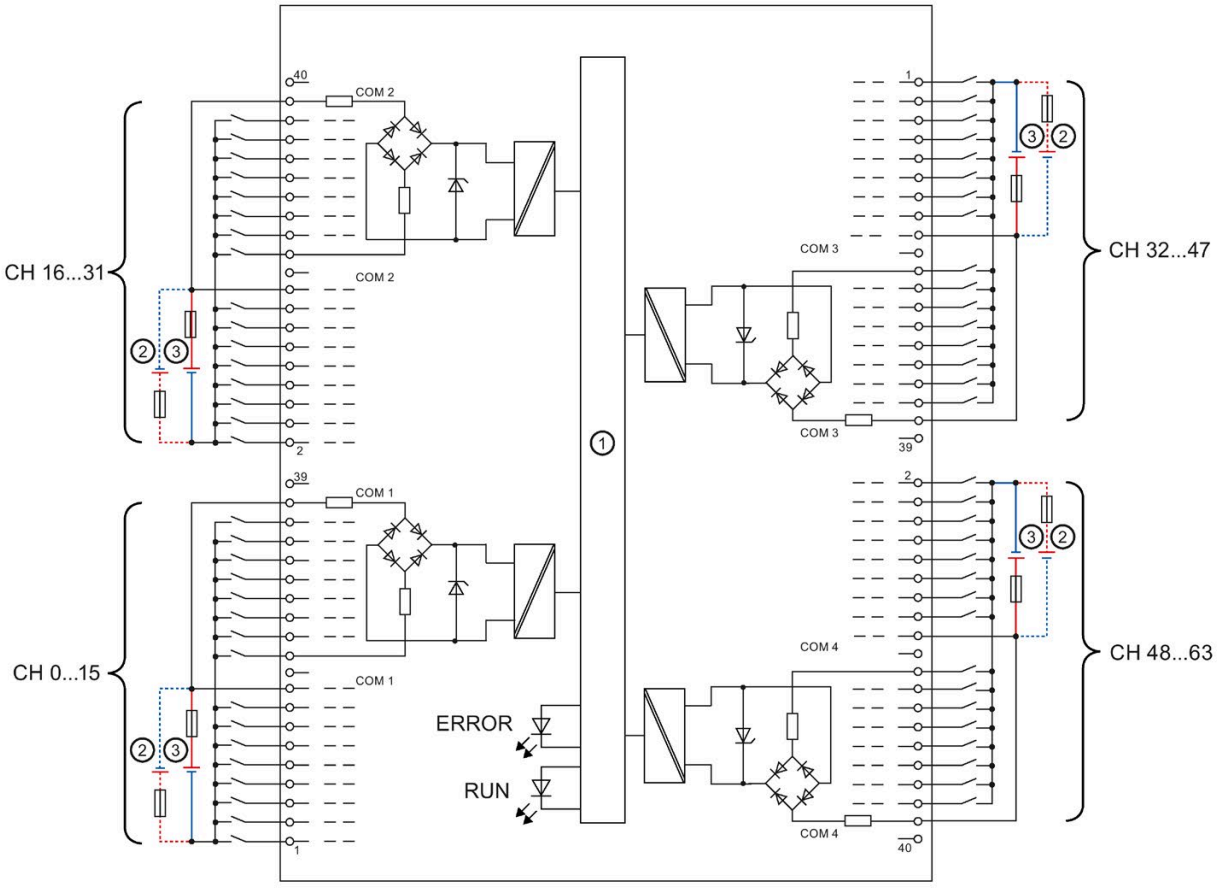

①	Backplane bus interface	CHx	Channel
②	Terminal for "sinking" operating mode	RUN	Status display LED (green)
③	Terminal for "sourcing" operating mode	ERROR	Error display LED (red)

Figure 3-1 Block diagram and terminal assignment

3.2 Terminal assignment X10 and X11.

The following figure shows the assignment of the channels to the addresses.

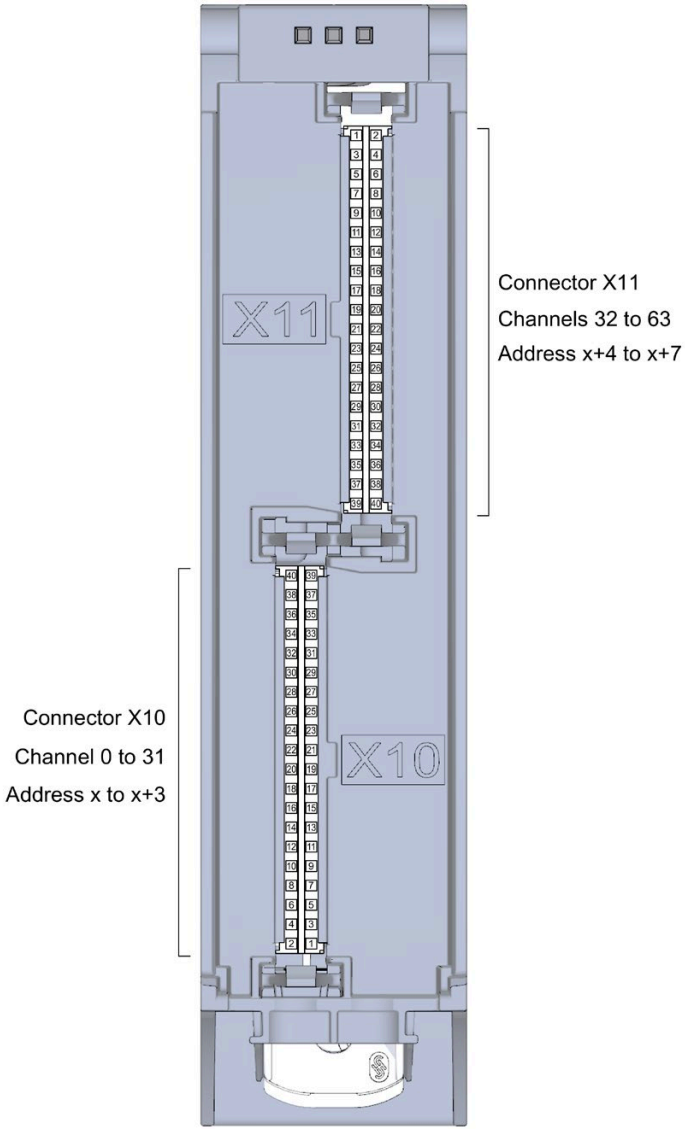

Figure 3-2 Front view of the module without front door

Terminal and address assignment

For connecting sensors or actuators, we recommend using the SIMATIC TOP connect pre-assembled connecting cables and the SIMATIC TOP connect connection modules. However, if you choose another wiring option, you will need the following tables.

Table 3- 1 Assignment for connector X10 of the module

Assignment for inputs to X10					
Terminal	**Channel**	**Address**	**Terminal**	**Channel**	**Address**
40	---	---	**39**	---	---
38	2COM *	---	**37**	1COM **	---
36	Channel 31	x+3.7	**35**	Channel 15	x+1.7
34	Channel 30	x+3.6	**33**	Channel 14	x+1.6
32	Channel 29	x+3.5	**31**	Channel 13	x+1.5
30	Channel 28	x+3.4	**29**	Channel 12	x+1.4
28	Channel 27	x+3.3	**27**	Channel 11	x+1.3
26	Channel 26	x+3.2	**25**	Channel 10	x+1.2
24	Channel 25	x+3.1	**23**	Channel 9	x+1.1
22	Channel 24	x+3.0	**21**	Channel 8	x+1.0
20	---	---	**19**	---	---
18	2COM *	---	**17**	1COM **	---
16	Channel 23	x+2.7	**15**	Channel 7	x.7
14	Channel 22	x+2.6	**13**	Channel 6	x.6
12	Channel 21	x+2.5	**11**	Channel 5	x.5
10	Channel 20	x+2.4	**9**	Channel 4	x.4
8	Channel 19	x+2.3	**7**	Channel 3	x.3
6	Channel 18	x+2.2	**5**	Channel 2	x.2
4	Channel 17	x+2.1	**3**	Channel 1	x.1
2	Channel 16	x+2.0	**1**	Channel 0	x.0

* 2M for Sinking (sinking input) connection type/ 2L+ for Sourcing (sourcing input) connection type

** 1M for Sinking (sinking input) connection type/ 1L+ for Sourcing (sourcing input) connection type

Table 3- 2 Assignment for the connector X11 of the module

Assignment for inputs to X11					
Terminal	**Channel**	**Address**	**Terminal**	**Channel**	**Address**
1	Channel 32	x+4.0	**2**	Channel 48	x+6.0
3	Channel 33	x+4.1	**4**	Channel 49	x+6.1
5	Channel 34	x+4.2	**6**	Channel 50	x+6.2
7	Channel 35	x+4.3	**8**	Channel 51	x+6.3
9	Channel 36	x+4.4	**10**	Channel 52	x+6.4
11	Channel 37	x+4.5	**12**	Channel 53	x+6.5
13	Channel 38	x+4.6	**14**	Channel 54	x+6.6
15	Channel 39	x+4.7	**16**	Channel 55	x+6.7
17	3COM *	---	**18**	4COM **	---
19	---	---	**20**	---	---
21	Channel 40	x+5.0	**22**	Channel 56	x+7.0
23	Channel 41	x+5.1	**24**	Channel 57	x+7.1
25	Channel 42	x+5.2	**26**	Channel 58	x+7.2
27	Channel 43	x+5.3	**28**	Channel 59	x+7.3
29	Channel 44	x+5.4	**30**	Channel 60	x+7.4
31	Channel 45	x+5.5	**32**	Channel 61	x+7.5
33	Channel 46	x+5.6	**34**	Channel 62	x+7.6
35	Channel 47	x+5.7	**36**	Channel 63	x+7.7
37	3COM *	---	**38**	4COM **	---
39	---	---	**40**	---	---

* 3M for Sinking (sinking input) connection type/ 3L+ for Sourcing (sourcing input) connection type

** 4M for Sinking (sinking input) connection type/ 4L+ for Sourcing (sourcing input) connection type

3.3 Connecting a module with a connection module

Component for connecting

To connect sensors, you need 2 connection modules per module. The connection modules are connected to the module with pre-assembled connecting cables.

You can find additional information on the components of the SIMATIC TOP connect system cabling, e.g. for connecting connection modules, in the equipment manual SIMATIC TOP connect for S7-1500 and ET 200MP (https://support.industry.siemens.com/cs/ww/en/view/95924607).

Note

Common supply

If you use the listed SIMATIC TOP connect connection modules, then all 32 channels of a connection module have a common supply. This means that 2 groups of 16 channels each are supplied by common potential.

You can find the required components in the tables below.

Table 3- 3 SIMATIC TOP connect connection module

Components	Type	Description	Connection technology	Article number	Delivery quantity
Connection modules for digital inputs	TP1	1-wire connection, without LED (sinking input)	- Screw terminals - Push-in system	6ES7924-2AA20-0AA0 6ES7924-2AA20-0AC0	Pack of 1 Pack of 1
		1-wire connection, with LED (sinking input)	- Screw terminals - Push-in system	6ES7924-2AA20-0BA0 6ES7924-2AA20-0BC0	Pack of 1 Pack of 1
		1-wire connection, with LED (sourcing input)	- Screw terminals - Push-in system	6ES7924-2AK20-0BA0 6ES7924-2AK20-0BC0	Pack of 1 Pack of 1
	TP3	3-wire connection, without LED (sinking input)	- Screw terminals - Push-in system	6ES7924-2CA20-0AA0 6ES7924-2CA20-0AC0	Pack of 1 Pack of 1
		3-wire connection, with LED (sinking input)	- Screw terminals - Push-in system	6ES7924-2CA20-0BA0 6ES7924-2CA20-0BC0	Pack of 1 Pack of 1

Table 3- 4 Connecting cables SIMATIC TOP connect

Components	Length	Article number	Delivery quantity
Pre-assembled connecting cable with IDC connector an both ends • IDC connector 40-pin for the I/O module • IDC connector 50-pin for the SIMATIC TOP connect connection module	1.0 m	6ES7923-5BB00-0GB0	Pack of 1
	2.0 m	6ES7923-5BC00-0GB0	Pack of 1
	2.5 m	6ES7923-5BC50-0GB0	Pack of 1
	3.0 m	6ES7923-5BD00-0GB0	Pack of 1

Support for selecting hardware components

We recommend you use the TIA Selection Tool for planning your project. The TIA Selection Tool is available free of charge as a desktop version for download or as a cloud version, refer to the Internet (https://new.siemens.com/global/en/products/automation/topic-areas/tia/tia-selection-tool.html).

3.4 Wiring of the module

Requirement

- The I/O modules are installed on the mounting rail.
- The supply voltage of the station is switched off.

Procedure

1. Plug the two SIMATIC TOP connect connecting cables with the **40-pin** IDC connector into X10 and X11.

   Note when plugging:

   – ① The nob on the left edge of connector X11

   – ② The nob on the right edge of connector X10

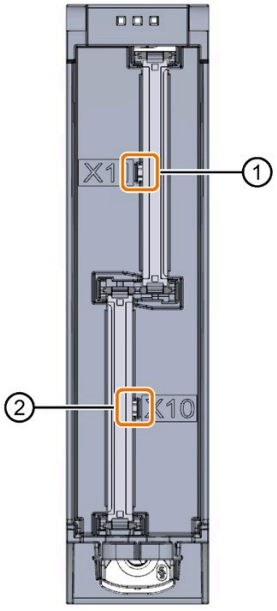

Figure 3-3 Connect the SIMATIC TOP connect 40-pin connecting cable to the module

2. Guide the SIMATIC TOP connect connecting cables down to the module.
3. Guide a cable tie around the module at the fixing points and connect the SIMATIC TOP connect cables.

4. Tighten the cable tie for the strain relief.

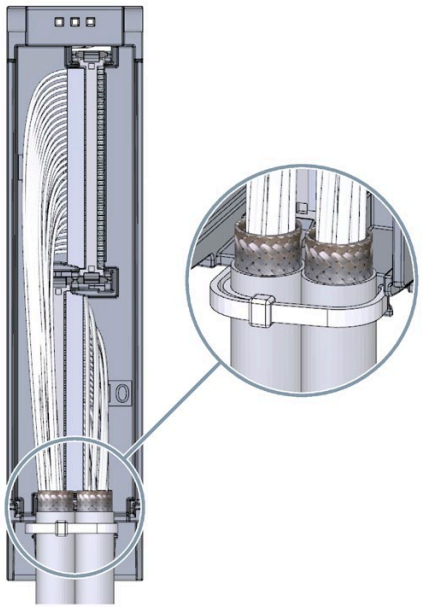

Figure 3-4 Fastening the cable tie for the strain relief

5. Plug the SIMATIC TOP connect connecting cables with the **50-pin** IDC connector into the SIMATIC TOP connect connection module.

Additional information

You can find out how to wire the SIMATIC TOP connect connection module in the equipment manual SIMATIC TOP connect for S7-1500 and ET 200MP (https://support.industry.siemens.com/cs/ww/en/view/95924607).

3.5 Fuse

Miniature circuit breaker

The supply lines of groups are to be protected with a 4 A miniature circuit breaker with tripping characteristic C or B.

Below, you see the connection for "Sourcing" mode and for "Sinking" mode.

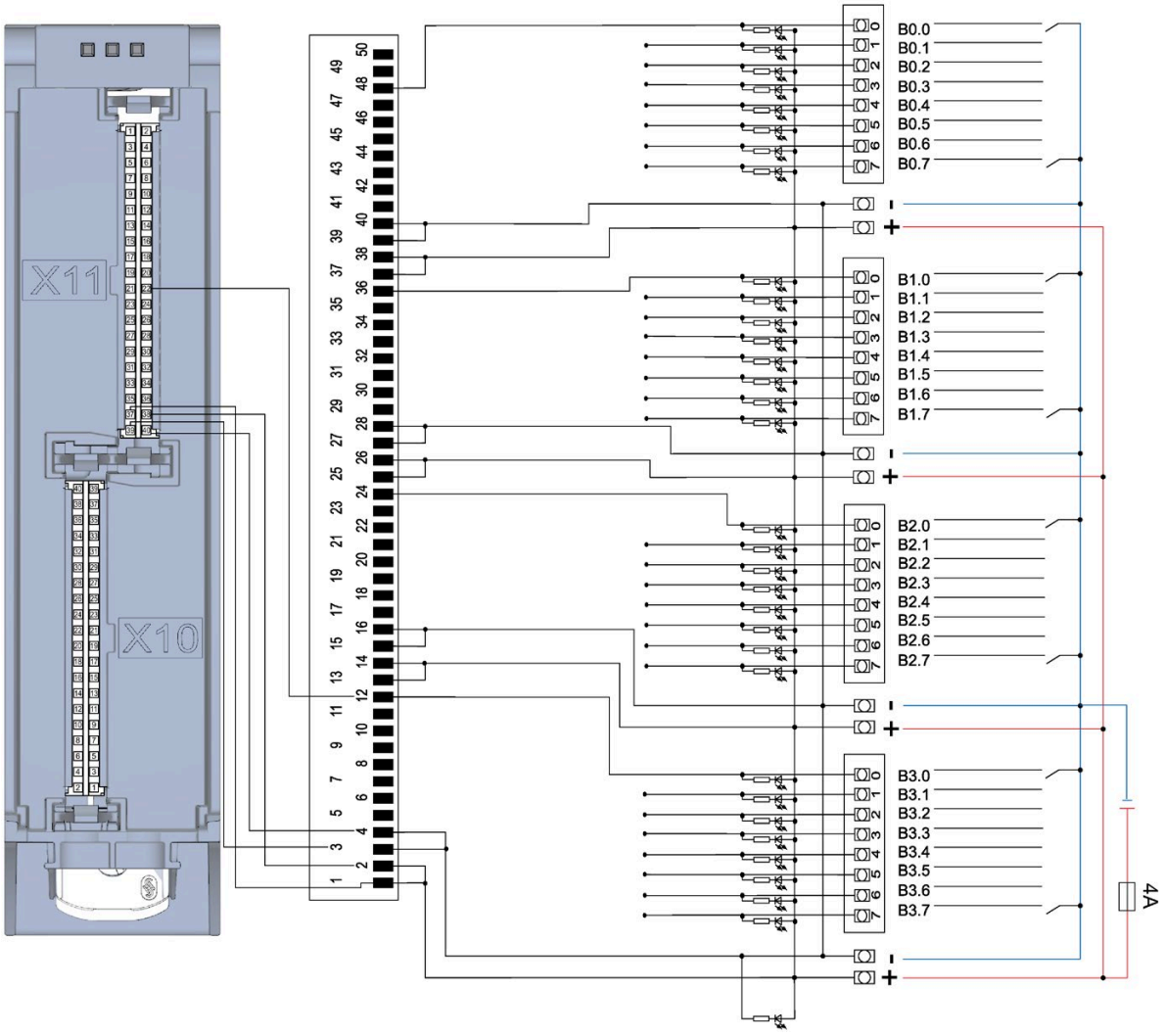

Figure 3-5 "Sourcing" mode

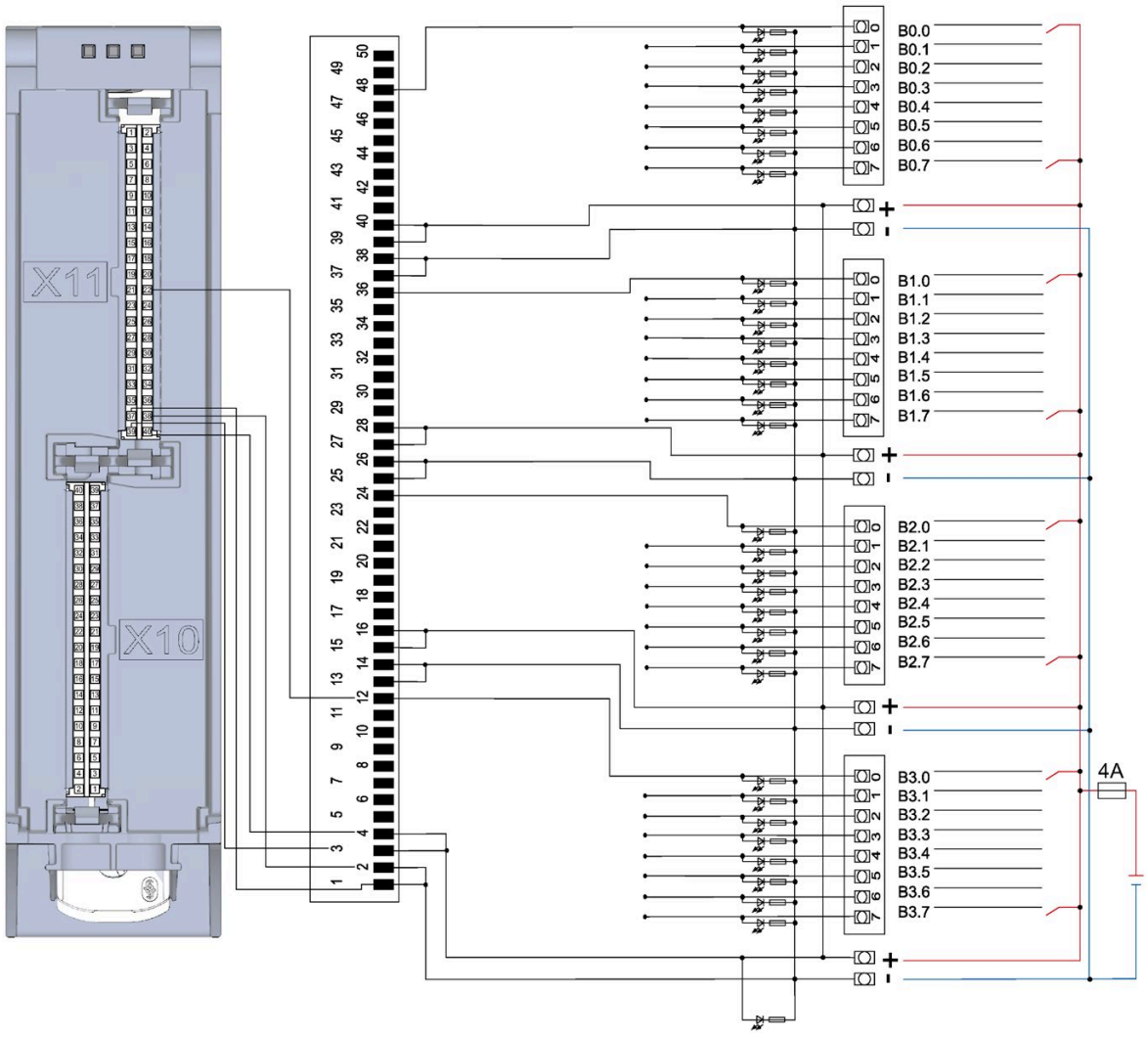

Figure 3-6 "Sinking" mode

Address space

4

The module can be configured in various ways in STEP 7. Depending on the configuration, additional/different addresses are assigned in the process image output/input.

Configuration options of DI 64x24VDC SNK/SRC BA

You can configure the module with STEP 7 (TIA Portal) or with a GSD file.

When you configure the module by means of the GSD file, the configurations are available under different short designations/module names.

The following configurations are possible:

Table 4- 1 Configuration options

Configuration	**Short designation/module name in the GSD file**	**Configuration software, e.g., with STEP 7 (TIA Portal)**	
		Integrated in the hardware catalog of STEP 7 (TIA Portal) as of V16 and HSP 0319	**GSD file in STEP 7 (TIA Portal) V12 or higher or STEP 7 V5.5 SP3 or higher**
1 x 64-channel without value status	DI 64x24VDC SNK/SRC BA	X	X
8 x 8-channel without value status	DI 64x24VDC SNK/SRC BA S	X (PROFINET IO only)	X (PROFINET IO only)
1 x 64-channel with value status for module-internal Shared Input (MSI) with up to 4 sub-modules	DI 64x24VDC SNK/SRC BA MSI	X (PROFINET IO only)	X (PROFINET IO only)

Address space for configuration as 1 x 64-channel DI 64x24VDC SNK/SRC BA

The figure below shows the address space assignment for configuration as a 1 x 64-channel module. You can freely assign the start address for the module. The addresses of the channels are derived from the start address.

"IB a" for example, stands for module start address input byte a.

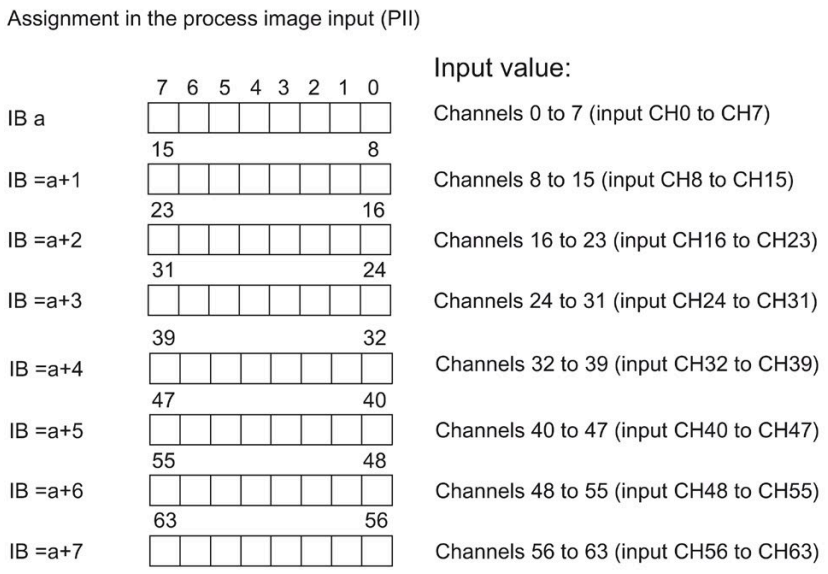

Figure 4-1 Address space for configuration as 1 x 64-channel DI 64x24VDC SNK/SRC BA

Address space for configuration as 8 x 8-channel DI 64x24VDC SNK/SRC BA S

For the configuration as an 8 x 8-channel module, the channels of the module are divided into multiple submodules. The submodules can be assigned to different IO controllers when the module is used in a shared device.

The number of usable IO controllers depends on the interface module used. Please observe the information in the manual for the particular interface module.

Unlike the 1 x 64-channel module configuration, each of the eight submodules has a freely assignable start address.

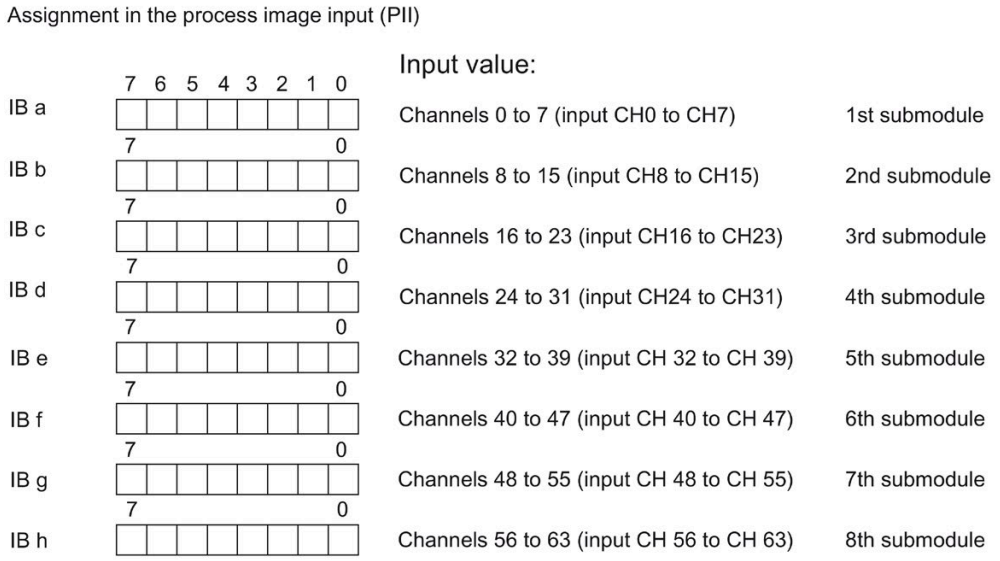

Figure 4-2 Address space for configuration as 8 x 8-channel DI 64x24VDC SNK/SRC BA S

Address space for configuration as 1 x 64-channel DI 64x24VDC SNK/SRC BA MSI

The channels 0 to 63 of the module are copied in up to 4 submodules for the configuration as 1 x 64-channel module (module-internal shared input, MSI). Channels 0 to 63 are then available with identical input values in various submodules. These submodules can be assigned to up to four IO controllers when the module is used in a shared device. Each IO controller has read access to the same channels.

The number of usable IO controllers depends on the interface module used. Please observe the information in the manual for the particular interface module.

Value status (Quality Information, QI)

The meaning of the value status depends on the submodule involved.

For the 1st submodule (=basic submodule), the value status is not relevant.

For the 2nd to 4th submodule (=MSI submodule), the value status 0 indicates that the value is incorrect or the basic submodule has not yet been configured (not ready).

The figure below shows the assignment of the address space with submodules 1 and 2.

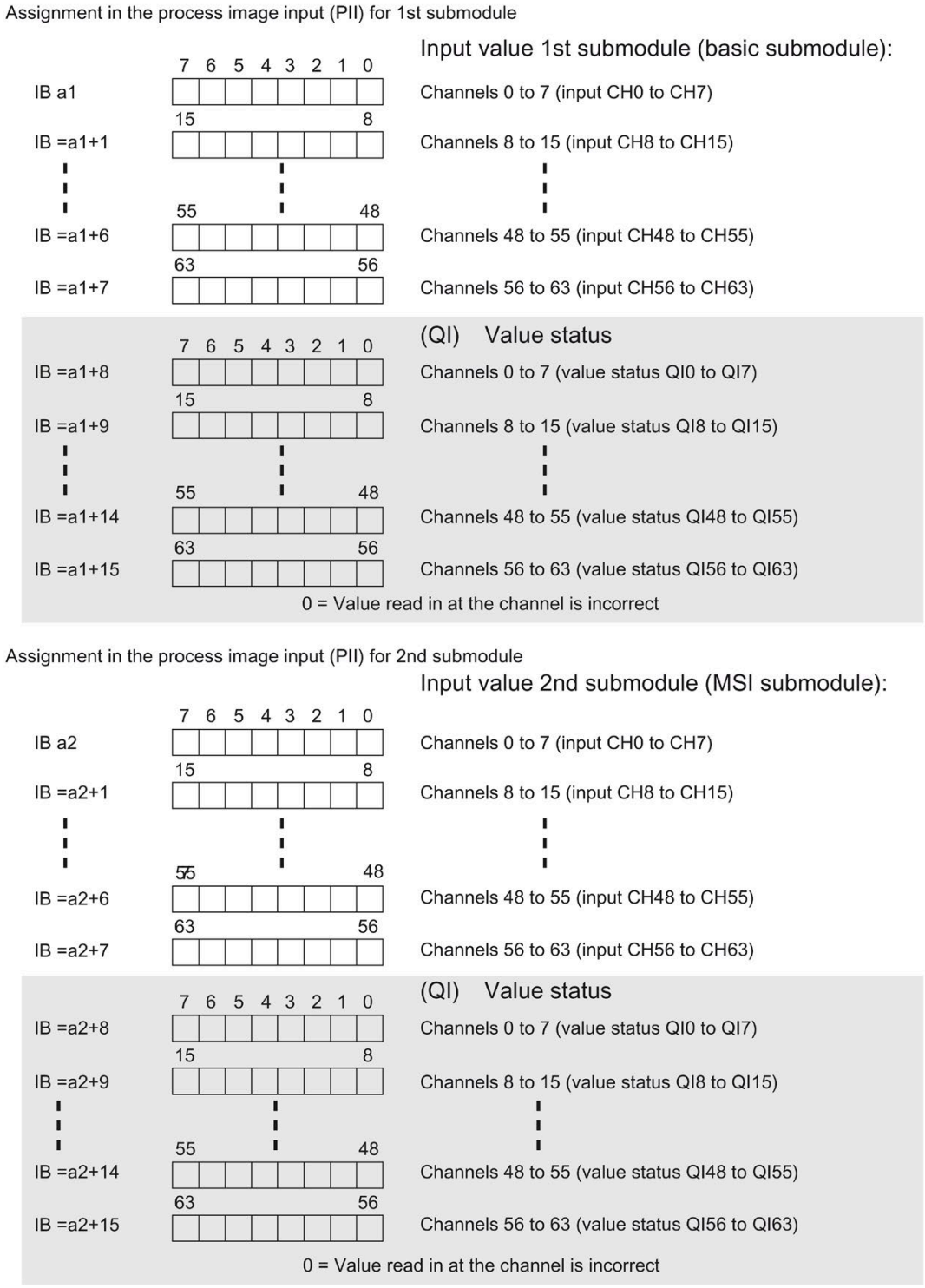

Figure 4-3 Address space for configuration as 1 x 64-channel DI 64x24VDC SNK/SRC BA MSI with value status

The figure below shows the assignment of the address space with submodules 3 and 4.

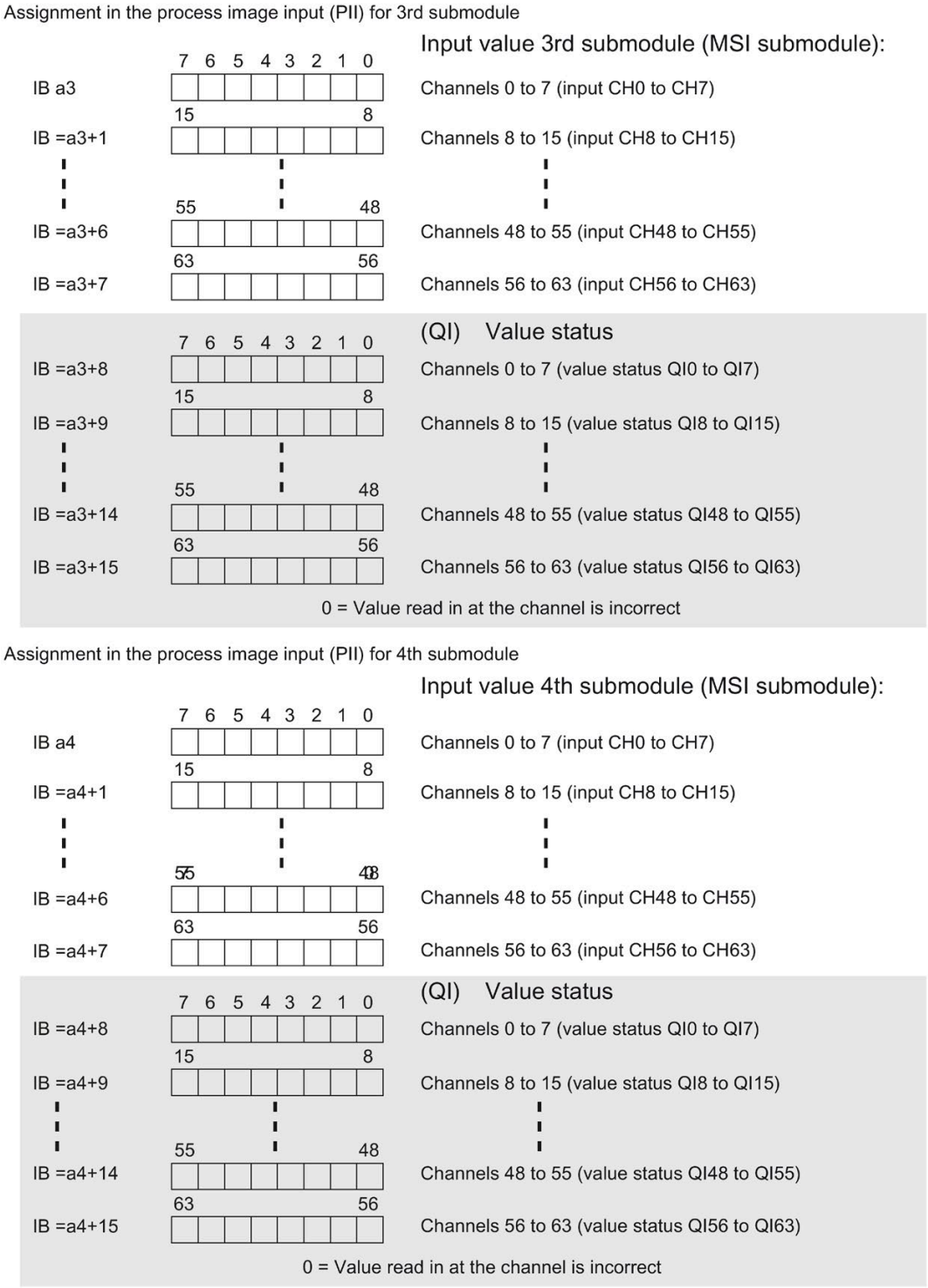

Figure 4-4 Address space for configuration as 1 x 64-channel DI 64x24VDC SNK/SRC BA MSI with value status

Reference

You can find information on the Shared Input/Output (MSI/MSO) function in the section Module-Internal Shared Input/Output (MSI/MSO) of the PROFINET with STEP 7 V16 (https://support.industry.siemens.com/cs/ww/en/view/49948856) function manual.

Diagnostic alarms

5

5.1 Status and error displays

LED displays

The figure below shows the LED displays (status and error displays) of the DI 64x24VDC SNK/SRC BA.

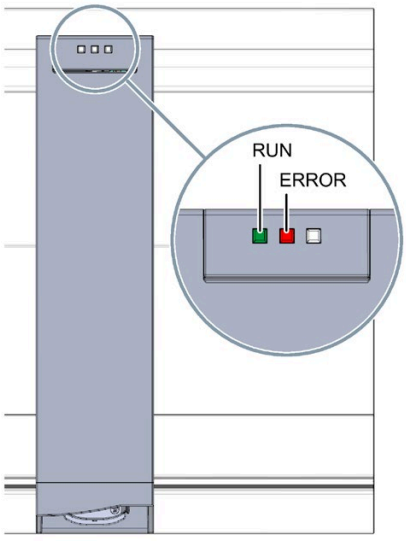

Figure 5-1 LED display of the module DI 64x24VDC SNK/SRC BA

Meaning of the LED displays

The following table explains the meaning of the status and error displays.

RUN and ERROR LED

Table 5- 1 Status and error displays RUN and ERROR

LED		Meaning	Remedy
RUN	ERROR		
Off	Off	Voltage missing or too low at backplane bus	• Switch on the CPU and/or the system power supply modules. • Verify that the U connectors are inserted. • Check whether too many modules are inserted.
Flashes	Off	Module starts up	---
On	Off	Module is ready	
Flashes	Flashes	Hardware defective	Replace the module.

Technical specifications 6

Technical specifications of DI 64x24VDC SNK/SRC BA

The following table shows the technical specifications as of 07/2020. You can find a data sheet including daily updated technical specifications on the Internet (https://support.industry.siemens.com/cs/ww/en/ps/td).

Enter the article number or the short designation of the module on the website.

Article number	6ES7521-1BP00-0AA0
General information	
Product type designation	DI 64x24VDC BA
HW functional status	From FS01
Firmware version	V1.0.0
• FW update possible	Yes
Product function	
• I&M data	Yes; I&M0 to I&M3
• Isochronous mode	No
• Prioritized startup	No
Engineering with	
• STEP 7 TIA Portal configurable/integrated from version	V16 with HSP 0319 / V17
• STEP 7 configurable/integrated from version	V5.5 SP3 / -
• PROFIBUS from GSD version/GSD revision	V1.0 / V5.1
Operating mode	
• DI	Yes
• Counter	No
• Oversampling	No
• MSI	Yes
Power	
Power available from the backplane bus	0.6 W
Power loss	
Power loss, typ.	4.8 W
Digital inputs	
Number of digital inputs	64
Digital inputs, parameterizable	No
Source/sink input	Yes
Input characteristic curve in accordance with IEC 61131, type 3	Yes

Article number	6ES7521-1BP00-0AA0
Number of simultaneously controllable inputs	
• Number of simultaneously controllable inputs	64; see additional description in the manual
Input voltage	
• Rated value (DC)	24 V
– 24 V DC	Yes
• for signal "0"	-30 to +5 V
• for signal "1"	+11 to +30V
Input current	
• for signal "1", typ.	2.7 mA
Input delay (for rated value of input voltage) for standard inputs	
– parameterizable	No
– at "0" to "1", min.	3 ms
– at "0" to "1", max.	4 ms
– at "1" to "0", min.	3 ms
– at "1" to "0", max.	4 ms
for interrupt inputs	
– parameterizable	No
for technological functions	
– parameterizable	No
Cable length	
• shielded, max.	1 000 m
• unshielded, max.	600 m
Encoder	
Connectable encoders	
• 2-wire sensor	Yes
– permissible quiescent current (2-wire sensor), max.	1.5 mA
Interrupts/diagnostics/status information	
Diagnostics function	No
Alarms	
• Diagnostic alarm	No
• Hardware interrupt	No
Diagnostic messages	
• Monitoring the supply voltage	No
• Wire-break	No
• Short-circuit	No
• Group error	No

Article number	6ES7521-1BP00-0AA0
Diagnostics indication LED	
• RUN LED	Yes; green LED
• ERROR LED	Yes; red LED
• MAINT LED	No
• Monitoring of the supply voltage (PWR-LED)	Yes; via SIMATIC TOP connect connection module
• Channel status display	Yes; via SIMATIC TOP connect connection module
• for channel diagnostics	No
• for module diagnostics	No
Potential separation	
Potential separation channels	
• between the channels	No
• between the channels, in groups of	16; 32 when using SIMATIC TOP connect connection module
• between the channels and backplane bus	Yes
Isolation	
Isolation tested with	707 V DC (type test)
Standards, approvals, certificates	
Suitable for safety functions	No
Ambient conditions	
Ambient temperature during operation	
• horizontal installation, min.	-30 °C
• horizontal installation, max.	60 °C
• vertical installation, min.	-30 °C
• vertical installation, max.	40 °C
Altitude during operation relating to sea level	
• Installation altitude above sea level, max.	5 000 m
Dimensions	
Width	35 mm
Height	147 mm
Depth	129 mm
Weights	
Weight, approx.	250 g
Other	
Note:	Please order cable and connection modules separately

Power reduction (derating) depending on the mounting position and ambient temperature (per module)

The following graphs show the number of channels that can be used simultaneously depending on the mounting position of the S7-1500/ET 200MP automation system and the ambient temperature.

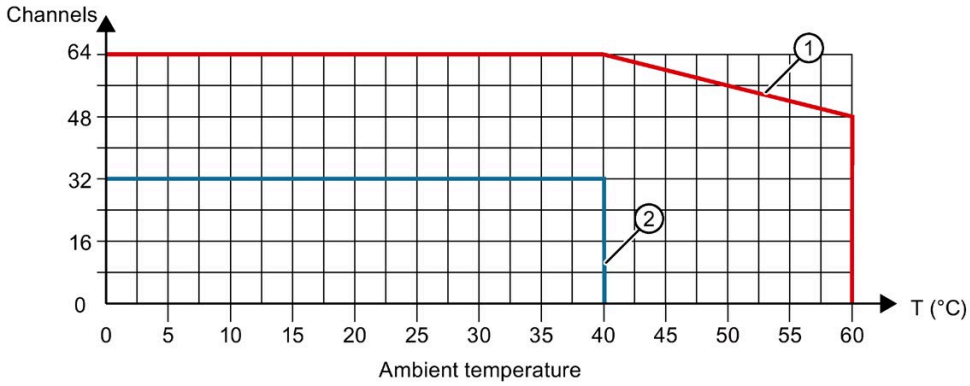

① Horizontal mounting of the system

② Vertical mounting of the system

Figure 6-1 Information on channels used simultaneously (per module)

Dimensional drawing

A

The dimensional drawing of the module on the mounting rail, as well as a dimensional drawing with open front cover, are provided in the appendix. Always observe the specified dimensions for installation in cabinets, control rooms, etc.

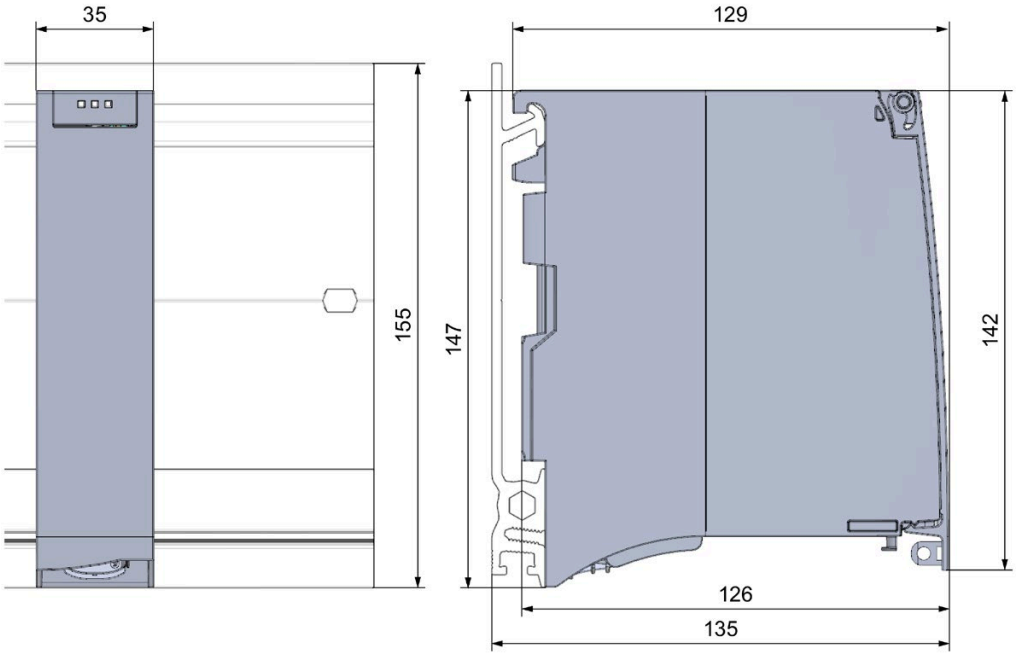

Figure A-1 Dimensional drawing of the DI 64x24VDC SNK/SRC BA module

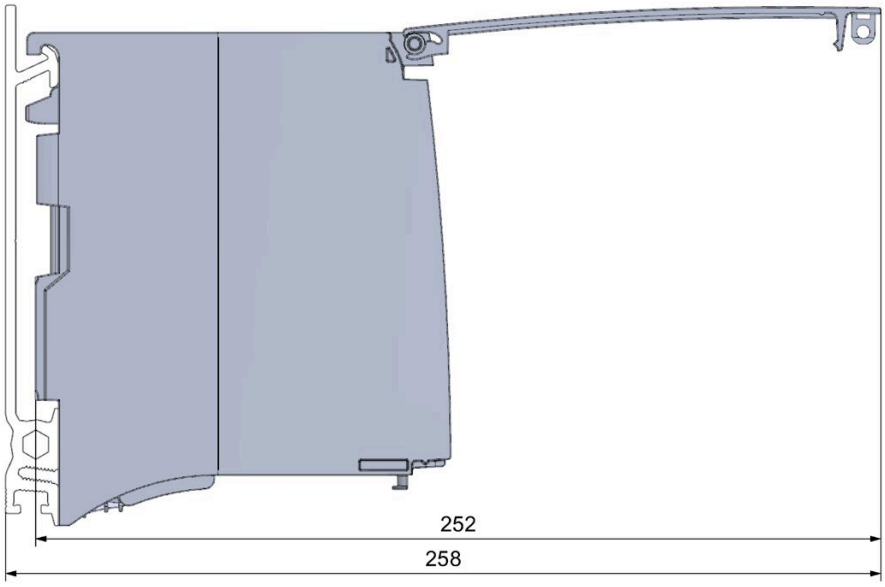

Figure A-2 Dimension drawing of the DI 64x24VDC SNK/SRC BA module, side view with open front cover

SIEMENS

SIMATIC

S7-1500 / ET 200MP

Digital input module DI 16x24...125VUC HF (6ES7521-7EH00-0AB0)

Manual

Edition 12/2016

siemens.com

SIEMENS

SIMATIC

S7-1500/ET 200MP Digital input module DI 16x24...125VUC HF (6ES7521-7EH00-0AB0)

Manual

Preface

Documentation guide 1

Product overview 2

Wiring 3

Parameters/address space 4

Interrupts/diagnostic alarms 5

Technical specifications 6

Dimensional drawing A

Parameter data records B

12/2016

A5E35681478-AC

Legal information

Warning notice system

This manual contains notices you have to observe in order to ensure your personal safety, as well as to prevent damage to property. The notices referring to your personal safety are highlighted in the manual by a safety alert symbol, notices referring only to property damage have no safety alert symbol. These notices shown below are graded according to the degree of danger.

⚠ DANGER

indicates that death or severe personal injury **will** result if proper precautions are not taken.

⚠ WARNING

indicates that death or severe personal injury **may** result if proper precautions are not taken.

⚠ CAUTION

indicates that minor personal injury can result if proper precautions are not taken.

NOTICE

indicates that property damage can result if proper precautions are not taken.

If more than one degree of danger is present, the warning notice representing the highest degree of danger will be used. A notice warning of injury to persons with a safety alert symbol may also include a warning relating to property damage.

Qualified Personnel

The product/system described in this documentation may be operated only by **personnel qualified** for the specific task in accordance with the relevant documentation, in particular its warning notices and safety instructions. Qualified personnel are those who, based on their training and experience, are capable of identifying risks and avoiding potential hazards when working with these products/systems.

Proper use of Siemens products

Note the following:

⚠ WARNING

Siemens products may only be used for the applications described in the catalog and in the relevant technical documentation. If products and components from other manufacturers are used, these must be recommended or approved by Siemens. Proper transport, storage, installation, assembly, commissioning, operation and maintenance are required to ensure that the products operate safely and without any problems. The permissible ambient conditions must be complied with. The information in the relevant documentation must be observed.

Trademarks

All names identified by ® are registered trademarks of Siemens AG. The remaining trademarks in this publication may be trademarks whose use by third parties for their own purposes could violate the rights of the owner.

Disclaimer of Liability

We have reviewed the contents of this publication to ensure consistency with the hardware and software described. Since variance cannot be precluded entirely, we cannot guarantee full consistency. However, the information in this publication is reviewed regularly and any necessary corrections are included in subsequent editions.

Siemens AG
Division Digital Factory
Postfach 48 48
90026 NÜRNBERG
GERMANY

A5E35681478-AC
℗ 12/2016 Subject to change

Copyright © Siemens AG 2015 - 2016.
All rights reserved

Preface

Purpose of the documentation

This manual supplements the S7-1500/ET 200MP (https://support.industry.siemens.com/cs/ww/en/view/59191792) system manual.

Functions that relate in general to the systems are described in these system manuals.

The information provided in this manual and in the system/function manuals supports you in commissioning the systems.

Changes compared to previous version

Compared to the previous version, this manual contains the following change:

Technical specifications have been updated: Module is M/P reading.

Conventions

The term "CPU" is used in this manual both for the CPUs of the S7-1500 automation system and for interface modules of the ET 200MP distributed I/O system.

Please also observe notes marked as follows:

Note

A note contains important information on the product described in the documentation, on the handling of the product or on the section of the documentation to which particular attention should be paid.

Security information

Siemens provides products and solutions with industrial security functions that support the secure operation of plants, systems, machines and networks.

In order to protect plants, systems, machines and networks against cyber threats, it is necessary to implement – and continuously maintain – a holistic, state-of-the-art industrial security concept. Siemens' products and solutions only form one element of such a concept.

Customer is responsible to prevent unauthorized access to its plants, systems, machines and networks. Systems, machines and components should only be connected to the enterprise network or the internet if and to the extent necessary and with appropriate security measures (e.g. use of firewalls and network segmentation) in place.

Additionally, Siemens' guidance on appropriate security measures should be taken into account. For more information about industrial security, please visit (http://www.siemens.com/industrialsecurity).

Siemens' products and solutions undergo continuous development to make them more secure. Siemens strongly recommends to apply product updates as soon as available and to always use the latest product versions. Use of product versions that are no longer supported, and failure to apply latest updates may increase customer's exposure to cyber threats.

To stay informed about product updates, subscribe to the Siemens Industrial Security RSS Feed under (http://www.siemens.com/industrialsecurity).

Open Source Software

Open-source software is used in the firmware of the I/O modules. Open Source Software is provided free of charge. We are liable for the product described, including the open-source software contained in it, pursuant to the conditions applicable to the product. Siemens accepts no liability for the use of the open source software over and above the intended program sequence, or for any faults caused by modifications to the software.

For legal reasons, we are obliged to publish the original text of the license conditions and copyright notices. Please read the information relating to this on the Internet (https://support.industry.siemens.com/cs/ww/en/view/109741045).

Table of contents

Preface 4
1 Documentation guide 7
2 Product overview 11
2.1 Properties 11
3 Wiring 13
3.1 Wiring and block diagram 13
4 Parameters/address space 15
4.1 Parameters 15
4.2 Declaration of parameters 16
4.3 Address space 17
5 Interrupts/diagnostic alarms 21
5.1 Status and error displays 21
5.2 Interrupts 23
5.3 Diagnostics alarms 25
6 Technical specifications 26
A Dimensional drawing 30
A.1 Dimensional drawing 30
B Parameter data records 32
B.1 Parameter assignment and structure of the parameter data records 32
B.2 Structure of the parameter data records 33

Documentation guide

1

The documentation for the SIMATIC S7-1500 automation system, the CPU 1516pro-2 PN based on SIMATIC S7-1500 and the SIMATIC ET 200MP distributed I/O system is arranged into three areas.
This arrangement enables you to access the specific content you require.

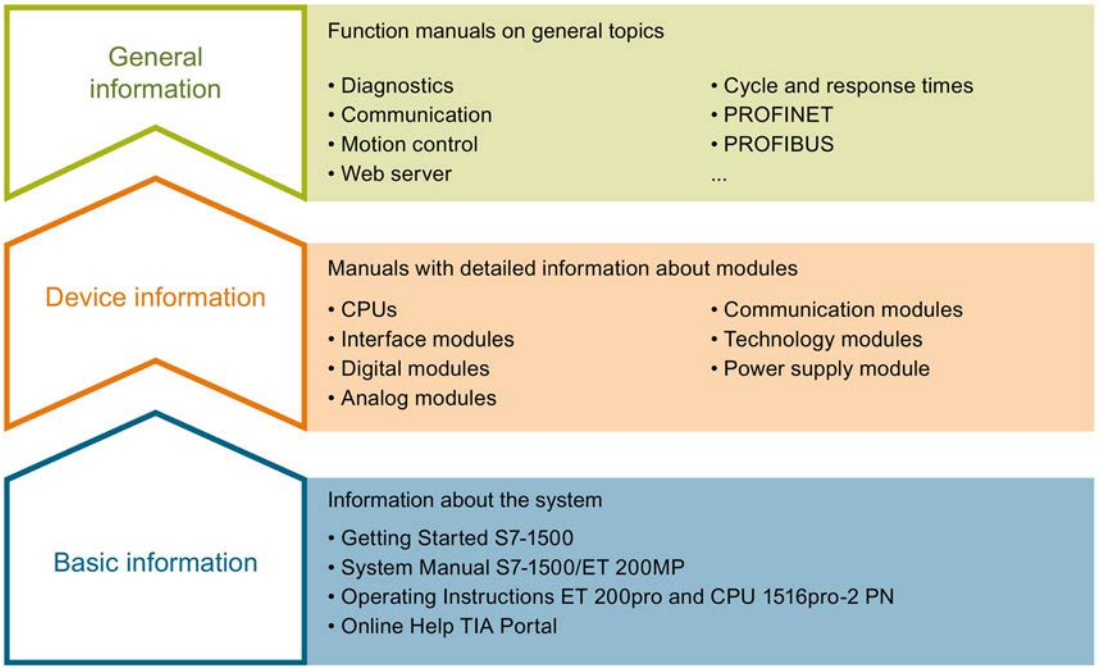

Basic information

The System Manual and Getting Started describe in detail the configuration, installation, wiring and commissioning of the SIMATIC S7-1500 and ET 200MP systems. For CPU 1516pro-2 PN you use the corresponding operating instructions. The STEP 7 online help supports you in the configuration and programming.

Device information

Product manuals contain a compact description of the module-specific information, such as properties, wiring diagrams, characteristics and technical specifications.

General information

The function manuals contain detailed descriptions on general topics regarding the SIMATIC S7-1500 and ET 200MP systems, e.g. diagnostics, communication, motion control, Web server, OPC UA.

You can download the documentation free of charge from the Internet (http://w3.siemens.com/mcms/industrial-automation-systems-simatic/en/manual-overview/Pages/Default.aspx).

Changes and supplements to the manuals are documented in a Product Information.

You can download the product information free of charge from the Internet (https://support.industry.siemens.com/cs/us/en/view/68052815).

Manual Collection S7-1500/ET 200MP

The Manual Collection contains the complete documentation on the SIMATIC S7-1500 automation system and the ET 200MP distributed I/O system gathered together in one file.

You can find the Manual Collection on the Internet (https://support.industry.siemens.com/cs/ww/en/view/86140384).

SIMATIC S7-1500 comparison list for programming languages

The comparison list contains an overview of which instructions and functions you can use for which controller families.

You can find the comparison list on the Internet (https://support.industry.siemens.com/cs/ww/en/view/86630375).

"mySupport"

With "mySupport", your personal workspace, you make the best out of your Industry Online Support.

In "mySupport", you can save filters, favorites and tags, request CAx data and compile your personal library in the Documentation area. In addition, your data is already filled out in support requests and you can get an overview of your current requests at any time.

You must register once to use the full functionality of "mySupport".

You can find "mySupport" on the Internet (https://support.industry.siemens.com/My/ww/en).

"mySupport" - Documentation

In the Documentation area in "mySupport" you can combine entire manuals or only parts of these to your own manual.
You can export the manual as PDF file or in a format that can be edited later.

You can find "mySupport" - Documentation on the Internet (http://support.industry.siemens.com/My/ww/en/documentation).

"mySupport" - CAx data

In the CAx data area in "mySupport", you can access the current product data for your CAx or CAe system.

You configure your own download package with a few clicks.

In doing so you can select:

- Product images, 2D dimension drawings, 3D models, internal circuit diagrams, EPLAN macro files
- Manuals, characteristics, operating manuals, certificates
- Product master data

You can find "mySupport" - CAx data on the Internet (http://support.industry.siemens.com/my/ww/en/CAxOnline).

Application examples

The application examples support you with various tools and examples for solving your automation tasks. Solutions are shown in interplay with multiple components in the system - separated from the focus on individual products.

You will find the application examples on the Internet (https://support.industry.siemens.com/sc/ww/en/sc/2054).

TIA Selection Tool

With the TIA Selection Tool, you can select, configure and order devices for Totally Integrated Automation (TIA).
This tool is the successor of the SIMATIC Selection Tool and combines the known configurators for automation technology into one tool.
With the TIA Selection Tool, you can generate a complete order list from your product selection or product configuration.

You can find the TIA Selection Tool on the Internet (http://w3.siemens.com/mcms/topics/en/simatic/tia-selection-tool).

SIMATIC Automation Tool

You can use the SIMATIC Automation Tool to run commissioning and maintenance activities simultaneously on various SIMATIC S7 stations as a bulk operation independently of the TIA Portal.

The SIMATIC Automation Tool provides a multitude of functions:

- Scanning of a PROFINET/Ethernet network and identification of all connected CPUs
- Address assignment (IP, subnet, gateway) and station name (PROFINET device) to a CPU
- Transfer of the date and the programming device/PC time converted to UTC time to the module
- Program download to CPU
- Operating mode switchover RUN/STOP
- Localization of the CPU by means of LED flashing
- Reading out CPU error information
- Reading the CPU diagnostic buffer
- Reset to factory settings
- Updating the firmware of the CPU and connected modules

You can find the SIMATIC Automation Tool on the Internet (https://support.industry.siemens.com/cs/ww/en/view/98161300).

PRONETA

With SIEMENS PRONETA (PROFINET network analysis), you analyze the PROFINET network during commissioning. PRONETA features two core functions:

- The topology overview independently scans PROFINET and all connected components.
- The IO check is a fast test of the wiring and the module configuration of a system.

You can find SIEMENS PRONETA on the Internet (https://support.industry.siemens.com/cs/ww/en/view/67460624).

Product overview

2

2.1 Properties

Part number:

6ES7521-7EH00-0AB0

View of the module

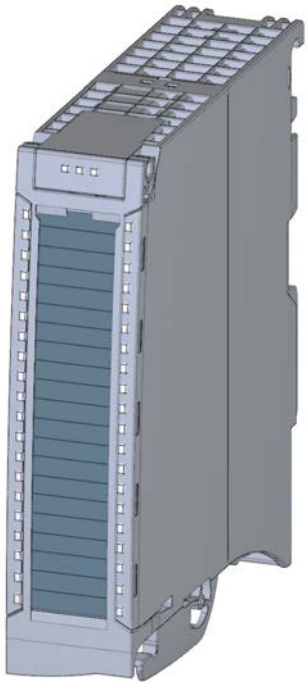

Figure 2-1 View of the module DI 16x24...125VUC HF

Properties

The module has the following technical properties:

- 16 digital inputs; electrically isolated in groups of 1
- Rated input voltage 24 V UC to 125 V UC
- Configurable diagnostics (per channel)
- Configurable hardware interrupt (per channel)
- Programmable input delay (only with DC)
- Suitable for switches and 2-/3-/4-wire proximity switches

The module supports the following functions:

Table 2- 1 Version dependencies of the module functions

Function	Firmware version of the module	Configuration software	
		STEP 7 (TIA Portal) as of V13 SP1 with HSP 0142	GSD file in STEP 7 (TIA Portal) as of V12 or STEP 7 as of V5.5 SP3
Firmware update	V1.0.0 or higher	X	--- / X
Identification data I&M0 to I&M3	V1.0.0 or higher	X	X
Parameter assignment in RUN	V1.0.0 or higher	X	X
Module internal shared input (MSI)	V1.0.0 or higher	X (PROFINET IO only)	X (PROFINET IO only)
Configurable submodules / submodules for Shared Device	V1.0.0 or higher	X (PROFINET IO only)	X (PROFINET IO only)

You can configure the module with STEP 7 (TIA Portal) and with a GSD file.

Accessories

The following accessories are supplied with the module and can also be ordered separately as spare parts:

- Labeling strips
- U connector
- Universal front cover

Other components

The following component must be ordered separately:

Front connectors, including potential jumpers and cable ties

You can find additional information on accessories in the system manual S7-1500/ET 200MP (http://support.automation.siemens.com/WW/view/en/59191792).

Wiring 3

3.1 Wiring and block diagram

This section contains the block diagram of the module and outlines various wiring options.

You can find information on wiring the front connector, establishing a cable shield, etc. in the system manual S7-1500/ET 200MP (http://support.automation.siemens.com/WW/view/en/59191792).

Note

Do not insert the potential jumpers included with the front connector!

Wiring and block diagram

The figure below shows you how to wire the module and the assignment of the channels to the addresses (input byte a to input byte b).

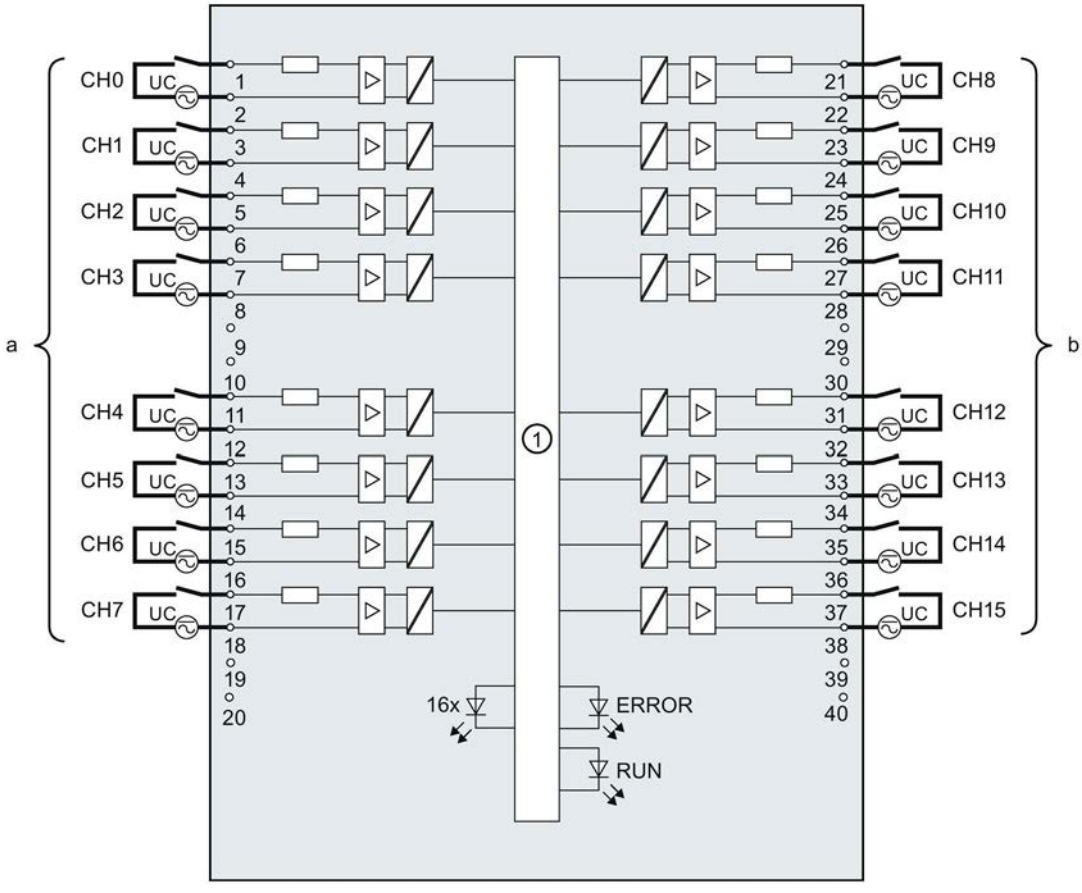

① Backplane bus interface	CHx	Channel or channel status LED (green/red)
	RUN	Status display LED (green)
	ERROR	Error display LED (red)

Figure 3-1 Block diagram and terminal assignment

Resistor circuitry of the encoders

To detect a wire break, it is necessary that enough quiescent current is flowing even when the encoder contacts are open. Connect a resistor to the encoder contacts for this reason, see figure below.

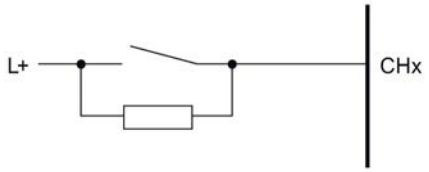

Rated input voltage:	Resistance:
24 VUC	16 kΩ ... 21 kΩ with 1.0 W
48 VUC	37 kΩ ... 53 kΩ with 0.5 W
125 VUC	101 kΩ ... 156 kΩ with 0.25 W

Figure 3-2 Resistor circuitry of the encoders

Parameters/address space 4

4.1 Parameters

DI 16x24...125VUC HF parameters

When you assign the module parameters in STEP 7, you use various parameters to specify the module properties. The following table lists the configurable parameters. The effective range of the configurable parameters depends on the type of configuration. The following configurations are possible:

- Central operation with a S7-1500 CPU
- Distributed operation on PROFINET IO in an ET 200MP system
- Distributed operation on PROFIBUS DP in an ET 200MP system

For parameter assignment in the user program, the parameters are transferred to the module using the WRREC instruction (parameter assignment in RUN) and data records; see chapter Parameter assignment and structure of the parameter data records (Page 32).

Table 4- 1 Configurable parameters and their defaults

Parameter	Range of values	Default setting	Parameter reassignment in RUN	Range of effectiveness with configuration software, e.g. STEP 7	
				Integrated in the hardware catalog as of STEP 7, V13 SP1 or GSD file PROFINET IO	GSD file PROFIBUS DP
Diagnostics					
• Wire break	Yes/No	No	Yes	Channel	Channel group (CH0 to CH7, CH8 to CH15)
Input delay	0.05 ms, 0.1 ms, 0.4 ms, 1.6 ms, 3.2 ms, 12.8 ms, 20 ms	• 20 ms • Fixed 20 ms for AC	Yes	Channel	Channel group (CH0 to CH7, CH8 to CH15)
Hardware interrupt					
• Rising edge	Yes/No	No	Yes	Channel	Channel
• Falling edge	Yes/No	No	Yes	Channel	Channel
• Rising and falling edge	Yes/No	No	Yes	Channel	Channel

Note

Input delay for AS input voltages

If you are operating channels of the module with an AC input voltage, you must set the input delay for these channels at 20 ms.

If you set a different input delay, the input signal might be incorrectly altered and the wrong value read.

4.2 Declaration of parameters

Wire break

Enabling diagnostics if the line to the encoder is interrupted.

Input delay

This parameter can be used to suppress signal disruptions. Changes to the signal are only detected if they are constantly pending longer than the set input delay time.

Hardware interrupt

Specifies whether or not a hardware interrupt is disabled or with which of the following events a hardware interrupt is generated.

- Rising edge
- Falling edge
- Rising and falling edge

4.3 Address space

The module can be configured differently in STEP 7; see following table. Depending on the configuration, additional/different addresses are assigned in the process image of the inputs.

The letters "a" and "b" are printed on the module. "IB a" for example, stands for module start address input byte a.

Configuration options of DI 16x24...125VUC HF

You can configure the module with STEP 7 (TIA Portal) or with a GSD file.

When you configure the module by means of the GSD file, the configurations are available under different abbreviations/module names.

The following configurations are possible:

Table 4- 2 Configuration options

Configuration	Short designation/ module name in the GSD file	Configuration software, e.g., with STEP 7 (TIA Portal)	
		Integrated in the hardware catalog as of STEP 7 (TIA Portal) V13 SP1 with HSP 0142	GSD file in STEP 7 (TIA Portal) V12 or higher or STEP 7 V5.5 SP3 or higher
1 x 16-channel without value status	DI 16x24...125VUC HF	X	X
1 x 16-channel with value status	DI 16x24...125VUC HF QI	X	X
2 x 8-channel without value status	DI 16x24...125VUC HF S	X (PROFINET IO only)	X (PROFINET IO only)
2 x 8-channel with value status	DI 16x24...125VUC HF S QI	X (PROFINET IO only)	X (PROFINET IO only)
1 x 16-channel with value status for module-internal shared input with up to 4 submodules	DI 16x24...125VUC HF MSI	X (PROFINET IO only)	X (PROFINET IO only)

Value status (Quality Information, QI)

The value status is always activated for the following module names:

- DI 16x24...125VUC HF QI,
- DI 16x24...125VUC HF S QI
- DI 16x24...125VUC HF MSI

An additional bit is assigned to each channel for the value status. The value status bit indicates if the read in digital value is valid. (0 = value is incorrect).

Address space for configuration as 16-channel DI 16x24...125VUC HF QI

The figure below shows the assignment of the address space for the configuration as a 16-channel module with value status. You can freely assign the start address for the module. The addresses of the channels are derived from the start address.

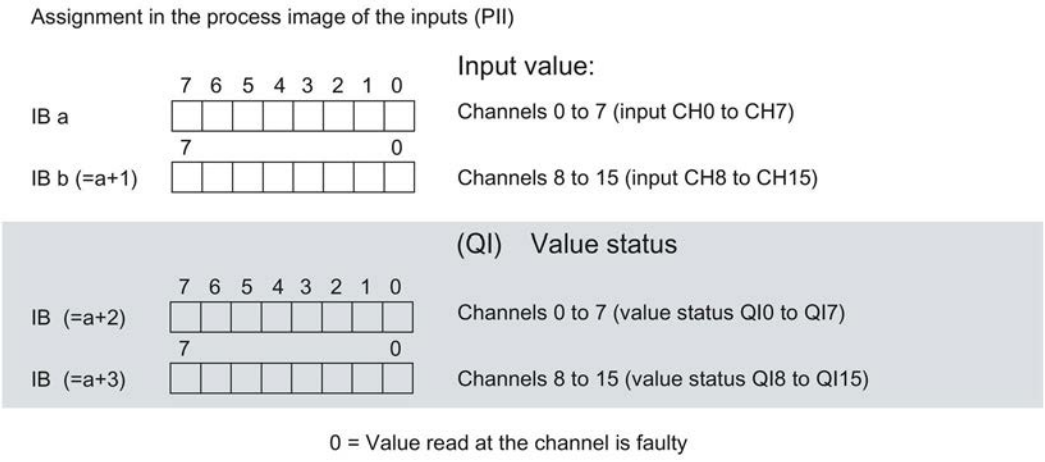

Figure 4-1 Address space for configuration as 16-channel DI 16x24...125VUC HF QI with value status

Address space for configuration as 2 x 8-channel DI 16x24...125VUC HF S QI

For the configuration as a 2 x 8-channel module, the channels of the module are divided into multiple submodules. The submodules can be assigned to different IO controllers when the module is used in a shared device.

The number of usable IO controllers depends on the interface module used. Please observe the information in the manual for the particular interface module.

Contrary to the 1 x 16-channel module configuration, each of the two submodules has a freely assignable start address.

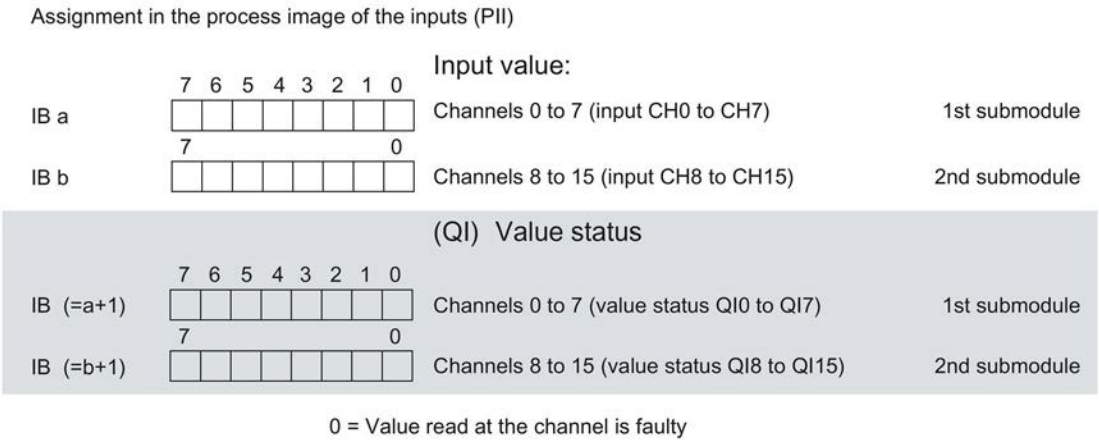

Figure 4-2 Address space for configuration as 2 x 8-channel DI 16x24...125VUC HF S QI

Address space for configuration as 1 x 16-channel DI 16x24...125VUC HF MSI

The channels 0 to 15 of the module are copied in up to four submodules with configuration 1 x 16-channel module (Module-internal shared input, MSI). Channels 0 to 15 are then available with identical input values in different submodules. These submodules can be assigned to up to four IO controllers when the module is used in a shared device. Each IO controller has read access to the same channels.

The number of IO controllers depends on the interface module being used. Please observe the information in the manual for the particular interface module.

Value status (Quality Information, QI)

The meaning of the value status depends on the submodule involved.

For the 1st submodule (= basic submodule), the value status 0 indicates that the value is incorrect.

For the 2nd to 4th submodule (=MSI submodule), the value status 0 indicates that the value is incorrect or the basic submodule has not yet been configured (not ready).

The following figure shows the assignment of the address space with submodules 1 and 2 and the value status.

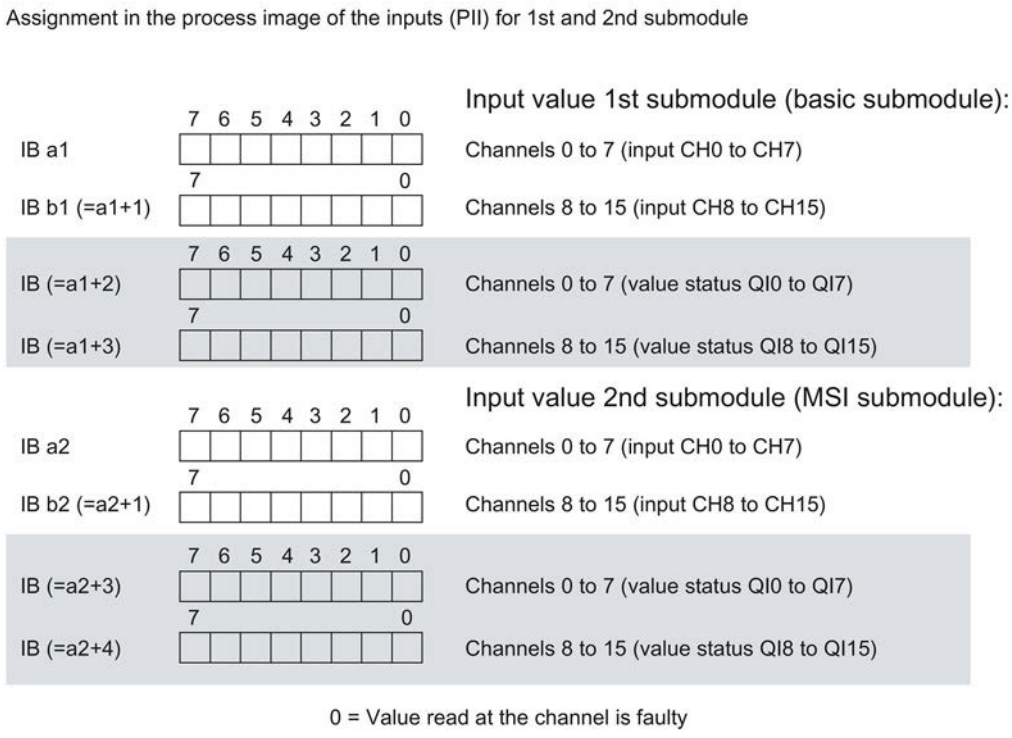

Figure 4-3 Address space for configuration as 1 x 16-channel DI 16x24...125VUC HF MSI

The following figure shows the assignment of the address space with submodules 3 and 4 and the value status.

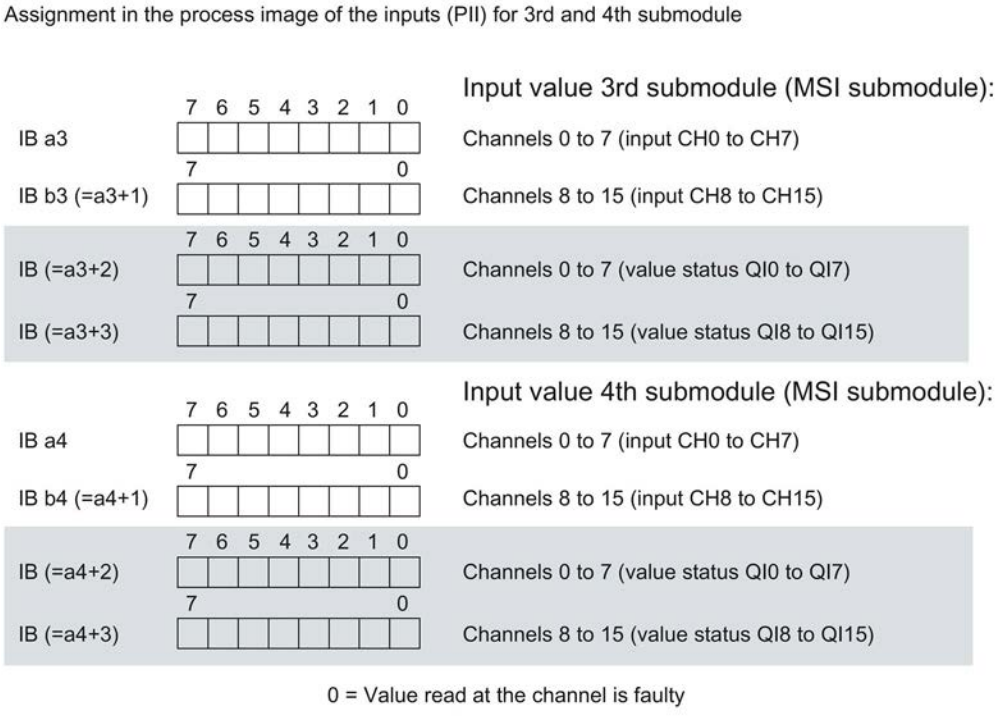

Figure 4-4 Address space for configuration as 1 x 16-channel DI 16x24...125VUC HF MSI

Reference

You can find information on the module-internal shared input/shared output (MSI/MSO) function in the section Module-internal shared input/shared output (MSI/MSO) of the function manual PROFINET with STEP 7 V13 (https://support.industry.siemens.com/cs/ww/en/view/49948856).

Interrupts/diagnostic alarms

5

5.1 Status and error displays

LED displays

The following figure shows the LED displays (status and error displays) of module.

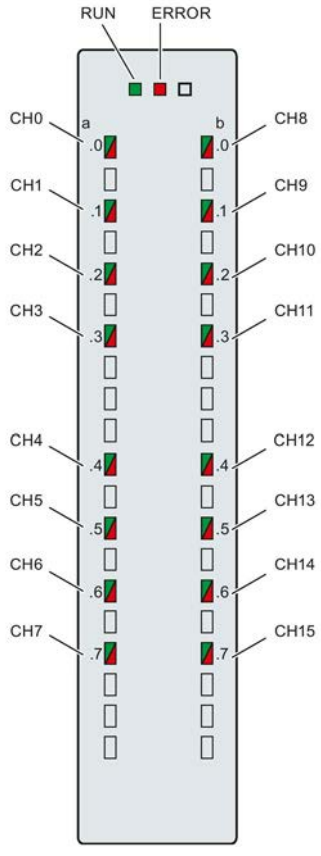

Figure 5-1 LED displays of the module DI 16x24...125VUC HF

Meaning of the LED displays

The tables below explain the meaning of the status and error displays.

LED RUN/ERROR

Table 5- 1 RUN/ERROR status and error displays

LED		Meaning	Remedy
RUN	ERROR		
Off	Off	Voltage missing or too low at backplane bus.	• Switch on the CPU and/or the system power supply modules. • Verify that the U connectors are inserted. • Check to see if too many modules are inserted.
Flashes	Off	The module starts and flashes until the valid parameter assignment is set.	---
On	Off	Module is ready.	
On	Flashes	Indicates module errors (at least one error at one channel, e.g., wire break).	Evaluate the diagnostics data and eliminate the error (e.g., wire break).
Flashes	Flashes	Hardware defective.	Replace the module.

LED CHx

Table 5- 2 CHx status display

LED CHx	Meaning	Remedy
Off	0 = Status of the input signal.	---
On	1 = Status of the input signal.	---
On	Diagnostics: Wire break or hardware interrupt lost	Check the wiring. When using simple switches, disable diagnostics or connect a resistor to the encoder contacts.

5.2 Interrupts

Digital input module DI 16x24...125VUC HF supports diagnostic and hardware interrupts.

You can find detailed information on the error event in the error organization block with the "RALRM" instruction (read additional interrupt info) and in the STEP 7 online help.

Diagnostics interrupt

The module generates a diagnostic interrupt at the following events:

- Wire break
- Parameter assignment error
- Hardware interrupt lost

Hardware interrupt

The module generates a hardware interrupt at the following events:

- Rising edge
- Falling edge
- Rising and falling edge

The module channel that triggered the hardware interrupt is entered in the start information of the organization block. The following figure shows the assignment to the bits of double word 8 in local data.

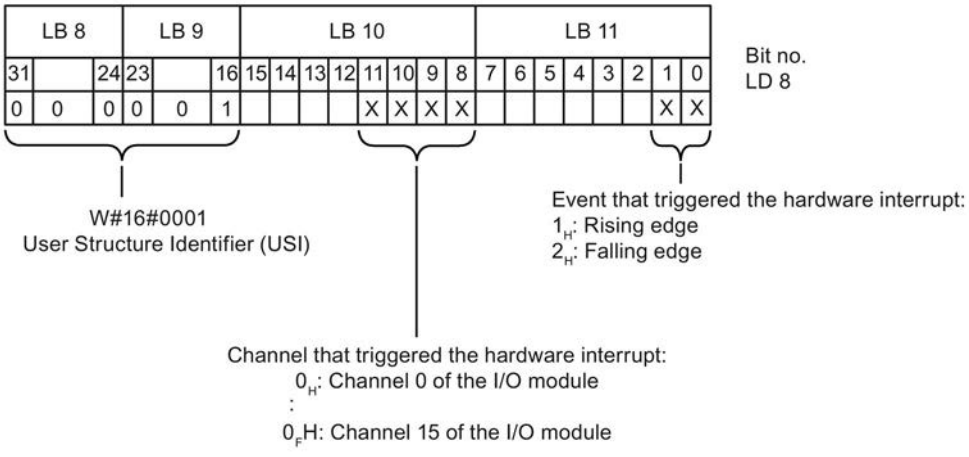

Figure 5-2 Start information of the organization block

Structure of the additional interrupt information

Table 5- 3 Structure of USI = W#16#0001

Data block name		Contents	Comment	Bytes
USI (User Structure Identifier)		W#16#0001	Additional interrupt info for hardware interrupts of the I/O module	2
The channel that triggered the hardware interrupt follows.				
	Channel	B#16#00 to B#16#0F	Number of the event-triggering channel (channel 0 to channel 15 of the module)	1
It follows the error event that triggered the hardware interrupt.				
	Event	B#16#01	Rising edge	1
		B#16#02	Falling edge	

5.3 Diagnostics alarms

Diagnostics alarms

A diagnostics alarm is generated and the ERROR LED flashes for each diagnostics event on the module. The diagnostics alarms can be read out in the diagnostics buffer of the CPU, for example. You can evaluate the error codes with the user program.

If the module is operated distributed with PROFIBUS DP in an ET 200MP system, you have the option to read out diagnostics data with the instruction RDREC or RD_REC using data record 0 and 1. The structure of the data records is available on the Internet in the "Manual for interface module IM 155-5 DP ST (6ES7155-5BA00-0AB0)".

Table 5- 4 Diagnostics alarms, their meaning and corrective measures

Diagnostics alarm	Error code	Meaning	Corrective measures
Wire break	6_H	Impedance of encoder circuit too high	Use a different encoder type or modify the wiring, for example, using cables with larger cross-section
		Wire break between the module and sensor	Connect the cable
		Channel not connected (open)	• Disable diagnostics • Connect encoder contacts with resistor: – 16 kΩ ... 21 kΩ with 1.0 W at 24 VUC – 37 kΩ ... 53 kΩ with 0.5 W at 48 VUC – 101 kΩ ... 156 kΩ with 0.25 W at 125 VUC
Parameter assignment error	10_H	• The module cannot evaluate parameters for the channel • Incorrect parameter assignment	Correct the parameter assignment
Hardware interrupt lost	16_H	The module cannot trigger an interrupt because the previous interrupt was not acknowledged; possibly a configuration error	Change interrupt processing in the CPU and edit the module parameters if necessary (the error persists until the module is assigned new parameters).

Technical specifications

6

Technical specifications of the DI 16x24...125VUC HF

Order number	6ES7521-7EH00-0AB0
General information	
Product type designation	DI 16x24 ... 125VUC HF
HW functional status	FS01
Firmware version	V1.0.0
• FW update possible	Yes
Product function	
• I&M data	Yes; I&M0 to I&M3
Engineering with	
• STEP 7 TIA Portal configurable/integrated as of version	V13 SP1 / -
• STEP 7 configurable/integrated as of version	V5.5 SP3 / -
• PROFIBUS as of GSD version/GSD revision	V1.0 / V5.1
• PROFINET as of GSD version/GSD revision	V2.3 / -
Operating mode	
• DI	Yes
• Counter	No
• Oversampling	No
• MSI	Yes
Power	
Power available from the backplane bus	1.2 W
Power loss	
Power loss, typ.	2.2 W; At 24 V DC; 6.0 W at 125 V AC
Digital inputs	
Number of digital inputs	16
Digital inputs, parameterizable	Yes
Source/sink input	Yes
Input characteristic curve in accordance with IEC 61131, type 3	Yes; at 24 V DC

Order number	6ES7521-7EH00-0AB0
Input voltage	
• Type of input voltage	AC/DC
• Rated value (DC)	24 V; 48 V, 125 V
• Rated value (AC)	24 V; 48 V, 125 V (50 - 60 Hz)
• for signal "0"	-5 ... +5 V
• for signal "1"	+11 V DC to +146 V DC
Input current	
• for signal "1", typ.	3 mA; at 24 V DC
Input delay (for rated value of input voltage)	
for standard inputs	
– parameterizable	Yes; 0.05 / 0.1 / 0.4 / 1.6 / 3.2 / 12.8 / 20 ms parameterizable with DC, 20 ms fixed with AC
– at "0" to "1", min.	0.05 ms
– at "0" to "1", max.	20 ms
– at "1" to "0", min.	0.05 ms
– at "1" to "0", max.	20 ms
for interrupt inputs	
– parameterizable	Yes
for counter/technological functions	
– parameterizable	No
Cable length	
• shielded, max.	1 000 m
• unshielded, max.	600 m
Encoder	
Connectable encoders	
• 2-wire sensor	Yes
– permissible quiescent current (2-wire sensor), max.	1.5 mA
Isochronous mode	
Isochronous operation (application synchronized up to terminal)	No
Interrupts/diagnostics/status information	
Diagnostics function	Yes
Alarms	
• Diagnostic alarm	Yes
• Hardware interrupt	Yes

Order number	6ES7521-7EH00-0AB0
Diagnostic messages	
• Monitoring the supply voltage	No
• Wire-break	Yes; To I < 550 µA
• Short-circuit	No
Diagnostics indication LED	
• RUN LED	Yes; Green LED
• ERROR LED	Yes; Red LED
• Monitoring of the supply voltage (PWR-LED)	No
• Channel status display	Yes; Green LED
• for channel diagnostics	Yes; Red LED
• for module diagnostics	Yes; Red LED
Potential separation	
Potential separation channels	
• between the channels	Yes
• between the channels, in groups of	1
• between the channels and backplane bus	Yes
Permissible potential difference	
between different circuits	146 V DC/132 V AC
Isolation	
Isolation tested with	2 000 V DC
Ambient conditions	
Ambient temperature during operation	
• horizontal installation, min.	0 °C
• horizontal installation, max.	60 °C
• vertical installation, min.	0 °C
• vertical installation, max.	40 °C
Decentralized operation	
Prioritized startup	Yes
Dimensions	
Width	35 mm
Height	147 mm
Depth	129 mm
Weights	
Weight, approx.	240 g

Power reduction (derating) in relation to the mounting position and ambient temperature (per module)

The following graphs show the number of channels (CHx) that can be used simultaneously in relation to the mounting position of the S7-1500/ET 200MP automation system and the ambient temperature.

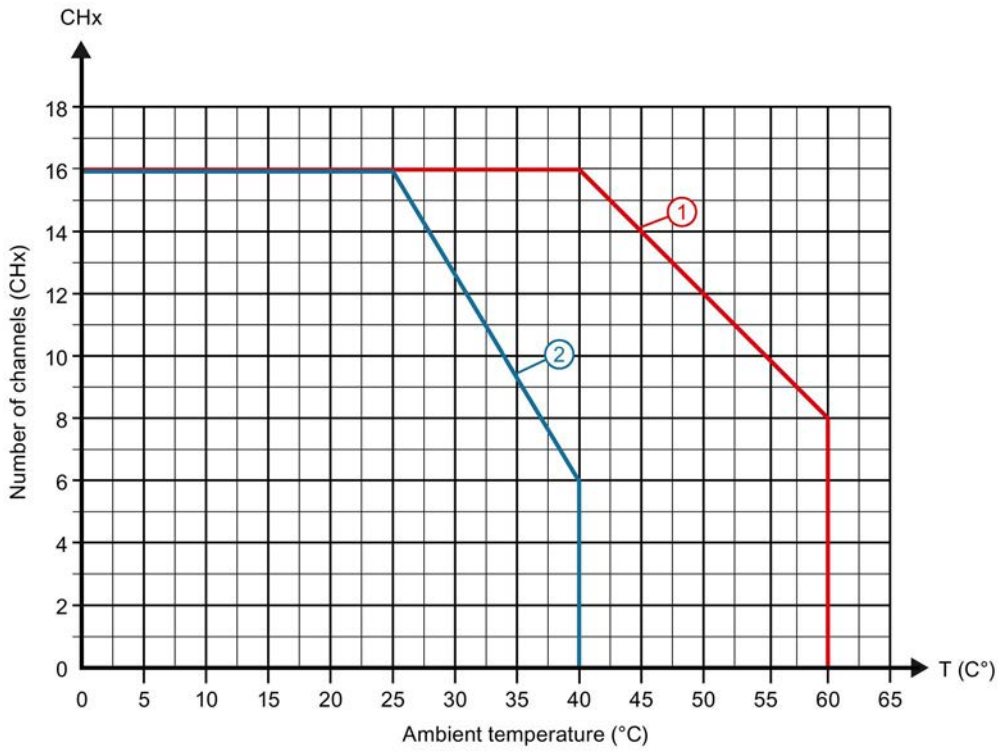

Figure 6-1 Information on channels used simultaneously (per module):

Dimensional drawing

A

A.1 Dimensional drawing

The dimensional drawing of the module on the mounting rail, as well as a dimensional drawing with open front cover, are provided in this appendix. Always observe the specified dimensions for installations in cabinets, control rooms, etc.

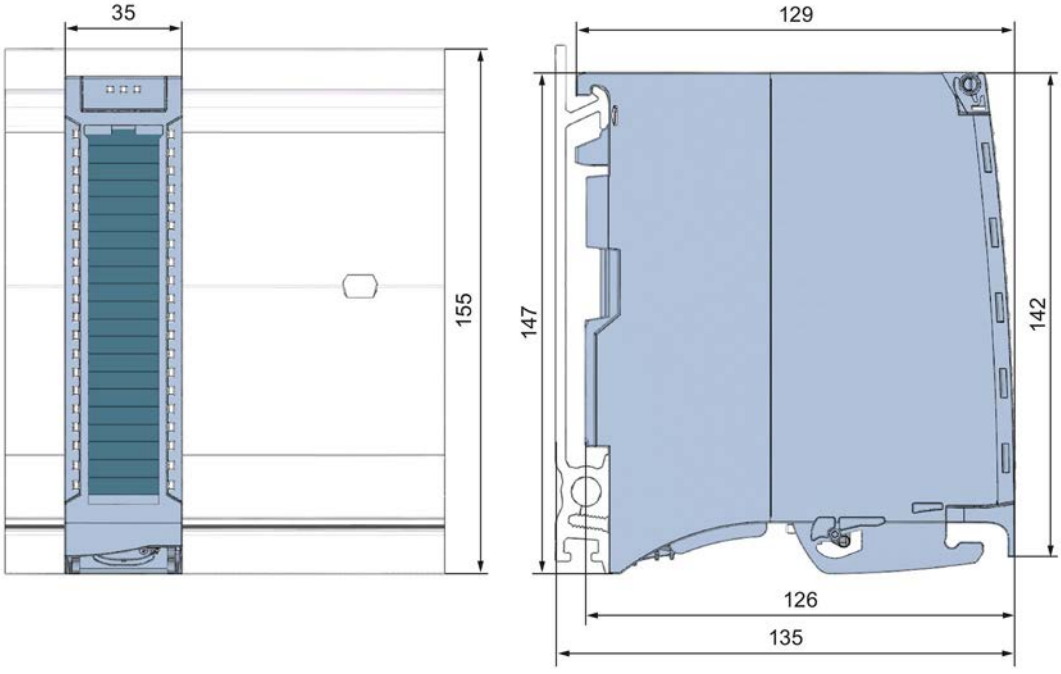

Figure A-1 Dimension drawing of the DI 16x24...125VUC HF module

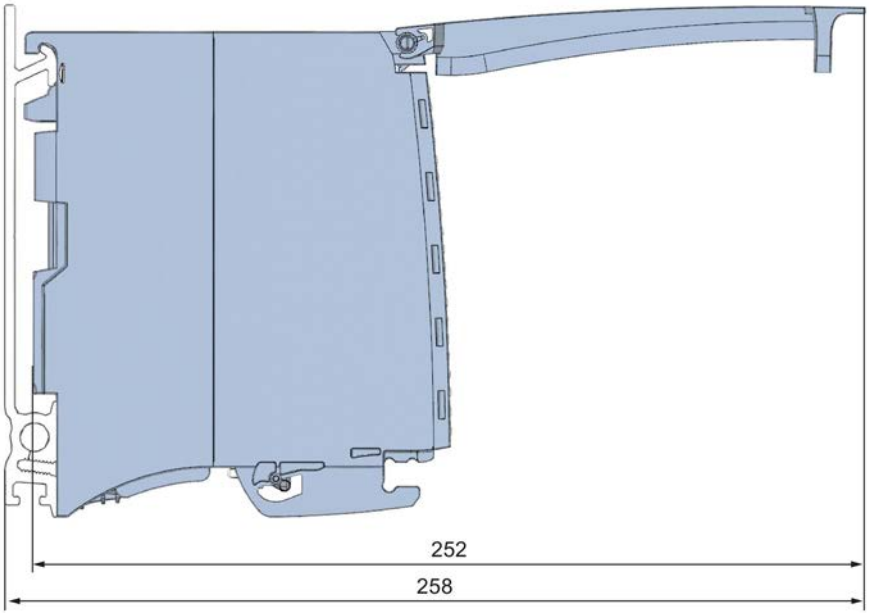

Figure A-2 Dimension drawing of the DI 16x24...125VUC HF module, side view with open front cover

Parameter data records

B

B.1 Parameter assignment and structure of the parameter data records

The data records of the module have an identical structure, regardless of whether you configure the module with PROFIBUS DP or PROFINET IO.

Dependencies for configuration with GSD file

When a GSD file is used to configure a module, dependencies can arise when "assigning the parameters".

There are no dependencies for this module. You can assign the individual parameters in any combination.

Parameter assignment in the user program

You have the option to reconfigure the module in RUN (e.g. the input delay values of selected channels can be edited without having an effect on the other channels).

Parameter assignment in RUN

The "WRREC" instruction is used to transfer the parameters to the module using data records 0 to 15. The parameters set in STEP 7 do not change in the CPU, which means the parameters set in STEP 7 are still valid after a restart.

The parameters are only checked for plausibility by the module after the transfer.

Output parameter STATUS

The module ignores errors that occurred during the transfer of parameters with the WRREC instruction and continues operation with the previous parameter assignment. However, a corresponding error code is written to the STATUS output parameter.

The description of the WRREC instruction and the error codes is available in the STEP 7 online help.

Operation of the module behind a PROFIBUS DP interface module

If the module is operated behind a PROFIBUS DP interface module, the parameter data records 0 and 1 are not read back. You obtain the diagnostics data records 0 and 1 with the read back parameter data records 0 and 1. You can find additional information in the Interrupts section of the device manual for the PROFIBUS DP interface module in the Internet.

B.2 Structure of the parameter data records

Assignment of data record and channel

For the configuration with 1 x 16-channel, the parameters are located in data records 0 to 15 and are assigned as follows:

- Data record 0 for channel 0
- Data record 1 for channel 1
- …
- Data record 14 for channel 14
- Data record 15 for channel 15

For the configuration as a 4 x 8-channel module, the module has 4 submodules with eight channels each. The parameters for the channels are located in data records 0 to 7 and are assigned as follows:

- Data records 0 to 7 for channels 0 to 7 (submodule 1)
- Data records 0 to 7 for channels 8 to 15 (submodule 2)

Address the respective submodule for data record transfer.

Data record structure

The figure below shows the structure of data record 0 for channel 0 as an example. The structure is identical for channels 1 to 15. The values in byte 0 and byte 1 are fixed and may not be changed.

Enable a parameter by setting the corresponding bit to "1".

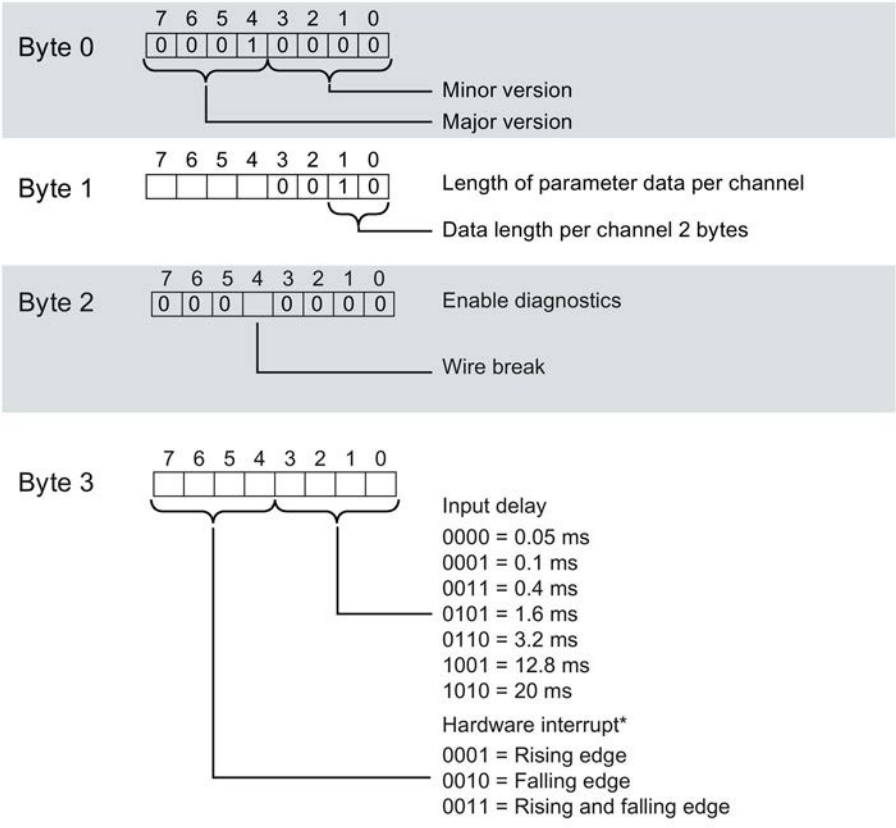

* Enabling the hardware interrupts via a data record is only possible if the channel is assigned to a hardware interrupt OB in STEP 7

Figure B-1 Structure of data record 0: Bytes 0 to 3

SIEMENS

SIMATIC

S7-1500 / ET 200MP

Digital input module DI 16x230VAC BA (6ES7521-1FH00-0AA0)

Manual

Edition 09/2016

siemens.com

SIEMENS

SIMATIC

S7-1500/ET 200MP DI 16x230VAC BA Digital Input Module (6ES7521-1FH00-0AA0)

Manual

Preface

Documentation guide 1

Product overview 2

Wiring 3

Address space 4

Diagnostic alarms 5

Technical specifications 6

Dimensional drawing A

09/2016

A5E03485975-AD

Legal information

Warning notice system

This manual contains notices you have to observe in order to ensure your personal safety, as well as to prevent damage to property. The notices referring to your personal safety are highlighted in the manual by a safety alert symbol, notices referring only to property damage have no safety alert symbol. These notices shown below are graded according to the degree of danger.

⚠ DANGER

indicates that death or severe personal injury **will** result if proper precautions are not taken.

⚠ WARNING

indicates that death or severe personal injury **may** result if proper precautions are not taken.

⚠ CAUTION

indicates that minor personal injury can result if proper precautions are not taken.

NOTICE

indicates that property damage can result if proper precautions are not taken.

If more than one degree of danger is present, the warning notice representing the highest degree of danger will be used. A notice warning of injury to persons with a safety alert symbol may also include a warning relating to property damage.

Qualified Personnel

The product/system described in this documentation may be operated only by **personnel qualified** for the specific task in accordance with the relevant documentation, in particular its warning notices and safety instructions. Qualified personnel are those who, based on their training and experience, are capable of identifying risks and avoiding potential hazards when working with these products/systems.

Proper use of Siemens products

Note the following:

⚠ WARNING

Siemens products may only be used for the applications described in the catalog and in the relevant technical documentation. If products and components from other manufacturers are used, these must be recommended or approved by Siemens. Proper transport, storage, installation, assembly, commissioning, operation and maintenance are required to ensure that the products operate safely and without any problems. The permissible ambient conditions must be complied with. The information in the relevant documentation must be observed.

Trademarks

All names identified by ® are registered trademarks of Siemens AG. The remaining trademarks in this publication may be trademarks whose use by third parties for their own purposes could violate the rights of the owner.

Disclaimer of Liability

We have reviewed the contents of this publication to ensure consistency with the hardware and software described. Since variance cannot be precluded entirely, we cannot guarantee full consistency. However, the information in this publication is reviewed regularly and any necessary corrections are included in subsequent editions.

Siemens AG
Division Digital Factory
Postfach 48 48
90026 NÜRNBERG
GERMANY

A5E03485975-AD
℗ 09/2016 Subject to change

Copyright © Siemens AG 2013 - 2016.
All rights reserved

Preface

Purpose of the documentation

This manual supplements the S7-1500/ET 200MP (https://support.industry.siemens.com/cs/ww/en/view/59191792) system manual.

Functions that relate in general to the systems are described in this system manual.

The information provided in this manual and in the system/function manuals supports you in commissioning the systems.

Changes compared to previous version

Compared to the previous version, this manual contains the following change:

Original texts of the license conditions and copyright notes for open-source software are available on the Internet as of 09/2016.

Conventions

The term "CPU" is used in this manual both for the CPUs of the S7-1500 automation system and for interface modules of the ET 200MP distributed I/O system.

Please also observe notes marked as follows:

Note

A note contains important information on the product described in the documentation, on the handling of the product or on the section of the documentation to which particular attention should be paid.

Security information

Siemens provides products and solutions with industrial security functions that support the secure operation of plants, systems, machines and networks.

In order to protect plants, systems, machines and networks against cyber threats, it is necessary to implement – and continuously maintain – a holistic, state-of-the-art industrial security concept. Siemens' products and solutions only form one element of such a concept.

Customer is responsible to prevent unauthorized access to its plants, systems, machines and networks. Systems, machines and components should only be connected to the enterprise network or the internet if and to the extent necessary and with appropriate security measures (e.g. use of firewalls and network segmentation) in place.

Additionally, Siemens' guidance on appropriate security measures should be taken into account. For more information about industrial security, please visit (http://www.siemens.com/industrialsecurity).

Siemens' products and solutions undergo continuous development to make them more secure. Siemens strongly recommends to apply product updates as soon as available and to always use the latest product versions. Use of product versions that are no longer supported, and failure to apply latest updates may increase customer's exposure to cyber threats.

To stay informed about product updates, subscribe to the Siemens Industrial Security RSS Feed under (http://www.siemens.com/industrialsecurity).

Open Source Software

Open-source software is used in the firmware of the I/O modules. Open Source Software is provided free of charge. We are liable for the product described, including the open-source software contained in it, pursuant to the conditions applicable to the product. Siemens accepts no liability for the use of the open source software over and above the intended program sequence, or for any faults caused by modifications to the software.

For legal reasons, we are obliged to publish the original text of the license conditions and copyright notices. Please read the information relating to this on the Internet (https://support.industry.siemens.com/cs/ww/en/view/109741045).

Table of contents

Preface 4
1 Documentation guide 7
2 Product overview 11
2.1 Properties 11
3 Wiring 13
4 Address space 14
4.1 Address space 14
5 Diagnostic alarms 18
5.1 Status and error displays 18
6 Technical specifications 20
A Dimensional drawing 23

Documentation guide

1

The documentation for the SIMATIC S7-1500 automation system, the CPU 1516pro-2 PN based on SIMATIC S7-1500 and the SIMATIC ET 200MP distributed I/O system is arranged into three areas.
This arrangement enables you to access the specific content you require.

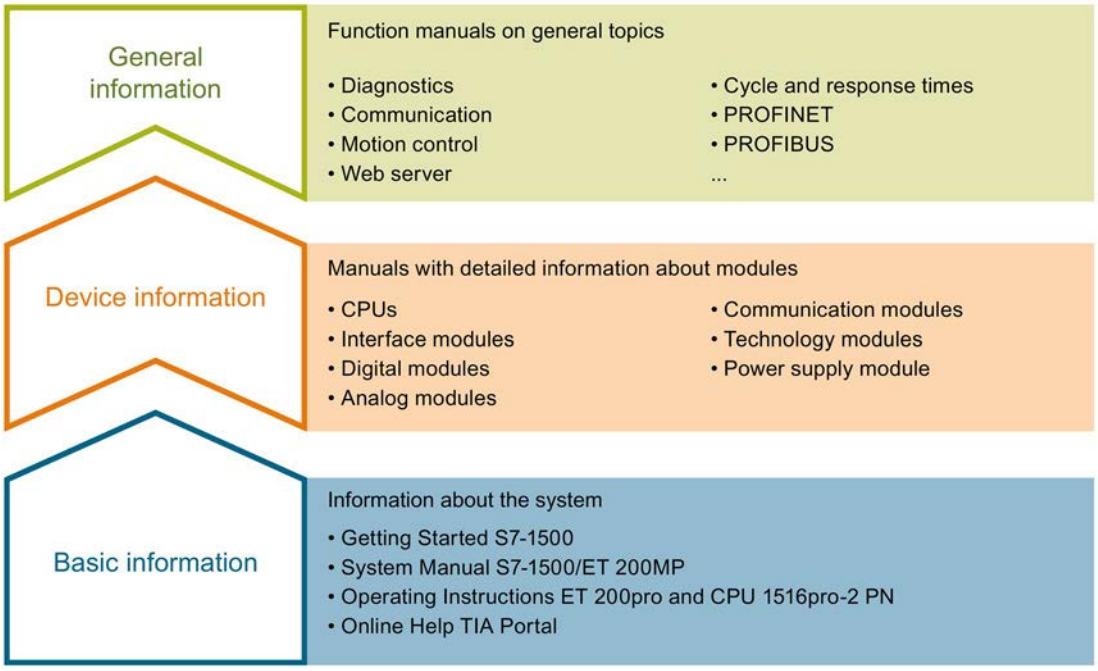

Basic information

The System Manual and Getting Started describe in detail the configuration, installation, wiring and commissioning of the SIMATIC S7-1500 and ET 200MP systems. For CPU 1516pro-2 PN you use the corresponding operating instructions. The STEP 7 online help supports you in the configuration and programming.

Device information

Product manuals contain a compact description of the module-specific information, such as properties, wiring diagrams, characteristics and technical specifications.

General information

The function manuals contain detailed descriptions on general topics regarding the SIMATIC S7-1500 and ET 200MP systems, e.g. diagnostics, communication, motion control, Web server, OPC UA.

You can download the documentation free of charge from the Internet (http://w3.siemens.com/mcms/industrial-automation-systems-simatic/en/manual-overview/Pages/Default.aspx).

Changes and supplements to the manuals are documented in a Product Information.

You can download the product information free of charge from the Internet (https://support.industry.siemens.com/cs/us/en/view/68052815).

Manual Collection S7-1500/ET 200MP

The Manual Collection contains the complete documentation on the SIMATIC S7-1500 automation system and the ET 200MP distributed I/O system gathered together in one file.

You can find the Manual Collection on the Internet (https://support.industry.siemens.com/cs/ww/en/view/86140384).

SIMATIC S7-1500 comparison list for programming languages

The comparison list contains an overview of which instructions and functions you can use for which controller families.

You can find the comparison list on the Internet (https://support.industry.siemens.com/cs/ww/en/view/86630375).

"mySupport"

With "mySupport", your personal workspace, you make the best out of your Industry Online Support.

In "mySupport", you can save filters, favorites and tags, request CAx data and compile your personal library in the Documentation area. In addition, your data is already filled out in support requests and you can get an overview of your current requests at any time.

You must register once to use the full functionality of "mySupport".

You can find "mySupport" on the Internet (https://support.industry.siemens.com/My/ww/en).

"mySupport" - Documentation

In the Documentation area in "mySupport" you can combine entire manuals or only parts of these to your own manual.
You can export the manual as PDF file or in a format that can be edited later.

You can find "mySupport" - Documentation on the Internet (http://support.industry.siemens.com/My/ww/en/documentation).

"mySupport" - CAx data

In the CAx data area in "mySupport", you can access the current product data for your CAx or CAe system.

You configure your own download package with a few clicks.

In doing so you can select:

- Product images, 2D dimension drawings, 3D models, internal circuit diagrams, EPLAN macro files
- Manuals, characteristics, operating manuals, certificates
- Product master data

You can find "mySupport" - CAx data on the Internet (http://support.industry.siemens.com/my/ww/en/CAxOnline).

Application examples

The application examples support you with various tools and examples for solving your automation tasks. Solutions are shown in interplay with multiple components in the system - separated from the focus on individual products.

You will find the application examples on the Internet (https://support.industry.siemens.com/sc/ww/en/sc/2054).

TIA Selection Tool

With the TIA Selection Tool, you can select, configure and order devices for Totally Integrated Automation (TIA).
This tool is the successor of the SIMATIC Selection Tool and combines the known configurators for automation technology into one tool.
With the TIA Selection Tool, you can generate a complete order list from your product selection or product configuration.

You can find the TIA Selection Tool on the Internet (http://w3.siemens.com/mcms/topics/en/simatic/tia-selection-tool).

SIMATIC Automation Tool

You can use the SIMATIC Automation Tool to run commissioning and maintenance activities simultaneously on various SIMATIC S7 stations as a bulk operation independently of the TIA Portal.

The SIMATIC Automation Tool provides a multitude of functions:

- Scanning of a PROFINET/Ethernet network and identification of all connected CPUs
- Address assignment (IP, subnet, gateway) and station name (PROFINET device) to a CPU
- Transfer of the date and the programming device/PC time converted to UTC time to the module
- Program download to CPU
- Operating mode switchover RUN/STOP
- Localization of the CPU by means of LED flashing
- Reading out CPU error information
- Reading the CPU diagnostic buffer
- Reset to factory settings
- Updating the firmware of the CPU and connected modules

You can find the SIMATIC Automation Tool on the Internet (https://support.industry.siemens.com/cs/ww/en/view/98161300).

PRONETA

With SIEMENS PRONETA (PROFINET network analysis), you analyze the PROFINET network during commissioning. PRONETA features two core functions:

- The topology overview independently scans PROFINET and all connected components.
- The IO check is a fast test of the wiring and the module configuration of a system.

You can find SIEMENS PRONETA on the Internet (https://support.industry.siemens.com/cs/ww/en/view/67460624).

Product overview

2

2.1 Properties

Article number

6ES7521-1FH00-0AA0

View of the module

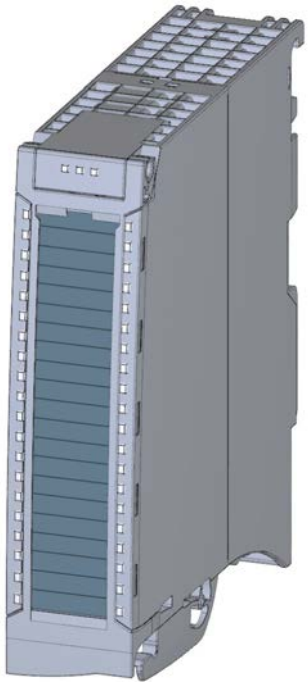

Figure 2-1 View of the DI 16x230VAC BA module

Properties

The module has the following technical properties:

- 16 digital inputs; electrically isolated in groups of 4
- Rated input voltage 120/230 V AC
- Suitable for switches and 2-/3-/4-wire AC proximity switches (alternating voltage)

The module supports the following functions:

Table 2- 1 Version dependencies of the module functions

Function	Firmware version of the module	Configuration software	
		STEP 7 (TIA Portal)	GSD file in STEP 7 (TIA Portal) V12 or higher, or STEP 7 V5.5 SP3 or higher
Firmware update	V1.0.0 or higher	V12 or higher	X
Identification data I&M0 to I&M3	V1.0.0 or higher	V12 or higher	X
Module-internal Shared Input (MSI)	V2.0.0 or higher	V13 Update 3 or higher (PROFINET IO only)	X (PROFINET IO only)
Configurable submodules / sub-modules for Shared Device	V2.0.0 or higher	V13 Update 3 or higher (PROFINET IO only)	X (PROFINET IO only)
Configurable after interface module IM 155-5 DP ST	V2.0.0 or higher	V13 or higher	X

You can configure the module with STEP 7 (TIA Portal) and with a GSD file.

Accessories

The following accessories are supplied with the module and can also be ordered separately as spare parts:

- Labeling strips
- U connector
- Universal front door

Other components

The following component can be ordered separately:

Front connectors, including potential jumpers and cable ties

You can find additional information on accessories in the S7-1500/ET 200MP (http://support.automation.siemens.com/WW/view/en/59191792) system manual.

Wiring

3

This section contains the block diagram of the module and outlines various wiring options. You can find information on wiring the front connector, creating a cable shield, etc. in the Wiring section of the S7-1500/ET 200MP (http://support.automation.siemens.com/WW/view/en/59191792) system manual.

Note

Do not insert the potential jumpers included with the front connector!

Wiring and block diagram

The figure below shows you how to wire the module and the assignment of the channels to the addresses (input byte a to input byte b).

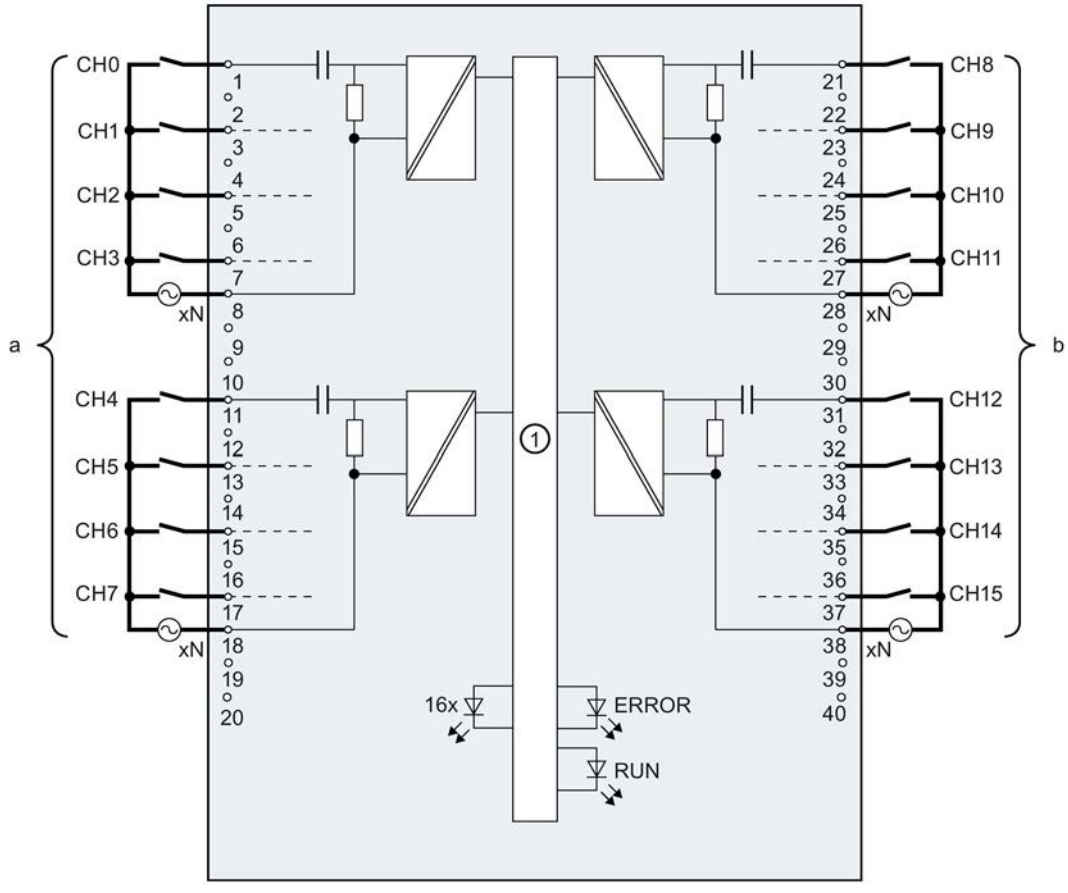

①	Backplane bus interface	CHx	Channel or channel status LED (green)
xN	Supply voltage AC	RUN	Status display LED (green)
		ERROR	Error display LED (red)

Figure 3-1 Block diagram and terminal assignment

Address space 4

4.1 Address space

The module can be configured differently in STEP 7; see following table. Depending on the configuration, additional/different addresses are assigned in the process image of the inputs.

The letters "a to d" are printed on the module - "EB a", for example, stands for module start address input byte a.

Configuration options of DI 16x230VAC BA

You can configure the module with STEP 7 (TIA Portal) or with a GSD file.

When you configure the module by means of the GSD file, the configurations are available under different abbreviations/module names.

The following configurations are possible:

Table 4- 1 Configuration options

Configuration	Short designation/ module name in the GSD file	Configuration software, e.g., with STEP 7 (TIA Portal)	
		Integrated in hardware catalog STEP 7 (TIA Portal)	GSD file in STEP 7 (TIA Portal) V12 or higher or STEP 7 V5.5 SP3 or higher
1 x 16-channel without value status	DI 16x230VAC BA	V12 or higher	X
2 x 8-channel without value status	DI 16x230VAC BA S	V13 Update 3 or higher (PROFINET IO only)	X (PROFINET IO only)
1 x 16-channel with value status for module-internal shared input with up to 4 submodules	DI 16x230VAC BA MSI	V13 Update 3 or higher (PROFINET IO only)	X (PROFINET IO only)

Value status (Quality Information, QI)

The value status is always activated for the DI 16x230VAC BA MSI module.

An additional bit is assigned to each channel for the value status. In contrast to the modules with diagnostics capability, the module only shows information regarding the parameter assignment of the first submodule (basic submodule) in the value status.

The module does not supply a value status for the read-in digital value.

Address space for configuration as DI 16x230VAC BA

The following figure shows the address space allocation for the configuration as 16-channel module. You can freely assign the start address for the module. The addresses of the channels are derived from the start address.

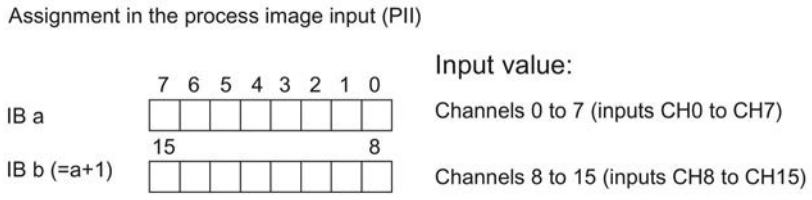

Figure 4-1 Address space for configuration as 16-channel DI 16x230VAC BA

Address space for configuration as 2 x 8-channel DI 16x230VAC BA S

For the configuration as a 2 x 8-channel module, the channels of the module are divided into multiple submodules. The submodules can be assigned to different IO controllers when the module is used in a shared device.

The number of usable IO controllers depends on the interface module used. Please observe the information in the manual for the particular interface module.

Contrary to the 1 x 16-channel module configuration, each of the two submodules has a freely assignable start address.

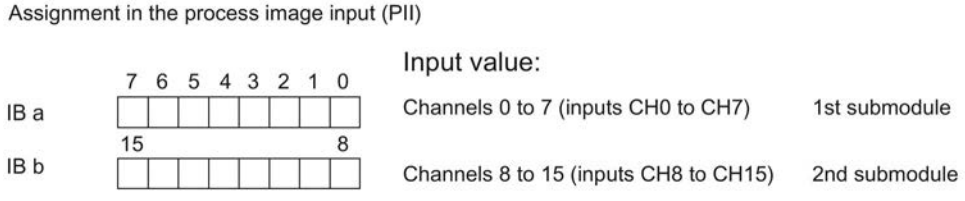

Figure 4-2 Address space for configuration as 2 x 8-channel DI 16x24VDC SRC BA S

Address space for configuration as 1 x 16-channel DI 16x230VAC BA MSI

The channels 0 to 15 of the module are copied in up to four submodules with configuration 1 x 16-channel module (Module-internal shared input, MSI). Channels 0 to 15 are then available with identical input values in different submodules. These submodules can be assigned to up to four IO controllers when the module is used in a shared device. Each IO controller has read access to the same channels.

The number of usable IO controllers depends on the interface module used. Please observe the information in the manual for the particular interface module.

Value status (Quality Information, QI)

The meaning of the value status depends on the submodule involved.

For the 1st submodule (=basic submodule), the value status is not relevant.

For the 2nd to 4th submodule (=MSI submodule), the value status 0 indicates that the basic submodule parameters have not yet been assigned (not ready).

The figure below shows the assignment of the address space with submodules 1 and 2.

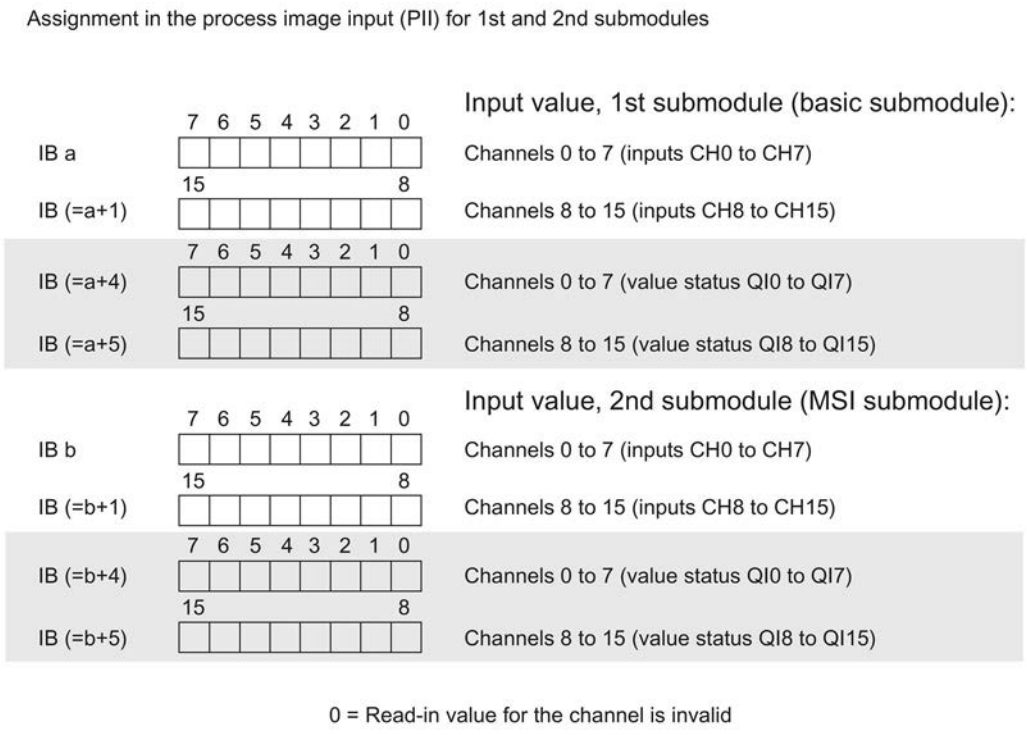

Figure 4-3 Address space for configuration as 1 x 16-channel DI 16x230VAC BA MSI

The figure below shows the assignment of the address space with submodules 3 and 4.

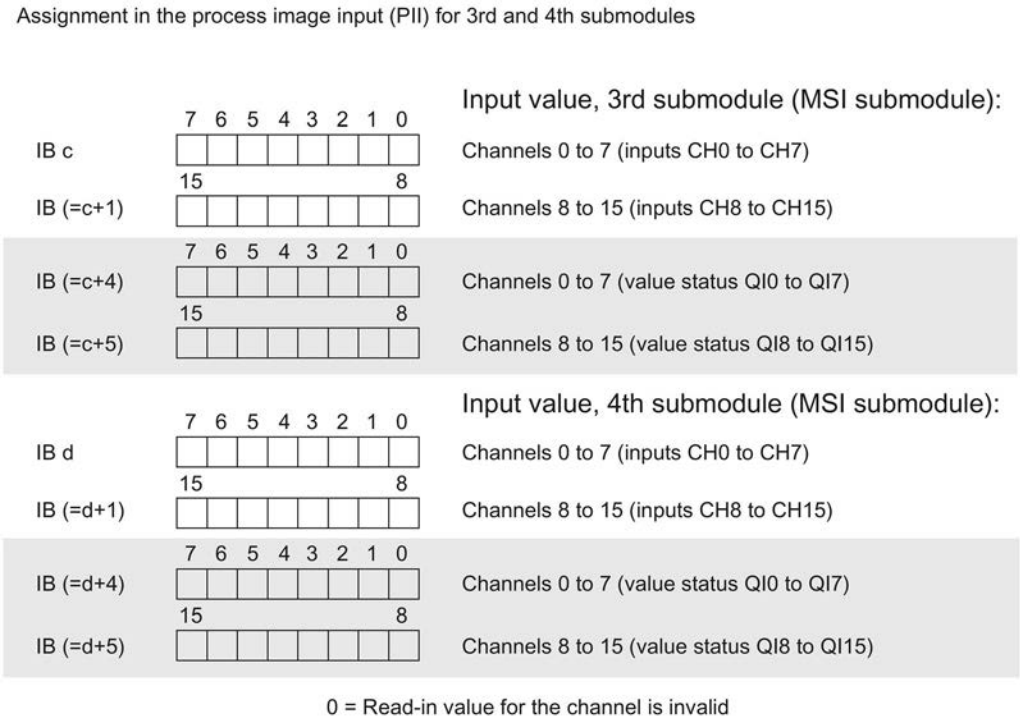

Figure 4-4 Address space for configuration as 1 x 16-channel DI 16x230VAC BA MSI

Reference

You can find information on the module-internal shared input/shared output (MSI/MSO) function in the section Module-internal shared input/shared output (MSI/MSO) of the function manual PROFINET with STEP 7 V13 (https://support.industry.siemens.com/cs/ww/en/view/49948856).

Diagnostic alarms

5

5.1 Status and error displays

LED displays

The figure below shows the LED displays (status and error displays) of the DI 16x230VAC BA.

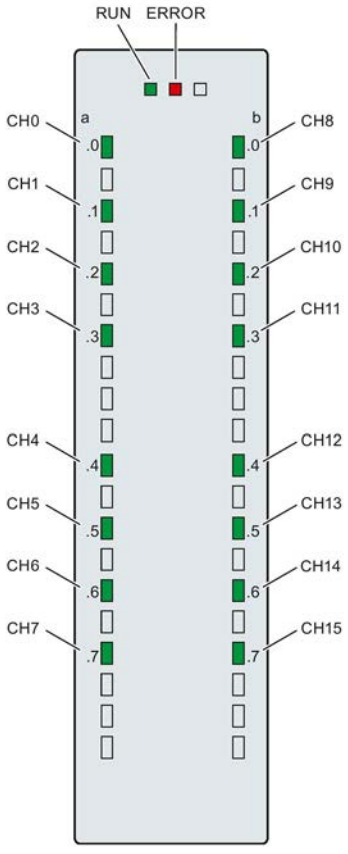

Figure 5-1 LED displays of the module DI 16x230VAC BA

Meaning of the LED displays

The following table explains the meaning of the status and error displays.

RUN and ERROR LED

Table 5- 1 Status and error displays RUN and ERROR

LED		Meaning	Remedy
RUN	ERROR		
□ Off	□ Off	Voltage missing or too low at backplane bus	• Switch on the CPU and/or the system power supply modules. • Verify that the U connectors are inserted. • Check to see if too many modules are inserted.
☼ Flashes	□ Off	Module starts up	---
■ On	□ Off	Module is ready	
☼ Flashes	☼ Flashes	Hardware defective	Replace the module.

CHx LED

Table 5- 2 CHx status display

LED CHx	Meaning	Remedy
□ Off	0 = Status of the input signal	---
■ On	1 = Status of the input signal	---

Technical specifications 6

Technical specifications of the DI 16x230VAC BA

	6ES7521-1FH00-0AA0
General information	
Product type designation	DI 16x230VAC BA
Hardware functional status	FS01
Firmware version	V2.0.0
• FW update possible	Yes
Product function	
I&M data	Yes; I&M0 to I&M3
Engineering with	
STEP 7 TIA Portal can be configured/integrated as of version	V12 / V12
STEP 7 can be configured/integrated as of version	V5.5 SP3 / -
PROFIBUS as of GSD version/GSD revision	V1.0 / V5.1
PROFINET as of GSD version/GSD revision	V2.3 / -
Operating mode	
DI	Yes
Counters	No
MSI	Yes
Power	
Power consumption from the backplane bus	1 W
Power loss	
Power loss, typ.	4.9 W
Digital inputs	
Number of inputs	16
Configurable digital inputs	No
Sinking/sourcing input	Sinking input
Input characteristic curve acc. to IEC 61131, type 1	Yes
Input voltage	
Type of input voltage	AC
Rated value (AC)	230 V; 120/230 V AC, 50 / 60 Hz
for signal "0"	0 V AC to 40 V AC
for signal "1"	79 V AC to 264 V AC
Input current	
for signal "1", typ.	11 mA; at 230 V AC and 5.5 mA at 120 V AC

	6ES7521-1FH00-0AA0
Input delay (for rated value of input voltage)	
For standard inputs	
• Configurable	No
• with "0" to "1", max.	25 ms
• with "1" to "0", max.	25 ms
For interrupt inputs	
• Configurable	No
for technological functions	
• Configurable	No
Cable length	
shielded, max.	1000 m
unshielded, max.	600 m
Encoders	
Connectable encoders	
2-wire sensor	Yes
• Permitted quiescent current (2-wire sensor), max.	2 mA
Isochronous mode	
Isochronous mode (application synchronized up to terminal)	No
Interrupts/diagnostics/status information	
Diagnostics function	No
Interrupts	
Diagnostics interrupt	No
Hardware interrupt	No
Diagnostics alarms	
Monitoring of supply voltage	No
Wire break	No
Short-circuit	No
Diagnostics indicator LED	
RUN LED	Yes; green LED
ERROR LED	Yes; red LED
Monitoring of supply voltage (PWR LED)	No
Channel status display	Yes; green LED
For channel diagnostics	No
For module diagnostics	Yes; red LED
Electrical isolation	
Electrical isolation of channels	
Between the channels	No
Between the channels, in groups of	4
Between the channels and backplane bus	Yes

	6ES7521-1FH00-0AA0
Permitted potential difference	
Between different circuits	250 V AC between the channels and the back-plane bus; 500 V AC between the channels
Isolation	
Isolation tested with	3100 V DC
Ambient conditions	
Ambient temperature during operation	
Horizontal mounting position, min.	0 °C
Horizontal mounting position, max.	60 °C
Vertical mounting position, min.	0 °C
Vertical mounting position, max.	40 °C
Distributed mode	
Prioritized startup	Yes
Dimensions	
Width	35 mm
Height	147 mm
Depth	129 mm
Weights	
Weight, approx.	300 g

Dimensional drawing

A

The dimensional drawing of the module on the mounting rail, as well as a dimensional drawing with open front cover, are provided in the appendix. Always observe the specified dimensions for installation in cabinets, control rooms, etc.

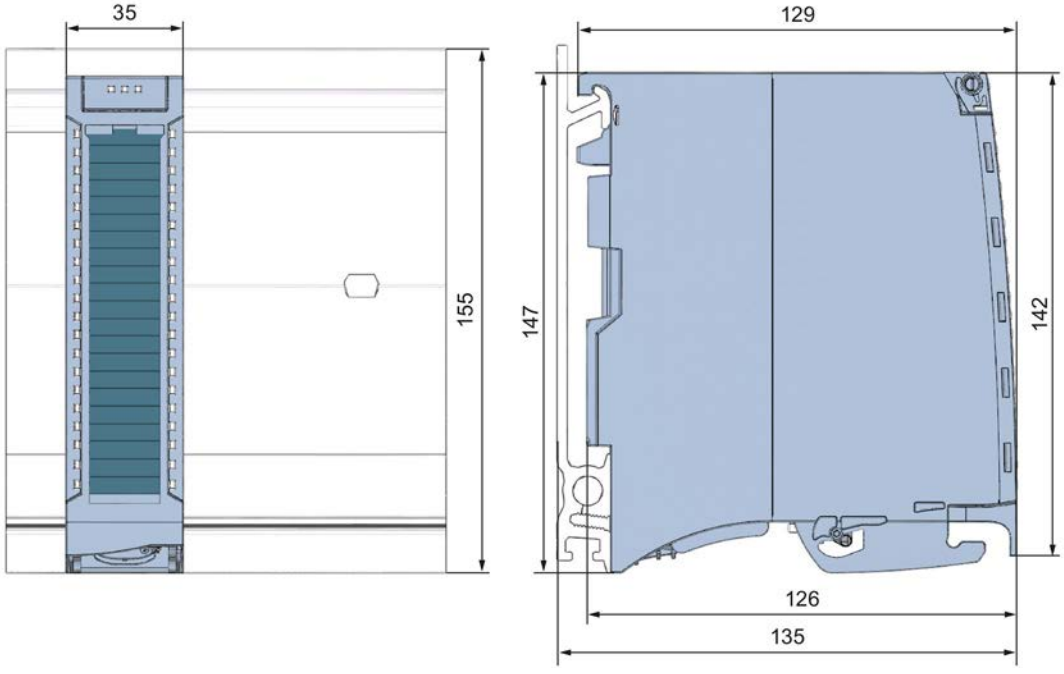

Figure A-1 Dimensional drawing of the DI 16x24VAC BA module

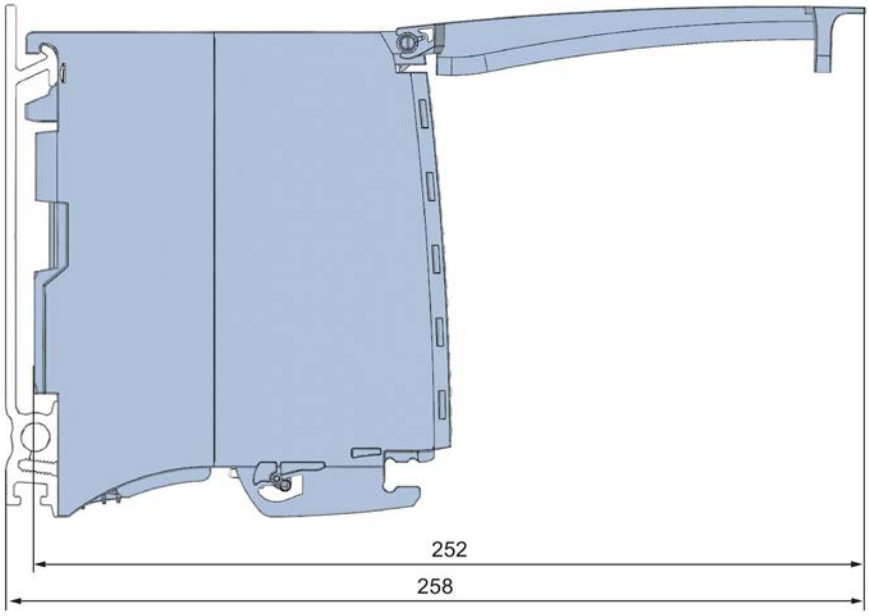

Figure A-2 Dimensional drawing of the DI 16x24VAC BA module, side view with open front cover

SIEMENS

SIMATIC

S7-1500 / ET 200MP

Digital output module DQ 32x24VDC/0.5A BA (6ES7522-1BL10-0AA0)

Manual

Edition 09/2016

siemens.com

SIEMENS

SIMATIC

S7-1500/ET 200MP Digital output module DQ 32x24VDC/0.5A BA (6ES7522-1BL10-0AA0)

Manual

Preface

Documentation guide 1

Product overview 2

Wiring 3

Address space 4

Diagnostics alarms 5

Technical specifications 6

Dimensional drawing A

09/2016

A5E32364205-AC

Legal information

Warning notice system

This manual contains notices you have to observe in order to ensure your personal safety, as well as to prevent damage to property. The notices referring to your personal safety are highlighted in the manual by a safety alert symbol, notices referring only to property damage have no safety alert symbol. These notices shown below are graded according to the degree of danger.

⚠ DANGER

indicates that death or severe personal injury **will** result if proper precautions are not taken.

⚠ WARNING

indicates that death or severe personal injury **may** result if proper precautions are not taken.

⚠ CAUTION

indicates that minor personal injury can result if proper precautions are not taken.

NOTICE

indicates that property damage can result if proper precautions are not taken.

If more than one degree of danger is present, the warning notice representing the highest degree of danger will be used. A notice warning of injury to persons with a safety alert symbol may also include a warning relating to property damage.

Qualified Personnel

The product/system described in this documentation may be operated only by **personnel qualified** for the specific task in accordance with the relevant documentation, in particular its warning notices and safety instructions. Qualified personnel are those who, based on their training and experience, are capable of identifying risks and avoiding potential hazards when working with these products/systems.

Proper use of Siemens products

Note the following:

⚠ WARNING

Siemens products may only be used for the applications described in the catalog and in the relevant technical documentation. If products and components from other manufacturers are used, these must be recommended or approved by Siemens. Proper transport, storage, installation, assembly, commissioning, operation and maintenance are required to ensure that the products operate safely and without any problems. The permissible ambient conditions must be complied with. The information in the relevant documentation must be observed.

Trademarks

All names identified by ® are registered trademarks of Siemens AG. The remaining trademarks in this publication may be trademarks whose use by third parties for their own purposes could violate the rights of the owner.

Disclaimer of Liability

We have reviewed the contents of this publication to ensure consistency with the hardware and software described. Since variance cannot be precluded entirely, we cannot guarantee full consistency. However, the information in this publication is reviewed regularly and any necessary corrections are included in subsequent editions.

Siemens AG
Division Digital Factory
Postfach 48 48
90026 NÜRNBERG
GERMANY

A5E32364205-AC
℗ 11/2016 Subject to change

Copyright © Siemens AG 2014 - 2016.
All rights reserved

Preface

Purpose of the documentation

This manual supplements the system manual S7-1500/ET 200MP (https://support.industry.siemens.com/cs/ww/en/view/59191792).

Functions that relate in general to the systems are described in this system manual.

The information provided in this manual and in the system/function manuals supports you in commissioning the systems.

Changes compared to previous version

Compared to the previous version, this manual contains the following change:

Original texts of the license conditions and copyright notes for open-source software are available on the Internet as of 09/2016.

Conventions

The term "CPU" is used in this manual both for the CPUs of the S7-1500 automation system and for interface modules of the ET 200MP distributed I/O system.

Please also observe notes marked as follows:

Note

A note contains important information on the product described in the documentation, on the handling of the product or on the section of the documentation to which particular attention should be paid.

Security information

Siemens provides products and solutions with industrial security functions that support the secure operation of plants, systems, machines and networks.

In order to protect plants, systems, machines and networks against cyber threats, it is necessary to implement – and continuously maintain – a holistic, state-of-the-art industrial security concept. Siemens' products and solutions only form one element of such a concept.

Customer is responsible to prevent unauthorized access to its plants, systems, machines and networks. Systems, machines and components should only be connected to the enterprise network or the internet if and to the extent necessary and with appropriate security measures (e.g. use of firewalls and network segmentation) in place.

Additionally, Siemens' guidance on appropriate security measures should be taken into account. For more information about industrial security, please visit (http://www.siemens.com/industrialsecurity).

Siemens' products and solutions undergo continuous development to make them more secure. Siemens strongly recommends to apply product updates as soon as available and to always use the latest product versions. Use of product versions that are no longer supported, and failure to apply latest updates may increase customer's exposure to cyber threats.

To stay informed about product updates, subscribe to the Siemens Industrial Security RSS Feed under (http://www.siemens.com/industrialsecurity).

Open Source Software

Open-source software is used in the firmware of the I/O modules. Open Source Software is provided free of charge. We are liable for the product described, including the open-source software contained in it, pursuant to the conditions applicable to the product. Siemens accepts no liability for the use of the open source software over and above the intended program sequence, or for any faults caused by modifications to the software.

For legal reasons, we are obliged to publish the original text of the license conditions and copyright notices. Please read the information relating to this on the Internet (https://support.industry.siemens.com/cs/ww/en/view/109741045).

Table of contents

Preface 4
1 Documentation guide 7
2 Product overview 11
2.1 Properties 11
3 Wiring 13
4 Address space 15
4.1 Address space 15
5 Diagnostics alarms 20
5.1 Status and error displays 20
6 Technical specifications 22
A Dimensional drawing 26

Documentation guide

1

The documentation for the SIMATIC S7-1500 automation system, the CPU 1516pro-2 PN based on SIMATIC S7-1500 and the SIMATIC ET 200MP distributed I/O system is arranged into three areas.
This arrangement enables you to access the specific content you require.

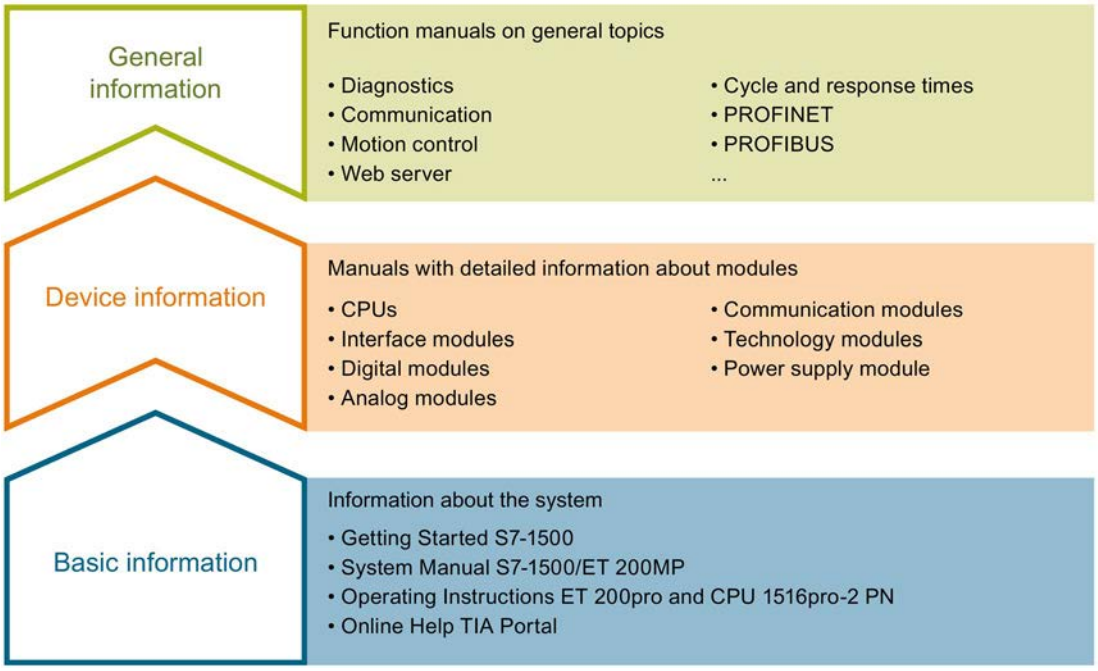

Basic information

The System Manual and Getting Started describe in detail the configuration, installation, wiring and commissioning of the SIMATIC S7-1500 and ET 200MP systems. For CPU 1516pro-2 PN you use the corresponding operating instructions. The STEP 7 online help supports you in the configuration and programming.

Device information

Product manuals contain a compact description of the module-specific information, such as properties, wiring diagrams, characteristics and technical specifications.

General information

The function manuals contain detailed descriptions on general topics regarding the SIMATIC S7-1500 and ET 200MP systems, e.g. diagnostics, communication, motion control, Web server, OPC UA.

You can download the documentation free of charge from the Internet (http://w3.siemens.com/mcms/industrial-automation-systems-simatic/en/manual-overview/Pages/Default.aspx).

Changes and supplements to the manuals are documented in a Product Information.

You can download the product information free of charge from the Internet (https://support.industry.siemens.com/cs/us/en/view/68052815).

Manual Collection S7-1500/ET 200MP

The Manual Collection contains the complete documentation on the SIMATIC S7-1500 automation system and the ET 200MP distributed I/O system gathered together in one file.

You can find the Manual Collection on the Internet (https://support.industry.siemens.com/cs/ww/en/view/86140384).

SIMATIC S7-1500 comparison list for programming languages

The comparison list contains an overview of which instructions and functions you can use for which controller families.

You can find the comparison list on the Internet (https://support.industry.siemens.com/cs/ww/en/view/86630375).

"mySupport"

With "mySupport", your personal workspace, you make the best out of your Industry Online Support.

In "mySupport", you can save filters, favorites and tags, request CAx data and compile your personal library in the Documentation area. In addition, your data is already filled out in support requests and you can get an overview of your current requests at any time.

You must register once to use the full functionality of "mySupport".

You can find "mySupport" on the Internet (https://support.industry.siemens.com/My/ww/en).

"mySupport" - Documentation

In the Documentation area in "mySupport" you can combine entire manuals or only parts of these to your own manual.
You can export the manual as PDF file or in a format that can be edited later.

You can find "mySupport" - Documentation on the Internet (http://support.industry.siemens.com/My/ww/en/documentation).

"mySupport" - CAx data

In the CAx data area in "mySupport", you can access the current product data for your CAx or CAe system.

You configure your own download package with a few clicks.

In doing so you can select:

- Product images, 2D dimension drawings, 3D models, internal circuit diagrams, EPLAN macro files
- Manuals, characteristics, operating manuals, certificates
- Product master data

You can find "mySupport" - CAx data on the Internet (http://support.industry.siemens.com/my/ww/en/CAxOnline).

Application examples

The application examples support you with various tools and examples for solving your automation tasks. Solutions are shown in interplay with multiple components in the system - separated from the focus on individual products.

You will find the application examples on the Internet (https://support.industry.siemens.com/sc/ww/en/sc/2054).

TIA Selection Tool

With the TIA Selection Tool, you can select, configure and order devices for Totally Integrated Automation (TIA).
This tool is the successor of the SIMATIC Selection Tool and combines the known configurators for automation technology into one tool.
With the TIA Selection Tool, you can generate a complete order list from your product selection or product configuration.

You can find the TIA Selection Tool on the Internet (http://w3.siemens.com/mcms/topics/en/simatic/tia-selection-tool).

SIMATIC Automation Tool

You can use the SIMATIC Automation Tool to run commissioning and maintenance activities simultaneously on various SIMATIC S7 stations as a bulk operation independently of the TIA Portal.

The SIMATIC Automation Tool provides a multitude of functions:

- Scanning of a PROFINET/Ethernet network and identification of all connected CPUs
- Address assignment (IP, subnet, gateway) and station name (PROFINET device) to a CPU
- Transfer of the date and the programming device/PC time converted to UTC time to the module
- Program download to CPU
- Operating mode switchover RUN/STOP
- Localization of the CPU by means of LED flashing
- Reading out CPU error information
- Reading the CPU diagnostic buffer
- Reset to factory settings
- Updating the firmware of the CPU and connected modules

You can find the SIMATIC Automation Tool on the Internet (https://support.industry.siemens.com/cs/ww/en/view/98161300).

PRONETA

With SIEMENS PRONETA (PROFINET network analysis), you analyze the PROFINET network during commissioning. PRONETA features two core functions:

- The topology overview independently scans PROFINET and all connected components.
- The IO check is a fast test of the wiring and the module configuration of a system.

You can find SIEMENS PRONETA on the Internet (https://support.industry.siemens.com/cs/ww/en/view/67460624).

Product overview

2

2.1 Properties

Article number

6ES7522-1BL10-0AA0

View of the module

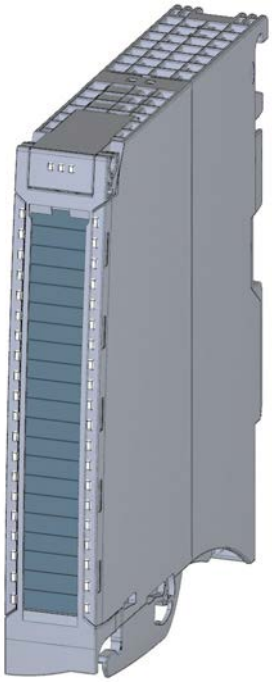

Figure 2-1 View of the DQ 32x24VDC/0.5A BA module

Properties

The digital module has the following technical properties:

- 32 DO; electrically isolated in groups of 8
- Rated output voltage 24 V DC
- Rated output current 0.5 A per channel
- Suitable for solenoid valves, DC contactors, and indicator lights
- Hardware compatible with digital output module DQ 16x24VDC/0.5A BA (6ES7522-1BH10-0AA0)

The module supports the following functions:

Table 2- 1 Version dependencies of the module functions

Function	Firmware version of the module	Configuration software	
		STEP 7 (TIA Portal)	GSD file in STEP 7 (TIA Portal) V12 or higher, or STEP 7 V5.5 SP3 or higher
Firmware update	V1.0.0 or higher	V13 or higher	--- / X
Identification data I&M0 to I&M3	V1.0.0 or higher	V13 or higher	X
Module-internal Shared Output (MSO)	V1.0.0 or higher	V13 Update 3 or higher (PROFINET IO only)	X (PROFINET IO only)
Configurable submodules / submodules for Shared Device	V1.0.0 or higher	V13 Update 3 or higher (PROFINET IO only)	X (PROFINET IO only)

You can configure the module with STEP 7 (TIA Portal) and with a GSD file.

Accessories

The following accessories are supplied with the module and can also be ordered separately as spare parts:

- Front connector (push-in terminals) including cable tie
- Labeling strips
- U connector
- Universal front door

You can find additional information on accessories in the system manual S7-1500/ET 200MP (https://support.industry.siemens.com/cs/ww/en/view/59191792).

Wiring 3

This section contains the block diagram of the module and outlines various wiring options.

You can find information on wiring the front connector, creating a cable shield, etc. in the Wiring section of the system manual S7-1500/ET 200MP (https://support.industry.siemens.com/cs/ww/en/view/59191792).

Wiring and block diagram

The example in the following figure shows the terminal assignment and the assignment of the channels to the addresses (output byte a to output byte d).

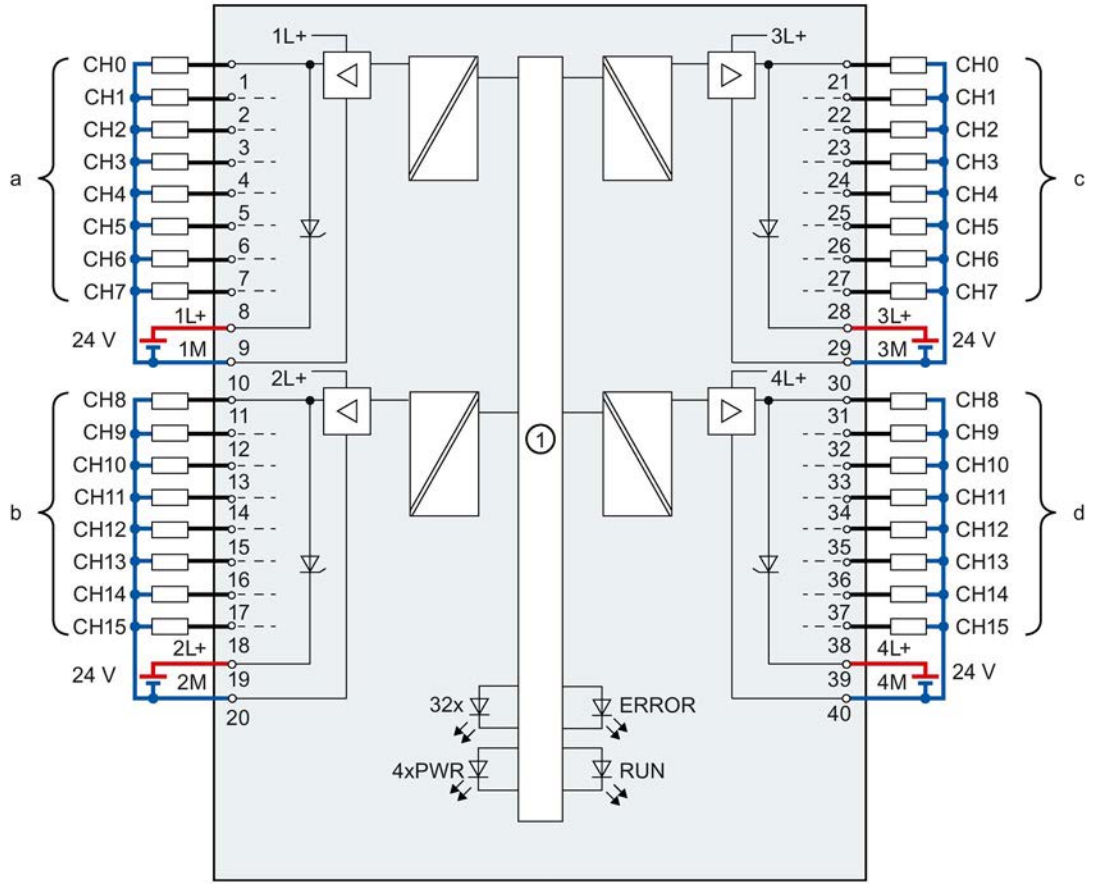

①	Backplane bus interface	CHx	Channel or channel status LED (green)
xL+	Supply voltage 24 V DC	RUN	Status display LED (green)
xM	Ground	ERROR	Error display LED (red)
		PWR	POWER supply voltage LED (green)

Figure 3-1 Block diagram and terminal assignment

Note

Upon activation of the 24 V supply voltage, there is a "1" signal at the module outputs for approx. 50 µs.

Address space 4

4.1 Address space

The module can be configured in various ways in STEP 7. Depending on the configuration, additional/different addresses are assigned in the process image output/input.

Configuration options of DQ 32x24VDC/0.5A BA

You can configure the module with STEP 7 (TIA Portal) or with a GSD file.

When you configure the module by means of the GSD file, the configurations are available under different short designations/module names.

The following configurations are possible:

Table 4- 1 Configuration options

Configuration	Short designation/module name in the GSD file	Configuration software, e.g., with STEP 7 (TIA Portal)	
		Integrated in hardware catalog STEP 7 (TIA Portal)	GSD file in STEP 7 (TIA Portal) V12 or higher or STEP 7 V5.5 SP3 or higher
1 x 32-channel without value status	DQ 32x24VDC/0.5A BA	V13 or higher	X
4 x 8-channel without value status	DQ 32x24VDC/0.5A BA S	V13 Update 3 or higher (PROFINET IO only)	X (PROFINET IO only)
1 x 32-channel with value status for module-internal Shared Output with up to 4 submodules	DQ 32x24VDC/0.5A BA MSO	V13 Update 3 or higher (PROFINET IO only)	X (PROFINET IO only)

Address space for configuration as 1 x 32-channel DQ 32x24VDC/0.5A BA

The figure below shows the address space assignment for configuration as a 1 x 32-channel module. You can freely assign the start address for the module. The addresses of the channels are derived from the start address.

The letters "a to d" are printed on the module- "QB a", for example, stands for module start address output byte a.

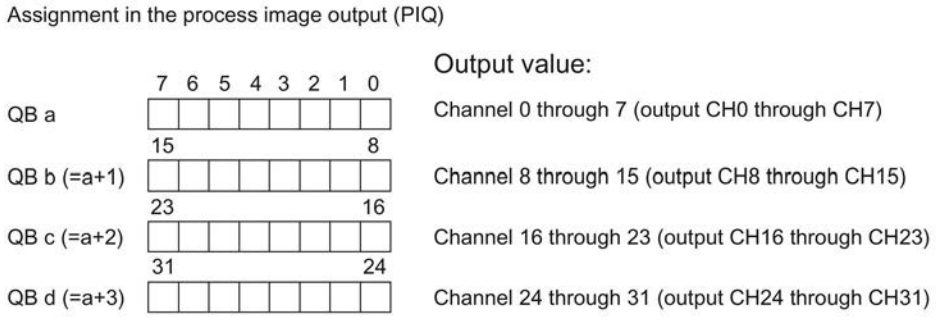

Figure 4-1 Address space for configuration as 1 x 32-channel DQ 32x24VDC/0.5A BA with value status

Address space for configuration as 4 x 8-channel DQ 32x24VDC/0.5A BA S

For the configuration as a 4 x 8-channel module, the channels of the module are divided into multiple submodules. The submodules can be assigned to different IO controllers when the module is used in a shared device.

The number of usable IO controllers depends on the interface module used. Please observe the information in the manual for the particular interface module.

Unlike the 1 x 32-channel module configuration, each of the four submodules has a freely assignable start address.

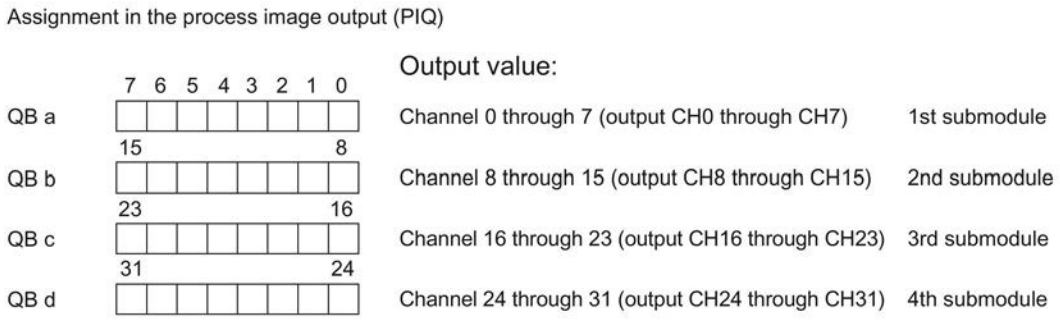

Figure 4-2 Address space for configuration as 4 x 8-channel DQ 32x24VDC/0.5A BA S

Address space for configuration as 1 x 32-channel DQ 32x24VDC/0.5A BA MSO

For the configuration as a 1 x 32-channel module (module-internal Shared Output, MSO), channels 0 to 31 of the module are copied to multiple submodules. Channels 0 to 31 are then available with identical values in various submodules. These submodules can be assigned to up to four IO controllers when the module is used in a shared device:

- The IO controller to which submodule 1 is assigned has write access to outputs 0 to 31.
- The IO controllers to which submodule 2, 3, or 4 is assigned have read access to outputs 0 to 31.

The number of usable IO controllers depends on the interface module used. Please observe the information in the manual for the particular interface module.

Value status (Quality Information, QI)

The meaning of the value status depends on the submodule involved.

For the 1st submodule (=basic submodule), the value status 1 indicates that the output value specified by the user program is actually output at the module terminal.

Possible causes for value status = 0:

- Value is incorrect, for example, because the supply voltage is missing.
- IO controller of the basic submodule is in STOP mode.

For the 2nd to 4th submodule (=MSO submodule), the value status 1 indicates that the output value specified by the user program is actually output at the module terminal.

Possible causes for value status = 0:

- Value is incorrect, for example, because the supply voltage is missing.
- IO controller of the basic submodule is in STOP mode.
- The basic submodule is not yet configured.

The figure below shows the assignment of the address space for submodules 1 and 2.

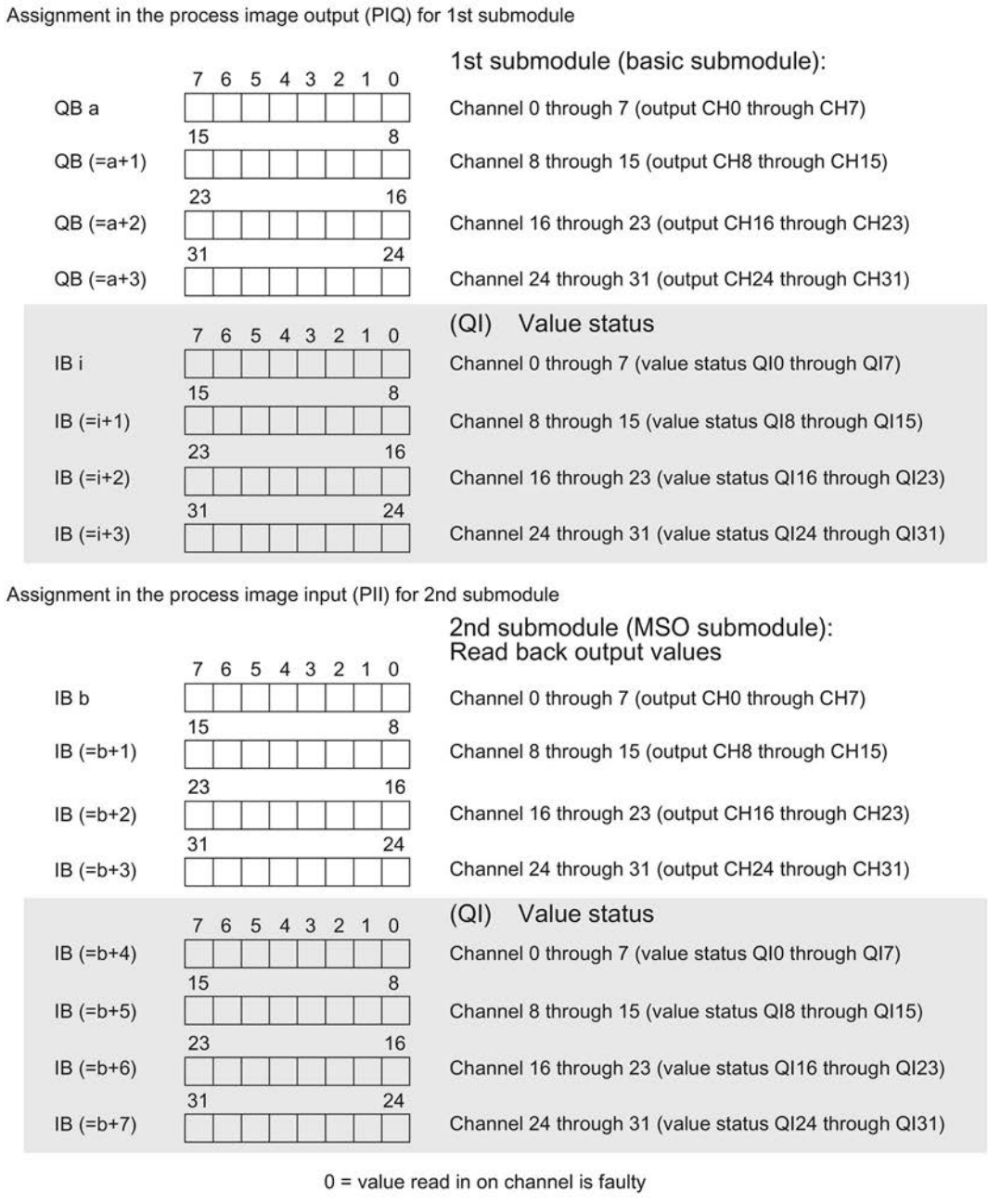

Figure 4-3 Address space for configuration as 1 x 32-channel DQ 32x24VDC/0.5A BA MSO with value status

The figure below shows the assignment of the address space with submodules 3 and 4.

Assignment in the process image input (PII) for 3rd and 4th submodule

	7 6 5 4 3 2 1 0	3rd submodule (MSO submodule): Read back output values
IB c		Channel 0 through 7 (output CH0 through CH7)
IB (=c+1)	15 … 8	Channel 8 through 15 (output CH8 through CH15)
IB (=c+2)	23 … 16	Channel 16 through 23 (output CH16 through CH23)
IB (=c+3)	31 … 24	Channel 24 through 31 (output CH24 through CH31)
	7 6 5 4 3 2 1 0	(QI) Value status
IB (=c+4)		Channel 0 through 7 (value status QI0 through QI7)
IB (=c+5)	15 … 8	Channel 8 through 15 (value status QI8 through QI15)
IB (=c+6)	23 … 16	Channel 16 through 23 (value status QI16 through QI23)
IB (=c+7)	31 … 24	Channel 24 through 31 (value status QI24 through QI31)
	7 6 5 4 3 2 1 0	4th submodule (MSO submodule): Read back output values
IB d		Channel 0 through 7 (output CH0 through CH7)
IB (=d+1)	15 … 8	Channel 8 through 15 (output CH8 through CH15)
IB (=d+2)	23 … 16	Channel 16 through 23 (output CH16 through CH23)
IB (=d+3)	31 … 24	Channel 24 through 31 (output CH24 through CH31)
	7 6 5 4 3 2 1 0	(QI) Value status
IB (=d+4)		Channel 0 through 7 (value status QI0 through QI7)
IB (=d+5)	15 … 8	Channel 8 through 15 (value status QI8 through QI15)
IB (=d+6)	23 … 16	Channel 16 through 23 (value status QI16 through QI23)
IB (=d+7)	31 … 24	Channel 24 through 31 (value status QI24 through QI31)

0 = value read in on channel is faulty

Figure 4-4 Address space for configuration as 1 x 32-channel DQ 32x24VDC/0.5A BA MSO with value status

Reference

You can find information on the Shared Input/Output (MSI/MSO) function in the section Module-Internal Shared Input/Output (MSI/MSO) of the PROFINET with STEP 7 V13 (https://support.industry.siemens.com/cs/ww/en/view/49948856) function manual.

Diagnostics alarms 5

The module has no selectable diagnostics. Diagnostics alarms, for example, cannot be output with STEP 7 (TIA Portal).

5.1 Status and error displays

LED displays

The figure below shows you the LED displays (status and error displays) of the DQ 32x24VDC/0.5A BA.

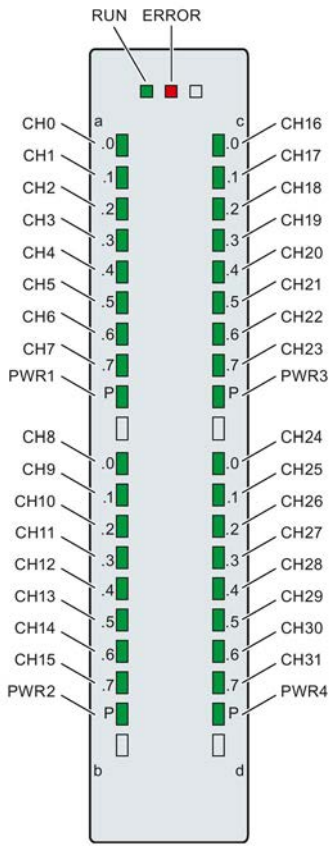

Figure 5-1 LED displays of the module DQ 32x24VDC/0.5A BA

Meaning of the LED displays

The tables below explain the meaning of the status and error displays.

LED RUN/ERROR

Table 5- 1 RUN/ERROR status and error displays

LED		Meaning	Remedy
RUN	ERROR		
□ Off	□ Off	Voltage missing or too low at backplane bus.	• Switch on the CPU and/or the system power supply modules. • Verify that the U connectors are inserted. • Check to see if too many modules are inserted.
☼ Flashes	□ Off	Module is starting up.	---
■ On	□ Off	Module is ready.	
☼ Flashes	☼ Flashes	Hardware defective.	Replace the module.

LED PWR1/PWR2/PWR3/PWR4

Table 5- 2 PWR1/PWR2/PWR3/PWR4 status display

LED PWRx	Meaning	Remedy
□ Off	Supply voltage L+ too low or missing.	Check the L+ supply voltage.
■ On	Supply voltage L+ is present and OK.	---

LED CHx

Table 5- 3 CHx status display

LED CHx	Meaning	Remedy
□ Off	0 = Status of the output signal.	---
■ On	1 = Status of the output signal.	---

Technical specifications 6

Technical specifications of the DQ 32x24VDC/0.5 A BA

	6ES7522-1BL10-0AA0
General information	
Product type designation	DQ 32x24VDC/0,5A BA
Hardware functional status	FS01
Firmware version	V1.0.0
• FW update possible	Yes
Product function	
I&M data	Yes; I&M0 to I&M3
Engineering with	
STEP 7 TIA Portal can be configured/integrated as of version	V13 / V13
STEP 7 can be configured/integrated as of version	V5.5 SP3 / -
PROFIBUS as of GSD version/GSD revision	V1.0 / V5.1
PROFINET as of GSD version/GSD revision	V2.3 / -
Operating mode	
DQ	Yes
DQ with energy-saving function	No
PWM	No
Oversampling	No
MSO	Yes
Supply voltage	
Rated value (DC)	24 V
Valid range, low limit (DC)	20.4 V
Valid range, high limit (DC)	28.8 V
Reverse polarity protection	Yes; through internal protection with 7 A per group
Input current	
Current consumption, max.	60 mA
Output voltage	
Rated value (DC)	24 V
Power	
Power consumption from the backplane bus	1.15 W
Power loss	
Power loss, typ.	3.8 W

	6ES7522-1BL10-0AA0
Digital outputs	
Number of outputs	32
Sourcing output	Yes
Short-circuit protection	Yes
• Response threshold, typ.	1 A
Limitation of inductive shutdown voltage to	L+ (-53 V)
Control of a digital input	Yes
Switching capacity of outputs	
With resistive load, max.	0.5 A
With lamp load, max.	5 W
Load resistance range	
Low limit	48 Ω
High limit	12 kΩ
Output voltage	
For signal "1", min.	L+ (-0.8 V)
Output current	
For signal "1" rated value	0.5 A
For signal "1" permitted range, max.	0.5 A
For signal "0" residual current, max.	0.5 mA
Output delay with resistive load	
"0" to "1", max.	100 µs
"1" to "0", max.	500 µs
Parallel connection of two outputs	
For logic operations	Yes
For increased performance	No
For redundant control of a load	Yes
Switching frequency	
With resistive load, max.	100 Hz
With inductive load, max.	0.5 Hz; according to IEC 60947-5-1, DC-13
With lamp load, max.	10 Hz
Total current of outputs	
Current per channel, max.	0.5 A; see additional description in the manual
Current per group, max.	4 A; see additional description in the manual
Current per module, max.	16 A; see additional description in the manual
Cable length	
shielded, max.	1000 m
unshielded, max.	600 m
Isochronous mode	
Isochronous mode (application synchronized up to terminal)	No

	6ES7522-1BL10-0AA0
Interrupts/diagnostics/status information	
Diagnostics function	No
Substitute values can be applied	No
Interrupts	
Diagnostic interrupt	No
Diagnostics alarms	
Monitoring of supply voltage	No
Wire break	No
Short-circuit	No
Group error	No
Diagnostics indicator LED	
RUN LED	Yes; green LED
ERROR LED	Yes; red LED
Monitoring of supply voltage (PWR LED)	Yes; green LED
Channel status display	Yes; green LED
For channel diagnostics	No
For module diagnostics	No
Electrical isolation	
Electrical isolation of channels	
Between the channels	No
Between the channels, in groups of	8
Between the channels and backplane bus	Yes
Insulation	
Insulation tested with	707 V DC (type test)
Distributed operation	
Prioritized startup	Yes
Dimensions	
Width	25 mm
Height	147 mm
Depth	129 mm
Weights	
Weight, approx.	280 g
Miscellaneous	
Note:	Delivery includes 40-pin push-in front connector

Power reduction (derating) to aggregate current of outputs (per group)

The following graphs show the loading capacity of the outputs in relation to the mounting position of the S71500 automation system/ET 200MP distributed I/O system and the ambient temperature.

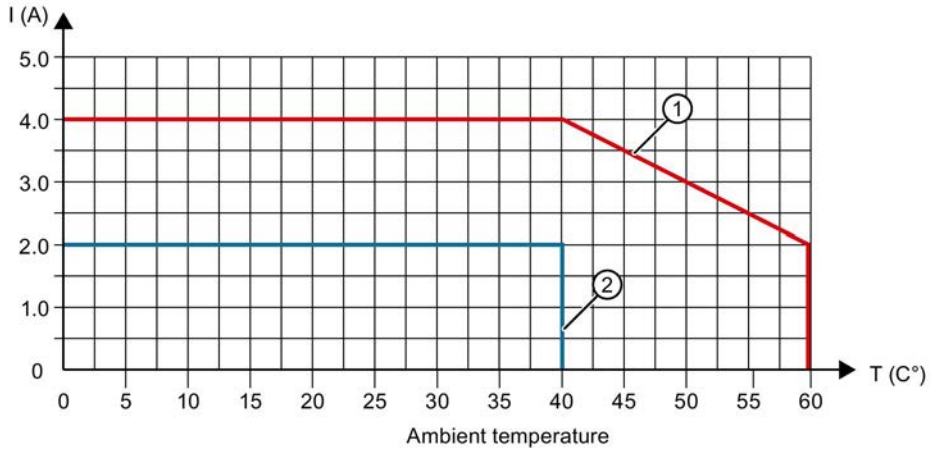

① Horizontal mounting of the system

② Vertical mounting of the system

Figure 6-1 Details on aggregate current of outputs (per group)

Dimensional drawing

A

The dimensional drawing of the module on the mounting rail, as well as a dimensional drawing with open front cover, are provided in this appendix. Always observe the specified dimensions for installation in cabinets, control rooms, etc.

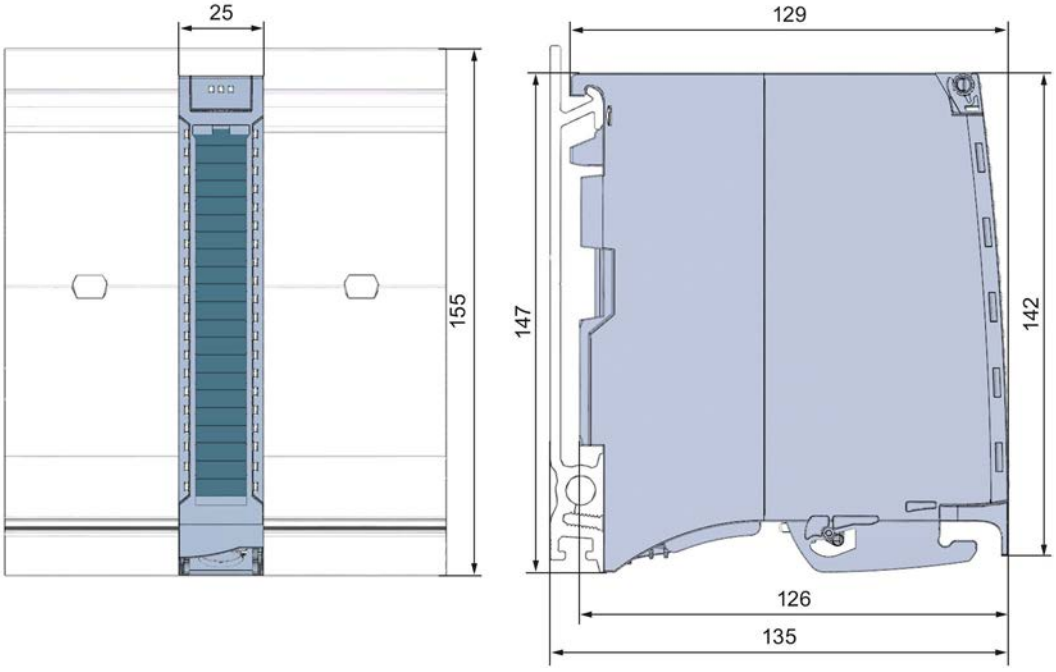

Figure A-1 Dimensional drawing of the DQ 32x24VDC/0.5A BA module

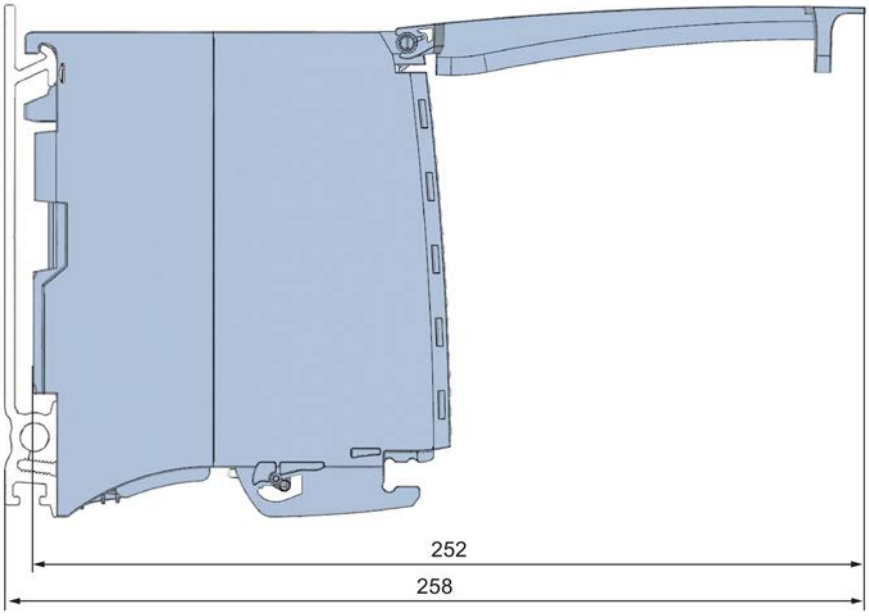

Figure A-2 Dimensional drawing of the DQ 32x24VDC/0.5A BA module, side view with open front cover

SIEMENS

Manual

SIMATIC

S7-1500 / ET 200MP

Digital output module
DQ 32x24VDC/0.5A HF (6ES7522-1BL01-0AB0)

Edition 06/2018

support.industry.siemens.com

SIEMENS

SIMATIC

S7-1500/ET 200MP Digital output module DQ 32x24VDC/0.5A HF (6ES7522-1BL01-0AB0)

Manual

Preface

Documentation guide 1

Product overview 2

Wiring 3

Parameters/address space 4

Interrupts/diagnostics alarms 5

Technical specifications 6

Dimensional drawing A

Parameter data records B

06/2018

A5E35683508-AC

Legal information

Warning notice system

This manual contains notices you have to observe in order to ensure your personal safety, as well as to prevent damage to property. The notices referring to your personal safety are highlighted in the manual by a safety alert symbol, notices referring only to property damage have no safety alert symbol. These notices shown below are graded according to the degree of danger.

⚠ DANGER

indicates that death or severe personal injury **will** result if proper precautions are not taken.

⚠ WARNING

indicates that death or severe personal injury **may** result if proper precautions are not taken.

⚠ CAUTION

indicates that minor personal injury can result if proper precautions are not taken.

NOTICE

indicates that property damage can result if proper precautions are not taken.

If more than one degree of danger is present, the warning notice representing the highest degree of danger will be used. A notice warning of injury to persons with a safety alert symbol may also include a warning relating to property damage.

Qualified Personnel

The product/system described in this documentation may be operated only by **personnel qualified** for the specific task in accordance with the relevant documentation, in particular its warning notices and safety instructions. Qualified personnel are those who, based on their training and experience, are capable of identifying risks and avoiding potential hazards when working with these products/systems.

Proper use of Siemens products

Note the following:

⚠ WARNING

Siemens products may only be used for the applications described in the catalog and in the relevant technical documentation. If products and components from other manufacturers are used, these must be recommended or approved by Siemens. Proper transport, storage, installation, assembly, commissioning, operation and maintenance are required to ensure that the products operate safely and without any problems. The permissible ambient conditions must be complied with. The information in the relevant documentation must be observed.

Trademarks

All names identified by ® are registered trademarks of Siemens AG. The remaining trademarks in this publication may be trademarks whose use by third parties for their own purposes could violate the rights of the owner.

Disclaimer of Liability

We have reviewed the contents of this publication to ensure consistency with the hardware and software described. Since variance cannot be precluded entirely, we cannot guarantee full consistency. However, the information in this publication is reviewed regularly and any necessary corrections are included in subsequent editions.

Siemens AG
Division Digital Factory
Postfach 48 48
90026 NÜRNBERG
GERMANY

A5E35683508-AC
℗ 08/2018 Subject to change

Copyright © Siemens AG 2015 - 2018.
All rights reserved

Preface

Purpose of the documentation

This manual supplements the system manual S7-1500/ET 200MP (https://support.industry.siemens.com/cs/ww/en/view/59191792).

Functions that relate in general to the systems are described in this system manual.

The information provided in this manual and in the system/function manuals supports you in commissioning the systems.

Changes compared to previous version

Compared to the previous version, this manual contains the following change:

- New licensing conditions and copyright information of the Open Source Software
- The module features a switching cycle counter as of firmware version V1.1.0.

Conventions

The term "CPU" is used in this manual both for the CPUs of the S7-1500 automation system and for interface modules of the ET 200MP distributed I/O system.

Please also observe notes marked as follows:

Note

A note contains important information on the product described in the documentation, on the handling of the product or on the section of the documentation to which particular attention should be paid.

Recycling and disposal

For environmentally friendly recycling and disposal of your old equipment, contact a certified electronic waste disposal company and dispose of the equipment according to the applicable regulations in your country.

Security information

Siemens provides products and solutions with industrial security functions that support the secure operation of plants, systems, machines and networks.

In order to protect plants, systems, machines and networks against cyber threats, it is necessary to implement – and continuously maintain – a holistic, state-of-the-art industrial security concept. Siemens' products and solutions constitute one element of such a concept.

Customers are responsible for preventing unauthorized access to their plants, systems, machines and networks. Such systems, machines and components should only be connected to an enterprise network or the internet if and to the extent such a connection is necessary and only when appropriate security measures (e.g. firewalls and/or network segmentation) are in place.

For additional information on industrial security measures that may be implemented, please visit (https://www.siemens.com/industrialsecurity).

Siemens' products and solutions undergo continuous development to make them more secure. Siemens strongly recommends that product updates are applied as soon as they are available and that the latest product versions are used. Use of product versions that are no longer supported, and failure to apply the latest updates may increase customers' exposure to cyber threats.

To stay informed about product updates, subscribe to the Siemens Industrial Security RSS Feed under (https://www.siemens.com/industrialsecurity).

Open Source Software

Open-source software is used in the firmware of the I/O modules. Open Source Software is provided free of charge. We are liable for the product described, including the open-source software contained in it, pursuant to the conditions applicable to the product. Siemens accepts no liability for the use of the open source software over and above the intended program sequence, or for any faults caused by modifications to the software.

For legal reasons, we are obliged to publish the original text of the license conditions and copyright notices. Please read the information relating to this on the Internet (https://support.industry.siemens.com/cs/ww/en/view/109757558).

Table of contents

Preface 3

1 Documentation guide 6

2 Product overview 10

2.1 Properties 10

2.2 Functions 13

2.2.1 Switching cycle counter 13

3 Wiring 15

4 Parameters/address space 17

4.1 Parameters 17

4.2 Description of parameters 19

4.3 Address space 20

5 Interrupts/diagnostics alarms 26

5.1 Status and error displays 26

5.2 Interrupts 28

5.3 Diagnostics alarms 29

6 Technical specifications 30

A Dimensional drawing 35

A.1 Dimensional drawing 35

B Parameter data records 37

B.1 Parameter assignment 37

B.2 Structure of parameter data sets DS 64 - 95 39

B.3 Structure of data set DS 129 40

B.4 Structure of data set DS 130 42

B.5 Structure of data set DS 131 44

Documentation guide 1

The documentation for the SIMATIC S7-1500 automation system and the SIMATIC ET 200MP distributed I/O system is arranged into three areas.
This arrangement enables you to access the specific content you require.

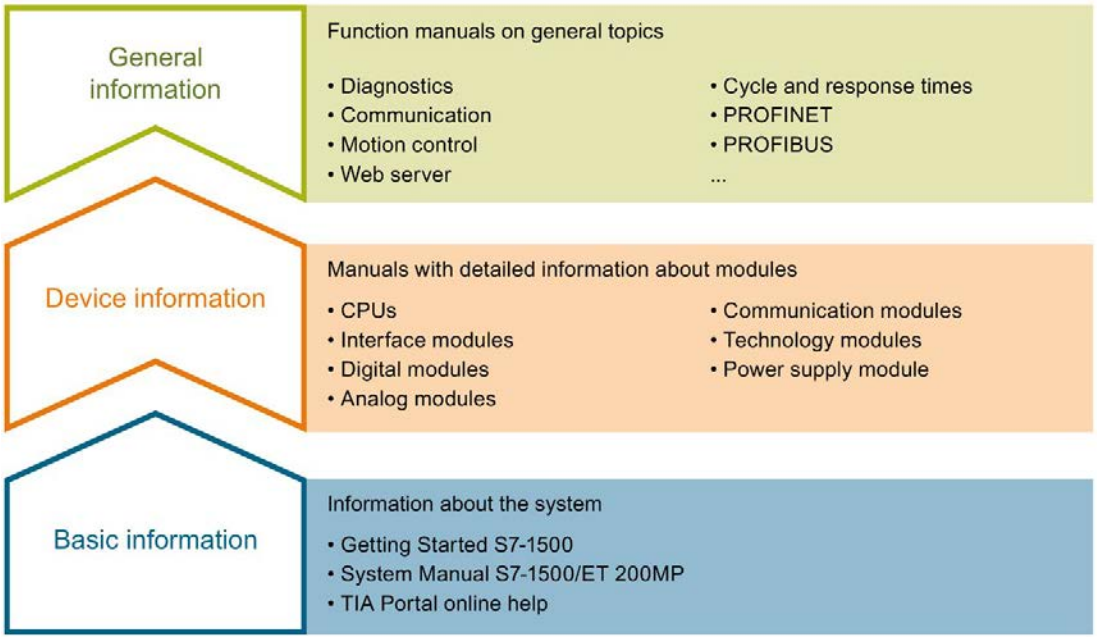

Basic information

The System Manual and Getting Started describe in detail the configuration, installation, wiring and commissioning of the SIMATIC S7-1500 and ET 200MP systems. The STEP 7 online help supports you in the configuration and programming.

Device information

Product manuals contain a compact description of the module-specific information, such as properties, wiring diagrams, characteristics and technical specifications.

General information

The function manuals contain detailed descriptions on general topics regarding the SIMATIC S7-1500 and ET 200MP systems, e.g. diagnostics, communication, motion control, Web server, OPC UA.

You can download the documentation free of charge from the Internet (https://support.industry.siemens.com/cs/ww/en/view/109742691).

Changes and supplements to the manuals are documented in a Product Information.

You can download the product information free of charge from the Internet (https://support.industry.siemens.com/cs/us/en/view/68052815).

Manual Collection S7-1500/ET 200MP

The Manual Collection contains the complete documentation on the SIMATIC S7-1500 automation system and the ET 200MP distributed I/O system gathered together in one file.

You can find the Manual Collection on the Internet (https://support.industry.siemens.com/cs/ww/en/view/86140384).

SIMATIC S7-1500 comparison list for programming languages

The comparison list contains an overview of which instructions and functions you can use for which controller families.

You can find the comparison list on the Internet (https://support.industry.siemens.com/cs/ww/en/view/86630375).

"mySupport"

With "mySupport", your personal workspace, you make the best out of your Industry Online Support.

In "mySupport", you can save filters, favorites and tags, request CAx data and compile your personal library in the Documentation area. In addition, your data is already filled out in support requests and you can get an overview of your current requests at any time.

You must register once to use the full functionality of "mySupport".

You can find "mySupport" on the Internet (https://support.industry.siemens.com/My/ww/en).

"mySupport" - Documentation

In the Documentation area in "mySupport" you can combine entire manuals or only parts of these to your own manual.
You can export the manual as PDF file or in a format that can be edited later.

You can find "mySupport" - Documentation on the Internet (http://support.industry.siemens.com/My/ww/en/documentation).

"mySupport" - CAx data

In the CAx data area in "mySupport", you can access the current product data for your CAx or CAe system.

You configure your own download package with a few clicks.

In doing so you can select:

- Product images, 2D dimension drawings, 3D models, internal circuit diagrams, EPLAN macro files
- Manuals, characteristics, operating manuals, certificates
- Product master data

You can find "mySupport" - CAx data on the Internet (http://support.industry.siemens.com/my/ww/en/CAxOnline).

Application examples

The application examples support you with various tools and examples for solving your automation tasks. Solutions are shown in interplay with multiple components in the system - separated from the focus on individual products.

You will find the application examples on the Internet (https://support.industry.siemens.com/sc/ww/en/sc/2054).

TIA Selection Tool

With the TIA Selection Tool, you can select, configure and order devices for Totally Integrated Automation (TIA).
This tool is the successor of the SIMATIC Selection Tool and combines the known configurators for automation technology into one tool.
With the TIA Selection Tool, you can generate a complete order list from your product selection or product configuration.

You can find the TIA Selection Tool on the Internet (http://w3.siemens.com/mcms/topics/en/simatic/tia-selection-tool).

SIMATIC Automation Tool

You can use the SIMATIC Automation Tool to perform commissioning and maintenance activities simultaneously on various SIMATIC S7 stations as a bulk operation independent of the TIA Portal.

General function overview:

- Network browsing and creation of a table showing the accessible devices in the network.
- Flashing of device LEDs or HMI display to locate a device
- Downloading of addresses (IP, subnet, gateway) to a device
- Downloading the PROFINET name (station name) to a device
- Placing a CPU in RUN or STOP mode
- Setting the time in a CPU to the current time of your PG/PC
- Downloading a new program to a CPU or an HMI device
- Downloading from CPU, downloading to CPU or deleting recipe data from a CPU
- Downloading from CPU or deleting data log data from a CPU
- Backup/restore of data from/to a backup file for CPUs and HMI devices
- Downloading service data from a CPU
- Reading the diagnostics buffer of a CPU
- Performing a CPU memory reset
- Resetting devices to factory settings
- Downloading a firmware update to a device

You can find the SIMATIC Automation Tool on the Internet (https://support.industry.siemens.com/cs/ww/en/view/98161300).

PRONETA

With SIEMENS PRONETA (PROFINET network analysis), you analyze the PROFINET network during commissioning. PRONETA features two core functions:

- The topology overview independently scans PROFINET network and all connected components.
- The IO check is a fast test of the wiring and the module configuration of a system.

You can find SIEMENS PRONETA on the Internet (https://support.industry.siemens.com/cs/ww/en/view/67460624).

SINETPLAN

SINETPLAN, the Siemens Network Planner, supports you in planning automation systems and networks based on PROFINET. The tool facilitates professional and predictive dimensioning of your PROFINET installation as early as in the planning stage. In addition, SINETPLAN supports you during network optimization and helps you to exploit network resources optimally and to plan reserves. This helps to prevent problems in commissioning or failures during productive operation even in advance of a planned operation. This increases the availability of the production plant and helps improve operational safety.

The advantages at a glance

- Network optimization thanks to port-specific calculation of the network load
- Increased production availability thanks to online scan and verification of existing systems
- Transparency before commissioning through importing and simulation of existing STEP 7 projects
- Efficiency through securing existing investments in the long term and optimal exploitation of resources

You can find SINETPLAN on the Internet (https://www.siemens.com/sinetplan).

Product overview

2

2.1 Properties

Article number

6ES7522-1BL01-0AB0

View of the module

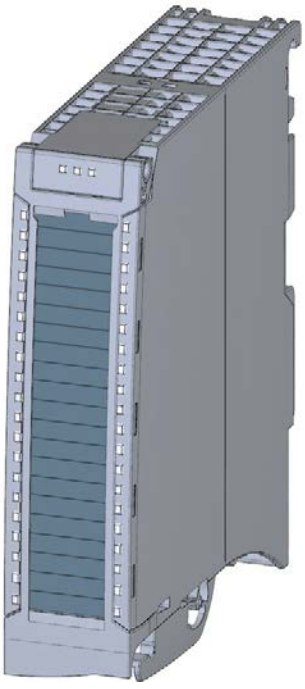

Figure 2-1 View of the DQ 32x24VDC/0.5A HF module

Properties

The module has the following technical properties:

- 32 DO; electrically isolated in groups of 8
- Rated output voltage 24 V DC
- Rated output current 0.5 A per channel
- Configurable substitute values (per channel)
- Configurable diagnostics (per channel)
- Suitable for solenoid valves, DC contactors, and indicator lights
- Switching cycle counter for connected actuators, e.g. solenoid valves
- Hardware compatible with digital output module:
  - DQ 16x24VDC/0.5A ST (6ES7522-1BH00-0AB0)
  - DQ 16x24VDC/0.5A HF (6ES7522-1BH01-0AB0)
  - DQ 32x24VDC/0.5A ST (6ES7522-1BL00-0AB0)

The module supports the following functions:

Table 2- 1 Version dependencies of the module functions

Function	Firmware version of the module	Configuration software	
		STEP 7 (TIA Portal) as of V13, SP1 with HSP 0143	GSD file in STEP 7 (TIA Portal) V12 or higher, or STEP 7 V5.5 SP3 or higher
Firmware update	V1.0.0 or higher	X	--- / X
Identification data I&M0 to I&M3	V1.0.0 or higher	X	X
Parameter assignment in RUN	V1.0.0 or higher	X	X
Isochronous mode	V1.0.0 or higher	X	---
Module-internal Shared Output (MSO)	V1.0.0 or higher	X (PROFINET IO only)	X (PROFINET IO only)
Configurable submodules / submodules for Shared Device	V1.0.0 or higher	X (PROFINET IO only)	X (PROFINET IO only)
Switching cycle counter	V1.1.0 or higher	as of V15.0 with HSP0247 • PROFINET IO only • Central operation with a S7-1500 CPU is supported	X (PROFINET IO only)

You can configure the module with STEP 7 (TIA Portal) and with a GSD file.

Compatibility

The following table shows the compatibility of the modules and the dependencies between hardware functional status (FS) and firmware version (FW) used:

Hardware functional status	Firmware version	Note
FS01	V1.0.0	Upgrade to V1.1.0 not possible
FS02	V1.1.0	Upgrade and downgrade possible between V1.1.0 and higher

Accessories

The following accessories are supplied with the module and can also be ordered separately as spare parts:

- Labeling strips
- U connector
- Universal front cover

Other components

The following component must be ordered separately:

Front connectors, including potential jumpers and cable ties

You can find additional information on accessories in the system manual S7-1500/ET 200MP (https://support.industry.siemens.com/cs/ww/en/view/59191792).

2.2 Functions

2.2.1 Switching cycle counter

The function records the number of switching cycles of the output and thus the switching cycles of a connected actuator, such as those of solenoid valves. When the specified number of switching cycles is reached, the "Limit value warning" maintenance interrupt is triggered, provided it is configured and enabled. When replacing the actuator, you can reset the switching cycle counter from the user program.

When replacing modules, you have the option of pre-initializing the switching cycle counter from the user program.

Typical areas of application:

- Recording the number of switching cycles of the connected devices, e.g. solenoid valves or load contactors
- Predictive maintenance

Advantages

- You configure this function instead of programming.
- "Monitoring" of each individual channel is possible. You can select which outputs are "monitored".
- You can adapt the plant configuration flexibly and individually.
- Easy to service and maintain. You can enable and disable the switching cycle counter via the user program.
- Increase in plant availability. You can schedule actuator replacement in advance for the next maintenance cycle.

Requirement

Firmware version as of V1.1.0 of the module.

Configuration

You configure the switching cycle counter with the following parameters:

- Switching cycle counter enabled/disabled
- Trigger maintenance interrupt when the limit is reached
- Set limit for maintenance interrupt

How it works

The module counts the switching cycles by evaluating the rising edges of an output signal. If the module detects a rising edge, the switching cycle counter (24-bit) for the respective channel is incremented. After an overflow of the switching cycle counter, it starts again with 0.

If you activate the "Maintenance switching cycles" parameter, the "Limit warning" of the maintenance interrupt is triggered when the limit is exceeded. Alternatively, activate the maintenance interrupt in the parameter data sets starting at DS 64.

The current counter states are stored on the module cyclically (approx. every 20 seconds) and retentively. The switching cycle counters are reset each time the module is restarted (power off/on).

You activate the function with the "Switching cycle counter" parameter or in the parameter data sets starting at DS 64.

You can read the current counter states with data set DS 129. Data set DS 129 contains the counter status for each channel in UDINT format.

You can read the limits for each channel in UDINT format with data set DS 130.

Data set DS 131 enables you to overwrite the current counter value for each switching cycle counter.

You can set a limit for each switching cycle counter with the "Switching cycle limit" parameter or with data set DS 131.

Wiring

3

This section contains the block diagram of the module and outlines various wiring options.

You can find information on wiring the front connector, establishing a cable shield, etc. in the system manual S7-1500/ET 200MP (https://support.industry.siemens.com/cs/ww/en/view/59191792).

Wiring and block diagram

The example in the following figure shows the terminal assignment and the assignment of the channels to the addresses (output byte a to output byte d).

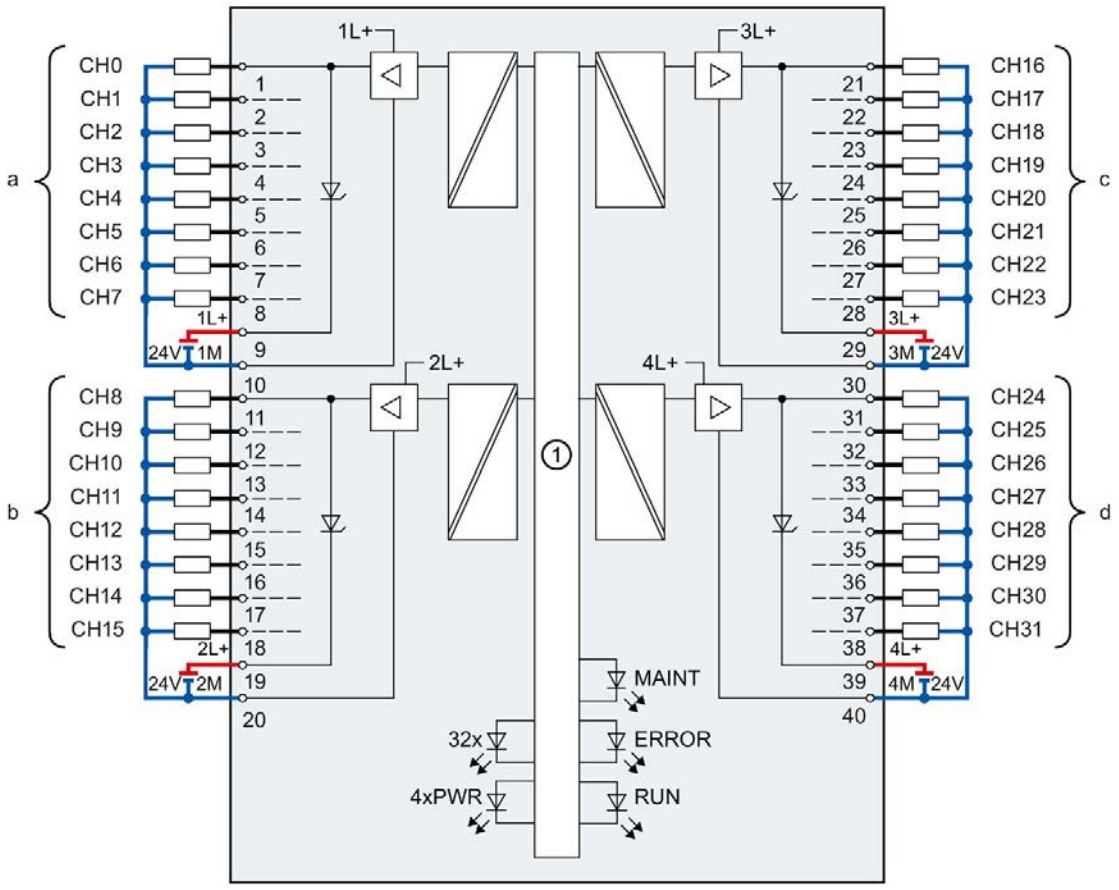

①	Backplane bus interface	MAINT	LED maintenance display (yellow)
xL+	Supply voltage 24 V DC	RUN	Status display LED (green)
xM	Ground	ERROR	Error display LED (red)
CHx	Channel or channel status LED (green/red)	PWR	POWER supply voltage LED (green)

Figure 3-1 Block diagram and terminal assignment

Note

When the 24 V supply voltage is switched on at each channel, there is a "1" signal at the module outputs for approx. 50 µs.

Tip: Using the potential jumpers

Use the potential jumpers supplied with the front connector if you want to connect the four load groups to the same potential (non-isolated). This helps you to avoid having to terminate two wires to one terminal.

Proceed as follows:

1. Connect the 24 V DC supply voltage to terminals 19 and 20.
2. Insert the potential jumpers between the following terminals:
   - 9 and 29 (L+)
   - 10 and 30 (M)
   - 19 and 39 (L+)
   - 20 and 40 (M).
3. Insert the jumpers between terminals 29 and 39, as well as 30 and 40.
4. Use the terminals 9 and 10 to loop the potential to the next module.

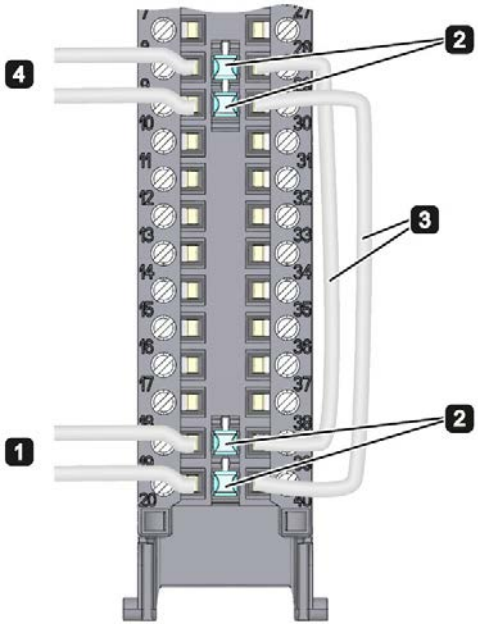

Figure 3-2 Using the potential jumpers

Note

Ensure that the maximum current load of 8 A per potential jumper is not exceeded.

Parameters/address space 4

4.1 Parameters

DQ 32x24VDC/0.5A HF parameters

When you assign the module parameters in STEP 7, you use various parameters to specify the module properties. The following table lists the configurable parameters. The effective range of the configurable parameters depends on the type of configuration. The following configurations are possible:

- Central operation with a S7-1500 CPU
- Distributed operation on PROFINET IO in an ET 200MP system
- Distributed operation on PROFIBUS DP in an ET 200MP system

For parameter assignment in the user program, the parameters are transferred to the module using the WRREC instruction (parameter assignment in RUN) and data sets; see section Parameter assignment (Page 37)

Table 4- 1 Configurable parameters and their defaults

Parameters	Range of values	Default setting	Parameter assignment in RUN	Scope with configuration software, e.g., STEP 7 (TIA Portal)	
				Integrated in the hardware catalog as of STEP 7, V13 SP1 or GSD file PROFINET IO	GSD file PROFIBUS DP
Diagnostics					
• No supply voltage L+	Yes/No	No	Yes	Channel*	Channel group (CH0 to CH7, CH8 to CH15, CH16 to CH23, CH24 to CH31)
• Short circuit to ground	Yes/No	No	Yes	Channel*	Channel group (CH0 to CH7, CH8 to CH15, CH16 to CH23, CH24 to CH31)
• Maintenance switching cycles	Yes/No	No	Yes	Channel (as of V15.0 with HSP0247)	---
• Switching cycle counter	Yes/No	No	Yes	Channel (as of V15.0 with HSP0247)	---

Parameters	Range of values	Default setting	Parameter assignment in RUN	Scope with configuration software, e.g., STEP 7 (TIA Portal)	
				Integrated in the hardware catalog as of STEP 7, V13 SP1 or GSD file PROFINET IO	GSD file PROFIBUS DP
• Wire break	Yes/No	No	Yes	Channel*	Channel group (CH0 to CH7, CH8 to CH15, CH16 to CH23, CH24 to CH31)
Reaction to CPU STOP	• Turn off • Keep last value • Output substitute value 1	Turn off	Yes	Channel	Channel
Switching cycle limits					
Switching cycle limit	0 ... 16777214	0	Yes	Channel (as of V15.0 with HSP0247)	---

* If you enable diagnostics for multiple channels, you will receive an alarm surge on failure of the supply voltage because each enabled channel will detect this fault. You can prevent this message burst by assigning the diagnostics function to one channel only.

4.2 Description of parameters

No supply voltage

Enabling of the diagnostics, for lacking or insufficient supply voltage L+.

Short circuit to ground

Enabling of the diagnostics if a short-circuit of the actuator supply (CHx) to ground occurs.

Maintenance switching cycles

You use this parameter to enable the maintenance interrupt "Limit value warning" when the switching cycle limit is violated.

You configure the limit with the parameter "Switching cycle limit" for each channel CHx.

Switching cycle counter

Channel-by-channel enable of switching cycle counter (Page 13).

Wire break

Enabling of the diagnostics if the line to the actuator is broken.

Reaction to CPU STOP

Determines the reaction of the output when the CPU goes into the STOP state or when the connection to the CPU is interrupted.

Switching cycle limit

Defines the limit channel-by-channel. If this value is exceeded, the "Limit value warning" maintenance interrupt is signaled.

Enter an integer value between 0 and 16777214. Refer to the data sheet of the connected actuator. We recommend that you do not enter this maximum value, but instead set it to 80% or 90%, for example, so that you have enough time to replace the actuator as a preventive measure.

4.3 Address space

The module can be configured differently in STEP 7; see following table. Depending on the configuration, additional/different addresses are assigned in the process image of the outputs/inputs.

Configuration options of DQ 32x24VDC/0.5A HF

You can configure the module with STEP 7 (TIA Portal) or with a GSD file.

When you configure the module by means of the GSD file, the configurations are available under different abbreviations/module names.

The following configurations are possible:

Table 4- 2 Configuration options

Configuration	Abbreviation/module name in the GSD file	Configuration software, e.g., STEP 7 (TIA Portal)	
		Integrated in the hardware catalog STEP 7 (TIA Portal) as of V13 SP1 with HSP 0143	GSD file in STEP 7 (TIA Portal) V12 or higher or STEP 7 V5.5 SP3 or higher
1 x 32-channel without value status	DQ 32x24VDC/0.5A HF	X	X
1 x 32-channel with value status	DQ 32x24VDC/0.5A HF QI	X	X
4 x 8-channel without value status	DQ 32x24VDC/0.5A HF S	X (PROFINET IO only)	X (PROFINET IO only)
4 x 8-channel with value status	DQ 32x24VDC/0.5A HF S QI	X (PROFINET IO only)	X (PROFINET IO only)
1 x 32-channel with value status for module-internal Shared Output with up to 4 submodules	DQ 32x24VDC/0.5A HF MSO	X (PROFINET IO only)	X (PROFINET IO only)

Note

Substitute value behavior in shared device operation with the following configuration (V1.0 only):

- **4 x 8-channel with / without value status**

If the system is in shared device mode and one of the IO controllers involved goes into STOP or fails due to a communication failure, for example, all submodules of the output module perform the configured substitute value reaction (e.g. shutdown).

This means that even when only one IO controller fails, the other IO controllers associated with the shared device no longer control the assigned submodule of the output module.

Value status (Quality Information, QI)

The value status is always activated for the following module names:

- DQ 32x24VDC/0.5A HF QI
- DQ 32x24VDC/0.5A HF S QI
- DQ 32x24VDC/0.5A HF MSO

An additional bit is assigned to each channel for the value status. The bit for the value status indicates if the output value specified by the user program is actually pending at the module terminal (0 = value is incorrect).

Note

The maintenance interrupt "Limit value warning" has no effect on the value status.

Address space for configuration as 32-channel DQ 32x24VDC/0.5A HF

The following figure shows the assignment of the address space for the configuration as a 32-channel module with value status. You can freely assign the start address for the module. The addresses of the channels are derived from the start address.

The letters "a to d" are printed onto the module. "QB a" stands for module start address output byte a.

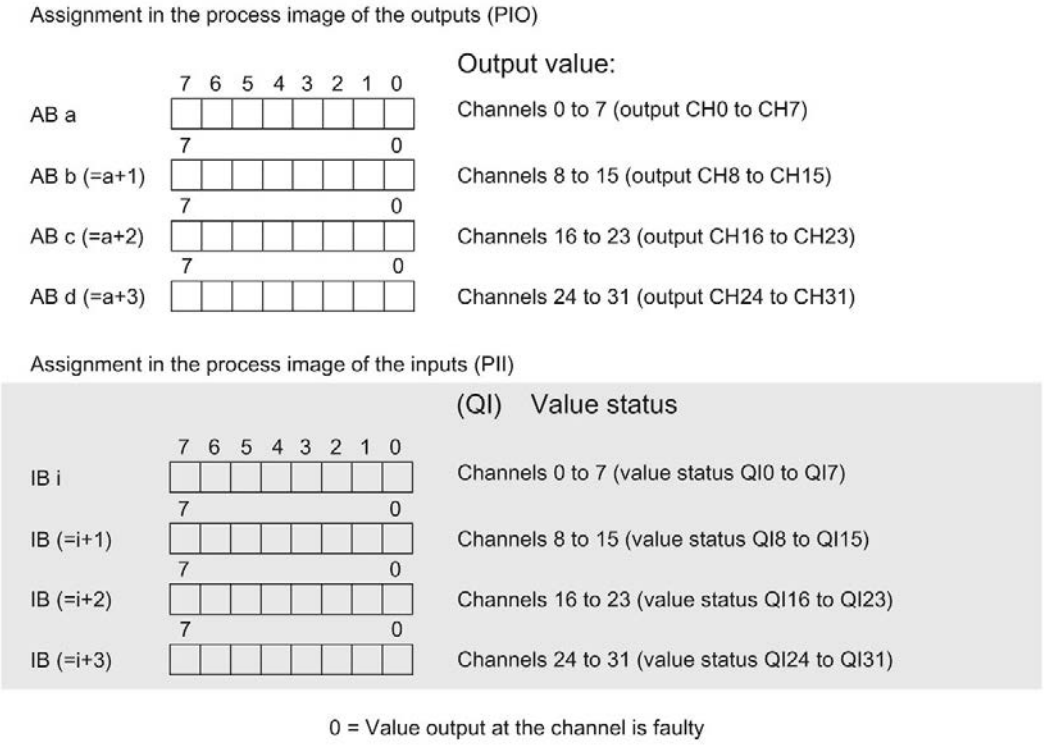

Figure 4-1 Address space for configuration as 32-channel DQ 32x24VDC/0.5A HF with value status

Address space for configuration as 4 x 8-channel DQ 32x24VDC/0.5A HF S QI

For the configuration as a 4 x 8-channel module, the channels of the module are divided into multiple submodules. The submodules can be assigned to different IO controllers when the module is used in a shared device.

The number of IO controllers depends on the interface module used. Please observe the information in the manual for the particular interface module.

Contrary to the 1 x 32-channel module configuration, each of the four submodules has a freely assignable start address. The addresses for the respective value status of a submodule can also be assigned by the user.

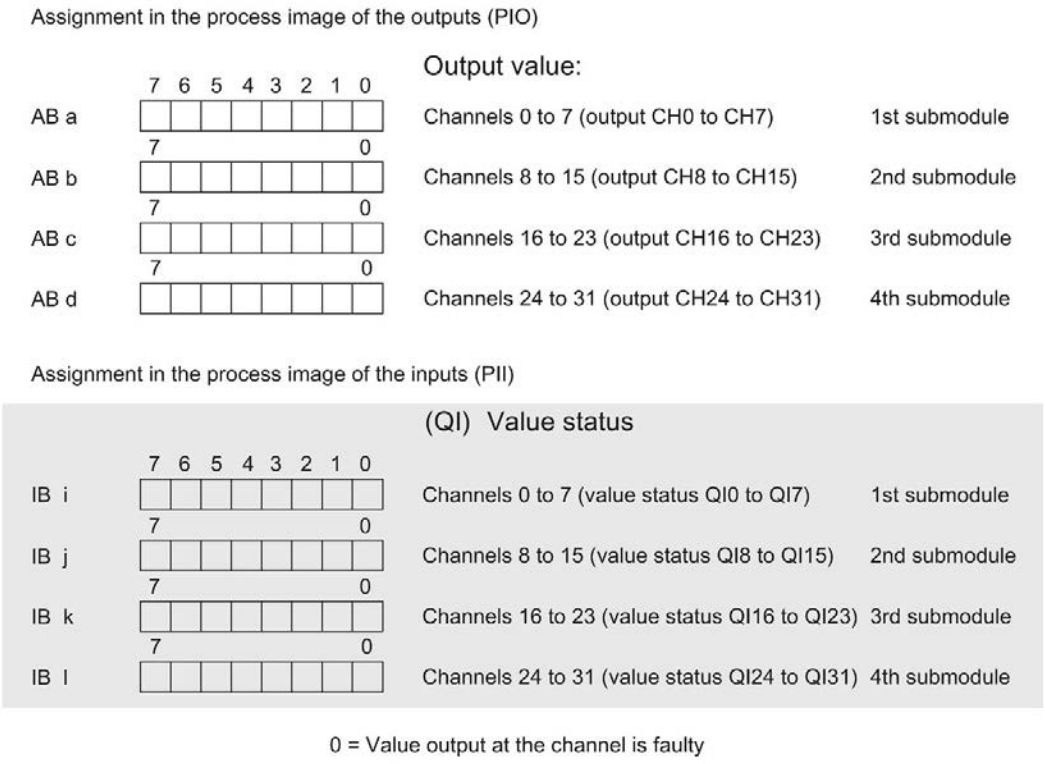

Figure 4-2 Address space for configuration as 4 x 8-channel DQ 32x24VDC/0.5A HF S QI with value status

Address space for configuration as 1 x 32-channel DQ 32x24VDC/0.5A HF MSO

For the configuration as a 1 x 32-channel module (module-internal Shared Output, MSO), channels 0 to 31 of the module are copied to multiple submodules. Channels 0 to 31 are then available with identical values in various submodules. These submodules can be assigned to up to four IO controllers when the module is used in a shared device:

- The IO controller to which submodule 1 is assigned has write access to outputs 0 to 31.
- The IO controllers to which submodule 2, 3, or 4 is assigned have read access to outputs 0 to 31.

The number of IO controllers depends on the interface module used. Observe the information in the manual for the particular interface module.

Value status (Quality Information, QI)

The meaning of the value status depends on the submodule on which it occurs.

For the first submodule (=basic submodule), the value status 0 indicates that the value is incorrect or that the IO controller of the basic submodule is in STOP state.

For 2nd to 4th submodule (=MSO submodule), the value status 0 indicates that the value is incorrect or one of the following errors has occurred:

- The basic submodule is not yet configured (not ready).
- The connection between the IO controller and the basic submodule has been interrupted.
- The IO controller of the basic submodule is in STOP or POWER OFF state.

The following figure shows the assignment of the address space for submodules 1 and 2 and the value status.

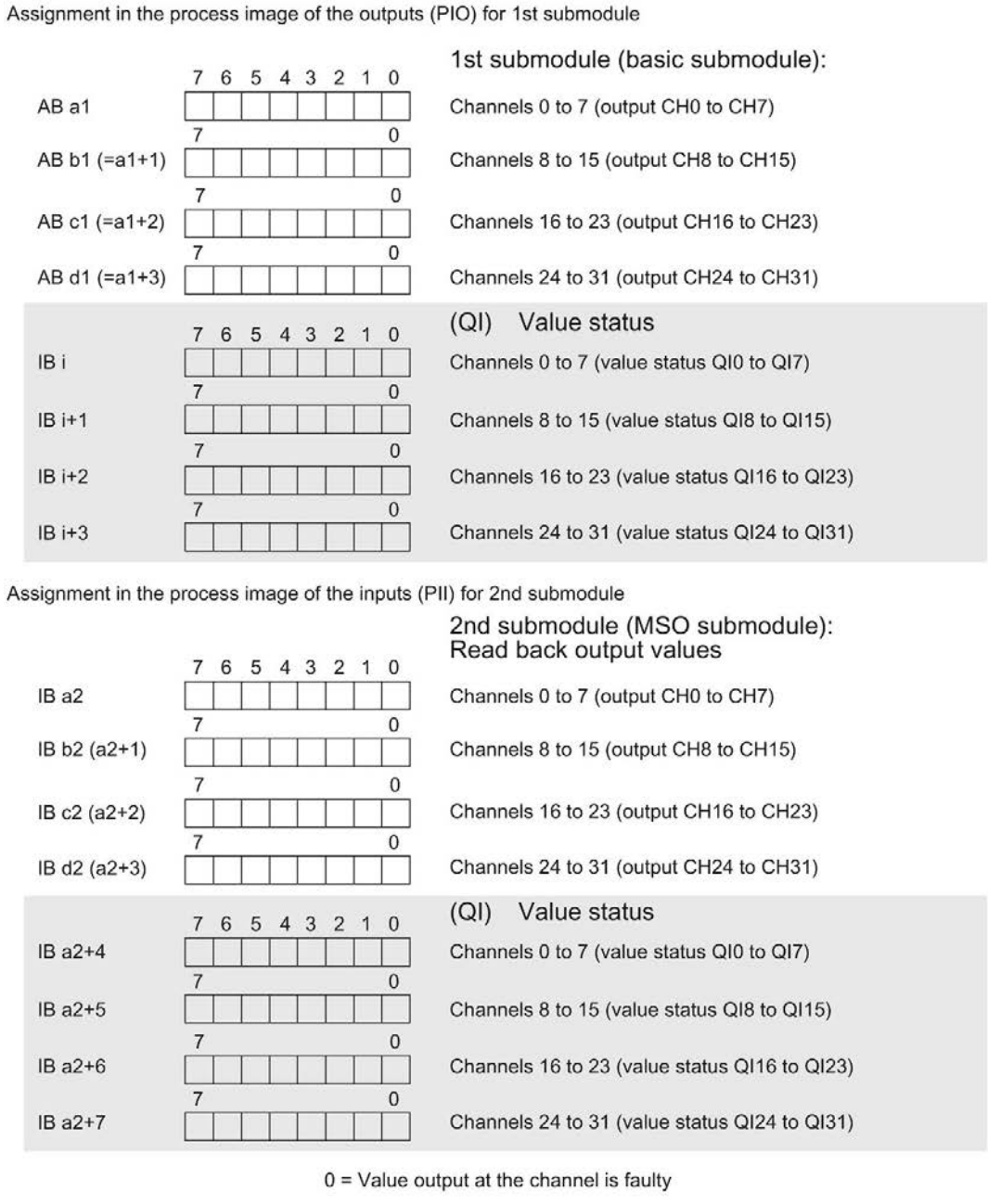

Figure 4-3 Address space for configuration as 1 x 32-channel DQ 32x24VDC/0.5A HF S MSO with value status

The following figure shows the assignment of the address space with submodules 3 and 4 and the value status.

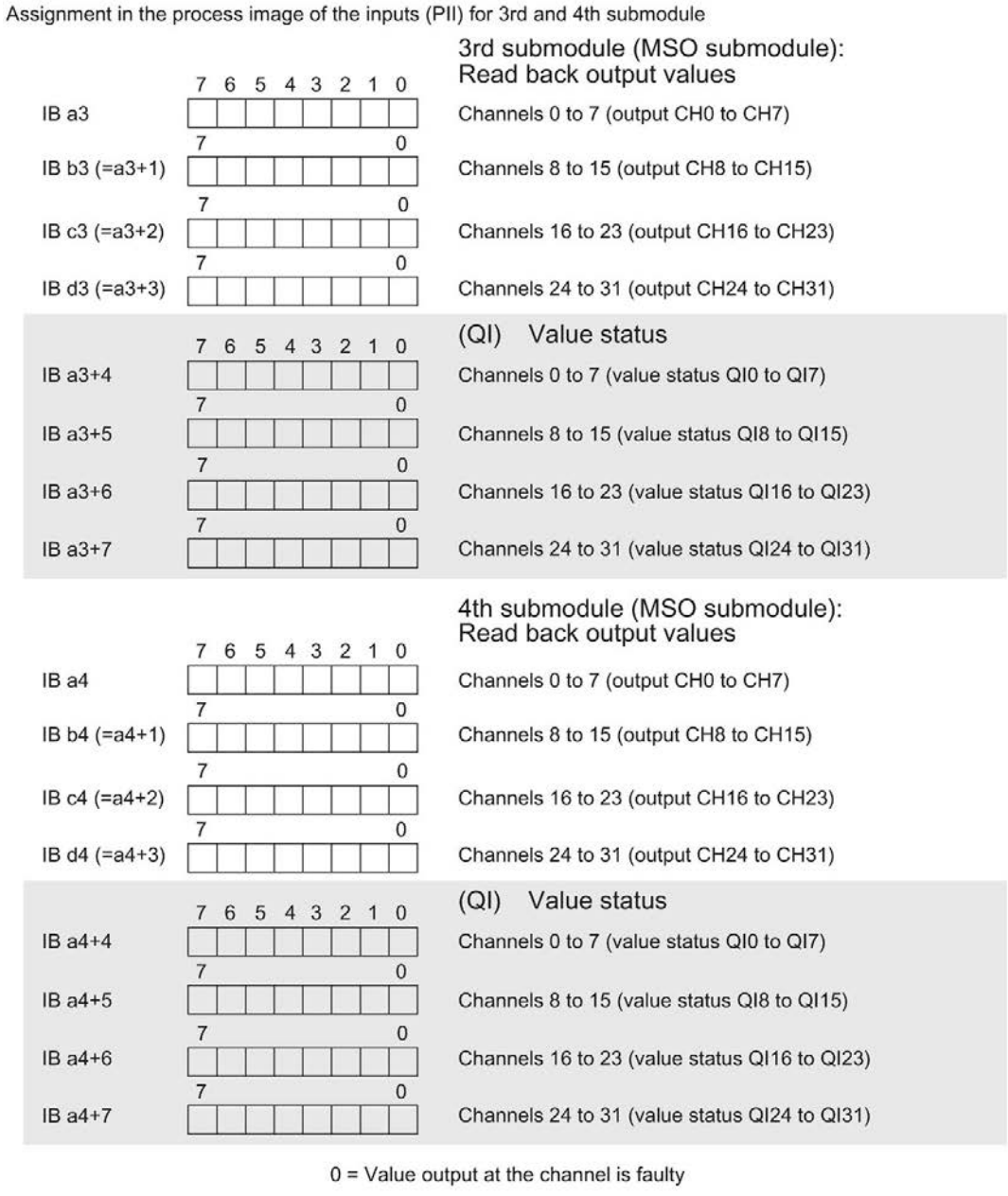

Figure 4-4 Address space for configuration as 1 x 32-channel DQ 32x24VDC/0.5A HF S MSO with value status

Reference

You can find information on the Shared Input/Output (MSI/MSO) function in the section Module-Internal Shared Input/Output (MSI/MSO) of the PROFINET with STEP 7 V13 (https://support.industry.siemens.com/cs/ww/en/view/49948856) function manual.

Interrupts/diagnostics alarms

5

5.1 Status and error displays

LED displays

The following figure shows the LED displays (status and error displays) of module.

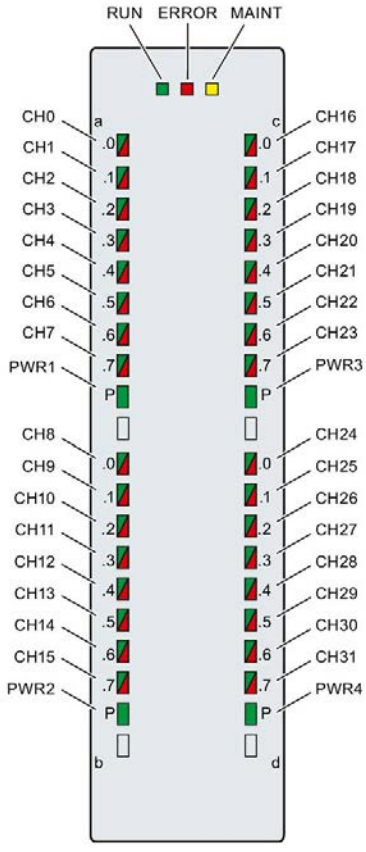

Figure 5-1 LED displays of the DQ 32x24VDC/0.5A HF module

Meaning of the LED displays

The tables below explain the meaning of the status and error displays. Remedial measures for diagnostic reports can be found in section Diagnostics alarms (Page 29).

RUN and ERROR LED

Table 5- 1 Status and error displays RUN and ERROR

LED		Meaning	Solution
RUN	ERROR		
Off	Off	Voltage missing or too low at backplane bus	• Switch on the CPU and/or the system power supply modules. • Verify that the U connectors are inserted. • Check to see if too many modules are inserted.
Flashes	Off	The module starts and flashes until the valid parameter assignment is set.	---
On	Off	Module is configured	
On	Flashes	Indicates module errors (at least one error at one channel, e.g., short-circuit to ground).	Evaluate the diagnostics data and eliminate the error (e.g., check the cables).
Flashes	Flashes	Hardware defective	Replace the module.

LED MAINT

Table 5- 2 MAINT status display

LED MAINT	Meaning	Solution
Off	0 = No maintenance interrupt is pending.	---
On	1 = The maintenance interrupt "Limit value warning" is pending.	---

LED PWR1/PWR2/PWR3/PWR4

Table 5- 3 PWR1/PWR2/PWR3/PWR4 status display

LED PWRx	Meaning	Solution
Off	Supply voltage L+ too low or missing	Check the L+ supply voltage.
On	Supply voltage L+ is present and OK	---

LED CHx

Table 5- 4 CHx status display

LED CHx	Meaning	Solution
□ Off	0 = Status of the output signal	---
■ On	1 = Status of the output signal	---
■ On	• Wire break or short-circuit to ground • Supply voltage L+ missing or too low	• Correct the process wiring • Check the supply voltage.

5.2 Interrupts

The digital output module DQ 32x24VDC/0.5A HF supports diagnostic interrupts and maintenance interrupts

For detailed information on the error event, refer to the diagnostic interrupt organization block with the "RALRM" instruction (read additional interrupt information) and to the STEP 7 online help.

Diagnostic interrupt

The module generates a diagnostic interrupt at the following events:

- No supply voltage L+
- Short circuit to ground
- Wire break
- Parameter assignment error

Maintenance interrupt

The module generates a maintenance interrupt at the following events:

- Limit value warning

5.3 Diagnostics alarms

Diagnostics alarms

A diagnostics alarm is generated and the ERROR LED flashes for each diagnostics event on the module. You can read the diagnostics alarms, for example, in the diagnostics buffer of the CPU. You can evaluate the error codes with the user program.

If the module is operated distributed with PROFIBUS DP in an ET 200MP system, you have the option to read out diagnostics data with the instruction RDREC or RD_REC using data record 0 and 1. The structure of the data records is available on the Internet in the "Manual for interface module IM 155-5 DP ST (6ES7155-5BA00-0AB0)".

Table 5- 5 Diagnostics alarms, their meaning and corrective measures

Diagnostics alarm	Error code	Meaning	Corrective measures
Short circuit to ground	1_H	Short-circuit or overload at the channel	Check the wiring/actuator. Check the ambient temperature.
Wire break*	6_H	Actuator circuit impedance too high.	Use different actuator type or wire differently, e.g. use lines with bigger cross-section
		Wire break between the module and actuator	Connect the cable
		Channel not connected (open)	• Disable diagnostics • Connect an actuator to a resistor in the load resistance range
Parameter assignment error	10_H	• The module cannot evaluate parameters for the channel • Incorrect parameter assignment	Correct the parameter assignment
Load voltage missing	11_H	Supply voltage L+ of the module is missing	Connect supply voltage L+ to module/channel
Limit value warning	17_H	The configured limit for switching cycles has been exceeded.	• Replace actuator as a precautionary measure • Reset counter with DS131

* Wire break is also reported for short-circuit of actuator supply to L+. This can lead to inappropriate diagnostics for redundant load control.

Technical specifications 6

Technical specifications of the DQ 32x24VDC/0.5 A HF

The following table shows the technical specifications as of 06/2018. You will find a data sheet including daily updated technical specifications on the Internet (https://support.industry.siemens.com/cs/ww/denpv/6ES7522-1BL01-0AB0/td?dl=en).

Article number	6ES7522-1BL01-0AB0
General information	
Product type designation	DQ 32x24VDC/0.5A HF
HW functional status	FS02
Firmware version	V1.1.0
Product function	
• I&M data	Yes; I&M0 to I&M3
Engineering with	
• STEP 7 TIA Portal configurable/integrated as of version	V13 SP1 / -
• PROFIBUS as of GSD version/GSD revision	V1.0 / V5.1
• PROFINET as of GSD version/GSD revision	V2.3 / -
Operating mode	
• DQ	Yes
• DQ with energy-saving function	No
• PWM	No
• Cam control (switching at comparison values)	No
• Oversampling	No
• MSO	Yes
• Integrated operating cycle counter	Yes
Supply voltage	
Rated value (DC)	24 V
permissible range, lower limit (DC)	20.4 V
permissible range, upper limit (DC)	28.8 V
Reverse polarity protection	Yes; through internal protection with 7 A per group
Input current	
Current consumption, max.	60 mA

Article number	6ES7522-1BL01-0AB0
Output voltage	
Rated value (DC)	24 V
Power	
Power available from the backplane bus	1.1 W
Power loss	
Power loss, typ.	3.5 W
Digital outputs	
Type of digital output	Transistor
Number of digital outputs	32
Current-sourcing	Yes
Short-circuit protection	Yes; Clocked electronically
• Response threshold, typ.	1 A
Limitation of inductive shutdown voltage to	L+ (-53 V)
Controlling a digital input	Yes
Switching capacity of the outputs	
• with resistive load, max.	0.5 A
• on lamp load, max.	5 W
Load resistance range	
• lower limit	48 Ω
• upper limit	12 kΩ
Output voltage	
• for signal "1", min.	L+ (-0.8 V)
Output current	
• for signal "1" rated value	0.5 A
• for signal "1" permissible range, max.	0.5 A
• for signal "0" residual current, max.	0.5 mA
Output delay with resistive load	
• "0" to "1", max.	100 µs
• "1" to "0", max.	500 µs
Parallel switching of two outputs	
• for logic links	Yes
• for uprating	No
• for redundant control of a load	Yes
Switching frequency	
• with resistive load, max.	100 Hz
• with inductive load, max.	0.5 Hz; According to IEC 60947-5-1, DC-13
• on lamp load, max.	10 Hz

Article number	6ES7522-1BL01-0AB0
Total current of the outputs	
• Current per channel, max.	0.5 A; see additional description in the manual
• Current per group, max.	4 A; see additional description in the manual
• Current per module, max.	16 A; see additional description in the manual
Cable length	
• shielded, max.	1 000 m
• unshielded, max.	600 m
Isochronous mode	
Isochronous operation (application synchronized up to terminal)	Yes
Execution and activation time (TCO), min.	70 µs
Bus cycle time (TDP), min.	250 µs
Interrupts/diagnostics/status information	
Diagnostics function	Yes
Substitute values connectable	Yes
Alarms	
• Diagnostic alarm	Yes
Diagnostic messages	
• Monitoring the supply voltage	Yes
• Wire-break	Yes
• Short-circuit	Yes
• Group error	Yes
Diagnostics indication LED	
• RUN LED	Yes; Green LED
• ERROR LED	Yes; Red LED
• MAINT LED	Yes; yellow LED
• Monitoring of the supply voltage (PWR-LED)	Yes; Green LED
• Channel status display	Yes; Green LED
• for channel diagnostics	Yes; Red LED
• for module diagnostics	Yes; Red LED
Potential separation	
Potential separation channels	
• between the channels	No
• between the channels, in groups of	8
• between the channels and backplane bus	Yes
Isolation	
Isolation tested with	707 V DC (type test)

Article number	6ES7522-1BL01-0AB0
Standards, approvals, certificates	
Suitable for safety-related tripping of standard modules	Yes; From FS02
Highest safety class achievable for safety-related tripping of standard modules	
• Performance level according to ISO 13849-1	PL d
• Category according to ISO 13849-1	Cat. 3
• SILCL according to IEC 62061	SILCL 2
Decentralized operation	
Prioritized startup	Yes
Dimensions	
Width	35 mm
Height	147 mm
Depth	129 mm
Weights	
Weight, approx.	280 g

Residual current at signal state "0":

Note

Due to the Diagnostics: Wire break function, there is a low level of residual current in the "0" signal state at the output, which may cause the display diodes to flicker.

This residual current does not depend on the setting for the wire break diagnostics parameter.

Power reduction (derating) to aggregate current of outputs (per group)

The following graphs show the loading capacity of the digital outputs in relation to the mounting position of the S71500 / Distributed I/O System ET 200MP automation system and the ambient temperature.

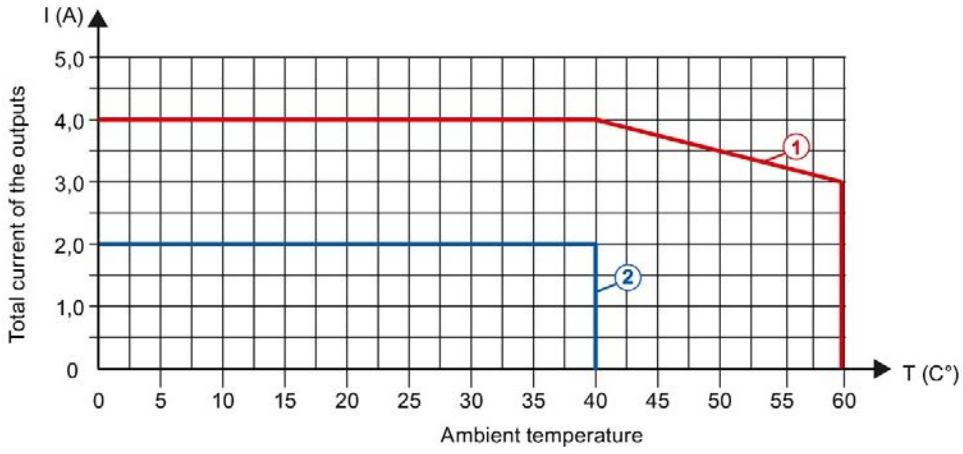

① Horizontal mounting of the system

② Vertical mounting of the system

Figure 6-1 Details on aggregate current of outputs (per group)

Dimensional drawing

A

A.1 Dimensional drawing

The dimensional drawing of the module on the mounting rail, as well as a dimensional drawing with open front cover, are provided in this appendix. Always observe the specified dimensions for installations in cabinets, control rooms, etc.

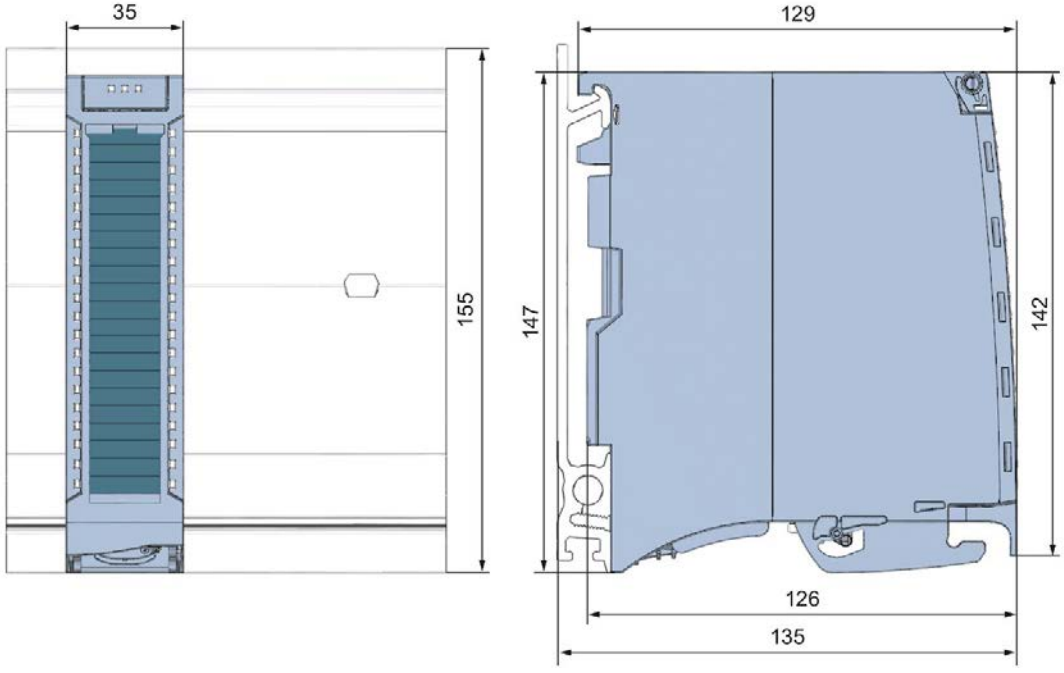

Figure A-1 Dimension drawing of the DQ 32x24VDC/0.5A HF module

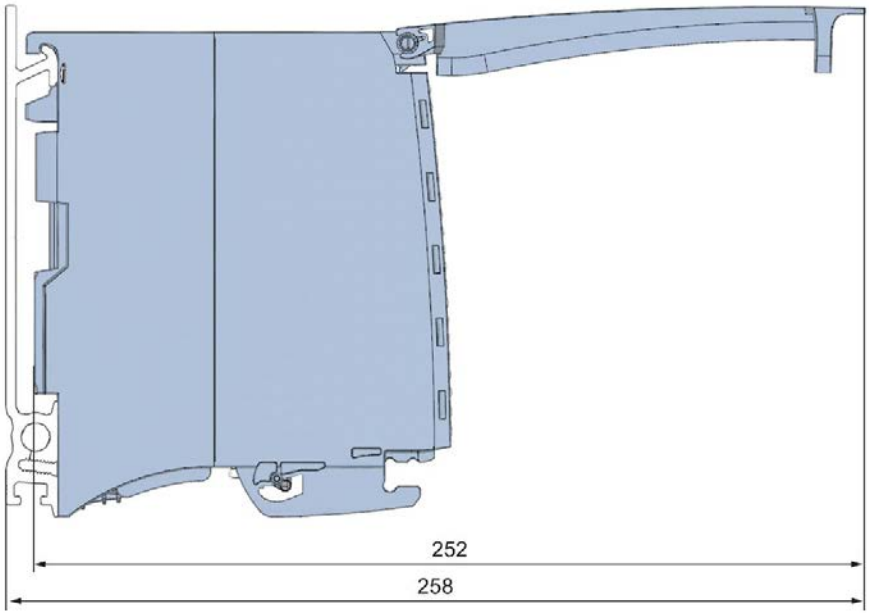

Figure A-2 Dimension drawing of the DQ 32x24VDC/0.5A HF module, side view with open front cover

Parameter data records

B

B.1 Parameter assignment

The data records of the module have an identical structure, regardless of whether you configure the module with PROFIBUS DP or PROFINET IO.

Dependencies for configuration with GSD file

When a GSD file is used to configure a module, dependencies can arise when "setting the parameters".

There are no dependencies for this module. You can assign the individual parameters in any combination.

Parameter assignment in the user program

You have the option of changing the module parameters in RUN (e.g. the reaction of the individual channels to CPU STOP can be changed in RUN without affecting the other channels)

Changing parameters in RUN

The WRREC instruction is used to transfer the parameters to the module using data sets 64 to 95. The parameters set in STEP 7 do not change in the CPU, which means the parameters set in STEP 7 are still valid after a restart.

The parameters are only checked for plausibility by the module after the transfer.

Output parameter STATUS

The module ignores errors that occurred during the transfer of parameters with the WRREC instruction and continues operation with the previous parameter assignment. However, a corresponding error code is written to the STATUS output parameter.

The description of the WRREC instruction and the error codes is available in the STEP 7 online help.

Assignment of data record and channel

For the configuration as a 1 x 32-channel module, the parameters are located in data sets 64 to 95 and are assigned as follows:

- Data record 64 for channel 0
- Data record 65 for channel 1
- …
- Data set 94 for channel 30
- Data set 95 for channel 31

For the configuration as a 4 x 8-channel module, the module has 4 submodules with eight channels each. The parameters for the channels are located in data records 64 to 71 and are assigned as follows:

- Data records 64 to 71 for channels 0 to 7 (submodule 1)
- Data records 64 to 71 for channels 8 to 15 (submodule 2)
- Data sets 64 to 71 for channels 16 to 23 (submodule 3)
- Data sets 64 to 71 for channels 24 to 31 (submodule 4)

Address the respective submodule for data record transfer.

B.2 Structure of parameter data sets DS 64 - 95

Structure of data sets 64 to 95

The figure below shows the structure of data set 64 for channel 0 as an example. The structure is identical for channels 1 to 31. The values in byte 0 and byte 1 are fixed and may not be changed.

Enable a parameter by setting the corresponding bit to "1".

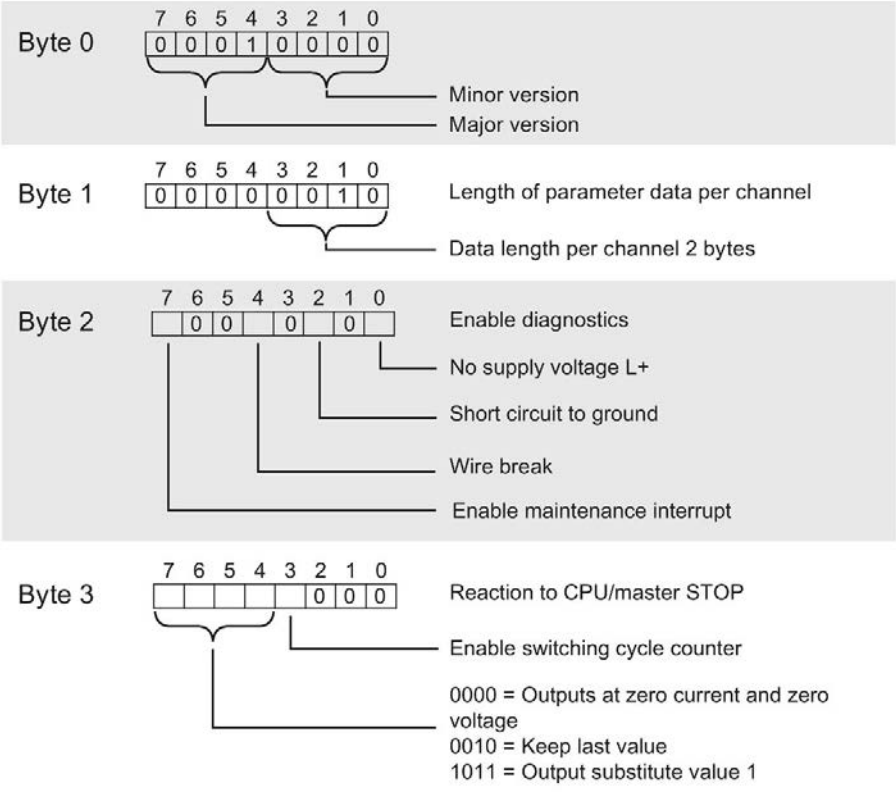

Figure B-1 Structure of data record 64: Bytes 0 to 3

B.3 Structure of data set DS 129

Structure of data set 129

You can read the current states of the switching cycle counters with data set 129. The counter status is supplied for each channel in UDINT format. The length of the data set results from the number of channels in the selected submodule.

The following figure shows you the structure of data set 129 for 32 channels.

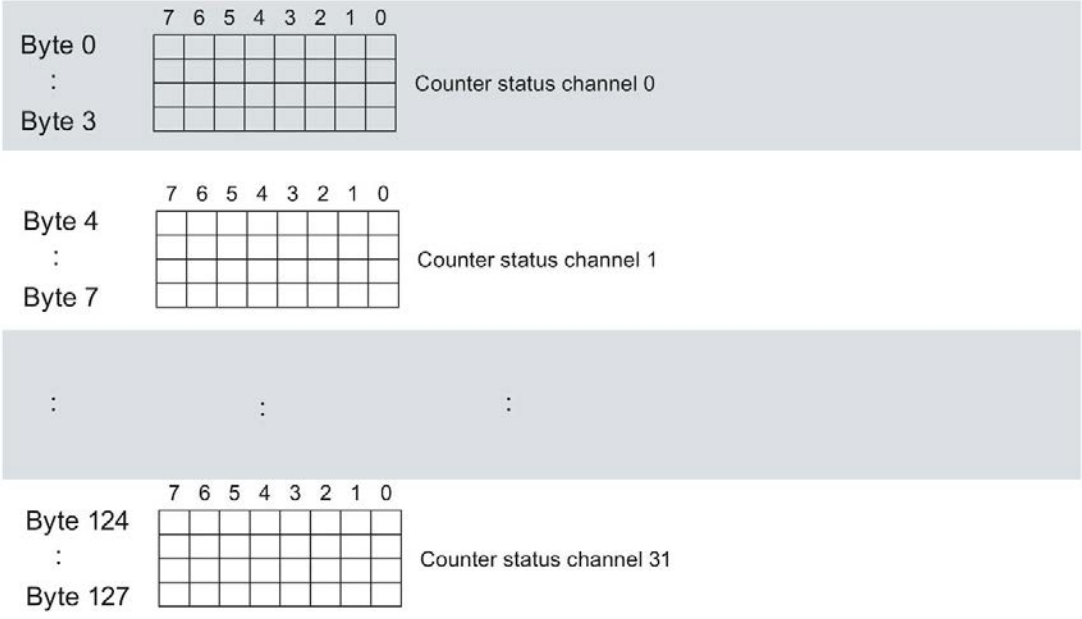

Figure B-2 Structure of data set 129: Byte 0 to 127

The following figure shows you the structure of data set 129 for 4 submodules with 8 channels each.

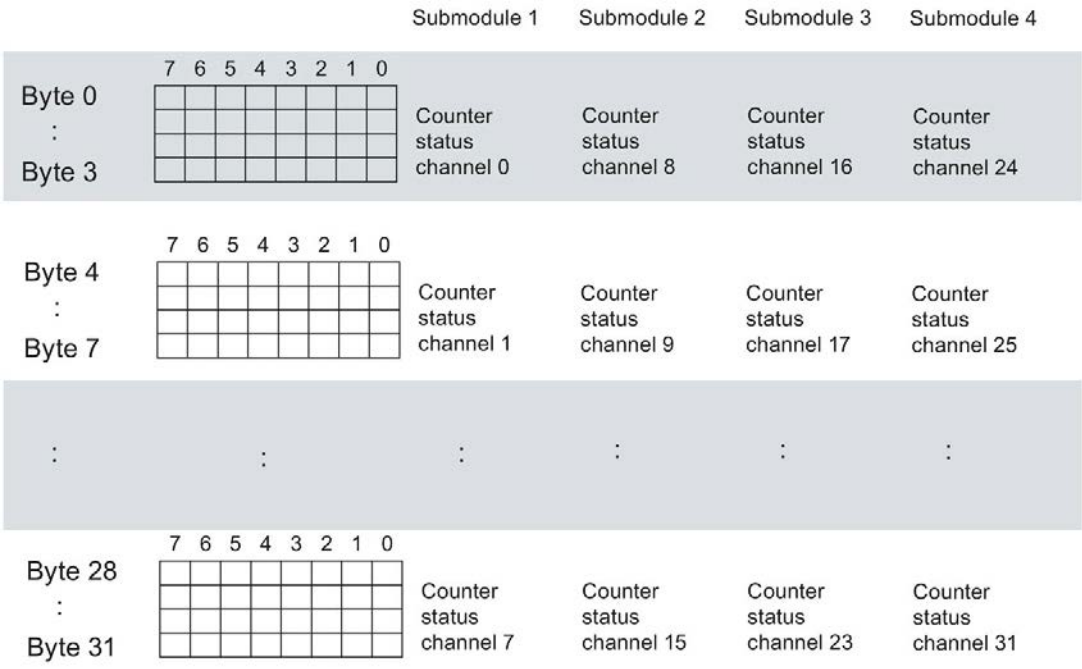

Figure B-3 Structure of data set 129: Byte 0 to 31

B.4 Structure of data set DS 130

Structure of data set 130

The limits of the switching cycle counters are read out with data set 130. The set value is supplied for each channel in UDINT format. The length of the data set results from the number of channels in the selected submodule.

The following figure shows you the structure of data set 130 for 32 channels.

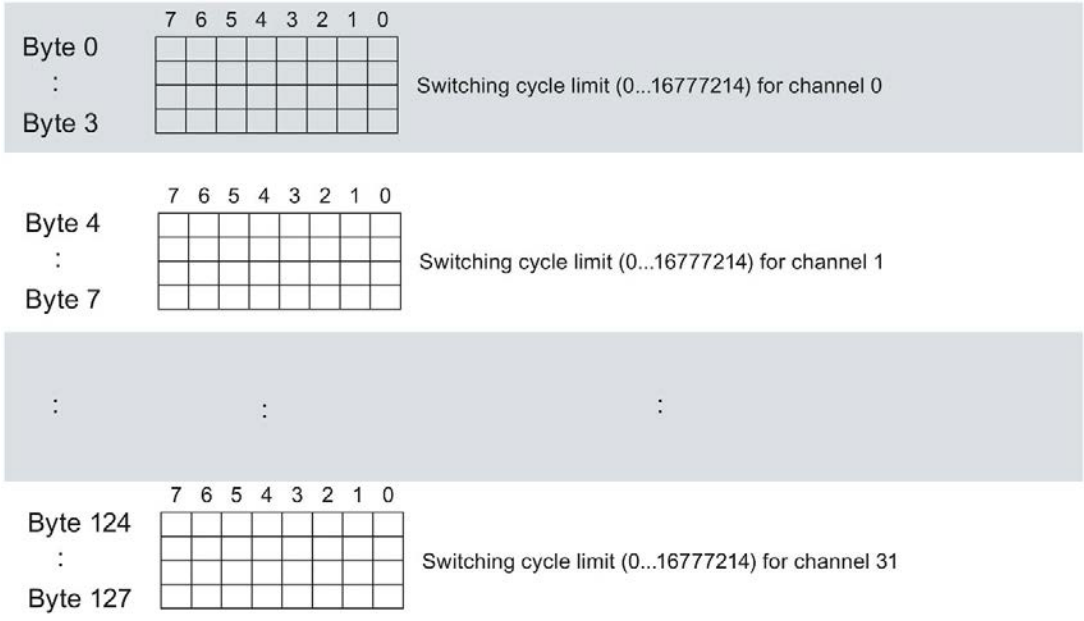

Figure B-4 Structure of data set 130: Byte 0 to 127

The following figure shows you the structure of data set 130 for 4 submodules with 8 channels each.

		Submodule 1	Submodule 2	Submodule 3	Submodule 4
Byte 0 : Byte 3	7 6 5 4 3 2 1 0	Switching cycle limit (0...16777214) for channel 0	Switching cycle limit (0...16777214) for channel 8	Switching cycle limit (0...16777214) for channel 16	Switching cycle limit (0...16777214) for channel 24
Byte 4 : Byte 7	7 6 5 4 3 2 1 0	Switching cycle limit (0...16777214) for channel 1	Switching cycle limit (0...16777214) for channel 9	Switching cycle limit (0...16777214) for channel 17	Switching cycle limit (0...16777214) for channel 25
:	:	:	:	:	:
Byte 28 : Byte 31	7 6 5 4 3 2 1 0	Switching cycle limit (0...16777214) for channel 7	Switching cycle limit (0...16777214) for channel 15	Switching cycle limit (0...16777214) for channel 23	Switching cycle limit (0...16777214) for channel 31

Figure B-5 Structure of data set 130: Byte 0 to 31

B.5 Structure of data set DS 131

Structure of data set 131

The following figure shows you the structure of data set 131.

Enable a parameter by setting the corresponding bit to "1".

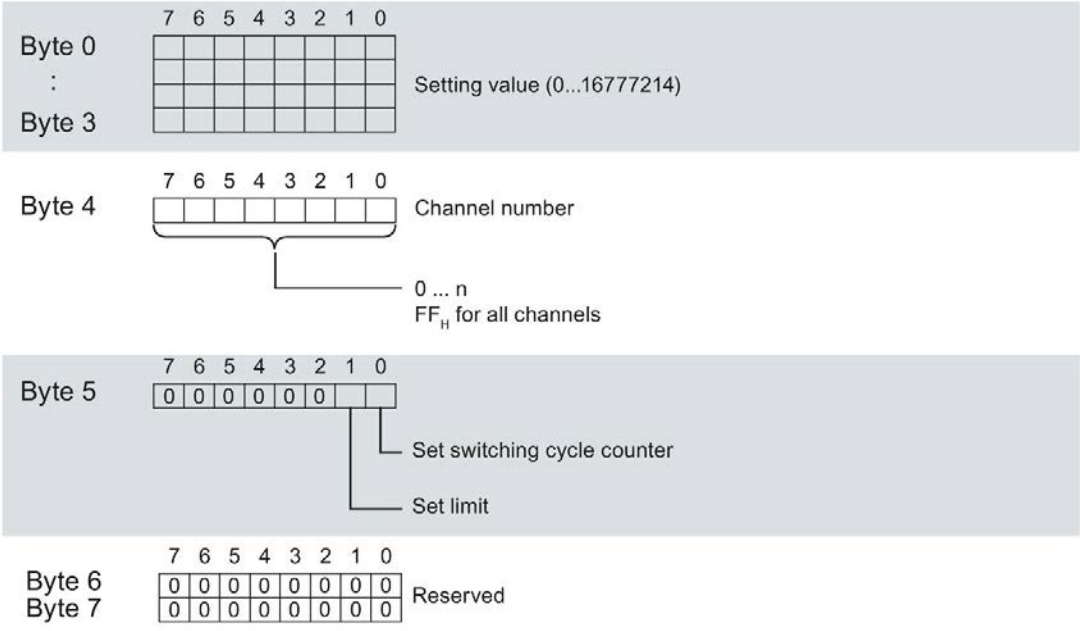

Figure B-6 Structure of data set 131: Bytes 0 to 7

SIEMENS

SIMATIC

S7-1500 / ET 200MP

Digital output module DQ 16x24VDC/0.5A BA (6ES7522-1BH10-0AA0)

Manual

Edition 09/2016

siemens.com

SIEMENS

SIMATIC

S7-1500/ET 200MP Digital output module DQ 16x24VDC/0.5A BA (6ES7522-1BH10-0AA0)

Manual

Preface

Documentation guide 1

Product overview 2

Wiring 3

Address space 4

Diagnostics alarms 5

Technical specifications 6

Dimensional drawing A

09/2016

A5E32364017-AC

Legal information

Warning notice system

This manual contains notices you have to observe in order to ensure your personal safety, as well as to prevent damage to property. The notices referring to your personal safety are highlighted in the manual by a safety alert symbol, notices referring only to property damage have no safety alert symbol. These notices shown below are graded according to the degree of danger.

⚠ DANGER

indicates that death or severe personal injury **will** result if proper precautions are not taken.

⚠ WARNING

indicates that death or severe personal injury **may** result if proper precautions are not taken.

⚠ CAUTION

indicates that minor personal injury can result if proper precautions are not taken.

NOTICE

indicates that property damage can result if proper precautions are not taken.

If more than one degree of danger is present, the warning notice representing the highest degree of danger will be used. A notice warning of injury to persons with a safety alert symbol may also include a warning relating to property damage.

Qualified Personnel

The product/system described in this documentation may be operated only by **personnel qualified** for the specific task in accordance with the relevant documentation, in particular its warning notices and safety instructions. Qualified personnel are those who, based on their training and experience, are capable of identifying risks and avoiding potential hazards when working with these products/systems.

Proper use of Siemens products

Note the following:

⚠ WARNING

Siemens products may only be used for the applications described in the catalog and in the relevant technical documentation. If products and components from other manufacturers are used, these must be recommended or approved by Siemens. Proper transport, storage, installation, assembly, commissioning, operation and maintenance are required to ensure that the products operate safely and without any problems. The permissible ambient conditions must be complied with. The information in the relevant documentation must be observed.

Trademarks

All names identified by ® are registered trademarks of Siemens AG. The remaining trademarks in this publication may be trademarks whose use by third parties for their own purposes could violate the rights of the owner.

Disclaimer of Liability

We have reviewed the contents of this publication to ensure consistency with the hardware and software described. Since variance cannot be precluded entirely, we cannot guarantee full consistency. However, the information in this publication is reviewed regularly and any necessary corrections are included in subsequent editions.

Siemens AG
Division Digital Factory
Postfach 48 48
90026 NÜRNBERG
GERMANY

A5E32364017-AC
℗ 11/2016 Subject to change

Copyright © Siemens AG 2014 - 2016.
All rights reserved

Preface

Purpose of the documentation

This manual supplements the system manual S7-1500/ET 200MP (https://support.industry.siemens.com/cs/ww/en/view/59191792).

Functions that relate in general to the systems are described in this system manual.

The information provided in this manual and in the system/function manuals supports you in commissioning the systems.

Changes compared to previous version

Compared to the previous version, this manual contains the following change:

Original texts of the license conditions and copyright notes for open-source software are available on the Internet as of 09/2016.

Conventions

The term "CPU" is used in this manual both for the CPUs of the S7-1500 automation system and for interface modules of the ET 200MP distributed I/O system.

Please also observe notes marked as follows:

Note

A note contains important information on the product described in the documentation, on the handling of the product or on the section of the documentation to which particular attention should be paid.

Security information

Siemens provides products and solutions with industrial security functions that support the secure operation of plants, systems, machines and networks.

In order to protect plants, systems, machines and networks against cyber threats, it is necessary to implement – and continuously maintain – a holistic, state-of-the-art industrial security concept. Siemens' products and solutions only form one element of such a concept.

Customer is responsible to prevent unauthorized access to its plants, systems, machines and networks. Systems, machines and components should only be connected to the enterprise network or the internet if and to the extent necessary and with appropriate security measures (e.g. use of firewalls and network segmentation) in place.

Additionally, Siemens' guidance on appropriate security measures should be taken into account. For more information about industrial security, please visit (http://www.siemens.com/industrialsecurity).

Siemens' products and solutions undergo continuous development to make them more secure. Siemens strongly recommends to apply product updates as soon as available and to always use the latest product versions. Use of product versions that are no longer supported, and failure to apply latest updates may increase customer's exposure to cyber threats.

To stay informed about product updates, subscribe to the Siemens Industrial Security RSS Feed under (http://www.siemens.com/industrialsecurity).

Open Source Software

Open-source software is used in the firmware of the I/O modules. Open Source Software is provided free of charge. We are liable for the product described, including the open-source software contained in it, pursuant to the conditions applicable to the product. Siemens accepts no liability for the use of the open source software over and above the intended program sequence, or for any faults caused by modifications to the software.

For legal reasons, we are obliged to publish the original text of the license conditions and copyright notices. Please read the information relating to this on the Internet (https://support.industry.siemens.com/cs/ww/en/view/109741045).

Table of contents

Preface 4
1 Documentation guide 7
2 Product overview 11
2.1 Properties 11
3 Wiring 13
4 Address space 15
4.1 Address space 15
5 Diagnostics alarms 19
5.1 Status and error displays 19
6 Technical specifications 21
A Dimensional drawing 25

Documentation guide

1

The documentation for the SIMATIC S7-1500 automation system, the CPU 1516pro-2 PN based on SIMATIC S7-1500 and the SIMATIC ET 200MP distributed I/O system is arranged into three areas.
This arrangement enables you to access the specific content you require.

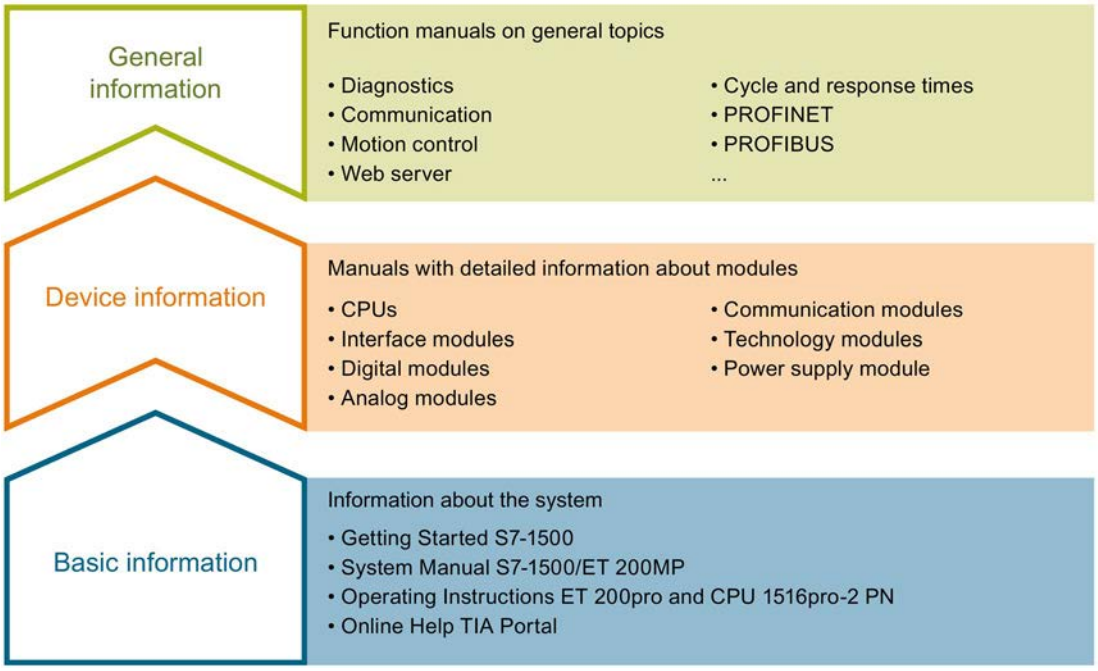

Basic information

The System Manual and Getting Started describe in detail the configuration, installation, wiring and commissioning of the SIMATIC S7-1500 and ET 200MP systems. For CPU 1516pro-2 PN you use the corresponding operating instructions. The STEP 7 online help supports you in the configuration and programming.

Device information

Product manuals contain a compact description of the module-specific information, such as properties, wiring diagrams, characteristics and technical specifications.

General information

The function manuals contain detailed descriptions on general topics regarding the SIMATIC S7-1500 and ET 200MP systems, e.g. diagnostics, communication, motion control, Web server, OPC UA.

You can download the documentation free of charge from the Internet (http://w3.siemens.com/mcms/industrial-automation-systems-simatic/en/manual-overview/Pages/Default.aspx).

Changes and supplements to the manuals are documented in a Product Information.

You can download the product information free of charge from the Internet (https://support.industry.siemens.com/cs/us/en/view/68052815).

Manual Collection S7-1500/ET 200MP

The Manual Collection contains the complete documentation on the SIMATIC S7-1500 automation system and the ET 200MP distributed I/O system gathered together in one file.

You can find the Manual Collection on the Internet (https://support.industry.siemens.com/cs/ww/en/view/86140384).

SIMATIC S7-1500 comparison list for programming languages

The comparison list contains an overview of which instructions and functions you can use for which controller families.

You can find the comparison list on the Internet (https://support.industry.siemens.com/cs/ww/en/view/86630375).

"mySupport"

With "mySupport", your personal workspace, you make the best out of your Industry Online Support.

In "mySupport", you can save filters, favorites and tags, request CAx data and compile your personal library in the Documentation area. In addition, your data is already filled out in support requests and you can get an overview of your current requests at any time.

You must register once to use the full functionality of "mySupport".

You can find "mySupport" on the Internet (https://support.industry.siemens.com/My/ww/en).

"mySupport" - Documentation

In the Documentation area in "mySupport" you can combine entire manuals or only parts of these to your own manual.
You can export the manual as PDF file or in a format that can be edited later.

You can find "mySupport" - Documentation on the Internet (http://support.industry.siemens.com/My/ww/en/documentation).

"mySupport" - CAx data

In the CAx data area in "mySupport", you can access the current product data for your CAx or CAe system.

You configure your own download package with a few clicks.

In doing so you can select:

- Product images, 2D dimension drawings, 3D models, internal circuit diagrams, EPLAN macro files
- Manuals, characteristics, operating manuals, certificates
- Product master data

You can find "mySupport" - CAx data on the Internet (http://support.industry.siemens.com/my/ww/en/CAxOnline).

Application examples

The application examples support you with various tools and examples for solving your automation tasks. Solutions are shown in interplay with multiple components in the system - separated from the focus on individual products.

You will find the application examples on the Internet (https://support.industry.siemens.com/sc/ww/en/sc/2054).

TIA Selection Tool

With the TIA Selection Tool, you can select, configure and order devices for Totally Integrated Automation (TIA).
This tool is the successor of the SIMATIC Selection Tool and combines the known configurators for automation technology into one tool.
With the TIA Selection Tool, you can generate a complete order list from your product selection or product configuration.

You can find the TIA Selection Tool on the Internet (http://w3.siemens.com/mcms/topics/en/simatic/tia-selection-tool).

SIMATIC Automation Tool

You can use the SIMATIC Automation Tool to run commissioning and maintenance activities simultaneously on various SIMATIC S7 stations as a bulk operation independently of the TIA Portal.

The SIMATIC Automation Tool provides a multitude of functions:

- Scanning of a PROFINET/Ethernet network and identification of all connected CPUs
- Address assignment (IP, subnet, gateway) and station name (PROFINET device) to a CPU
- Transfer of the date and the programming device/PC time converted to UTC time to the module
- Program download to CPU
- Operating mode switchover RUN/STOP
- Localization of the CPU by means of LED flashing
- Reading out CPU error information
- Reading the CPU diagnostic buffer
- Reset to factory settings
- Updating the firmware of the CPU and connected modules

You can find the SIMATIC Automation Tool on the Internet (https://support.industry.siemens.com/cs/ww/en/view/98161300).

PRONETA

With SIEMENS PRONETA (PROFINET network analysis), you analyze the PROFINET network during commissioning. PRONETA features two core functions:

- The topology overview independently scans PROFINET and all connected components.
- The IO check is a fast test of the wiring and the module configuration of a system.

You can find SIEMENS PRONETA on the Internet (https://support.industry.siemens.com/cs/ww/en/view/67460624).

Product overview

2

2.1 Properties

Article number

6ES7522-1BH10-0AA0

View of the module

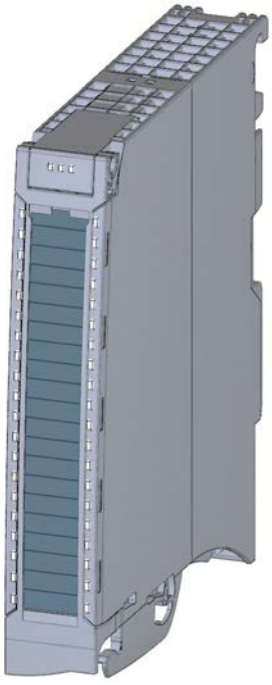

Figure 2-1 View of the DQ 16x24VDC/0.5A BA module

Properties

The digital module has the following technical properties:

- 16 digital outputs, electrically isolated in groups of 8
- Rated output voltage 24 V DC
- Rated output current 0.5 A per channel
- Suitable for solenoid valves, DC contactors, and indicator lights

The module supports the following functions:

Table 2- 1 Version dependencies of the module functions

Function	Firmware version of the module	Configuration software	
		STEP 7 (TIA Portal)	GSD file in STEP 7 (TIA Portal) V12 or higher, or STEP 7 V5.5 SP3 or higher
Firmware update	V1.0.0 or higher	V13 or higher	--- / X
Identification data I&M0 to I&M3	V1.0.0 or higher	V13 or higher	X
Module-internal Shared Output (MSO)	V1.0.0 or higher	V13 Update 3 or higher (PROFINET IO only)	X (PROFINET IO only)
Configurable submodules / submodules for Shared Device	V1.0.0 or higher	V13 Update 3 or higher (PROFINET IO only)	X (PROFINET IO only)

You can configure the module with STEP 7 (TIA Portal) and with a GSD file.

Accessories

The following accessories are supplied with the module and can also be ordered separately as spare parts:

- Front connector (push-in terminals) including cable tie
- Labeling strips
- U connector
- Universal front door

You can find additional information on accessories in the system manual S7-1500/ET 200MP (https://support.industry.siemens.com/cs/ww/en/view/59191792).

Wiring

3

This section contains the block diagram of the module and outlines various wiring options.

You can find information on wiring the front connector, creating a cable shield, etc. in the Wiring section of the S7-1500/ET 200MP (https://support.industry.siemens.com/cs/ww/en/view/59191792) system manual.

Wiring and block diagram

The example in the following figure shows the terminal assignment and the assignment of the channels to the addresses (output byte a and output byte b).

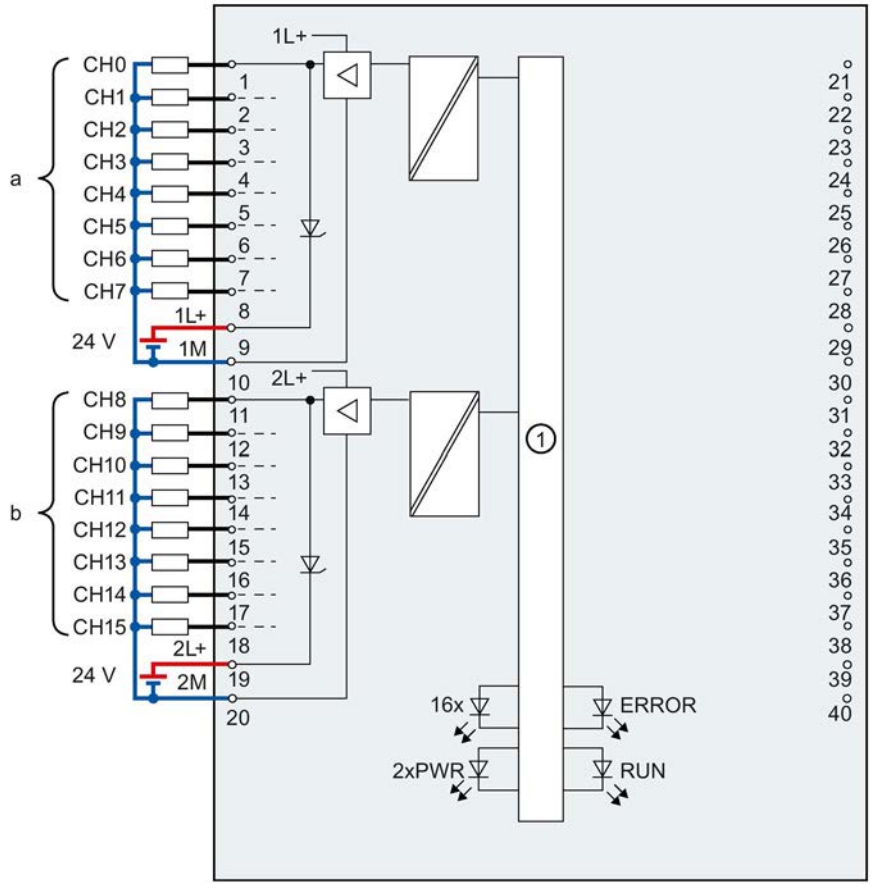

①	Backplane bus interface	CHx	Channel or channel status LED (green)
xL+	Supply voltage 24 V DC	RUN	Status display LED (green)
xM	Ground	ERROR	Error display LED (red)
		PWR	POWER supply voltage LED (green)

Figure 3-1 Block diagram and terminal assignment

Note

Upon activation of the 24 V supply voltage, there is a "1" signal at the module outputs for approx. 50 µs.

Address space 4

4.1 Address space

The module can be configured in various ways in STEP 7. Depending on the configuration, additional/different addresses are assigned in the process image output/input.

Configuration options of DQ 16x24VDC/0.5A BA

You can configure the module with STEP 7 (TIA Portal) or with a GSD file.

When you configure the module by means of the GSD file, the configurations are available under different short designations/module names.

The following configurations are possible:

Table 4- 1 Configuration options

Configuration	Short designation/module name in the GSD file	Configuration software, e.g., with STEP 7 (TIA Portal)	
		Integrated in hardware catalog STEP 7 (TIA Portal)	GSD file in STEP 7 (TIA Portal) V12 or higher or STEP 7 V5.5 SP3 or higher
1 x 16-channel without value status	DQ 16x24VDC/0.5A BA	V13 or higher	X
2 x 8-channel without value status	DQ 16x24VDC/0.5A BA S	V13 Update 3 or higher (PROFINET IO only)	X (PROFINET IO only)
1 x 16-channel with value status for module-internal Shared Output with up to 4 submodules	DQ 16x24VDC/0.5A BA MSO	V13 Update 3 or higher (PROFINET IO only)	X (PROFINET IO only)

Address space for configuration as 1 x 16-channel DQ 16x24VDC/0.5A BA

The figure below shows the address space assignment for configuration as a 1 x 16-channel module. You can freely assign the start address for the module. The addresses of the channels are derived from the start address.

The letters "a to d" are printed on the module- "QB a", for example, stands for module start address output byte a.

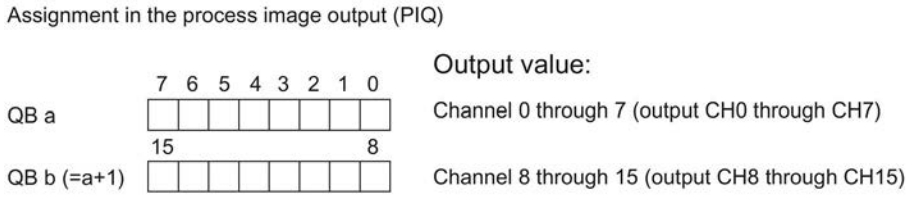

Figure 4-1 Address space for configuration as 1 x 16-channel DQ 16x24VDC/0.5A BA

Address space for configuration as 2 x 8-channel DQ 16x24VDC/0.5A BA S

For the configuration as a 2 x 8-channel module, the channels of the module are divided into multiple submodules. The submodules can be assigned to different IO controllers when the module is used in a shared device.

The number of usable IO controllers depends on the interface module used. Please observe the information in the manual for the particular interface module.

Unlike the 1 x 16-channel module configuration, each of the two submodules has a freely assignable start address.

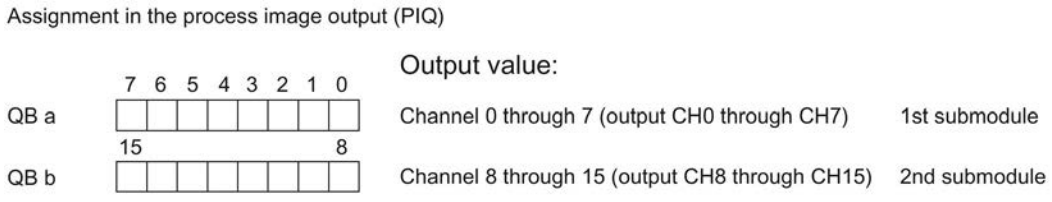

Figure 4-2 Address space for configuration as 2 x 8-channel DQ 32x24VDC/0.5A BA S

Address space for configuration as 1 x 16-channel DQ 16x24VDC/0.5A BA MSO

For the configuration as a 1 x 16-channel module (module-internal Shared Output, MSO), channels 0 to 15 of the module are copied to multiple submodules. Channels 0 to 16 are then available with identical values in various submodules. These submodules can be assigned to up to four IO controllers when the module is used in a shared device:

- The IO controller to which submodule 1 is assigned has write access to outputs 0 to 15.
- The IO controllers to which submodule 2, 3, or 4 is assigned have read access to outputs 0 to 15.

The number of usable IO controllers depends on the interface module used. Please observe the information in the manual for the particular interface module.

Value status (Quality Information, QI)

The meaning of the value status depends on the submodule involved.

For the 1st submodule (=basic submodule), the value status 1 indicates that the output value specified by the user program is actually output at the module terminal.

Possible causes for value status = 0:

- Value is incorrect, for example, because the supply voltage is missing.
- IO controller of the basic submodule is in STOP mode.

For the 2nd to 4th submodule (=MSO submodule), the value status 1 indicates that the output value specified by the user program is actually output at the module terminal.

Possible causes for value status = 0:

- Value is incorrect, for example, because the supply voltage is missing.
- IO controller of the basic submodule is in STOP mode.
- The basic submodule is not yet configured.

The figure below shows the assignment of the address space for submodules 1 and 2.

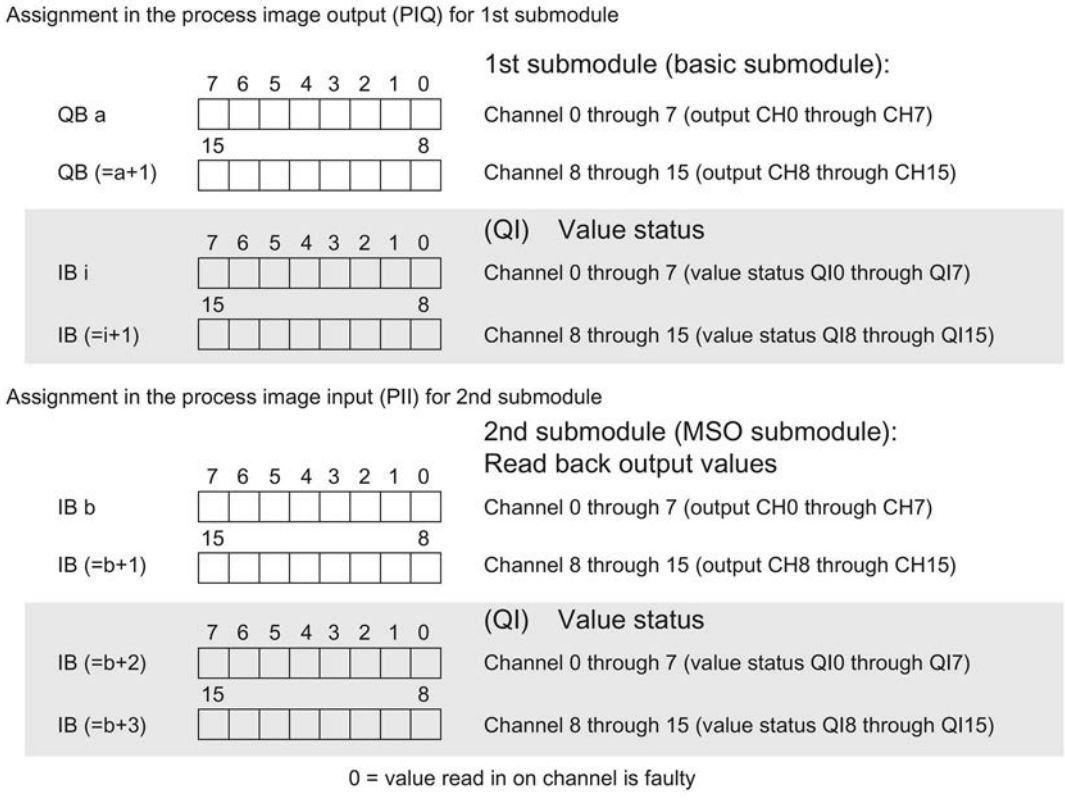

Figure 4-3 Address space for configuration as 1 x 16-channel DQ 16x24VDC/0.5A BA MSO with value status

The figure below shows the assignment of the address space with submodules 3 and 4.

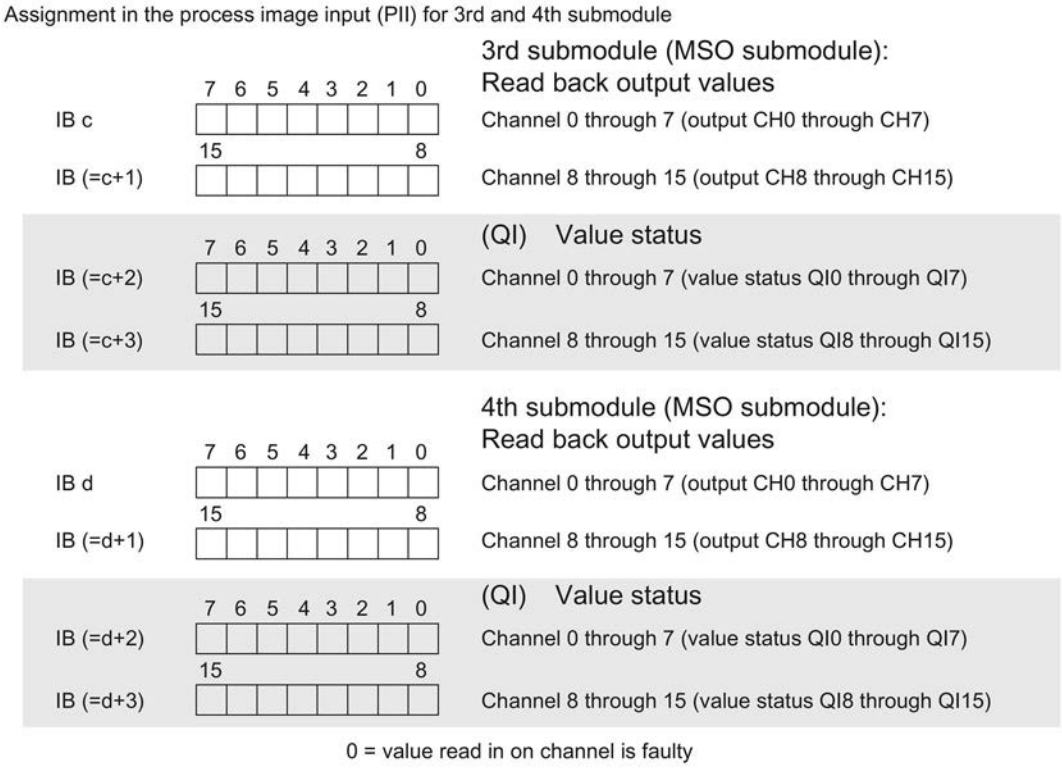

Figure 4-4 Address space for configuration as 1 x 16-channel DQ 16x24VDC/0.5A BA MSO with value status

Reference

You can find information on the Shared Input/Output (MSI/MSO) function in the section Module-Internal Shared Input/Output (MSI/MSO) of the PROFINET with STEP 7 V13 (https://support.industry.siemens.com/cs/ww/en/view/49948856) function manual.

Diagnostics alarms

5

The module has no selectable diagnostics. Diagnostics alarms, for example, cannot be output with STEP 7 (TIA Portal).

5.1 Status and error displays

LED displays

The figure below shows you the LED displays (status and error displays) of the DQ 16x24VDC/0.5A BA.

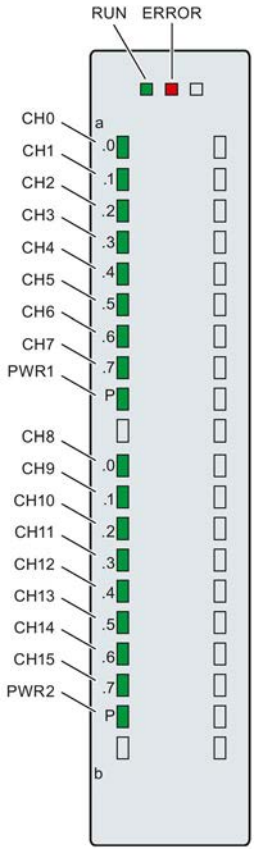

Figure 5-1 LED displays of the module DQ 16x24VDC/0.5A BA

Meaning of the LED displays

The tables below explain the meaning of the status and error displays.

LED RUN/ERROR

Table 5- 1 RUN/ERROR status and error displays

LED		Meaning	Remedy
RUN	ERROR		
Off	Off	Voltage missing or too low at backplane bus.	• Switch on the CPU and/or the system power supply modules. • Verify that the U connectors are inserted. • Check to see if too many modules are inserted.
Flashes	Off	Module is starting up.	---
On	Off	Module is ready.	
Flashes	Flashes	Hardware defective.	Replace the module.

LED PWR1/PWR2

Table 5- 2 PWR1/PWR2 status display

LED PWRx	Meaning	Remedy
Off	Supply voltage L+ too low or missing.	Check the L+ supply voltage.
On	Supply voltage L+ is present and OK.	---

LED CHx

Table 5- 3 CHx status display

LED CHx	Meaning	Remedy
Off	0 = Status of the output signal.	---
On	1 = Status of the output signal.	---

Technical specifications

6

Technical specifications of the DQ 16x24VDC/0.5A BA

	6ES7522-1BH10-0AA0
General information	
Product type designation	DQ 16x24VDC/0,5A BA
Hardware functional status	FS01
Firmware version	V1.0.0
• FW update possible	Yes
Product function	
I&M data	Yes; I&M0 to I&M3
Engineering with	
STEP 7 TIA Portal can be configured/integrated as of version	V13 / V13
STEP 7 can be configured/integrated as of version	V5.5 SP3 / -
PROFIBUS as of GSD version/GSD revision	V1.0 / V5.1
PROFINET as of GSD version/GSD revision	V2.3 / -
Operating mode	
DQ	Yes
DQ with energy-saving function	No
PWM	No
Oversampling	No
MSO	Yes
Supply voltage	
Rated value (DC)	24 V
Valid range, low limit (DC)	20.4 V
Valid range, high limit (DC)	28.8 V
Reverse polarity protection	Yes; through internal protection with 7 A per group
Input current	
Current consumption, max.	30 mA
Output voltage	
Rated value (DC)	24 V
Power	
Power consumption from the backplane bus	1.15 W
Power loss	
Power loss, typ.	2.2 W

	6ES7522-1BH10-0AA0
Digital outputs	
Number of outputs	16
Sourcing output	Yes
Short-circuit protection	Yes
• Response threshold, typ.	1 A
Limitation of inductive shutdown voltage to	L+ (-53 V)
Control of a digital input	Yes
Switching capacity of outputs	
With resistive load, max.	0.5 A
With lamp load, max.	5 W
Load resistance range	
Low limit	48 Ω
High limit	12 kΩ
Output voltage	
For signal "1", min.	L+ (-0.8 V)
Output current	
For signal "1" rated value	0.5 A
For signal "1" permitted range, max.	0.5 A
For signal "0" residual current, max.	0.5 mA
Output delay with resistive load	
"0" to "1", max.	100 µs
"1" to "0", max.	500 µs
Parallel connection of two outputs	
For logic operations	Yes
For increased performance	No
For redundant control of a load	Yes
Switching frequency	
With resistive load, max.	100 Hz
With inductive load, max.	0.5 Hz; according to IEC 60947-5-1, DC-13
With lamp load, max.	10 Hz
Total current of outputs	
Current per channel, max.	0.5 A; see additional description in the manual
Current per group, max.	4 A; see additional description in the manual
Current per module, max.	8 A; see additional description in the manual
Cable length	
shielded, max.	1000 m
unshielded, max.	600 m
Isochronous mode	
Isochronous mode (application synchronized up to terminal)	No
Interrupts/diagnostics/status information	
Diagnostics function	No
Substitute values can be applied	No

	6ES7522-1BH10-0AA0
Interrupts	
Diagnostic interrupt	No
Diagnostics alarms	
Monitoring of supply voltage	No
Wire break	No
Short-circuit	No
Group error	No
Diagnostics indicator LED	
RUN LED	Yes; green LED
ERROR LED	Yes; red LED
Monitoring of supply voltage (PWR LED)	Yes; green LED
Channel status display	Yes; green LED
For channel diagnostics	No
For module diagnostics	No
Electrical isolation	
Electrical isolation of channels	
Between the channels	No
Between the channels, in groups of	8
Between the channels and backplane bus	Yes
Insulation	
Insulation tested with	707 V DC (type test)
Distributed operation	
Prioritized startup	Yes
Dimensions	
Width	25 mm
Height	147 mm
Depth	129 mm
Weights	
Weight, approx.	230 g
Miscellaneous	
Note:	Delivery includes 40-pin push-in front connector

Power reduction (derating) to aggregate current of outputs (per group)

The following derating graphs show the loading capacity of the outputs in relation to the mounting position of the S71500 automation system/ET 200MP distributed I/O system and the ambient temperature.

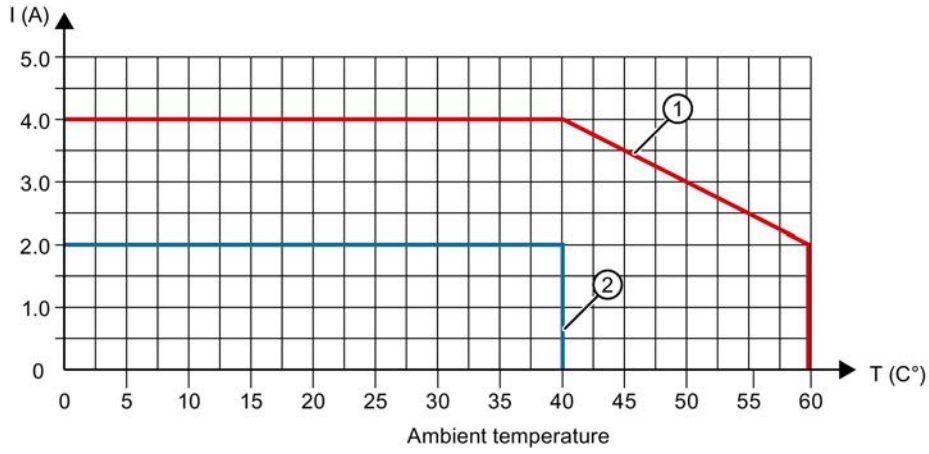

① Horizontal mounting of the system

② Vertical mounting of the system

Figure 6-1 Details on aggregate current of outputs (per group)

Dimensional drawing

A

The dimensional drawing of the module on the mounting rail, as well as a dimensional drawing with open front cover, are provided in this appendix. Always observe the specified dimensions for installation in cabinets, control rooms, etc.

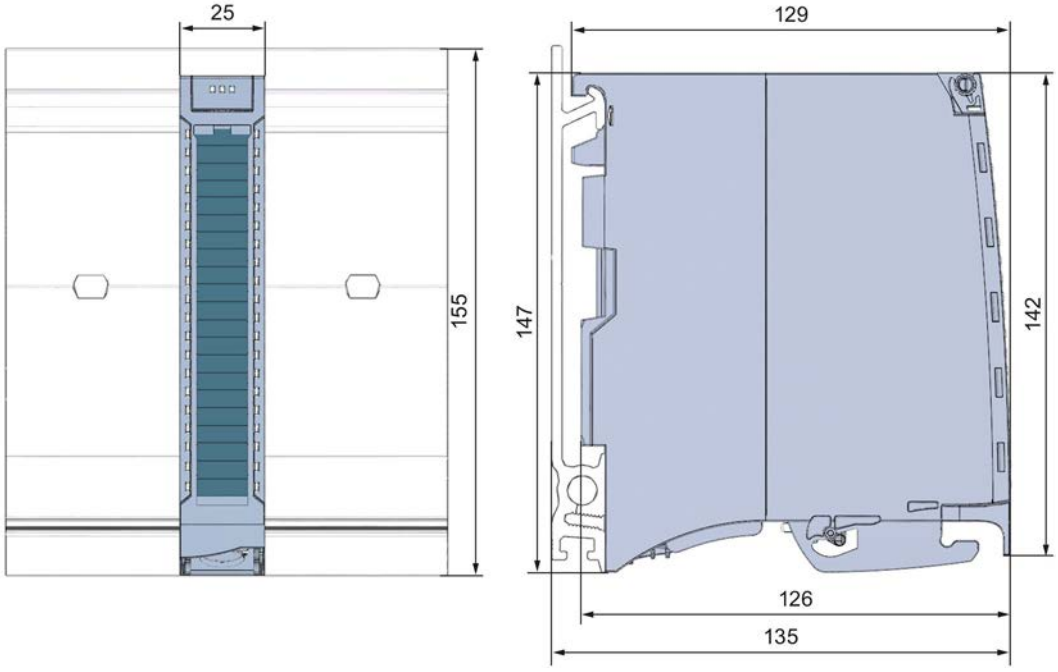

Figure A-1 Dimensional drawing of the DQ 16x24VDC/0.5A BA module

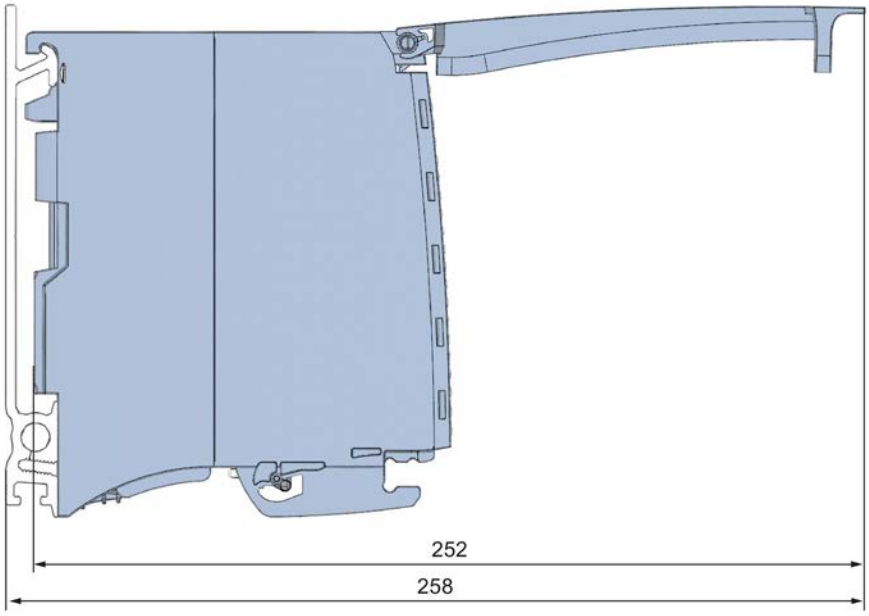

Figure A-2 Dimensional drawing of the DQ 16x24VDC/0.5A BA module, side view with open front cover

SIEMENS

Manual

SIMATIC

S7-1500 / ET 200MP

Digital output module
DQ 16x24VDC/0.5A HF (6ES7522-1BH01-0AB0)

Edition 06/2018

support.industry.siemens.com

SIEMENS

SIMATIC

S7-1500/ET 200MP Digital output module DQ 16x24VDC/0.5A HF (6ES7522-1BH01-0AB0)

Manual

Preface

Documentation guide 1

Product overview 2

Wiring 3

Parameters/address space 4

Interrupts/diagnostics alarms 5

Technical specifications 6

Dimensional drawing A

Parameter data records B

06/2018

A5E35683409-AC

Legal information

Warning notice system

This manual contains notices you have to observe in order to ensure your personal safety, as well as to prevent damage to property. The notices referring to your personal safety are highlighted in the manual by a safety alert symbol, notices referring only to property damage have no safety alert symbol. These notices shown below are graded according to the degree of danger.

⚠ DANGER

indicates that death or severe personal injury **will** result if proper precautions are not taken.

⚠ WARNING

indicates that death or severe personal injury **may** result if proper precautions are not taken.

⚠ CAUTION

indicates that minor personal injury can result if proper precautions are not taken.

NOTICE

indicates that property damage can result if proper precautions are not taken.

If more than one degree of danger is present, the warning notice representing the highest degree of danger will be used. A notice warning of injury to persons with a safety alert symbol may also include a warning relating to property damage.

Qualified Personnel

The product/system described in this documentation may be operated only by **personnel qualified** for the specific task in accordance with the relevant documentation, in particular its warning notices and safety instructions. Qualified personnel are those who, based on their training and experience, are capable of identifying risks and avoiding potential hazards when working with these products/systems.

Proper use of Siemens products

Note the following:

⚠ WARNING

Siemens products may only be used for the applications described in the catalog and in the relevant technical documentation. If products and components from other manufacturers are used, these must be recommended or approved by Siemens. Proper transport, storage, installation, assembly, commissioning, operation and maintenance are required to ensure that the products operate safely and without any problems. The permissible ambient conditions must be complied with. The information in the relevant documentation must be observed.

Trademarks

All names identified by ® are registered trademarks of Siemens AG. The remaining trademarks in this publication may be trademarks whose use by third parties for their own purposes could violate the rights of the owner.

Disclaimer of Liability

We have reviewed the contents of this publication to ensure consistency with the hardware and software described. Since variance cannot be precluded entirely, we cannot guarantee full consistency. However, the information in this publication is reviewed regularly and any necessary corrections are included in subsequent editions.

Siemens AG
Division Digital Factory
Postfach 48 48
90026 NÜRNBERG
GERMANY

A5E35683409-AC
℗ 08/2018 Subject to change

Copyright © Siemens AG 2015 - 2018.
All rights reserved

Preface

Purpose of the documentation

This manual supplements the system manual S7-1500/ET 200MP (https://support.industry.siemens.com/cs/ww/en/view/59191792).

Functions that relate in general to the systems are described in this system manual.

The information provided in this manual and in the system/function manuals supports you in commissioning the systems.

Changes compared to previous version

Compared to the previous version, this manual contains the following change:

- New licensing conditions and copyright information of the Open Source Software
- The module features a switching cycle counter as of firmware version V1.1.0.

Conventions

The term "CPU" is used in this manual both for the CPUs of the S7-1500 automation system and for interface modules of the ET 200MP distributed I/O system.

Please also observe notes marked as follows:

Note

A note contains important information on the product described in the documentation, on the handling of the product or on the section of the documentation to which particular attention should be paid.

Recycling and disposal

For environmentally friendly recycling and disposal of your old equipment, contact a certified electronic waste disposal company and dispose of the equipment according to the applicable regulations in your country.

Security information

Siemens provides products and solutions with industrial security functions that support the secure operation of plants, systems, machines and networks.

In order to protect plants, systems, machines and networks against cyber threats, it is necessary to implement – and continuously maintain – a holistic, state-of-the-art industrial security concept. Siemens' products and solutions constitute one element of such a concept.

Customers are responsible for preventing unauthorized access to their plants, systems, machines and networks. Such systems, machines and components should only be connected to an enterprise network or the internet if and to the extent such a connection is necessary and only when appropriate security measures (e.g. firewalls and/or network segmentation) are in place.

For additional information on industrial security measures that may be implemented, please visit (https://www.siemens.com/industrialsecurity).

Siemens' products and solutions undergo continuous development to make them more secure. Siemens strongly recommends that product updates are applied as soon as they are available and that the latest product versions are used. Use of product versions that are no longer supported, and failure to apply the latest updates may increase customers' exposure to cyber threats.

To stay informed about product updates, subscribe to the Siemens Industrial Security RSS Feed under (https://www.siemens.com/industrialsecurity).

Open Source Software

Open-source software is used in the firmware of the I/O modules. Open Source Software is provided free of charge. We are liable for the product described, including the open-source software contained in it, pursuant to the conditions applicable to the product. Siemens accepts no liability for the use of the open source software over and above the intended program sequence, or for any faults caused by modifications to the software.

For legal reasons, we are obliged to publish the original text of the license conditions and copyright notices. Please read the information relating to this on the Internet (https://support.industry.siemens.com/cs/ww/en/view/109757558).

Table of contents

Preface 3

1 Documentation guide 6

2 Product overview 10

2.1 Properties 10

2.2 Functions 13

2.2.1 Switching cycle counter 13

3 Wiring 15

4 Parameters/address space 17

4.1 Parameters 17

4.2 Description of parameters 19

4.3 Address space 20

5 Interrupts/diagnostics alarms 25

5.1 Status and error displays 25

5.2 Interrupts 27

5.3 Diagnostics alarms 28

6 Technical specifications 29

A Dimensional drawing 34

A.1 Dimensional drawing 34

B Parameter data records 36

B.1 Parameter assignment 36

B.2 Structure of parameter data sets DS 64 - 79 38

B.3 Structure of data set DS 129 39

B.4 Structure of data set DS 130 41

B.5 Structure of data set DS 131 43

Documentation guide

1

The documentation for the SIMATIC S7-1500 automation system and the SIMATIC ET 200MP distributed I/O system is arranged into three areas.
This arrangement enables you to access the specific content you require.

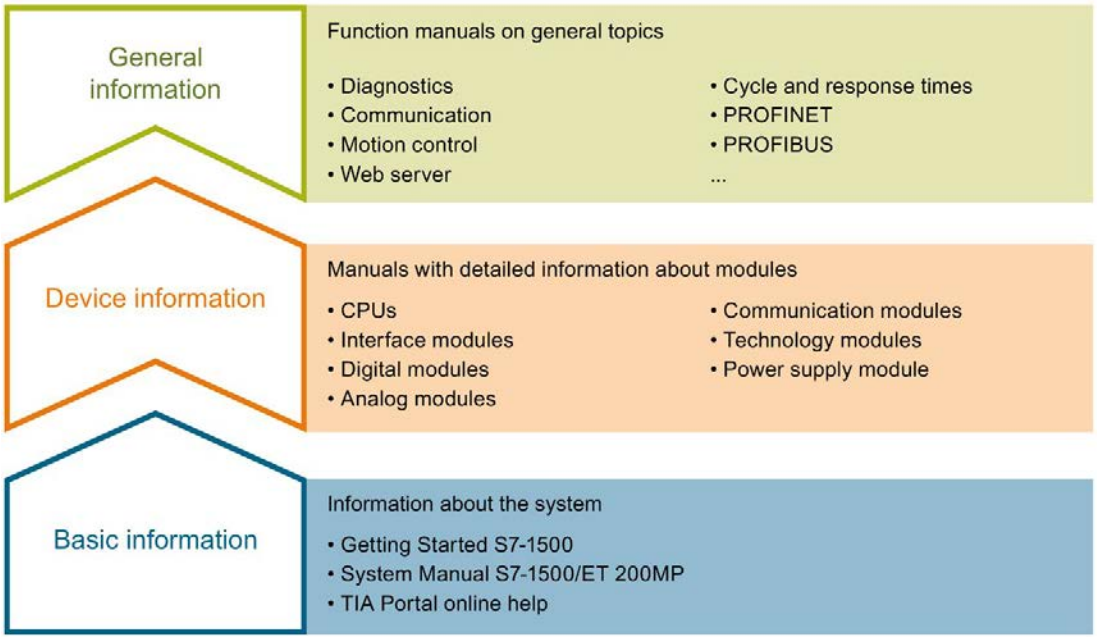

Basic information

The System Manual and Getting Started describe in detail the configuration, installation, wiring and commissioning of the SIMATIC S7-1500 and ET 200MP systems. The STEP 7 online help supports you in the configuration and programming.

Device information

Product manuals contain a compact description of the module-specific information, such as properties, wiring diagrams, characteristics and technical specifications.

General information

The function manuals contain detailed descriptions on general topics regarding the SIMATIC S7-1500 and ET 200MP systems, e.g. diagnostics, communication, motion control, Web server, OPC UA.

You can download the documentation free of charge from the Internet (https://support.industry.siemens.com/cs/ww/en/view/109742691).

Changes and supplements to the manuals are documented in a Product Information.

You can download the product information free of charge from the Internet (https://support.industry.siemens.com/cs/us/en/view/68052815).

Manual Collection S7-1500/ET 200MP

The Manual Collection contains the complete documentation on the SIMATIC S7-1500 automation system and the ET 200MP distributed I/O system gathered together in one file.

You can find the Manual Collection on the Internet (https://support.industry.siemens.com/cs/ww/en/view/86140384).

SIMATIC S7-1500 comparison list for programming languages

The comparison list contains an overview of which instructions and functions you can use for which controller families.

You can find the comparison list on the Internet (https://support.industry.siemens.com/cs/ww/en/view/86630375).

"mySupport"

With "mySupport", your personal workspace, you make the best out of your Industry Online Support.

In "mySupport", you can save filters, favorites and tags, request CAx data and compile your personal library in the Documentation area. In addition, your data is already filled out in support requests and you can get an overview of your current requests at any time.

You must register once to use the full functionality of "mySupport".

You can find "mySupport" on the Internet (https://support.industry.siemens.com/My/ww/en).

"mySupport" - Documentation

In the Documentation area in "mySupport" you can combine entire manuals or only parts of these to your own manual.
You can export the manual as PDF file or in a format that can be edited later.

You can find "mySupport" - Documentation on the Internet (http://support.industry.siemens.com/My/ww/en/documentation).

"mySupport" - CAx data

In the CAx data area in "mySupport", you can access the current product data for your CAx or CAe system.

You configure your own download package with a few clicks.

In doing so you can select:

- Product images, 2D dimension drawings, 3D models, internal circuit diagrams, EPLAN macro files
- Manuals, characteristics, operating manuals, certificates
- Product master data

You can find "mySupport" - CAx data on the Internet (http://support.industry.siemens.com/my/ww/en/CAxOnline).

Application examples

The application examples support you with various tools and examples for solving your automation tasks. Solutions are shown in interplay with multiple components in the system - separated from the focus on individual products.

You will find the application examples on the Internet (https://support.industry.siemens.com/sc/ww/en/sc/2054).

TIA Selection Tool

With the TIA Selection Tool, you can select, configure and order devices for Totally Integrated Automation (TIA).
This tool is the successor of the SIMATIC Selection Tool and combines the known configurators for automation technology into one tool.
With the TIA Selection Tool, you can generate a complete order list from your product selection or product configuration.

You can find the TIA Selection Tool on the Internet (http://w3.siemens.com/mcms/topics/en/simatic/tia-selection-tool).

SIMATIC Automation Tool

You can use the SIMATIC Automation Tool to perform commissioning and maintenance activities simultaneously on various SIMATIC S7 stations as a bulk operation independent of the TIA Portal.

General function overview:

- Network browsing and creation of a table showing the accessible devices in the network.
- Flashing of device LEDs or HMI display to locate a device
- Downloading of addresses (IP, subnet, gateway) to a device
- Downloading the PROFINET name (station name) to a device
- Placing a CPU in RUN or STOP mode
- Setting the time in a CPU to the current time of your PG/PC
- Downloading a new program to a CPU or an HMI device
- Downloading from CPU, downloading to CPU or deleting recipe data from a CPU
- Downloading from CPU or deleting data log data from a CPU
- Backup/restore of data from/to a backup file for CPUs and HMI devices
- Downloading service data from a CPU
- Reading the diagnostics buffer of a CPU
- Performing a CPU memory reset
- Resetting devices to factory settings
- Downloading a firmware update to a device

You can find the SIMATIC Automation Tool on the Internet (https://support.industry.siemens.com/cs/ww/en/view/98161300).

PRONETA

With SIEMENS PRONETA (PROFINET network analysis), you analyze the PROFINET network during commissioning. PRONETA features two core functions:

- The topology overview independently scans PROFINET network and all connected components.
- The IO check is a fast test of the wiring and the module configuration of a system.

You can find SIEMENS PRONETA on the Internet (https://support.industry.siemens.com/cs/ww/en/view/67460624).

SINETPLAN

SINETPLAN, the Siemens Network Planner, supports you in planning automation systems and networks based on PROFINET. The tool facilitates professional and predictive dimensioning of your PROFINET installation as early as in the planning stage. In addition, SINETPLAN supports you during network optimization and helps you to exploit network resources optimally and to plan reserves. This helps to prevent problems in commissioning or failures during productive operation even in advance of a planned operation. This increases the availability of the production plant and helps improve operational safety.

The advantages at a glance

- Network optimization thanks to port-specific calculation of the network load
- Increased production availability thanks to online scan and verification of existing systems
- Transparency before commissioning through importing and simulation of existing STEP 7 projects
- Efficiency through securing existing investments in the long term and optimal exploitation of resources

You can find SINETPLAN on the Internet (https://www.siemens.com/sinetplan).

Product overview

2

2.1 Properties

Article number

6ES7522-1BH01-0AB0

View of the module

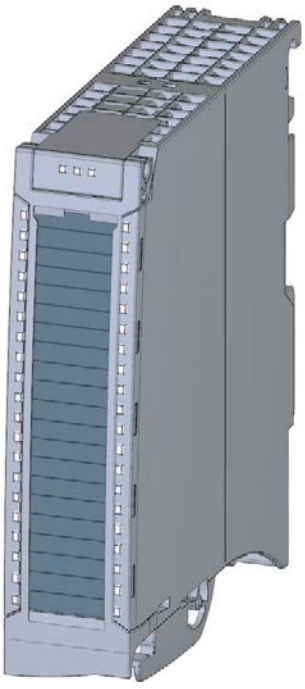

Figure 2-1 View of the DQ 16x24VDC/0.5A HF module

Properties

The module has the following technical properties:

- 16 digital outputs, electrically isolated in groups of 8
- Rated output voltage 24 V DC
- Rated output current 0.5 A per channel
- Configurable substitute values (per channel)
- Configurable diagnostics (per channel)
- Suitable for solenoid valves, DC contactors, and indicator lights
- Switching cycle counter for connected actuators, e.g. solenoid valves
- Hardware compatible with digital output module DQ 16x24VDC/0.5A ST (6ES7522-1BH00-0AB0).

The module supports the following functions:

Table 2- 1 Version dependencies of the module functions

Function	Firmware version of the module	Configuration software	
		STEP 7 (TIA Portal) as of V13, SP1 with HSP 0143	GSD file in STEP 7 (TIA Portal) V12 or higher, or STEP 7 V5.5 SP3 or higher
Firmware update	V1.0.0 or higher	X	--- / X
Identification data I&M0 to I&M3	V1.0.0 or higher	X	X
Parameter assignment in RUN	V1.0.0 or higher	X	X
Isochronous mode	V1.0.0 or higher	X	---
Module-internal Shared Output (MSO)	V1.0.0 or higher	X (PROFINET IO only)	X (PROFINET IO only)
Configurable submodules / sub-modules for Shared Device	V1.0.0 or higher	X (PROFINET IO only)	X (PROFINET IO only)
Switching cycle counter	V1.1.0 or higher	as of V15.0 with HSP0247 • PROFINET IO only • Central operation with a S7-1500 CPU is supported	X (PROFINET IO only)

You can configure the module with STEP 7 (TIA Portal) and with a GSD file.

Compatibility

The following table shows the compatibility of the modules and the dependencies between hardware functional status (FS) and firmware version (FW) used:

Hardware functional status	Firmware version	Note
FS01	V1.0.0	Upgrade to V1.1.0 not possible
FS02	V1.1.0	Upgrade and downgrade possible between V1.1.0 and higher

Accessories

The following accessories are supplied with the module and can also be ordered separately as spare parts:

- Labeling strips
- U connector
- Universal front cover

Other components

The following component can be ordered separately:

Front connectors, including potential jumpers and cable ties

You can find additional information on accessories in the system manual S7-1500/ET 200MP (https://support.industry.siemens.com/cs/ww/en/view/59191792).

2.2 Functions

2.2.1 Switching cycle counter

The function records the number of switching cycles of the output and thus the switching cycles of a connected actuator, such as those of solenoid valves. When the specified number of switching cycles is reached, the "Limit value warning" maintenance interrupt is triggered, provided it is configured and enabled. When replacing the actuator, you can reset the switching cycle counter from the user program.

When replacing modules, you have the option of pre-initializing the switching cycle counter from the user program.

Typical areas of application:

- Recording the number of switching cycles of the connected devices, e.g. solenoid valves or load contactors
- Predictive maintenance

Advantages

- You configure this function instead of programming.
- "Monitoring" of each individual channel is possible. You can select which outputs are "monitored".
- You can adapt the plant configuration flexibly and individually.
- Easy to service and maintain. You can enable and disable the switching cycle counter via the user program.
- Increase in plant availability. You can schedule actuator replacement in advance for the next maintenance cycle.

Requirement

Firmware version as of V1.1.0 of the module.

Configuration

You configure the switching cycle counter with the following parameters:

- Switching cycle counter enabled/disabled
- Trigger maintenance interrupt when the limit is reached
- Set limit for maintenance interrupt

How it works

The module counts the switching cycles by evaluating the rising edges of an output signal. If the module detects a rising edge, the switching cycle counter (24-bit) for the respective channel is incremented. After an overflow of the switching cycle counter, it starts again with 0.

If you activate the "Maintenance switching cycles" parameter, the "Limit warning" of the maintenance interrupt is triggered when the limit is exceeded. Alternatively, activate the maintenance interrupt in the parameter data sets starting at DS 64.

The current counter states are stored on the module cyclically (approx. every 20 seconds) and retentively. The switching cycle counters are reset each time the module is restarted (power off/on).

You activate the function with the "Switching cycle counter" parameter or in the parameter data sets starting at DS 64.

You can read the current counter states with data set DS 129. Data set DS 129 contains the counter status for each channel in UDINT format.

You can read the limits for each channel in UDINT format with data set DS 130.

Data set DS 131 enables you to overwrite the current counter value for each switching cycle counter.

You can set a limit for each switching cycle counter with the "Switching cycle limit" parameter or with data set DS 131.

Wiring

3

This section contains the block diagram of the module and outlines various wiring options.

You can find information on wiring the front connector, establishing a cable shield, etc. in the system manual S7-1500/ET 200MP (https://support.industry.siemens.com/cs/ww/en/view/59191792).

Wiring and block diagram

The example in the following figure shows the terminal assignment and the assignment of the channels to the addresses (output byte a and output byte b).

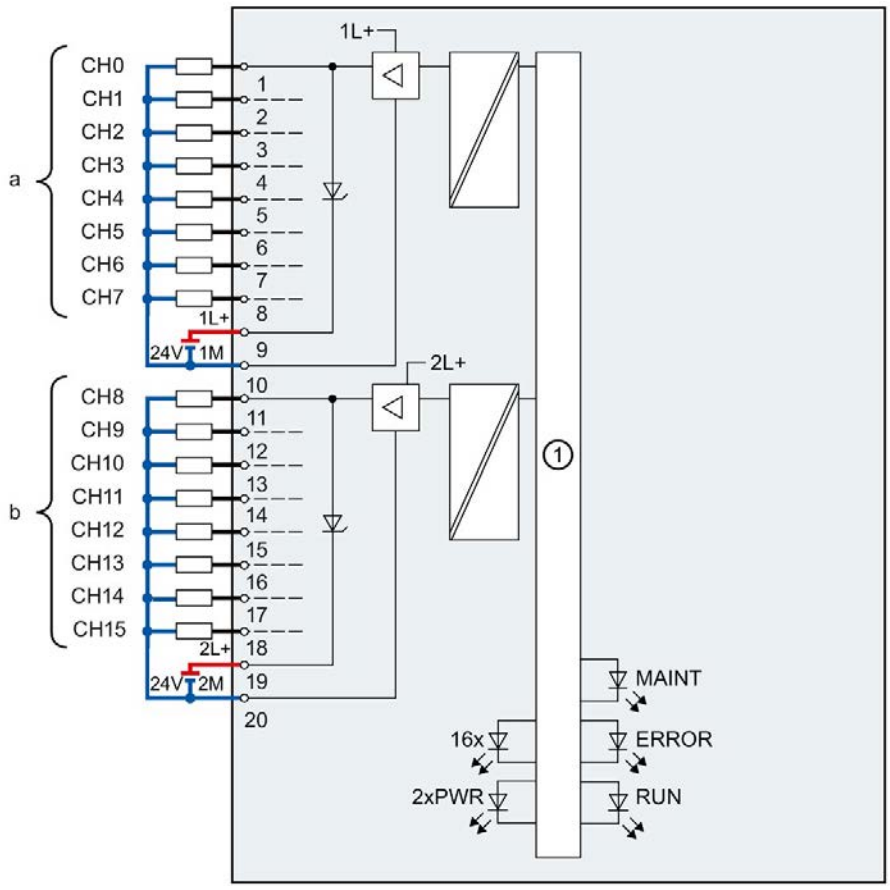

①	Backplane bus interface	MAINT	LED maintenance display (yellow)
xL+	Supply voltage 24 V DC	RUN	Status display LED (green)
xM	Ground	ERROR	Error display LED (red)
CHx	Channel or channel status LED (green/red)	PWR	POWER supply voltage LED (green)

Figure 3-1 Block diagram and terminal assignment

Note

When the 24 V supply voltage is switched on at each channel, there is a "1" signal at the module outputs for approx. 50 µs.

Tip: Using the potential jumpers

If you want to supply both load groups with the same potential (non-isolated), use the potential jumpers supplied with the front connector. This helps you to avoid having to terminate two wires to one terminal.

Proceed as follows:

1. Connect the 24 V DC supply voltage to terminals 19 and 20.
2. Insert the potential jumpers between terminals
   - 9 and 29 (L+)
   - 10 and 30 (M)
   - 19 and 39 (L+)
   - 20 and 40 (M)
3. Insert the jumpers between terminals 29 and 39, as well as 30 and 40.
4. Use the terminals 19 and 20 to distribute the potential to the next module.

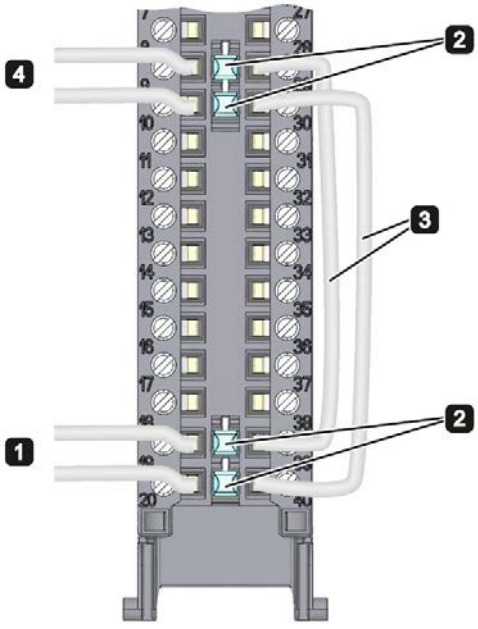

Figure 3-2 Using the potential jumpers

Note

Ensure that the maximum current load of 8 A per potential jumper is not exceeded.

Parameters/address space 4

4.1 Parameters

DQ 16x24VDC/0.5 HF parameters

When you assign the module parameters in STEP 7, you use various parameters to specify the module properties. The following table lists the configurable parameters. The effective range of the configurable parameters depends on the type of configuration. The following configurations are possible:

- Central operation with a S7-1500 CPU
- Distributed operation on PROFINET IO in an ET 200MP system
- Distributed operation on PROFIBUS DP in an ET 200MP system

For parameter assignment in the user program, the parameters are transferred to the module using the WRREC instruction (parameter assignment in RUN) and data sets; see section Parameter assignment (Page 36)

Table 4- 1 Configurable parameters and their defaults

Parameters	Range of values	Default setting	Parameter assignment in RUN	Scope with configuration software, e.g., STEP 7 (TIA Portal)	
				Integrated in the hardware catalog as of STEP 7, V13 SP1 or GSD file PROFINET IO	GSD file PROFIBUS DP
Diagnostics					
• No supply voltage L+	Yes/No	No	Yes	Channel*	Channel group (CH0 to CH7, CH8 to CH15)
• Short circuit to ground	Yes/No	No	Yes	Channel*	Channel group (CH0 to CH7, CH8 to CH15)
• Maintenance switching cycles	Yes/No	No	Yes	Channel (as of V15.0 with HSP0247)	---
• Switching cycle counter	Yes/No	No	Yes	Channel (as of V15.0 with HSP0247)	---
• Wire break	Yes/No	No	Yes	Channel*	Channel group (CH0 to CH7, CH8 to CH15)

Parameters	Range of values	Default setting	Parameter assignment in RUN	Scope with configuration software, e.g., STEP 7 (TIA Portal)	
				Integrated in the hardware catalog as of STEP 7, V13 SP1 or GSD file PROFINET IO	GSD file PROFIBUS DP
Reaction to CPU STOP	• Turn off • Keep last value • Output substitute value 1	Turn off	Yes	Channel	Channel
Switching cycle limits					
Switching cycle limit	0 ... 16777214	0	Yes	Channel (as of V15.0 with HSP0247)	---

* If you enable diagnostics for multiple channels, you will receive an alarm surge on failure of the supply voltage because each enabled channel will detect this fault. You can prevent this message burst by assigning the diagnostics function to one channel only.

4.2 Description of parameters

No supply voltage

Enabling of the diagnostics, for lacking or insufficient supply voltage L+.

Short circuit to ground

Enabling of the diagnostics if a short-circuit of the actuator supply (CHx) to ground occurs.

Maintenance switching cycles

You use this parameter to enable the maintenance interrupt "Limit value warning" when the switching cycle limit is violated.

You configure the limit with the parameter "Switching cycle limit" for each channel CHx.

Switching cycle counter

Channel-by-channel enable of switching cycle counter (Page 13).

Wire break

Enabling of the diagnostics if the line to the actuator is broken.

Reaction to CPU STOP

Determines the reaction of the output when the CPU goes into the STOP state or when the connection to the CPU is interrupted.

Switching cycle limit

Defines the limit channel-by-channel. If this value is exceeded, the "Limit value warning" maintenance interrupt is signaled.

Enter an integer value between 0 and 16777214. Refer to the data sheet of the connected actuator. We recommend that you do not enter this maximum value, but instead set it to 80% or 90%, for example, so that you have enough time to replace the actuator as a preventive measure.

4.3 Address space

The module can be configured differently in STEP 7; see following table. Depending on the configuration, additional/different addresses are assigned in the process image of the outputs/inputs.

Configuration options of DQ 16x24VDC/0.5A HF

You can configure the module with STEP 7 (TIA Portal) or with a GSD file.

When you configure the module by means of the GSD file, the configurations are available under different abbreviations/module names.

The following configurations are possible:

Table 4- 2 Configuration options

Configuration	Short designation/module name in the GSD file	Configuration software, e.g., STEP 7 (TIA Portal)	
		Integrated in the hardware catalog STEP 7 (TIA Portal) as of V13 SP1 with HSP 0143	GSD file in STEP 7 (TIA Portal) V12 or higher or STEP 7 V5.5 SP3 or higher
1 x 16-channel without value status	DQ 16x24VDC/0.5A HF	X	X
1 x 16-channel with value status	DQ 16x24VDC/0.5A HF QI	X	X
2 x 8-channel without value status	DQ 16x24VDC/0.5A HF S	X (PROFINET IO only)	X (PROFINET IO only)
2 x 8-channel with value status	DQ 16x24VDC/0.5A HF S QI	X (PROFINET IO only)	X (PROFINET IO only)
1 x 16-channel with value status for module-internal Shared Output with up to 4 submodules	DQ 16x24VDC/0.5A HF MSO	X (PROFINET IO only)	X (PROFINET IO only)

Note

Substitute value behavior in shared device operation with the following configuration (V1.0 only):

- **2 x 8-channel with / without value status**

If the system is in shared device mode and one of the IO controllers involved goes into STOP or fails due to a communication failure, for example, all submodules of the output module perform the configured substitute value reaction (e.g. shutdown).

This means that even when only one IO controller fails, the other IO controllers associated with the shared device no longer control the assigned submodule of the output module.

Value status (Quality Information, QI)

The value status is always activated for the following module names:

- DQ 16x24VDC/0.5A HF QI
- DQ 16x24VDC/0.5A HF S QI
- DQ 16x24VDC/0.5A HF MSO

An additional bit is assigned to each channel for the value status. The bit for the value status indicates if the output value specified by the user program is actually pending at the module terminal (0 = value is incorrect).

Note

The maintenance interrupt "Limit value warning" has no effect on the value status.

Address space for configuration as 16-channel DQ 16x24VDC/0.5A HF

The following figure shows the assignment of the address space for the configuration as a 16-channel module with value status. You can freely assign the start address for the module. The addresses of the channels are derived from the start address.

The letters "a to d" are printed onto the module. "QB a" stands for module start address output byte a.

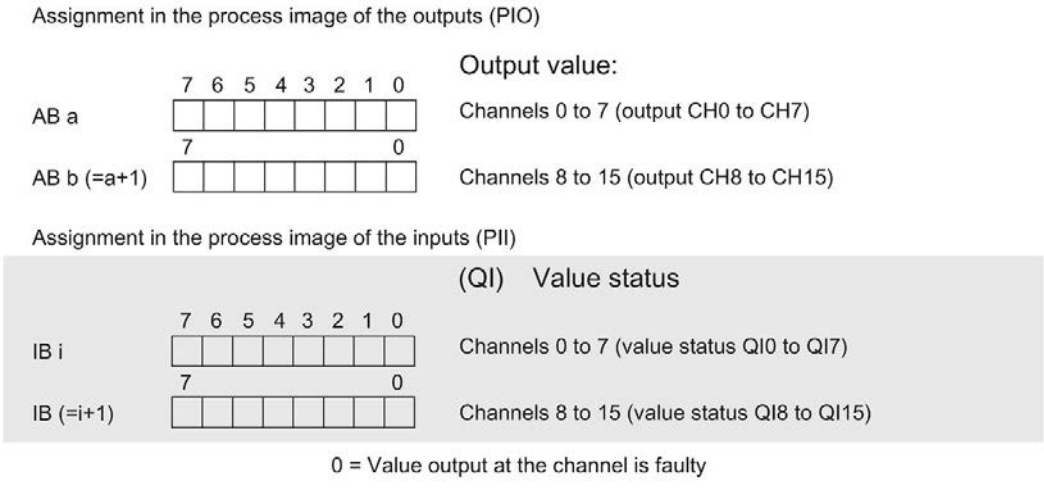

Figure 4-1 Address space for configuration as 16-channel DQ 16x24VDC/0.5A HF with value status

Address space for configuration as 2 x 8-channel DQ 16x24VDC/0.5A HF S QI

For the configuration as a 2 x 8-channel module, the channels of the module are divided into multiple submodules. The submodules can be assigned to different IO controllers when the module is used in a shared device.

The number of IO controllers depends on the interface module used. Please observe the information in the manual for the particular interface module.

Contrary to the 1 x 16-channel module configuration, each of the two submodules has a freely assignable start address. The addresses for the respective value status of a submodule can also be assigned by the user.

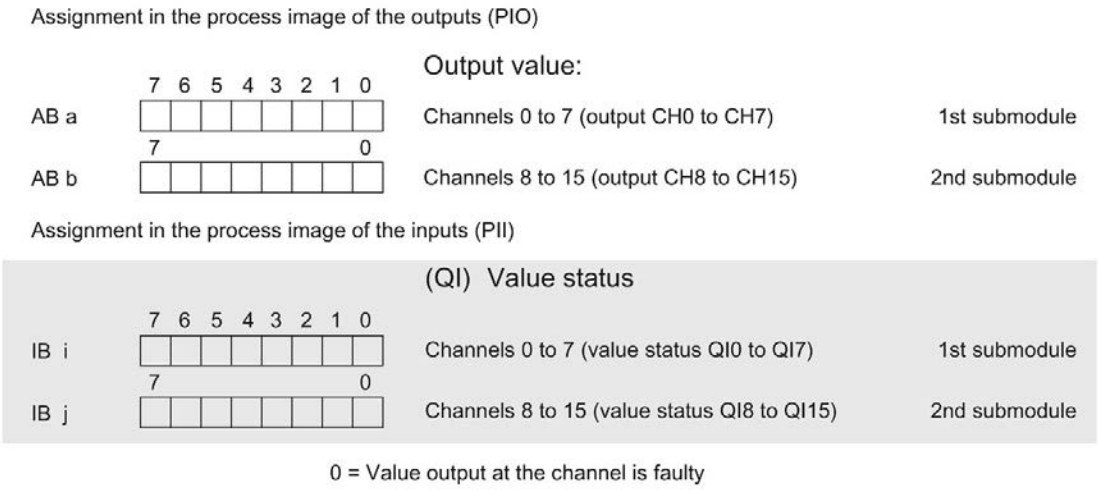

Figure 4-2 Address space for configuration as 2 x 8-channel DQ 16x24VDC/0.5A HF S QI with value status

Address space for configuration as 1 x 16-channel DQ 16x24VDC/0.5A HF MSO

For the configuration as a 1 x 16-channel module (module-internal shared output, MSO), channels 0 to 15 of the module are copied to multiple submodules. Channels 0 to 15 are then available with identical values in various submodules. These submodules can be assigned to up to four IO controllers when the module is used in a shared device:

- The IO controller to which submodule 1 is assigned has write access to outputs 0 to 15.
- The IO controllers to which submodule 2, 3, or 4 is assigned have read access to outputs 0 to 15.

The number of IO controllers depends on the interface module used. Observe the information in the manual for the particular interface module.

Value status (Quality Information, QI)

The meaning of the value status depends on the submodule on which it occurs.

For the first submodule (=basic submodule), the value status 0 indicates that the value is incorrect or that the IO controller of the basic submodule is in STOP state.

For 2nd to 4th submodule (=MSO submodule), the value status 0 indicates that the value is incorrect or one of the following errors has occurred:

- The basic submodule is not yet configured (not ready).
- The connection between the IO controller and the basic submodule has been interrupted.
- The IO controller of the basic submodule is in STOP or POWER OFF state.

The following figure shows the assignment of the address space for submodules 1 and 2 and the value status.

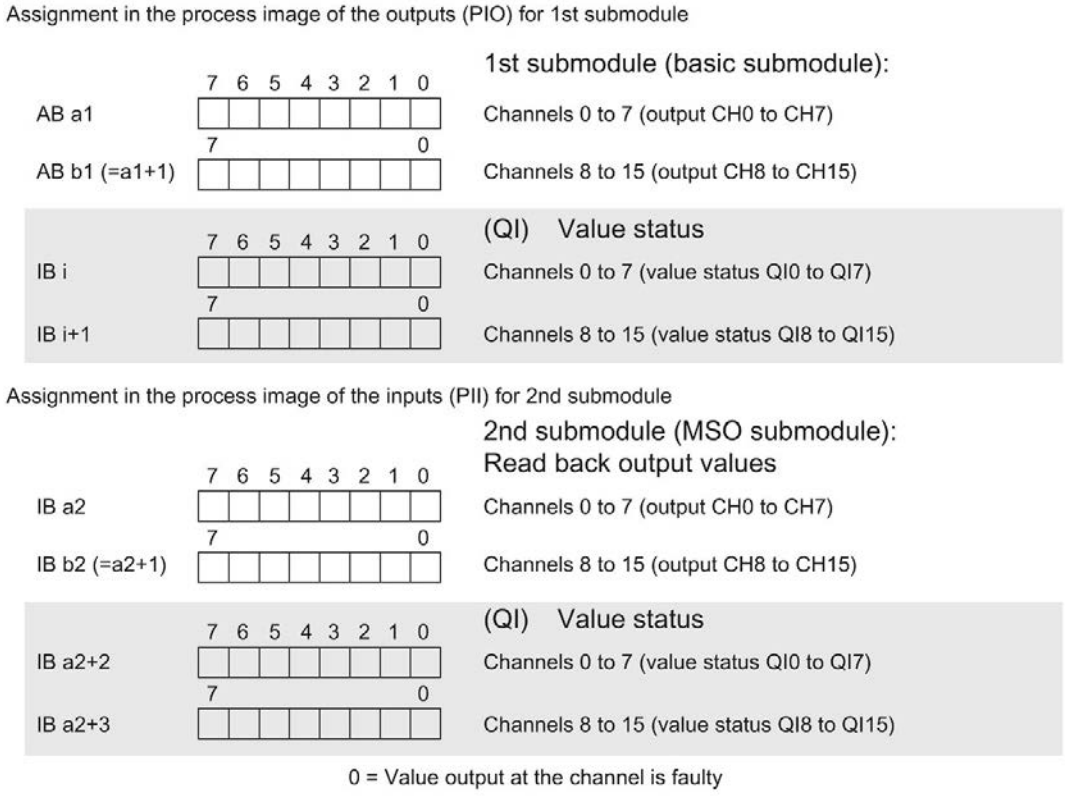

Figure 4-3 Address space for configuration as 1 x 16-channel DQ 16x24VDC/0.5A HF S MSO with value status

The following figure shows the assignment of the address space with submodules 3 and 4 and the value status.

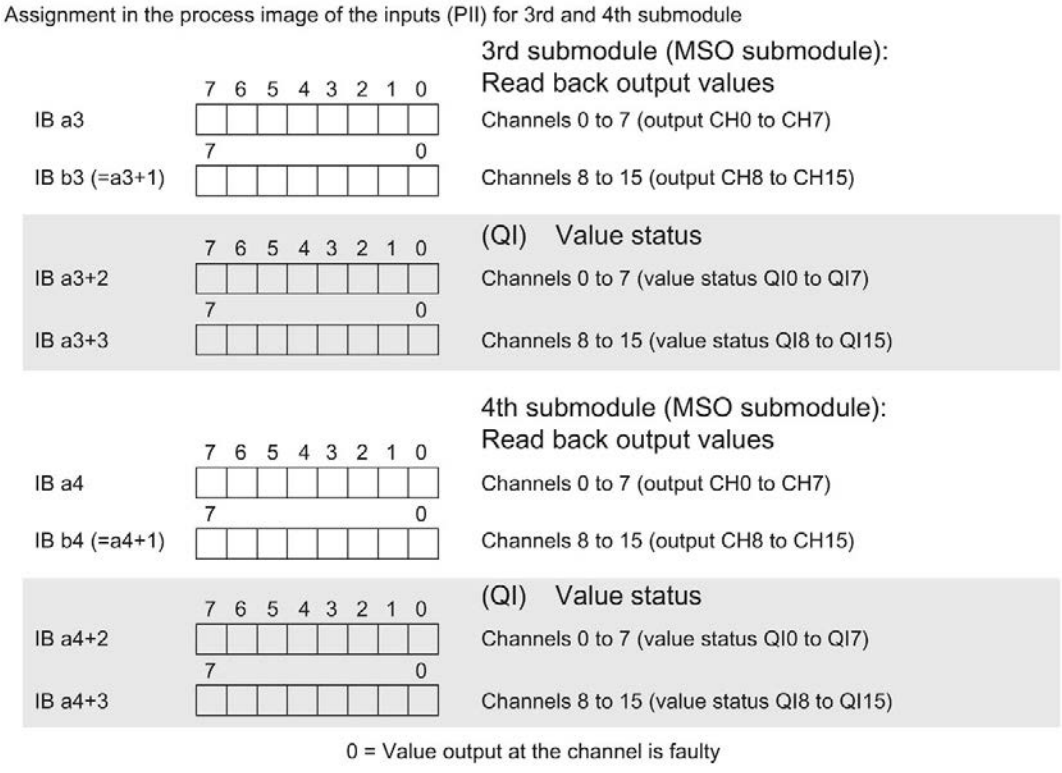

Figure 4-4 Address space for configuration as 1 x 16-channel DQ 16x24VDC/0.5A HF S MSO with value status

Reference

You can find information on the Shared Input/Output (MSI/MSO) function in the section Module-Internal Shared Input/Output (MSI/MSO) of the PROFINET with STEP 7 V13 (https://support.industry.siemens.com/cs/ww/en/view/49948856) function manual.

Interrupts/diagnostics alarms

5

5.1 Status and error displays

LED displays

The following figure shows the LED displays (status and error displays) of module.

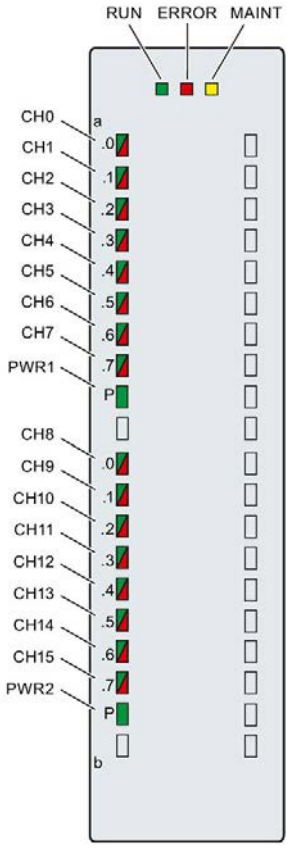

Figure 5-1 LED displays of the DQ 16x24VDC/0.5A HF module

Meaning of the LED displays

The tables below explain the meaning of the status and error displays. Remedial measures for diagnostic alarms can be found in section Diagnostic alarms (Page 28).

RUN and ERROR LED

Table 5- 1 Status and error displays RUN and ERROR

LED		Meaning	Solution
RUN	ERROR		
Off	Off	Voltage missing or too low at backplane bus	• Switch on the CPU and/or the system power supply modules. • Verify that the U connectors are inserted. • Check to see if too many modules are inserted.
Flashes	Off	The module starts and flashes until the valid parameter assignment is set.	---
On	Off	Module is configured	
On	Flashes	Indicates module errors (at least one error at one channel, e.g., short-circuit to ground).	Evaluate the diagnostics data and eliminate the error (e.g., check the cables).
Flashes	Flashes	Hardware defective	Replace the module.

LED MAINT

Table 5- 2 MAINT status display

LED MAINT	Meaning	Solution
Off	0 = No maintenance interrupt is pending.	---
On	1 = The maintenance interrupt "Limit value warning" is pending.	---

PWR1 and PWR2 LED

Table 5- 3 PWR1 and PWR2 status indication

LED PWRx	Meaning	Solution
Off	Supply voltage L+ too low or missing	Check the L+ supply voltage.
On	Supply voltage L+ is present and OK	---

LED CHx

Table 5- 4 CHx status display

LED CHx	Meaning	Solution
□ Off	0 = Status of the output signal	---
■ On	1 = Status of the output signal	---
■ On	• Wire break or short-circuit to ground • Supply voltage L+ missing or too low	• Correct the process wiring • Check the supply voltage.

5.2 Interrupts

The digital output module DQ 16x24VDC/0.5A HF supports diagnostic interrupts and maintenance interrupts.

You can find detailed information on the event in the error organization block with the "RALRM" instruction (read additional interrupt info) and in the STEP 7 online help.

Diagnostic interrupt

The module generates a diagnostic interrupt at the following events:

- No supply voltage L+
- Short circuit to ground
- Wire break
- Parameter assignment error

Maintenance interrupt

The module generates a maintenance interrupt at the following events:

- Limit value warning

5.3 Diagnostics alarms

Diagnostics alarms

A diagnostics alarm is generated and the ERROR LED flashes for each diagnostics event on the module. You can read the diagnostics alarms, for example, in the diagnostics buffer of the CPU. You can evaluate the error codes with the user program.

If the module is operated distributed with PROFIBUS DP in an ET 200MP system, you have the option to read out diagnostics data with the instruction RDREC or RD_REC using data record 0 and 1. The structure of the data records is available on the Internet in the "Manual for interface module IM 155-5 DP ST (6ES7155-5BA00-0AB0)".

Table 5- 5 Diagnostics alarms, their meaning and corrective measures

Diagnostics alarm	Error code	Meaning	Corrective measures
Short circuit to ground	1_H	Short-circuit or overload at the channel	Check the wiring/actuator. Check the ambient temperature.
Wire break*	6_H	Actuator circuit impedance too high.	Use different actuator type or wire differently, e.g. use lines with bigger cross-section
		Wire break between the module and actuator	Connect the cable
		Channel not connected (open)	• Disable diagnostics • Connect a resistor to the actuator contacts in the load resistance range
Parameter assignment error	10_H	• The module cannot evaluate parameters for the channel. • Incorrect parameter assignment	Correct the parameter assignment
Load voltage missing	11_H	Supply voltage L+ of the module is missing	Connect supply voltage L+ to module/channel
Limit value warning	17_H	The configured limit for switching cycles has been exceeded.	• Replace actuator as a precautionary measure • Reset counter with DS131

* Wire break is also reported for short-circuit of actuator supply to L+. This can lead to inappropriate diagnostics for redundant load control.

Technical specifications

6

Technical specifications of the DQ 16x24VDC/0.5A HF

The following table shows the technical specifications as of 06/2018. You will find a data sheet including daily updated technical specifications on the Internet (https://support.industry.siemens.com/cs/ww/en/pv/6ES7522-1BH01-0AB0/td?dl=en).

Article number	6ES7522-1BH01-0AB0
General information	
Product type designation	DQ 16x24VDC/0.5A HF
HW functional status	FS02
Firmware version	V1.1.0
• FW update possible	Yes
Product function	
• I&M data	Yes; I&M0 to I&M3
Engineering with	
• STEP 7 TIA Portal configurable/integrated as of version	V13 SP1 / -
• PROFIBUS as of GSD version/GSD revision	V1.0 / V5.1
• PROFINET as of GSD version/GSD revision	V2.3 / -
Operating mode	
• DQ	Yes
• DQ with energy-saving function	No
• PWM	No
• Cam control (switching at comparison values)	No
• Oversampling	No
• MSO	Yes
• Integrated operating cycle counter	Yes
Supply voltage	
Rated value (DC)	24 V
permissible range, lower limit (DC)	20.4 V
permissible range, upper limit (DC)	28.8 V
Reverse polarity protection	Yes; through internal protection with 7 A per group

Article number	6ES7522-1BH01-0AB0
Input current	
Current consumption, max.	30 mA
Output voltage	
Rated value (DC)	24 V
Power	
Power available from the backplane bus	1.1 W
Power loss	
Power loss, typ.	2 W
Digital outputs	
Type of digital output	Transistor
Number of digital outputs	16
Current-sourcing	Yes
Short-circuit protection	Yes; Clocked electronically
• Response threshold, typ.	1 A
Limitation of inductive shutdown voltage to	L+ (-53 V)
Controlling a digital input	Yes
Switching capacity of the outputs	
• with resistive load, max.	0.5 A
• on lamp load, max.	5 W
Load resistance range	
• lower limit	48 Ω
• upper limit	12 kΩ
Output voltage	
• for signal "1", min.	L+ (-0.8 V)
Output current	
• for signal "1" rated value	0.5 A
• for signal "1" permissible range, max.	0.5 A
• for signal "0" residual current, max.	0.5 mA
Output delay with resistive load	
• "0" to "1", max.	100 µs
• "1" to "0", max.	500 µs
Parallel switching of two outputs	
• for logic links	Yes
• for uprating	No
• for redundant control of a load	Yes

Article number	6ES7522-1BH01-0AB0
Switching frequency	
• with resistive load, max.	100 Hz
• with inductive load, max.	0.5 Hz; According to IEC 60947-5-1, DC-13
• on lamp load, max.	10 Hz
Total current of the outputs	
• Current per channel, max.	0.5 A; see additional description in the manual
• Current per group, max.	4 A; see additional description in the manual
• Current per module, max.	8 A; see additional description in the manual
Cable length	
• shielded, max.	1 000 m
• unshielded, max.	600 m
Isochronous mode	
Isochronous operation (application synchronized up to terminal)	Yes
Execution and activation time (TCO), min.	70 µs
Bus cycle time (TDP), min.	250 µs
Interrupts/diagnostics/status information	
Diagnostics function	Yes
Substitute values connectable	Yes
Alarms	
• Diagnostic alarm	Yes
Diagnostic messages	
• Monitoring the supply voltage	Yes
• Wire-break	Yes
• Short-circuit	Yes
• Group error	Yes
Diagnostics indication LED	
• RUN LED	Yes; Green LED
• ERROR LED	Yes; Red LED
• MAINT LED	Yes; yellow LED
• Monitoring of the supply voltage (PWR-LED)	Yes; Green LED
• Channel status display	Yes; Green LED
• for channel diagnostics	Yes; Red LED
• for module diagnostics	Yes; Red LED

Article number	6ES7522-1BH01-0AB0
Potential separation	
Potential separation channels	
• between the channels	No
• between the channels, in groups of	8
• between the channels and backplane bus	Yes
Isolation	
Isolation tested with	707 V DC (type test)
Standards, approvals, certificates	
Suitable for safety-related tripping of standard modules	Yes; From FS02
Highest safety class achievable for safety-related tripping of standard modules	
• Performance level according to ISO 13849-1	PL d
• Category according to ISO 13849-1	Cat. 3
• SILCL according to IEC 62061	SILCL 2
Ambient conditions	
Ambient temperature during operation	
• horizontal installation, min.	0 °C
• horizontal installation, max.	60 °C
• vertical installation, min.	0 °C
• vertical installation, max.	60 °C
Decentralized operation	
Prioritized startup	Yes
Dimensions	
Width	35 mm
Height	147 mm
Depth	129 mm
Weights	
Weight, approx.	230 g

Residual current at signal state "0":

Note

Due to the Diagnostics: Wire break function, there is a low level of residual current in the "0" signal state at the output, which may cause the display diodes to flicker.

This residual current does not depend on the setting for the wire break diagnostics parameter.

Power reduction (derating) to aggregate current of outputs (per group)

The following graphs show the loading capacity of the digital outputs in relation to the mounting position of the S71500 / Distributed I/O System ET 200MP automation system and the ambient temperature.

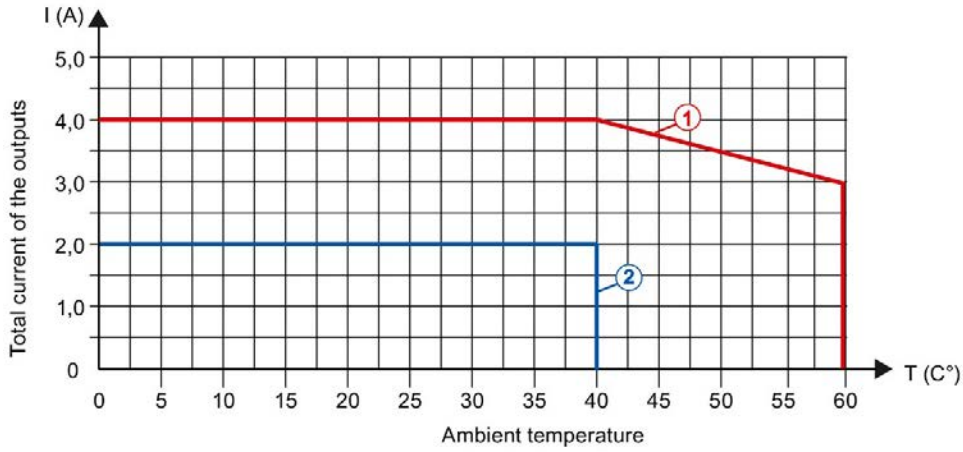

① Horizontal mounting of the system

② Vertical mounting of the system

Figure 6-1 Details on aggregate current of outputs (per group)

Dimensional drawing

A

A.1 Dimensional drawing

The dimensional drawing of the module on the mounting rail, as well as a dimensional drawing with open front cover, are provided in this appendix. Always observe the specified dimensions for installations in cabinets, control rooms, etc.

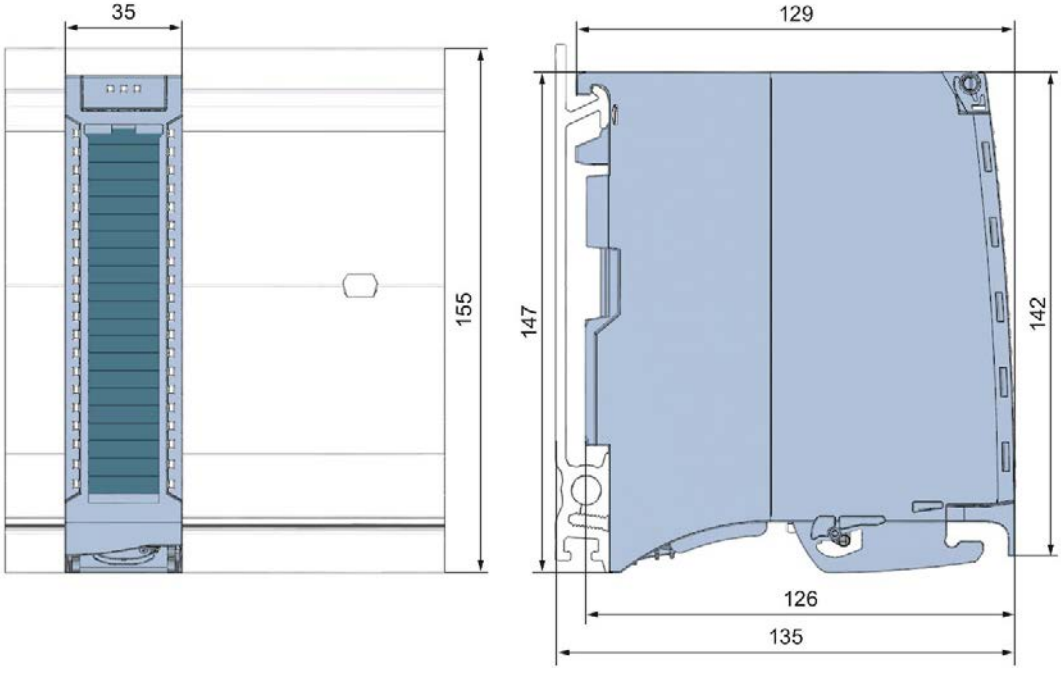

Figure A-1 Dimension drawing of the DQ 16x24VDC/0.5A HF module

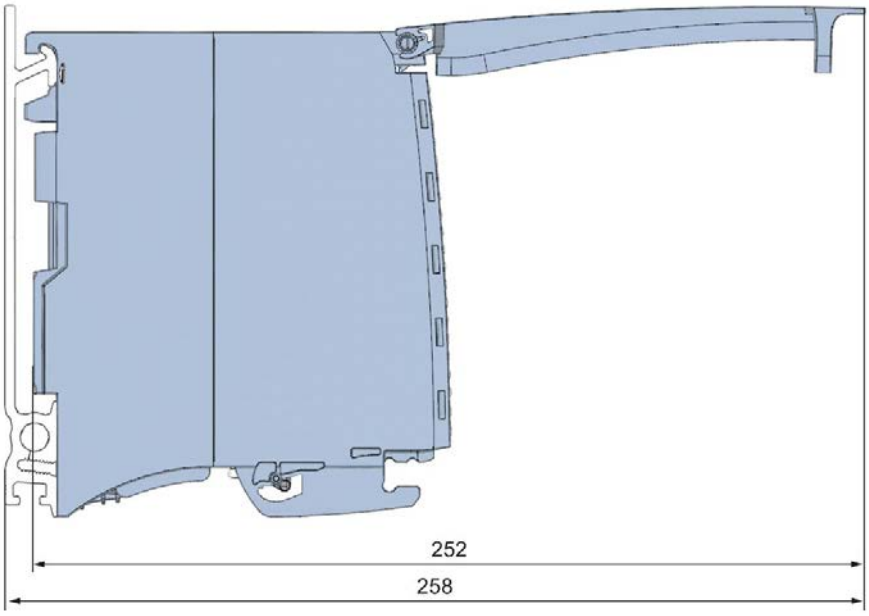

Figure A-2 Dimension drawing of the DQ 16x24VDC/0.5A HF module, side view with open front cover

Parameter data records

B

B.1 Parameter assignment

The data records of the module have an identical structure, regardless of whether you configure the module with PROFIBUS DP or PROFINET IO.

Dependencies for configuration with GSD file

When a GSD file is used to configure a module, dependencies can arise when "assigning the parameters".

There are no dependencies for this module. You can assign the individual parameters in any combination.

Parameter assignment in the user program

You have the option to reconfigure the modules in RUN (e.g. the response of selected channels to the CPU-STOP state can be changed in RUN without having an effect on the other channels)

Parameter assignment in RUN

The WRREC instruction is used to transfer the parameters to the module using data sets 64 to 79. The parameters set in STEP 7 do not change in the CPU, which means the parameters set in STEP 7 are still valid after a restart.

The parameters are only checked for plausibility by the module after the transfer.

Output parameter STATUS

The module ignores errors that occurred during the transfer of parameters with the WRREC instruction and continues operation with the previous parameter assignment. However, a corresponding error code is written to the STATUS output parameter.

The description of the WRREC instruction and the error codes is available in the STEP 7 online help.

Assignment of data record and channel

For the configuration as a 1 x 16-channel module, the parameters are located in data sets 64 to 79 and are assigned as follows:

- Data record 64 for channel 0
- Data record 65 for channel 1
- …
- Data set 78 for channel 14
- Data set 79 for channel 15

For the configuration as a 2 x 8-channel module, the module has 2 submodules with eight channels each. The parameters for the channels are located in data records 64 to 71 and are assigned as follows:

- Data records 64 to 71 for channels 0 to 7 (submodule 1)
- Data records 64 to 71 for channels 8 to 15 (submodule 2)

Address the respective submodule for data record transfer.

B.2 Structure of parameter data sets DS 64 - 79

Structure of data sets 64 to 79

The figure below shows the structure of data set 64 for channel 0 as an example. The structure is identical for channels 1 to 15. The values in byte 0 and byte 1 are fixed and may not be changed.

Enable a parameter by setting the corresponding bit to "1".

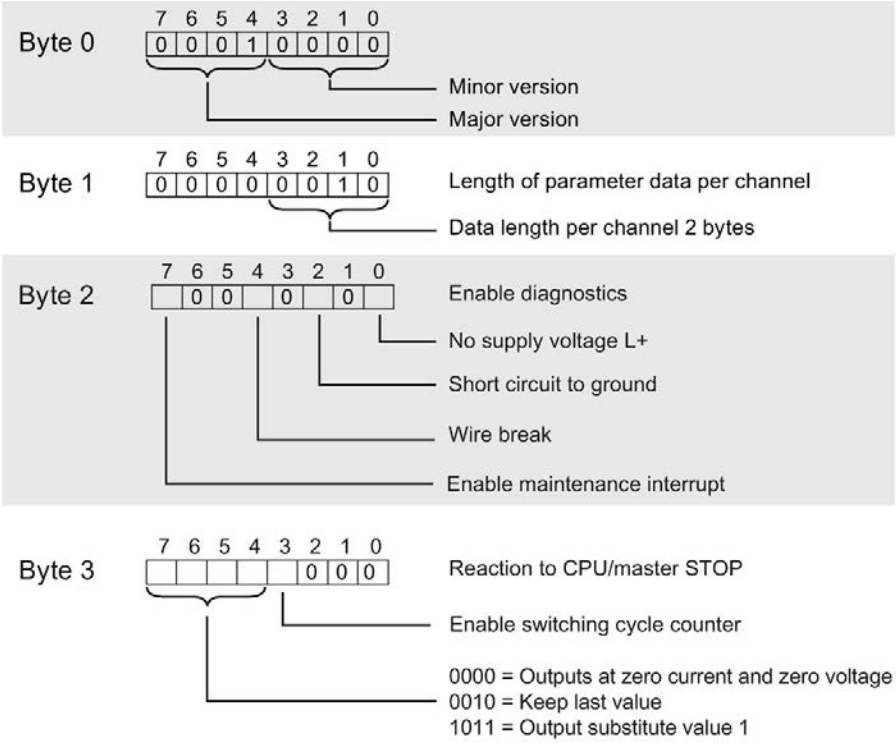

Figure B-1 Structure of data record 64: Bytes 0 to 3

B.3 Structure of data set DS 129

Structure of data set 129

You can read the current states of the switching cycle counters with data set 129. The counter status is supplied for each channel in UDINT format. The length of the data set results from the number of channels in the selected submodule.

The following figure shows you the structure of data set 129 for 16 channels.

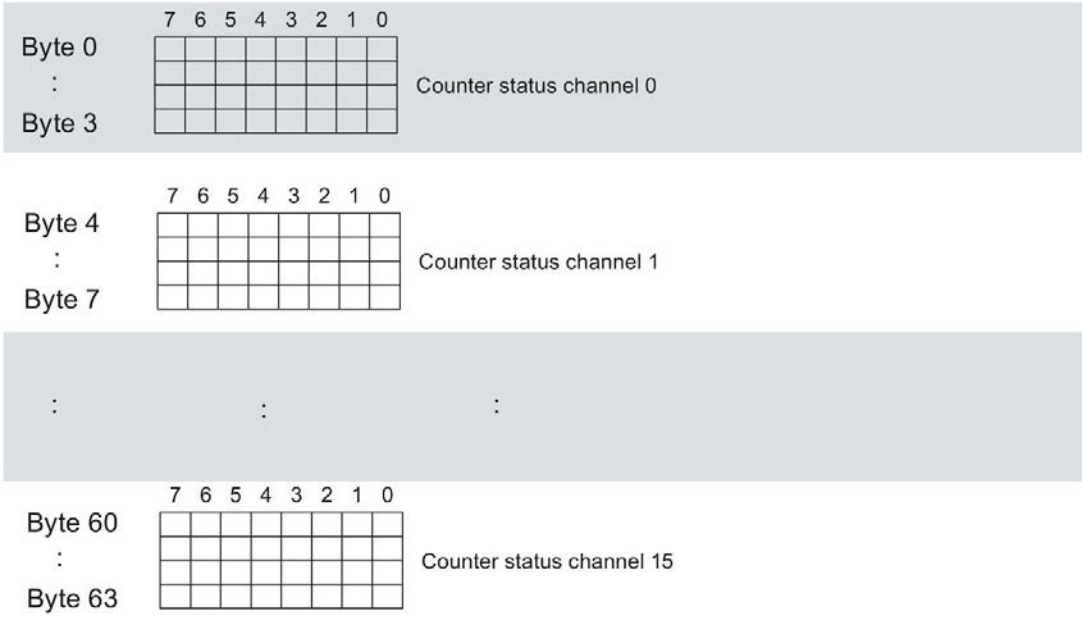

Figure B-2 Structure of data set 129: Byte 0 to 63

The following figure shows you the structure of data set 129 for 2 submodules with 8 channels each.

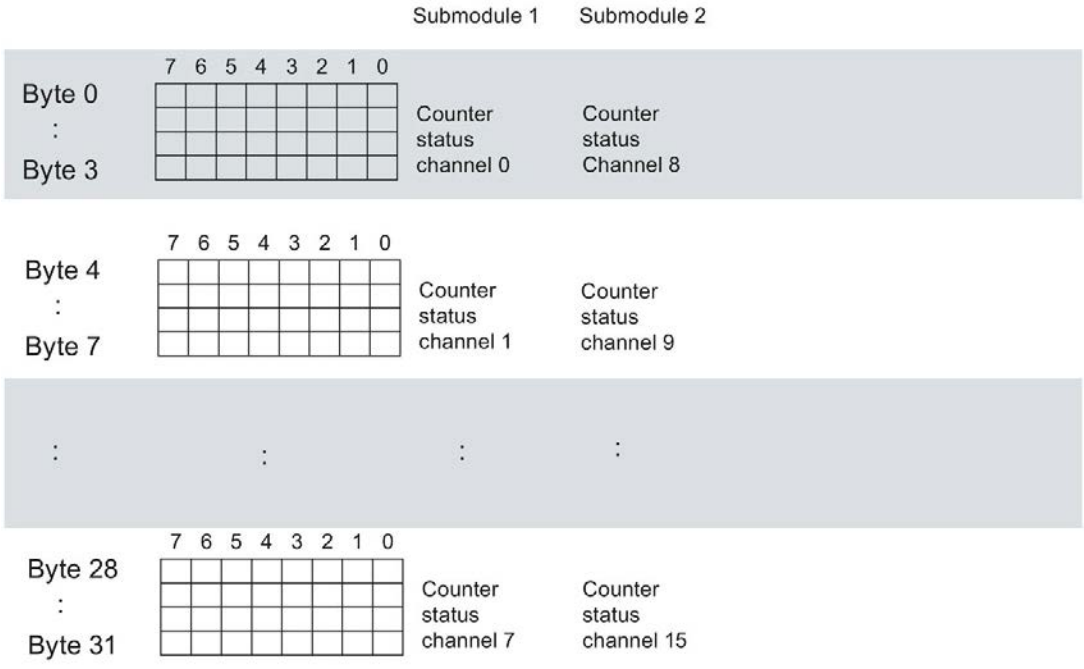

Figure B-3 Structure of data set 129: Byte 0 to 31

B.4 Structure of data set DS 130

Structure of data set 130

The limits of the switching cycle counters are read out with data set 130. The set value is supplied for each channel in UDINT format. The length of the data set results from the number of channels in the selected submodule.

The following figure shows you the structure of data set 130 for 16 channels.

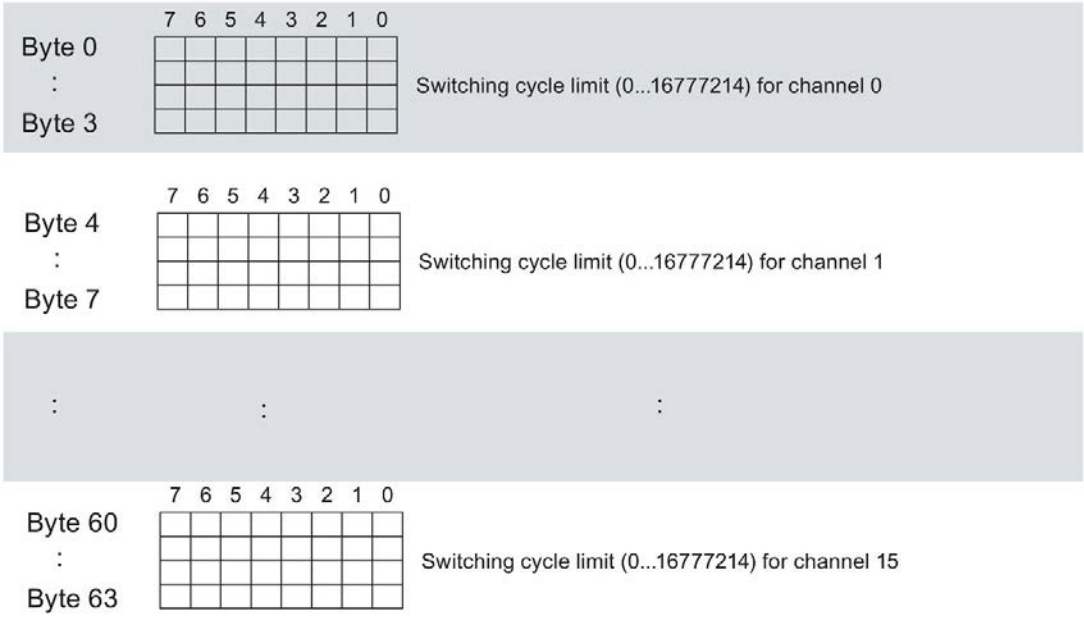

Figure B-4 Structure of data set 130: Byte 0 to 63

The following figure shows you the structure of data set 130 for 2 submodules with 8 channels each.

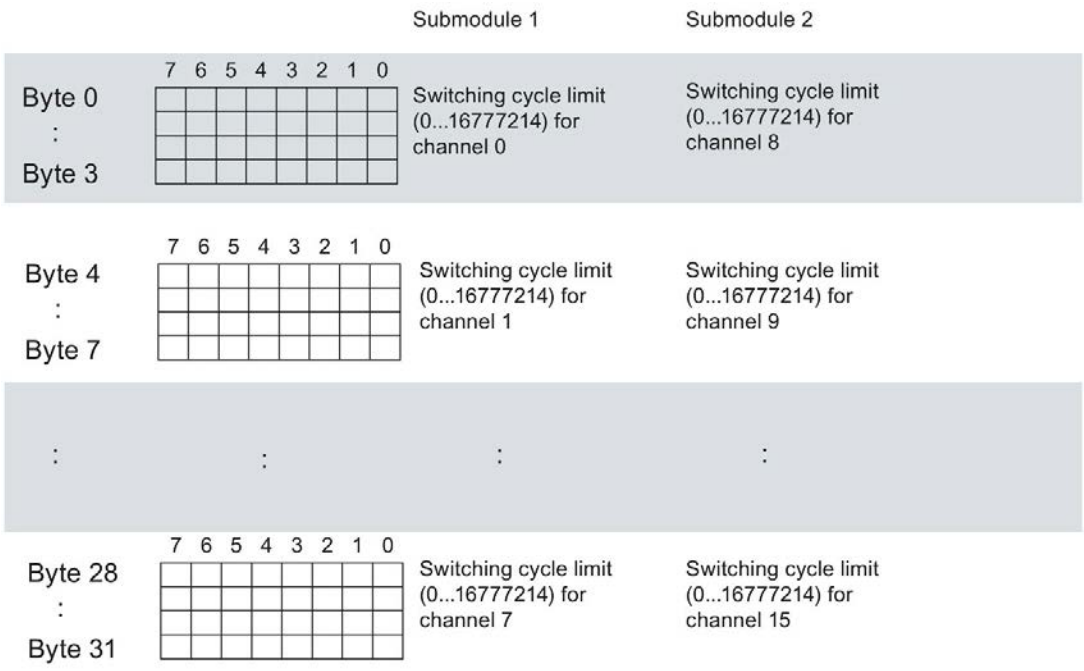

Figure B-5 Structure of data set 130: Byte 0 to 31

B.5 Structure of data set DS 131

Structure of data set 131

The following figure shows you the structure of data set 131.

Enable a parameter by setting the corresponding bit to "1".

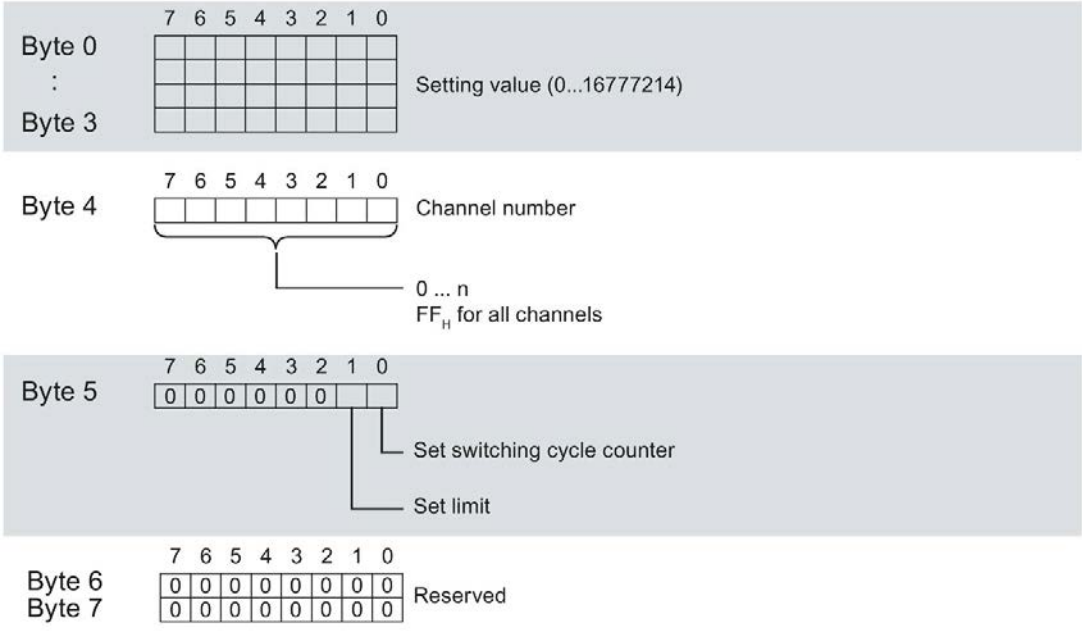

Figure B-6 Structure of data set 131: Bytes 0 to 7

SIEMENS

SIMATIC

S7-1500 / ET 200MP

Digital output module DQ 16x24...48VUC/125VDC/0.5A ST (6ES7522-5EH00-0AB0)

Manual

Edition 09/2016

siemens.com

SIEMENS

SIMATIC

S7-1500/ET 200MP Digital output module DQ 16x24...48VUC/125VDC/0.5A ST (6ES7522-5EH00-0AB0)

Manual

Preface

Documentation guide 1

Product overview 2

Wiring 3

Parameters/address space 4

Interrupts/diagnostics alarms 5

Technical specifications 6

Dimensional drawing A

Parameter data records B

09/2016

A5E35683139-AB

Legal information

Warning notice system

This manual contains notices you have to observe in order to ensure your personal safety, as well as to prevent damage to property. The notices referring to your personal safety are highlighted in the manual by a safety alert symbol, notices referring only to property damage have no safety alert symbol. These notices shown below are graded according to the degree of danger.

⚠ DANGER

indicates that death or severe personal injury **will** result if proper precautions are not taken.

⚠ WARNING

indicates that death or severe personal injury **may** result if proper precautions are not taken.

⚠ CAUTION

indicates that minor personal injury can result if proper precautions are not taken.

NOTICE

indicates that property damage can result if proper precautions are not taken.

If more than one degree of danger is present, the warning notice representing the highest degree of danger will be used. A notice warning of injury to persons with a safety alert symbol may also include a warning relating to property damage.

Qualified Personnel

The product/system described in this documentation may be operated only by **personnel qualified** for the specific task in accordance with the relevant documentation, in particular its warning notices and safety instructions. Qualified personnel are those who, based on their training and experience, are capable of identifying risks and avoiding potential hazards when working with these products/systems.

Proper use of Siemens products

Note the following:

⚠ WARNING

Siemens products may only be used for the applications described in the catalog and in the relevant technical documentation. If products and components from other manufacturers are used, these must be recommended or approved by Siemens. Proper transport, storage, installation, assembly, commissioning, operation and maintenance are required to ensure that the products operate safely and without any problems. The permissible ambient conditions must be complied with. The information in the relevant documentation must be observed.

Trademarks

All names identified by ® are registered trademarks of Siemens AG. The remaining trademarks in this publication may be trademarks whose use by third parties for their own purposes could violate the rights of the owner.

Disclaimer of Liability

We have reviewed the contents of this publication to ensure consistency with the hardware and software described. Since variance cannot be precluded entirely, we cannot guarantee full consistency. However, the information in this publication is reviewed regularly and any necessary corrections are included in subsequent editions.

Siemens AG
Division Digital Factory
Postfach 48 48
90026 NÜRNBERG
GERMANY

A5E35683139-AB
℗ 11/2016 Subject to change

Copyright © Siemens AG 2015 - 2016.
All rights reserved

Preface

Purpose of the documentation

This manual supplements the system manual S7-1500/ET 200MP (https://support.industry.siemens.com/cs/ww/en/view/59191792).

Functions that relate in general to the systems are described in these system manuals.

The information provided in this manual and in the system/function manuals supports you in commissioning the systems.

Changes compared to previous version

Compared to the previous version, this manual contains the following change:

Original texts of the license conditions and copyright notes for open-source software are available on the Internet as of 09/2016.

Conventions

The term "CPU" is used in this manual both for the CPUs of the S7-1500 automation system and for interface modules of the ET 200MP distributed I/O system.

Please also observe notes marked as follows:

Note

A note contains important information on the product described in the documentation, on the handling of the product or on the section of the documentation to which particular attention should be paid.

Security information

Siemens provides products and solutions with industrial security functions that support the secure operation of plants, systems, machines and networks.

In order to protect plants, systems, machines and networks against cyber threats, it is necessary to implement – and continuously maintain – a holistic, state-of-the-art industrial security concept. Siemens' products and solutions only form one element of such a concept.

Customer is responsible to prevent unauthorized access to its plants, systems, machines and networks. Systems, machines and components should only be connected to the enterprise network or the internet if and to the extent necessary and with appropriate security measures (e.g. use of firewalls and network segmentation) in place.

Additionally, Siemens' guidance on appropriate security measures should be taken into account. For more information about industrial security, please visit (http://www.siemens.com/industrialsecurity).

Siemens' products and solutions undergo continuous development to make them more secure. Siemens strongly recommends to apply product updates as soon as available and to always use the latest product versions. Use of product versions that are no longer supported, and failure to apply latest updates may increase customer's exposure to cyber threats.

To stay informed about product updates, subscribe to the Siemens Industrial Security RSS Feed under (http://www.siemens.com/industrialsecurity).

Open Source Software

Open-source software is used in the firmware of the I/O modules. Open Source Software is provided free of charge. We are liable for the product described, including the open-source software contained in it, pursuant to the conditions applicable to the product. Siemens accepts no liability for the use of the open source software over and above the intended program sequence, or for any faults caused by modifications to the software.

For legal reasons, we are obliged to publish the original text of the license conditions and copyright notices. Please read the information relating to this on the Internet (https://support.industry.siemens.com/cs/ww/en/view/109741045).

Table of contents

Preface 4
1 Documentation guide 7
2 Product overview 11
2.1 Properties 11
3 Wiring 13
4 Parameters/address space 15
4.1 Parameters 15
4.2 Description of parameters 15
4.3 Address space 16
5 Interrupts/diagnostics alarms 21
5.1 Status and error displays 21
5.2 Interrupts 23
5.3 Diagnostics alarms 23
6 Technical specifications 24
A Dimensional drawing 27
A.1 Dimensional drawing 27
B Parameter data records 29
B.1 Parameter assignment and structure of the parameter data records 29

Documentation guide

1

The documentation for the SIMATIC S7-1500 automation system, the CPU 1516pro-2 PN based on SIMATIC S7-1500 and the SIMATIC ET 200MP distributed I/O system is arranged into three areas.
This arrangement enables you to access the specific content you require.

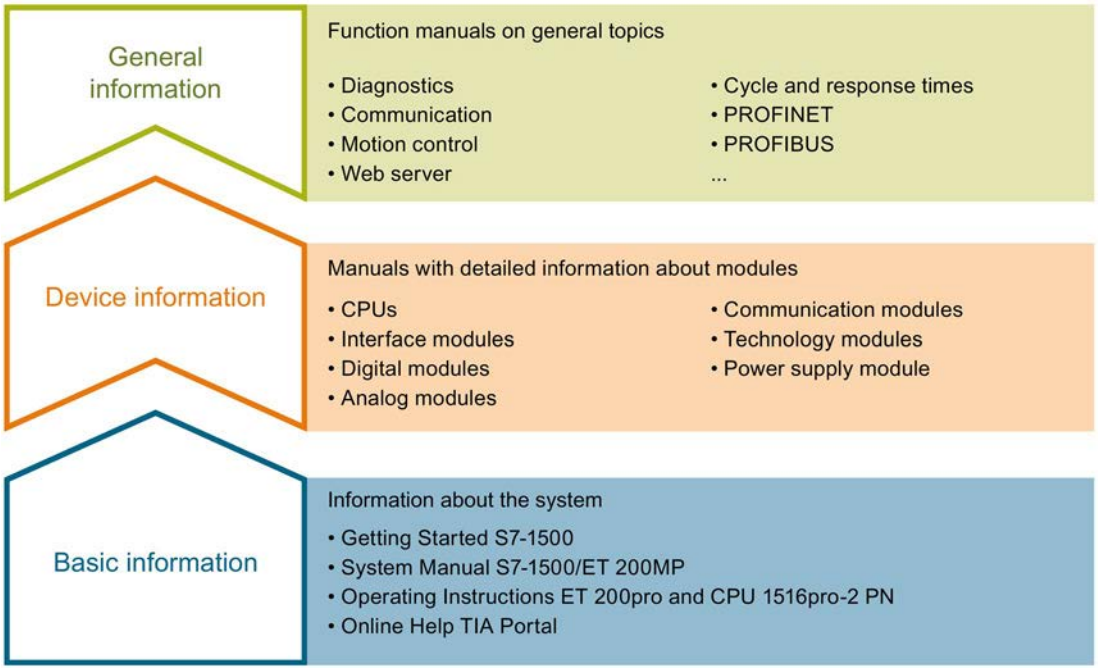

Basic information

The System Manual and Getting Started describe in detail the configuration, installation, wiring and commissioning of the SIMATIC S7-1500 and ET 200MP systems. For CPU 1516pro-2 PN you use the corresponding operating instructions. The STEP 7 online help supports you in the configuration and programming.

Device information

Product manuals contain a compact description of the module-specific information, such as properties, wiring diagrams, characteristics and technical specifications.

General information

The function manuals contain detailed descriptions on general topics regarding the SIMATIC S7-1500 and ET 200MP systems, e.g. diagnostics, communication, motion control, Web server, OPC UA.

You can download the documentation free of charge from the Internet (http://w3.siemens.com/mcms/industrial-automation-systems-simatic/en/manual-overview/Pages/Default.aspx).

Changes and supplements to the manuals are documented in a Product Information.

You can download the product information free of charge from the Internet (https://support.industry.siemens.com/cs/us/en/view/68052815).

Manual Collection S7-1500/ET 200MP

The Manual Collection contains the complete documentation on the SIMATIC S7-1500 automation system and the ET 200MP distributed I/O system gathered together in one file.

You can find the Manual Collection on the Internet (https://support.industry.siemens.com/cs/ww/en/view/86140384).

SIMATIC S7-1500 comparison list for programming languages

The comparison list contains an overview of which instructions and functions you can use for which controller families.

You can find the comparison list on the Internet (https://support.industry.siemens.com/cs/ww/en/view/86630375).

"mySupport"

With "mySupport", your personal workspace, you make the best out of your Industry Online Support.

In "mySupport", you can save filters, favorites and tags, request CAx data and compile your personal library in the Documentation area. In addition, your data is already filled out in support requests and you can get an overview of your current requests at any time.

You must register once to use the full functionality of "mySupport".

You can find "mySupport" on the Internet (https://support.industry.siemens.com/My/ww/en).

"mySupport" - Documentation

In the Documentation area in "mySupport" you can combine entire manuals or only parts of these to your own manual.
You can export the manual as PDF file or in a format that can be edited later.

You can find "mySupport" - Documentation on the Internet (http://support.industry.siemens.com/My/ww/en/documentation).

"mySupport" - CAx data

In the CAx data area in "mySupport", you can access the current product data for your CAx or CAe system.

You configure your own download package with a few clicks.

In doing so you can select:

- Product images, 2D dimension drawings, 3D models, internal circuit diagrams, EPLAN macro files
- Manuals, characteristics, operating manuals, certificates
- Product master data

You can find "mySupport" - CAx data on the Internet (http://support.industry.siemens.com/my/ww/en/CAxOnline).

Application examples

The application examples support you with various tools and examples for solving your automation tasks. Solutions are shown in interplay with multiple components in the system - separated from the focus on individual products.

You will find the application examples on the Internet (https://support.industry.siemens.com/sc/ww/en/sc/2054).

TIA Selection Tool

With the TIA Selection Tool, you can select, configure and order devices for Totally Integrated Automation (TIA).
This tool is the successor of the SIMATIC Selection Tool and combines the known configurators for automation technology into one tool.
With the TIA Selection Tool, you can generate a complete order list from your product selection or product configuration.

You can find the TIA Selection Tool on the Internet (http://w3.siemens.com/mcms/topics/en/simatic/tia-selection-tool).

SIMATIC Automation Tool

You can use the SIMATIC Automation Tool to run commissioning and maintenance activities simultaneously on various SIMATIC S7 stations as a bulk operation independently of the TIA Portal.

The SIMATIC Automation Tool provides a multitude of functions:

- Scanning of a PROFINET/Ethernet network and identification of all connected CPUs
- Address assignment (IP, subnet, gateway) and station name (PROFINET device) to a CPU
- Transfer of the date and the programming device/PC time converted to UTC time to the module
- Program download to CPU
- Operating mode switchover RUN/STOP
- Localization of the CPU by means of LED flashing
- Reading out CPU error information
- Reading the CPU diagnostic buffer
- Reset to factory settings
- Updating the firmware of the CPU and connected modules

You can find the SIMATIC Automation Tool on the Internet (https://support.industry.siemens.com/cs/ww/en/view/98161300).

PRONETA

With SIEMENS PRONETA (PROFINET network analysis), you analyze the PROFINET network during commissioning. PRONETA features two core functions:

- The topology overview independently scans PROFINET and all connected components.
- The IO check is a fast test of the wiring and the module configuration of a system.

You can find SIEMENS PRONETA on the Internet (https://support.industry.siemens.com/cs/ww/en/view/67460624).

Product overview

2

2.1 Properties

Article number

6ES7522-5EH00-0AB0

View of the module

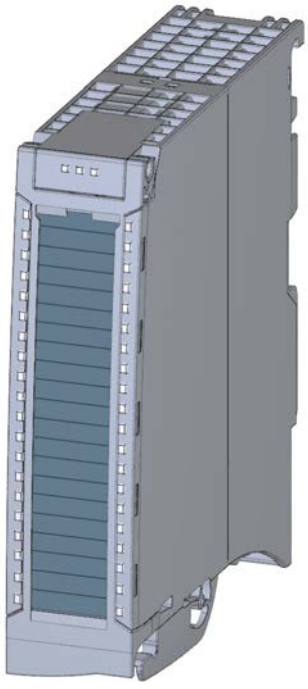

Figure 2-1 View of the DQ 16x24...48VUC/125VDC/0.5A ST module

Properties

The module has the following technical properties:

- 16 digital outputs; electrically isolated in groups of 1
- Rated output voltage 24 V DC (24 V DC to 125 V DC / 24 V UC to 48 V UC)
- Rated output current 0.5 A per channel
- Configurable substitute values (per channel)
- Suitable for solenoid valves, DC contactors, and indicator lights

The module supports the following functions:

Table 2- 1 Version dependencies of the module functions

Function	Firmware version of the module	Configuration software	
		STEP 7 (TIA Portal) as of V13, SP1 with HSP 0142	GSD file in STEP 7 (TIA Portal) V12 or higher, or STEP 7 V5.5 SP3 or higher
Firmware update	V1.0.0 or higher	X	--- / X
Identification data I&M0 to I&M3	V1.0.0 or higher	X	X
Parameter assignment in RUN	V1.0.0 or higher	X	X
Module-internal Shared Output (MSO)	V1.0.0 or higher	X (PROFINET IO only)	X (PROFINET IO only)
Configurable submodules / submodules for Shared Device	V1.0.0 or higher	X (PROFINET IO only)	X (PROFINET IO only)

You can configure the module with STEP 7 (TIA Portal) and with a GSD file.

Accessories

The following accessories are supplied with the module and can also be ordered separately as spare parts:

- Labeling strips
- U connector
- Universal front cover

Other components

The following component can be ordered separately:

Front connectors, including potential jumpers and cable ties

You can find additional information on accessories in the system manual S7-1500/ET 200MP (https://support.industry.siemens.com/cs/ww/en/view/59191792).

Wiring 3

This section contains the block diagram of the module and outlines various wiring options.

You can find information on wiring the front connector, establishing a cable shield, etc. in the system manual S7-1500/ET 200MP (https://support.industry.siemens.com/cs/ww/en/view/59191792).

Wiring and block diagram

The example in the following figure shows the terminal assignment and the assignment of the channels to the addresses (output byte a and output byte b).

Note

Do not insert the potential jumpers included with the front connector!

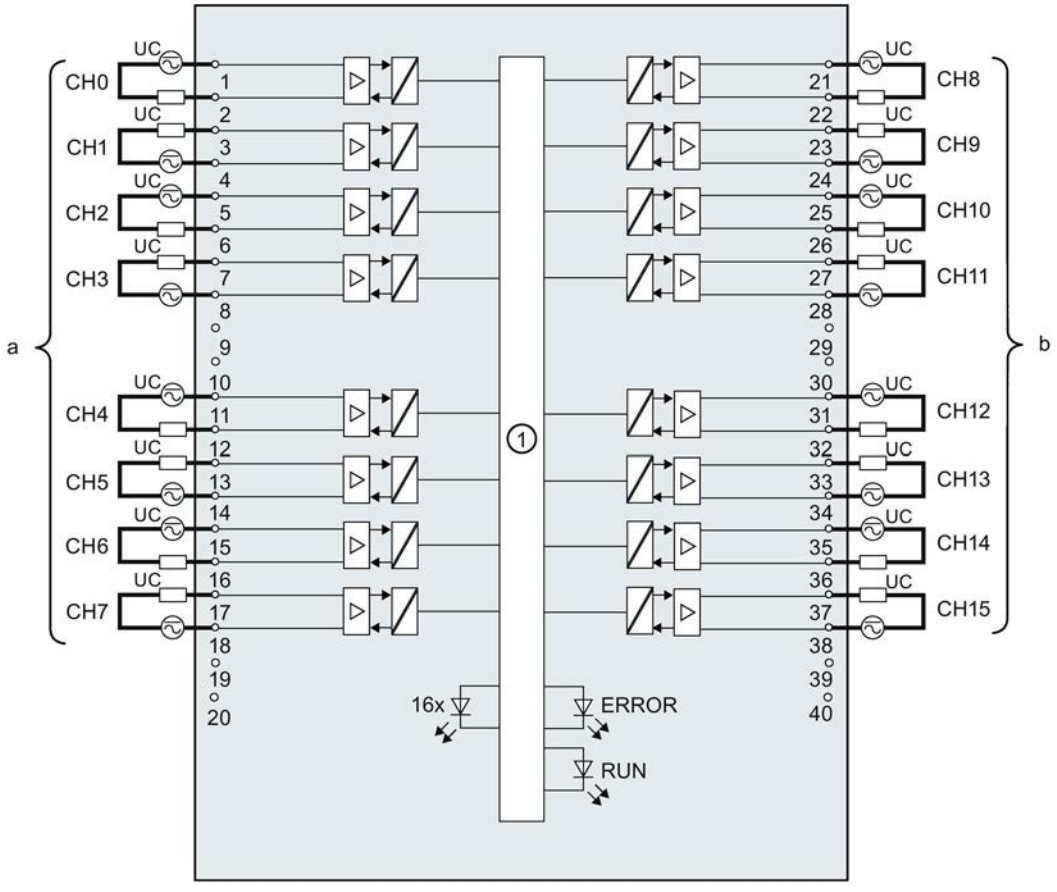

①	Backplane bus interface	CHx	Channel or channel status LED (green)
		RUN	Status display LED (green)
		ERROR	Error display LED (red)

Figure 3-1 Block diagram and terminal assignment

Note

When the supply voltage is switched on at each channel, there is a "1" signal at the module outputs for approx. 50 µs.

Parameters/address space 4

4.1 Parameters

DQ 16x24...48VUC/125VDC/0.5A ST parameters

When you assign the module parameters in STEP 7, you use various parameters to specify the module properties. The following table lists the configurable parameters. The effective range of the configurable parameters depends on the type of configuration. The following configurations are possible:

- Central operation with a S7-1500 CPU
- Distributed operation on PROFINET IO in an ET 200MP system
- Distributed operation on PROFIBUS DP in an ET 200MP system

For parameter assignment in the user program, the parameters are transferred to the module using the WRREC instruction (parameter assignment in RUN) and data records; see chapter Parameter assignment and structure of the parameter data records (Page 29).

Table 4- 1 Configurable parameters and their defaults

Parameters	Range of values	Default setting	Parameter assignment in RUN	Scope with configuration software, e.g., STEP 7 (TIA Portal)	
				Integrated in the hardware catalog as of STEP 7, V13 SP1 or GSD file PROFINET IO	GSD file PROFIBUS DP
Reaction to CPU STOP	• Turn off • Keep last value • Output substitute value 1	Turn off	Yes	Channel	Channel

4.2 Description of parameters

Reaction to CPU STOP

Determines the reaction of the output when the CPU goes into the STOP state or when the connection to the CPU is interrupted.

4.3 Address space

The module can be configured differently in STEP 7; see following table. Depending on the configuration, additional/different addresses are assigned in the process image of the outputs/inputs.

The letters "a and b" are printed onto the module. "IB a" for example, stands for module start address input byte a.

Configuration options of DQ 16x24...48VUC/125VDC/0.5A ST

You can configure the module with STEP 7 (TIA Portal) or with a GSD file.

When you configure the module by means of the GSD file, the configurations are available under different abbreviations/module names.

The following configurations are possible:

Table 4- 2 Configuration options

Configuration	Short designation/module name in the GSD file	Configuration software, e.g., STEP 7 (TIA Portal)	
		Integrated in the hardware catalog STEP 7 (TIA Portal) as of V13 SP1 with HSP 0142	GSD file in STEP 7 (TIA Portal) V12 or higher or STEP 7 V5.5 SP3 or higher
1 x 16-channel without value status	DQ 16x24...48VUC/125VDC/0.5A ST	X	X
1 x 16-channel with value status	DQ 16x24...48VUC/125VDC/0.5A ST QI	X	X
2 x 8-channel without value status	DQ 16x24...48VUC/125VDC/0.5A ST S	X (PROFINET IO only)	X (PROFINET IO only)
2 x 8-channel with value status	DQ 16x24...48VUC/125VDC/0.5A ST S QI	X (PROFINET IO only)	X (PROFINET IO only)
1 x 16-channel with value status for module-internal Shared Output with up to 4 submodules	DQ 16x24...48VUC/125VDC/0.5A ST MSO	X (PROFINET IO only)	X (PROFINET IO only)

Value status (Quality Information, QI)

The value status is always activated for the following module names:

- DQ 16x24...48VUC/125VDC/0.5A ST QI
- DQ 16x24...48VUC/125VDC/0.5A ST S QI
- DQ 16x24...48VUC/125VDC/0.5A ST MSO

An additional bit is assigned to each channel for the value status. The bit for the value status indicates if the output value specified by the user program is actually pending at the module terminal (0 = value is incorrect).

Address space for configuration as 16-channel DQ 16x24...48VUC/125VDC/0.5A ST

The following figure shows the assignment of the address space for the configuration as a 16-channel module with value status. You can freely assign the start address for the module. The addresses of the channels are derived from the start address.

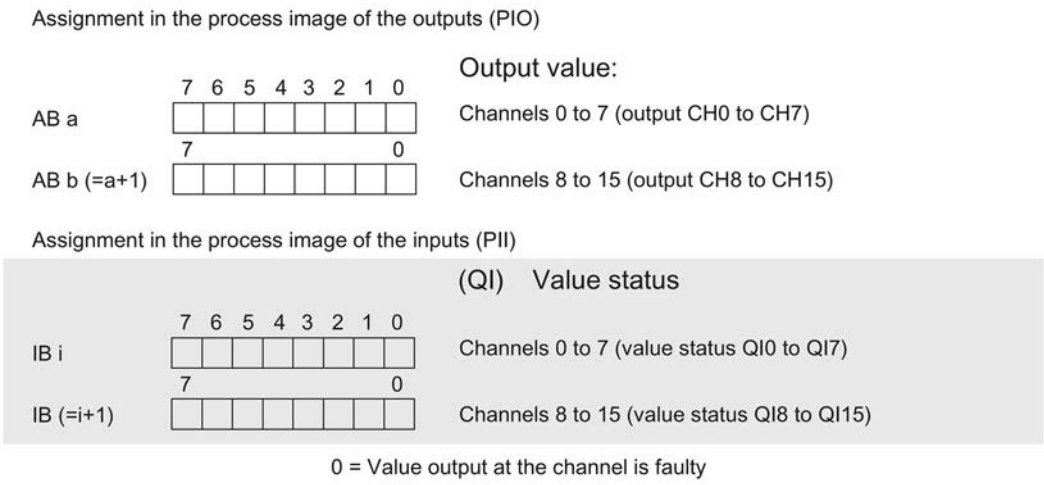

Figure 4-1 Address space for configuration as 16-channel DQ 16x24...48VUC/125VDC/0.5A ST with value status

Address space for configuration as 2 x 8-channel DQ 16x24...48VUC/125VDC/0.5A ST S QI

For the configuration as a 2 x 8-channel module, the channels of the module are divided into multiple submodules. The submodules can be assigned to different IO controllers when the module is used in a shared device.

The number of IO controllers depends on the interface module used. Please observe the information in the manual for the particular interface module.

Contrary to the 1 x 16-channel module configuration, each of the two submodules has a freely assignable start address. The addresses for the respective value status of a submodule can also be assigned by the user.

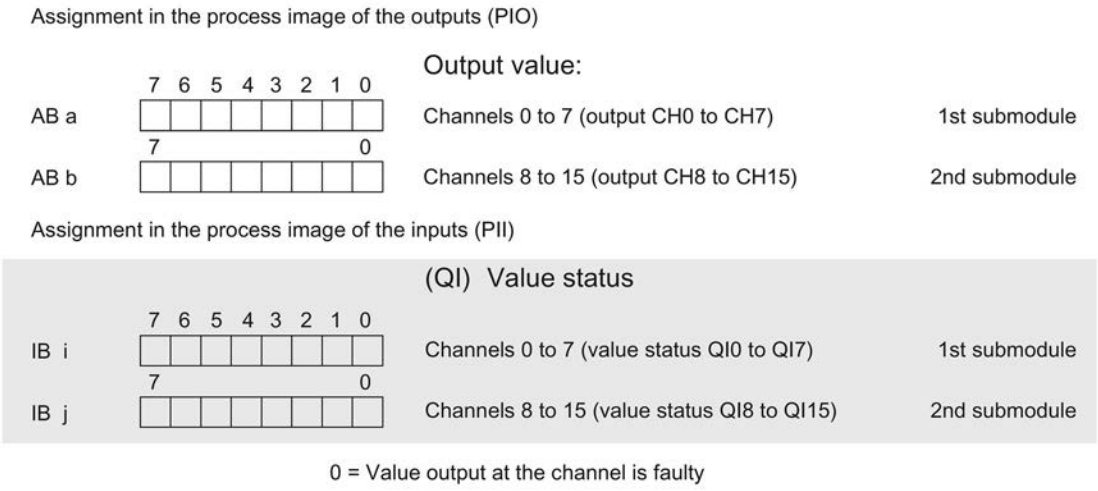

Figure 4-2 Address space for configuration as 2 x 8-channel DQ 16x24...48VUC/125VDC/0.5A ST S QI with value status

Address space for configuration as 1 x 16-channel DQ 16x24...48VUC/125VDC/0.5A ST MSO

For the configuration as a 1 x 16-channel module (module-internal shared output, MSO), channels 0 to 15 of the module are copied to multiple submodules. Channels 0 to 15 are then available with identical values in various submodules. These submodules can be assigned to up to four IO controllers when the module is used in a shared device:

- The IO controller to which submodule 1 is assigned has write access to outputs 0 to 15.
- The IO controllers to which submodule 2, 3, or 4 is assigned have read access to outputs 0 to 15.

The number of IO controllers depends on the interface module used. Observe the information in the manual for the particular interface module.

Value status (Quality Information, QI)

The meaning of the value status depends on the submodule on which it occurs.

For the first submodule (=basic submodule), the value status 0 indicates that the value is incorrect or that the IO controller of the basic submodule is in STOP state.

For 2nd to 4th submodule (=MSO submodule), the value status 0 indicates that the value is incorrect or one of the following errors has occurred:

- The basic submodule is not yet configured (not ready).
- The connection between the IO controller and the basic submodule has been interrupted.
- The IO controller of the basic submodule is in STOP or POWER OFF state.

The following figure shows the assignment of the address space for submodules 1 and 2 and the value status.

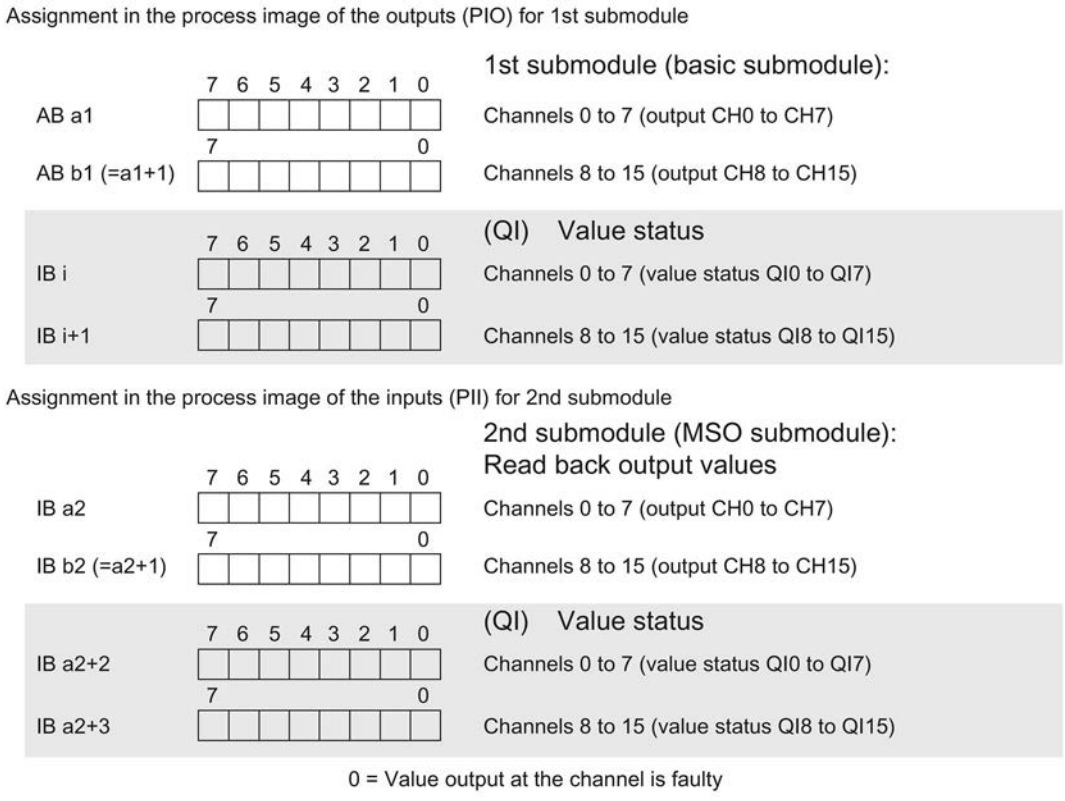

Figure 4-3 Address space for configuration as 1 x 16-channel DQ 16x24...48VUC/125VDC/0.5A ST S MSO with value status

The following figure shows the assignment of the address space with submodules 3 and 4 and the value status.

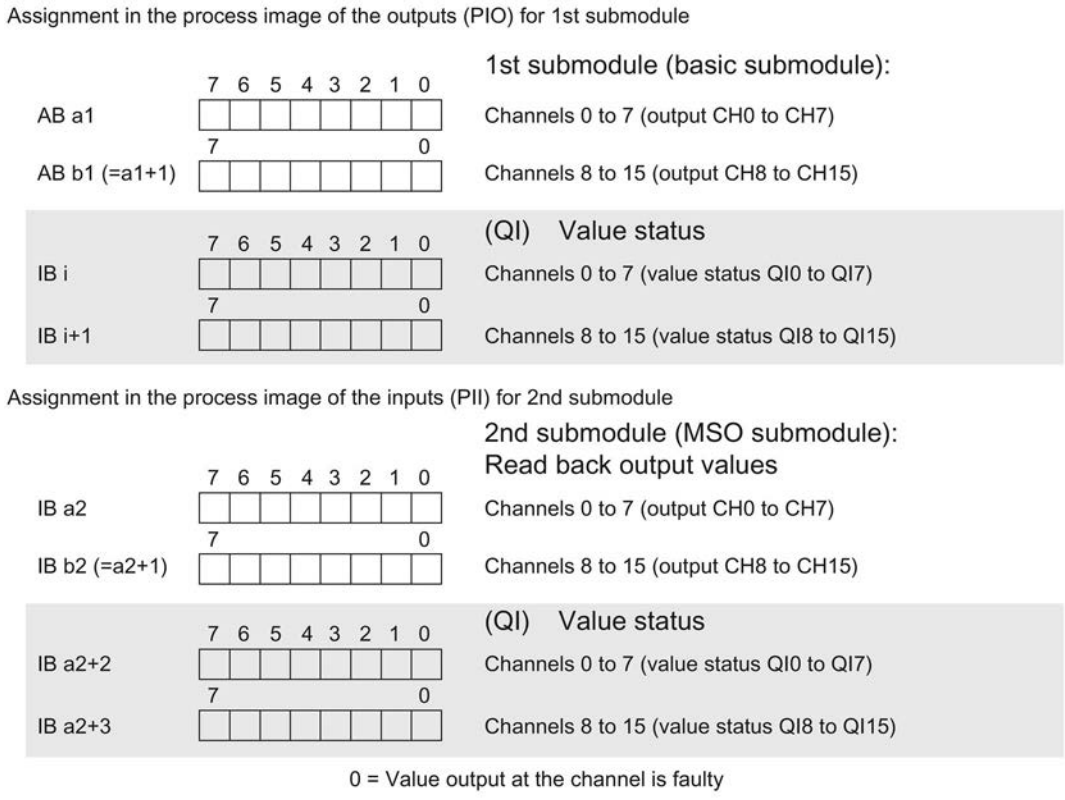

Figure 4-4 Address space for configuration as 1 x 16-channel DQ 16x24...48VUC/125VDC/0.5A ST S MSO with value status

Reference

You can find information on the Shared Input/Output (MSI/MSO) function in the section Module-Internal Shared Input/Output (MSI/MSO) of the PROFINET with STEP 7 V13 (https://support.industry.siemens.com/cs/ww/en/view/49948856) function manual.

Interrupts/diagnostics alarms

5

5.1 Status and error displays

LED displays

The following figure shows the LED displays (status and error displays) of module.

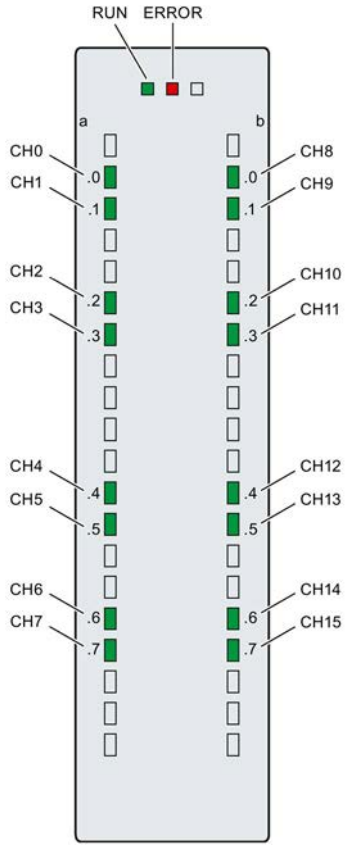

Figure 5-1 LED displays of the module DQ 16x24...48VUC/125VDC/0.5A ST

Meaning of the LED displays

The tables below explain the meaning of the status and error displays. Remedial measures for diagnostics alarms can be found in section Diagnostics alarms (Page 23).

RUN and ERROR LED

Table 5- 1 Status and error displays RUN and ERROR

LED		Meaning	Remedy
RUN	ERROR		
□ Off	□ Off	Voltage missing or too low at backplane bus	• Switch on the CPU and/or the system power supply modules. • Verify that the U connectors are inserted. • Check to see if too many modules are inserted.
☼ Flashes	□ Off	The module starts and flashes until the valid parameter assignment is set.	---
■ On	□ Off	Module is configured	
■ On	☼ Flashes	Indicates module errors (at least one error at one channel, e.g., parameter assignment error).	Evaluate the diagnostics data and eliminate the error (e.g., check the cables).
☼ Flashes	☼ Flashes	Hardware defective	Replace the module.

CHx LED

Table 5- 2 CHx status display

LED CHx	Meaning	Remedy
□ Off	0 = Status of the output signal	---
■ On	1 = Status of the output signal	---

5.2 Interrupts

Digital output module DQ 16x24...48VUC/125VDC/0.5A ST supports diagnostic interrupts.

For detailed information on the error event, refer to the diagnostic interrupt organization block with the "RALRM" instruction (read additional interrupt information) and to the STEP 7 online help.

Diagnostics interrupt

The module generates a diagnostic interrupt at the following event: Parameter assignment error

5.3 Diagnostics alarms

Diagnostics alarms

A diagnostics alarm is generated and the ERROR LED flashes for each diagnostics event on the module. You can read the diagnostics alarms, for example, in the diagnostics buffer of the CPU. You can evaluate the error codes with the user program.

Table 5- 3 Diagnostics alarm, meaning and corrective measures

Diagnostics alarm	Error code	Meaning	Corrective measures
Parameter assignment error	10_H	• The module cannot evaluate parameters for the channel. • Incorrect parameter assignment	Correct the parameter assignment

Technical specifications 6

Technical specifications of the DQ 16x24...125VUC/0.5A ST

	6ES7522-5EH00-0AB0
General information	
Product type designation	DQ 16x24 ... 48VUC/125VDC/0,5A ST
Hardware functional status	FS01
Firmware version	V1.0.0
• FW update possible	Yes
Product function	
I&M data	Yes; I&M0 to I&M3
Engineering with	
STEP 7 TIA Portal can be configured/integrated as of version	V13 SP1 / -
STEP 7 can be configured/integrated as of version	V5.5 SP3 / -
PROFIBUS as of GSD version/GSD revision	V1.0 / V5.1
PROFINET as of GSD version/GSD revision	V2.3 / -
Operating mode	
DQ	Yes
DQ with energy-saving function	No
PWM	No
Oversampling	No
MSO	Yes
Output voltage	
Rated value (DC)	24 V; 48 V, 125 V
Rated value (AC)	24 V; 48 V (50 - 60 Hz)
Power	
Power consumption from the backplane bus	2 W
Power loss	
Power loss, typ.	3.8 W
Digital outputs	
Number of outputs	16
Sinking output	Yes
Sourcing output	Yes
Limitation of inductive shutdown voltage to	200 V (suppressor diode)
Control of a digital input	Yes

	6ES7522-5EH00-0AB0
Switching capacity of outputs	
With resistive load, max.	0.5 A
With lamp load, max.	40 W; at 125 VDC, 10 W at 48 VUC, 5 W at 24 VUC
Output voltage	
For signal "1", min.	L+ (-1.0 V)
Output current	
For signal "1" rated value	0.5 A
For signal "1" permitted range, max.	0.6 A
Output delay with resistive load	
"0" to "1", max.	5 ms
"1" to "0", max.	5 ms
Parallel connection of two outputs	
For logic operations	Yes
For increased performance	No
For redundant control of a load	Yes
Switching frequency	
With resistive load, max.	25 Hz
With inductive load, max.	0.5 Hz
With lamp load, max.	10 Hz
Total current of outputs	
Current per channel, max.	0.5 A
Current per group, max.	0.5 A
Current per module, max.	8 A
Cable length	
shielded, max.	1000 m
unshielded, max.	600 m
Isochronous mode	
Isochronous mode (application synchronized up to terminal)	No
Interrupts/diagnostics/status information	
Diagnostics function	No
Substitute values can be applied	Yes
Interrupts	
Diagnostic interrupt	No
Diagnostics alarms	
Monitoring of supply voltage	No
Wire break	No
Short-circuit	No

	6ES7522-5EH00-0AB0
Diagnostics indicator LED	
RUN LED	Yes; green LED
ERROR LED	Yes; red LED
Monitoring of supply voltage (PWR LED)	No
Channel status display	Yes; green LED
For channel diagnostics	No
For module diagnostics	Yes; red LED
Electrical isolation	
Electrical isolation of channels	
Between the channels	Yes
Between the channels, in groups of	1
Between the channels and backplane bus	Yes
Permitted potential difference	
Between different circuits	125 V DC / 48 V AC
Insulation	
Insulation tested with	2000 V DC
Ambient conditions	
Ambient temperature during operation	
Horizontal mounting position, min.	0 °C
Horizontal mounting position, max.	60 °C
Vertical mounting position, min.	0 °C
Vertical mounting position, max.	40 °C
Distributed operation	
Prioritized startup	Yes
Dimensions	
Width	35 mm
Height	147 mm
Depth	129 mm
Weights	
Weight, approx.	230 g

Note

External fuse for outputs

The outputs have to be protected by an external fuse. Recommendation: Siemens 2A 3NW6002-4 in fuse holder 3NW7014-4.

When installed in a danger area according to the National Electric Code (NEC), the fuse must only be removed with the correct tool when the module is not in an explosion-proof zone.

Dimensional drawing

A

A.1 Dimensional drawing

The dimensional drawing of the module on the mounting rail, as well as a dimensional drawing with open front cover, are provided in this appendix. Always observe the specified dimensions for installations in cabinets, control rooms, etc.

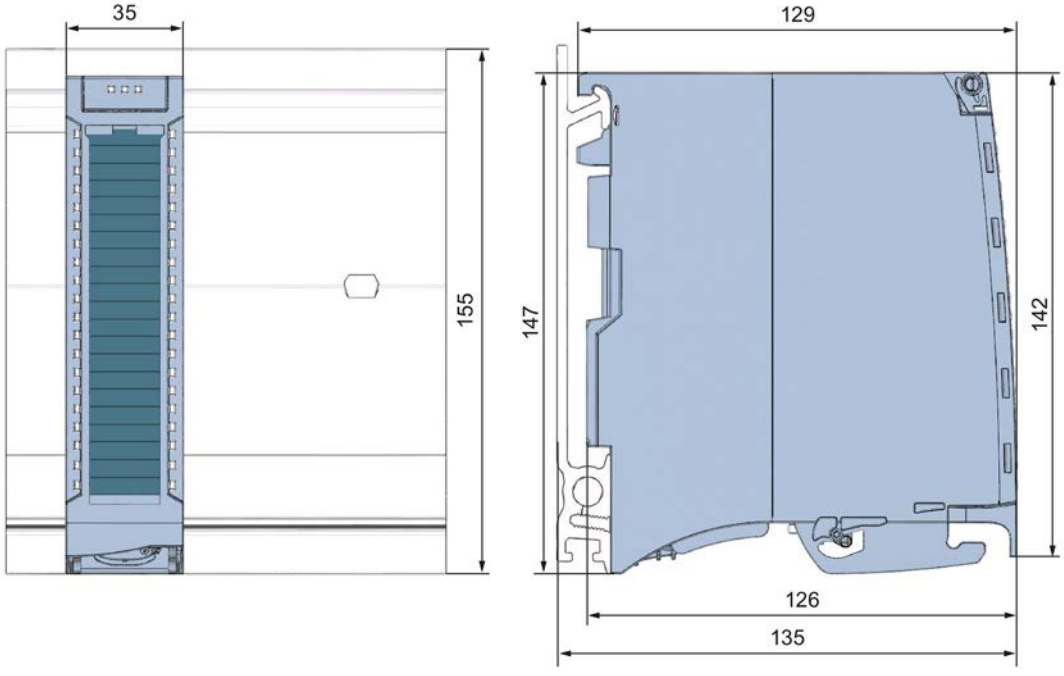

Figure A-1 Dimension drawing of the DQ 16x24...48VUC/125VDC/0.5A ST module

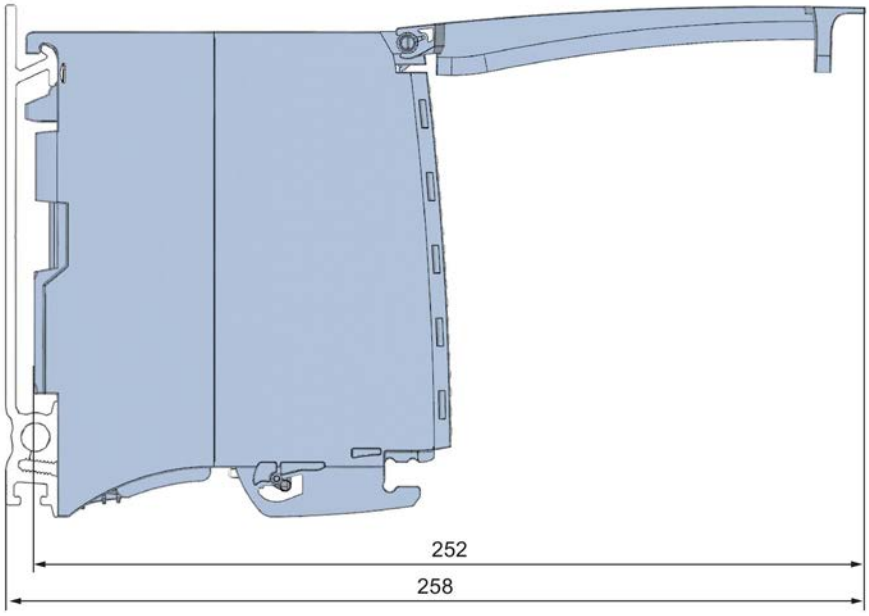

Figure A-2 Dimension drawing of the DQ 16x24...48VUC/125VDC/0.5A ST module, side view with open front cover

Parameter data records

B

B.1 Parameter assignment and structure of the parameter data records

The data records of the module have an identical structure, regardless of whether you configure the module with PROFIBUS DP or PROFINET IO.

Dependencies for configuration with GSD file

When a GSD file is used to configure a module, dependencies can arise when "assigning the parameters".

There are no dependencies for this module. You can assign the individual parameters in any combination.

Parameter assignment in the user program

You have the option to reconfigure the modules in RUN (e.g. the response of selected channels to the CPU-STOP state can be changed in RUN without having an effect on the other channels)

Parameter assignment in RUN

The WRREC instruction is used to transfer the parameters to the module using data records 64 to 79. The parameters set in STEP 7 do not change in the CPU, which means the parameters set in STEP 7 are still valid after a restart.

The parameters are only checked for plausibility by the module after the transfer.

Output parameter STATUS

The module ignores errors that occurred during the transfer of parameters with the WRREC instruction and continues operation with the previous parameter assignment. However, a corresponding error code is written to the STATUS output parameter.

The description of the WRREC instruction and the error codes is available in the STEP 7 online help.

Assignment of data record and channel

For the configuration as a 1 x 16-channel module, the parameters are located in data records 64 to 79 and are assigned as follows:

- Data record 64 for channel 0
- Data record 65 for channel 1
- …
- Data record 78 for channel 14
- Data record 79 for channel 15

For the configuration as a 2 x 8-channel module, the module has 2 submodules with eight channels each. The parameters for the channels are located in data records 64 to 71 and are assigned as follows:

- Data records 64 to 71 for channels 0 to 7 (submodule 1)
- Data records 64 to 71 for channels 8 to 15 (submodule 2)

Address the respective submodule for data record transfer.

Data record structure

The figure below shows the structure of data record 64 for channel 0 as an example. The structure is identical for channels 1 to 15. The values in byte 0 and byte 1 are fixed and may not be changed.

Enable a parameter by setting the corresponding bit to "1".

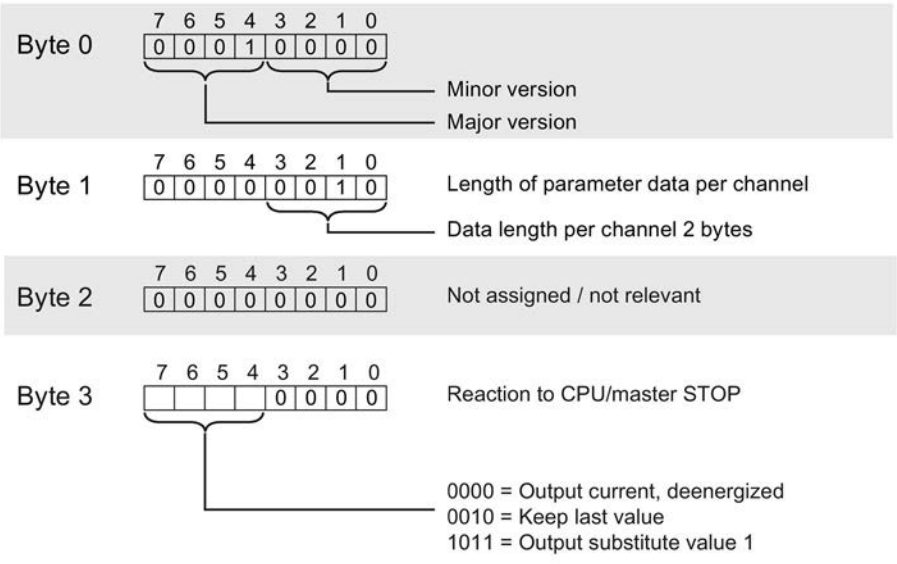

Figure B-1 Structure of data record 64: Bytes 0 to 3

SIEMENS

SIMATIC

S7-1500 / ET 200MP

Digital output module DQ 16x230VAC/1A ST Triac (6ES7522-5FH00-0AB0)

Manual

Edition 09/2016

siemens.com

SIEMENS

SIMATIC

S7-1500/ET 200MP Digital output module DQ 16x230VAC/1A ST Triac (6ES7522-5FH00-0AB0)

Manual

Preface

Documentation guide 1

Product overview 2

Wiring 3

Parameters/address space 4

Diagnostic alarms 5

Technical specifications 6

Dimensional drawing A

Parameter data records B

09/2016

A5E34934069-AB

Legal information

Warning notice system

This manual contains notices you have to observe in order to ensure your personal safety, as well as to prevent damage to property. The notices referring to your personal safety are highlighted in the manual by a safety alert symbol, notices referring only to property damage have no safety alert symbol. These notices shown below are graded according to the degree of danger.

⚠ DANGER

indicates that death or severe personal injury **will** result if proper precautions are not taken.

⚠ WARNING

indicates that death or severe personal injury **may** result if proper precautions are not taken.

⚠ CAUTION

indicates that minor personal injury can result if proper precautions are not taken.

NOTICE

indicates that property damage can result if proper precautions are not taken.

If more than one degree of danger is present, the warning notice representing the highest degree of danger will be used. A notice warning of injury to persons with a safety alert symbol may also include a warning relating to property damage.

Qualified Personnel

The product/system described in this documentation may be operated only by **personnel qualified** for the specific task in accordance with the relevant documentation, in particular its warning notices and safety instructions. Qualified personnel are those who, based on their training and experience, are capable of identifying risks and avoiding potential hazards when working with these products/systems.

Proper use of Siemens products

Note the following:

⚠ WARNING

Siemens products may only be used for the applications described in the catalog and in the relevant technical documentation. If products and components from other manufacturers are used, these must be recommended or approved by Siemens. Proper transport, storage, installation, assembly, commissioning, operation and maintenance are required to ensure that the products operate safely and without any problems. The permissible ambient conditions must be complied with. The information in the relevant documentation must be observed.

Trademarks

All names identified by ® are registered trademarks of Siemens AG. The remaining trademarks in this publication may be trademarks whose use by third parties for their own purposes could violate the rights of the owner.

Disclaimer of Liability

We have reviewed the contents of this publication to ensure consistency with the hardware and software described. Since variance cannot be precluded entirely, we cannot guarantee full consistency. However, the information in this publication is reviewed regularly and any necessary corrections are included in subsequent editions.

Siemens AG
Division Digital Factory
Postfach 48 48
90026 NÜRNBERG
GERMANY

A5E34934069-AB
℗ 11/2016 Subject to change

Copyright © Siemens AG 2015 - 2016.
All rights reserved

Preface

Purpose of the documentation

This manual supplements the system manual S7-1500/ET 200MP (https://support.industry.siemens.com/cs/ww/en/view/59191792).

Functions that relate in general to the systems are described in this system manual.

The information provided in this manual and in the system/function manuals supports you in commissioning the systems.

Changes compared to previous version

Compared to the previous version, this manual contains the following change:

Original texts of the license conditions and copyright notes for open-source software are available on the Internet as of 09/2016.

Conventions

CPU: The term "CPU" is used in this manual both for the CPUs of the S7-1500 automation system and for interface modules of the ET 200MP distributed I/O system.

STEP 7: In this documentation, "STEP 7" is used as a synonym for all versions of the configuration and programming software "STEP 7 (TIA Portal)".

Please also observe notes marked as follows:

Note

A note contains important information on the product described in the documentation, on the handling of the product or on the section of the documentation to which particular attention should be paid.

Security information

Siemens provides products and solutions with industrial security functions that support the secure operation of plants, systems, machines and networks.

In order to protect plants, systems, machines and networks against cyber threats, it is necessary to implement – and continuously maintain – a holistic, state-of-the-art industrial security concept. Siemens' products and solutions only form one element of such a concept.

Customer is responsible to prevent unauthorized access to its plants, systems, machines and networks. Systems, machines and components should only be connected to the enterprise network or the internet if and to the extent necessary and with appropriate security measures (e.g. use of firewalls and network segmentation) in place.

Additionally, Siemens' guidance on appropriate security measures should be taken into account. For more information about industrial security, please visit (http://www.siemens.com/industrialsecurity).

Siemens' products and solutions undergo continuous development to make them more secure. Siemens strongly recommends to apply product updates as soon as available and to always use the latest product versions. Use of product versions that are no longer supported, and failure to apply latest updates may increase customer's exposure to cyber threats.

To stay informed about product updates, subscribe to the Siemens Industrial Security RSS Feed under (http://www.siemens.com/industrialsecurity).

Open Source Software

Open-source software is used in the firmware of the I/O modules. Open Source Software is provided free of charge. We are liable for the product described, including the open-source software contained in it, pursuant to the conditions applicable to the product. Siemens accepts no liability for the use of the open source software over and above the intended program sequence, or for any faults caused by modifications to the software.

For legal reasons, we are obliged to publish the original text of the license conditions and copyright notices. Please read the information relating to this on the Internet (https://support.industry.siemens.com/cs/ww/en/view/109741045).

Table of contents

Preface 4
1 Documentation guide 7
2 Product overview 11
2.1 Properties 11
3 Wiring 13
4 Parameters/address space 15
4.1 Parameters 15
4.2 Declaration of parameters 15
4.3 Address space 16
5 Diagnostic alarms 21
5.1 Status and error displays 21
6 Technical specifications 23
A Dimensional drawing 27
B Parameter data records 29
B.1 Parameter assignment and structure of the parameter data records 29

Documentation guide

1

The documentation for the SIMATIC S7-1500 automation system, the CPU 1516pro-2 PN based on SIMATIC S7-1500 and the SIMATIC ET 200MP distributed I/O system is arranged into three areas.
This arrangement enables you to access the specific content you require.

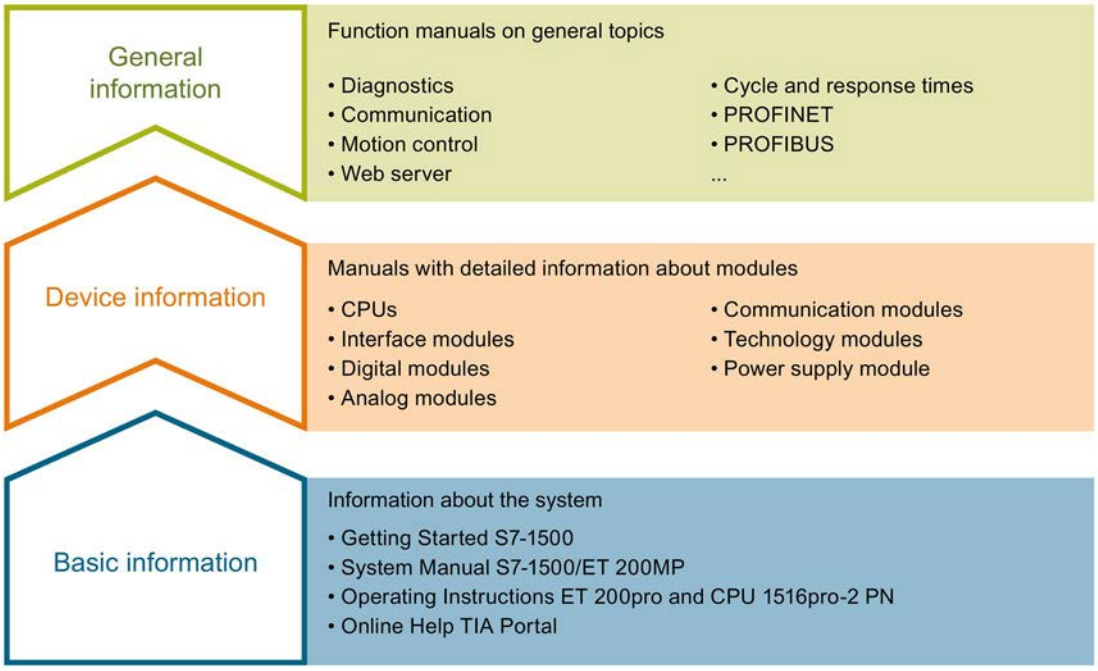

Basic information

The System Manual and Getting Started describe in detail the configuration, installation, wiring and commissioning of the SIMATIC S7-1500 and ET 200MP systems. For CPU 1516pro-2 PN you use the corresponding operating instructions. The STEP 7 online help supports you in the configuration and programming.

Device information

Product manuals contain a compact description of the module-specific information, such as properties, wiring diagrams, characteristics and technical specifications.

General information

The function manuals contain detailed descriptions on general topics regarding the SIMATIC S7-1500 and ET 200MP systems, e.g. diagnostics, communication, motion control, Web server, OPC UA.

You can download the documentation free of charge from the Internet (http://w3.siemens.com/mcms/industrial-automation-systems-simatic/en/manual-overview/Pages/Default.aspx).

Changes and supplements to the manuals are documented in a Product Information.

You can download the product information free of charge from the Internet (https://support.industry.siemens.com/cs/us/en/view/68052815).

Manual Collection S7-1500/ET 200MP

The Manual Collection contains the complete documentation on the SIMATIC S7-1500 automation system and the ET 200MP distributed I/O system gathered together in one file.

You can find the Manual Collection on the Internet (https://support.industry.siemens.com/cs/ww/en/view/86140384).

SIMATIC S7-1500 comparison list for programming languages

The comparison list contains an overview of which instructions and functions you can use for which controller families.

You can find the comparison list on the Internet (https://support.industry.siemens.com/cs/ww/en/view/86630375).

"mySupport"

With "mySupport", your personal workspace, you make the best out of your Industry Online Support.

In "mySupport", you can save filters, favorites and tags, request CAx data and compile your personal library in the Documentation area. In addition, your data is already filled out in support requests and you can get an overview of your current requests at any time.

You must register once to use the full functionality of "mySupport".

You can find "mySupport" on the Internet (https://support.industry.siemens.com/My/ww/en).

"mySupport" - Documentation

In the Documentation area in "mySupport" you can combine entire manuals or only parts of these to your own manual.
You can export the manual as PDF file or in a format that can be edited later.

You can find "mySupport" - Documentation on the Internet (http://support.industry.siemens.com/My/ww/en/documentation).

"mySupport" - CAx data

In the CAx data area in "mySupport", you can access the current product data for your CAx or CAe system.

You configure your own download package with a few clicks.

In doing so you can select:

- Product images, 2D dimension drawings, 3D models, internal circuit diagrams, EPLAN macro files
- Manuals, characteristics, operating manuals, certificates
- Product master data

You can find "mySupport" - CAx data on the Internet (http://support.industry.siemens.com/my/ww/en/CAxOnline).

Application examples

The application examples support you with various tools and examples for solving your automation tasks. Solutions are shown in interplay with multiple components in the system - separated from the focus on individual products.

You will find the application examples on the Internet (https://support.industry.siemens.com/sc/ww/en/sc/2054).

TIA Selection Tool

With the TIA Selection Tool, you can select, configure and order devices for Totally Integrated Automation (TIA).
This tool is the successor of the SIMATIC Selection Tool and combines the known configurators for automation technology into one tool.
With the TIA Selection Tool, you can generate a complete order list from your product selection or product configuration.

You can find the TIA Selection Tool on the Internet (http://w3.siemens.com/mcms/topics/en/simatic/tia-selection-tool).

SIMATIC Automation Tool

You can use the SIMATIC Automation Tool to run commissioning and maintenance activities simultaneously on various SIMATIC S7 stations as a bulk operation independently of the TIA Portal.

The SIMATIC Automation Tool provides a multitude of functions:

- Scanning of a PROFINET/Ethernet network and identification of all connected CPUs
- Address assignment (IP, subnet, gateway) and station name (PROFINET device) to a CPU
- Transfer of the date and the programming device/PC time converted to UTC time to the module
- Program download to CPU
- Operating mode switchover RUN/STOP
- Localization of the CPU by means of LED flashing
- Reading out CPU error information
- Reading the CPU diagnostic buffer
- Reset to factory settings
- Updating the firmware of the CPU and connected modules

You can find the SIMATIC Automation Tool on the Internet (https://support.industry.siemens.com/cs/ww/en/view/98161300).

PRONETA

With SIEMENS PRONETA (PROFINET network analysis), you analyze the PROFINET network during commissioning. PRONETA features two core functions:

- The topology overview independently scans PROFINET and all connected components.
- The IO check is a fast test of the wiring and the module configuration of a system.

You can find SIEMENS PRONETA on the Internet (https://support.industry.siemens.com/cs/ww/en/view/67460624).

Product overview 2

2.1 Properties

Article number

6ES7522-5FH00-0AB0

View of the module

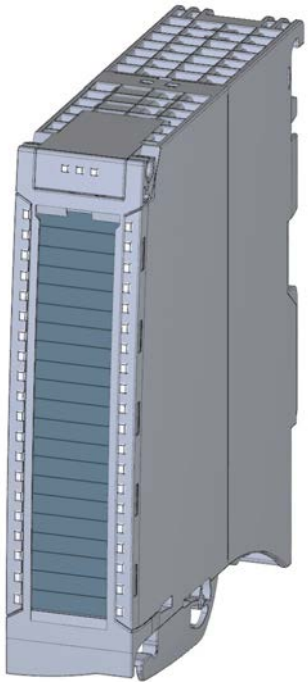

Figure 2-1 View of the DQ 16x230VAC/1A ST module

Properties

The module has the following technical properties:

- 16 digital outputs (Triac)
- Rated output voltage 120 V/230 V AC
- Rated output current 1A (per channel)
- Configurable substitute values (per channel)
- Suitable for solenoid valves, DC contactors, indicator lights and smaller single phase drives

The module supports the following functions:

Table 2- 1 Version dependencies of the module functions

Function	Firmware version of the module	Configuration software	
		STEP 7 as of V13 SP1 with HSP 0119	GSD file in STEP 7 , V12 or higher STEP 7 V5.5 SP3 or higher
Firmware update	V1.0.0 or higher	X	--- / X
Identification data I&M0 to I&M3	V1.0.0 or higher	X	--- / X
Parameter assignment in RUN	V1.0.0 or higher	X	X
Module-internal Shared Output (MSO)	V1.0.0 or higher	X (PROFINET IO only)	X (PROFINET IO only)
Configurable submodules/submodules for shared device	V1.0.0 or higher	X (PROFINET IO only)	X (PROFINET IO only)

You can configure the module with STEP 7 and with a GSD file.

Accessories

The following components are supplied with the module and can also be ordered separately as spare parts:

- Labeling strips
- U connector
- Universal front door

Other components

The following component can be ordered separately:

Front connectors, including potential jumpers and cable ties

For more information on accessories, refer to the S7-1500, ET 200MP system manual (https://support.industry.siemens.com/cs/ww/en/view/59191792).

Wiring 3

This section contains the block diagram of the module and outlines various wiring options.

You can find information on wiring the front connector, creating a cable shield, etc. in the Wiring section of the S7-1500, ET 200MP system manual (https://support.industry.siemens.com/cs/ww/en/view/59191792).

Note

Do not insert the potential jumpers included with the front connector!

Wiring and block diagram

The example in the following figure shows the terminal assignment and the assignment of the channels. The individual channels are connected with a TRIAC (Triode for Alternating Current).

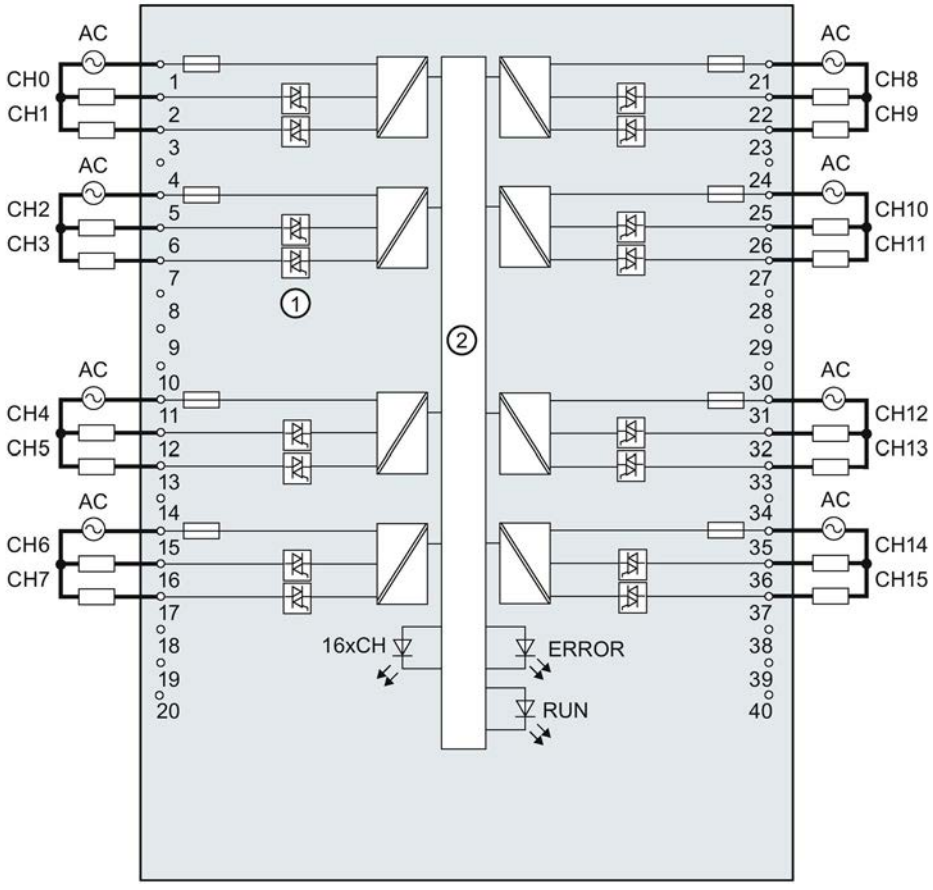

①	TRIAC 16x	CHx	Channel or channel status LED (green)
②	Backplane bus interface	RUN	Status display LED (green)
		ERROR	Error display LED (red)

Figure 3-1 Block diagram and terminal assignment

Parameters/address space 4

4.1 Parameters

DQ 16x230VAC/1A ST parameters

When you assign the module parameters in STEP 7, you use various parameters to specify the module properties. The table below lists the parameters that can be set. The effective range of the configurable parameters depends on the type of configuration. The following configurations are possible:

- Central operation with a S7-1500 CPU
- Distributed operation on PROFINET IO in an ET 200MP system
- Distributed operation on PROFIBUS DP in an ET 200MP system

For parameter assignment in the user program, the parameters are transferred to the module using the WRREC instruction (reconfiguration in RUN) and data records; see chapter Parameter assignment and structure of the parameter data records (Page 29).

Table 4- 1 Configurable parameters and their defaults

Parameter	Range of values	Default	Reconfiguration in RUN	Range of effectiveness with configuration software, e.g. STEP 7	
				Integrated in the hardware catalog STEP 7, SP1 with HSP 0119 or GSD file PROFINET IO	GSD file PROFIBUS DP
Reaction to CPU STOP	• Turn off • Keep last value • Output substitute value 1	Turn off	Yes	Channel	Channel

4.2 Declaration of parameters

Reaction to CPU STOP

Determines the reaction of the output to the CPU going into STOP state or when the connection to the CPU is interrupted.

4.3 Address space

The module can be configured differently in STEP 7; see following table. Depending on the configuration, additional/different addresses are assigned in the process image output/input.

Configuration options of DQ 16x230VAC/1A ST

You can configure the module with STEP 7 or with a GSD file.

When you configure the module by means of the GSD file, the configurations are available under different short designations/module names.

The following configurations are possible:

Table 4- 2 Configuration options

Configuration	Short designation/module name in the GSD file	Configuration software, e.g., STEP 7	
		Integrated in hardware catalog STEP 7 V13, SP1 or higher with HSP 0119	GSD file in STEP 7 V12 or higher or STEP 7 V5.5 SP3 or higher
1 x 16-channel without value status	DQ 16x230VAC/1A ST	X	X
2 x 8-channel without value status	DQ 16x230VAC/1A ST S	X (PROFINET IO only)	X (PROFINET IO only)
1 x 16-channel with value status for module-internal Shared Output with up to 4 submodules	DQ 16x230VAC/1A ST MSO	X (PROFINET IO only)	X (PROFINET IO only)

Value status (Quality Information, QI)

The value status is always activated for the DQ 16x230VAC/1A ST MSO.

An additional bit is assigned to each channel for the value status. The bit for the value status indicates if the output value specified by the user program is actually pending at the module terminal (0 = value is incorrect).

Address space for configuration as 16-channel DQ 16x230VAC/1A ST

The figure below shows the address space allocation for the configuration as 16-channel module. You can freely assign the start address for the module. The addresses of the channels are derived from the start address.

The letters "a to b" are printed on the module; "QB a", for example, stands for module start address output byte a.

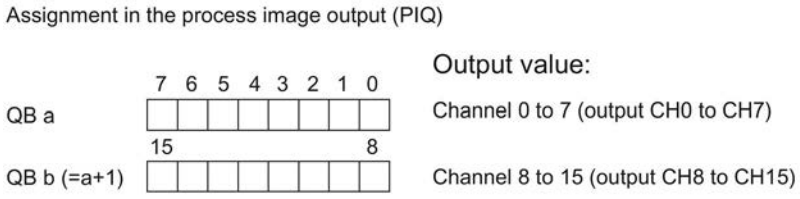

Figure 4-1 Address space for configuration as 16-channel DQ 16x230VAC/1A ST

Address space for configuration as 2 x 8-channel DQ 16x230VAC/1A ST S

For the configuration as a 2 x 8-channel module, the channels of the module are divided into two submodules. The submodules can be assigned to different IO controllers when the module is used in a shared device.

The number of I/O controllers depends on the interface module being used. Please observe the information in the manual for the particular interface module.

Unlike the 1 x 16-channel module configuration, each of the two submodules has a freely assignable start address.

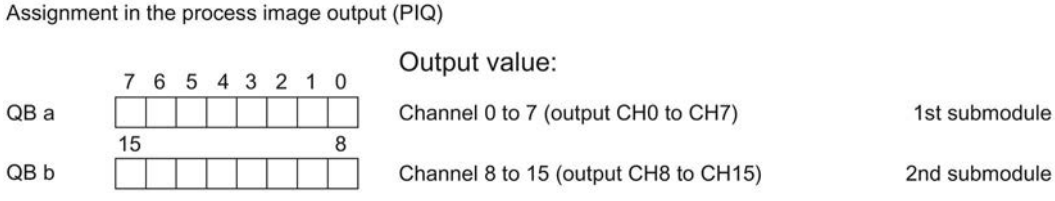

Figure 4-2 Address space for configuration as 2 x 8-channel DQ 16x230VAC/1A ST S

Note

Substitute value behavior in shared device operation with 2 x 8-channel configuration

If the system is in shared device mode and one of the associated IO controllers goes into STOP or fails due to, for example, a communication failure, all submodules of the output module follow the configured substitute value behavior (e.g. switch off).
This means that even when only one IO controller fails, the other IO controllers associated with the shared device no longer control the assigned submodule of the output module.

Address space for configuration as 1 x 16-channel DQ 16x230VAC/1A ST MSO

For the configuration as a 1 x 16-channel module (module-internal Shared Output, MSO), channels 0 to 15 of the module are copied to multiple submodules. Channels 0 to 15 are then available with identical values in various submodules. These submodules can be assigned to up to four IO controllers when the module is used in a shared device:

- The IO controller to which submodule 1 is assigned has write access to outputs 0 to 15.
- The IO controllers to which submodule 2, 3, or 4 is assigned have read access to outputs 0 to 15.

The number of IO controllers depends on the interface module being used. Please observe the information in the manual for the particular interface module.

Value status (Quality Information, QI)

The meaning of the value status depends on the submodule involved.

For the 1st submodule (=basic submodule), the value status 0 indicates that the value is incorrect or that the IO controller of the basic submodule is in STOP state.

For the 2nd to 4th submodule (=MSO submodule), the value status 0 indicates that the value is incorrect or one of the following errors has occurred:

- The basic submodule is not yet configured (not ready).
- The connection between the IO controller and the basic submodule has been interrupted.
- The IO controller of the basic submodule is in STOP or POWER OFF state.

The following figure shows the assignment of the address space for submodules 1 and 2 and the value status.

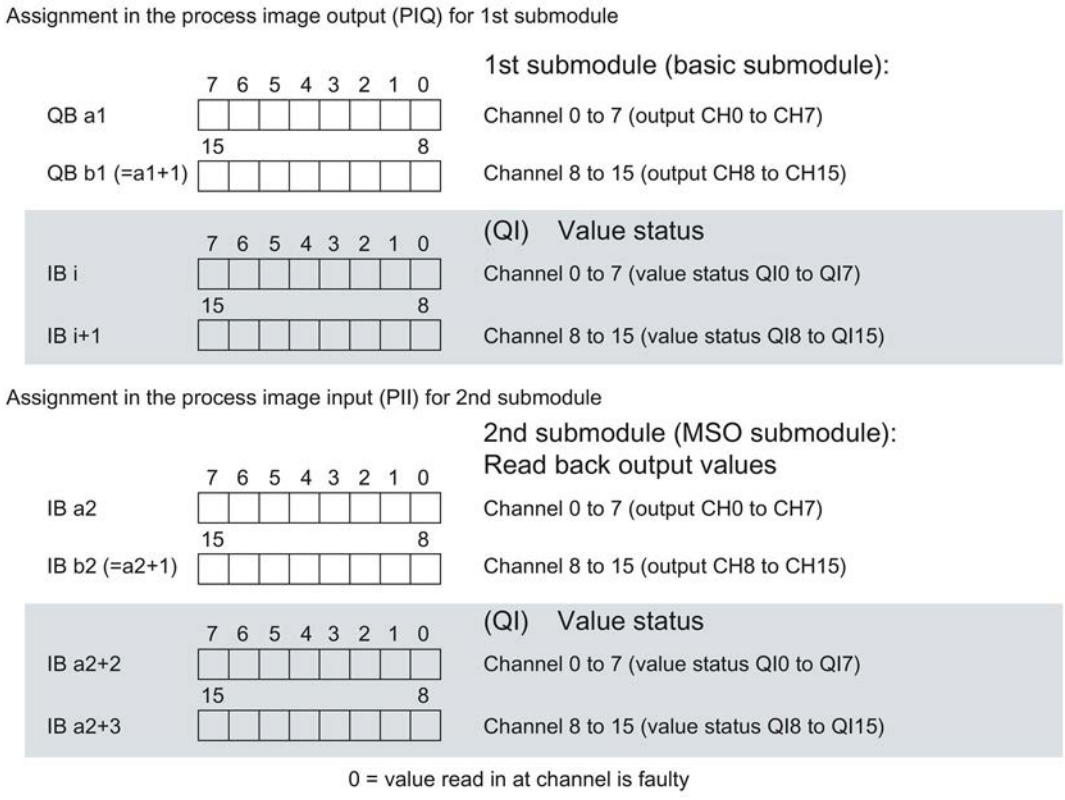

Figure 4-3 Address space for configuration as 1 x 16-channel DQ 16x230VAC/1A ST MSO with value status

The figure below shows the assignment of the address space for submodules 3 and 4 and the value status.

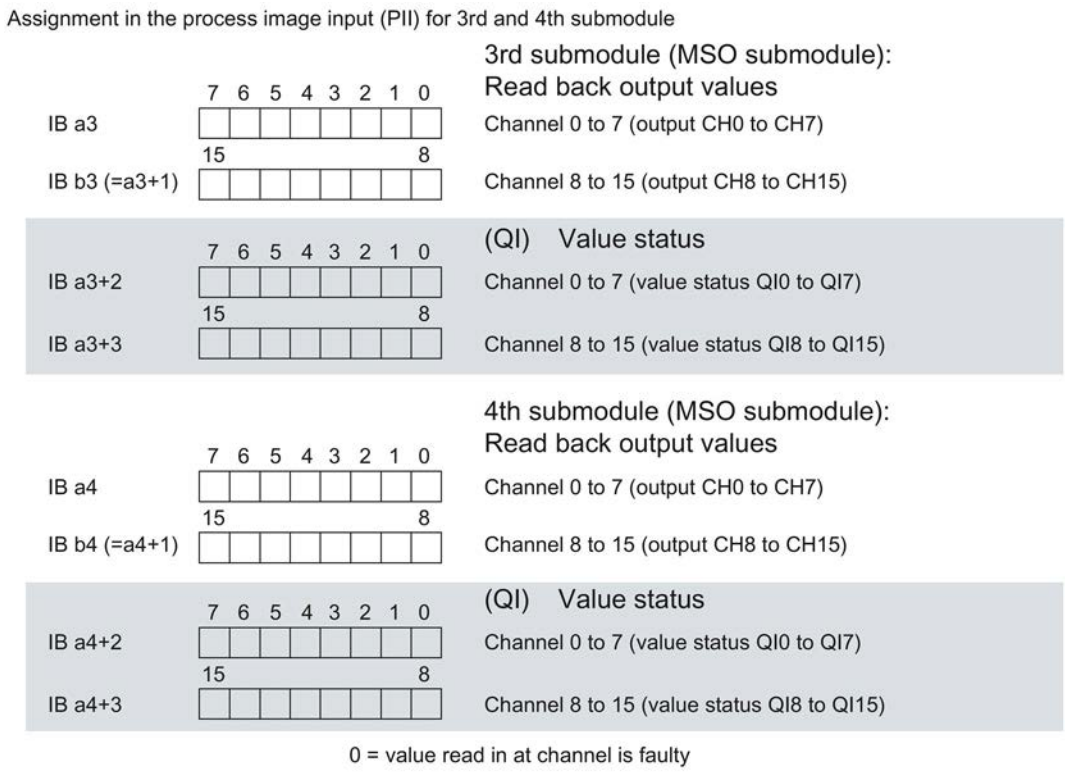

Figure 4-4 Address space for configuration as 1 x 16-channel DQ 16x230VAC/1A ST MSO with value status

Reference

You will find information on the module-internal shared input/shared output (MSI/MSO) function in the function manual PROFINET with STEP 7 V13 (https://support.industry.siemens.com/cs/ww/en/view/49948856) in the section Module-internal shared input/shared output (MSI/MSO).

Diagnostic alarms

5

5.1 Status and error displays

LED displays

The figure below shows the LED displays (status and error displays) of DQ 16x230VAC/1A ST.

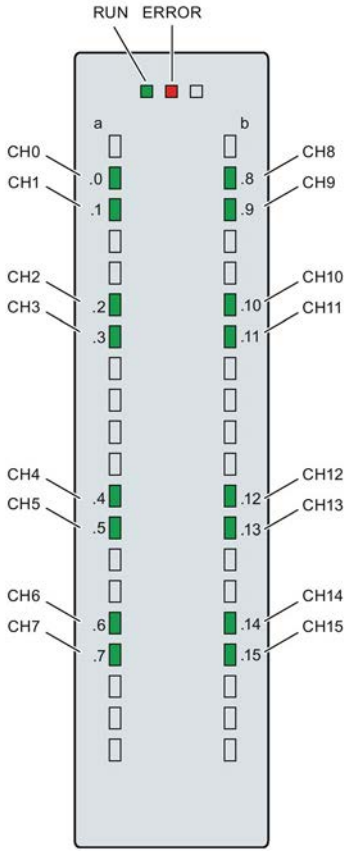

Figure 5-1 LED displays of the module DQ 16x230VAC/1A ST

Meaning of the LED displays

The following table explains the meaning of the status and error displays.

RUN and ERROR LED

Table 5- 1 RUN and ERROR status and error displays

LED		Meaning	Solution
RUN	ERROR		
Off	Off	Voltage missing or too low at backplane bus	• Switch on the CPU and/or the system power supply modules. • Verify that the U connectors are inserted. • Check whether too many modules are inserted.
Flashes	Off	The module starts and flashes until the valid parameter assignment is set.	---
On	Off	Module parameters assigned	
Flashes	Flashes	Hardware defective	Replace the module.

CHx LED

Table 5- 2 CHx status display

LED CHx	Meaning	Solution
Off	0 = Status of the output signal	---
On	1 = Status of the output signal	---

Technical specifications

6

Technical specifications of the DQ 16x230VAC/1A ST

	6ES7522-5FH00-0AB0
General information	
Product type designation	DQ 16x230VAC/1A ST (Triac)
Hardware functional status	FS01
Firmware version	V1.0.0
• FW update possible	Yes
Product function	
I&M data	Yes; I&M0 to I&M3
Engineering with	
STEP 7 TIA Portal can be configured/integrated as of version	V13 SP1 / -
STEP 7 can be configured/integrated as of version	V5.5 SP3 / -
PROFIBUS as of GSD version/GSD revision	V1.0 / V5.1
PROFINET as of GSD version/GSD revision	V2.3 / -
Operating mode	
DQ	Yes
DQ with energy-saving function	No
PWM	No
Oversampling	No
MSO	Yes
Output voltage	
Rated value (AC)	120/230 V AC, 50 / 60 Hz
Power	
Power consumption from the backplane bus	1.2 W
Power loss	
Power loss, typ.	11.1 W
Digital outputs	
Number of outputs	16
Sinking output	Yes
Sourcing output	Yes
Short-circuit protection	No
Switching capacity of outputs	
With resistive load, max.	1 A
With lamp load, max.	50 W

	6ES7522-5FH00-0AB0
Output voltage	
For signal "1", min.	L1 (-1.5 V) at maximum output current; L1 (-8.5 V) at minimum output current
Output current	
For signal "1" rated value	1 A
For signal "1" permitted range, min.	10 mA
For signal "1" permitted range, max.	15 A; max. 1 AC cycle
For signal "0" residual current, max.	2 mA
Output delay with resistive load	
"0" to "1", max.	1 AC cycle
"1" to "0", max.	1 AC cycle
Parallel connection of two outputs	
For logic operations	No
For increased performance	No
For redundant control of a load	Yes
Switching frequency	
With resistive load, max.	10 Hz
With inductive load, max.	0.5 Hz
With lamp load, max.	1 Hz
Total current of outputs	
Current per channel, max.	1 A; see additional description in the manual
Current per group, max.	2 A; see additional description in the manual
Current per module, max.	10 A; see additional description in the manual
Triac outputs	
Size of motor starter according to NEMA, max.	4
Cable length	
shielded, max.	1000 m
unshielded, max.	600 m
Isochronous mode	
Isochronous mode (application synchronized up to terminal)	No
Interrupts/diagnostics/status information	
Diagnostics function	No
Substitute values can be applied	Yes
Interrupts	
Diagnostic interrupt	No
Diagnostics alarms	
Monitoring of supply voltage	No
Wire break	No
Short-circuit	No

	6ES7522-5FH00-0AB0
Diagnostics indicator LED	
RUN LED	Yes; green LED
ERROR LED	Yes; red LED
Monitoring of supply voltage (PWR LED)	No
Channel status display	Yes; green LED
For channel diagnostics	No
For module diagnostics	Yes; red LED
Electrical isolation	
Electrical isolation of channels	
Between the channels	No
Between the channels, in groups of	2
Between the channels and backplane bus	Yes
Permitted potential difference	
Between different circuits	250 V AC between the channels and the back-plane bus; 500 V AC between the channels
Insulation	
Insulation tested with	3100 V DC
Ambient conditions	
Ambient temperature during operation	
Horizontal mounting position, min.	0 °C
Horizontal mounting position, max.	60 °C
Vertical mounting position, min.	0 °C
Vertical mounting position, max.	60 °C
Distributed operation	
Prioritized startup	Yes
Dimensions	
Width	35 mm
Height	147 mm
Depth	129 mm
Weights	
Weight, approx.	310 g

Power reduction (derating) to aggregate current of outputs (per module)

The following graphs show the loading capacity of the outputs in relation to the mounting position of the S71500 automation system/ET 200MP distributed I/O system and the ambient temperature.

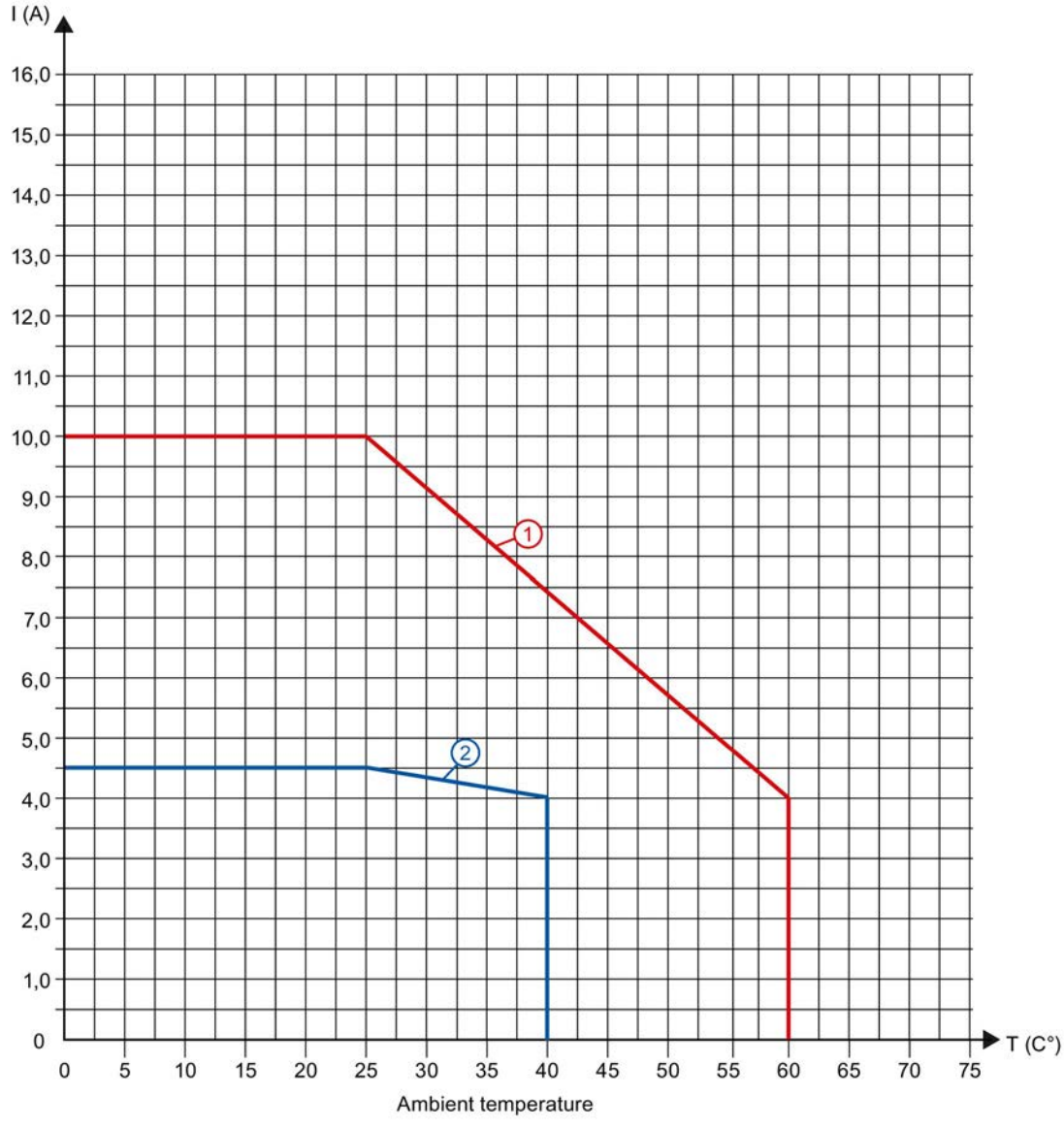

① Horizontal mounting of the system

② Vertical mounting of the system

Figure 6-1 Details on aggregate current of outputs (per module)

Dimensional drawing

A

The dimension drawing of the module on the mounting rail, as well as a dimension drawing with open front cover, are provided in the appendix. Always observe the specified dimensions for installation in cabinets, control rooms, etc.

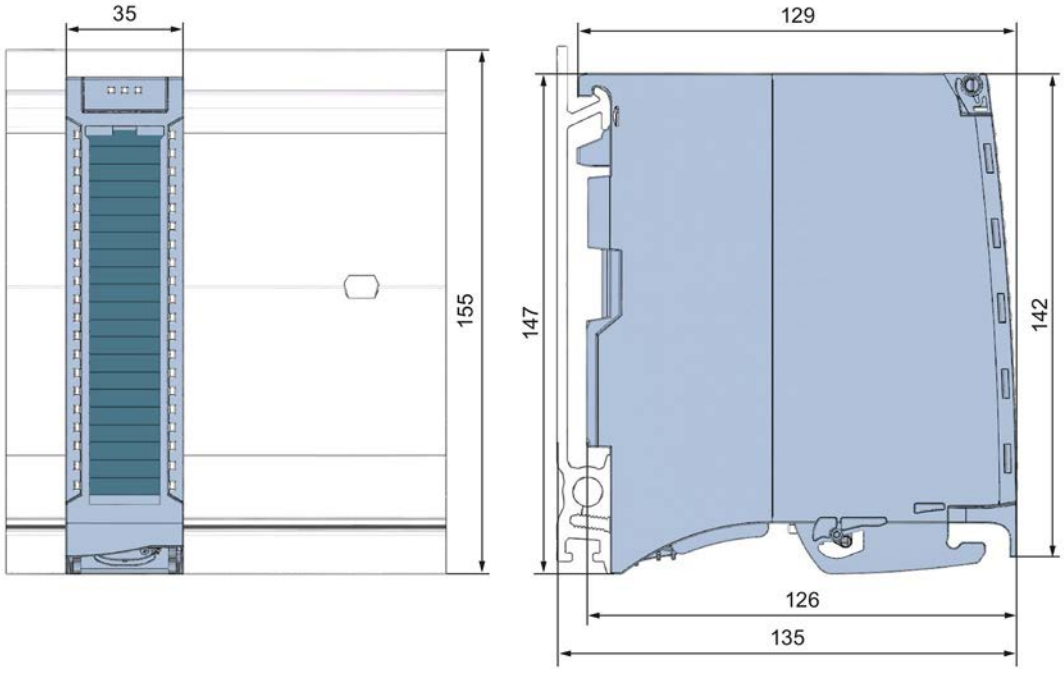

Figure A-1 Dimension drawing of the DQ 16x230VAC/1A ST module

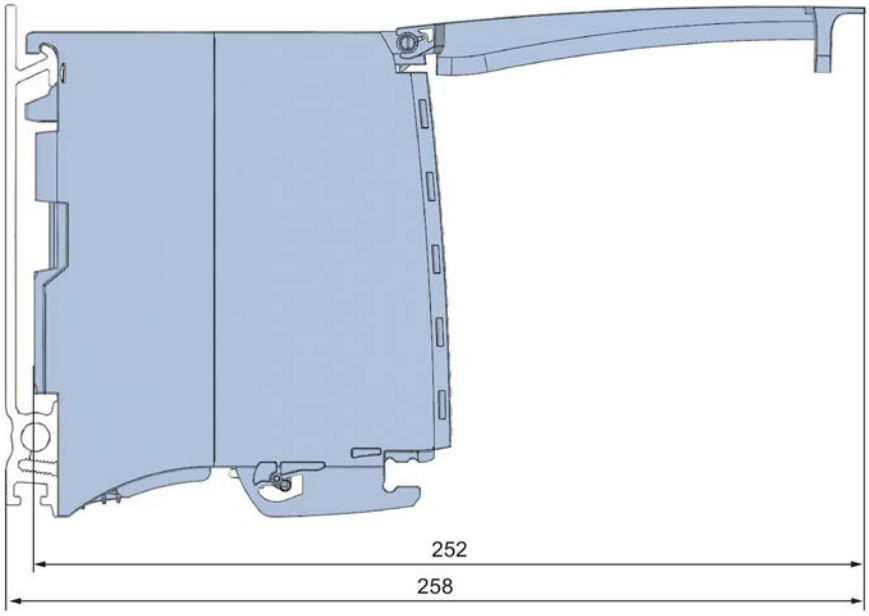

Figure A-2 Dimension drawing of the DQ 16x230VAC/1A ST module, side view with open front cover

Parameter data records

B

B.1 Parameter assignment and structure of the parameter data records

The data records of the module have an identical structure, regardless of whether you configure the module with PROFIBUS DP or PROFINET IO.

Dependencies for configuration with GSD file

When a GSD file is used to configure a module, dependencies can arise when "assigning the parameters".

There are no dependencies for this module. You can assign the individual parameters in any combination.

Parameter assignment in the user program

You have the option to reconfigure the module in RUN (e.g. the response of selected channels to the CPU STOP state can be changed in RUN without having an effect on the other channels).

Changing parameters in RUN

The WRREC instruction is used to transfer the parameters to the module using data records 64 to 79. The parameters set in STEP 7 are not changed in the CPU, which means the parameters set in STEP 7 are valid again after a restart.

The parameters are only checked for plausibility by the module after the transfer.

STATUS output parameter

The module ignores errors that occurred during the transfer of parameters with the WRREC instruction and continues operation with the previous parameter assignment. However, a corresponding error code is written to the STATUS output parameter.

The description of the WRREC instruction and the error codes is available in the STEP 7 online help.

Operation of the module behind a PROFIBUS DP interface module

If the module is operated behind a PROFIBUS DP interface module, the parameter data records 0 and 1 are not read back. You get the diagnostics data records 0 and 1 for the read back parameter data records 0 and 1. You can find more information in the Interrupts section of the PROFIBUS DP interface module device manual on the Internet (http://support.automation.siemens.com/WW/view/en/78324181).

Assignment of data record and channel

For the configuration as a 1 x 16-channel module, the parameters are located in data records 64 to 79 and are assigned as follows:

- Data record 64 for channel 0
- Data record 65 for channel 1
- …
- Data record 78 for channel 14
- Data record 79 for channel 15

For the configuration as a 2 x 8-channel module, the module has 2 submodules with eight channels each. The parameters for the channels are located in data records 64 to 71 and are assigned as follows:

- Data records 64 to 71 for channels 0 to 7 (submodule 1)
- Data records 64 to 71 for channels 8 to 15 (submodule 2)

Address the respective submodule for data record transfer.

Data record structure

The example in the figure below shows the structure of data record 64 for channel 0. The structure of channels 1 to 16 is identical. The values in byte 0 and byte 1 are fixed and may not be changed.

Enable a parameter by setting the corresponding bit to "1".

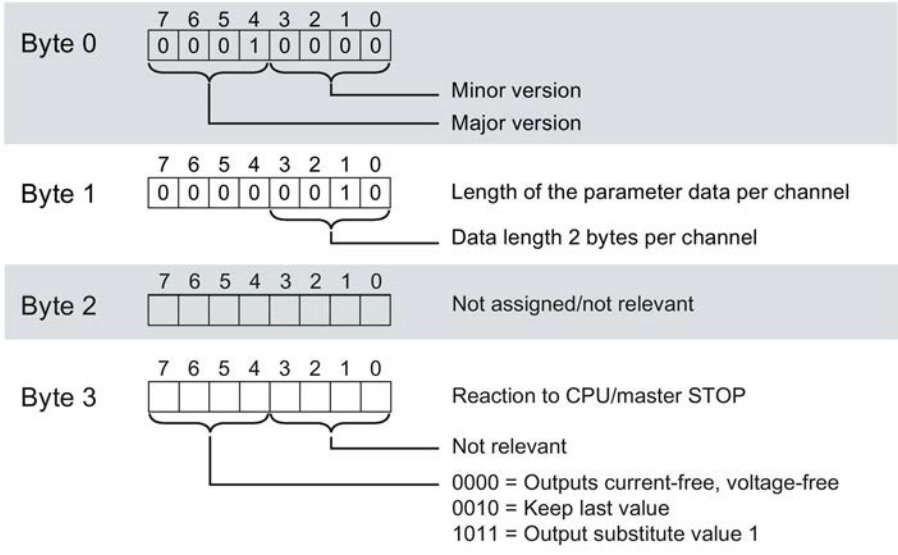

Figure B-1 Structure of data record 64: Bytes 0 to 3

SIEMENS

Manual

SIMATIC

S7-1500 / ET 200MP

Digital output module
DQ 16x230VAC/2A ST Relay (6ES7522-5HF00-0AB0)

Edition 04/2020

support.industry.siemens.com

SIEMENS

SIMATIC

S7-1500/ET 200MP Digital output module DQ 16x230VAC/2A ST Relay (6ES7522-5HH00-0AB0)

Equipment Manual

Preface

Documentation guide 1

Product overview 2

Wiring 3

Parameters/address space 4

Interrupts/diagnostics alarms 5

Technical specifications 6

Dimensional drawing A

Parameter data records B

04/2020

A5E34934019-AD

Legal information

Warning notice system

This manual contains notices you have to observe in order to ensure your personal safety, as well as to prevent damage to property. The notices referring to your personal safety are highlighted in the manual by a safety alert symbol, notices referring only to property damage have no safety alert symbol. These notices shown below are graded according to the degree of danger.

⚠ DANGER

indicates that death or severe personal injury **will** result if proper precautions are not taken.

⚠ WARNING

indicates that death or severe personal injury **may** result if proper precautions are not taken.

⚠ CAUTION

indicates that minor personal injury can result if proper precautions are not taken.

NOTICE

indicates that property damage can result if proper precautions are not taken.

If more than one degree of danger is present, the warning notice representing the highest degree of danger will be used. A notice warning of injury to persons with a safety alert symbol may also include a warning relating to property damage.

Qualified Personnel

The product/system described in this documentation may be operated only by **personnel qualified** for the specific task in accordance with the relevant documentation, in particular its warning notices and safety instructions. Qualified personnel are those who, based on their training and experience, are capable of identifying risks and avoiding potential hazards when working with these products/systems.

Proper use of Siemens products

Note the following:

⚠ WARNING

Siemens products may only be used for the applications described in the catalog and in the relevant technical documentation. If products and components from other manufacturers are used, these must be recommended or approved by Siemens. Proper transport, storage, installation, assembly, commissioning, operation and maintenance are required to ensure that the products operate safely and without any problems. The permissible ambient conditions must be complied with. The information in the relevant documentation must be observed.

Trademarks

All names identified by ® are registered trademarks of Siemens AG. The remaining trademarks in this publication may be trademarks whose use by third parties for their own purposes could violate the rights of the owner.

Disclaimer of Liability

We have reviewed the contents of this publication to ensure consistency with the hardware and software described. Since variance cannot be precluded entirely, we cannot guarantee full consistency. However, the information in this publication is reviewed regularly and any necessary corrections are included in subsequent editions.

Siemens AG
Digital Industries
Postfach 48 48
90026 NÜRNBERG
GERMANY

A5E34934019-AD
℗ 05/2020 Subject to change

Copyright © Siemens AG 2015 - 2020.
All rights reserved

Preface

Purpose of the documentation

This manual supplements the system manual S7-1500/ET 200MP (https://support.industry.siemens.com/cs/ww/en/view/59191792).

Functions that relate in general to the systems are described in this system manual.

The information provided in this manual and in the system/function manuals supports you in commissioning the systems.

Changes compared to previous version

Compared to the previous version, this manual contains the following change:

The module features a switching cycle counter as of firmware version V1.1.0.

Conventions

CPU: The term "CPU" is used in this manual both for the CPUs of the S7-1500 automation system and for interface modules of the ET 200MP distributed I/O system.

STEP 7: In this documentation, "STEP 7" is used as a synonym for all versions of the configuration and programming software "STEP 7 (TIA Portal)".

Please also observe notes marked as follows:

Note

A note contains important information on the product described in the documentation, on the handling of the product or on the section of the documentation to which particular attention should be paid.

Security information

Siemens provides products and solutions with industrial security functions that support the secure operation of plants, systems, machines and networks.

In order to protect plants, systems, machines and networks against cyber threats, it is necessary to implement – and continuously maintain – a holistic, state-of-the-art industrial security concept. Siemens' products and solutions constitute one element of such a concept.

Customers are responsible for preventing unauthorized access to their plants, systems, machines and networks. Such systems, machines and components should only be connected to an enterprise network or the internet if and to the extent such a connection is necessary and only when appropriate security measures (e.g. firewalls and/or network segmentation) are in place.

For additional information on industrial security measures that can be implemented, please visit (https://www.siemens.com/industrialsecurity).

Siemens' products and solutions undergo continuous development to make them more secure. Siemens strongly recommends that product updates are applied as soon as they are available and that the latest product versions are used. Use of product versions that are no longer supported, and failure to apply the latest updates may increase customers' exposure to cyber threats.

To stay informed about product updates, subscribe to the Siemens Industrial Security RSS Feed visit (https://www.siemens.com/industrialsecurity).

Open Source Software

Open-source software is used in the firmware of the I/O modules. Open Source Software is provided free of charge. We are liable for the product described, including the open-source software contained in it, pursuant to the conditions applicable to the product. Siemens accepts no liability for the use of the open source software over and above the intended program sequence, or for any faults caused by modifications to the software.

For legal reasons, we are obliged to publish the original text of the license conditions and copyright notices. Please read the information relating to this on the Internet (https://support.industry.siemens.com/cs/ww/en/view/109741045).

Table of contents

Preface 3

1 Documentation guide 6

2 Product overview 10

2.1 Properties 10

2.2 Functions 13

2.2.1 Switching cycle counter 13

3 Wiring 15

4 Parameters/address space 18

4.1 Parameters 18

4.2 Declaration of parameters 19

4.3 Address space 20

5 Interrupts/diagnostics alarms 26

5.1 Status and error displays 26

5.2 Interrupts 28

5.3 Diagnostics alarms 29

6 Technical specifications 30

A Dimensional drawing 36

B Parameter data records 38

B.1 Parameter assignment and structure of the parameter data records 38

B.2 Structure of data sets 64 to 79 40

B.3 Structure of data set DS 129 41

B.4 Structure of data set DS 130 43

B.5 Structure of data set DS 131 45

Documentation guide

1

The documentation for the SIMATIC S7-1500 automation system and the SIMATIC ET 200MP distributed I/O system is arranged into three areas.
This arrangement enables you to access the specific content you require.

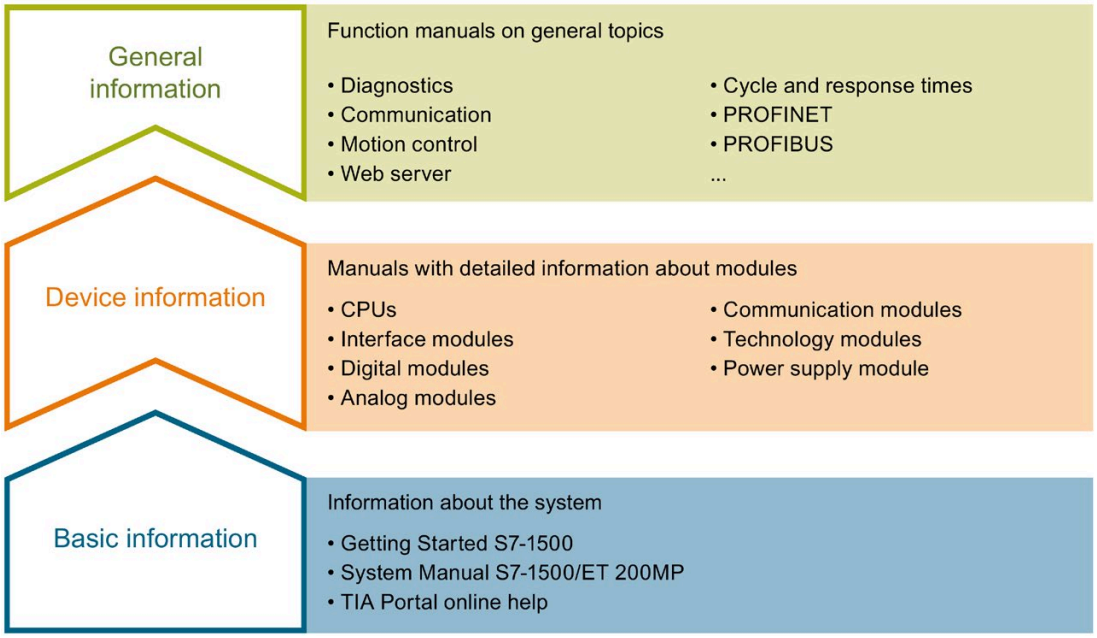

Basic information

The System Manual and Getting Started describe in detail the configuration, installation, wiring and commissioning of the SIMATIC S7-1500 and ET 200MP systems. The STEP 7 online help supports you in the configuration and programming.

Device information

Product manuals contain a compact description of the module-specific information, such as properties, wiring diagrams, characteristics and technical specifications.

General information

The function manuals contain detailed descriptions on general topics regarding the SIMATIC S7-1500 and ET 200MP systems, e.g. diagnostics, communication, motion control, Web server, OPC UA.

You can download the documentation free of charge from the Internet (https://support.industry.siemens.com/cs/ww/en/view/109742691).

Changes and supplements to the manuals are documented in a Product Information.

You can download the product information free of charge from the Internet (https://support.industry.siemens.com/cs/us/en/view/68052815).

Manual Collection S7-1500/ET 200MP

The Manual Collection contains the complete documentation on the SIMATIC S7-1500 automation system and the ET 200MP distributed I/O system gathered together in one file.

You can find the Manual Collection on the Internet (https://support.industry.siemens.com/cs/ww/en/view/86140384).

SIMATIC S7-1500 comparison list for programming languages

The comparison list contains an overview of which instructions and functions you can use for which controller families.

You can find the comparison list on the Internet (https://support.industry.siemens.com/cs/ww/en/view/86630375).

"mySupport"

With "mySupport", your personal workspace, you make the best out of your Industry Online Support.

In "mySupport", you can save filters, favorites and tags, request CAx data and compile your personal library in the Documentation area. In addition, your data is already filled out in support requests and you can get an overview of your current requests at any time.

You must register once to use the full functionality of "mySupport".

You can find "mySupport" on the Internet (https://support.industry.siemens.com/My/ww/en).

"mySupport" - Documentation

In the Documentation area in "mySupport" you can combine entire manuals or only parts of these to your own manual.
You can export the manual as PDF file or in a format that can be edited later.

You can find "mySupport" - Documentation on the Internet (http://support.industry.siemens.com/My/ww/en/documentation).

"mySupport" - CAx data

In the CAx data area in "mySupport", you can access the current product data for your CAx or CAe system.

You configure your own download package with a few clicks.

In doing so you can select:

- Product images, 2D dimension drawings, 3D models, internal circuit diagrams, EPLAN macro files
- Manuals, characteristics, operating manuals, certificates
- Product master data

You can find "mySupport" - CAx data on the Internet (http://support.industry.siemens.com/my/ww/en/CAxOnline).

Application examples

The application examples support you with various tools and examples for solving your automation tasks. Solutions are shown in interplay with multiple components in the system - separated from the focus on individual products.

You will find the application examples on the Internet (https://support.industry.siemens.com/sc/ww/en/sc/2054).

TIA Selection Tool

With the TIA Selection Tool, you can select, configure and order devices for Totally Integrated Automation (TIA).
This tool is the successor of the SIMATIC Selection Tool and combines the known configurators for automation technology into one tool.
With the TIA Selection Tool, you can generate a complete order list from your product selection or product configuration.

You can find the TIA Selection Tool on the Internet (http://w3.siemens.com/mcms/topics/en/simatic/tia-selection-tool).

SIMATIC Automation Tool

You can use the SIMATIC Automation Tool to perform commissioning and maintenance activities simultaneously on various SIMATIC S7 stations as a bulk operation independent of the TIA Portal.

General function overview:

- Network browsing and creation of a table showing the accessible devices in the network.
- Flashing of device LEDs or HMI display to locate a device
- Downloading of addresses (IP, subnet, gateway) to a device
- Downloading the PROFINET name (station name) to a device
- Placing a CPU in RUN or STOP mode
- Setting the time in a CPU to the current time of your PG/PC
- Downloading a new program to a CPU or an HMI device
- Downloading from CPU, downloading to CPU or deleting recipe data from a CPU
- Downloading from CPU or deleting data log data from a CPU
- Backup/restore of data from/to a backup file for CPUs and HMI devices
- Downloading service data from a CPU
- Reading the diagnostics buffer of a CPU
- Performing a CPU memory reset
- Resetting devices to factory settings
- Downloading a firmware update to a device

You can find the SIMATIC Automation Tool on the Internet (https://support.industry.siemens.com/cs/ww/en/view/98161300).

PRONETA

With SIEMENS PRONETA (PROFINET network analysis), you analyze the PROFINET network during commissioning. PRONETA features two core functions:

- The topology overview independently scans PROFINET network and all connected components.
- The IO check is a fast test of the wiring and the module configuration of a system.

You can find SIEMENS PRONETA on the Internet (https://support.industry.siemens.com/cs/ww/en/view/67460624).

SINETPLAN

SINETPLAN, the Siemens Network Planner, supports you in planning automation systems and networks based on PROFINET. The tool facilitates professional and predictive dimensioning of your PROFINET installation as early as in the planning stage. In addition, SINETPLAN supports you during network optimization and helps you to exploit network resources optimally and to plan reserves. This helps to prevent problems in commissioning or failures during productive operation even in advance of a planned operation. This increases the availability of the production plant and helps improve operational safety.

The advantages at a glance

- Network optimization thanks to port-specific calculation of the network load
- Increased production availability thanks to online scan and verification of existing systems
- Transparency before commissioning through importing and simulation of existing STEP 7 projects
- Efficiency through securing existing investments in the long term and optimal exploitation of resources

You can find SINETPLAN on the Internet (https://www.siemens.com/sinetplan).

Product overview

2

2.1 Properties

Article number

6ES7522-5HH00-0AB0

View of the module

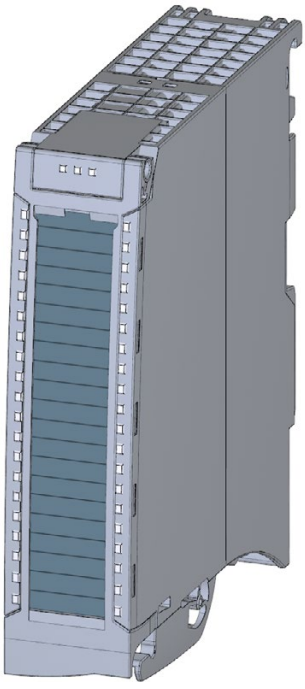

Figure 2-1 View of the DQ 16x230VAC/2A ST module

Properties

The module has the following technical properties:

- 16 digital outputs (relays)
- Supply voltage of the 24 V DC relay coils
- Rated output voltage 230 V AC (24 V DC up to 120 V DC/24 V AC up to 230 V AC)
- Rated output current 2 A per channel
- Configurable substitute values (per channel)
- Configurable diagnostics
- Switching cycle counter for relay contacts
- Suitable for solenoid valves, DC contactors, and indicator lights

The module supports the following functions:

Table 2- 1 Version dependencies of the module functions

Function	Firmware version of the module	Configuration software	
		STEP 7 (TIA Portal) as of V13 SP1 with HSP 0119	GSD file in STEP 7 (TIA Portal) as of V12 or STEP 7 V5.5 SP3 or higher
Firmware update	V1.0.0 or higher	X	--- / X
Identification data I&M0 to I&M3	V1.0.0 or higher	X	--- / X
Parameter assignment in RUN	V1.0.0 or higher	X	X
Module-internal Shared Output (MSO)	V1.0.0 or higher	X (PROFINET IO only)	X (PROFINET IO only)
Configurable submodules / submodules for Shared Device	V1.0.0 or higher	X (PROFINET IO only)	X (PROFINET IO only)
Switching cycle counter	V1.1.0 or higher	V15.1 or higher with HSP0282 • PROFINET IO only • Central operation with an S7-1500 CPU	X (PROFINET IO only)

You configure the module with STEP 7 (TIA Portal) or with a GSD file.

Compatibility

The following table shows the compatibility of the modules and the dependencies between hardware functional status (FS) and firmware version (FW) used:

Hardware functional status	Firmware version	Note
FS01	V1.0.0	Upgrade to V1.1.0 not possible
FS02	V1.1.0	Upgrade and downgrade possible between V1.1.0 and higher

Accessories

The following accessories are supplied with the module and can also be ordered separately as spare parts:

- Labeling strips
- U connector
- Universal front door

Other components

For example, you order the front connector including the potential bridge and cable tie separately.

You can find additional information on accessories and the article numbers in the system manual S7-1500/ET 200MP (https://support.industry.siemens.com/cs/ww/en/view/59191792).

2.2 Functions

2.2.1 Switching cycle counter

The "Switching cycle counter" function records the number of switching cycles of the integrated relay contact. When the "Limit value warning" maintenance alarm is configured and enabled, the "Limit value warning" maintenance alarm is triggered when the specified number of switching cycles is reached.

Typical areas of application:

- Recording the number of switching cycles of the integrated relay contacts
- Predictive maintenance so maintenance and service intervals are more predictable, for example

Advantages

- No programming required, because the switching cycle counter is integrated into the module.
- "Monitoring" of each individual channel is possible. Select which outputs are "monitored".
- The system configuration is flexible and individually adaptable.
- Increase in plant availability. You can foresee a module or actuator replacement in advance for the next maintenance cycle.

Requirement

Firmware version as of V1.1.0 of the module.

Configuration

The switching cycle counter for the integrated relay contacts is always activated.

Configure the maintenance alarm to monitor the channels with the following parameters:

- Trigger maintenance interrupt when the limit is reached
- Set limit for maintenance interrupt

How it works

The module counts the switching cycles by evaluating the rising edges of an output signal. If the module detects a rising edge, the switching cycle counter (24-bit) for the respective channel is incremented. The counter stops when the high limit is reached.

If you activate the "Maintenance switching cycles" parameter, the "Limit value warning" of the maintenance alarm is signaled when the limit is exceeded. Alternatively, activate the maintenance interrupt in the parameter data sets starting at DS 64.

The current counter states are stored on the module cyclically (approx. every 20 seconds) and retentively. The switching cycle counters are reset each time the module is restarted (power off/on). If there is no supply voltage, the switching cycle counter stops.

You can read the current counter states with data set DS 129 (Page 41). Data set DS 129 contains the counter status for each channel in UDINT format.

You can read the limits for each channel in UDINT format with data set DS 130 (Page 43).

You can set a limit for each switching cycle counter with the "Switching cycle limit" parameter or data set DS 131 (Page 45).

Note:

The number of permissible switching cycles depends on the type and size of the load. We recommend setting the switching cycle counter to 90% of the actual service life of the contacts, for example. You then still have adequate time to preemptively replace the module.

You can find the permissible number of switching cycles in theTechnical specifications (Page 30).

Wiring 3

This section contains the block diagram of the module and outlines various wiring options.

You will find information on wiring the front connector, establishing a cable shield, etc in the S7-1500/ET 200MP system manual (https://support.industry.siemens.com/cs/ww/en/view/59191792) in section Wiring.

Wiring and block diagram

The example in the following figure shows the terminal assignment and the assignment of the channels. The individual channels are connected with a relay.

Note

Note that the 24 V DC supply voltage for this module must always be supplied by terminals 19/20 **and** 39/40. Use the supplied potential jumpers for this purpose.

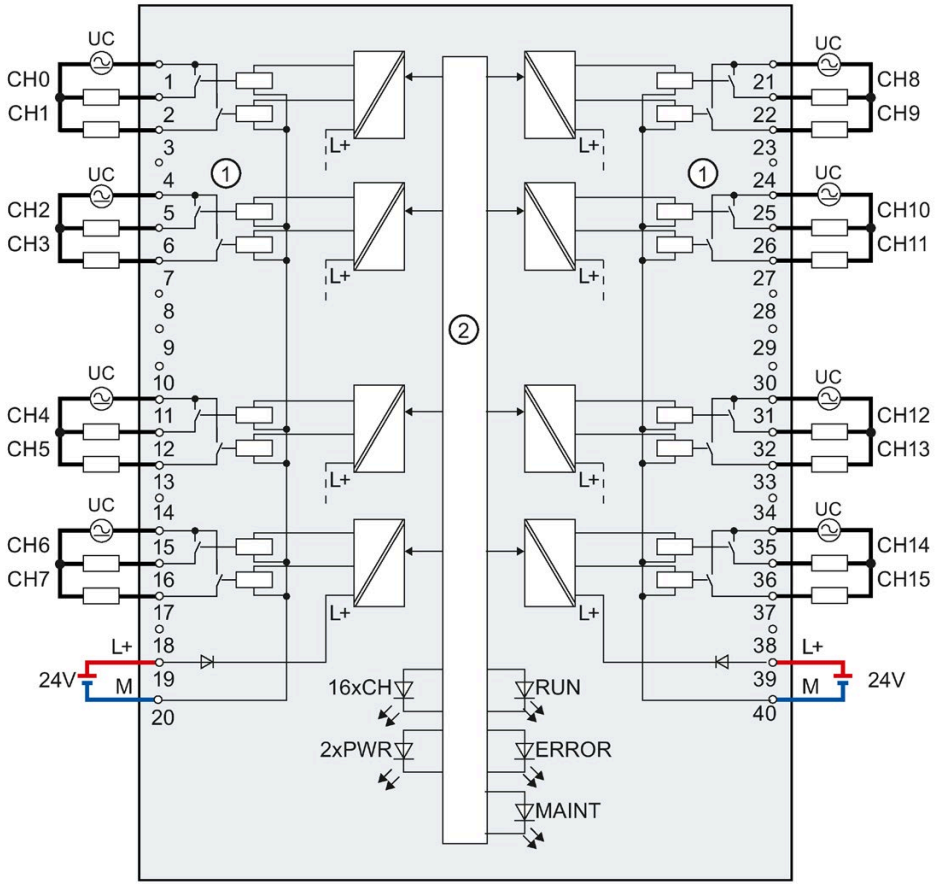

①	Relay 16x	CHx	Channel or channel status LED (green)
②	Backplane bus interface	RUN	Status display LED (green)
L+	Power supply 24 V DC for relay contacts	ERROR	Error display LED (red)
M	Ground	MAINT	LED maintenance display (yellow)
		PWR	POWER supply voltage LED (green)

Figure 3-1 Block diagram and terminal assignment

Tip: Using the potential jumpers

Use the potential jumpers supplied with the front connector if you want to distribute the 24 V DC supply voltage to a neighboring module. This helps you to avoid having to terminate two wires to one terminal.

Proceed as follows:

1. Connect the 24 V DC supply voltage to terminals 19 and 20.
2. Insert the potential jumpers between terminals 19 and 39 (L+) and between terminals 20 and 40 (M).
3. Use the terminals 39 and 40 to loop the potential to the next module.

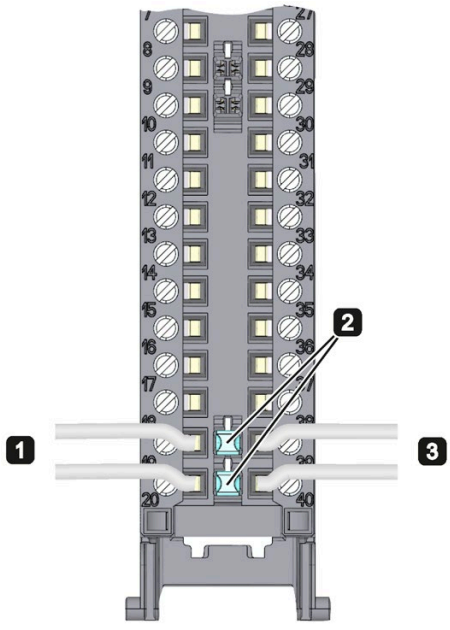

Figure 3-2 Using the potential jumpers

Note

Ensure that the maximum current load of 8 A per potential jumper is not exceeded.

Parameters/address space 4

4.1 Parameters

DQ 16x230VAC/2A ST parameters

When you assign the module parameters in STEP 7, you use various parameters to specify the module properties. The table below lists the parameters that can be set. The effective range of the configurable parameters depends on the type of configuration. The following configurations are possible:

- Central operation with a S7-1500 CPU
- Distributed operation on PROFINET IO in an ET 200MP system
- Distributed operation on PROFIBUS DP in an ET 200MP system

For parameter assignment in the user program, the parameters are transferred to the module with the WRREC instruction (reconfiguration in RUN) using data records; see section Parameter assignment and structure of the parameter data records (Page 38).

Table 4- 1 Configurable parameters and their defaults

Parameter	Range of values	Default	Reconfiguration in RUN	Range of effectiveness with configuration software, e.g. STEP 7	
				GSD file PROFINET IO	GSD file PROFIBUS DP
Diagnostics					
No supply voltage L+	Yes/No	No	Yes	Module	Module
Reaction to CPU STOP	• Turn off • Keep last value • Output substitute value 1	Turn off	Yes	Channel	Channel
Maintenance switching cycle counter	Yes/No	No	Yes	Channel	---
Switching cycle limits					
Switching cycle counter limit	0 to 16777214	0	Yes	Channel	---

4.2 Declaration of parameters

No supply voltage L+

Enabling of the diagnostics at no or insufficient supply voltage L+.

Reaction to CPU STOP

Determines the reaction of the output to the CPU going into STOP state or when the connection to the CPU is interrupted.

Maintenance switching cycles

You use this parameter to enable the maintenance alarm "Limit value warning" when the switching cycle counter limit is violated.

You configure the limit with the parameter "Switching cycle limit" for each channel CHx.

Switching cycle limit

Defines the limit value channel-by-channel. If this value is exceeded, the "Limit value warning" maintenance alarm is signaled.

Enter an integer value between 0 and 16777214.

4.3 Address space

The module can be configured differently in STEP 7; see following table. Depending on the configuration, additional/different addresses are assigned in the process image output/input.

Configuration options of DQ 16x230VAC/2A ST

You can configure the module with STEP 7 or with a GSD file.

When you configure the module by means of the GSD file, the configurations are available under different short designations/module names.

The following configurations are possible:

Table 4- 2 Configuration options

Configuration	Short designation/module name in the GSD file	Configuration software, e.g., STEP 7	
		Integrated in hardware catalog STEP 7 V13, SP1 or higher with HSP 0119	GSD file in STEP 7 as of V12 or STEP 7 as of V5.5 SP3
1 x 16-channel without value status	DQ 16x230VAC/2A ST	X	X
1 x 16-channel with value status	DQ 16x230VAC/2A ST QI	X	X
2 x 8-channel without value status	DQ 16x230VAC/2A ST S	X (PROFINET IO only)	X (PROFINET IO only)
2 x 8-channel with value status	DQ 16x230VAC/2A ST S QI	X (PROFINET IO only)	X (PROFINET IO only)
1 x 16-channel with value status for module-internal Shared Output with up to 4 submodules	DQ 16x230VAC/2A ST MSO	X (PROFINET IO only)	X (PROFINET IO only)

Note

Substitute value behavior in shared device operation with the following configuration (V1.0 only):

- **2 x 8-channel with / without value status**

If the system is in shared device mode and one of the IO controllers involved goes into STOP or fails due to a communication failure, for example, all submodules of the output module perform the configured substitute value reaction (e.g. shutdown).

This means that even when only one IO controller fails, the other IO controllers associated with the shared device no longer control the assigned submodule of the output module.

Value status (Quality Information, QI)

The value status is always activated for the following modules:

- DQ 16x230VAC/2A ST QI
- DQ 16x230VAC/2A ST S QI
- DQ 16x230VAC/2A ST MSO

An additional bit is assigned to each channel for the value status. The bit for the value status indicates if the output value specified by the user program is actually pending at the module terminal (0 = value is incorrect).

Note

Limit value warning

The maintenance alarm "Limit value warning" has no effect on the value status.

Address space for configuration as 16-channel DQ 16x230VAC/2A ST QI

The following figure shows the assignment of the address space for the configuration as a 16-channel module with value status. You can freely assign the start address for the module. The addresses of the channels are derived from the start address.

The letters "a to b" are printed on the module; "QB a", for example, stands for module start address output byte a.

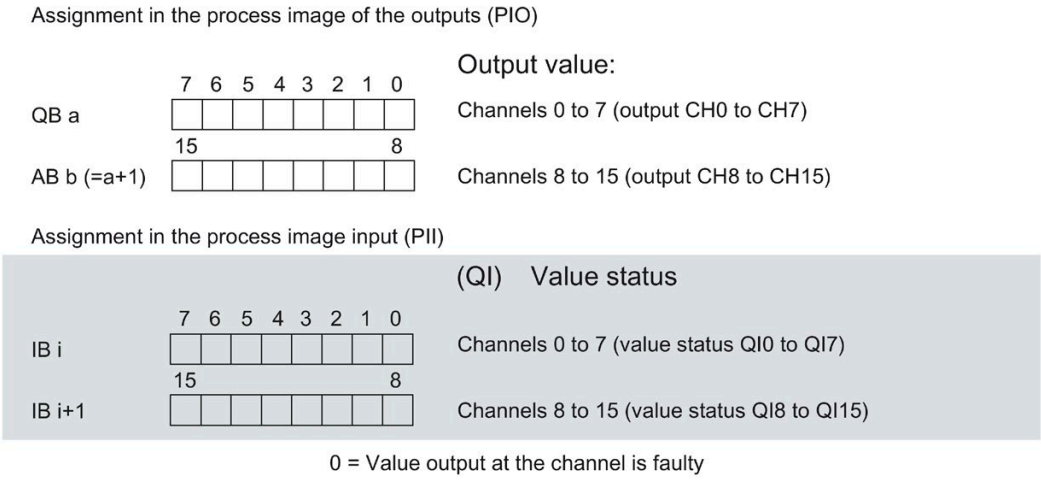

Figure 4-1 Address space for configuration as 16-channel DQ 16x230VAC/2A ST QI with value status

Address space for configuration as 2 x 8-channel DQ 16x230VAC/2A ST S QI

For the configuration as a 2 x 8-channel module, the channels of the module are divided into two submodules. The submodules can be assigned to different IO controllers when the module is used in a shared device.

The number of IO controllers depends on the interface module being used. Please observe the information in the manual for the particular interface module.

Unlike the 1 x 16-channel module configuration, each of the two submodules has a freely assignable start address. The addresses for the respective value status of a submodule can also be assigned by the user.

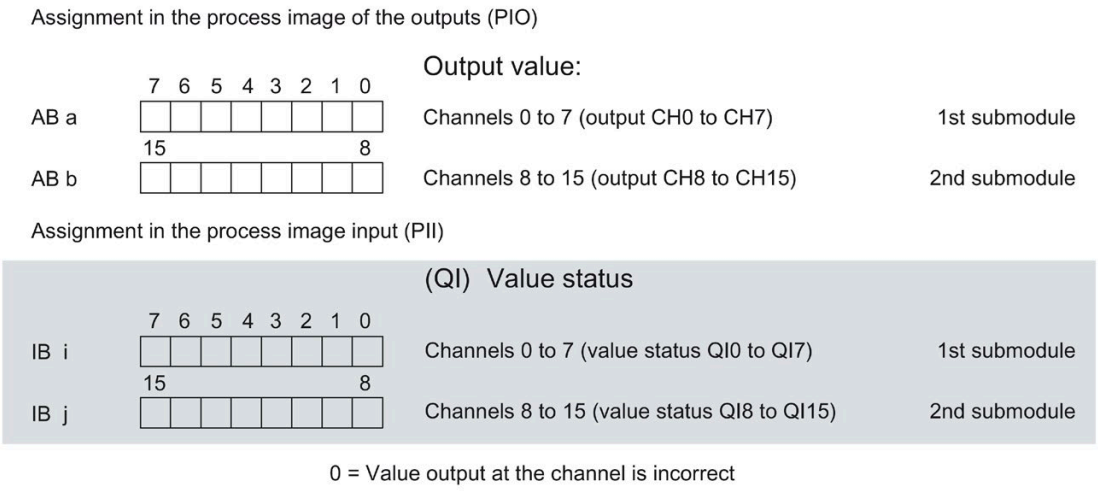

Figure 4-2 Address space for configuration as 2 x 8-channel DQ 16x230VAC/2A ST S QI with value status

Address space for configuration as 1 x 16-channel DQ 16x230VAC/2A ST MSO

For the configuration as a 1 x 16-channel module (module-internal Shared Output, MSO), channels 0 to 15 of the module are copied to multiple submodules. Channels 0 to 15 are then available with identical values in various submodules. These submodules can be assigned to up to four IO controllers when the module is used in a shared device:

- The IO controller to which submodule 1 is assigned has write access to outputs 0 to 15.
- The IO controllers to which submodule 2, 3, or 4 is assigned have read access to outputs 0 to 15.

The number of IO controllers depends on the interface module being used. Observe the information in the manual for the particular interface module.

Value status (Quality Information, QI)

The meaning of the value status depends on the submodule on which it occurs.

For the first submodule (=basic submodule), the value status 0 indicates that the value is incorrect or that the IO controller of the basic submodule is in STOP state.

For the 2nd to 4th submodule (=MSO submodule), the value status 0 indicates that the value is incorrect or one of the following errors has occurred:

- The basic submodule is not yet configured (not ready).
- The connection between the IO controller and the basic submodule has been interrupted.
- The IO controller of the basic submodule is in STOP or POWER OFF state.

The figure below shows the assignment of the address space for submodules 1 and 2 and the value status.

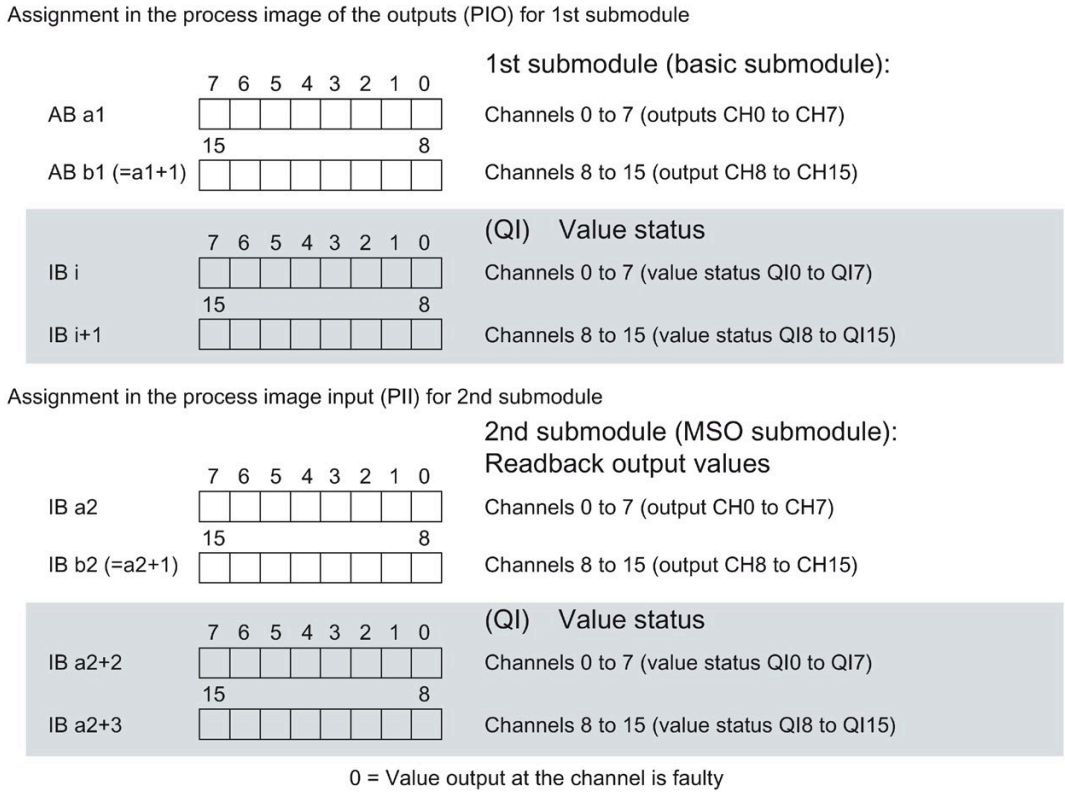

Figure 4-3 Address space for configuration as 1 x 16-channel DQ 16x230VAC/2A ST MSO with value status

The figure below shows the assignment of the address space for submodules 3 and 4 and the value status.

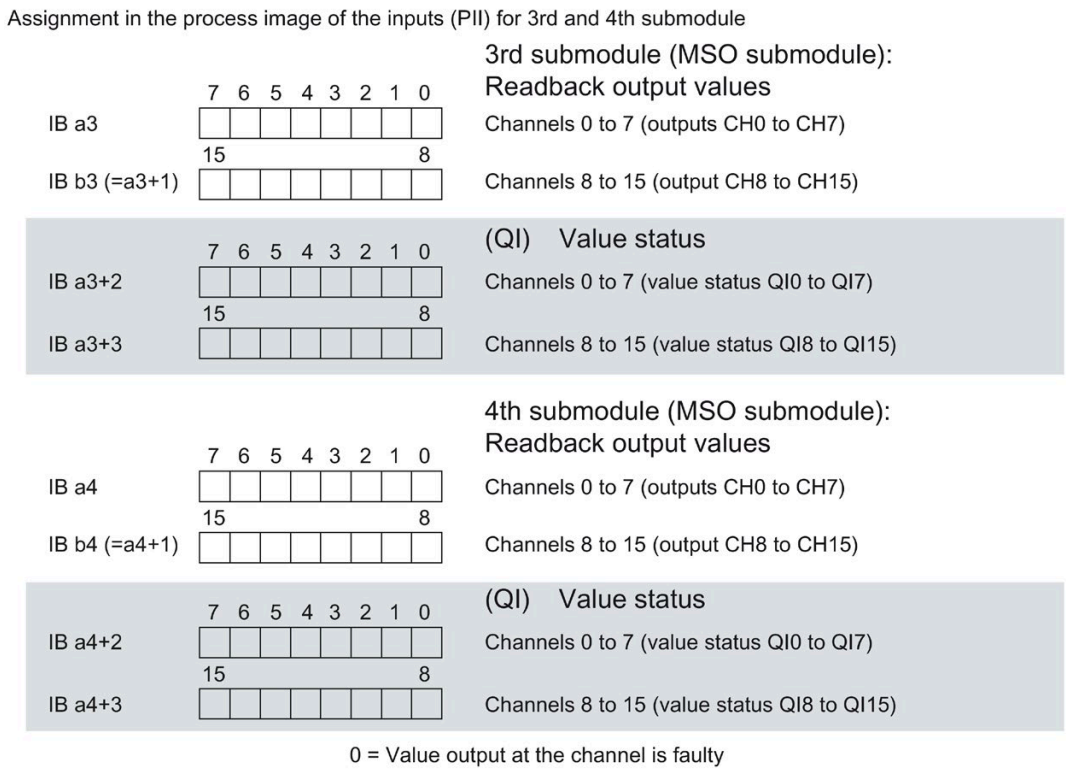

Figure 4-4 Address space for configuration as 1 x 16-channel DQ 16x230VAC/2A ST MSO with value status

Reference

You can find information on the module-internal shared input/shared output (MSI/MSO) function in the section Module-internal shared input/shared output (MSI/MSO) of the function manual PROFINET with STEP 7 V15 (http://support.automation.siemens.com/WW/view/en/49948856).

Interrupts/diagnostics alarms

5

5.1 Status and error displays

LED displays

The figure below shows the LED displays (status and error displays) of the DQ 16x230VAC/2A ST.

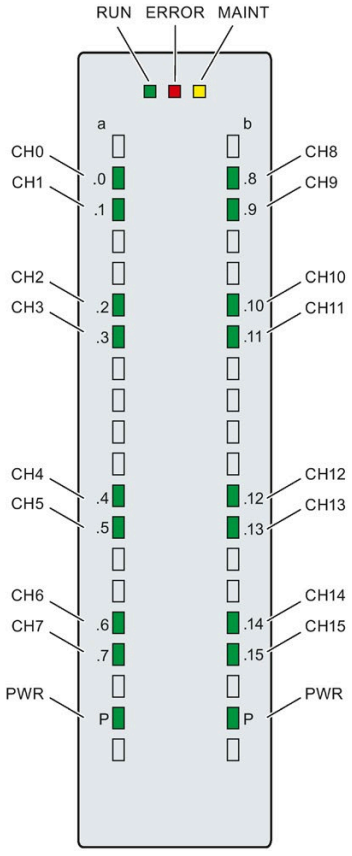

Figure 5-1 LED displays of the DQ 16x230VAC/2A ST module

Meaning of the LED displays

The following tables explain the meaning of the status and error displays. Corrective measures for diagnostics alarms can be found in the section Diagnostics alarms (Page 29).

RUN and ERROR LED

Table 5- 1 RUN and ERROR status and error displays

LED		Meaning	Solution
RUN	ERROR		
Off	Off	Voltage missing or too low at backplane bus	• Switch on the CPU and/or the system power supply modules. • Verify that the U connectors are inserted. • Check whether too many modules are inserted.
Flashes	Off	The module starts and flashes until the valid parameter assignment is set.	---
On	Off	Module parameters assigned	
On	Flashes	Indicates module error because supply voltage L+ is missing	Check the supply voltage L+ at the terminals 19 and 20 or 39 and 40.
Flashes	Flashes	Hardware defective	Replace the module.

LED MAINT

Table 5- 2 MAINT status display

LED MAINT	Meaning	Solution
Off	0 = No maintenance interrupt is pending.	---
On	1 = The maintenance interrupt "Limit value warning" is pending.	Perform maintenance.

PWR LED

Table 5- 3 PWR status display

LED PWR	Meaning	Solution
□ Off	Supply voltage L+ too low or missing	Check the supply voltage L+ at the terminals 19 and 20 or 39 and 40.
■ On	Supply voltage L+ is present and OK	---

CHx LED

Table 5- 4 CHx status display

LED CHx	Meaning	Solution
□ Off	0 = Status of the output signal	---
■ On	1 = Status of the output signal	---

5.2 Interrupts

The digital output module DQ 16x230VAC/2A ST supports diagnostics interrupts and maintenance alarms.

Diagnostic interrupt

The module generates a diagnostic interrupt at the following event:

- Missing supply voltage L+
- Parameter assignment error

Maintenance alarm

The module generates a maintenance alarm at the following event: Limit value warning.

Detailed information

You can find detailed information on the event in the error organization block with the "RALRM" instruction (read alarm status information) and in the STEP 7 online help.

5.3 Diagnostics alarms

Diagnostics alarms

A diagnostic interrupt is generated and the ERROR LED flashes on the module for each diagnostics message. You can read out the diagnostics interrupts, for example, in the diagnostics buffer of the CPU. You can evaluate the error codes with the user program.

If the module is operated distributed with PROFIBUS DP in an ET 200MP system, you have the option to read out diagnostics data with the instruction RDREC or RD_REC using data record 0 and 1. The structure of the data records is available in the "Manual for interface module IM 155-5 DP ST (6ES7155-5BA00-0AB0)" on the Internet (https://support.industry.siemens.com/cs/ww/en/view/78324181).

Table 5- 5 Diagnostics alarms, their meaning and corrective measures

Diagnostics alarm	Error code	Meaning	Corrective measures
Parameter assignment error	10_H	The module cannot evaluate parameters for the channel Incorrect parameter assignment	Correct the parameter assignment
No load voltage	11_H	Supply voltage L+ of the module is missing	Connect supply voltage L+ to module/channel
Limit value warning	17_H	The configured limit for switching cycles has been exceeded.	• Replace module / actuator as a precautionary measure

Technical specifications

6

Technical specifications of the DQ 16x230VAC/2A ST

The following table shows the technical specifications as of 04/2020. You will find a data sheet including daily updated technical specifications on the Internet (https://support.industry.siemens.com/cs/ww/en/pv/6ES7522-5HH00-0AB0/td?dl=en).

Article number	6ES7522-5HH00-0AB0
General information	
HW functional status	From FS02
Firmware version	V1.1.0
• FW update possible	Yes
Product function	
• I&M data	Yes; I&M0 to I&M3
• Isochronous mode	No
Engineering with	
• STEP 7 TIA Portal configurable/integrated as of version	V13 SP1 / -
• STEP 7 configurable/integrated as of version	V5.5 SP3 / -
• PROFIBUS as of GSD version/GSD revision	V1.0 / V5.1
• PROFINET as of GSD version/GSD revision	V2.3 / -
Operating mode	
• DQ	Yes
• DQ with energy-saving function	No
• PWM	No
• Oversampling	No
• MSO	Yes
• Integrated operating cycle counter	Yes; FW V1.1.0 or higher
Supply voltage	
Rated value (DC)	24 V
permissible range, lower limit (DC)	20.4 V
permissible range, upper limit (DC)	28.8 V
Reverse polarity protection	Yes

Article number	6ES7522-5HH00-0AB0
Input current	
Current consumption, max.	185 mA
Output voltage	
Rated value (AC)	230 V; 24 V DC to 120 V DC / 24 V AC to 230 V AC
Power	
Power available from the backplane bus	0.8 W
Power loss	
Power loss, typ.	5 W
Digital outputs	
Type of digital output	Relays
Number of digital outputs	16
Current-sinking	Yes
Current-sourcing	Yes
Digital outputs, parameterizable	Yes
Short-circuit protection	No
Controlling a digital input	Yes
Size of motor starters according to NEMA, max.	5
Switching capacity of the outputs	
• on lamp load, max.	50 W (230 V AC), 5 W (24 V DC)
Output current	
• for signal "1" rated value	2 A
• for signal "1" permissible range, min.	10 mA; 10 V
• for signal "1" permissible range, max.	2 A; thermal continuous current
• for signal "0" residual current, max.	0 A
Parallel switching of two outputs	
• for logic links	Yes
• for uprating	No
• for redundant control of a load	Yes
Switching frequency	
• with resistive load, max.	1 Hz
• with inductive load, max.	0.5 Hz
• on lamp load, max.	1 Hz
Total current of the outputs	
• Current per channel, max.	2 A; see additional description in the manual
• Current per group, max.	4 A; see additional description in the manual
• Current per module, max.	32 A; see additional description in the manual

Article number	6ES7522-5HH00-0AB0
Relay outputs	
• Number of relay outputs	16
• Rated supply voltage of relay coil L+ (DC)	24 V
• Current consumption of relays (coil current of all relays), typ.	185 mA
• external protection for relay outputs	Miniature circuit breaker B10 / B16
• Contact connection (internal)	No
• Number of operating cycles, max.	see additional description in the manual
• Relay approved acc. to UL 508	No
Switching capacity of contacts	
– with inductive load, max.	2 A; see additional description in the manual
– with resistive load, max.	2 A; see additional description in the manual
Cable length	
• shielded, max.	1 000 m
• unshielded, max.	600 m
Interrupts/diagnostics/status information	
Diagnostics function	Yes
Substitute values connectable	Yes
Alarms	
• Diagnostic alarm	Yes
Diagnostic messages	
• Monitoring the supply voltage	Yes
• Wire-break	No
• Short-circuit	No
Diagnostics indication LED	
• RUN LED	Yes; green LED
• ERROR LED	Yes; red LED
• MAINT LED	Yes; Yellow LED
• Monitoring of the supply voltage (PWR-LED)	Yes; green LED
• Channel status display	Yes; green LED
• for channel diagnostics	No
• for module diagnostics	Yes; red LED

Article number	6ES7522-5HH00-0AB0
Potential separation	
Potential separation channels	
• between the channels	No
• between the channels, in groups of	2
• between the channels and backplane bus	Yes
• Between the channels and load voltage L+	Yes
Permissible potential difference	
between different circuits	250 V AC between the channels and the supply voltage L+; 250 V AC between the channels and the backplane bus; 500 V AC between the channels
Isolation	
Isolation tested with	Between channels: 3 100 V DC; between channels backplane bus: 3 100 V DC; between L+ and backplane bus: 707 V DC (type test)
Standards, approvals, certificates	
Suitable for safety functions	No
Ambient conditions	
Ambient temperature during operation	
• horizontal installation, min.	-25 °C; From FS02
• horizontal installation, max.	60 °C
• vertical installation, min.	-25 °C; From FS02
• vertical installation, max.	40 °C
Decentralized operation	
Prioritized startup	Yes
Dimensions	
Width	35 mm
Height	147 mm
Depth	129 mm
Weights	
Weight, approx.	350 g

Details on the number of switching cycles

The following tables list the permissible number of switching cycles depending on the applied voltage and current load. Different values apply in each case to resistive and inductive loads.

Table 6- 1 Switching capacity and service life of relay contacts for resistive load

For resistive load		
Voltage	Current	Number of switching cycles (typ.)
24 V DC	2.0 A 1.0 A 0.5 A	0.1 million 0.2 million 1.0 million
60 V DC	0.5 A	0.2 million
120 V DC	0.2 A	0.6 million
24 V AC	1.5 A	1.5 million
48 V AC	1.5 A	1.5 million
60 V AC	1.0 A	1.5 million
120 V AC	2.0 A 1.0 A 0.5 A	1.0 million 1.5 million 2.0 million
230 V AC	2.0 A 1.0 A 0.5 A	1.0 million 1.5 million 2.0 million

Table 6- 2 Switching capacity and lifetime of the relay contacts for inductive load

For inductive load		
Voltage	Current	Number of switching cycles (typ.)
24 V DC	2.0 A 1.0 A 0.5 A	0.05 million 0.1 million 0.5 million
60 V DC	0.5 A	0.1 million
120 V DC	0.2 A	0.3 million
24 V AC	1.5 A	1.0 million
48 V AC	1.5 A	1.0 million
60 V AC	1.5 A	1.0 million
120 V AC	2.0 A 1.0 A 0.5 A	0.7 million 1.0 million 1.5 million
230 V AC	2.0 A 1.0 A 0.5 A	0.7 million 1.0 million 1.5 million

Power reduction (derating) of outputs according to number of channels

The following graphs show the number of usable channels in relation to the mounting position of the S71500 automation system/ET 200MP distributed I/O system and the ambient temperature. The total current of the outputs remains unaffected.

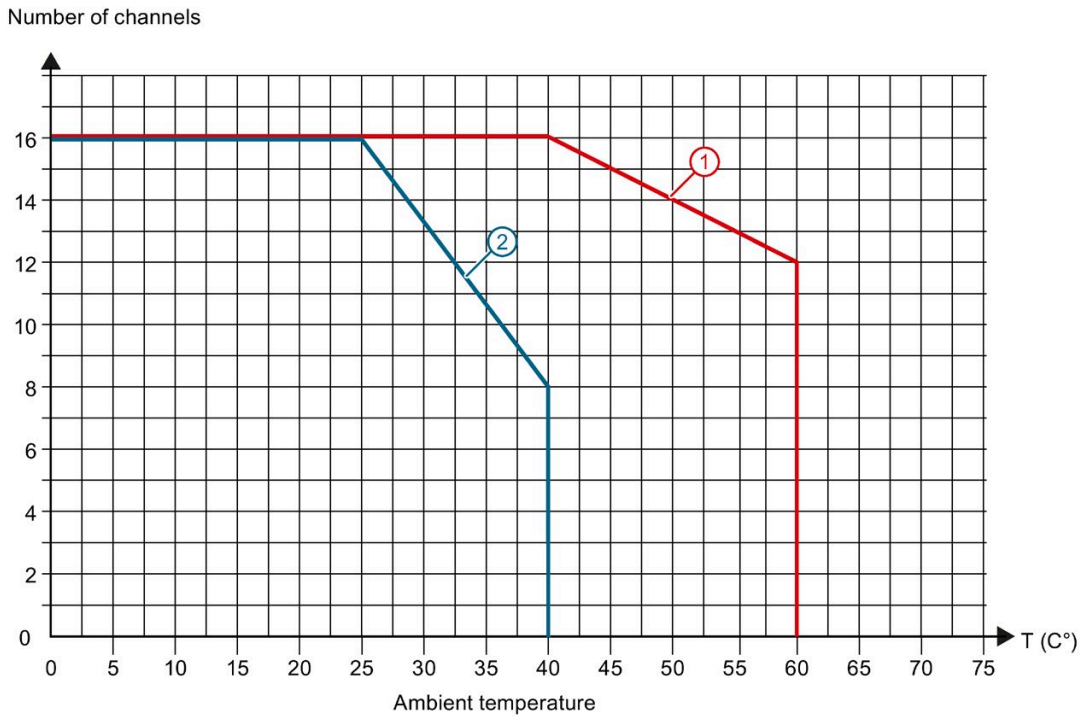

① Horizontal mounting of the system

② Vertical mounting of the system

Figure 6-1 Information on power reduction of outputs according to number of channels

Dimensional drawing

A

The dimension drawing of the module on the mounting rail, as well as a dimension drawing with open front cover, are provided in the appendix. Always observe the specified dimensions for installation in cabinets, control rooms, etc.

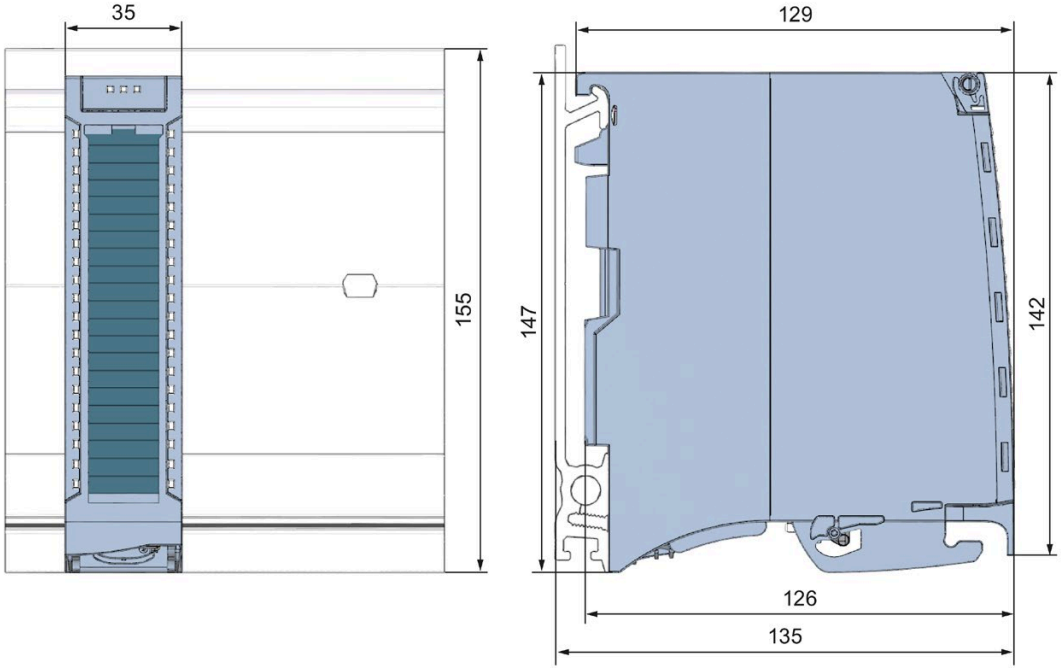

Figure A-1 Dimension drawing of the DQ 16x230VAC/2A ST module

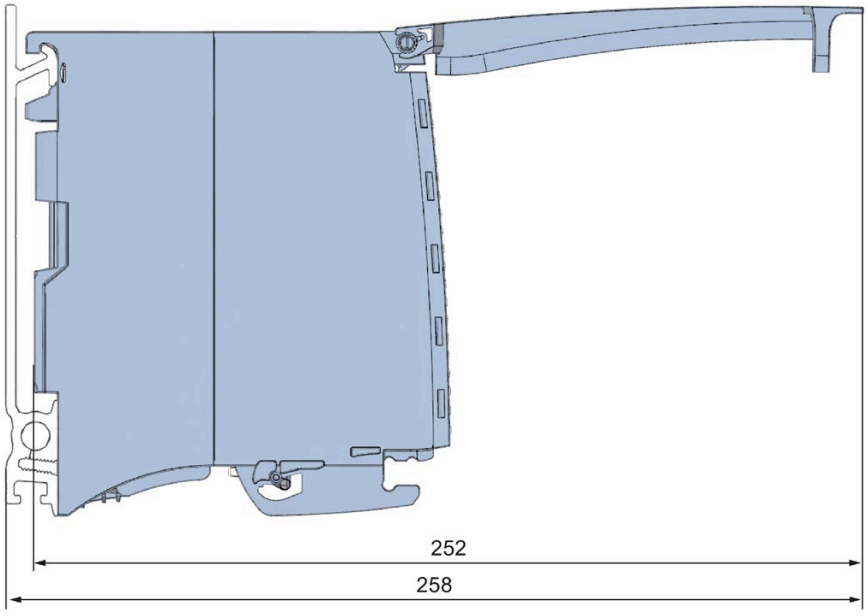

Figure A-2 Dimension drawing of the DQ 16x230VAC/2A ST module, side view with open front cover

Parameter data records

B

B.1 Parameter assignment and structure of the parameter data records

The data records of the module have an identical structure, regardless of whether you configure the module with PROFIBUS DP or PROFINET IO.

Dependencies for configuration with GSD file

When a GSD file is used to configure a module, dependencies can arise when "assigning the parameters".

There are no dependencies for this module. You can assign the individual parameters in any combination.

Parameter assignment in the user program

You have the option to reconfigure the module in RUN (e.g. the response of selected channels to the CPU STOP state can be changed in RUN without having an effect on the other channels).

Changing parameters in RUN

The WRREC instruction is used to transfer the parameters to the module using data records 64 to 79. The parameters set in STEP 7 are not changed in the CPU, which means the parameters set in STEP 7 are valid again after a restart.

The parameters are only checked for plausibility by the module after the transfer.

STATUS output parameter

The module ignores errors that occurred during the transfer of parameters with the WRREC instruction and continues operation with the previous parameter assignment. However, a corresponding error code is written to the STATUS output parameter.

The description of the WRREC instruction and the error codes is available in the STEP 7 online help.

Operation of the module behind a PROFIBUS DP interface module

If the module is operated behind a PROFIBUS DP interface module, the parameter data records 0 and 1 are not read back. You obtain the diagnostics data records 0 and 1 with the read back parameter data records 0 and 1. You can find additional information in the Interrupts section of the manual for the PROFIBUS DP interface module in the Internet (http://support.automation.siemens.com/WW/view/en/78324181).

Assignment of data record and channel

For the configuration as a 1 x 16-channel module, the parameters are located in data records 64 to 79 and are assigned as follows:

- Data record 64 for channel 0
- Data record 65 for channel 1
- …
- Data record 78 for channel 14
- Data record 79 for channel 15

For the configuration as a 2 x 8-channel module, the module has 2 submodules with eight channels each. The parameters for the channels are located in data records 64 to 71 and are assigned as follows:

- Data records 64 to 71 for channels 0 to 7 (submodule 1)
- Data records 64 to 71 for channels 8 to 15 (submodule 2)

Address the respective submodule for data record transfer.

Assignment of data record for the switching cycle counter

The parameters for the switching cycle counter are located in the data records 129 to 130 and are assigned as follows:

Data record 129 for channels 0 to 15 to read the counter values

Data record 130 for channels 0 to 15 to read the limit values

For the configuration as a 2 x 8-channel module, the module has 2 submodules with eight channels each. The parameters for the switching cycle counter are located in the data records 129 to 130 and are assigned as follows:

- Data records 129 for channels 0 to 7 (submodule 1) and channels 8 to 15 (submodule 2)
- Data records 130 for channels 0 to 7 (submodule 1) and channels 8 to 15 (submodule 2)

Address the respective submodule for data record transfer.

B.2 Structure of data sets 64 to 79

Data record structure

The figure below shows the structure of data record 64 for channel 0 as an example. The structure is identical for channels 1 to 16. The values in byte 0 and byte 1 are fixed and may not be changed.

Enable a parameter by setting the corresponding bit to "1".

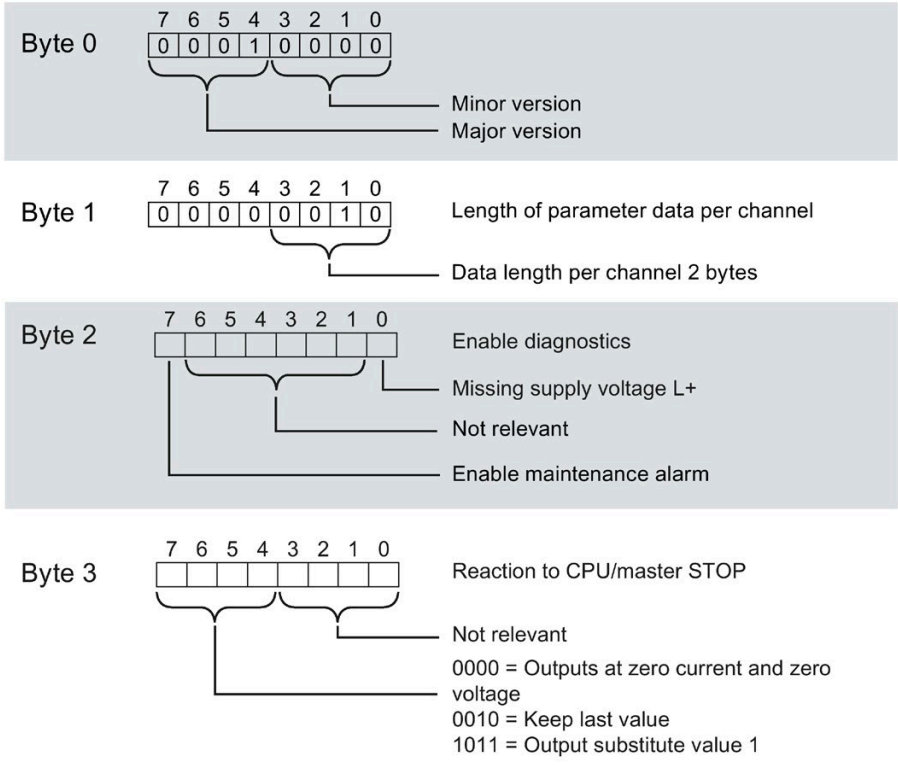

Figure B-1 Structure of data record 64: Bytes 0 to 3

B.3 Structure of data set DS 129

Structure of data set 129

You can read the current states of the switching cycle counters with data set 129. The counter status is supplied for each channel in UDINT format. The length of the data set results from the number of channels in the selected submodule.

The following figure shows you the structure of data set 129 for 16 channels.

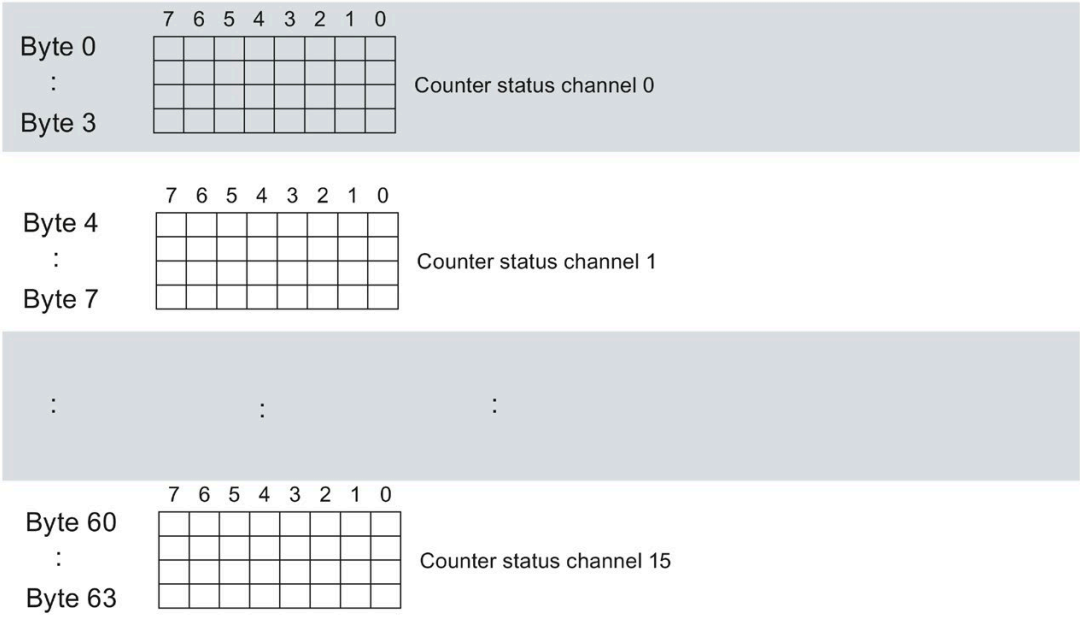

Figure B-2 Structure of data set 129: Byte 0 to 63

The following figure shows you the structure of data set 129 for 2 submodules with 8 channels each.

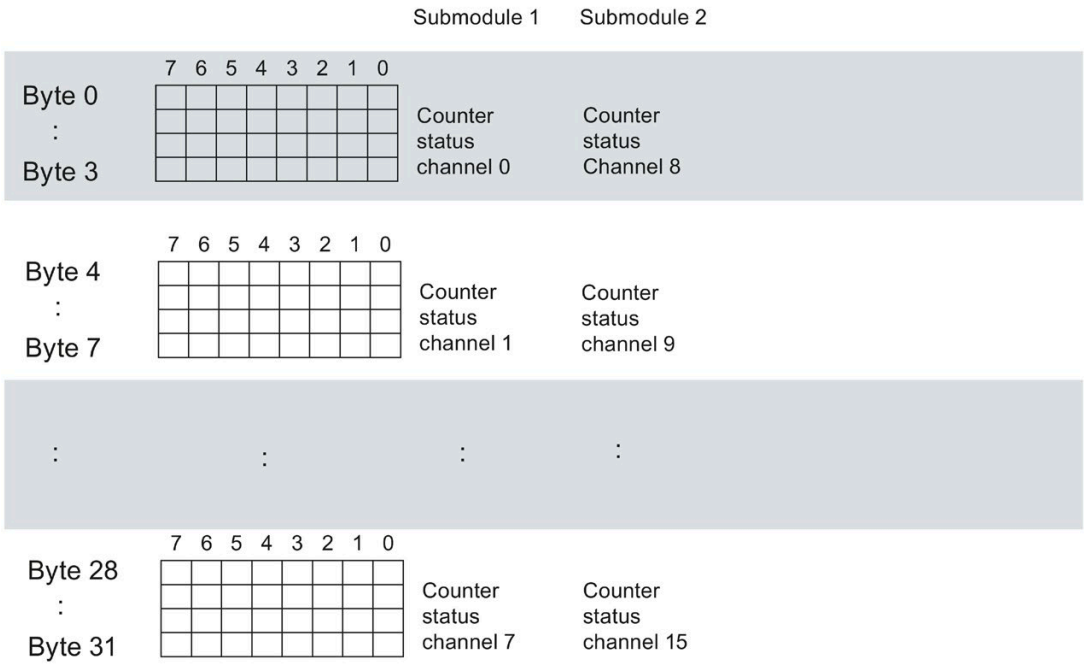

Figure B-3 Structure of data set 129: Byte 0 to 31

B.4 Structure of data set DS 130

Structure of data set 130

The limits of the switching cycle counters are read out with data set 130. The set value is supplied for each channel in UDINT format. The length of the data set results from the number of channels in the selected submodule.

The following figure shows you the structure of data set 130 for 16 channels.

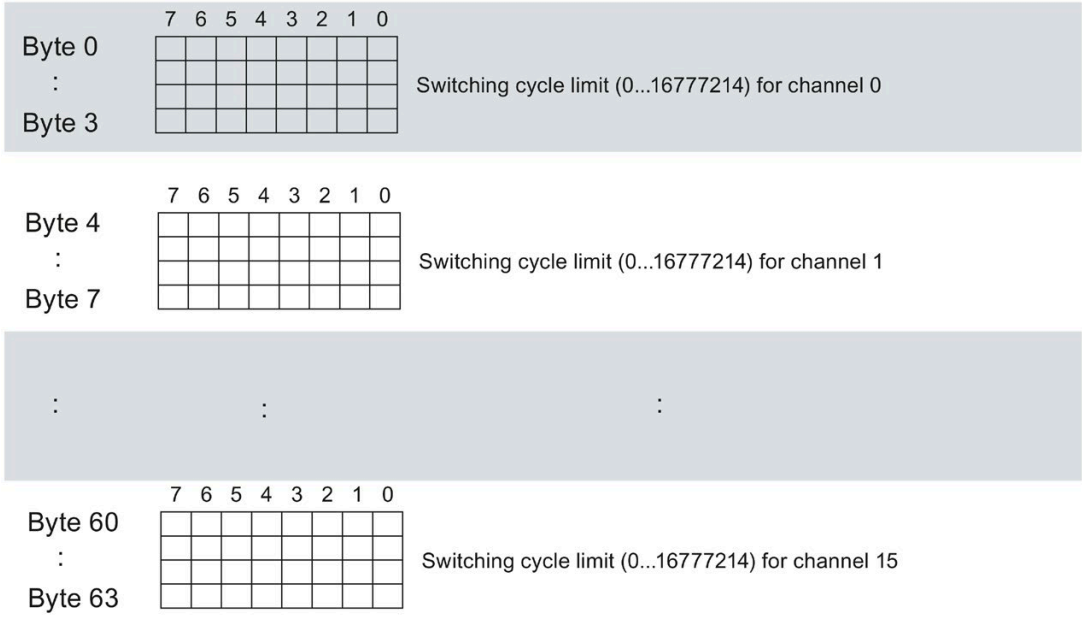

Figure B-4 Structure of data set 130: Byte 0 to 63

The following figure shows you the structure of data set 130 for 2 submodules with 8 channels each.

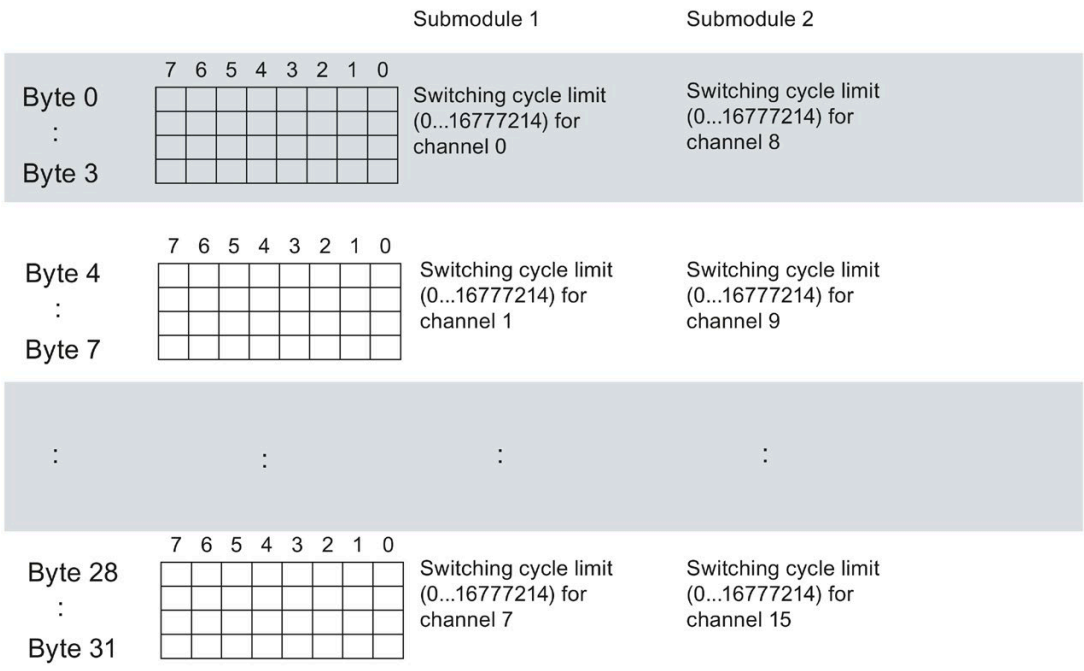

Figure B-5 Structure of data set 130: Byte 0 to 31

B.5 Structure of data set DS 131

Structure of data set 131

The following figure shows you the structure of data set 131 for 16 channels.

Enable a parameter by setting the corresponding bit to "1".

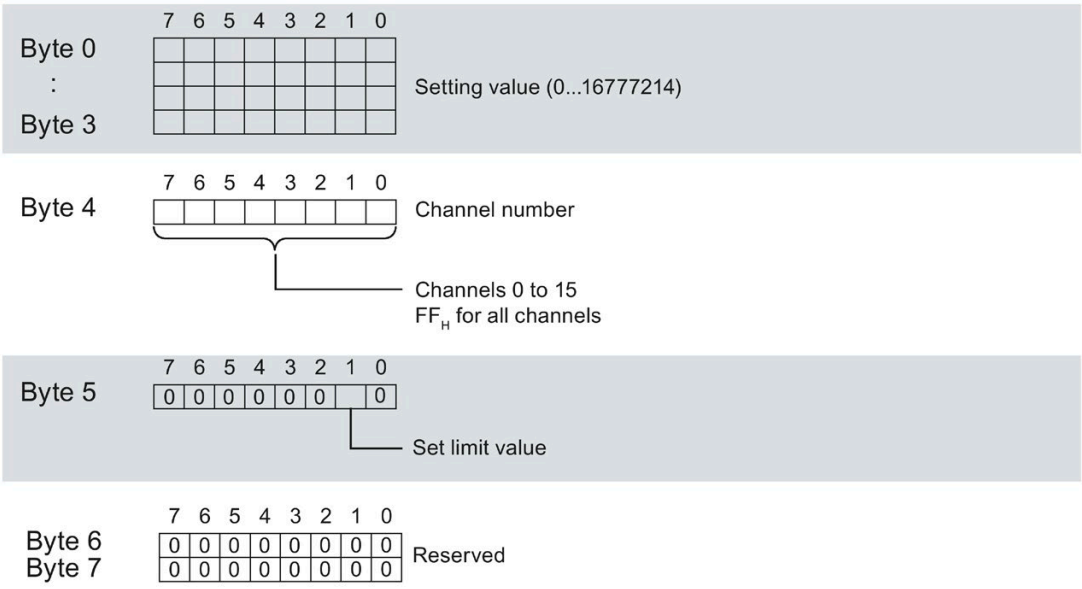

Figure B-6 Structure of data set 131: Bytes 0 to 7

The following figure shows you the structure of data set 131 for 2 submodules with 8 channels each.

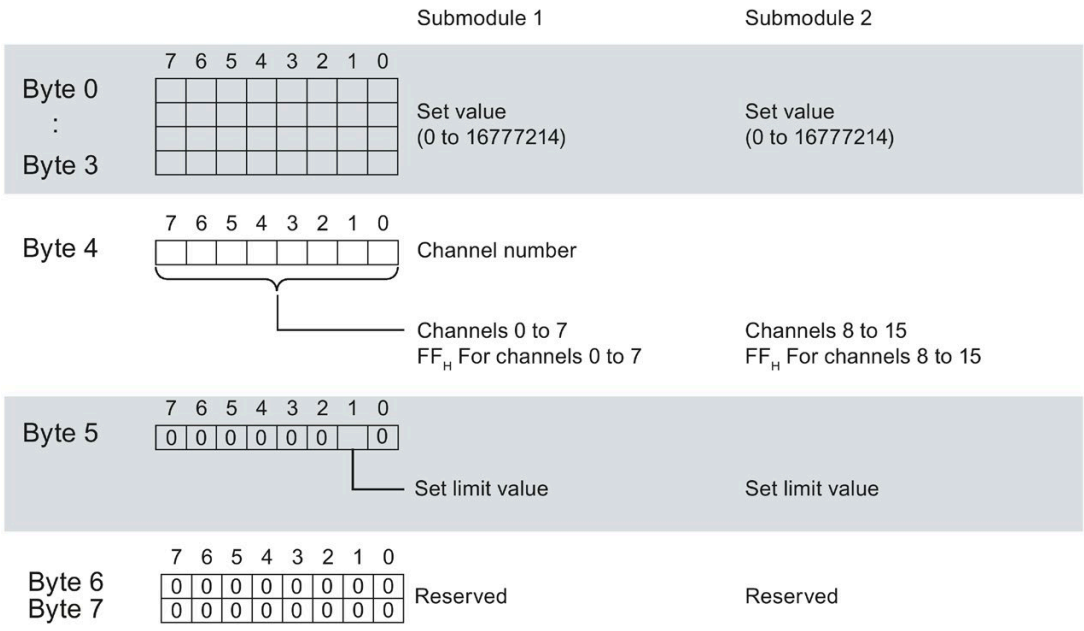

Figure B-7 Structure of data set 131: Bytes 0 to 7

SIEMENS

SIMATIC

S7-1500

Digital output module DQ 8x230VAC/2A ST Triac (6ES7522-5FF00-0AB0)

Manual

Edition 09/2016

siemens.com

SIEMENS

SIMATIC

S7-1500/ET 200MP Digital output module DQ 8x230VAC/2A ST Triac (6ES7522-5FF00-0AB0)

Manual

Preface

Documentation guide 1

Product overview 2

Wiring 3

Parameters/address space 4

Diagnostic alarms 5

Technical specifications 6

Dimensional drawing A

Parameter data records B

09/2016

A5E03485733-AD

Legal information

Warning notice system

This manual contains notices you have to observe in order to ensure your personal safety, as well as to prevent damage to property. The notices referring to your personal safety are highlighted in the manual by a safety alert symbol, notices referring only to property damage have no safety alert symbol. These notices shown below are graded according to the degree of danger.

⚠ DANGER

indicates that death or severe personal injury **will** result if proper precautions are not taken.

⚠ WARNING

indicates that death or severe personal injury **may** result if proper precautions are not taken.

⚠ CAUTION

indicates that minor personal injury can result if proper precautions are not taken.

NOTICE

indicates that property damage can result if proper precautions are not taken.

If more than one degree of danger is present, the warning notice representing the highest degree of danger will be used. A notice warning of injury to persons with a safety alert symbol may also include a warning relating to property damage.

Qualified Personnel

The product/system described in this documentation may be operated only by **personnel qualified** for the specific task in accordance with the relevant documentation, in particular its warning notices and safety instructions. Qualified personnel are those who, based on their training and experience, are capable of identifying risks and avoiding potential hazards when working with these products/systems.

Proper use of Siemens products

Note the following:

⚠ WARNING

Siemens products may only be used for the applications described in the catalog and in the relevant technical documentation. If products and components from other manufacturers are used, these must be recommended or approved by Siemens. Proper transport, storage, installation, assembly, commissioning, operation and maintenance are required to ensure that the products operate safely and without any problems. The permissible ambient conditions must be complied with. The information in the relevant documentation must be observed.

Trademarks

All names identified by ® are registered trademarks of Siemens AG. The remaining trademarks in this publication may be trademarks whose use by third parties for their own purposes could violate the rights of the owner.

Disclaimer of Liability

We have reviewed the contents of this publication to ensure consistency with the hardware and software described. Since variance cannot be precluded entirely, we cannot guarantee full consistency. However, the information in this publication is reviewed regularly and any necessary corrections are included in subsequent editions.

Siemens AG
Division Digital Factory
Postfach 48 48
90026 NÜRNBERG
GERMANY

A5E03485733-AD
℗ 11/2016 Subject to change

Copyright © Siemens AG 2013 - 2016.
All rights reserved

Preface

Purpose of the documentation

This manual supplements the system manual S7-1500/ET 200MP (https://support.industry.siemens.com/cs/ww/en/view/59191792).

Functions that relate in general to the systems are described in this system manual.

The information provided in this manual and in the system/function manuals supports you in commissioning the systems.

Changes compared to previous version

Compared to the previous version, this manual contains the following change:

Original texts of the license conditions and copyright notes for open-source software are available on the Internet as of 09/2016.

Conventions

The term "CPU" is used in this manual both for the CPUs of the S7-1500 automation system and for interface modules of the ET 200MP distributed I/O system.

Please also observe notes marked as follows:

Note

A note contains important information on the product described in the documentation, on the handling of the product or on the section of the documentation to which particular attention should be paid.

Security information

Siemens provides products and solutions with industrial security functions that support the secure operation of plants, systems, machines and networks.

In order to protect plants, systems, machines and networks against cyber threats, it is necessary to implement – and continuously maintain – a holistic, state-of-the-art industrial security concept. Siemens' products and solutions only form one element of such a concept.

Customer is responsible to prevent unauthorized access to its plants, systems, machines and networks. Systems, machines and components should only be connected to the enterprise network or the internet if and to the extent necessary and with appropriate security measures (e.g. use of firewalls and network segmentation) in place.

Additionally, Siemens' guidance on appropriate security measures should be taken into account. For more information about industrial security, please visit (http://www.siemens.com/industrialsecurity).

Siemens' products and solutions undergo continuous development to make them more secure. Siemens strongly recommends to apply product updates as soon as available and to always use the latest product versions. Use of product versions that are no longer supported, and failure to apply latest updates may increase customer's exposure to cyber threats.

To stay informed about product updates, subscribe to the Siemens Industrial Security RSS Feed under (http://www.siemens.com/industrialsecurity).

Open Source Software

Open-source software is used in the firmware of the I/O modules. Open Source Software is provided free of charge. We are liable for the product described, including the open-source software contained in it, pursuant to the conditions applicable to the product. Siemens accepts no liability for the use of the open source software over and above the intended program sequence, or for any faults caused by modifications to the software.

For legal reasons, we are obliged to publish the original text of the license conditions and copyright notices. Please read the information relating to this on the Internet (https://support.industry.siemens.com/cs/ww/en/view/109741045).

Table of contents

Preface 4
1 Documentation guide 7
2 Product overview 11
2.1 Properties 11
3 Wiring 13
4 Parameters/address space 14
4.1 Parameters 14
4.2 Address space 15
5 Diagnostic alarms 18
5.1 Status and error displays 18
6 Technical specifications 20
A Dimensional drawing 24
B Parameter data records 26
B.1 Parameter assignment and structure of the parameter data records 26

Documentation guide

1

The documentation for the SIMATIC S7-1500 automation system, the CPU 1516pro-2 PN based on SIMATIC S7-1500 and the SIMATIC ET 200MP distributed I/O system is arranged into three areas.
This arrangement enables you to access the specific content you require.

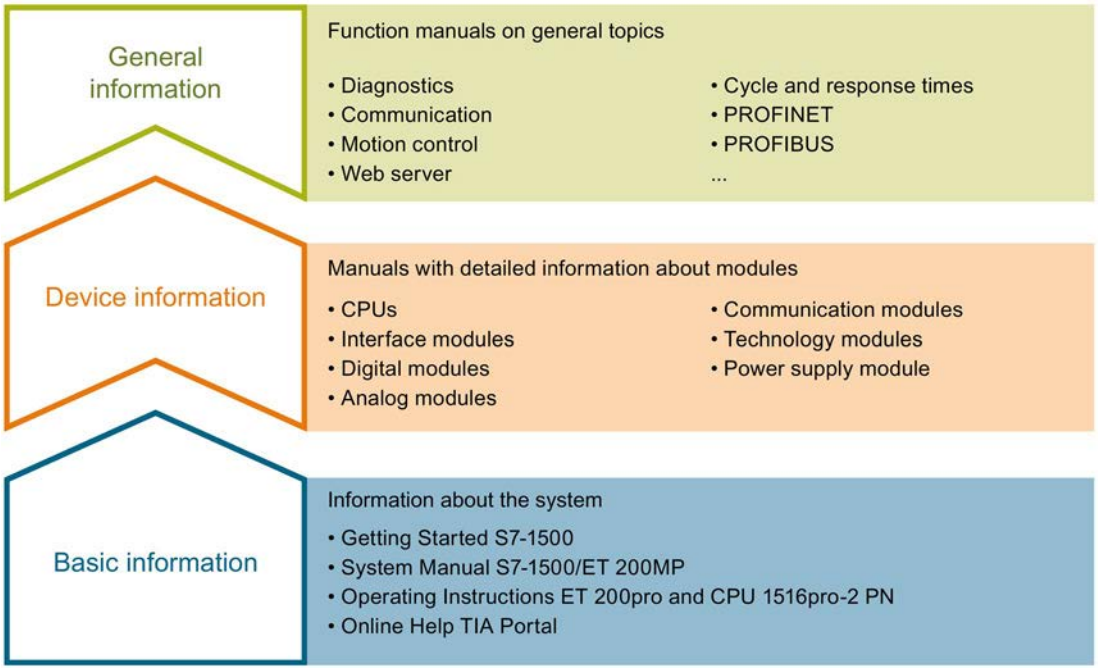

Basic information

The System Manual and Getting Started describe in detail the configuration, installation, wiring and commissioning of the SIMATIC S7-1500 and ET 200MP systems. For CPU 1516pro-2 PN you use the corresponding operating instructions. The STEP 7 online help supports you in the configuration and programming.

Device information

Product manuals contain a compact description of the module-specific information, such as properties, wiring diagrams, characteristics and technical specifications.

General information

The function manuals contain detailed descriptions on general topics regarding the SIMATIC S7-1500 and ET 200MP systems, e.g. diagnostics, communication, motion control, Web server, OPC UA.

You can download the documentation free of charge from the Internet (http://w3.siemens.com/mcms/industrial-automation-systems-simatic/en/manual-overview/Pages/Default.aspx).

Changes and supplements to the manuals are documented in a Product Information.

You can download the product information free of charge from the Internet (https://support.industry.siemens.com/cs/us/en/view/68052815).

Manual Collection S7-1500/ET 200MP

The Manual Collection contains the complete documentation on the SIMATIC S7-1500 automation system and the ET 200MP distributed I/O system gathered together in one file.

You can find the Manual Collection on the Internet (https://support.industry.siemens.com/cs/ww/en/view/86140384).

SIMATIC S7-1500 comparison list for programming languages

The comparison list contains an overview of which instructions and functions you can use for which controller families.

You can find the comparison list on the Internet (https://support.industry.siemens.com/cs/ww/en/view/86630375).

"mySupport"

With "mySupport", your personal workspace, you make the best out of your Industry Online Support.

In "mySupport", you can save filters, favorites and tags, request CAx data and compile your personal library in the Documentation area. In addition, your data is already filled out in support requests and you can get an overview of your current requests at any time.

You must register once to use the full functionality of "mySupport".

You can find "mySupport" on the Internet (https://support.industry.siemens.com/My/ww/en).

"mySupport" - Documentation

In the Documentation area in "mySupport" you can combine entire manuals or only parts of these to your own manual.
You can export the manual as PDF file or in a format that can be edited later.

You can find "mySupport" - Documentation on the Internet (http://support.industry.siemens.com/My/ww/en/documentation).

"mySupport" - CAx data

In the CAx data area in "mySupport", you can access the current product data for your CAx or CAe system.

You configure your own download package with a few clicks.

In doing so you can select:

- Product images, 2D dimension drawings, 3D models, internal circuit diagrams, EPLAN macro files
- Manuals, characteristics, operating manuals, certificates
- Product master data

You can find "mySupport" - CAx data on the Internet (http://support.industry.siemens.com/my/ww/en/CAxOnline).

Application examples

The application examples support you with various tools and examples for solving your automation tasks. Solutions are shown in interplay with multiple components in the system - separated from the focus on individual products.

You will find the application examples on the Internet (https://support.industry.siemens.com/sc/ww/en/sc/2054).

TIA Selection Tool

With the TIA Selection Tool, you can select, configure and order devices for Totally Integrated Automation (TIA).
This tool is the successor of the SIMATIC Selection Tool and combines the known configurators for automation technology into one tool.
With the TIA Selection Tool, you can generate a complete order list from your product selection or product configuration.

You can find the TIA Selection Tool on the Internet (http://w3.siemens.com/mcms/topics/en/simatic/tia-selection-tool).

SIMATIC Automation Tool

You can use the SIMATIC Automation Tool to run commissioning and maintenance activities simultaneously on various SIMATIC S7 stations as a bulk operation independently of the TIA Portal.

The SIMATIC Automation Tool provides a multitude of functions:

- Scanning of a PROFINET/Ethernet network and identification of all connected CPUs
- Address assignment (IP, subnet, gateway) and station name (PROFINET device) to a CPU
- Transfer of the date and the programming device/PC time converted to UTC time to the module
- Program download to CPU
- Operating mode switchover RUN/STOP
- Localization of the CPU by means of LED flashing
- Reading out CPU error information
- Reading the CPU diagnostic buffer
- Reset to factory settings
- Updating the firmware of the CPU and connected modules

You can find the SIMATIC Automation Tool on the Internet (https://support.industry.siemens.com/cs/ww/en/view/98161300).

PRONETA

With SIEMENS PRONETA (PROFINET network analysis), you analyze the PROFINET network during commissioning. PRONETA features two core functions:

- The topology overview independently scans PROFINET and all connected components.
- The IO check is a fast test of the wiring and the module configuration of a system.

You can find SIEMENS PRONETA on the Internet (https://support.industry.siemens.com/cs/ww/en/view/67460624).

Product overview 2

2.1 Properties

Article number

6ES7522-5FF00-0AB0

View of the module

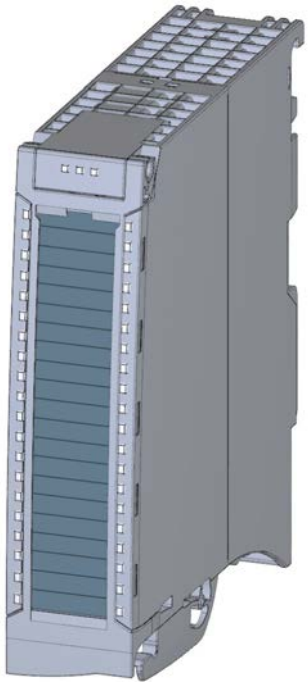

Figure 2-1 View of the DQ 8x230VAC/2A ST module

Properties

The module has the following technical properties:

- 8 digital outputs (Triac)
- Rated output voltage 120 V/230 V AC
- Rated output current 2 A
- Configurable substitute values (per channel)
- Suitable for solenoid valves, DC contactors, indicator lights and smaller single phase drives

The module supports the following functions:

Table 2- 1 Version dependencies of the module functions

Function	Firmware version of the module	Configuration software	
		STEP 7 (TIA Portal)	GSD file in STEP 7 (TIA Portal) V12 or higher, or STEP 7 V5.5 SP3 or higher
Firmware update	V1.0.0 or higher	V12 or higher	--- / X
Identification data I&M0 to I&M3	V1.0.0 or higher	V12 or higher	X
Parameter assignment in RUN	V1.0.0 or higher	V12 or higher	X
Module-internal Shared Output (MSO)	V2.0.0 or higher	V13 Update 3 or higher (PROFINET IO only)	X (PROFINET IO only)
Configurable after interface module IM 155-5 DP ST	V2.0.0 or higher	V13 or higher	X

You can configure the module with STEP 7 (TIA Portal) and with a GSD file.

Accessories

The following components are supplied with the module and can also be ordered separately as spare parts:

- Labeling strips
- U connector
- Universal front door

Other components

The following component can be ordered separately:

Front connectors, including potential jumpers and cable ties

You can find additional information on accessories in the system manual S7-1500/ET 200MP (https://support.industry.siemens.com/cs/ww/en/view/59191792).

Wiring

3

This section contains the block diagram of the module and outlines various wiring options.

You can find information on wiring the front connector, creating a cable shield, etc. in the Wiring section of the system manual S7-1500/ET 200MP (https://support.industry.siemens.com/cs/ww/en/view/59191792).

Note

Do not insert the potential jumpers included with the front connector!

Wiring and block diagram

The example in the following figure shows the terminal assignment and the assignment of the channels.

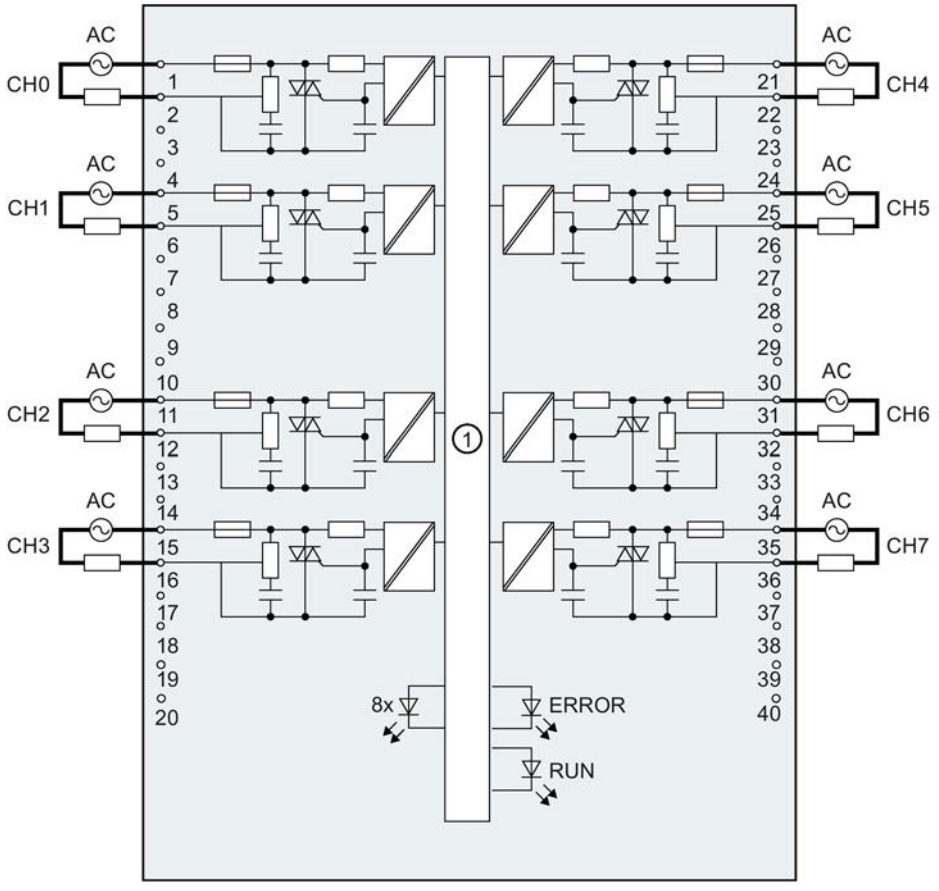

①	Backplane bus interface	CHx	Channel or channel status LED (green/red)
		RUN	Status display LED (green)
		ERROR	Error display LED (red)

Figure 3-1 Block diagram and terminal assignment

Parameters/address space 4

4.1 Parameters

DQ 8x230VAC/2A ST parameters

When you assign the module parameters in STEP 7, you use various parameters to specify the module properties. The following table lists the configurable parameters. The effective range of the configurable parameters depends on the type of configuration. The following configurations are possible:

- Central operation with a S7-1500 CPU
- Distributed operation on PROFINET IO in an ET 200MP system
- Distributed operation on PROFIBUS DP in an ET 200MP system

For parameter assignment in the user program, the parameters are transferred to the module using the WRREC instruction (parameter reassignment in RUN) and data records; see chapter Parameter assignment and structure of the parameter data records (Page 26).

Table 4- 1 Configurable parameters and their defaults

Parameters	Range of values	Default setting	Parameter assignment in RUN	Scope with configuration software, e.g., STEP 7 (TIA Portal)	
				GSD file PROFINET IO	GSD file PROFIBUS DP
Diagnostics					
Reaction to CPU STOP	• Turn off • Keep last value • Output substitute value 1	Turn off	Yes	Channel	Channel

4.2 Address space

The module can be configured differently in STEP 7; see following table. Depending on the configuration, additional/different addresses are assigned in the process image output/input.

Configuration options of DQ 8x230VAC/2A ST

You can configure the module with STEP 7 (TIA Portal) or with a GSD file.

When you configure the module by means of the GSD file, the configurations are available under different short designations/module names.

The following configurations are possible:

Table 4- 2 Configuration options

Configuration	Short designation/module name in the GSD file	Configuration software, e.g., STEP 7 (TIA Portal)	
		Integrated in hardware catalog STEP 7 (TIA Portal)	GSD file in STEP 7 (TIA Portal) V12 or higher or STEP 7 V5.5 SP3 or higher
1 x 8-channel without value status	DQ 8x230VAC/2A ST	X	X
1 x 8-channel with value status for module-internal Shared Output with up to 4 submodules	DQ 8x230VAC/2A ST MSO	V13 Update 3 or higher (PROFINET IO only)	X (PROFINET IO only)

Value status (Quality Information, QI)

The value status is always activated for the DQ 8x230VAC/2A ST MSO module.

An additional bit is assigned to each channel for the value status. The bit for the value status indicates if the output value specified by the user program is actually pending at the module terminal (0 = value is incorrect).

Address space for configuration as 8-channel DQ 8x230VAC/2A ST

The following figure shows the assignment of the address space for the configuration as a 8-channel module with value status. You can freely assign the start address for the module. The addresses of the channels are derived from the start address.

The letters "a to d" are printed on the module; "QB a", for example, stands for module start address output byte a.

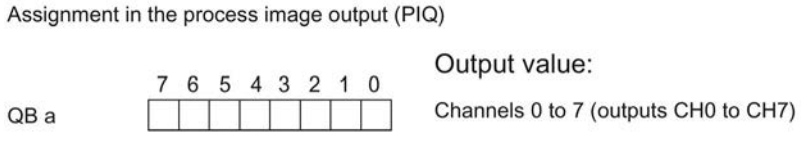

Figure 4-1 Address space for configuration as 8-channel DQ 8x230VAC/2A ST

Address space for configuration as 1 x 8-channel DQ 8x230VAC/2A ST MSO

For the configuration as a 1 x 8-channel module (module-internal Shared Output, MSO), channels 0 to 7 of the module are copied to multiple submodules. Channels 0 to 7 are then available with identical values in various submodules. These submodules can be assigned to up to four IO controllers when the module is used in a shared device:

- The IO controller to which submodule 1 is assigned has write access to outputs 0 to 7.
- The IO controllers to which submodule 2, 3, or 4 is assigned have read access to outputs 0 to 7.

The number of usable IO controllers depends on the interface module used. Please observe the information in the manual for the particular interface module.

Value status (Quality Information, QI)

The meaning of the value status depends on the submodule involved.

For the 1st submodule (=basic submodule), the value status 0 indicates that the value is incorrect or that the IO controller of the basic submodule is in STOP state.

For the 2nd to 4th submodule (=MSO submodule), the value status 0 indicates that the value is incorrect or one of the following errors has occurred:

- The basic submodule is not yet configured (not ready).
- The connection between the IO controller and the basic submodule has been interrupted.
- The IO controller of the basic submodule is in STOP or POWER OFF state.

The following figure shows the assignment of the address space for submodules 1, 2, 3, and 4 and the value status.

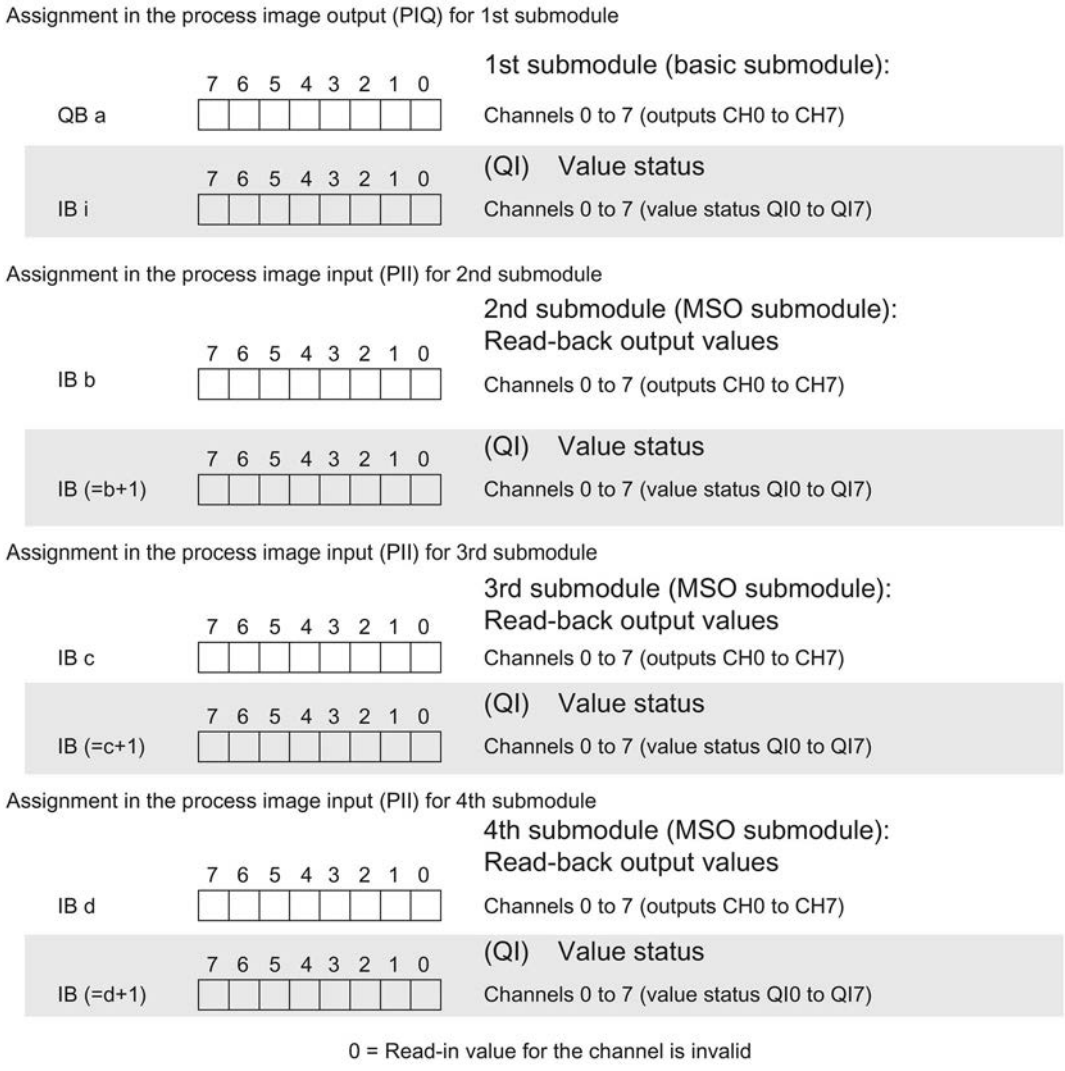

Figure 4-2 Address space for configuration as 1 x 8-channel DQ 8x230VAC/2A ST S MSO with value status

Reference

You can find information on the Shared Input/Output (MSI/MSO) function in the section Module-Internal Shared Input/Output (MSI/MSO) of the PROFINET with STEP 7 V13 (https://support.industry.siemens.com/cs/ww/en/view/49948856) function manual.

Diagnostic alarms

5

5.1 Status and error displays

LED displays

The following figure shows the LED displays (status and error displays) of DQ 8x230VAC/2A ST.

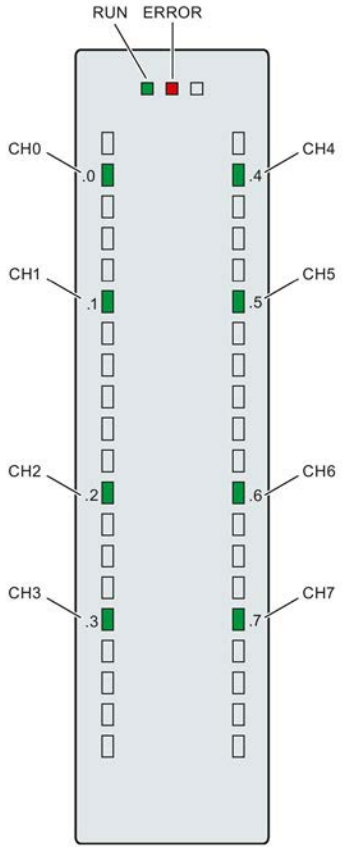

Figure 5-1 LED displays of the module DQ 8x230VAC/2A ST

Meaning of the LED displays

The following table explains the meaning of the status and error displays.

RUN and ERROR LED

Table 5- 1 Status and error displays RUN and ERROR

LED		Meaning	Remedy
RUN	ERROR		
□ Off	□ Off	Voltage missing or too low at backplane bus	• Switch on the CPU and/or the system power supply modules. • Verify that the U connectors are inserted. • Check to see if too many modules are inserted.
☼ Flashes	□ Off	The module starts and flashes until the valid parameter assignment is set.	---
■ On	□ Off	Module is configured	
☼ Flashes	☼ Flashes	Hardware defective	Replace the module.

CHx LED

Table 5- 2 CHx status display

LED CHx	Meaning	Remedy
□ Off	0 = Status of the output signal	---
■ On	1 = Status of the output signal	---

Technical specifications 6

Technical specifications of the DQ 8x230VAC/2A ST

	6ES7522-5FF00-0AB0
General information	
Product type designation	DQ 8x230VAC/2A ST (Triac)
Hardware functional status	FS01
Firmware version	V2.0.0
• FW update possible	Yes
Product function	
I&M data	Yes; I&M0 to I&M3
Engineering with	
STEP 7 TIA Portal can be configured/integrated as of version	V12 / V12
STEP 7 can be configured/integrated as of version	V5.5 SP3 / -
PROFIBUS as of GSD version/GSD revision	V1.0 / V5.1
PROFINET as of GSD version/GSD revision	V2.3 / -
Operating mode	
DQ	Yes
DQ with energy-saving function	No
PWM	No
Oversampling	No
MSO	Yes
Output voltage	
Rated value (AC)	120/230 V AC, 50 / 60 Hz
Power	
Power consumption from the backplane bus	0.9 W
Power loss	
Power loss, typ.	10.8 W
Digital outputs	
Number of outputs	8
Sourcing output	Yes
Short-circuit protection	No
Switching capacity of outputs	
With resistive load, max.	2 A
With lamp load, max.	50 W
Output voltage	
For signal "1", min.	L1 (-1.5 V) at maximum output current; L1 (-8.5 V) at minimum output current

	6ES7522-5FF00-0AB0
Output current	
For signal "1" rated value	2 A
For signal "1" permitted range, min.	10 mA
For signal "1" permitted range, max.	15 A; max. 1 AC cycle
For signal "0" residual current, max.	2 mA
Output delay with resistive load	
"0" to "1", max.	1 AC cycle
"1" to "0", max.	1 AC cycle
Parallel connection of two outputs	
For logic operations	No
For increased performance	No
For redundant control of a load	Yes
Switching frequency	
With resistive load, max.	10 Hz
With inductive load, max.	0.5 Hz
With lamp load, max.	1 Hz
Total current of outputs	
Current per channel, max.	2 A; see additional description in the manual
Current per group, max.	2 A; see additional description in the manual
Current per module, max.	10 A; see additional description in the manual
Triac outputs	
Size of motor starter according to NEMA, max.	5
Cable length	
shielded, max.	1000 m
unshielded, max.	600 m
Isochronous mode	
Isochronous mode (application synchronized up to terminal)	No
Interrupts/diagnostics/status information	
Diagnostics function	No
Substitute values can be applied	Yes
Interrupts	
Diagnostic interrupt	No
Diagnostics alarms	
Monitoring of supply voltage	No
Wire break	No
Short-circuit	No
Diagnostics indicator LED	
RUN LED	Yes; green LED
ERROR LED	Yes; red LED
Monitoring of supply voltage (PWR LED)	No
Channel status display	Yes; green LED
For channel diagnostics	No
For module diagnostics	Yes; red LED

	6ES7522-5FF00-0AB0
Electrical isolation	
Electrical isolation of channels	
Between the channels	Yes
Between the channels, in groups of	1
Between the channels and backplane bus	Yes
Between the channels and load voltage L1	Yes
Permitted potential difference	
Between different circuits	250 V AC between the channels and the back-plane bus; 500 V AC between the channels
Insulation	
Insulation tested with	3100 V DC
Ambient conditions	
Ambient temperature during operation	
Horizontal mounting position, min.	0 °C
Horizontal mounting position, max.	60 °C
Vertical mounting position, min.	0 °C
Vertical mounting position, max.	40 °C
Distributed operation	
Prioritized startup	Yes
Dimensions	
Width	35 mm
Height	147 mm
Depth	129 mm
Weights	
Weight, approx.	290 g

Power reduction (derating) to aggregate current of outputs (per module)

The following graphs show the loading capacity of the outputs in relation to the mounting position of the S71500 automation system/ET 200MP distributed I/O system and the ambient temperature.

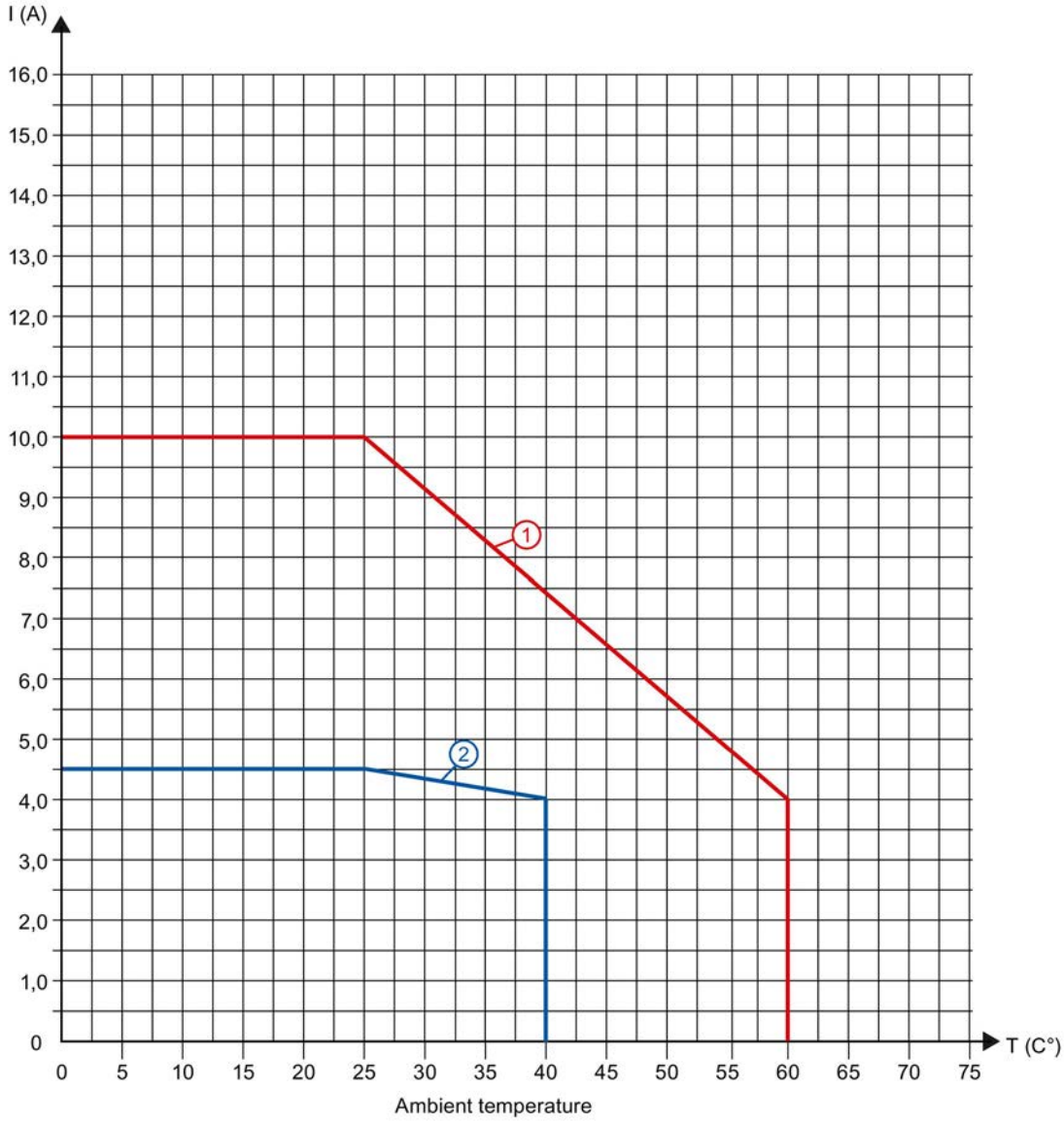

① Horizontal mounting of the system

② Vertical mounting of the system

Figure 6-1 Details on aggregate current of outputs (per module)

Dimensional drawing

A

The dimensional drawing of the module on the mounting rail, as well as a dimensional drawing with open front cover, are provided in the appendix. Always observe the specified dimensions for installations in cabinets, control rooms, etc.

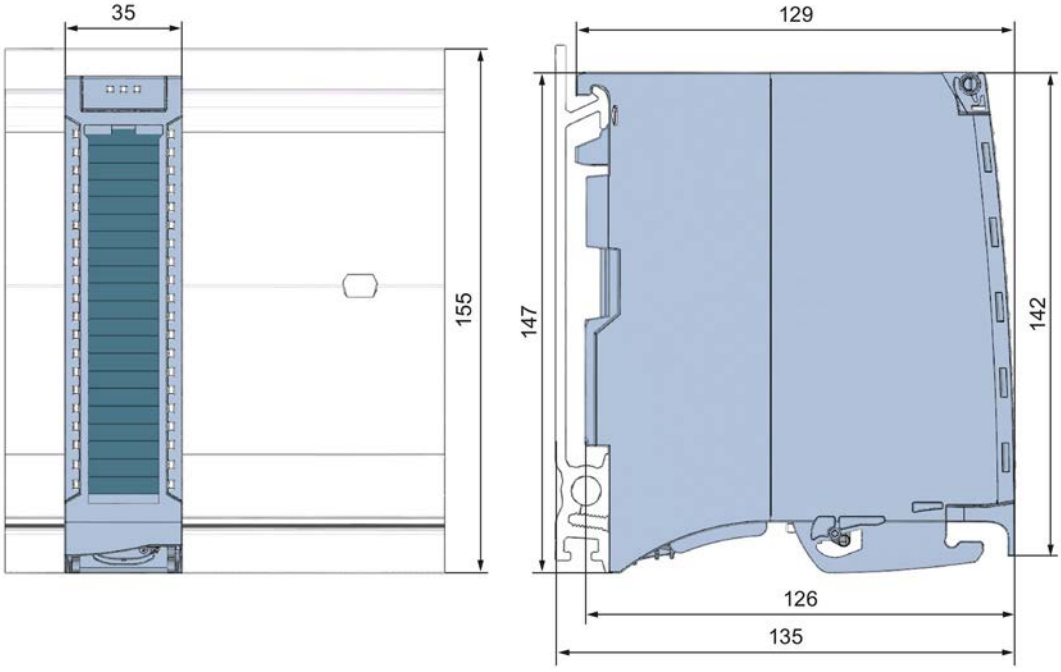

Figure A-1 Dimensional drawing of the DQ 8x230VAC/2A ST module

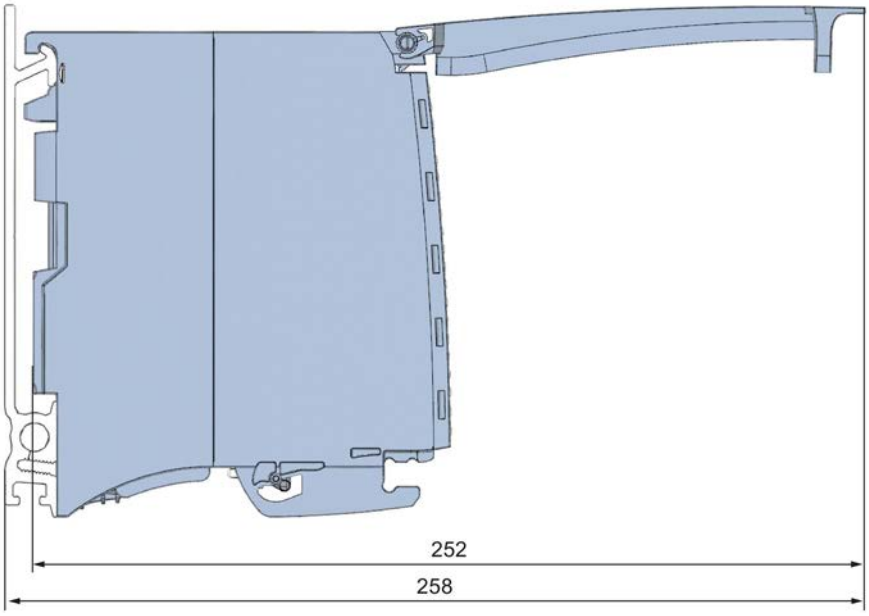

Figure A-2 Dimensional drawing of the DQ 8x230VAC/2A ST module, side view with open front cover

Parameter data records

B

B.1 Parameter assignment and structure of the parameter data records

The data records of the module have an identical structure, regardless of whether you configure the module with PROFIBUS DP or PROFINET IO.

Dependencies for configuration with GSD file

When a GSD file is used to configure a module, dependencies can arise when "assigning the parameters".

There are no dependencies for this module. You can assign the individual parameters in any combination.

Parameter assignment in the user program

You have the option to reconfigure the module in RUN (e.g. the response of selected channels to the CPU-STOP state can be changed in RUN without having an effect on the other channels).

Parameter assignment in RUN

The WRREC instruction is used to transfer the parameters to the module using data records 64 to 71. The parameters set in STEP 7 do not change in the CPU, which means the parameters set in STEP 7 are still valid after a restart.

The parameters are only checked for plausibility by the module after the transfer.

Output parameter STATUS

The module ignores errors that occurred during the transfer of parameters with the WRREC instruction and continues operation with the previous parameter assignment. However, a corresponding error code is written to the STATUS output parameter.

The description of the WRREC instruction and the error codes is available in the STEP 7 online help.

Operation of the module behind a PROFIBUS DP interface module

If the module is operated behind a PROFIBUS DP interface module, the parameter data records 0 and 1 are not read back. You get the diagnostics data records 0 and 1 for the read back parameter data records 0 and 1. You can find more information in the Interrupts section of the PROFIBUS DP interface module device manual on the Internet (http://support.automation.siemens.com/WW/view/en/78324181).

Assignment of data record and channel

The channel parameters of the module are included in data records 64 to 71 and are assigned as follows:

- Data record 64 for channel 0
- Data record 65 for channel 1
- Data record 66 for channel 2
- Data record 67 for channel 3
- Data record 68 for channel 4
- Data record 69 for channel 5
- Data record 70 for channel 6
- Data record 71 for channel 7

Data record structure

The example in the following figure shows the structure of data record 64 for channel 0. The structure of channels 1 to 7 is identical. The values in byte 0 and byte 1 are fixed and may not be changed.

Enable a parameter by setting the corresponding bit to "1".

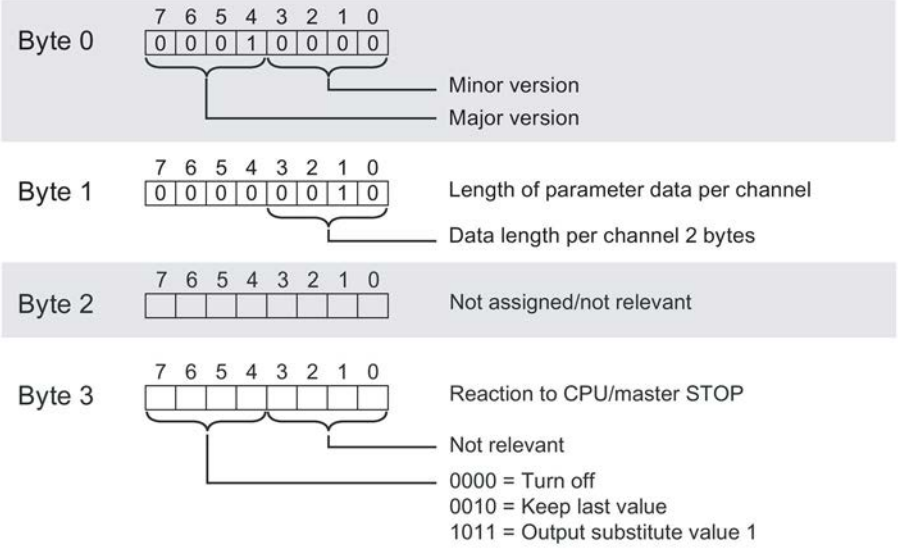

Figure B-1 Structure of data record 64: Bytes 0 to 3

SIEMENS

Manual

SIMATIC

S7-1500 / ET 200MP

DQ 8x24VDC/2A HF
Digital Output Module (6ES7522-1BF00-0AB0)

Edition 06/2018

support.industry.siemens.com

SIEMENS

SIMATIC

S7-1500/ET 200MP DQ 8x24VDC/2A HF Digital Output Module (6ES7522-1BF00-0AB0)

Manual

Preface

Documentation guide 1

Product overview 2

Wiring 3

Parameters/address space 4

Interrupts/diagnostics alarms 5

Technical specifications 6

Dimensional drawing A

Parameter data records B

06/2018

A5E03485650-AF

Legal information

Warning notice system

This manual contains notices you have to observe in order to ensure your personal safety, as well as to prevent damage to property. The notices referring to your personal safety are highlighted in the manual by a safety alert symbol, notices referring only to property damage have no safety alert symbol. These notices shown below are graded according to the degree of danger.

⚠ DANGER

indicates that death or severe personal injury **will** result if proper precautions are not taken.

⚠ WARNING

indicates that death or severe personal injury **may** result if proper precautions are not taken.

⚠ CAUTION

indicates that minor personal injury can result if proper precautions are not taken.

NOTICE

indicates that property damage can result if proper precautions are not taken.

If more than one degree of danger is present, the warning notice representing the highest degree of danger will be used. A notice warning of injury to persons with a safety alert symbol may also include a warning relating to property damage.

Qualified Personnel

The product/system described in this documentation may be operated only by **personnel qualified** for the specific task in accordance with the relevant documentation, in particular its warning notices and safety instructions. Qualified personnel are those who, based on their training and experience, are capable of identifying risks and avoiding potential hazards when working with these products/systems.

Proper use of Siemens products

Note the following:

⚠ WARNING

Siemens products may only be used for the applications described in the catalog and in the relevant technical documentation. If products and components from other manufacturers are used, these must be recommended or approved by Siemens. Proper transport, storage, installation, assembly, commissioning, operation and maintenance are required to ensure that the products operate safely and without any problems. The permissible ambient conditions must be complied with. The information in the relevant documentation must be observed.

Trademarks

All names identified by ® are registered trademarks of Siemens AG. The remaining trademarks in this publication may be trademarks whose use by third parties for their own purposes could violate the rights of the owner.

Disclaimer of Liability

We have reviewed the contents of this publication to ensure consistency with the hardware and software described. Since variance cannot be precluded entirely, we cannot guarantee full consistency. However, the information in this publication is reviewed regularly and any necessary corrections are included in subsequent editions.

Siemens AG
Division Digital Factory
Postfach 48 48
90026 NÜRNBERG
GERMANY

A5E03485650-AF
℗ 08/2018 Subject to change

Copyright © Siemens AG 2013 - 2018.
All rights reserved

Preface

Purpose of the documentation

This manual supplements the system manual S7-1500/ET 200MP (https://support.industry.siemens.com/cs/ww/en/view/59191792).

Functions that relate in general to the systems are described in this system manual.

The information provided in this manual and in the system/function manuals supports you in commissioning the systems.

Changes compared to previous version

Compared to the previous version, this manual contains the following change:

- New licensing conditions and copyright information of the Open Source Software
- The module features a switching cycle counter as of firmware version V2.2.0.

Conventions

The term "CPU" is used in this manual both for the CPUs of the S7-1500 automation system, as well as for interface modules of the ET 200MP distributed I/O system.

Please also observe notes marked as follows:

Note

A note contains important information on the product described in the documentation, on the handling of the product or on the section of the documentation to which particular attention should be paid.

Recycling and disposal

For environmentally friendly recycling and disposal of your old equipment, contact a certified electronic waste disposal company and dispose of the equipment according to the applicable regulations in your country.

Security information

Siemens provides products and solutions with industrial security functions that support the secure operation of plants, systems, machines and networks.

In order to protect plants, systems, machines and networks against cyber threats, it is necessary to implement – and continuously maintain – a holistic, state-of-the-art industrial security concept. Siemens' products and solutions constitute one element of such a concept.

Customers are responsible for preventing unauthorized access to their plants, systems, machines and networks. Such systems, machines and components should only be connected to an enterprise network or the internet if and to the extent such a connection is necessary and only when appropriate security measures (e.g. firewalls and/or network segmentation) are in place.

For additional information on industrial security measures that may be implemented, please visit (https://www.siemens.com/industrialsecurity).

Siemens' products and solutions undergo continuous development to make them more secure. Siemens strongly recommends that product updates are applied as soon as they are available and that the latest product versions are used. Use of product versions that are no longer supported, and failure to apply the latest updates may increase customers' exposure to cyber threats.

To stay informed about product updates, subscribe to the Siemens Industrial Security RSS Feed under (https://www.siemens.com/industrialsecurity).

Open Source Software

Open-source software is used in the firmware of the I/O modules. Open Source Software is provided free of charge. We are liable for the product described, including the open-source software contained in it, pursuant to the conditions applicable to the product. Siemens accepts no liability for the use of the open source software over and above the intended program sequence, or for any faults caused by modifications to the software.

For legal reasons, we are obliged to publish the original text of the license conditions and copyright notices. Please read the information relating to this on the Internet (https://support.industry.siemens.com/cs/ww/en/view/109757558).

Table of contents

Preface 3

1 Documentation guide 6

2 Product overview 10

2.1 Properties 10

2.2 Functions 13
2.2.1 Pulse-width modulation (PWM) 13
2.2.2 Switching cycle counter 17

3 Wiring 19

4 Parameters/address space 21

4.1 Parameters 21
4.1.1 DQ operating mode parameter 22
4.1.2 Explanation of the parameters of DQ mode 23
4.1.3 Pulse width modulation operating mode parameter 24
4.1.4 Explanation of the parameters of pulse width modulation mode 25

4.2 Address space 26
4.2.1 Address space operating mode DQ 27
4.2.2 Address space operating mode pulse-width modulation 29

5 Interrupts/diagnostics alarms 30

5.1 Status and error displays 30

5.2 Interrupts 32

5.3 Diagnostics alarms 33

6 Technical specifications 34

A Dimensional drawing 41

B Parameter data records 43

B.1 Parameter assignment 43

B.2 Structure of parameter data sets DS 64 - 71 45

B.3 Structure of data set DS 129 46

B.4 Structure of data set DS 130 47

B.5 Structure of data set DS 131 48

Documentation guide 1

The documentation for the SIMATIC S7-1500 automation system and the SIMATIC ET 200MP distributed I/O system is arranged into three areas.
This arrangement enables you to access the specific content you require.

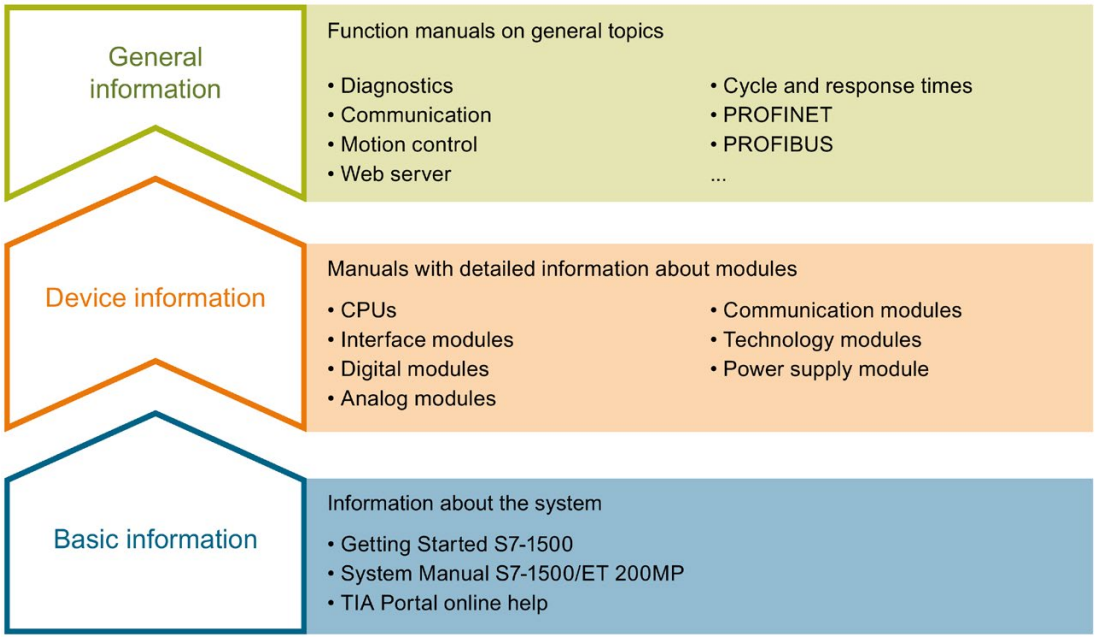

Basic information

The System Manual and Getting Started describe in detail the configuration, installation, wiring and commissioning of the SIMATIC S7-1500 and ET 200MP systems. The STEP 7 online help supports you in the configuration and programming.

Device information

Product manuals contain a compact description of the module-specific information, such as properties, wiring diagrams, characteristics and technical specifications.

General information

The function manuals contain detailed descriptions on general topics regarding the SIMATIC S7-1500 and ET 200MP systems, e.g. diagnostics, communication, motion control, Web server, OPC UA.

You can download the documentation free of charge from the Internet (https://support.industry.siemens.com/cs/ww/en/view/109742691).

Changes and supplements to the manuals are documented in a Product Information.

You can download the product information free of charge from the Internet (https://support.industry.siemens.com/cs/us/en/view/68052815).

Manual Collection S7-1500/ET 200MP

The Manual Collection contains the complete documentation on the SIMATIC S7-1500 automation system and the ET 200MP distributed I/O system gathered together in one file.

You can find the Manual Collection on the Internet (https://support.industry.siemens.com/cs/ww/en/view/86140384).

SIMATIC S7-1500 comparison list for programming languages

The comparison list contains an overview of which instructions and functions you can use for which controller families.

You can find the comparison list on the Internet (https://support.industry.siemens.com/cs/ww/en/view/86630375).

"mySupport"

With "mySupport", your personal workspace, you make the best out of your Industry Online Support.

In "mySupport", you can save filters, favorites and tags, request CAx data and compile your personal library in the Documentation area. In addition, your data is already filled out in support requests and you can get an overview of your current requests at any time.

You must register once to use the full functionality of "mySupport".

You can find "mySupport" on the Internet (https://support.industry.siemens.com/My/ww/en).

"mySupport" - Documentation

In the Documentation area in "mySupport" you can combine entire manuals or only parts of these to your own manual.
You can export the manual as PDF file or in a format that can be edited later.

You can find "mySupport" - Documentation on the Internet (http://support.industry.siemens.com/My/ww/en/documentation).

"mySupport" - CAx data

In the CAx data area in "mySupport", you can access the current product data for your CAx or CAe system.

You configure your own download package with a few clicks.

In doing so you can select:

- Product images, 2D dimension drawings, 3D models, internal circuit diagrams, EPLAN macro files
- Manuals, characteristics, operating manuals, certificates
- Product master data

You can find "mySupport" - CAx data on the Internet (http://support.industry.siemens.com/my/ww/en/CAxOnline).

Application examples

The application examples support you with various tools and examples for solving your automation tasks. Solutions are shown in interplay with multiple components in the system - separated from the focus on individual products.

You will find the application examples on the Internet (https://support.industry.siemens.com/sc/ww/en/sc/2054).

TIA Selection Tool

With the TIA Selection Tool, you can select, configure and order devices for Totally Integrated Automation (TIA).
This tool is the successor of the SIMATIC Selection Tool and combines the known configurators for automation technology into one tool.
With the TIA Selection Tool, you can generate a complete order list from your product selection or product configuration.

You can find the TIA Selection Tool on the Internet (http://w3.siemens.com/mcms/topics/en/simatic/tia-selection-tool).

SIMATIC Automation Tool

You can use the SIMATIC Automation Tool to perform commissioning and maintenance activities simultaneously on various SIMATIC S7 stations as a bulk operation independent of the TIA Portal.

General function overview:

- Network browsing and creation of a table showing the accessible devices in the network.
- Flashing of device LEDs or HMI display to locate a device
- Downloading of addresses (IP, subnet, gateway) to a device
- Downloading the PROFINET name (station name) to a device
- Placing a CPU in RUN or STOP mode
- Setting the time in a CPU to the current time of your PG/PC
- Downloading a new program to a CPU or an HMI device
- Downloading from CPU, downloading to CPU or deleting recipe data from a CPU
- Downloading from CPU or deleting data log data from a CPU
- Backup/restore of data from/to a backup file for CPUs and HMI devices
- Downloading service data from a CPU
- Reading the diagnostics buffer of a CPU
- Performing a CPU memory reset
- Resetting devices to factory settings
- Downloading a firmware update to a device

You can find the SIMATIC Automation Tool on the Internet (https://support.industry.siemens.com/cs/ww/en/view/98161300).

PRONETA

With SIEMENS PRONETA (PROFINET network analysis), you analyze the PROFINET network during commissioning. PRONETA features two core functions:

- The topology overview independently scans PROFINET network and all connected components.
- The IO check is a fast test of the wiring and the module configuration of a system.

You can find SIEMENS PRONETA on the Internet (https://support.industry.siemens.com/cs/ww/en/view/67460624).

SINETPLAN

SINETPLAN, the Siemens Network Planner, supports you in planning automation systems and networks based on PROFINET. The tool facilitates professional and predictive dimensioning of your PROFINET installation as early as in the planning stage. In addition, SINETPLAN supports you during network optimization and helps you to exploit network resources optimally and to plan reserves. This helps to prevent problems in commissioning or failures during productive operation even in advance of a planned operation. This increases the availability of the production plant and helps improve operational safety.

The advantages at a glance

- Network optimization thanks to port-specific calculation of the network load
- Increased production availability thanks to online scan and verification of existing systems
- Transparency before commissioning through importing and simulation of existing STEP 7 projects
- Efficiency through securing existing investments in the long term and optimal exploitation of resources

You can find SINETPLAN on the Internet (https://www.siemens.com/sinetplan).

Product overview 2

2.1 Properties

Article number

6ES7522-1BF00-0AB0

View of the module

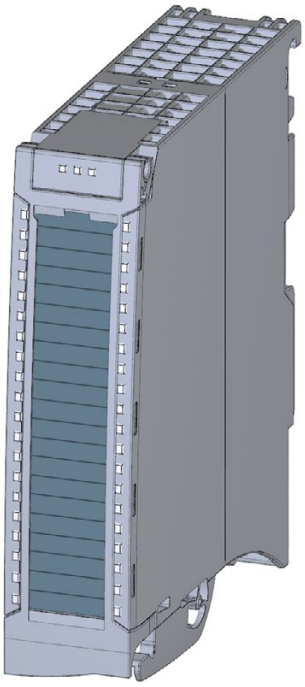

Figure 2-1 View of the DQ 8x24VDC/2A HF module

Properties

The module has the following technical properties:

- 8 digital outputs, electrically isolated in groups of 4
  - of which optional channels 0 and 4 are available for pulse width modulation (PWM).
- Rated output voltage 24 V DC
- Rated output current 2 A
- Configurable substitute values (per channel)
- Configurable diagnostics (per channel)
- Suitable for solenoid valves, contactors, DC contactors and indicator lights
- Switching cycle counter for connected actuators, e.g. solenoid valves

The module supports the following functions:

Table 2- 1 Version dependencies of the module functions

Function	Firmware version of the module	Configuration software	
		STEP 7 (TIA Portal)	GSD file in STEP 7 (TIA Portal) V12 or higher, or STEP 7 V5.5 SP3 or higher
Firmware update	V1.0.0 or higher	V12 or higher	--- / X
Identification data I&M0 to I&M3	V1.0.0 or higher	V12 or higher	X
Parameter assignment in RUN	V1.0.0 or higher	V12 or higher	X
Module-internal Shared Output (MSO)	V2.0.0 or higher	V13 Update 3 or higher (PROFINET IO only)	X (PROFINET IO only)
Pulse-width modulation (PWM) for channel 0 and 4	V2.1.0 or higher	as of V13, SP1 with HSP 0178	X (PROFINET IO only)
Switching cycle counter	V2.2.0 or higher	as of V15.0 with HSP0247 • PROFINET IO only • Central operation with a S7-1500 CPU is supported	X (PROFINET IO only)

You can configure the module with STEP 7 (TIA Portal) and with a GSD file.

Compatibility

The following table shows the compatibility of the modules and the dependencies between hardware functional status (FS) and firmware version (FW) used:

Hardware functional status	Firmware version	Note
FS01	V1.0.0 to V2.1.0	Upgrade and downgrade possible between V1.0.0 and V2.1.0
FS02	V1.0.0 to V2.1.0	Upgrade and downgrade possible between V1.0.0 and V2.1.0
FS03	V2.2.0	Upgrade and downgrade possible between V2.2.0 and higher

Accessories

The following accessories are supplied with the module and can also be ordered separately as spare parts:

- Labeling strips
- U connector
- Universal front cover

Other components

The following component can be ordered separately:

Front connectors, including potential jumpers and cable ties

You can find additional information on accessories in the system manual S7-1500/ET 200MP. (https://support.industry.siemens.com/cs/ww/en/view/59191792)

2.2 Functions

2.2.1 Pulse-width modulation (PWM)

Channels 0 and 4 of the module support the pulse width modulation (PWM) function. The pulse width modulation function can be used to easily generate periodic pulses with a constant rated voltage and a variable pulse duration for the above-mentioned channels.

Advantages

- Automatic generation of periodic signals (without user program).
- Possibility of power reduction, e.g. in solenoid valves.

Typical areas of application:

- Control of proportional valves and way values (e.g. energy saving by reducing the holding current).
- Heating control e.g. via an external additional power unit.

Requirement

Firmware version as of V2.1.0 of the module.

Rules

Channels 0 and 4 can be used together and individually in pulse width modulation mode. The remaining channels can continue to be used as digital outputs.

Configuration

You configure the pulse width modulation with the following parameters:

- Pulse width modulation mode for activating the function
- Pulse width modulation (time period)

How it works

In the pulse width modulation mode, the two outputs (channels 0 and 4) provide one pulse width modulated output signal.

Pulse width modulation is characterized by its time period (frequency) and its duty factor (also referred to as ON period or Duty Cycle). The duty factor describes the relation between pulse duration and time period.

The pulse duration is derived from the time period and the duty factor: Pulse duration = duty factor x time period.

Example for duty factor of 50% and time period of 10 ms:

Pulse duration 0.5 x 10 ms = 5 ms

You define the duty factor for channels 0 and 4 in the user program using the output value (0 ... 1000) in the process image output; see section Address space operating mode pulse-width modulation (Page 29).

The output signal is a square wave signal (pulse sequence of on and off pulses).

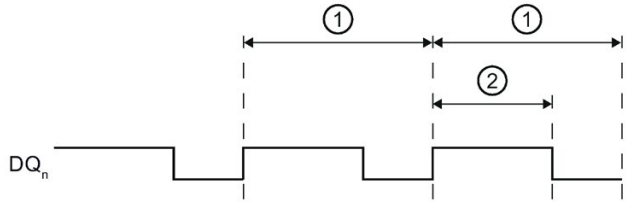

① Time period T (2 to 100 ms); Frequency of the pulse width modulation: f = 1/T (10 to 500 Hz)
② Pulse duration (duty factor x time period)

Figure 2-2 How pulse width modulation works

Minimum pulse duration

The minimum pulse duration is 300 µs due to the hardware. The duty factor can be adjusted from 0.0 to 100.0%. The time period can be adjusted from 2 to 100 ms.

Example: If you configure a time period of 2 ms and set a duty factor of 10% for the output, this results in a pulse duration of 200 µs. In fact, the output works with a minimum pulse duration of 300 µs.

Pulse waveform

The pulse duration of the actual signal profile is slightly longer than the specified, ideal pulse duration.

The figure below shows the reaction of the output to control by PWM. The blue line shows the specified, ideal signal profile (square wave signal), with which the output is controlled. The red dashed line shows the actual signal profile on the output terminal, caused by the externally connected load.

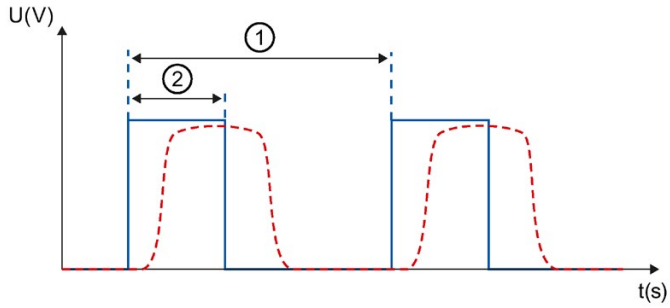

① Time period
② Pulse duration (duty factor x time period)

Figure 2-3 Pulse waveform at output terminal

Example for energy saving by reducing the holding current

High starting current is required to activate a solenoid valve. When the solenoid valve is activated, the current requirement is lower; it only has to be held in position. This time-dependent current requirement can be met well with the PWM function.

The "ValveControl" function block shown below sets the holding current required by a solenoid valve only after the configured time (HoldTime) has expired. You can generate the required holding current with a duty factor (PWM duty cycle << 100%). While "HoldTime" is running, the output is set (duty factor = 100 %) to generate a high starting torque for the solenoid valve.

```
FUNCTION_BLOCK "ValveControl"
{ S7_Optimized_Access := 'FALSE' }
VERSION : 0.1
VAR_INPUT
      OutputTrigger : Bool; // Binary control of the output
      HoldTime : Time; // Lenght of time until the PWM output begins
      PWM_DutyCycle : Int; // PWM duty cycle after hold time
END_VAR
VAR_OUTPUT
      PWM_Out : Int; // Value for PWM output
END_VAR
VAR
      Hold_TON {OriginalPartName := 'TON'; LibVersion := '1.0'} :
TON;
END_VAR

BEGIN

#Hold_TON(IN:=#OutputTrigger,
     PT:=#HoldTime);
IF #OutputTrigger = FALSE THEN
     #PWM_Out := 0;
     RETURN;
END_IF;
  IF #Hold_TON.Q THEN
     // Hold time expired => switch to PWM mode
     #PWM_Out := #PWM_DutyCycle;
ELSE
     // Control output to 100% during hold time
     #PWM_Out := 1000;
END_IF;

END_FUNCTION_BLOCK
```

2.2.2 Switching cycle counter

The function records the number of switching cycles of the output and thus the switching cycles of a connected actuator, such as those of solenoid valves. When the specified number of switching cycles is reached, the "Limit value warning" maintenance interrupt is triggered, provided it is configured and enabled. When replacing the actuator, you can reset the switching cycle counter from the user program.

When replacing modules, you have the option of pre-initializing the switching cycle counter from the user program.

Typical areas of application:

- Recording the number of switching cycles of the connected devices, e.g. solenoid valves or load contactors
- Predictive maintenance

Advantages

- You configure this function instead of programming.
- "Monitoring" of each individual channel is possible. You can select which outputs are "monitored".
- You can adapt the plant configuration flexibly and individually.
- Easy to service and maintain. You can enable and disable the switching cycle counter via the user program.
- Increase in plant availability. You can schedule actuator replacement in advance for the next maintenance cycle.

Requirement

Firmware version as of V2.2.0 of the module.

Configuration

You configure the switching cycle counter with the following parameters:

- Switching cycle counter enabled/disabled
- Trigger maintenance interrupt when the limit is reached
- Set limit for maintenance interrupt

How it works

The module counts the switching cycles by evaluating the rising edges of an output signal. If the module detects a rising edge, the switching cycle counter (24-bit) for the respective channel is incremented. After an overflow of the switching cycle counter, it starts again with 0.

If you activate the "Maintenance switching cycles" parameter, the "Limit warning" of the maintenance interrupt is triggered when the limit is exceeded. Alternatively, activate the maintenance interrupt in the parameter data sets starting at DS 64.

The current counter states are stored on the module cyclically (approx. every 20 seconds) and retentively. The switching cycle counters are reset each time the module is restarted (power off/on).

You activate the function with the "Switching cycle counter" parameter or in the parameter data sets starting at DS 64.

You can read the current counter states with data set DS 129. Data set DS 129 contains the counter status for each channel in UDINT format.

You can read the limits for each channel in UDINT format with data set DS 130.

Data set DS 131 enables you to overwrite the current counter value for each switching cycle counter.

You can set a limit for each switching cycle counter with the "Switching cycle limit" parameter or with data set DS 131.

Wiring

3

This section contains the block diagram of the module and outlines various wiring options.

You can find information on wiring the front connector, establishing a cable shield, etc. in the "Wiring" section of system manual S7-1500/ET 200MP (https://support.industry.siemens.com/cs/ww/en/view/59191792).

Wiring and block diagram

The example in the following figure shows the terminal assignment and the assignment of the channels. You can optionally assign parameters to channels 0 and channel 4 for pulse width modulation mode.

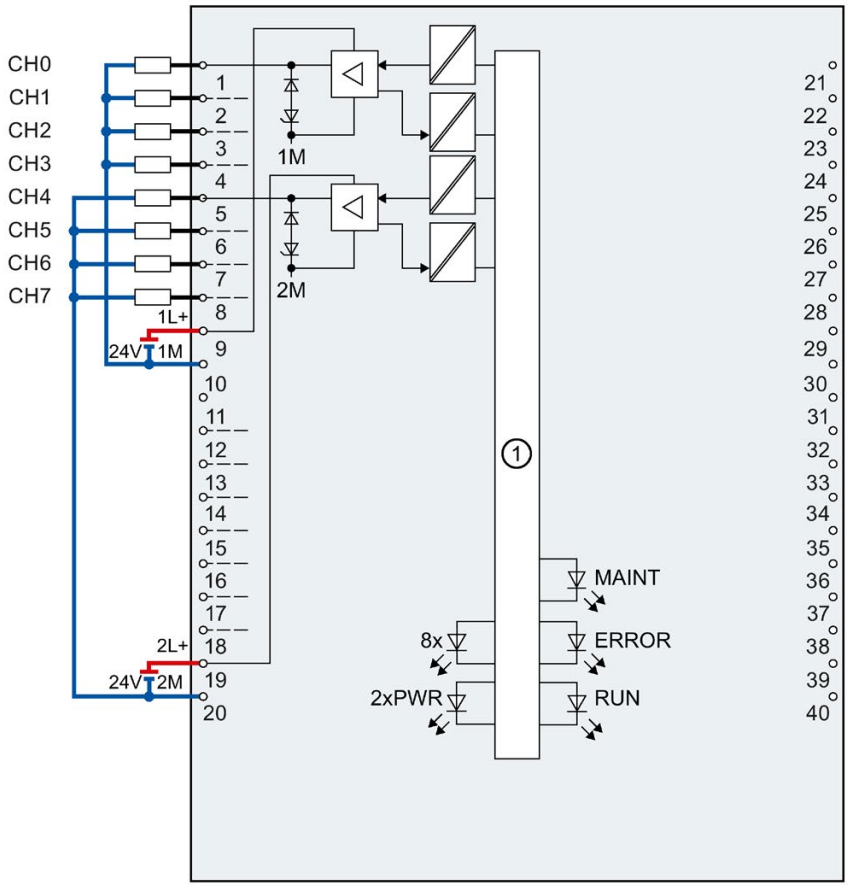

①	Backplane bus interface	MAINT	LED maintenance display (yellow)
xL+	Supply voltage 24 V DC	RUN	Status display LED (green)
xM	Ground	ERROR	Error display LED (red)
CHx	Channel or channel status LED (green/red)	PWR	POWER supply voltage LED (green)

Figure 3-1 Block diagram and terminal assignment

Wiring of the outputs for channels 0 and 4 for inductive load

If you set the channel 0 and channel 4 for the pulse width modulation mode, then you need to wire the outputs CH0 and CH4 with an external diode (blocking voltage U_R > 60 V; let-through current I_F > 1.5 A); see figure below.

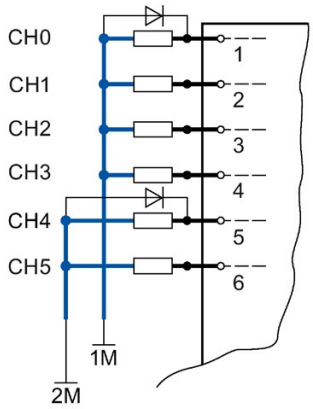

Figure 3-2 Wiring of the outputs for inductive load

Parameters/address space 4

4.1 Parameters

DQ 8x24VDC/2A HF parameters

When you assign the module parameters in STEP 7, you use various parameters to specify the module properties. The following table lists the configurable parameters. The effective range of the configurable parameters depends on the type of configuration. The following configurations are possible:

- Central operation with a S7-1500 CPU
- Distributed operation on PROFINET IO in an ET 200MP system
- Distributed operation on PROFIBUS DP in an ET 200MP system

For parameter assignment in the user program, the parameters are transferred to the module using the WRREC instruction (parameter assignment in RUN) and data records; see chapter Parameter assignment (Page 43).

4.1.1 DQ operating mode parameter

DQ 8x24VDC/2A HF parameters

The table below lists the parameters in DQ mode. These parameters apply to channels 0 to 7.

Table 4- 1 Configurable parameters and their defaults

Parameters	Range of values	Default setting	Parameter assignment in RUN	Scope with configuration software, e.g., STEP 7 (TIA Portal)	
				Integrated in the hardware catalog STEP 7 (TIA Portal) as of V12 or GSD file PROFINET IO	GSD file PROFIBUS DP
Diagnostics					
• No supply voltage L+	Yes/No	No	Yes	Channel*	Channel group
• Short circuit to ground	Yes/No	No	Yes	Channel	Channel group
• Maintenance switching cycles	Yes/No	No	Yes	Channel (as of V15.0 with HSP0247)	---
• Switching cycle counter	Yes/No	No	Yes	Channel (as of V15.0 with HSP0247)	---
Reaction to CPU STOP	• Turn off • Keep last value • Output substitute value 1	Turn off	Yes	Channel	Channel
Switching cycle limits					
Switching cycle limit	0 ... 16777214	0	Yes	Channel (as of V15.0 with HSP0247)	---

* If you enable diagnostics for multiple channels, you will receive an alarm surge on failure of the supply voltage because each enabled channel will detect this fault. You can prevent this message burst by assigning the diagnostics function to one channel only.

4.1.2 Explanation of the parameters of DQ mode

No supply voltage

Enabling of the diagnostics, for lacking or insufficient supply voltage L+.

Short circuit to ground

Enabling of the diagnostics if a short-circuit of the actuator supply to ground occurs.

Maintenance switching cycles

You use this parameter to enable the maintenance interrupt "Limit value warning" when the switching cycle limit is violated.

You configure the limit with the parameter "Switching cycle limit" for each channel CHx.

Switching cycle counter

Channel-by-channel enable of switching cycle counter (Page 17).

Reaction to CPU STOP

Determines the reaction of the output when the CPU goes into the STOP state or when the connection to the CPU is interrupted.

Switching cycle limit

Defines the limit channel-by-channel. If this value is exceeded, the "Limit value warning" maintenance interrupt is signaled.

Enter an integer value between 0 and 16777214. Refer to the data sheet of the connected actuator. We recommend that you do not enter this maximum value, but instead set it to 80% or 90%, for example, so that you have enough time to replace the actuator as a preventive measure.

4.1.3 Pulse width modulation operating mode parameter

DQ 8x24VDC/2A HF parameters

The table below lists the parameters in pulse width modulation mode. These parameters apply to channels 0 and 4.

Table 4- 2 Configurable parameters and their defaults

Parameters	Range of values	Default setting	Parameter assignment in RUN	Scope with configuration software, e.g., STEP 7 (TIA Portal)	
				Integrated in the hardware catalog as of STEP 7 (TIA Portal) as of V 13 SP1 GSD file PROFINET IO	GSD file PROFIBUS DP
Diagnostics					
• No supply voltage L+	Yes/No	No	Yes	Channel	---
• Short circuit to ground	Yes/No	No	Yes	Channel	---
Reaction to CPU STOP	• Turn off • Keep last value	Turn off	Yes	Channel	---
Operating mode	• Digital output (DQ) • Pulse width modulation	Digital output DQ	Yes	Channel	---
Pulse width modulation (Period duration)	2 ... 100 ms*	10 ms	No	Module	---

* 20 ... 1000 [x 0.1] with GSD file

4.1.4 Explanation of the parameters of pulse width modulation mode

Missing supply voltage

Enabling of the diagnostics for missing or insufficient supply voltage L+.

Short-circuit to ground

Enabling of the diagnostics if a short-circuit of the actuator supply to ground occurs.

Reaction to CPU STOP

Determines the reaction of the output when the CPU goes into the STOP state or when the connection to the CPU is interrupted.

Operating mode

Specifies the operating mode in which the channels 0 and 4 of the module are operated.

- Digital output DQ as digital output channel
- Pulse width modulation, see section Pulse-width modulation (PWM) (Page 13)

Pulse width modulation time period

Specifies the period duration and therefore the frequency of the pulse width modulation. See sectionPulse-width modulation (PWM) (Page 13)

4.2 Address space

The module can be configured differently in STEP 7; see following table. Depending on the configuration, additional/different addresses are assigned in the process image of the outputs/inputs.

Configuration options of DQ 8x24VDC/2A HF

You can configure the module with STEP 7 (TIA Portal) or with a GSD file.

When you configure the module by means of the GSD file, the configurations are available under different abbreviations/module names.

The following configurations are possible:

Table 4- 3 Configuration options

Configuration	Short designation/module name in the GSD file	Configuration software, e.g., STEP 7 (TIA Portal)	
		Integrated in hardware catalog STEP 7 (TIA Portal)	GSD file in STEP 7 (TIA Portal) V12 or higher or STEP 7 V5.5 SP3 or higher
1 x 8-channel without value status	DQ 8x24VDC/2A HF	X	X
1 x 8-channel with value status	DQ 8x24VDC/2A HF QI	X	X
1 x 8-channel with value status for module-internal Shared Output with up to 4 submodules	DQ 8x24VDC/2A HF MSO	V13 Update 3 or higher (PROFINET IO only)	X (PROFINET IO only)
1 x 8-channel with value status (channel 0 and channel 4 for PWM)	DQ 8x24VDC/2A HF PWM	as of V13 SP1 with HSP 0178	X (PROFINET IO only)

Value status (Quality Information, QI)

The value status is always activated for the following module names:

- DQ 8x24VDC/2A HF QI
- DQ 8x24VDC/2A HF MSO
- DQ 8x24VDC/2A HF PWM

An additional bit is assigned to each channel for the value status. The bit for the value status indicates if the output value specified by the user program is actually pending at the module terminal (0 = value is incorrect).

Note

The maintenance interrupt "Limit value warning" has no effect on the value status.

4.2.1 Address space operating mode DQ

Address space for configuration as 8-channel DQ 8x24VDC/2A HF

The following figure shows the assignment of the address space for the configuration as a 8-channel module with value status. You can freely assign the start address for the module. The addresses of the channels are derived from the start address.

The letter "a" is are printed on the module; "AB a" stands for module start address output byte a.

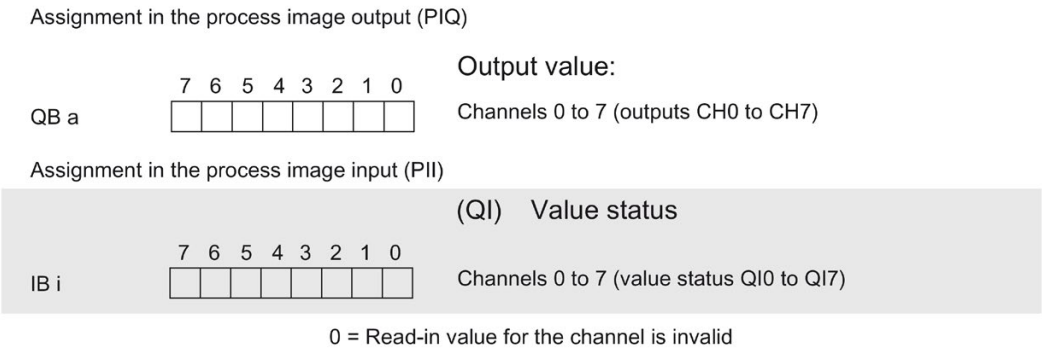

Figure 4-1 Address space for configuration as 8-channel DQ 8x24VDC/2A HF with value status

Address space for configuration as 1 x 8-channel DQ 8x24VDC/2A HF MSO

For the configuration as a 1 x 8-channel module (module-internal Shared Output, MSO), channels 0 to 7 of the module are copied to multiple submodules. Channels 0 to 7 are then available with identical values in various submodules. These submodules can be assigned to up to four IO controllers when the module is used in a shared device:

- The IO controller to which submodule 1 is assigned has write access to outputs 0 to 7.
- The IO controllers to which submodule 2, 3, or 4 is assigned have read access to outputs 0 to 7.

The number of usable IO controllers depends on the interface module used. Observe the information in the manual for the particular interface module.

Value status (Quality Information, QI)

The meaning of the value status depends on the submodule on which it occurs.

For the first submodule (=basic submodule), the value status 0 indicates that the value is incorrect or that the IO controller of the basic submodule is in STOP state.

For 2nd to 4th submodule (=MSO submodule), the value status 0 indicates that the value is incorrect or one of the following errors has occurred:

- The basic submodule is not yet configured (not ready).
- The connection between the IO controller and the basic submodule has been interrupted.
- The IO controller of the basic submodule is in STOP or POWER OFF state.

The following figure shows the assignment of the address space for submodules 1, 2, 3, and 4 and the value status.

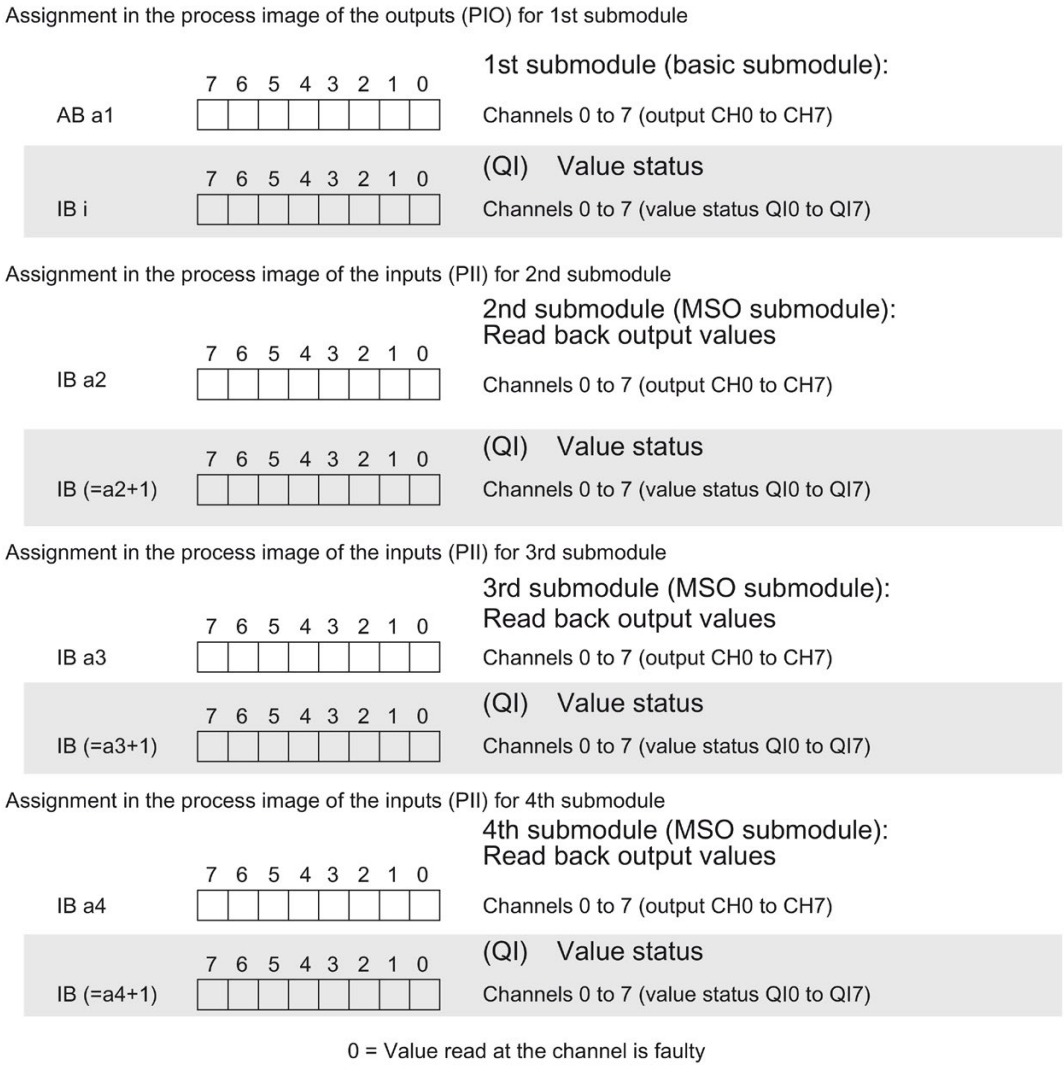

Figure 4-2 Address space for configuration as 1 x 8-channel DQ 8x24VDC/2A HF MSO with value status

Reference

You can find information on the Shared Input/Output (MSI/MSO) function in the section Module-Internal Shared Input/Output (MSI/MSO) of the PROFINET with STEP 7 V13 (https://support.industry.siemens.com/cs/ww/en/view/49948856) function manual.

4.2.2 Address space operating mode pulse-width modulation

Address space for configuration as 1 x 8-channel DQ 8x24VDC/2A PWM

If you use the module in the "Pulse width modulation mode" (channels 0 and 4), the module uses the following address spaces:

- 6 bytes in the process image output
- 1 byte in the process image input

Allocation of the process image

If you have set "Pulse width modulation" mode for channels 0 and 4 in the parameter, bits 0 and 4 have no significance. Enter the on-load factor (duty factor) in the following output bytes; see the figure below.

$$\text{Duty factor} = \frac{\text{Pulse duration}}{\text{Time period}}$$

Assignment in the process image output (PIQ)

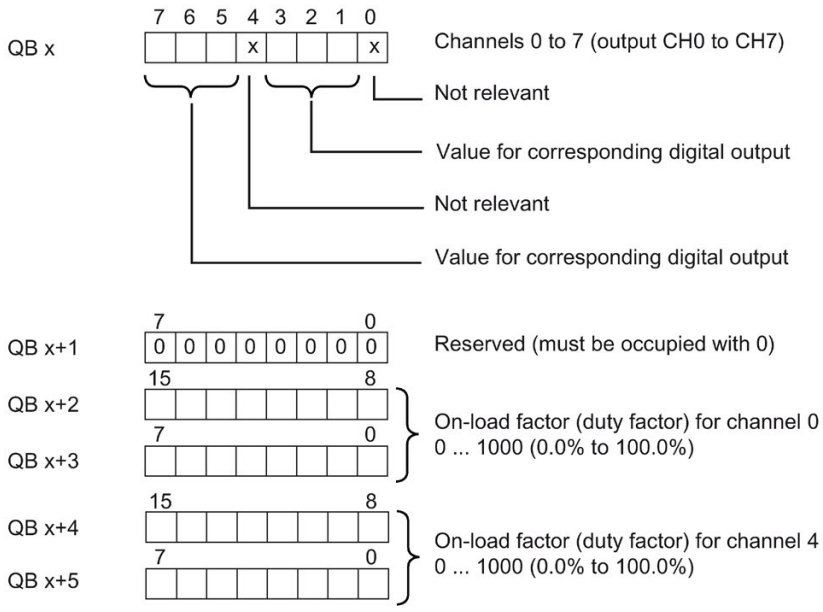

Figure 4-3 Allocation in the process image output

The figure below shows the address assignment of the module.

Assignment in the process image input (PII)

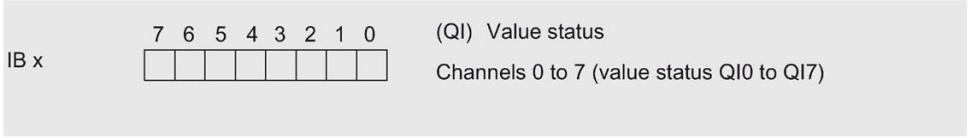

Figure 4-4 Allocation in the process image of the inputs

Interrupts/diagnostics alarms

5

5.1 Status and error displays

LED displays

The following figure shows the LED displays (status and error displays) of DQ 8x24VDC/2A HF.

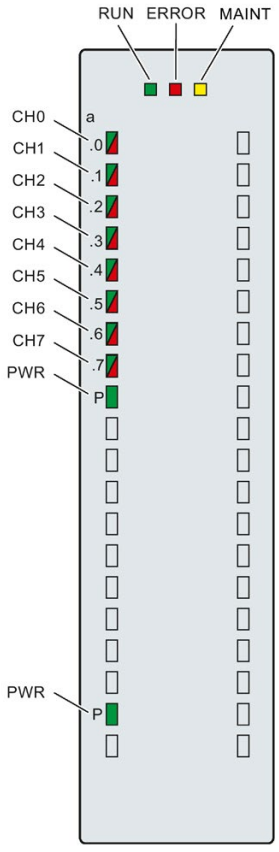

Figure 5-1 LED displays of the DQ 8x24VDC/2A HF module

Meaning of the LED displays

The following table explains the meaning of the status and error displays. Remedial measures for diagnostic alarms can be found in section Diagnostic alarms (Page 33).

RUN and ERROR LED

Table 5- 1 Status and error displays RUN and ERROR

LED		Meaning	Solution
RUN	ERROR		
Off	Off	Voltage missing or too low at backplane bus.	• Switch on the CPU and/or the system power supply modules. • Verify that the U connectors are inserted. • Check to see if too many modules are inserted.
Flashes	Off	The module starts and flashes until the valid parameter assignment is set.	---
On	Off	Module is configured.	
On	Flashes	Indicates module errors (at least one error at one channel, e.g., short-circuit to ground).	Evaluate the diagnostics data and eliminate the error (e.g., check the cables).
Flashes	Flashes	Hardware defective.	Replace the module.

LED MAINT

Table 5- 2 MAINT status display

LED MAINT	Meaning	Solution
Off	0 = No maintenance interrupt is pending.	---
On	1 = The maintenance interrupt "Limit value warning" is pending.	---

LED PWR

Table 5- 3 PWR status display

LED PWR	Meaning	Solution
Off	Supply voltage L+ too low or missing.	Check supply voltage L+.
On	Supply voltage L+ is present and OK.	---

LED CHx

Table 5- 4 CHx status display

LED CHx	Meaning	Solution
□ Off	0 = Status of the output signal.	---
■ On	1 = Status of the output signal.	---
■ On	Channel parameters assigned (channel fault pending; a short-circuit to ground is pending at the respective channel).	Check the wiring and remedy the short-circuit to ground.
	Supply voltage L+ too low or missing.	Check supply voltage L+.

5.2 Interrupts

The digital output module DQ 8x24VDC/2A HF supports diagnostic interrupts and maintenance interrupts.

You can find detailed information on the error event in the error organization block with the "RALRM" instruction (read additional interrupt info) and in the STEP 7 online help.

Diagnostic interrupt

The module generates a diagnostic interrupt at the following events:

- No supply voltage L+
- Short circuit to ground
- Parameter assignment error

Maintenance interrupt

The module generates a maintenance interrupt at the following events:

- Limit value warning

5.3 Diagnostics alarms

Diagnostics alarms

A diagnostics alarm is generated and the ERROR LED flashes for each diagnostics event on the module. The diagnostics alarms can be read out in the diagnostics buffer of the CPU, for example. You can evaluate the error codes with the user program.

If the module is operated distributed with PROFIBUS DP in an ET 200MP system, you have the option to read out diagnostics data with the instruction RDREC or RD_REC using data record 0 and 1. The structure of the data records is available on the Internet in the "Manual for interface module IM 155-5 DP ST (6ES7155-5BA00-0AB0)".

Table 5- 5 Diagnostics alarms, their meaning and corrective measures

Diagnostics alarm	Error code	Meaning	Corrective measures
Short-circuit to ground*	1_H	Short-circuit or overload at the channel	Check the wiring/actuator. Check the ambient temperature.
Parameter assignment error	10_H	• The module cannot evaluate parameters for the channel • Incorrect parameter assignment	Correct the parameter assignment
Load voltage missing	11_H	Supply voltage L+ of the module is missing	Connect supply voltage L+ to module/channel
Limit value warning	17_H	The configured limit for switching cycles has been exceeded.	• Replace actuator as a precautionary measure • Reset counter with DS131

* This diagnostic message can be output with pulse duration <500 microseconds in pulse width modulation mode. Disable the diagnostics of pulse duration < 500 µs.

Technical specifications 6

Technical specifications of the DQ 8x24VDC/2A HF

The following table shows the technical specifications as of 06/2018. You will find a data sheet including daily updated technical specifications on the Internet (https://support.industry.siemens.com/cs/ww/en/pv/6ES7522-1BF00-0AB0/td?dl=en).

Article number	6ES7522-1BF00-0AB0
General information	
Product type designation	DQ 8x24VDC/2A HF
HW functional status	FS03
Firmware version	V2.2.0
• FW update possible	Yes
Product function	
• I&M data	Yes; I&M0 to I&M3
Engineering with	
• STEP 7 TIA Portal configurable/integrated as of version	V13 SP1 / -
• STEP 7 configurable/integrated as of version	V5.5 SP3 / -
• PROFIBUS as of GSD version/GSD revision	V1.0 / V5.1
• PROFINET as of GSD version/GSD revision	V2.3 / -
Operating mode	
• DQ	Yes
• DQ with energy-saving function	Yes; with an application
• PWM	Yes
• Cam control (switching at comparison values)	No
• Oversampling	No
• MSO	Yes
• Integrated operating cycle counter	Yes

Article number	6ES7522-1BF00-0AB0
Supply voltage	
Rated value (DC)	24 V
permissible range, lower limit (DC)	20.4 V
permissible range, upper limit (DC)	28.8 V
Reverse polarity protection	Yes; through internal protection with 10 A per group
Input current	
Current consumption, max.	40 mA; 20 mA per group, no output is activated.
Output voltage	
Rated value (DC)	24 V
Power	
Power available from the backplane bus	0.9 W
Power loss	
Power loss, typ.	5.6 W; 6.8 W for PWM operation
Digital outputs	
Type of digital output	Transistor
Number of digital outputs	8
Current-sourcing	Yes
Short-circuit protection	Yes
• Response threshold, typ.	3 A
Limitation of inductive shutdown voltage to	-17 V
Controlling a digital input	Yes
Digital output functions, parameterizable	
• Freely usable digital output	Yes
• PWM output	Yes
– Number, max.	2
– Cycle duration, parameterizable	Yes; 2 ... 100 ms continuous
– ON period, min.	0 %
– ON period, max.	100 %
– Resolution of the duty cycle	0.1 %
– Minimum pulse duration	300 µs
Switching capacity of the outputs	
• on lamp load, max.	10 W
Load resistance range	
• lower limit	12 Ω
• upper limit	4 kΩ
Output voltage	
• for signal "1", min.	L+ (-0.8 V)

Article number	6ES7522-1BF00-0AB0
Output current	
• for signal "1" rated value	2 A
• for signal "1" permissible range, max.	2.4 A; Note derating specification for PWM operation
• for signal "0" residual current, max.	0.5 mA
Output delay with resistive load	
• "0" to "1", typ.	80 µs
• "0" to "1", max.	100 µs
• "1" to "0", typ.	300 µs
• "1" to "0", max.	500 µs
Parallel switching of two outputs	
• for logic links	Yes
• for uprating	No
• for redundant control of a load	Yes
Switching frequency	
• with resistive load, max.	100 Hz; With PWM operation: 500 Hz
• with inductive load, max.	0.5 Hz; According to IEC 60947-5-1, DC-13; max. 500 Hz with PWM operation only with external circuit; see additional description in the manual
• on lamp load, max.	10 Hz
Total current of the outputs	
• Current per channel, max.	2 A; see additional description in the manual
• Current per group, max.	8 A; see additional description in the manual
• Current per module, max.	16 A; see additional description in the manual
Cable length	
• shielded, max.	1 000 m
• unshielded, max.	600 m
Isochronous mode	
Isochronous operation (application synchronized up to terminal)	No
Interrupts/diagnostics/status information	
Diagnostics function	Yes
Substitute values connectable	Yes
Alarms	
• Diagnostic alarm	Yes

Article number	6ES7522-1BF00-0AB0
Diagnostic messages	
• Monitoring the supply voltage	Yes
• Wire-break	No
• Short-circuit	Yes
• Group error	Yes
Diagnostics indication LED	
• RUN LED	Yes; Green LED
• ERROR LED	Yes; Red LED
• MAINT LED	Yes; yellow LED
• Monitoring of the supply voltage (PWR-LED)	Yes; Green LED
• Channel status display	Yes; Green LED
• for channel diagnostics	Yes; Red LED
• for module diagnostics	Yes; Red LED
Potential separation	
Potential separation channels	
• between the channels	No
• between the channels, in groups of	4
• between the channels and backplane bus	Yes
Isolation	
Isolation tested with	707 V DC (type test)
Standards, approvals, certificates	
Suitable for safety-related tripping of standard modules	Yes; From FS03
Highest safety class achievable for safety-related tripping of standard modules	
• Performance level according to ISO 13849-1	PL d
• Category according to ISO 13849-1	Cat. 3
• SILCL according to IEC 62061	SILCL 2
Decentralized operation	
Prioritized startup	Yes
Dimensions	
Width	35 mm
Height	147 mm
Depth	129 mm
Weights	
Weight, approx.	240 g

Power reduction (derating) to aggregate current of outputs (per group)

The following graphs show the loading capacity of the outputs in relation to the mounting position and the ambient temperature.

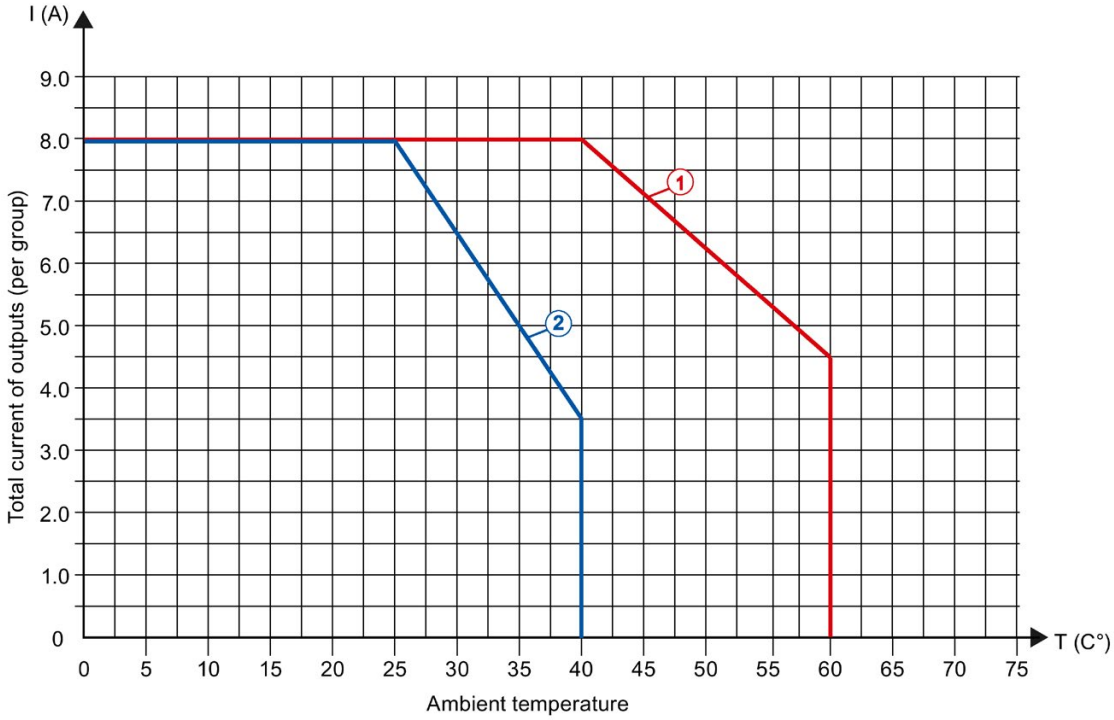

① Horizontal mounting of the system
② Vertical mounting of the system

Figure 6-1 Details on total current of outputs (per group)

DQ mode and PWM mode with switching frequency max. 100 Hz

The following graphs apply to resistive loads and inductive loads with max. 2 A total current of the outputs per channel. Inductive loads in PWM mode require additional wiring to an external diode; see section Wiring (Page 19). You can find the total current of the outputs for each channel or for each module in the technical specifications.

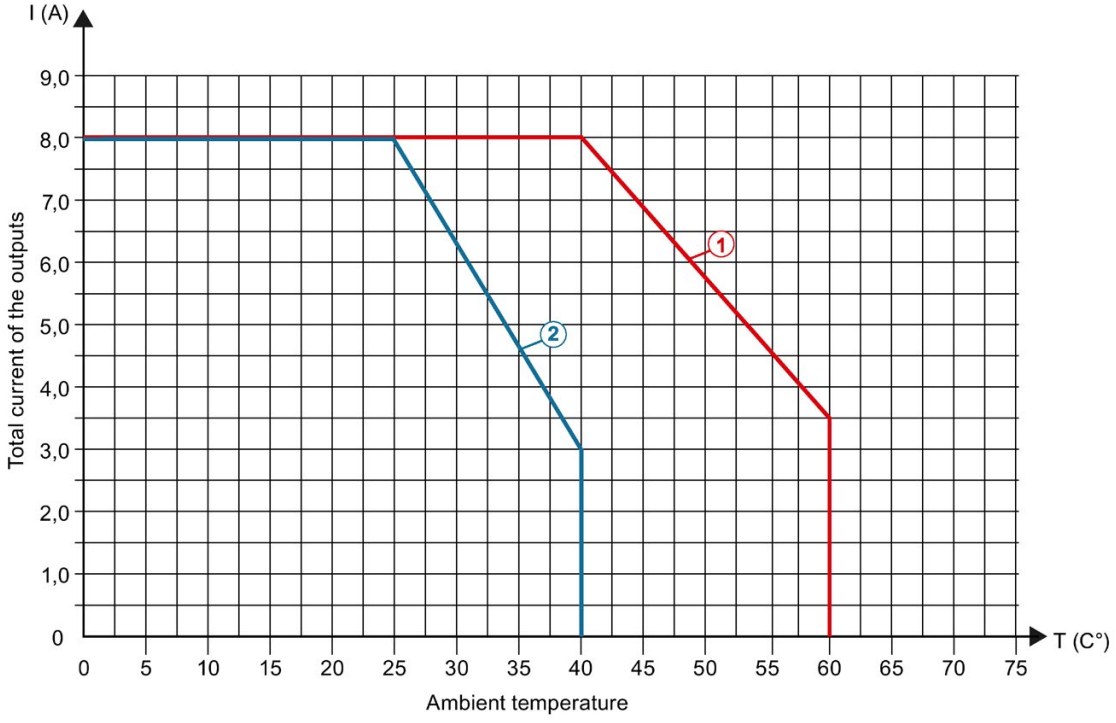

① Horizontal mounting of the system
② Vertical mounting of the system

Figure 6-2 Details on total current of outputs (per group) in the DQ and PWM operating modes

PWM mode with switching frequency max. 500 Hz

The following graphs apply to resistive loads and inductive loads with max. 2 A total current of the outputs per channel. Inductive loads require additional wiring with an external diode, see section Wiring (Page 19). You can find the total current of the outputs for each channel or for each module in the technical specifications.

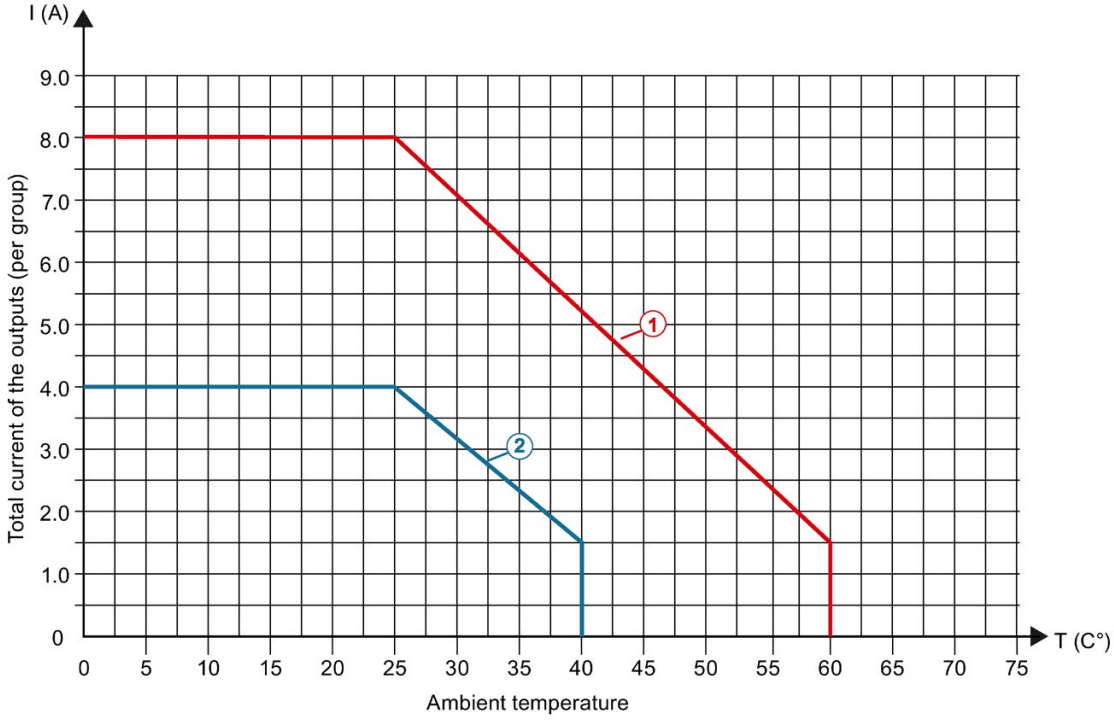

① Horizontal mounting of the system
② Vertical mounting of the system

Figure 6-3 Details on total current of outputs (per group) in the PWM operating mode

Dimensional drawing

A

The dimensional drawing of the module on the mounting rail, as well as a dimensional drawing with open front cover, are provided in the appendix. Always observe the specified dimensions for installations in cabinets, control rooms, etc.

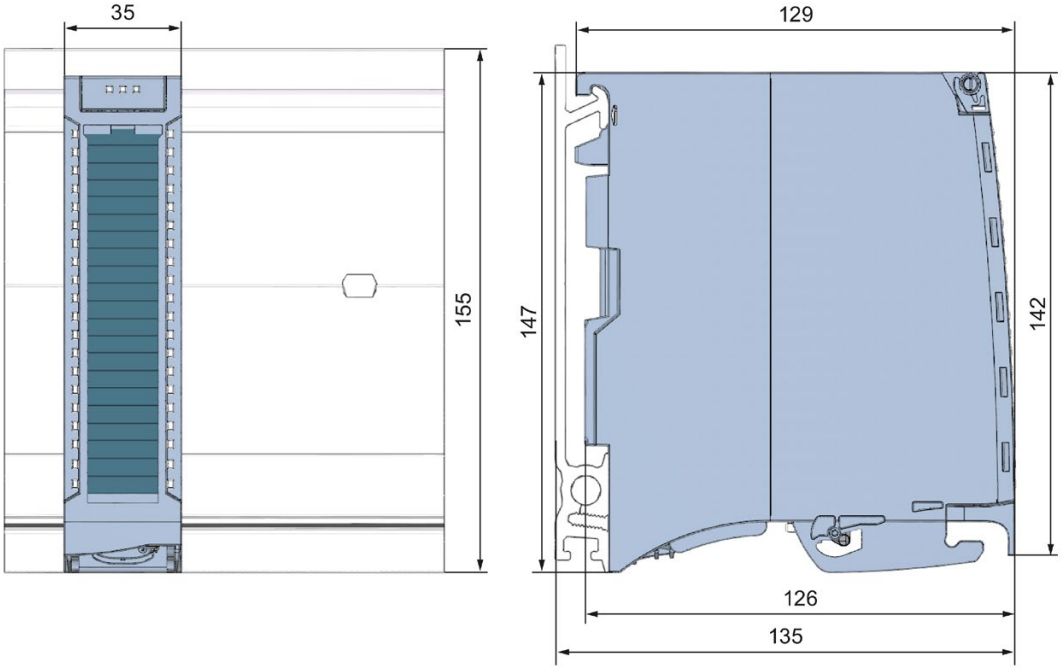

Figure A-1 Dimensional drawing of the DQ 8x24VDC/2A HF module

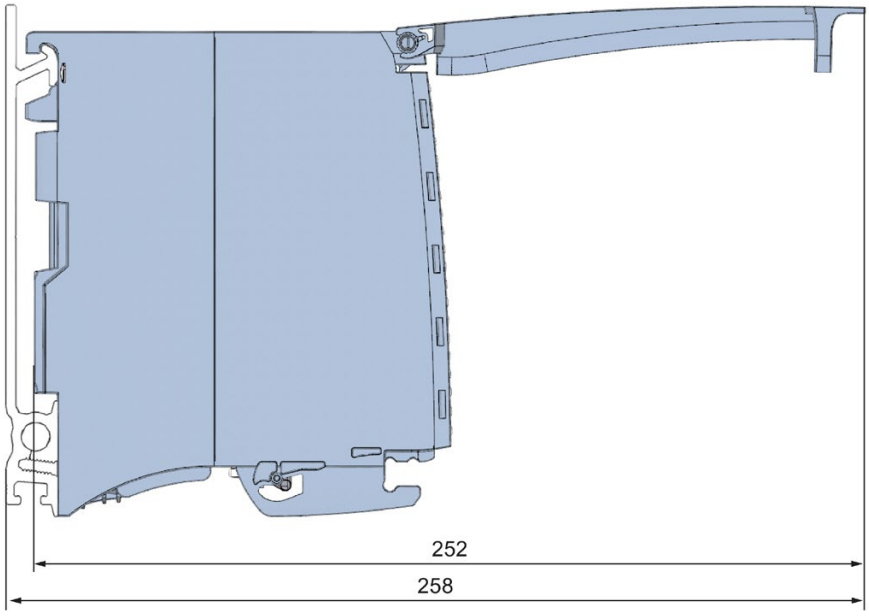

Figure A-2 Dimensional drawing of the DQ 8x24VDC/2A HF module, side view with open front cover

Parameter data records

B

B.1 Parameter assignment

The data records of the module have an identical structure, regardless of whether you configure the module with PROFIBUS DP or PROFINET IO.

Dependencies for configuration with GSD file

When a GSD file is used to configure a module, dependencies can arise when "assigning the parameters".

There are no dependencies for this module. You can assign the individual parameters in any combination.

Parameter assignment in the user program

You have the option to reconfigure the module in RUN (e.g. the response of selected channels to the CPU-STOP state can be changed in RUN without having an effect on the other channels).

Parameter assignment in RUN

The WRREC instruction is used to transfer the parameters to the module using data sets 64 to 71. The parameters set in STEP 7 do not change in the CPU, which means the parameters set in STEP 7 are still valid after a restart.

The parameters are only checked for plausibility by the module after the transfer.

Output parameter STATUS

The module ignores errors that occurred during the transfer of parameters with the WRREC instruction and continues operation with the previous parameter assignment. However, a corresponding error code is written to the STATUS output parameter.

The description of the WRREC instruction and the error codes is available in the STEP 7 online help.

Assignment of data record and channel

The channel parameters of the module are included in data sets 64 to 71 and are assigned as follows:

- Data set 64 for channel 0 (PWM operating mode possible)
- Data record 65 for channel 1
- Data set 66 for channel 2
- Data set 67 for channel 3
- Data set 68 for channel 4 (PWM operating mode possible)
- Data set 69 for channel 5
- Data set 70 for channel 6
- Data set 71 for channel 7

B.2 Structure of parameter data sets DS 64 - 71

Structure of data sets 64 to 71

The figure below shows the structure of data set 64 for channel 0 as an example. The structure is identical for channels 1 to 7. The values in byte 0 and byte 1 are fixed and may not be changed.

Enable a parameter by setting the corresponding bit to "1".

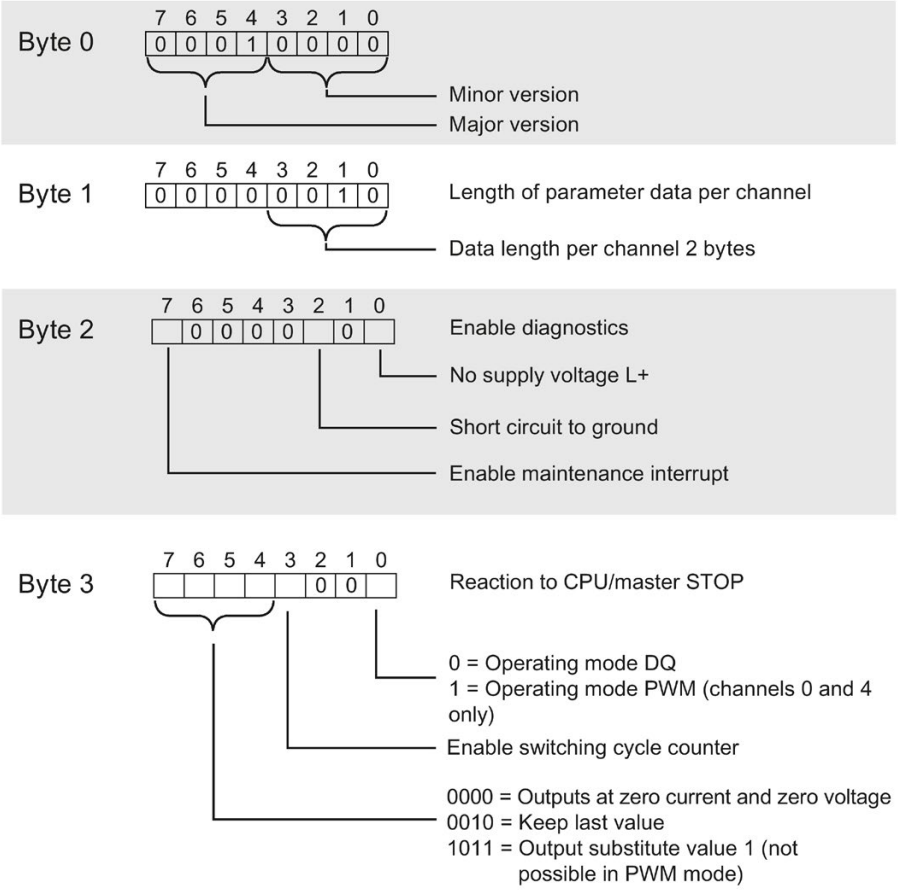

Figure B-1 Structure of data set 64: Bytes 0 to 3

B.3 Structure of data set DS 129

Structure of data set 129

You can read the current states of the switching cycle counters with data set 129. The counter status is supplied for each channel in UDINT format.

The following figure shows you the structure of data set 129.

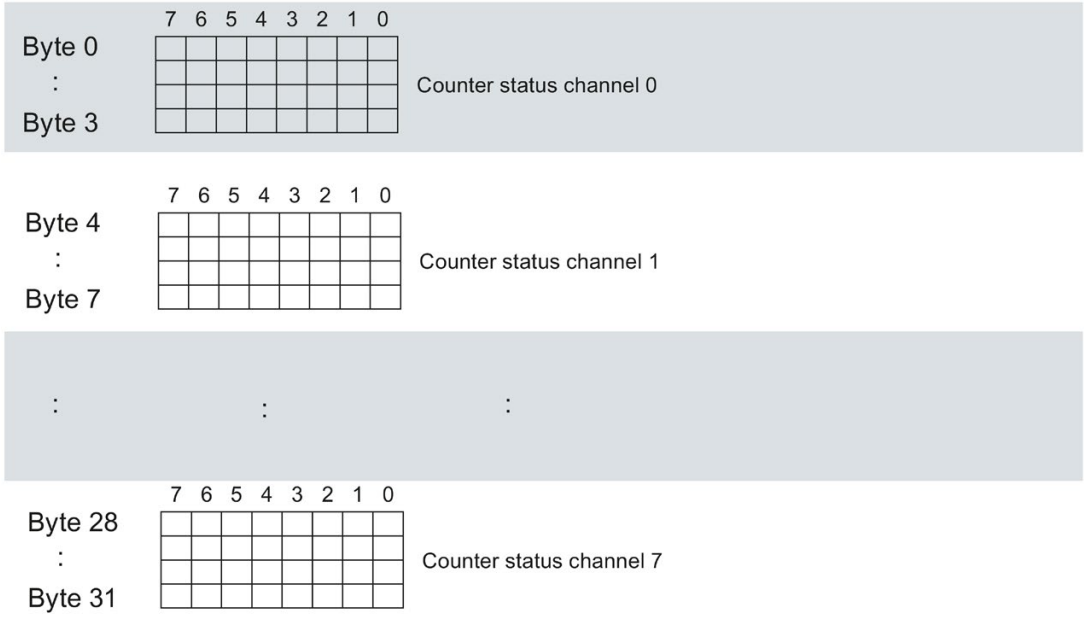

Figure B-2 Structure of data set 129: Byte 0 to 31

B.4 Structure of data set DS 130

Structure of data set 130

The limits of the switching cycle counters are read out with data set 130. The set value is supplied for each channel in UDINT format.

The following figure shows you the structure of data set 130.

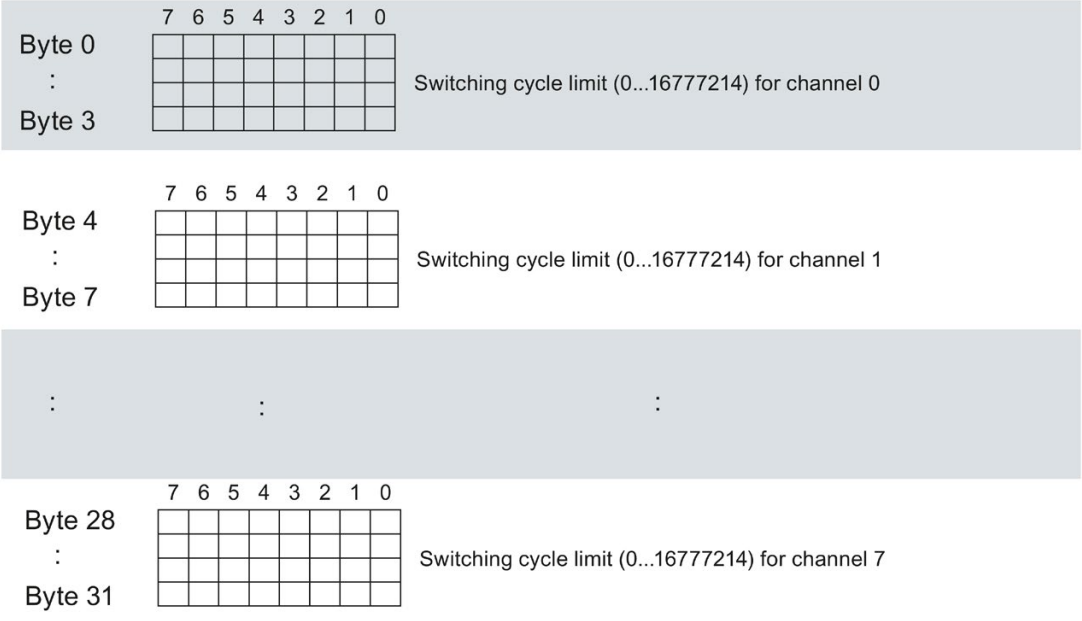

Figure B-3 Structure of data set 130: Byte 0 to 31

B.5 Structure of data set DS 131

Structure of data set 131

The following figure shows you the structure of data set 131.

Enable a parameter by setting the corresponding bit to "1".

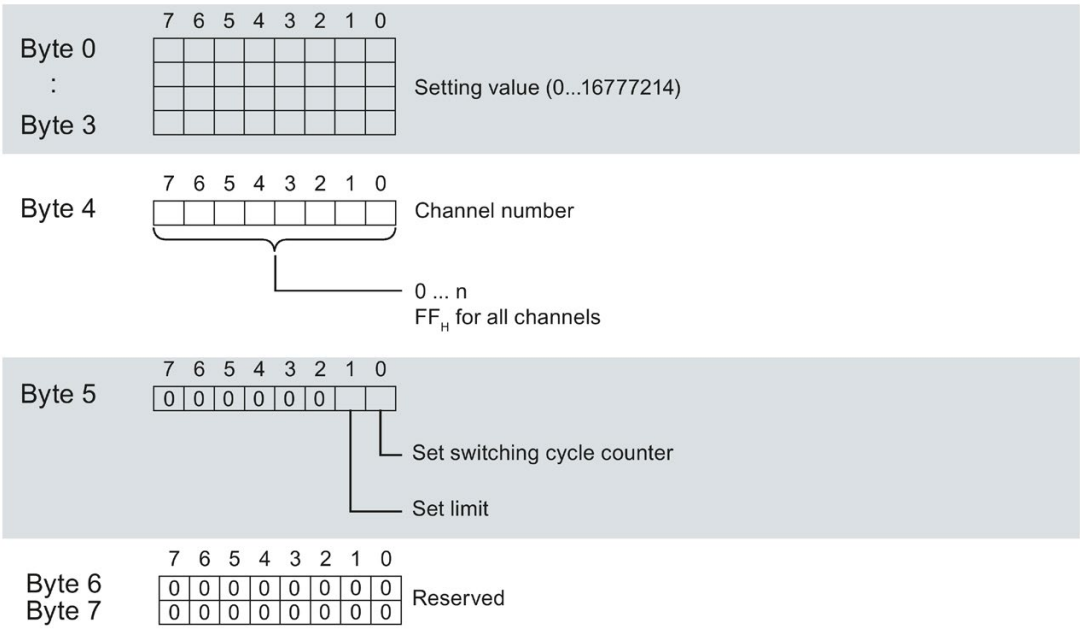

Figure B-4 Structure of data set 131: Bytes 0 to 7

SIEMENS

Manual

SIMATIC

S7-1500 / ET 200MP

Digital output module
DQ 64x24VDC/0.3A BA (6ES7522-1BP00-0AA0)

Edition 07/2020

support.industry.siemens.com

SIEMENS

SIMATIC

S7-1500/ET 200MP Digital output module DQ 64x24VDC/0.3A BA (6ES7522-1BP00-0AA0)

Equipment Manual

Preface

S7-1500 / ET 200MP Documentation Guide 1

Product overview 2

Wiring 3

Address space 4

Diagnostics alarms 5

Technical specifications 6

Dimensional drawing A

07/2020

A5E48024569-AA

Legal information

Warning notice system

This manual contains notices you have to observe in order to ensure your personal safety, as well as to prevent damage to property. The notices referring to your personal safety are highlighted in the manual by a safety alert symbol, notices referring only to property damage have no safety alert symbol. These notices shown below are graded according to the degree of danger.

⚠ DANGER
indicates that death or severe personal injury **will** result if proper precautions are not taken.

⚠ WARNING
indicates that death or severe personal injury **may** result if proper precautions are not taken.

⚠ CAUTION
indicates that minor personal injury can result if proper precautions are not taken.

NOTICE
indicates that property damage can result if proper precautions are not taken.

If more than one degree of danger is present, the warning notice representing the highest degree of danger will be used. A notice warning of injury to persons with a safety alert symbol may also include a warning relating to property damage.

Qualified Personnel

The product/system described in this documentation may be operated only by **personnel qualified** for the specific task in accordance with the relevant documentation, in particular its warning notices and safety instructions. Qualified personnel are those who, based on their training and experience, are capable of identifying risks and avoiding potential hazards when working with these products/systems.

Proper use of Siemens products

Note the following:

⚠ WARNING
Siemens products may only be used for the applications described in the catalog and in the relevant technical documentation. If products and components from other manufacturers are used, these must be recommended or approved by Siemens. Proper transport, storage, installation, assembly, commissioning, operation and maintenance are required to ensure that the products operate safely and without any problems. The permissible ambient conditions must be complied with. The information in the relevant documentation must be observed.

Trademarks

All names identified by ® are registered trademarks of Siemens AG. The remaining trademarks in this publication may be trademarks whose use by third parties for their own purposes could violate the rights of the owner.

Disclaimer of Liability

We have reviewed the contents of this publication to ensure consistency with the hardware and software described. Since variance cannot be precluded entirely, we cannot guarantee full consistency. However, the information in this publication is reviewed regularly and any necessary corrections are included in subsequent editions.

Siemens AG
Digital Industries
Postfach 48 48
90026 NÜRNBERG
GERMANY

A5E48024569-AA
Ⓟ 07/2020 Subject to change

Copyright © Siemens AG 2020.
All rights reserved

Preface

Purpose of the documentation

This manual supplements the system manual S7-1500/ET 200MP (https://support.industry.siemens.com/cs/ww/en/view/59191792).

Functions that relate in general to the systems are described in this system manual.

The information provided in this manual and in the system/function manuals supports you in commissioning the systems.

Conventions

The term "CPU" is used in this manual both for the CPUs of the S7-1500 automation system and for interface modules of the ET 200MP distributed I/O system.

Also observe notes marked as follows:

Note

A note contains important information on the product described in the documentation, on the handling of the product or on the section of the documentation to which particular attention should be paid.

Security information

Siemens provides products and solutions with industrial security functions that support the secure operation of plants, systems, machines and networks.

In order to protect plants, systems, machines and networks against cyber threats, it is necessary to implement – and continuously maintain – a holistic, state-of-the-art industrial security concept. Siemens' products and solutions constitute one element of such a concept.

Customers are responsible for preventing unauthorized access to their plants, systems, machines and networks. Such systems, machines and components should only be connected to an enterprise network or the internet if and to the extent such a connection is necessary and only when appropriate security measures (e.g. firewalls and/or network segmentation) are in place.

For additional information on industrial security measures that may be implemented, please visit (https://www.siemens.com/industrialsecurity).

Siemens' products and solutions undergo continuous development to make them more secure. Siemens strongly recommends that product updates are applied as soon as they are available and that the latest product versions are used. Use of product versions that are no longer supported, and failure to apply the latest updates may increase customers' exposure to cyber threats.

To stay informed about product updates, subscribe to the Siemens Industrial Security RSS Feed visit (https://www.siemens.com/industrialsecurity).

Open Source Software

Open-source software is used in the firmware of the I/O modules. Open Source Software is provided free of charge. We are liable for the product described, including the open-source software contained in it, pursuant to the conditions applicable to the product. Siemens accepts no liability for the use of the open source software over and above the intended program sequence, or for any faults caused by modifications to the software.

For legal reasons, we are obliged to publish the original text of the license conditions and copyright notices. Please read the information relating to this on the Internet (https://support.industry.siemens.com/cs/ww/en/view/109757558).

Table of contents

Preface **3**

1 S7-1500 / ET 200MP Documentation Guide **6**

2 Product overview **8**

2.1 Properties 8

3 Wiring **10**

3.1 Wiring and block diagram 10

3.2 Terminal assignment X10 and X11. 11

3.3 Connecting a module with a connection module 14

3.4 Wiring of the module 15

3.5 Fuse 17

4 Address space **18**

5 Diagnostics alarms **25**

5.1 Status and error displays 25

6 Technical specifications **27**

A Dimensional drawing **31**

S7-1500 / ET 200MP Documentation Guide

1

The documentation for the SIMATIC S7-1500 automation system and the SIMATIC ET 200MP distributed I/O system is arranged into three areas.
This arrangement enables you to access the specific content you require.

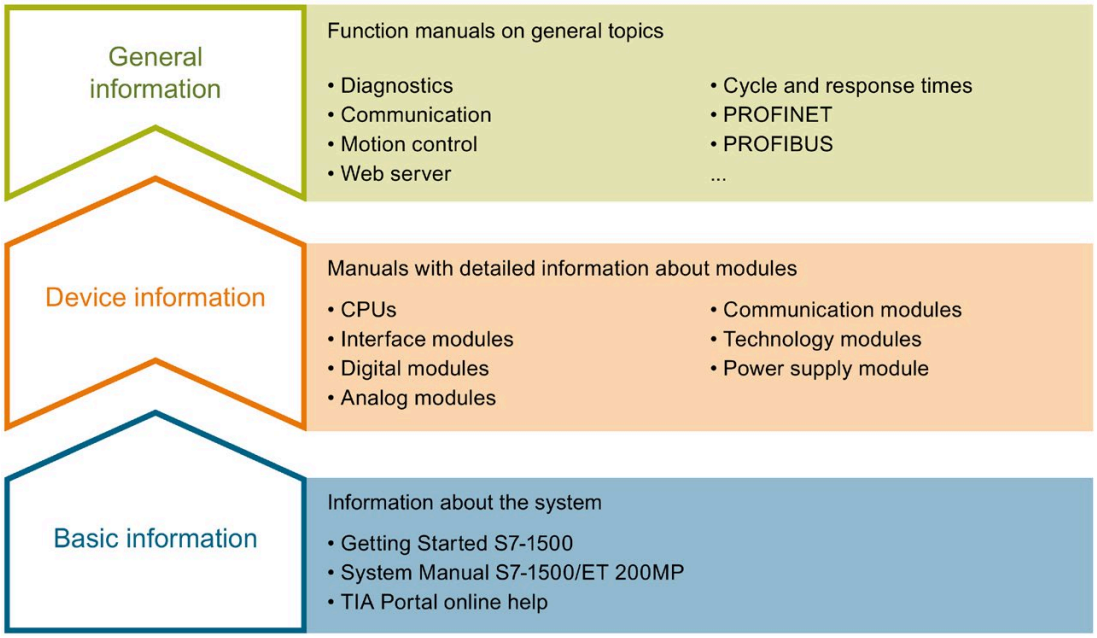

Basic information

The System Manual and Getting Started describe in detail the configuration, installation, wiring and commissioning of the SIMATIC S7-1500 and ET 200MP systems. The STEP 7 online help supports you in the configuration and programming.

Device information

Product manuals contain a compact description of the module-specific information, such as properties, wiring diagrams, characteristics and technical specifications.

General information

The function manuals contain detailed descriptions on general topics regarding the SIMATIC S7-1500 and ET 200MP systems, e.g. diagnostics, communication, motion control, Web server, OPC UA.

You can download the documentation free of charge from the Internet (https://support.industry.siemens.com/cs/ww/en/view/109742691).

Changes and supplements to the manuals are documented in a Product Information.

You can download the product information free of charge from the Internet (https://support.industry.siemens.com/cs/us/en/view/68052815).

Manual Collection S7-1500/ET 200MP

The Manual Collection contains the complete documentation on the SIMATIC S7-1500 automation system and the ET 200MP distributed I/O system gathered together in one file.

You can find the Manual Collection on the Internet (https://support.industry.siemens.com/cs/ww/en/view/86140384).

SIMATIC S7-1500 comparison list for programming languages

The comparison list contains an overview of which instructions and functions you can use for which controller families.

You can find the comparison list on the Internet (https://support.industry.siemens.com/cs/ww/en/view/86630375).

"mySupport"

With "mySupport", your personal workspace, you make the best out of your Industry Online Support.

In "mySupport", you can save filters, favorites and tags, request CAx data and compile your personal library in the Documentation area. In addition, your data is already filled out in support requests and you can get an overview of your current requests at any time.

You must register once to use the full functionality of "mySupport".

You can find "mySupport" on the Internet (https://support.industry.siemens.com/My/ww/en).

Application examples

The application examples support you with various tools and examples for solving your automation tasks. Solutions are shown in interplay with multiple components in the system - separated from the focus on individual products.

You will find the application examples on the Internet (https://support.industry.siemens.com/sc/ww/en/sc/2054).

Product overview

2

2.1 Properties

Article number

6ES7522-1BP00-0AA0

View of the module

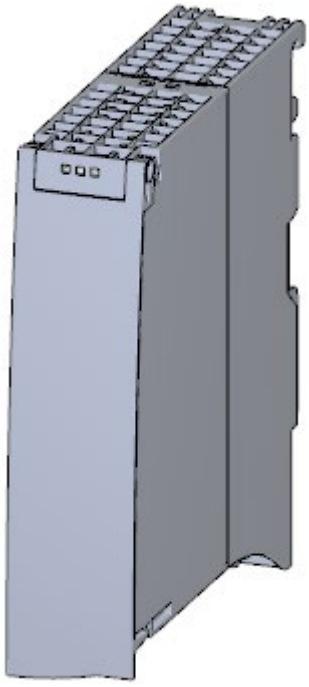

Figure 2-1 View of the DQ 64x24VDC/0.3A BA module

Properties

The digital module has the following technical properties:

- 64 digital outputs, electrically isolated in 4 groups of 16
  - P switching (sourcing)
- Rated output voltage 24 V DC
- Rated output current 0.3 A per channel
- Suitable for solenoid valves, DC contactors, and indicator lights

The module supports the following functions:

Table 2- 1 Version dependencies of the module functions

Function	Firmware version of the module	Configuration software	
		STEP 7 (TIA Portal) as of V16 and HSP 0319	GSD file in STEP 7 (TIA Portal) V12 or higher, or STEP 7 V5.5 SP3 or higher
Firmware update	V1.0.0 or higher	X	--- / X
Identification data I&M0 to I&M3	V1.0.0 or higher	X	X
Module-internal Shared Output (MSO)	V1.0.0 or higher	X (PROFINET IO only)	X (PROFINET IO only)
Configurable submodules / submodules for Shared Device	V1.0.0 or higher	X (PROFINET IO only)	X (PROFINET IO only)

You can configure the module with STEP 7 (TIA Portal) and with a GSD file.

Accessories

The following accessories are supplied with the module and can be ordered as spare parts:

- U connector
- Universal front door with the article number: 6ES7 591-8AA00-0AA0

You can find additional information in the system manual S7-1500/ET 200MP (https://support.industry.siemens.com/cs/ww/en/view/59191792).

Other components

The following must be ordered separately:

- SIMATIC TOP connect connection module
- Pre-fabricated connecting cable with IDC connectors

For additional information, see section Connecting a module with a connection module (Page 14)

Wiring

3

3.1 Wiring and block diagram

This section contains the block diagram of the module and the terminal assignment.

Wiring and block diagram

The following figure shows the terminal assignment and the assignment of the channels.

- Outputs: Channel 0 to 31 to connector X10.
- Outputs: Channel 32 to 63 to connector X11

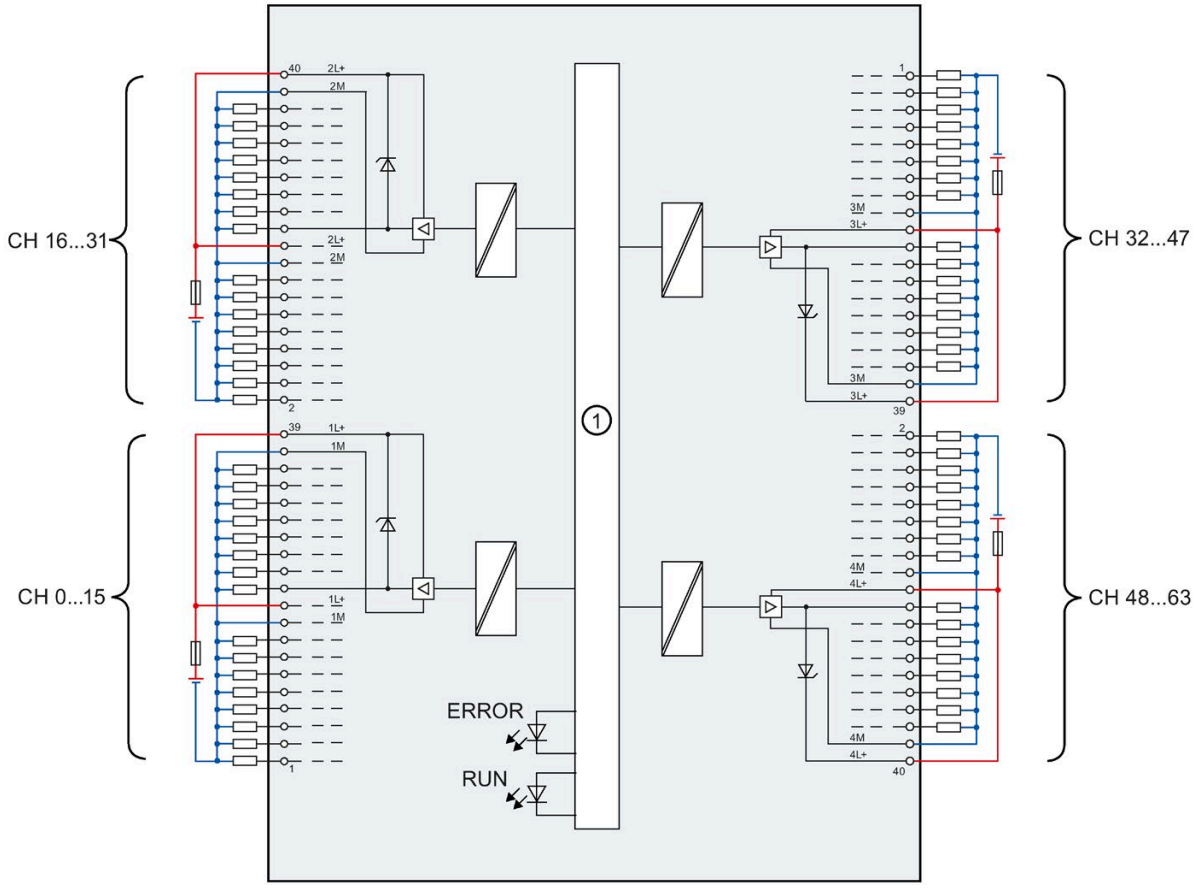

①	Backplane bus interface	CHx	Channel
		RUN	Status display LED (green)
		ERROR	Error display LED (red)

Figure 3-1 Block diagram and terminal assignment

3.2 Terminal assignment X10 and X11.

The following figure shows the assignment of the channels to the addresses.

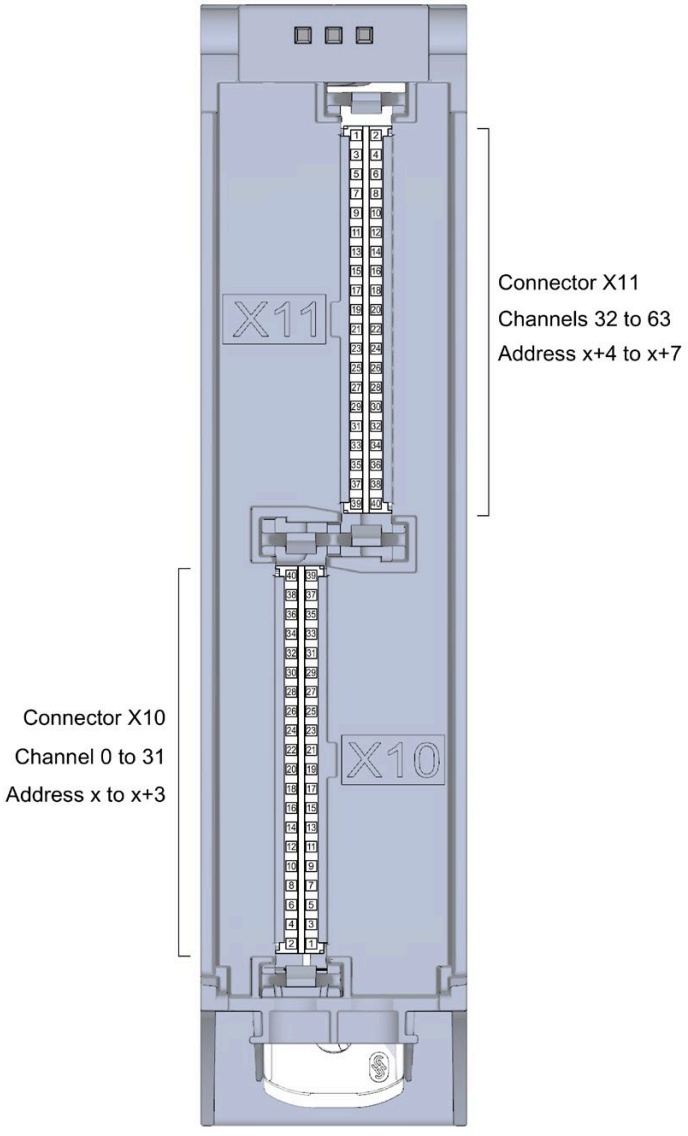

Figure 3-2 Front view of the module without front door

Terminal and address assignment

For connecting actuators, we recommend using the SIMATIC TOP connect pre-assembled connecting cables and SIMATIC TOP connect connection modules. However, if you choose another wiring option, you will need the following tables.

Table 3- 1 Assignment for connector X10 of the module

Assignment for outputs to X10					
Terminal	**Channel**	**Address**	**Terminal**	**Channel**	**Address**
40	2L+	---	**39**	1L+	---
38	2M	---	**37**	1M	---
36	Channel 31	x+3.7	**35**	Channel 15	x+1.7
34	Channel 30	x+3.6	**33**	Channel 14	x+1.6
32	Channel 29	x+3.5	**31**	Channel 13	x+1.5
30	Channel 28	x+3.4	**29**	Channel 12	x+1.4
28	Channel 27	x+3.3	**27**	Channel 11	x+1.3
26	Channel 26	x+3.2	**25**	Channel 10	x+1.2
24	Channel 25	x+3.1	**23**	Channel 9	x+1.1
22	Channel 24	x+3.0	**21**	Channel 8	x+1.0
20	2L+	---	**19**	1L+	---
18	2M	---	**17**	1M	---
16	Channel 23	x+2.7	**15**	Channel 7	x.7
14	Channel 22	x+2.6	**13**	Channel 6	x.6
12	Channel 21	x+2.5	**11**	Channel 5	x.5
10	Channel 20	x+2.4	**9**	Channel 4	x.4
8	Channel 19	x+2.3	**7**	Channel 3	x.3
6	Channel 18	x+2.2	**5**	Channel 2	x.2
4	Channel 17	x+2.1	**3**	Channel 1	x.1
2	Channel 16	x+2.0	**1**	Channel 0	x.0

Table 3- 2 Assignment for the connector X11 of the module

Assignment for outputs to X11					
Terminal	**Channel**	**Address**	**Terminal**	**Channel**	**Address**
1	Channel 32	x+4.0	**2**	Channel 48	x+6.0
3	Channel 33	x+4.1	**4**	Channel 49	x+6.1
5	Channel 34	x+4.2	**6**	Channel 50	x+6.2
7	Channel 35	x+4.3	**8**	Channel 51	x+6.3
9	Channel 36	x+4.4	**10**	Channel 52	x+6.4
11	Channel 37	x+4.5	**12**	Channel 53	x+6.5
13	Channel 38	x+4.6	**14**	Channel 54	x+6.6
15	Channel 39	x+4.7	**16**	Channel 55	x+6.7
17	3M	---	**18**	4M	---
19	3L+	---	**20**	4L+	---
21	Channel 40	x+5.0	**22**	Channel 56	x+7.0
23	Channel 41	x+5.1	**24**	Channel 57	x+7.1
25	Channel 42	x+5.2	**26**	Channel 58	x+7.2
27	Channel 43	x+5.3	**28**	Channel 59	x+7.3
29	Channel 44	x+5.4	**30**	Channel 60	x+7.4
31	Channel 45	x+5.5	**32**	Channel 61	x+7.5
33	Channel 46	x+5.6	**34**	Channel 62	x+7.6
35	Channel 47	x+5.7	**36**	Channel 63	x+7.7
37	3M	---	**38**	4M	---
39	3L+	---	**40**	4L+	---

3.3 Connecting a module with a connection module

Component for connecting

To connect actuators, you need 2 connection modules per module. The connection modules are connected to the module with pre-assembled connecting cables.

You can find additional information on the components of the SIMATIC TOP connect system cabling, e.g. for connecting connection modules, in the equipment manual SIMATIC TOP connect for S7-1500 and ET 200MP (https://support.industry.siemens.com/cs/ww/en/view/95924607).

Note

Common supply

If you use the listed SIMATIC TOP connect connection modules, then all 32 channels of a connection module have a common supply. This means that 2 groups of 16 channels each are supplied by common potential.

You can find the required components in the tables below.

Table 3- 3 SIMATIC TOP connect connection module

Components	Type	Description	Connection technology	Article number	Delivery quantity
Connection modules for digital outputs	TP1	1-wire connection, without LED	- Screw terminals - Push-in system	6ES7924-2AA20-0AA0 6ES7924-2AA20-0CA0	Pack of 1 Pack of 1
		1-wire connection, with LED	- Screw terminals - Push-in system	6ES7924-2AA20-0BA0 6ES7924-2AA20-0BC0	Pack of 1 Pack of 1
	TP3	3-wire connection, without LED	- Screw terminals - Push-in system	6ES7924-2CA20-0AA0 6ES7924-2CA20-0AC0	Pack of 1 Pack of 1
		3-wire connection, with LED	- Screw terminals - Push-in system	6ES7924-2CA20-0 BA0 6ES7924-2CA20-0BC0	Pack of 1 Pack of 1

Table 3- 4 Connecting cables SIMATIC TOP connect

Components	Length	Article number	Delivery quantity
Pre-assembled connecting cable with IDC connector an both ends • IDC connector 40-pin for the I/O module • IDC connector 50-pin for the SIMATIC TOP connect connection module	1.0 m	6ES7923-5BB00-0GB0	Pack of 1
	2.0 m	6ES7923-5BC00-0GB0	Pack of 1
	2.5 m	6ES7923-5BC50-0GB0	Pack of 1
	3.0 m	6ES7923-5BD00-0GB0	Pack of 1

Support for selecting hardware components

We recommend you use the TIA Selection Tool for planning your project. The TIA Selection Tool is available free of charge as a desktop version for download or as a cloud version, refer to the Internet (https://new.siemens.com/global/en/products/automation/topic-areas/tia/tia-selection-tool.html).

3.4 Wiring of the module

Requirement

- The I/O modules are installed on the mounting rail.
- The supply voltage of the station is switched off.

Procedure

1. Plug the two SIMATIC TOP connect connecting cables with the **40-pin** IDC connector into X10 and X11.

   Note when plugging:

   – ① The nob on the left edge of connector X11

   – ② The nob on the right edge of connector X10

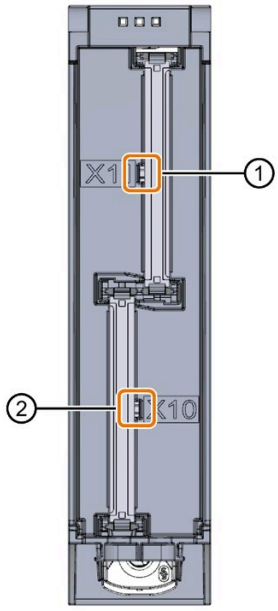

Figure 3-3 Connect the SIMATIC TOP connect 40-pin connecting cable to the module

2. Guide the SIMATIC TOP connect connecting cables down to the module.
3. Guide a cable tie around the module at the fixing points and connect the SIMATIC TOP connect cables.

4. Tighten the cable tie for the strain relief.

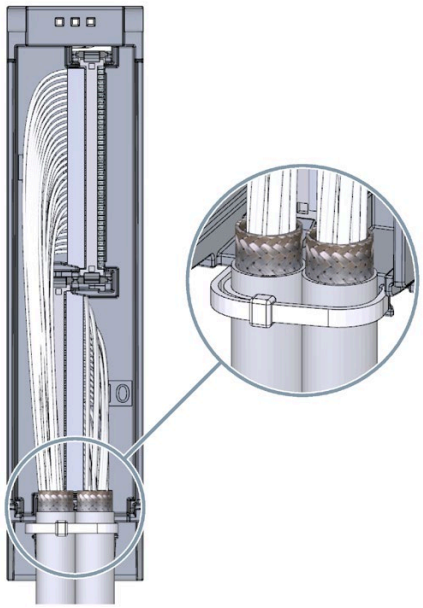

Figure 3-4 Fastening the cable tie for the strain relief

5. Plug the SIMATIC TOP connect connecting cables with the **50-pin** IDC connector into the SIMATIC TOP connect connection module.

Additional information

You can find out how to wire the SIMATIC TOP connect connection module in the equipment manual SIMATIC TOP connect for S7-1500 and ET 200MP (https://support.industry.siemens.com/cs/ww/en/view/95924607).

3.5 Fuse

Miniature circuit breaker

The supply lines are to be protected with a 6 A miniature circuit breaker with tripping characteristic B.

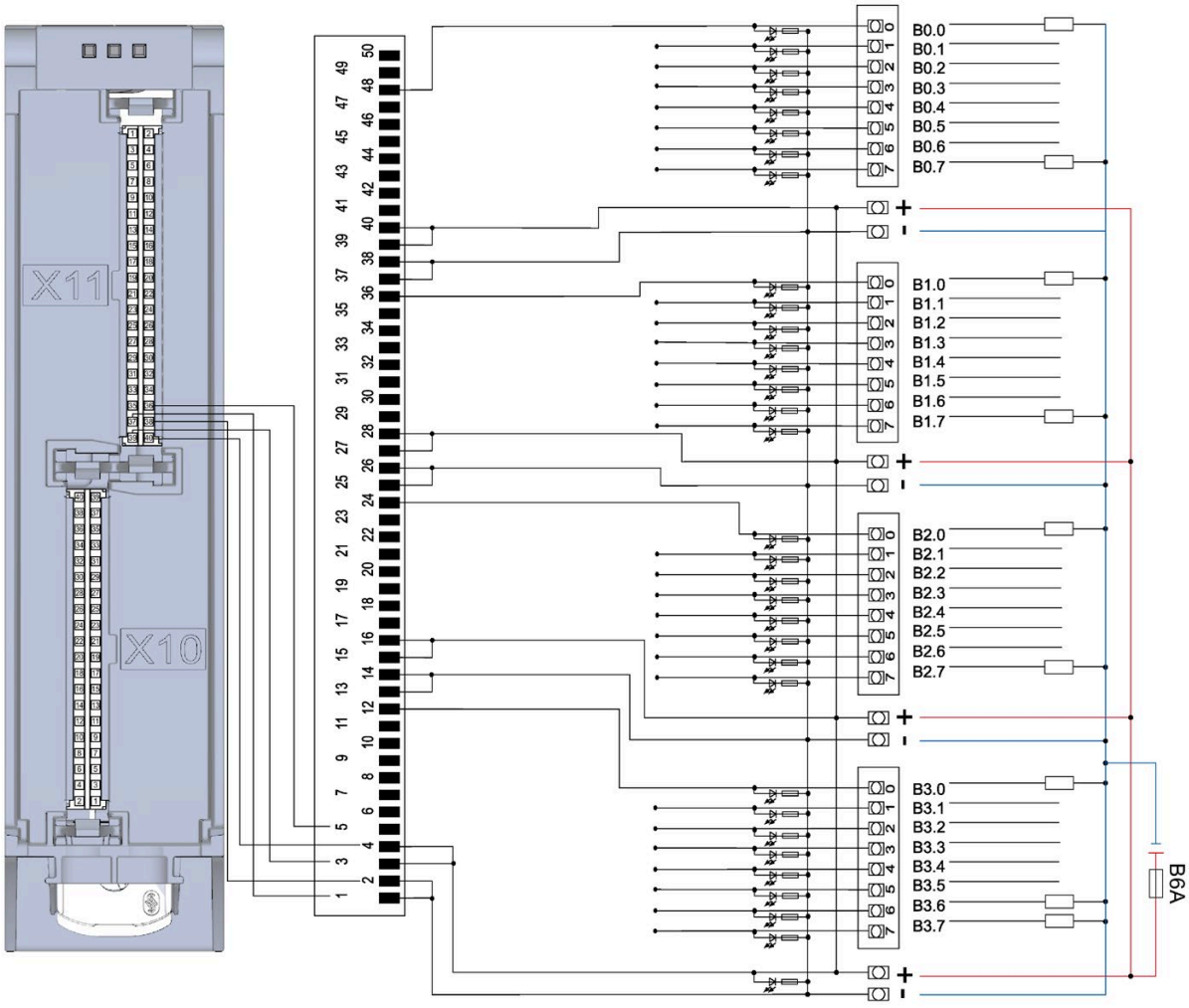

Address space

4

The module can be configured in various ways in STEP 7. Depending on the configuration, additional/different addresses are assigned in the process image output/input.

Configuration options of DQ 64x24VDC/0.3A BA

You can configure the module with STEP 7 (TIA Portal) or with a GSD file.

When you configure the module by means of the GSD file, the configurations are available under different short designations/module names.

The following configurations are possible:

Table 4- 1 Configuration options

Configuration	Short designation/module name in the GSD file	Configuration software, e.g., with STEP 7 (TIA Portal)	
		Integrated in the hardware catalog of STEP 7 (TIA Portal) as of V16 and HSP 0319	GSD file in STEP 7 (TIA Portal) V12 or higher or STEP 7 V5.5 SP3 or higher
1 x 64-channel without value status	DQ 64x24VDC/0.3A BA	X	X
8 x 8-channel without value status	DQ 64x24VDC/0.3A BA S	X (PROFINET IO only)	X (PROFINET IO only)
1 x 64-channel with value status for module-internal Shared Output (MSO) with up to 4 sub-modules	DQ 64x24VDC/0.3A BA MSO	X (PROFINET IO only)	X (PROFINET IO only)

Address space for configuration as 1 x 64-channel DQ 64x24VDC/0.3A BA

The figure below shows the address space assignment for configuration as a 1 x 64-channel module. You can freely assign the start address for the module. The addresses of the channels are derived from the start address.

"QB a" stands for module start address output byte a.

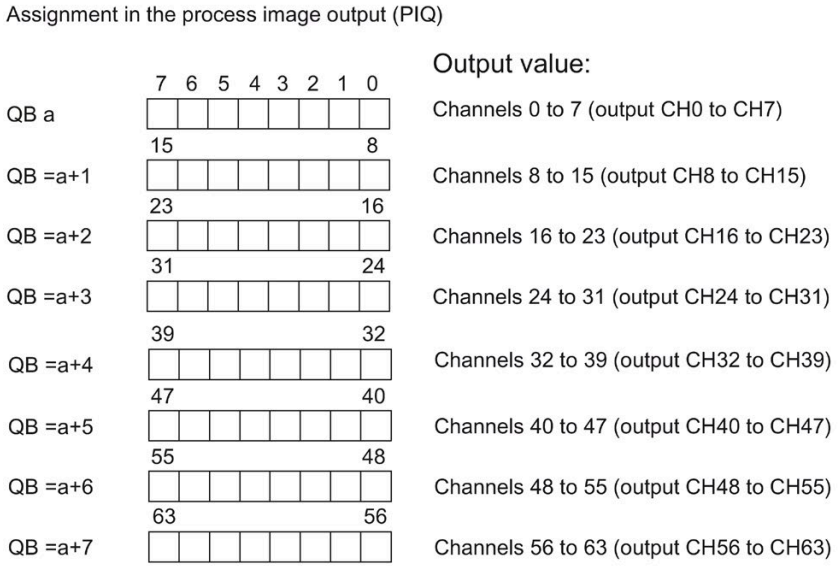

Figure 4-1 Address space for configuration as 1 x 64-channel DQ 64x24VDC/0.3A BA

Address space for configuration as 8 x 8-channel DQ 64x24VDC/0.3A BA S

For the configuration as an 8 x 8-channel module, the channels of the module are divided into multiple submodules. The submodules can be assigned to different IO controllers when the module is used in a shared device.

The number of usable IO controllers depends on the interface module used. Please observe the information in the manual for the particular interface module.

Unlike the 1 x 64-channel module configuration, each of the eight submodules has a freely assignable start address.

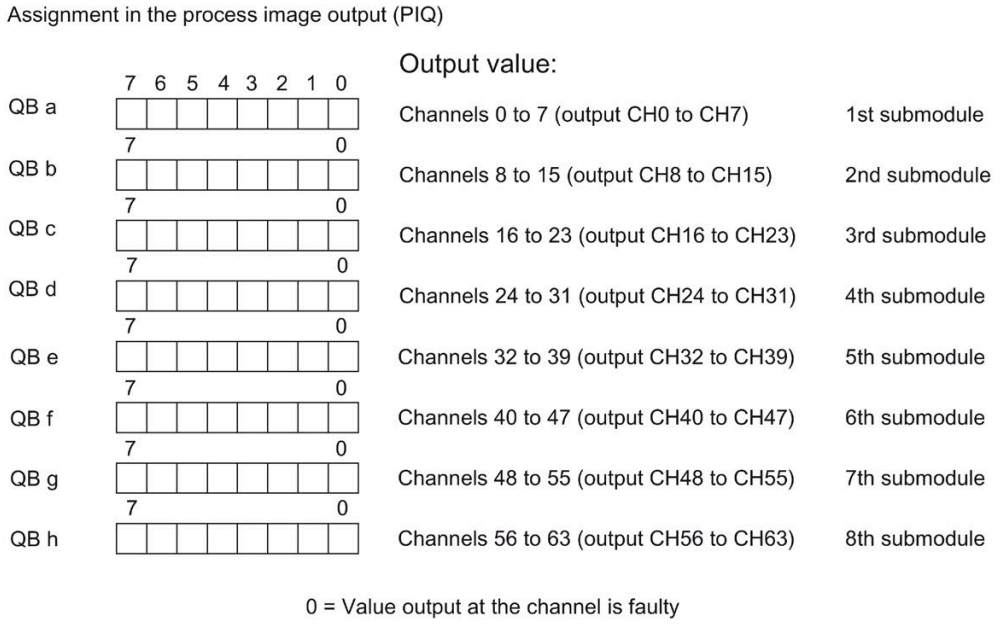

Figure 4-2 Address space for configuration as 8 x 8-channel DQ 64x24VDC/0.3A BA S

Address space for configuration as 1 x 64-channel DQ 64x24VDC/0.3A BA MSO

For the configuration as a 1 x 64-channel module (module-internal Shared Output, MSO), channels 0 to 63 of the module are copied to multiple submodules. Channels 0 to 63 are then available with identical values in various submodules. These submodules can be assigned to up to four IO controllers when the module is used in a shared device:

- The IO controller to which submodule 1 is assigned has write access to outputs 0 to 63.
- The IO controllers to which submodule 2, 3, or 4 is assigned have read access to outputs 0 to 63.

The number of usable IO controllers depends on the interface module used. Please observe the information in the manual for the particular interface module.

Value status (Quality Information, QI)

The meaning of the value status depends on the submodule involved.

For the 1st submodule (=basic submodule), the value status 1 indicates that the output value specified by the user program is actually output at the module terminal.

Possible causes for value status = 0:

- Value is incorrect, for example, because the supply voltage is missing.
- IO controller of the basic submodule is in STOP mode.

For the 2nd to 4th submodule (=MSO submodule), the value status 1 indicates that the output value specified by the user program is actually output at the module terminal.

Possible causes for value status = 0:

- Value is incorrect, for example, because the supply voltage is missing.
- IO controller of the basic submodule is in STOP mode.
- The basic submodule is not yet configured.

The figure below shows the assignment of the address space for submodules 1 and 2.

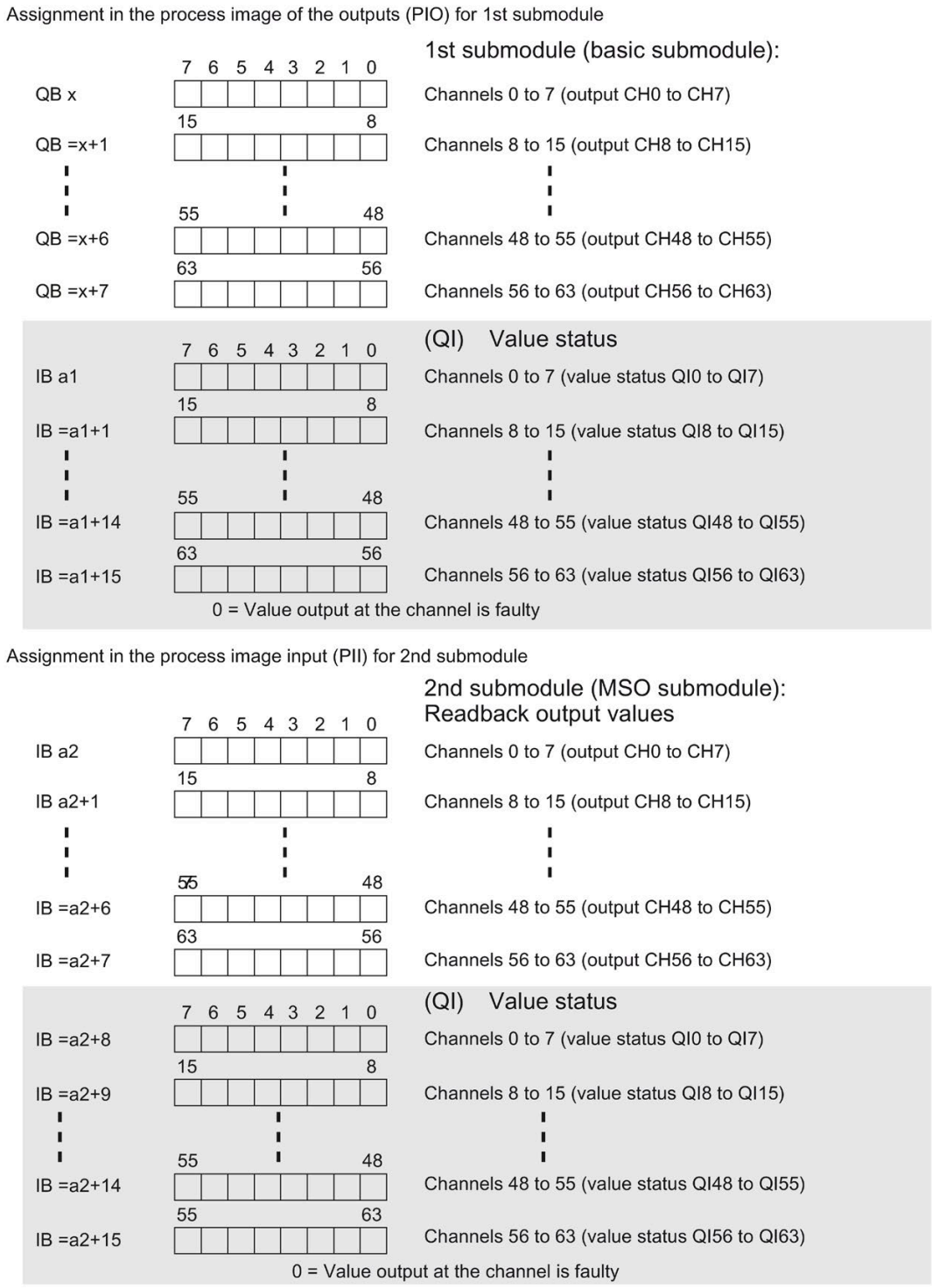

Figure 4-3 Address space for configuration as 1 x 64-channel DQ 64x24VDC/0.3A BA MSO with value status

The figure below shows the assignment of the address space with submodules 3 and 4.

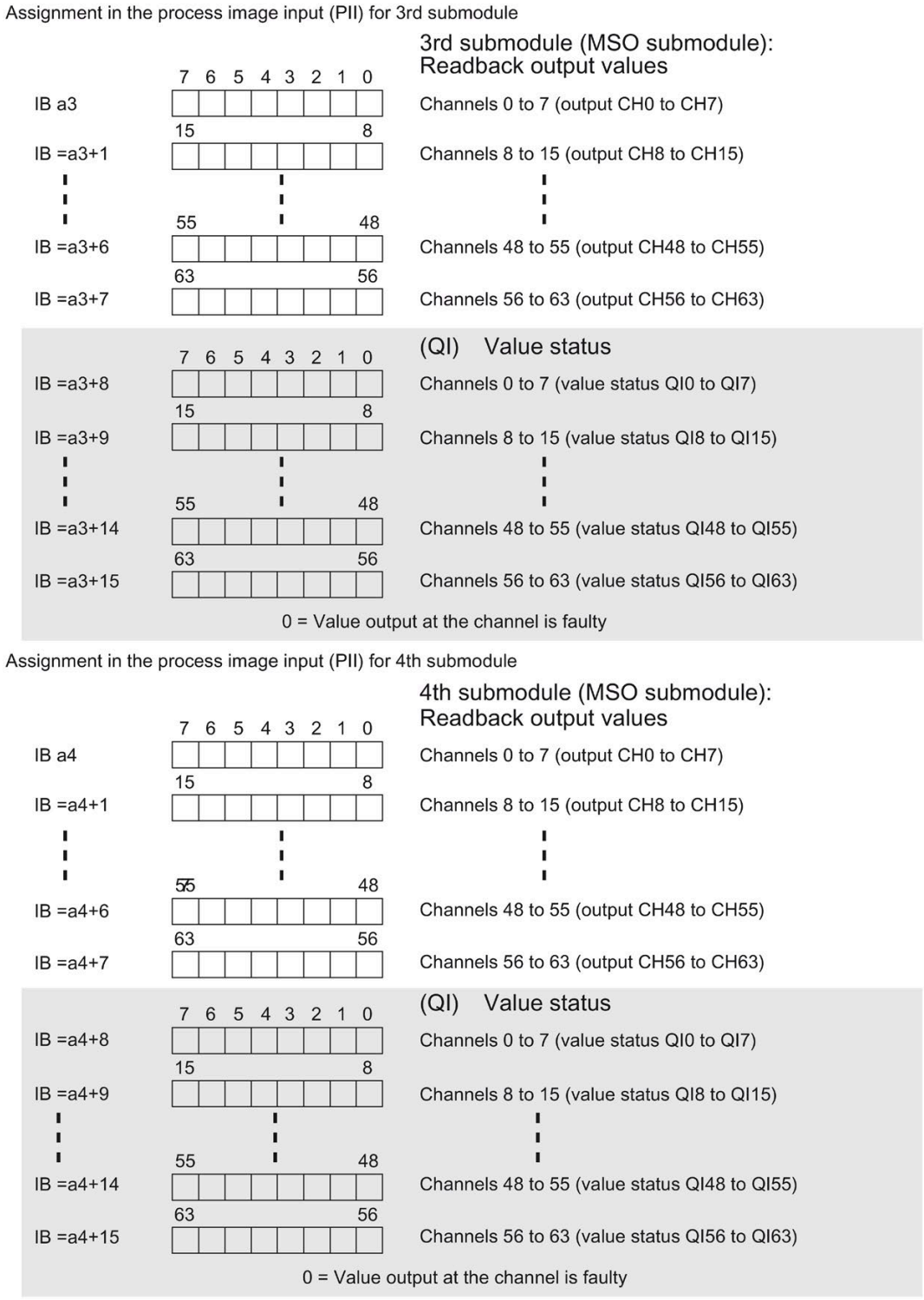

Figure 4-4 Address space for configuration as 1 x 64-channel DQ 64x24VDC/0.3A BA MSO with value status

Reference

You can find information on the Shared Input/Output (MSI/MSO) function in the section Module-Internal Shared Input/Output (MSI/MSO) of the PROFINET with STEP 7 V16 (https://support.industry.siemens.com/cs/ww/en/view/49948856) function manual.

Diagnostics alarms

5

The module has no selectable diagnostics. Diagnostics alarms, for example, cannot be output with STEP 7 (TIA Portal).

5.1 Status and error displays

LED displays

The figure below shows the LED displays (status and error displays) of DQ 64x24VDC/0.3A BA.

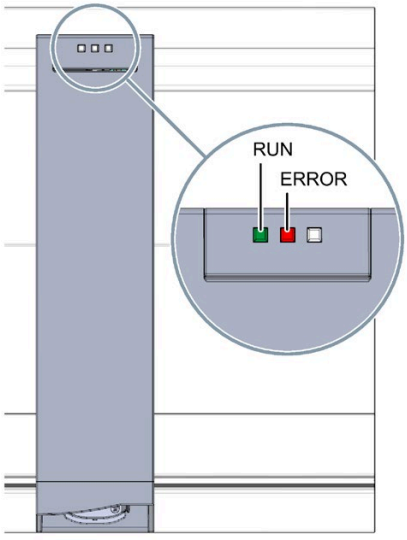

Figure 5-1 LED displays of the module DQ 64x24VDC/0.3A BA

Meaning of the LED displays

The tables below explain the meaning of the status and error displays.

LED RUN/ERROR

Table 5- 1 RUN/ERROR status and error displays

LED		Meaning	Remedy
RUN	**ERROR**		
□ Off	□ Off	Voltage missing or too low at backplane bus.	• Switch on the CPU and/or the system power supply modules. • Verify that the U connectors are inserted. • Check whether too many modules are inserted.
☼ Flashes	□ Off	Module is starting up.	---
■ On	□ Off	Module is ready.	
☼ Flashes	☼ Flashes	Hardware defective.	Replace the module.

Technical specifications

6

Technical specifications of DQ 64x24VDC/0.3A BA

The following table shows the technical specifications as of 07/2020. You can find a data sheet including daily updated technical specifications on the Internet (https://support.industry.siemens.com/cs/ww/en/ps/td).

Enter the article number or the short designation of the module on the website.

Article number	6ES7522-1BP00-0AA0
General information	
Product type designation	DQ 64x24VDC/0.3A BA
HW functional status	From FS01
Firmware version	V1.0.0
• FW update possible	Yes
Product function	
• I&M data	Yes; I&M0 to I&M3
• Isochronous mode	No
• Prioritized startup	No
Engineering with	
• STEP 7 TIA Portal configurable/integrated from version	V16 with HSP 0319 / V17
• STEP 7 configurable/integrated from version	V5.5 SP3 / -
• PROFIBUS from GSD version/GSD revision	V1.0 / V5.1
Operating mode	
• DQ	Yes
• DQ with energy-saving function	No
• PWM	No
• Cam control (switching at comparison values)	No
• Oversampling	No
• MSO	Yes
• Integrated operating cycle counter	No

Article number	6ES7522-1BP00-0AA0
Supply voltage	
Rated value (DC)	24 V
permissible range, lower limit (DC)	19.2 V
permissible range, upper limit (DC)	28.8 V
Reverse polarity protection	Yes; through internal protection with 7 A per group
Input current	
Current consumption, max.	90 mA; without load
Output voltage	
Rated value (DC)	24 V
Power	
Power available from the backplane bus	0.6 W
Power loss	
Power loss, typ.	3.5 W
Digital outputs	
Type of digital output	Transistor
Number of digital outputs	64
Current-sinking	No
Current-sourcing	Yes
Digital outputs, parameterizable	No
Short-circuit protection	Yes
Limitation of inductive shutdown voltage to	L+ (-53 V)
Controlling a digital input	Yes
Switching capacity of the outputs	
• with resistive load, max.	0.3 A
• on lamp load, max.	5 W
Load resistance range	
• lower limit	80 Ω
• upper limit	10 kΩ
Output voltage	
• for signal "1", min.	L+ (-0.8 V)
Output current	
• for signal "1" rated value	0.3 A
• for signal "1" permissible range, max.	0.3 A
• for signal "0" residual current, max.	0.5 mA
Output delay with resistive load	
• "0" to "1", max.	100 µs
• "1" to "0", max.	500 µs

Article number	6ES7522-1BP00-0AA0
Parallel switching of two outputs	
• for logic links	Yes
• for uprating	No
• for redundant control of a load	Yes
Switching frequency	
• with resistive load, max.	100 Hz
• with inductive load, max.	0.5 Hz; According to IEC 60947-5-1, DC-13
• on lamp load, max.	10 Hz
Total current of the outputs	
• Current per channel, max.	0.3 A
• Current per group, max.	2 A
• Current per module, max.	8 A
Total current of the outputs (per module)	
horizontal installation	
– up to 60 °C, max.	8 A
vertical installation	
– up to 40 °C, max.	8 A
Cable length	
• shielded, max.	1 000 m
• unshielded, max.	600 m
Interrupts/diagnostics/status information	
Diagnostics function	No
Substitute values connectable	No
Alarms	
• Diagnostic alarm	No
• Maintenance interrupt	No
Diagnostic messages	
• Monitoring the supply voltage	No
• Wire-break	No
• Short-circuit	No
• Group error	No

Article number	6ES7522-1BP00-0AA0
Diagnostics indication LED	
• RUN LED	Yes; green LED
• ERROR LED	Yes; red LED
• MAINT LED	No
• Monitoring of the supply voltage (PWR-LED)	Yes; via SIMATIC TOP connect connection module
• Channel status display	Yes; via SIMATIC TOP connect connection module
• for channel diagnostics	No
• for module diagnostics	No
Potential separation	
Potential separation channels	
• between the channels	No
• between the channels, in groups of	16; 32 when using SIMATIC TOP connect connection module
• between the channels and backplane bus	Yes
Isolation	
Isolation tested with	707 V DC (type test)
Standards, approvals, certificates	
Suitable for safety functions	No
Suitable for safety-related tripping of standard modules	No
Ambient conditions	
Ambient temperature during operation	
• horizontal installation, min.	-30 °C
• horizontal installation, max.	60 °C
• vertical installation, min.	-30 °C
• vertical installation, max.	40 °C
Altitude during operation relating to sea level	
• Installation altitude above sea level, max.	5 000 m
Dimensions	
Width	35 mm
Height	147 mm
Depth	129 mm
Weights	
Weight, approx.	270 g
Other	
Note:	Please order cable and connection modules separately

Dimensional drawing

A

The dimensional drawing of the module on the mounting rail, as well as a dimensional drawing with open front cover, are provided in this appendix. Always observe the specified dimensions for installation in cabinets, control rooms, etc.

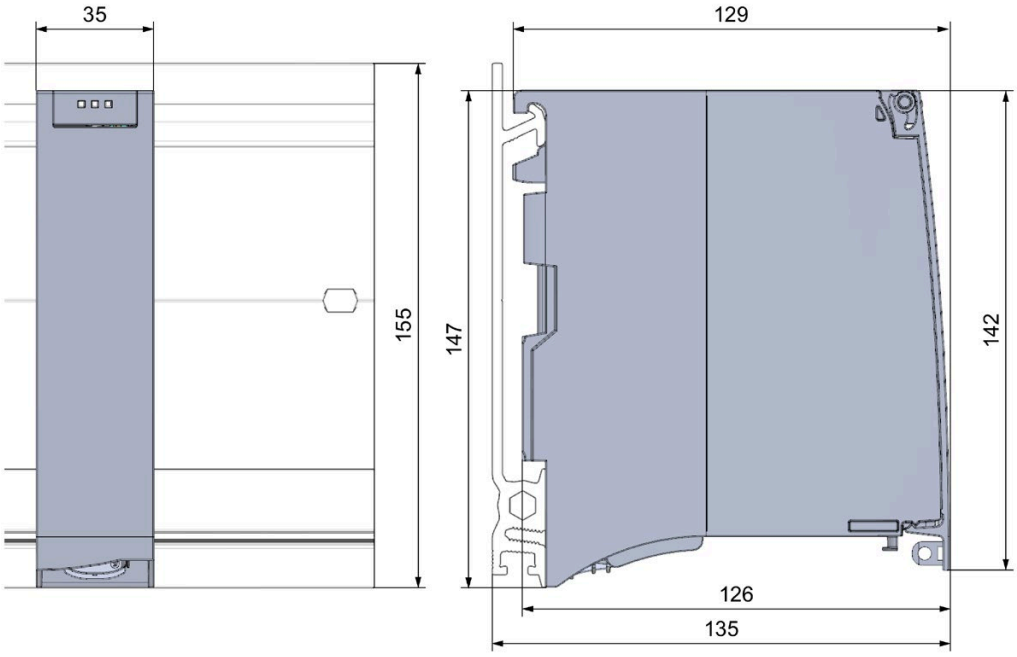

Figure A-1 Dimensional drawing of the DQ 64x24VDC/0.3A BA module

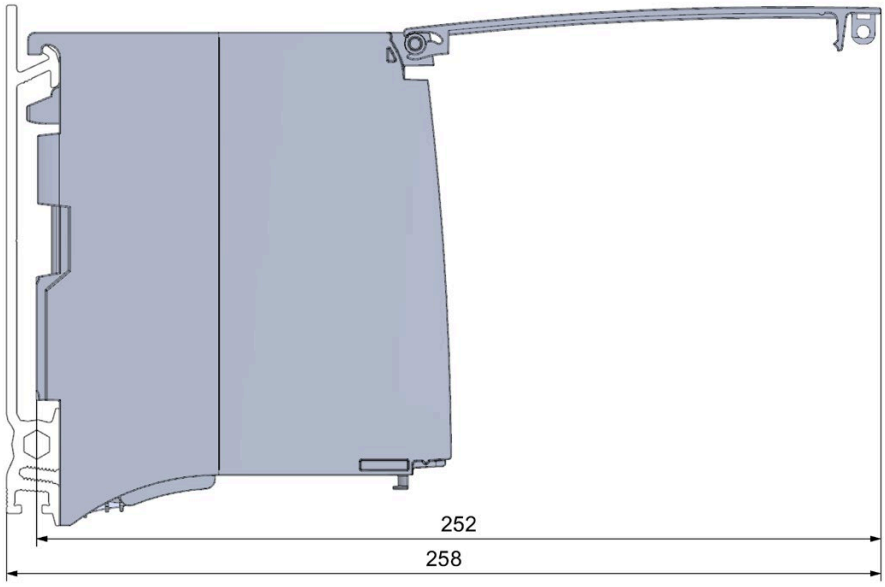

Figure A-2 Dimension drawing of the DQ 64x24VDC/0.3A BA module, side view with open front cover

SIEMENS

Manual

SIMATIC

S7-1500 / ET 200MP

Digital output module
DQ 64x24VDC/0.3A SNK BA (6ES7522-1BP50-0AA0)

Edition 07/2020

support.industry.siemens.com

SIEMENS

SIMATIC

S7-1500/ET 200MP Digital output module DQ 64x24VDC/0.3A SNK BA (6ES7522-1BP50-0AA0)

Equipment Manual

Preface

S7-1500 / ET 200MP Documentation Guide 1

Product overview 2

Wiring 3

Address space 4

Diagnostics alarms 5

Technical specifications 6

Dimensional drawing A

07/2020

A5E48024817-AA

Legal information

Warning notice system

This manual contains notices you have to observe in order to ensure your personal safety, as well as to prevent damage to property. The notices referring to your personal safety are highlighted in the manual by a safety alert symbol, notices referring only to property damage have no safety alert symbol. These notices shown below are graded according to the degree of danger.

⚠ DANGER
indicates that death or severe personal injury **will** result if proper precautions are not taken.

⚠ WARNING
indicates that death or severe personal injury **may** result if proper precautions are not taken.

⚠ CAUTION
indicates that minor personal injury can result if proper precautions are not taken.

NOTICE
indicates that property damage can result if proper precautions are not taken.

If more than one degree of danger is present, the warning notice representing the highest degree of danger will be used. A notice warning of injury to persons with a safety alert symbol may also include a warning relating to property damage.

Qualified Personnel

The product/system described in this documentation may be operated only by **personnel qualified** for the specific task in accordance with the relevant documentation, in particular its warning notices and safety instructions. Qualified personnel are those who, based on their training and experience, are capable of identifying risks and avoiding potential hazards when working with these products/systems.

Proper use of Siemens products

Note the following:

⚠ WARNING
Siemens products may only be used for the applications described in the catalog and in the relevant technical documentation. If products and components from other manufacturers are used, these must be recommended or approved by Siemens. Proper transport, storage, installation, assembly, commissioning, operation and maintenance are required to ensure that the products operate safely and without any problems. The permissible ambient conditions must be complied with. The information in the relevant documentation must be observed.

Trademarks

All names identified by ® are registered trademarks of Siemens AG. The remaining trademarks in this publication may be trademarks whose use by third parties for their own purposes could violate the rights of the owner.

Disclaimer of Liability

We have reviewed the contents of this publication to ensure consistency with the hardware and software described. Since variance cannot be precluded entirely, we cannot guarantee full consistency. However, the information in this publication is reviewed regularly and any necessary corrections are included in subsequent editions.

Siemens AG
Digital Industries
Postfach 48 48
90026 NÜRNBERG
GERMANY

A5E48024817-AA
Ⓟ 07/2020 Subject to change

Copyright © Siemens AG 2020.
All rights reserved

Preface

Purpose of the documentation

This manual supplements the system manual S7-1500/ET 200MP (https://support.industry.siemens.com/cs/ww/en/view/59191792).

Functions that relate in general to the systems are described in this system manual.

The information provided in this manual and in the system/function manuals supports you in commissioning the systems.

Conventions

The term "CPU" is used in this manual both for the CPUs of the S7-1500 automation system and for interface modules of the ET 200MP distributed I/O system.

Please also observe notes marked as follows:

Note

A note contains important information on the product described in the documentation, on the handling of the product or on the section of the documentation to which particular attention should be paid.

Security information

Siemens provides products and solutions with industrial security functions that support the secure operation of plants, systems, machines and networks.

In order to protect plants, systems, machines and networks against cyber threats, it is necessary to implement – and continuously maintain – a holistic, state-of-the-art industrial security concept. Siemens' products and solutions constitute one element of such a concept.

Customers are responsible for preventing unauthorized access to their plants, systems, machines and networks. Such systems, machines and components should only be connected to an enterprise network or the internet if and to the extent such a connection is necessary and only when appropriate security measures (e.g. firewalls and/or network segmentation) are in place.

For additional information on industrial security measures that may be implemented, please visit (https://www.siemens.com/industrialsecurity).

Siemens' products and solutions undergo continuous development to make them more secure. Siemens strongly recommends that product updates are applied as soon as they are available and that the latest product versions are used. Use of product versions that are no longer supported, and failure to apply the latest updates may increase customers' exposure to cyber threats.

To stay informed about product updates, subscribe to the Siemens Industrial Security RSS Feed visit (https://www.siemens.com/industrialsecurity).

Open Source Software

Open-source software is used in the firmware of the I/O modules. Open Source Software is provided free of charge. We are liable for the product described, including the open-source software contained in it, pursuant to the conditions applicable to the product. Siemens accepts no liability for the use of the open source software over and above the intended program sequence, or for any faults caused by modifications to the software.

For legal reasons, we are obliged to publish the original text of the license conditions and copyright notices. Please read the information relating to this on the Internet (https://support.industry.siemens.com/cs/ww/en/view/109757558).

Table of contents

Preface **3**

1 S7-1500 / ET 200MP Documentation Guide **6**

2 Product overview **8**

2.1 Properties 8

3 Wiring **10**

3.1 Wiring and block diagram 10

3.2 Terminal assignment X10 and X11 11

3.3 Connecting a module with a connection module 14

3.4 Wiring of the module 15

3.5 Fuse 17

4 Address space **18**

5 Diagnostics alarms **25**

5.1 Status and error displays 25

6 Technical specifications **27**

A Dimensional drawing **31**

S7-1500 / ET 200MP Documentation Guide

1

The documentation for the SIMATIC S7-1500 automation system and the SIMATIC ET 200MP distributed I/O system is arranged into three areas.
This arrangement enables you to access the specific content you require.

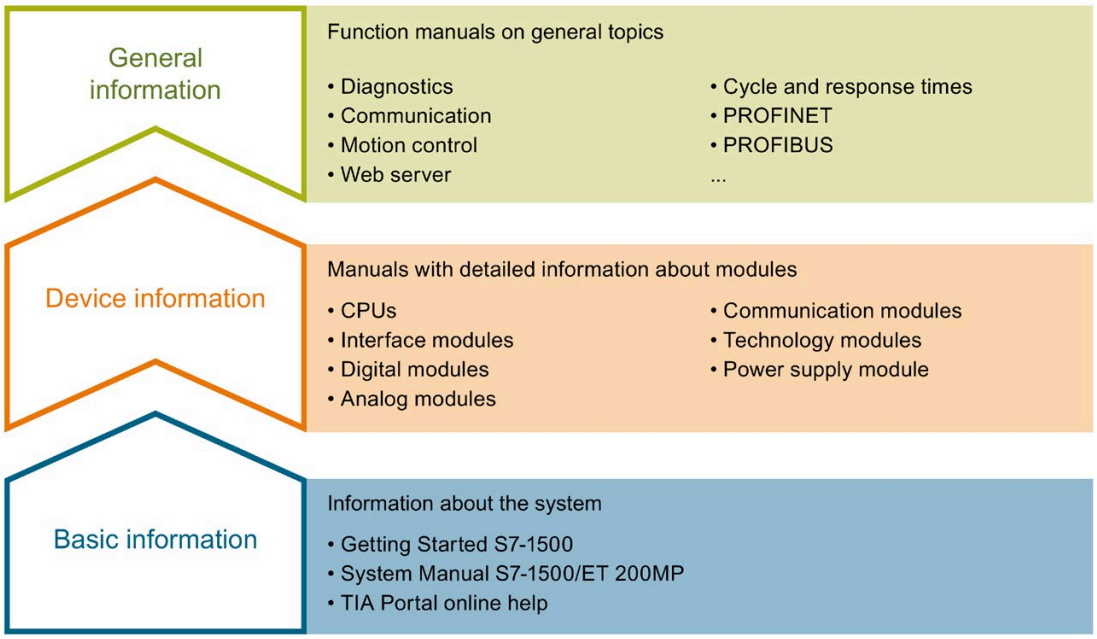

Basic information

The System Manual and Getting Started describe in detail the configuration, installation, wiring and commissioning of the SIMATIC S7-1500 and ET 200MP systems. The STEP 7 online help supports you in the configuration and programming.

Device information

Product manuals contain a compact description of the module-specific information, such as properties, wiring diagrams, characteristics and technical specifications.

General information

The function manuals contain detailed descriptions on general topics regarding the SIMATIC S7-1500 and ET 200MP systems, e.g. diagnostics, communication, motion control, Web server, OPC UA.

You can download the documentation free of charge from the Internet (https://support.industry.siemens.com/cs/ww/en/view/109742691).

Changes and supplements to the manuals are documented in a Product Information.

You can download the product information free of charge from the Internet (https://support.industry.siemens.com/cs/us/en/view/68052815).

Manual Collection S7-1500/ET 200MP

The Manual Collection contains the complete documentation on the SIMATIC S7-1500 automation system and the ET 200MP distributed I/O system gathered together in one file.

You can find the Manual Collection on the Internet (https://support.industry.siemens.com/cs/ww/en/view/86140384).

SIMATIC S7-1500 comparison list for programming languages

The comparison list contains an overview of which instructions and functions you can use for which controller families.

You can find the comparison list on the Internet (https://support.industry.siemens.com/cs/ww/en/view/86630375).

"mySupport"

With "mySupport", your personal workspace, you make the best out of your Industry Online Support.

In "mySupport", you can save filters, favorites and tags, request CAx data and compile your personal library in the Documentation area. In addition, your data is already filled out in support requests and you can get an overview of your current requests at any time.

You must register once to use the full functionality of "mySupport".

You can find "mySupport" on the Internet (https://support.industry.siemens.com/My/ww/en).

Application examples

The application examples support you with various tools and examples for solving your automation tasks. Solutions are shown in interplay with multiple components in the system - separated from the focus on individual products.

You will find the application examples on the Internet (https://support.industry.siemens.com/sc/ww/en/sc/2054).

Product overview

2

2.1 Properties

Article number

6ES7522-1BP50-0AA0

View of the module

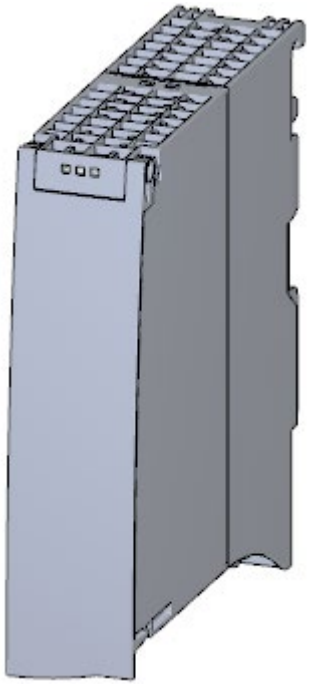

Figure 2-1 View of the DQ 64x24VDC/0.3A SNK BA module

Properties

The digital module has the following technical properties:

- 64 digital outputs, electrically isolated in 4 groups of 16
  - M switching (sinking)
- Rated output voltage 24 V DC
- Rated output current 0.3 A per channel
- Suitable for solenoid valves, DC contactors, and indicator lights

The module supports the following functions:

Table 2- 1 Version dependencies of the module functions

Function	Firmware version of the module	Configuration software	
		STEP 7 (TIA Portal) as of V16 and HSP 0319	GSD file in STEP 7 (TIA Portal) V12 or higher, or STEP 7 V5.5 SP3 or higher
Firmware update	V1.0.0 or higher	X	--- / X
Identification data I&M0 to I&M3	V1.0.0 or higher	X	X
Module-internal Shared Output (MSO)	V1.0.0 or higher	X (PROFINET IO only)	X (PROFINET IO only)
Configurable submodules / submodules for Shared Device	V1.0.0 or higher	X (PROFINET IO only)	X (PROFINET IO only)

You can configure the module with STEP 7 (TIA Portal) and with a GSD file.

Accessories

The following accessories are supplied with the module and can be ordered as spare parts:

- U connector
- Universal front door with the article number: 6ES7 591-8AA00-0AA0

You can find additional information in the system manual S7-1500/ET 200MP (https://support.industry.siemens.com/cs/ww/en/view/59191792).

Other components

The following must be ordered separately:

- SIMATIC TOP connect connection module
- Pre-fabricated connecting cable with IDC connectors

For additional information, see section Connecting a module with a connection module (Page 14)

Wiring

3

3.1 Wiring and block diagram

This section contains the block diagram of the module and the terminal assignment.

Wiring and block diagram

The following figure shows the terminal assignment and the assignment of the channels.

- Outputs: Channel 0 to 31 to connector X10
- Outputs: Channel 32 to 63 to connector X11

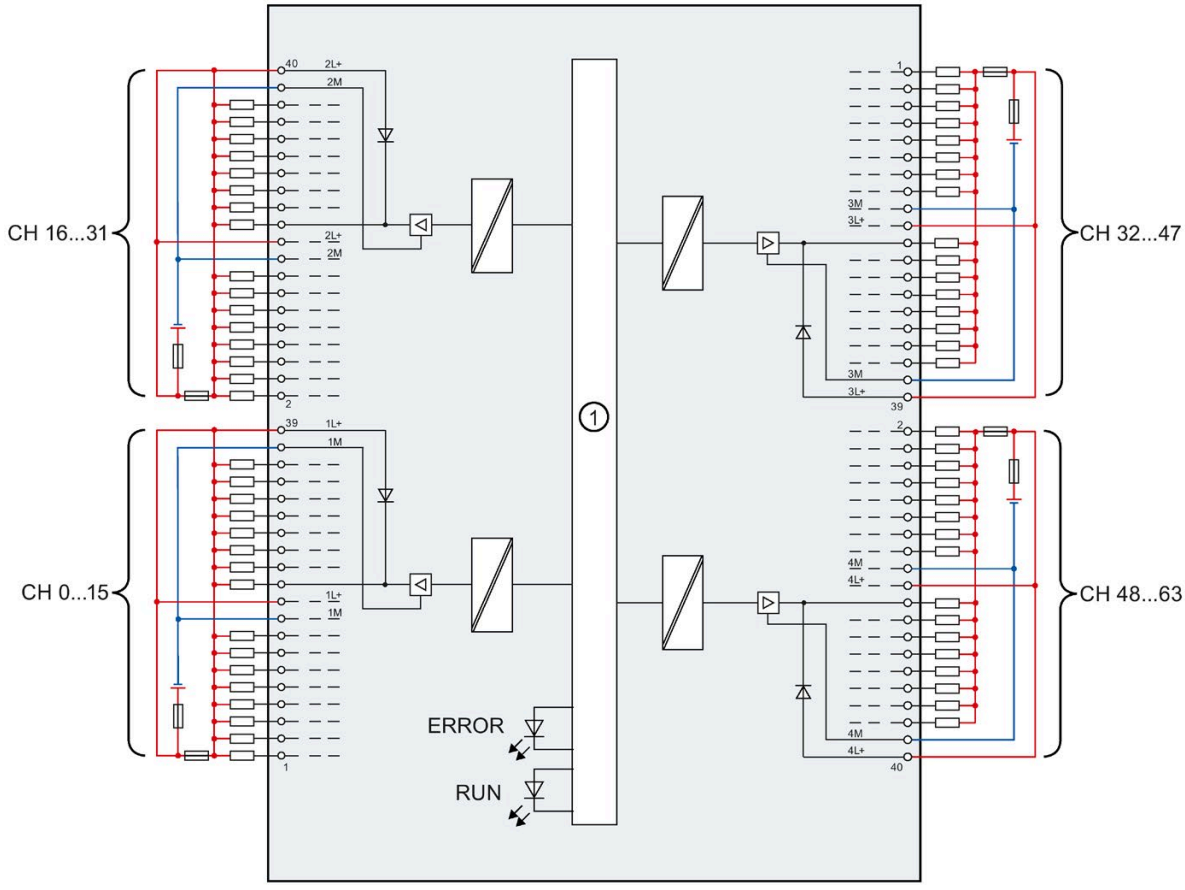

① Backplane bus interface

CHx	Channel
RUN	Status display LED (green)
ERROR	Error display LED (red)

Figure 3-1 Block diagram and terminal assignment

3.2 Terminal assignment X10 and X11.

The following figure shows the assignment of the channels to the addresses.

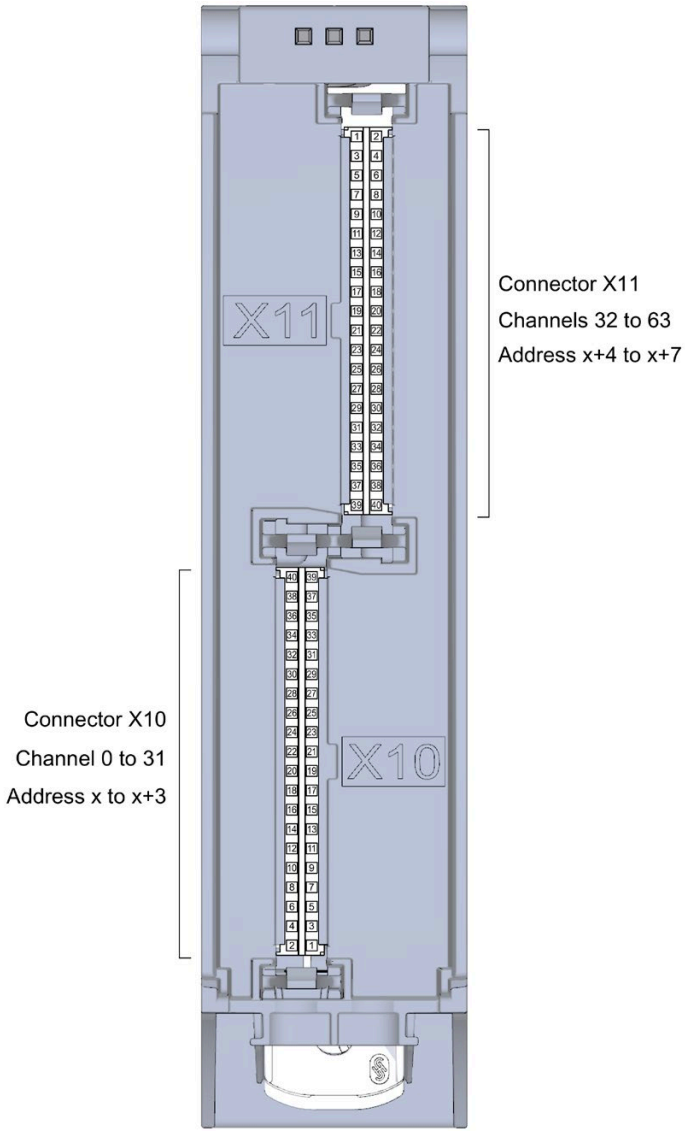

Figure 3-2 Front view of the module without front door

Terminal and address assignment

For connecting sensors or actuators, we recommend using the SIMATIC TOP connect pre-assembled connecting cables and the SIMATIC TOP connect connection modules. However, if you choose another wiring option, you will need the following tables.

Table 3- 1 Assignment for connector X10 of the module

Assignment for outputs to X10					
Terminal	**Channel**	**Address**	**Terminal**	**Channel**	**Address**
40	2L+	---	**39**	1L+	---
38	2M	---	**37**	1M	---
36	Channel 31	x+3.7	**35**	Channel 15	x+1.7
34	Channel 30	x+3.6	**33**	Channel 14	x+1.6
32	Channel 29	x+3.5	**31**	Channel 13	x+1.5
30	Channel 28	x+3.4	**29**	Channel 12	x+1.4
28	Channel 27	x+3.3	**27**	Channel 11	x+1.3
26	Channel 26	x+3.2	**25**	Channel 10	x+1.2
24	Channel 25	x+3.1	**23**	Channel 9	x+1.1
22	Channel 24	x+3.0	**21**	Channel 8	x+1.0
20	2L+	---	**19**	1L+	---
18	2M	---	**17**	1M	---
16	Channel 23	x+2.7	**15**	Channel 7	x.7
14	Channel 22	x+2.6	**13**	Channel 6	x.6
12	Channel 21	x+2.5	**11**	Channel 5	x.5
10	Channel 20	x+2.4	**9**	Channel 4	x.4
8	Channel 19	x+2.3	**7**	Channel 3	x.3
6	Channel 18	x+2.2	**5**	Channel 2	x.2
4	Channel 17	x+2.1	**3**	Channel 1	x.1
2	Channel 16	x+2.0	**1**	Channel 0	x.0

Table 3- 2 Assignment for the connector X11 of the module

Assignment for outputs to X11					
Terminal	**Channel /**	**Address**	**Terminal**	**Channel / address**	**Address**
1	Channel 32	x+4.0	**2**	Channel 48	x+6.0
3	Channel 33	x+4.1	**4**	Channel 49	x+6.1
5	Channel 34	x+4.2	**6**	Channel 50	x+6.2
7	Channel 35	x+4.3	**8**	Channel 51	x+6.3
9	Channel 36	x+4.4	**10**	Channel 52	x+6.4
11	Channel 37	x+4.5	**12**	Channel 53	x+6.5
13	Channel 38	x+4.6	**14**	Channel 54	x+6.6
15	Channel 39	x+4.7	**16**	Channel 55	x+6.7
17	3M	---	**18**	4M	---
19	3L+	---	**20**	4L+	---
21	Channel 40	x+5.0	**22**	Channel 56	x+7.0
23	Channel 41	x+5.1	**24**	Channel 57	x+7.1
25	Channel 42	x+5.2	**26**	Channel 58	x+7.2
27	Channel 43	x+5.3	**28**	Channel 59	x+7.3
29	Channel 44	x+5.4	**30**	Channel 60	x+7.4
31	Channel 45	x+5.5	**32**	Channel 61	x+7.5
33	Channel 46	x+5.6	**34**	Channel 62	x+7.6
35	Channel 47	x+5.7	**36**	Channel 63	x+7.7
37	3M	---	**38**	4M	---
39	3L+	---	**40**	4L+	---

3.3 Connecting a module with a connection module

Component for connecting

To connect actuators, you need 2 connection modules per module. The connection modules are connected to the module with pre-assembled connecting cables.

You can find additional information on the components of the SIMATIC TOP connect system cabling, e.g. for connecting connection modules, in the equipment manual SIMATIC TOP connect for S7-1500 and ET 200MP (https://support.industry.siemens.com/cs/ww/en/view/95924607).

Note

Common supply

If you use the listed SIMATIC TOP connect connection modules, then all 32 channels of the connection module have a common supply. This means that 2 groups of 16 channels each are supplied by common potential.

You can find the required components in the tables below.

Table 3- 3 SIMATIC TOP connect connection module

Components	Type	Description	Connection technology	Article number	Delivery quantity
Connection modules for digital outputs	TP1	1-wire connection, without LED	- Screw terminals - Push-in system	6ES7924-2AA20-0AA0 6ES7924-2AA20-0AC0	Pack of 1 Pack of 1
		1-wire connection, with LED	- Screw terminals - Push-in system	6ES7924-2AM20-0BA0 6ES7924-2AM20-0BC0	Pack of 1 Pack of 1
	TP3	3-wire connection, without LED	- Screw terminals - Push-in system	6ES7924-2CA20-0AA0 6ES7924-2CA20-0AC0	Pack of 1 Pack of 1

Table 3- 4 Connecting cables SIMATIC TOP connect

Components	Length	Article number	Delivery quantity
Pre-assembled connecting cable with IDC connector an both ends • IDC connector 40-pin for the I/O module • IDC connector 50-pin for the SIMATIC TOP connect connection module	1.0 m	6ES7923-5BB00-0GB0	Pack of 1
	2.0 m	6ES7923-5BC00-0GB0	Pack of 1
	2.5 m	6ES7923-5BC50-0GB0	Pack of 1
	3.0 m	6ES7923-5BD00-0GB0	Pack of 1

Support for selecting hardware components

We recommend you use the TIA Selection Tool for planning your project. The TIA Selection Tool is available free of charge as a desktop version for download or as a cloud version, refer to the Internet (https://new.siemens.com/global/en/products/automation/topic-areas/tia/tia-selection-tool.html).

3.4 Wiring of the module

Requirement

- The I/O modules are installed on the mounting rail.
- The supply voltage of the station is switched off.

Procedure

1. Plug the two SIMATIC TOP connect connecting cables with the **40-pin** IDC connector into X10 and X11.

   Note when plugging:

   – ① The nob on the left edge of connector X11

   – ② The nob on the right edge of connector X10

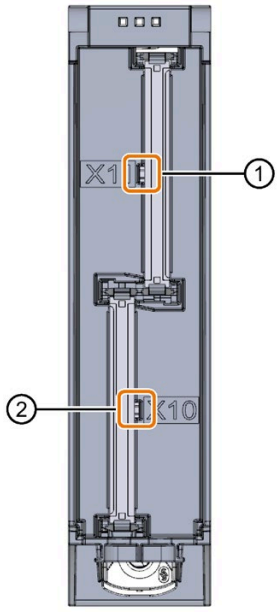

Figure 3-3 Connect the SIMATIC TOP connect 40-pin connecting cable to the module

2. Guide the SIMATIC TOP connect connecting cables down to the module.
3. Guide a cable tie around the module at the fixing points and connect the SIMATIC TOP connect cables.

4. Tighten the cable tie for the strain relief.

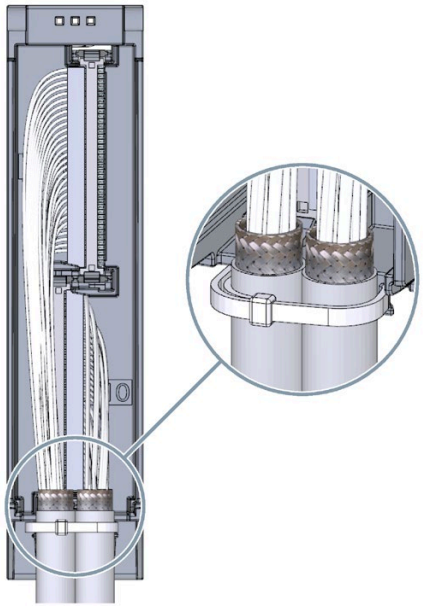

Figure 3-4 Fastening the cable tie for the strain relief

5. Plug the SIMATIC TOP connect connecting cables with the **50-pin** IDC connector into the SIMATIC TOP connect connection module.

Additional information

You can find out how to wire the SIMATIC TOP connect connection module in the equipment manual SIMATIC TOP connect for S7-1500 and ET 200MP (https://support.industry.siemens.com/cs/ww/en/view/95924607).

3.5 Fuse

Miniature circuit breaker

The supply lines, max. 16 outputs of a group, are to be protected with a 4 A miniature circuit breaker with tripping characteristic B or C.

The connection module is to be protected with a 6 A miniature circuit breaker with tripping characteristic B.

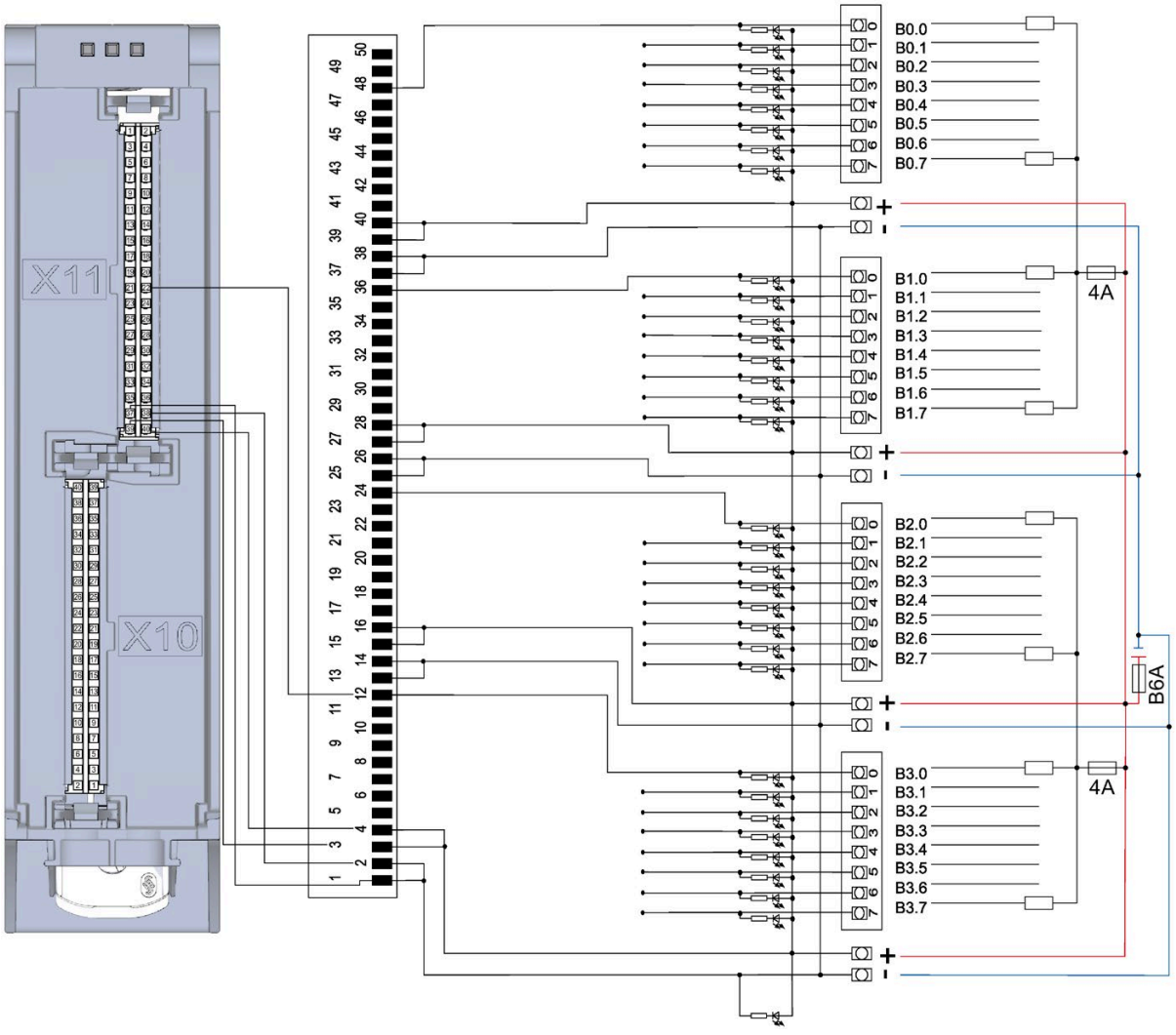

Address space

4

The module can be configured in various ways in STEP 7. Depending on the configuration, additional/different addresses are assigned in the process image output/input.

Configuration options of DQ 64x24VDC/0.3A SNK BA

You can configure the module with STEP 7 (TIA Portal) or with a GSD file.

When you configure the module by means of the GSD file, the configurations are available under different short designations/module names.

The following configurations are possible:

Table 4- 1 Configuration options

Configuration	Short designation/module name in the GSD file	Configuration software, e.g., with STEP 7 (TIA Portal)	
		Integrated in the hardware catalog of STEP 7 (TIA Portal) as of V16 and HSP 0319	GSD file in STEP 7 (TIA Portal) V12 or higher or STEP 7 V5.5 SP3 or higher
1 x 64-channel without value status	DQ 64x24VDC/0.3A SNK BA	X	X
8 x 8-channel without value status	DQ 64x24VDC/0.3A BA SNK S	X (PROFINET IO only)	X (PROFINET IO only)
1 x 64-channel with value status for module-internal Shared Output (MSO) with up to 4 submodules	DQ 64x24VDC/0.3A BA SNK MSO	X (PROFINET IO only)	X (PROFINET IO only)

Address space for configuration as 1 x 64-channel DQ 64x24VDC/0.3A SNK BA

The figure below shows the address space assignment for configuration as a 1 x 64-channel module. You can freely assign the start address for the module. The addresses of the channels are derived from the start address.

"QB a" stands for module start address output byte a.

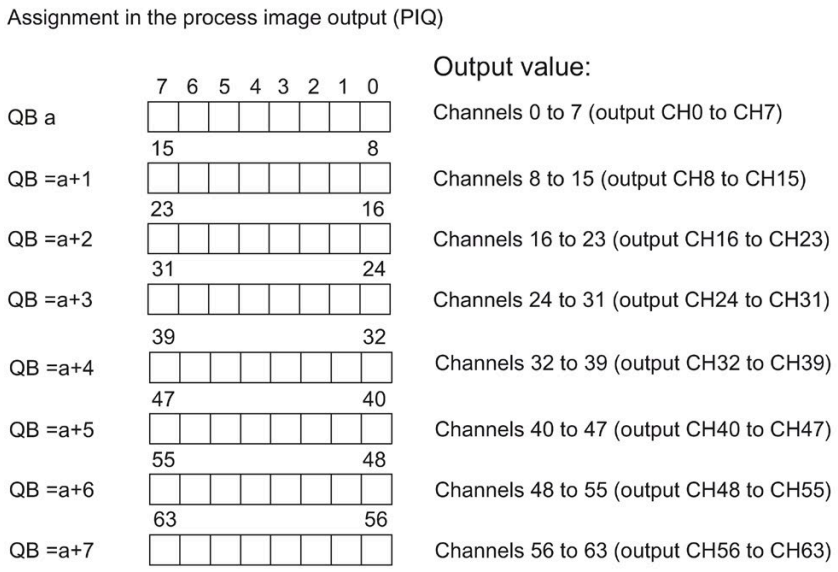

Figure 4-1 Address space for configuration as 1 x 64-channel DQ 64x24VDC/0.3A SNK BA

Address space for configuration as 8 x 8-channel DQ 64x24VDC/0.3A SNK BA S

For the configuration as an 8 x 8-channel module, the channels of the module are divided into multiple submodules. The submodules can be assigned to different IO controllers when the module is used in a shared device.

The number of usable IO controllers depends on the interface module used. Please observe the information in the manual for the particular interface module.

Unlike the 1 x 64-channel module configuration, each of the eight submodules has a freely assignable start address.

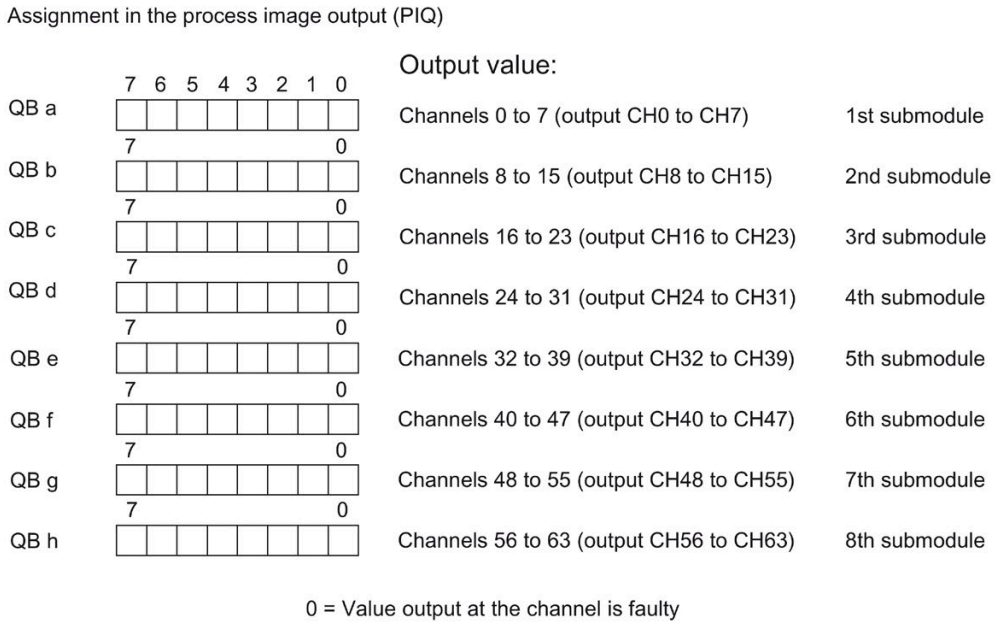

Figure 4-2 Address space for configuration as 8 x 8-channel DQ 64x24VDC/0.3A SNK BA S

Address space for configuration as 1 x 64-channel DQ 64x24VDC/0.3A SNK BA MSO

For the configuration as a 1 x 64-channel module (module-internal Shared Output, MSO), channels 0 to 63 of the module are copied to multiple submodules. Channels 0 to 63 are then available with identical values in various submodules. These submodules can be assigned to up to four IO controllers when the module is used in a shared device:

- The IO controller to which submodule 1 is assigned has write access to outputs 0 to 63.
- The IO controllers to which submodule 2, 3, or 4 is assigned have read access to outputs 0 to 63.

The number of usable IO controllers depends on the interface module used. Please observe the information in the manual for the particular interface module.

Value status (Quality Information, QI)

The meaning of the value status depends on the submodule involved.

For the 1st submodule (=basic submodule), the value status 1 indicates that the output value specified by the user program is actually output at the module terminal.

Possible causes for value status = 0: IO controller of the basic submodule is in STOP mode.

For the 2nd to 4th submodule (=MSO submodule), the value status 1 indicates that the output value specified by the user program is actually output at the module terminal.

Possible causes for value status = 0:

- IO controller of the basic submodule is in STOP mode.
- The basic submodule is not yet configured.

The figure below shows the assignment of the address space for submodules 1 and 2.

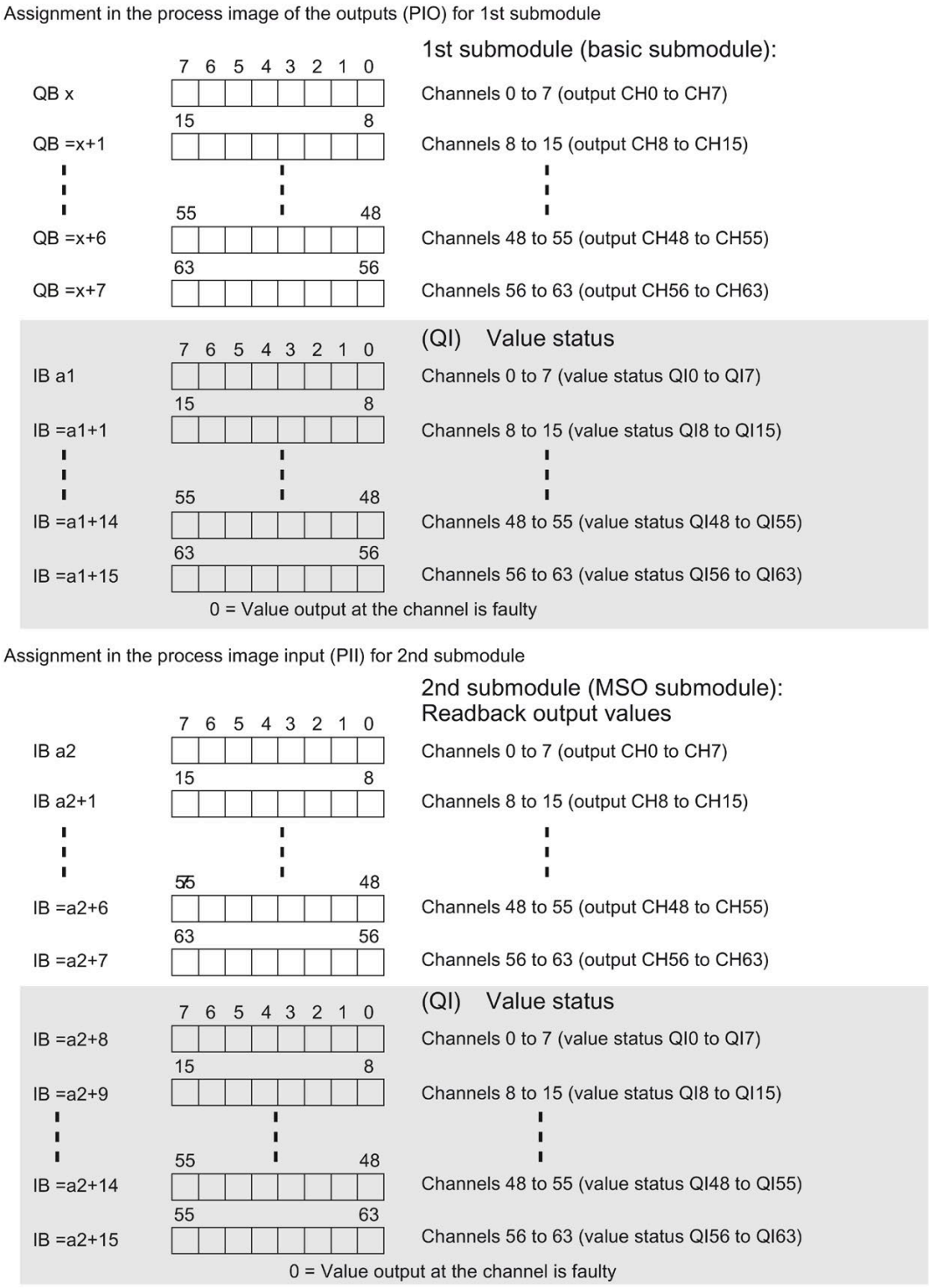

Figure 4-3 Address space for configuration as 1 x 64-channel DQ 64x24VDC/0.3A SNK BA MSO with value status

The figure below shows the assignment of the address space with submodules 3 and 4.

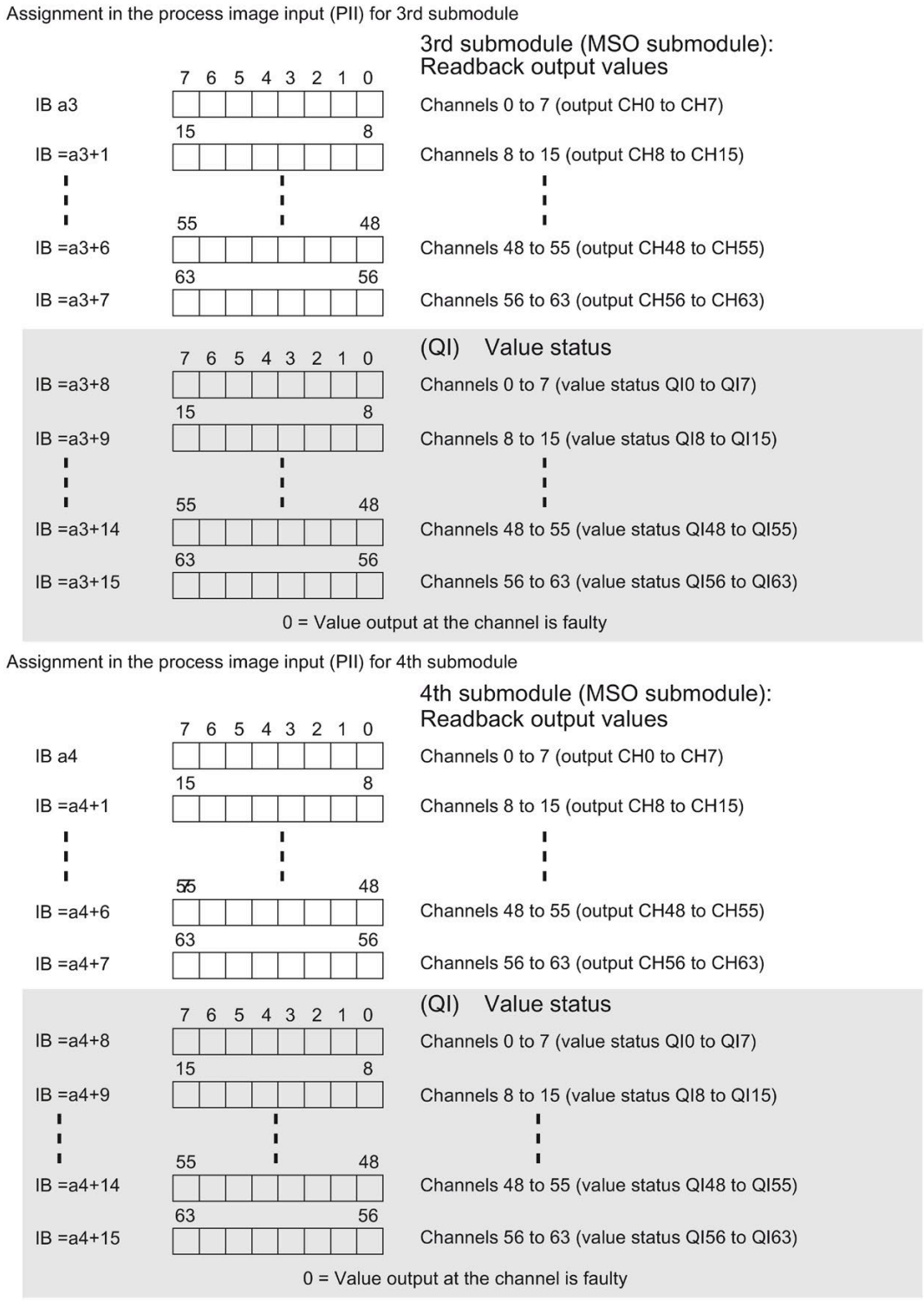

Figure 4-4 Address space for configuration as 1 x 64-channel DQ 64x24VDC/0.3A SNK BA MSO with value status

Reference

You can find information on the Shared Input/Output (MSI/MSO) function in the section Module-Internal Shared Input/Output (MSI/MSO) of the PROFINET with STEP 7 V16 (https://support.industry.siemens.com/cs/ww/en/view/49948856) function manual.

Diagnostics alarms

5

The module has no selectable diagnostics. Diagnostics alarms, for example, cannot be output with STEP 7 (TIA Portal).

5.1 Status and error displays

LED displays

The figure below shows the LED displays (status and error displays) of DQ 64x24VDC/0.3A SNK BA.

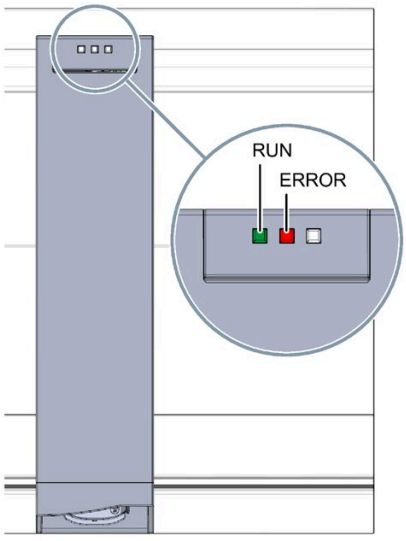

Figure 5-1 LED displays of the DQ 64x24VDC/0.3A SNK BA module

Meaning of the LED displays

The tables below explain the meaning of the status and error displays.

LED RUN/ERROR

Table 5- 1 RUN/ERROR status and error displays

LED		Meaning	Remedy
RUN	**ERROR**		
□ Off	□ Off	Voltage missing or too low at backplane bus.	• Switch on the CPU and/or the system power supply modules. • Verify that the U connectors are inserted. • Check whether too many modules are inserted.
☼ Flashes	□ Off	Module is starting up.	---
■ On	□ Off	Module is ready.	
☼ Flashes	☼ Flashes	Hardware defective.	Replace the module.

Technical specifications

6

Technical specifications of DQ 64x24VDC/0.3A SNK BA

The following table shows the technical specifications as of 07/2020. You can find a data sheet including daily updated technical specifications on the Internet (https://support.industry.siemens.com/cs/ww/en/ps/td).

Enter the article number or the short designation of the module on the website.

Article number	6ES7522-1BP50-0AA0
General information	
Product type designation	DQ 64x24VDC/0.3A BA
HW functional status	From FS01
Firmware version	V1.0.0
• FW update possible	Yes
Product function	
• I&M data	Yes; I&M0 to I&M3
• Isochronous mode	No
• Prioritized startup	No
Engineering with	
• STEP 7 TIA Portal configurable/integrated from version	V16 with HSP 0319 / V17
• STEP 7 configurable/integrated from version	V5.5 SP3 / -
• PROFIBUS from GSD version/GSD revision	V1.0 / V5.1
Operating mode	
• DQ	Yes
• DQ with energy-saving function	No
• PWM	No
• Cam control (switching at comparison values)	No
• Oversampling	No
• MSO	Yes
• Integrated operating cycle counter	No

Article number	6ES7522-1BP50-0AA0
Supply voltage	
Rated value (DC)	24 V
permissible range, lower limit (DC)	19.2 V
permissible range, upper limit (DC)	28.8 V
Reverse polarity protection	Yes; Through internal protection with 4 A per group
Input current	
Current consumption, max.	90 mA; without load
Output voltage	
Rated value (DC)	24 V
Power	
Power available from the backplane bus	0.6 W
Power loss	
Power loss, typ.	4.7 W
Digital outputs	
Type of digital output	Transistor
Number of digital outputs	64
Current-sinking	Yes
Current-sourcing	No
Digital outputs, parameterizable	No
Short-circuit protection	No; external fusing necessary, max. 4 A per group, tripping characteristic type B or C
Limitation of inductive shutdown voltage to	L+ (-53 V)
Controlling a digital input	Yes
Switching capacity of the outputs	
• with resistive load, max.	0.3 A
• on lamp load, max.	5 W
Load resistance range	
• lower limit	80 Ω
• upper limit	10 kΩ
Output voltage	
• for signal "1", min.	M+ (0.5 V)
Output current	
• for signal "1" rated value	0.3 A
• for signal "1" permissible range, max.	0.3 A
• for signal "0" residual current, max.	0.5 mA
Output delay with resistive load	
• "0" to "1", max.	100 µs
• "1" to "0", max.	500 µs

Article number	6ES7522-1BP50-0AA0
Parallel switching of two outputs	
• for logic links	Yes
• for uprating	No
• for redundant control of a load	Yes
Switching frequency	
• with resistive load, max.	100 Hz
• with inductive load, max.	0.5 Hz; According to IEC 60947-5-1, DC-13
• on lamp load, max.	10 Hz
Total current of the outputs	
• Current per channel, max.	0.3 A
• Current per group, max.	2 A
• Current per module, max.	8 A
Total current of the outputs (per module)	
horizontal installation	
– up to 60 °C, max.	8 A
vertical installation	
– up to 40 °C, max.	8 A
Cable length	
• shielded, max.	1 000 m
• unshielded, max.	600 m
Interrupts/diagnostics/status information	
Diagnostics function	No
Substitute values connectable	No
Alarms	
• Diagnostic alarm	No
• Maintenance interrupt	No
Diagnostic messages	
• Monitoring the supply voltage	No
• Wire-break	No
• Short-circuit	No
• Group error	No

Article number	6ES7522-1BP50-0AA0
Diagnostics indication LED	
• RUN LED	Yes; green LED
• ERROR LED	Yes; red LED
• MAINT LED	No
• Monitoring of the supply voltage (PWR-LED)	Yes; via SIMATIC TOP connect connection module
• Channel status display	Yes; via SIMATIC TOP connect connection module
• for channel diagnostics	No
• for module diagnostics	No
Potential separation	
Potential separation channels	
• between the channels	No
• between the channels, in groups of	16; 32 when using SIMATIC TOP connect connection module
• between the channels and backplane bus	Yes
Isolation	
Isolation tested with	707 V DC (type test)
Standards, approvals, certificates	
Suitable for safety functions	No
Suitable for safety-related tripping of standard modules	No
Ambient conditions	
Ambient temperature during operation	
• horizontal installation, min.	-30 °C
• horizontal installation, max.	60 °C
• vertical installation, min.	-30 °C
• vertical installation, max.	40 °C
Altitude during operation relating to sea level	
• Installation altitude above sea level, max.	5 000 m
Dimensions	
Width	35 mm
Height	147 mm
Depth	129 mm
Weights	
Weight, approx.	270 g
Other	
Note:	Please order cable and connection modules separately

Dimensional drawing

A

The dimensional drawing of the module on the mounting rail, as well as a dimensional drawing with open front cover, are provided in this appendix. Always observe the specified dimensions for installation in cabinets, control rooms, etc.

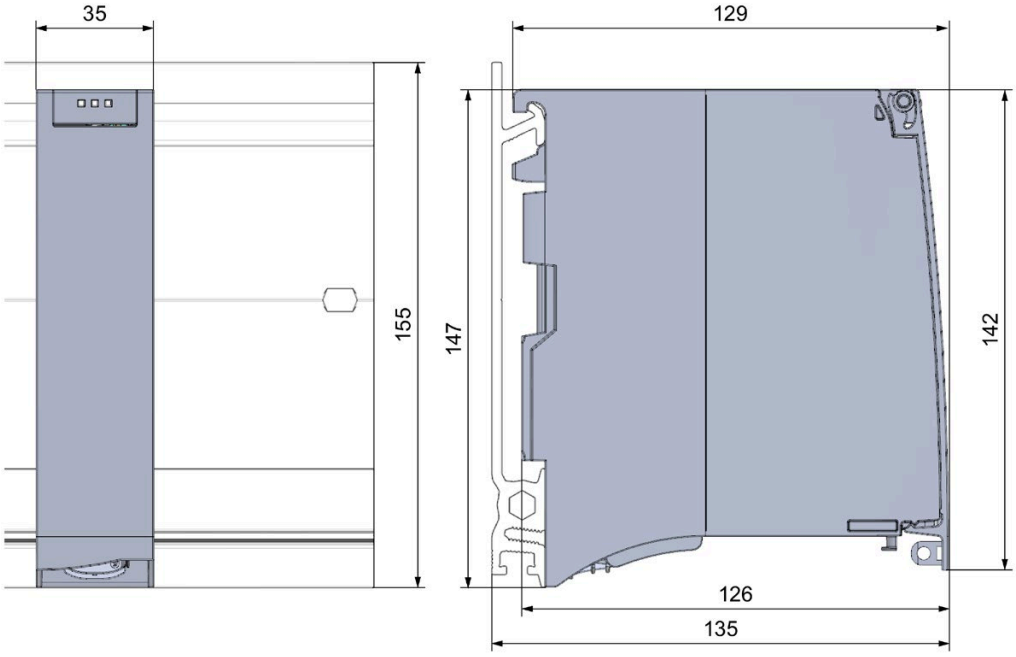

Figure A-1 Dimensional drawing of the DQ 64x24VDC/0.3A SNK BA module

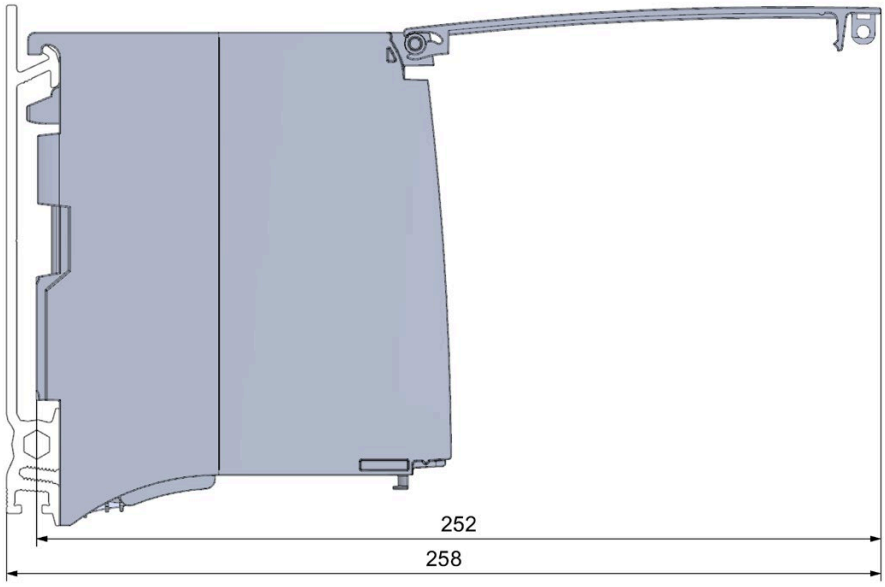

Figure A-2 Dimension drawing of the DQ 64x24VDC/0.3A SNK BA module, side view with open front cover

SIEMENS

Manual

SIMATIC

S7-1500 / ET 200MP

Digital output module
DQ 8x230VAC/5A ST Relay (6ES7522-5HF00-0AB0)

Edition 04/2020

support.industry.siemens.com

SIEMENS

SIMATIC

S7-1500/ET 200MP Digital output module DQ 8x230VAC/5A ST Relay (6ES7522-5HF00-0AB0)

Equipment Manual

Preface

Documentation guide 1

Product overview 2

Wiring 3

Parameters/address space 4

Interrupts/diagnostics alarms 5

Technical specifications 6

Dimensional drawing A

Parameter data records B

04/2020

A5E03485590-AE

Legal information

Warning notice system

This manual contains notices you have to observe in order to ensure your personal safety, as well as to prevent damage to property. The notices referring to your personal safety are highlighted in the manual by a safety alert symbol, notices referring only to property damage have no safety alert symbol. These notices shown below are graded according to the degree of danger.

⚠ DANGER

indicates that death or severe personal injury **will** result if proper precautions are not taken.

⚠ WARNING

indicates that death or severe personal injury **may** result if proper precautions are not taken.

⚠ CAUTION

indicates that minor personal injury can result if proper precautions are not taken.

NOTICE

indicates that property damage can result if proper precautions are not taken.

If more than one degree of danger is present, the warning notice representing the highest degree of danger will be used. A notice warning of injury to persons with a safety alert symbol may also include a warning relating to property damage.

Qualified Personnel

The product/system described in this documentation may be operated only by **personnel qualified** for the specific task in accordance with the relevant documentation, in particular its warning notices and safety instructions. Qualified personnel are those who, based on their training and experience, are capable of identifying risks and avoiding potential hazards when working with these products/systems.

Proper use of Siemens products

Note the following:

⚠ WARNING

Siemens products may only be used for the applications described in the catalog and in the relevant technical documentation. If products and components from other manufacturers are used, these must be recommended or approved by Siemens. Proper transport, storage, installation, assembly, commissioning, operation and maintenance are required to ensure that the products operate safely and without any problems. The permissible ambient conditions must be complied with. The information in the relevant documentation must be observed.

Trademarks

All names identified by ® are registered trademarks of Siemens AG. The remaining trademarks in this publication may be trademarks whose use by third parties for their own purposes could violate the rights of the owner.

Disclaimer of Liability

We have reviewed the contents of this publication to ensure consistency with the hardware and software described. Since variance cannot be precluded entirely, we cannot guarantee full consistency. However, the information in this publication is reviewed regularly and any necessary corrections are included in subsequent editions.

Siemens AG
Digital Industries
Postfach 48 48
90026 NÜRNBERG
GERMANY

A5E03485590-AE
℗ 04/2020 Subject to change

Copyright © Siemens AG 2013 - 2020.
All rights reserved

Preface

Purpose of the documentation

This manual supplements the system manual S7-1500/ET 200MP (https://support.industry.siemens.com/cs/ww/en/view/59191792).

Functions that relate in general to the systems are described in this system manual.

The information provided in this manual and in the system/function manuals supports you in commissioning the systems.

Changes compared to previous version

Compared to the previous version, this manual contains the following change:

The module features a switching cycle counter as of firmware version V2.1.0.

Conventions

The term "CPU" is used in this manual both for the CPUs of the S7-1500 automation system and for interface modules of the ET 200MP distributed I/O system.

Please also observe notes marked as follows:

Note

A note contains important information on the product described in the documentation, on the handling of the product or on the section of the documentation to which particular attention should be paid.

Security information

Siemens provides products and solutions with industrial security functions that support the secure operation of plants, systems, machines and networks.

In order to protect plants, systems, machines and networks against cyber threats, it is necessary to implement – and continuously maintain – a holistic, state-of-the-art industrial security concept. Siemens' products and solutions constitute one element of such a concept.

Customers are responsible for preventing unauthorized access to their plants, systems, machines and networks. Such systems, machines and components should only be connected to an enterprise network or the internet if and to the extent such a connection is necessary and only when appropriate security measures (e.g. firewalls and/or network segmentation) are in place.

For additional information on industrial security measures that can be implemented, please visit (https://www.siemens.com/industrialsecurity).

Siemens' products and solutions undergo continuous development to make them more secure. Siemens strongly recommends that product updates are applied as soon as they are available and that the latest product versions are used. Use of product versions that are no longer supported, and failure to apply the latest updates may increase customers' exposure to cyber threats.

To stay informed about product updates, subscribe to the Siemens Industrial Security RSS Feed visit (https://www.siemens.com/industrialsecurity).

Open Source Software

Open-source software is used in the firmware of the I/O modules. Open Source Software is provided free of charge. We are liable for the product described, including the open-source software contained in it, pursuant to the conditions applicable to the product. Siemens accepts no liability for the use of the open source software over and above the intended program sequence, or for any faults caused by modifications to the software.

For legal reasons, we are obliged to publish the original text of the license conditions and copyright notices. Please read the information relating to this on the Internet (https://support.industry.siemens.com/cs/ww/en/view/109741045).

Table of contents

Preface 3

1 Documentation guide 6

2 Product overview 10

2.1 Properties 10

2.2 Functions 12

2.2.1 Switching cycle counter 12

3 Wiring 14

4 Parameters/address space 17

4.1 Parameters 17

4.2 Explanation of parameters 18

4.3 Address space 19

5 Interrupts/diagnostics alarms 22

5.1 Status and error displays 22

5.2 Interrupts 24

5.3 Diagnostics alarms 25

6 Technical specifications 26

A Dimensional drawing 33

B Parameter data records 35

B.1 Parameter assignment and structure of the parameter data records 35

B.2 Structure of the data records DS 64 to 71 37

B.3 Structure of data set DS 129 38

B.4 Structure of data set DS 130 39

B.5 Structure of data set DS 131 40

Documentation guide

1

The documentation for the SIMATIC S7-1500 automation system and the SIMATIC ET 200MP distributed I/O system is arranged into three areas.
This arrangement enables you to access the specific content you require.

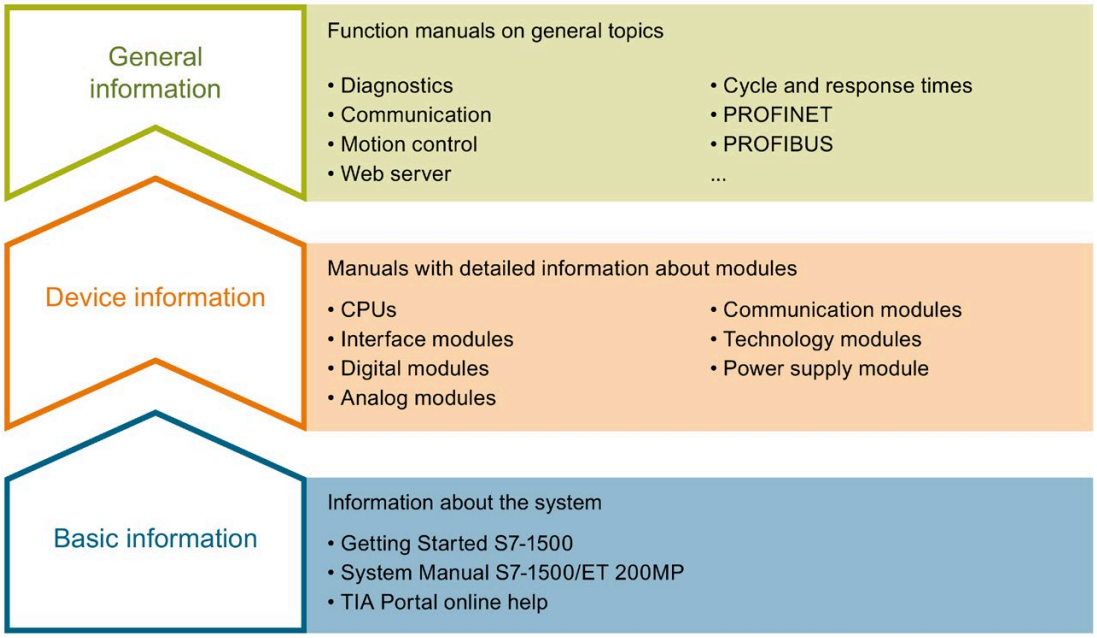

Basic information

The System Manual and Getting Started describe in detail the configuration, installation, wiring and commissioning of the SIMATIC S7-1500 and ET 200MP systems. The STEP 7 online help supports you in the configuration and programming.

Device information

Product manuals contain a compact description of the module-specific information, such as properties, wiring diagrams, characteristics and technical specifications.

General information

The function manuals contain detailed descriptions on general topics regarding the SIMATIC S7-1500 and ET 200MP systems, e.g. diagnostics, communication, motion control, Web server, OPC UA.

You can download the documentation free of charge from the Internet (https://support.industry.siemens.com/cs/ww/en/view/109742691).

Changes and supplements to the manuals are documented in a Product Information.

You can download the product information free of charge from the Internet (https://support.industry.siemens.com/cs/us/en/view/68052815).

Manual Collection S7-1500/ET 200MP

The Manual Collection contains the complete documentation on the SIMATIC S7-1500 automation system and the ET 200MP distributed I/O system gathered together in one file.

You can find the Manual Collection on the Internet (https://support.industry.siemens.com/cs/ww/en/view/86140384).

SIMATIC S7-1500 comparison list for programming languages

The comparison list contains an overview of which instructions and functions you can use for which controller families.

You can find the comparison list on the Internet (https://support.industry.siemens.com/cs/ww/en/view/86630375).

"mySupport"

With "mySupport", your personal workspace, you make the best out of your Industry Online Support.

In "mySupport", you can save filters, favorites and tags, request CAx data and compile your personal library in the Documentation area. In addition, your data is already filled out in support requests and you can get an overview of your current requests at any time.

You must register once to use the full functionality of "mySupport".

You can find "mySupport" on the Internet (https://support.industry.siemens.com/My/ww/en).

"mySupport" - Documentation

In the Documentation area in "mySupport" you can combine entire manuals or only parts of these to your own manual.
You can export the manual as PDF file or in a format that can be edited later.

You can find "mySupport" - Documentation on the Internet (http://support.industry.siemens.com/My/ww/en/documentation).

"mySupport" - CAx data

In the CAx data area in "mySupport", you can access the current product data for your CAx or CAe system.

You configure your own download package with a few clicks.

In doing so you can select:

- Product images, 2D dimension drawings, 3D models, internal circuit diagrams, EPLAN macro files
- Manuals, characteristics, operating manuals, certificates
- Product master data

You can find "mySupport" - CAx data on the Internet (http://support.industry.siemens.com/my/ww/en/CAxOnline).

Application examples

The application examples support you with various tools and examples for solving your automation tasks. Solutions are shown in interplay with multiple components in the system - separated from the focus on individual products.

You will find the application examples on the Internet (https://support.industry.siemens.com/sc/ww/en/sc/2054).

TIA Selection Tool

With the TIA Selection Tool, you can select, configure and order devices for Totally Integrated Automation (TIA).
This tool is the successor of the SIMATIC Selection Tool and combines the known configurators for automation technology into one tool.
With the TIA Selection Tool, you can generate a complete order list from your product selection or product configuration.

You can find the TIA Selection Tool on the Internet (http://w3.siemens.com/mcms/topics/en/simatic/tia-selection-tool).

SIMATIC Automation Tool

You can use the SIMATIC Automation Tool to perform commissioning and maintenance activities simultaneously on various SIMATIC S7 stations as a bulk operation independent of the TIA Portal.

General function overview:

- Network browsing and creation of a table showing the accessible devices in the network.
- Flashing of device LEDs or HMI display to locate a device
- Downloading of addresses (IP, subnet, gateway) to a device
- Downloading the PROFINET name (station name) to a device
- Placing a CPU in RUN or STOP mode
- Setting the time in a CPU to the current time of your PG/PC
- Downloading a new program to a CPU or an HMI device
- Downloading from CPU, downloading to CPU or deleting recipe data from a CPU
- Downloading from CPU or deleting data log data from a CPU
- Backup/restore of data from/to a backup file for CPUs and HMI devices
- Downloading service data from a CPU
- Reading the diagnostics buffer of a CPU
- Performing a CPU memory reset
- Resetting devices to factory settings
- Downloading a firmware update to a device

You can find the SIMATIC Automation Tool on the Internet (https://support.industry.siemens.com/cs/ww/en/view/98161300).

PRONETA

With SIEMENS PRONETA (PROFINET network analysis), you analyze the PROFINET network during commissioning. PRONETA features two core functions:

- The topology overview independently scans PROFINET network and all connected components.
- The IO check is a fast test of the wiring and the module configuration of a system.

You can find SIEMENS PRONETA on the Internet (https://support.industry.siemens.com/cs/ww/en/view/67460624).

SINETPLAN

SINETPLAN, the Siemens Network Planner, supports you in planning automation systems and networks based on PROFINET. The tool facilitates professional and predictive dimensioning of your PROFINET installation as early as in the planning stage. In addition, SINETPLAN supports you during network optimization and helps you to exploit network resources optimally and to plan reserves. This helps to prevent problems in commissioning or failures during productive operation even in advance of a planned operation. This increases the availability of the production plant and helps improve operational safety.

The advantages at a glance

- Network optimization thanks to port-specific calculation of the network load
- Increased production availability thanks to online scan and verification of existing systems
- Transparency before commissioning through importing and simulation of existing STEP 7 projects
- Efficiency through securing existing investments in the long term and optimal exploitation of resources

You can find SINETPLAN on the Internet (https://www.siemens.com/sinetplan).

Product overview

2

2.1 Properties

Article number

6ES7522-5HF00-0AB0

View of the module

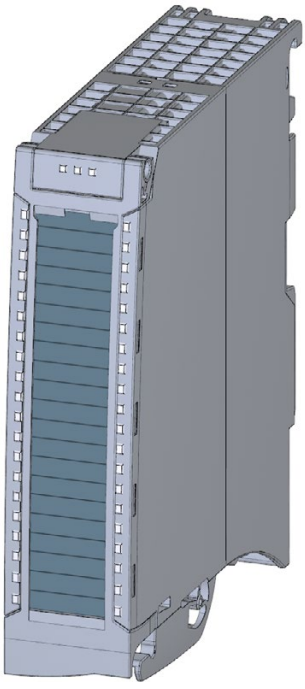

Figure 2-1 View of the DQ 8x230VAC/5A ST module

Properties

The module has the following technical properties:

- 8 digital outputs (relays)
- Supply voltage of the 24 V DC relay coils
- Rated output voltage 230 V AC (24 V DC up to 120 V DC/24 V AC up to 230 V AC)
- Rated output current 5 A
- Configurable substitute values (per channel)
- Assignable diagnostics (per channel group)
- Switching cycle counter for relay contacts
- Suitable for solenoid valves, DC contactors, and indicator lights

The module supports the following functions:

Table 2- 1 Version dependencies of the module functions

Function	Firmware version of the module	Configuration software	
		STEP 7 (TIA Portal)	GSD file in STEP 7 (TIA Portal) V12 or higher, or STEP 7 V5.5 SP3 or higher
Firmware update	V1.0.0 or higher	V12 or higher	--- / X
Identification data I&M0 to I&M3	V1.0.0 or higher	V12 or higher	X
Parameter assignment in RUN	V1.0.0 or higher	V12 or higher	X
Module-internal Shared Output (MSO)	V2.0.0 or higher	V13 Update 3 or higher (PROFINET IO only)	X (PROFINET IO only)
Switching cycle counter	V2.1.0 or higher	V15.1 or higher with HSP0282 • PROFINET IO only • Central operation with a S7-1500 CPU	X (PROFINET IO only)

You configure the module with STEP 7 (TIA Portal) or with a GSD file.

Compatibility

The following table shows the compatibility of the modules and the dependencies between hardware functional status (FS) and firmware version (FW) used:

Hardware functional status	Firmware version	Note
FS01	V1.0.0 to V2.0.0	Upgrade and downgrade possible between V1.0.0 and V2.0.0
FS02	V1.0.0 to V2.0.0	Upgrade and downgrade possible between V1.0.0 and V2.0.0
FS03	V2.1.0	Upgrade and downgrade possible between V2.1.0 and higher

Accessories

The following accessories are supplied with the module and can also be ordered separately as spare parts:

- Labeling strips
- U connector
- Universal front door

Other components

For example, you order the front connector including the potential bridge and cable tie separately.

You can find additional information on accessories and the article numbers in the system manual S7-1500/ET 200MP (https://support.industry.siemens.com/cs/ww/en/view/59191792).

2.2 Functions

2.2.1 Switching cycle counter

The "Switching cycle counter" function records the number of switching cycles of the integrated relay contact. When the "Limit value warning" maintenance alarm is configured and enabled, the "Limit value warning" maintenance alarm is triggered when the specified number of switching cycles is reached.

Typical areas of application:

- Recording the number of switching cycles of the integrated relay contacts
- Predictive maintenance so maintenance and service intervals are more predictable, for example

Advantages

- No programming required, because the switching cycle counter is integrated into the module.
- "Monitoring" of each individual channel is possible. Select which outputs are "monitored".
- The system configuration is flexible and individually adaptable.
- Increase in plant availability. You can foresee a module or actuator replacement in advance for the next maintenance cycle.

Requirement

Firmware version V2.1.0 or higher of the module.

Configuration

The switching cycle counter for the integrated relay contacts is always activated.

Configure the maintenance alarm to monitor the channels with the following parameters:

- Trigger maintenance alarm when the limit is reached
- Set limit for maintenance alarm

How it works

The module counts the switching cycles by evaluating the rising edges of an output signal. If the module detects a rising edge, the switching cycle counter (24-bit) for the respective channel is incremented. The counter stops when the high limit is reached.

If you activate the "Maintenance switching cycles" parameter, the "Limit value warning" of the maintenance alarm is signaled when the limit is exceeded. Alternatively, activate the maintenance alarm in the parameter data records starting at DS 64.

The current counter states are stored on the module cyclically (approx. every 20 seconds) and retentively. The switching cycle counters are reset each time the module is restarted (power off/on). If there is no supply voltage, the switching cycle counter stops.

You can read the current counter states with data set DS 129 (Page 38). Data set DS 129 contains the counter status for each channel in UDINT format.

You can read the limits for each channel in UDINT format with data set DS 130 (Page 39).

You can set a limit for each switching cycle counter with the "Switching cycle limit" parameter or data set DS 131 (Page 40).

Note:

The number of permissible switching cycles depends on the type and size of the load. We recommend setting the switching cycle counter to 90 % of the actual service life of the contacts, for example. You then still have adequate time to preemptively replace the module.

You can find the permissible number of switching cycles in theTechnical specifications (Page 26).

Wiring

3

This section contains the block diagram of the module and outlines various wiring options.

You can find information on wiring the front connector, creating a cable shield, etc. in the Wiring section of the system manual S7-1500/ET 200MP (https://support.industry.siemens.com/cs/ww/en/view/59191792).

Wiring and block diagram

The example in the following figure shows the terminal assignment and the assignment of the channels.

Note

Note that the 24V DC supply voltage for this module must always be supplied by terminals 19/20 **and** terminals 39/40. Use the included potential jumpers for this purpose.

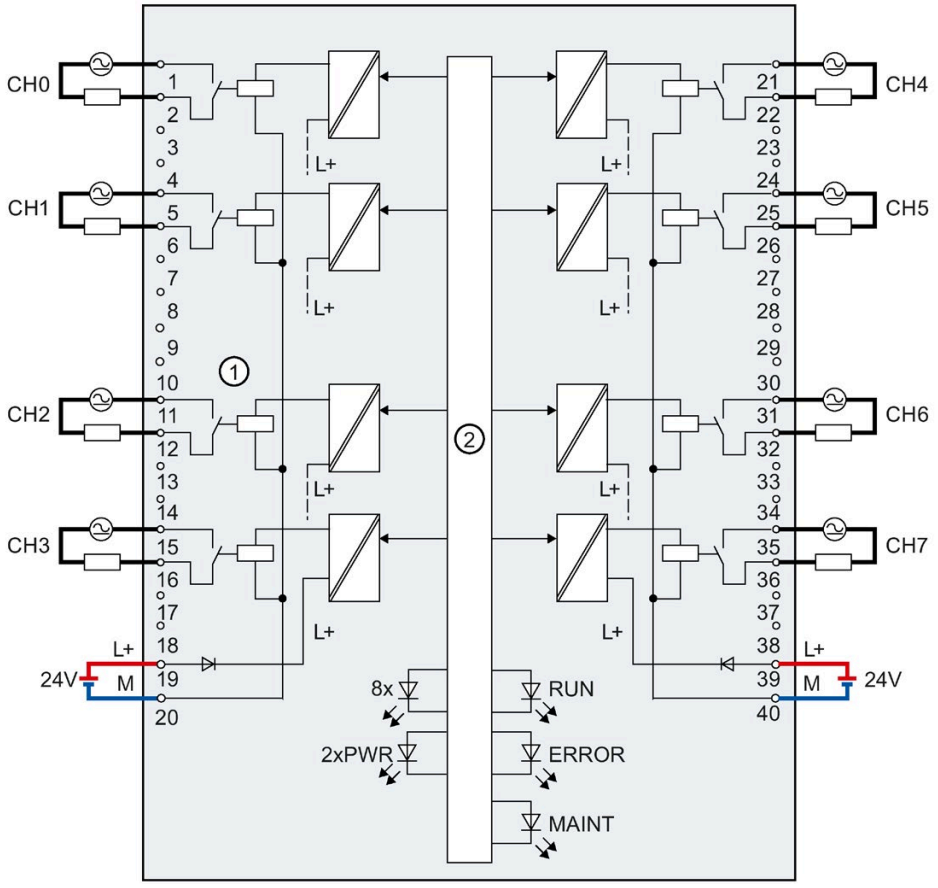

①	Relay 8x	CHx	Channel or channel status LED (green)
②	Backplane bus interface	RUN	Status display LED (green)
L+	Power supply 24 V DC for relay contacts	ERROR	Error display LED (red)
M	Ground	MAINT	LED maintenance display (yellow)
		PWR	POWER supply voltage LED (green)

Figure 3-1 Block diagram and terminal assignment

Tip: Using the potential jumpers

Use the potential jumpers supplied with the front connector if you want to distribute the 24 V DC supply voltage to a neighboring module. This helps you to avoid having to terminate two wires to one terminal.

Proceed as follows:

1. Connect the 24 V DC supply voltage to terminals 19 and 20.
2. Insert the potential jumpers between terminals 19 and 39 (L+) and between terminals 20 and 40 (M).
3. Use the terminals 39 and 40 to loop the potential to the next module.

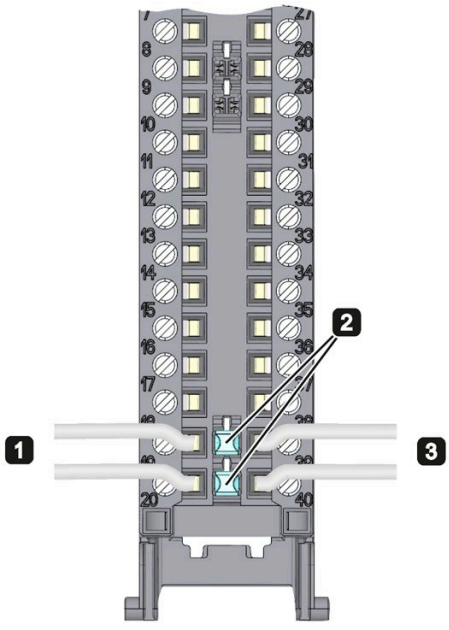

Figure 3-2 Using the potential jumpers

Note

Ensure that the maximum current load of 8 A per potential jumper is not exceeded.

Parameters/address space 4

4.1 Parameters

DQ 8x230VAC/5A ST parameters

When you assign the module parameters in STEP 7, you use various parameters to specify the module properties. The following table lists the configurable parameters. The effective range of the configurable parameters depends on the type of configuration. The following configurations are possible:

- Central operation with a S7-1500 CPU
- Distributed operation on PROFINET IO in an ET 200MP system
- Distributed operation on PROFIBUS DP in an ET 200MP system

For parameter assignment in the user program, the parameters are transferred to the module using the WRREC instruction (parameter reassignment in RUN) and data records; see chapter Parameter assignment and structure of the parameter data records (Page 35).

Table 4- 1 Configurable parameters and their defaults

Parameters	Range of values	Default setting	Parameter assignment in RUN	Scope with configuration software, e.g., STEP 7 (TIA Portal)	
				GSD file PROFINET IO	GSD file PROFIBUS DP
Diagnostics					
• Missing supply voltage L+	Yes/No	No	Yes	Channel group	Channel group
Reaction to CPU STOP	• Turn off • Keep last value • Output substitute value 1	Turn off	Yes	Channel	Channel
Maintenance switching cycle counter	Yes/No	No	Yes	Channel	---
Switching cycle limits					
Switching cycle counter limit	0 to 16777214	0	Yes	Channel	---

4.2 Explanation of parameters

No supply voltage

Enabling of the diagnostics, for lacking or insufficient supply voltage L+.

Reaction to CPU STOP

Determines the reaction of the output when the CPU goes into the STOP state or when the connection to the CPU is interrupted.

Maintenance switching cycles

You use this parameter to enable the maintenance alarm "Limit value warning" when the switching cycle counter limit is violated.

You configure the limit with the parameter "Switching cycle limit" for each channel CHx.

Switching cycle limit

Defines the limit value channel-by-channel. If this value is exceeded, the "Limit value warning" maintenance alarm is signaled.

Enter an integer value between 0 and 16777214.

4.3 Address space

The module can be configured differently in STEP 7; see following table. Depending on the configuration, additional/different addresses are assigned in the process image output/input.

Configuration options of DQ 8x230VAC/5A ST

You can configure the module with STEP 7 (TIA Portal) or with a GSD file.

When you configure the module by means of the GSD file, the configurations are available under different short designations/module names.

The following configurations are possible:

Table 4- 2 Configuration options

Configuration	Short designation/module name in the GSD file	Configuration software, e.g., STEP 7 (TIA Portal)	
		Integrated in hardware catalog STEP 7 (TIA Portal)	GSD file in STEP 7 (TIA Portal) V12 or higher or STEP 7 V5.5 SP3 or higher
1 x 8-channel without value status	DQ 8x230VAC/5A ST	X	X
1 x 8-channel with value status	DQ 8x230VAC/5A ST QI	X	X
1 x 8-channel with value status for module-internal Shared Output with up to 4 submodules	DQ 8x230VAC/5A ST MSO	V13 Update 3 or higher (PROFINET IO only)	X (PROFINET IO only)

Value status (Quality Information, QI)

The value status is always activated for the following module names:

- DQ 8x230VAC/5A ST QI
- DQ 8x230VAC/5A ST MSO

An additional bit is assigned to each channel for the value status. The bit for the value status indicates if the output value specified by the user program is actually pending at the module terminal (0 = value is incorrect).

Note

Limit value warning

The maintenance alarm "Limit value warning" has no effect on the value status.

Address space for configuration as 8-channel DQ 8x230VAC/5A ST

The following figure shows the assignment of the address space for the configuration as a 8-channel module with value status. You can freely assign the start address for the module. The addresses of the channels are derived from the start address.

The letters "a to d" are printed on the module; "QB a", for example, stands for module start address output byte a.

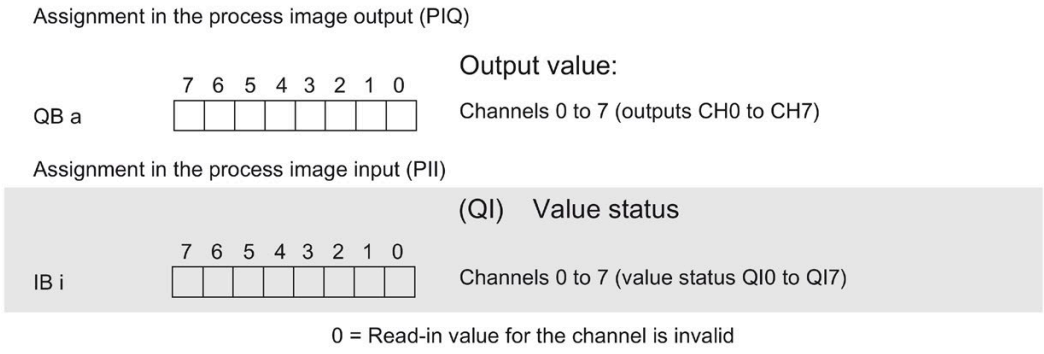

Figure 4-1 Address space for configuration as 8-channel DQ 8x230VAC/5A ST with value status

Address space for configuration as 1 x 8-channel DQ 8x230VAC/5A ST MSO

For the configuration as a 1 x 8-channel module (module-internal Shared Output, MSO), channels 0 to 7 of the module are copied to multiple submodules. Channels 0 to 7 are then available with identical values in various submodules. These submodules can be assigned to up to four IO controllers when the module is used in a shared device:

- The IO controller to which submodule 1 is assigned has write access to outputs 0 to 7.
- The IO controllers to which submodule 2, 3, or 4 is assigned have read access to outputs 0 to 7.

The number of usable IO controllers depends on the interface module used. Please observe the information in the manual for the particular interface module.

Value status (Quality Information, QI)

The meaning of the value status depends on the submodule involved.

For the first submodule (=basic submodule), the value status 0 indicates that the value is incorrect or that the IO controller of the basic submodule is in STOP state.

For the 2nd to 4th submodule (=MSO submodule), the value status 0 indicates that the value is incorrect or one of the following errors has occurred:

- The basic submodule is not yet configured (not ready).
- The connection between the IO controller and the basic submodule has been interrupted.
- The IO controller of the basic submodule is in STOP or POWER OFF state.

The following figure shows the assignment of the address space for submodules 1, 2, 3, and 4 and the value status.

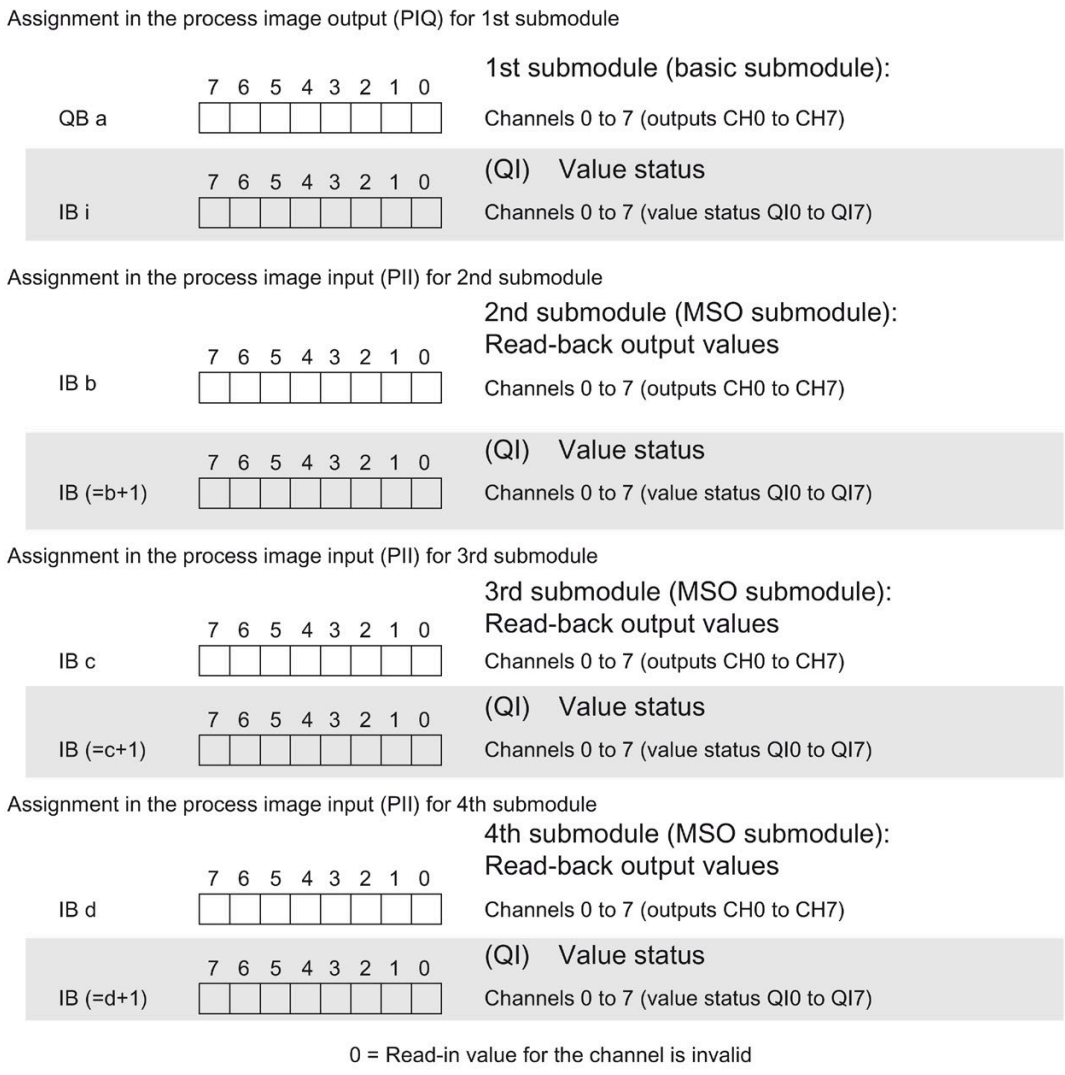

Figure 4-2 Address space for configuration as 1 x 8-channel DQ 8x230VAC/5A ST S MSO with value status

Reference

You can find information on the Shared Input/Output (MSI/MSO) function in the section Module-Internal Shared Input/Output (MSI/MSO) of the PROFINET with STEP 7 V15 (https://support.industry.siemens.com/cs/ww/en/view/49948856) function manual.

Interrupts/diagnostics alarms

5

5.1 Status and error displays

LED displays

The figure below shows the LED displays (status and error displays) of the DQ 8x230VAC/5A ST.

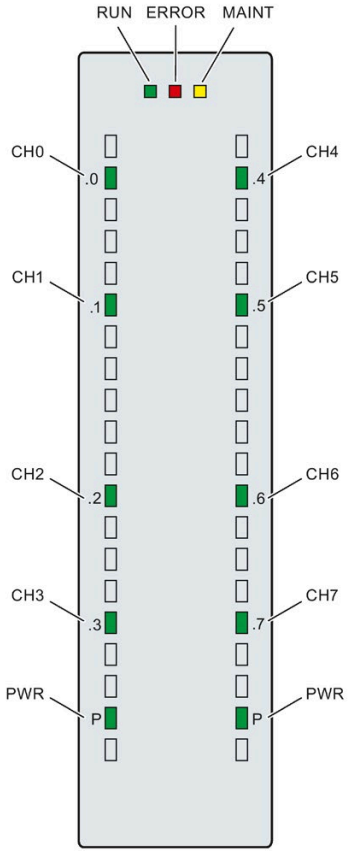

Figure 5-1 LED displays of the DQ 8x230VAC/5A ST module

Meaning of the LED displays

The following tables explain the meaning of the status and error displays. Corrective measures for diagnostics alarms can be found in the section Diagnostics alarm (Page 25).

RUN and ERROR LED

Table 5- 1 Status and error displays RUN and ERROR

LED		Meaning	Solution
RUN	ERROR		
Off	Off	Voltage missing or too low at backplane bus	• Switch on the CPU and/or the system power supply modules. • Verify that the U connectors are inserted. • Check to see if too many modules are inserted.
Flashes	Off	The module starts and flashes until the valid parameter assignment is set.	---
On	Off	Module is configured	
On	Flashes	Indicates module error because supply voltage L+ is missing	Evaluate the diagnostics data and eliminate the error.
Flashes	Flashes	Hardware defective	Replace the module.

LED MAINT

Table 5- 2 MAINT status display

LED MAINT	Meaning	Solution
Off	0 = No maintenance interrupt is pending.	---
On	1 = The maintenance interrupt "Limit value warning" is pending.	Perform maintenance.

PWR LED

Table 5- 3 PWR status display

LED PWR	Meaning	Solution
□ Off	Supply voltage L+ too low or missing	Check the L+ supply voltage.
■ On	Supply voltage L+ is present and OK	---

CHx LED

Table 5- 4 CHx status display

LED CHx	Meaning	Solution
□ Off	0 = Status of the output signal	---
■ On	1 = Status of the output signal	---

5.2 Interrupts

The digital output module DQ 8x230VAC/5A ST supports diagnostics interrupts and maintenance alarms.

Diagnostics interrupt

The module generates a diagnostics interrupt at the following event:

- Missing supply voltage L+
- Parameter assignment error

Maintenance alarm

The module generates a maintenance alarm at the following event: Limit value warning.

Detailed information

You can find detailed information on the event in the error organization block with the "RALRM" instruction (read alarm status information) and in the STEP 7 online help.

5.3 Diagnostics alarms

Diagnostics alarms

A diagnostics alarm is generated and the ERROR LED flashes on the module for each diagnostics event. You can read out the diagnostics alarms, for example, in the diagnostics buffer of the CPU. You can evaluate the error codes with the user program.

If the module is operated distributed with PROFIBUS DP in an ET 200MP system, you have the option to read out diagnostics data with the instruction RDREC or RD_REC using data record 0 and 1. The structure of the data records is available in the "Manual for interface module IM 155-5 DP ST (6ES7155-5BA00-0AB0)" on the Internet (https://support.industry.siemens.com/cs/ww/en/view/78324181).

Table 5- 5 Diagnostics alarms, their meaning and corrective measures

Diagnostics alarm	Error code	Meaning	Corrective measures
Parameter assignment error	10_H	• The module cannot evaluate parameters for the channel • Incorrect parameter assignment	Correct the parameter assignment
Load voltage missing	11_H	Supply voltage L+ of the module is missing	Connect supply voltage L+ to module/channel
Limit value warning	17_H	The configured limit for switching cycles has been exceeded.	• Replace module / actuator as a precautionary measure

Technical specifications

6

Technical specifications of the DQ 8x230VAC/5A ST

The following table shows the technical specifications as of 04/2020. You will find a data sheet including daily updated technical specifications on the Internet (https://support.industry.siemens.com/cs/ww/en/pv/6ES7522-5HF00-0AB0/td?dl=en).

Article number	6ES7522-5HF00-0AB0
General information	
HW functional status	FS02
Firmware version	V2.1.0
• FW update possible	Yes
Product function	
• I&M data	Yes; I&M0 to I&M3
• Isochronous mode	No
Engineering with	
• STEP 7 TIA Portal configurable/integrated as of version	V12 / V12
• STEP 7 configurable/integrated as of version	V5.5 SP3 / -
• PROFIBUS as of GSD version/GSD revision	V1.0 / V5.1
• PROFINET as of GSD version/GSD revision	V2.3 / -
Operating mode	
• DQ	Yes
• DQ with energy-saving function	No
• PWM	No
• Oversampling	No
• MSO	Yes
• Integrated operating cycle counter	Yes; FW V2.1.0 or higher
Supply voltage	
Rated value (DC)	24 V
permissible range, lower limit (DC)	20.4 V
permissible range, upper limit (DC)	28.8 V
Reverse polarity protection	Yes

Article number	6ES7522-5HF00-0AB0
Input current	
Current consumption, max.	80 mA
Output voltage	
Rated value (AC)	230 V; 24 V DC to 120 V DC / 24 V AC to 230 V AC
Power	
Power available from the backplane bus	0.8 W
Power loss	
Power loss, typ.	5 W
Digital outputs	
Type of digital output	Relays
Number of digital outputs	8
Current-sinking	Yes
Current-sourcing	Yes
Digital outputs, parameterizable	Yes
Short-circuit protection	No
Controlling a digital input	possible
Size of motor starters according to NEMA, max.	5
Switching capacity of the outputs	
• on lamp load, max.	1 500 W; 10 000 operating cycles
• Low energy/fluorescent lamps with electronic control gear	10x 58 W (25 000 operating cycles)
• Fluorescent tubes, conventionally compensated	1x 58 W (25 000 operating cycles)
• Fluorescent tubes, uncompensated	10x 58 W (25 000 operating cycles)
Output current	
• for signal "1" rated value	5 A
• for signal "1" permissible range, min.	5 mA; 10 V
• for signal "1" permissible range, max.	8 A; thermal continuous current
• for signal "0" residual current, max.	0 A
Parallel switching of two outputs	
• for logic links	Yes
• for uprating	No
• for redundant control of a load	Yes
Switching frequency	
• with resistive load, max.	2 Hz
• with inductive load, max.	0.5 Hz
• on lamp load, max.	2 Hz

Article number	6ES7522-5HF00-0AB0
Total current of the outputs	
• Current per channel, max.	8 A; see additional description in the manual
• Current per group, max.	8 A; see additional description in the manual
• Current per module, max.	64 A; see additional description in the manual
Relay outputs	
• Number of relay outputs	8
• Rated supply voltage of relay coil L+ (DC)	24 V
• Current consumption of relays (coil current of all relays), typ.	80 mA
• external protection for relay outputs	With miniature circuit breaker with characteristic B for: cos φ 1.0: 600 A cos φ 0.5 ... 0.7: 900 A with 8 A Diazed fuse: 1 000 A
• Contact connection (internal)	No
• Number of operating cycles, max.	4 000 000; see additional description in the manual
• Relay approved acc. to UL 508	Yes; 250 V AC/5 A g.p.; 120 V AC TV-4 tungsten; A300, R300
Switching capacity of contacts	
– with inductive load, max.	see additional description in the manual
– with resistive load, max.	see additional description in the manual
Cable length	
• shielded, max.	1 000 m
• unshielded, max.	600 m
Interrupts/diagnostics/status information	
Diagnostics function	Yes
Substitute values connectable	Yes
Alarms	
• Diagnostic alarm	Yes
Diagnostic messages	
• Monitoring the supply voltage	Yes
• Wire-break	No
• Short-circuit	No

Article number	6ES7522-5HF00-0AB0
Diagnostics indication LED	
• RUN LED	Yes; green LED
• ERROR LED	Yes; red LED
• MAINT LED	Yes; Yellow LED
• Monitoring of the supply voltage (PWR-LED)	Yes; green LED
• Channel status display	Yes; green LED
• for channel diagnostics	No
• for module diagnostics	Yes; red LED
Potential separation	
Potential separation channels	
• between the channels	Yes; Switching of different phases permitted
• between the channels, in groups of	1
• between the channels and backplane bus	Yes
• Between the channels and load voltage L+	Yes
Permissible potential difference	
between different circuits	250 V AC between the channels and the supply voltage L+; 250 V AC between the channels and the backplane bus; 500 V AC between the channels
Isolation	
Isolation tested with	Between channels: 3 100 V DC; between channels backplane bus: 3 100 V DC; between L+ and backplane bus: 707 V DC (type test)
Standards, approvals, certificates	
Suitable for safety functions	No
Ambient conditions	
Ambient temperature during operation	
• horizontal installation, min.	-30 °C; From FS03
• horizontal installation, max.	60 °C
• vertical installation, min.	-30 °C; From FS03
• vertical installation, max.	40 °C
Decentralized operation	
Prioritized startup	Yes
Dimensions	
Width	35 mm
Height	147 mm
Depth	129 mm
Weights	
Weight, approx.	350 g

Power reduction (derating) to aggregate current of outputs (per channel)

The following graphs show the loading capacity of the relay contacts in relation to the mounting position of the S71500 automation system/ET 200MP distributed I/O system and the ambient temperature.

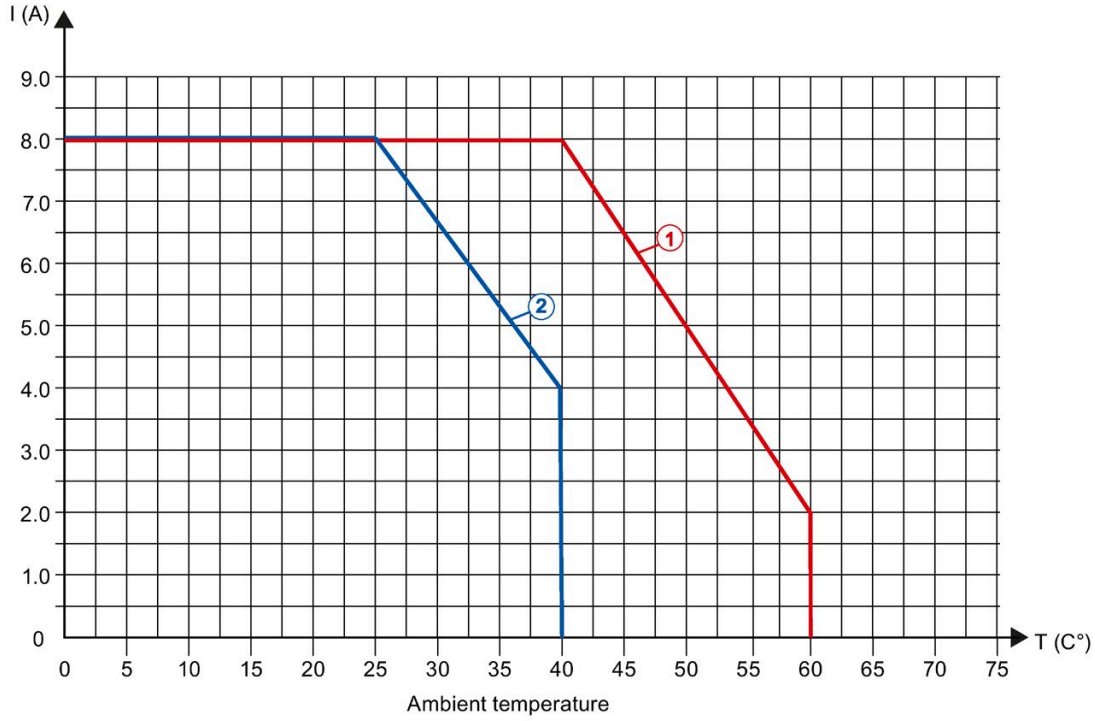

① Horizontal mounting of the system

② Vertical mounting of the system

Figure 6-1 Details on aggregate current of outputs (per channel)

Details on the number of switching cycles

The following tables list the permissible number of switching cycles depending on the applied voltage and current load. Different values apply in each case to resistive and inductive loads.

Table 6- 1 Switching capacity and service life of relay contacts for resistive load

For resistive load		
Voltage	Current	Number of switching cycles (typ.)
24 V DC	8.0 A	0.1 million
	5.0 A	0.2 million
	2.5 A	0.7 million
	2.0 A	1.0 million
	1.5 A	2.0 million
	0.5 A	4.0 million
60 V DC	0.5 A	4.0 million
120 V DC	0.2 A	1.6 million
	0.1 A	2.0 million
24 V AC	8.0 A	0.1 million
48 V AC	8.0 A	0.1 million
	2.0 A	1.6 million
60 V AC	8.0 A	0.1 million
	2.0 A	1.2 million
120 V AC	8.0 A	0.1 million
	5.0 A	0.2 million
	4.0 A	0.3 million
	2.0 A	0.5 million
	1.0 A	0.7 million
	0.5 A	1.5 million
230 V AC	8.0 A	0.1 million
	5.0 A	0.2 million
	4.0 A	0.3 million
	2.5 A	0.4 million
	2.0 A	0.5 million
	1.0 A	0.7 million
	0.5 A	1.5 million
	0.2 A	1.7 million
	0.1 A	2.0 million

Table 6- 2 Switching capacity and lifetime of the relay contacts for inductive load

For inductive load		
Voltage	Current	Number of switching cycles (typ.)
24 V DC	2.5 A	0.25 million
	2.0 A	0.3 million
	1.0 A	0.5 million
	0.5 A	1.0 million
	0.2 A	2.0 million
60 V DC	0.5 A	0.5 million
	0.3 A	1.0 million
120 V DC	0.1 A	1.2 million
	0.2 A	0.5 million
24 V AC	3.0 A	0.5 million
48 V AC	1.5 A	1.0 million
	3.0 A	0.4 million
60 V AC	1.5 A	1.0 million
	3.0 A	0.3 million
120 V AC	5.0 A	0.1 million
	3.0 A	0.2 million
	2.0 A	0.3 million
	1.0 A	0.7 million
	0.5 A	2.0 million
230 V AC	5.0 A	0.1 million
	3.0 A	0.2 million
	2.5 A	0.4 million
	2.0 A	0.3 million
	1.0 A	0.7 million
	0.5 A	2.0 million
	0.2 A	3.0 million
	0.1 A	4.0 million

Dimensional drawing

A

The dimensional drawing of the module on the mounting rail, as well as a dimensional drawing with open front cover, are provided in the appendix. Always observe the specified dimensions for installations in cabinets, control rooms, etc.

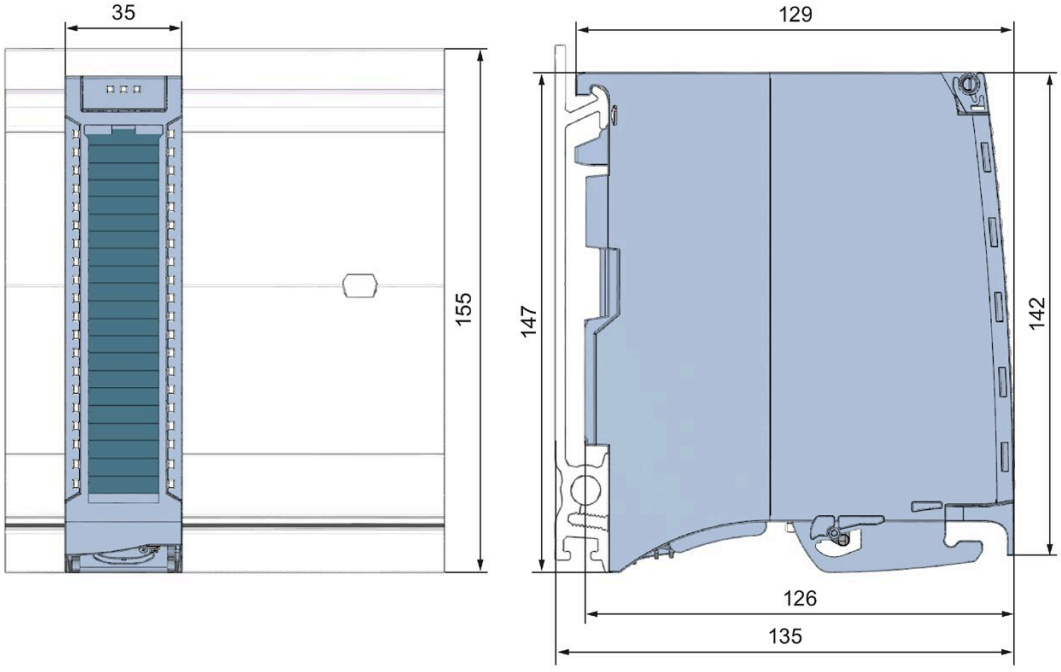

Figure A-1 Dimensional drawing of the DQ 8x230VAC/5A ST module

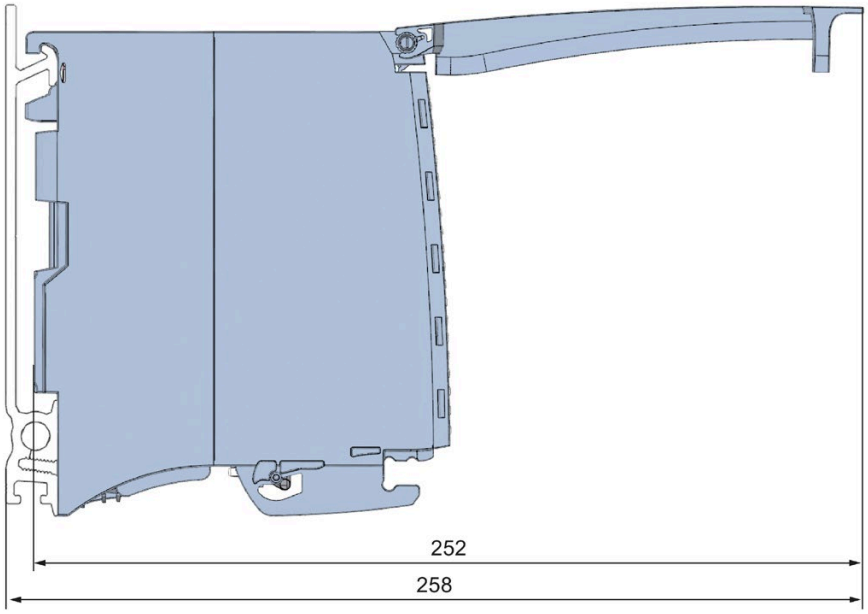

Figure A-2 Dimensional drawing of the DQ 8x230VAC/5A ST module, side view with open front cover

Parameter data records

B

B.1 Parameter assignment and structure of the parameter data records

The data records of the module have an identical structure, regardless of whether you configure the module with PROFIBUS DP or PROFINET IO.

Dependencies for configuration with GSD file

When a GSD file is used to configure a module, dependencies can arise when "assigning the parameters".

There are no dependencies for this module. You can assign the individual parameters in any combination.

Parameter assignment in the user program

You have the option to reconfigure the module in RUN (e.g. the response of selected channels to the CPU-STOP state can be changed in RUN without having an effect on the other channels).

Parameter assignment in RUN

The WRREC instruction is used to transfer the parameters to the module using data records 64 to 71. The parameters set in STEP 7 do not change in the CPU, which means the parameters set in STEP 7 are still valid after a restart.

The parameters are only checked for plausibility by the module after the transfer.

Output parameter STATUS

The module ignores errors that occurred during the transfer of parameters with the WRREC instruction and continues operation with the previous parameter assignment. However, a corresponding error code is written to the STATUS output parameter.

The description of the WRREC instruction and the error codes is available in the STEP 7 online help.

Operation of the module behind a PROFIBUS DP interface module

If the module is operated behind a PROFIBUS DP interface module, the parameter data records 0 and 1 are not read back. You obtain the diagnostics data records 0 and 1 with the read back parameter data records 0 and 1. You can find additional information in the Interrupts section of the manual for the PROFIBUS DP interface module in the Internet (http://support.automation.siemens.com/WW/view/en/78324181).

Assignment of data record and channel

The channel parameters of the module are included in data records 64 to 71 and are assigned as follows:

- Data record 64 for channel 0
- Data record 65 for channel 1
- Data record 66 for channel 2
- Data record 67 for channel 3
- Data record 68 for channel 4
- Data record 69 for channel 5
- Data record 70 for channel 6
- Data record 71 for channel 7

Assignment of data record for the switching cycle counter

The parameters for the switching cycle counter are located in the data records 129 to 130 and are assigned as follows:

- Data record 129 for channel 0 to 7 to read the counter values
- Data record 130 for channel 0 to 7 to read the limit values

B.2 Structure of the data records DS 64 to 71

Data record structure

The figure below shows the structure of data record 64 for channel 0 as an example. The structure is identical for channels 1 to 7. The values in byte 0 and byte 1 are fixed and may not be changed.

Enable a parameter by setting the corresponding bit to "1".

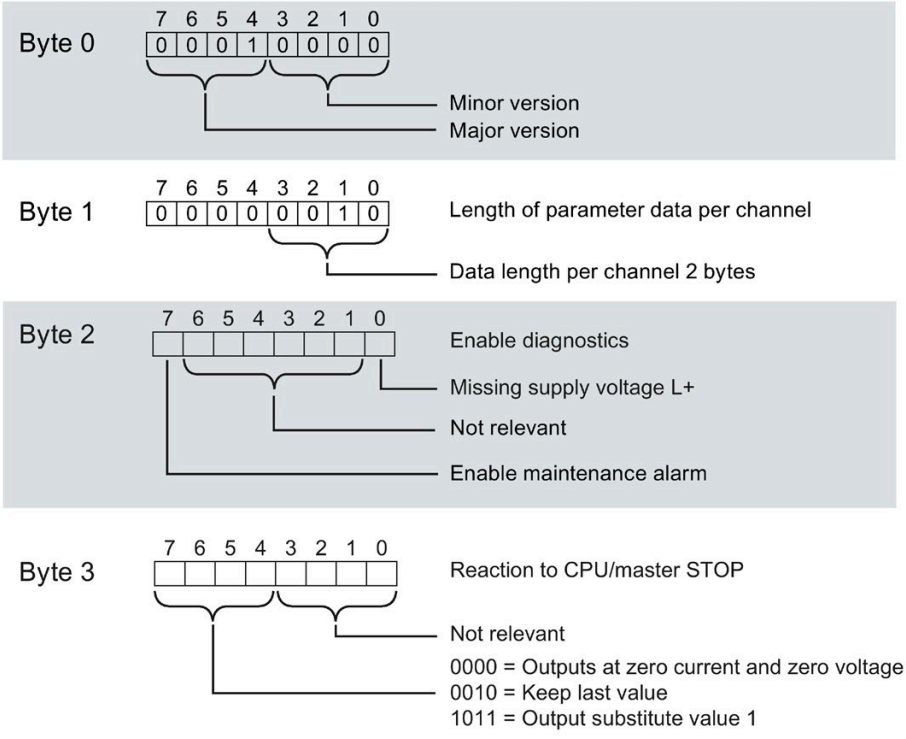

Figure B-1 Structure of data record 64: Bytes 0 to 3

B.3 Structure of data set DS 129

Structure of data set 129

You can read the current states of the switching cycle counters with data set 129. The counter status is supplied for each channel in UDINT format.

The following figure shows you the structure of data set 129.

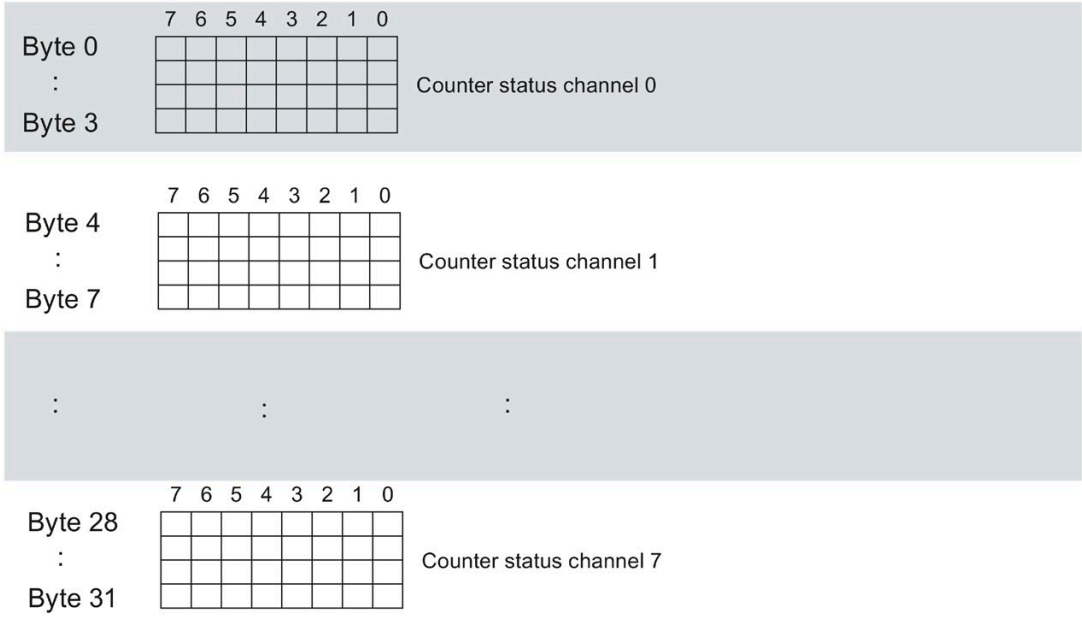

Figure B-2 Structure of data set 129: Byte 0 to 31

B.4 Structure of data set DS 130

Structure of data set 130

The limits of the switching cycle counters are read out with data set 130. The set value is supplied for each channel in UDINT format.

The following figure shows you the structure of data set 130.

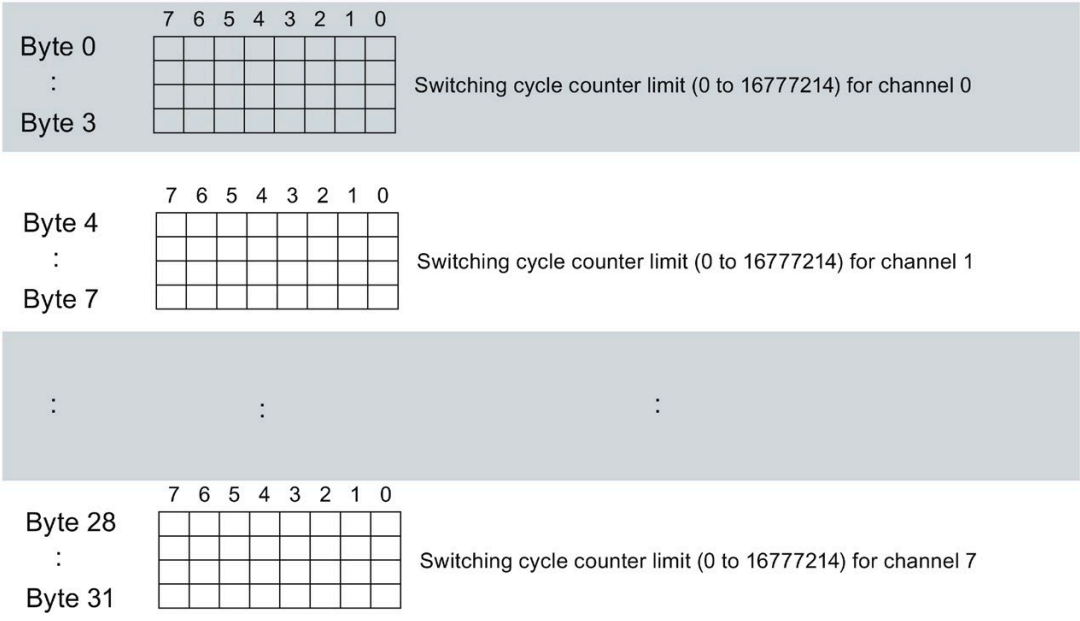

Figure B-3 Structure of data set 130: Byte 0 to 31

B.5 Structure of data set DS 131

Structure of data set 131

The following figure shows you the structure of data set 131.

Enable a parameter by setting the corresponding bit to "1".

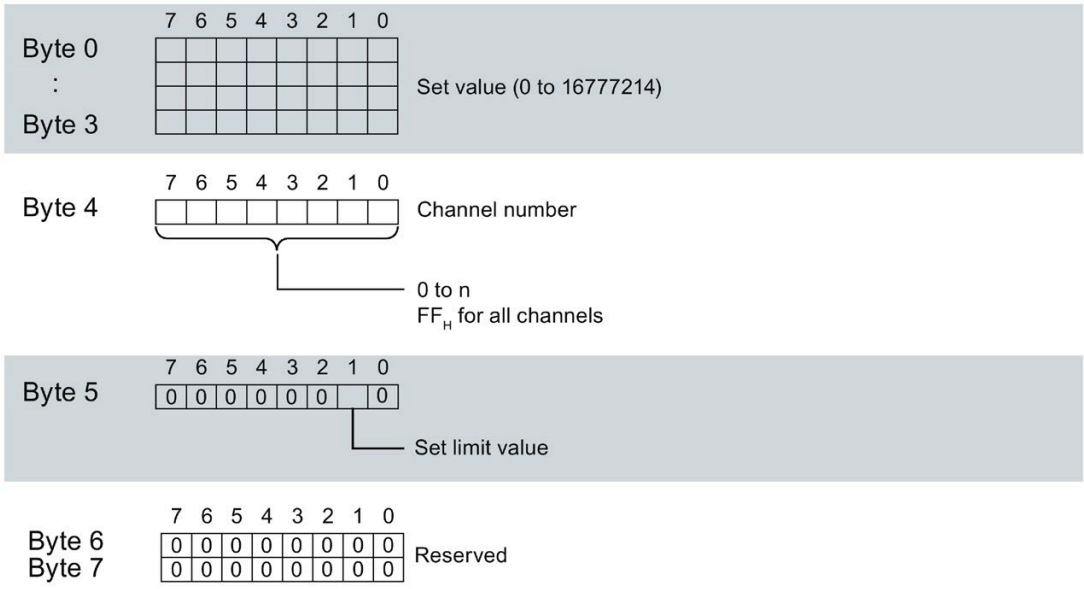

Figure B-4 Structure of data set 131: Bytes 0 to 7

SIEMENS

SIMATIC

S7-1500 / ET 200MP

Digital input/output module DI 16x24VDC/DQ 16x24VDC/0.5A BA (6ES7523-1BL00-0AA0)

Manual

Edition 09/2016

siemens.com

SIEMENS

SIMATIC

S7-1500/ET 200MP Digital input/output module DI 16x24VDC/DQ 16x24VDC/0.5A BA (6ES7523-1BL00-0AA0)

Manual

Preface

Documentation guide 1

Product overview 2

Wiring 3

Address space 4

Diagnostics alarms 5

Technical specifications 6

Dimensional drawing A

09/2016

A5E32364588-AC

Legal information

Warning notice system

This manual contains notices you have to observe in order to ensure your personal safety, as well as to prevent damage to property. The notices referring to your personal safety are highlighted in the manual by a safety alert symbol, notices referring only to property damage have no safety alert symbol. These notices shown below are graded according to the degree of danger.

⚠ DANGER

indicates that death or severe personal injury **will** result if proper precautions are not taken.

⚠ WARNING

indicates that death or severe personal injury **may** result if proper precautions are not taken.

⚠ CAUTION

indicates that minor personal injury can result if proper precautions are not taken.

NOTICE

indicates that property damage can result if proper precautions are not taken.

If more than one degree of danger is present, the warning notice representing the highest degree of danger will be used. A notice warning of injury to persons with a safety alert symbol may also include a warning relating to property damage.

Qualified Personnel

The product/system described in this documentation may be operated only by **personnel qualified** for the specific task in accordance with the relevant documentation, in particular its warning notices and safety instructions. Qualified personnel are those who, based on their training and experience, are capable of identifying risks and avoiding potential hazards when working with these products/systems.

Proper use of Siemens products

Note the following:

⚠ WARNING

Siemens products may only be used for the applications described in the catalog and in the relevant technical documentation. If products and components from other manufacturers are used, these must be recommended or approved by Siemens. Proper transport, storage, installation, assembly, commissioning, operation and maintenance are required to ensure that the products operate safely and without any problems. The permissible ambient conditions must be complied with. The information in the relevant documentation must be observed.

Trademarks

All names identified by ® are registered trademarks of Siemens AG. The remaining trademarks in this publication may be trademarks whose use by third parties for their own purposes could violate the rights of the owner.

Disclaimer of Liability

We have reviewed the contents of this publication to ensure consistency with the hardware and software described. Since variance cannot be precluded entirely, we cannot guarantee full consistency. However, the information in this publication is reviewed regularly and any necessary corrections are included in subsequent editions.

Siemens AG
Division Digital Factory
Postfach 48 48
90026 NÜRNBERG
GERMANY

A5E32364588-AC
℗ 09/2016 Subject to change

Copyright © Siemens AG 2014 - 2016.
All rights reserved

Preface

Purpose of the documentation

This manual supplements the S7-1500/ET 200MP (https://support.industry.siemens.com/cs/ww/en/view/59191792) system manual.

Functions that relate in general to the systems are described in this system manual.

The information provided in this manual and in the system/function manuals supports you in commissioning the systems.

Changes compared to previous version

Compared to the previous version, this manual contains the following change:

Original texts of the license conditions and copyright notes for open-source software are available on the Internet as of 09/2016.

Conventions

The term "CPU" is used in this manual both for the CPUs of the S7-1500 automation system and for interface modules of the ET 200MP distributed I/O system.

Please also observe notes marked as follows:

Note

A note contains important information on the product described in the documentation, on the handling of the product or on the section of the documentation to which particular attention should be paid.

Security information

Siemens provides products and solutions with industrial security functions that support the secure operation of plants, systems, machines and networks.

In order to protect plants, systems, machines and networks against cyber threats, it is necessary to implement – and continuously maintain – a holistic, state-of-the-art industrial security concept. Siemens' products and solutions only form one element of such a concept.

Customer is responsible to prevent unauthorized access to its plants, systems, machines and networks. Systems, machines and components should only be connected to the enterprise network or the internet if and to the extent necessary and with appropriate security measures (e.g. use of firewalls and network segmentation) in place.

Additionally, Siemens' guidance on appropriate security measures should be taken into account. For more information about industrial security, please visit (http://www.siemens.com/industrialsecurity).

Siemens' products and solutions undergo continuous development to make them more secure. Siemens strongly recommends to apply product updates as soon as available and to always use the latest product versions. Use of product versions that are no longer supported, and failure to apply latest updates may increase customer's exposure to cyber threats.

To stay informed about product updates, subscribe to the Siemens Industrial Security RSS Feed under (http://www.siemens.com/industrialsecurity).

Open Source Software

Open-source software is used in the firmware of the I/O modules. Open Source Software is provided free of charge. We are liable for the product described, including the open-source software contained in it, pursuant to the conditions applicable to the product. Siemens accepts no liability for the use of the open source software over and above the intended program sequence, or for any faults caused by modifications to the software.

For legal reasons, we are obliged to publish the original text of the license conditions and copyright notices. Please read the information relating to this on the Internet (https://support.industry.siemens.com/cs/ww/en/view/109741045).

Table of contents

Preface 4
1 Documentation guide 7
2 Product overview 11
2.1 Properties 11
3 Wiring 13
3.1 Wiring and block diagram 13
4 Address space 14
4.1 Address space 14
5 Diagnostics alarms 21
5.1 Status and error displays 21
6 Technical specifications 23
A Dimensional drawing 28

Documentation guide

1

The documentation for the SIMATIC S7-1500 automation system, the CPU 1516pro-2 PN based on SIMATIC S7-1500 and the SIMATIC ET 200MP distributed I/O system is arranged into three areas.
This arrangement enables you to access the specific content you require.

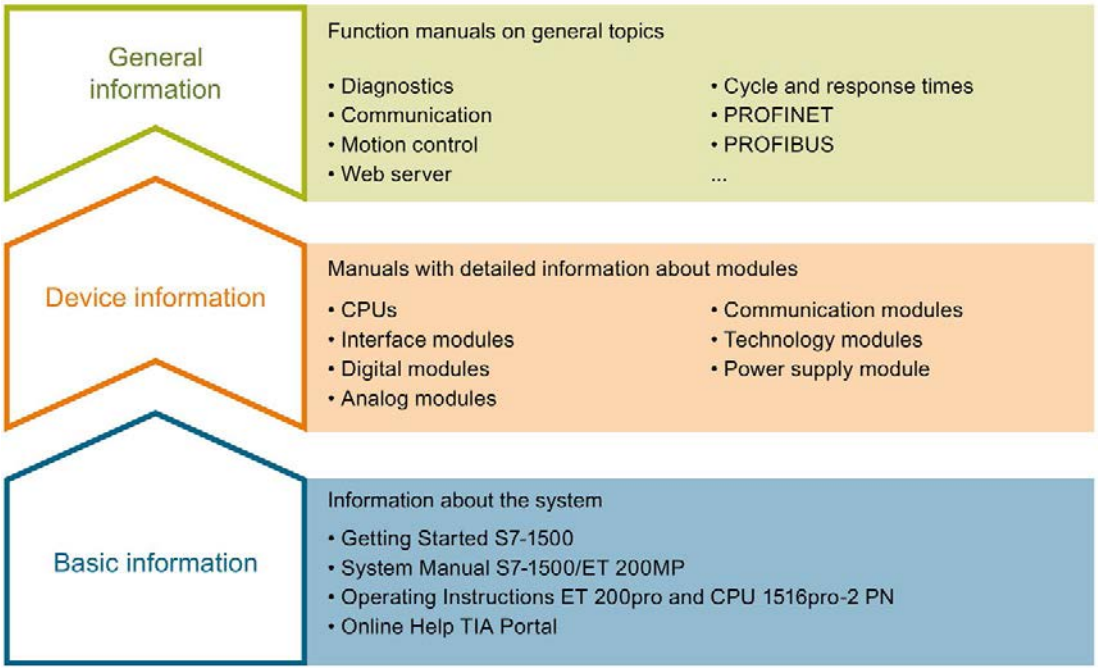

Basic information

The System Manual and Getting Started describe in detail the configuration, installation, wiring and commissioning of the SIMATIC S7-1500 and ET 200MP systems. For CPU 1516pro-2 PN you use the corresponding operating instructions. The STEP 7 online help supports you in the configuration and programming.

Device information

Product manuals contain a compact description of the module-specific information, such as properties, wiring diagrams, characteristics and technical specifications.

General information

The function manuals contain detailed descriptions on general topics regarding the SIMATIC S7-1500 and ET 200MP systems, e.g. diagnostics, communication, motion control, Web server, OPC UA.

You can download the documentation free of charge from the Internet (http://w3.siemens.com/mcms/industrial-automation-systems-simatic/en/manual-overview/Pages/Default.aspx).

Changes and supplements to the manuals are documented in a Product Information.

You can download the product information free of charge from the Internet (https://support.industry.siemens.com/cs/us/en/view/68052815).

Manual Collection S7-1500/ET 200MP

The Manual Collection contains the complete documentation on the SIMATIC S7-1500 automation system and the ET 200MP distributed I/O system gathered together in one file.

You can find the Manual Collection on the Internet (https://support.industry.siemens.com/cs/ww/en/view/86140384).

SIMATIC S7-1500 comparison list for programming languages

The comparison list contains an overview of which instructions and functions you can use for which controller families.

You can find the comparison list on the Internet (https://support.industry.siemens.com/cs/ww/en/view/86630375).

"mySupport"

With "mySupport", your personal workspace, you make the best out of your Industry Online Support.

In "mySupport", you can save filters, favorites and tags, request CAx data and compile your personal library in the Documentation area. In addition, your data is already filled out in support requests and you can get an overview of your current requests at any time.

You must register once to use the full functionality of "mySupport".

You can find "mySupport" on the Internet (https://support.industry.siemens.com/My/ww/en).

"mySupport" - Documentation

In the Documentation area in "mySupport" you can combine entire manuals or only parts of these to your own manual.
You can export the manual as PDF file or in a format that can be edited later.

You can find "mySupport" - Documentation on the Internet (http://support.industry.siemens.com/My/ww/en/documentation).

"mySupport" - CAx data

In the CAx data area in "mySupport", you can access the current product data for your CAx or CAe system.

You configure your own download package with a few clicks.

In doing so you can select:

- Product images, 2D dimension drawings, 3D models, internal circuit diagrams, EPLAN macro files
- Manuals, characteristics, operating manuals, certificates
- Product master data

You can find "mySupport" - CAx data on the Internet (http://support.industry.siemens.com/my/ww/en/CAxOnline).

Application examples

The application examples support you with various tools and examples for solving your automation tasks. Solutions are shown in interplay with multiple components in the system - separated from the focus on individual products.

You will find the application examples on the Internet (https://support.industry.siemens.com/sc/ww/en/sc/2054).

TIA Selection Tool

With the TIA Selection Tool, you can select, configure and order devices for Totally Integrated Automation (TIA).
This tool is the successor of the SIMATIC Selection Tool and combines the known configurators for automation technology into one tool.
With the TIA Selection Tool, you can generate a complete order list from your product selection or product configuration.

You can find the TIA Selection Tool on the Internet (http://w3.siemens.com/mcms/topics/en/simatic/tia-selection-tool).

SIMATIC Automation Tool

You can use the SIMATIC Automation Tool to run commissioning and maintenance activities simultaneously on various SIMATIC S7 stations as a bulk operation independently of the TIA Portal.

The SIMATIC Automation Tool provides a multitude of functions:

- Scanning of a PROFINET/Ethernet network and identification of all connected CPUs
- Address assignment (IP, subnet, gateway) and station name (PROFINET device) to a CPU
- Transfer of the date and the programming device/PC time converted to UTC time to the module
- Program download to CPU
- Operating mode switchover RUN/STOP
- Localization of the CPU by means of LED flashing
- Reading out CPU error information
- Reading the CPU diagnostic buffer
- Reset to factory settings
- Updating the firmware of the CPU and connected modules

You can find the SIMATIC Automation Tool on the Internet (https://support.industry.siemens.com/cs/ww/en/view/98161300).

PRONETA

With SIEMENS PRONETA (PROFINET network analysis), you analyze the PROFINET network during commissioning. PRONETA features two core functions:

- The topology overview independently scans PROFINET and all connected components.
- The IO check is a fast test of the wiring and the module configuration of a system.

You can find SIEMENS PRONETA on the Internet (https://support.industry.siemens.com/cs/ww/en/view/67460624).

Product overview

2

2.1 Properties

Part number:

6ES7523-1BL00-0AA0

View of the module

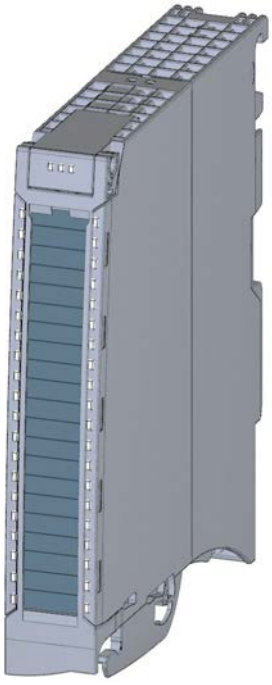

Figure 2-1 View of the DI 16x24VDC/DQ 16x24VDC/0.5A BA module

Properties

The module has the following technical properties:

- Digital inputs
  - 16 digital inputs; electrically isolated in groups of 16
  - Rated input voltage 24 VDC
  - Suitable for switches and 2-/3-/4-wire proximity switches
- Digital outputs
  - 16 digital outputs, electrically isolated in groups of 8
  - Rated output voltage 24 VDC
  - Rated output current 0.5 A per channel
  - Suitable for solenoid valves, DC contactors, and indicator lights

The module supports the following functions:

Table 2- 1 Version dependencies of the module functions

Function	Firmware version of the module	Configuration software	
		STEP 7 (TIA Portal)	GSD file in STEP 7 (TIA Portal) V12 or higher, or STEP 7 V5.5 SP3 or higher
Firmware update	V1.0.0 or higher	V13 or higher	X
Identification data I&M0 to I&M3	V1.0.0 or higher	V13 or higher	X
Module-internal Shared Input (MSI) / Shared Output (MSO)	V1.0.0 or higher	V13 Update 3 or higher (PROFINET IO only)	X (PROFINET IO only)
Configurable submodules / sub-modules for Shared Device	V1.0.0 or higher	V13 Update 3 or higher (PROFINET IO only)	X (PROFINET IO only)

You can configure the module with STEP 7 (TIA Portal) and with a GSD file.

Accessories

The following components are supplied with the module and can also be ordered separately as spare parts:

- Front connector (push-in terminals) including cable tie
- Labeling strips
- U connector
- Universal front door

You can find additional information on accessories in the S7-1500/ET 200MP (http://support.automation.siemens.com/WW/view/en/59191792) system manual.

Wiring 3

3.1 Wiring and block diagram

This section contains the block diagram of the module and outlines various wiring options.

You can find information on wiring the front connector, creating a cable shield, etc. in the Wiring section of the S7-1500/ET 200MP (http://support.automation.siemens.com/WW/view/en/59191792) system manual.

Wiring and block diagram

The figure below shows you how to connect the module and the assignment of the channels to the addresses (input byte a and b, output byte c and d).

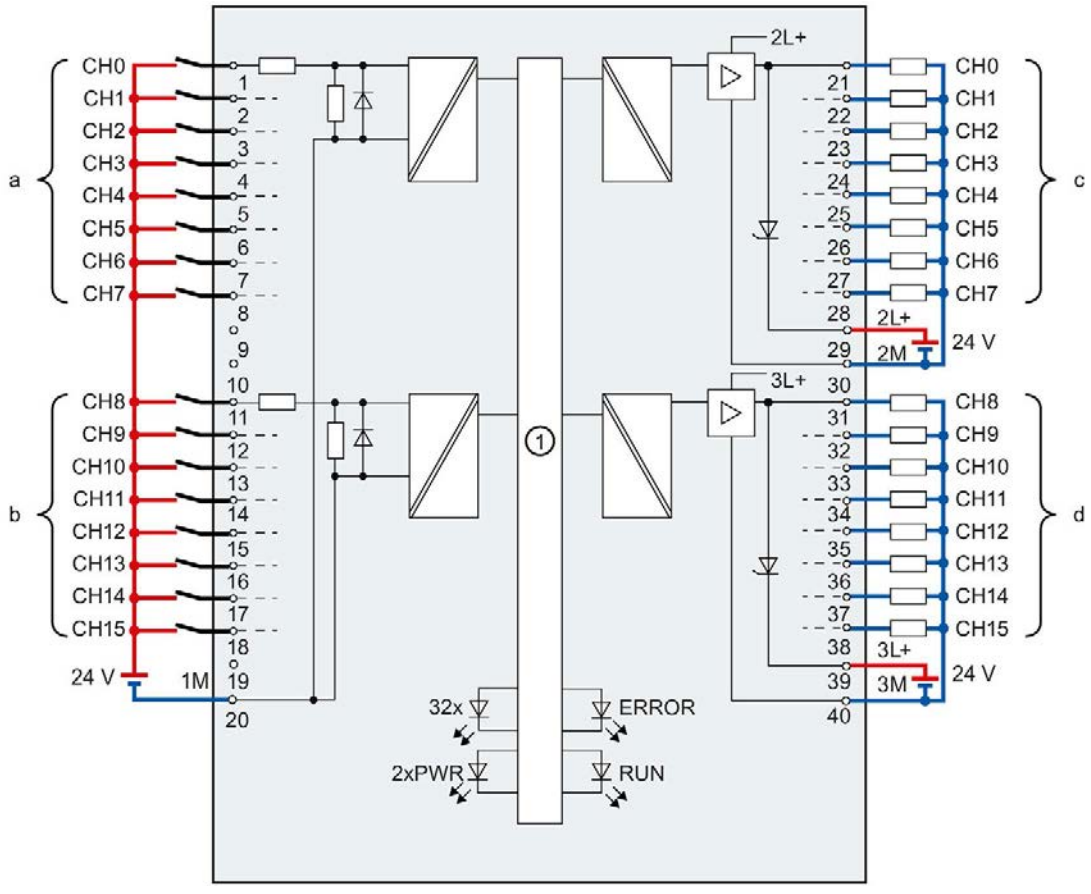

①	Backplane bus interface	CHx	Channel or channel status LED (green)
xL+	Supply voltage 24 V DC	RUN	Status display LED (green)
xM	Ground	ERROR	Error display LED (red)
		PWR	POWER supply voltage LED (green)

Figure 3-1 Block diagram and terminal assignment

Address space

4

4.1 Address space

The module can be configured in various ways in STEP 7. Depending on the configuration, additional/different addresses are assigned in the process image input/output.

Configuration options of DI 16x24VDC/DQ 16x24VDC/0.5A BA

You can configure the module with STEP 7 (TIA Portal) or with a GSD file.

When you configure the module by means of the GSD file, the configurations are available under different abbreviations/module names.

The following configurations are possible:

Table 4- 1 Configuration options

Configuration	Short designation/ module name in the GSD file	Configuration software, e.g., with STEP 7 (TIA Portal)	
		Integrated in hardware catalog STEP 7 (TIA Portal)	GSD file in STEP 7 (TIA Portal) V12 or higher or STEP 7 V5.5 SP3 or higher
1 x 32-channel without value status (1 x 16 digital inputs and 1 x 16 digital outputs)	DI 16x24VDC/ DQ 16x24VDC/0.5 BA	V13 or higher	X
4 x 8-channel without value status (2 x 8 digital inputs and 2 x 8 digital outputs)	DI 16x24VDC/ DQ 16x24VDC/0.5 BA S	V13 Update 3 or higher (PROFINET IO only)	X (PROFINET IO only)
1 x 32-channel with value status for up to 4 submodules (each 1 x 16 channels for module-internal Shared Input or Shared Output)	DI 16x24VDC/ DQ 16x24VDC/0.5 BA MSI or MSO	V13 Update 3 or higher (PROFINET IO only)	X (PROFINET IO only)

Address space for configuration as 1 x 32-channel DI 16x24VDC/DQ 16x24VDC/0.5A BA

The figure below shows the address space assignment for configuration as a 1 x 32-channel module (16 digital inputs / 16 digital outputs). You can freely assign the start address for the module. The addresses of the channels are derived from the start address.

The letters "a to d" are printed on the module- "EB a", for example, stands for module start address input byte a.

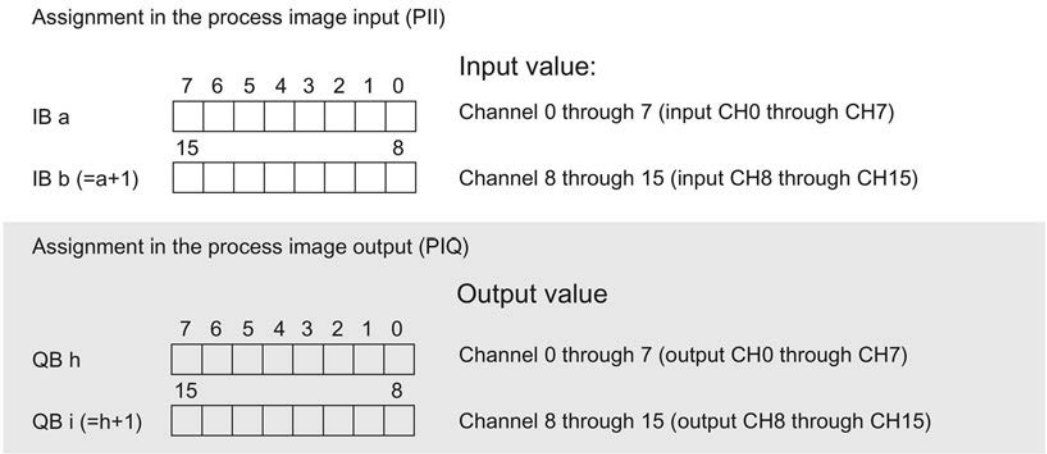

Figure 4-1 Address space for configuration as 32-channel DI 16x24VDC/DQ 16x24VDC/0.5A BA

Address space for configuration as 4 x 8-channel DI 16x24VDC/DQ 16x24VDC/0.5A BA S

For the configuration as a 4 x 8-channel module, the channels of the module are divided into multiple submodules. The submodules can be assigned to different IO controllers when the module is used in a shared device.

The number of usable IO controllers depends on the interface module used. Please observe the information in the manual for the particular interface module.

Unlike the 1 x 32-channel module configuration, each of the four submodules has a freely assignable start address.

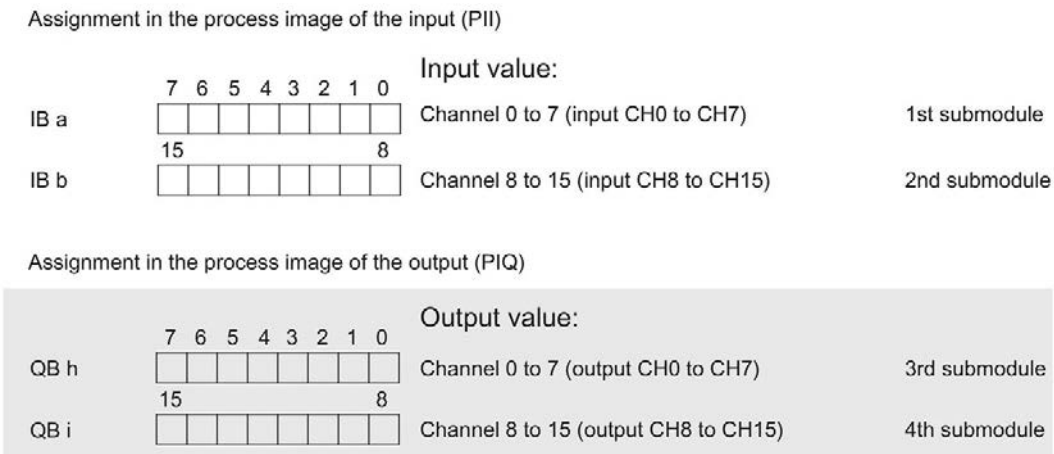

Figure 4-2 Address space for configuration as 4 x 8-channel DI 16x24VDC/DQ 16x24VDC/0.5A BA S

Address space for configuration as 1 x 32-channel DI 16x24VDC/DQ 16x24VDC/0.5A BA MSI/MSO

For configuration as a 1 x 32-channel module (module-internal Shared Input, MSI/Shared Output, MSO), the channels for inputs or outputs 0 to 15 of the module are copied to multiple submodules. Each of the channels 0 to 15 are then available with identical values in various submodules. These submodules can be assigned to up to four IO controllers when the module is used in a Shared Device:

- The IO controller to which submodule 1 is assigned has write access to output channels 0 to 15 and read access to the input channels 0 to 15.
- The IO controllers to which submodule 2, 3 or 4 is assigned have read access to the input channels or output channels 0 to 15.

The number of usable IO controllers depends on the interface module used. Please observe the information in the manual for the particular interface module.

Value status (Quality Information, QI) for inputs

The meaning of the value status depends on the submodule involved.

For the 1st submodule (=basic submodule), the value status is not relevant.

For the 2nd to 4th submodule (=MSI submodule), the value status 0 indicates that the value is incorrect or the basic submodule has not yet been configured (not ready).

Value status (Quality Information, QI) for outputs

The meaning of the value status depends on the submodule involved.

For the 1st submodule (=basic submodule), the value status 1 indicates that the output value specified by the user program is actually output at the module terminal.

Possible causes for value status = 0:

- Value is incorrect, for example, because the supply voltage is missing.
- IO controller of the basic submodule is in STOP mode.

For the 2nd to 4th submodule (=MSO submodule), the value status 1 indicates that the output value specified by the user program is actually output at the module terminal.

Possible causes for value status = 0:

- Value is incorrect, for example, because the supply voltage is missing.
- IO controller of the basic submodule is in STOP mode.
- The basic submodule is not yet configured.

The figure below shows the assignment of the address space with submodule 1 and the value status.

Assignment in the process image input (PII) for 1st submodule

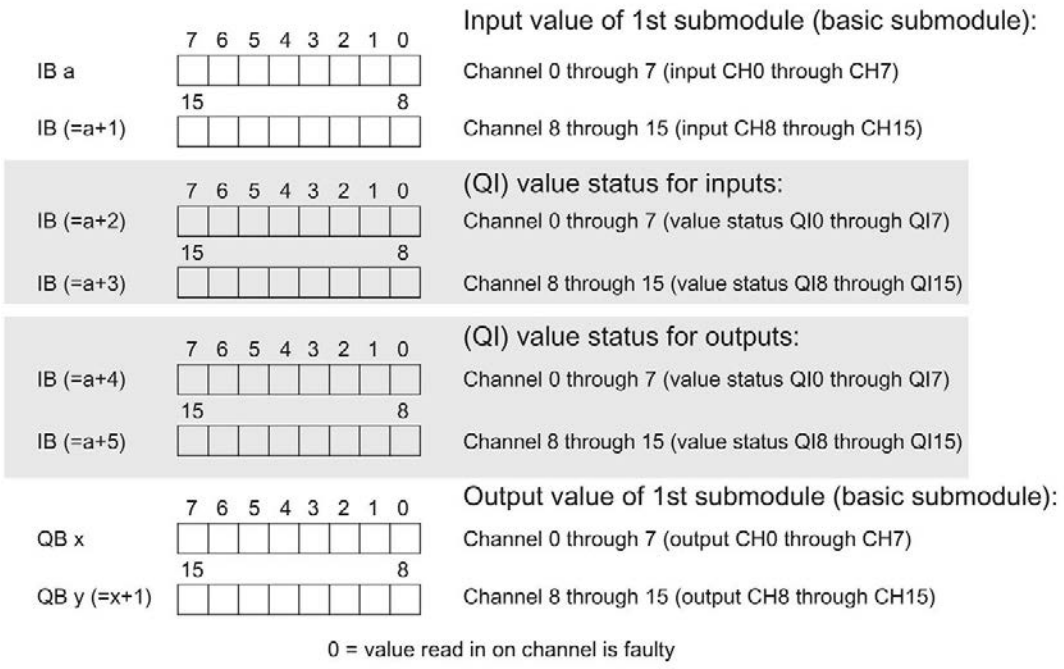

Figure 4-3 Address space for configuration as 1 x 32-channel DI 16x24VDC/DQ 16x24VDC/0.5A BA MSI/MSO

The figure below shows the assignment of the address space with submodule 2 and the value status.

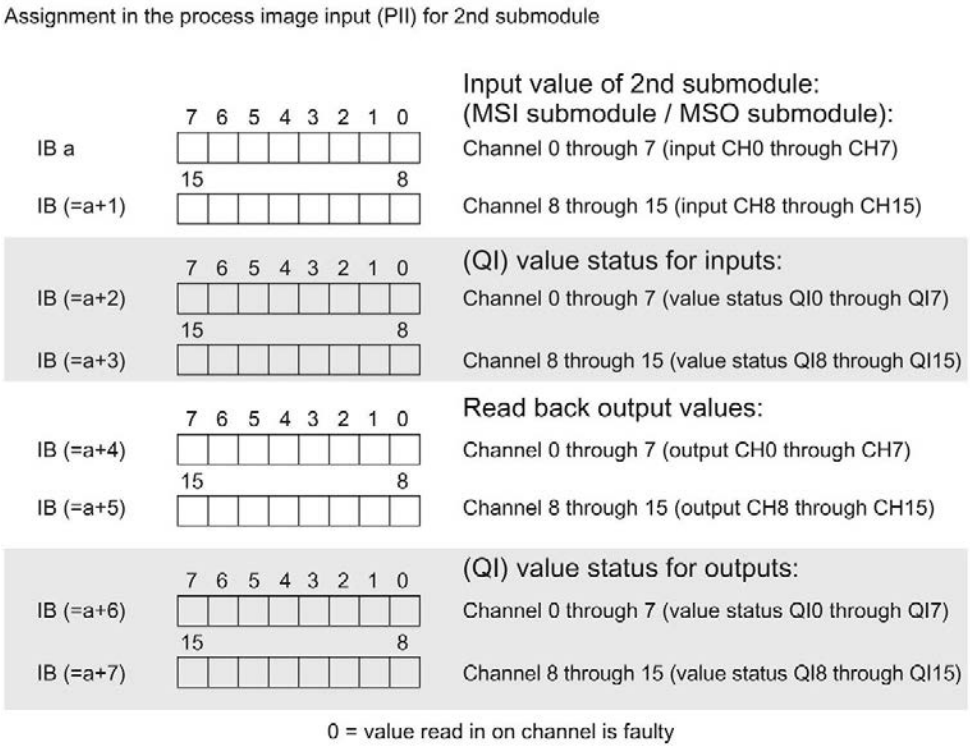

Figure 4-4 Address space for configuration as 1 x 32-channel DI 16x24VDC/DQ 16x24VDC/0.5A BA MSI/MSO

The figure below shows the assignment of the address space with submodule 3 and the value status.

Assignment in the process image input (PII) for 3rd submodule

	7 6 5 4 3 2 1 0	Input value of 3rd submodule: (MSI submodule / MSO submodule):
IB c		Channel 0 through 7 (input CH0 through CH7)
IB (=c+1)	15 … 8	Channel 8 through 15 (input CH8 through CH15)
	7 6 5 4 3 2 1 0	(QI) value status for inputs:
IB (=c+2)		Channel 0 through 7 (value status QI0 through QI7)
IB (=c+3)	15 … 8	Channel 8 through 15 (value status QI8 through QI15)
	7 6 5 4 3 2 1 0	Read back output values:
IB (=c+4)		Channel 0 through 7 (output CH0 through CH7)
IB (=c+5)	15 … 8	Channel 8 through 15 (output CH8 through CH15)
	7 6 5 4 3 2 1 0	(QI) value status for outputs:
IB (=c+6)		Channel 0 through 7 (value status QI0 through QI7)
IB (=c+7)	15 … 8	Channel 8 through 15 (value status QI8 through QI15)

0 = value read in on channel is faulty

Figure 4-5 Address space for configuration as 1 x 32-channel DI 16x24VDC/DQ 16x24VDC/0.5A BA MSI/MSO

The figure below shows the assignment of the address space with submodule 4 and the value status.

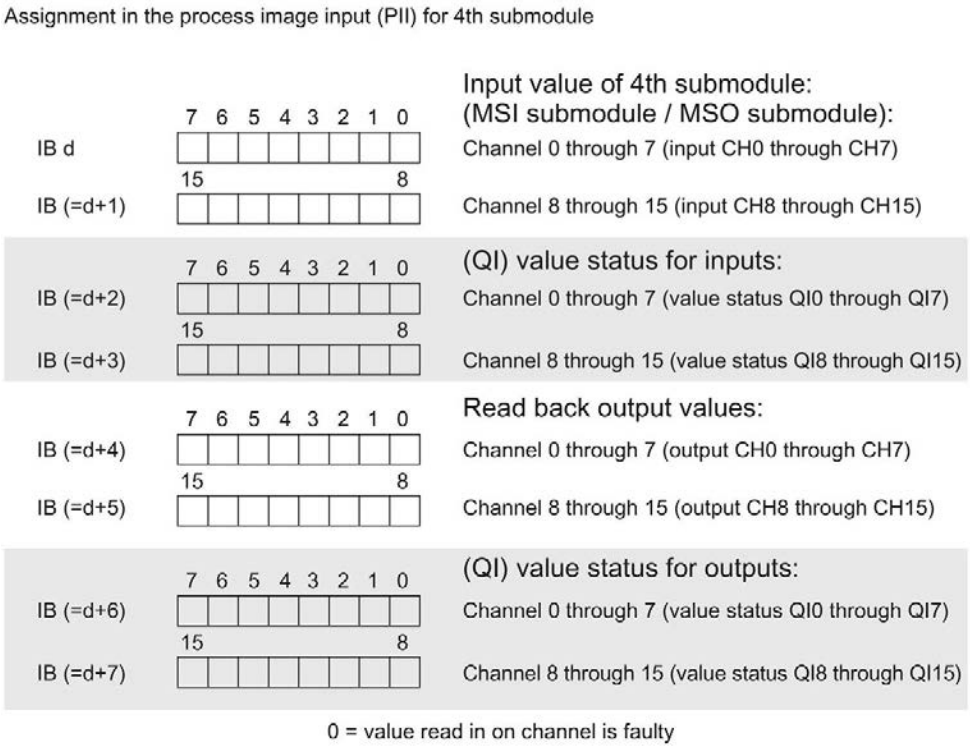

Figure 4-6 Address space for configuration as 1 x 32-channel DI 16x24VDC/DQ 16x24VDC/0.5A BA MSI/MSO

Reference

You can find information on the module-internal shared input/shared output (MSI/MSO) function in the section Module-internal shared input/shared output (MSI/MSO) of the function manual PROFINET with STEP 7 V13 (https://support.industry.siemens.com/cs/ww/en/view/49948856).

Diagnostics alarms 5

The module has no selectable diagnostics. Diagnostics alarms, for example, cannot be output with STEP 7 (TIA Portal).

5.1 Status and error displays

LED displays

The figure below shows the LED displays (status and error displays) of the DI 16x24VDC/DQ 16x24VDC/0.5A BA.

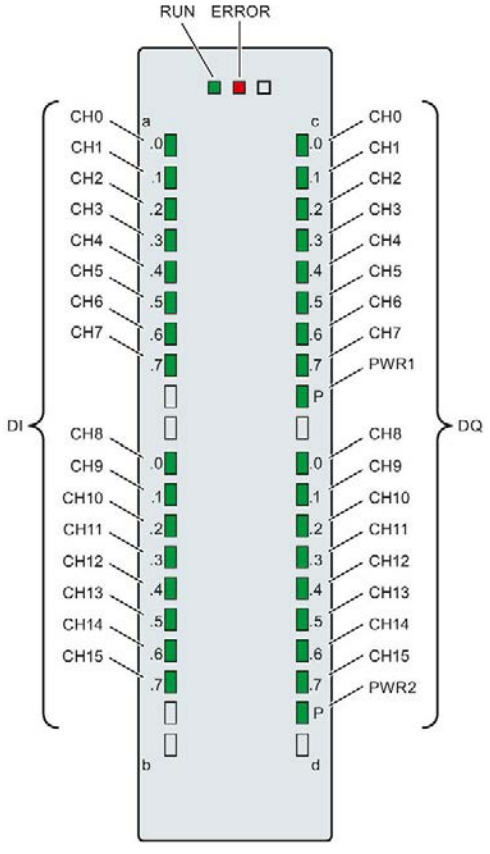

Figure 5-1 LED displays of the module DI 16x24VDC/DQ 16x24VDC/0.5A BA

Meaning of the LED displays

The tables below explain the meaning of the status and error displays.

LED RUN/ERROR

Table 5- 1 RUN/ERROR status and error displays

LED		Meaning	Remedy
RUN	ERROR		
Off	Off	Voltage missing or too low at backplane bus.	• Switch on the CPU and/or the system power supply modules. • Verify that the U connectors are inserted. • Check to see if too many modules are inserted.
Flashes	Off	Module is starting up.	---
On	Off	Module is ready.	
Flashes	Flashes	Hardware defective.	Replace the module.

LED PWRx

Table 5- 2 PWRx status display

LED PWRx	Meaning	Remedy
Off	Supply voltage L+ too low or missing	Check supply voltage L+.
On	Supply voltage L+ is present and OK.	---

LED CHx

Table 5- 3 CHx status display

LED CHx	Meaning	Remedy
Off	0 = Status of the input/output signal.	---
On	1 = Status of the input/output signal.	---

Technical specifications

6

Technical specifications of the DI 16x24VDC/DQ 16x24VDC/0.5A BA

	6ES7523-1BL00-0AA0
General information	
Product type designation	DI 16x24VDC / DQ16x24VDC/0.5A BA
Hardware functional status	FS01
Firmware version	V1.0.0
• FW update possible	Yes
Product function	
I&M data	Yes; I&M0 to I&M3
Engineering with	
STEP 7 TIA Portal can be configured/integrated as of version	V13 / V13
STEP 7 can be configured/integrated as of version	V5.5 SP3 / -
PROFIBUS as of GSD version/GSD revision	V1.0 / V5.1
PROFINET as of GSD version/GSD revision	V2.3 / -
Operating mode	
DI	Yes
Counters	No
DQ	Yes
DQ with energy-saving function	No
PWM	No
Oversampling	No
MSI	Yes
MSO	Yes
Supply voltage	
Rated value (DC)	24 V
Valid range, low limit (DC)	20.4 V
Valid range, high limit (DC)	28.8 V
Reverse polarity protection	Yes; with internal protection with 7 A per group
Input current	
Current consumption, max.	30 mA
Output voltage	
Rated value (DC)	24 V
Power	
Power consumption from the backplane bus	1.1 W
Power loss	
Power loss, typ.	3.45 W

	6ES7523-1BL00-0AA0
Digital inputs	
Number of inputs	16
Configurable digital inputs	No
Sinking/sourcing input	Sinking input
Input characteristic curve acc. to IEC 61131, type 3	Yes
Input voltage	
Type of input voltage	DC
Rated value (DC)	24 V
for signal "0"	-30 to +5 V
for signal "1"	+11 to +30 V
Input current	
for signal "1", typ.	2.7 mA
Input delay (for rated value of input voltage)	
For standard inputs	
• Configurable	No
• with "0" to "1", min.	3 ms
• with "0" to "1", max.	4 ms
• with "1" to "0", min.	3 ms
• with "1" to "0", max.	4 ms
For interrupt inputs	
• Configurable	No
Cable length	
shielded, max.	1000 m
unshielded, max.	600 m
Digital outputs	
Number of outputs	16
Sourcing output	Yes
Short-circuit protection	Yes
• Response threshold, typ.	1 A
Limitation of inductive shutdown voltage to	L+ (-53 V)
Activation of a digital input	Yes
Switching capacity of the outputs	
With resistive load, max.	0.5 A
With lamp load, max.	5 W
Load resistance range	
Low limit	48 Ω
High limit	12 kΩ
Output voltage	
for signal "1", min.	L+ (-0.8 V)

	6ES7523-1BL00-0AA0
Output current	
For signal "1" rated value	0.5 A
For signal "1" permitted range, max.	0.5 A
For signal "0" residual current, max.	0.5 mA
Output delay with resistive load	
"0" to "1", max.	100 µs
"1" to "0", max.	500 µs
Parallel connection of two outputs	
For logical operations	Yes
For increased performance	No
For redundant activation of a load	Yes
Switching frequency	
With resistive load, max.	100 Hz
With inductive load, max.	0.5 Hz
With lamp load, max.	10 Hz
Total current of the outputs	
Current per channel, max.	0.5 A; see additional description in the manual
Current per group, max.	4 A; see additional description in the manual
Current per module, max.	8 A; see additional description in the manual
Cable length	
shielded, max.	1000 m
unshielded, max.	600 m
Encoders	
Connectable encoders	
2-wire sensor	Yes
• Permitted quiescent current (2-wire sensor), max.	1.5 mA
Isochronous mode	
Isochronous mode (application synchronized up to terminal)	No
Interrupts/diagnostics/status information	
Diagnostics function	No
Substitute values can be applied	No
Interrupts	
Diagnostics interrupt	No
Hardware interrupt	No
Diagnostics alarms	
Monitoring of supply voltage	No
Wire break	No
Short-circuit	No
Group error	No

	6ES7523-1BL00-0AA0
Diagnostics indicator LED	
RUN LED	Yes; green LED
ERROR LED	Yes; red LED
Monitoring of supply voltage (PWR LED)	Yes; green LED
Channel status display	Yes; green LED
For channel diagnostics	No
For module diagnostics	No
Electrical isolation	
Electrical isolation of channels	
Between the channels	No
Between the channels, in groups of	8
Between the channels and backplane bus	Yes
Isolation	
Isolation tested with	707 V DC (type test)
Ambient conditions	
Ambient temperature during operation	
Horizontal mounting position, min.	0 °C
Horizontal mounting position, max.	60 °C
Vertical mounting position, min.	0 °C
Vertical mounting position, max.	40 °C
Distributed mode	
Prioritized startup	Yes
Dimensions	
Width	25 mm
Height	147 mm
Depth	129 mm
Weights	
Weight, approx.	280 g
Miscellaneous	
Note:	Delivery includes 40-pin push-in front connector

Power reduction (derating) to total current of outputs (per group)

The following graphs show the loading capacity of the outputs in relation to the mounting position of the S71500 automation system/ET 200MP distributed I/O system and the ambient temperature.

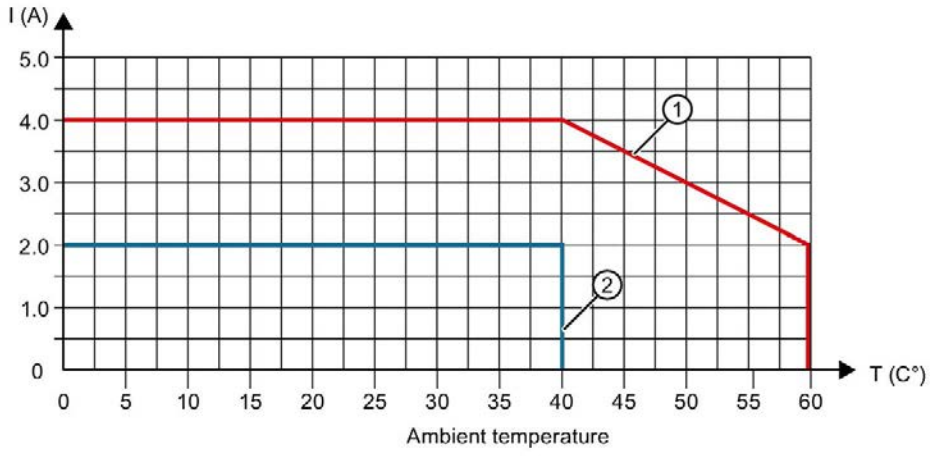

① Horizontal mounting of the system

② Vertical mounting of the system

Figure 6-1 Details on total current of outputs (per group)

Dimensional drawing

A

The dimensional drawing of the module on the mounting rail, as well as a dimensional drawing with open front cover, are provided in this appendix. Always observe the specified dimensions for installation in cabinets, control rooms, etc.

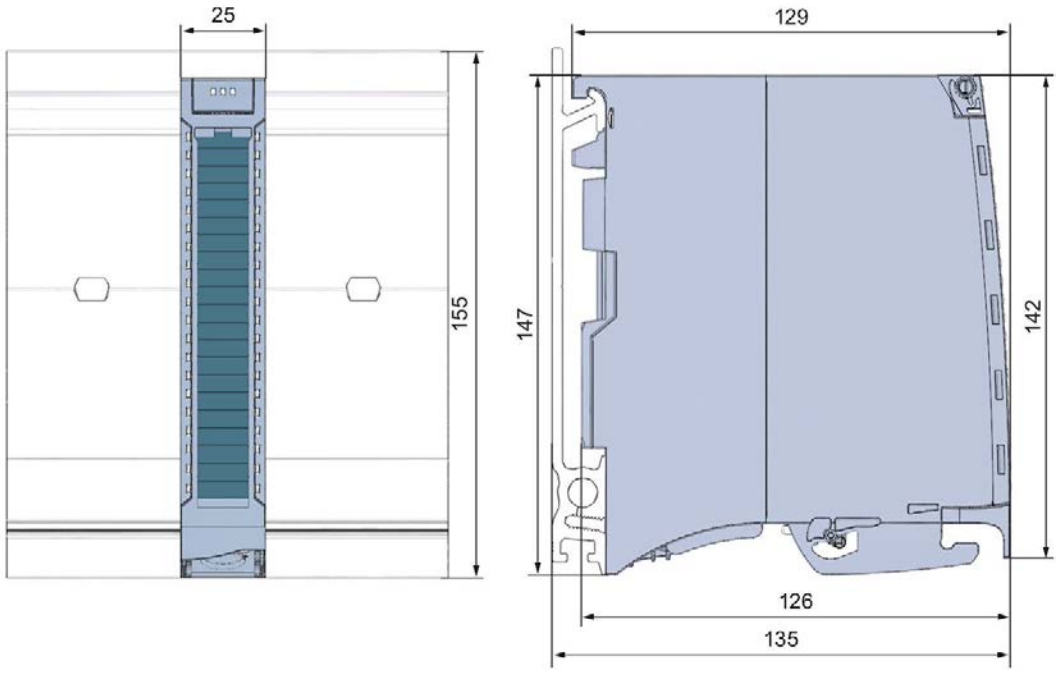

Figure A-1 Dimensional drawing of the DI 16x24VDC/DQ 16x24VDC/0.5A BA module

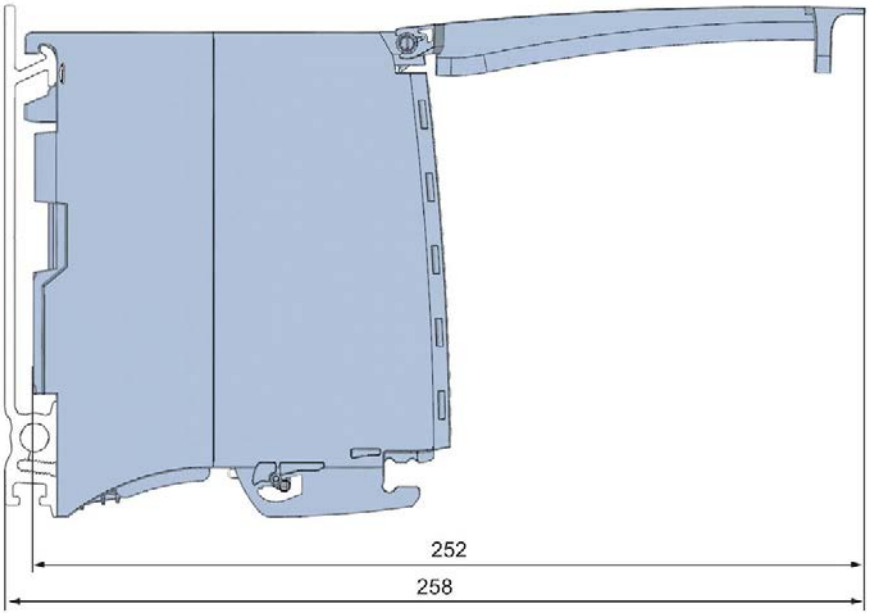

Figure A-2 Dimensional drawing of the DI 16x24VDC/DQ 16x24VDC/0.5A BA module, side view with open front cover

SIEMENS

Manual

SIMATIC

S7-1500 / ET 200MP

Digital input/output module
DI 32x24VDC SNK/SRC/DQ 32x24VDC/0.3A SNK BA
(6ES7523-1BP50-0AA0)

Edition 07/2020

support.industry.siemens.com

SIEMENS

SIMATIC

S7-1500/ET 200MP Digital input/output module DI 32x24VDC SNK/SRC/ DQ 32x24VDC/0.3A SNK BA (6ES7523-1BP50-0AA0)

Equipment Manual

Preface

S7-1500 / ET 200MP Documentation Guide 1

Product overview 2

Wiring 3

Address space 4

Diagnostics alarms 5

Technical specifications 6

Dimensional drawing A

07/2020

A5E48027024-AA

Legal information

Warning notice system

This manual contains notices you have to observe in order to ensure your personal safety, as well as to prevent damage to property. The notices referring to your personal safety are highlighted in the manual by a safety alert symbol, notices referring only to property damage have no safety alert symbol. These notices shown below are graded according to the degree of danger.

⚠ DANGER
indicates that death or severe personal injury **will** result if proper precautions are not taken.

⚠ WARNING
indicates that death or severe personal injury **may** result if proper precautions are not taken.

⚠ CAUTION
indicates that minor personal injury can result if proper precautions are not taken.

NOTICE
indicates that property damage can result if proper precautions are not taken.

If more than one degree of danger is present, the warning notice representing the highest degree of danger will be used. A notice warning of injury to persons with a safety alert symbol may also include a warning relating to property damage.

Qualified Personnel

The product/system described in this documentation may be operated only by **personnel qualified** for the specific task in accordance with the relevant documentation, in particular its warning notices and safety instructions. Qualified personnel are those who, based on their training and experience, are capable of identifying risks and avoiding potential hazards when working with these products/systems.

Proper use of Siemens products

Note the following:

⚠ WARNING
Siemens products may only be used for the applications described in the catalog and in the relevant technical documentation. If products and components from other manufacturers are used, these must be recommended or approved by Siemens. Proper transport, storage, installation, assembly, commissioning, operation and maintenance are required to ensure that the products operate safely and without any problems. The permissible ambient conditions must be complied with. The information in the relevant documentation must be observed.

Trademarks

All names identified by ® are registered trademarks of Siemens AG. The remaining trademarks in this publication may be trademarks whose use by third parties for their own purposes could violate the rights of the owner.

Disclaimer of Liability

We have reviewed the contents of this publication to ensure consistency with the hardware and software described. Since variance cannot be precluded entirely, we cannot guarantee full consistency. However, the information in this publication is reviewed regularly and any necessary corrections are included in subsequent editions.

Siemens AG
Digital Industries
Postfach 48 48
90026 NÜRNBERG
GERMANY

A5E48027024-AA
Ⓟ 07/2020 Subject to change

Copyright © Siemens AG 2020.
All rights reserved

Preface

Purpose of the documentation

This manual supplements the S7-1500/ET 200MP (https://support.industry.siemens.com/cs/ww/en/view/59191792) system manual.

Functions that relate in general to the systems are described in this system manual.

The information provided in this manual and in the system/function manuals supports you in commissioning the systems.

Conventions

The term "CPU" is used in this manual both for the CPUs of the S7-1500 automation system and for interface modules of the ET 200MP distributed I/O system.

Please also observe notes marked as follows:

Note

A note contains important information on the product described in the documentation, on the handling of the product or on the section of the documentation to which particular attention should be paid.

Security information

Siemens provides products and solutions with industrial security functions that support the secure operation of plants, systems, machines and networks.

In order to protect plants, systems, machines and networks against cyber threats, it is necessary to implement – and continuously maintain – a holistic, state-of-the-art industrial security concept. Siemens' products and solutions constitute one element of such a concept.

Customers are responsible for preventing unauthorized access to their plants, systems, machines and networks. Such systems, machines and components should only be connected to an enterprise network or the internet if and to the extent such a connection is necessary and only when appropriate security measures (e.g. firewalls and/or network segmentation) are in place.

For additional information on industrial security measures that may be implemented, please visit (https://www.siemens.com/industrialsecurity).

Siemens' products and solutions undergo continuous development to make them more secure. Siemens strongly recommends that product updates are applied as soon as they are available and that the latest product versions are used. Use of product versions that are no longer supported, and failure to apply the latest updates may increase customers' exposure to cyber threats.

To stay informed about product updates, subscribe to the Siemens Industrial Security RSS Feed visit (https://www.siemens.com/industrialsecurity).

Open Source Software

Open-source software is used in the firmware of the I/O modules. Open Source Software is provided free of charge. We are liable for the product described, including the open-source software contained in it, pursuant to the conditions applicable to the product. Siemens accepts no liability for the use of the open source software over and above the intended program sequence, or for any faults caused by modifications to the software.

For legal reasons, we are obliged to publish the original text of the license conditions and copyright notices. Please read the information relating to this on the Internet (https://support.industry.siemens.com/cs/ww/en/view/109757558).

Table of contents

Preface **3**

1 S7-1500 / ET 200MP Documentation Guide **6**

2 Product overview **8**

2.1 Properties 8

3 Wiring **11**

3.1 Wiring and block diagram 11

3.2 Terminal assignment X10 and X11 12

3.3 Connecting a module with a connection module 15

3.4 Wiring of the module 17

3.5 Fuse 19

4 Address space **21**

5 Diagnostics alarms **29**

5.1 Status and error displays 29

6 Technical specifications **31**

A Dimensional drawing **36**

S7-1500 / ET 200MP Documentation Guide 1

The documentation for the SIMATIC S7-1500 automation system and the SIMATIC ET 200MP distributed I/O system is arranged into three areas.
This arrangement enables you to access the specific content you require.

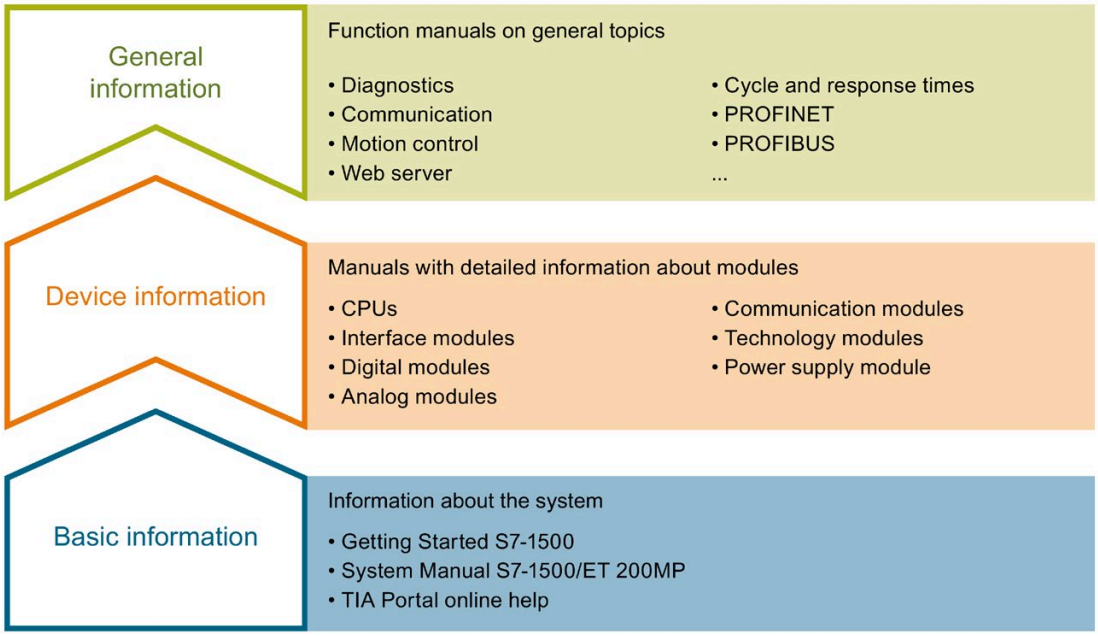

Basic information

The System Manual and Getting Started describe in detail the configuration, installation, wiring and commissioning of the SIMATIC S7-1500 and ET 200MP systems. The STEP 7 online help supports you in the configuration and programming.

Device information

Product manuals contain a compact description of the module-specific information, such as properties, wiring diagrams, characteristics and technical specifications.

General information

The function manuals contain detailed descriptions on general topics regarding the SIMATIC S7-1500 and ET 200MP systems, e.g. diagnostics, communication, motion control, Web server, OPC UA.

You can download the documentation free of charge from the Internet (https://support.industry.siemens.com/cs/ww/en/view/109742691).

Changes and supplements to the manuals are documented in a Product Information.

You can download the product information free of charge from the Internet (https://support.industry.siemens.com/cs/us/en/view/68052815).

Manual Collection S7-1500/ET 200MP

The Manual Collection contains the complete documentation on the SIMATIC S7-1500 automation system and the ET 200MP distributed I/O system gathered together in one file.

You can find the Manual Collection on the Internet (https://support.industry.siemens.com/cs/ww/en/view/86140384).

SIMATIC S7-1500 comparison list for programming languages

The comparison list contains an overview of which instructions and functions you can use for which controller families.

You can find the comparison list on the Internet (https://support.industry.siemens.com/cs/ww/en/view/86630375).

"mySupport"

With "mySupport", your personal workspace, you make the best out of your Industry Online Support.

In "mySupport", you can save filters, favorites and tags, request CAx data and compile your personal library in the Documentation area. In addition, your data is already filled out in support requests and you can get an overview of your current requests at any time.

You must register once to use the full functionality of "mySupport".

You can find "mySupport" on the Internet (https://support.industry.siemens.com/My/ww/en).

Application examples

The application examples support you with various tools and examples for solving your automation tasks. Solutions are shown in interplay with multiple components in the system - separated from the focus on individual products.

You will find the application examples on the Internet (https://support.industry.siemens.com/sc/ww/en/sc/2054).

Product overview

2

2.1 Properties

Part number:

6ES7523-1BP50-0AA0

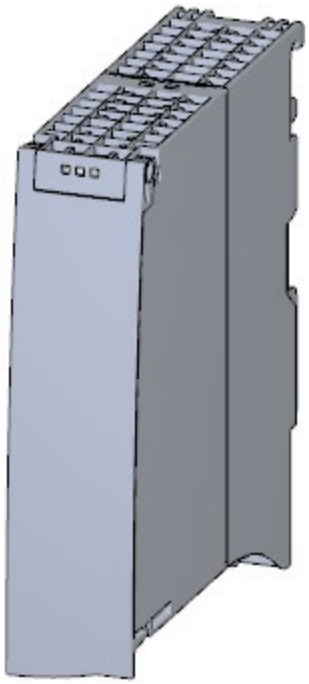

Figure 2-1 View of the module DI 32x24VDC SNK/SRC/DQ 32x24VDC/0.3A SNK BA

Properties

The module has the following technical properties:

- Digital inputs
  - 32 digital inputs; electrically isolated in 2 groups of 16
  - Sourcing input or sinking input, depending on wiring
  - Rated input voltage 24 VDC
  - Suitable for switches and 2-/3-/4-wire proximity switches
- Digital outputs
  - 32 digital outputs, electrically isolated in 2 groups of 16
  - Sinking output
  - Rated output voltage 24 VDC
  - Rated output current 0.3 A per channel
  - Suitable for solenoid valves, DC contactors, and indicator lights

The module supports the following functions:

Table 2- 1 Version dependencies of the module functions

Function	Firmware version of the module	Configuration software	
		STEP 7 (TIA Portal) as of V16 and HSP 0319	GSD file in STEP 7 (TIA Portal) V12 or higher, or STEP 7 V5.5 SP3 or higher
Firmware update	V1.0.0 or higher	X	--- / X
Identification data I&M0 to I&M3	V1.0.0 or higher	X	X
Module-internal Shared Input (MSI) / Shared Output (MSO)	V1.0.0 or higher	X (PROFINET IO only)	X (PROFINET IO only)
Configurable submodules / submodules for Shared Device	V1.0.0 or higher	X (PROFINET IO only)	X (PROFINET IO only)

You can configure the module with STEP 7 (TIA Portal) and with a GSD file.

Accessories

The following accessories are supplied with the module and can be ordered as spare parts:

- U connector
- Universal front door with the article number: 6ES7 591-8AA00-0AA0

You can find additional information in the system manual S7-1500/ET 200MP (https://support.industry.siemens.com/cs/ww/en/view/59191792).

Other components

The following must be ordered separately:

- SIMATIC TOP connect connection module
- Pre-fabricated connecting cable with IDC connectors

For additional information, see section Connecting a module with a connection module (Page 15)

Wiring

3

3.1 Wiring and block diagram

This section contains the block diagram of the module and the terminal assignment.

Wiring and block diagram

The following figure shows the terminal assignment and the assignment of the channels.

- Inputs: Channel 0 to 31 to connector X10.
- Outputs: Channel 0 to 31 to connector X11.

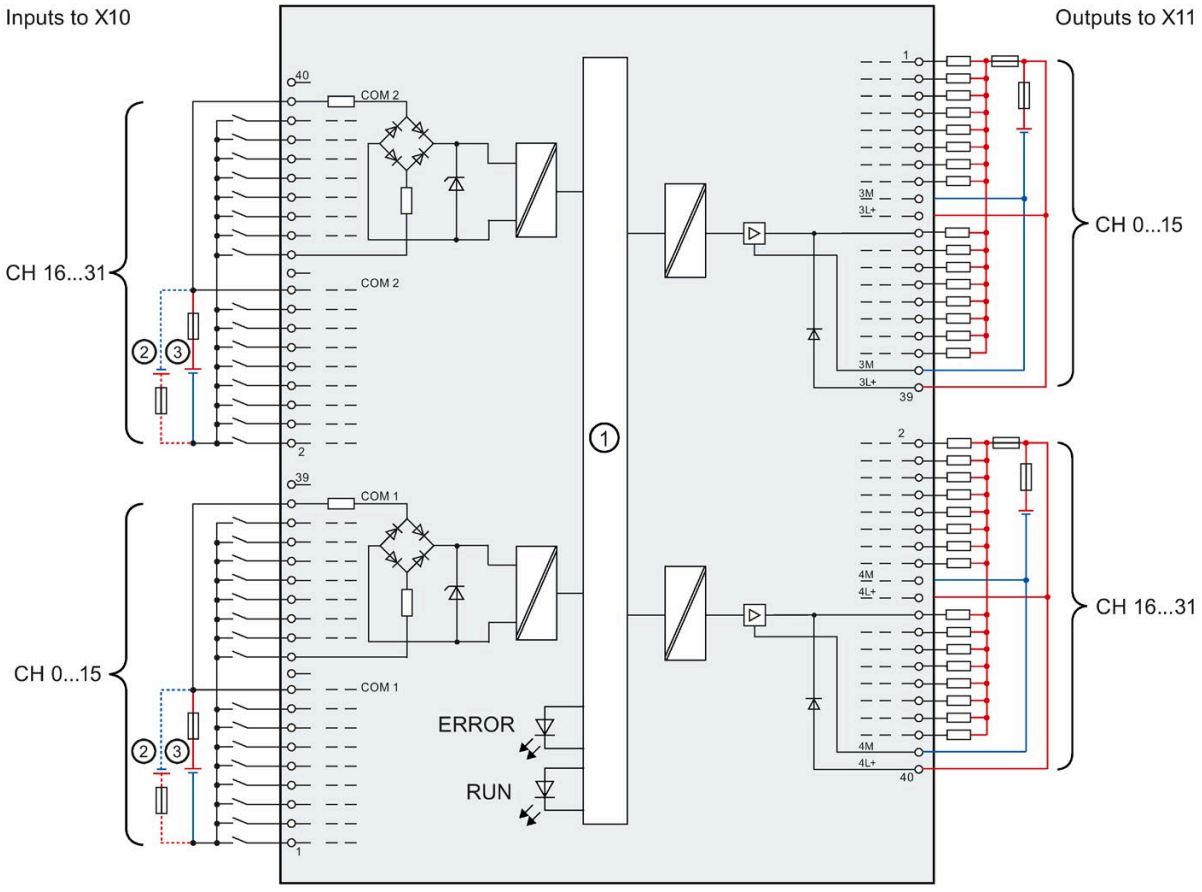

①	Backplane bus interface	CHx	Channel
②	Connection type sinking	RUN	Status display LED (green)
③	Connection type sourcing	ERROR	Error display LED (red)

Figure 3-1 Block diagram and terminal assignment

3.2 Terminal assignment X10 and X11

The following figure shows the assignment of the channels to the addresses.

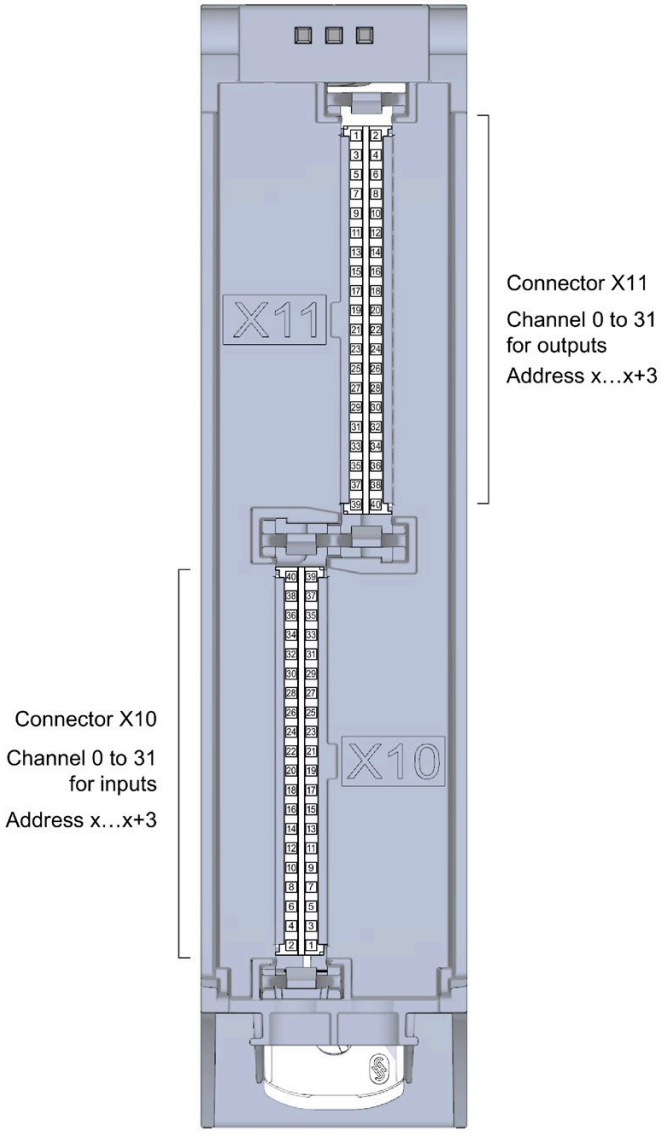

Figure 3-2 Front view of the module without front door

Terminal and address assignment

For connecting sensors or actuators, we recommend using the SIMATIC TOP connect pre-assembled connecting cables and the SIMATIC TOP connect connection modules. However, if you choose another wiring option, you will need the following tables.

Table 3- 1 Assignment for connector X10 of the module

Assignment for inputs to X10					
Terminal	**Channel**	**Address**	**Terminal**	**Channel**	**Address**
40	---	---	**39**	---	---
38	2COM *	---	**37**	1COM **	---
36	Channel 31	x+3.7	**35**	Channel 15	x+1.7
34	Channel 30	x+3.6	**33**	Channel 14	x+1.6
32	Channel 29	x+3.5	**31**	Channel 13	x+1.5
30	Channel 28	x+3.4	**29**	Channel 12	x+1.4
28	Channel 27	x+3.3	**27**	Channel 11	x+1.3
26	Channel 26	x+3.2	**25**	Channel 10	x+1.2
24	Channel 25	x+3.1	**23**	Channel 9	x+1.1
22	Channel 24	x+3.0	**21**	Channel 8	x+1.0
20	---	---	**19**	---	---
18	2COM *	---	**17**	1COM **	---
16	Channel 23	x+2.7	**15**	Channel 7	x.7
14	Channel 22	x+2.6	**13**	Channel 6	x.6
12	Channel 21	x+2.5	**11**	Channel 5	x.5
10	Channel 20	x+2.4	**9**	Channel 4	x.4
8	Channel 19	x+2.3	**7**	Channel 3	x.3
6	Channel 18	x+2.2	**5**	Channel 2	x.2
4	Channel 17	x+2.1	**3**	Channel 1	x.1
2	Channel 16	x+2.0	**1**	Channel 0	x.0

* 2M for Sinking (sinking input) connection type/ 2L+ for Sourcing (sourcing input) connection type

** 1M for Sinking (sinking input) connection type/ 1L+ for Sourcing (sourcing input) connection type

Table 3- 2 Assignment for the connector X11 of the module

Assignment for outputs to X11					
Terminal	**Channel**	**Address**	**Terminal**	**Channel**	**Address**
1	Channel 0	x.0	**2**	Channel 16	x+2.0
3	Channel 1	x.1	**4**	Channel 17	x+2.1
5	Channel 2	x.2	**6**	Channel 18	x+2.2
7	Channel 3	x.3	**8**	Channel 19	x+2.3
9	Channel 4	x.4	**10**	Channel 20	x+2.4
11	Channel 5	x.5	**12**	Channel 21	x+2.5
13	Channel 6	x.6	**14**	Channel 22	x+2.6
15	Channel 7	x.7	**16**	Channel 23	x+2.7
17	3M	---	**18**	4M	---
19	3L+	---	**20**	4L+	---
21	Channel 8	x+1.0	**22**	Channel 24	x+3.0
23	Channel 9	x+1.1	**24**	Channel 25	x+3.1
25	Channel 10	x+1.2	**26**	Channel 26	x+3.2
27	Channel 11	x+1.3	**28**	Channel 27	x+3.3
29	Channel 12	x+1.4	**30**	Channel 28	x+3.4
31	Channel 13	x+1.5	**32**	Channel 29	x+3.5
33	Channel 14	x+1.6	**34**	Channel 30	x+3.6
35	Channel 15	x+1.7	**36**	Channel 31	x+3.7
37	3M	---	**38**	4M	---
39	3L+	---	**40**	4L+	---

3.3 Connecting a module with a connection module

Component for connecting

To connect actuators or sensors, you need 2 connection modules per module. The connection modules are connected to the module with pre-assembled connecting cables.

You can find additional information on the components of the SIMATIC TOP connect system cabling, e.g. for connecting connection modules, in the equipment manual SIMATIC TOP connect for S7-1500 and ET 200MP (https://support.industry.siemens.com/cs/ww/en/view/95924607).

Note

Common supply

If you use the listed SIMATIC TOP connect connection modules, then all 32 channels of a connection module have a common supply. This means that 2 groups of 16 channels each are supplied by common potential.

You can find the required components in the tables below.

Table 3- 3 SIMATIC TOP connect connection module

Components	Type	Description	Connection technology	Article number	Delivery quantity
Connection modules for digital inputs	TP1	1-wire connection, without LED (sinking input)	- Screw terminals - Push-in system	6ES7924-2AA20-0AA0 6ES7924-2AA20-0AC0	Pack of 1 Pack of 1
		1-wire connection, with LED (sinking input)	- Screw terminals - Push-in system	6ES7924-2AA20-0BA0 6ES7924-2AA20-0BC0	Pack of 1 Pack of 1
		1-wire connection, with LED (sourcing input)	- Screw terminals - Push-in system	6ES7924-2AK20-0BA0 6ES7924-2AK20-0BC0	Pack of 1 Pack of 1
	TP3	3-wire connection, without LED (sinking input)	- Screw terminals - Push-in system	6ES7924-2CA20-0AA0 6ES7924-2CA20-0AC0	Pack of 1 Pack of 1
		3-wire connection, with LED (sinking input)	- Screw terminals - Push-in system	6ES7924-2CA20-0BA0 6ES7924-2CA20-0BC0	Pack of 1 Pack of 1
Connection modules for digital outputs	TP1	1-wire connection, without LED (sinking output)	- Screw terminals - Push-in system	6ES7924-2AA20-0AA0 6ES7924-2AA20-0AC0	Pack of 1 Pack of 1
		1-wire connection, with LED (sinking output)	- Screw terminals - Push-in system	6ES7924-2AM20-0BA0 6ES7924-2AM20-0BC0	Pack of 1 Pack of 1
	TP3	3-wire connection, without LED (sinking output)	- Screw terminals - Push-in system	6ES7924-2CA20-0AA0 6ES7924-2CA20-0AC0	Pack of 1 Pack of 1

Table 3- 4 Connecting cables SIMATIC TOP connect

Components	Length	Article number	Delivery quantity
Pre-assembled connecting cable with IDC connector an both ends • IDC connector 40-pin for the I/O module • IDC connector 50-pin for the SIMATIC TOP connect connection module	1.0 m	6ES7923-5BB00-0GB0	Pack of 1
	2.0 m	6ES7923-5BC00-0GB0	Pack of 1
	2.5 m	6ES7923-5BC50-0GB0	Pack of 1
	3.0 m	6ES7923-5BD00-0GB0	Pack of 1

Support for selecting hardware components

We recommend you use the TIA Selection Tool for planning your project. The TIA Selection Tool is available free of charge as a desktop version for download or as a cloud version, refer to the Internet (https://new.siemens.com/global/en/products/automation/topic-areas/tia/tia-selection-tool.html).

3.4 Wiring of the module

Requirement

- The I/O modules are installed on the mounting rail.
- The supply voltage of the station is switched off.

Procedure

1. Plug the two SIMATIC TOP connect connecting cables with the **40-pin** IDC connector into X10 and X11.

   Note when plugging:

   – ① The nob on the left edge of connector X11

   – ② The nob on the right edge of connector X10

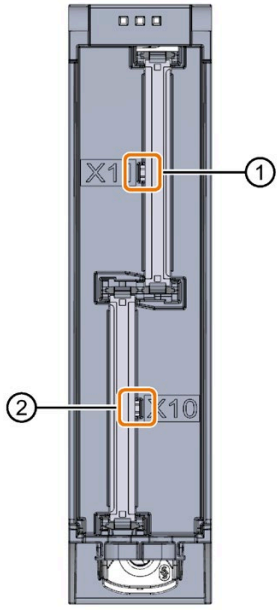

Figure 3-3 Connect the SIMATIC TOP connect 40-pin connecting cable to the module

2. Guide the SIMATIC TOP connect connecting cables down to the module.
3. Guide a cable tie around the module at the fixing points and connect the SIMATIC TOP connect cables.

4. Tighten the cable tie for the strain relief.

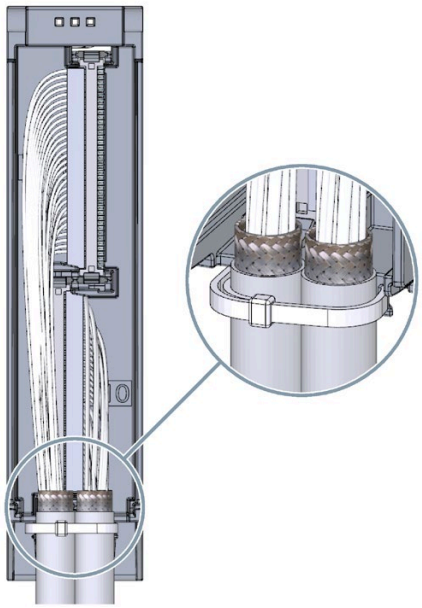

Figure 3-4 Fastening the cable tie for the strain relief

5. Plug the SIMATIC TOP connect connecting cables with the **50-pin** IDC connector into the SIMATIC TOP connect connection module.

Additional information

You can find out how to wire the SIMATIC TOP connect connection module in the equipment manual SIMATIC TOP connect for S7-1500 and ET 200MP (https://support.industry.siemens.com/cs/ww/en/view/95924607).

3.5 Fuse

Miniature circuit breaker

Inputs

The supply lines of groups are to be protected with a 4 A miniature circuit breaker with tripping characteristic C or B.

Below, you see the connection for "Sourcing" mode and for "Sinking" mode.

Outputs

The supply lines, max. 16 outputs of a group, are to be protected with a 4 A miniature circuit breaker with tripping characteristic B or C.

The connection module is to be protected with a 6 A miniature circuit breaker with tripping characteristic B.

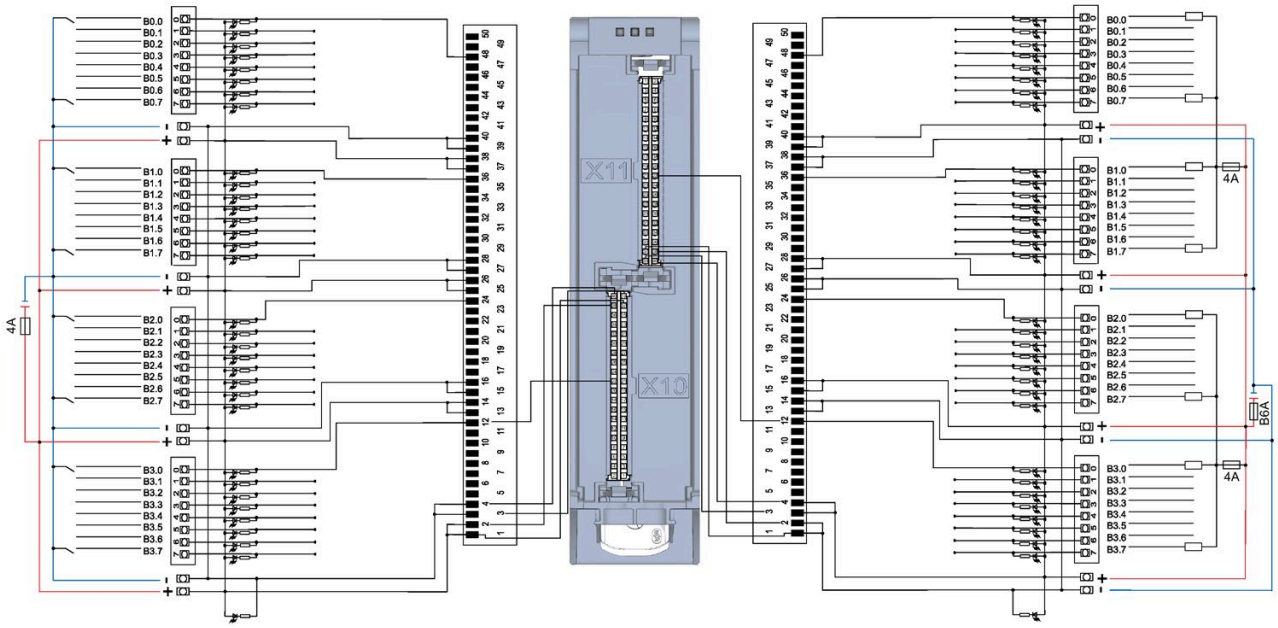

Figure 3-5 "Sourcing" mode for the inputs

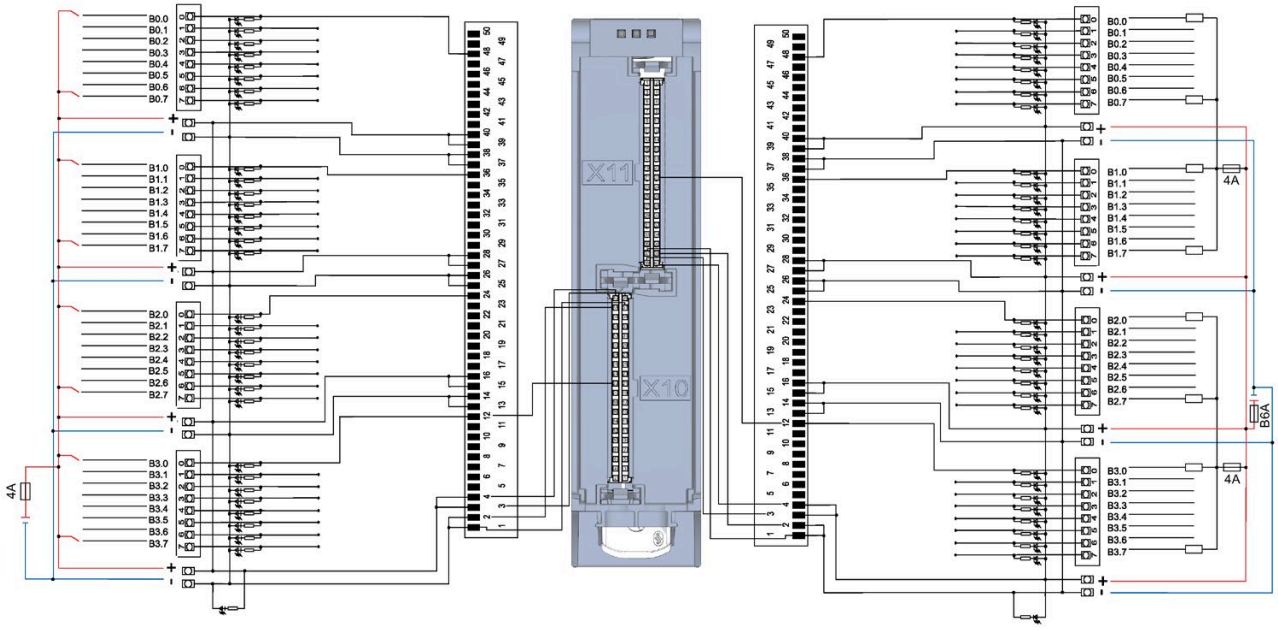

Figure 3-6 "Sinking" mode for the inputs

Address space

4

The module can be configured in various ways in STEP 7. Depending on the configuration, additional/different addresses are assigned in the process image input/output.

Configuration options of DI 32x24VDC SNK/SRC/DQ 32x24VDC/0.3A SNK BA

You can configure the module with STEP 7 (TIA Portal) or with a GSD file.

When you configure the module by means of the GSD file, the configurations are available under different abbreviations/module names.

The following configurations are possible:

Table 4- 1 Configuration options

Configuration	**Short designation/ module name in the GSD file**	**Configuration software, e.g., with STEP 7 (TIA Portal)**	
		Integrated in the hardware catalog of STEP 7 (TIA Portal) as of V16 and HSP 0319	**GSD file in STEP 7 (TIA Portal) V12 or higher or STEP 7 V5.5 SP3 or higher**
1 x 64-channel without value status (1 x 32 digital inputs and 1 x 32 digital outputs)	DI 32x24VDC SNK/SRC/DQ 32x24VDC/0.3A SNK BA	X	X
8 x 8-channel without value status (4 x 8 digital inputs and 4 x 8 digital outputs)	DI 32x24VDC SNK/SRC/DQ 32x24VDC/0.3A SNK BA S	X (PROFINET IO only)	X (PROFINET IO only)
1 x 64-channel with value status for up to 4 sub-modules (each 1 x 32 channels for module-internal Shared Input or module-internal Shared Output)	DI 32x24VDC SNK/SRC/DQ 32x24VDC/0.3A SNK BA MSI or MSO	X (PROFINET IO only)	X (PROFINET IO only)

Address space for configuration as 1 x 64-channel DI 32x24VDC SNK/SRC/DQ 32x24VDC/0.3A SNK BA

The figure below shows the address space assignment for configuration as a 1 x 64-channel module (32 digital inputs / 32 digital outputs). You can freely assign the start address for the module. The addresses of the channels are derived from the start address.

"EB a (IB a)" stands for module start address input byte and "AB x (QB x)" stands for module start address output byte.

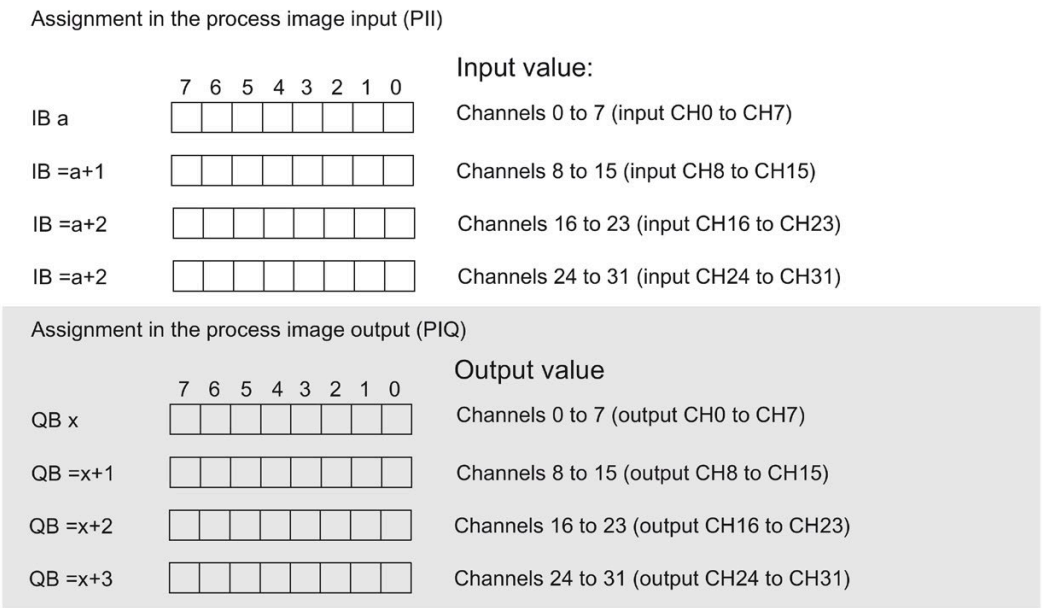

Figure 4-1 Address space for configuration as 1 x 64-channel DI 32x24VDC SNK/SRC/DQ 32x24VDC/0.3A SNK BA

Address space for configuration as 8 x 8-channel DI 32x24VDC SNK/SRC/DQ 32x24VDC/0.3A SNK BA S

For the configuration as an 8 x 8-channel module, the channels of the module are divided into multiple submodules. The submodules can be assigned to different IO controllers when the module is used in a shared device.

The number of usable IO controllers depends on the interface module used. Please observe the information in the manual for the particular interface module.

Unlike the 1 x 64-channel module configuration, each of the eight submodules has a freely assignable start address.

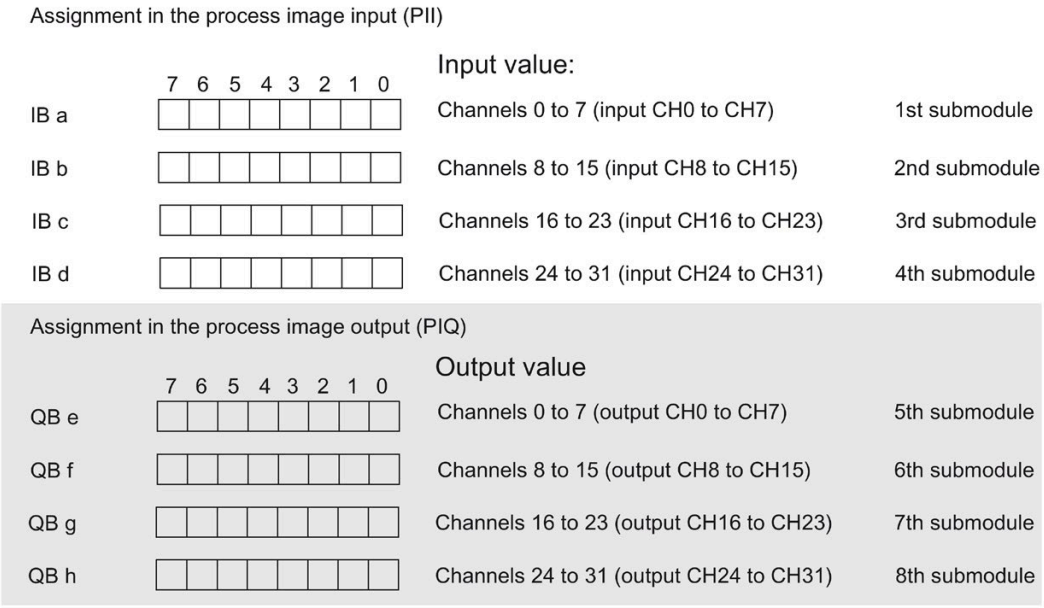

Figure 4-2 Address space for configuration as 8 x 8-channel DI 32x24VDC SNK/SRC/DQ 32x24VDC/0.3A SNK BA S

Address space for configuration as 1 x 64-channel DI 32x24VDC SNK/SRC/DQ 32x24VDC/0.3A SNK BA MSI/MSO

For configuration as a 1 x 64-channel module (module-internal Shared Input, MSI / module-internal Shared Output, MSO), the channels for inputs or outputs are copied to multiple submodules. Each of the channels are then available with identical values in various submodules. These submodules can be assigned to up to four IO controllers when the module is used in a Shared Device:

- The IO controller to which submodule 1 is assigned has write access to output channels 0 to 31 and read access to the input channels 0 to 31.
- The IO controllers to which submodule 2, 3 or 4 is assigned have read access to the input channels or output channels 0 to 31.

The number of usable IO controllers depends on the interface module used. Please observe the information in the manual for the particular interface module.

Value status (Quality Information, QI) for inputs

The meaning of the value status depends on the submodule involved.

For the 1st submodule (=basic submodule), the value status is not relevant.

For the 2nd to 4th submodule (=MSI submodule), the value status 0 indicates that the value is incorrect or the basic submodule has not yet been configured (not ready).

Value status (Quality Information, QI) for outputs

The meaning of the value status depends on the submodule involved.

For the 1st submodule (=basic submodule), the value status 1 indicates that the output value specified by the user program is actually output at the module terminal.

Possible causes for value status = 0: IO controller of the basic submodule is in STOP mode.

For the 2nd to 4th submodule (=MSO submodule), the value status 1 indicates that the output value specified by the user program is actually output at the module terminal.

Possible causes for value status = 0:

- IO controller of the basic submodule is in STOP mode.
- The basic submodule is not yet configured.

The figure below shows the assignment of the address space with submodule 1 and the value status.

Assignment in the process image input (PII) for 1st submodule

		Input value 1st submodule (basic submodule):
	7 6 5 4 3 2 1 0	
IB a1		Channels 0 to 7 (input CH0 to CH7)
	15 8	
IB =a1+1		Channels 8 to 15 (input CH8 to CH15)
	23 16	
IB =a1+2		Channels 16 to 23 (input CH16 to CH23)
	31 24	
IB =a1+3		Channels 24 to 31 (input CH24 to CH31)

		(QI) Value status for inputs:
	7 6 5 4 3 2 1 0	
IB =a1+4		Channels 0 to 7 (value status QI0 to QI7)
	15 8	
IB =a1+5		Channels 8 to 15 (value status QI8 to QI15)
	23 16	
IB =a1+6		Channel 16 to 23 (value status QI16 to QI323)
	31 24	
IB =a1+7		Channels 24 to 31 (value status QI24 to QI31)

0 = Value read in at the channel is incorrect

		(QI) Value status for outputs:
	7 6 5 4 3 2 1 0	
IB =a1+8		Channels 0 to 7 (value status QI0 to QI7)
	15 8	
IB =a1+9		Channels 8 to 15 (value status QI8 to QI15)
	23 16	
IB =a1+10		Channel 16 to 23 (value status QI16 to QI323)
	31 24	
IB =a1+11		Channels 24 to 31 (value status QI24 to QI31)

0 = Value read in at the channel is incorrect

		Output value 1st submodule (basic submodule):
	7 6 5 4 3 2 1 0	
QB x		Channels 0 to 7 (output CH0 to CH7)
	15 8	
QB =x+1		Channels 8 to 15 (output CH8 to CH15)
	23 16	
QB =x+2		Channels 16 to 23 (output CH16 to CH23)
	31 24	
QB =x+3		Channels 24 to 31 (output CH24 to CH31)

Figure 4-3 Address space for configuration as 1 x 64-channel DI 32x24VDC SNK/SRC/DQ 32x24VDC/0.3A SNK BA MSI/MSO

The figure below shows the assignment of the address space with submodule 2 and the value status.

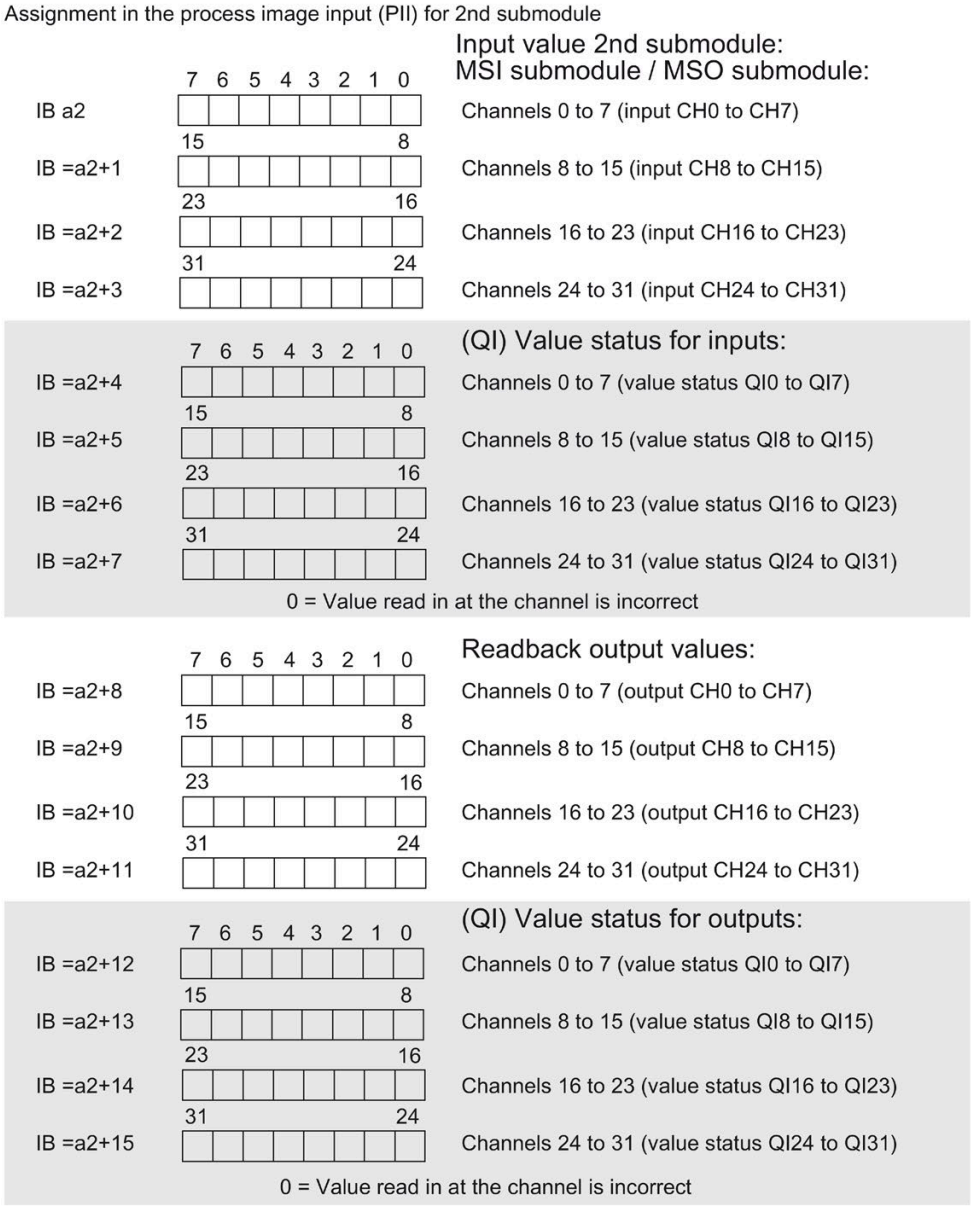

Figure 4-4 Address space for configuration as 1 x 64-channel DI 32x24VDC SNK/SRC/DQ 32x24VDC/0.3A SNK BA MSI/MSO

The figure below shows the assignment of the address space with submodule 3 and the value status.

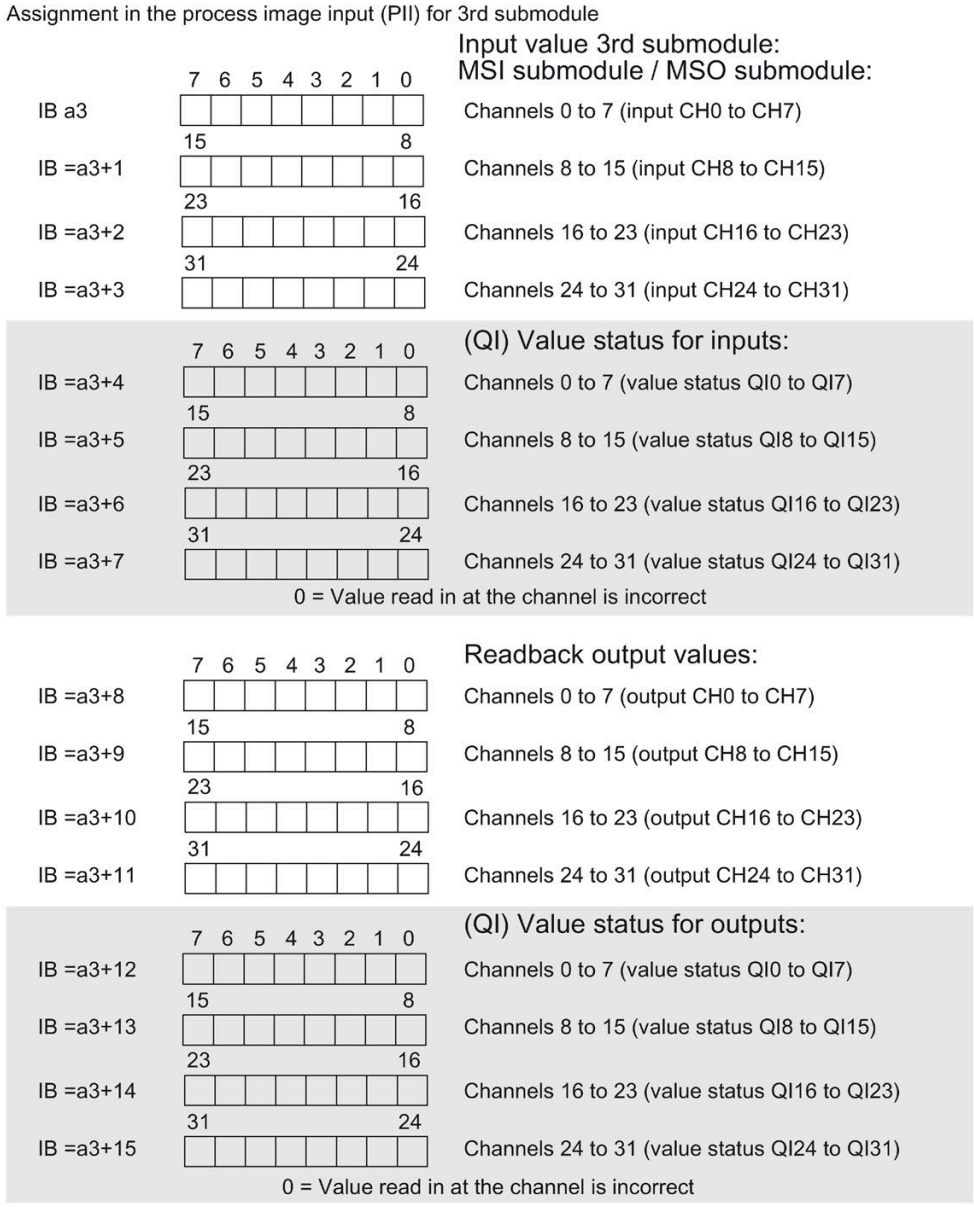

Figure 4-5 Address space for configuration as 1 x 64-channel DI 32x24VDC SNK/SRC/DQ 32x24VDC/0.3A SNK BA MSI/MSO

The figure below shows the assignment of the address space with submodule 4 and the value status.

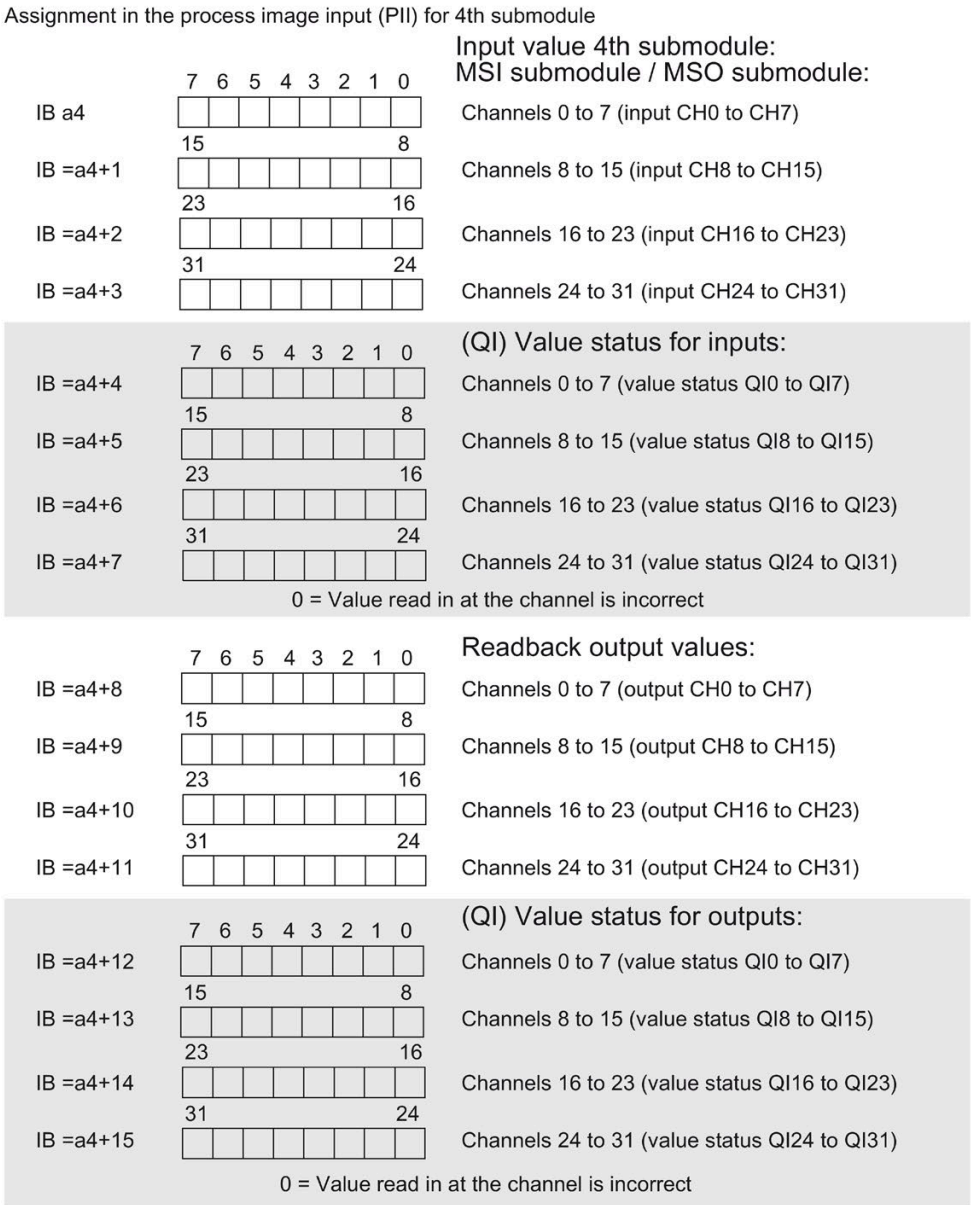

Figure 4-6 Address space for configuration as 1 x 64-channel DI 32x24VDC SNK/SRC/DQ 32x24VDC/0.3A SNK BA MSI/MSO

Reference

You can find information on the module-internal shared input/shared output (MSI/MSO) function in the section "Module-internal shared input / Module-internal shared output (MSI/MSO)" of the function manual PROFINET with STEP 7 V16 (https://support.industry.siemens.com/cs/ww/en/view/49948856).

Diagnostics alarms

5

The module has no selectable diagnostics. Diagnostics alarms, for example, cannot be output with STEP 7 (TIA Portal).

5.1 Status and error displays

LED displays

The figure below shows the LED displays (status and error displays) of DI 32x24VDC SNK/SRC/DQ 32x24VDC/0.3A SNK BA.

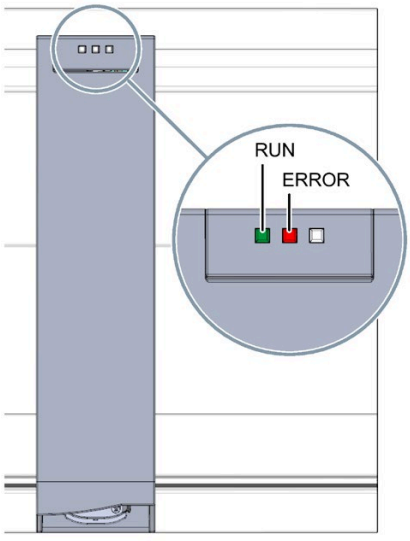

Figure 5-1 LED displays of the DI 32x24VDC SNK/SRC/DQ 32x24VDC/0.3A SNK BA module

Meaning of the LED displays

The tables below explain the meaning of the status and error displays.

LED RUN/ERROR

Table 5- 1 RUN/ERROR status and error displays

LED		Meaning	Remedy
RUN	ERROR		
Off	Off	Voltage missing or too low at backplane bus.	• Switch on the CPU and/or the system power supply modules. • Verify that the U connectors are inserted. • Check whether too many modules are inserted.
Flashes	Off	Module is starting up.	---
On	Off	Module is ready.	
Flashes	Flashes	Hardware defective.	Replace the module.

Technical specifications

6

Technical specifications of the DI 32x24VDC SNK/SRC/DQ 32x24VDC/0.3A SNK BA

The following table shows the technical specifications as of 07/2020. You can find a data sheet including daily updated technical specifications on the Internet (https://support.industry.siemens.com/cs/ww/en/ps/td).

Enter the article number or the short designation of the module on the website.

Article number	6ES7523-1BP50-0AA0
General information	
Product type designation	DI 32 x 24 V DC / DQ 32 x 24 V DC/0.3A SNK BA
HW functional status	From FS01
Firmware version	V1.0.0
• FW update possible	Yes
Product function	
• I&M data	Yes; I&M0 to I&M3
• Isochronous mode	No
• Prioritized startup	No
Engineering with	
• STEP 7 TIA Portal configurable/integrated from version	V16 with HSP 0319 / V17
• STEP 7 configurable/integrated from version	V5.5 SP3 / -
• PROFIBUS from GSD version/GSD revision	V1.0 / V5.1
Operating mode	
• DI	Yes
• Counter	No
• DQ	Yes
• DQ with energy-saving function	No
• PWM	No
• Cam control (switching at comparison values)	No
• Oversampling	No
• MSI	Yes
• MSO	Yes
• Integrated operating cycle counter	No

Article number	6ES7523-1BP50-0AA0
Supply voltage	
Rated value (DC)	24 V
permissible range, lower limit (DC)	19.2 V
permissible range, upper limit (DC)	28.8 V
Reverse polarity protection	Yes; Through internal protection with 4 A per group
Input current	
Current consumption, max.	45 mA; without load
Output voltage	
Rated value (DC)	24 V
Power	
Power available from the backplane bus	0.6 W
Power loss	
Power loss, typ.	4.7 W
Digital inputs	
Number of digital inputs	32
Digital inputs, parameterizable	No
Source/sink input	Yes
Input characteristic curve in accordance with IEC 61131, type 3	Yes
Number of simultaneously controllable inputs	
• Number of simultaneously controllable inputs	32
horizontal installation	
– up to 60 °C, max.	32
vertical installation	
– up to 40 °C, max.	16
Input voltage	
• Rated value (DC)	24 V
• for signal "0"	-30 to +5 V
• for signal "1"	+11 to +30V
Input current	
• for signal "1", typ.	2.7 mA
Input delay (for rated value of input voltage) for standard inputs	
– parameterizable	No
– at "0" to "1", min.	3 ms
– at "0" to "1", max.	4 ms
– at "1" to "0", min.	3 ms
– at "1" to "0", max.	4 ms
for interrupt inputs	
– parameterizable	No

Article number	6ES7523-1BP50-0AA0
for technological functions	
– parameterizable	No
Cable length	
• shielded, max.	1 000 m
• unshielded, max.	600 m
Digital outputs	
Type of digital output	Transistor
Number of digital outputs	32
Current-sinking	Yes
Current-sourcing	No
Digital outputs, parameterizable	No
Short-circuit protection	No; external fusing necessary, max. 4 A per group, tripping characteristic type B or C
Limitation of inductive shutdown voltage to	L+ (-53 V)
Controlling a digital input	Yes
Switching capacity of the outputs	
• with resistive load, max.	0.3 A
• on lamp load, max.	5 W
Load resistance range	
• lower limit	80 Ω
• upper limit	10 kΩ
Output voltage	
• for signal "1", min.	M+ (0.5 V)
Output current	
• for signal "1" rated value	0.3 A
• for signal "1" permissible range, max.	0.3 A
• for signal "0" residual current, max.	0.5 mA
Output delay with resistive load	
• "0" to "1", max.	100 µs
• "1" to "0", max.	500 µs
Parallel switching of two outputs	
• for logic links	Yes
• for uprating	No
• for redundant control of a load	Yes
Switching frequency	
• with resistive load, max.	100 Hz
• with inductive load, max.	0.5 Hz; According to IEC 60947-5-1, DC-13
• on lamp load, max.	10 Hz

Article number	6ES7523-1BP50-0AA0
Total current of the outputs	
• Current per channel, max.	0.3 A
• Current per group, max.	2 A
• Current per module, max.	4 A
Total current of the outputs (per module)	
horizontal installation	
– up to 60 °C, max.	4 A
vertical installation	
– up to 40 °C, max.	4 A
Cable length	
• shielded, max.	1 000 m
• unshielded, max.	600 m
Encoder	
Connectable encoders	
• 2-wire sensor	Yes
– permissible quiescent current (2-wire sensor), max.	1.5 mA
Interrupts/diagnostics/status information	
Diagnostics function	No
Substitute values connectable	No
Alarms	
• Diagnostic alarm	No
• Maintenance interrupt	No
• Hardware interrupt	No
Diagnostic messages	
• Monitoring the supply voltage	No
• Wire-break	No
• Short-circuit	No
• Group error	No
Diagnostics indication LED	
• RUN LED	Yes; green LED
• ERROR LED	Yes; red LED
• MAINT LED	No
• Monitoring of the supply voltage (PWR-LED)	Yes; via SIMATIC TOP connect connection module
• Channel status display	Yes; via SIMATIC TOP connect connection module
• for channel diagnostics	No
• for module diagnostics	No

Article number	6ES7523-1BP50-0AA0
Potential separation	
Potential separation channels	
• between the channels	No
• between the channels, in groups of	16; 32 when using SIMATIC TOP connect connection module
• between the channels and backplane bus	Yes
Isolation	
Isolation tested with	707 V DC (type test)
Ambient conditions	
Ambient temperature during operation	
• horizontal installation, min.	-30 °C
• horizontal installation, max.	60 °C
• vertical installation, min.	-30 °C
• vertical installation, max.	40 °C
Altitude during operation relating to sea level	
• Installation altitude above sea level, max.	5 000 m
Dimensions	
Width	35 mm
Height	147 mm
Depth	129 mm
Weights	
Weight, approx.	250 g
Other	
Note:	Please order cable and connection modules separately

Dimensional drawing

A

The dimensional drawing of the module on the mounting rail, as well as a dimensional drawing with open front cover, are provided in this appendix. Always observe the specified dimensions for installation in cabinets, control rooms, etc.

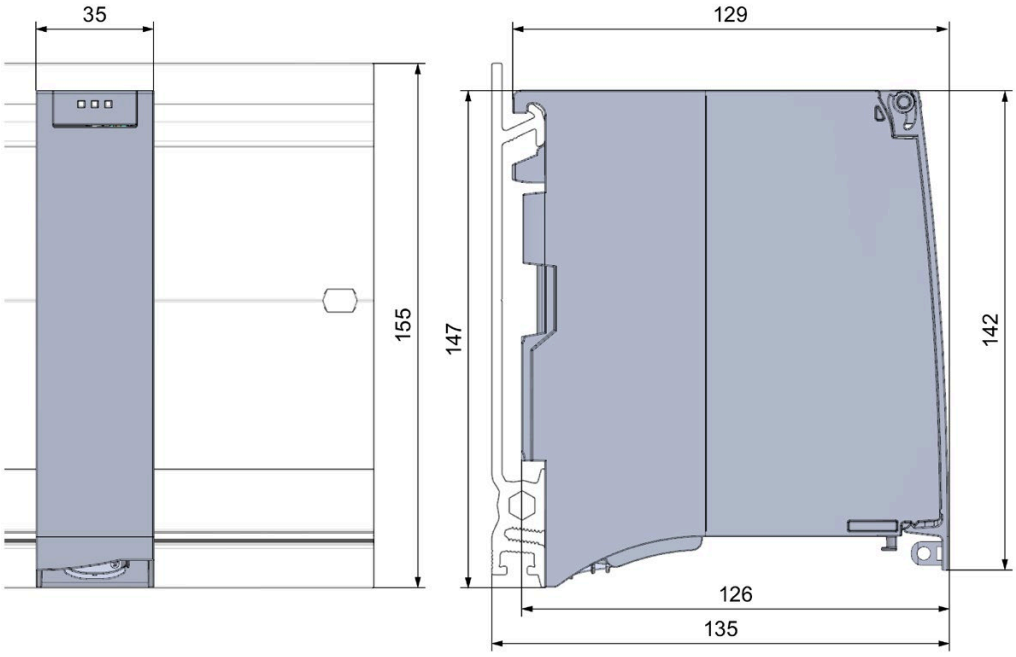

Figure A-1 Dimensional drawing of the DI 32x24VDC SNK/SRC/DQ 32x24VDC/0.3A SNK BA module

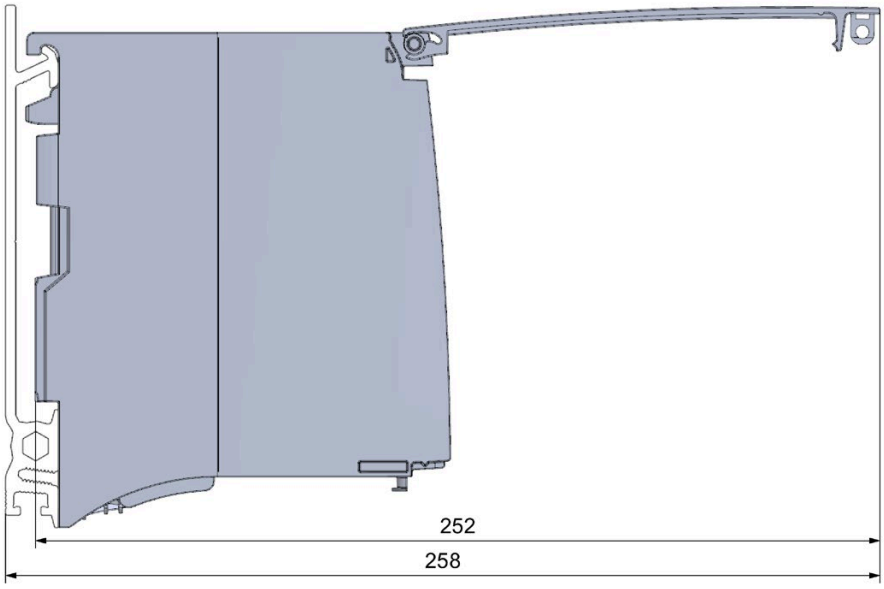

Figure A-2 Dimension drawing of the DI 32x24VDC SNK/SRC/DQ 32x24VDC/0.3A SNK BA module, side view with open front cover

SIEMENS

SIMATIC

S7-1500 / ET 200MP

Analog Input Module AI 8xU/I HF (6ES7531-7NF00-0AB0)

Manual

Edition 09/2016

siemens.com

SIEMENS

SIMATIC

S7-1500/ET 200MP
Analog Input Module AI 8xU/I HF
(6ES7531-7NF00-0AB0)

Manual

Preface

Documentation guide 1

Product overview 2

Wiring 3

Parameters/address space 4

Interrupts/diagnostics alarms 5

Technical specifications 6

Dimensional drawing A

Parameter data records B

Representation of analog values C

09/2016

A5E36649087-AB

Legal information

Warning notice system

This manual contains notices you have to observe in order to ensure your personal safety, as well as to prevent damage to property. The notices referring to your personal safety are highlighted in the manual by a safety alert symbol, notices referring only to property damage have no safety alert symbol. These notices shown below are graded according to the degree of danger.

⚠ DANGER

indicates that death or severe personal injury **will** result if proper precautions are not taken.

⚠ WARNING

indicates that death or severe personal injury **may** result if proper precautions are not taken.

⚠ CAUTION

indicates that minor personal injury can result if proper precautions are not taken.

NOTICE

indicates that property damage can result if proper precautions are not taken.

If more than one degree of danger is present, the warning notice representing the highest degree of danger will be used. A notice warning of injury to persons with a safety alert symbol may also include a warning relating to property damage.

Qualified Personnel

The product/system described in this documentation may be operated only by **personnel qualified** for the specific task in accordance with the relevant documentation, in particular its warning notices and safety instructions. Qualified personnel are those who, based on their training and experience, are capable of identifying risks and avoiding potential hazards when working with these products/systems.

Proper use of Siemens products

Note the following:

⚠ WARNING

Siemens products may only be used for the applications described in the catalog and in the relevant technical documentation. If products and components from other manufacturers are used, these must be recommended or approved by Siemens. Proper transport, storage, installation, assembly, commissioning, operation and maintenance are required to ensure that the products operate safely and without any problems. The permissible ambient conditions must be complied with. The information in the relevant documentation must be observed.

Trademarks

All names identified by ® are registered trademarks of Siemens AG. The remaining trademarks in this publication may be trademarks whose use by third parties for their own purposes could violate the rights of the owner.

Disclaimer of Liability

We have reviewed the contents of this publication to ensure consistency with the hardware and software described. Since variance cannot be precluded entirely, we cannot guarantee full consistency. However, the information in this publication is reviewed regularly and any necessary corrections are included in subsequent editions.

Siemens AG
Division Digital Factory
Postfach 48 48
90026 NÜRNBERG
GERMANY

A5E36649087-AB
℗ 09/2016 Subject to change

Copyright © Siemens AG 2016.
All rights reserved

Preface

Purpose of the documentation

This manual supplements the S7-1500/ET 200MP (http://support.automation.siemens.com/WW/view/en/59191792) system manual.

Functions that relate in general to the systems are described in these system manuals.

The information provided in this manual and in the system/function manuals supports you in commissioning the systems.

Changes compared to previous version

Compared to the previous version, this manual contains the following changes:

- As of firmware version V1.1.0, the module supports the following functions:
  - Measuring range adjustment
  - Scaling of measured values
- Original texts of the license conditions and copyright notes for open-source software are available on the Internet as of 09/2016.

Conventions

The term "CPU" is used in this manual both for the CPUs of the S7-1500 automation system, as well as for interface modules of the ET 200MP distributed I/O system.

Please also observe notes marked as follows:

Note

A note contains important information regarding the product described in the documentation or its handling, or draws special attention to a section of the documentation.

Security information

Siemens provides products and solutions with industrial security functions that support the secure operation of plants, systems, machines and networks.

In order to protect plants, systems, machines and networks against cyber threats, it is necessary to implement – and continuously maintain – a holistic, state-of-the-art industrial security concept. Siemens' products and solutions only form one element of such a concept.

Customer is responsible to prevent unauthorized access to its plants, systems, machines and networks. Systems, machines and components should only be connected to the enterprise network or the internet if and to the extent necessary and with appropriate security measures (e.g. use of firewalls and network segmentation) in place.

Additionally, Siemens' guidance on appropriate security measures should be taken into account. For more information about industrial security, please visit (http://www.siemens.com/industrialsecurity).

Siemens' products and solutions undergo continuous development to make them more secure. Siemens strongly recommends to apply product updates as soon as available and to always use the latest product versions. Use of product versions that are no longer supported, and failure to apply latest updates may increase customer's exposure to cyber threats.

To stay informed about product updates, subscribe to the Siemens Industrial Security RSS Feed under (http://www.siemens.com/industrialsecurity).

Open Source Software

Open-source software is used in the firmware of the I/O modules. Open Source Software is provided free of charge. We are liable for the product described, including the open-source software contained in it, pursuant to the conditions applicable to the product. Siemens accepts no liability for the use of the open source software over and above the intended program sequence, or for any faults caused by modifications to the software.

For legal reasons, we are obliged to publish the original text of the license conditions and copyright notices. Please read the information relating to this on the Internet (https://support.industry.siemens.com/cs/ww/en/view/109739516).

Table of contents

Preface 4

1 Documentation guide 7

2 Product overview 11

2.1 Properties 11

2.2 Functions 14

2.2.1 Measuring range adjustment 14

2.2.2 Scaling of measured values 17

3 Wiring 21

4 Parameters/address space 25

4.1 Measuring types and ranges 25

4.2 Parameters 26

4.3 Declaration of parameters 29

4.4 Address space 32

5 Interrupts/diagnostics alarms 39

5.1 Status and error displays 39

5.2 Interrupts 41

5.3 Diagnostics alarms 43

6 Technical specifications 44

A Dimensional drawing 48

B Parameter data records 50

B.1 Parameter assignment 50

B.2 Structure of the parameter data records without scaling of measured values 52

B.3 Structure of the parameter data records with scaling of measured values 55

B.4 Codes for measurement types/measuring ranges and limits for hardware interrupts 58

C Representation of analog values 60

C.1 Representation of input ranges 61

C.2 Representation of analog values in voltage measuring ranges 62

C.3 Representation of analog values in the current measuring ranges 63

C.4 Measured values for wire break diagnostic 64

Documentation guide

1

The documentation for the SIMATIC S7-1500 automation system, the CPU 1516pro-2 PN based on SIMATIC S7-1500 and the SIMATIC ET 200MP distributed I/O system is arranged into three areas.
This arrangement enables you to access the specific content you require.

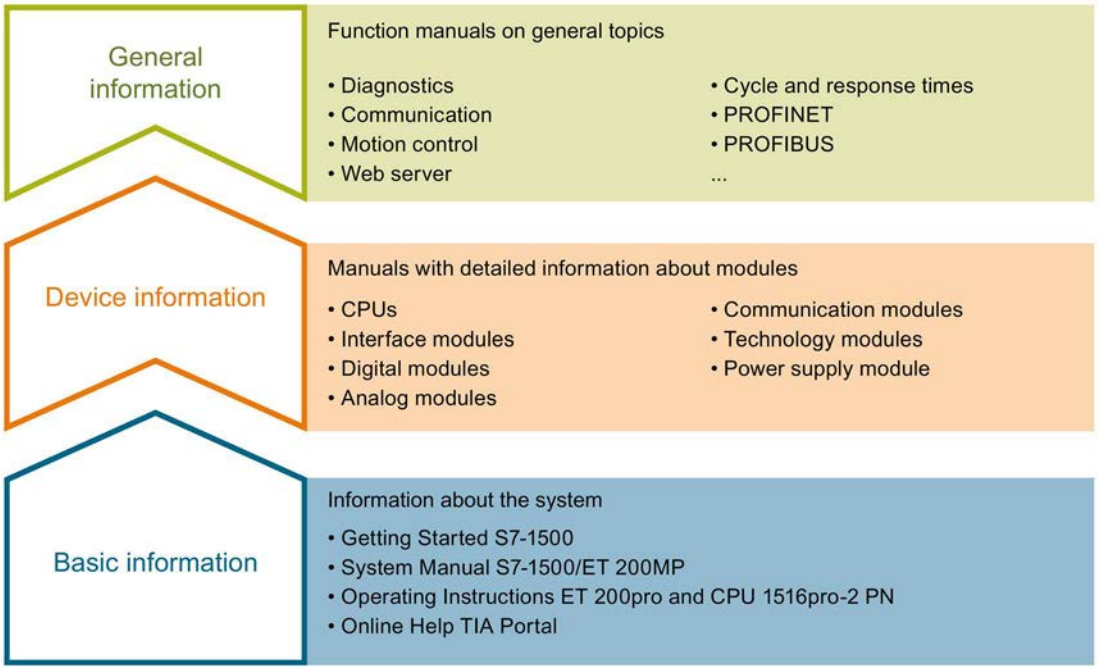

Basic information

The System Manual and Getting Started describe in detail the configuration, installation, wiring and commissioning of the SIMATIC S7-1500 and ET 200MP systems. For CPU 1516pro-2 PN you use the corresponding operating instructions. The STEP 7 online help supports you in the configuration and programming.

Device information

Product manuals contain a compact description of the module-specific information, such as properties, wiring diagrams, characteristics and technical specifications.

General information

The function manuals contain detailed descriptions on general topics regarding the SIMATIC S7-1500 and ET 200MP systems, e.g. diagnostics, communication, motion control, Web server, OPC UA.

You can download the documentation free of charge from the Internet (http://w3.siemens.com/mcms/industrial-automation-systems-simatic/en/manual-overview/Pages/Default.aspx).

Changes and supplements to the manuals are documented in a Product Information.

You can download the product information free of charge from the Internet (https://support.industry.siemens.com/cs/us/en/view/68052815).

Manual Collection S7-1500/ET 200MP

The Manual Collection contains the complete documentation on the SIMATIC S7-1500 automation system and the ET 200MP distributed I/O system gathered together in one file.

You can find the Manual Collection on the Internet (https://support.industry.siemens.com/cs/ww/en/view/86140384).

SIMATIC S7-1500 comparison list for programming languages

The comparison list contains an overview of which instructions and functions you can use for which controller families.

You can find the comparison list on the Internet (https://support.industry.siemens.com/cs/ww/en/view/86630375).

"mySupport"

With "mySupport", your personal workspace, you make the best out of your Industry Online Support.

In "mySupport", you can save filters, favorites and tags, request CAx data and compile your personal library in the Documentation area. In addition, your data is already filled out in support requests and you can get an overview of your current requests at any time.

You must register once to use the full functionality of "mySupport".

You can find "mySupport" on the Internet (https://support.industry.siemens.com/My/ww/en).

"mySupport" - Documentation

In the Documentation area in "mySupport" you can combine entire manuals or only parts of these to your own manual.
You can export the manual as PDF file or in a format that can be edited later.

You can find "mySupport" - Documentation on the Internet (http://support.industry.siemens.com/My/ww/en/documentation).

"mySupport" - CAx data

In the CAx data area in "mySupport", you can access the current product data for your CAx or CAe system.

You configure your own download package with a few clicks.

In doing so you can select:

- Product images, 2D dimension drawings, 3D models, internal circuit diagrams, EPLAN macro files
- Manuals, characteristics, operating manuals, certificates
- Product master data

You can find "mySupport" - CAx data on the Internet (http://support.industry.siemens.com/my/ww/en/CAxOnline).

Application examples

The application examples support you with various tools and examples for solving your automation tasks. Solutions are shown in interplay with multiple components in the system - separated from the focus on individual products.

You will find the application examples on the Internet (https://support.industry.siemens.com/sc/ww/en/sc/2054).

TIA Selection Tool

With the TIA Selection Tool, you can select, configure and order devices for Totally Integrated Automation (TIA).
This tool is the successor of the SIMATIC Selection Tool and combines the known configurators for automation technology into one tool.
With the TIA Selection Tool, you can generate a complete order list from your product selection or product configuration.

You can find the TIA Selection Tool on the Internet (http://w3.siemens.com/mcms/topics/en/simatic/tia-selection-tool).

SIMATIC Automation Tool

You can use the SIMATIC Automation Tool to run commissioning and maintenance activities simultaneously on various SIMATIC S7 stations as a bulk operation independently of the TIA Portal.

The SIMATIC Automation Tool provides a multitude of functions:

- Scanning of a PROFINET/Ethernet network and identification of all connected CPUs
- Address assignment (IP, subnet, gateway) and station name (PROFINET device) to a CPU
- Transfer of the date and the programming device/PC time converted to UTC time to the module
- Program download to CPU
- Operating mode switchover RUN/STOP
- Localization of the CPU by means of LED flashing
- Reading out CPU error information
- Reading the CPU diagnostic buffer
- Reset to factory settings
- Updating the firmware of the CPU and connected modules

You can find the SIMATIC Automation Tool on the Internet (https://support.industry.siemens.com/cs/ww/en/view/98161300).

PRONETA

With SIEMENS PRONETA (PROFINET network analysis), you analyze the PROFINET network during commissioning. PRONETA features two core functions:

- The topology overview independently scans PROFINET and all connected components.
- The IO check is a fast test of the wiring and the module configuration of a system.

You can find SIEMENS PRONETA on the Internet (https://support.industry.siemens.com/cs/ww/en/view/67460624).

Product overview

2

2.1 Properties

Article number

6ES7531-7NF00-0AB0

View of the module

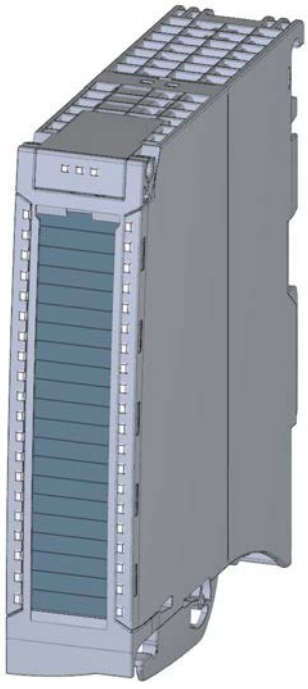

Figure 2-1 View of the AI 8xU/I HF module

Properties

The module has the following technical properties:

- 8 electrically isolated analog inputs
- Voltage measurement type can be set per channel
- Current measurement type can be set per channel
- Two operating modes
  - Fast: shortest integration time 2.5 ms
  - Standard: shortest integration time 7.5 ms
- Resolution 16 bits including sign
- Configurable diagnostics (per channel)
- Hardware interrupt on limit violation can be set per channel (two low and two high limits per channel)

The module supports the following functions:

Table 2- 1 Version dependencies of the module functions

Function	Firmware version of the module	Configuration software	
		STEP 7 (TIA Portal) as of V13, SP1 and HSP 0166	GSD file in STEP 7 (TIA Portal) V12 or higher, or STEP 7 V5.5 SP3 or higher
Firmware update	V1.0.0 or higher	X	--- / X
Identification data I&M0 to I&M3	V1.0.0 or higher	X	X
Parameter assignment in RUN	V1.0.0 or higher	X	X
Module internal Shared Input (MSI)	V1.0.0 or higher	X (PROFINET IO only)	X (PROFINET IO only)
Configurable submodules / submodules for Shared Device	V1.0.0 or higher	X (PROFINET IO only)	X (PROFINET IO only)
Measuring range adjustment	V1.1.0 or higher	V14 or higher and HSP 0186 (only PROFINET IO)	X (PROFINET IO only)
Scaling of measured values			

You can configure the module with STEP 7 (TIA Portal) and with a GSD file.

Accessories

The following accessories are supplied with the module and can also be ordered separately as spare parts:

- Shield bracket
- Shield terminal
- Power supply element
- Labeling strips
- U connector
- Universal front cover

Other components

The following component can be ordered separately:

Front connectors, including potential jumpers and cable ties

You can find additional information on accessories in the S7-1500/ET 200MP (http://support.automation.siemens.com/WW/view/en/59191792) system manual.

2.2 Functions

2.2.1 Measuring range adjustment

Introduction

The measuring range adjustment is available for current and voltage measuring ranges. Live zero measuring ranges are not supported.

Function

The measuring range adjustment is an adjustment of the measuring range at the sensor.

It allows you to increase the resolution for a configurable part of the measuring range in S7 format.

- You activate the function in STEP 7 (TIA Portal) via the "Measuring range adjustment" parameter.
- The "Measuring range adjustment high limit" parameter sets the high limit of the measuring range in mV or µA.
- The "Measuring range adjustment low limit" parameter sets the low limit of the measuring range in mV or µA.

Note

- The "Measuring range adjustment" function can be used in combination with the "Measured value scaling" function, see also Scaling of measured values (Page 17).
- When the "Measuring range adjustment high limit" and "Measuring range adjustment low limit" parameters are too close together, resolution may be lost, which means it may no longer be possible to show every value.

Rules

- The limits of the measuring range adjustment must be selected within the nominal range of the base measuring range. They are specified in integers.
- The measuring range adjustment is resolved depending on the base measuring range from 0_H to $6C00_H$ or 9400_H to $6C00_H$.
- Underranges/overranges apply in accordance with the S7 format and the base measuring range.

Example

The following values result, for example:

Table 2- 2 Example of measuring range adjustment

Measuring range adjustment	Measuring range resolution	
	Bipolar	Unipolar
Base measuring range	±10 V	0 mA to 20 mA
Adjusted measuring range	+2 V to +5 V	+2 mA to +15 mA
Measuring range adjustment high limit	5000 mV (S7: +27648)	15 mA (S7: +27648)
Measuring range adjustment low limit	2000 mV (S7: -27648)	2 mA (S7: 0)

The following example illustrates the effect of a measuring range adjustment:

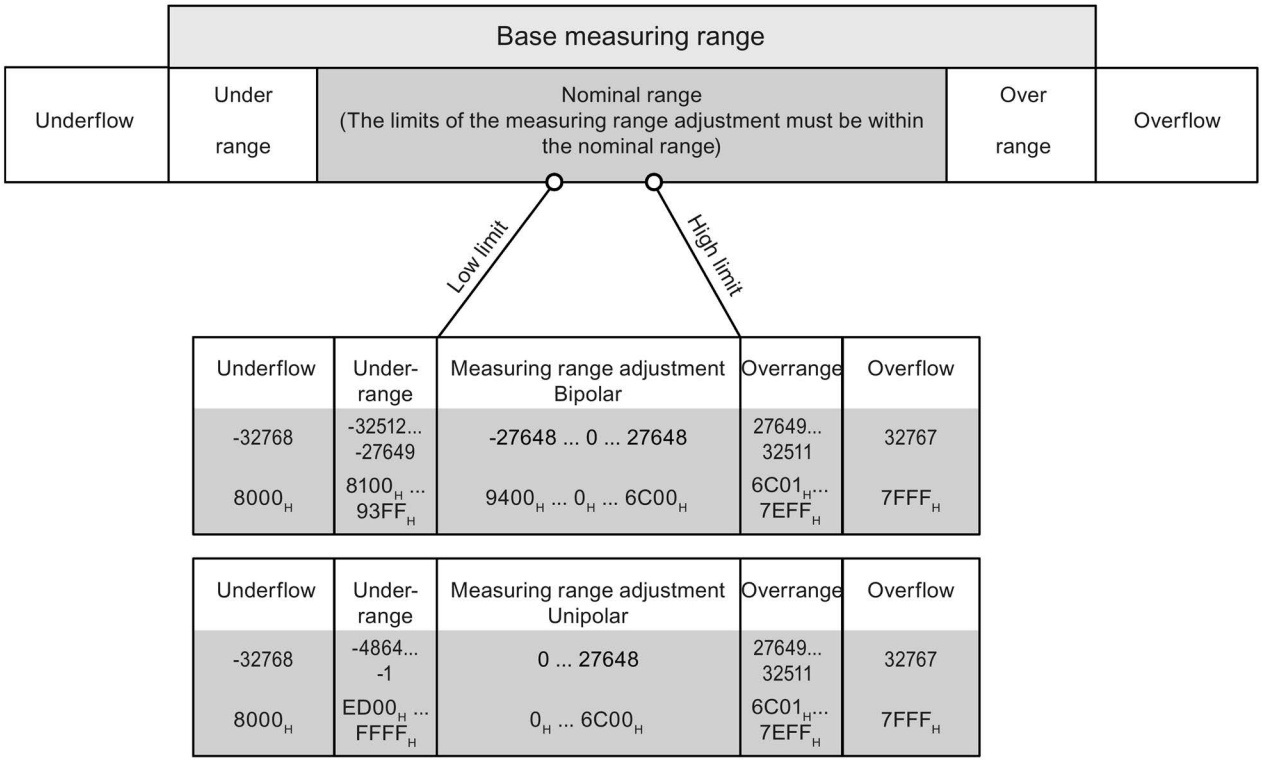

Figure 2-2 Example of a measuring range adjustment

Example of a configuration

The following figure shows an example of a configuration with a measuring range adjustment of 2000 mV to 5000 mV.

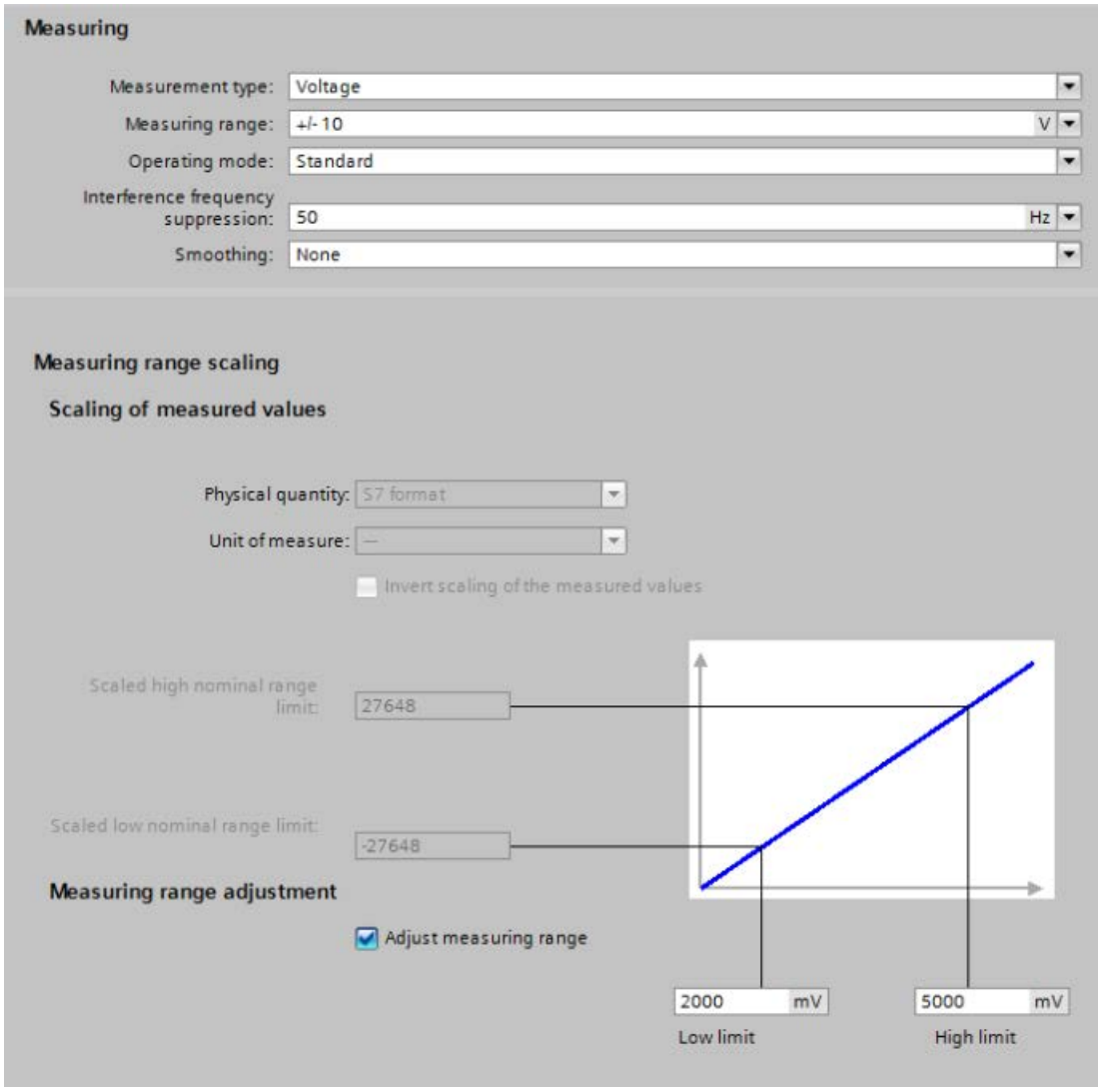

Figure 2-3 Example of a measuring range adjustment in STEP 7 (TIA Portal)

2.2.2 Scaling of measured values

Introduction

The measured value scaling can be combined with the measuring range adjustment. In this case, the measuring range is adjusted first and then the representation of the measuring range is scaled.

Function

With measured value scaling, the user data of the module is displayed in REAL format (32-bit floating point) instead of S7 format.

The representation of the measuring range is defined by the following parameters:

- The "Scaled high nominal range limit" parameter sets the desired display value (in REAL format) for the high nominal range limit of the measuring range.
- The "Scaled low nominal range limit" parameter sets the desired display value (in REAL format) for the low nominal range limit of the measuring range.

Note

Effects of inversion

- It is possible to set the "Scaled high nominal range limit" parameter lower than the "Scaled low nominal range limit" parameter, whereby the representation of the measuring range will be inverted compared to the terminal value (V, mA).
- Overflow/underflow and hardware interrupts are always based on representation in REAL format. A terminal value of > 11.76 V triggered an underflow for an inverted measured value scaling. Hardware interrupts react similarly.

Substitute value for underflow/overflow

With measured value scaling, the substitute value is minus infinity for underflow (FF80 0000H) and plus infinity for overflow (7F80 0000H).

Resolution at the parameter "Scaled high/low nominal range limit"

When the Parameter "Scaled high nominal range limit" and "Scaled low nominal range limit" parameters are too close together, resolution may be lost, which means it may no longer be possible to show every value.

Example

The following values result, for example:

Table 2- 3 Example of measured value scaling

	Low nominal range limit	High nominal range limit
Base measuring range	-10 V	+10 V
S7 format	-27648	+27648
Scaling of measured values	1.00	7.00

As shown in the table, -10 V corresponds to 1.00 and +10 V corresponds to 7.00.

Combination with measuring range adjustment

If the measuring range adjustment is enabled in addition to measured value scaling, first the measuring range is adjusted and then the representation of the measuring range scaled. The table below shows an example of the combination of measured value scaling and measuring range adjustment.

Table 2- 4 Example for a combination of measured value scaling and measuring range adjustment

	Low nominal range limit	High nominal range limit
Measuring range adjustment	-4000 mV	8000 mV
S7 format	-27648	+27648
Scaling of measured values	1.00	7.00

As shown in the table, -4 V corresponds to 1.00 and +8 V corresponds to 7.00.

Configuration

The following figures show examples of a configuration in STEP 7 (TIA Portal):

Configuration of measured value scaling

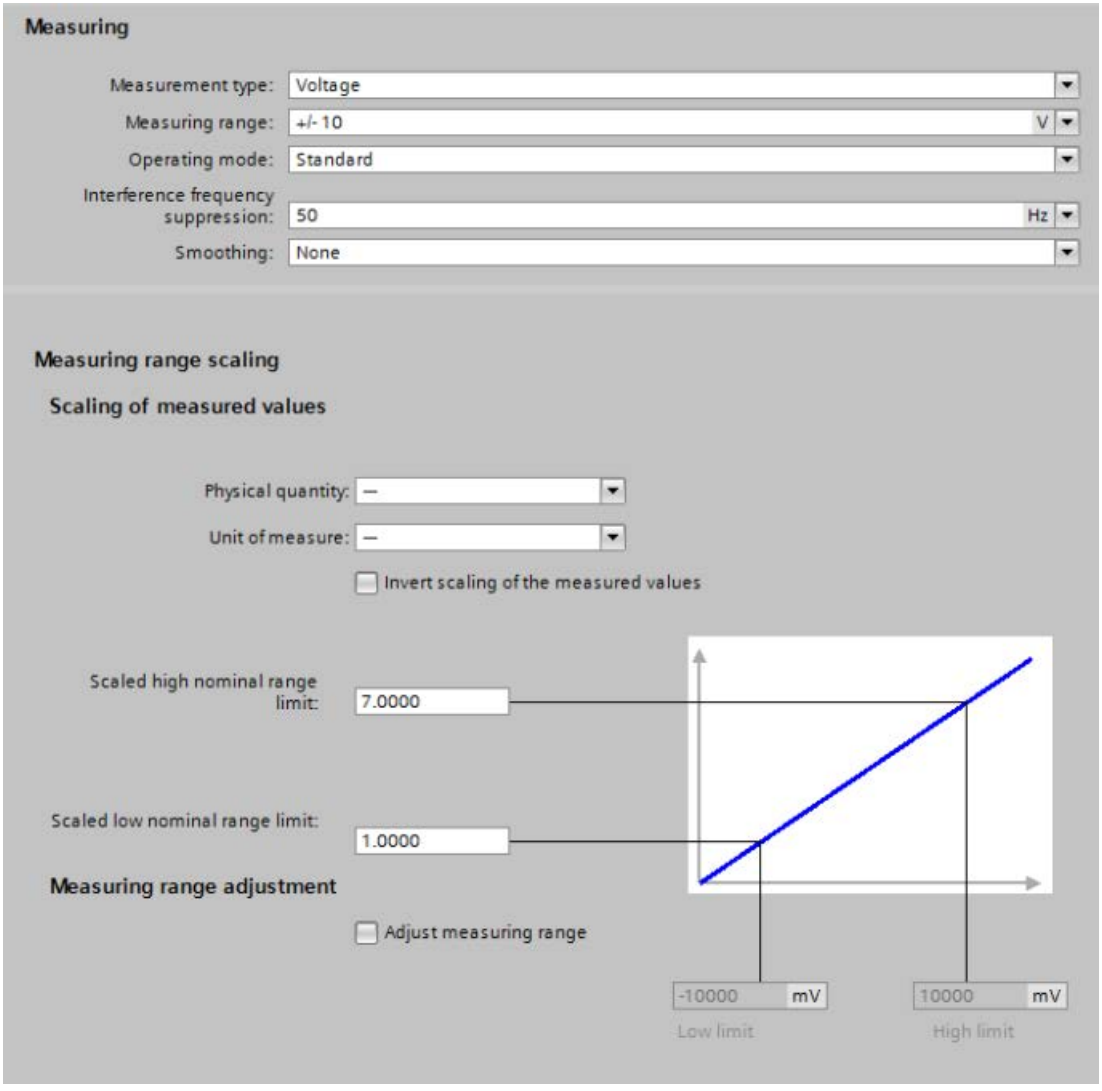

Figure 2-4 Configuration of measured value scaling

Configuration with measuring range adjustment and measured value scaling

In the configuration example, a measuring range adjustment of -4000 mV to 8000 mV is displayed and additionally converted to a scaled high and low nominal range limit of 1.00 to 7.00.

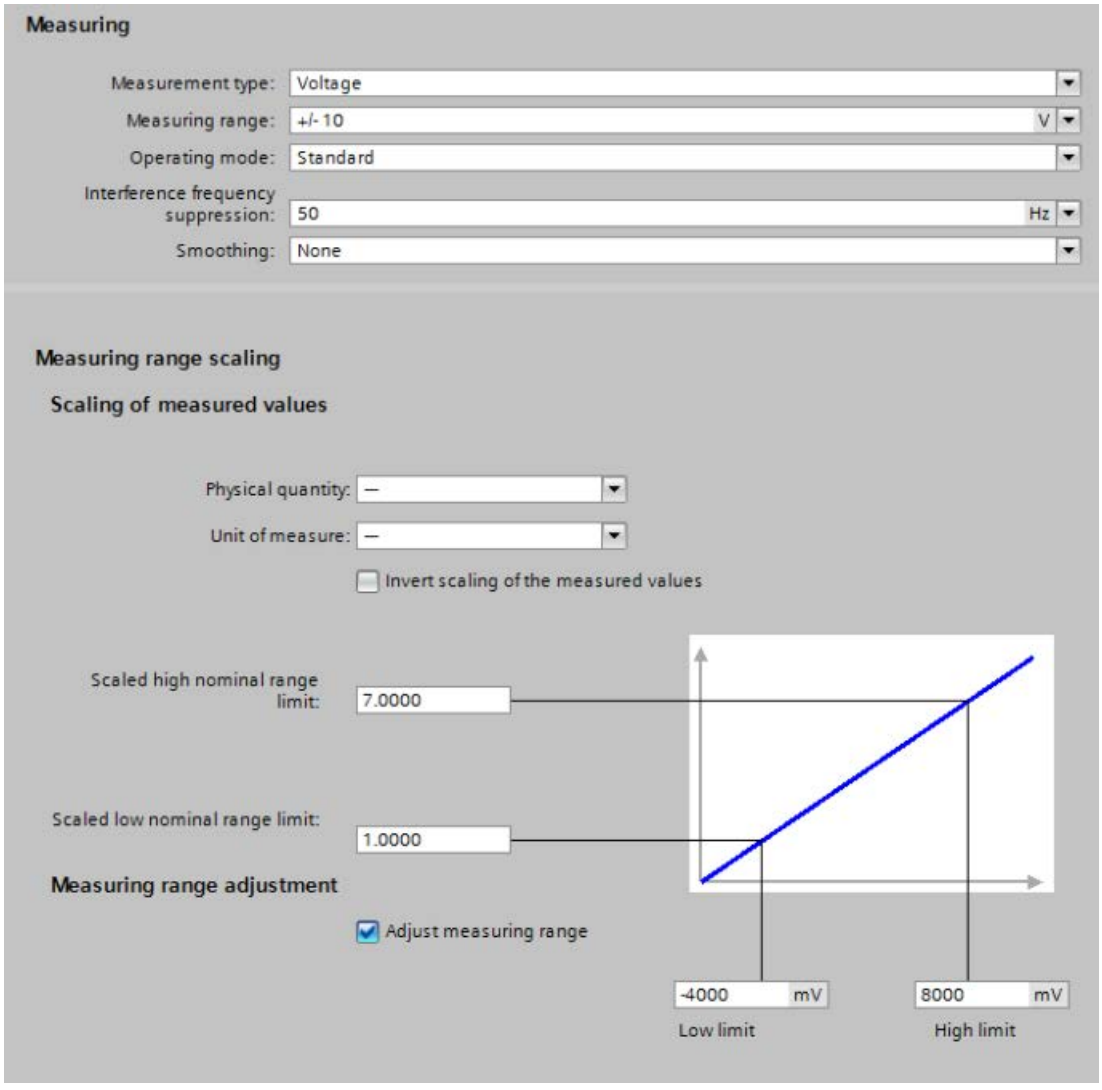

Figure 2-5 Configuration with measuring range adjustment and measured value scaling

Wiring

3

The section below includes the block diagram of the module and various wiring options. You can find information on wiring the front connector, establishing a cable shield, etc in the Wiring section of the S7-1500/ET 200MP (http://support.automation.siemens.com/WW/view/en/59191792) system manual.

Note

- You may use and combine the different wiring options for all channels.
- Do not insert the potential jumpers included with the front connector!

Abbreviations used

Meaning of the abbreviations used in the following figures:

U_n+/U_n-	Voltage input channel n (voltage only)
I_n+/I_n-	Current input channel n (current only)
L+	Supply voltage connection
M	Ground connection

Pin assignment for the power supply element

The power supply element is plugged onto the front connector for powering the analog module. Wire the supply voltage to terminals 41 (L+) and 44 (M). Use terminals 42 (L+) and 43 (M) to loop the potential to the next module.

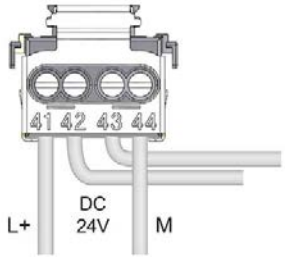

Figure 3-1 Power supply element wiring

Block diagram and pin assignment for voltage measurement

The example in the figure below shows the pin assignment for a voltage measurement.

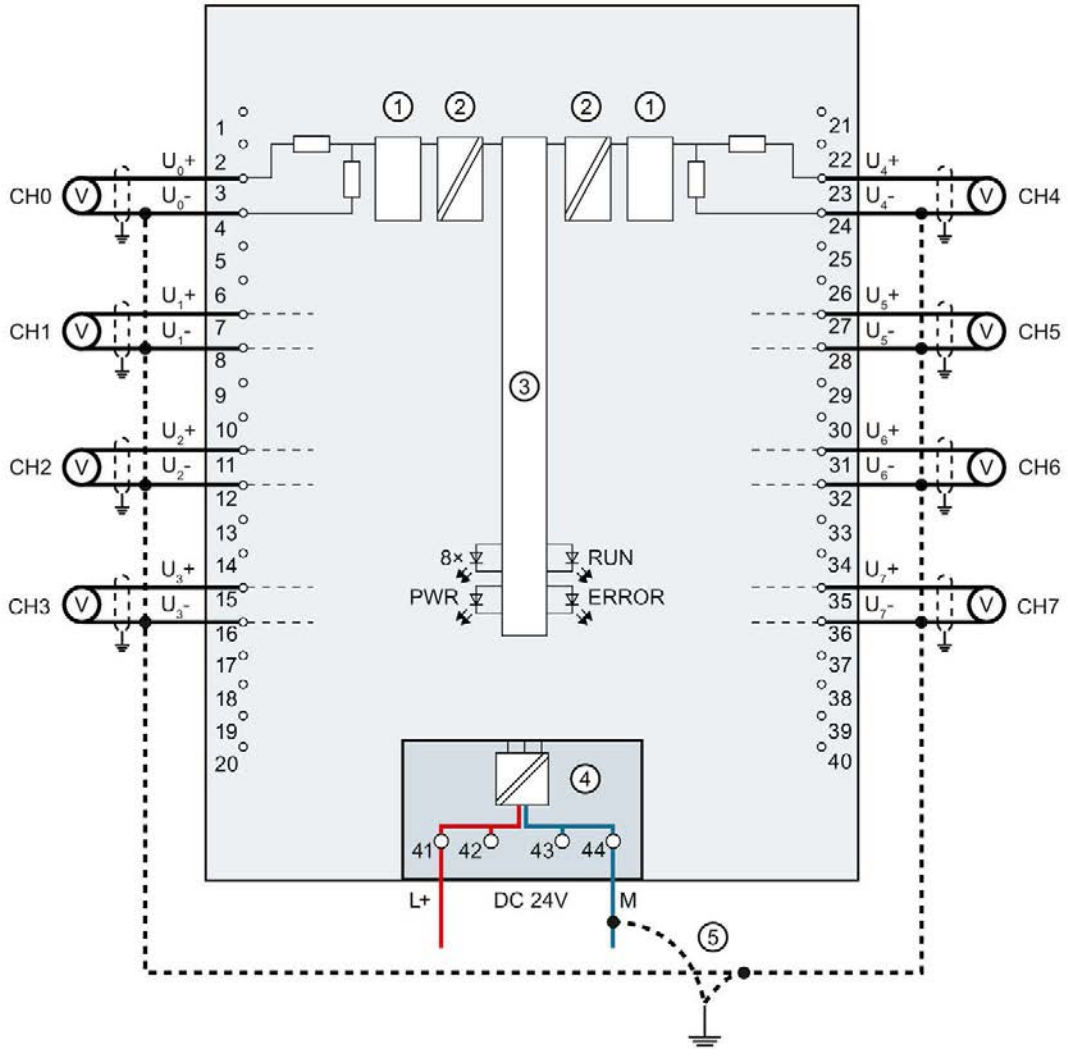

①	Analog-to-Digital Converter (ADC)	CHx	Channel or 8 x channel status (green/red)
②	Electrical isolation	RUN	Status display LED (green)
③	Backplane bus interface	ERROR	Error display LED (red)
④	Supply voltage via power supply element	PWR	LED for power supply (green)
⑤	Equipotential bonding cable (optional)		

Figure 3-2 Block diagram and pin assignment for voltage measurement

Block diagram and terminal assignment for 4-wire transducer for current measurement

The example in the following figure shows the pin assignment for current measurement with 4-wire transducers.

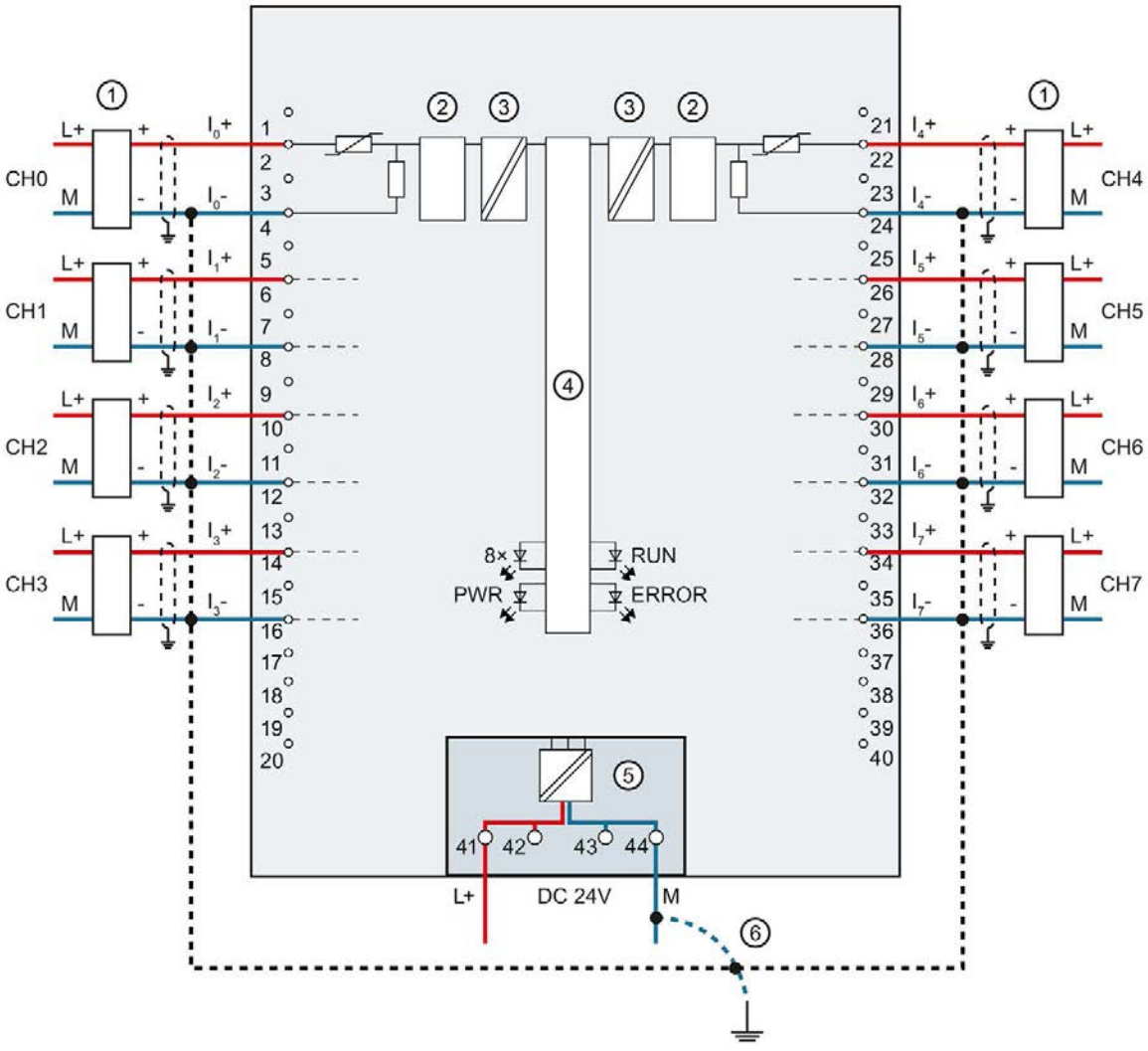

①	Connector 4-wire transducer	CHx	Channel or 8 x channel status (green/red)
②	Analog-to-Digital Converter (ADC)	RUN	Status display LED (green)
③	Electrical isolation	ERROR	Error display LED (red)
④	Backplane bus interface	PWR	LED for power supply (green)
⑤	Supply voltage via power supply element		
⑥	Equipotential bonding cable (optional)		

Figure 3-3 Block diagram and terminal assignment for 4-wire transducer for current measurement

Block diagram and terminal assignment for 2-wire transducer for current measurement

The example in the following figure shows the pin assignment for current measurement with 2-wire transducers.

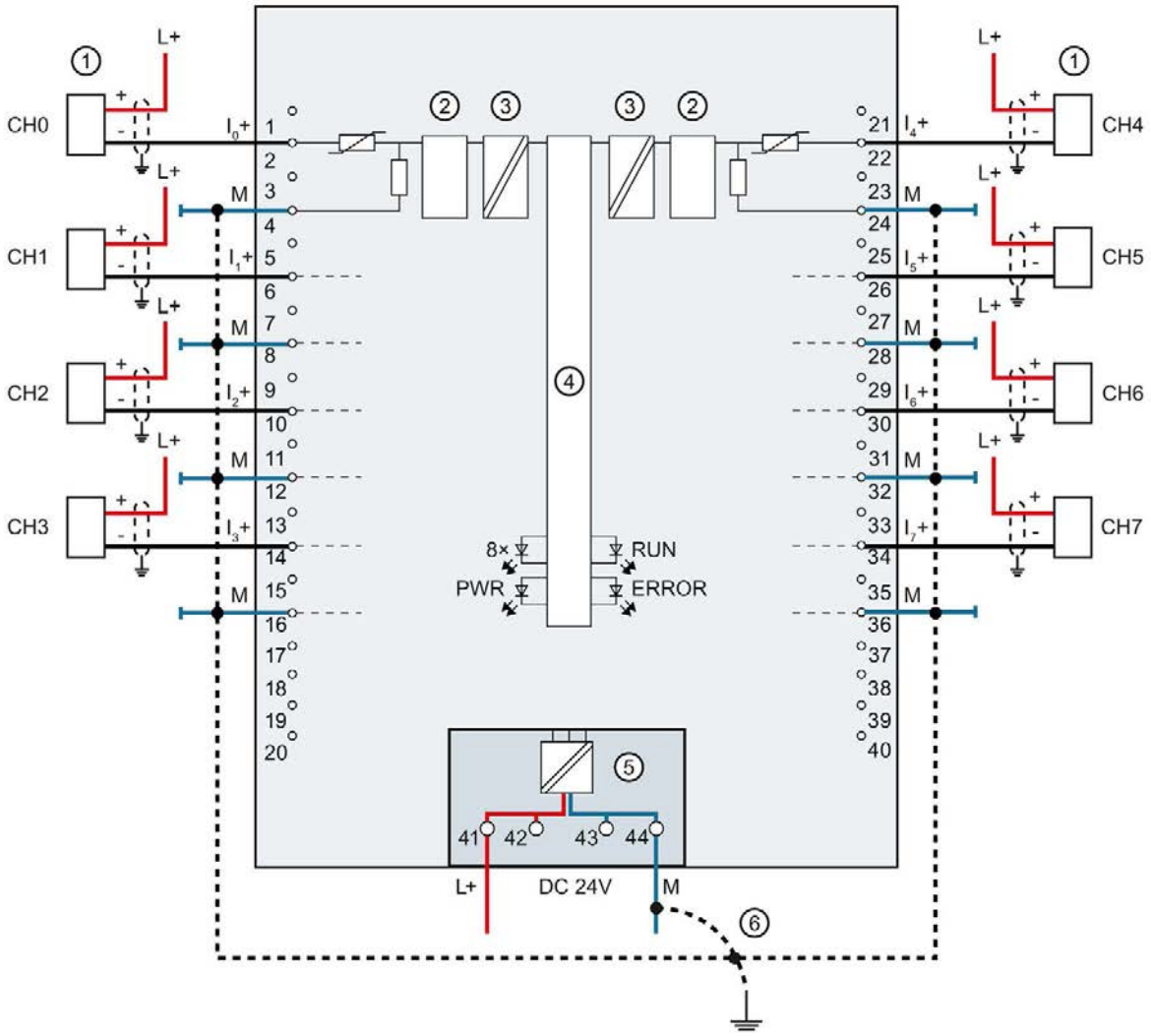

①	Connector 2-wire transducer	CHx	Channel or 8 x channel status (green/red)
②	Analog-to-Digital Converter (ADC)	RUN	Status display LED (green)
③	Electrical isolation	ERROR	Error display LED (red)
④	Backplane bus interface	PWR	LED for power supply (green)
⑤	Supply voltage via power supply element		
⑥	Equipotential bonding cable (optional)		

Figure 3-4 Block diagram and terminal assignment for 2-wire transducer for current measurement

Parameters/address space 4

4.1 Measuring types and ranges

Introduction

The module is set to voltage measuring type with measuring range ±10 V by default. You need to reassign the module parameters with STEP 7 if you want to use a different measuring type or range.

The following table shows the measuring types and the respective measuring range.

Measurement type	Measuring range	Representation of analog values
Voltage	1 V to 5 V ±2.5 V ±5 V ±10 V	See Appendix Representation of analog values in voltage measuring ranges (Page 62).
Current 2WMT (2-wire transducer)	4 mA to 20 mA	See Appendix Representation of analog values in the current measuring ranges (Page 63).
Current 4WMT (4-wire transducer)	4 mA to 20 mA 0 mA to 20 mA ±20 mA	
Deactivated	-	

The tables of the input ranges, overflow, undershoot range, etc. are available in appendix Representation of analog values (Page 60).

4.2 Parameters

Parameters of AI 8xU/I HF

The AI 8xU/I HF is usually already integrated in the hardware catalog of STEP 7 (TIA Portal). In this case, STEP 7 (TIA Portal) checks the configured properties for plausibility during configuration.

However, you can also assign parameters to the module by means of a GSD file and the configuration software of any provider. The module does not check the validity of the configured properties until after the configuration has been loaded.

When you assign the module parameters in STEP 7, you use various parameters to specify the module properties. The following table lists the configurable parameters. The effective range of the configurable parameters depends on the type of configuration. The following configurations are possible:

- Central operation with a S7-1500 CPU
- Distributed operation on PROFINET IO in an ET 200MP system
- Distributed operation on PROFIBUS DP in an ET 200MP system

When assigning parameters in the user program, use the WRREC instruction to transfer the parameters to the module by means of data records; refer to the section Parameter assignment (Page 50).

The following parameter settings for the channels are possible:

Table 4- 1 Configurable parameters and their defaults

Parameters	Range of values	Default setting	Configuration in RUN	Scope with configuration software, e.g., STEP 7 (TIA Portal)	
				Integrated in the hardware catalog STEP 7 (TIA Portal) as of V13 or GSD file PROFINET IO	GSD file PROFIBUS DP
Diagnostics					
• Missing supply voltage L+	Yes/No	No	Yes	Channel [1]	Module [3]
• Overflow	Yes/No	No	Yes	Channel	Module [3]
• Underflow	Yes/No	No	Yes	Channel	Module [3]
• Wire break	Yes/No (Voltage: 1 V to 5 V Current: 4 mA to 20 mA)	No	Yes	Channel	Module [3]
• Current limit for wire break diagnostics [2]	1.185 mA or 3.6 mA	1.185 mA	Yes	Channel	--- [4]

Parameters	Range of values	Default setting	Configuration in RUN	Scope with configuration software, e.g., STEP 7 (TIA Portal)	
				Integrated in the hardware catalog STEP 7 (TIA Portal) as of V13 or GSD file PROFINET IO	GSD file PROFIBUS DP
Measuring					
• Measurement type	See section Measuring types and ranges (Page 25)	Voltage	Yes	Channel	Channel
• Measuring range		±10 V	Yes	Channel	Channel
• Operating mode	Standard Fast	Standard	Yes	Channel	--- [4]
• Interference frequency suppression	400 Hz 60 Hz 50 Hz 10 Hz	50 Hz	Yes	Channel	Module
• Smoothing	None/low/medium/high	None	Yes	Channel	Channel
• Measuring range adjustment	• Disable • Enable	Disable	Yes	Channel	Channel
• Measuring range adjustment high limit (mV or µA)	Value within the nominal range of the measuring range greater than lower limit	High limit	Yes	Channel	Channel [4]
• Measuring range adjustment low limit (mV or µA)	Value within the nominal range of the measuring range smaller than high limit	Low limit	Yes	Channel	Channel [4]
• Scaled high nominal range limit	Scale • High limit • Low limit	High limit	Yes	Channel	---
• Scaled low nominal range limit	Scale • High limit • Low limit	Low limit	Yes	Channel	---

Parameters	Range of values	Default setting	Configuration in RUN	Scope with configuration software, e.g., STEP 7 (TIA Portal)	
				Integrated in the hardware catalog STEP 7 (TIA Portal) as of V13 or GSD file PROFINET IO	GSD file PROFIBUS DP
Hardware interrupt					
• Hardware interrupt high limit 1	Yes/No	No	Yes	Channel	--- [4]
• Hardware interrupt low limit 1	Yes/No	No	Yes	Channel	--- [4]
• Hardware interrupt high limit 2	Yes/No	No	Yes	Channel	--- [4]
• Hardware interrupt low limit 2	Yes/No	No	Yes	Channel	--- [4]

[1] If you enable diagnostics for multiple channels, you will receive an alarm surge on failure of the supply voltage because each enabled channel will detect this fault.

You can prevent this message burst by assigning the diagnostics function to one channel only.

[2] When "Wire break" diagnostics is disabled, the current limit of 1.185 mA applies to the value status. For measured values below 1.185 mA, the value status is always: 0 = fault.

[3] You can set the effective range of the diagnostics for each channel in the user program with data records 0 to 7.

[4] You can set the current limit for wire break diagnostics, the "Hardware interrupt" parameter, the "Measuring range adjustment high and low limit" and the hardware interrupt limits in the user program with data records 0 to 7.

4.3 Declaration of parameters

Missing supply voltage L+

Enabling of the diagnostics, with missing or too little supply voltage L+.

Overflow

Enabling of the diagnostics if the measured value violates the high limit.

Underflow

Enabling of the diagnostics if the measured value violates the low limit.

Wire break

Enabling of the diagnostics if the module has no current flow or the current is too weak for the measurement at the corresponding configured input or the applied voltage is too low.

Current limit for wire break diagnostics

Threshold for reporting wire breaks. The value can be set to 1.185 mA or 3.6 mA, depending on the sensor used.

Interference frequency suppression

Suppresses the interference affecting analog input modules that is caused by the frequency of the AC voltage network used.

The frequency of the AC voltage network can negatively affect the measured value, in particular when measuring in low voltage ranges and with thermocouples. With this parameter, the user specifies the line frequency that is predominant in the plant.

Smoothing

The individual measured values are smoothed using filtering. The smoothing can be set in 4 levels.

Smoothing time = number of module cycles (k) x cycle time of the module.

The following figure shows after how many module cycles the smoothed analog value is almost 100%, depending on the set smoothing. Is valid for each signal change at the analog input.

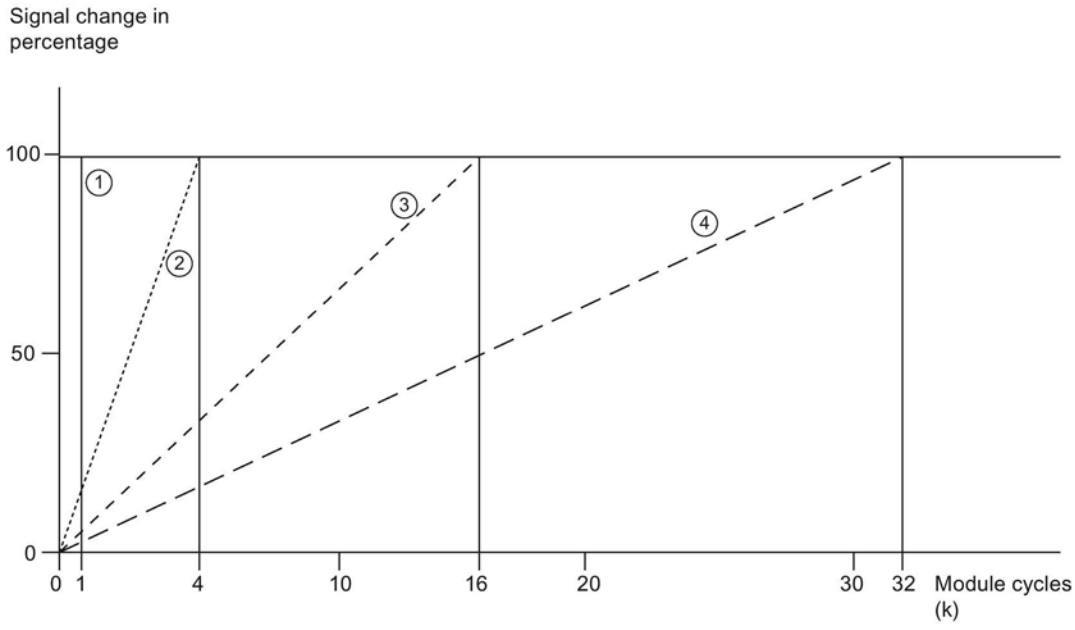

① None (k = 1)
② Weak (k = 4)
③ Medium (k = 16)
④ Strong (k = 32)

Figure 4-1 Smoothing with AI 8xU/I HF

Hardware interrupt 1 or 2

Enable a hardware interrupt at violation of high limit 1 or 2 or low limit 1 or 2.

Low limit 1 or 2

Specifies the low limit threshold that triggers hardware interrupt 1 or 2.

High limit 1 or 2

Specifies the high limit threshold that triggers hardware interrupt 1 or 2.

Operating mode Fast / Standard

You can use this parameter to determine the operating mode for the module.

- Fast mode; easy integration time with less frequency suppression (minimal integration time 2.5 ms)
- Standard mode; triple integration time with higher frequency suppression (minimal integration time 7.5 ms)

Measuring range adjustment

With this parameter, you disable or enable the measuring range adjustment function.

Measuring range adjustment high limit

With this parameter, you specify the high limit of the measuring range.

Measuring range adjustment low limit

With this parameter, you specify the low limit of the measuring range.

Scaled high nominal range limit

With this parameter, you set the desired display value (in REAL) for the high nominal range limit of the measuring range.

Scaled low nominal range limit

With this parameter, you set the desired display value (in REAL) for the low nominal range limit of the measuring range.

4.4 Address space

The module can be configured differently in STEP 7; see following table. Depending on the configuration, additional/different addresses are assigned in the process image of the inputs.

Configuration options of AI 8xU/I HF

You can configure the module with STEP 7 (TIA Portal) or with a GSD file.

When you configure the module by means of the GSD file, the configurations are available under different abbreviations/module names.

The following configurations are possible:

Table 4- 2 Configuration options

Configuration	Short designation/ module name in the GSD file	Configuration software, e.g., with STEP 7 (TIA Portal)	
		Integrated in the hardware catalog STEP 7 (TIA Portal) as of V13, SP1 and HSP 0166	GSD file in STEP 7 (TIA Portal) V12 or higher or STEP 7 V5.5 SP3 or higher
1 x 8-channel without value status	AI 8xU/I HF	X	X
1 x 8-channel with value status	AI 8xU/I HF QI	X	X
8 x 1-channel without value status	AI 8xU/I HF S	X (PROFINET IO only)	X (PROFINET IO only)
8 x 1-channel with value status	AI 8xU/I HF S QI	X (PROFINET IO only)	X (PROFINET IO only)
1 x 8-channel with value status for module-internal shared input with up to 4 submodules	AI 8xU/I HF MSI	X (PROFINET IO only)	X (PROFINET IO only)
1 x 8-channel with value status for scaling of measured values	AI 8xU/I HF Scale	V14 or higher with HSP 0186 (PROFINET IO only)	X (PROFINET IO only)

Value status (Quality Information, QI)

The value status is always activated for the following module names:

- AI 8xU/I HF QI
- AI 8xU/I HF S QI
- AI 8xU/I HF MSI
- AI 8xU/I HF Scale

An additional bit is assigned to each channel for the value status. The value status bit indicates if the read in digital value is valid. (0 = value is incorrect).

Address space for configuration as 1 x 8-channel AI 8xU/I HF and AI 8xU/I HF QI

The figure below shows the address space assignment with the configuration as 1 x 8-channel module. You can freely assign the start address for the module. The addresses of the channels are derived from the start address.

"IB x" stands, for example, for the module start address input byte x.

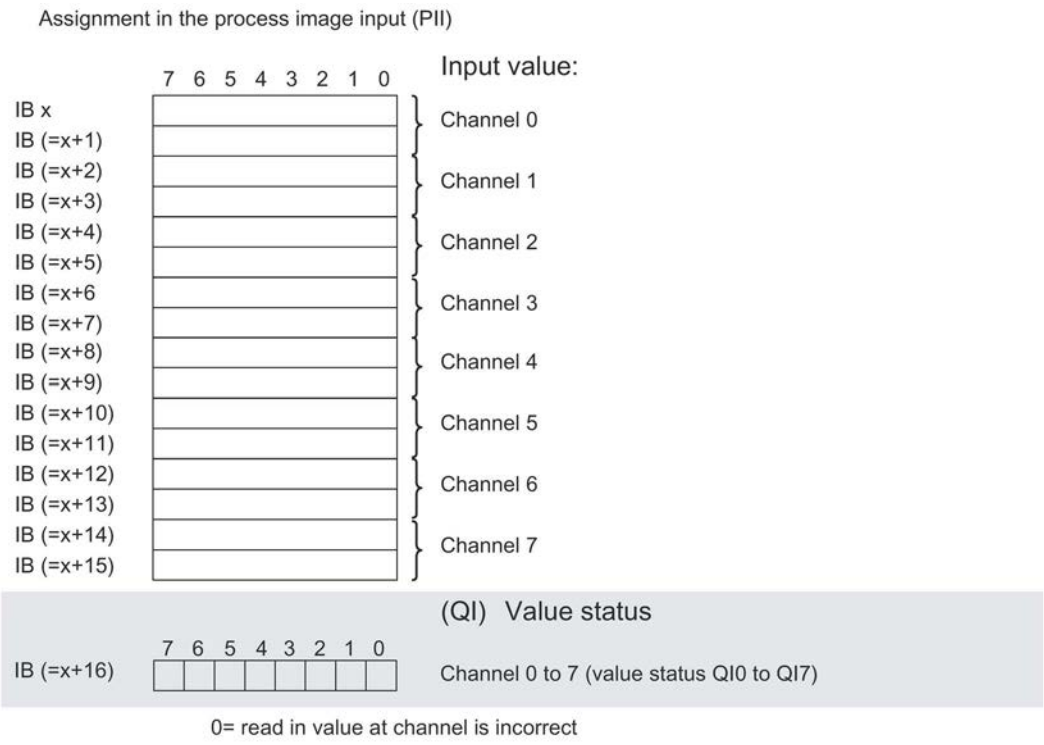

Figure 4-2 Address space for configuration as 1 x 8-channel AI 8xU/I HF with value status

Address space for configuration as 8 x 1-channel AI 8xU/I HF S and AI 8xU/I HF S QI

For the configuration as a 8 x 1-channel module, the channels of the module are divided into multiple submodules. The submodules can be assigned to different IO controllers when the module is used in a shared device.

The number of usable submodules is dependent on the interface module used. Observe the information in the manual for the particular interface module.

Contrary to the 1 x 8-channel module configuration, each of the eight submodules has a freely assignable start address.

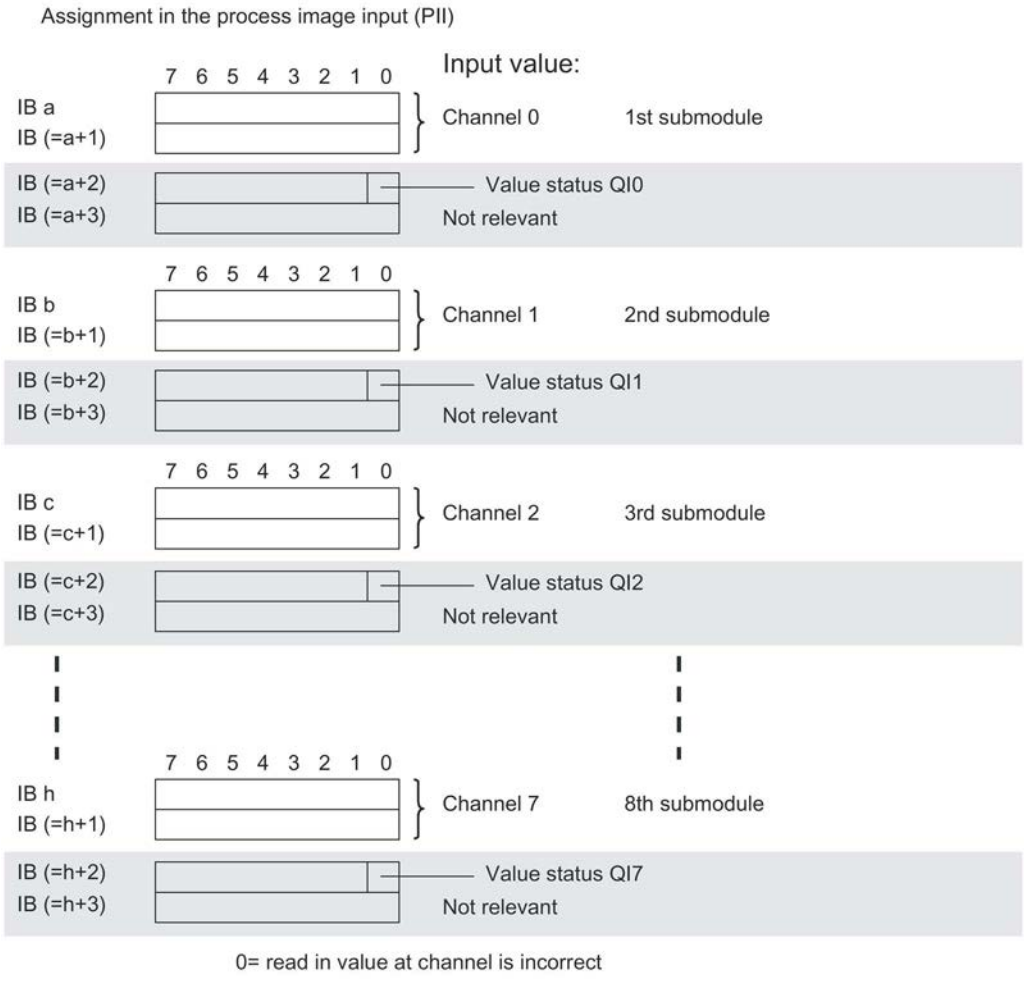

Figure 4-3 Address space for configuration as 8 x 1-channel AI 8xU/I HF S QI with value status

Address space for configuration as 1 x 8-channel AI 8xU/I HF MSI

The channels 0 to 7 of the module are copied in up to four submodules with configuration 1 x 8-channel module (Module-internal shared input, MSI). Channels 0 to 7 are then available with identical input values in different submodules. These submodules can be assigned to up to four IO controllers when the module is used in a shared device. Each IO controller has read access to the same channels.

The number of IO controllers depends on the interface module used. Please observe the information in the manual for the particular interface module.

Value status (Quality Information, QI)

The meaning of the value status depends on the submodule on which it occurs.

For the 1st submodule (= basic submodule), the value status 0 indicates that the value is incorrect.

For the 2nd to 4th submodule (=MSI submodule), the value status 0 indicates that the value is incorrect or the basic submodule has not yet been configured (not ready).

The following figure shows the assignment of the address space with submodules 1 and 2.

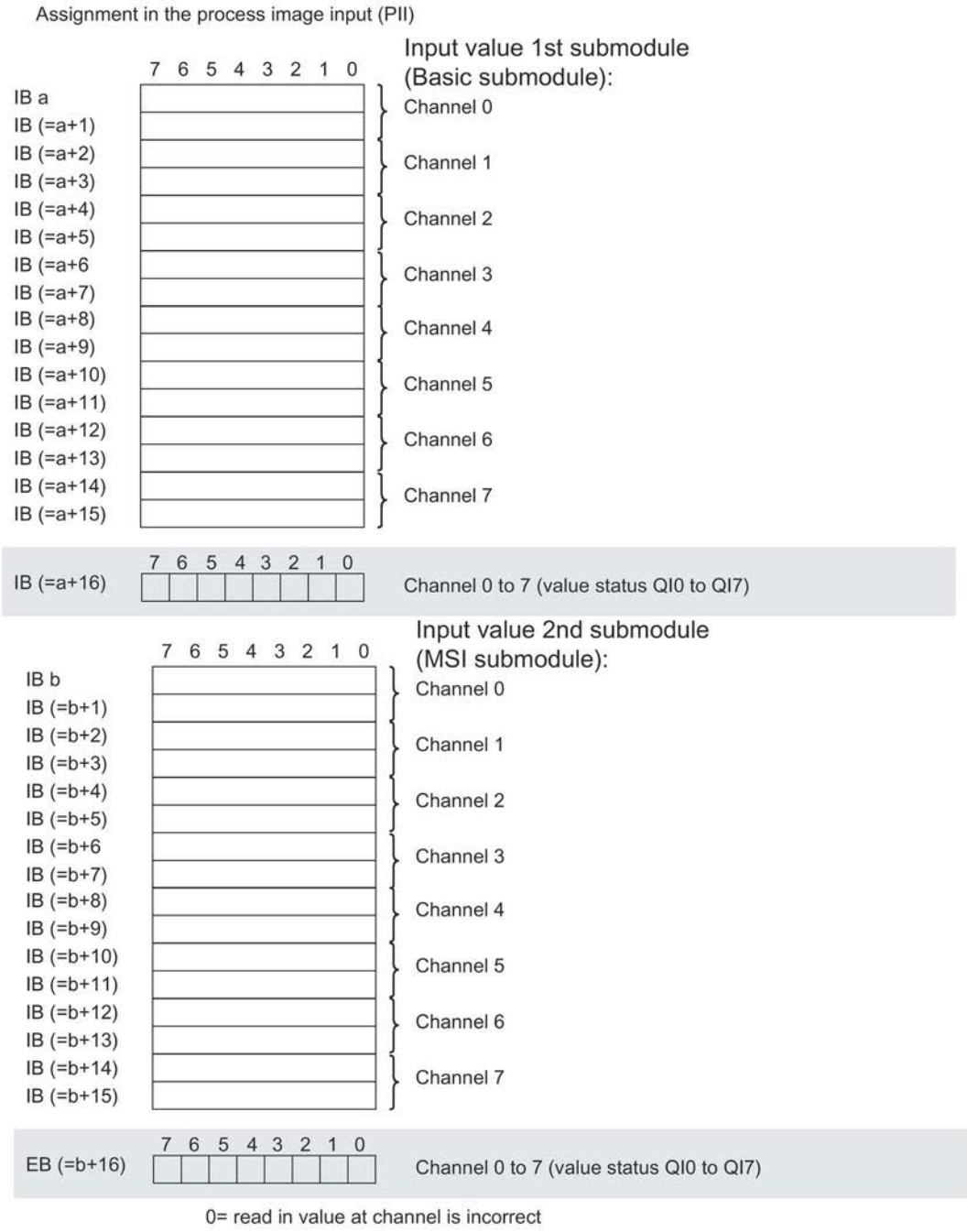

Figure 4-4 Address space for configuration as 1 x 8-channel AI 8xU/I HF MSI with value status

The following figure shows the assignment of the address space with submodules 3 and 4.

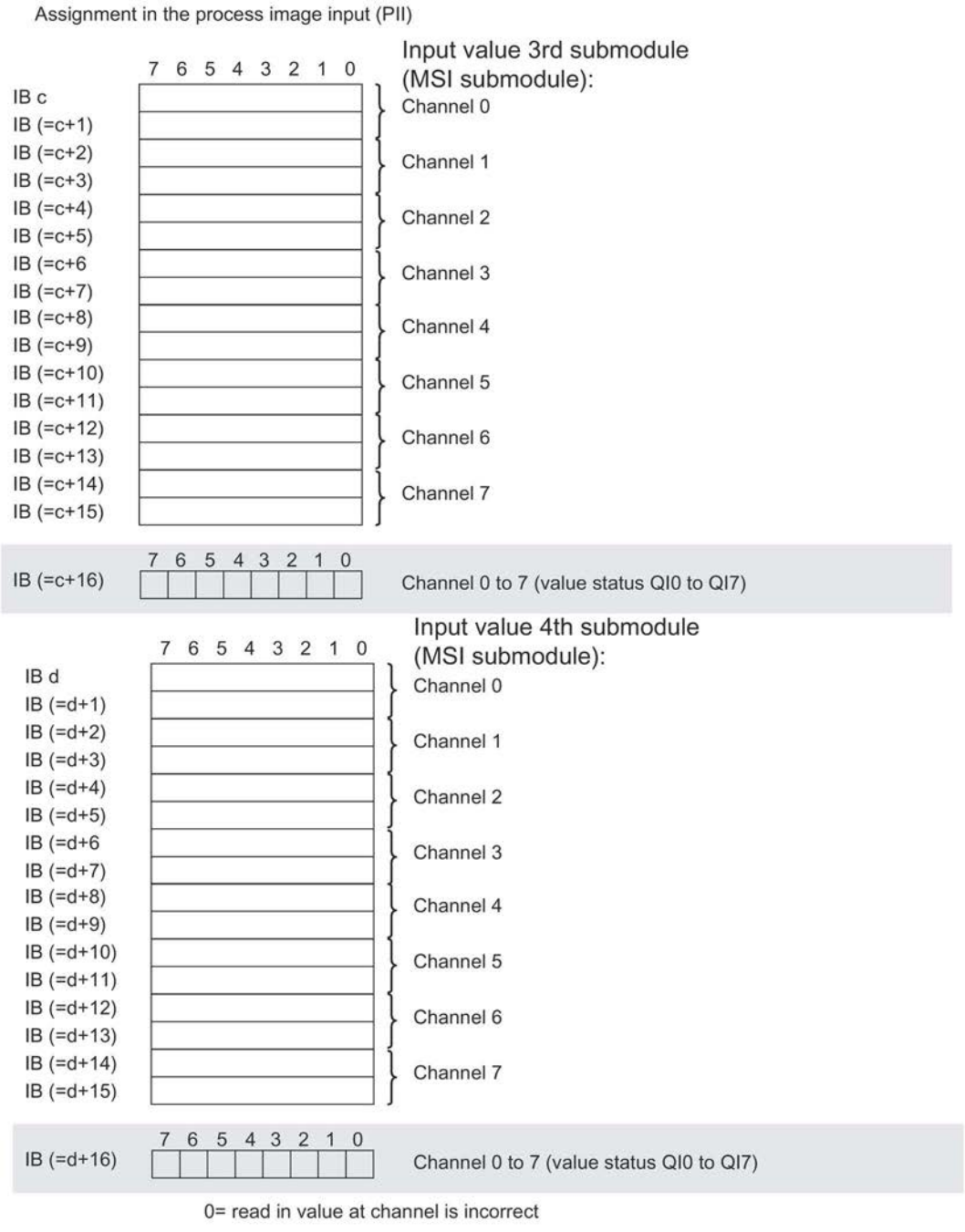

Figure 4-5 Address space for configuration as 1 x 8-channel AI 8xU/I HF MSI with value status

Address space for configuration as 1 x 8-channel AI 8xU/I HF and Scale

The figure below shows the address space assignment for configuration as a 1 x 8-channel module for scaling (Scale) of the measured values. You can freely assign the start address for the module. The addresses of the channels are derived from the start address.

"IB x" stands, for example, for the module start address input byte x.

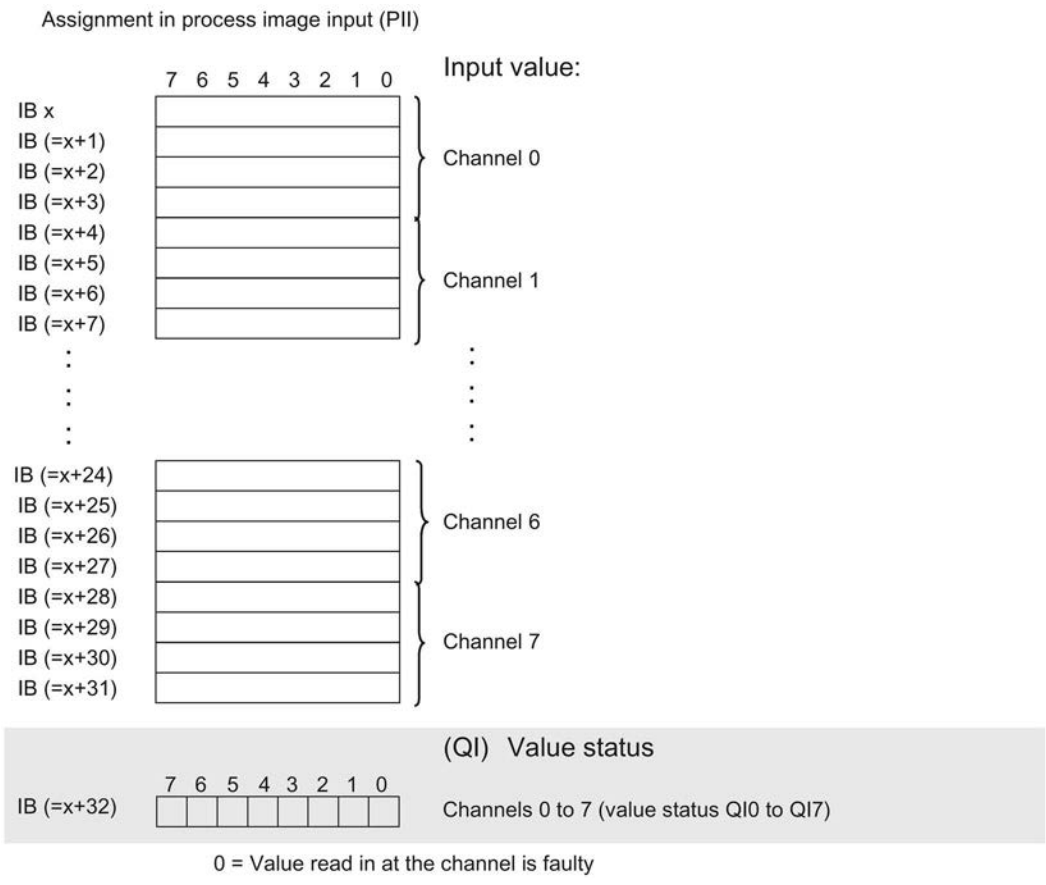

Figure 4-6 Address space for configuration as 1 x 8-channel AI 8xU/I HF MSI Scale with value status

Reference

You can find information on the Shared Input/Output (MSI/MSO) function in the section Module-Internal Shared Input/Output (MSI/MSO) of the PROFINET with STEP 7 V13 (https://support.industry.siemens.com/cs/ww/en/view/49948856) function manual.

Interrupts/diagnostics alarms

5

5.1 Status and error displays

LED displays

The figure below shows the LED displays (status and error displays) of AI 8xU/I HF.

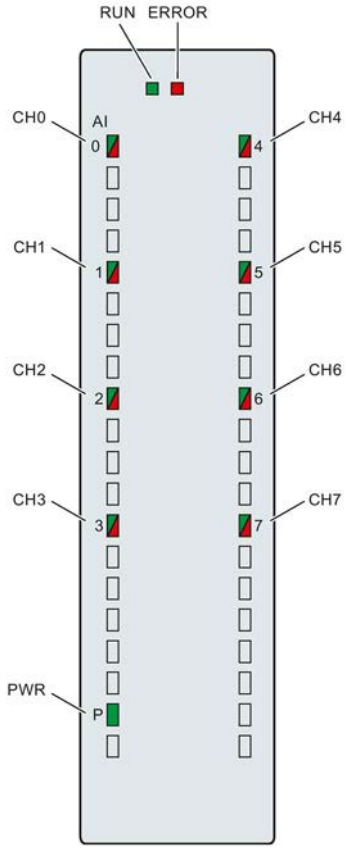

Figure 5-1 LED displays of the module AI 8xU/I HF

Meaning of the LED displays

The following tables explain the meaning of the status and error displays. Remedial measures for diagnostic alarms can be found in section Diagnostic alarms (Page 43).

RUN and ERROR LED

Table 5- 1 Status and error displays RUN and ERROR

LED		Meaning	Remedy
RUN	ERROR		
Off	Off	Voltage missing or too low at backplane bus.	• Switch on the CPU and/or the system power supply modules. • Verify that the U connectors are inserted. • Check whether too many modules are inserted.
Flashes	Off	The module starts and flashes until the valid parameter assignment is set.	---
On	Off	Module is configured.	
On	Flashes	Indicates module errors (at least one error at one channel, e.g., wire break).	Evaluate the diagnostics data and eliminate the error (e.g., wire break).
Flashes	Flashes	Hardware defective.	Replace the module.

PWR LED

Table 5- 2 PWR status display

LED PWR	Meaning	Remedy
Off	Supply voltage L+ to module too low or missing	Check supply voltage L+.
On	Supply voltage L+ is present and OK.	---

CHx LED

Table 5- 3 CHx status display

LED CHx	Meaning	Remedy
Off	Channel disabled	---
On	Channel configured and OK.	---
On	Channel is configured (channel error pending). Diagnostic alarm: e.g. wire break	Check the wiring. Disable diagnostics.

5.2 Interrupts

Analog input module AI 8xU/I HF supports the following diagnostic and hardware interrupts.

You can find detailed information on the event in the error organization block with the RALRM instruction (read additional interrupt info) and in the STEP 7 online help.

Diagnostic interrupt

The module generates a diagnostic interrupt at the following events:

- Missing supply voltage L+
- Wire break
- Overflow
- Underflow
- Parameter assignment error

Hardware interrupt

The module generates a hardware interrupt at the following events:

- Low limit violated 1
- High limit violated 1
- Low limit violated 2
- Violation of high limit 2

The module channel that triggered the hardware interrupt is entered in the start information of the organization block. The following figure shows the assignment of the local data double word 8 by the start information of the hardware interrupt organization block.

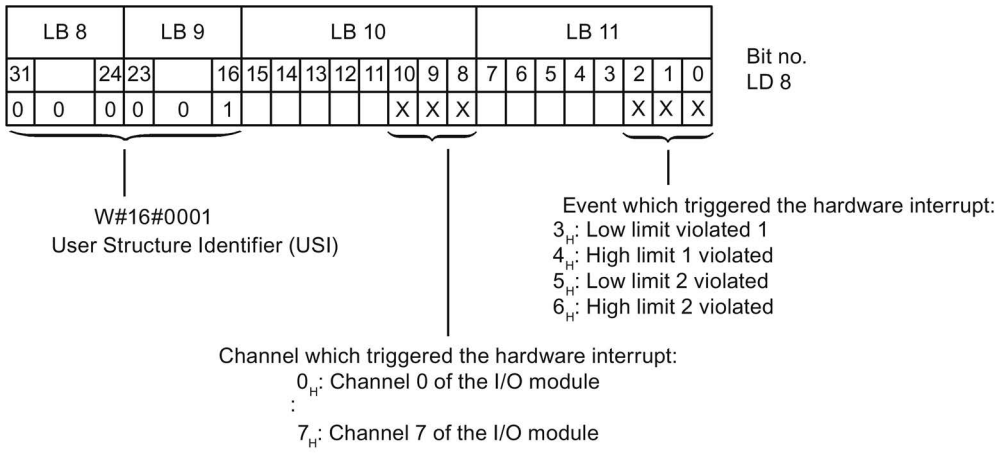

Figure 5-2 OB start information

Reaction when reaching limits 1 and 2 at the same time

If the two high limits 1 and 2 are reached at the same time, the module always signals the hardware interrupt for high limit 1 first. The configured value for high limit 2 is irrelevant. After processing the hardware interrupt for high limit 1, the module triggers the hardware interrupt for high limit 2.

The module has the same reaction when the low limits are reached at the same time. If the two low limits 1 and 2 are reached at the same time, the module always signals the hardware interrupt for low limit 1 first. After processing the hardware interrupt for low limit 1, the module triggers the hardware interrupt for low limit 2.

Structure of the additional interrupt information

Table 5- 4 Structure of USI = W#16#0001

Data block name		Contents	Remark	Bytes
USI (User Structure Identifier)		W#16#0001	Additional interrupt info for hardware interrupts of the I/O module	2
The channel that triggered the hardware interrupt follows.				
	Channel	B#16#00 to B#16#n	Number of the event-triggering channel (n = number of module channels -1)	1
It follows the error event that triggered the hardware interrupt.				
	Event	B#16#03	Low limit violated 1	1
		B#16#04	High limit violated 1	
		B#16#05	Low limit violated 2	
		B#16#06	Violation of high limit 2	

5.3 Diagnostics alarms

A diagnostics alarm is generated and the ERROR LED flashes for each diagnostics event on the module. The diagnostics alarms can be read out in the diagnostics buffer of the CPU, for example. You can evaluate the error codes with the user program.

If the module is operated distributed with PROFIBUS DP in an ET 200MP system, you have the option to read out diagnostics data with the instruction RDREC or RD_REC using data record 0 and 1. The structure of the data records is available on the Internet in the "Manual for interface module IM 155-5 DP ST (6ES7155-5BA00-0AB0)".

Table 5- 5 Diagnostics alarms, their meaning and corrective measures

Diagnostics alarm	Error code	Meaning	Remedy
Wire break	6_H	Impedance of sensor circuit too high	Use a different encoder type or modify the wiring, for example, using cables with larger cross-section
		Wire break between the module and sensor	Connect the cable
		Channel not connected (open)	• Disable diagnostics • Connect the channel
Overflow	7_H	Measuring range violated	Check the measuring range
Underflow	8_H	Measuring range violated	Check the measuring range
Parameter assignment error	10_H	• The module cannot evaluate parameters for the channel • Incorrect parameter assignment.	Correct the parameter assignment
Load voltage missing	11_H	Supply voltage L+ of the module is missing	Connect supply voltage L+ to module/channel

Diagnostics alarms with value status (QI)

If you configure the module with value status (QI), the module always checks all errors even if the respective diagnostics is not enabled. But the module cancels the inspection as soon as it detects the first error, regardless if the respective diagnostics has been enabled or not. The result may be that enabled diagnostics may not be displayed.

Example: You have enabled "Underflow" diagnostics, but the module detects the previous "Wire break" diagnostics and aborts after this error message. The "Underflow" diagnostics is not detected.

Recommendation: To ensure that all errors are subjected to the diagnostics, select all check boxes under "Diagnostics".

Technical specifications 6

Technical specifications of the AI 8xU/I HF

	6ES7531-7NF00-0AB0
General information	
Product type designation	AI 8xU/I HF
Hardware functional status	FS01
Firmware version	V1.1.0
• FW update possible	Yes
Product function	
I&M data	Yes; I&M0 to I&M3
Measuring range scalable	No
Measured values scalable	Yes
Measuring range adjustment	Yes
Engineering with	
STEP 7 TIA Portal can be configured/integrated as of version	V14 / -
STEP 7 can be configured/integrated as of version	V5.5 SP3 / -
PROFIBUS as of GSD version/GSD revision	V1.0 / V5.1
PROFINET as of GSD version/GSD revision	V2.3 / -
Operating mode	
Oversampling	No
MSI	Yes
CiR Configuration in RUN	
Configuration in RUN possible	Yes
Calibration in RUN possible	Yes
Supply voltage	
Rated value (DC)	24 V
Valid range, low limit (DC)	20.4 V
Valid range, high limit (DC)	28.8 V
Reverse polarity protection	Yes
Input current	
Current consumption, max.	50 mA; with 24 V DC supply
Power	
Power consumption from the backplane bus	0.85 W
Power loss	
Power loss, typ.	1.9 W

	6ES7531-7NF00-0AB0
Analog inputs	
Number of analog inputs	8
• For current measurement	8
• For voltage measurement	8
Permissible input voltage for voltage input (destruction limit), max.	28.8 V
Permissible input current for current input (destruction limit), max.	40 mA
Input ranges (rated values), voltages	
1 V to 5 V	Yes
Input resistance (1 V to 5 V)	100 kΩ
-10 V to +10 V	Yes
Input resistance (-10 V to +10 V)	100 kΩ
-2.5 to +2.5 V	Yes
Input resistance (-2.5 to +2.5 V)	100 kΩ
-5 V to +5 V	Yes
Input resistance (-5 V to +5 V)	100 kΩ
Input ranges (rated values), currents	
0 mA to 20 mA	Yes
Input resistance (0 mA to 20 mA)	25 Ω; plus approx. 42 ohm for overvoltage protection by PTC
-20 mA to +20 mA	Yes
Input resistance (-20 mA to +20 mA)	25 Ω; plus approx. 42 ohm for overvoltage protection by PTC
4 mA to 20 mA	Yes
Input resistance (4 mA to 20 mA)	25 Ω; plus approx. 42 ohm for overvoltage protection by PTC
Cable length	
shielded, max.	800 m
Analog value generation for the inputs	
Integration and conversion time/resolution per channel	
Resolution with overrange (bit including sign), max.	16 bit
Configurable integration time	Yes
Integration time (ms)	Fast mode: 2.5 / 16.67 / 20 / 100 ms; standard mode: 7.5 / 50 / 60 / 300 ms
Basic conversion time, including integration time (ms)	Fast mode: 4 / 18 / 22 / 102 ms; standard mode: 9 / 52 / 62 / 302 ms
Interference voltage suppression for interference frequency f1 in Hz	400 / 60 / 50 / 10 Hz
Basic execution time of the module (all channels enabled)	Corresponds to the channel with the highest basic conversion time

	6ES7531-7NF00-0AB0
Smoothing of the measured values	
Configurable	Yes
Level: None	Yes
Level: Weak	Yes
Level: Medium	Yes
Level: Strong	Yes
Encoders	
Connection of the signal encoders	
For voltage measurement	Yes
for current measurement as 2-wire transducer	Yes; with external transmitter supply
for current measurement as 4-wire transducer	Yes
Errors/accuracies	
Linearity error (in relation to input range), (+/-)	0.02%
Temperature error (in relation to input range), (+/-)	0.005%/K
Crosstalk between the inputs, max.	-80 dB
Repeat accuracy in settled state at 25 °C (in relation to input range), (+/-)	0.02%
Operational limit in overall temperature range	
Voltage in relation to input range, (+/-)	0.1%
Current in relation to input range, (+/-)	0.1%
Basic error limit (operational limit at 25 °C)	
Voltage in relation to input range, (+/-)	0.05%
Current in relation to input range, (+/-)	0.05%
Interference voltage suppression for f = n x (f1 +/- 1 %), f1 = interference frequency	
Series-mode interference (peak of the interference < rated value of the input range), min.	80 dB; in Standard mode, 40 dB in Fast mode
Common mode voltage, max.	60 V DC / 30 V AC
Common mode interference, min.	80 dB
Isochronous mode	
Isochronous mode (application synchronized up to terminal)	No
Interrupts/diagnostics/status information	
Diagnostics function	Yes
Interrupts	
Diagnostic interrupt	Yes
Limit interrupt	Yes; two high limits and two low limits each
Diagnostics alarms	
Monitoring of supply voltage	Yes
Wire break	Yes; only for 1 to 5 V and 4 to 20 mA
Overflow/underflow	Yes

	6ES7531-7NF00-0AB0
Diagnostics indicator LED	
RUN LED	Yes; green LED
ERROR LED	Yes; red LED
Monitoring of supply voltage (PWR LED)	Yes; green LED
Channel status display	Yes; green LED
For channel diagnostics	Yes; red LED
For module diagnostics	Yes; red LED
Electrical isolation	
Electrical isolation of channels	
Between the channels	Yes
Between the channels, in groups of	1
Between the channels and backplane bus	Yes
Between the channels and power supply of the electronics	Yes
Permitted potential difference	
Between different circuits	60 V DC / 30 V AC; Isolation measured for 120 V AC basic isolation: Between the channels and supply voltage L+, between the channels and the backplane bus, between the channels
Isolation	
Isolation tested with	2000 V DC between the channels and the supply voltage L+, 2000 V DC between the channels and the backplane bus, 2000 V DC between the channels, 707 V DC (type test) between the supply voltage L+ and the backplane bus
Ambient conditions	
Ambient temperature during operation	
Horizontal mounting position, min.	0 °C
Horizontal mounting position, max.	60 °C
Vertical mounting position, min.	0 °C
Vertical mounting position, max.	40 °C
Distributed mode	
Prioritized startup	Yes
Dimensions	
Width	35 mm
Height	147 mm
Depth	129 mm
Weights	
Weight, approx.	280 g

Dimensional drawing

A

This appendix contains the dimensional drawing of the module installed on a mounting rail and with a shield bracket. Always adhere to the specified dimensions for installations in cabinets, control rooms, etc.

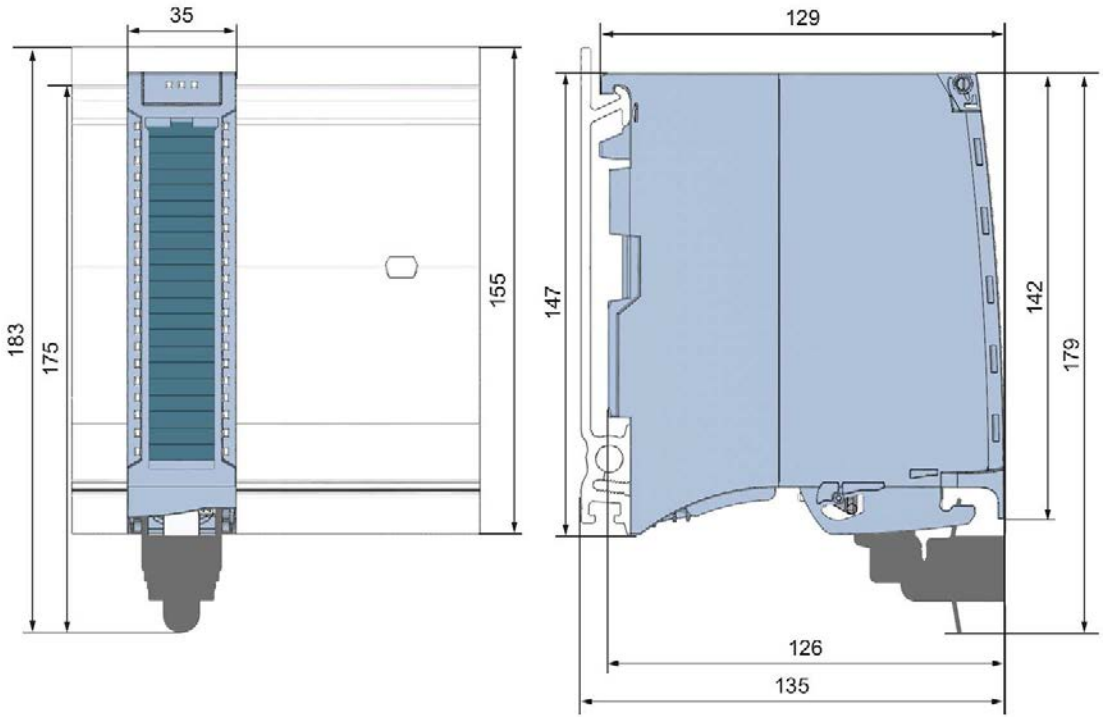

Figure A-1 Dimension drawing of the AI 8xU/I HF module

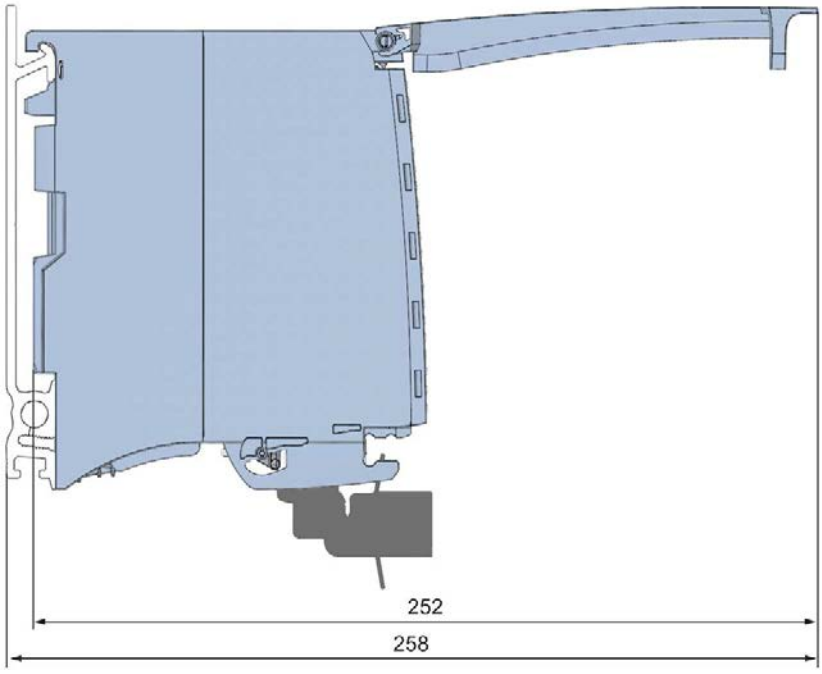

Figure A-2 Dimension drawing of the AI 8xU/I HF module, side view with open front cover

Parameter data records B

B.1 Parameter assignment

The data records of the module have an identical structure, regardless of whether you configure the module with PROFIBUS DP or PROFINET IO.

Dependencies for configuration with GSD file

When configuring the module with a GSD file, remember that the settings of some parameters are dependent on each other. The parameters are only checked for plausibility by the module after the transfer to the module.

The following table lists the parameters that depend on one another.

Table B- 1 Dependencies of parameters for configuration with GSD file

Device-specific parameters (GSD file)	Dependent parameters
Current limit for wire break	Only for **measuring type** current with **measuring range** 4 mA to 20 mA.
Wire break	Only for **measuring type** resistance with **measuring range** 1V to 5 V and current with **measuring range** 4 mA to 20 mA.
Hardware interrupt limits	Only if hardware interrupts are enabled.

Parameter assignment in the user program

You have the option to assign module parameters in RUN (e.g., the voltage or current values of selected channels can be edited in RUN without having an effect on the other channels).

Parameter assignment in RUN

The WRREC instruction is used to transfer the parameters to the module using data records 0 to 7. The parameters set in STEP 7 do not change in the CPU, which means the parameters set in STEP 7 are still valid after a restart.

The parameters are only checked for plausibility by the module after the transfer to the module.

Output parameter STATUS

The module ignores errors that occurred during the transfer of parameters with the WRREC instruction and continues operation with the previous parameter assignment. However, a corresponding error code is written to the STATUS output parameter.

The description of the WRREC instruction and the error codes is available in the STEP 7 online help.

Operation of the module behind a PROFIBUS DP interface module

If the module is operated behind a PROFIBUS DP interface module, the parameter data records 0 and 1 are not read back. You obtain the diagnostics data records 0 and 1 with the read back parameter data records 0 and 1. You can find additional information in the Interrupts section of the manual for the PROFIBUS DP interface module on the Internet (http://support.automation.siemens.com/WW/view/en/78324181).

Assignment of data record and channel

For the configuration as a 1 x 8-channel module, the parameters are located in data records 0 to 7 and are assigned as follows:

- Data record 0 for channel 0
- Data record 1 for channel 1
- …
- Data record 6 for channel 6
- Data record 7 for channel 7

For configuration 8 x 1-channel, the module has 8 submodules with one channel each. The parameters for the channel are available in data record 0 and are assigned as follows:

- Data record 0 for channel 0 (submodule 1)
- Data record 0 for channel 1 (submodule 2)
- …
- Data record 0 for channel 6 (submodule 7)
- Data record 0 for channel 7 (submodule 8)

Address the respective submodule for data record transfer.

Dependency of the parameter data records

The structure of the parameter data record differs depending on the configuration:

- 28 bytes data length for configuration without scaling of the measured values, see section Structure of the parameter data records without scaling of measured values (Page 52).
- 40 bytes data length for configuration with scaling of the measured values, see section Structure of the parameter data records with scaling of measured values (Page 55).

B.2 Structure of the parameter data records without scaling of measured values

Structure of a data record without scaling of the measured values

The figure below shows the structure of data record 0 for channel 0 as an example. The structure is identical for channels 1 to 7. The values in byte 0 and byte 1 are fixed and may not be changed.

Enable a parameter by setting the corresponding bit to "1".

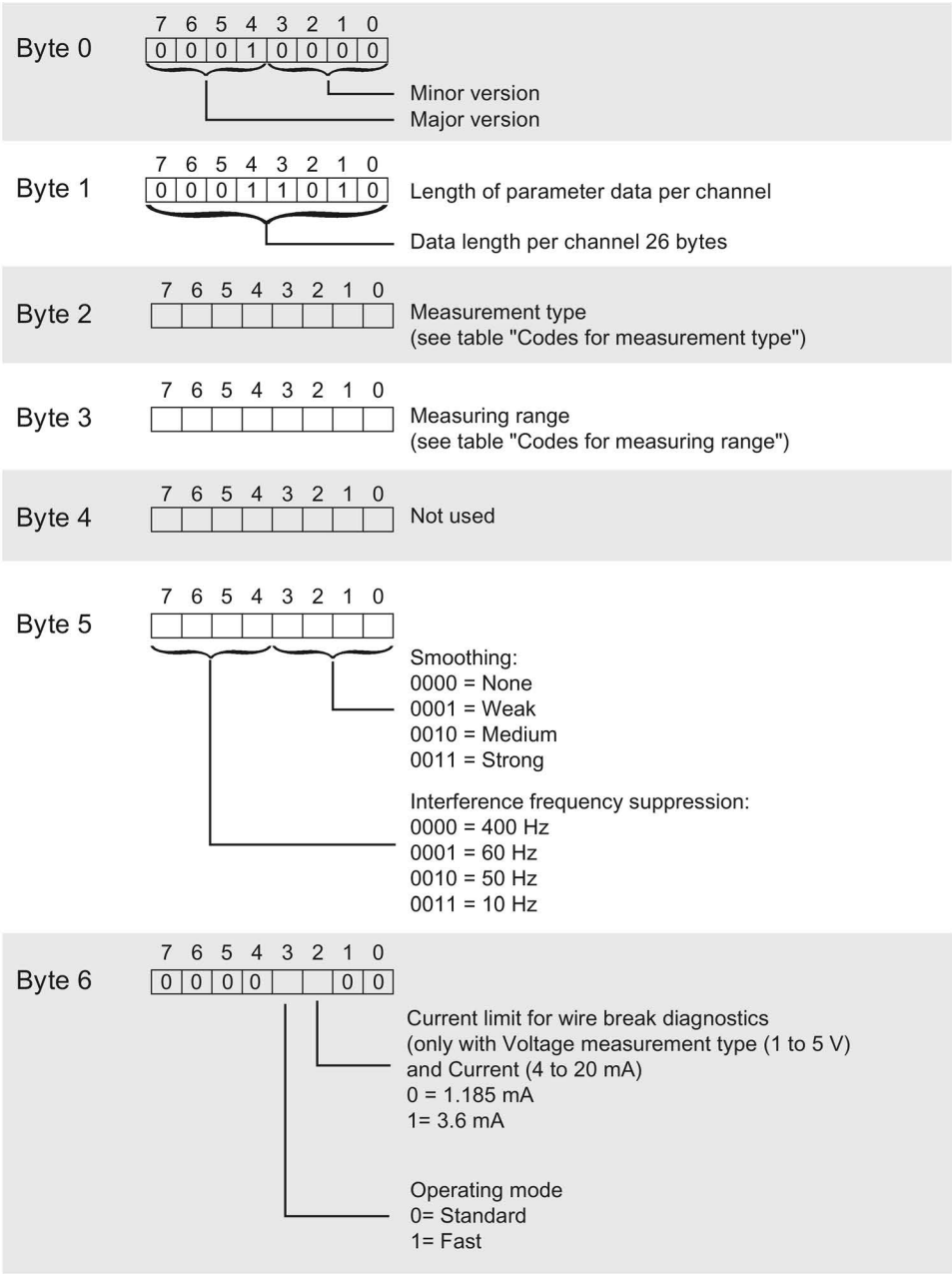

Figure B-1 Structure of data record 0: Byte 0 to 6 without scaling of measured values

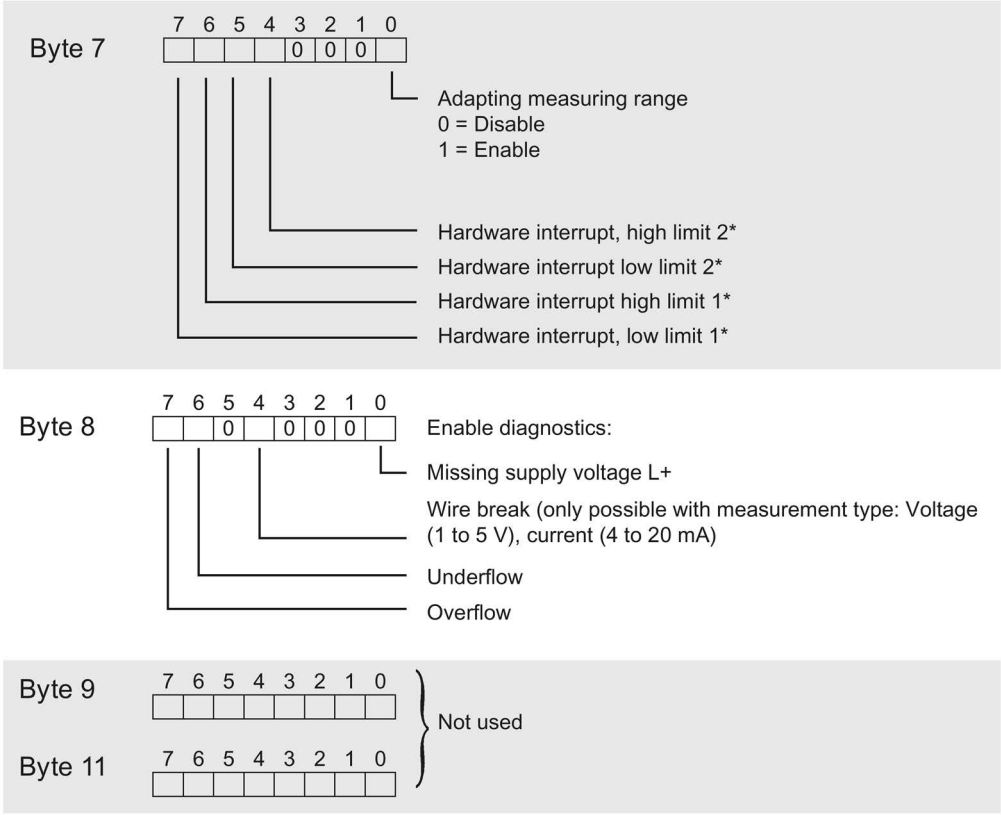

* Hardware interrupts can only be activated via data record if the channel is assigned a hardware interrupt OB in STEP 7

Figure B-2 Structure of data record 0: Byte 7 to 11 without scaling of measured values

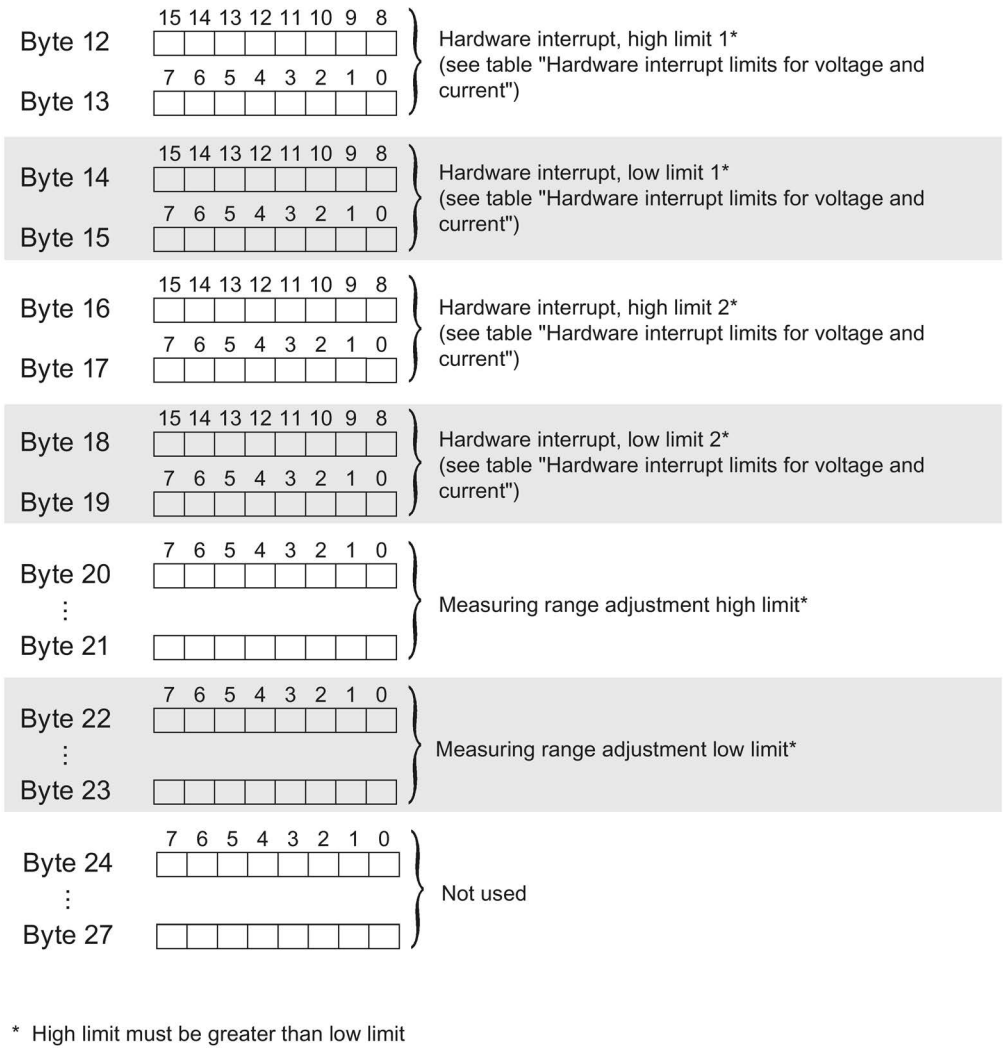

Figure B-3 Structure of data record 0: Byte 12 to 27 without scaling of measured values

See also

Codes for measurement types/measuring ranges and limits for hardware interrupts (Page 58)

B.3 Structure of the parameter data records with scaling of measured values

Structure of a data record with scaling of the measured values

The example in the figure below shows the structure of data record 0 for channel 0 for scaling of measured values. The structure is identical for channels 1 to 7. The values in byte 0 and byte 1 are fixed and may not be changed.

Enable a parameter by setting the corresponding bit to "1".

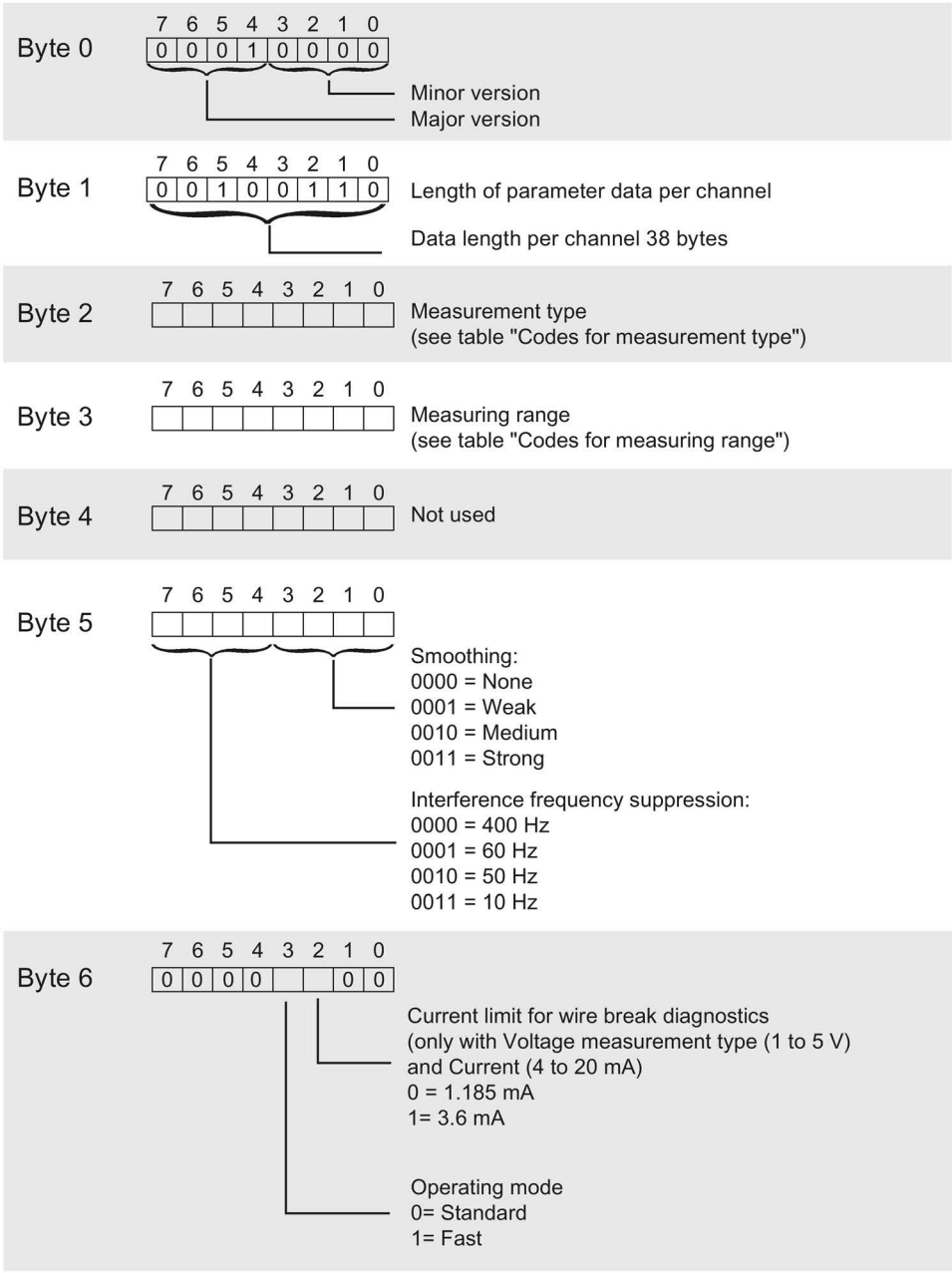

Figure B-4 Structure of data record 0: Byte 0 to 6 for scaling of measured values

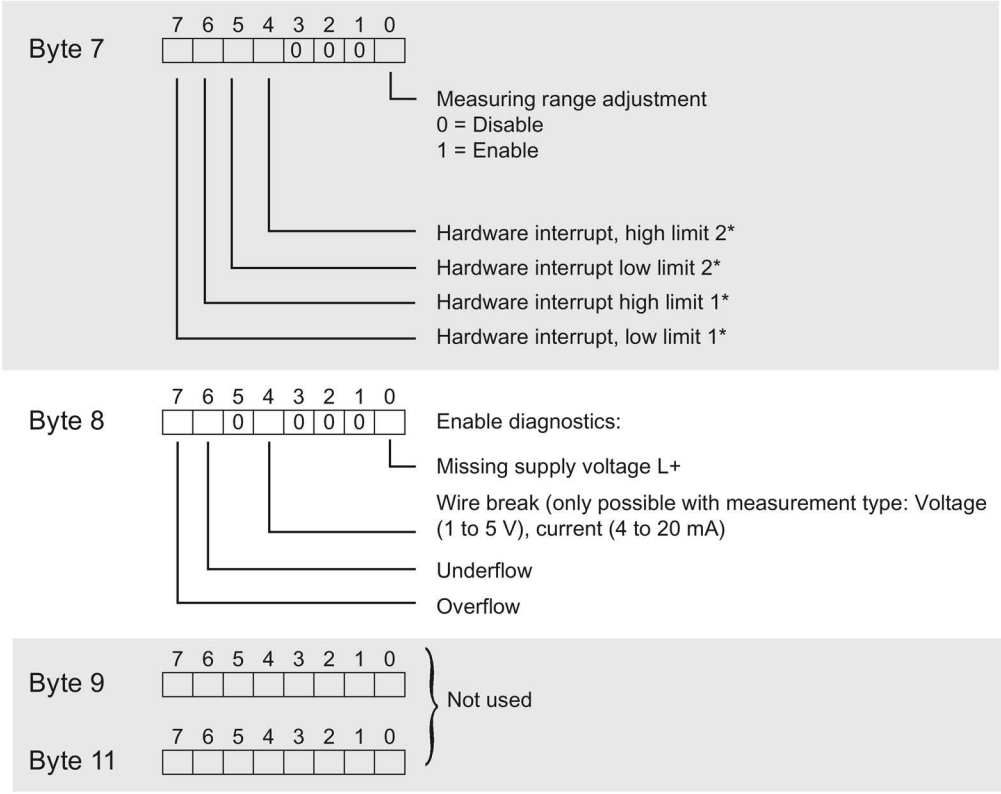

* Hardware interrupts can only be activated via data record if the channel is assigned a hardware interrupt OB in STEP 7

Figure B-5 Structure of data record 0: Byte 7 to 11 for scaling of measured values

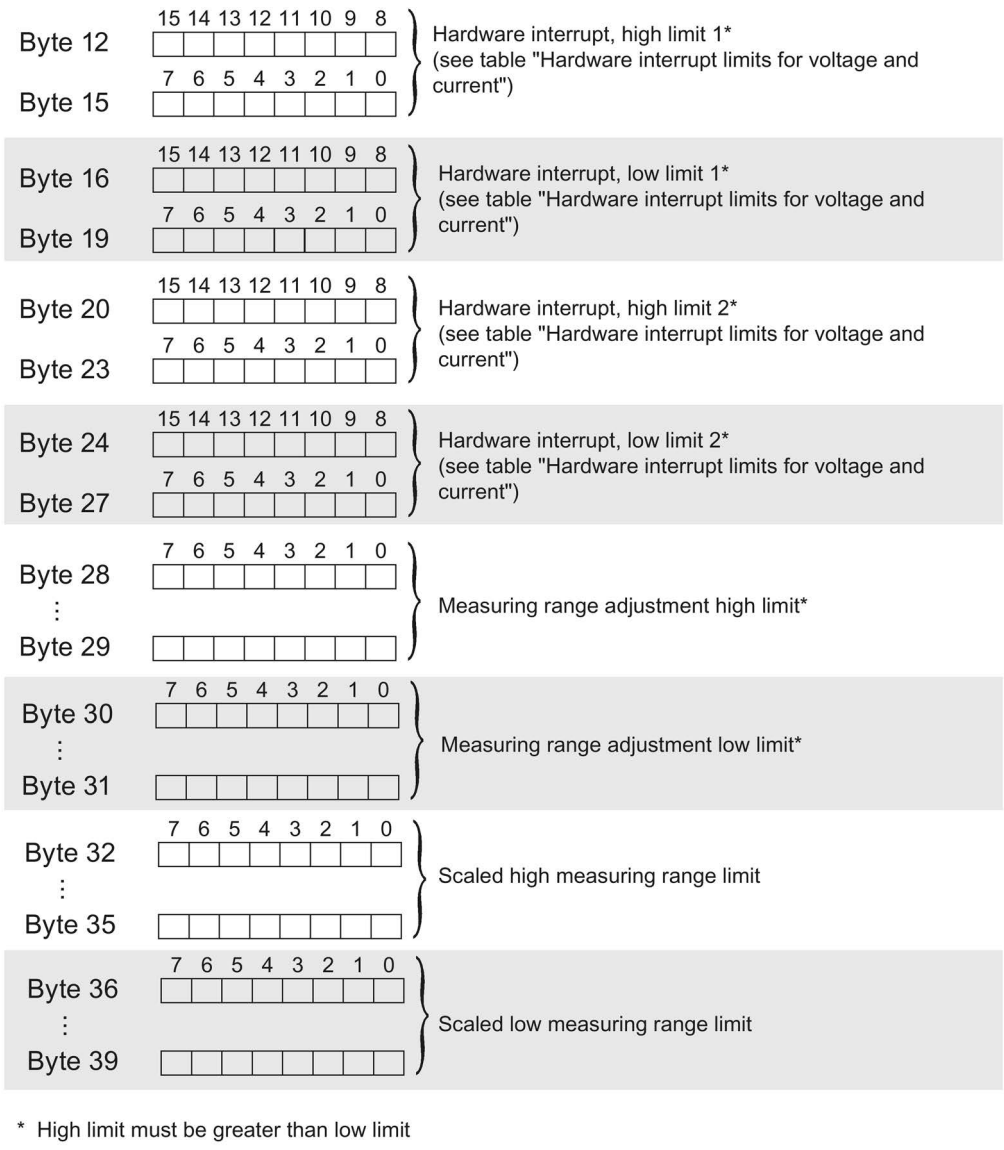

Figure B-6 Structure of data record 0: Byte 12 to 39 for scaling of measured values

See also

Codes for measurement types/measuring ranges and limits for hardware interrupts (Page 58)

B.4 Codes for measurement types/measuring ranges and limits for hardware interrupts

Codes for measuring types

The following table lists all measuring types of the analog input module along with their codes. Enter these codes in byte 2 of the respective data record.

Table B- 2 Code for the measuring type

Measurement type	Code
Deactivated	0000 0000
Voltage	0000 0001
Current 4-wire transducer	0000 0010
Current 2-wire transducer	0000 0011

Codes for measuring ranges

The following table lists all measuring ranges of the analog input module along with their codes. Enter these codes in byte 3 of the respective data record.

Table B- 3 Code for the measuring range

Measuring range	Code
Voltage	
±2.5 V	0000 0111
±5 V	0000 1000
±10 V	0000 1001
1 V to 5 V	0000 1010
Current 4-wire transducer	
0 mA to 20 mA	0000 0010
4 mA to 20 mA	0000 0011
±20 mA	0000 0100
Current 2-wire transducer	
4 mA to 20 mA	0000 0011

Hardware interrupt limits

The following tables list the valid hardware interrupt limits. The limit values depend on the selected measuring type and range. The values that you can set for hardware interrupts (high/low limit) must not exceed the respective rated measuring range.

Enter the limits in bytes 12 to 19 or 12 to 27 of the corresponding data record.

Table B- 4 Limits of hardware interrupts for voltage and current

Voltage		Current		
±2.5 V, ±5 V, ±10 V	1 V to 5 V	±20 mA	4 mA to 20 mA, 0 mA to 20 mA	
32510	32510	32510	32510	High limit
-32511	-4863	-32511	-4863	Low limit

Representation of analog values

C

Introduction

This appendix shows the analog values for all measuring ranges supported by the AI 8xU/I HF analog module.

Measured value resolution

Each analog value is written left aligned to the tags. The bits marked with "x" are set to "0".

Table C- 1 Resolution of the analog values

Resolution in bits including sign	Values		Analog value	
	Decimal	Hexadecimal	High byte	Low byte
16	1	1_H	Sign 0 0 0 0 0 0 0	0 0 0 0 0 0 0 1

C.1 Representation of input ranges

The tables below set out the digitized representation of the input ranges separately for bipolar and unipolar input ranges. The resolution is 16 bits.

Table C- 2 Bipolar input ranges

Units	Measured value in %	Data word																Range
		2^{15}	2^{14}	2^{13}	2^{12}	2^{11}	2^{10}	2^{9}	2^{8}	2^{7}	2^{6}	2^{5}	2^{4}	2^{3}	2^{2}	2^{1}	2^{0}	
32767	>117.589	0	1	1	1	1	1	1	1	1	1	1	1	1	1	1	1	Overflow
32511	117.589	0	1	1	1	1	1	1	0	1	1	1	1	1	1	1	1	Overshoot range
27649	100.004	0	1	1	0	1	1	0	0	0	0	0	0	0	0	0	1	
27648	100.000	0	1	1	0	1	1	0	0	0	0	0	0	0	0	0	0	Rated range
1	0.003617	0	0	0	0	0	0	0	0	0	0	0	0	0	0	0	1	
0	0.000	0	0	0	0	0	0	0	0	0	0	0	0	0	0	0	0	
-1	-0.003617	1	1	1	1	1	1	1	1	1	1	1	1	1	1	1	1	
-27648	-100.000	1	0	0	1	0	1	0	0	0	0	0	0	0	0	0	0	
-27649	-100.004	1	0	0	1	0	0	1	1	1	1	1	1	1	1	1	1	Undershoot range
-32512	-117.593	1	0	0	0	0	0	0	1	0	0	0	0	0	0	0	0	
-32768	<-117.593	1	0	0	0	0	0	0	0	0	0	0	0	0	0	0	0	Underflow

Table C- 3 Unipolar input ranges

Units	Measured value in %	Data word																Range
		2^{15}	2^{14}	2^{13}	2^{12}	2^{11}	2^{10}	2^{9}	2^{8}	2^{7}	2^{6}	2^{5}	2^{4}	2^{3}	2^{2}	2^{1}	2^{0}	
32767	>117.589	0	1	1	1	1	1	1	1	1	1	1	1	1	1	1	1	Overflow
32511	117.589	0	1	1	1	1	1	1	0	1	1	1	1	1	1	1	1	Overshoot range
27649	100.004	0	1	1	0	1	1	0	0	0	0	0	0	0	0	0	1	
27648	100.000	0	1	1	0	1	1	0	0	0	0	0	0	0	0	0	0	
1	0.003617	0	0	0	0	0	0	0	0	0	0	0	0	0	0	0	1	Rated range
0	0.000	0	0	0	0	0	0	0	0	0	0	0	0	0	0	0	0	
-1	-0.003617	1	1	1	1	1	1	1	1	1	1	1	1	1	1	1	1	Undershoot range
-4864	-17.593	1	1	1	0	1	1	0	1	0	0	0	0	0	0	0	0	
-32768	<-17.593	1	0	0	0	0	0	0	0	0	0	0	0	0	0	0	0	Underflow

C.2 Representation of analog values in voltage measuring ranges

The following tables list the decimal and hexadecimal values (codes) of the possible voltage measuring ranges.

Table C- 4 Voltage measuring ranges ±10 V, ±5 V and ±2.5 V

Values		Voltage measuring range			Range
dec	hex	±10 V	±5 V	±2.5 V	
32767	7FFF	>11.759 V	>5.879 V	>2.939 V	Overflow
32511	7EFF	11.759 V	5.879 V	2.939 V	Overshoot range
27649	6C01				
27648	6C00	10 V	5 V	2.5 V	Rated range
20736	5100	7.5 V	3.75 V	1.875 V	
1	1	361.7 µV	180.8 µV	90.4 µV	
0	0	0 V	0 V	0 V	
-1	FFFF				
-20736	AF00	-7.5 V	-3.75 V	- 1.875 V	
-27648	9400	-10 V	-5 V	- 2.5 V	
-27649	93FF				Undershoot range
-32512	8100	-11.759 V	-5.879 V	- 2.939 V	
-32768	8000	< - 11.759 V	< -5.879 V	<-2.939 V	Underflow

Table C- 5 Voltage measuring range 1 to 5 V

Values		Voltage measuring range	Range
dec	hex	1 to 5 V	
32767	7FFF	>5.704 V	Overflow
32511	7EFF	5.704 V	Overshoot range
27649	6C01		
27648	6C00	5 V	Rated range
20736	5100	4 V	
1	1	1 V + 144.7 µV	
0	0	1 V	
-1	FFFF		Undershoot range
-4864	ED00	0.296 V	
-32768	8000	< 0.296 V	Underflow

C.3 Representation of analog values in the current measuring ranges

The following tables list the decimal and hexadecimal values (codes) of the possible current measuring ranges.

Table C- 6 Current measuring range ±20 mA

Values		Current measuring range	
dec	hex	±20 mA	
32767	7FFF	>23.52 mA	Overflow
32511	7EFF	23.52 mA	Overshoot range
27649	6C01		
27648	6C00	20 mA	Rated range
20736	5100	15 mA	
1	1	723.4 nA	
0	0	0 mA	
-1	FFFF		
-20736	AF00	-15 mA	
-27648	9400	-20 mA	
-27649	93FF		Undershoot range
-32512	8100	-23.52 mA	
-32768	8000	< -23.52 mA	Underflow

Table C- 7 Current measuring ranges 0 to 20 mA and 4 to 20 mA

Values		Current measuring range		
dec	hex	0 to 20 mA	4 to 20 mA	
32767	7FFF	>23.52 mA	>22.81 mA	Overflow
32511	7EFF	23.52 mA	22.81 mA	Overshoot range
27649	6C01			
27648	6C00	20 mA	20 mA	Rated range
20736	5100	15 mA	16 mA	
1	1	723.4 nA	4 mA + 578.7 nA	
0	0	0 mA	4 mA	
-1	FFFF			Undershoot range
-4864	ED00	-3.52 mA	1.185 mA	
-32768	8000	<- 3.52 mA	< 1.185 mA	Underflow

C.4 Measured values for wire break diagnostic

Measured values on diagnostic event "wire break", dependent on diagnostics enables

Error events initiate a diagnostics entry and trigger a diagnostics interrupt if configured accordingly.

Table C- 8 Measured values for wire break diagnostic

Format	Parameter assignment	Measured values		Explanation
S7	• "Wire break" diagnostics enabled • "Overflow/Underflow" diagnostics enabled or disabled ("Wire break" diagnostics takes priority over "Overflow/Underflow" diagnostics)	32767	$7FFF_H$	"Wire break" or "Open circuit" diagnostic alarm
	• "Wire break" diagnostics disabled • "Overflow/Underflow" diagnostics enabled	-32767	8000_H	• Measured value after leaving the under-shoot range • Diagnostic alarm "Low limit violated"
	• "Wire break" diagnostics disabled • "Overflow/Underflow" diagnostics disabled	-32767	8000_H	Measured value after leaving the undershoot range

SIEMENS

SIMATIC

S7-1500 / ET 200MP

Analog Input Module AI 8xU/I HS (6ES7531-7NF10-0AB0)

Manual

Edition 12/2016

siemens.com

SIEMENS

SIMATIC

S7-1500/ET 200MP Analog Input Module AI 8xU/I HS (6ES7531-7NF10-0AB0)

Manual

Preface

Documentation guide 1

Product overview 2

Wiring 3

Parameters/address space 4

Interrupts/diagnostics alarms 5

Technical specifications 6

Dimensional drawing A

Parameter data records B

Representation of analog values C

12/2016

A5E03484886-AE

Legal information

Warning notice system

This manual contains notices you have to observe in order to ensure your personal safety, as well as to prevent damage to property. The notices referring to your personal safety are highlighted in the manual by a safety alert symbol, notices referring only to property damage have no safety alert symbol. These notices shown below are graded according to the degree of danger.

⚠ DANGER

indicates that death or severe personal injury **will** result if proper precautions are not taken.

⚠ WARNING

indicates that death or severe personal injury **may** result if proper precautions are not taken.

⚠ CAUTION

indicates that minor personal injury can result if proper precautions are not taken.

NOTICE

indicates that property damage can result if proper precautions are not taken.

If more than one degree of danger is present, the warning notice representing the highest degree of danger will be used. A notice warning of injury to persons with a safety alert symbol may also include a warning relating to property damage.

Qualified Personnel

The product/system described in this documentation may be operated only by **personnel qualified** for the specific task in accordance with the relevant documentation, in particular its warning notices and safety instructions. Qualified personnel are those who, based on their training and experience, are capable of identifying risks and avoiding potential hazards when working with these products/systems.

Proper use of Siemens products

Note the following:

⚠ WARNING

Siemens products may only be used for the applications described in the catalog and in the relevant technical documentation. If products and components from other manufacturers are used, these must be recommended or approved by Siemens. Proper transport, storage, installation, assembly, commissioning, operation and maintenance are required to ensure that the products operate safely and without any problems. The permissible ambient conditions must be complied with. The information in the relevant documentation must be observed.

Trademarks

All names identified by ® are registered trademarks of Siemens AG. The remaining trademarks in this publication may be trademarks whose use by third parties for their own purposes could violate the rights of the owner.

Disclaimer of Liability

We have reviewed the contents of this publication to ensure consistency with the hardware and software described. Since variance cannot be precluded entirely, we cannot guarantee full consistency. However, the information in this publication is reviewed regularly and any necessary corrections are included in subsequent editions.

Siemens AG
Division Digital Factory
Postfach 48 48
90026 NÜRNBERG
GERMANY

A5E03484886-AE
℗ 12/2016 Subject to change

Copyright © Siemens AG 2013 - 2016.
All rights reserved

Preface

Purpose of the documentation

This manual supplements the system manual: S7-1500/ET 200MP (https://support.industry.siemens.com/cs/ww/en/view/59191792) automation system.

Functions that relate in general to the systems are described in these system manuals.

The information provided in this manual and in the system/function manuals supports you in commissioning the systems.

Changes compared to previous version

Compared to the previous version, this manual contains the following changes:

- Updated technical specifications "common mode interference"

Conventions

The term "CPU" is used in this manual both for the CPUs of the S7-1500 automation system, as well as for interface modules of the ET 200MP distributed I/O system.

Please also observe notes marked as follows:

Note

A note contains important information regarding the product described in the documentation or its handling, or draws special attention to a section of the documentation.

Security information

Siemens provides products and solutions with industrial security functions that support the secure operation of plants, systems, machines and networks.

In order to protect plants, systems, machines and networks against cyber threats, it is necessary to implement – and continuously maintain – a holistic, state-of-the-art industrial security concept. Siemens' products and solutions only form one element of such a concept.

Customer is responsible to prevent unauthorized access to its plants, systems, machines and networks. Systems, machines and components should only be connected to the enterprise network or the internet if and to the extent necessary and with appropriate security measures (e.g. use of firewalls and network segmentation) in place.

Additionally, Siemens' guidance on appropriate security measures should be taken into account. For more information about industrial security, please visit (http://www.siemens.com/industrialsecurity).

Siemens' products and solutions undergo continuous development to make them more secure. Siemens strongly recommends to apply product updates as soon as available and to always use the latest product versions. Use of product versions that are no longer supported, and failure to apply latest updates may increase customer's exposure to cyber threats.

To stay informed about product updates, subscribe to the Siemens Industrial Security RSS Feed under (http://www.siemens.com/industrialsecurity).

Open Source Software

Open-source software is used in the firmware of the I/O modules. Open Source Software is provided free of charge. We are liable for the product described, including the open-source software contained in it, pursuant to the conditions applicable to the product. Siemens accepts no liability for the use of the open source software over and above the intended program sequence, or for any faults caused by modifications to the software.

For legal reasons, we are obliged to publish the original text of the license conditions and copyright notices. Please read the information relating to this on the Internet (https://support.industry.siemens.com/cs/ww/en/view/109739516).

Table of contents

Preface 4
1 Documentation guide 7
2 Product overview 11
2.1 Properties 11
2.2 Functions 13
2.2.1 Oversampling for inputs 13
3 Wiring 15
4 Parameters/address space 19
4.1 Measuring types and ranges 19
4.2 Parameters 20
4.3 Declaration of parameters 22
4.4 Address space 24
5 Interrupts/diagnostics alarms 31
5.1 Status and error displays 31
5.2 Interrupts 33
5.3 Diagnostics alarms 35
6 Technical specifications 36
A Dimensional drawing 42
B Parameter data records 44
B.1 Parameter assignment and structure of the parameter data records 44
C Representation of analog values 49
C.1 Representation of input ranges 50
C.2 Representation of analog values in voltage measuring ranges 51
C.3 Representation of analog values in the current measuring ranges 52
C.4 Measured values for wire break diagnostic 53

Documentation guide

1

The documentation for the SIMATIC S7-1500 automation system, the CPU 1516pro-2 PN based on SIMATIC S7-1500 and the SIMATIC ET 200MP distributed I/O system is arranged into three areas.
This arrangement enables you to access the specific content you require.

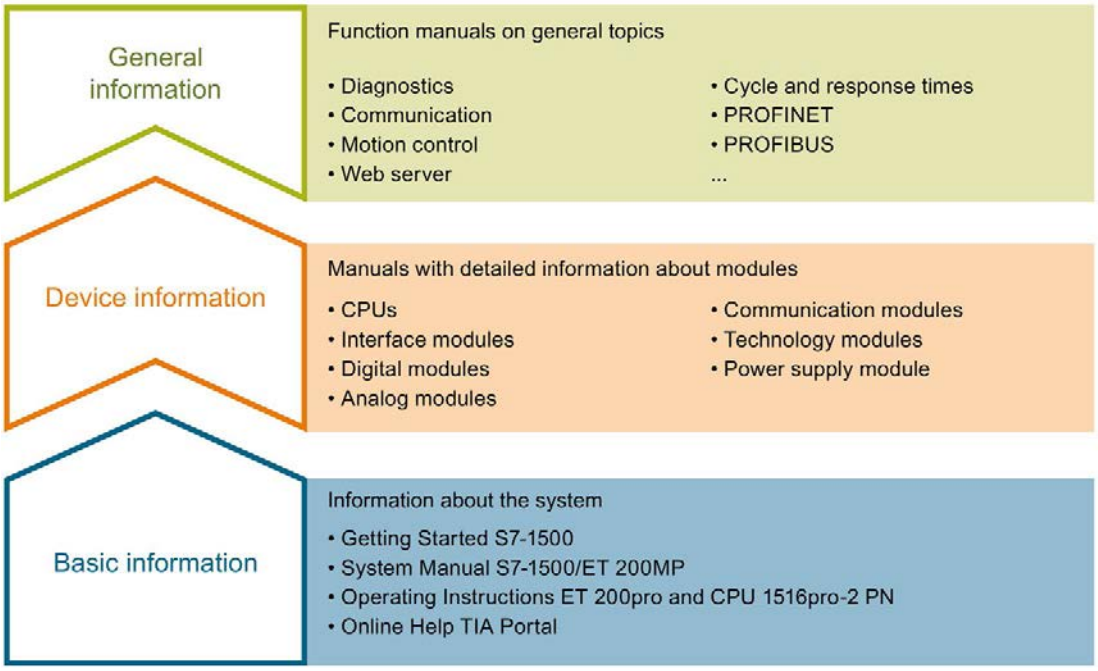

Basic information

The System Manual and Getting Started describe in detail the configuration, installation, wiring and commissioning of the SIMATIC S7-1500 and ET 200MP systems. For CPU 1516pro-2 PN you use the corresponding operating instructions. The STEP 7 online help supports you in the configuration and programming.

Device information

Product manuals contain a compact description of the module-specific information, such as properties, wiring diagrams, characteristics and technical specifications.

General information

The function manuals contain detailed descriptions on general topics regarding the SIMATIC S7-1500 and ET 200MP systems, e.g. diagnostics, communication, motion control, Web server, OPC UA.

You can download the documentation free of charge from the Internet (http://w3.siemens.com/mcms/industrial-automation-systems-simatic/en/manual-overview/Pages/Default.aspx).

Changes and supplements to the manuals are documented in a Product Information.

You can download the product information free of charge from the Internet (https://support.industry.siemens.com/cs/us/en/view/68052815).

Manual Collection S7-1500/ET 200MP

The Manual Collection contains the complete documentation on the SIMATIC S7-1500 automation system and the ET 200MP distributed I/O system gathered together in one file.

You can find the Manual Collection on the Internet (https://support.industry.siemens.com/cs/ww/en/view/86140384).

SIMATIC S7-1500 comparison list for programming languages

The comparison list contains an overview of which instructions and functions you can use for which controller families.

You can find the comparison list on the Internet (https://support.industry.siemens.com/cs/ww/en/view/86630375).

"mySupport"

With "mySupport", your personal workspace, you make the best out of your Industry Online Support.

In "mySupport", you can save filters, favorites and tags, request CAx data and compile your personal library in the Documentation area. In addition, your data is already filled out in support requests and you can get an overview of your current requests at any time.

You must register once to use the full functionality of "mySupport".

You can find "mySupport" on the Internet (https://support.industry.siemens.com/My/ww/en).

"mySupport" - Documentation

In the Documentation area in "mySupport" you can combine entire manuals or only parts of these to your own manual.
You can export the manual as PDF file or in a format that can be edited later.

You can find "mySupport" - Documentation on the Internet (http://support.industry.siemens.com/My/ww/en/documentation).

"mySupport" - CAx data

In the CAx data area in "mySupport", you can access the current product data for your CAx or CAe system.

You configure your own download package with a few clicks.

In doing so you can select:

- Product images, 2D dimension drawings, 3D models, internal circuit diagrams, EPLAN macro files
- Manuals, characteristics, operating manuals, certificates
- Product master data

You can find "mySupport" - CAx data on the Internet (http://support.industry.siemens.com/my/ww/en/CAxOnline).

Application examples

The application examples support you with various tools and examples for solving your automation tasks. Solutions are shown in interplay with multiple components in the system - separated from the focus on individual products.

You will find the application examples on the Internet (https://support.industry.siemens.com/sc/ww/en/sc/2054).

TIA Selection Tool

With the TIA Selection Tool, you can select, configure and order devices for Totally Integrated Automation (TIA).
This tool is the successor of the SIMATIC Selection Tool and combines the known configurators for automation technology into one tool.
With the TIA Selection Tool, you can generate a complete order list from your product selection or product configuration.

You can find the TIA Selection Tool on the Internet (http://w3.siemens.com/mcms/topics/en/simatic/tia-selection-tool).

SIMATIC Automation Tool

You can use the SIMATIC Automation Tool to run commissioning and maintenance activities simultaneously on various SIMATIC S7 stations as a bulk operation independently of the TIA Portal.

The SIMATIC Automation Tool provides a multitude of functions:

- Scanning of a PROFINET/Ethernet network and identification of all connected CPUs
- Address assignment (IP, subnet, gateway) and station name (PROFINET device) to a CPU
- Transfer of the date and the programming device/PC time converted to UTC time to the module
- Program download to CPU
- Operating mode switchover RUN/STOP
- Localization of the CPU by means of LED flashing
- Reading out CPU error information
- Reading the CPU diagnostic buffer
- Reset to factory settings
- Updating the firmware of the CPU and connected modules

You can find the SIMATIC Automation Tool on the Internet (https://support.industry.siemens.com/cs/ww/en/view/98161300).

PRONETA

With SIEMENS PRONETA (PROFINET network analysis), you analyze the PROFINET network during commissioning. PRONETA features two core functions:

- The topology overview independently scans PROFINET and all connected components.
- The IO check is a fast test of the wiring and the module configuration of a system.

You can find SIEMENS PRONETA on the Internet (https://support.industry.siemens.com/cs/ww/en/view/67460624).

Product overview 2

2.1 Properties

Article number

6ES7531-7NF10-0AB0

View of the module

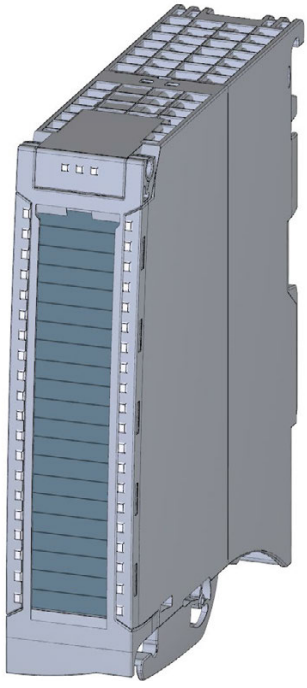

Figure 2-1 View of the AI 8xU/I HS module

Properties

The module has the following technical properties:

- 8 analog inputs
- Voltage or current measuring type can be set per channel
- Resolution 16 bits including sign
- Configurable diagnostics (per channel)
- Hardware interrupt on limit violation can be set per channel (two low and two high limits per channel)
- High-speed update of measured values

The module supports the following functions:

Table 2- 1 Version dependencies of the module functions

Function	Firmware version of the module	Configuration software	
		STEP 7 (TIA Portal)	GSD file in STEP 7 (TIA Portal) V12 or higher, or STEP 7 V5.5 SP3 or higher
Firmware update	V1.0.0 or higher	V12 or higher	--- / X
Identification data I&M0 to I&M3	V1.0.0 or higher	V12 or higher	X
Parameter assignment in RUN	V1.0.0 or higher	V12 or higher	X
Isochronous mode	V1.0.0 or higher	V12 or higher	---
Calibration in runtime	V1.0.0 or higher	V12 or higher	X
Module internal Shared Input (MSI)	V2.0.0 or higher	V13 Update 3 or higher (PROFINET IO only)	X (PROFINET IO only)
Configurable submodules / submodules for Shared Device	V2.0.0 or higher	V13 Update 3 or higher (PROFINET IO only)	X (PROFINET IO only)
Oversampling	V2.1.0 or higher	V14 or higher and HSP 0186 (PROFINET IO only)	---

You can configure the module with STEP 7 (TIA Portal) and with a GSD file. The oversampling function requires isochronous mode and can therefore only be configured with STEP 7 (TIA Portal).

Accessories

The following accessories are supplied with the module and can also be ordered separately as spare parts:

- Shield bracket
- Shield terminal
- Power supply element
- Labeling strips
- U connector
- Universal front door

Other components

The following component can be ordered separately:

Front connectors, including potential jumpers and cable ties

You can find additional information on accessories in the S7-1500/ET 200MP (http://support.automation.siemens.com/WW/view/en/59191792) system manual.

2.2 Functions

2.2.1 Oversampling for inputs

Function

Oversampling is defined as the transfer of data in constant bus cycle segments (sub-cycles), whereby n sub-cycles correspond to one PROFINET bus cycle. The configured number n of sub-cycles corresponds to one data cycle. Each sub-cycle reads in a measured value.

Oversampling is useful whenever you require acquisition of data with high time resolution but without using an extremely short PROFINET bus cycle and thus fast CPU cycles.

With oversampling, a PROFINET bus cycle is divided into constant bus sub-cycles:

- One 16-bit value is read in per channel in each sub-cycle.
- The shortest possible sub-cycle is 62.5 µs.
- Sub-cycles are possible in increments of 2 to 16. The following applies here: Isochronous data cycle / number of sub-cycles ≥ permitted sub-cycle duration (62.5 µs).

Typical areas of applications

Quality-monitoring measurements, for example when recording pressure trends during the blowing process of PET bottle production.

Requirements

- Firmware version V2.1.0 or higher of the module.
- Isochronous mode has to be set.

Configuration

You configure the oversampling function by means of the sampling rate parameter.

Chronological sequence

The recorded input data of a data cycle (send clock) is copied into the interface module in the next data cycle and is available for the module in the data cycle after that.

The figure below shows the chronological sequence for oversampling with 10 sub-cycles.

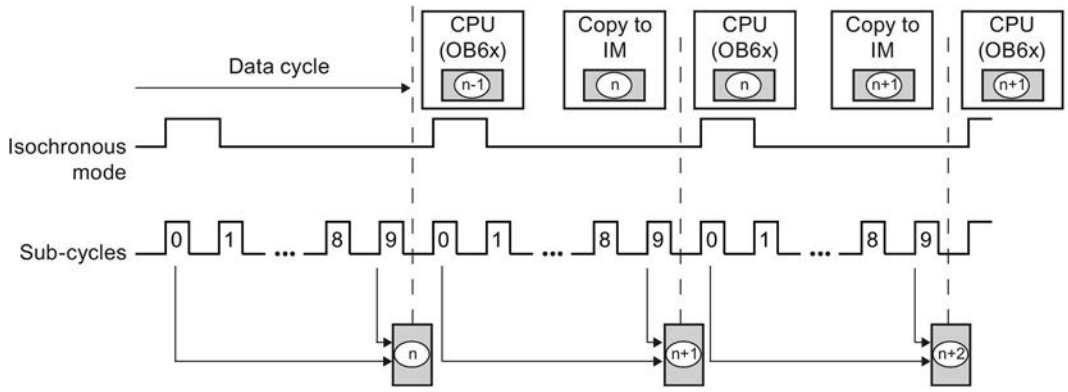

n Recorded value from Cycle n

Figure 2-2 Chronological sequence with oversampling

Sampling interval

The duration of a sub-cycle corresponds to the sampling time. The bus cycle time T_{DP} (send clock for isochronous mode) is specified in the configuration software. The actual sampling interval of the module results from this time divided by the set sampling rate (2-16).

$$\text{Sampling interval} = \frac{T_{DP}}{n_{Sample}} = \frac{1\ \text{ms}}{16} = 62.5\ \mu\text{s}$$

Figure 2-3 Example for the calculation of the sampling interval

Wiring

3

This section contains the block diagram of the module and various wiring options.
You can find information on wiring the front connector, establishing a cable shield, etc in the Wiring section of the S7-1500/ET 200MP (http://support.automation.siemens.com/WW/view/en/59191792)hotspot text system manual.

Note

- You may use and combine the different wiring options for all channels.
- Do not insert the potential jumpers included with the front connector!

Abbreviations used

Meaning of the abbreviations used in the following figures:

U_n+/U_n-	Voltage input channel n (voltage only)
I_n+/I_n-	Current input channel n (current only)
U_{Vn}	Supply voltage at channel n for 2-wire transmitters (2WT)
L+	Supply voltage connection
M	Ground connection
M_{ANA}	Reference potential of the analog circuit
CHx	Channel or display of the channel status
PWR	Display for the supply voltage

Pin assignment for the power supply element

The power supply element is plugged onto the front connector for powering the analog module. Wire the supply voltage to terminals 41 (L+) and 44 (M). Use terminals 42 (L+) and 43 (M) to loop the potential to the next module.

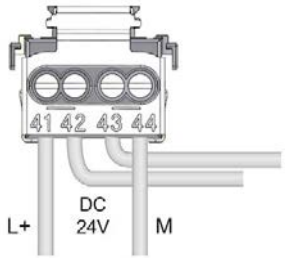

Figure 3-1 Power supply element wiring

Block diagram and pin assignment for voltage measurement

The example in the figure below shows the pin assignment for a voltage measurement.

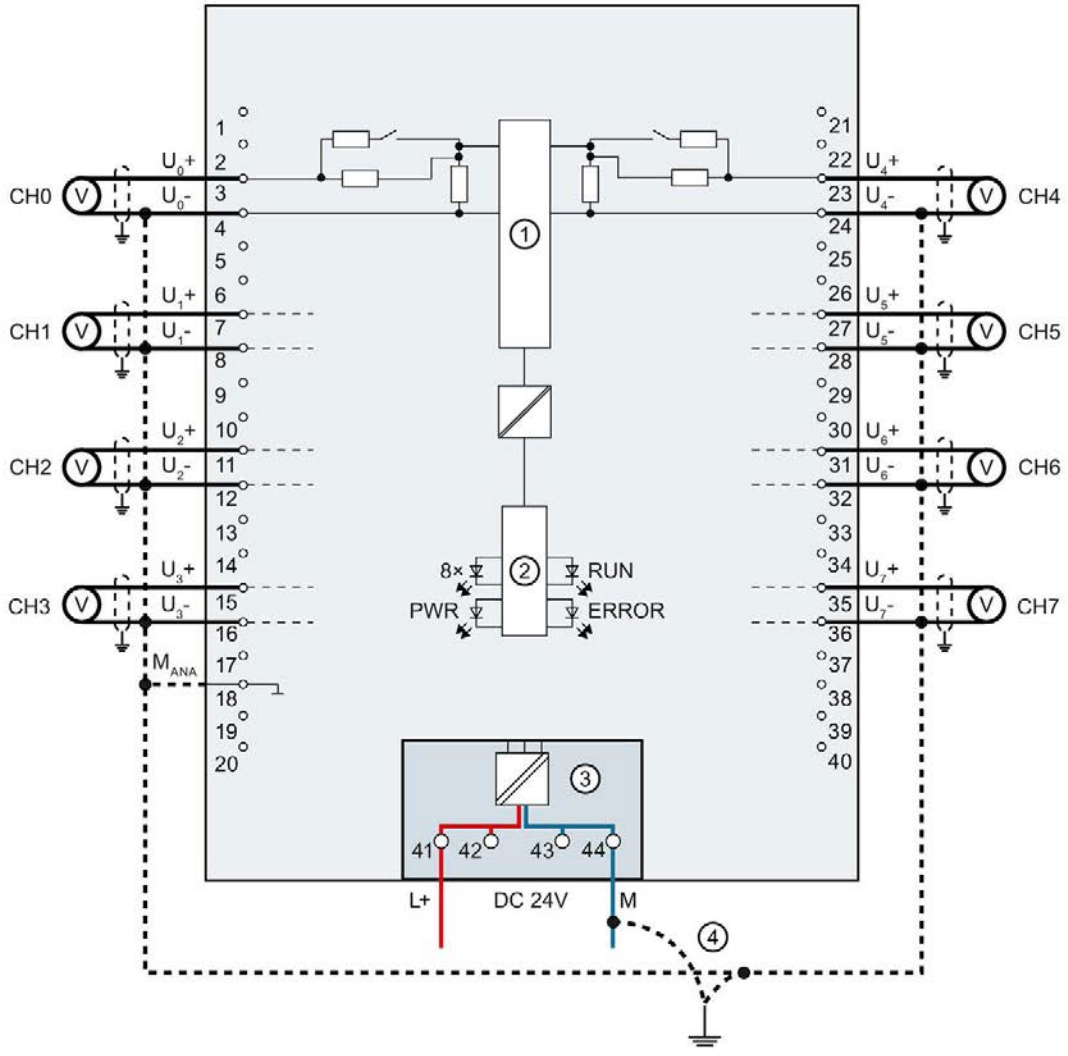

①	Analog-to-Digital Converter (ADC)	CHx	Channel or 8 x channel status (green/red)
②	Backplane bus interface	RUN	Status display LED (green)
③	Supply voltage via power supply element	ERROR	Error display LED (red)
④	Equipotential bonding cable (optional)	PWR	LED for power supply (green)

Figure 3-2 Block diagram and pin assignment for voltage measurement

Block diagram and pin assignment for 4-wire transmitter for current measurement

The example in the following figure shows the pin assignment for current measurement with 4-wire transmitters.

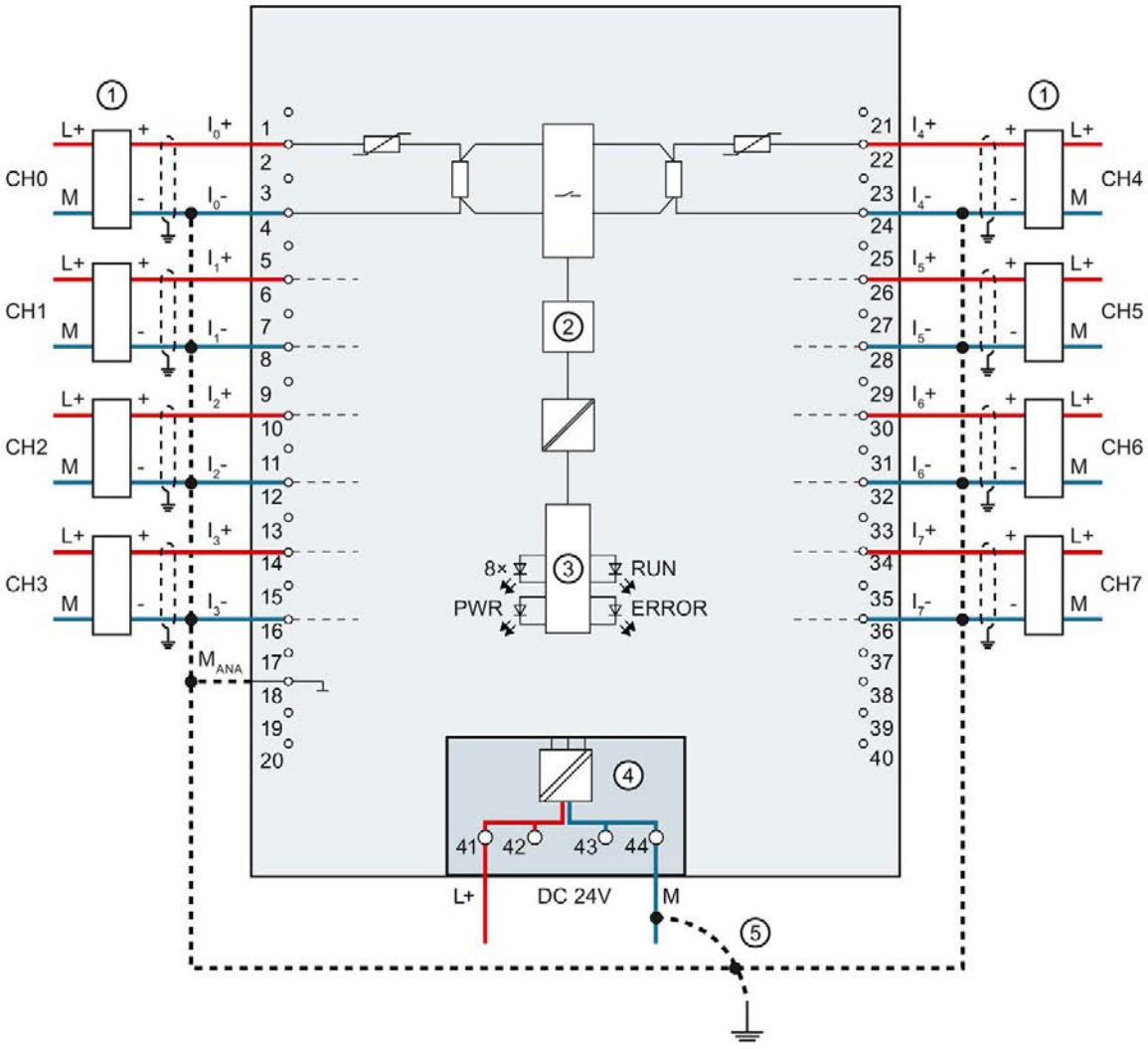

①	Wiring 4-wire transmitter	CHx	Channel or 8 x channel status (green/red)
②	Analog-to-Digital Converter (ADC)	RUN	Status display LED (green)
③	Backplane bus interface	ERROR	Error display LED (red)
④	Supply voltage via power supply element	PWR	LED for power supply (green)
⑤	Equipotential bonding cable (optional)		

Figure 3-3 Block diagram and pin assignment for 4-wire transmitter for current measurement

Block diagram and pin assignment for 2-wire transmitter for current measurement

The example in the following figure shows the pin assignment for current measurement with 2-wire transmitters.

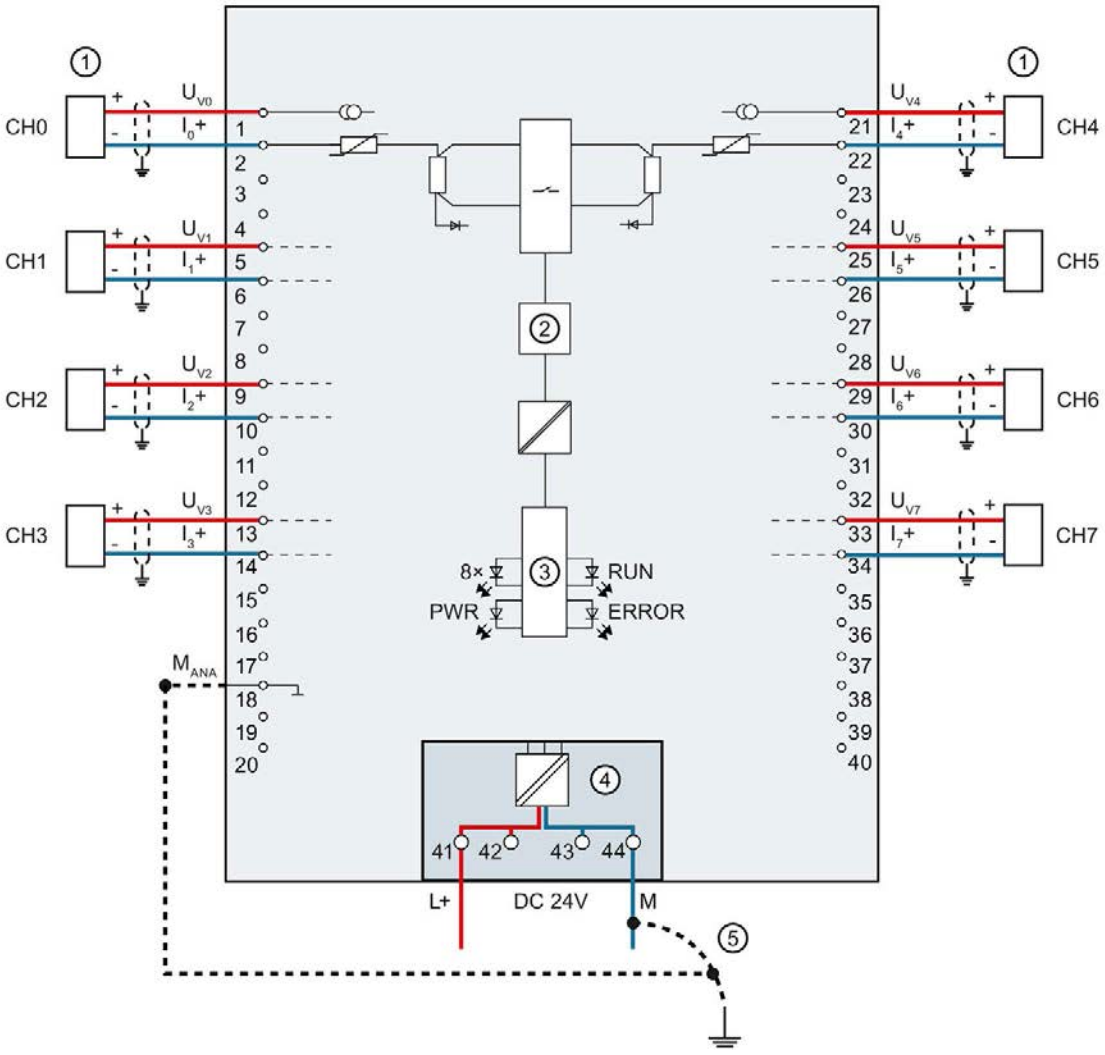

①	Wiring 2-wire transmitter	CHx	Channel or 8 x channel status (green/red)
②	Analog-to-Digital Converter (ADC)	RUN	Status display LED (green)
③	Backplane bus interface	ERROR	Error display LED (red)
④	Supply voltage via power supply element	PWR	LED for power supply (green)
⑤	Equipotential bonding cable (optional)		

Figure 3-4 Block diagram and pin assignment for 2-wire transmitter for current measurement

Parameters/address space 4

4.1 Measuring types and ranges

Introduction

The module is set to voltage measuring type with measuring range ±10 V by default. You need to reassign the module parameters with STEP 7 if you want to use a different measuring type or range.

The following table shows the measuring types and the respective measuring range.

Measuring type	Measuring range
Voltage	1 V to 5 V ±5 V ±10 V
Current 2WMT (2-wire transmitter)	4 mA to 20 mA
Current 4WMT (4-wire transmitter)	4 mA to 20 mA 0 mA to 20 mA ±20 mA
Deactivated	-

The tables of the input ranges, overflow, undershoot range, etc. are available in appendix Representation of analog values (Page 49).

4.2 Parameters

Parameters of the AI 8xU/I HS

The AI 8xU/I HS is usually already integrated in the hardware catalog of STEP 7 (TIA Portal). In this case, STEP 7 (TIA Portal) checks the configured properties for plausibility during configuration.

However, you can also assign parameters to the module by means of a GSD file and the configuration software of any provider. The module does not check the validity of the configured properties until after the configuration has been loaded.

When you assign the module parameters in STEP 7, you use various parameters to specify the module properties. The following table lists the configurable parameters. The effective range of the configurable parameters depends on the type of configuration. The following configurations are possible:

- Central operation with a S7-1500 CPU
- Distributed operation on PROFINET IO in an ET 200MP system
- Distributed operation on PROFIBUS DP in an ET 200MP system

When assigning parameters in the user program, use the WRREC instruction to transfer the parameters to the module by means of data records; refer to the section Parameter assignment and structure of the parameter data records (Page 44).

The following parameter settings are possible:

Table 4- 1 Configurable parameters and their defaults

Parameters	Range of values	Default setting	Parameter assignment in RUN	Scope with configuration software, e.g., STEP 7 (TIA Portal)	
				Integrated in the hardware catalog STEP 7 (TIA Portal) as of V12 or GSD file PROFINET IO	GSD file PROFIBUS DP
AI configuration					
Sampling rate (for the oversampling function)	1...16 values/cycle	1	No	Module (not GSD file)	---
Diagnostics					
• Missing supply voltage L+	Yes/No	No	Yes	Channel [1]	Module [3]
• Overflow	Yes/No	No	Yes	Channel	Module [3]
• Underflow	Yes/No	No	Yes	Channel	Module [3]
• Wire break	Yes/No (Voltage: 1 V to 5 V Current: 4 mA to 20 mA)	No	Yes	Channel	Module [3]

Parameters	Range of values	Default setting	Parameter assignment in RUN	Scope with configuration software, e.g., STEP 7 (TIA Portal)	
				Integrated in the hardware catalog STEP 7 (TIA Portal) as of V12 or GSD file PROFINET IO	GSD file PROFIBUS DP
• Current limit for wire break diagnostics [2]	1.185 mA or 3.6 mA	1.185 mA	Yes	Channel	--- [4]
Measuring					
• Measurement type	See section Measuring types and ranges (Page 19)	Voltage	Yes	Channel	Channel
• Measuring range		±10 V	Yes	Channel	Channel
• Smoothing:	None/low/medium /high	None	Yes	Channel	Channel
Hardware interrupt					
• Hardware interrupt high limit 1	Yes/No	No	Yes	Channel	--- [4]
• Hardware interrupt low limit 1	Yes/No	No	Yes	Channel	--- [4]
• Hardware interrupt high limit 2	Yes/No	No	Yes	Channel	--- [4]
• Hardware interrupt low limit 2	Yes/No	No	Yes	Channel	--- [4]

[1] If you enable diagnostics for multiple channels, you will receive an alarm surge on failure of the supply voltage because each enabled channel will detect this fault.

You can prevent this message burst by assigning the diagnostics function to one channel only.

[2] When "Wire break" diagnostics is disabled, the current limit of 1.185 mA applies to the value status. For measured values below 1.185 mA, the value status is always: 0 = fault.

[3] You can set the effective range of the diagnostics for each channel in the user program with data records 0 to 7.

[4] You can set the current limit for wire break diagnostics, the "Hardware interrupt" parameter and the hardware interrupt limits in the user program with data records 0 to 7.

4.3 Declaration of parameters

Sampling rate

Specifies the number of sub-cycles per isochronous data cycle for the for the oversampling function.

Missing supply voltage L+

Enabling of the diagnostics, with missing or too little supply voltage L+.

Overflow

Enabling of the diagnostics if the measured value violates the high limit.

Underflow

Enabling of the diagnostics if the measured value violates the low limit.

Wire break

Enabling of the diagnostics if the module has no current flow or the current is too weak for the measurement at the corresponding configured input or the applied voltage is too low.

Current limit for wire break diagnostics

Threshold for reporting wire breaks. The value can be set to 1.185 mA or 3.6 mA, depending on the sensor used.

Smoothing

The individual measured values are smoothed using filtering. The smoothing can be set in 4 levels.

Smoothing time = number of module cycles (k) x cycle time of the module.

The following figure shows after how many module cycles the smoothed analog value is almost 100%, depending on the set smoothing. Is valid for each signal change at the analog input.

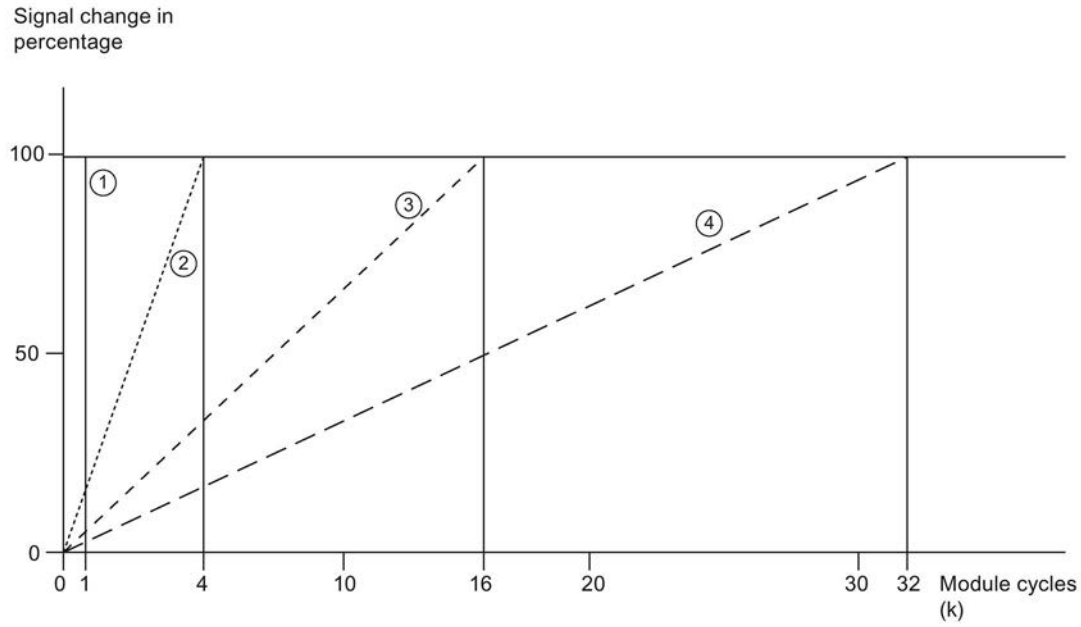

① None (k = 1)
② Weak (k = 4)
③ Medium (k = 16)
④ Strong (k = 32)

Figure 4-1 Smoothing with AI 8xU/I HS

Hardware interrupt 1 or 2

Enable a hardware interrupt at violation of high limit 1 or 2 or low limit 1 or 2.

Low limit 1 or 2

Specifies the low limit threshold that triggers hardware interrupt 1 or 2.

High limit 1 or 2

Specifies the high limit threshold that triggers hardware interrupt 1 or 2.

4.4 Address space

The module can be configured differently in STEP 7; see following table. Depending on the configuration, additional/different addresses are assigned in the process image of the inputs.

Configuration options of AI 8xU/I HS

You can configure the module with STEP 7 (TIA Portal) or with a GSD file.

When you configure the module by means of the GSD file, the configurations are available under different abbreviations/module names.

The following configurations are possible:

Table 4- 2 Configuration options

Configuration	Short designation/ module name in the GSD file	Configuration software, e.g., with STEP 7 (TIA Portal)	
		Integrated in hardware catalog STEP 7 (TIA Portal)	GSD file in STEP 7 (TIA Portal) V12 or higher or STEP 7 V5.5 SP3 or higher
1 x 8-channel without value status	AI 8xU/I HS	V12 or higher	X
1 x 8-channel with value status	AI 8xU/I HS QI	V12 or higher	X
8 x 1-channel without value status	AI 8xU/I HS S	V13 Update 3 or higher (PROFINET IO only)	X (PROFINET IO only)
8 x 1-channel with value status	AI 8xU/I HS S QI	V13 Update 3 or higher (PROFINET IO only)	X (PROFINET IO only)
1 x 8-channel with value status for module-internal shared input with up to 4 submodules	AI 8xU/I HS MSI	V13 Update 3 or higher (PROFINET IO only)	X (PROFINET IO only)
1 x 8-channel without value status for oversampling	---	V14 or higher with HSP 0186 (PROFINET IO only)	---

Value status (Quality Information, QI)

The value status is always activated for the following module names:

- AI 8xU/I HS QI
- AI 8xU/I HS S QI
- AI 8xU/I HS MSI

An additional bit is assigned to each channel for the value status. The value status bit indicates if the read in digital value is valid. (0 = value is incorrect).

Address space of the AI 8xU/I HS and AQ 8xU/I HS QI

The following figure shows the address space allocation for the configuration as 8-channel module. You can freely assign the start address for the module. The addresses of the channels are derived from the start address.

"IB x" stands, for example, for the module start address input byte x.

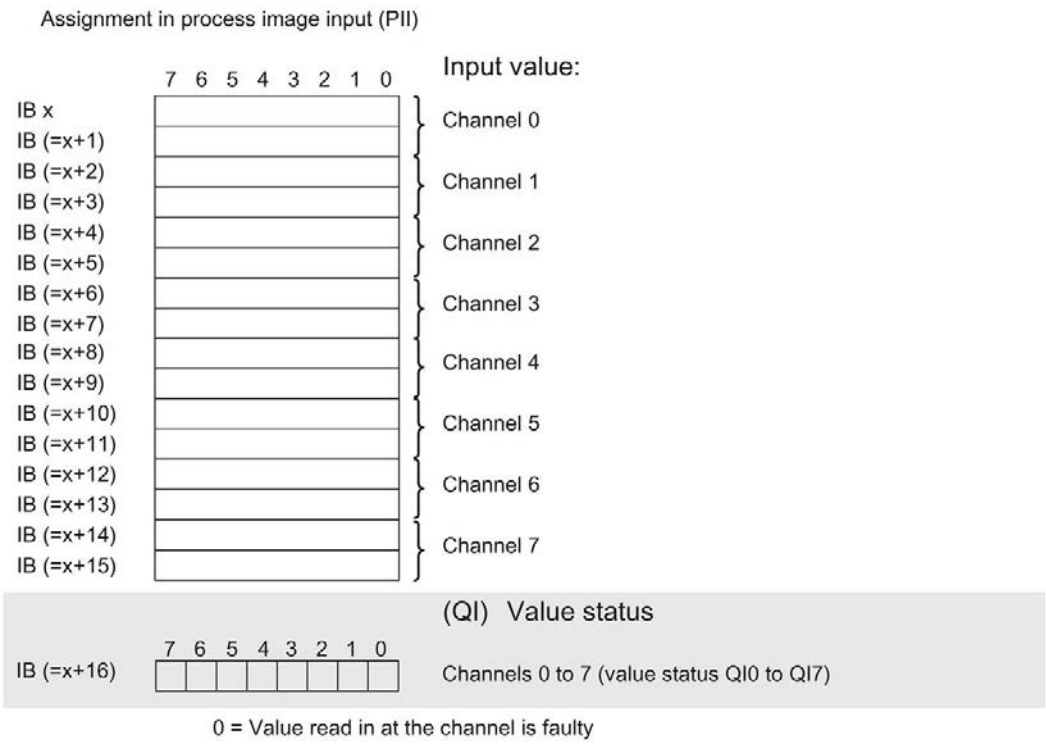

Figure 4-2 Address space for configuration as 1 x 8-channel AI 8xU/I HS with value status

Address space for configuration as 8 x 1-channel AI 8xU/I HS QI and AI 8xU/I HS S QI

For the configuration as a 8 x 1-channel module, the channels of the module are divided into multiple submodules. The submodules can be assigned to different IO controllers when the module is used in a shared device.

The number of usable submodules is dependent on the interface module used. Observe the information in the manual for the particular interface module.

Contrary to the 1 x 8-channel module configuration, each of the eight submodules has a freely assignable start address.

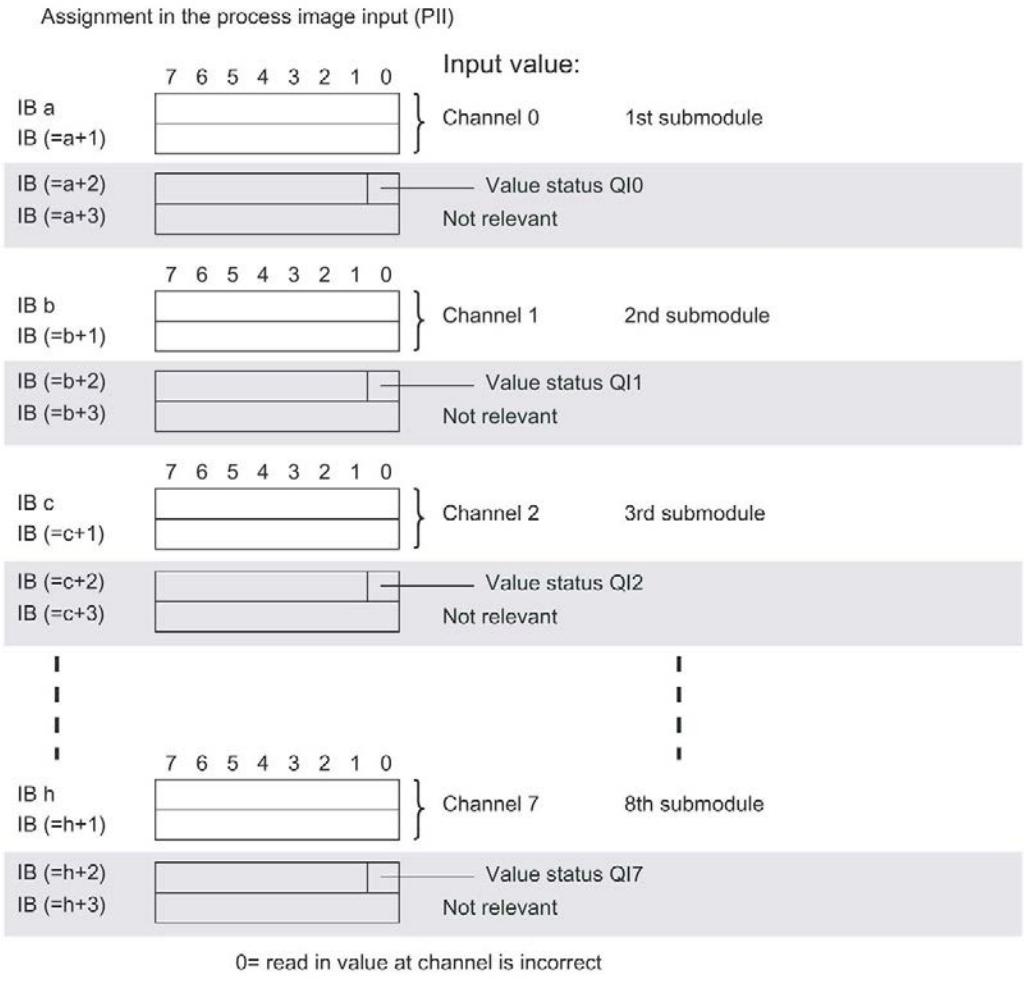

Figure 4-3 Address space for configuration as 8 x 1-channel AI 8xU/I HS S QI with value status

Address space for configuration as 1 x 8-channel AI 8xU/I HS MSI

The channels 0 to 7 of the module are copied in up to four submodules with configuration 1 x 8-channel module (Module-internal shared input, MSI). Channels 0 to 7 are then available with identical input values in different submodules. These submodules can be assigned to up to four IO controllers when the module is used in a shared device. Each IO controller has read access to the same channels.

The number of usable submodules is dependent on the interface module used. Please observe the information in the manual for the particular interface module.

Value status (Quality Information, QI)

The meaning of the value status depends on the submodule on which it occurs.

For the 1st submodule (= basic submodule), the value status 0 indicates that the value is incorrect.

For the 2nd to 4th submodule (=MSI submodule), the value status 0 indicates that the value is incorrect or the basic submodule has not yet been configured (not ready).

The following figure shows the assignment of the address space with submodules 1 and 2.

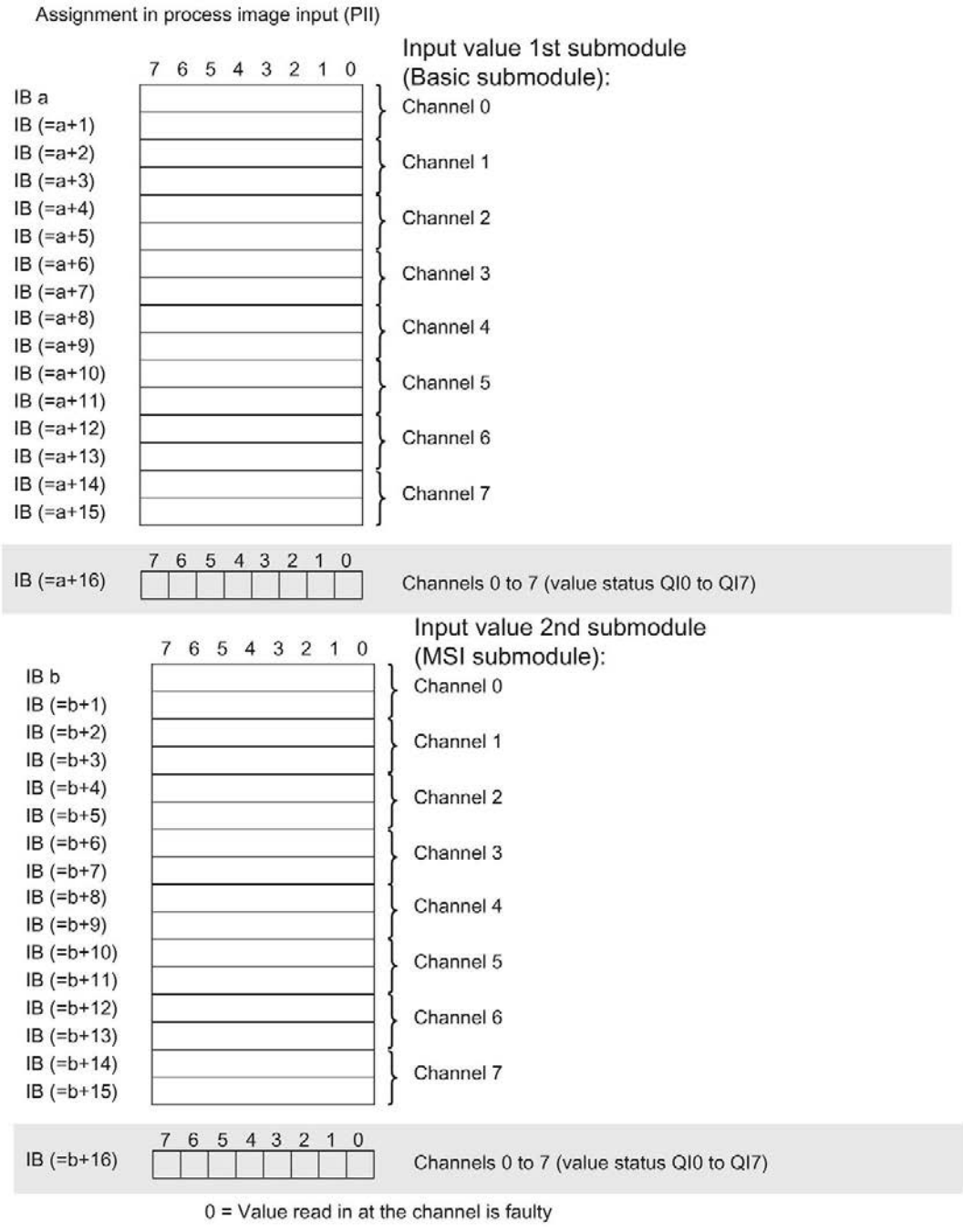

Figure 4-4 Address space for configuration as 1 x 8-channel AI 8xU/I HS MSI with value status

The following figure shows the assignment of the address space with submodules 3 and 4.

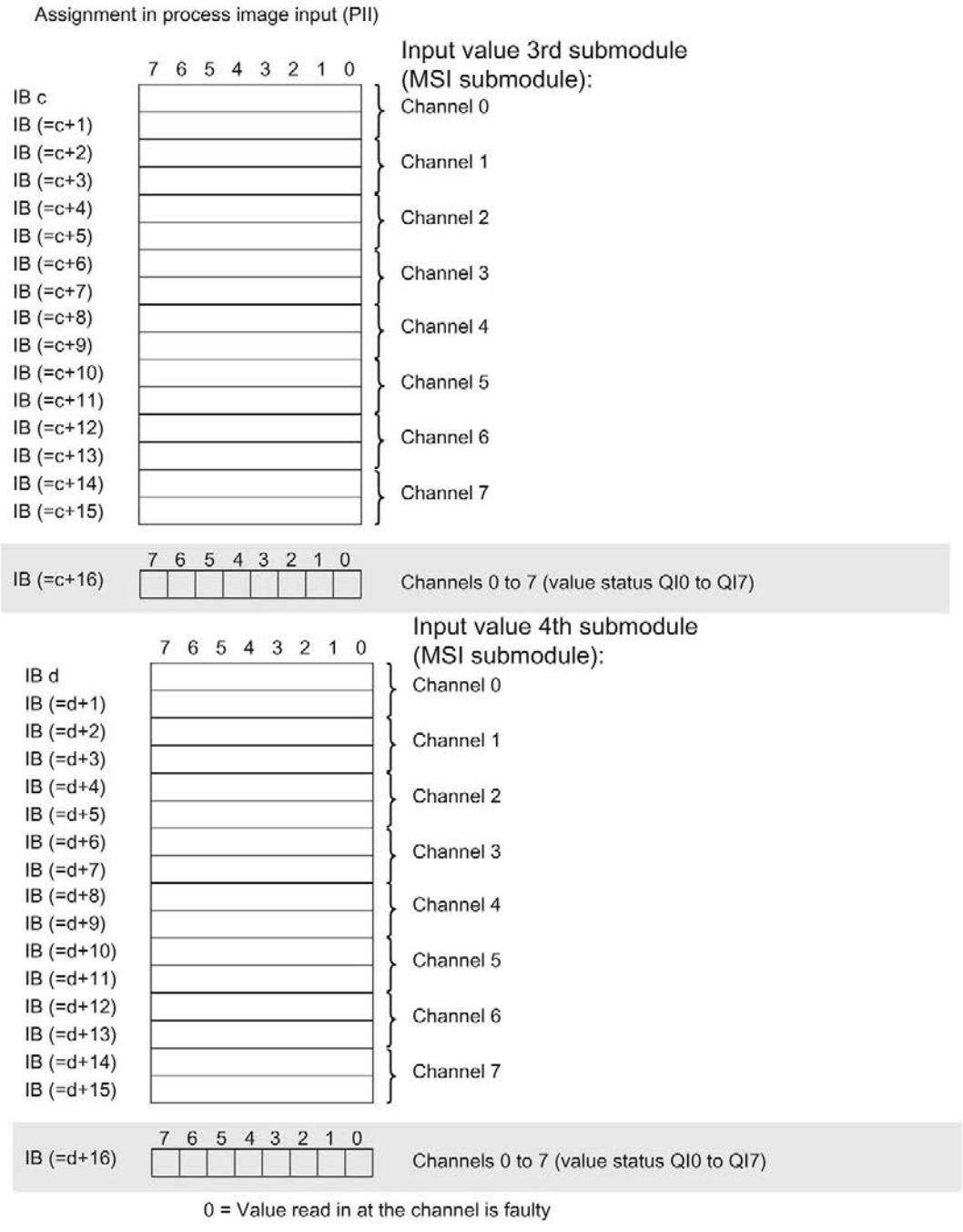

Figure 4-5 Address space for configuration as 1 x 8-channel AI 8xU/I HS MSI with value status

Reference

You can find information on the Shared Input/Output (MSI/MSO) function in the section Module-Internal Shared Input/Output (MSI/MSO) of the PROFINET with STEP 7 V13 (https://support.industry.siemens.com/cs/ww/en/view/49948856) function manual.

Address space for configuration as 1 x 8-channel AI 8xU/I HS for oversampling

The following figure shows the address space assignment with the configuration as 8-channel module for the oversampling function. You can freely assign the start address for the module. The addresses of the channels are derived from the start address.

Writing always starts from IB x. If fewer than 16 sub-cycles are set, the addresses that are then unused are filled with $7FFF_H$.

"IB x" stands, for example, for the module start address input byte x.

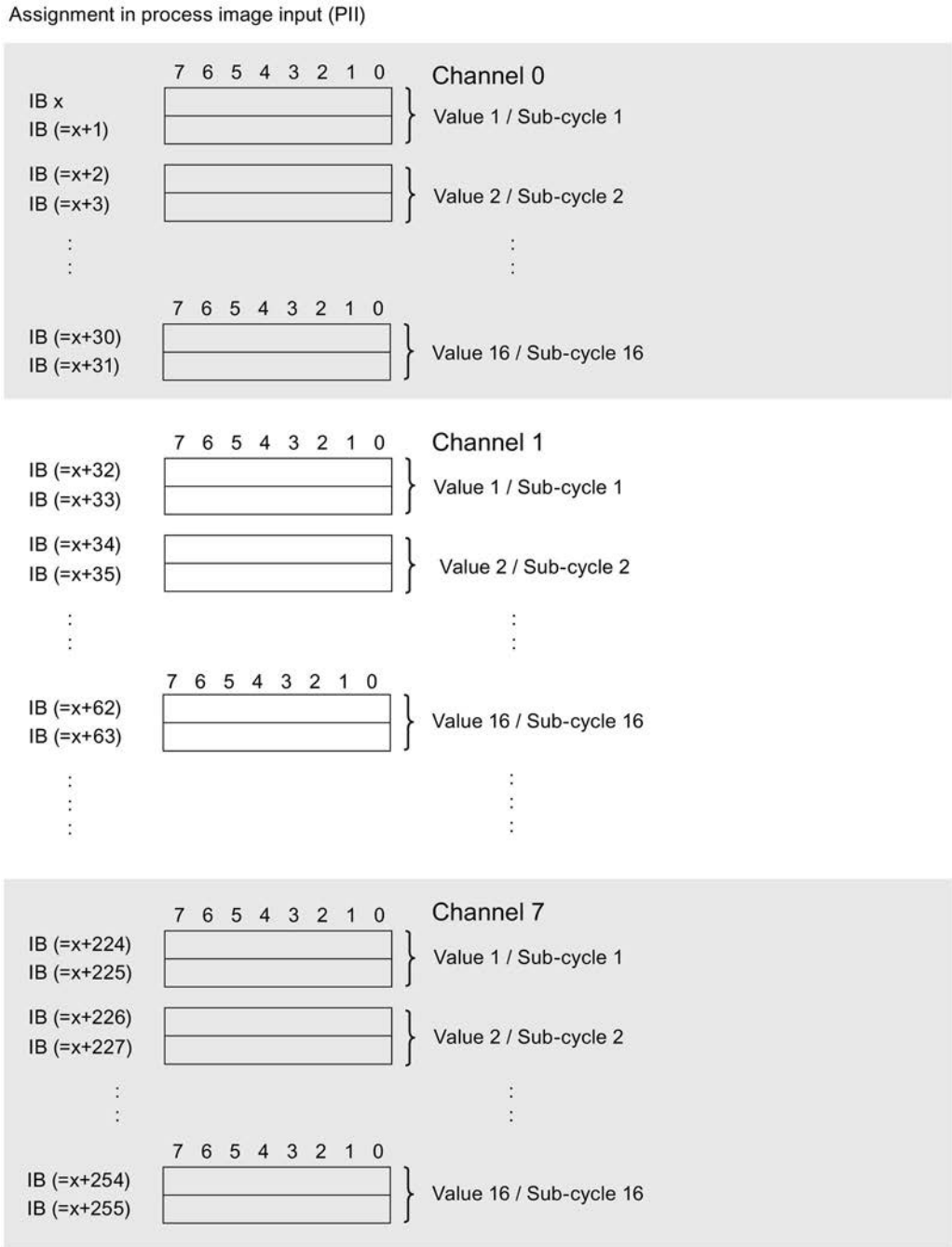

Figure 4-6 Address space for configuration as 1 x 8-channel AI 8xU/I HS for oversampling

Interrupts/diagnostics alarms

5

5.1 Status and error displays

LED displays

The following figure shows the LED displays (status and error displays) of AI 8xU/I HS.

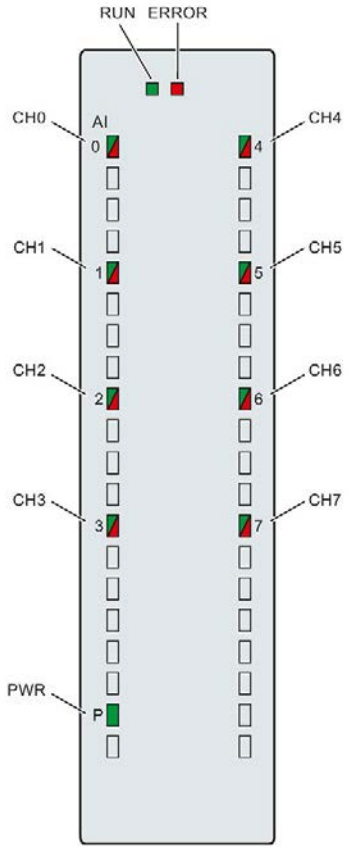

Figure 5-1 LED displays of the module AI 8xU/I HS

Meaning of the LED displays

The following tables explain the meaning of the status and error displays. Remedial measures for diagnostic alarms can be found in section Diagnostic alarms.

RUN and ERROR LED

Table 5- 1 Status and error displays RUN and ERROR

LED		Meaning	Remedy
RUN	ERROR		
□ Off	□ Off	Voltage missing or too low at backplane bus.	• Switch on the CPU and/or the system power supply modules. • Verify that the U connectors are inserted. • Check to see if too many modules are inserted.
☼ Flashes	□ Off	The module starts and flashes until the valid parameter assignment is set.	---
■ On	□ Off	Module is configured.	
■ On	☼ Flashes	Indicates module errors (at least one error at one channel, e.g., wire break).	Evaluate the diagnostics data and eliminate the error (e.g., wire break).
☼ Flashes	☼ Flashes	Hardware defective.	Replace the module.

PWR LED

Table 5- 2 PWR status display

LED PWR	Meaning	Remedy
□ Off	Supply voltage L+ to module too low or missing	Check supply voltage L+.
■ On	Supply voltage L+ is present and OK.	---

CHx LED

Table 5- 3 CHx status display

LED CHx	Meaning	Remedy
□ Off	Channel disabled	---
■ On	Channel configured and OK.	---
■ On	Channel is configured (channel error pending). Diagnostic alarm: e.g. wire break	Check the wiring. Disable diagnostics.

See also

Diagnostics alarms (Page 35)

5.2 Interrupts

Analog input module AI 8xU/I HS supports the following diagnostic and hardware interrupts.

You can find detailed information on the event in the error organization block with the RALRM instruction (read additional interrupt info) and in the STEP 7 online help.

Diagnostic interrupt

The module generates a diagnostic interrupt at the following events:

- Missing supply voltage L+
- Wire break
- Overflow
- Underflow
- Parameter assignment error

Hardware interrupt

The module generates a hardware interrupt at the following events:

- Low limit violated 1
- High limit violated 1
- Low limit violated 2
- Violation of high limit 2

The module channel that triggered the hardware interrupt is entered in the start information of the organization block. The diagram below shows the assignment to the bits of double word 8 in local data.

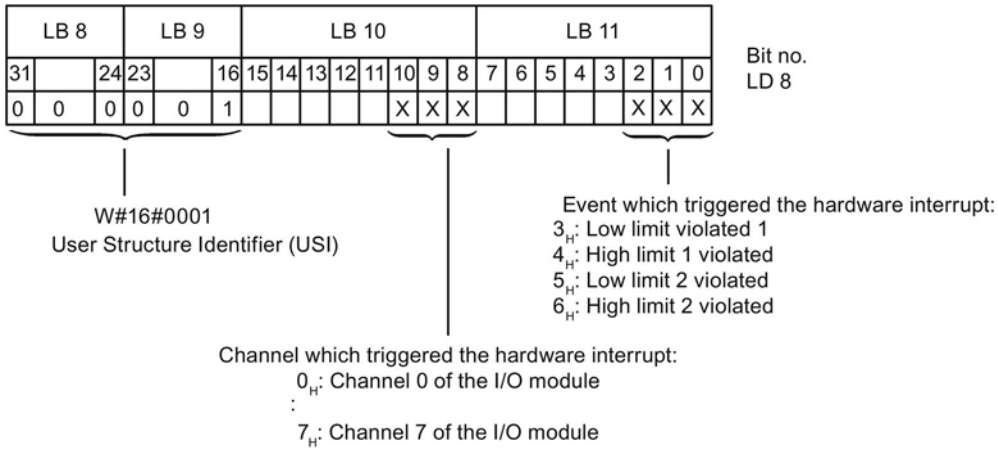

Figure 5-2 OB start information

Reaction when reaching limits 1 and 2 at the same time

If the two high limits 1 and 2 are reached at the same time, the module always signals the hardware interrupt for high limit 1 first. The configured value for high limit 2 is irrelevant. After processing the hardware interrupt for high limit 1, the module triggers the hardware interrupt for high limit 2.

The module has the same reaction when the low limits are reached at the same time. If the two low limits 1 and 2 are reached at the same time, the module always signals the hardware interrupt for low limit 1 first. After processing the hardware interrupt for low limit 1, the module triggers the hardware interrupt for low limit 2.

Structure of the additional interrupt information

Table 5- 4 Structure of USI = W#16#0001

Data block name		Contents	Remark	Bytes
USI (User Structure Identifier)		W#16#0001	Additional interrupt info for hardware interrupts of the I/O module	2
The channel that triggered the hardware interrupt follows.				
	Channel	B#16#00 to B#16#n	Number of the event-triggering channel (n = number of module channels -1)	1
It follows the error event that triggered the hardware interrupt.				
	Event	B#16#03	Low limit violated 1	1
		B#16#04	High limit violated 1	
		B#16#05	Low limit violated 2	
		B#16#06	Violation of high limit 2	

5.3 Diagnostics alarms

A diagnostics alarm is generated and the ERROR LED flashes on the module for each diagnostics event. The diagnostics alarms can be read out in the diagnostics buffer of the CPU, for example. You can evaluate the error codes with the user program.

If the module is operated distributed with PROFIBUS DP in an ET 200MP system, you have the option to read out diagnostics data with the instruction RDREC or RD_REC using data record 0 and 1. The structure of the data records is available on the Internet in the "Manual for interface module IM 155-5 DP ST (6ES7155-5BA00-0AB0)".

Table 5- 5 Diagnostics alarms, their meaning and corrective measures

Diagnostics alarm	Error code	Meaning	Remedy
Wire break	6_H	Impedance of sensor circuit too high	Use a different encoder type or modify the wiring, for example, using cables with larger cross-section
		Wire break between the module and sensor	Connect the cable
		Channel not connected (open)	• Disable diagnostics • Connect the channel
Overflow	7_H	Measuring range violated	Check the measuring range
Underflow	8_H	Measuring range violated	Check the measuring range
Parameter assignment error	10_H	• The module cannot evaluate parameters for the channel • Incorrect parameter assignment.	Correct the parameter assignment
Load voltage missing	11_H	Supply voltage L+ of the module is missing	Connect supply voltage L+ to module/channel

Diagnostics alarms with value status (QI)

If you configure the module with value status (QI), the module always checks all errors even if the respective diagnostics is not enabled. But the module cancels the inspection as soon as it detects the first error, regardless if the respective diagnostics has been enabled or not. The result may be that enabled diagnostics may not be displayed.

Example: You have enabled "Underflow" diagnostics, but the module detects the "Wire break" diagnostics first and aborts after this error message. The "Underflow" diagnostics is not detected.

Recommendation: To ensure that all errors can be diagnosed reliably, select all check boxes under "Diagnostics".

Technical specifications

6

Technical specifications of the AI 8xU/I HS

Order number	6ES7531-7NF10-0AB0
General information	
Product type designation	AI 8xU/I HS
HW functional status	FS01
Firmware version	V2.1.0
• FW update possible	Yes
Product function	
• I&M data	Yes; I&M0 to I&M3
• Measuring range scalable	No
• Scalable measured values	No
• Adjustment of measuring range	No
Engineering with	
• STEP 7 TIA Portal configurable/integrated as of version	V14 / -
• STEP 7 configurable/integrated as of version	V5.5 SP3 / -
• PROFIBUS as of GSD version/GSD revision	V1.0 / V5.1
• PROFINET as of GSD version/GSD revision	V2.3 / -
Operating mode	
• Oversampling	Yes
• MSI	Yes
CiR – Configuration in RUN	
Reparameterization possible in RUN	Yes
Calibration possible in RUN	Yes
Supply voltage	
Rated value (DC)	24 V
permissible range, lower limit (DC)	20.4 V
permissible range, upper limit (DC)	28.8 V
Reverse polarity protection	Yes
Input current	
Current consumption, max.	240 mA; with 24 V DC supply
Encoder supply	
24 V encoder supply	
• Short-circuit protection	Yes
• Output current, max.	53 mA

Order number	6ES7531-7NF10-0AB0
Power	
Power available from the backplane bus	1.15 W
Power loss	
Power loss, typ.	3.4 W
Analog inputs	
Number of analog inputs	8
• For current measurement	8
• For voltage measurement	8
permissible input voltage for voltage input (destruction limit), max.	28.8 V
permissible input current for current input (destruction limit), max.	40 mA
Input ranges (rated values), voltages	
• 0 to +5 V	No
• 0 to +10 V	No
• 1 V to 5 V	Yes
• Input resistance (1 V to 5 V)	50 kΩ
• -10 V to +10 V	Yes
• Input resistance (-10 V to +10 V)	100 kΩ
• -2.5 V to +2.5 V	No
• -25 mV to +25 mV	No
• -250 mV to +250 mV	No
• -5 V to +5 V	Yes
• Input resistance (-5 V to +5 V)	50 kΩ
• -50 mV to +50 mV	No
• -500 mV to +500 mV	No
• -80 mV to +80 mV	No
Input ranges (rated values), currents	
• 0 to 20 mA	Yes
• Input resistance (0 to 20 mA)	41 Ω; Plus approx. 42 ohms for overvoltage protection by PTC
• -20 mA to +20 mA	Yes
• Input resistance (-20 mA to +20 mA)	41 Ω; Plus approx. 42 ohms for overvoltage protection by PTC
• 4 mA to 20 mA	Yes
• Input resistance (4 mA to 20 mA)	41 Ω; Plus approx. 42 ohms for overvoltage protection by PTC

Order number	6ES7531-7NF10-0AB0
Input ranges (rated values), thermocouples	
• Type B	No
• Type C	No
• Type E	No
• Type J	No
• Type K	No
• Type L	No
• Type N	No
• Type R	No
• Type S	No
• Type T	No
• Type TXK/TXK(L) to GOST	No
Input ranges (rated values), resistance thermometer	
• Cu 10	No
• Cu 10 according to GOST	No
• Cu 50	No
• Cu 50 according to GOST	No
• Cu 100	No
• Cu 100 according to GOST	No
• Ni 10	No
• Ni 10 according to GOST	No
• Ni 100	No
• Ni 100 according to GOST	No
• Ni 1000	No
• Ni 1000 according to GOST	No
• LG-Ni 1000	No
• Ni 120	No
• Ni 120 according to GOST	No
• Ni 200	No
• Ni 200 according to GOST	No
• Ni 500	No
• Ni 500 according to GOST	No
• Pt 10	No
• Pt 10 according to GOST	No

Order number	6ES7531-7NF10-0AB0
• Pt 50	No
• Pt 50 according to GOST	No
• Pt 100	No
• Pt 100 according to GOST	No
• Pt 1000	No
• Pt 1000 according to GOST	No
• Pt 200	No
• Pt 200 according to GOST	No
• Pt 500	No
• Pt 500 according to GOST	No
Input ranges (rated values), resistors	
• 0 to 150 ohms	No
• 0 to 300 ohms	No
• 0 to 600 ohms	No
• 0 to 3000 ohms	No
• 0 to 6000 ohms	No
• PTC	No
Cable length	
• shielded, max.	800 m
Analog value generation for the inputs	
Integration and conversion time/resolution per channel	
• Resolution with overrange (bit including sign), max.	16 bit
• Basic execution time of the module (all channels released)	62.5 µs; independent of number of activated channels
Smoothing of measured values	
• parameterizable	Yes
• Step: None	Yes
• Step: low	Yes
• Step: Medium	Yes
• Step: High	Yes

Order number	6ES7531-7NF10-0AB0
Encoder	
Connection of signal encoders	
• for voltage measurement	Yes
• for current measurement as 2-wire transducer	Yes
– Burden of 2-wire transmitter, max.	820 Ω
• for current measurement as 4-wire transducer	Yes
• for resistance measurement with two-wire connection	No
• for resistance measurement with three-wire connection	No
• for resistance measurement with four-wire connection	No
Errors/accuracies	
Linearity error (relative to input range), (+/-)	0.02 %
Temperature error (relative to input range), (+/-)	0.005 %/K
Crosstalk between the inputs, max.	-60 dB
Repeat accuracy in steady state at 25 °C (relative to input range), (+/-)	0.02 %
Operational error limit in overall temperature range	
• Voltage, relative to input range, (+/-)	0.3 %
• Current, relative to input range, (+/-)	0.3 %
Basic error limit (operational limit at 25 °C)	
• Voltage, relative to input range, (+/-)	0.2 %
• Current, relative to input range, (+/-)	0.2 %
Interference voltage suppression for f = n x (f1 +/- 1 %), f1 = interference frequency	
• Common mode voltage, max.	10 V
Isochronous mode	
Isochronous operation (application synchronized up to terminal)	Yes
Filtering and processing time (TCI), min.	80 µs
Bus cycle time (TDP), min.	250 µs
Interrupts/diagnostics/status information	
Diagnostics function	Yes
Alarms	
• Diagnostic alarm	Yes
• Limit value alarm	Yes; two upper and two lower limit values in each case
Diagnostic messages	
• Monitoring the supply voltage	Yes
• Wire-break	Yes; only for 1 ... 5 V and 4 ... 20 mA
• Overflow/underflow	Yes

Order number	6ES7531-7NF10-0AB0
Diagnostics indication LED	
• RUN LED	Yes; Green LED
• ERROR LED	Yes; Red LED
• Monitoring of the supply voltage (PWR-LED)	Yes; Green LED
• Channel status display	Yes; Green LED
• for channel diagnostics	Yes; Red LED
• for module diagnostics	Yes; Red LED
Potential separation	
Potential separation channels	
• between the channels	No
• between the channels, in groups of	8
• between the channels and backplane bus	Yes
• between the channels and the power supply of the electronics	Yes
Permissible potential difference	
between the inputs (UCM)	20 V DC
Between the inputs and MANA (UCM)	10 V DC
Isolation	
Isolation tested with	707 V DC (type test)
Ambient conditions	
Ambient temperature during operation	
• horizontal installation, min.	0 °C
• horizontal installation, max.	60 °C
• vertical installation, min.	0 °C
• vertical installation, max.	40 °C
Decentralized operation	
Prioritized startup	Yes
Dimensions	
Width	35 mm
Height	147 mm
Depth	129 mm
Weights	
Weight, approx.	300 g

Dimensional drawing

A

This appendix contains the dimensional drawing of the module installed on a mounting rail and with a shield bracket. Always adhere to the specified dimensions for installations in cabinets, control rooms, etc.

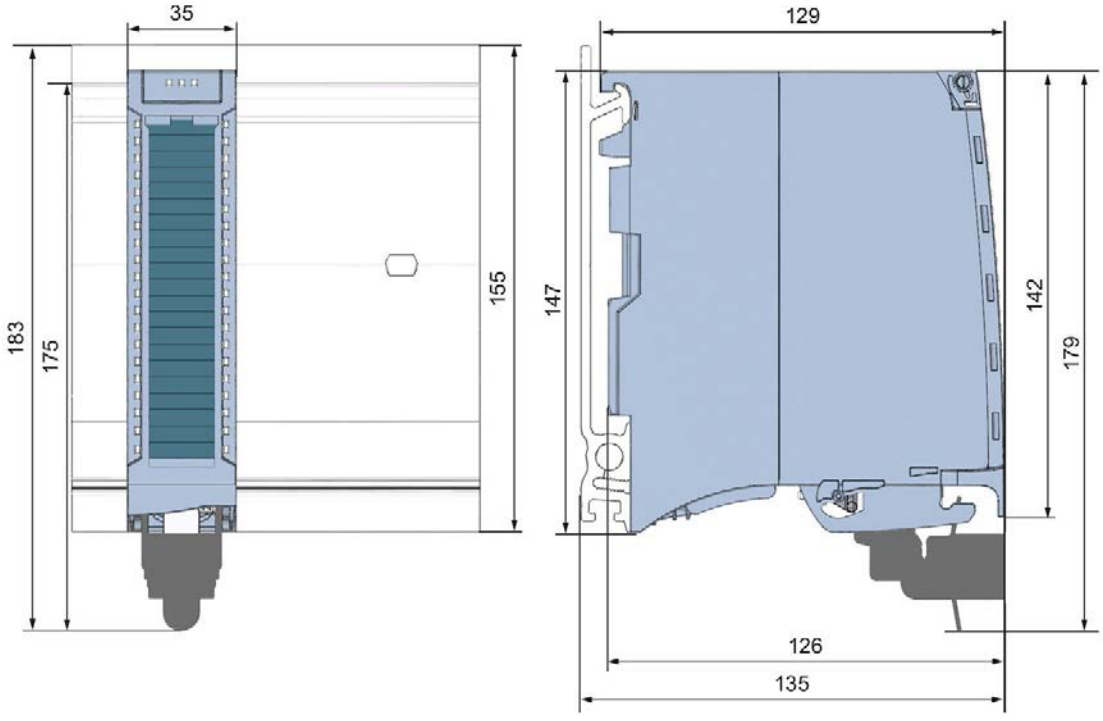

Figure A-1 Dimensional drawing of the AI 8xU/I HS module

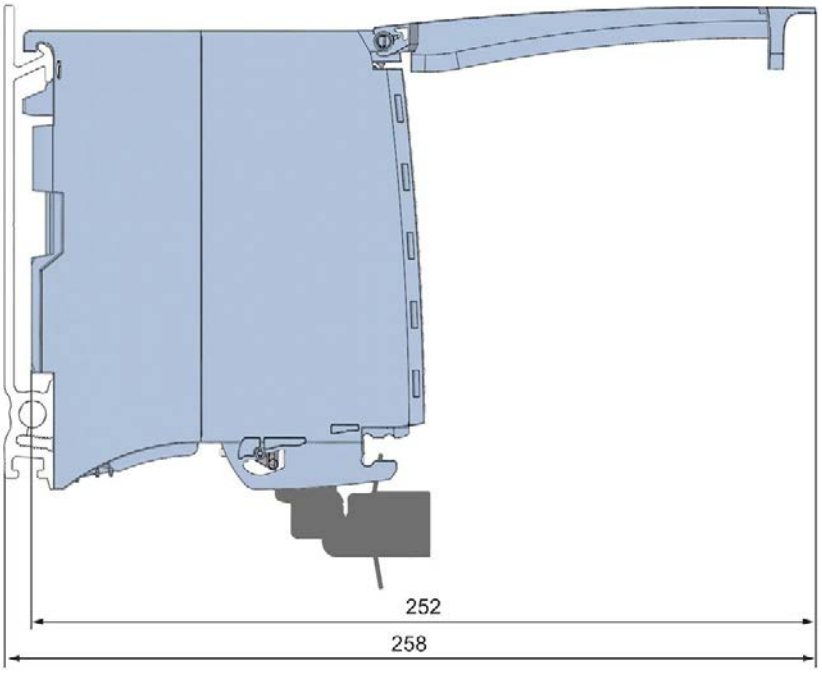

Figure A-2 Dimensional drawing of the AI 8xU/I HS module, side view with open front panel

Parameter data records

B

B.1 Parameter assignment and structure of the parameter data records

The data records of the module have an identical structure, regardless of whether you configure the module with PROFIBUS DP or PROFINET IO.

Dependencies for configuration with GSD file

When configuring the module with a GSD file, remember that the settings of some parameters are dependent on each other. The parameters are only checked for plausibility by the module after the transfer to the module.

The following table lists the parameters that depend on one another.

Table B- 1 Dependencies of parameters for configuration with GSD file

Device-specific parameters (GSD file)	Dependent parameters
Current limit for wire break	Only for **measuring type** current with **measuring range** 4 mA to 20 mA.
Wire break	Only for **measuring type** resistance with **measuring range** 1V to 5 V and current with **measuring range** 4 mA to 20 mA.
Hardware interrupt limits	Only if hardware interrupts are enabled.

Parameter assignment in the user program

You have the option to assign module parameters in RUN (e.g., the voltage or current values of selected channels can be edited in RUN without having an effect on the other channels).

Parameter assignment in RUN

The WRREC instruction is used to transfer the parameters to the module using data records 0 to 7. The parameters set in STEP 7 do not change in the CPU, which means the parameters set in STEP 7 are still valid after a restart.

The parameters are only checked for plausibility by the module after the transfer to the module.

Output parameter STATUS

The module ignores errors that occurred during the transfer of parameters with the WRREC instruction and continues operation with the previous parameter assignment. However, a corresponding error code is written to the STATUS output parameter.

The description of the WRREC instruction and the error codes is available in the STEP 7 online help.

Operation of the module behind a PROFIBUS DP interface module

If the module is operated behind a PROFIBUS DP interface module, the parameter data records 0 and 1 are not read back. You obtain the diagnostics data records 0 and 1 with the read back parameter data records 0 and 1. You can find additional information in the Interrupts section of the manual for the PROFIBUS DP interface module on the Internet (http://support.automation.siemens.com/WW/view/en/78324181).

Assignment of data record and channel

For the configuration as a 1 x 8-channel module, the parameters are located in data records 0 to 7 and are assigned as follows:

- Data record 0 for channel 0
- Data record 1 for channel 1
- …
- Data record 6 for channel 6
- Data record 7 for channel 7

For configuration 8 x 1-channel, the module has 8 submodules with one channel each. The parameters for the channel are available in data record 0 and are assigned as follows:

- Data record 0 for channel 0 (submodule 1)
- Data record 0 for channel 1 (submodule 2)
- …
- Data record 0 for channel 6 (submodule 7)
- Data record 0 for channel 7 (submodule 8)

Address the respective submodule for data record transfer.

Data record structure

The figure below shows the structure of data record 0 for channel 0 as an example. The structure is identical for channels 1 to 7. The values in byte 0 and byte 1 are fixed and may not be changed.

Enable a parameter by setting the corresponding bit to "1".

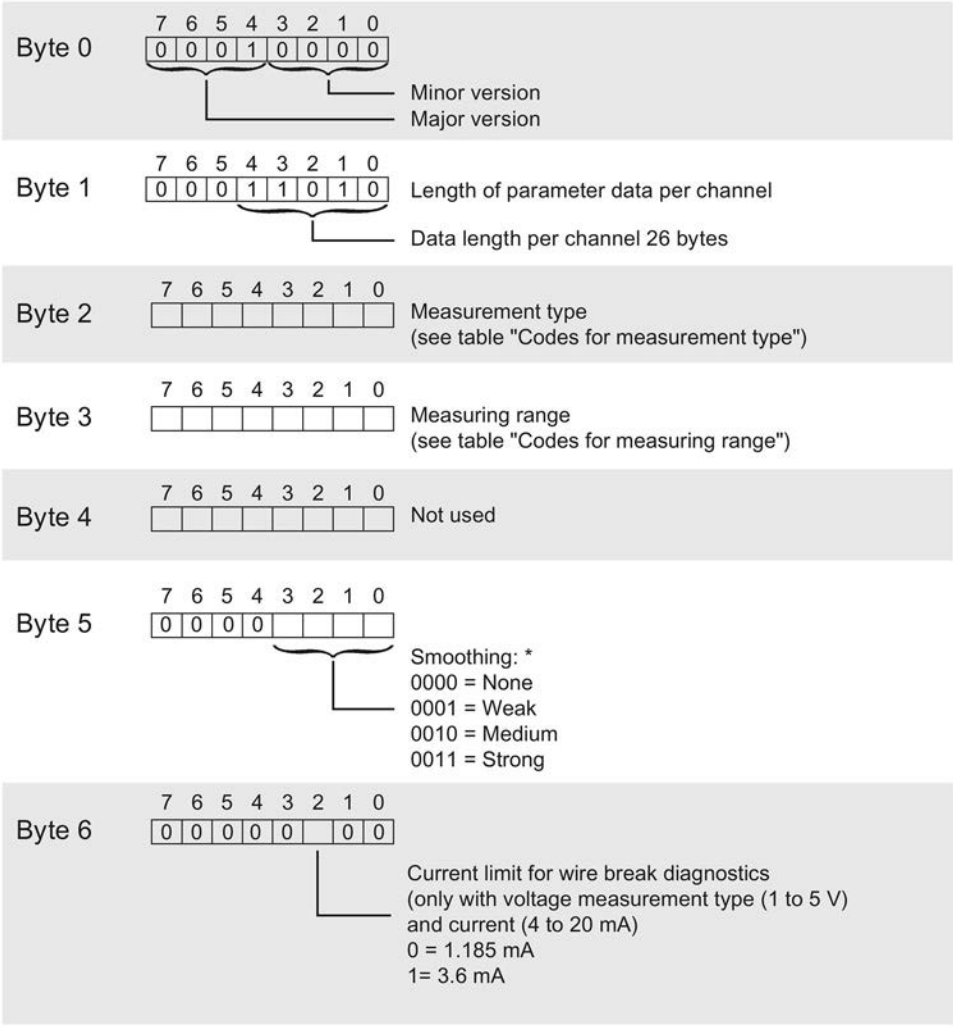

Figure B-1 Structure of data record 0: Bytes 0 to 6

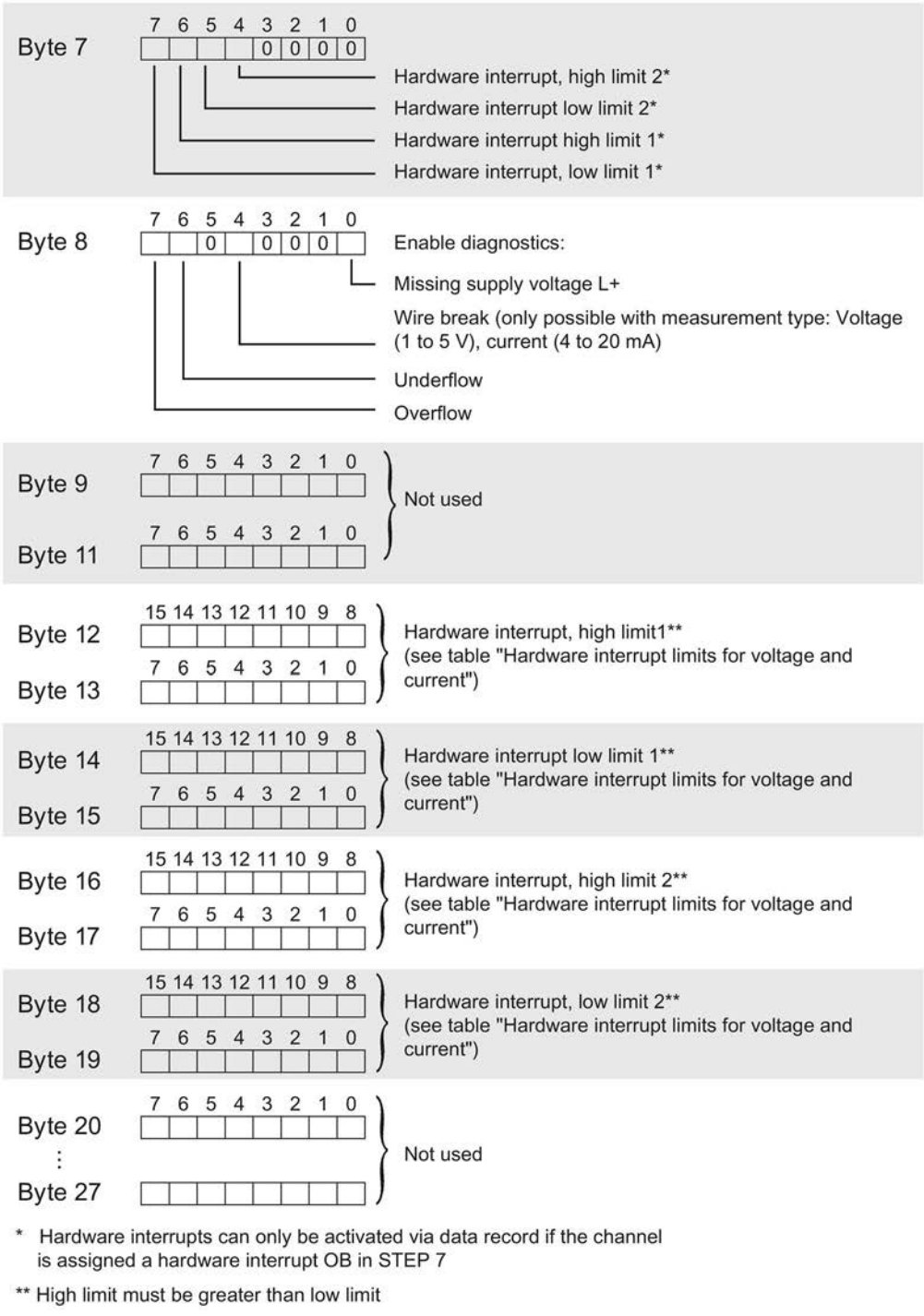

Figure B-2 Structure of data record 0: Bytes 7 to 27

Note

- You can only configure the oversampling function with STEP 7 (TIA Portal) via the sampling rate parameter.

Codes for measuring types

The following table lists all measuring types of the analog input module along with their codes. Enter these codes at byte 2 of the respective data record (see previous figure).

Table B- 2 Code for the measuring type

Measurement type	Code
Deactivated	0000 0000
Voltage	0000 0001
Current 4-wire transmitter	0000 0010
Current 2-wire transmitter	0000 0011

Codes for measuring ranges

The following table lists all measuring ranges of the analog input module along with their codes. Enter these codes at byte 3 of the respective data record (see previous figure).

Table B- 3 Code for the measuring range

Measuring range	Code
Voltage	
±5 V	0000 1000
±10 V	0000 1001
1 V to 5 V	0000 1010
Current 4-wire transmitter	
0 mA to 20 mA	0000 0010
4 mA to 20 mA	0000 0011
±20 mA	0000 0100
Current 2-wire transmitter	
4 mA to 20 mA	0000 0011

Hardware interrupt limits

The values that you can set for hardware interrupts (high/low limit) must not exceed the respective rated measuring range.

The following tables list the valid hardware interrupt limits. The limit values depend on the selected measuring type and range.

Table B- 4 Limits of hardware interrupts for voltage and current

Voltage		Current		
± 5 V, ± 10 V	1 V to 5 V	±20 mA	4 mA to 20 mA, 0 mA to 20 mA	
32510	32510	32510	32510	High limit
-32511	-4863	-32511	-4863	Low limit

Representation of analog values

C

Introduction

This chapter shows the analog values for all measuring ranges supported by the AI 8xU/I HS analog module.

Measured value resolution

Each analog value is written left aligned to the tags. The bits marked with "x" are set to "0".

Table C- 1 Resolution of the analog values

Resolution in bits including sign	Values		Analog value	
	Decimal	Hexadecimal	High byte	Low byte
16	1	1_H	Sign 0 0 0 0 0 0 0	0 0 0 0 0 0 0 1

C.1 Representation of input ranges

The following tables set out the digitalized representation of the input ranges by bipolar and unipolar range. The resolution is 16 bits.

Table C- 2 Bipolar input ranges

Units	Measured value in %	Data word																Range
		2^{15}	2^{14}	2^{13}	2^{12}	2^{11}	2^{10}	2^{9}	2^{8}	2^{7}	2^{6}	2^{5}	2^{4}	2^{3}	2^{2}	2^{1}	2^{0}	
32767	>117.589	0	1	1	1	1	1	1	1	1	1	1	1	1	1	1	1	Overflow
32511	117.589	0	1	1	1	1	1	1	0	1	1	1	1	1	1	1	1	Overshoot range
27649	100.004	0	1	1	0	1	1	0	0	0	0	0	0	0	0	0	1	
27648	100.000	0	1	1	0	1	1	0	0	0	0	0	0	0	0	0	0	Rated range
1	0.003617	0	0	0	0	0	0	0	0	0	0	0	0	0	0	0	1	
0	0.000	0	0	0	0	0	0	0	0	0	0	0	0	0	0	0	0	
-1	-0.003617	1	1	1	1	1	1	1	1	1	1	1	1	1	1	1	1	
-27648	-100.000	1	0	0	1	0	1	0	0	0	0	0	0	0	0	0	0	
-27649	-100.004	1	0	0	1	0	0	1	1	1	1	1	1	1	1	1	1	Undershoot range
-32512	-117.593	1	0	0	0	0	0	0	1	0	0	0	0	0	0	0	0	
-32768	<-117.593	1	0	0	0	0	0	0	0	0	0	0	0	0	0	0	0	Underflow

Table C- 3 Unipolar input ranges

Units	Measured value in %	Data word																Range
		2^{15}	2^{14}	2^{13}	2^{12}	2^{11}	2^{10}	2^{9}	2^{8}	2^{7}	2^{6}	2^{5}	2^{4}	2^{3}	2^{2}	2^{1}	2^{0}	
32767	>117.589	0	1	1	1	1	1	1	1	1	1	1	1	1	1	1	1	Overflow
32511	117.589	0	1	1	1	1	1	1	0	1	1	1	1	1	1	1	1	Overshoot range
27649	100.004	0	1	1	0	1	1	0	0	0	0	0	0	0	0	0	1	
27648	100.000	0	1	1	0	1	1	0	0	0	0	0	0	0	0	0	0	
1	0.003617	0	0	0	0	0	0	0	0	0	0	0	0	0	0	0	1	Rated range
0	0.000	0	0	0	0	0	0	0	0	0	0	0	0	0	0	0	0	
-1	-0.003617	1	1	1	1	1	1	1	1	1	1	1	1	1	1	1	1	Undershoot range
-4864	-17.593	1	1	1	0	1	1	0	1	0	0	0	0	0	0	0	0	
-32768	<-17.593	1	0	0	0	0	0	0	0	0	0	0	0	0	0	0	0	Underflow

C.2 Representation of analog values in voltage measuring ranges

The following tables list the decimal and hexadecimal values (codes) of the possible voltage measuring ranges.

Table C- 4 Voltage measuring range ±10 V and ±5 V

Values		Voltage measuring range		Range
dec	hex	±10 V	±5 V	
32767	7FFF	>11.759 V	>5.879 V	Overflow
32511	7EFF	11.759 V	5.879 V	Overshoot range
27649	6C01			
27648	6C00	10 V	5 V	Rated range
20736	5100	7.5 V	3.75 V	
1	1	361.7 µV	180.8 µV	
0	0	0 V	0 V	
-1	FFFF			
-20736	AF00	-7.5 V	-3.75 V	
-27648	9400	-10 V	-5 V	
-27649	93FF			Undershoot range
-32512	8100	-11.759 V	-5.879 V	
-32768	8000	< -11.759 V	< -5.879 V	Underflow

Table C- 5 Voltage measuring range 1 to 5 V

Values		Voltage measuring range	Range
dec	hex	1 to 5 V	
32767	7FFF	>5.704 V	Overflow
32511	7EFF	5.704 V	Overshoot range
27649	6C01		
27648	6C00	5 V	Rated range
20736	5100	4 V	
1	1	1 V + 144.7 µV	
0	0	1 V	
-1	FFFF		Undershoot range
-4864	ED00	0.296 V	
-32768	8000	< 0.296 V	Underflow

C.3 Representation of analog values in the current measuring ranges

The following tables list the decimal and hexadecimal values (codes) of the possible current measuring ranges.

Table C- 6 Current measuring range ±20 mA

Values		Current measuring range	
dec	hex	±20 mA	
32767	7FFF	>23.52 mA	Overflow
32511	7EFF	23.52 mA	Overshoot range
27649	6C01		
27648	6C00	20 mA	Rated range
20736	5100	15 mA	
1	1	723.4 nA	
0	0	0 mA	
-1	FFFF		
-20736	AF00	-15 mA	
-27648	9400	-20 mA	
-27649	93FF		Undershoot range
-32512	8100	-23.52 mA	
-32768	8000	< -23.52 mA	Underflow

Table C- 7 Current measuring ranges 0 to 20 mA and 4 to 20 mA

Values		Current measuring range		
dec	hex	0 to 20 mA	4 to 20 mA	
32767	7FFF	>23.52 mA	>22.81 mA	Overflow
32511	7EFF	23.52 mA	22.81 mA	Overshoot range
27649	6C01			
27648	6C00	20 mA	20 mA	Rated range
20736	5100	15 mA	16 mA	
1	1	723.4 nA	4 mA + 578.7 nA	
0	0	0 mA	4 mA	
-1	FFFF			Undershoot range
-4864	ED00	-3.52 mA	1.185 mA	
-32768	8000	<- 3.52 mA	< 1.185 mA	Underflow

C.4 Measured values for wire break diagnostic

Measured values on diagnostic event "wire break", dependent on diagnostics enables

Error events initiate a diagnostics entry and trigger a diagnostics interrupt if configured accordingly.

Table C- 8 Measured values for wire break diagnostic

Format	Parameter assignment	Measured values		Explanation
S7	• "Wire break" diagnostics enabled • "Overflow/Underflow" diagnostics enabled or disabled ("Wire break" diagnostics takes priority over "Overflow/Underflow" diagnostics)	32767	$7FFF_H$	"Wire break" or "Open circuit" diagnostic alarm
	• "Wire break" diagnostics disabled • "Overflow/Underflow" diagnostics enabled	-32767	8000_H	• Measured value after leaving the under-shoot range • Diagnostic alarm "Low limit violated"
	• "Wire break" diagnostics disabled • "Overflow/Underflow" diagnostics disabled	-32767	8000_H	Measured value after leaving the undershoot range

SIEMENS

Manual

SIMATIC

S7-1500 / ET 200MP

Analog Input Module
AI 8xU/I/RTD BA (6ES7531-7QF00-0AB0)

Edition 03/2019

support.industry.siemens.com

SIEMENS

SIMATIC

S7-1500/ET 200MP Analog Input Module AI 8xU/I/R/RTD BA (6ES7531-7QF00-0AB0)

Manual

Preface

Documentation guide 1

Product overview 2

Wiring 3

Parameters/address space 4

Interrupts/diagnostics alarms 5

Technical specifications 6

Dimensional drawing A

Parameter data records B

Representation of analog values C

03/2019

A5E44792324-AA

Legal information

Warning notice system

This manual contains notices you have to observe in order to ensure your personal safety, as well as to prevent damage to property. The notices referring to your personal safety are highlighted in the manual by a safety alert symbol, notices referring only to property damage have no safety alert symbol. These notices shown below are graded according to the degree of danger.

⚠ DANGER

indicates that death or severe personal injury **will** result if proper precautions are not taken.

⚠ WARNING

indicates that death or severe personal injury **may** result if proper precautions are not taken.

⚠ CAUTION

indicates that minor personal injury can result if proper precautions are not taken.

NOTICE

indicates that property damage can result if proper precautions are not taken.

If more than one degree of danger is present, the warning notice representing the highest degree of danger will be used. A notice warning of injury to persons with a safety alert symbol may also include a warning relating to property damage.

Qualified Personnel

The product/system described in this documentation may be operated only by **personnel qualified** for the specific task in accordance with the relevant documentation, in particular its warning notices and safety instructions. Qualified personnel are those who, based on their training and experience, are capable of identifying risks and avoiding potential hazards when working with these products/systems.

Proper use of Siemens products

Note the following:

⚠ WARNING

Siemens products may only be used for the applications described in the catalog and in the relevant technical documentation. If products and components from other manufacturers are used, these must be recommended or approved by Siemens. Proper transport, storage, installation, assembly, commissioning, operation and maintenance are required to ensure that the products operate safely and without any problems. The permissible ambient conditions must be complied with. The information in the relevant documentation must be observed.

Trademarks

All names identified by ® are registered trademarks of Siemens AG. The remaining trademarks in this publication may be trademarks whose use by third parties for their own purposes could violate the rights of the owner.

Disclaimer of Liability

We have reviewed the contents of this publication to ensure consistency with the hardware and software described. Since variance cannot be precluded entirely, we cannot guarantee full consistency. However, the information in this publication is reviewed regularly and any necessary corrections are included in subsequent editions.

Siemens AG
Division Digital Factory
Postfach 48 48
90026 NÜRNBERG
GERMANY

A5E44792324-AA
℗ 02/2019 Subject to change

Copyright © Siemens AG 2019.
All rights reserved

Preface

Purpose of the documentation

This manual supplements the system manual S7-1500/ET 200MP (https://support.industry.siemens.com/cs/ww/en/view/59191792).

Functions that relate in general to the systems are described in this system manual.

The information provided in this manual and in the system/function manuals supports you in commissioning the systems.

Conventions

The term "CPU" is used in this manual both for the CPUs of the S7-1500 automation system, as well as for interface modules of the ET 200MP distributed I/O system.

Please also observe notes marked as follows:

Note

A note contains important information on the product described in the documentation, on the handling of the product or on the section of the documentation to which particular attention should be paid.

Recycling and disposal

For environmentally friendly recycling and disposal of your old equipment, contact a certified electronic waste disposal company and dispose of the equipment according to the applicable regulations in your country.

Security information

Siemens provides products and solutions with industrial security functions that support the secure operation of plants, systems, machines and networks.

In order to protect plants, systems, machines and networks against cyber threats, it is necessary to implement – and continuously maintain – a holistic, state-of-the-art industrial security concept. Siemens' products and solutions constitute one element of such a concept.

Customers are responsible for preventing unauthorized access to their plants, systems, machines and networks. Such systems, machines and components should only be connected to an enterprise network or the internet if and to the extent such a connection is necessary and only when appropriate security measures (e.g. firewalls and/or network segmentation) are in place.

For additional information on industrial security measures that can be implemented, please visit (https://www.siemens.com/industrialsecurity).

Siemens' products and solutions undergo continuous development to make them more secure. Siemens strongly recommends that product updates are applied as soon as they are available and that the latest product versions are used. Use of product versions that are no longer supported, and failure to apply the latest updates may increase customers' exposure to cyber threats.

To stay informed about product updates, subscribe to the Siemens Industrial Security RSS Feed visit (https://www.siemens.com/industrialsecurity).

Open Source Software

Open-source software is used in the firmware of the I/O modules. Open Source Software is provided free of charge. We are liable for the product described, including the open-source software contained in it, pursuant to the conditions applicable to the product. Siemens accepts no liability for the use of the open source software over and above the intended program sequence, or for any faults caused by modifications to the software.

For legal reasons, we are obliged to publish the original text of the license conditions and copyright notices. Please read the information relating to this on the Internet (https://support.industry.siemens.com/cs/ww/en/view/109757558).

Table of contents

Preface 3
1 Documentation guide 6
2 Product overview 10
2.1 Properties 10
3 Wiring 13
4 Parameters/address space 18
4.1 Measuring types and ranges 18
4.2 Parameters 20
4.3 Declaration of parameters 23
4.4 Address space 25
5 Interrupts/diagnostics alarms 31
5.1 Status and error displays 31
5.2 Interrupts 33
5.3 Diagnostics alarms 35
6 Technical specifications 36
A Dimensional drawing 43
B Parameter data records 45
B.1 Parameter assignment and structure of the parameter data records 45
C Representation of analog values 52
C.1 Representation of input ranges 53
C.2 Representation of analog values in voltage measuring ranges 54
C.3 Representation of analog values in the current measuring ranges 55
C.4 Representation of the analog values of resistance-based sensors/resistance thermometers 56
C.5 Measured values for wire break diagnostic 59

Documentation guide

1

The documentation for the SIMATIC S7-1500 automation system and the SIMATIC ET 200MP distributed I/O system is arranged into three areas.
This arrangement enables you to access the specific content you require.

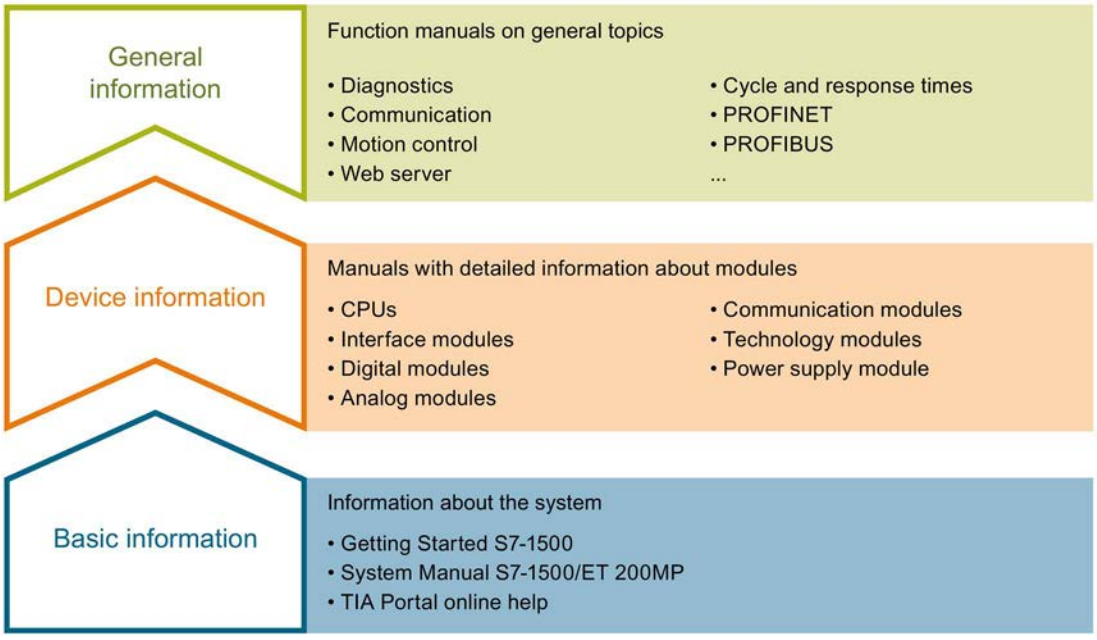

Basic information

The System Manual and Getting Started describe in detail the configuration, installation, wiring and commissioning of the SIMATIC S7-1500 and ET 200MP systems. The STEP 7 online help supports you in the configuration and programming.

Device information

Product manuals contain a compact description of the module-specific information, such as properties, wiring diagrams, characteristics and technical specifications.

General information

The function manuals contain detailed descriptions on general topics regarding the SIMATIC S7-1500 and ET 200MP systems, e.g. diagnostics, communication, motion control, Web server, OPC UA.

You can download the documentation free of charge from the Internet (https://support.industry.siemens.com/cs/ww/en/view/109742691).

Changes and supplements to the manuals are documented in a Product Information.

You can download the product information free of charge from the Internet (https://support.industry.siemens.com/cs/us/en/view/68052815).

Manual Collection S7-1500/ET 200MP

The Manual Collection contains the complete documentation on the SIMATIC S7-1500 automation system and the ET 200MP distributed I/O system gathered together in one file.

You can find the Manual Collection on the Internet (https://support.industry.siemens.com/cs/ww/en/view/86140384).

SIMATIC S7-1500 comparison list for programming languages

The comparison list contains an overview of which instructions and functions you can use for which controller families.

You can find the comparison list on the Internet (https://support.industry.siemens.com/cs/ww/en/view/86630375).

"mySupport"

With "mySupport", your personal workspace, you make the best out of your Industry Online Support.

In "mySupport", you can save filters, favorites and tags, request CAx data and compile your personal library in the Documentation area. In addition, your data is already filled out in support requests and you can get an overview of your current requests at any time.

You must register once to use the full functionality of "mySupport".

You can find "mySupport" on the Internet (https://support.industry.siemens.com/My/ww/en).

"mySupport" - Documentation

In the Documentation area in "mySupport" you can combine entire manuals or only parts of these to your own manual.
You can export the manual as PDF file or in a format that can be edited later.

You can find "mySupport" - Documentation on the Internet (http://support.industry.siemens.com/My/ww/en/documentation).

"mySupport" - CAx data

In the CAx data area in "mySupport", you can access the current product data for your CAx or CAe system.

You configure your own download package with a few clicks.

In doing so you can select:

- Product images, 2D dimension drawings, 3D models, internal circuit diagrams, EPLAN macro files
- Manuals, characteristics, operating manuals, certificates
- Product master data

You can find "mySupport" - CAx data on the Internet (http://support.industry.siemens.com/my/ww/en/CAxOnline).

Application examples

The application examples support you with various tools and examples for solving your automation tasks. Solutions are shown in interplay with multiple components in the system - separated from the focus on individual products.

You will find the application examples on the Internet (https://support.industry.siemens.com/sc/ww/en/sc/2054).

TIA Selection Tool

With the TIA Selection Tool, you can select, configure and order devices for Totally Integrated Automation (TIA).
This tool is the successor of the SIMATIC Selection Tool and combines the known configurators for automation technology into one tool.
With the TIA Selection Tool, you can generate a complete order list from your product selection or product configuration.

You can find the TIA Selection Tool on the Internet (http://w3.siemens.com/mcms/topics/en/simatic/tia-selection-tool).

SIMATIC Automation Tool

You can use the SIMATIC Automation Tool to perform commissioning and maintenance activities simultaneously on various SIMATIC S7 stations as a bulk operation independent of the TIA Portal.

General function overview:

- Network browsing and creation of a table showing the accessible devices in the network.
- Flashing of device LEDs or HMI display to locate a device
- Downloading of addresses (IP, subnet, gateway) to a device
- Downloading the PROFINET name (station name) to a device
- Placing a CPU in RUN or STOP mode
- Setting the time in a CPU to the current time of your PG/PC
- Downloading a new program to a CPU or an HMI device
- Downloading from CPU, downloading to CPU or deleting recipe data from a CPU
- Downloading from CPU or deleting data log data from a CPU
- Backup/restore of data from/to a backup file for CPUs and HMI devices
- Downloading service data from a CPU
- Reading the diagnostics buffer of a CPU
- Performing a CPU memory reset
- Resetting devices to factory settings
- Downloading a firmware update to a device

You can find the SIMATIC Automation Tool on the Internet (https://support.industry.siemens.com/cs/ww/en/view/98161300).

PRONETA

With SIEMENS PRONETA (PROFINET network analysis), you analyze the PROFINET network during commissioning. PRONETA features two core functions:

- The topology overview independently scans PROFINET network and all connected components.
- The IO check is a fast test of the wiring and the module configuration of a system.

You can find SIEMENS PRONETA on the Internet (https://support.industry.siemens.com/cs/ww/en/view/67460624).

SINETPLAN

SINETPLAN, the Siemens Network Planner, supports you in planning automation systems and networks based on PROFINET. The tool facilitates professional and predictive dimensioning of your PROFINET installation as early as in the planning stage. In addition, SINETPLAN supports you during network optimization and helps you to exploit network resources optimally and to plan reserves. This helps to prevent problems in commissioning or failures during productive operation even in advance of a planned operation. This increases the availability of the production plant and helps improve operational safety.

The advantages at a glance

- Network optimization thanks to port-specific calculation of the network load
- Increased production availability thanks to online scan and verification of existing systems
- Transparency before commissioning through importing and simulation of existing STEP 7 projects
- Efficiency through securing existing investments in the long term and optimal exploitation of resources

You can find SINETPLAN on the Internet (https://www.siemens.com/sinetplan).

Product overview

2

2.1 Properties

Article number

6ES7531-7QF00-0AB0

View of the module

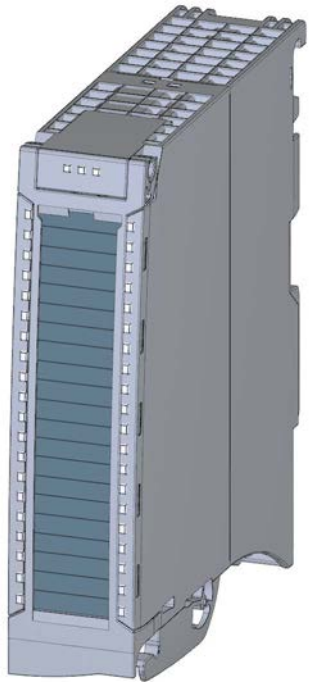

Figure 2-1 View of the AI 8xU/I/R/RTD BA module

Properties

The module has the following technical properties:

- 8 analog inputs
- Voltage measurement type can be set per channel
- Current measurement type can be set per channel
- Resistor measurement type can be set per channel
- Resistance thermometer (RTD) measuring type can be set per channel
- Resolution 16 bits including sign
- Configurable diagnostics (per channel)
- Hardware interrupt on limit violation can be set per channel (two low and two high limits per channel)

The module supports the following functions:

Table 2- 1 Version dependencies of the module functions

Function	Firmware version of the module	Configuration software	
		STEP 7 (TIA Portal) as of V15.1 and HSP 0275	GSD file in STEP 7 (TIA Portal) V12 or higher, or STEP 7 V5.5 SP3 or higher
Firmware update	V1.0.0 or higher	X	X
Identification data I&M0 to I&M3	V1.0.0 or higher	X	X
Parameter assignment in RUN	V1.0.0 or higher	X	X
Isochronous mode	---	---	---
Calibration in runtime	---	---	---
Module-internal Shared Input (MSI)	V1.0.0 or higher	X (PROFINET IO only)	X (PROFINET IO only)
Configurable submodules / submodules for Shared Device	V1.0.0 or higher	X (PROFINET IO only)	X (PROFINET IO only)

You can configure the module with STEP 7 (TIA Portal) and with a GSD file.

Accessories

The following accessories are supplied with the module and can also be ordered separately as spare parts:

- Shield bracket
- Shield terminal
- Power supply element
- Labeling strips
- U connector
- Universal front door

Other components

For example, you order the front connector including the potential bridge and cable tie separately.

You can find additional information on accessories and the article number in the system manual S7-1500/ET 200MP (https://support.industry.siemens.com/cs/ww/en/view/59191792).

Wiring 3

This section contains the block diagram of the module and outlines various connection options.

You can find information on wiring the front connector, creating a cable shield, etc. in the Wiring section of the system manual S7-1500/ET 200MP (https://support.industry.siemens.com/cs/ww/en/view/59191792).

Note

- You may use and combine the different wiring options for all channels.
- Do not insert the potential jumpers supplied with the front connector.

Abbreviations used

Meaning of the abbreviations used in the following figures:

U_n+/U_n-	Voltage input channel n (voltage only)
M_n+/M_n-	Measuring input channel n
I_n+/I_n-	Current input channel n (current only)
$I_{c\,n}$+/$I_{c\,n}$-	Current output for RTD, channel n
M_{ANA}	Reference potential of the analog circuit

Infeed element

The module does not require supply voltage through the infeed element. The infeed element is inserted on the front connector and serves solely for shielding.

Figure 3-1 Infeed element

Block diagram and pin assignment for voltage measurement

The example in the following figure shows the pin assignment for voltage measurement.

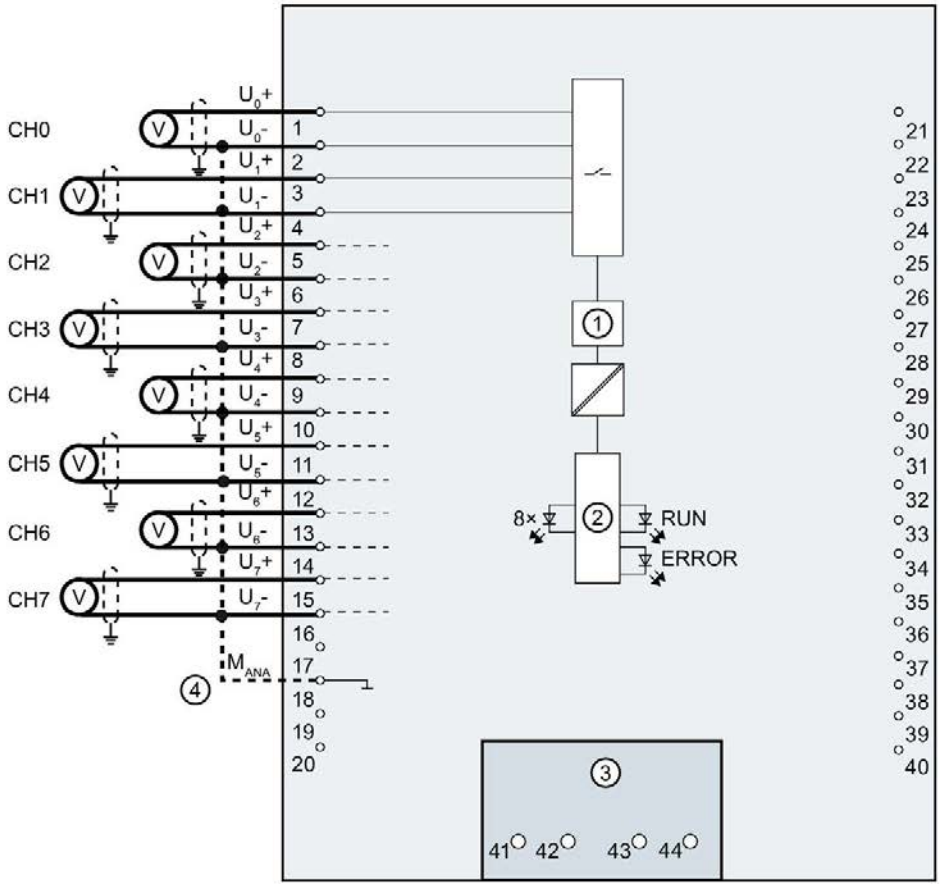

①	Analog-to-digital converter (ADC)	CHx	Channel or 8 x channel status (green/red)
②	Backplane bus interface	RUN	Status display LED (green)
③	Infeed element (for shielding only)	ERROR	Error display LED (red)
④	Equipotential bonding cable (optional)		

Figure 3-2 Block diagram and pin assignment for voltage measurement

Connection: 4-wire transmitters for current measurement

The example in the following figure shows the pin assignment for current measurement with 4-wire transmitters.

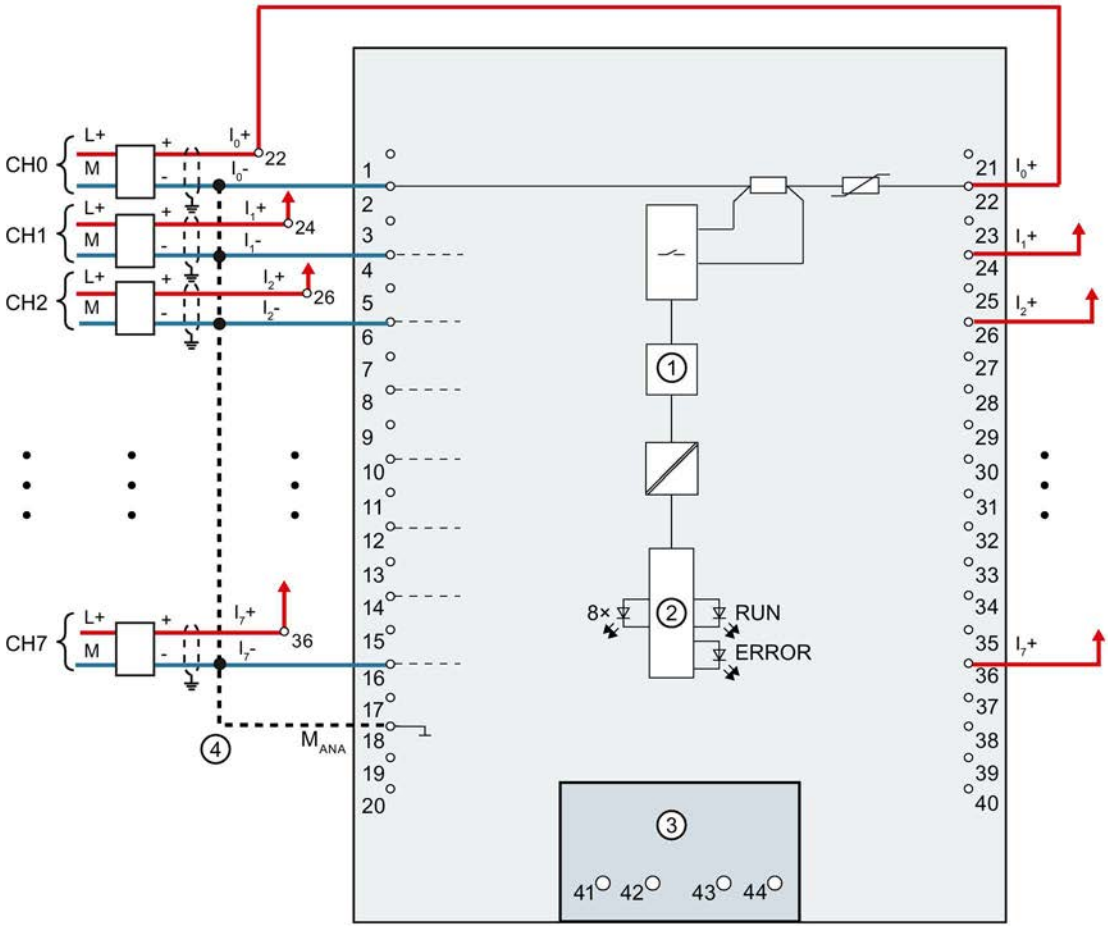

①	Analog-to-digital converter (ADC)	CHx	Channel or 8 x channel status (green/red)
②	Backplane bus interface	RUN	Status display LED (green)
③	Infeed element (for shielding only)	ERROR	Error display LED (red)
④	Equipotential bonding cable (optional)		

Figure 3-3 Block diagram and pin assignment for current measurement

Connection: 2-wire transmitters for current measurement

The example in the following figure shows the pin assignment for current measurement with 2-wire transmitters.

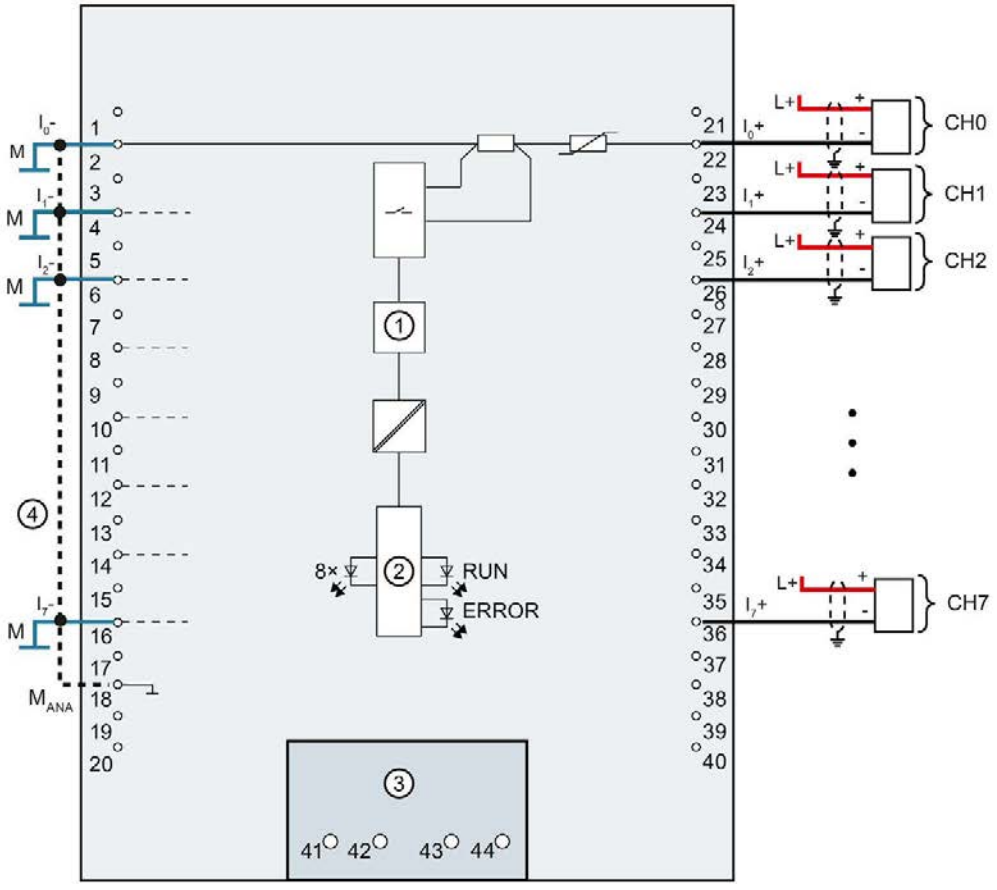

①	Analog-to-digital converter (ADC)	CHx	Channel or 8 x channel status (green/red)
②	Backplane bus interface	RUN	Status display LED (green)
③	Infeed element (for shielding only)	ERROR	Error display LED (red)
④	Equipotential bonding cable (optional)		

Figure 3-4 Block diagram and pin assignment for current measurement

Connection: 2-wire and 3-wire connection of resistance sensors or resistance thermometers (RTD)

The example in the following figure shows the pin assignment for 2-wire and 3-wire connections of resistance sensors or resistance thermometers.

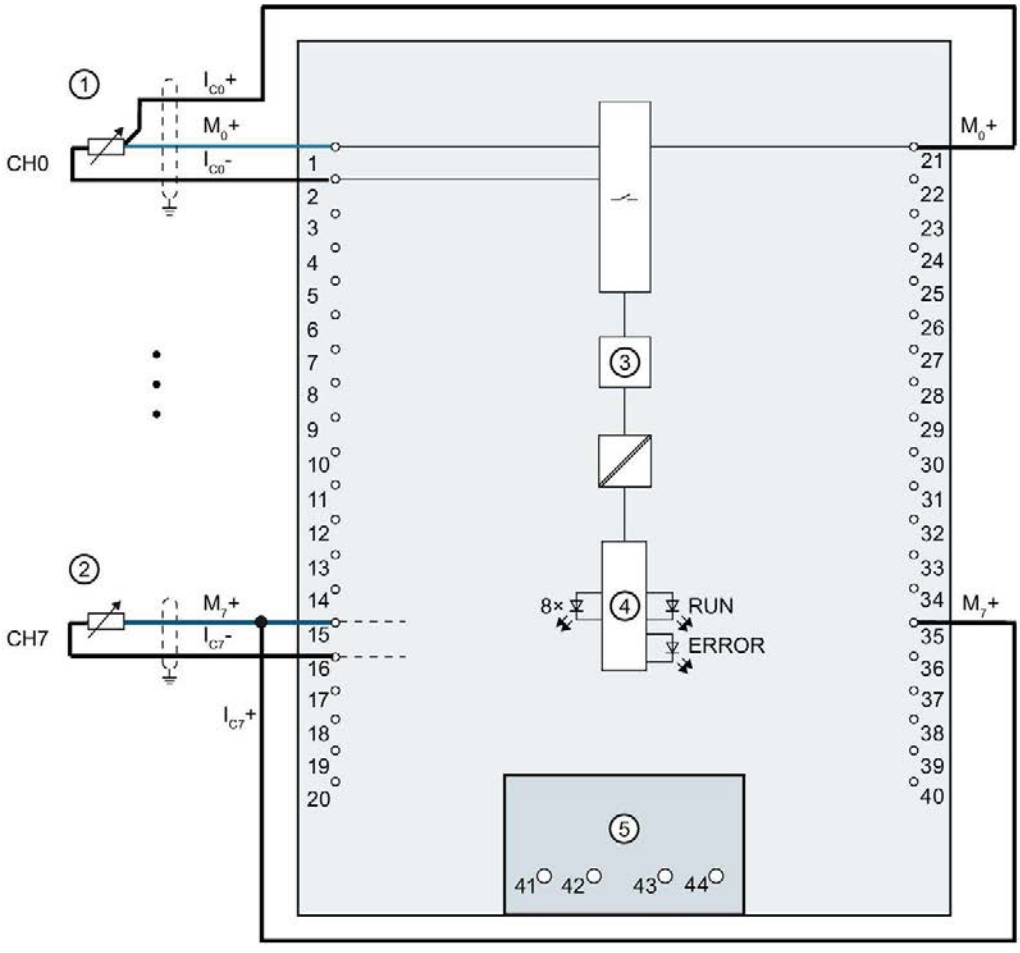

①	3-wire connection	CHx	Channel or 8 x channel status (green/red)
②	2-wire connection	RUN	Status display LED (green)
③	Analog-to-digital converter (ADC)	ERROR	Error display LED (red)
④	Backplane bus interface		
⑤	Infeed element (for shielding only)		

Figure 3-5 Block diagram and pin assignment for 2-wire, 3-wire connection

Parameters/address space 4

4.1 Measuring types and ranges

Introduction

The module is set to voltage measurement type with measuring range ±10 V by default. You need to reassign the module parameters with STEP 7 if you want to use a different measurement type or range.

Deactivate the input if it is not going to be used. The module cycle time is shortened and the interference factors that lead to failure of the module (for example, triggering a hardware interrupt) are avoided.

The following table shows the measurement types and the respective measuring range.

Table 4- 1 Measurement types and measuring ranges

Measurement type	Measuring range	Representation of analog values
Voltage	±50 mV ±500 mV ±1 V 1 V to 5 V ±5 V ±10 V	See Representation of analog values in voltage measuring ranges (Page 54)
Current 2WMT (2-wire transmitter)	4 mA to 20 mA	See Representation of analog values in the current measuring ranges (Page 55)
Current 4WMT (4-wire transmitter)	0 mA to 20 mA 4 mA to 20 mA ±20 mA	
Resistor (2-wire connection)	PTC	See Representation of the analog values of resistance-based sensors/resistance thermometers (Page 56)
Resistor (3-wire connection)	600 Ω 6000 Ω	
Thermal resistor RTD (3-wire connection)	PT100 Standard/Climate PT1000 Standard/Climate Ni100 Standard/Climate Ni1000 Standard/Climate LG-Ni1000 Standard/Climatic	
Disabled	-	-

The tables of the input ranges, overflow, underrange, etc. are available in the appendix Representation of analog values (Page 52).

Note

Wire break in voltage measuring ranges

"Wire break" diagnosis can be configured for the "Voltage" measurement type with the "Measuring range 1 to 5 V". No "wire break" diagnostics is available for the other measuring ranges.

If there is a wire break for these measuring ranges, the channel supplies a random value as an input value. This random value can also lie within the valid value range.

Using PTC resistors

PTC resistors are suitable for temperature monitoring of electrical devices, such as motors, drives, and transformers.

Use Type A PTC resistors (PTC thermistor) in accordance with DIN/VDE 0660, part 302. In doing so, follow these steps:

1. Choose "Resistor (2-wire terminal)" and "PTC" in STEP 7.
2. Connect the PTC using 2-wire connection technology.

If you enable the "Underflow" diagnostics in STEP 7, it will be signaled for resistance values <18 Ω. In this case, this diagnostic signifies "Short-circuit in the wiring".

The following figure shows the address space assignment for the AI 8xU/I/R/RTD BA module with PTC resistors.

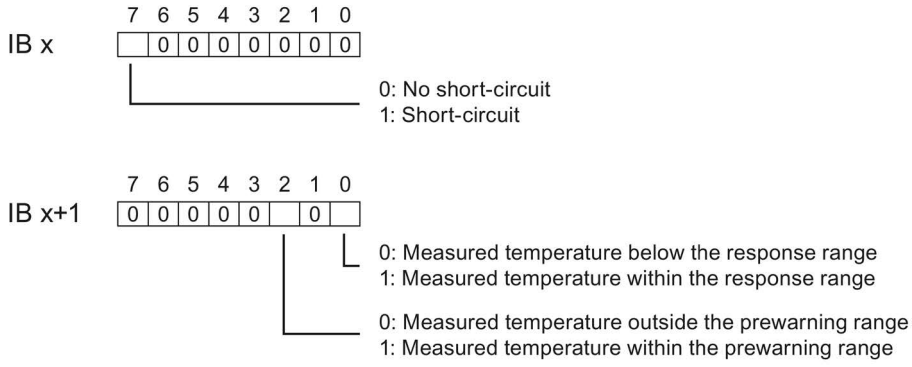

Figure 4-1 Address space for the AI 8xU/I/R/RTD BA module with PTC resistors

The diagram below shows the temperature profile and the corresponding switching points.

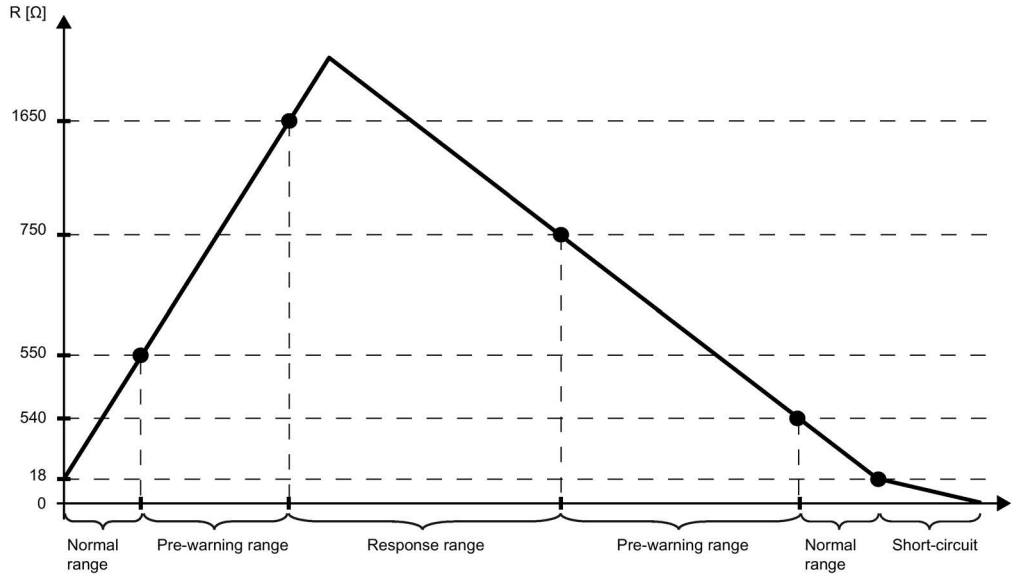

Figure 4-2 Temperature profile and the corresponding switching points

4.2 Parameters

Parameters of AI 8xU/I/R/RTD BA

When you assign the module parameters in STEP 7, you use various parameters to specify the module properties. The following table lists the configurable parameters. The effective range of the configurable parameters depends on the type of configuration. The following configurations are possible:

- Central operation with a S7-1500 CPU
- Distributed operation on PROFINET IO in an ET 200MP system
- Distributed operation on PROFIBUS DP in an ET 200MP system

When assigning parameters in the user program, use the WRREC instruction to transfer the parameters to the module by means of data records; refer to the section Parameter assignment and structure of the parameter data records (Page 45).

The following parameter settings for the channels are possible:

Table 4- 2 Configurable parameters and their defaults

Parameters	Range of values	Default setting	Parameter assignment in RUN	Scope with configuration software, e.g., STEP 7 (TIA Portal)	
				GSD file PROFINET IO	GSD file PROFIBUS DP
Diagnostics					
• Overflow	Yes/No	No	Yes	Channel	Module [2]
• Underflow	Yes/No	No	Yes	Channel	Module [2]
• Common mode error	Yes/No	No	Yes	Channel	Module [2]
• Wire break [1]	Yes/No	No	Yes	Channel	Module [2]
Measuring					
• Measuring type	See chapter Measuring types and ranges (Page 18)	Voltage	Yes	Channel	Channel
• Measuring range		±10 V	Yes	Channel	Channel
• Temperature coefficient	Pt: 0.003851 Pt: 0.003902 Pt: 0.003916 Pt: 0.003920 Ni: 0.00618 Ni: 0.00672 LG-Ni: 0.005000	0.003851	Yes	Channel	Channel
• Temperature unit	• Kelvin (K) • Fahrenheit (°F) • Celsius (°C)	°C	Yes	Channel	Module
• Interference frequency suppression	400 Hz 60 Hz 50 Hz 10 Hz	50 Hz	Yes	Channel	Module
• Smoothing	None/low/medium/high	None	Yes	Channel	Channel

Parameters	Range of values	Default setting	Parameter assignment in RUN	Scope with configuration software, e.g., STEP 7 (TIA Portal)	
				GSD file PROFINET IO	GSD file PROFIBUS DP
Hardware interrupts					
• Hardware interrupt low limit 1	Yes/No	No	Yes	Channel	--- 3)
• Hardware interrupt high limit 1	Yes/No	No	Yes	Channel	--- 3)
• Hardware interrupt low limit 2	Yes/No	No	Yes	Channel	--- 3)
• Hardware interrupt high limit 2	Yes/No	No	Yes	Channel	--- 3)

1) If "Wire break" diagnostics and "Value status" are deactivated, the module reports overflow / underflow ($7FFF_H$ / 8000_H) in the event of a wiring error. The alarm depends on whether the connected cables are faulty.

Recommendation: Activate the "Wire break" diagnostics to obtain the correct value.

2) You can set the effective range of the diagnostics for each channel in the user program with data records 0 to 7.

3) You can configure the limits for hardware interrupts in the user program with data records 0 to 7.

4.3 Declaration of parameters

Overflow

Enabling of the diagnostics if the measured value violates the high limit.

Underflow

Enabling of the diagnostics when the measured value violates the low limit.

Common mode error

Enabling of diagnostics if the valid common mode voltage is exceeded.

Wire break

Enabling of the diagnostics if the module has no current flow or the current is too weak for the measurement at the corresponding configured input or the applied voltage is too low.

Temperature coefficient

The temperature coefficient depends on the chemical composition of the material. In Europe, only one value is used per sensor type (default value).

The temperature coefficient (α value) indicates by how much the resistance of a specific material changes relatively if the temperature increases by 1 °C.

The further values facilitate a sensor-specific setting of the temperature coefficient and enhance accuracy.

Interference frequency suppression

At analog input modules, this suppresses interference caused by the frequency of the AC network.

The frequency of the AC voltage network may interfere with measured values, particularly for measurements within narrow voltage ranges. For this parameter, the user defines the mains frequency prevailing on his system.

Smoothing

The individual measured values are smoothed using filtering. The smoothing can be set in 4 levels.

Smoothing time = number of module cycles (k) x cycle time of the module.

The following figure shows the number of module cycles after which the smoothed analog value is almost 100%, depending on the set smoothing. It is valid for each signal change at the analog input.

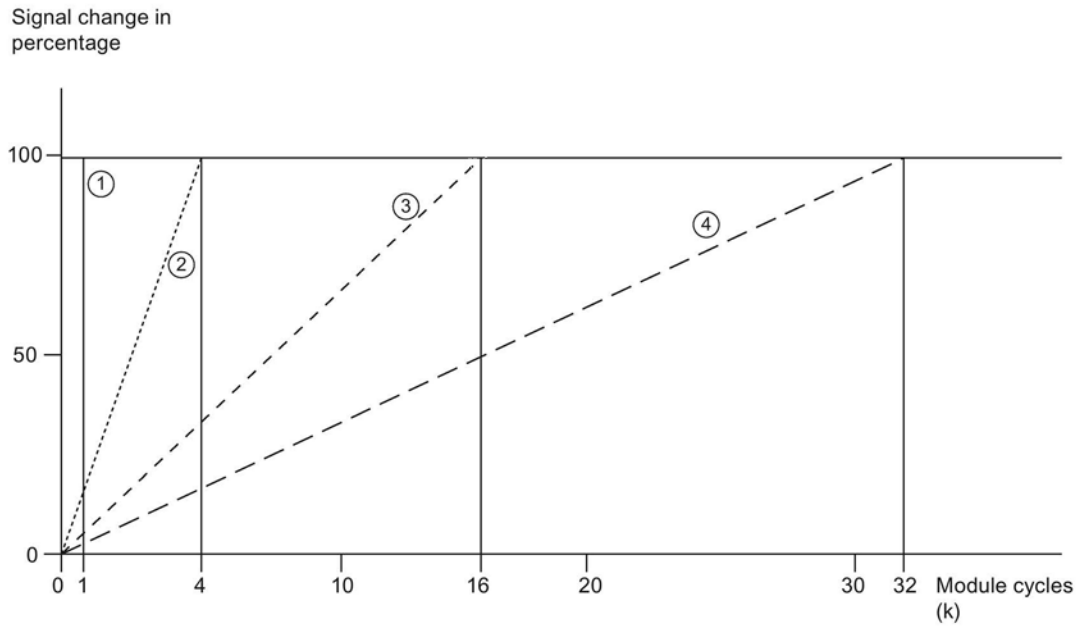

① None (k = 1)
② Weak (k = 4)
③ Medium (k = 16)
④ Strong (k = 32)

Figure 4-3 Smoothing for AI 8xU/I/R/RTD BA

Hardware interrupt 1 or 2

Enabling of a hardware interrupt at violation of high limit 1 or 2 or low limit 1 or 2.

Low limit 1 or 2

Specifies the low limit threshold that triggers hardware interrupt 1 or 2.

High limit 1 or 2

Specifies the high limit threshold that triggers hardware interrupt 1 or 2.

4.4 Address space

The module can be configured differently in STEP 7; see following table. Depending on the configuration, additional/different addresses are assigned in the process image of the inputs.

Configuration options of AI 8xU/I/R/RTD BA

You can configure the module with STEP 7 (TIA Portal) or with a GSD file.

When you configure the module by means of the GSD file, the configurations are available under different abbreviations/module names.

The following configurations are possible:

Table 4- 3 Configuration options

Configuration	Short designation/ module name in the GSD file	Configuration software, e.g., with STEP 7 (TIA Portal)	
		Integrate in the hardware catalog STEP 7 (TIA Portal) as of V15.1 and HSP 0275 or V16	GSD file in STEP 7 (TIA Portal) V12 or higher or STEP 7 V5.5 SP3 or higher
1 x 8-channel without value status	AI 8xU/I/R/RTD BA	X	X
1 x 8-channel with value status	AI 8xU/I/R/RTD BA QI	X	X
8 x 1-channel without value status	AI 8xU/I/R/RTD BA S	X (PROFINET IO only)	X (PROFINET IO only)
8 x 1-channel with value status	AI 8xU/I/R/RTD BA S QI	X (PROFINET IO only)	X (PROFINET IO only)
1 x 8-channel with value status for module-internal shared input with up to 4 submodules	AI 8xU/I/R/RTD BA MSI	X (PROFINET IO only)	X (PROFINET IO only)

Value status (Quality Information, QI)

The value status is always activated for the following module names:

- AI 8xU/I/R/RTD BA QI
- AI 8xU/I/R/RTD BA S QI
- AI 8xU/I/R/RTD BA MSI

An additional bit is assigned to each channel for the value status. The value status bit indicates if the read in digital value is valid. (0 = value is incorrect).

Address space of AI 8xU/I/R/RTD BA

The following figure shows the address space allocation for the configuration as 8-channel module. You can freely assign the start address for the module. The addresses of the channels are derived from the start address.

"IB x" stands, for example, for the module start address input byte x.

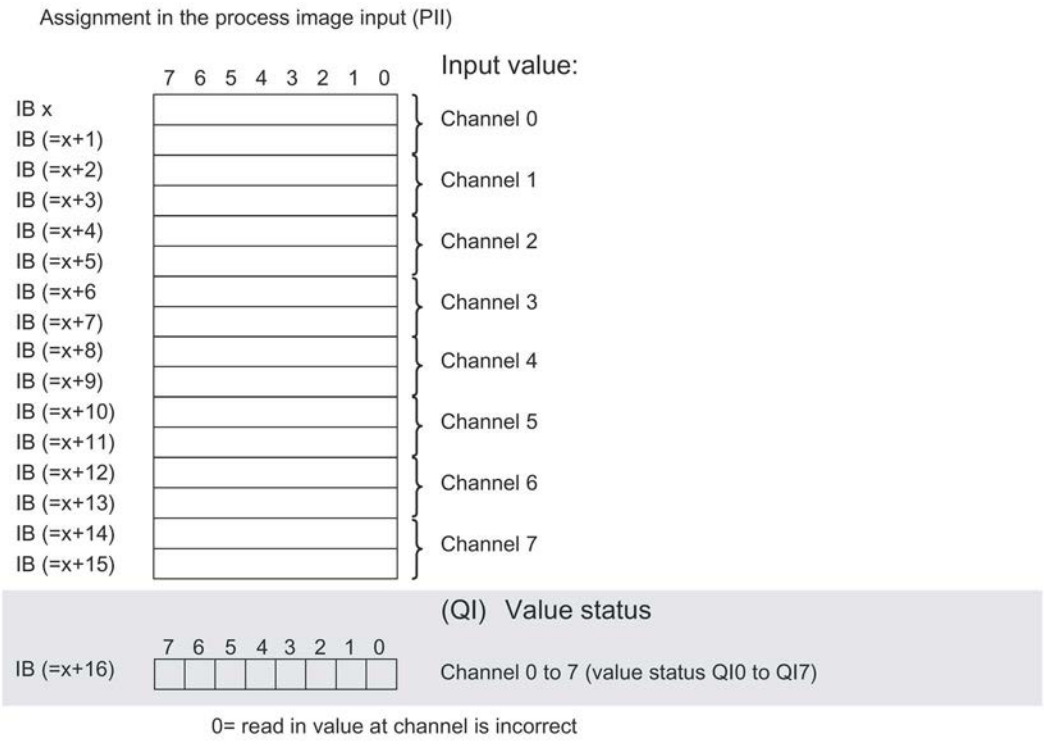

Figure 4-4 Address space for configuration as 1 x 8-channel AI 8xU/I/R/RTD BA with value status

Address space for configuration as 8 x 1-channel AI 8xU/I/R/RTD BA QI

For the configuration as a 8 x 1-channel module, the channels of the module are divided into multiple submodules. The submodules can be assigned to different IO controllers when the module is used in a shared device.

The number of usable IO controllers depends on the interface module used. Observe the information in the manual for the particular interface module.

Contrary to the 1 x 8-channel module configuration, each of the eight submodules has a freely assignable start address.

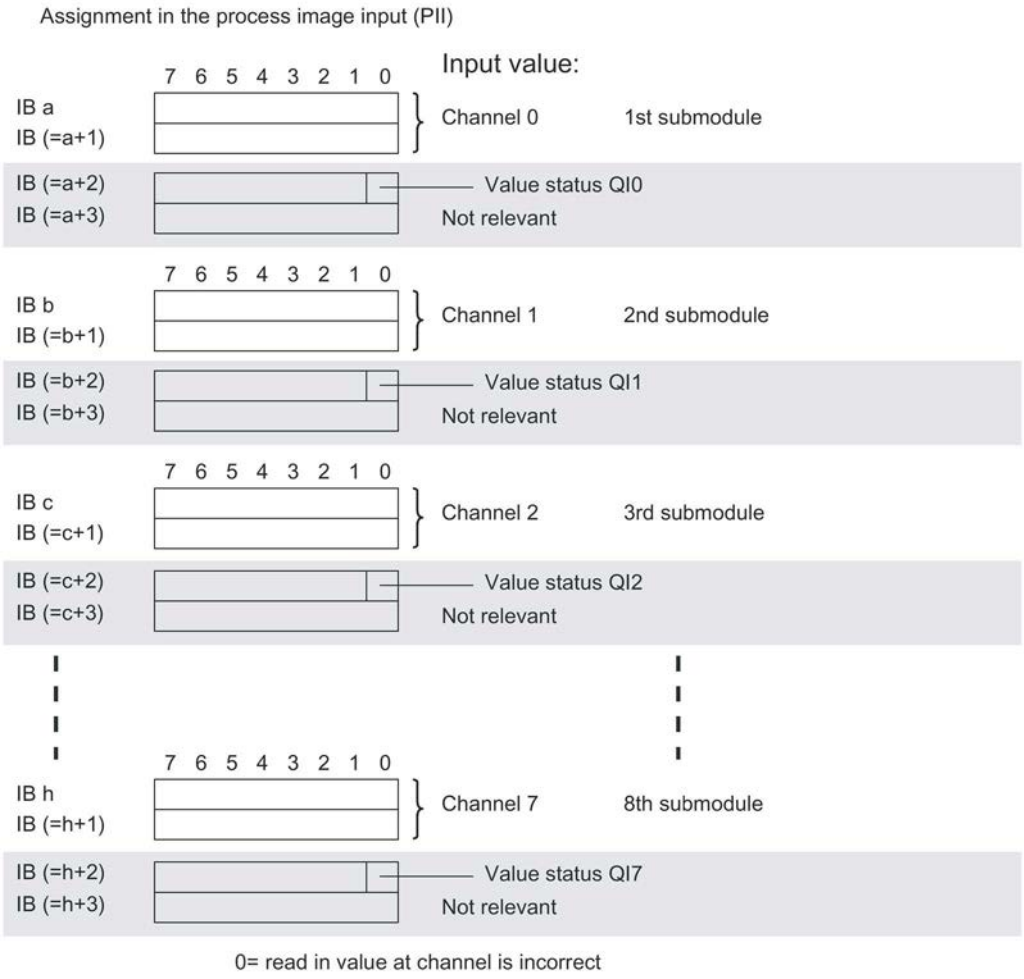

Figure 4-5 Address space for configuration as 8 x 1-channel AI 8xU/I/R/RTD BA S QI with value status

Address space for configuration as 1 x 8-channel AI 8xU/I/R/RTD BA MSI

The channels 0 to 7 of the module are copied in up to four submodules with configuration 1 x 8-channel module (Module-internal shared input, MSI). Channels 0 to 7 are then available with identical input values in different submodules. These submodules can be assigned to up to four IO controllers when the module is used in a shared device. Each IO controller has read access to the same channels.

The number of usable IO controllers depends on the interface module used. Please observe the information in the manual for the particular interface module.

Value status (Quality Information, QI)

The meaning of the value status depends on the submodule on which it occurs.

For the first submodule (=basic submodule), the value status 0 indicates that the value is incorrect.

For the 2nd to 4th submodule (=MSI submodule), the value status 0 indicates that the value is incorrect or the basic submodule has not yet been configured (not ready).

The figure below shows the assignment of the address space with submodules 1 and 2.

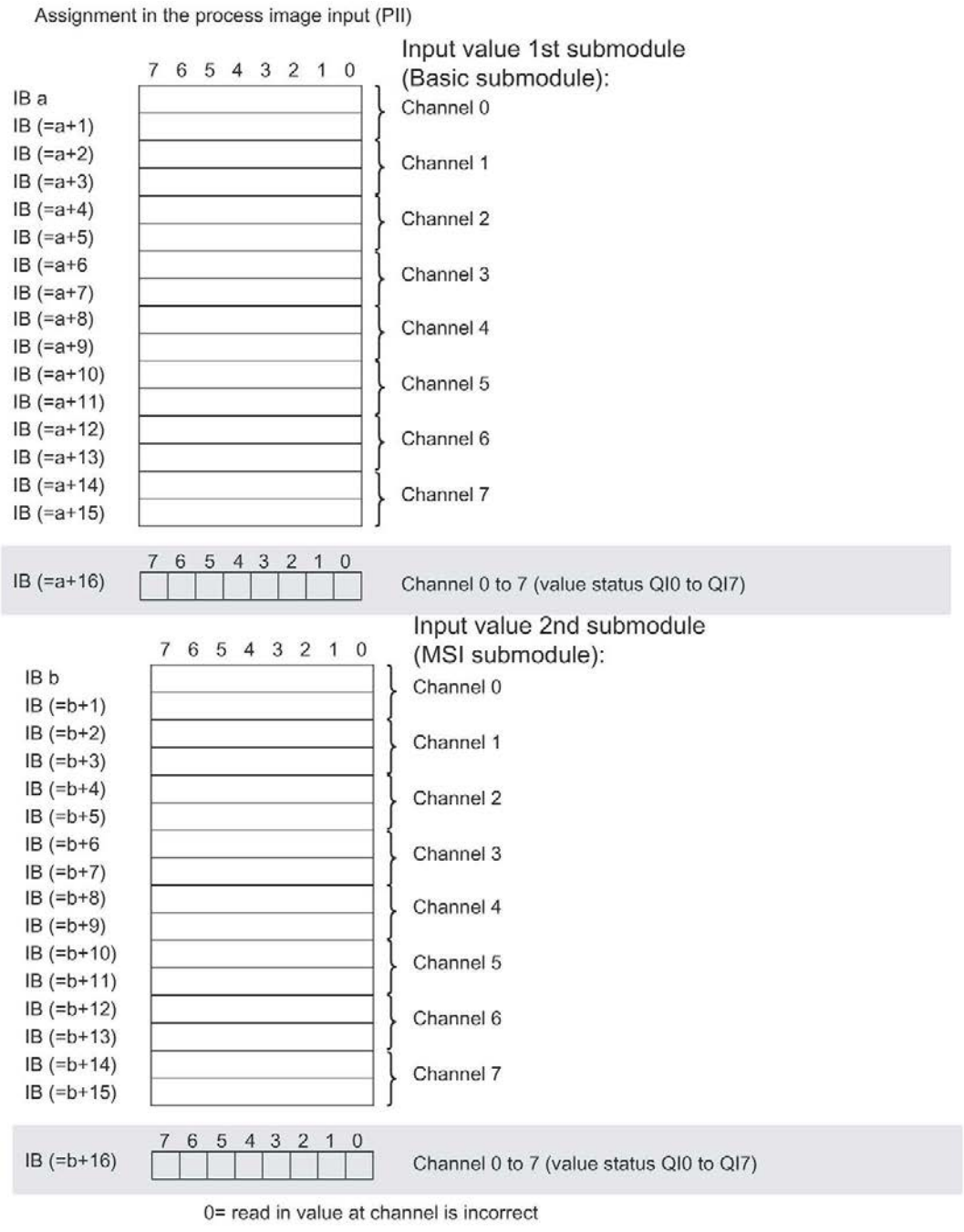

Figure 4-6 Address space for configuration as 1 x 8-channel AI 8xU/I/R/RTD BA MSI with value status

The following figure shows the assignment of the address space with submodule 3 and 4.

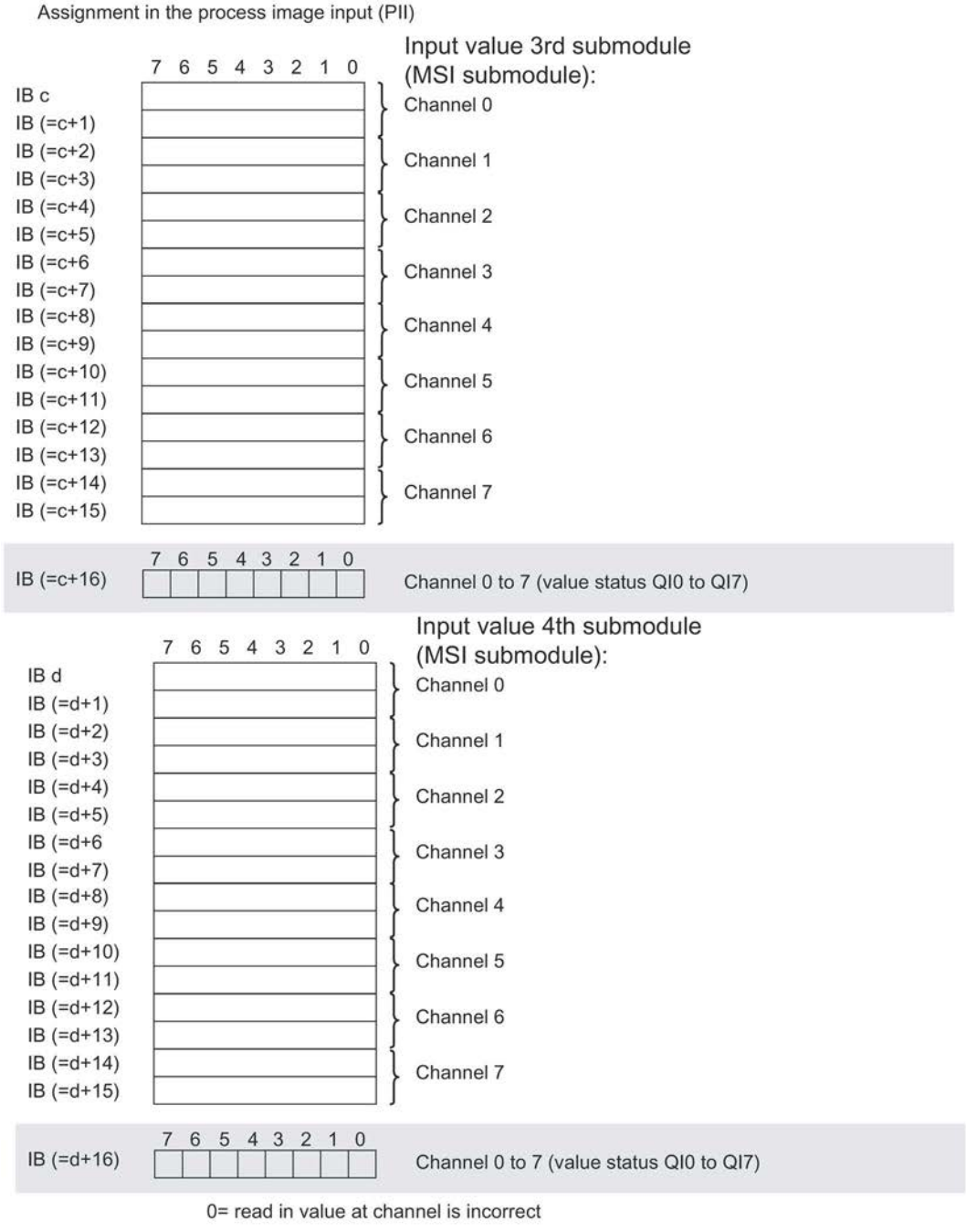

Figure 4-7 Address space for configuration as 1 x 8-channel AI 8xU/I/R/RTD BA MSI with value status

Reference

You can find information on the Shared Input/Output (MSI/MSO) function in the section Module-Internal Shared Input/Output (MSI/MSO) of the PROFINET with STEP 7 V15 (https://support.industry.siemens.com/cs/ww/en/view/49948856) function manual.

Interrupts/diagnostics alarms

5

5.1 Status and error displays

LED displays

The figure below shows the LED displays (status and error displays) of AI 8xU/I/R/RTD BA.

Figure 5-1 LED displays of the AI 8xU/I/R/RTD BA module

Meaning of the LED displays

The following tables explain the meaning of the status and error displays. Remedial measures for diagnostic alarms can be found in section Diagnostic alarms (Page 35).

RUN and ERROR LED

Table 5- 1 Status and error displays RUN and ERROR

LEDs		Meaning	Remedy
RUN	ERROR		
□ Off	□ Off	Voltage missing or too low at backplane bus.	• Switch on the CPU and/or the system power supply modules. • Verify that the U connectors are inserted. • Check to see if too many modules are inserted.
☼ Flashes	□ Off	The module starts and flashes until the valid parameter assignment is set.	---
■ On	□ Off	Module is configured.	
■ On	☼ Flashes	Indicates module errors (at least one error at one channel, e.g., wire break).	Evaluate the diagnostics data and eliminate the error (e.g., wire break).
☼ Flashes	☼ Flashes	Hardware defective.	Replace the module.

CHx LED

Table 5- 2 CHx status display

LED CHx/COMP	Meaning	Remedy
□ Off	Channel disabled	---
■ On	Channel configured and OK.	---
■ On	Channel is configured (channel error pending). Diagnostic alarm: e.g. wire break	Check the wiring. Disable diagnostics.

5.2 Interrupts

Analog input module AI 8xU/I/R/RTD BA supports the following diagnostic and hardware interrupts.

You can find detailed information on the event in the error organization block with the "RALRM" instruction (read additional interrupt info) and in the STEP 7 online help.

Diagnostic interrupt

The module generates a diagnostic interrupt at the following events:

- Wire break
- Overflow
- Underflow
- Common mode error
- Parameter assignment error

Hardware interrupt

The module generates a hardware interrupt at the following events:

- Low limit violated 1
- High limit violated 1
- Low limit violated 2
- Above high limit 2

The module channel that triggered the hardware interrupt is entered in the start information of the organization block. The diagram below shows the assignment to the bits of double word 8 in local data.

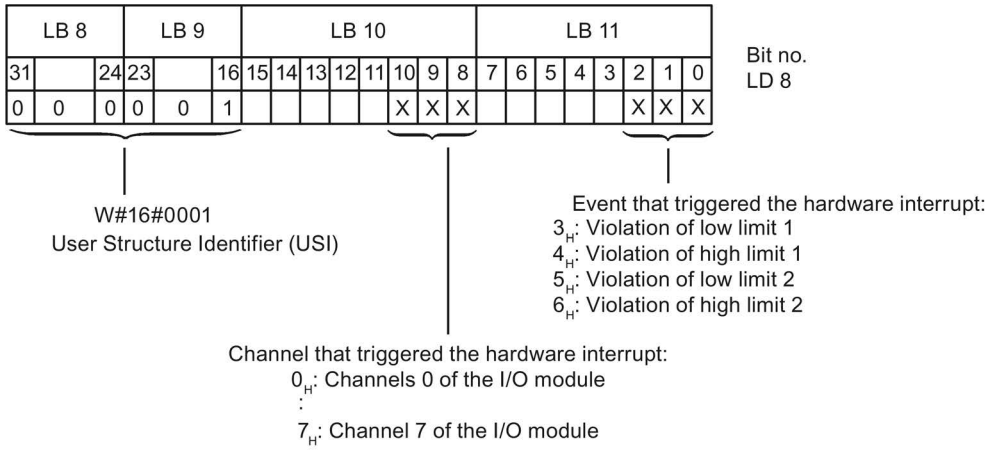

Figure 5-2 OB start information

Reaction when reaching limits 1 and 2 at the same time

If the two high limits 1 and 2 are reached at the same time, the module always signals the hardware interrupt for high limit 1 first. The configured value for high limit 2 is irrelevant. After processing the hardware interrupt for high limit 1, the module triggers the hardware interrupt for high limit 2.

The module has the same reaction when the low limits are reached at the same time. If the two low limits 1 and 2 are reached at the same time, the module always signals the hardware interrupt for low limit 1 first. After processing the hardware interrupt for low limit 1, the module triggers the hardware interrupt for low limit 2.

Structure of the additional interrupt information

Table 5- 3 Structure of USI = W#16#0001

Data block name		Contents	Remark	Bytes
USI (User Structure Identifier)		W#16#0001	Additional interrupt info for hardware interrupts of the I/O module	2
The channel that triggered the hardware interrupt follows.				
	Channel	B#16#00 to B#16#n	Number of the event-triggering channel (n = number of module channels -1)	1
The event that triggered the hardware interrupt follows.				
	Event	B#16#03	Low limit violated 1	1
		B#16#04	High limit violated 1	
		B#16#05	Low limit violated 2	
		B#16#06	Violation of high limit 2	

5.3 Diagnostics alarms

A diagnostics alarm is generated and the ERROR LED flashes on the module for each diagnostics event. The diagnostics alarms can be read out in the diagnostics buffer of the CPU, for example. You can evaluate the error codes with the user program.

If the module is operated distributed with PROFIBUS DP in an ET 200MP system, you have the option to read out diagnostics data with the instruction RDREC or RD_REC using data record 0 and 1. The structure of the data records is available in the "Manual for interface module IM 155-5 DP ST (6ES7155-5BA00-0AB0)" on the Internet (https://support.industry.siemens.com/cs/ww/en/view/78324181).

Table 5- 4 Diagnostics alarms, their meaning and corrective measures

Diagnostics alarm	Error code	Meaning	Solution
Wire break	6_H	Impedance of encoder circuit too high	Use a different encoder type or modify the wiring, for example, using cables with larger cross-section
		Wire break between the module and sensor	Connect the cable
		Channel not connected (open)	• Disable diagnostics • Connect the channel
Overflow	7_H	Measuring range violated	Check the measuring range
Underflow	8_H	Measuring range violated	Check the measuring range
Parameter assignment error	10_H	• The module cannot evaluate parameters for the channel • Incorrect parameter assignment	Correct the parameter assignment
Common mode error	118_H	Valid common mode voltage exceeded	Check the wiring, e.g. sensor ground connections, use equipotential cables

Diagnostics alarms with value status (QI)

If you configure the module with value status (QI), the module always checks all errors even if the respective diagnostics is not enabled. But the module cancels the inspection as soon as it detects the first error, regardless if the respective diagnostics has been enabled or not. The result may be that enabled diagnostics may not be displayed.

Example: You have enabled "Underflow" diagnostics, but the module detects the "Wire break" diagnostics first and aborts after this error message. The "Underflow" diagnostics is not detected.

Recommendation: To ensure that all errors can be diagnosed reliably, select all check boxes under "Diagnostics".

Technical specifications 6

Technical specifications of AI 8xU/I/R/RTD BA

The following table shows the technical specifications as of 03/2019. You can find a data sheet including daily updated technical specifications on the Internet (https://support.industry.siemens.com/cs/ww/en/pv/6ES7531-7QF00-0AB0/td?dl=en).

Article number	6ES7531-7QF00-0AB0
General information	
Product type designation	AI 8xU/I/R/RTD BA
HW functional status	FS01
Firmware version	V1.0.0
• FW update possible	Yes
Product function	
• I&M data	Yes; I&M0 to I&M3
Engineering with	
• STEP 7 TIA Portal configurable/integrated as of version	V15.1 / V16
• STEP 7 configurable/integrated as of version	V5.5 SP3 / -
• PROFIBUS as of GSD version/GSD revision	V1.0 / V5.1
• PROFINET as of GSD version/GSD revision	V2.3 / -
Operating mode	
• Oversampling	No
• MSI	Yes
CiR – Configuration in RUN	
Reparameterization possible in RUN	Yes
Calibration possible in RUN	No
Power	
Power available from the backplane bus	0.85 W
Power loss	
Power loss, typ.	0.9 W

Article number	6ES7531-7QF00-0AB0
Analog inputs	
Number of analog inputs	8
• For current measurement	8
• For voltage measurement	8
• For resistance/resistance thermometer measurement	8
permissible input voltage for voltage input (destruction limit), max.	12 V; 12 V continuous, 30 V for max. 1 s
permissible input current for current input (destruction limit), max.	40 mA
Constant measurement current for resistance-type transmitter, typ.	230 ... 370 µA
Technical unit for temperature measurement adjustable	Yes; °C/°F/K
Input ranges (rated values), voltages	
• 0 to +5 V	No
• 0 to +10 V	No
• 1 V to 5 V	Yes
• Input resistance (1 V to 5 V)	10 MΩ
• -1 V to +1 V	Yes
• Input resistance (-1 V to +1 V)	10 MΩ
• -10 V to +10 V	Yes
• Input resistance (-10 V to +10 V)	10 MΩ
• -2.5 V to +2.5 V	No
• -25 mV to +25 mV	No
• -250 mV to +250 mV	No
• -5 V to +5 V	Yes
• Input resistance (-5 V to +5 V)	10 MΩ
• -50 mV to +50 mV	Yes
• Input resistance (-50 mV to +50 mV)	10 MΩ
• -500 mV to +500 mV	Yes
• Input resistance (-500 mV to +500 mV)	10 MΩ
• -80 mV to +80 mV	No

Article number	6ES7531-7QF00-0AB0
Input ranges (rated values), currents	
• 0 to 10 mA	No
• 0 to 20 mA	Yes
• Input resistance (0 to 20 mA)	25 Ω; Plus approx. 42 ohms for overvoltage protection by PTC
• -20 mA to +20 mA	Yes
• Input resistance (-20 mA to +20 mA)	25 Ω; Plus approx. 42 ohms for overvoltage protection by PTC
• 4 mA to 20 mA	Yes
• Input resistance (4 mA to 20 mA)	25 Ω; Plus approx. 42 ohms for overvoltage protection by PTC
Input ranges (rated values), thermocouples	
• Type B	No
• Type C	No
• Type E	No
• Type J	No
• Type K	No
• Type L	No
• Type N	No
• Type R	No
• Type S	No
• Type T	No
• Type U	No
• Type TXK/TXK(L) to GOST	No
Input ranges (rated values), resistance thermometer	
• Cu 10	No
• Cu 10 according to GOST	No
• Cu 50	No
• Cu 50 according to GOST	No
• Cu 100	No
• Cu 100 according to GOST	No
• Ni 10	No
• Ni 10 according to GOST	No
• Ni 100	Yes; Standard/climate
• Input resistance (Ni 100)	10 MΩ
• Ni 100 according to GOST	No

Article number	6ES7531-7QF00-0AB0
• Ni 1000	Yes; Standard/climate
• Input resistance (Ni 1000)	10 MΩ
• Ni 1000 according to GOST	No
• LG-Ni 1000	Yes; Standard/climate
• Input resistance (LG-Ni 1000)	10 MΩ
• Ni 120	No
• Ni 120 according to GOST	No
• Ni 200	No
• Ni 200 according to GOST	No
• Ni 500	No
• Ni 500 according to GOST	No
• Pt 10	No
• Pt 10 according to GOST	No
• Pt 50	No
• Pt 50 according to GOST	No
• Pt 100	Yes; Standard/climate
• Input resistance (Pt 100)	10 MΩ
• Pt 100 according to GOST	No
• Pt 1000	Yes; Standard/climate
• Input resistance (Pt 1000)	10 MΩ
• Pt 1000 according to GOST	No
• Pt 200	No
• Pt 200 according to GOST	No
• Pt 500	No
• Pt 500 according to GOST	No
Input ranges (rated values), resistors	
• 0 to 150 ohms	No
• 0 to 300 ohms	No
• 0 to 600 ohms	Yes
• Input resistance (0 to 600 ohms)	10 MΩ
• 0 to 3000 ohms	No
• 0 to 6000 ohms	Yes
• Input resistance (0 to 6000 ohms)	10 MΩ
• PTC	Yes
• Input resistance (PTC)	10 MΩ

Article number	6ES7531-7QF00-0AB0
Cable length	
• shielded, max.	200 m; 50 m at 50 mV
Analog value generation for the inputs	
Measurement principle	integrating
Integration and conversion time/resolution per channel	
• Resolution with overrange (bit including sign), max.	16 bit
• Integration time, parameterizable	Yes
• Integration time (ms)	2,5 / 16,67 / 20 / 100 ms
• Basic conversion time, including integration time (ms)	10 / 24 / 27 / 107 ms
– additional conversion time for wire-break monitoring	4 ms (to be considered in R/RTD/U 1 to 5 V measurement)
– additional conversion time for resistance measurement	8 ms
• Interference voltage suppression for interference frequency f1 in Hz	400 / 60 / 50 / 10 Hz
Smoothing of measured values	
• parameterizable	Yes
• Step: None	Yes
• Step: low	Yes
• Step: Medium	Yes
• Step: High	Yes
Encoder	
Connection of signal encoders	
• for voltage measurement	Yes
• for current measurement as 2-wire transducer	Yes; with external supply
• for current measurement as 4-wire transducer	Yes
• for resistance measurement with two-wire connection	Yes; Only for PTC
• for resistance measurement with three-wire connection	Yes; All measuring ranges except PTC; internal compensation of the cable resistances

Article number	6ES7531-7QF00-0AB0
Errors/accuracies	
Linearity error (relative to input range), (+/-)	0.1 %
Temperature error (relative to input range), (+/-)	0.006 %/K
Crosstalk between the inputs, max.	-50 dB
Repeat accuracy in steady state at 25 °C (relative to input range), (+/-)	0.1 %
Operational error limit in overall temperature range	
• Voltage, relative to input range, (+/-)	0.5 %
• Current, relative to input range, (+/-)	0.5 %
• Resistance, relative to input range, (+/-)	0.5 %
• Resistance thermometer, relative to input range, (+/-)	Ptxxx Standard: ±1.2 K, Ptxxx Climate: ±0.8 K, Nixxx Standard: ±0.8 K, Nixxx Climate: ±0.8 K
Basic error limit (operational limit at 25 °C)	
• Voltage, relative to input range, (+/-)	0.3 %
• Current, relative to input range, (+/-)	0.3 %
• Resistance, relative to input range, (+/-)	0.3 %
• Resistance thermometer, relative to input range, (+/-)	Ptxxx Standard: ±1.0 K, Ptxxx Climate: ±0.5 K, Nixxx Standard: ±0.5 K, Nixxx Climate: ±0.5 K
Interference voltage suppression for f = n x (f1 +/- 1 %), f1 = interference frequency	
• Series mode interference (peak value of interference < rated value of input range), min.	40 dB
• Common mode voltage, max.	4 V
• Common mode interference, min.	60 dB
Interrupts/diagnostics/status information	
Diagnostics function	Yes
Alarms	
• Diagnostic alarm	Yes
• Limit value alarm	Yes; two upper and two lower limit values in each case
Diagnostic messages	
• Monitoring the supply voltage	No
• Wire-break	Yes; Only for 1 ... 5 V, 4 ... 20 mA, R, and RTD
• Short-circuit	No
• Group error	No
• Overflow/underflow	Yes

Article number	6ES7531-7QF00-0AB0
Diagnostics indication LED	
• RUN LED	Yes; Green LED
• ERROR LED	Yes; Red LED
• MAINT LED	No
• Monitoring of the supply voltage (PWR-LED)	No
• Channel status display	Yes; Green LED
• for channel diagnostics	Yes; Red LED
• for module diagnostics	Yes; Red LED
Potential separation	
Potential separation channels	
• between the channels	No
• between the channels, in groups of	8
• between the channels and backplane bus	Yes
Permissible potential difference	
between the inputs (UCM)	8 V DC
Between the inputs and MANA (UCM)	4 V DC
Isolation	
Isolation tested with	707 V DC (type test)
Ambient conditions	
Ambient temperature during operation	
• horizontal installation, min.	0 °C
• horizontal installation, max.	60 °C
• vertical installation, min.	0 °C
• vertical installation, max.	40 °C
Decentralized operation	
Prioritized startup	No
Dimensions	
Width	35 mm
Height	147 mm
Depth	129 mm
Weights	
Weight, approx.	250 g

Additional information

You can learn how to calculate the cycle time of the module with an example provided on the Internet (https://support.industry.siemens.com/cs/ww/en/view109761283).

Dimensional drawing

A

The dimensional drawing of the module on the mounting rail, as well as a dimensional drawing with open front panel are provided in the appendix. Always adhere to the specified dimensions for installations in cabinets, control rooms, etc.

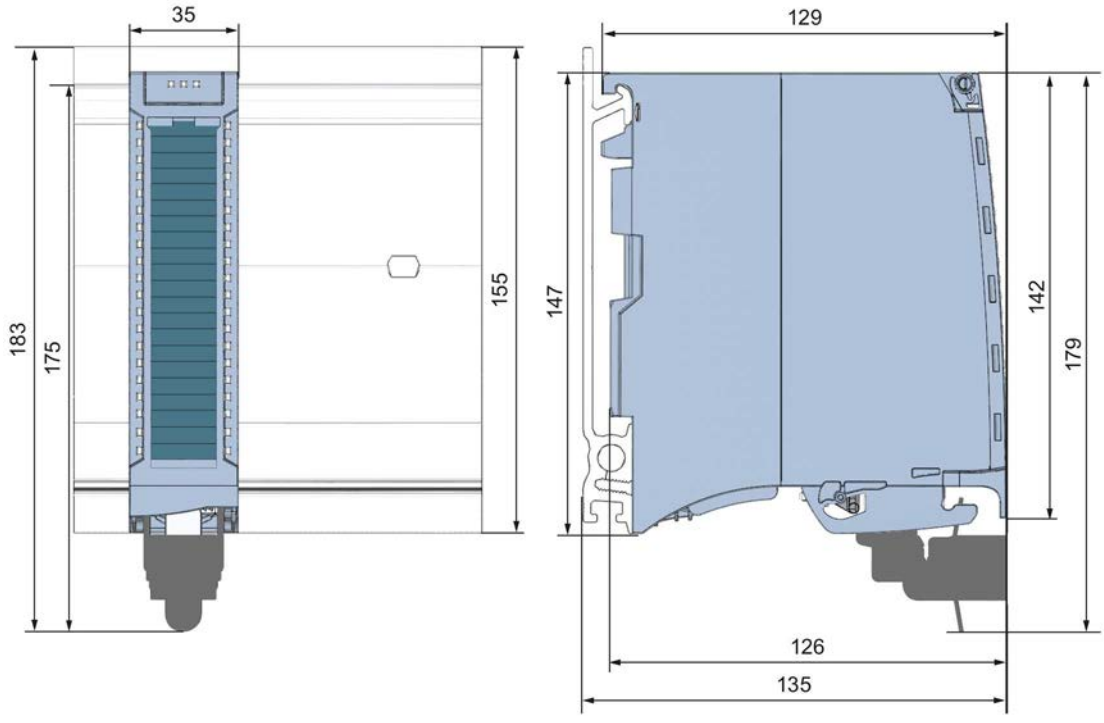

Figure A-1 Dimensional drawing of the AI 8xU/I/R/RTD BA module

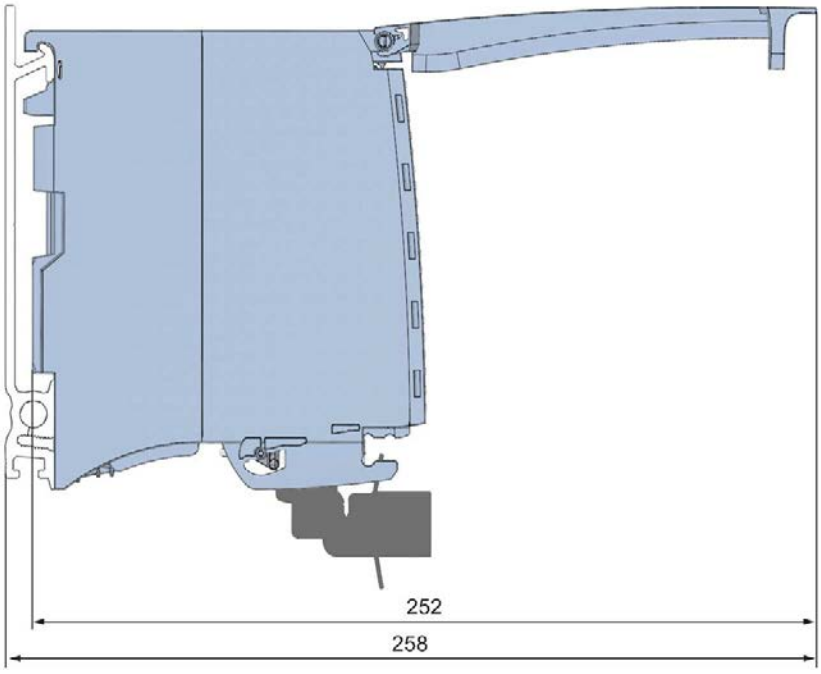

Figure A-2 Dimension drawing of the AI 8xU/I/R/RTD BA module, side view with open front cover

Parameter data records

B

B.1 Parameter assignment and structure of the parameter data records

The data records of the module have an identical structure, regardless of whether you configure the module with PROFIBUS DP or PROFINET IO.

Dependencies for configuration with GSD file

When configuring the module with a GSD file, remember that the settings of some parameters are dependent on each other. The parameters are only checked for plausibility by the module after the transfer to the module.

The following table lists the parameters that depend on one another.

Table B- 1 Dependencies of parameters for configuration with GSD file

Device-specific parameters (GSD file)	Dependent parameters
Wire break	Only for **measurement type** resistance 3-wire connection, thermal resistor RTD, voltage with **measuring range** 1 to 5 V and current with **measuring range** 4 to 20 mA.
Common mode error	Only with **measurement type** voltage and current
Measurement type resistance (3-wire-connection)	Only with **measuring range** 600 Ω and 6000 Ω.
Hardware interrupt limits	Only if hardware interrupts are enabled.
Temperature unit Kelvin (K)	Only with **measurement type** thermal resistor (RTD) standard.

Parameter assignment in the user program

The module parameters can be assigned in RUN (for example, measuring ranges of selected channels can be edited in RUN without having an effect on the other channels).

Parameter assignment in RUN

The WRREC instruction is used to transfer the parameters to the module using data records 0 to 7. The parameters set in STEP 7 do not change in the CPU, which means the parameters set in STEP 7 are still valid after a restart.

The parameters are only checked for plausibility by the module after the transfer to the module.

Output parameter STATUS

The module ignores errors that occurred during the transfer of parameters with the WRREC instruction and continues operation with the previous parameter assignment. However, a corresponding error code is written to the STATUS output parameter.

The description of the WRREC instruction and the error codes is available in the STEP 7 online help.

Operation of the module behind a PROFIBUS DP interface module

If the module is operated behind a PROFIBUS DP interface module, the parameter data records 0 and 1 are not read back. You obtain the diagnostics data records 0 and 1 with the read back parameter data records 0 and 1. You can find additional information in the Interrupts section of the manual for the PROFIBUS DP interface module on the Internet (http://support.automation.siemens.com/WW/view/en/78324181).

Assignment of data record and channel

For the configuration as a 1 x 8-channel module, the parameters are located in data records 0 to 7 and are assigned as follows:

- Data record 0 for channel 0
- Data record 1 for channel 1
- …
- Data record 6 for channel 6
- Data record 7 for channel 7

For configuration 8 x 1-channel, the module has 8 submodules with one channel each. The parameters for the channel are available in data record 0 and are assigned as follows:

- Data record 0 for channel 0 (submodule 1)
- Data record 0 for channel 1 (submodule 2)
- …
- Data record 0 for channel 6 (submodule 7)
- Data record 0 for channel 7 (submodule 8)

Address the respective submodule for data record transfer.

Data record structure

The figure below shows the structure of data record 0 for channel 0 as an example. The structure is identical for channels 1 to 7. The values in byte 0 and byte 1 are fixed and may not be changed.

Enable a parameter by setting the corresponding bit to "1".

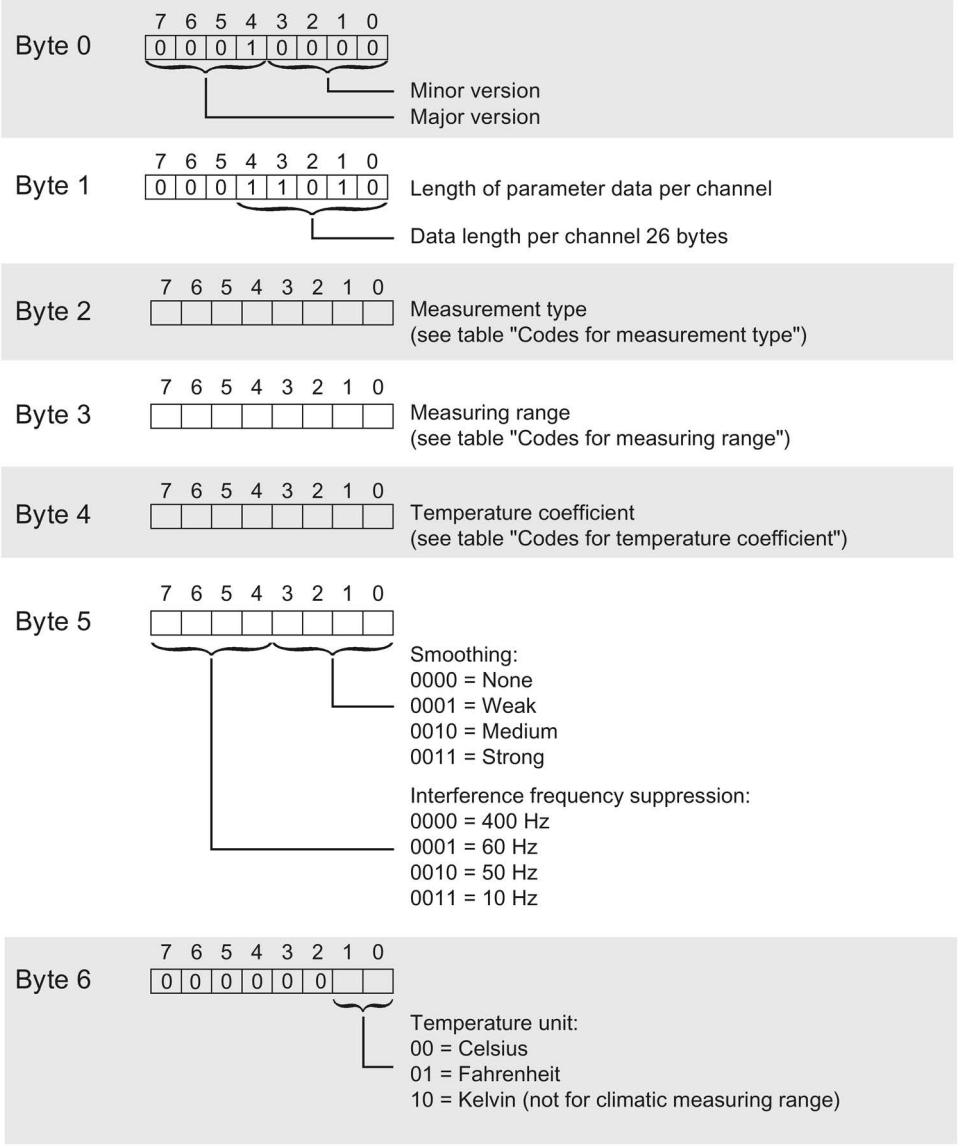

Figure B-1 Structure of data record 0: Bytes 0 to 6

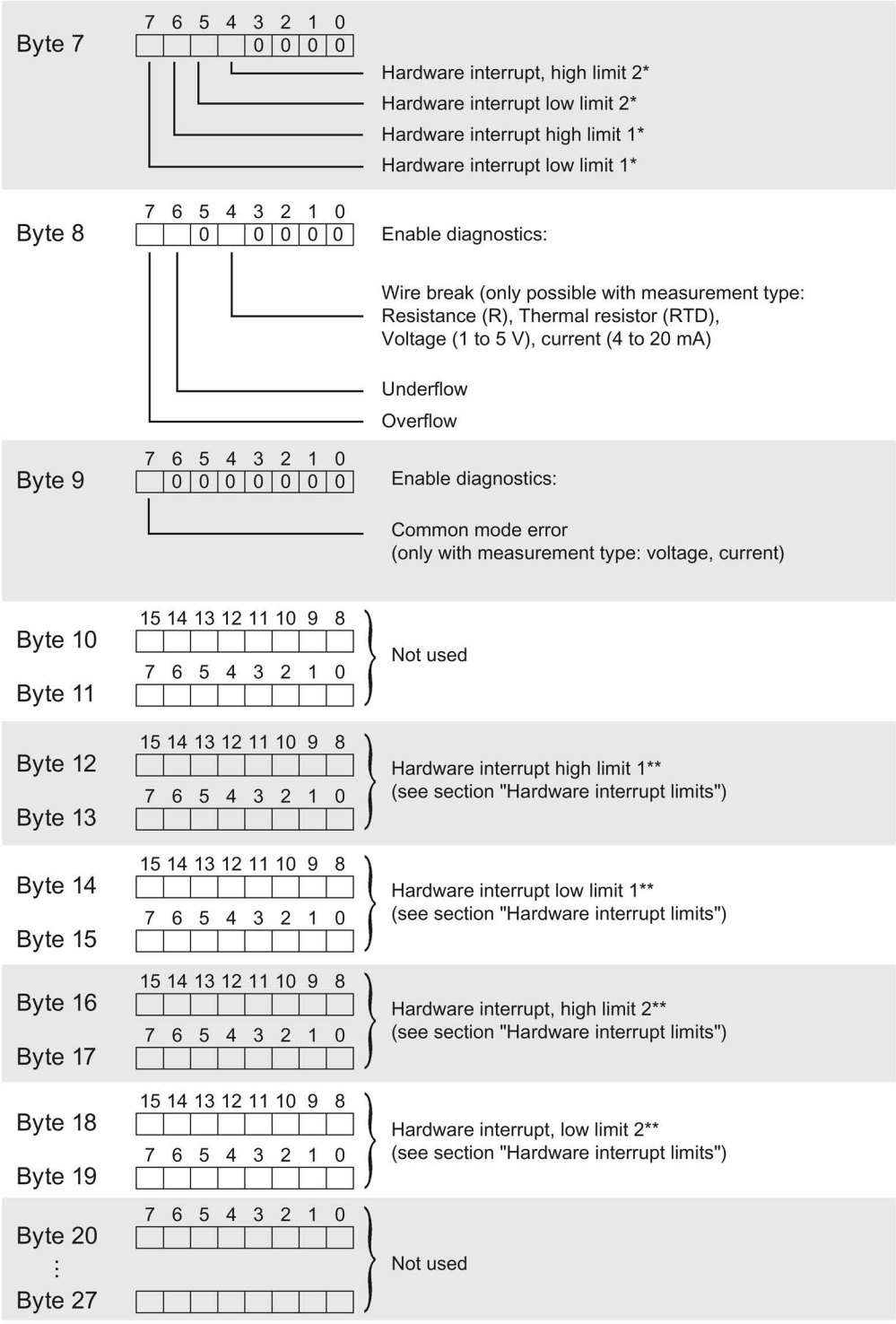

* Hardware interrupts can only be activated via data record if the channel is assigned a hardware interrupt OB in STEP 7

** High limit must be greater than low limit

Figure B-2 Structure of data record 0: Bytes 7 to 27

Codes for measurement types

The following table lists all measurement types of the analog input module along with their codes. Enter these codes at byte 2 of the data record for the corresponding channel (see the figure Structure of data record 0: Bytes 7 to 27).

Table B- 2 Code for the measurement type

Measurement type	Code
Deactivated	0000 0000
Voltage	0000 0001
Current, 2-wire transmitter	0000 0011
Current, 4-wire transmitter	0000 0010
Resistance, 3-wire-connection *)	0000 0101
Resistance, 2-wire connection **)	0000 0110
Thermal resistor linear, 3-wire connection	0000 1000

*) Only for the following measuring ranges: 600 Ω, 6 kΩ

**) only for measuring range PTC

Codes for measuring ranges

The following table lists all measuring ranges of the analog input module along with their codes. Enter these codes accordingly at byte 3 of the data record for the corresponding channel (see the figure Structure of data record 0: Bytes 7 to 27).

Table B- 3 Code for the measuring range

Measuring range	Code
Voltage	
±50 mV	0000 0001
±500 mV	0000 0100
±1 V	0000 0101
±5 V	0000 1000
±10 V	0000 1001
1 V to 5 V	0000 1010
Current, 4-wire transmitter	
0 mA to 20 mA	0000 0010
4 mA to 20 mA	0000 0011
±20 mA	0000 0100

Current, 2-wire transmitter	
4 mA to 20 mA	0000 0011
Resistor	
600 Ω	0000 0011
6 kΩ	0000 0101
PTC	0000 1111
Thermal resistor	
Pt100 Climate	0000 0000
Ni100 Climate	0000 0001
Pt100 standard	0000 0010
Ni100 standard	0000 0011
Pt1000 standard	0000 0101
Ni1000 standard	0000 0110
Pt1000 Climate	0000 1001
Ni1000 Climate	0000 1010
LG-Ni1000 standard	0001 1100
LG-Ni1000 Climate	0001 1101

Codes for temperature coefficients

The following table lists all temperature coefficients along with their codes for temperature measurements with the thermal resistors. You need to enter these codes in byte 4 of the data records 0 to 6 (see Fig. Structure of data record 0: bytes 0 to 6).

Table B- 4 Codes for temperature coefficient

Temperature coefficient	Code
Pt xxx	
0.003851	0000 0000
0.003916	0000 0001
0.003902	0000 0010
0.003920	0000 0011
Ni xxx	
0.006180	0000 1000
0.006720	0000 1001
LG-Ni	
0.005000	0000 1010

Hardware interrupt limits

The values that you can set for hardware interrupts (high/low limit) must not violate the over/underrange of the respective rated measuring range.

The following tables list the valid hardware interrupt limits. The limits depend on the selected measurement type and measuring range.

Table B- 5 Voltage limits

Voltage		
±50 mV, ±500 mV, ±1 V, ±5 V, ±10 V	1 V to 5 V	
32510	32510	High limit
-32511	-4863	Low limit

Table B- 6 Current and resistance limits

Current		Resistor	
±20 mA	4 mA to 20 mA / 0 mA to 20 mA	(all configurable measuring ranges)	
32510	32510	32510	High limit
-32511	-4863	1	Low limit

Table B- 7 Limits for thermal resistor Pt xxx Standard and Pt xxx Climatic

Thermal resistor						
Pt xxx Standard			Pt xxx Climate			
°C	°F	K	°C	°F	K	
9999	18319	12731	15499	31099	---	High limit
-2429	-4053	303	-14499	-22899	---	Low limit

Table B- 8 Limits for thermal resistor Ni xxx Standard and Ni xxx Climatic

Thermal resistor						
Ni xxx Standard			Ni xxx Climate			
°C	°F	K	°C	°F	K	
2949	5629	5681	15499	31099	---	High limit
-1049	-1569	1683	-10499	-15699	---	Low limit

Representation of analog values

C

Introduction

This appendix shows the analog values for all measuring ranges supported by the AI 8xU/I/R/RTD BA analog module.

Measured value resolution

Each analog value is written left aligned to the tags. The bits marked with "x" are set to "0".

Note

This resolution does not apply to temperature values. The digitalized temperature values are the result of a conversion in the analog module.

Table C- 1 Resolution of the analog values

Resolution in bits including sign	Values		Analog value	
	Decimal	Hexadecimal	High byte	Low byte
16	1	1_H	Sign 0 0 0 0 0 0 0	0 0 0 0 0 0 0 1

C.1 Representation of input ranges

The following tables set out the digitalized representation of the input ranges by bipolar and unipolar range. The resolution is 16 bits.

Table C- 2 Bipolar input ranges

Dec. value	Measured value in %	Data word																Range
		2^{15}	2^{14}	2^{13}	2^{12}	2^{11}	2^{10}	2^{9}	2^{8}	2^{7}	2^{6}	2^{5}	2^{4}	2^{3}	2^{2}	2^{1}	2^{0}	
32767	>117.589	0	1	1	1	1	1	1	1	1	1	1	1	1	1	1	1	Overflow
32511	117.589	0	1	1	1	1	1	1	0	1	1	1	1	1	1	1	1	Overshoot range
27649	100.004	0	1	1	0	1	1	0	0	0	0	0	0	0	0	0	1	
27648	100.000	0	1	1	0	1	1	0	0	0	0	0	0	0	0	0	0	Rated range
1	0.003617	0	0	0	0	0	0	0	0	0	0	0	0	0	0	0	1	
0	0.000	0	0	0	0	0	0	0	0	0	0	0	0	0	0	0	0	
-1	-0.003617	1	1	1	1	1	1	1	1	1	1	1	1	1	1	1	1	
-27648	-100.000	1	0	0	1	0	1	0	0	0	0	0	0	0	0	0	0	
-27649	-100.004	1	0	0	1	0	0	1	1	1	1	1	1	1	1	1	1	Undershoot range
-32512	-117.593	1	0	0	0	0	0	0	1	0	0	0	0	0	0	0	0	
-32768	<-117.593	1	0	0	0	0	0	0	0	0	0	0	0	0	0	0	0	Underflow

Table C- 3 Unipolar input ranges

Dec. value	Measured value in %	Data word																Range
		2^{15}	2^{14}	2^{13}	2^{12}	2^{11}	2^{10}	2^{9}	2^{8}	2^{7}	2^{6}	2^{5}	2^{4}	2^{3}	2^{2}	2^{1}	2^{0}	
32767	>117.589	0	1	1	1	1	1	1	1	1	1	1	1	1	1	1	1	Overflow
32511	117.589	0	1	1	1	1	1	1	0	1	1	1	1	1	1	1	1	Overshoot range
27649	100.004	0	1	1	0	1	1	0	0	0	0	0	0	0	0	0	1	
27648	100.000	0	1	1	0	1	1	0	0	0	0	0	0	0	0	0	0	
1	0.003617	0	0	0	0	0	0	0	0	0	0	0	0	0	0	0	1	Rated range
0	0.000	0	0	0	0	0	0	0	0	0	0	0	0	0	0	0	0	
-1	-0.003617	1	1	1	1	1	1	1	1	1	1	1	1	1	1	1	1	Undershoot range
-4864	-17.593	1	1	1	0	1	1	0	1	0	0	0	0	0	0	0	0	
-32768	<-17.593	1	0	0	0	0	0	0	0	0	0	0	0	0	0	0	0	Underflow

C.2 Representation of analog values in voltage measuring ranges

The following tables list the decimal and hexadecimal values (codes) of the possible voltage measuring ranges.

Table C- 4 Voltage measuring ranges ±10 V, ±5 V, ±1 V,

Values		Voltage measuring range			Range
dec	hex	±10 V	±5 V	±1 V	
32767	7FFF	>11.759 V	>5.879 V	> 1.176 V	Overflow
32511	7EFF	11.759 V	5.879 V	1.176 V	Overshoot range
27649	6C01				
27648	6C00	10 V	5 V	1 V	Rated range
20736	5100	7.5 V	3.75 V	0.75 V	
1	1	361.7 µV	180.8 µV	36.17 µV	
0	0	0 V	0 V	0 V	
-1	FFFF				
-20736	AF00	-7.5 V	-3.75 V	-0.75 V	
-27648	9400	-10 V	-5 V	-1 V	
-27649	93FF				Undershoot range
-32512	8100	-11.759 V	-5.879 V	-1.176 V	
-32768	8000	< -11.759 V	< -5.879 V	< -1.176 V	Underflow

Table C- 5 Voltage measuring ranges ±500 mV and ±50 mV

Values		Voltage measuring range		Range
dec	hex	±500 mV	±50 mV	
32767	7FFF	>587.9 mV	> 58.8 mV	Overflow
32511	7EFF	587.9 mV	58.8 mV	Overshoot range
27649	6C01			
27648	6C00	500 mV	50 mV	Rated range
20736	5100	375 mV	37.5 mA	
1	1	18.08 µV	1.81 µV	
0	0	0 mV	0 mV	
-1	FFFF			
-20736	AF00	-375 mV	-37.5 mV	
-27648	9400	-500 mV	-50 mV	
-27649	93FF			Undershoot range
-32512	8100	-587.9 mV	-58.8 mV	
-32768	8000	<-587.9 mV	< -58.8 mV	Underflow

Table C- 6 Voltage measuring range 1 to 5 V

Values		Voltage measuring range	Range
dec	hex	1 to 5 V	
32767	7FFF	>5.704 V	Overflow
32511	7EFF	5.704 V	Overshoot range
27649	6C01		
27648	6C00	5 V	Rated range
20736	5100	4 V	
1	1	1 V + 144.7 µV	
0	0	1 V	
-1	FFFF		Undershoot range
-4864	ED00	0.296 V	
-32768	8000	< 0.296 V	Underflow

C.3 Representation of analog values in the current measuring ranges

The following tables list the decimal and hexadecimal values (codes) of the possible current measuring ranges.

Table C- 7 Current measuring range ±20 mA

Values		Current measuring range	
dec	hex	±20 mA	
32767	7FFF	>23.52 mA	Overflow
32511	7EFF	23.52 mA	Overshoot range
27649	6C01		
27648	6C00	20 mA	Rated range
20736	5100	15 mA	
1	1	723.4 nA	
0	0	0 mA	
-1	FFFF		
-20736	AF00	-15 mA	
-27648	9400	-20 mA	
-27649	93FF		Undershoot range
-32512	8100	-23.52 mA	
-32768	8000	< -23.52 mA	Underflow

Table C- 8 Current measuring ranges 0 to 20 mA and 4 to 20 mA

Values		Current measuring range		
dec	hex	0 to 20 mA	4 to 20 mA	
32767	7FFF	>23.52 mA	>22.81 mA	Overflow
32511	7EFF	23.52 mA	22.81 mA	Overshoot range
27649	6C01			
27648	6C00	20 mA	20 mA	Rated range
20736	5100	15 mA	16 mA	
1	1	723.4 nA	4 mA + 578.7 nA	
0	0	0 mA	4 mA	
-1	FFFF			Undershoot range
-4864	ED00	-3.52 mA	1.185 mA	
-32768	8000	<- 3.52 mA	< 1.185 mA	Underflow

C.4 Representation of the analog values of resistance-based sensors/resistance thermometers

The following tables list the decimal and hexadecimal values (codes) of the possible resistance-based sensor ranges.

Table C- 9 Resistance sensors of 600 Ω and 6000 Ω

Values		Resistive transmitter range		
dec	hex	600 Ω	6000 Ω	
32767	7FFF	>705.53 Ω	>7055.3 Ω	Overflow
32511	7EFF	705.53 Ω	7055.3 Ω	Overshoot range
27649	6C01			
27648	6C00	600 Ω	6000 Ω	Rated range
20736	5100	450 Ω	4500 Ω	
1	1	21.70 mΩ	217 mΩ	
0	0	0 Ω	0 Ω	

The following tables list the decimal and hexadecimal values (codes) of the supported resistance thermometers.

Table C- 10 Resistance thermometers Pt 100 and Pt 1000 Standard

Pt x00 Standard in °C (1 digit = 0.1°C)	Values		Pt x00 Standard in °F (1 digit = 0.1 °F)	Values		Pt x00 Standard in K (1 digit = 0.1 K)	Values		Range
	dec	hex		dec	hex		dec	hex	
> 1000.0	32767	7FFF	> 1832.0	32767	7FFF	> 1273.2	32767	7FFF	Overflow
1000.0 : 850.1	10000 : 8501	2710 : 2135	1832.0 : 1562.1	18320 : 15621	4790 : 3D05	1273.2 : 1123.3	12732 : 11233	31BC : 2BE1	Overshoot range
850.0 : -200.0	8500 : -2000	2134 : F830	1562.0 : -328.0	15620 : -3280	3D04 : F330	1123.2 : 73.2	11232 : 732	2BE0 : 2DC	Rated range
-200.1 : -243.0	-2001 : -2430	F82F : F682	-328.1 : -405.4	-3281 : -4054	F32F : F02A	73.1 : 30.2	731 : 302	2DB : 12E	Undershoot range
< -243.0	-32768	8000	< -405.4	-32768	8000	< 30.2	32768	8000	Underflow

Table C- 11 Resistance thermometers Pt 100 and Pt 1000 Climate

Pt x00 Climate/ in °C (1 digit = 0.01 °C)	Values		Pt x00 Climate/ in °F (1 digit = 0.01 °F)	Values		Range
	dec	hex		dec	hex	
> 155.00	32767	7FFF	> 311.00	32767	7FFF	Overflow
155.00 : 130.01	15500 : 13001	3C8C : 32C9	311.00 : 266.01	31100 : 26601	797C : 67E9	Overshoot range
130.00 : -120.00	13000 : -12000	32C8 : D120	266.00 : -184.00	26600 : -18400	67E8 : B820	Rated range
-120.01 : -145.00	-12001 : -14500	D11F : C75C	-184.01 : -229.00	-18401 : -22900	B81F : A68C	Undershoot range
< -145.00	-32768	8000	< -229.00	-32768	8000	Underflow

Table C- 12 Thermal resistors Ni 100, Ni 1000, LG-Ni 1000 Standard

Ni x00 standard in °C (1 digit = 0.1 °C)	Values		Ni x00 Standard in °F (1 digit = 0.1 °F)	Values		Ni x00 Standard in K (1 digit = 0.1 K)	Values		Range
	dec	hex		dec	hex		dec	hex	
> 295.0	32767	7FFF	> 563.0	32767	7FFF	> 568.2	32767	7FFF	Overflow
295.0 : 250.1	2950 : 2501	B86 : 9C5	563.0 : 482.1	5630 : 4821	15FE : 12D5	568.2 : 523.3	5682 : 5233	1632 : 1471	Overshoot range
250.0 : -60.0	2500 : -600	9C4 : FDA8	482.0 : -76.0	4820 : -760	12D4 : FD08	523.2 : 213.2	5232 : 2132	1470 : 854	Rated range
-60.1 : -105.0	-601 : -1050	FDA7 : FBE6	-76.1 : -157.0	-761 : -1570	FD07 : F9DE	213.1 : 168.2	2131 : 1682	853 : 692	Undershoot range
< -105.0	-32768	8000	< -157.0	-32768	8000	< 168.2	32768	8000	Underflow

Table C- 13 Thermal resistors Ni 100, Ni 1000, LG-Ni 1000 Climate

Ni x00 Climate in °C (1 digit = 0.01 °C)	Values		Ni x00 Climate in °F (1 digit = 0.01 °F)	Values		Range
	dec	hex		dec	hex	
> 155.00	32767	7FFF	> 311.00	32767	7FFF	Overflow
155.00 : 130.01	15500 : 13001	3C8C : 32C9	311.00 : 266.01	31100 : 26601	797C : 67E9	Overshoot range
130.00 : -60.00	13000 : -6000	32C8 : E890	266.00 : -76.00	26600 : -7600	67E8 : E250	Rated range
-60.01 : -105.00	-6001 : -10500	E88F : D6FC	-76.01 : -157.00	-7601 : -15700	E24F : C2AC	Undershoot range
< - 105.00	-32768	8000	< - 157.00	-32768	8000	Underflow

C.5 Measured values for wire break diagnostic

Measured values on diagnostic event "wire break", dependent on diagnostics enables

Error events initiate a diagnostics entry and trigger a diagnostics interrupt if configured accordingly.

Table C- 14 Measured values for wire break diagnostic

Format	Parameter assignment	Measured values		Explanation
S7	• "Wire break" diagnostics enabled • "Overflow/Underflow" diagnostics enabled or disabled ("Wire break" diagnostics takes priority over "Overflow/Underflow" diagnostics)	32767	$7FFF_H$	"Wire break" or "Open circuit" diagnostic alarm
	• "Wire break" diagnostics disabled • "Overflow/Underflow" diagnostics enabled	-32767	8000_H	• Measured value after leaving the under-shoot range • Diagnostic alarm "Low limit violated"
	• "Wire break" diagnostics disabled • "Overflow/Underflow" diagnostics disabled	-32767	8000_H	Measured value after leaving the undershoot range

SIEMENS

Manual

SIMATIC

S7-1500 / ET 200MP

Analog Input Module AI 8xU/I/RTD/TC ST
(6ES7531-7KF00-0AB0)

Edition 08/2018

support.industry.siemens.com

SIEMENS

SIMATIC

S7-1500/ET 200MP Analog input module AI 8xU/I/RTD/TC ST (6ES7531-7KF00-0AB0)

Manual

Preface

Documentation guide 1

Product overview 2

Wiring 3

Parameters/address space 4

Interrupts/diagnostics alarms 5

Technical specifications 6

Dimensional drawing A

Parameter data records B

Representation of analog values C

08/2018

A5E03484864-AE

Legal information

Warning notice system

This manual contains notices you have to observe in order to ensure your personal safety, as well as to prevent damage to property. The notices referring to your personal safety are highlighted in the manual by a safety alert symbol, notices referring only to property damage have no safety alert symbol. These notices shown below are graded according to the degree of danger.

⚠ DANGER

indicates that death or severe personal injury **will** result if proper precautions are not taken.

⚠ WARNING

indicates that death or severe personal injury **may** result if proper precautions are not taken.

⚠ CAUTION

indicates that minor personal injury can result if proper precautions are not taken.

NOTICE

indicates that property damage can result if proper precautions are not taken.

If more than one degree of danger is present, the warning notice representing the highest degree of danger will be used. A notice warning of injury to persons with a safety alert symbol may also include a warning relating to property damage.

Qualified Personnel

The product/system described in this documentation may be operated only by **personnel qualified** for the specific task in accordance with the relevant documentation, in particular its warning notices and safety instructions. Qualified personnel are those who, based on their training and experience, are capable of identifying risks and avoiding potential hazards when working with these products/systems.

Proper use of Siemens products

Note the following:

⚠ WARNING

Siemens products may only be used for the applications described in the catalog and in the relevant technical documentation. If products and components from other manufacturers are used, these must be recommended or approved by Siemens. Proper transport, storage, installation, assembly, commissioning, operation and maintenance are required to ensure that the products operate safely and without any problems. The permissible ambient conditions must be complied with. The information in the relevant documentation must be observed.

Trademarks

All names identified by ® are registered trademarks of Siemens AG. The remaining trademarks in this publication may be trademarks whose use by third parties for their own purposes could violate the rights of the owner.

Disclaimer of Liability

We have reviewed the contents of this publication to ensure consistency with the hardware and software described. Since variance cannot be precluded entirely, we cannot guarantee full consistency. However, the information in this publication is reviewed regularly and any necessary corrections are included in subsequent editions.

Siemens AG
Division Digital Factory
Postfach 48 48
90026 NÜRNBERG
GERMANY

A5E03484864-AE
℗ 07/2018 Subject to change

Copyright © Siemens AG 2014 - 2018.
All rights reserved

Preface

Purpose of the documentation

This manual supplements the system manual S7-1500/ET 200MP (https://support.industry.siemens.com/cs/ww/en/view/59191792).

Functions that relate in general to the systems are described in this system manual.

The information provided in this manual and in the system/function manuals supports you in commissioning the systems.

Changes compared to previous version

Compared to the previous version, this manual contains the following changes:

- New licensing conditions and copyright information of the Open Source Software
- New technical specifications

Conventions

The term "CPU" is used in this manual both for the CPUs of the S7-1500 automation system, as well as for interface modules of the ET 200MP distributed I/O system.

Please also observe notes marked as follows:

Note

A note contains important information on the product described in the documentation, on the handling of the product or on the section of the documentation to which particular attention should be paid.

Security information

Siemens provides products and solutions with industrial security functions that support the secure operation of plants, systems, machines and networks.

In order to protect plants, systems, machines and networks against cyber threats, it is necessary to implement – and continuously maintain – a holistic, state-of-the-art industrial security concept. Siemens' products and solutions constitute one element of such a concept.

Customers are responsible for preventing unauthorized access to their plants, systems, machines and networks. Such systems, machines and components should only be connected to an enterprise network or the internet if and to the extent such a connection is necessary and only when appropriate security measures (e.g. firewalls and/or network segmentation) are in place.

For additional information on industrial security measures that may be implemented, please visit (https://www.siemens.com/industrialsecurity).

Siemens' products and solutions undergo continuous development to make them more secure. Siemens strongly recommends that product updates are applied as soon as they are available and that the latest product versions are used. Use of product versions that are no longer supported, and failure to apply the latest updates may increase customers' exposure to cyber threats.

To stay informed about product updates, subscribe to the Siemens Industrial Security RSS Feed under (https://www.siemens.com/industrialsecurity).

Open Source Software

Open-source software is used in the firmware of the I/O modules. Open Source Software is provided free of charge. We are liable for the product described, including the open-source software contained in it, pursuant to the conditions applicable to the product. Siemens accepts no liability for the use of the open source software over and above the intended program sequence, or for any faults caused by modifications to the software.

For legal reasons, we are obliged to publish the original text of the license conditions and copyright notices. Please read the information relating to this on the Internet (https://support.industry.siemens.com/cs/ww/en/view/109757558).

Table of contents

Preface 3
1 Documentation guide 6
2 Product overview 10
2.1 Properties 10
3 Wiring 13
4 Parameters/address space 21
4.1 Measuring types and ranges 21
4.2 Parameters 24
4.3 Declaration of parameters 27
4.4 Address space 30
5 Interrupts/diagnostics alarms 36
5.1 Status and error displays 36
5.2 Interrupts 39
5.3 Diagnostics alarms 41
6 Technical specifications 42
A Dimensional drawing 52
B Parameter data records 54
B.1 Parameter assignment and structure of the parameter data records 54
B.2 Structure of a data record for dynamic reference temperature 65
C Representation of analog values 67
C.1 Representation of input ranges 68
C.2 Representation of analog values in voltage measuring ranges 69
C.3 Representation of analog values in the current measuring ranges 71
C.4 Representation of the analog values of resistance-based sensors/resistance thermometers 72
C.5 Representation of analog values for thermocouples 75

Documentation guide

1

The documentation for the SIMATIC S7-1500 automation system and the SIMATIC ET 200MP distributed I/O system is arranged into three areas.
This arrangement enables you to access the specific content you require.

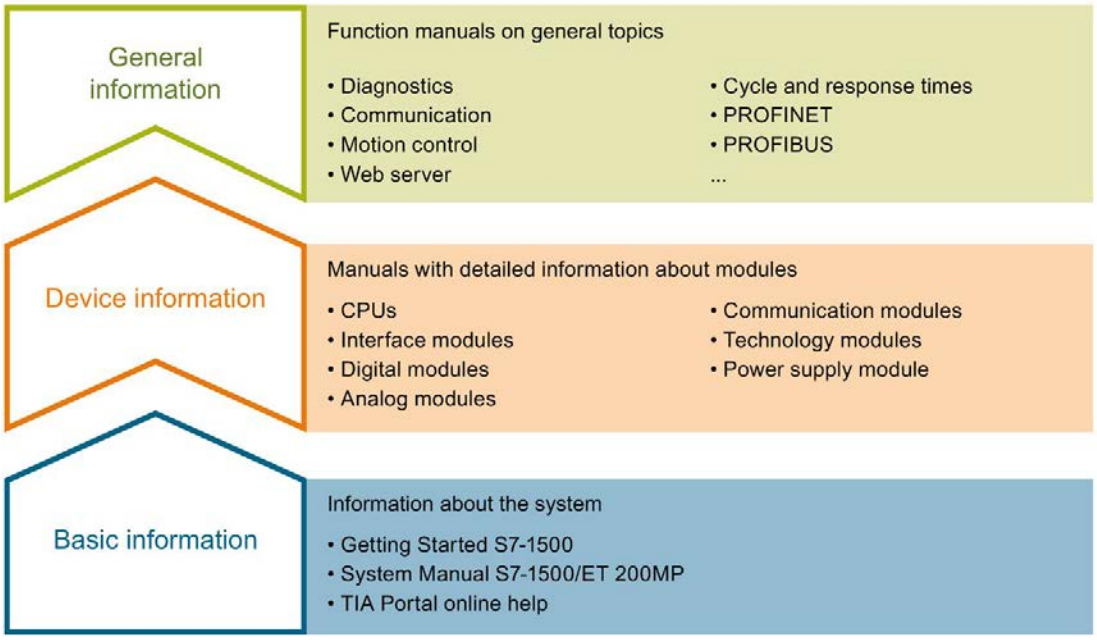

Basic information

The System Manual and Getting Started describe in detail the configuration, installation, wiring and commissioning of the SIMATIC S7-1500 and ET 200MP systems. The STEP 7 online help supports you in the configuration and programming.

Device information

Product manuals contain a compact description of the module-specific information, such as properties, wiring diagrams, characteristics and technical specifications.

General information

The function manuals contain detailed descriptions on general topics regarding the SIMATIC S7-1500 and ET 200MP systems, e.g. diagnostics, communication, motion control, Web server, OPC UA.

You can download the documentation free of charge from the Internet (https://support.industry.siemens.com/cs/ww/en/view/109742691).

Changes and supplements to the manuals are documented in a Product Information.

You can download the product information free of charge from the Internet (https://support.industry.siemens.com/cs/us/en/view/68052815).

Manual Collection S7-1500/ET 200MP

The Manual Collection contains the complete documentation on the SIMATIC S7-1500 automation system and the ET 200MP distributed I/O system gathered together in one file.

You can find the Manual Collection on the Internet (https://support.industry.siemens.com/cs/ww/en/view/86140384).

SIMATIC S7-1500 comparison list for programming languages

The comparison list contains an overview of which instructions and functions you can use for which controller families.

You can find the comparison list on the Internet (https://support.industry.siemens.com/cs/ww/en/view/86630375).

"mySupport"

With "mySupport", your personal workspace, you make the best out of your Industry Online Support.

In "mySupport", you can save filters, favorites and tags, request CAx data and compile your personal library in the Documentation area. In addition, your data is already filled out in support requests and you can get an overview of your current requests at any time.

You must register once to use the full functionality of "mySupport".

You can find "mySupport" on the Internet (https://support.industry.siemens.com/My/ww/en).

"mySupport" - Documentation

In the Documentation area in "mySupport" you can combine entire manuals or only parts of these to your own manual.
You can export the manual as PDF file or in a format that can be edited later.

You can find "mySupport" - Documentation on the Internet (http://support.industry.siemens.com/My/ww/en/documentation).

"mySupport" - CAx data

In the CAx data area in "mySupport", you can access the current product data for your CAx or CAe system.

You configure your own download package with a few clicks.

In doing so you can select:

- Product images, 2D dimension drawings, 3D models, internal circuit diagrams, EPLAN macro files
- Manuals, characteristics, operating manuals, certificates
- Product master data

You can find "mySupport" - CAx data on the Internet (http://support.industry.siemens.com/my/ww/en/CAxOnline).

Application examples

The application examples support you with various tools and examples for solving your automation tasks. Solutions are shown in interplay with multiple components in the system - separated from the focus on individual products.

You will find the application examples on the Internet (https://support.industry.siemens.com/sc/ww/en/sc/2054).

TIA Selection Tool

With the TIA Selection Tool, you can select, configure and order devices for Totally Integrated Automation (TIA).
This tool is the successor of the SIMATIC Selection Tool and combines the known configurators for automation technology into one tool.
With the TIA Selection Tool, you can generate a complete order list from your product selection or product configuration.

You can find the TIA Selection Tool on the Internet (http://w3.siemens.com/mcms/topics/en/simatic/tia-selection-tool).

SIMATIC Automation Tool

You can use the SIMATIC Automation Tool to perform commissioning and maintenance activities simultaneously on various SIMATIC S7 stations as a bulk operation independent of the TIA Portal.

General function overview:

- Network browsing and creation of a table showing the accessible devices in the network.
- Flashing of device LEDs or HMI display to locate a device
- Downloading of addresses (IP, subnet, gateway) to a device
- Downloading the PROFINET name (station name) to a device
- Placing a CPU in RUN or STOP mode
- Setting the time in a CPU to the current time of your PG/PC
- Downloading a new program to a CPU or an HMI device
- Downloading from CPU, downloading to CPU or deleting recipe data from a CPU
- Downloading from CPU or deleting data log data from a CPU
- Backup/restore of data from/to a backup file for CPUs and HMI devices
- Downloading service data from a CPU
- Reading the diagnostics buffer of a CPU
- Performing a CPU memory reset
- Resetting devices to factory settings
- Downloading a firmware update to a device

You can find the SIMATIC Automation Tool on the Internet (https://support.industry.siemens.com/cs/ww/en/view/98161300).

PRONETA

With SIEMENS PRONETA (PROFINET network analysis), you analyze the PROFINET network during commissioning. PRONETA features two core functions:

- The topology overview independently scans PROFINET network and all connected components.
- The IO check is a fast test of the wiring and the module configuration of a system.

You can find SIEMENS PRONETA on the Internet (https://support.industry.siemens.com/cs/ww/en/view/67460624).

SINETPLAN

SINETPLAN, the Siemens Network Planner, supports you in planning automation systems and networks based on PROFINET. The tool facilitates professional and predictive dimensioning of your PROFINET installation as early as in the planning stage. In addition, SINETPLAN supports you during network optimization and helps you to exploit network resources optimally and to plan reserves. This helps to prevent problems in commissioning or failures during productive operation even in advance of a planned operation. This increases the availability of the production plant and helps improve operational safety.

The advantages at a glance

- Network optimization thanks to port-specific calculation of the network load
- Increased production availability thanks to online scan and verification of existing systems
- Transparency before commissioning through importing and simulation of existing STEP 7 projects
- Efficiency through securing existing investments in the long term and optimal exploitation of resources

You can find SINETPLAN on the Internet (https://www.siemens.com/sinetplan).

Product overview

2

2.1 Properties

Article number

6ES7531-7KF00-0AB0

View of the module

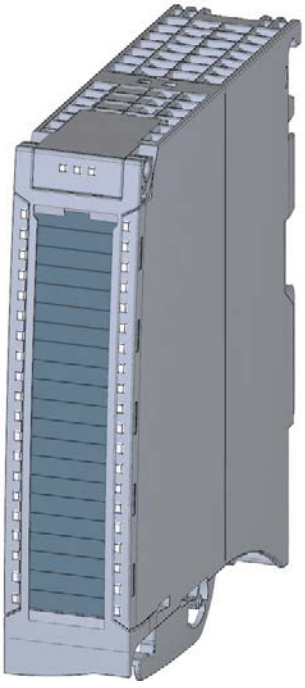

Figure 2-1 View of the AI 8xU/I/RTD/TC ST module

Properties

The module has the following technical properties:

- 8 analog inputs
- Voltage measurement type can be set per channel
- Current measurement type can be set per channel
- Measuring type resistance adjustable for channel 0, 2, 4 and 6
- Measuring type resistance thermometers (RTD) adjustable for channel 0, 2, 4 and 6
- Thermocouple (TC) measurement type can be set per channel
- Resolution 16 bits including sign
- Configurable diagnostics (per channel)
- Hardware interrupt on limit violation can be set per channel (two low and two high limits per channel)

The module supports the following functions:

Table 2- 1 Version dependencies of the module functions

Function	Firmware version of the module	Configuration software	
		STEP 7 (TIA Portal)	GSD file in STEP 7 (TIA Portal) V12 or higher, or STEP 7 V5.5 SP3 or higher
Firmware update	V1.0.0 or higher	V12 or higher	X
Identification data I&M0 to I&M3	V1.0.0 or higher	V12 or higher	X
Parameter assignment in RUN	V1.0.0 or higher	V12 or higher	X
Isochronous mode	V1.0.0 or higher	V12 or higher	---
Calibration in runtime	V1.0.0 or higher	V12 or higher	X
Module-internal Shared Input (MSI)	V2.0.0 or higher	V13 Update 3 or higher (PROFINET IO only)	X (PROFINET IO only)
Configurable submodules / submodules for Shared Device	V2.0.0 or higher	V13 Update 3 or higher (PROFINET IO only)	X (PROFINET IO only)
Configurable after interface module IM 155-5 DP ST	V2.0.0 or higher	V13 or higher	X

You can configure the module with STEP 7 (TIA Portal) and with a GSD file.

Compatibility

The following table shows the compatibility of the modules and the dependencies between hardware functional status (FS) and firmware version (FW) used:

Hardware functional status	Firmware version	Note
FS01	V1.0.0 to V2.0.x	Upgrade to downgrade possible between V1.0.0 and V2.0.x
FS02	V1.0.0 to V2.0.x	
FS03	V2.1.0 to V2.1.x	Upgrade to downgrade possible between V2.1.0 and V2.1.x
FS04	V2.2.0 or higher	Upgrade and downgrade possible between V2.2.0 and higher

Accessories

The following accessories are supplied with the module and can also be ordered separately as spare parts:

- Shield bracket
- Shield terminal
- Power supply element
- Labeling strips
- U connector
- Universal front door

Other components

The following component can be ordered separately:

Front connectors, including potential jumpers and cable ties

You can find additional information on accessories in the system manual S7-1500/ET 200MP (https://support.industry.siemens.com/cs/ww/en/view/59191792).

Wiring 3

This section contains the block diagram of the module and outlines various connection options.

You can find information on wiring the front connector, creating a cable shield, etc. in the Wiring section of the system manual S7-1500/ET 200MP (https://support.industry.siemens.com/cs/ww/en/view/59191792).

You can find additional information on compensating the reference junction temperature in the function manual Analog value processing (http://support.automation.siemens.com/WW/view/en/67989094), the structure of a data record in the section Structure of a data record for dynamic reference temperature (Page 65).

Note

- You may use and combine the different wiring options for all channels.
- Do not insert the potential jumpers supplied with the front connector.

Abbreviations used

Meaning of the abbreviations used in the following figures:

U_n+/U_n-	Voltage input channel n (voltage only)
M_n+/M_n-	Measuring input channel n
I_n+/I_n-	Current input channel n (current only)
$I_{c\,n}$+/$I_{c\,n}$-	Current output for RTD, channel n
U_{Vn}	Supply voltage at channel n for 2-wire transmitters (2WMT)
Comp+/Comp-	Compensation input
I_{Comp}+/I_{Comp}-	Current output for compensation
L+	Connection for supply voltage
M	Ground connection
M_{ANA}	Reference potential of the analog circuit

Pin assignment for the power supply element

The power supply element is plugged onto the front connector for powering the analog module. Wire the supply voltage to terminals 41 (L+) and 44 (M). You can use terminals 42 (L+) and 43 (M) to loop the potential to the next module.

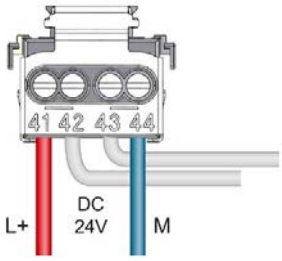

Figure 3-1 Power supply element wiring

Block diagram and pin assignment for voltage measurement

The example in the following figure shows the pin assignment for voltage measurement.

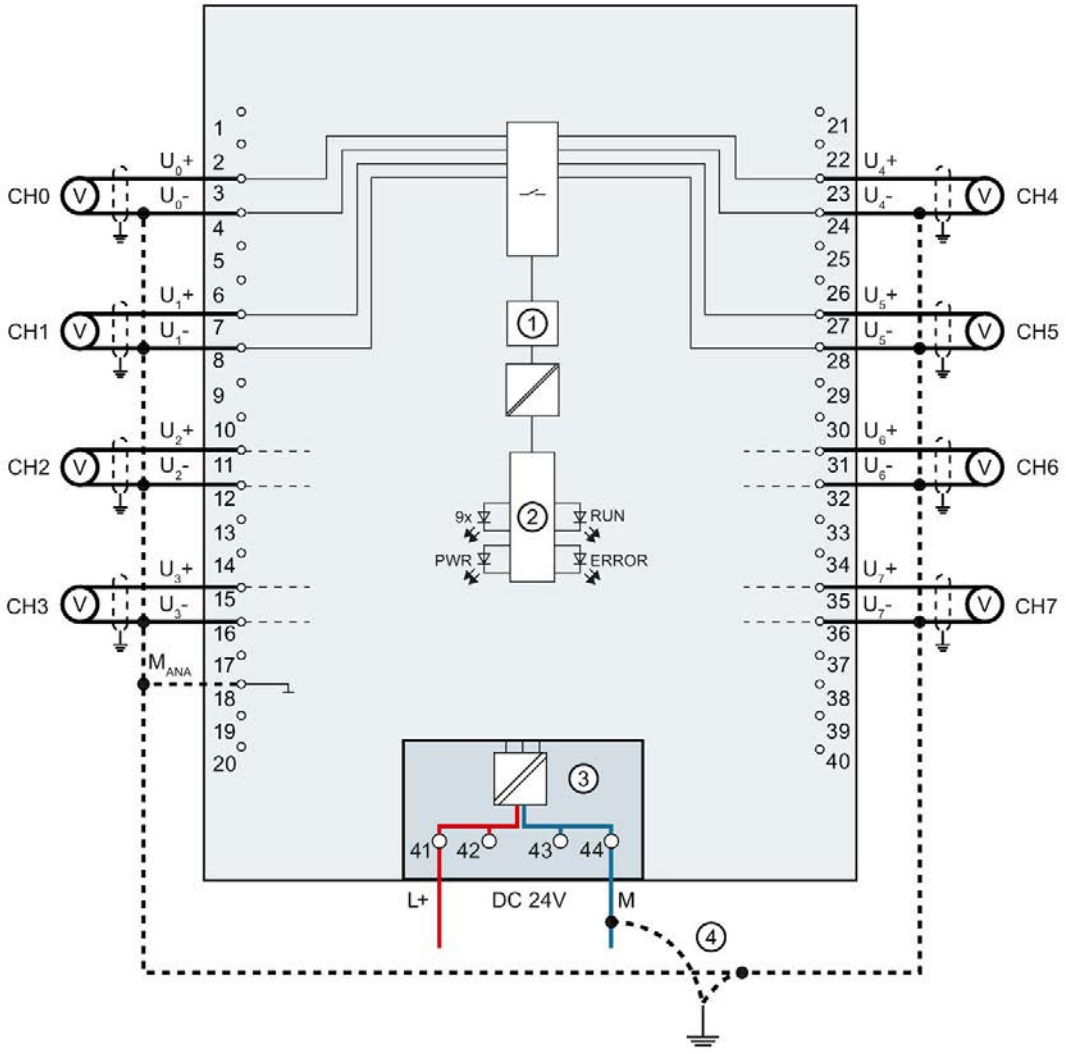

①	Analog-to-digital converter (ADC)	CHx	Channel or 9 x channel status (green/red)
②	Backplane bus interface	RUN	Status display LED (green)
③	Supply voltage via power supply element	ERROR	Error display LED (red)
④	Equipotential bonding cable (optional)	PWR	LED for power supply (green)

Figure 3-2 Block diagram and pin assignment for voltage measurement

Connection: 4-wire transmitters for current measurement

The example in the following figure shows the pin assignment for current measurement with 4-wire transmitters.

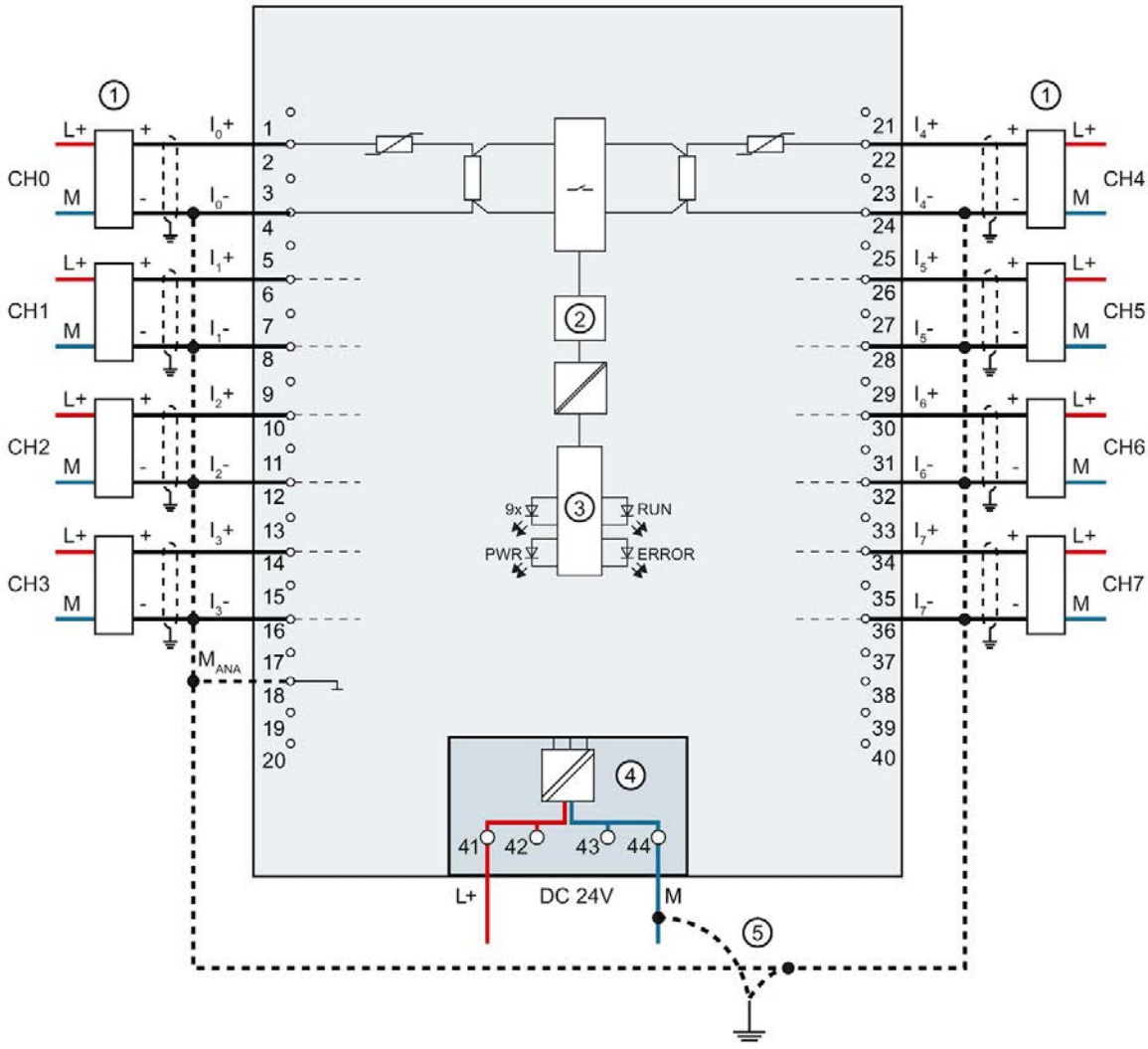

①	Wiring 4-wire transmitter	CHx	Channel or 9 x channel status (green/red)
②	Analog-to-digital converter (ADC)	RUN	Status display LED (green)
③	Backplane bus interface	ERROR	Error display LED (red)
④	Supply voltage via power supply element	PWR	LED for power supply (green)
⑤	Equipotential bonding cable (optional)		

Figure 3-3 Block diagram and pin assignment for current measurement

Connection: 2-wire transmitters for current measurement

The example in the following figure shows the pin assignment for current measurement with 2-wire transmitters.

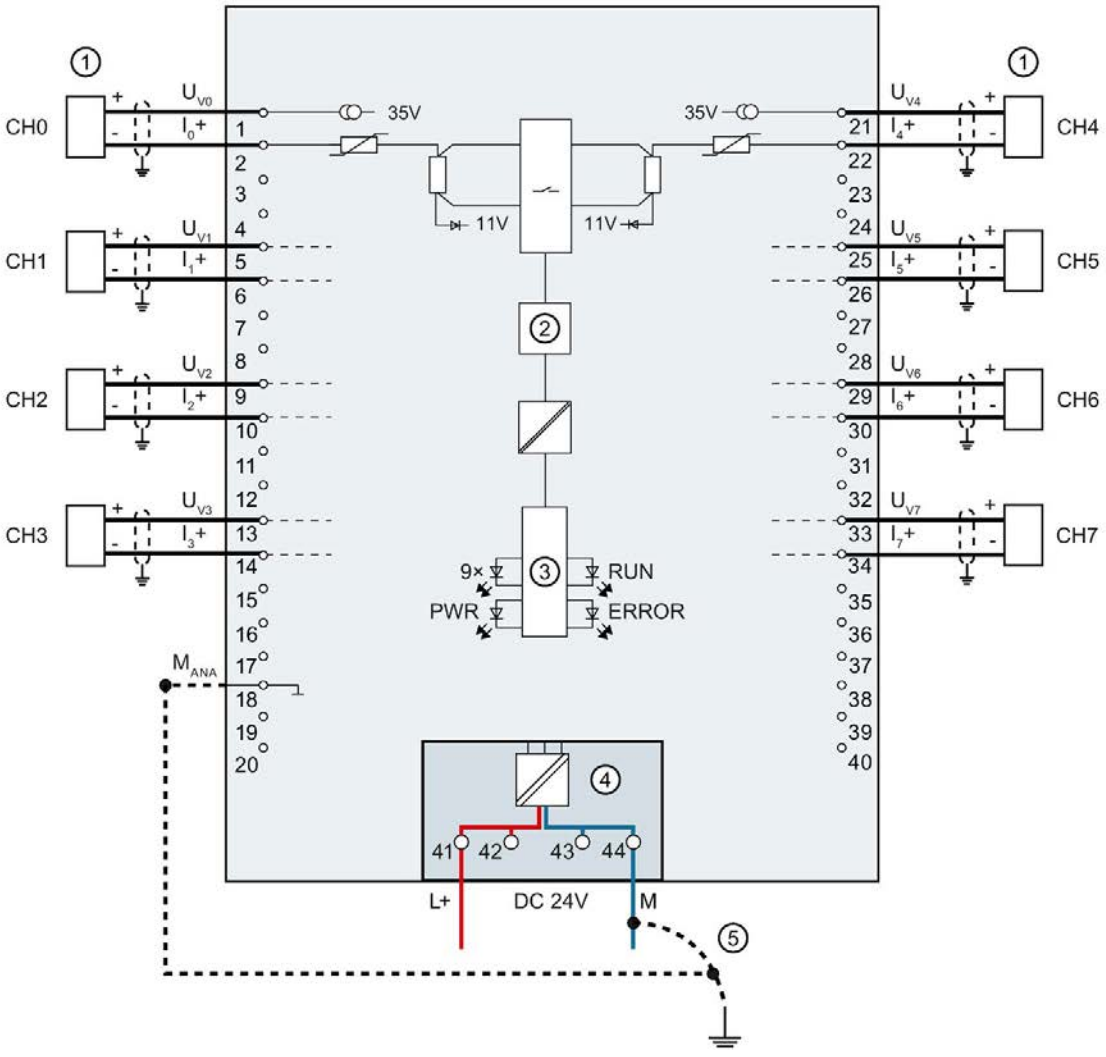

①	Wiring 2-wire transmitter	CHx	Channel or 9 x channel status (green/red)
②	Analog-to-digital converter (ADC)	RUN	Status display LED (green)
③	Backplane bus interface	ERROR	Error display LED (red)
④	Supply voltage via power supply element	PWR	LED for power supply (green)
⑤	Equipotential bonding cable (optional)		

Figure 3-4 Block diagram and pin assignment for current measurement

Connection: 2-, 3- and 4-wire connection of resistance-based sensors or thermal resistors (RTD)

The example in the following figure shows the pin assignment for 2-, 3- and 4-wire connections of resistance-based sensors or thermal resistors.

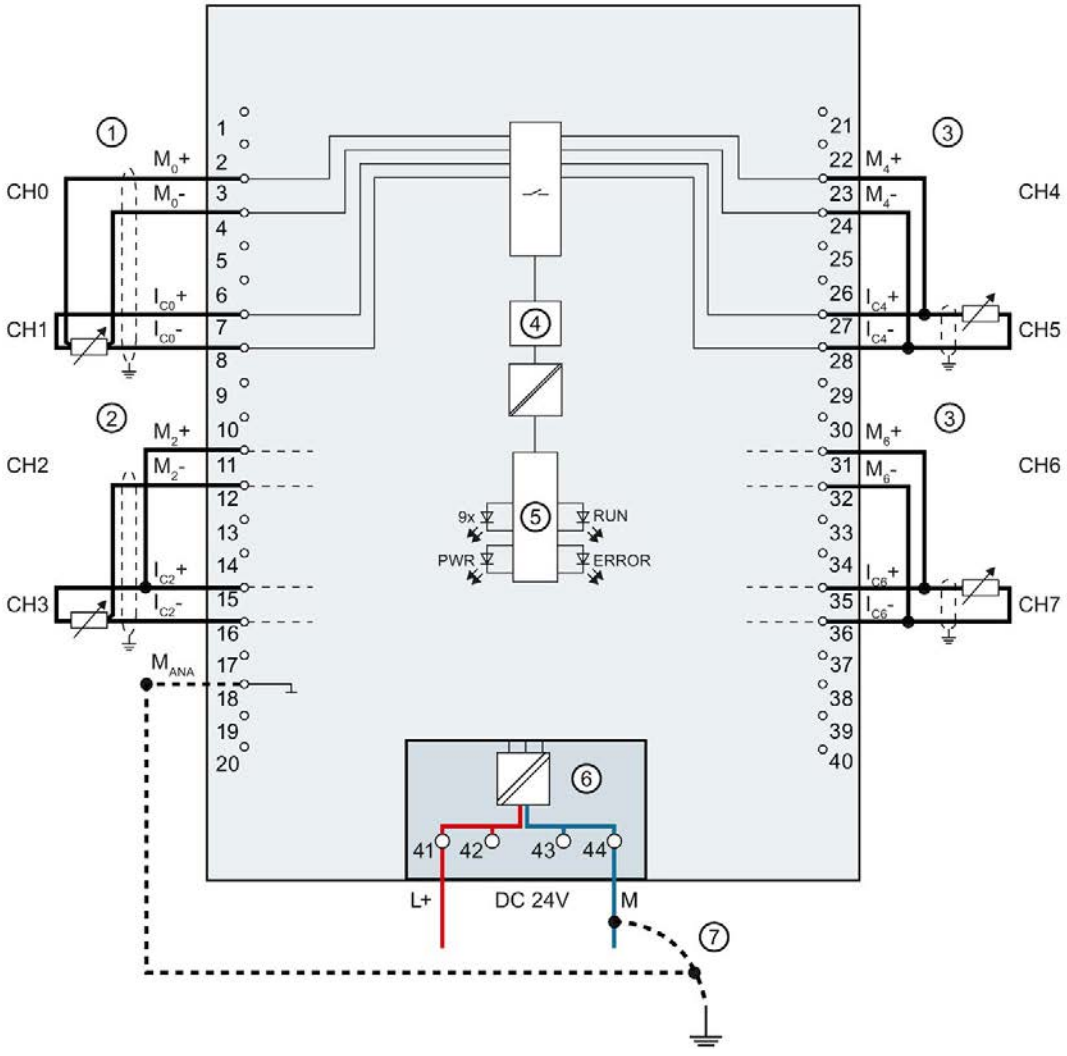

①	4-wire connection	CHx	Channel or 9 x channel status (green/red)
②	3-wire connection	RUN	Status display LED (green)
③	2-wire connection	ERROR	Error display LED (red)
④	Analog-to-digital converter (ADC)	PWR	LED for power supply (green)
⑤	Backplane bus interface		
⑥	Supply voltage via power supply element		
⑦	Equipotential bonding cable (optional)		

Figure 3-5 Block diagram and pin assignment for 2-, 3- and 4-wire connections

Connection: Non-grounded thermocouples for external/internal compensation and connection of a resistance thermometer (RTD) at the reference channel

The following figure shows an example of the pin assignment of non-grounded thermocouples for external/internal compensation and the connection of a resistance thermometer (RTD) at the reference channel.

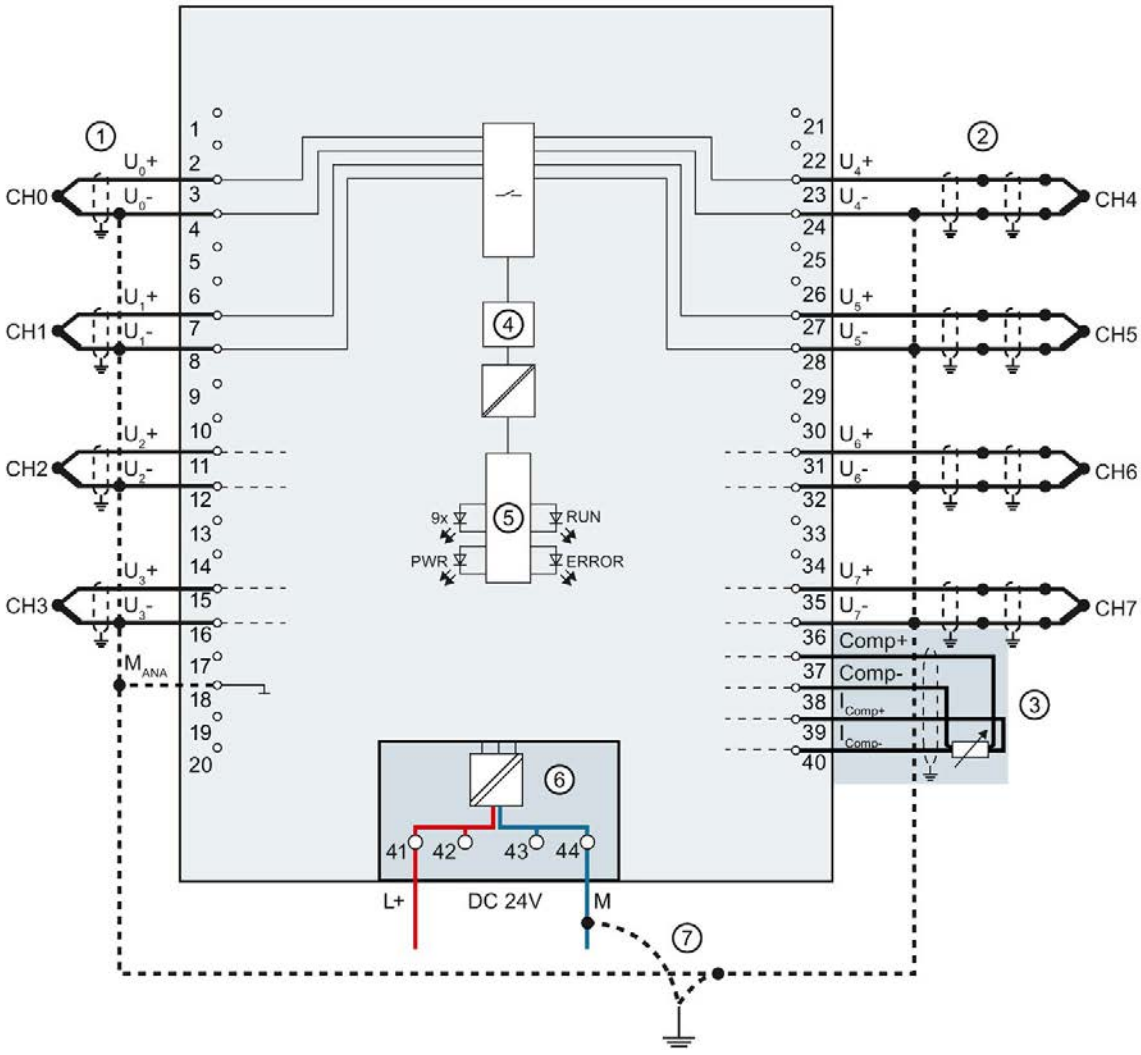

①	Wiring of a thermocouple (non-grounded) for internal compensation	CHx	Channel or 9 x channel status (green/red)
②	Wiring of a thermocouple (non-grounded) for external compensation	RUN	Status display LED (green)
③	Wiring of a resistance thermometer (RTD) at the reference channel	ERROR	Error display LED (red)
④	Analog-to-digital converter (ADC)	PWR	LED for power supply (green)
⑤	Backplane bus interface		
⑥	Supply voltage via power supply element		
⑦	Equipotential bonding cable (optional)		

Figure 3-6 Block diagram and pin assignment for non-grounded thermocouples and resistance thermometers

Connection: Grounded thermocouples for internal compensation

The following figure shows an example of the pin assignment for grounded thermocouples for internal compensation.

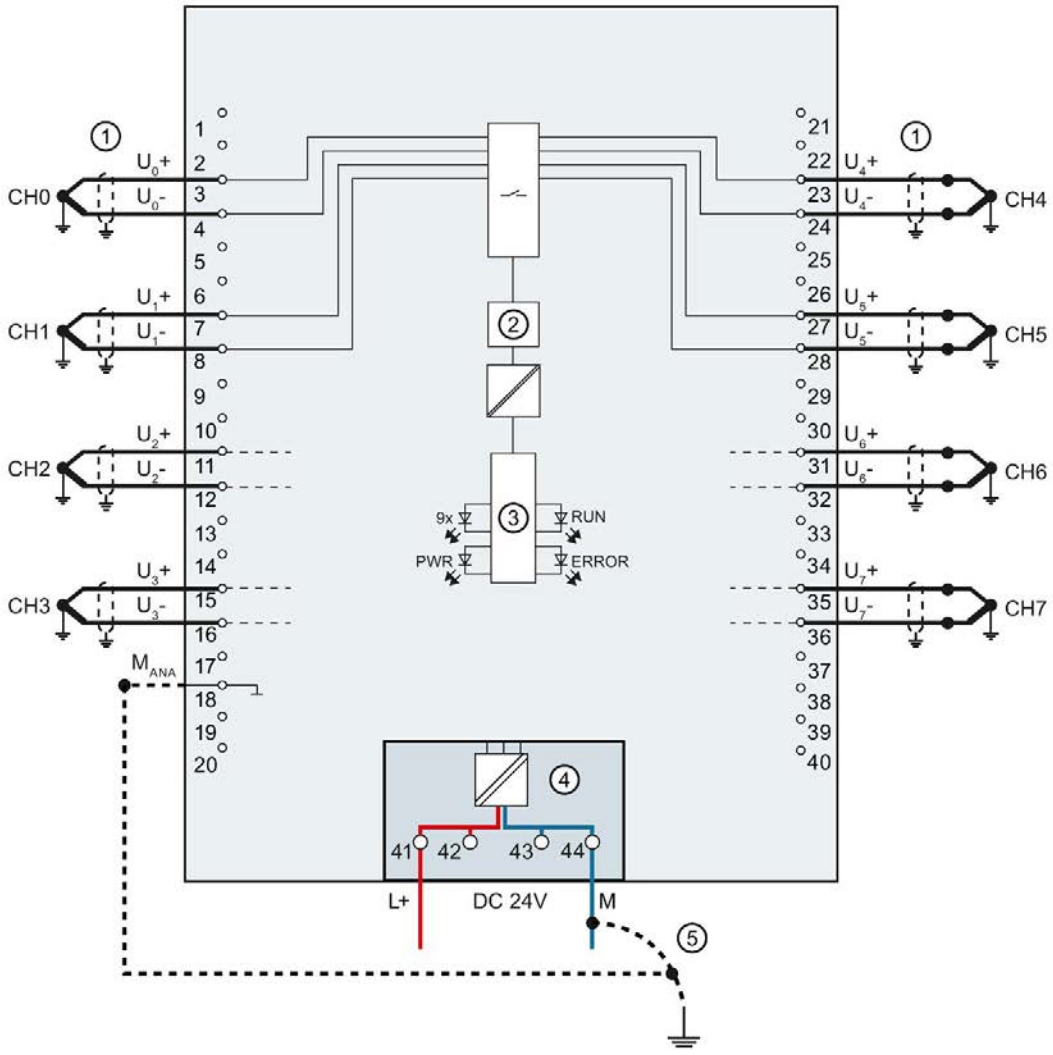

①	Wiring of a thermocouple (grounded) for internal compensation	CHx	Channel or 9 x channel status (green/red)
②	Analog-to-digital converter (ADC)	RUN	Status display LED (green)
③	Backplane bus interface	ERROR	Error display LED (red)
④	Supply voltage via power supply element	PWR	LED for power supply (green)
⑤	Equipotential bonding cable (optional)		

Figure 3-7 Block diagram and pin assignment for grounded thermocouples

Parameters/address space 4

4.1 Measuring types and ranges

Introduction

The module is set to voltage measurement type with measuring range ±10 V by default. You need to reassign the module parameters with STEP 7 if you want to use a different measurement type or range.

Deactivate the input if it is not going to be used. The module cycle time is shortened and the interference factors that lead to failure of the module (for example, triggering a hardware interrupt) are avoided.

The following table shows the measurement types and the respective measuring range.

Table 4- 1 Measurement types and measuring ranges

Measurement type	Measuring range	Representation of analog values
Voltage	±50 mV ±80 mV ±250 mV ±500 mV ±1 V ±2.5 V 1 V to 5 V ±5 V ±10 V	See Representation of analog values in voltage measuring ranges (Page 69)
Current 2WMT (2-wire transmitter)	4 mA to 20 mA	See Representation of analog values in the current measuring ranges (Page 71)
Current 4WMT (4-wire transmitter)	0 mA to 20 mA 4 mA to 20 mA ±20 mA	
Resistor (2-wire connection)	PTC	See Representation of the analog values of resistance-based sensors/resistance thermometers (Page 72)
Resistor (3-wire connection) (4-wire connection)	150 Ω 300 Ω 600 Ω 6000 Ω	

Measurement type	Measuring range	Representation of analog values
Thermal resistor RTD (3-wire connection) (4-wire connection)	PT100 Standard/Climate PT200 Standard/Climate PT500 Standard/Climate PT1000 Standard/Climate Ni100 Standard/Climate Ni1000 Standard/Climate LG-Ni1000 Standard/Climatic	
Thermocouple (TC)	Type B Type E Type J Type K Type N Type R Type S Type T	See Representation of analog values for thermocouples (Page 75)
Disabled	-	-

The tables of the input ranges, overflow, underrange, etc. are available in the appendix Representation of analog values (Page 67).

Using PTC resistors

PTC resistors are suitable for temperature monitoring of electrical devices, such as motors, drives, and transformers.

Use Type A PTC resistors (PTC thermistor) in accordance with DIN/VDE 0660, part 302. In doing so, follow these steps:

1. Choose "Resistor (2-wire terminal)" and "PTC" in STEP 7.
2. Connect the PTC using 2-wire connection technology.

If you enable the "Underflow" diagnostics in STEP 7, it will be signaled for resistance values <18 Ω. In this case, this diagnostic signifies "Short-circuit in the wiring".

The following figure shows the address space assignment for the AI 8xU/I/RTD/TC ST module with PTC resistors.

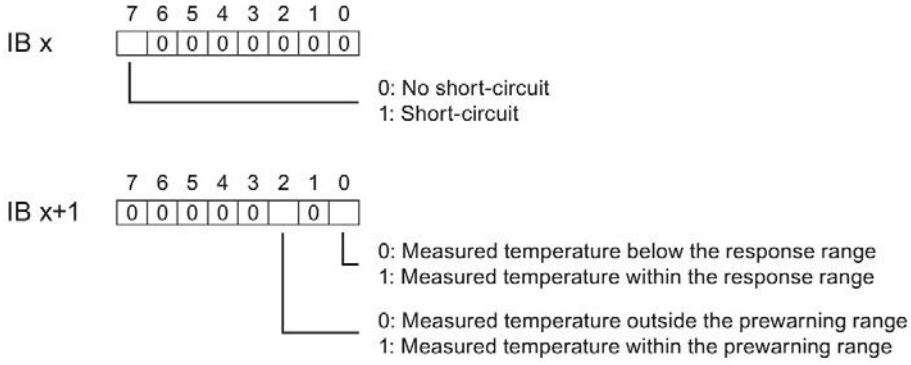

Figure 4-1 Address space for the AI 8xU/I/RTD/TC ST module with PTC resistors

The diagram below shows the temperature profile and the corresponding switching points.

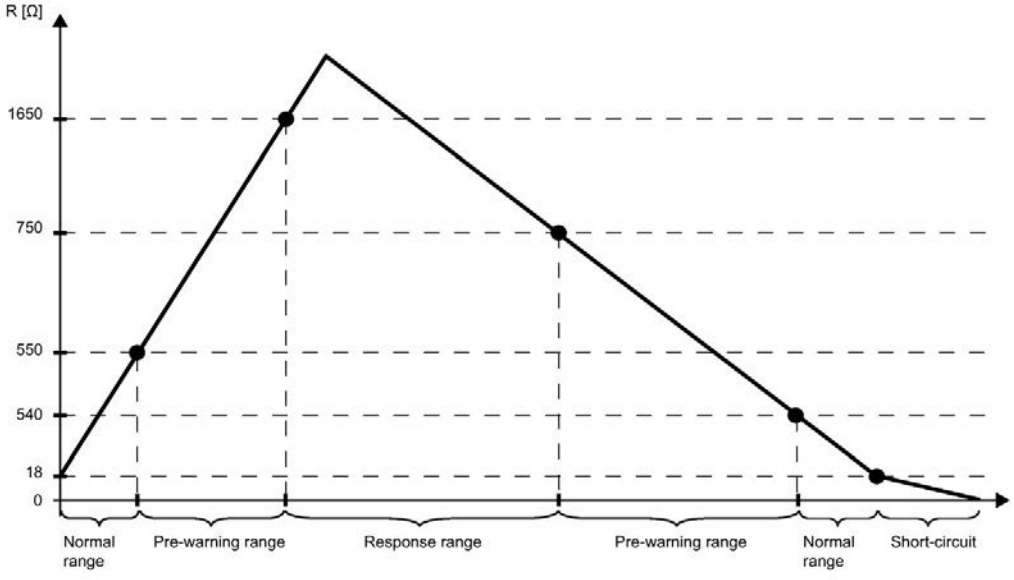

Figure 4-2 Temperature profile and the corresponding switching points

Measured value acquisition with PTC resistors

If faults occur (for example supply voltage L+ missing) that make it impossible to acquire measured values with PTC resistors, the corresponding channels (IR x/IR x+1) report overflow ($7FFF_H$). If the value status (QI) is enabled, the value 0 = incorrect is output in the corresponding bit.

4.2 Parameters

AI 8xU/I/RTD/TC ST parameters

When you assign the module parameters in STEP 7, you use various parameters to specify the module properties. The following table lists the configurable parameters. The effective range of the configurable parameters depends on the type of configuration. The following configurations are possible:

- Central operation with a S7-1500 CPU
- Distributed operation on PROFINET IO in an ET 200MP system
- Distributed operation on PROFIBUS DP in an ET 200MP system

When assigning parameters in the user program, use the WRREC instruction to transfer the parameters to the module by means of data records; refer to the section Parameter assignment and structure of the parameter data records (Page 54).

The following parameter settings for the channels are possible:

Table 4- 2 Configurable parameters and their defaults

Parameters	Range of values	Default setting	Parameter assignment in RUN	Scope with configuration software, e.g., STEP 7 (TIA Portal)	
				GSD file PROFINET IO	GSD file PROFIBUS DP
Diagnostics					
• Missing supply voltage L+	Yes/No	No	Yes	Channel [3]	Module [4]
• Overflow	Yes/No	No	Yes	Channel	Module [4]
• Underflow	Yes/No	No	Yes	Channel	Module [4]
• Common mode error	Yes/No	No	Yes	Channel	Module [4]
• Reference channel error	Yes/No	No	Yes	Channel	Module [4]
• Wire break [1]	Yes/No	No	Yes	Channel	Module [4]
• Current limit for wire break diagnostics [2]	1.185 mA or 3.6 mA	1.185 mA	Yes	Channel	--- [5]

Parameters	Range of values	Default setting	Parameter assignment in RUN	Scope with configuration software, e.g., STEP 7 (TIA Portal)	
				GSD file PROFINET IO	GSD file PROFIBUS DP
Measuring					
• Measuring type	See chapter Measuring types and ranges (Page 21)	Voltage	Yes	Channel	Channel
• Measuring range		±10 V	Yes	Channel	Channel
• Temperature coefficient	Pt: 0.003851 Pt: 0.003902 Pt: 0.003916 Pt: 0.003920 Ni: 0.00618 Ni: 0.00672 LG-Ni: 0.005000	0.003851	Yes	Channel	Channel
• Temperature unit	• Kelvin (K) • Fahrenheit (°F) • Celsius (°C)	°C	Yes	Channel	Module
• Interference frequency suppression	400 Hz 60 Hz 50 Hz 10 Hz	50 Hz	Yes	Channel	Module
• Smoothing	None/low/medium/high	None	Yes	Channel	Channel
• Reference junction for TC	• Fixed reference temperature • Dynamic reference temperature • Internal reference junction • Reference channel of the module	Internal reference junction	Yes	Channel	Module [5)] • Dynamic reference temperature • Internal reference junction
• Fixed reference temperature	Temperature	25 °C	Yes	Channel	--- [5)]

Parameters	Range of values	Default setting	Parameter assignment in RUN	Scope with configuration software, e.g., STEP 7 (TIA Portal)	
				GSD file PROFINET IO	GSD file PROFIBUS DP
Hardware interrupts					
• Hardware interrupt low limit 1	Yes/No	No	Yes	Channel	--- 5)
• Hardware interrupt high limit 1	Yes/No	No	Yes	Channel	--- 5)
• Hardware interrupt low limit 2	Yes/No	No	Yes	Channel	--- 5)
• Hardware interrupt high limit 2	Yes/No	No	Yes	Channel	--- 5)

1) Only for measurement type Resistance, Resistance Thermometer RTD: If "Wire break" diagnostics and "Value status" are deactivated, the module reports overflow or underflow ($7FFF_h$ or 8000_h) in case of a wiring error. The alarm depends on whether the connected cables are faulty.

Recommendation: Activate the "Wire break" diagnostics. The active check for wire break reliably detects wiring errors and the module reports overflow ($7FFF_H$).

2) When "Wire break" diagnostics is disabled, the current limit of 1.185 mA applies to the value status. For measured values below 1.185 mA, the value status is always: 0 = fault.

3) If you enable diagnostics for multiple channels, you will receive an alarm surge on failure of the supply voltage because each enabled channel will detect this fault.

You can prevent this message burst by assigning the diagnostics function to one channel only.

4) You can set the effective range of the diagnostics for each channel in the user program with data records 0 to 7.

5) You can set the current limit for wire break diagnostics, the setting "Fixed reference temperature" and "Reference channel of the module" as well as the limits for hardware interrupts in the user program with data records 0 to 7.

Parameters of the reference channel

You cannot configure the reference channel with GSD file. You have to transfer the reference channel to the module with data record 8.

If you want to change the default settings, you have to transfer the parameters to the module with data record 8, see chapter Parameter assignment and structure of the parameter data records (Page 54).

The diagnostics "Common mode error" and "Reference channel error" cannot be configured for the reference channel.

4.3 Declaration of parameters

Missing supply voltage L+

Enabling of the diagnostics, with missing or too little supply voltage L+.

Overflow

Enabling of the diagnostics if the measured value violates the high limit.

Underflow

Enabling of the diagnostics when the measured value violates the low limit.

Common mode error

Enabling of diagnostics if the valid common mode voltage is exceeded.

Enable the Common mode error diagnostics when 2WMT is connected, for example, to check for a short circuit to M_{ANA} or a wire break. If you do not need the Common mode error diagnostics, disable the parameter.

Reference channel error

- Enable diagnostics for an error at the temperature compensation channel, e.g. wire break.
- Dynamic reference temperature compensation type is configured and no reference temperature has been transferred to the module yet.

Wire break

Enabling of the diagnostics if the module has no current flow or the current is too weak for the measurement at the corresponding configured input or the applied voltage is too low.

Current limit for wire break diagnostics

Threshold for reporting wire breaks. The value can be set to 1.185 mA or 3.6 mA, depending on the sensor used.

Temperature coefficient

The temperature coefficient depends on the chemical composition of the material. In Europe, only one value is used per sensor type (default value).

The temperature coefficient (α value) indicates by how much the resistance of a specific material changes relatively if the temperature increases by 1 °C.

The further values facilitate a sensor-specific setting of the temperature coefficient and enhance accuracy.

Interference frequency suppression

At analog input modules, this suppresses interference caused by the frequency of the AC network.

The frequency of the AC network may corrupt measurements, particularly in the low voltage ranges and when thermocouples are being used. For this parameter, the user defines the mains frequency prevailing on his system.

Smoothing

The individual measured values are smoothed using filtering. The smoothing can be set in 4 levels.

Smoothing time = number of module cycles (k) x cycle time of the module.

The following figure shows the number of module cycles after which the smoothed analog value is almost 100%, depending on the set smoothing. It is valid for each signal change at the analog input.

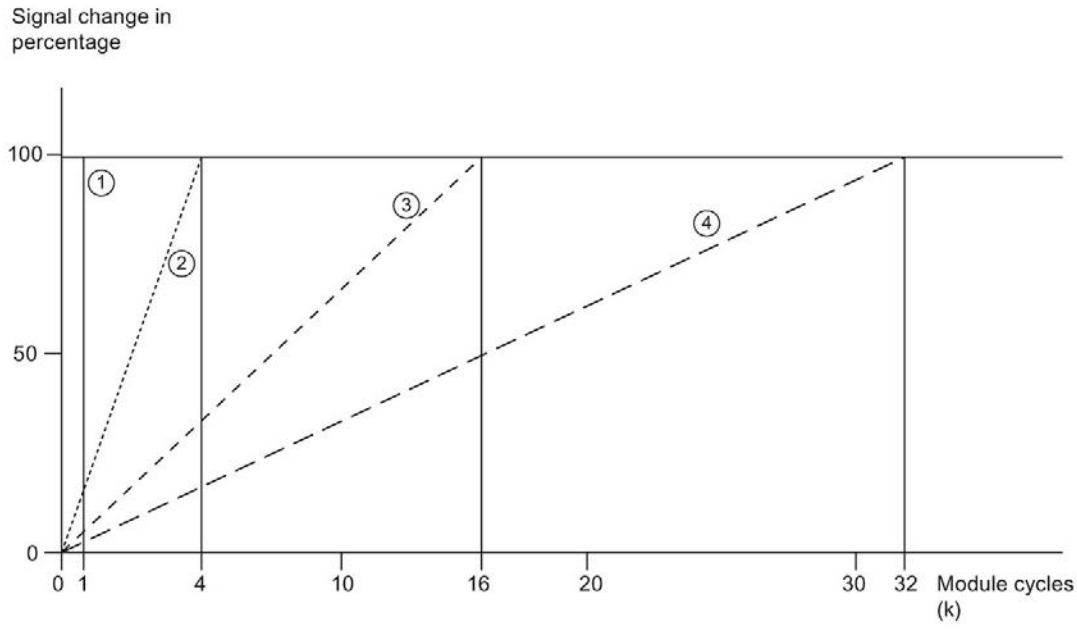

① None (k = 1)
② Weak (k = 4)
③ Medium (k = 16)
④ Strong (k = 32)

Figure 4-3 Smoothing with AI 8xU/I/RTD/TC ST

Reference junction for TC

The following settings can be configured for the reference junction parameter:

Table 4- 3 Possible parameter assignments for the reference junction parameter TC

Setting	Description
Fixed reference temperature	The reference junction temperature is configured and stored in the module as a fixed value.
Dynamic reference temperature	The reference junction temperature is transferred in the user program from the CPU to the module by data records 192 to 199 using the WRREC (SFB 53) instruction.
Internal reference junction	The reference junction temperature is determined using an integrated sensor of the module.
Reference channel of the module	The reference junction temperature is determined using an external resistance thermometer (RTD) at the reference channel (COMP) of the module.

Hardware interrupt 1 or 2

Enabling of a hardware interrupt at violation of high limit 1 or 2 or low limit 1 or 2.

Low limit 1 or 2

Specifies the low limit threshold that triggers hardware interrupt 1 or 2.

High limit 1 or 2

Specifies the high limit threshold that triggers hardware interrupt 1 or 2.

4.4 Address space

The module can be configured differently in STEP 7; see following table. Depending on the configuration, additional/different addresses are assigned in the process image of the inputs.

Configuration options of AI 8xU/I/RTD/TC ST

You can configure the module with STEP 7 (TIA Portal) or with a GSD file.

When you configure the module by means of the GSD file, the configurations are available under different abbreviations/module names.

The following configurations are possible:

Table 4- 4 Configuration options

Configuration	Short designation/ module name in the GSD file	Configuration software, e.g., with STEP 7 (TIA Portal)	
		Integrated in hardware catalog STEP 7 (TIA Portal)	GSD file in STEP 7 (TIA Portal) V12 or higher or STEP 7 V5.5 SP3 or higher
1 x 8-channel without value status	AI 8xU/I/RTD/TC ST	V12 or higher	X
1 x 8-channel with value status	AI 8xU/I/RTD/TC ST QI	V12 or higher	X
8 x 1-channel without value status	AI 8xU/I/RTD/TC ST S	V13 Update 3 or higher (PROFINET IO only)	X (PROFINET IO only)
8 x 1-channel with value status	AI 8xU/I/RTD/TC ST S QI	V13 Update 3 or higher (PROFINET IO only)	X (PROFINET IO only)
1 x 8-channel with value status for module-internal shared input with up to 4 submodules	AI 8xU/I/RTD/TC ST MSI	V13 Update 3 or higher (PROFINET IO only)	X (PROFINET IO only)

Value status (Quality Information, QI)

The value status is always activated for the following module names:

- AI 8xU/I/RTD/TC ST QI
- AI 8xU/I/RTD/TC ST S QI
- AI 8xU/I/RTD/TC ST MSI

An additional bit is assigned to each channel for the value status. The value status bit indicates if the read in digital value is valid. (0 = value is incorrect).

Address space of AI 8xU/I/RTD/TC ST

The following figure shows the address space allocation for the configuration as 8-channel module. You can freely assign the start address for the module. The addresses of the channels are derived from the start address.

"IB x" stands, for example, for the module start address input byte x.

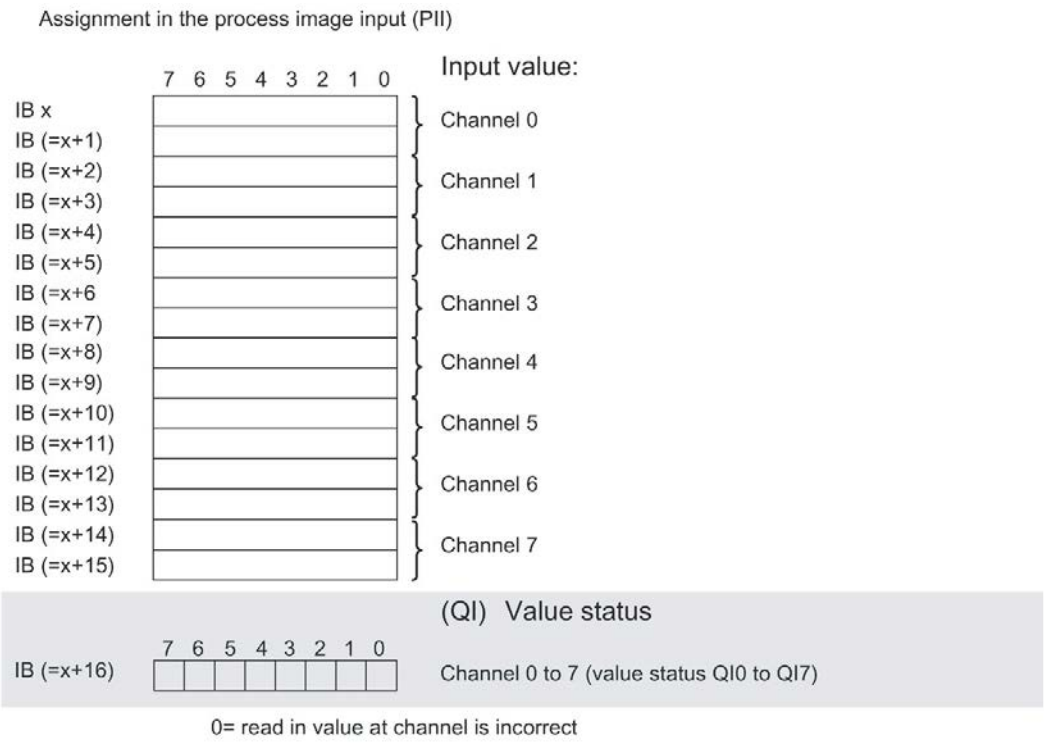

Figure 4-4 Address space for configuration as 1 x 8-channel AI 8xU/I/RTD/TC ST with value status

Address space for configuration as 8 x 1-channel AI 8xU/I/RTD/TC ST QI

For the configuration as a 8 x 1-channel module, the channels of the module are divided into multiple submodules. The submodules can be assigned to different IO controllers when the module is used in a shared device.

The number of usable IO controllers depends on the interface module used. Observe the information in the manual for the particular interface module.

Contrary to the 1 x 8-channel module configuration, each of the eight submodules has a freely assignable start address.

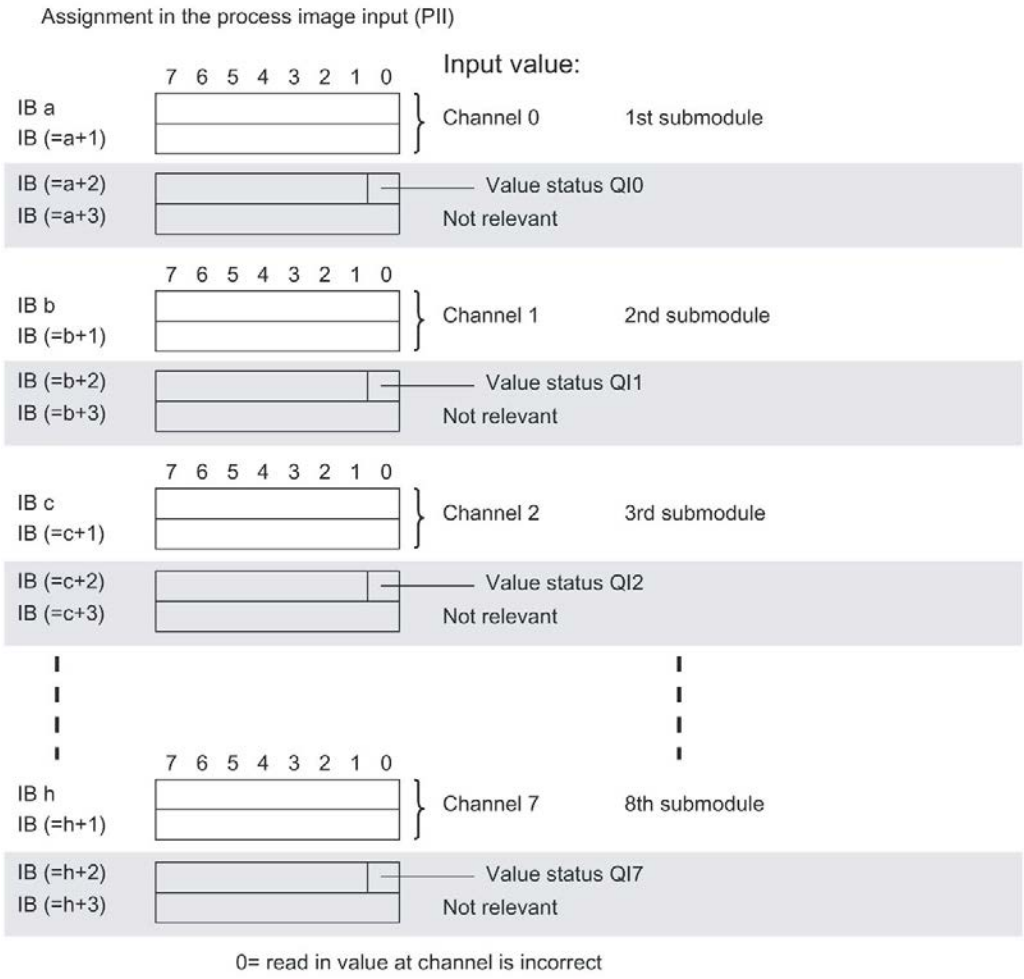

Figure 4-5 Address space for configuration as 8 x 1-channel AI 8xU/I/RTD/TC ST S QI with value status

Address space for configuration as 1 x 8-channel AI 8xU/I/RTD/TC ST MSI

The channels 0 to 7 of the module are copied in up to four submodules with configuration 1 x 8-channel module (Module-internal shared input, MSI). Channels 0 to 7 are then available with identical input values in different submodules. These submodules can be assigned to up to four IO controllers when the module is used in a shared device. Each IO controller has read access to the same channels.

The number of usable IO controllers depends on the interface module used. Please observe the information in the manual for the particular interface module.

Value status (Quality Information, QI)

The meaning of the value status depends on the submodule on which it occurs.

For the 1st submodule (= basic submodule), the value status 0 indicates that the value is incorrect.

For the 2nd to 4th submodule (=MSI submodule), the value status 0 indicates that the value is incorrect or the basic submodule has not yet been configured (not ready).

The figure below shows the assignment of the address space with submodules 1 and 2.

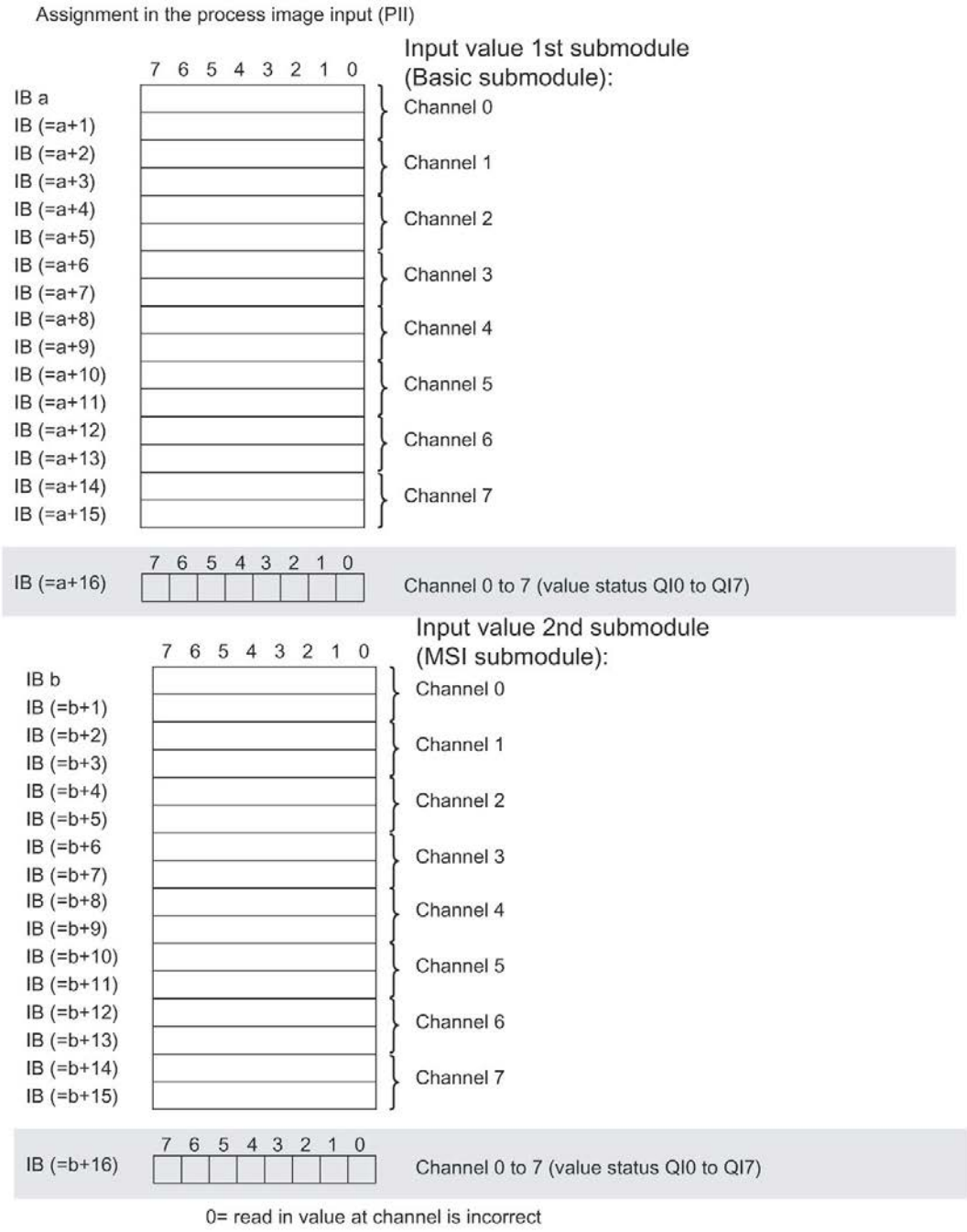

Figure 4-6 Address space for configuration as 1 x 8-channel AI 8xU/I/RTD/TC ST MSI with value status

The following figure shows the assignment of the address space with submodule 3 and 4.

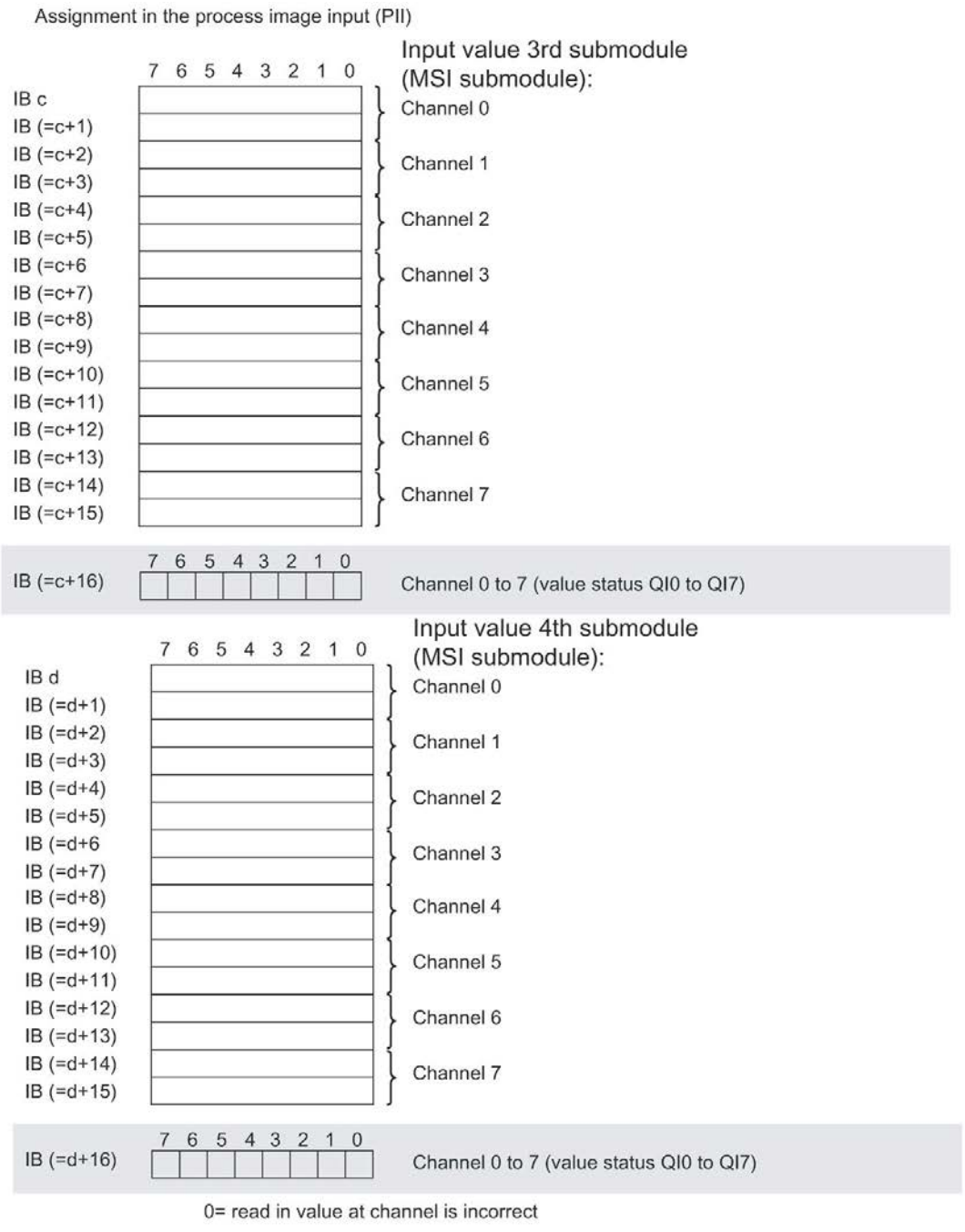

Figure 4-7 Address space for configuration as 1 x 8-channel AI 8xU/I/RTD/TC ST MSI with value status

Reference

You can find information on the Shared Input/Output (MSI/MSO) function in the section Module-Internal Shared Input/Output (MSI/MSO) of the PROFINET with STEP 7 V13 (https://support.industry.siemens.com/cs/ww/en/view/49948856) function manual.

Interrupts/diagnostics alarms

5

5.1 Status and error displays

LED displays

The following figure shows the LED displays (status and error displays) of AI 8xU/I/RTD/TC ST.

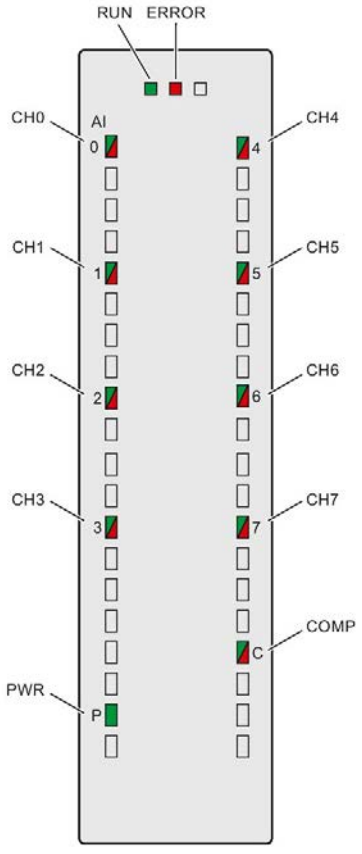

Figure 5-1 LED displays of the module AI 8xU/I/RTD/TC ST

Meaning of the LED displays

The following tables explain the meaning of the status and error displays. Remedial measures for diagnostic alarms can be found in section Diagnostic alarms.

RUN and ERROR LED

Table 5- 1 Status and error displays RUN and ERROR

LEDs		Meaning	Remedy
RUN	ERROR		
□ Off	□ Off	Voltage missing or too low at backplane bus.	• Switch on the CPU and/or the system power supply modules. • Verify that the U connectors are inserted. • Check to see if too many modules are inserted.
☼ Flashes	□ Off	The module starts and flashes until the valid parameter assignment is set.	---
■ On	□ Off	Module is configured.	
■ On	☼ Flashes	Indicates module errors (at least one error at one channel, e.g., wire break).	Evaluate the diagnostics data and eliminate the error (e.g., wire break).
☼ Flashes	☼ Flashes	Hardware defective.	Replace the module.

PWR LED

Table 5- 2 PWR status display

LED PWR	Meaning	Remedy
□ Off	Supply voltage L+ to module too low or missing	Check supply voltage L+.
■ On	Supply voltage L+ is present and OK.	---

CHx and COMP LED

Table 5- 3 CHx and COMP status indication

LED CHx/COMP	Meaning	Remedy
□ Off	Channel disabled	---
■ On	Channel configured and OK.	---
■ On	Channel is configured (channel error pending). Diagnostic alarm: e.g. wire break	Check the wiring. Disable diagnostics.

See also

Diagnostics alarms (Page 41)

5.2 Interrupts

Analog input module AI 8xU/I/RTD/TC ST supports the following diagnostic and hardware interrupts.

You can find detailed information on the event in the error organization block with the "RALRM" instruction (read additional interrupt info) and in the STEP 7 online help.

Diagnostic interrupt

The module generates a diagnostic interrupt at the following events:

- Missing supply voltage L+
- Wire break
- Overflow
- Underflow
- Common mode error
- Reference channel error
- Parameter assignment error

Hardware interrupt

The module generates a hardware interrupt at the following events:

- Low limit violated 1
- High limit violated 1
- Low limit violated 2
- Above high limit 2

The module channel that triggered the hardware interrupt is entered in the start information of the organization block. The diagram below shows the assignment to the bits of double word 8 in local data.

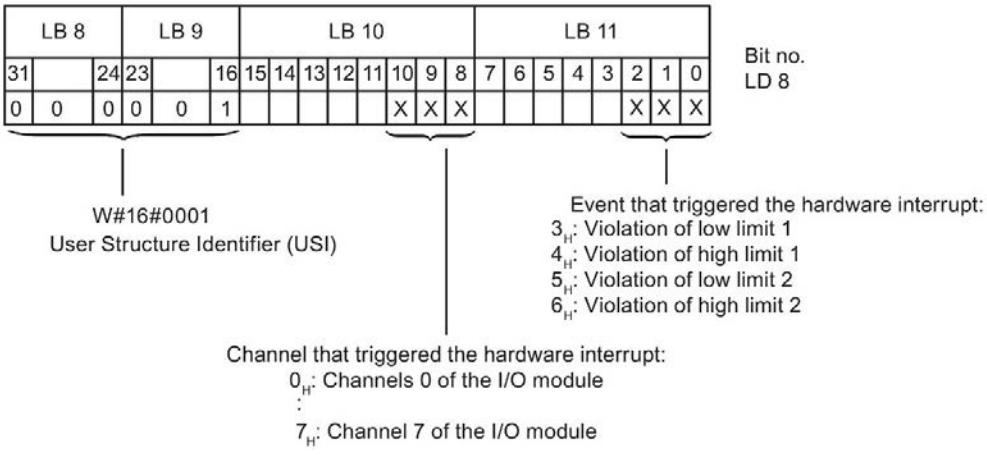

Figure 5-2 OB start information

Reaction when reaching limits 1 and 2 at the same time

If the two high limits 1 and 2 are reached at the same time, the module always signals the hardware interrupt for high limit 1 first. The configured value for high limit 2 is irrelevant. After processing the hardware interrupt for high limit 1, the module triggers the hardware interrupt for high limit 2.

The module has the same reaction when the low limits are reached at the same time. If the two low limits 1 and 2 are reached at the same time, the module always signals the hardware interrupt for low limit 1 first. After processing the hardware interrupt for low limit 1, the module triggers the hardware interrupt for low limit 2.

Structure of the additional interrupt information

Table 5- 4 Structure of USI = W#16#0001

Data block name		Contents	Remark	Bytes
USI (User Structure Identifier)		W#16#0001	Additional interrupt info for hardware interrupts of the I/O module	2
The channel that triggered the hardware interrupt follows.				
	Channel	B#16#00 to B#16#n	Number of the event-triggering channel (n = number of module channels -1)	1
The event that triggered the hardware interrupt follows.				
	Event	B#16#03	Low limit violated 1	1
		B#16#04	High limit violated 1	
		B#16#05	Low limit violated 2	
		B#16#06	Violation of high limit 2	

5.3 Diagnostics alarms

A diagnostics alarm is generated and the ERROR LED flashes on the module for each diagnostics event. The diagnostics alarms can be read out in the diagnostics buffer of the CPU, for example. You can evaluate the error codes with the user program.

If the module is operated distributed with PROFIBUS DP in an ET 200MP system, you have the option to read out diagnostics data with the instruction RDREC or RD_REC using data record 0 and 1. The structure of the data records is available on the Internet in the "Manual for interface module IM 155-5 DP ST (6ES7155-5BA00-0AB0)".

Table 5- 5 Diagnostics alarms, their meaning and corrective measures

Diagnostics alarm	Error code	Meaning	Solution
Wire break	6_H	Impedance of encoder circuit too high	Use a different encoder type or modify the wiring, for example, using cables with larger cross-section
		Wire break between the module and sensor	Connect the cable
		Channel not connected (open)	• Disable diagnostics • Connect the channel
Overflow	7_H	Measuring range violated	Check the measuring range
Underflow	8_H	Measuring range violated	Check the measuring range
Parameter assignment error	10_H	• The module cannot evaluate parameters for the channel • Incorrect parameter assignment	Correct the parameter assignment
Load voltage missing	11_H	Supply voltage L+ of the module is missing	Connect supply voltage L+ to module/channel
Reference channel error	15_H	Invalid reference temperature for the used TC channel with compensation	Check the resistance thermometer. For the compensation with data record, restore communication to the module/station.
Common mode error	118_H	Valid common mode voltage exceeded Causes when a 2WT is connected, e.g.: • Wire break • Galvanic connection to M_{ANA}	Check the wiring, e.g. sensor ground connections, use equipotential cables

Diagnostics alarms with value status (QI)

If you configure the module with value status (QI), the module always checks all errors even if the respective diagnostics is not enabled. But the module cancels the inspection as soon as it detects the first error, regardless if the respective diagnostics has been enabled or not. The result may be that enabled diagnostics may not be displayed.

Example: You have enabled "Underflow" diagnostics, but the module detects the "Wire break" diagnostics first and aborts after this error message. The "Underflow" diagnostics is not detected.

Recommendation: To ensure that all errors can be diagnosed reliably, select all check boxes under "Diagnostics".

Technical specifications

6

Technical specifications of the AI 8xU/I/RTD/TC ST

The following table shows the technical specifications as of 08/2018. You will find a data sheet including daily updated technical specifications on the Internet (https://support.industry.siemens.com/cs/ww/en/pv/6ES7531-7KF00-0AB0/td?dl=en).

Article number	6ES7531-7KF00-0AB0
General information	
Product type designation	AI 8xU/I/RTD/TC ST
HW functional status	FS04
Firmware version	V2.0.0
• FW update possible	Yes
Product function	
• I&M data	Yes; I&M0 to I&M3
• Measuring range scalable	No
• Scalable measured values	No
• Adjustment of measuring range	No
Engineering with	
• STEP 7 TIA Portal configurable/integrated as of version	V12 / V12
• STEP 7 configurable/integrated as of version	V5.5 SP3 / -
• PROFIBUS as of GSD version/GSD revision	V1.0 / V5.1
• PROFINET as of GSD version/GSD revision	V2.3 / -
Operating mode	
• Oversampling	No
• MSI	Yes
CiR – Configuration in RUN	
Reparameterization possible in RUN	Yes
Calibration possible in RUN	Yes
Supply voltage	
Rated value (DC)	24 V
permissible range, lower limit (DC)	20.4 V
permissible range, upper limit (DC)	28.8 V
Reverse polarity protection	Yes

Article number	6ES7531-7KF00-0AB0
Input current	
Current consumption, max.	240 mA; with 24 V DC supply
Encoder supply	
24 V encoder supply	
• Short-circuit protection	Yes
• Output current, max.	20 mA; Max. 47 mA per channel for a duration < 10 s
Power	
Power available from the backplane bus	0.7 W
Power loss	
Power loss, typ.	2.7 W
Analog inputs	
Number of analog inputs	8
• For current measurement	8
• For voltage measurement	8
• For resistance/resistance thermometer measurement	4
• For thermocouple measurement	8
permissible input voltage for voltage input (destruction limit), max.	28.8 V
permissible input current for current input (destruction limit), max.	40 mA
Constant measurement current for resistance-type transmitter, typ.	150 Ohm, 300 Ohm, 600 Ohm, Pt100, Pt200, Ni100: 1.25 mA; 6 000 Ohm, Pt500, Pt1000, Ni1000, LG-Ni1000: 0.625 mA; PTC: 0.472 mA
Technical unit for temperature measurement adjustable	Yes; °C/°F/K

Article number	6ES7531-7KF00-0AB0
Input ranges (rated values), voltages	
• 0 to +5 V	No
• 0 to +10 V	No
• 1 V to 5 V	Yes
• Input resistance (1 V to 5 V)	100 kΩ
• -1 V to +1 V	Yes
• Input resistance (-1 V to +1 V)	10 MΩ
• -10 V to +10 V	Yes
• Input resistance (-10 V to +10 V)	100 kΩ
• -2.5 V to +2.5 V	Yes
• Input resistance (-2.5 V to +2.5 V)	10 MΩ
• -25 mV to +25 mV	No
• -250 mV to +250 mV	Yes
• Input resistance (-250 mV to +250 mV)	10 MΩ
• -5 V to +5 V	Yes
• Input resistance (-5 V to +5 V)	100 kΩ
• -50 mV to +50 mV	Yes
• Input resistance (-50 mV to +50 mV)	10 MΩ
• -500 mV to +500 mV	Yes
• Input resistance (-500 mV to +500 mV)	10 MΩ
• -80 mV to +80 mV	Yes
• Input resistance (-80 mV to +80 mV)	10 MΩ
Input ranges (rated values), currents	
• 0 to 20 mA	Yes
• Input resistance (0 to 20 mA)	25 Ω; Plus approx. 42 ohms for overvoltage protection by PTC
• -20 mA to +20 mA	Yes
• Input resistance (-20 mA to +20 mA)	25 Ω; Plus approx. 42 ohms for overvoltage protection by PTC
• 4 mA to 20 mA	Yes
• Input resistance (4 mA to 20 mA)	25 Ω; Plus approx. 42 ohms for overvoltage protection by PTC

Article number	6ES7531-7KF00-0AB0
Input ranges (rated values), thermocouples	
• Type B	Yes
• Input resistance (Type B)	10 MΩ
• Type C	No
• Type E	Yes
• Input resistance (Type E)	10 MΩ
• Type J	Yes
• Input resistance (type J)	10 MΩ
• Type K	Yes
• Input resistance (Type K)	10 MΩ
• Type L	No
• Type N	Yes
• Input resistance (Type N)	10 MΩ
• Type R	Yes
• Input resistance (Type R)	10 MΩ
• Type S	Yes
• Input resistance (Type S)	10 MΩ
• Type T	Yes
• Input resistance (Type T)	10 MΩ
• Type TXK/TXK(L) to GOST	No

Article number	6ES7531-7KF00-0AB0
Input ranges (rated values), resistance thermometer	
• Cu 10	No
• Cu 10 according to GOST	No
• Cu 50	No
• Cu 50 according to GOST	No
• Cu 100	No
• Cu 100 according to GOST	No
• Ni 10	No
• Ni 10 according to GOST	No
• Ni 100	Yes; Standard/climate
• Input resistance (Ni 100)	10 MΩ
• Ni 100 according to GOST	No
• Ni 1000	Yes; Standard/climate
• Input resistance (Ni 1000)	10 MΩ
• Ni 1000 according to GOST	No
• LG-Ni 1000	Yes; Standard/climate
• Input resistance (LG-Ni 1000)	10 MΩ
• Ni 120	No
• Ni 120 according to GOST	No
• Ni 200 according to GOST	No
• Ni 500	No
• Ni 500 according to GOST	No
• Pt 10	No
• Pt 10 according to GOST	No
• Pt 50	No
• Pt 50 according to GOST	No
• Pt 100	Yes; Standard/climate
• Input resistance (Pt 100)	10 MΩ
• Pt 100 according to GOST	No
• Pt 1000	Yes; Standard/climate
• Input resistance (Pt 1000)	10 MΩ
• Pt 1000 according to GOST	No
• Pt 200	Yes; Standard/climate

Article number	6ES7531-7KF00-0AB0
• Input resistance (Pt 200)	10 MΩ
• Pt 200 according to GOST	No
• Pt 500	Yes; Standard/climate
• Input resistance (Pt 500)	10 MΩ
• Pt 500 according to GOST	No
Input ranges (rated values), resistors	
• 0 to 150 ohms	Yes
• Input resistance (0 to 150 ohms)	10 MΩ
• 0 to 300 ohms	Yes
• Input resistance (0 to 300 ohms)	10 MΩ
• 0 to 600 ohms	Yes
• Input resistance (0 to 600 ohms)	10 MΩ
• 0 to 3000 ohms	No
• 0 to 6000 ohms	Yes
• Input resistance (0 to 6000 ohms)	10 MΩ
• PTC	Yes
• Input resistance (PTC)	10 MΩ
Thermocouple (TC)	
Temperature compensation	
– parameterizable	Yes
– internal temperature compensation	Yes
– external temperature compensation via RTD	Yes
– Compensation for 0 °C reference point temperature	Yes; fixed value can be set
– Reference channel of the module	Yes
Cable length	
• shielded, max.	800 m; for U/I, 200 m for R/RTD, 50 m for TC

Article number	6ES7531-7KF00-0AB0
Analog value generation for the inputs	
Integration and conversion time/resolution per channel	
• Resolution with overrange (bit including sign), max.	16 bit
• Integration time, parameterizable	Yes
• Integration time (ms)	2,5 / 16,67 / 20 / 100 ms
• Basic conversion time, including integration time (ms)	9 / 23 / 27 / 107 ms
– additional conversion time for wire-break monitoring	9 ms (to be considered in R/RTD/TC measurement)
– additional conversion time for resistance measurement	150 ohm, 300 ohm, 600 ohm, Pt100, Pt200, Ni100: 2 ms, 6000 ohm, Pt500, Pt1000, Ni1000, LG-Ni1000, PTC: 4 ms
• Interference voltage suppression for interference frequency f1 in Hz	400 / 60 / 50 / 10 Hz
• Time for offset calibration (per module)	Basic conversion time of the slowest channel
Smoothing of measured values	
• parameterizable	Yes
• Step: None	Yes
• Step: low	Yes
• Step: Medium	Yes
• Step: High	Yes
Encoder	
Connection of signal encoders	
• for voltage measurement	Yes
• for current measurement as 2-wire transducer	Yes
– Burden of 2-wire transmitter, max.	820 Ω
• for current measurement as 4-wire transducer	Yes
• for resistance measurement with two-wire connection	Yes; Only for PTC
• for resistance measurement with three-wire connection	Yes; All measuring ranges except PTC; internal compensation of the cable resistances
• for resistance measurement with four-wire connection	Yes; All measuring ranges except PTC

Article number	6ES7531-7KF00-0AB0
Errors/accuracies	
Linearity error (relative to input range), (+/-)	0.02 %
Temperature error (relative to input range), (+/-)	0.005 %/K; With TC type T 0.02 ± % / K
Crosstalk between the inputs, max.	-80 dB
Repeat accuracy in steady state at 25 °C (relative to input range), (+/-)	0.02 %
Temperature error of internal compensation	±6 °C
Operational error limit in overall temperature range	
• Voltage, relative to input range, (+/-)	0.3 %
• Current, relative to input range, (+/-)	0.3 %
• Resistance, relative to input range, (+/-)	0.3 %
• Resistance thermometer, relative to input range, (+/-)	Ptxxx standard: ±1.5 K, Ptxxx climate: ±0.5 K, Nixxx standard: ±0.5 K, Nixxx climate: ±0.3 K
• Thermocouple, relative to input range, (+/-)	Type B: > 600 °C ±4.6 K, type E: > -200 °C ±1.5 K, type J: > -210 °C ±1.9 K, type K: > -200 °C ±2.4 K, type N: > -200 °C ±2.9 K, type R: > 0 °C ±4.7 K, type S: > 0 °C ±4.6 K, type T: > -200 °C ±2.4 K
Basic error limit (operational limit at 25 °C)	
• Voltage, relative to input range, (+/-)	0.1 %
• Current, relative to input range, (+/-)	0.1 %
• Resistance, relative to input range, (+/-)	0.1 %
• Resistance thermometer, relative to input range, (+/-)	Ptxxx standard: ±0.7 K, Ptxxx climate: ±0.2 K, Nixxx standard: ±0.3 K, Nixxx climate: ±0.15 K
• Thermocouple, relative to input range, (+/-)	Type B: > 600 °C ±1.7 K, type E: > -200 °C ±0.7 K, type J: > -210 °C ±0.8 K, type K: > -200 °C ±1.2 K, type N: > -200 °C ±1.2 K, type R: > 0 °C ±1.9 K, type S: > 0 °C ±1.9 K, type T: > -200 °C ±0.8 K
Interference voltage suppression for f = n x (f1 +/- 1 %), f1 = interference frequency	
• Series mode interference (peak value of interference < rated value of input range), min.	40 dB
• Common mode voltage, max.	10 V
• Common mode interference, min.	60 dB
Isochronous mode	
Isochronous operation (application synchronized up to terminal)	No

Article number	6ES7531-7KF00-0AB0
Interrupts/diagnostics/status information	
Diagnostics function	Yes
Alarms	
• Diagnostic alarm	Yes
• Limit value alarm	Yes; two upper and two lower limit values in each case
Diagnostic messages	
• Monitoring the supply voltage	Yes
• Wire-break	Yes; Only for 1 to 5 V, 4 to 20 mA, TC, R, and RTD
• Overflow/underflow	Yes
Diagnostics indication LED	
• RUN LED	Yes; Green LED
• ERROR LED	Yes; Red LED
• Monitoring of the supply voltage (PWR-LED)	Yes; Green LED
• Channel status display	Yes; Green LED
• for channel diagnostics	Yes; Red LED
• for module diagnostics	Yes; Red LED
Potential separation	
Potential separation channels	
• between the channels	No
• between the channels, in groups of	8
• between the channels and backplane bus	Yes
• between the channels and the power supply of the electronics	Yes
Permissible potential difference	
between the inputs (UCM)	20 V DC
Between the inputs and MANA (UCM)	10 V DC
Isolation	
Isolation tested with	707 V DC (type test)
Standards, approvals, certificates	
Suitable for applications according to AMS 2750	Yes; Declaration of Conformity, see online support entry 109757262
Suitable for applications according to CQI-9	Yes; Based on AMS 2750 E

Article number	6ES7531-7KF00-0AB0
Ambient conditions	
Ambient temperature during operation	
• horizontal installation, min.	0 °C
• horizontal installation, max.	60 °C
• vertical installation, min.	0 °C
• vertical installation, max.	40 °C
Decentralized operation	
Prioritized startup	No
Dimensions	
Width	35 mm
Height	147 mm
Depth	129 mm
Weights	
Weight, approx.	310 g
Other	
Note:	Additional basic error and noise for integration time = 2.5 ms: Voltage: ±250 mV (±0.02%), ±80 mV (±0.05%), ±50 mV (±0.05%); resistance: 150 ohms ±0.02%; resistance thermometer: Pt100 climate: ±0.08 K, Ni100 climate: ±0.08 K; thermo-couple: Type B, R, S: ±3 K, type E, J, K, N, T: ±1 K

Dimensional drawing

A

The dimensional drawing of the module on the mounting rail, as well as a dimensional drawing with open front panel are provided in the appendix. Always adhere to the specified dimensions for installations in cabinets, control rooms, etc.

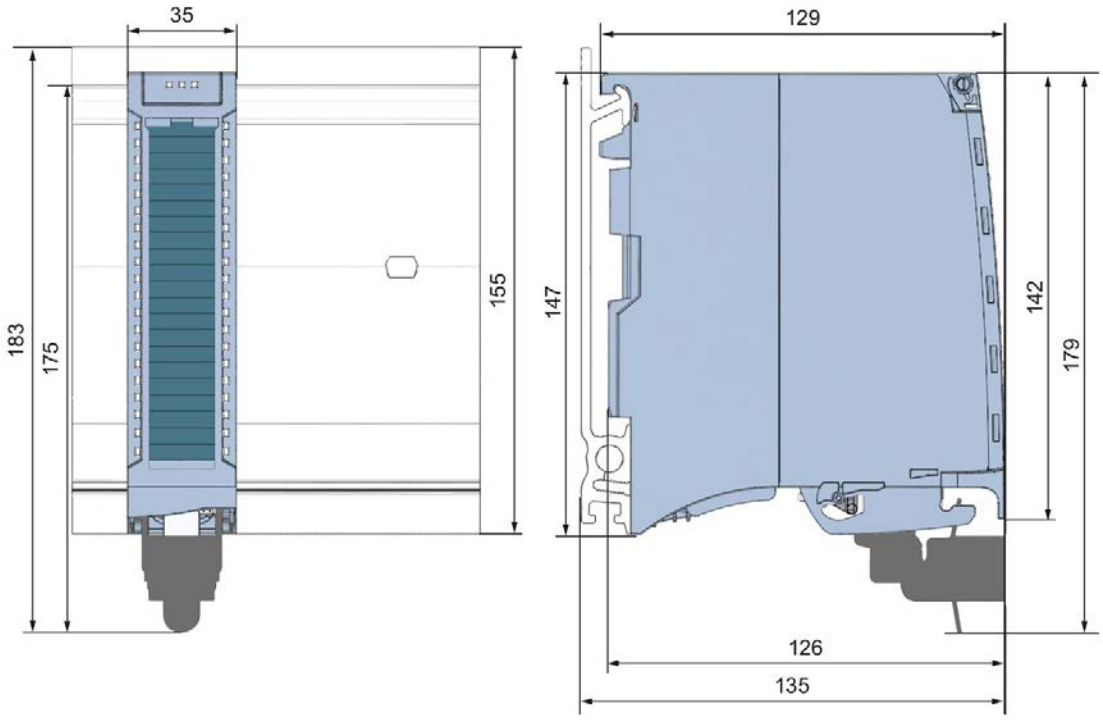

Figure A-1 Dimensional drawing of the AI 8xU/I/RTD/TC ST module

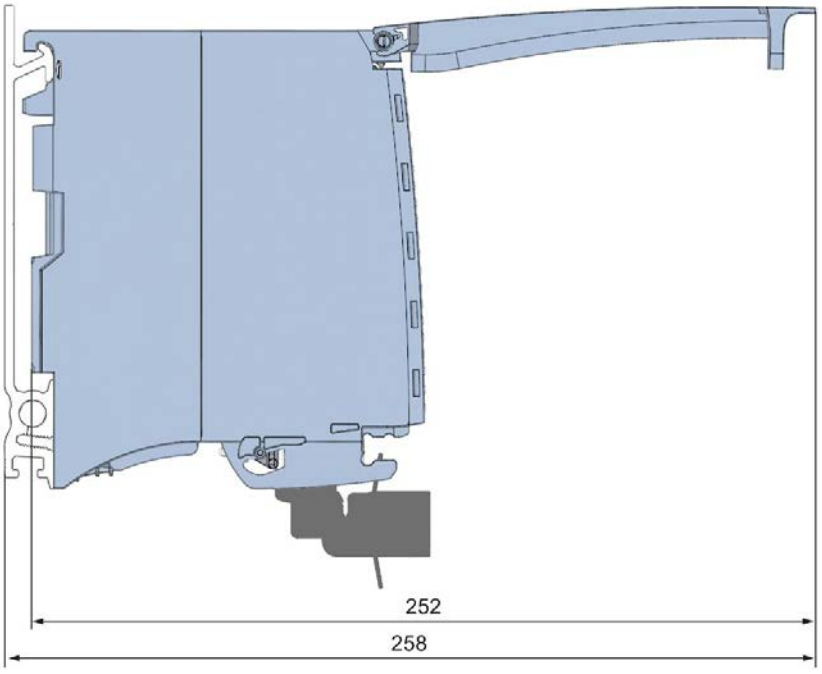

Figure A-2 Dimensional drawing of the AI 8xU/I/RTD/TC ST module, side view with open front panel

Parameter data records

B

B.1 Parameter assignment and structure of the parameter data records

The data records of the module have an identical structure, regardless of whether you configure the module with PROFIBUS DP or PROFINET IO.

Dependencies for configuration with GSD file

When configuring the module with a GSD file, remember that the settings of some parameters are dependent on each other. The parameters are only checked for plausibility by the module after the transfer to the module.

The following table lists the parameters that depend on one another.

Table B- 1 Dependencies of parameters for configuration with GSD file

Device-specific parameters (GSD file)	Dependent parameters
Current limit for wire break	Only for **measuring type** current with **measuring range** 4 mA to 20 mA.
Wire break	Only for **measuring type** resistance, thermal resistor RTD, thermocouple TC, voltage with **measuring range** 1V to 5 V and current with **measuring range** 4 mA to 20 mA.
Common mode error	Only for **measuring type** voltage, current and thermocouple TC.
Reference channel error	Only for **measuring type** thermocouple TC.
Measuring type resistance (4-wire connection, 3-wire connection)	Only for **measuring range** 150 Ω, 300 Ω, 600 Ω and 6000 Ω.
Measuring type resistance (4-wire connection, 3-wire connection, 2-wire connection)	Configurable for even channels (0, 2, 4 and 6) only. The following odd channel (1, 3, 5, 7) must be deactivated.
Measuring type thermal resistor RTD (4-wire connection, 3-wire connection)	
Hardware interrupt limits	Only if hardware interrupts are enabled.
Fixed reference temperature	Only if the value **Fixed reference temperature** is configured at parameter **Reference junction for TC**.
Temperature unit Kelvin (K)	Only for **measuring type** thermal resistor RTD and for thermocouple TC.

Parameter assignment in the user program

The module parameters can be assigned in RUN (for example, measuring ranges of selected channels can be edited in RUN without having an effect on the other channels).

Parameter assignment in RUN

Instruction WRREC is used to transfer the parameters by means of data records 0 to 7 and 8. The parameters set in STEP 7 do not change in the CPU, which means the parameters set in STEP 7 are still valid after a restart.

The parameters are only checked for plausibility by the module after the transfer to the module.

Output parameter STATUS

The module ignores errors that occurred during the transfer of parameters with the WRREC instruction and continues operation with the previous parameter assignment. However, a corresponding error code is written to the STATUS output parameter.

The description of the WRREC instruction and the error codes is available in the STEP 7 online help.

Operation of the module behind a PROFIBUS DP interface module

If the module is operated behind a PROFIBUS DP interface module, the parameter data records 0 and 1 are not read back. You obtain the diagnostics data records 0 and 1 with the read back parameter data records 0 and 1. You can find additional information in the Interrupts section of the manual for the PROFIBUS DP interface module on the Internet (http://support.automation.siemens.com/WW/view/en/78324181).

Assignment of data record and channel

The parameters in data records 0 to 7 and in data record 8 are available for 1x 8-channel configuration and are assigned as follows:

- Data record 0 for channel 0
- Data record 1 for channel 1
- …
- Data record 6 for channel 6
- Data record 7 for channel 7
- Data record 8 for the reference channel (COMP)

For configuration 8 x 1-channel, the module has 8 submodules with one channel each and one submodule for the reference channel. The parameters for the channel are available in data record 0 and are assigned as follows:

- Data record 0 for channel 0 (submodule 1)
- Data record 0 for channel 1 (submodule 2)
- …
- Data record 0 for channel 6 (submodule 7)
- Data record 0 for channel 7 (submodule 8)
- Data record 0 for the reference channel (COMP) (submodule 9)

Address the respective submodule for data record transfer.

Data record structure

The figure below shows the structure of data record 0 for channel 0 as an example. The structure is identical for channels 1 to 7. The values in byte 0 and byte 1 are fixed and may not be changed.

Enable a parameter by setting the corresponding bit to "1".

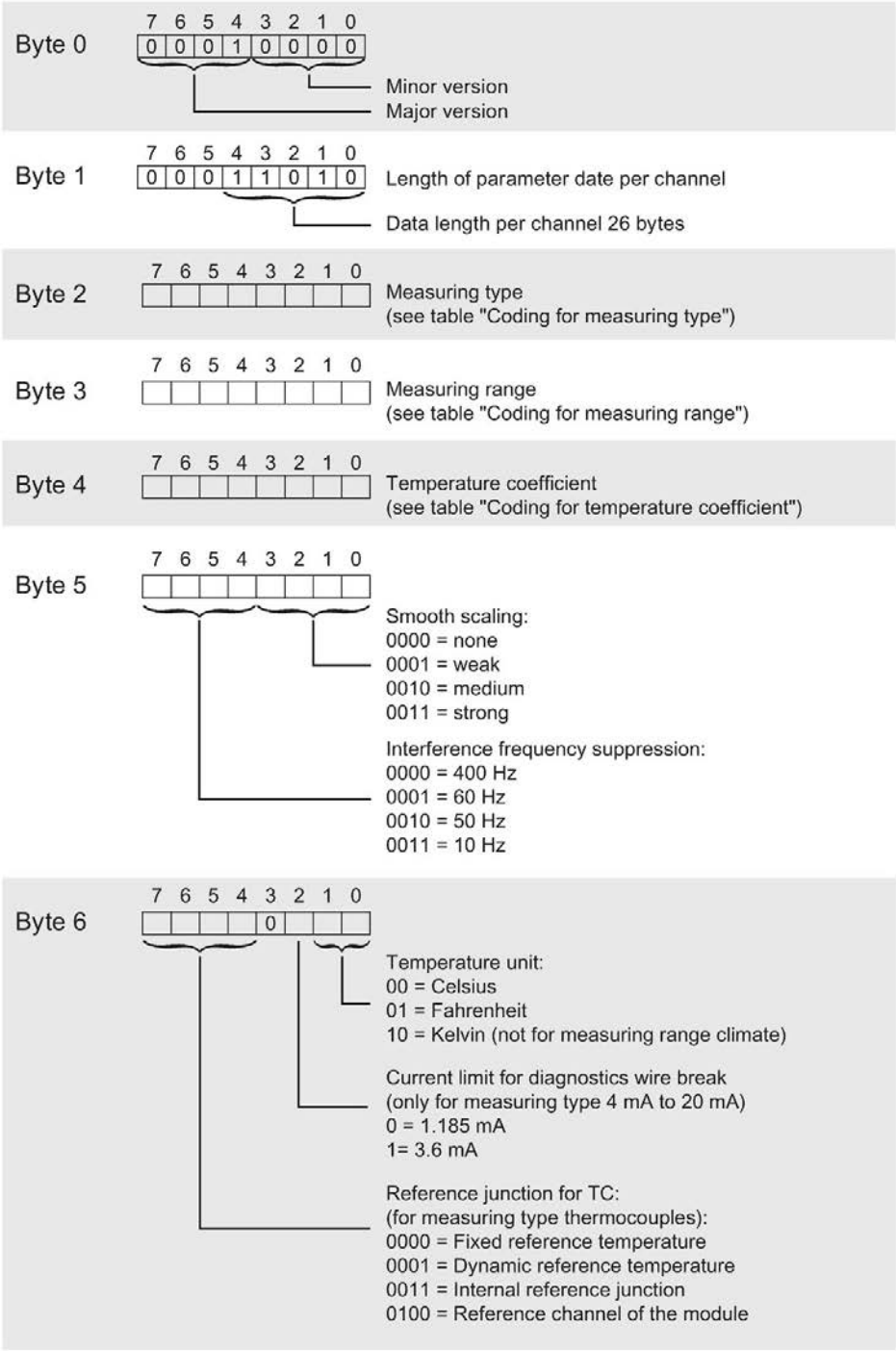

Figure B-1 Structure of data record 0: Bytes 0 to 6

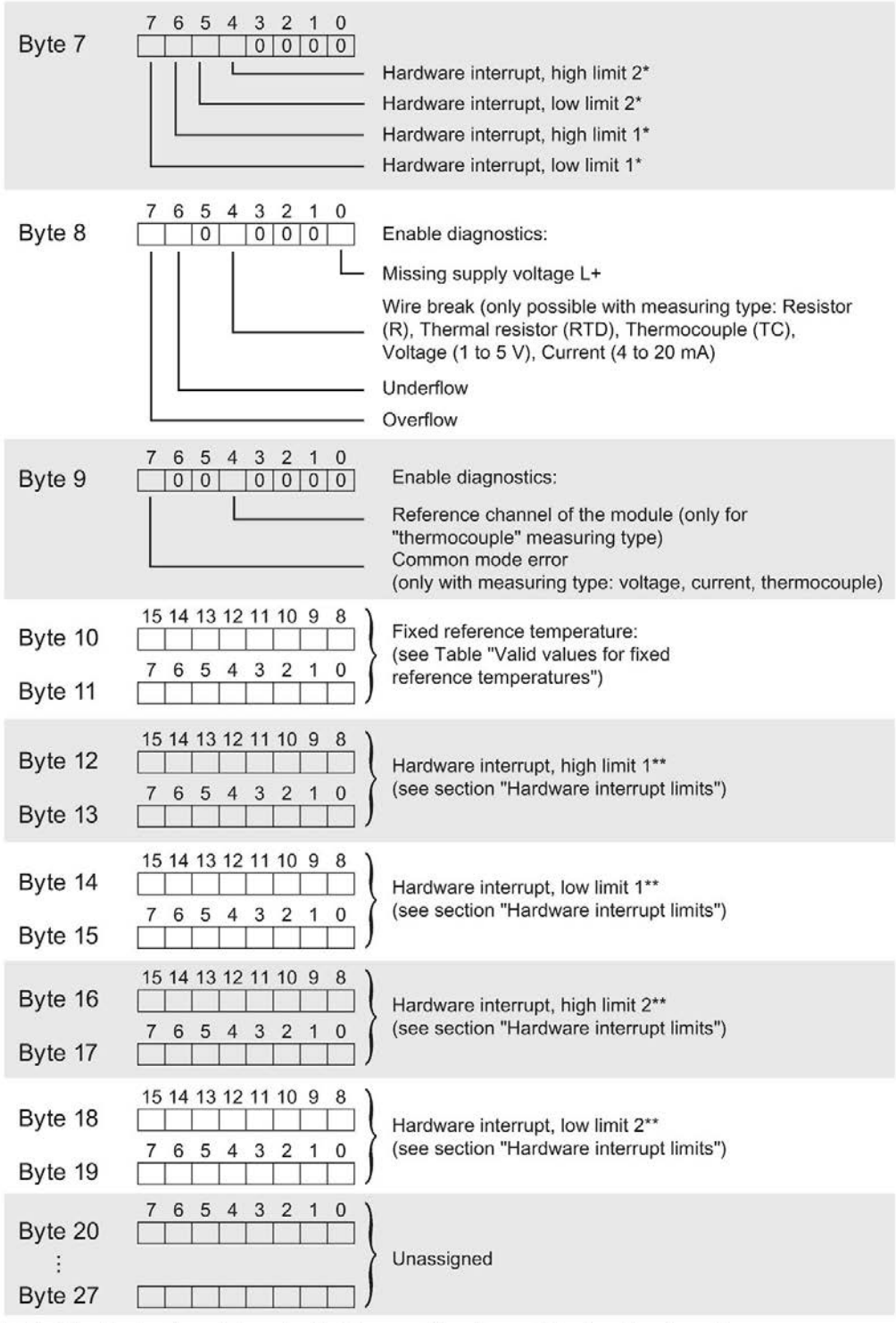

Figure B-2 Structure of data record 0: Bytes 7 to 27

Structure of data record 8, reference channel (COMP) of the module

The reference channel compensates the measured value for channels 0 to 7. The figure below shows the structure of data record 8. Enable a parameter by setting the corresponding bit to "1".

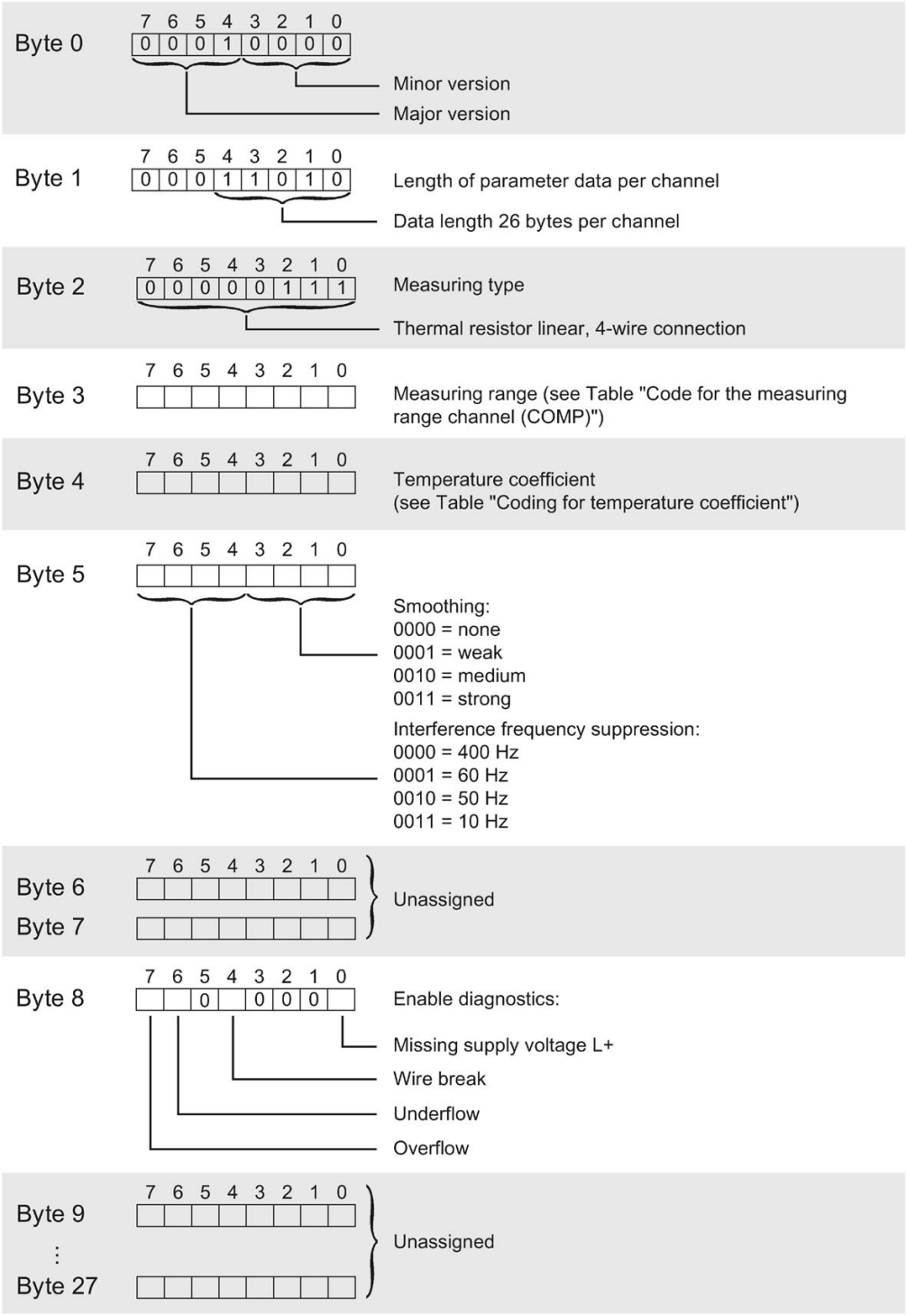

Figure B-3 Structure of data record 8, reference channel of the module: Bytes 0 to 27

Codes for measurement types

The following table lists all measurement types of the analog input module along with their codes. Enter these codes at byte 2 of the data record for the corresponding channel (see the figure Structure of data record 0: Bytes 7 to 27).

Table B- 2 Code for the measurement type

Measurement type	Code
Deactivated	0000 0000
Voltage	0000 0001
Current, 2-wire transmitter	0000 0011
Current, 4-wire transmitter	0000 0010
Resistance, 4-wire connection *) **)	0000 0100
Resistance, 3-wire connection *) **)	0000 0101
Resistance, 2-wire connection *) ***)	0000 0110
Thermal resistor linear, 4-wire connection *)	0000 0111
Thermal resistor linear, 3-wire connection *)	0000 1000
Thermocouple	0000 1010

*) only possible for channels 0, 2, 4 and 6

**) only for the following measuring ranges: 150 Ω, 300 Ω, 600 Ω, 6 kΩ

***) only for measuring range PTC

Special feature for configuration

If you configure one of the following measuring types at one of the channels 0, 2, 4 and 6:

- Resistance, 4-wire connection
- Resistance, 3-wire connection
- Resistance, 2-wire connection
- Thermal resistor linear, 4-wire connection
- Thermal resistor linear, 3-wire connection

then one of the following channels must be disabled.

Example:

You have configured "Resistance, 4-wire connection" at channel 0; channel 1 must be disabled. You have configured "Resistance, 2-wire connection" at channel 2; channel 3 must be disabled.

Codes for measuring ranges

The following table lists all measuring ranges of the analog input module along with their codes. Enter these codes accordingly at byte 3 of the data record for the corresponding channel (see the figure Structure of data record 0: Bytes 7 to 27).

Table B- 3 Code for the measuring range

Measuring range	Code
Voltage	
±50 mV	0000 0001
±80 mV	0000 0010
±250 mV	0000 0011
±500 mV	0000 0100
±1 V	0000 0101
±2.5 V	0000 0111
±5 V	0000 1000
±10 V	0000 1001
1 V to 5 V	0000 1010
Current, 4-wire transmitter	
0 mA to 20 mA	0000 0010
4 mA to 20 mA	0000 0011
±20 mA	0000 0100
Current, 2-wire transmitter	
4 mA to 20 mA	0000 0011
Resistor	
150 Ω	0000 0001
300 Ω	0000 0010
600 Ω	0000 0011
6 kΩ	0000 0101
PTC	0000 1111

Thermal resistor	
Pt100 Climate	0000 0000
Ni100 Climate	0000 0001
Pt100 standard	0000 0010
Ni100 standard	0000 0011
Pt500 standard	0000 0100
Pt1000 standard	0000 0101
Ni1000 standard	0000 0110
Pt200 Climate	0000 0111
Pt500 Climate	0000 1000
Pt1000 Climate	0000 1001
Ni1000 Climate	0000 1010
Pt200 standard	0000 1011
LG-Ni1000 standard	0001 1100
LG-Ni1000 Climate	0001 1101
Thermocouple	
B	0000 0000
N	0000 0001
E	0000 0010
R	0000 0011
S	0000 0100
J	0000 0101
T	0000 0111
K	0000 1000

Codes for measuring ranges, reference channel (COMP) of the module

The following table lists all measuring ranges along with their codes for the reference channel (COMP). Enter these codes in byte 3 of data record 8 (see figure Structure of data record 8, reference channel of the module: Bytes 0 to 27).

Table B- 4 Code for the measuring range, reference channel (COMP)

Measuring range	Code
Thermal resistor	
Pt100 Climate	0000 0000
Ni100 Climate	0000 0001
Pt100 standard	0000 0010
Ni100 standard	0000 0011
Pt500 standard	0000 0100
Pt1000 standard	0000 0101
Ni1000 standard	0000 0110
Pt200 Climate	0000 0111
Pt500 Climate	0000 1000
Pt1000 Climate	0000 1001
Ni1000 Climate	0000 1010
Pt200 standard	0000 1011
LG-Ni1000 standard	0001 1100
LG-Ni1000 Climate	0001 1101

Codes for temperature coefficients

The following table lists all temperature coefficients along with their codes for temperature measurements with the thermal resistors. You need to enter these codes in

- byte 4 of data record 8 (see figure, Structure of data record 8, reference channel of the module: bytes 0 to 27) and
- byte 4 of data records 0, 2, 4, 6 and 8 (see figure, Structure of data record 0: Bytes 0 to 6)

Table B- 5 Codes for temperature coefficient

Temperature coefficient	Code
Pt xxx	
0.003851	0000 0000
0.003916	0000 0001
0.003902	0000 0010
0.003920	0000 0011
Ni xxx	
0.006180	0000 1000
0.006720	0000 1001
LG-Ni	
0.005000	0000 1010

Valid values for fixed reference temperatures

The values that you can set for fixed reference temperatures must be in the valid range of values. The resolution is a tenth of a degree.

Table B- 6 Valid values for fixed reference temperatures

Temperature unit	Decimal	Hexadecimal
Celsius (default)	-1450 to 1550	$FA56_H$ to $60E_H$
Fahrenheit (default)	-2290 to 3110	$F70E_H$ to CCC_H
Kelvin (default)	1282 to 3276	502_H to $10BA_H$

Hardware interrupt limits

The values that you can set for hardware interrupts (high/low limit) must not violate the over/underrange of the respective rated measuring range.

The following tables list the valid hardware interrupt limits. The limits depend on the selected measurement type and measuring range.

Table B- 7 Voltage limits

Voltage		
±50 mV, ±80 mV, ±250 mV, ±500 mV, ±1 V, ±2.5 V, ±5 V, ±10 V	1 V to 5 V	
32510	32510	High limit
-32511	-4863	Low limit

Table B- 8 Current and resistance limits

Current		Resistor	
±20 mA	4 mA to 20 mA / 0 mA to 20 mA	(all configurable measuring ranges)	
32510	32510	32510	High limit
-32511	-4863	1	Low limit

Table B- 9 Limits for thermocouple types B, C, E, and J

Thermocouple									
Type B			Type E			Type J			
°C	°F	K	°C	°F	K	°C	°F	K	
20699	32765	23431	11999	21919	14731	14499	26419	17231	High limit
1	321	2733	-2699	-4539	33	-2099	-3459	633	Low limit

Table B- 10 Limits for thermocouples type K, N, R, and S

Thermocouple									
Type K			Type N			Types R, S			
°C	°F	K	°C	°F	K	°C	°F	K	
16219	29515	18951	15499	28219	18231	20189	32765	22921	High limit
-2699	-4539	33	-2699	-4539	33	-1699	-2739	1033	Low limit

Table B- 11 Limits for thermocouple type T

Thermocouple			
Type T			
°C	°F	K	
5399	10039	8131	High limit
-2699	-4539	33	Low limit

Table B- 12 Limits for thermal resistor Pt xxx Standard and Pt xxx Climatic

Thermal resistor						
Pt xxx Standard			Pt xxx Climate			
°C	°F	K	°C	°F	K	
9999	18319	12731	15499	31099	---	High limit
-2429	-4053	303	-14499	-22899	---	Low limit

Table B- 13 Limits for thermal resistor Ni xxx Standard and Ni xxx Climatic

Thermal resistor						
Ni xxx Standard			Ni xxx Climate			
°C	°F	K	°C	°F	K	
2949	5629	5681	15499	31099	---	High limit
-1049	-1569	1683	-10499	-15699	---	Low limit

B.2 Structure of a data record for dynamic reference temperature

The **WRREC** instruction is used to transfer the reference junction temperature via data record 192 to data record 199 to the module.

The description of the WRREC instruction can be found in the online help from STEP 7.

If you have set the "Dynamic reference temperature" value for the "Reference junction" parameter, the module expects a new data record at least every 5 minutes. If the module does not receive a new data record within this time, it generates the "Reference channel error" diagnostics message.

Assignment of data record and channel

The following assignment applies if no submodules (1 x 8-channel) are configured for the module:

- Data record 192 for channel 0
- Data record 193 for channel 1
- Data record 194 for channel 2
- Data record 195 for channel 3
- Data record 196 for channel 4
- Data record 197 for channel 5
- Data record 198 for channel 6
- Data record 199 for channel 7

If eight submodules (8 x 1-channel) are configured for the module, each submodule has only one channel. The parameters of the channel are in data record 192.

Background: Each submodule you address for the data record transfer has only one channel.

Structure of data record 192 for dynamic reference temperature

The following figure shows an example of the structure of data record 192 for channel 0. The structure for data records 193 to 199 is identical.

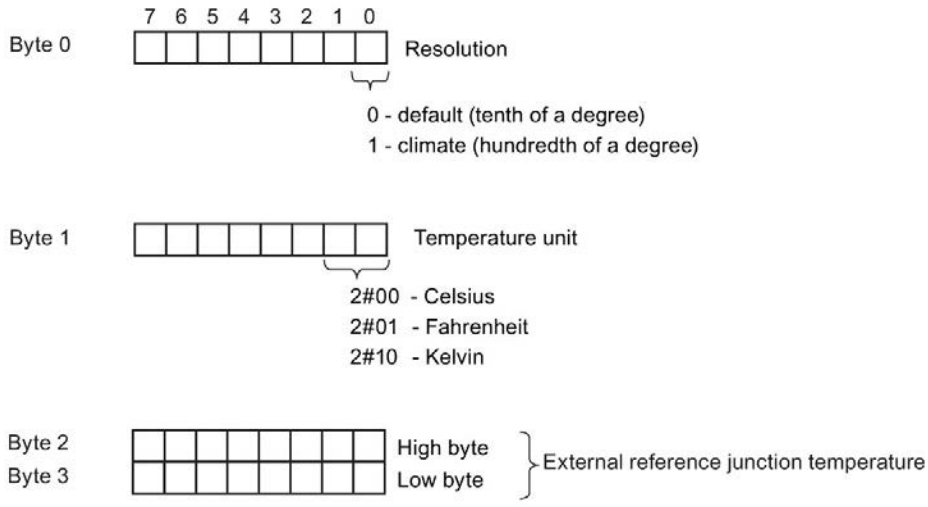

Figure B-4 Structure of data record 192

Valid values for fixed temperature compensation

You can enter the selectable values at byte 1 of the data record for the corresponding channel. The selectable values must lie within the permitted value range, see following table. The resolution is a tenth of a degree.

Table B- 14 Valid values for temperature compensation via data record

Temperature unit	Decimal	Hexadecimal
Celsius (default)	-1450 to 1550	$FA56_H$ to $60E_H$
Fahrenheit (default)	-2290 to 3110	$F70E_H$ to $C26_H$
Kelvin (default)	1282 to 3276	502_H to CCC_H
Celsius (climatic)	-14500 to 15500	$C75C_H$ to $3C8C_H$
Fahrenheit (climatic)	-22900 to 31100	$A68C_H$ to $797C_H$
Kelvin (climatic)	12820 to 32760	3214_H to $7FF8_H$

Additional information

For more information on compensation of the reference junction temperature via data record refer to the Analog value processing (http://support.automation.siemens.com/WW/view/en/67989094) function manual in the internet.

Representation of analog values

C

Introduction

This chapter shows the analog values for all measuring ranges supported by the AI 8xU/I/RTD/TC ST analog module.

Measured value resolution

Each analog value is written left aligned to the tags. The bits marked with "x" are set to "0".

Note

This resolution does not apply to temperature values. The digitalized temperature values are the result of a conversion in the analog module.

Table C- 1 Resolution of the analog values

Resolution in bits including sign	Values		Analog value	
	Decimal	Hexadecimal	High byte	Low byte
16	1	1_H	Sign 0 0 0 0 0 0 0	0 0 0 0 0 0 0 1

C.1 Representation of input ranges

The following tables set out the digitalized representation of the input ranges by bipolar and unipolar range. The resolution is 16 bits.

Table C- 2 Bipolar input ranges

Dec. value	Measured value in %	Data word																Range
		2^{15}	2^{14}	2^{13}	2^{12}	2^{11}	2^{10}	2^{9}	2^{8}	2^{7}	2^{6}	2^{5}	2^{4}	2^{3}	2^{2}	2^{1}	2^{0}	
32767	>117.589	0	1	1	1	1	1	1	1	1	1	1	1	1	1	1	1	Overflow
32511	117.589	0	1	1	1	1	1	1	0	1	1	1	1	1	1	1	1	Overshoot range
27649	100.004	0	1	1	0	1	1	0	0	0	0	0	0	0	0	0	1	
27648	100.000	0	1	1	0	1	1	0	0	0	0	0	0	0	0	0	0	Rated range
1	0.003617	0	0	0	0	0	0	0	0	0	0	0	0	0	0	0	1	
0	0.000	0	0	0	0	0	0	0	0	0	0	0	0	0	0	0	0	
-1	-0.003617	1	1	1	1	1	1	1	1	1	1	1	1	1	1	1	1	
-27648	-100.000	1	0	0	1	0	1	0	0	0	0	0	0	0	0	0	0	
-27649	-100.004	1	0	0	1	0	0	1	1	1	1	1	1	1	1	1	1	Undershoot range
-32512	-117.593	1	0	0	0	0	0	0	1	0	0	0	0	0	0	0	0	
-32768	<-117.593	1	0	0	0	0	0	0	0	0	0	0	0	0	0	0	0	Underflow

Table C- 3 Unipolar input ranges

Dec. value	Measured value in %	Data word																Range
		2^{15}	2^{14}	2^{13}	2^{12}	2^{11}	2^{10}	2^{9}	2^{8}	2^{7}	2^{6}	2^{5}	2^{4}	2^{3}	2^{2}	2^{1}	2^{0}	
32767	>117.589	0	1	1	1	1	1	1	1	1	1	1	1	1	1	1	1	Overflow
32511	117.589	0	1	1	1	1	1	1	0	1	1	1	1	1	1	1	1	Overshoot range
27649	100.004	0	1	1	0	1	1	0	0	0	0	0	0	0	0	0	1	
27648	100.000	0	1	1	0	1	1	0	0	0	0	0	0	0	0	0	0	
1	0.003617	0	0	0	0	0	0	0	0	0	0	0	0	0	0	0	1	Rated range
0	0.000	0	0	0	0	0	0	0	0	0	0	0	0	0	0	0	0	
-1	-0.003617	1	1	1	1	1	1	1	1	1	1	1	1	1	1	1	1	Undershoot range
-4864	-17.593	1	1	1	0	1	1	0	1	0	0	0	0	0	0	0	0	
-32768	<-17.593	1	0	0	0	0	0	0	0	0	0	0	0	0	0	0	0	Underflow

C.2 Representation of analog values in voltage measuring ranges

The following tables list the decimal and hexadecimal values (codes) of the possible voltage measuring ranges.

Table C- 4 Voltage measuring ranges ±10 V, ±5 V, ±2.5 V, ±1 V,

Values		Voltage measuring range				Range
dec	hex	±10 V	±5 V	±2.5 V	±1 V	
32767	7FFF	>11.759 V	>5.879 V	>2.940 V	> 1.176 V	Overflow
32511	7EFF	11.759 V	5.879 V	2.940 V	1.176 V	Overshoot range
27649	6C01					
27648	6C00	10 V	5 V	2.5 V	1 V	Rated range
20736	5100	7.5 V	3.75 V	1.875 V	0.75 V	
1	1	361.7 µV	180.8 µV	90.4 µV	36.17 µV	
0	0	0 V	0 V	0 V	0 V	
-1	FFFF					
-20736	AF00	-7.5 V	-3.75 V	-1.875 V	-0.75 V	
-27648	9400	-10 V	-5 V	-2.5 V	-1 V	
-27649	93FF					Undershoot range
-32512	8100	-11.759 V	-5.879 V	-2.940 V	-1.176 V	
-32768	8000	< -11.759 V	< -5.879 V	< -2.940 V	< -1.176 V	Underflow

Table C- 5 Voltage measuring ranges ±500 mV, ±250 mV, ±80 mV, and ±50 mV,

Values		Voltage measuring range				Range
dec	hex	±500 mV	±250 mV	±80 mV	±50 mV	
32767	7FFF	>587.9 mV	> 294.0 mV	> 94.1 mV	> 58.8 mV	Overflow
32511	7EFF	587.9 mV	294.0 mV	94.1 mV	58.8 mV	Overshoot range
27649	6C01					
27648	6C00	500 mV	250 mV	80 mV	50 mV	Rated range
20736	5100	375 mV	187.5 mV	60 mV	37.5 mA	
1	1	18.08 µV	9.04 µV	2.89 µV	1.81 µV	
0	0	0 mV	0 mV	0 mV	0 mV	
-1	FFFF					
-20736	AF00	-375 mV	-187.5 mV	-60 mV	-37.5 mV	
-27648	9400	-500 mV	-250 mV	-80 mV	-50 mV	
-27649	93FF					Undershoot range
-32512	8100	-587.9 mV	-294.0 mV	-94.1 mV	-58.8 mV	
-32768	8000	<-587.9 mV	< -294.0 mV	< -94.1 mV	< -58.8 mV	Underflow

Table C- 6 Voltage measuring range 1 to 5 V

Values		Voltage measuring range	Range
dec	hex	1 to 5 V	
32767	7FFF	>5.704 V	Overflow
32511	7EFF	5.704 V	Overshoot range
27649	6C01		
27648	6C00	5 V	Rated range
20736	5100	4 V	
1	1	1 V + 144.7 µV	
0	0	1 V	
-1	FFFF		Undershoot range
-4864	ED00	0.296 V	
-32768	8000	< 0.296 V	Underflow

C.3 Representation of analog values in the current measuring ranges

The following tables list the decimal and hexadecimal values (codes) of the possible current measuring ranges.

Table C- 7 Current measuring range ±20 mA

Values		Current measuring range	
dec	hex	±20 mA	
32767	7FFF	>23.52 mA	Overflow
32511	7EFF	23.52 mA	Overshoot range
27649	6C01		
27648	6C00	20 mA	Rated range
20736	5100	15 mA	
1	1	723.4 nA	
0	0	0 mA	
-1	FFFF		
-20736	AF00	-15 mA	
-27648	9400	-20 mA	
-27649	93FF		Undershoot range
-32512	8100	-23.52 mA	
-32768	8000	< -23.52 mA	Underflow

Table C- 8 Current measuring ranges 0 to 20 mA and 4 to 20 mA

Values		Current measuring range		
dec	hex	0 to 20 mA	4 to 20 mA	
32767	7FFF	>23.52 mA	>22.81 mA	Overflow
32511	7EFF	23.52 mA	22.81 mA	Overshoot range
27649	6C01			
27648	6C00	20 mA	20 mA	Rated range
20736	5100	15 mA	16 mA	
1	1	723.4 nA	4 mA + 578.7 nA	
0	0	0 mA	4 mA	
-1	FFFF			Undershoot range
-4864	ED00	-3.52 mA	1.185 mA	
-32768	8000	<- 3.52 mA	< 1.185 mA	Underflow

C.4 Representation of the analog values of resistance-based sensors/resistance thermometers

The following tables list the decimal and hexadecimal values (codes) of the possible resistance-based sensor ranges.

Table C- 9 Resistance-based sensors of 150 Ω, 300 Ω, 600 Ω, and 6000 Ω

Values		Resistive transmitter range				
dec	hex	150 Ω	300 Ω	600 Ω	6000 Ω	
32767	7FFF	>176.38 Ω	>352.77 Ω	>705.53 Ω	>7055.3 Ω	Overflow
32511	7EFF	176.38 Ω	352.77 Ω	705.53 Ω	7055.3 Ω	Overshoot range
27649	6C01					
27648	6C00	150 Ω	300 Ω	600 Ω	6000 Ω	Rated range
20736	5100	112.5 Ω	225 Ω	450 Ω	4500 Ω	
1	1	5.43 mΩ	10.85 mΩ	21.70 mΩ	217 mΩ	
0	0	0 Ω	0 Ω	0 Ω	0 Ω	

The following tables list the decimal and hexadecimal values (codes) of the supported resistance thermometers.

Table C- 10 Thermal resistors Pt 100, Pt 200, Pt 500 and Pt 1000 Standard

Pt x00 Standard in °C (1 digit = 0.1°C)	Values		Pt x00 Standard in °F (1 digit = 0.1 °F)	Values		Pt x00 Standard in K (1 digit = 0.1 K)	Values		Range
	dec	hex		dec	hex		dec	hex	
> 1000.0	32767	7FFF	> 1832.0	32767	7FFF	> 1273.2	32767	7FFF	Overflow
1000.0 : 850.1	10000 : 8501	2710 : 2135	1832.0 : 1562.1	18320 : 15621	4790 : 3D05	1273.2 : 1123.3	12732 : 11233	31BC : 2BE1	Overshoot range
850.0 : -200.0	8500 : -2000	2134 : F830	1562.0 : -328.0	15620 : -3280	3D04 : F330	1123.2 : 73.2	11232 : 732	2BE0 : 2DC	Rated range
-200.1 : -243.0	-2001 : -2430	F82F : F682	-328.1 : -405.4	-3281 : -4054	F32F : F02A	73.1 : 30.2	731 : 302	2DB : 12E	Undershoot range
< -243.0	-32768	8000	< -405.4	-32768	8000	< 30.2	32768	8000	Underflow

Table C- 11 Thermal resistors Pt 100, Pt 200, Pt 500 and Pt 1000 Climate

Pt x00 Climate/ in °C (1 digit = 0.01 °C)	Values		Pt x00 Climate/ in °F (1 digit = 0.01 °F)	Values		Range
	dec	hex		dec	hex	
> 155.00	32767	7FFF	> 311.00	32767	7FFF	Overflow
155.00 : 130.01	15500 : 13001	3C8C : 32C9	311.00 : 266.01	31100 : 26601	797C : 67E9	Overshoot range
130.00 : -120.00	13000 : -12000	32C8 : D120	266.00 : -184.00	26600 : -18400	67E8 : B820	Rated range
-120.01 : -145.00	-12001 : -14500	D11F : C75C	-184.01 : -229.00	-18401 : -22900	B81F : A68C	Undershoot range
< -145.00	-32768	8000	< -229.00	-32768	8000	Underflow

Table C- 12 Thermal resistors Ni 100, Ni 1000, LG-Ni 1000 Standard

Ni x00 standard in °C (1 digit = 0.1 °C)	Values		Ni x00 Standard in °F (1 digit = 0.1 °F)	Values		Ni x00 Standard in K (1 digit = 0.1 K)	Values		Range
	dec	hex		dec	hex		dec	hex	
> 295.0	32767	7FFF	> 563.0	32767	7FFF	> 568.2	32767	7FFF	Overflow
295.0 : 250.1	2950 : 2501	B86 : 9C5	563.0 : 482.1	5630 : 4821	15FE : 12D5	568.2 : 523.3	5682 : 5233	1632 : 1471	Overshoot range
250.0 : -60.0	2500 : -600	9C4 : FDA8	482.0 : -76.0	4820 : -760	12D4 : FD08	523.2 : 213.2	5232 : 2132	1470 : 854	Rated range
-60.1 : -105.0	-601 : -1050	FDA7 : FBE6	-76.1 : -157.0	-761 : -1570	FD07 : F9DE	213.1 : 168.2	2131 : 1682	853 : 692	Undershoot range
< -105.0	-32768	8000	< -157.0	-32768	8000	< 168.2	32768	8000	Underflow

Table C- 13 Thermal resistors Ni 100, Ni 1000, LG-Ni 1000 Climate

Ni x00 Climate in °C (1 digit = 0.01 °C)	Values		Ni x00 Climate in °F (1 digit = 0.01 °F)	Values		Range
	dec	hex		dec	hex	
> 155.00	32767	7FFF	> 311.00	32767	7FFF	Overflow
155.00 : 130.01	15500 : 13001	3C8C : 32C9	311.00 : 266.01	31100 : 26601	797C : 67E9	Overshoot range
130.00 : -60.00	13000 : -6000	32C8 : E890	266.00 : -76.00	26600 : -7600	67E8 : E250	Rated range
-60.01 : -105.00	-6001 : -10500	E88F : D6FC	-76.01 : -157.00	-7601 : -15700	E24F : C2AC	Undershoot range
< - 105.00	-32768	8000	< - 157.00	-32768	8000	Underflow

C.5 Representation of analog values for thermocouples

The following tables list the decimal and hexadecimal values (codes) of the supported thermocouples.

Table C- 14 Thermocouple type B

Type B in °C	Values		Type B in °F	Values		Type B in K	Values		Range
	dec	hex		dec	hex		dec	hex	
> 2070.0	32767	7FFF	> 3276.6	32767	7FFF	> 2343.2	32767	7FFF	Overflow
2070.0 : 1820.1	20700 : 18201	50DC : 4719	3276.6 : 2786.6	32766 : 27866	7FFE : 6CDA	2343.2 : 2093.3	23432 : 20933	5B88 : 51C5	Overshoot range
1820.0 : 250.0	18200 : 2500	4718 : 09C4	2786.5 : 482.0	27865 : 4820	6CD9 : 12D4	2093.2 : 523.2	20932 : 5232	51C4 : 1470	Rated range
249.9 : 0.0	2499 : 0	09C3 : 0	481.9 : 32.0	4819 : 320	12D3 : 0140	523.1 : 273.2	5231 : 2732	1469 : 0AAC	Undershoot range
< 0.0	-32768	8000	< 32.0	-32768	8000	< 273.2	32768	8000	Underflow

Table C- 15 Thermocouple type E

Type E in °C	Values		Type E in °F	Values		Type E in K	Values		Range
	dec	hex		dec	hex		dec	hex	
> 1200.0	32767	7FFF	> 2192.0	32767	7FFF	> 1473.2	32767	7FFF	Overflow
1200.0 : 1000.1	12000 : 10001	2EE0 : 2711	2192.0 : 1832.2	21920 : 18322	55A0 : 4792	1473.2 : 1273.3	14732 : 12733	398C : 31BD	Overshoot range
1000.0 : -270.0	10000 : -2700	2710 : F574	1832.0 : -454.0	18320 : -4540	4790 : EE44	1273.2 : 0	12732 : 0	31BC : 0000	Rated range
< -270.0	-32768	8000	< -454.0	-32768	8000	<0	-32768	8000	Underflow

Table C- 16 Thermocouple type J

Type J in °C	Values		Type J in °F	Values		Type J in K	Values		Range
	dec	hex		dec	hex		dec	hex	
> 1450.0	32767	7FFF	> 2642.0	32767	7FFF	> 1723.2	32767	7FFF	Overflow
1450.0 : 1200.1	14500 : 12001	38A4 : 2EE1	2642.0 : 2192.2	26420 : 21922	6734 : 55A2	1723.2 : 1473.3	17232 : 14733	4350 : 398D	Overshoot range
1200.0 : -210.0	12000 : -2100	2EE0 : F7CC	2192.0 : -346.0	21920 : -3460	55A0 : F27C	1473.2 : 63.2	14732 : 632	398C : 0278	Rated range
< -210.0	-32768	8000	< -346.0	-32768	8000	< 63.2	-32768	8000	Underflow

Table C- 17 Thermocouple type K

Type K in °C	Values		Type K in °F	Values		Type K in K	Values		Range
	dec	hex		dec	hex		dec	hex	
> 1622.0	32767	7FFF	> 2951.6	32767	7FFF	> 1895.2	32767	7FFF	Overflow
1622.0 : 1372.1	16220 : 13721	3F5C : 3599	2951.6 : 2501.7	29516 : 25017	734C : 61B9	1895.2 : 1645.3	18952 : 16453	4A08 : 4045	Overshoot range
1372.0 : -270.0	13720 : -2700	3598 : F574	2501.6 : -454.0	25016 : -4540	61B8 : EE44	1645.2 : 0	16452 : 0	4044 : 0000	Rated range
< -270.0	-32768	8000	< -454.0	-32768	8000	< 0	-32768	8000	Underflow

Table C- 18 Thermocouple type N

Type N in °C	Values		Type N in °F	Values		Type N in K	Values		Range
	dec	hex		dec	hex		dec	hex	
> 1550.0	32767	7FFF	> 2822.0	32767	7FFF	> 1823.2	32767	7FFF	Overflow
1550.0 : 1300.1	15500 : 13001	3C8C : 32C9	2822.0 : 2372.2	28220 : 23722	6E3C : 5CAA	1823.2 : 1573.3	18232 : 15733	4738 : 3D75	Overshoot range
1300.0 : -270.0	13000 : -2700	32C8 : F574	2372.0 : -454.0	23720 : -4540	5CA8 : EE44	1573.2 : 0	15732 : 0	3D74 : 0000	Rated range
< -270.0	-32768	8000	< -454.0	-32768	8000	< 0	-32768	8000	Underflow

Table C- 19 Thermocouple type R and S

Type R, S in °C	Values		Type R, S in °F	Values		Types R, S in K	Values		Range
	dec	hex		dec	hex		dec	hex	
> 2019.0	32767	7FFF	> 3276.6	32767	7FFF	> 2292.2	32767	7FFF	Overflow
2019.0 : 1769.1	20190 : 17691	4EDE : 451B	3276.6 : 3216.4	32766 : 32164	7FFE : 7DA4	2292.2 : 2042.3	22922 : 20423	598A : 4FC7	Overshoot range
1769.0 : -50.0	17690 : -500	451A : FE0C	3216.2 : -58.0	32162 : -580	7DA2 : FDBC	2042.2 : 223.2	20422 : 2232	4FC6 : 08B8	Rated range
-50.1 : -170.0	-501 : -1700	FE0B : F95C	-58.1 : -274.0	-581 : -2740	FDBB : F54C	223.1 : 103.2	2231 : 1032	08B7 : 0408	Undershoot range
< -170.0	-32768	8000	< -274.0	-32768	8000	< 103.2	< 1032	8000	Underflow

Table C- 20 Thermocouple type T

Type T in °C	Values		Type T in °F	Values		Type T in K	Values		Range
	dec	hex		dec	hex		dec	hex	
> 540.0	32767	7FFF	> 1004.0	32767	7FFF	> 813.2	32767	7FFF	Overflow
540.0 : 400.1	5400 : 4001	1518 : 0FA1	1004.0 : 752.2	10040 : 7522	2738 : 1D62	813.2 : 673.3	8132 : 6733	1FC4 : 1AAD	Overshoot range
400.0 : -270.0	4000 : -2700	0FA0 : F574	752.0 : -454.0	7520 : -4540	1D60 : EE44	673.2 : 3.2	6732 : 32	1AAC : 0020	Rated range
< -270.0	-32768	8000	< -454.0	-32768	8000	< 3.2	-32768	8000	Underflow

SIEMENS

SIMATIC

S7-1500 / ET 200MP

Analog Input Module AI 8xU/R/RTD/TC HF (6ES7531-7PF00-0AB0)

Manual

Edition 09/2016

siemens.com

SIEMENS

SIMATIC

S7-1500/ET 200MP Analog Input Module AI 8xU/R/RTD/TC HF (6ES7531-7PF00-0AB0)

Manual

Preface

Documentation guide 1

Product overview 2

Wiring 3

Parameters/address space 4

Interrupts/diagnostics alarms 5

Technical specifications 6

Dimensional drawing A

Parameter data records B

Representation of analog values C

09/2016

A5E36647959-AB

Legal information

Warning notice system

This manual contains notices you have to observe in order to ensure your personal safety, as well as to prevent damage to property. The notices referring to your personal safety are highlighted in the manual by a safety alert symbol, notices referring only to property damage have no safety alert symbol. These notices shown below are graded according to the degree of danger.

⚠ DANGER

indicates that death or severe personal injury **will** result if proper precautions are not taken.

⚠ WARNING

indicates that death or severe personal injury **may** result if proper precautions are not taken.

⚠ CAUTION

indicates that minor personal injury can result if proper precautions are not taken.

NOTICE

indicates that property damage can result if proper precautions are not taken.

If more than one degree of danger is present, the warning notice representing the highest degree of danger will be used. A notice warning of injury to persons with a safety alert symbol may also include a warning relating to property damage.

Qualified Personnel

The product/system described in this documentation may be operated only by **personnel qualified** for the specific task in accordance with the relevant documentation, in particular its warning notices and safety instructions. Qualified personnel are those who, based on their training and experience, are capable of identifying risks and avoiding potential hazards when working with these products/systems.

Proper use of Siemens products

Note the following:

⚠ WARNING

Siemens products may only be used for the applications described in the catalog and in the relevant technical documentation. If products and components from other manufacturers are used, these must be recommended or approved by Siemens. Proper transport, storage, installation, assembly, commissioning, operation and maintenance are required to ensure that the products operate safely and without any problems. The permissible ambient conditions must be complied with. The information in the relevant documentation must be observed.

Trademarks

All names identified by ® are registered trademarks of Siemens AG. The remaining trademarks in this publication may be trademarks whose use by third parties for their own purposes could violate the rights of the owner.

Disclaimer of Liability

We have reviewed the contents of this publication to ensure consistency with the hardware and software described. Since variance cannot be precluded entirely, we cannot guarantee full consistency. However, the information in this publication is reviewed regularly and any necessary corrections are included in subsequent editions.

Siemens AG
Division Digital Factory
Postfach 48 48
90026 NÜRNBERG
GERMANY

A5E36647959-AB
℗ 09/2016 Subject to change

Copyright © Siemens AG 2016.
All rights reserved

Preface

Purpose of the documentation

This manual supplements the S7-1500/ET 200MP (http://support.automation.siemens.com/WW/view/en/59191792) system manual.

Functions that relate in general to the systems are described in these system manuals.

The information provided in this manual and in the system/function manuals supports you in commissioning the systems.

Changes compared to previous version

Compared to the previous version, this manual contains the following changes:

- As of firmware version V1.1.0, the module supports the scalable measuring range function.
- Original texts of the license conditions and copyright notes for open-source software are available on the Internet as of 09/2016.

Conventions

The term "CPU" is used in this manual both for the CPUs of the S7-1500 automation system, as well as for interface modules of the ET 200MP distributed I/O system.

Please also observe notes marked as follows:

Note

A note contains important information regarding the product described in the documentation or its handling, or draws special attention to a section of the documentation.

Security information

Siemens provides products and solutions with industrial security functions that support the secure operation of plants, systems, machines and networks.

In order to protect plants, systems, machines and networks against cyber threats, it is necessary to implement – and continuously maintain – a holistic, state-of-the-art industrial security concept. Siemens' products and solutions only form one element of such a concept.

Customer is responsible to prevent unauthorized access to its plants, systems, machines and networks. Systems, machines and components should only be connected to the enterprise network or the internet if and to the extent necessary and with appropriate security measures (e.g. use of firewalls and network segmentation) in place.

Additionally, Siemens' guidance on appropriate security measures should be taken into account. For more information about industrial security, please visit (http://www.siemens.com/industrialsecurity).

Siemens' products and solutions undergo continuous development to make them more secure. Siemens strongly recommends to apply product updates as soon as available and to always use the latest product versions. Use of product versions that are no longer supported, and failure to apply latest updates may increase customer's exposure to cyber threats.

To stay informed about product updates, subscribe to the Siemens Industrial Security RSS Feed under (http://www.siemens.com/industrialsecurity).

Open Source Software

Open-source software is used in the firmware of the I/O modules. Open Source Software is provided free of charge. We are liable for the product described, including the open-source software contained in it, pursuant to the conditions applicable to the product. Siemens accepts no liability for the use of the open source software over and above the intended program sequence, or for any faults caused by modifications to the software.

For legal reasons, we are obliged to publish the original text of the license conditions and copyright notices. Please read the information relating to this on the Internet (https://support.industry.siemens.com/cs/ww/en/view/109739516).

Table of contents

Preface 4

1 Documentation guide 7

2 Product overview 11

2.1 Properties 11

2.2 Functions 13
2.2.1 Scalable measuring range 13
2.2.2 Configuration 18

3 Wiring 19

4 Parameters/address space 24

4.1 Measuring types and ranges 24

4.2 Parameters 27

4.3 Declaration of parameters 31

4.4 Address space 34

5 Interrupts/diagnostics alarms 41

5.1 Status and error displays 41

5.2 Interrupts 43

5.3 Diagnostics alarms 45

6 Technical specifications 46

A Dimensional drawing 54

B Parameter data records 56

B.1 Parameter assignment and structure of the parameter data records 56

B.2 Structure of the data record for dynamic reference temperature 66

B.3 Structure of data record 235 for scalable measuring range 68

C Representation of analog values 71

C.1 Representation of input ranges 72

C.2 Representation of analog values in voltage measuring ranges 73

C.3 Analog value representation for resistance-type transmitters / resistance thermometers 74
C.3.1 Resistance-type transmitters 150, 300, 600, 6000 Ohm 74
C.3.2 Thermal resistor Pt 10, 50, 100, 200, 500, 1000 Standard/GOST 74
C.3.3 Thermal resistor Ni 10, 100, 120, 200, 500, 1000, LG-Ni 1000 Standard 75
C.3.4 Thermal resistor Ni 10, 100, 120, 200, 500, 1000, LG-Ni 1000 Climatic 76
C.3.5 Thermal resistor Ni 10, 100, 120, 200, 500, 1000 GOST Standard 77
C.3.6 Thermal resistor Cu 10, 50, 100 Standard/Climatic/GOST 78

C.4 Representation of analog values for thermocouples 80

Documentation guide

1

The documentation for the SIMATIC S7-1500 automation system, the CPU 1516pro-2 PN based on SIMATIC S7-1500 and the SIMATIC ET 200MP distributed I/O system is arranged into three areas.
This arrangement enables you to access the specific content you require.

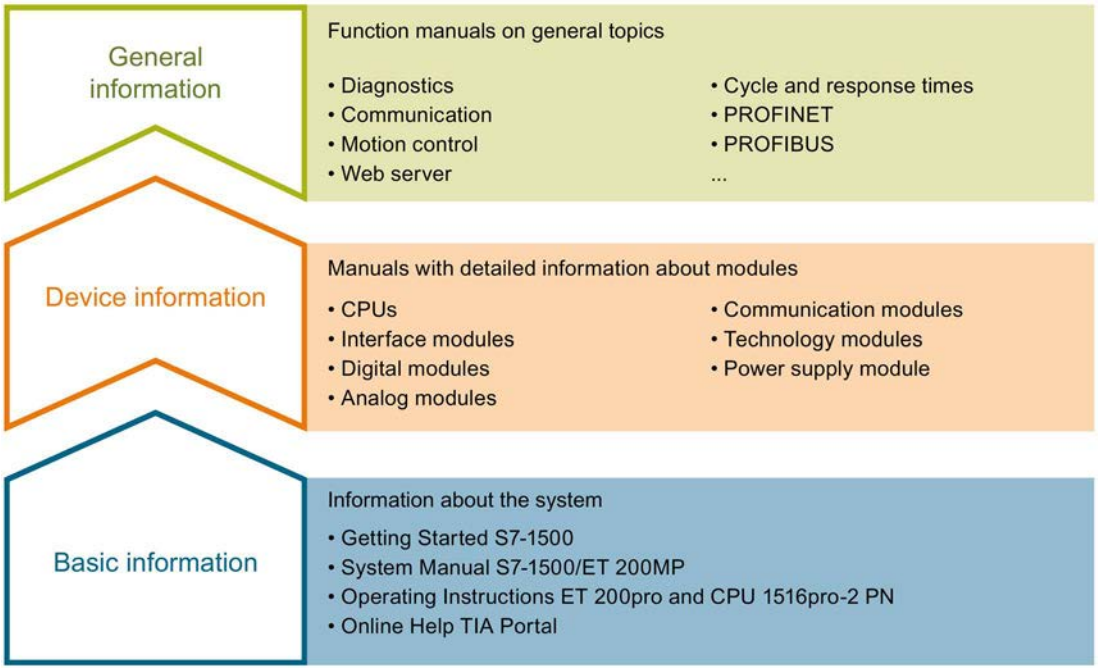

Basic information

The System Manual and Getting Started describe in detail the configuration, installation, wiring and commissioning of the SIMATIC S7-1500 and ET 200MP systems. For CPU 1516pro-2 PN you use the corresponding operating instructions. The STEP 7 online help supports you in the configuration and programming.

Device information

Product manuals contain a compact description of the module-specific information, such as properties, wiring diagrams, characteristics and technical specifications.

General information

The function manuals contain detailed descriptions on general topics regarding the SIMATIC S7-1500 and ET 200MP systems, e.g. diagnostics, communication, motion control, Web server, OPC UA.

You can download the documentation free of charge from the Internet (http://w3.siemens.com/mcms/industrial-automation-systems-simatic/en/manual-overview/Pages/Default.aspx).

Changes and supplements to the manuals are documented in a Product Information.

You can download the product information free of charge from the Internet (https://support.industry.siemens.com/cs/us/en/view/68052815).

Manual Collection S7-1500/ET 200MP

The Manual Collection contains the complete documentation on the SIMATIC S7-1500 automation system and the ET 200MP distributed I/O system gathered together in one file.

You can find the Manual Collection on the Internet (https://support.industry.siemens.com/cs/ww/en/view/86140384).

SIMATIC S7-1500 comparison list for programming languages

The comparison list contains an overview of which instructions and functions you can use for which controller families.

You can find the comparison list on the Internet (https://support.industry.siemens.com/cs/ww/en/view/86630375).

"mySupport"

With "mySupport", your personal workspace, you make the best out of your Industry Online Support.

In "mySupport", you can save filters, favorites and tags, request CAx data and compile your personal library in the Documentation area. In addition, your data is already filled out in support requests and you can get an overview of your current requests at any time.

You must register once to use the full functionality of "mySupport".

You can find "mySupport" on the Internet (https://support.industry.siemens.com/My/ww/en).

"mySupport" - Documentation

In the Documentation area in "mySupport" you can combine entire manuals or only parts of these to your own manual.
You can export the manual as PDF file or in a format that can be edited later.

You can find "mySupport" - Documentation on the Internet (http://support.industry.siemens.com/My/ww/en/documentation).

"mySupport" - CAx data

In the CAx data area in "mySupport", you can access the current product data for your CAx or CAe system.

You configure your own download package with a few clicks.

In doing so you can select:

- Product images, 2D dimension drawings, 3D models, internal circuit diagrams, EPLAN macro files
- Manuals, characteristics, operating manuals, certificates
- Product master data

You can find "mySupport" - CAx data on the Internet (http://support.industry.siemens.com/my/ww/en/CAxOnline).

Application examples

The application examples support you with various tools and examples for solving your automation tasks. Solutions are shown in interplay with multiple components in the system - separated from the focus on individual products.

You will find the application examples on the Internet (https://support.industry.siemens.com/sc/ww/en/sc/2054).

TIA Selection Tool

With the TIA Selection Tool, you can select, configure and order devices for Totally Integrated Automation (TIA).
This tool is the successor of the SIMATIC Selection Tool and combines the known configurators for automation technology into one tool.
With the TIA Selection Tool, you can generate a complete order list from your product selection or product configuration.

You can find the TIA Selection Tool on the Internet (http://w3.siemens.com/mcms/topics/en/simatic/tia-selection-tool).

SIMATIC Automation Tool

You can use the SIMATIC Automation Tool to run commissioning and maintenance activities simultaneously on various SIMATIC S7 stations as a bulk operation independently of the TIA Portal.

The SIMATIC Automation Tool provides a multitude of functions:

- Scanning of a PROFINET/Ethernet network and identification of all connected CPUs
- Address assignment (IP, subnet, gateway) and station name (PROFINET device) to a CPU
- Transfer of the date and the programming device/PC time converted to UTC time to the module
- Program download to CPU
- Operating mode switchover RUN/STOP
- Localization of the CPU by means of LED flashing
- Reading out CPU error information
- Reading the CPU diagnostic buffer
- Reset to factory settings
- Updating the firmware of the CPU and connected modules

You can find the SIMATIC Automation Tool on the Internet (https://support.industry.siemens.com/cs/ww/en/view/98161300).

PRONETA

With SIEMENS PRONETA (PROFINET network analysis), you analyze the PROFINET network during commissioning. PRONETA features two core functions:

- The topology overview independently scans PROFINET and all connected components.
- The IO check is a fast test of the wiring and the module configuration of a system.

You can find SIEMENS PRONETA on the Internet (https://support.industry.siemens.com/cs/ww/en/view/67460624).

Product overview

2

2.1 Properties

Article number

6ES7531-7PF00-0AB0

View of the module

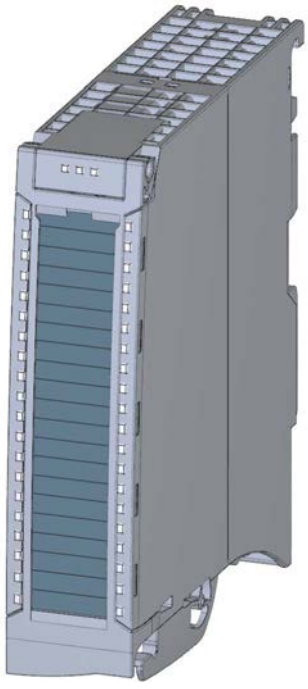

Figure 2-1 View of the AI 8xU/R/RTD/TC HF module

Properties

The module has the following technical properties:

- 9 electrically isolated analog inputs
- Measurement type can be set for each channel:
  - Voltage
  - Resistor
  - Thermal resistor (RTD)
  - Thermocouple (TC) including external compensation via CH 8 (reference channel)
- Resolution 16 bits including sign
- Two operating modes:
  - Fast: shortest integration time 2.5 ms
  - Standard: shortest integration time 7.5 ms
- Configurable diagnostics (per channel)
- Hardware interrupt on limit violation can be set per channel (two low and two high limits per channel)
- Supports thermoresistors and thermocouples according to the GOST standard

The module supports the following functions:

Table 2- 1 Version dependencies of the module functions

Function	Firmware version of the module	Configuration software	
		STEP 7 (TIA Portal) as of V13, SP1 and HSP 0166	GSD file in STEP 7 (TIA Portal) V12 or higher, or STEP 7 V5.5 SP3 or higher
Firmware update	V1.0.0 or higher	X	--- / X
Identification data I&M0 to I&M3	V1.0.0 or higher	X	X
Parameter assignment in RUN	V1.0.0 or higher	X	X
Module internal Shared Input (MSI)	V1.0.0 or higher	X (PROFINET IO only)	X (PROFINET IO only)
Configurable submodules / submodules for Shared Device	V1.0.0 or higher	X (PROFINET IO only)	X (PROFINET IO only)
Scalable measuring range	V1.1.0 or higher	V14 or higher and HSP 0186 (only PROFINET IO)	X (PROFINET IO only)

You can configure the module with STEP 7 (TIA Portal) and with a GSD file.

Accessories

The following accessories are supplied with the module and can also be ordered separately as spare parts:

- Shield bracket
- Shield terminal
- Power supply element
- Labeling strips
- U connector
- Universal front cover

Other components

The following component can be ordered separately:

Front connectors, including potential jumpers and cable ties

You can find additional information on accessories in the S7-1500/ET 200MP (http://support.automation.siemens.com/WW/view/en/59191792) system manual.

2.2 Functions

2.2.1 Scalable measuring range

Introduction

The scalable measuring range is available for the temperature measuring ranges of thermal resistors (RTD) standard and thermocouples (TC). The measuring ranges for voltage, resistor and thermal resistor climatic are not supported.

Function

The scalable measuring range is a limited section of a measuring range supported by the module.

It allows you to increase the resolution for a configurable section.

- The "Measuring range resolution" parameter determines the resolution to 2 or 3 decimal places.
- The "Measuring range center" parameter determines the temperature over which the scalable measuring range is symmetrically spanned.

Typical areas of applications

Temperature measurements and temperature controls with high resolution save energy and are required for:

- Manufacturing of special glass
- Manufacturing of semiconductors
- Heat processes / heat treatment in metals for the aerospace industry.

Value ranges

Table 2- 2 Value ranges for the scalable measuring range

Scalable measuring range	Measuring range resolution		Values hex.
	2 decimal places	3 decimal places	
Overflow	> 325.11	> 32.511	$7FFF_H$
High limit	325.11	32.511	$7EFF_H$
Measuring range center	0	0	0_H
Low limit	-325.12	-32.512	8100_H
Underflow	<-325.12	<-32.512	8000_H

To obtain the absolute temperature, the measuring range center in the user program (as offset) must be calculated with the value of the user data of the scalable measuring range.

The measuring range center is always output in the user data as the value "0". The user data is correspondingly mapped to the bipolar input ranges in S7 format. Underflow/overflow is also formed in accordance with the limits of S7.

Rules

- The measuring range center must be within the nominal range of the underlying measuring range. It is specified in integers.
- The scalable measuring range is spanned symmetrically over the measuring range center. Depending on the resolution, different value ranges result.
- The scalable measuring range is limited by underflow and overflow of the underlying measuring range:

  If the low limit is violated, the scaled measuring range is cut off at the underflow.

  If the high limit is violated, the scaled measuring range is cut off at the overflow.

Examples

The following example shows the scaled measuring range with 2 decimal places for a thermal resistor Pt 100 standard.

At the scaled measuring range with 2 decimal places, the measured value lies between -325.12 K and +325.11 K around the measuring range center. In the figure, the measuring range center is drawn at 300 °C.

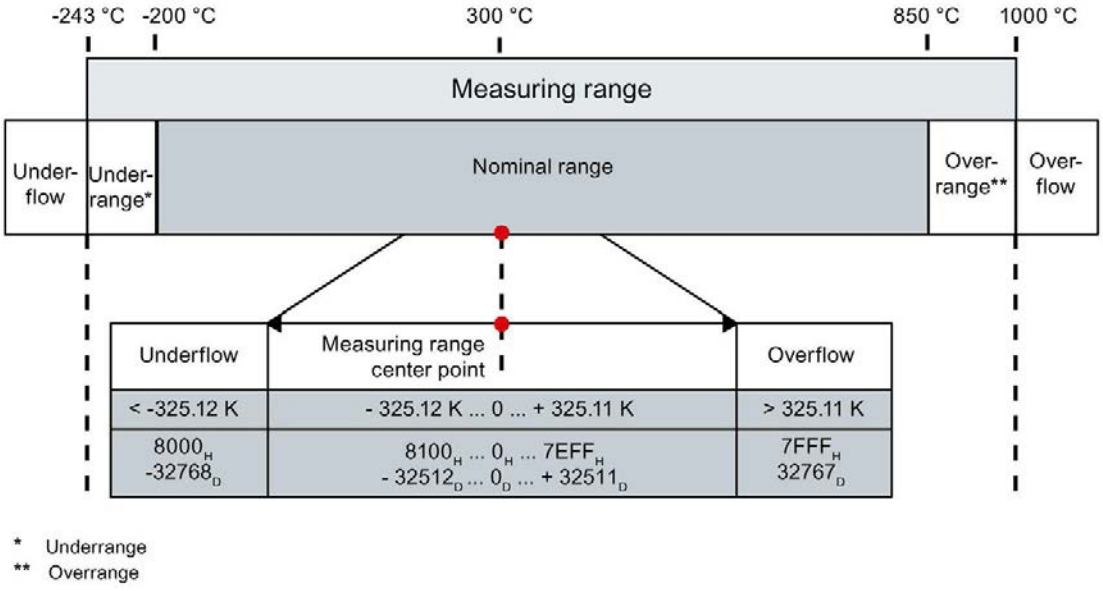

Figure 2-2 Scalable measuring range with 2 decimal places

The following example shows the scaled measuring range with 3 decimal places for a thermal resistor Pt 100 standard.

At the scaled measuring range with 3 decimal places, the measured value lies between -32.512 K and +32.511 K around the measuring range center. In the figure, the measuring range center is drawn at 300 °C.

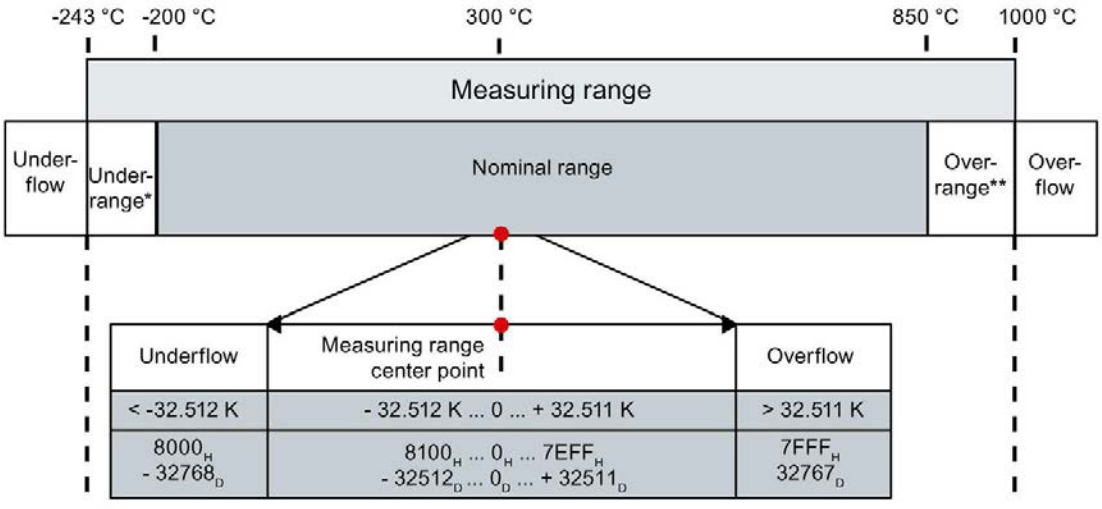

* Underrange
** Overrange

Figure 2-3 Scalable measuring range with 3 decimal places

The following example shows the scaled measuring range with 2 decimal places for a thermal resistor Pt 100 standard.

At the scaled measuring range with 2 decimal places, the measured value lies between -325.12 K and +325.11 K around the measuring range center. In the figure, the measuring range center is drawn at 850 °C.

The measuring range is cut off at 150.00 K, because the limit to the overflow has been exceeded at 1000 °C (clipping).

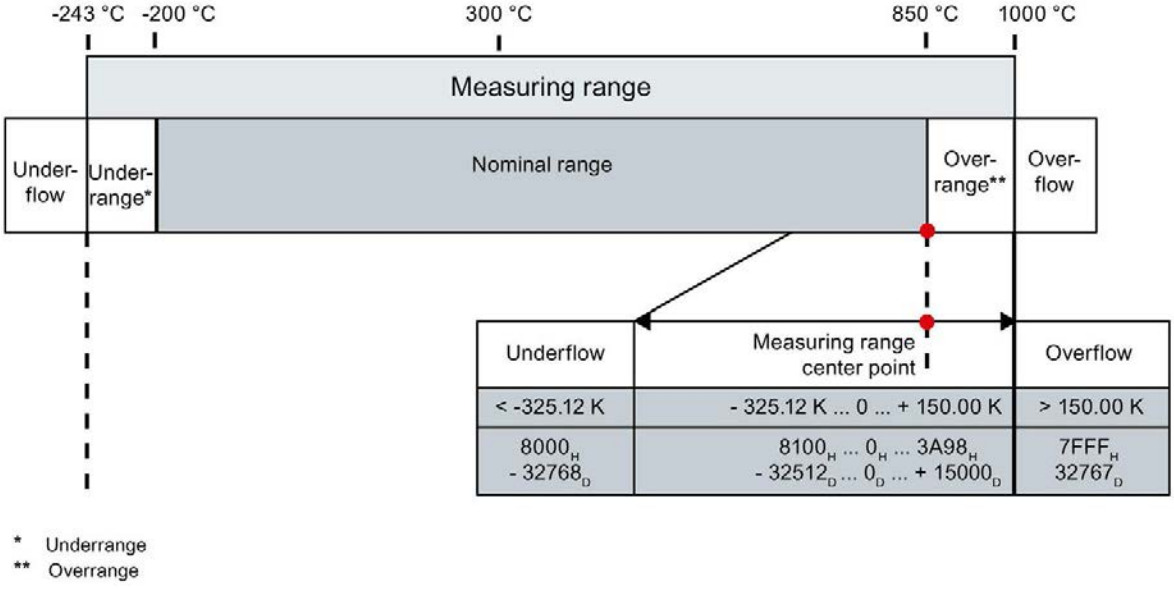

Figure 2-4 Scalable measuring range with 2 decimal places that is cut off at the overflow (clipping).

2.2.2 Configuration

Requirements

- Firmware version V1.1.0 or higher of the module.
- Selection of a valid temperature measuring range.

Configuration

The function is activated using the "Scalable measuring range" parameter.

The following figure shows an example for the configuration:

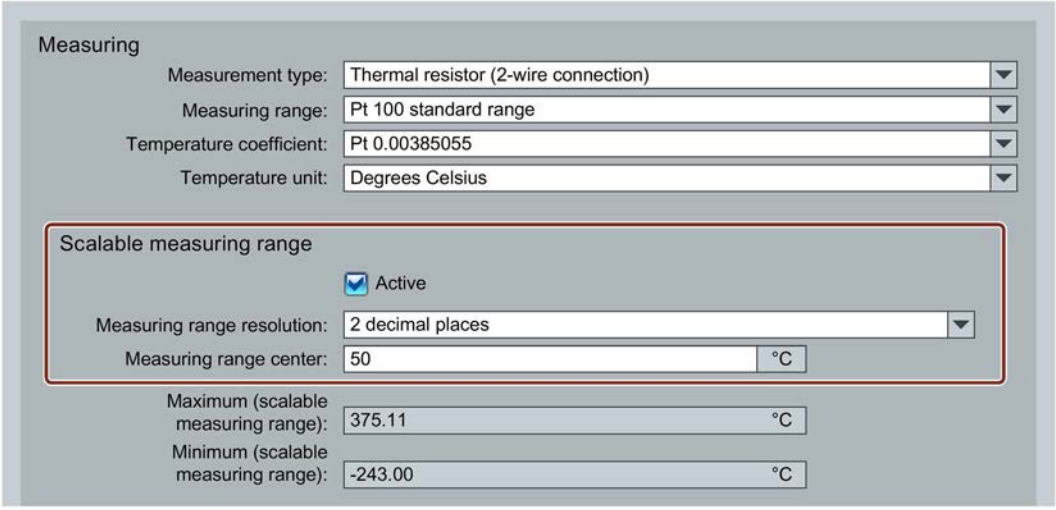

Figure 2-5 Configuration for the scalable measuring range

Reference

You can find additional information on configuration in the STEP 7 online help.

In the user program, you can evaluate the status and the limits of the scalable measuring range with data record 235, see Appendix (Page 68).

Wiring 3

This section contains the block diagram of the module and outlines various connection options.

You can find information on wiring the front connector, creating a cable shield, etc. in the Wiring section of the S7-1500/ET 200MP (http://support.automation.siemens.com/WW/view/en/59191792) system manual.

You can find additional information on compensating the reference junction temperature in the function manual Analog value processing (http://support.automation.siemens.com/WW/view/en/67989094), the structure of a data record in the section Structure of the data record for dynamic reference temperature (Page 66).

Note

- You may use and combine the different wiring options for all channels.
- Do not insert the potential jumpers included with the front connector!

Abbreviations used

Meaning of the abbreviations used in the following figures:

U_n+/U_n-	Voltage input channel n (voltage only)
M_n+/M_n-	Measuring input channel n
$I_{c\,n}$+/$I_{c\,n}$-	Current output for RTD, channel n
L+	Supply voltage connection
M	Ground connection

Pin assignment for the power supply element

The power supply element is plugged onto the front connector for powering the analog module. Wire the supply voltage to terminals 41 (L+) and 44 (M). You can use terminals 42 (L+) and 43 (M) to loop the potential to the next module.

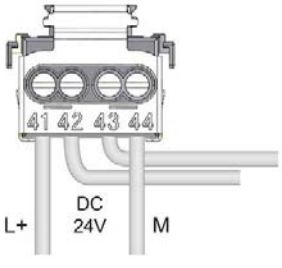

Figure 3-1 Power supply element wiring

Block diagram and pin assignment for voltage measurement

The example in the following figure shows the pin assignment for voltage measurement.

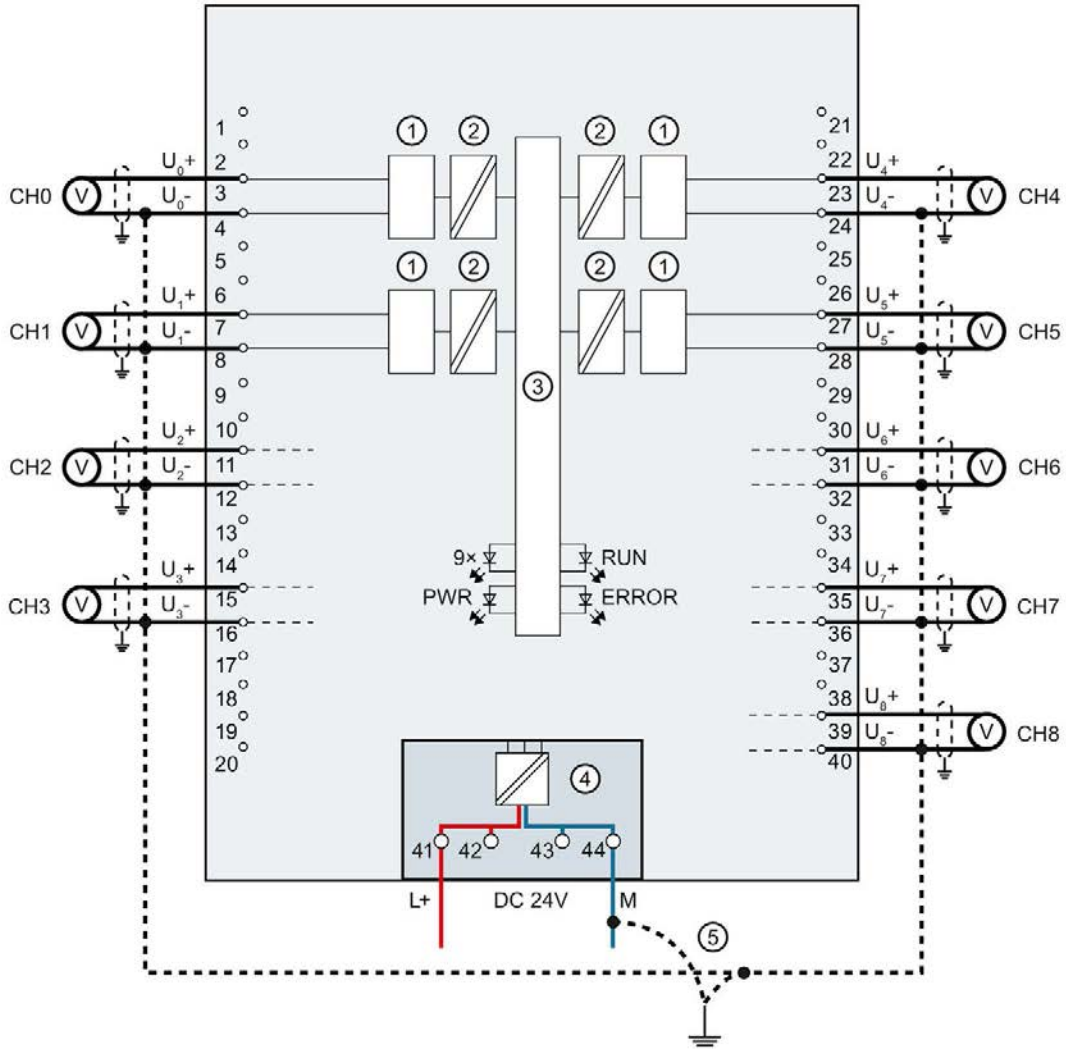

①	Analog-to-Digital Converter (ADC)	CHx	Channel or 9 x channel status (green/red)
②	Electrical isolation	RUN	Status display LED (green)
③	Backplane bus interface	ERROR	Error display LED (red)
④	Supply voltage via power supply element	PWR	LED for power supply (green)
⑤	Equipotential bonding cable (optional)		

Figure 3-2 Block diagram and pin assignment for voltage measurement

Connection: 2, 3 and 4-wire connection of resistance-type transmitters or resistance thermometers (RTD)

The example in the following figure shows the pin assignment for 2, 3 and 4-wire connections of resistance-type transmitters or resistance thermometers.

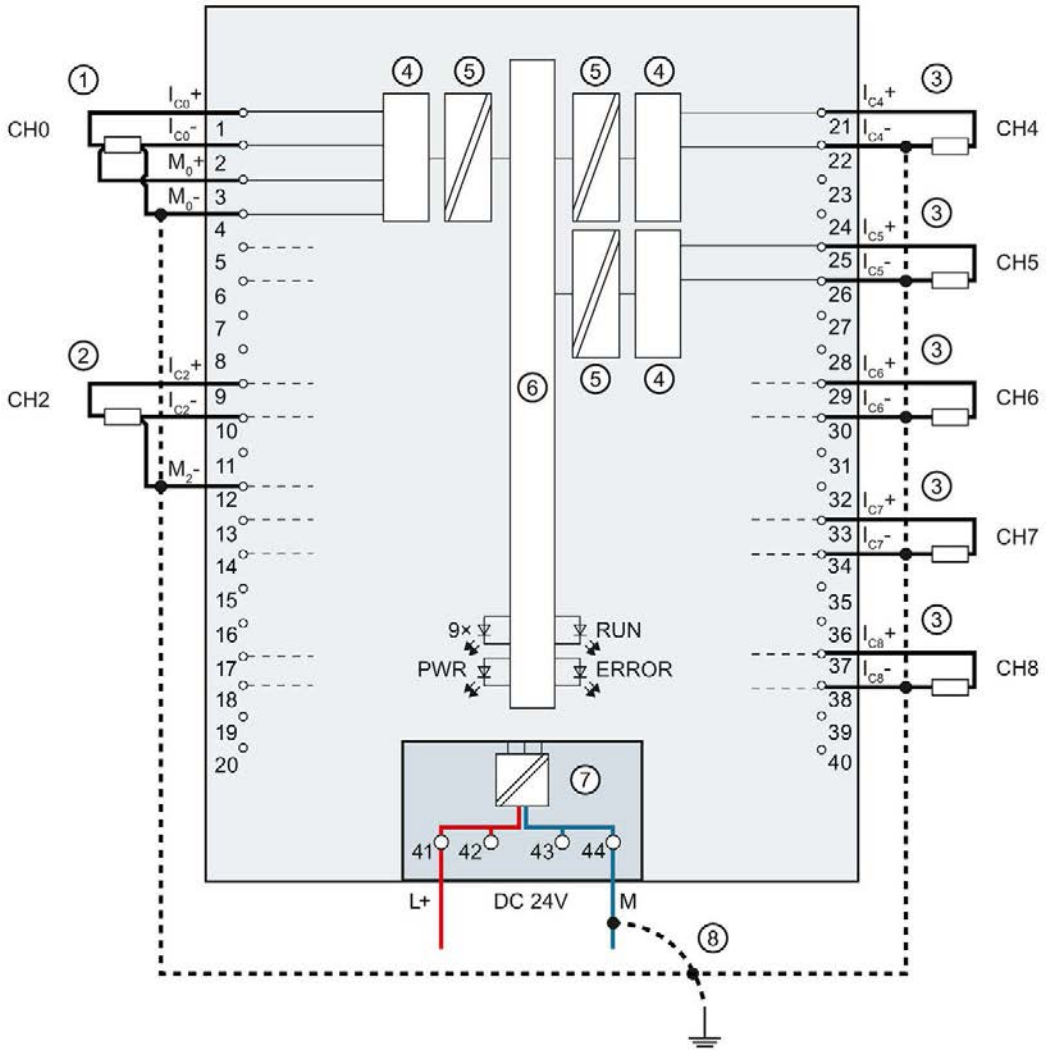

①	4-wire connection	CHx	Channel or 9 x channel status (green/red)
②	3-wire connection	RUN	Status display LED (green)
③	2-wire connection	ERROR	Error display LED (red)
④	Analog-to-Digital Converter (ADC)	PWR	LED for power supply (green)
⑤	Electrical isolation		
⑥	Backplane bus interface		
⑦	Supply voltage via power supply element		
⑧	Equipotential bonding cable (optional)		

Figure 3-3 Block diagram and terminal assignment for 2, 3, and 4-wire connection

Connection: Non-grounded thermocouples for external/internal compensation and connection of a resistance thermometer (RTD) to channel 8 (CH8) or the reference channel

The following figure shows an example of the pin assignment of non-grounded thermocouples for external/internal compensation and the connection of a resistance thermometer (RTD) at the reference channel.

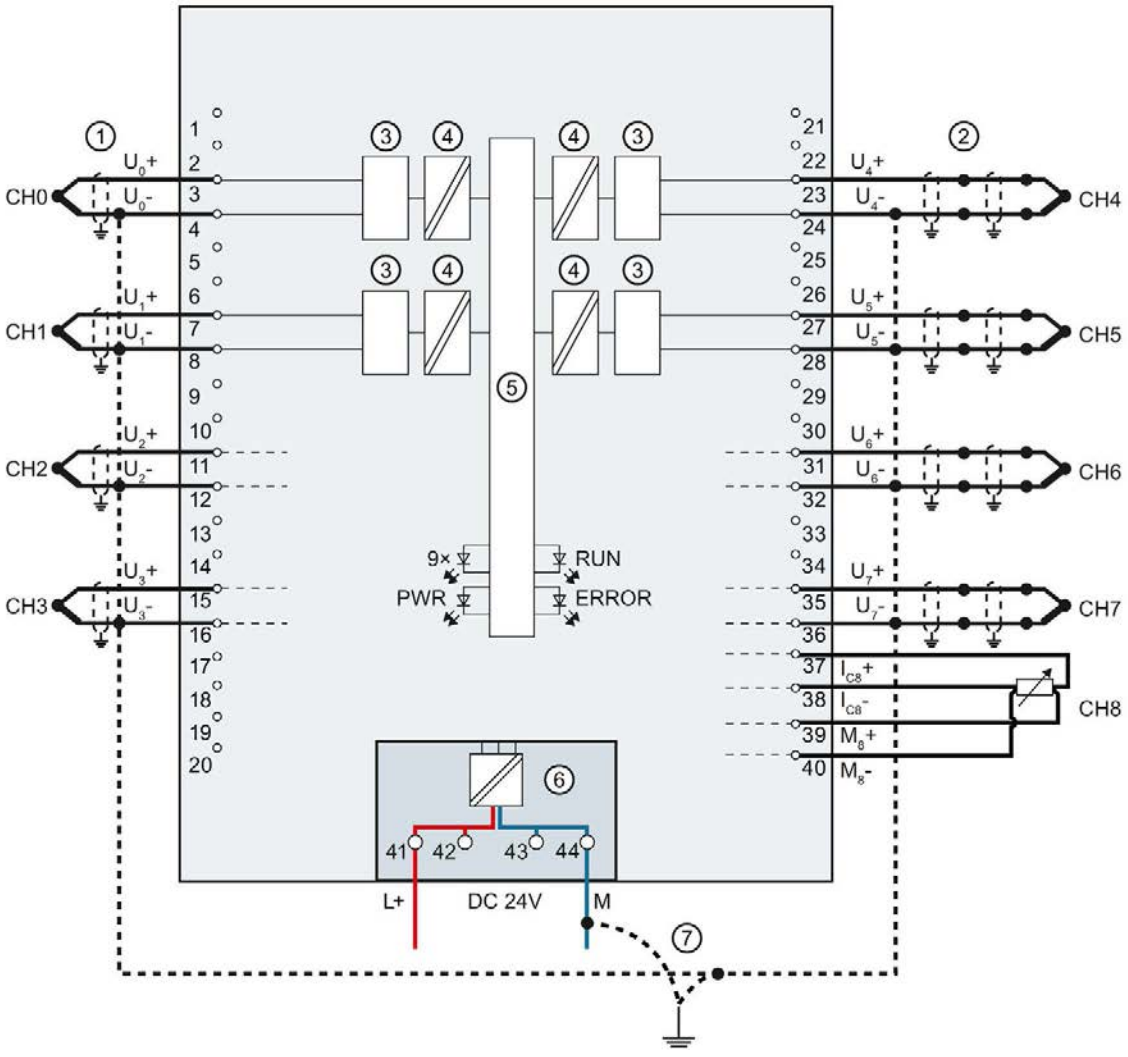

①	Wiring of a thermocouple (non-grounded) for internal compensation	CHx	Channel or 9 x channel status (green/red)
②	Wiring of a thermocouple (non-grounded) for external compensation	RUN	Status display LED (green)
③	Analog-to-Digital Converter (ADC)	ERROR	Error display LED (red)
④	Electrical isolation	PWR	LED for power supply (green)
⑤	Backplane bus interface		
⑥	Supply voltage via power supply element		
⑦	Backplane bus interface potential bonding cable (optional)		

Figure 3-4 Block diagram and pin assignment for non-grounded thermocouples and resistance thermometers

Connection: Grounded thermocouples for internal compensation

The following figure shows an example of the pin assignment for grounded thermocouples for internal compensation.

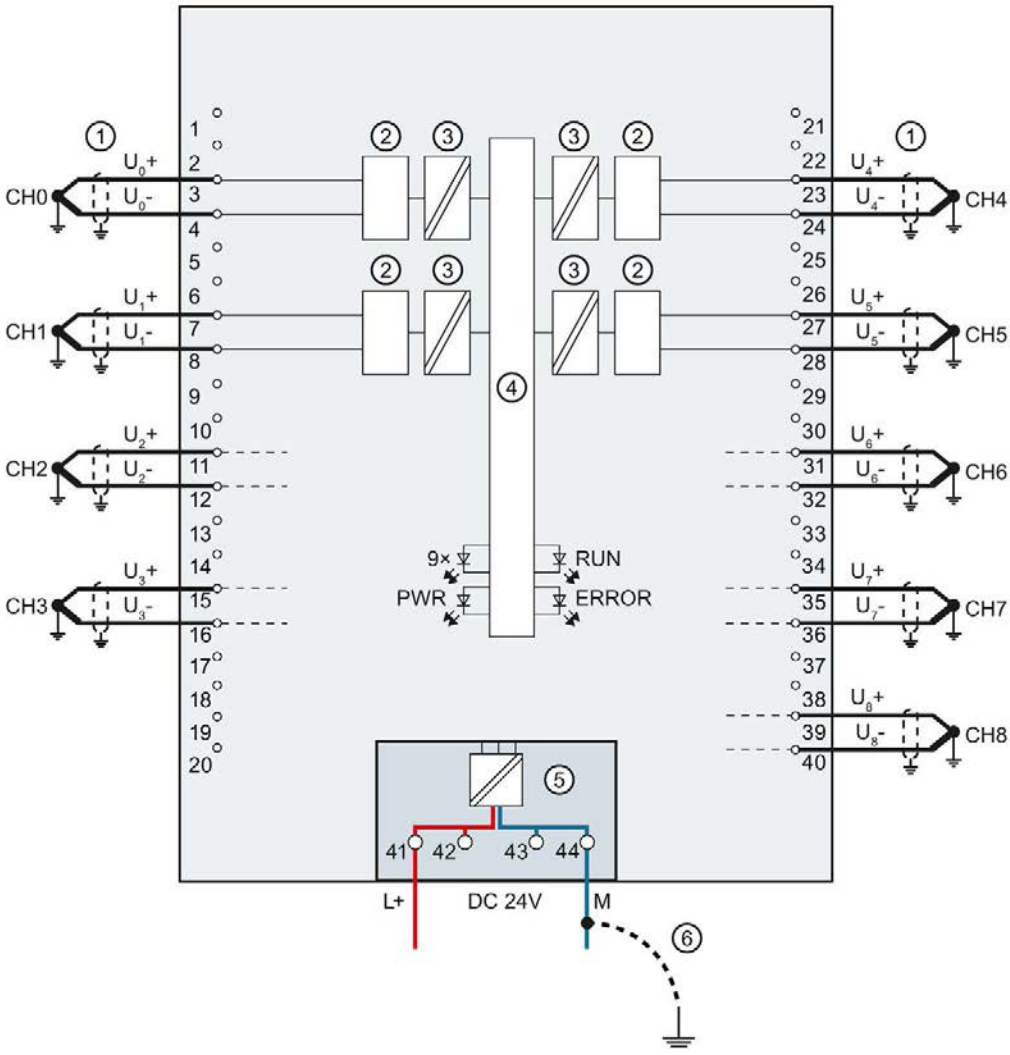

①	Wiring of a thermocouple (grounded) for internal compensation	CHx	Channel or 9 x channel status (green/red)
②	Analog-to-Digital Converter (ADC)	RUN	Status display LED (green)
③	Electrical isolation	ERROR	Error display LED (red)
④	Backplane bus interface	PWR	LED for power supply (green)
⑤	Supply voltage via power supply element		
⑥	Equipotential bonding cable (optional)		

Figure 3-5 Block diagram and pin assignment for grounded thermocouples

Parameters/address space 4

4.1 Measuring types and ranges

Introduction

The module has a default measurement type resistance thermometer RTD (4-wire connection) and the measuring range Pt100 Standard. You need to reassign the module parameters with STEP 7 if you want to use a different measurement type or range.

You use temperature coefficients to determine the measuring ranges for resistance thermometers / thermocouples according to the GOST standard. You can find the adjustable temperature coefficients in the Parameter assignment and structure of the parameter data records (Page 56) section in the table Coding for temperature coefficient.

You can find the analog values for the usable resistance thermometer / thermocouples in the sections Analog value representation for resistance-type transmitters / resistance thermometers (Page 74) and Representation of analog values for thermocouples (Page 80).

The following table shows the measuring types and the respective measuring range.

Table 4- 1 Measuring types and ranges

Measurement type	Measuring range	Representation of analog values
Voltage	±25 mV ±50 mV ±80 mV ±250 mV ±500 mV ±1 V	See Appendix Representation of analog values in voltage measuring ranges (Page 73).
Resistor (2-wire connection)	150 Ω 300 Ω 600 Ω 6000 Ω PTC	
Resistor (3-wire connection) (4-wire connection)	150 Ω 300 Ω 600 Ω 6000 Ω	

Measurement type	Measuring range	Representation of analog values
Thermal resistor RTD (2-wire connection) (3-wire connection) (4-wire connection)	Pt10 Standard/Climatic Pt50 Standard/Climatic Pt100 Standard/Climatic Pt200 Standard/Climatic Pt500 Standard/Climatic Pt1000 Standard/Climatic Ni10 Standard/Climatic Ni100 standard/climate Ni120 Standard/Climatic Ni200 Standard/Climatic Ni500 Standard/Climatic Ni1000 standard/climate LG-Ni1000 standard/climate Cu10 Standard/Climatic Cu50 Standard/Climatic Cu100 Standard/Climatic	
Thermocouple TC	Type B Type C Type E Type J Type K Type N Type R Type S Type T Type TXK	See Appendix Representation of analog values for thermocouples (Page 80).
Deactivated	-	

The tables of the input ranges, overflow, undershoot range, etc. are available in appendix Representation of analog values (Page 71).

Using PTC resistors

PTC resistors are suitable for temperature monitoring of electrical devices, such as motors, drives, and transformers.

Use Type A PTC resistors (PTC thermistor) in accordance with DIN/VDE 0660, part 302. In doing so, follow these steps:

1. Select "Resistor 2-wire terminal" and "PTC" in STEP 7.
2. Connect the PTC using 2-wire connection technology.

If you enable the "Underflow" diagnostics in STEP 7, it will be signaled for resistance values <18 Ω. In this case, this diagnostic signifies "Short-circuit in the wiring".

The following figure shows the address space assignment for the AI 8xU/R/RTD/TC HF module with PTC resistors.

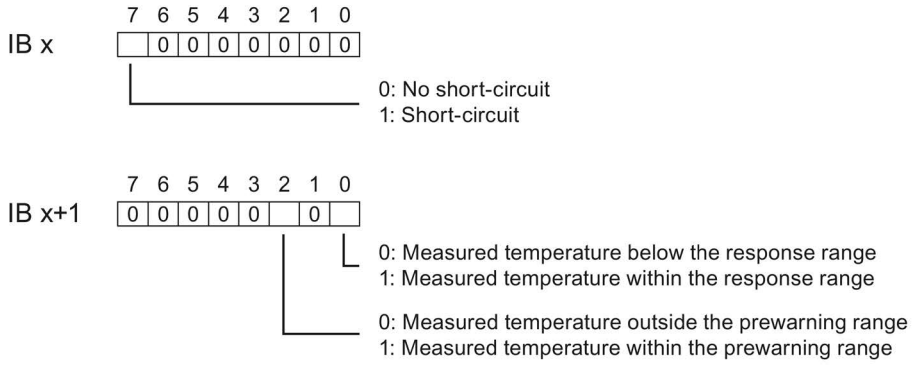

Figure 4-1 Address space for the AI 8xU/R/RTD/TC HF module with PTC resistors

The diagram below shows the temperature profile and the corresponding switching points.

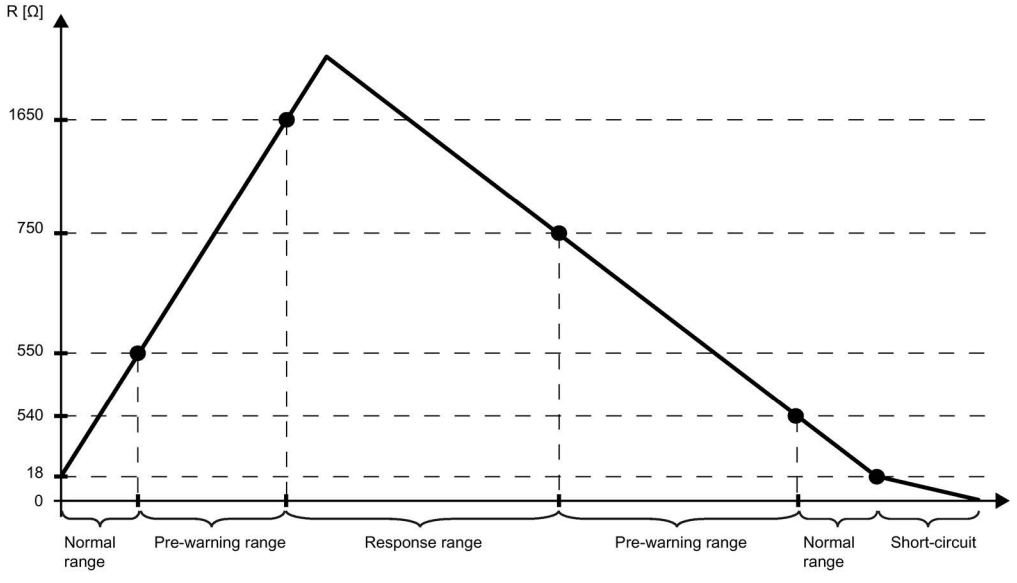

Figure 4-2 Temperature profile and the corresponding switching points

Measured value acquisition with PTC resistors

If faults occur (for example supply voltage L+ missing) that make it impossible to acquire measured values with PTC resistors, the corresponding channels (IB x/IB x+1) report overflow ($7FFF_H$). If the value status (QI) is enabled, the value 0 = fault is output in the corresponding bit.

4.2 Parameters

Parameters of AI 8xU/R/RTD/TC HF

The AI 8xU/R/RTD/TC HF is usually already integrated in the hardware catalog of STEP 7 (TIA Portal). In this case, STEP 7 (TIA Portal) checks the configured properties for plausibility during configuration.

However, you can also assign parameters to the module by means of a GSD file and the configuration software of any provider. The module does not check the validity of the configured properties until after the configuration has been loaded.

When you assign the module parameters in STEP 7, you use various parameters to specify the module properties. The following table lists the configurable parameters. The effective range of the configurable parameters depends on the type of configuration. The following configurations are possible:

- Central operation with a S7-1500 CPU
- Distributed operation on PROFINET IO in an ET 200MP system
- Distributed operation on PROFIBUS DP in an ET 200MP system

When assigning parameters in the user program, use the WRREC instruction to transfer the parameters to the module by means of data records; refer to the section Parameter assignment and structure of the parameter data records (Page 56).

The following parameter settings for the channels are possible:

Table 4- 2 Configurable parameters and their defaults

Parameters	Range of values	Default setting	Parameter assignment in RUN	Scope with configuration software, e.g., STEP 7 (TIA Portal)	
				Integrated in the hardware catalog STEP 7 (TIA Portal) as of V12 or GSD file PROFINET IO	GSD file PROFIBUS DP
Diagnostics					
• Missing supply voltage L+	Yes/No	No	Yes	Channel [1]	Module [2]
• Overflow	Yes/No	No	Yes	Channel	Module [2]
• Underflow	Yes/No	No	Yes	Channel	Module [2]
• Reference channel error	Yes/No	No	Yes	Channel	Module [2]
• Wire break	Yes/No	No	Yes	Channel	Module [2]
Measuring					
• Measurement type	See section Measuring types and ranges (Page 24)	Thermal resistor RTD (4-wire connection	Yes	Channel	Channel
• Measuring range		Pt100 standard	Yes	Channel	Channel
• Operating mode	• Standard • Fast	Standard	Yes	Channel	--- [4]
• Temperature coefficient	Pt: 0.003851 Pt: 0.003902 Pt: 0.003910 GOST Pt: 0.003916 Pt: 0.003920 Ni: 0.006170 GOST Ni: 0.006180 Ni: 0.006720 Cu: 0.00426 GOST Cu: 0.00427 Cu: 0.00428 GOST LG-Ni: 0.005000	0.003851	Yes	Channel	Channel
• Temperature unit	• Kelvin (K) • Fahrenheit (°F) • Celsius (°C)	°C	Yes	Channel	Module

Parameters	Range of values	Default setting	Parameter assignment in RUN	Scope with configuration software, e.g., STEP 7 (TIA Portal)	
				Integrated in the hardware catalog STEP 7 (TIA Portal) as of V12 or GSD file PROFINET IO	GSD file PROFIBUS DP
• Interference frequency suppression	400 Hz 60 Hz 50 Hz 10 Hz	50 Hz	Yes	Channel	Module
• Smoothing	None/low/medium/high	None	Yes	Channel	Channel
• Reference junction for TC	• Fixed reference temperature • Dynamic reference temperature • Internal reference junction • Reference channel of the module [3]	Internal reference junction	Yes	Channel	Module [4] • Dynamic reference temperature • Internal reference junction • Reference channel of the module
• Fixed reference temperature	Temperature	25 °C	Yes	Channel	--- [4]
• Scalable measuring range	• Disable • Enable	Disable	Yes	Channel	Channel [4]
• Measuring range resolution	• 2 decimal places • 3 decimal places	2 decimal places	Yes	Channel	Channel [4]
• Measuring range center	Value within the nominal range of the measuring range	0	Yes	Channel	Channel [4]

Parameters	Range of values	Default setting	Parameter assignment in RUN	Scope with configuration software, e.g., STEP 7 (TIA Portal)	
				Integrated in the hardware catalog STEP 7 (TIA Portal) as of V12 or GSD file PROFINET IO	GSD file PROFIBUS DP
Hardware interrupts					
• Hardware interrupt low limit 1	Yes/No	No	Yes	Channel	--- [4]
• Hardware interrupt high limit 1	Yes/No	No	Yes	Channel	--- [4]
• Hardware interrupt low limit 2	Yes/No	No	Yes	Channel	--- [4]
• Hardware interrupt high limit 2	Yes/No	No	Yes	Channel	--- [4]

[1] If you enable diagnostics for multiple channels, you will receive an alarm surge on failure of the supply voltage because each enabled channel will detect this fault.
You can prevent this message burst by assigning the diagnostics function to one channel only.

[2] You can set the effective range of the diagnostics for each channel in the user program with data records 0 to 8.

[3] The setting is only possible for channels 0 to 7. If you use the "Reference channel of the module" setting for at least one channel, you need to operate channel 8 with the resistance thermometer RTD measurement type.

[4] You can configure the "Fixed reference temperature" setting and the limits for hardware interrupts in the user program with data records 0 to 8.

4.3 Declaration of parameters

Missing supply voltage L+

Enabling of the diagnostics, with missing or too little supply voltage L+.

Overflow

Enabling of the diagnostics if the measured value violates the high limit.

Underflow

Enabling of the diagnostics when the measured value falls below the underrange or for voltage measurement ranges of ± 25 mV to ± 1.0 V if the inputs are not connected.

Reference channel error

- Enable diagnostics for an error at the temperature compensation channel, e.g. wire break.
- Dynamic reference temperature compensation type is configured and no reference temperature has been transferred to the module yet.

Wire break

Enable for diagnostics to check the cable resistances.

Temperature coefficient

The temperature coefficient depends on the chemical composition of the material. In Europe, only one value is used per sensor type (default value).

The temperature coefficient (α value) indicates by how much the resistance of a specific material changes relatively if the temperature increases by 1 °C.

The further values facilitate a sensor-specific setting of the temperature coefficient and enhance accuracy.

Interference frequency suppression

Suppresses the interference affecting analog input modules that is caused by the frequency of the AC voltage network used.

The frequency of the AC voltage network can negatively affect the measured value, in particular when measuring in low voltage ranges and with thermocouples. With this parameter, the user specifies the line frequency that is predominant in the plant.

Smoothing

The individual measured values are smoothed using filtering. The smoothing can be set in 4 levels.

Smoothing time = number of module cycles (k) x cycle time of the module.

The following figure shows after how many module cycles the smoothed analog value is almost 100%, depending on the set smoothing. Is valid for each signal change at the analog input.

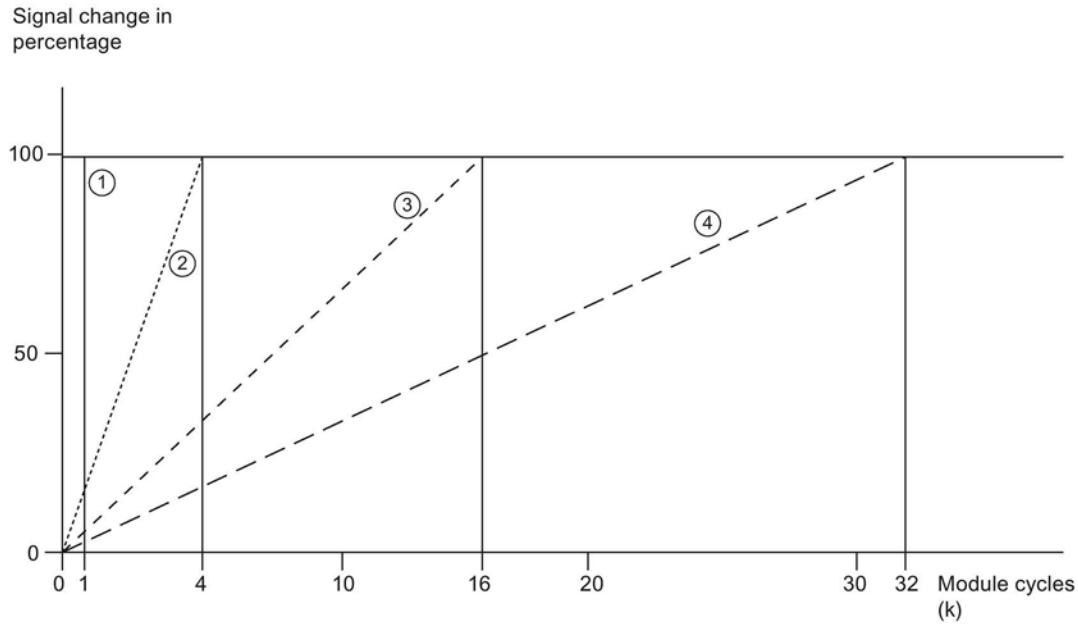

① None (k = 1)
② Weak (k = 4)
③ Medium (k = 16)
④ Strong (k = 32)

Figure 4-3 Smoothing with AI 8xU/R/RTD/TC HF

Reference junction for TC

The following settings can be configured for the reference junction parameter:

Table 4- 3 Possible parameter assignments for the reference junction parameter TC

Setting	Description
Fixed reference temperature	The reference junction temperature is configured and stored in the module as a fixed value.
Dynamic reference temperature	The reference junction temperature is transferred in the user program from the CPU to the module by data records 192 to 200 using the WRREC (SFB 53) instruction.
Internal reference junction	The reference junction temperature is determined using an integrated sensor of the module.
Reference channel of the module	The reference junction temperature is determined using an external resistance thermometer (RTD) at the reference channel (CH8) of the module.

Hardware interrupt 1 or 2

Enable a hardware interrupt at violation of high limit 1 or 2 or low limit 1 or 2.

Low limit 1 or 2

Specifies the low limit threshold that triggers hardware interrupt 1 or 2.

High limit 1 or 2

Specifies the high limit threshold that triggers hardware interrupt 1 or 2.

Operating mode Fast / Standard

You can use this parameter to determine the operating mode for the module.

- Fast mode; easy integration time with less frequency suppression (minimal integration time 2.5 ms)
- Standard mode; triple integration time with higher frequency suppression (minimal integration time 7.5 ms)

Scalable measuring range

With this parameter, you disable or enable the scalable measuring range function.

Measuring range resolution

With this parameter, you determine the resolution to 2 or 3 decimal places.

Measuring range center

With this parameter, you determine the temperature over which the scaled measuring range is symmetrically spanned. The value must be within the nominal range of the underlying measuring range. It is specified in integers.

Maximum = overflow (scaled measuring range)

Minimum = underflow (scaled measuring range)

4.4 Address space

The module can be configured differently in STEP 7; see following table. Depending on the configuration, additional/different addresses are assigned in the process image of the inputs.

Configuration options of AI 8xU/R/RTD/TC HF

You can configure the module with STEP 7 (TIA Portal) or with a GSD file.

When you configure the module by means of the GSD file, the configurations are available under different abbreviations/module names.

The following configurations are possible:

Table 4- 4 Configuration options

Configuration	Short designation/ module name in the GSD file	Configuration software, e.g., with STEP 7 (TIA Portal)	
		Integrated in the hardware catalog STEP 7 (TIA Portal) as of V13, SP1 and HSP 0166	GSD file in STEP 7 (TIA Portal) V12 or higher or STEP 7 V5.5 SP3 or higher
1 x 9-channel without value status	AI 8xU/R/RTD/TC HF	X	X
1 x 9-channel with value status	AI 8xU/R/RTD/TC HF QI	X	X
9 x 1-channel without value status	AI 8xU/R/RTD/TC HF S	X (PROFINET IO only)	X (PROFINET IO only)
9 x 1-channel with value status	AI 8xU/R/RTD/TC HF S QI	X (PROFINET IO only)	X (PROFINET IO only)
1 x 9-channel with value status for module-internal shared input with up to 4 submodules	AI 8xU/R/RTD/TC HF MSI	X (PROFINET IO only)	X (PROFINET IO only)

Value status (Quality Information, QI)

The value status is always activated for the following module names:

- AI 8xU/R/RTD/TC HF QI
- AI 8xU/R/RTD/TC HF S QI
- AI 8xU/R/RTD/TC HF MSI

An additional bit is assigned to each channel for the value status. The value status bit indicates if the read in digital value is valid. (0 = value is incorrect).

Address space of the AI 8xU/R/RTD/TC HF and AI 8xU/R/RTD/TC HF QI

The following figure shows the address space allocation for the configuration as a 9-channel module. You can freely assign the start address for the module. The addresses of the channels are derived from the start address.

"IB x" stands, for example, for the module start address input byte x.

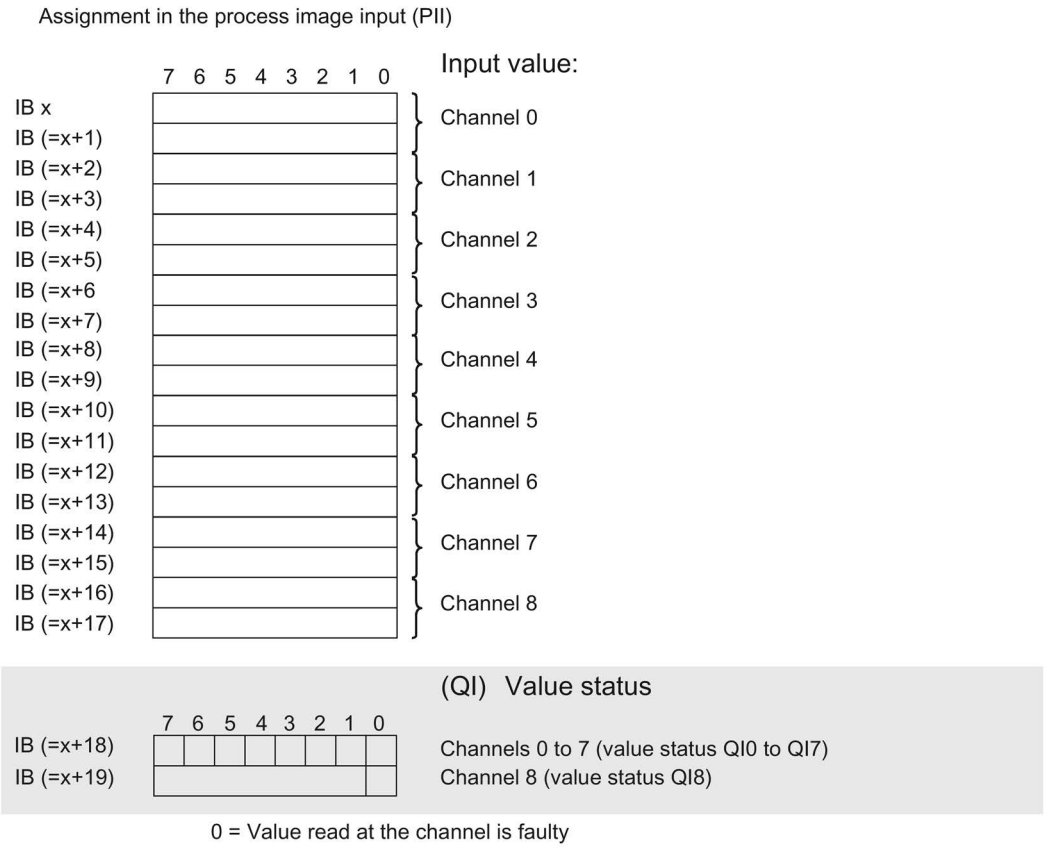

Figure 4-4 Address space for configuration as 1 x 9-channel AI 8xU/R/RTD/TC HF with value status

Address space for configuration as 9 x 1-channel AI 8xU/R/RTD/TC HF S and AI 8xU/R/RTD/TC HF S QI

For the configuration as a 9 x 1-channel module, the channels of the module are divided into multiple submodules. The submodules can be assigned to different IO controllers when the module is used in a shared device.

The number of usable submodules is dependent on the interface module used. Observe the information in the manual for the particular interface module.

In contrast to the 1 x 9-channel module configuration, each of the nine submodules has a freely assignable start address.

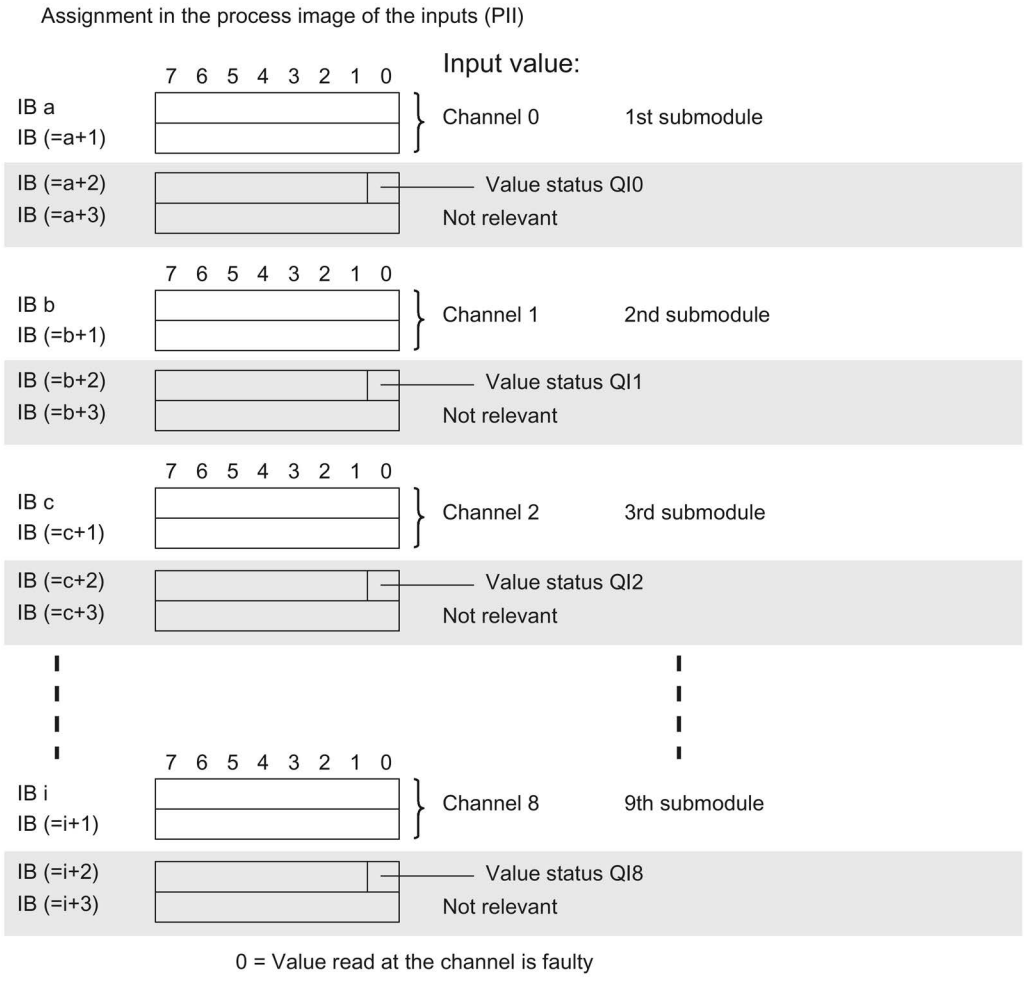

Figure 4-5 Address space for configuration as 9 x 1-channel AI 8xU/R/RTD/TC HF S QI with value status

Address space for configuration as 1 x 9-channel AI 8xU/R/RTD/TC HF MSI

The channels 0 to 8 of the module are copied in up to 4 submodules for the configuration as 1 x 9-channel module (module-internal shared input, MSI). Channels 0 to 8 are then available with identical input values in various submodules. These submodules can be assigned to up to four IO controllers when the module is used in a shared device. Each IO controller has read access to the same channels.

The number of usable submodules is dependent on the interface module used. Please observe the information in the manual for the particular interface module.

Value status (Quality Information, QI)

The meaning of the value status depends on the submodule on which it occurs.

For the 1st submodule (= basic submodule), the value status 0 indicates that the value is incorrect.

For the 2nd to 4th submodule (=MSI submodule), the value status 0 indicates that the value is incorrect or the basic submodule has not yet been configured (not ready).

The following figure shows the assignment of the address space with submodules 1 and 2.

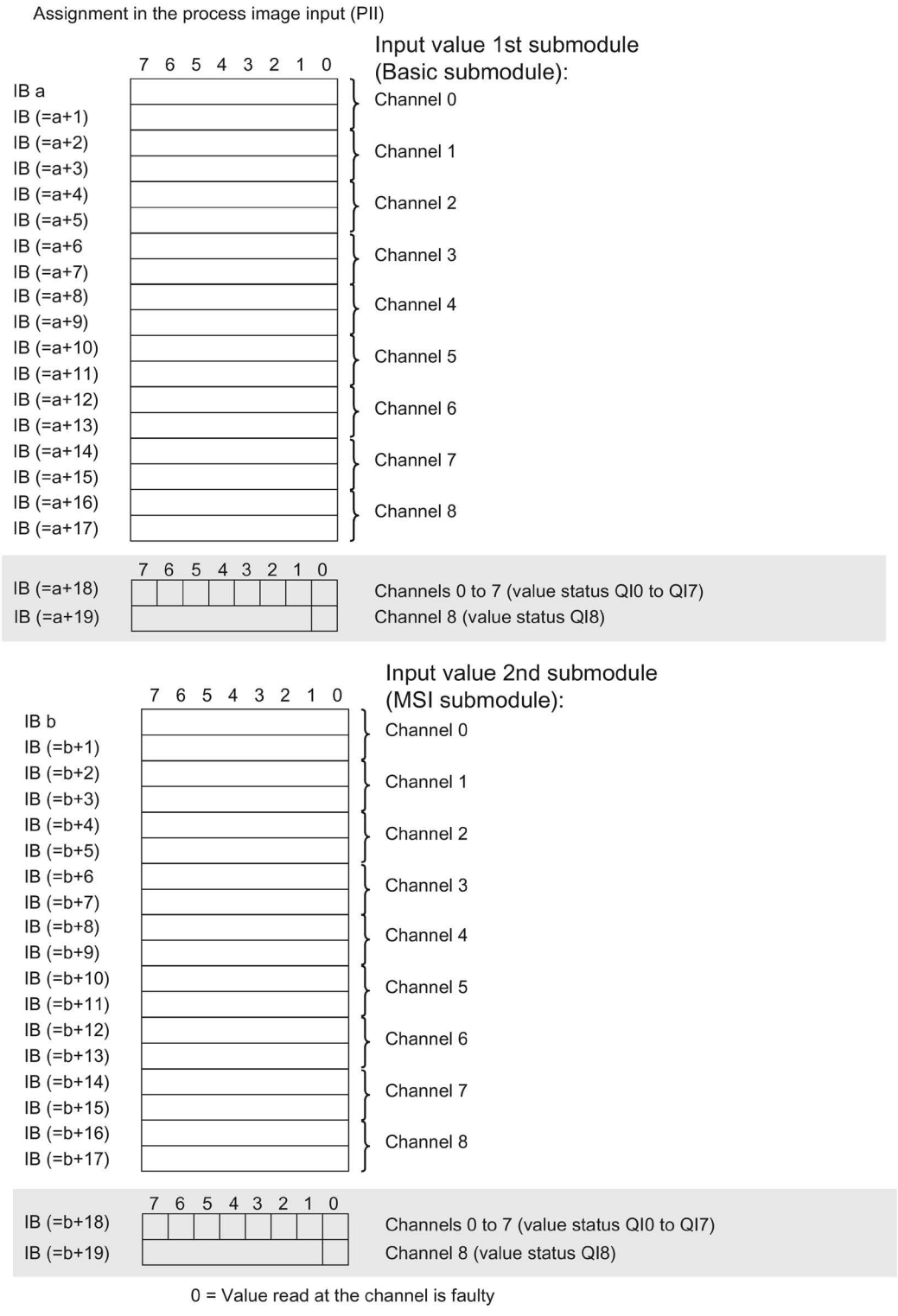

Figure 4-6 Address space for configuration as 1 x 9-channel AI 8xU/R/RTD/TC HF MSI with value status

The following figure shows the assignment of the address space with submodules 3 and 4.

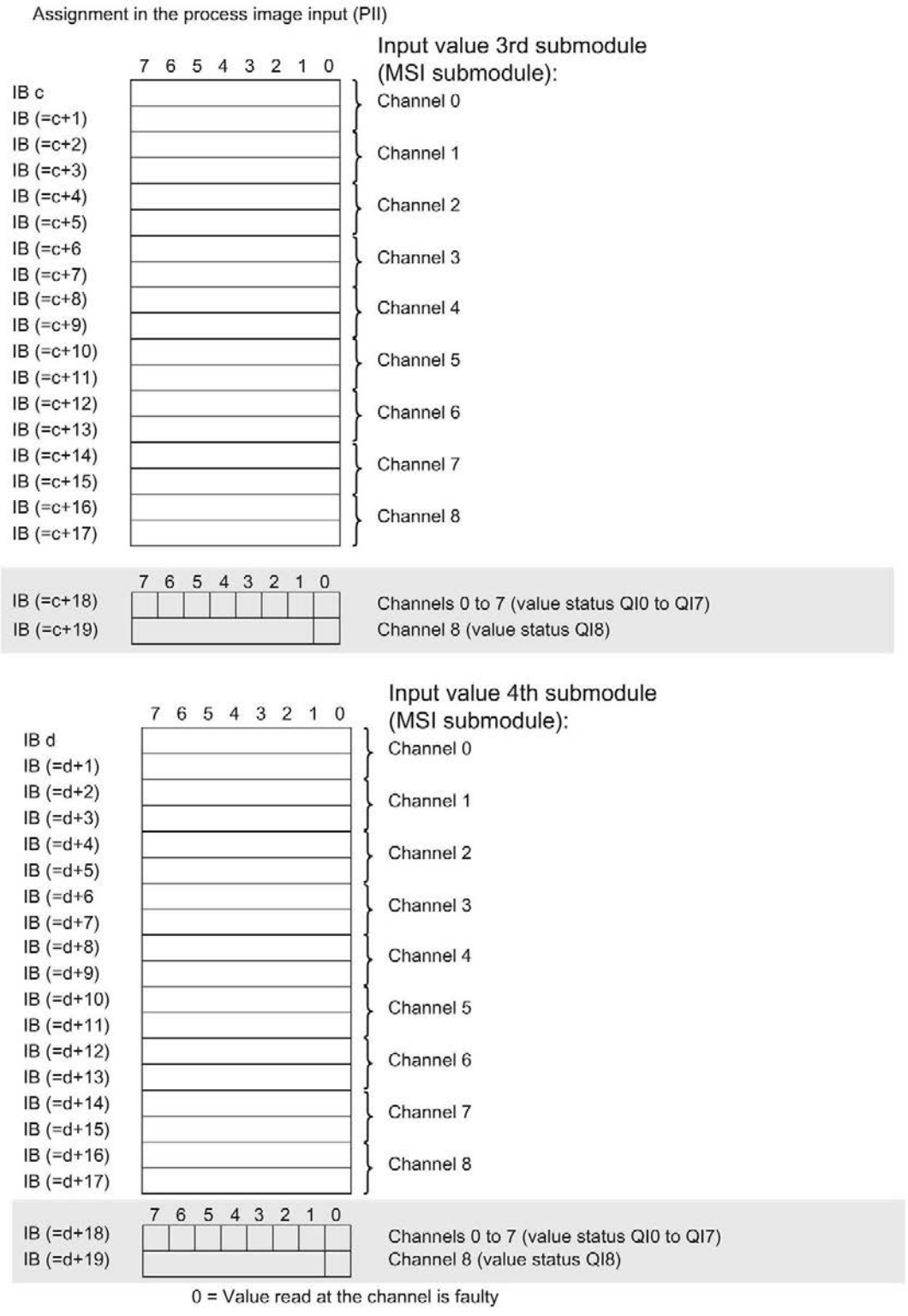

Figure 4-7 Address space for configuration as 1 x 9-channel AI 8xU/R/RTD/TC HF MSI with value status

Reference

You can find information on the Shared Input/Output (MSI/MSO) function in the section Module-Internal Shared Input/Output (MSI/MSO) of the PROFINET with STEP 7 V13 (https://support.industry.siemens.com/cs/ww/en/view/49948856) function manual.

Interrupts/diagnostics alarms

5

5.1 Status and error displays

LED displays

The figure below shows the LED displays (status and error displays) of AI 8xU/R/RTD/TC HF.

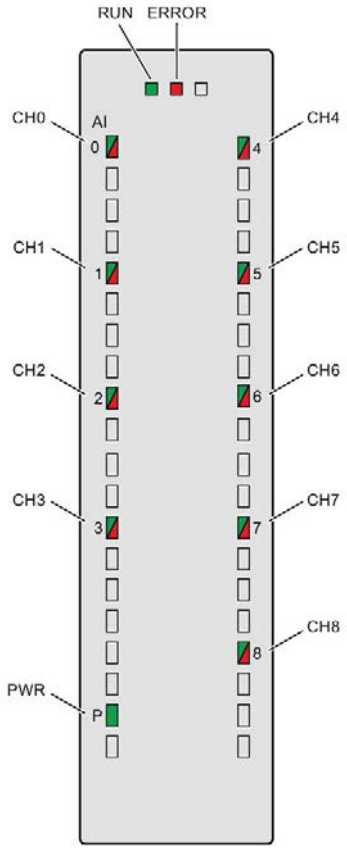

Figure 5-1 LED displays of the module AI 8xU/R/RTD/TC HF

Meaning of the LED displays

The following tables explain the meaning of the status and error displays. Remedial measures for diagnostic alarms can be found in section Diagnostic alarms (Page 45).

RUN and ERROR LED

Table 5- 1 Status and error displays RUN and ERROR

LEDs		Meaning	Remedy
RUN	ERROR		
Off	Off	Voltage missing or too low at backplane bus.	• Switch on the CPU and/or the system power supply modules. • Verify that the U connectors are inserted. • Check whether too many modules are inserted.
Flashes	Off	The module starts and flashes until the valid parameter assignment is set.	---
On	Off	Module is configured.	
On	Flashes	Indicates module errors (at least one error at one channel, e.g., wire break).	Evaluate the diagnostics data and eliminate the error (e.g., wire break).
Flashes	Flashes	Hardware defective.	Replace the module.

PWR LED

Table 5- 2 PWR status display

LED PWR	Meaning	Remedy
Off	Supply voltage L+ to module too low or missing	Check supply voltage L+.
On	Supply voltage L+ is present and OK.	---

CHx LED

Table 5- 3 CHx status display

LED CHx	Meaning	Remedy
Off	Channel disabled	---
On	Channel configured and OK.	---
On	Channel is configured (channel error pending). Diagnostic alarm: e.g. wire break	Check the wiring. Disable diagnostics.

5.2 Interrupts

Analog input module AI 8xU/R/RTD/TC HF supports the following diagnostic and hardware interrupts.

You can find detailed information on the event in the error organization block with the RALRM instruction (read additional interrupt info) and in the STEP 7 online help.

Diagnostic interrupt

The module generates a diagnostic interrupt at the following events:

- Missing supply voltage L+
- Wire break
- Overflow
- Underflow
- Reference channel error
- Parameter assignment error

Hardware interrupt

The module generates a hardware interrupt at the following events:

- Low limit violated 1
- High limit violated 1
- Low limit violated 2
- Violation of high limit 2

The module channel that triggered the hardware interrupt is entered in the start information of the organization block. The following figure shows the assignment of the local data double word 8 by the start information of the hardware interrupt organization block.

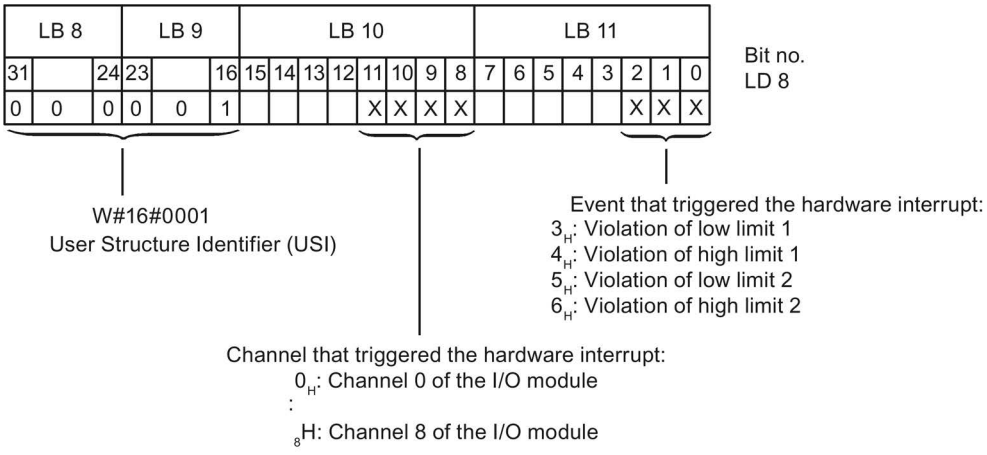

Figure 5-2 OB start information

Reaction when reaching limits 1 and 2 at the same time

If the two high limits 1 and 2 are reached at the same time, the module always signals the hardware interrupt for high limit 1 first. The configured value for high limit 2 is irrelevant. After processing the hardware interrupt for high limit 1, the module triggers the hardware interrupt for high limit 2.

The module has the same reaction when the low limits are reached at the same time. If the two low limits 1 and 2 are reached at the same time, the module always signals the hardware interrupt for low limit 1 first. After processing the hardware interrupt for low limit 1, the module triggers the hardware interrupt for low limit 2.

Structure of the additional interrupt information

Table 5- 4 Structure of USI = W#16#0001

Data block name		Contents	Remark	Bytes
USI (User Structure Identifier)		W#16#0001	Additional interrupt info for hardware interrupts of the I/O module	2
The channel that triggered the hardware interrupt follows.				
	Channel	B#16#00 to B#16#n	Number of the event-triggering channel (n = number of module channels -1)	1
It follows the error event that triggered the hardware interrupt.				
	Event	B#16#03	Low limit violated 1	1
		B#16#04	High limit violated 1	
		B#16#05	Low limit violated 2	
		B#16#06	Violation of high limit 2	

5.3 Diagnostics alarms

A diagnostics alarm is generated and the ERROR LED flashes for each diagnostics event on the module. The diagnostics alarms can be read out in the diagnostics buffer of the CPU, for example. You can evaluate the error codes with the user program.

If the module is operated distributed with PROFIBUS DP in an ET 200MP system, you have the option to read out diagnostics data with the instruction RDREC or RD_REC using data record 0 and 1. The structure of the data records is available on the Internet in the "Manual for interface module IM 155-5 DP ST (6ES7155-5BA00-0AB0)".

Table 5- 5 Diagnostics alarms, their meaning and corrective measures

Diagnostics alarm	Error code	Meaning	Remedy
Wire break	6_H	Impedance of encoder circuit too high	Use a different encoder type or modify the wiring, for example, using cables with larger cross-section
		Wire break between the module and sensor	Connect the cable
		Channel not connected (open)	• Disable diagnostics • Connect the channel
Overflow	7_H	Measuring range violated	Check the measuring range
Underflow	8_H	Measuring range violated	Check the measuring range
Parameter assignment error	10_H	• The module cannot evaluate parameters for the channel • Incorrect parameter assignment.	Correct the parameter assignment
Load voltage missing	11_H	Supply voltage L+ of the module is missing	Connect supply voltage L+ to module
Reference channel error	15_H	Invalid reference temperature for the used TC channel with compensation	Check compensation with reference channel parameterization or thermoresistor. Check communication to the module/station for the compensation with data record.

Diagnostics alarms with value status (QI)

If you configure the module with value status (QI), the module always checks all errors even if the respective diagnostics is not enabled. But the module cancels the inspection as soon as it detects the first error, regardless if the respective diagnostics has been enabled or not. The result may be that enabled diagnostics may not be displayed.

Example: You have enabled "Underflow" diagnostics, but the module detects the previous "Wire break" diagnostics and aborts after this error message. The "Underflow" diagnostics is not detected.

Recommendation: To ensure that all errors are subjected to the diagnostics, select all check boxes under "Diagnostics".

Technical specifications 6

Technical specifications of the AI 8xU/R/RTD/TC HF

	6ES7531-7PF00-0AB0
General information	
Product type designation	AI 8xU/R/RTD/TC HF
Hardware functional status	FS01
Firmware version	V1.1.0
• FW update possible	Yes
Product function	
I&M data	Yes; I&M0 to I&M3
Measuring range scalable	Yes
Measured values scalable	No
Measuring range adjustment	No
Engineering with	
STEP 7 TIA Portal can be configured/integrated as of version	V14 / -
STEP 7 can be configured/integrated as of version	V5.5 SP3 / -
PROFIBUS as of GSD version/GSD revision	V1.0 / V5.1
PROFINET as of GSD version/GSD revision	V2.3 / -
Operating mode	
Oversampling	No
MSI	Yes
CiR Configuration in RUN	
Configuration in RUN possible	Yes
Calibration in RUN possible	Yes
Supply voltage	
Rated value (DC)	24 V
Valid range, low limit (DC)	20.4 V
Valid range, high limit (DC)	28.8 V
Reverse polarity protection	Yes
Input current	
Current consumption, max.	55 mA; with 24 V DC supply
Power	
Power consumption from the backplane bus	0.85 W
Power loss	
Power loss, typ.	1.9 W

	6ES7531-7PF00-0AB0
Analog inputs	
Number of analog inputs	8; plus an additional RTD (reference) channel
• For voltage measurement	8; plus an additional RTD (reference) channel
• For resistance/resistance thermometer measurement	8; plus an additional RTD (reference) channel
• for thermocouple measurement	8; plus an additional RTD (reference) channel
Permissible input voltage for voltage input (destruction limit), max.	20 V
Technical unit for temperature measurement, can be set	Yes; °C / °F / K
Input ranges (rated values), voltages	
-1 to +1 V	Yes
Input resistance (-1 to +1 V)	10 MΩ
-25 mV to +25 mV	Yes
Input resistance (-25 mV to +25 mV)	10 MΩ
-250 to +250 mV	Yes
Input resistance (-250 to +250 mV)	10 MΩ
-50 mV to +50 mV	Yes
Input resistance (-50 mV to +50 mV)	10 MΩ
-500 mV to +500 mV	Yes
Input resistance (-500 mV to +500 mV)	10 MΩ
-80 mV to +80 mV	Yes
Input resistance (-80 mV to +80 mV)	10 MΩ
Input ranges (rated values), thermocouples	
Type B	Yes
Input resistance (type B)	10 MΩ
Type C	Yes
Input resistance (Type C)	10 MΩ
Type E	Yes
Input resistance (type E)	10 MΩ
Type J	Yes
Input resistance (type J)	10 MΩ
Type K	Yes
Input resistance (type K)	10 MΩ
Type N	Yes
Input resistance (type N)	10 MΩ
Type R	Yes
Input resistance (type R)	10 MΩ
Type S	Yes
Input resistance (type S)	10 MΩ
Type T	Yes
Input resistance (type T)	10 MΩ
Type TXK/TXK(L) according to GOST	Yes

	6ES7531-7PF00-0AB0
Input resistance (Type TXK/TXK(L) according to GOST)	10 MΩ
Input ranges (rated values), resistance thermometer	
Cu 10	Yes; Standard/Climatic
Input resistance (Cu 10)	10 MΩ
Cu 10 according to GOST	Yes; Standard/Climatic
Input resistance (Cu 10 according to GOST)	10 MΩ
Cu 50	Yes; Standard/Climatic
Input resistance (Cu 50)	10 MΩ
Cu 50 according to GOST	Yes; Standard/Climatic
Input resistance (Cu 50 according to GOST)	10 MΩ
Cu 100	Yes; Standard/Climatic
Input resistance (Cu 100)	10 MΩ
Cu 100 according to GOST	Yes; Standard/Climatic
Input resistance (Cu 100 according to GOST)	10 MΩ
Ni 10	Yes; Standard/Climatic
Input resistance (Ni 10)	10 MΩ
Ni 10 to GOST	Yes; Standard/Climatic
Input resistance (Ni 10 according to GOST)	10 MΩ
Ni 100	Yes; Standard/Climatic
Input resistance (Ni 100)	10 MΩ
Ni 100 according to GOST	Yes; Standard/Climatic
Input resistance (Ni 100 according to GOST)	10 MΩ
Ni 1000	Yes; Standard/Climatic
Input resistance (Ni 1000)	10 MΩ
Ni 1000 to GOST	Yes; Standard/Climatic
Input resistance (Ni 1000 according to GOST)	10 MΩ
LG-Ni 1000	Yes; Standard/Climatic
Input resistance (LG-Ni 1000)	10 MΩ
Ni 120	Yes; Standard/Climatic
Input resistance (Ni 120)	10 MΩ
Ni 120 to GOST	Yes; Standard/Climatic
Input resistance (Ni 120 according to GOST)	10 MΩ
Ni 200	Yes; Standard/Climatic
Input resistance (Ni 200)	10 MΩ
Ni 200 to GOST	Yes; Standard/Climatic
Input resistance (Ni 200 according to GOST)	10 MΩ
Ni 500	Yes; Standard/Climatic
Input resistance (Ni 500)	10 MΩ
Ni 500 to GOST	Yes; Standard/Climatic
Input resistance (Ni 500 according to GOST)	10 MΩ
Pt 10	Yes; Standard/Climatic
Input resistance (Pt 10)	10 MΩ

	6ES7531-7PF00-0AB0
Pt 10 according to GOST	Yes; Standard/Climatic
Input resistance (Pt 10 according to GOST)	10 MΩ
Pt 50	Yes; Standard/Climatic
Input resistance (Pt 50)	10 MΩ
Pt 50 according to GOST	Yes; Standard/Climatic
Input resistance (Pt 50 according to GOST)	10 MΩ
Pt 100	Yes; Standard/Climatic
Input resistance (Pt 100)	10 MΩ
Pt 100 according to GOST	Yes; Standard/Climatic
Input resistance (Pt 100 according to GOST)	10 MΩ
Pt 1000	Yes; Standard/Climatic
Input resistance (Pt 1000)	10 MΩ
Pt 1000 according to GOST	Yes; Standard/Climatic
Input resistance (Pt 1000 according to GOST)	10 MΩ
Pt 200	Yes; Standard/Climatic
Input resistance (Pt 200)	10 MΩ
Pt 200 according to GOST	Yes; Standard/Climatic
Input resistance (Pt 200 according to GOST)	10 MΩ
Pt 500	Yes; Standard/Climatic
Input resistance (Pt 500)	10 MΩ
Pt 500 according to GOST	Yes; Standard/Climatic
Input resistance (Pt 500 according to GOST)	10 MΩ
Input ranges (rated values), resistors	
0 to 150 ohm	Yes
Input resistance (0 to 150 ohm)	10 MΩ
0 to 300 ohm	Yes
Input resistance (0 to 300 ohm)	10 MΩ
0 to 600 ohm	Yes
Input resistance (0 to 600 ohm)	10 MΩ
0 to 6000 ohm	Yes
Input resistance (0 to 6000 ohm)	10 MΩ
PTC	Yes
Input resistance (PTC)	10 MΩ

	6ES7531-7PF00-0AB0
Thermocouple (TC)	
Temperature compensation	
• Configurable	Yes
• Internal temperature compensation	Yes
• External temperature compensation via RTD	Yes
• Compensation for 0 °C reference point temperature	Yes, fixed value can be set
• Reference channel of the module	Yes; 9th channel that can be used regardless of the parameterization of the other channels than as the genuine 9th RTD channel or for compensation for TC measurement
Cable length	
shielded, max.	800 m; with U; 200 m with R/RTD/TC
Analog value generation for the inputs	
Integration and conversion time/resolution per channel	
Resolution with overrange (bit including sign), max.	16 bit
Configurable integration time	Yes
Integration time (ms)	Fast mode: 2.5 / 16.67 / 20 / 100 ms; standard mode: 7.5 / 50 / 60 / 300 ms
Basic conversion time, including integration time (ms)	Fast mode: 4 / 18 / 22 / 102 ms; standard mode: 9 / 52 / 62 / 302 ms
• Additional conversion time for wire break monitoring	Thermocouples. 150 Ohm, 300 Ohm, 600 Ohm, Cu10, Cu50, Cu100, Ni10, Ni50, Ni100, Ni120, Ni200, Pt10, Pt50, Pt100, Pt200: 4 ms; 6 kilohm, Ni500, Ni1000, LG-Ni1000, Pt500, Pt1000: 13 ms
Interference voltage suppression for interference frequency f1 in Hz	400 / 60 / 50 / 10 Hz
Basic execution time of the module (all channels enabled)	Corresponds to the channel with the highest basic conversion time
Smoothing of the measured values	
Configurable	Yes
Level: None	Yes
Level: Weak	Yes
Level: Medium	Yes
Level: Strong	Yes
Encoders	
Connection of the signal encoders	
For voltage measurement	Yes
for resistance measurement with two-wire connection	Yes
for resistance measurement with three-wire connection	Yes; all measuring ranges except PTC; internal compensation of line resistance
For resistance measurement with four-wire connection	Yes; all measuring ranges except PTC

	6ES7531-7PF00-0AB0
Errors/accuracies	
Linearity error (in relation to input range), (+/-)	0.02%
Temperature error (in relation to input range), (+/-)	0.005%/K
Crosstalk between the inputs, max.	-80 dB
Repeat accuracy in settled state at 25 °C (in relation to input range), (+/-)	0.02%
Temperature errors of internal compensation	+/-1.5 °C
Operational limit in overall temperature range	
Voltage in relation to input range, (+/-)	0.1%
Resistance in relation to input range, (+/-)	0.1%
Resistance thermometer in relation to input range, (+/-)	Cuxxx Standard: ±0.5 K, Cuxxx Climatic: ±0.5 K, Ptxxx Standard: ±1 K, Ptxxx Climatic: ±0.5 K, Nixxx Standard: ±0.5 K, Nixxx Climatic: ±0.3 K
Thermocouple, relative to input range, (+/-)	Type B: > 600 °C ±2 K, Type E: > -200 °C ±1 K, Type J: > -210 °C ±1 K, Type K: > -200 °C ±2 K, Type N: > -200 °C ±2 K, Type R: > 0 °C ±2 K, Type S: > 0 °C ±2 K, Type T: > -200 °C ±1 K, Type C: ±4 K, Type TXK/TXK(L): ±1 K
Basic error limit (operational limit at 25 °C)	
Voltage in relation to input range, (+/-)	0.05%
Resistance in relation to input range, (+/-)	0.05%
Resistance thermometer in relation to input range, (+/-)	Cuxxx Standard: ±0.3 K, Cuxxx Climatic: ±0.2 K, Ptxxx Standard: ±0.5 K, Ptxxx Climatic: ±0.2 K, Nixxx Standard: ±0.3 K, Nixxx Climatic: ±0.15 K
Thermocouple, relative to input range, (+/-)	Type B: > 600 °C ±1 K, Type E: > -200 °C ±0.5 K, Type J: > -210 °C ±0.5 K, Type K: > -200 °C ±1 K, Type N: > -200 °C ±1 K, Type R: > 0 °C ±1 K, Type S: > 0 °C ±1 K, Type T: > -200 °C ±0.5 K, Type C: ±2 K, Type TXK/TXK(L): ±0.5 K
Interference voltage suppression for f = n x (f1 +/- 1 %), f1 = interference frequency	
Series-mode interference (peak of the interference < rated value of the input range), min.	80 dB; in Standard mode, 40 dB in Fast mode
Common mode voltage, max.	60 V DC / 30 V AC
Common mode interference, min.	80 dB
Isochronous mode	
Isochronous mode (application synchronized up to terminal)	No
Interrupts/diagnostics/status information	
Diagnostics function	Yes
Interrupts	
Diagnostic interrupt	Yes
Limit interrupt	Yes; two high limits and two low limits each
Diagnostics alarms	
Monitoring of supply voltage	Yes
Wire break	Yes; only for TC. R. RTD
Overflow/underflow	Yes

	6ES7531-7PF00-0AB0
Diagnostics indicator LED	
RUN LED	Yes; green LED
ERROR LED	Yes; red LED
Monitoring of supply voltage (PWR LED)	Yes; green LED
Channel status display	Yes; green LED
For channel diagnostics	Yes; red LED
For module diagnostics	Yes; red LED
Electrical isolation	
Electrical isolation of channels	
Between the channels	Yes
Between the channels, in groups of	1
Between the channels and backplane bus	Yes
Between the channels and power supply of the electronics	Yes
Permitted potential difference	
Between different circuits	60 V DC / 30 V AC; Isolation measured for 120 V AC basic isolation: Between the channels and supply voltage L+, between the channels and the backplane bus, between the channels
Isolation	
Isolation tested with	2000 V DC between the channels and the supply voltage L+, 2000 V DC between the channels and the backplane bus, 2000 V DC between the channels, 707 V DC (type test) between the supply voltage L+ and the backplane bus
Ambient conditions	
Ambient temperature during operation	
Horizontal mounting position, min.	0 °C
Horizontal mounting position, max.	60 °C
Vertical mounting position, min.	0 °C
Vertical mounting position, max.	40 °C
Distributed mode	
Prioritized startup	Yes
Dimensions	
Width	35 mm
Height	147 mm
Depth	129 mm
Weights	
Weight, approx.	290 g
Miscellaneous	
Note:	Cable compensation is performed alternately to measurement with the R/RTD three-wire measurement. Two module cycles are thus required for a measured value.

Additional information

You can learn how to calculate the cycle time of the module with an example provided on the Internet (https://support.industry.siemens.com/cs/ww/en/view/109037127).

Dimensional drawing

A

The dimensional drawing of the module on the mounting rail, as well as a dimensional drawing with open front panel are provided in the appendix. Always adhere to the specified dimensions for installations in cabinets, control rooms, etc.

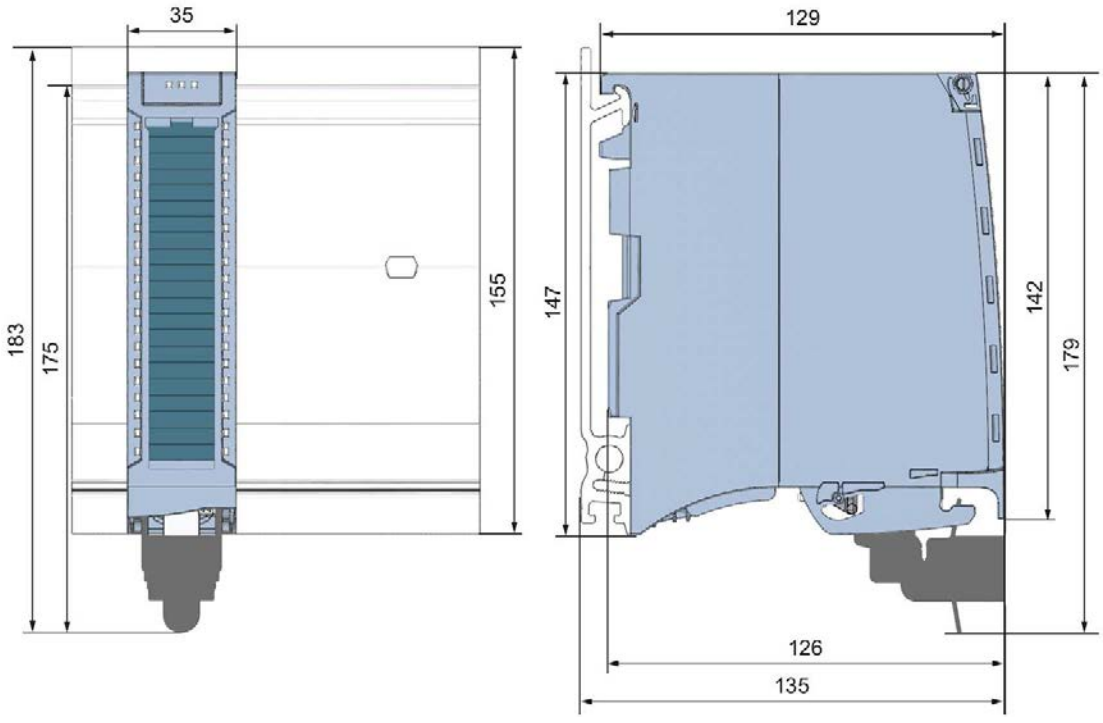

Figure A-1 Dimension drawing of the AI 8xU/R/RTD/TC HF module

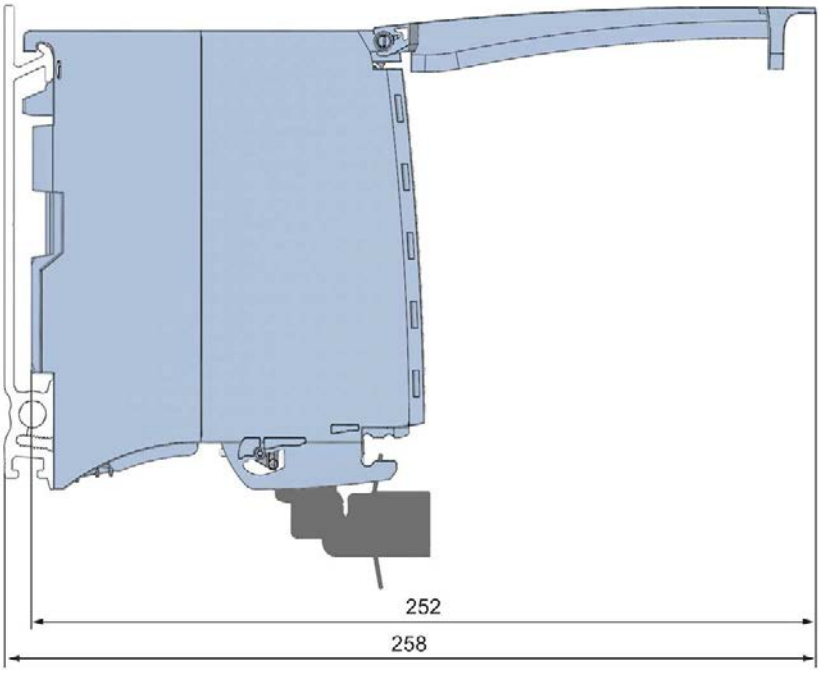

Figure A-2 Dimension drawing of the AI 8xU/R/RTD/TC HF module, side view with open front cover

Parameter data records

B

B.1 Parameter assignment and structure of the parameter data records

The data records of the module have an identical structure, regardless of whether you configure the module with PROFIBUS DP or PROFINET IO.

Dependencies for configuration with GSD file

When configuring the module with a GSD file, remember that the settings of some parameters are dependent on each other. The parameters are only checked for plausibility by the module after the transfer to the module.

The following table lists the parameters that depend on one another.

Table B- 1 Dependencies of parameters for configuration with GSD file

Device-specific parameters (GSD file)	Dependent parameters
Wire break	Only for **measurement type** Resistance, Resistance Thermometer RTD, Thermocouple TC.
Reference channel error	Only for **measuring type** thermocouple TC.
Resistance measurement type (4-wire connection. 3-wire connection)	Only for measuring range 150 Ω, 300 Ω, 600 Ω and 6000 Ω.
Hardware interrupt limits	Only if hardware interrupts are enabled.
Fixed reference temperature	Only if the value **Fixed reference temperature** is configured at parameter **Reference junction for TC**.
Temperature unit Kelvin (K)	Only for **measuring type** thermistor RTD and for thermocouple TC.

Parameter assignment in the user program

The module parameters can be assigned in RUN (for example, measuring ranges of selected channels can be edited in RUN without having an effect on the other channels).

Parameter assignment in RUN

The WRREC instruction is used to transfer the parameters via data records 0 to 8. The parameters set in STEP 7 do not change in the CPU, which means the parameters set in STEP 7 are still valid after a restart.

The parameters are only checked for plausibility by the module after the transfer to the module.

Output parameter STATUS

The module ignores errors that occurred during the transfer of parameters with the WRREC instruction and continues operation with the previous parameter assignment. However, a corresponding error code is written to the STATUS output parameter.

The description of the WRREC instruction and the error codes is available in the STEP 7 online help.

Operation of the module behind a PROFIBUS DP interface module

If the module is operated behind a PROFIBUS DP interface module, the parameter data records 0 and 1 are not read back. You obtain the diagnostics data records 0 and 1 with the read back parameter data records 0 and 1. You can find additional information in the Interrupts section of the manual for the PROFIBUS DP interface module on the Internet (http://support.automation.siemens.com/WW/view/en/78324181).

Assignment of data record and channel

The parameters in data records 0 to 9 and in data record 9 are available for 1x 9-channel configuration and are assigned as follows:

- Data record 0 for channel 0
- Data record 1 for channel 1
- …
- Data record 6 for channel 6
- Data record 7 for channel 7
- Data record 8 for channel 8 (reference channel)

For configuration 9 x 1-channel, the module has 9 submodules with one channel each and one submodule for the reference channel. The parameters for the channel are available in data record 0 and are assigned as follows:

- Data record 0 for channel 0 (submodule 1)
- Data record 0 for channel 1 (submodule 2)
- …
- Data record 0 for channel 6 (submodule 7)
- Data record 0 for channel 7 (submodule 8)
- Data record 0 for channel 8 (submodule 9) or reference channel

Address the respective submodule for data record transfer.

Data record structure

The figure below shows the structure of data record 0 for channel 0 as an example. The structure is identical for channels 1 to 8. The values in byte 0 and byte 1 are fixed and may not be changed.

Enable a parameter by setting the corresponding bit to "1".

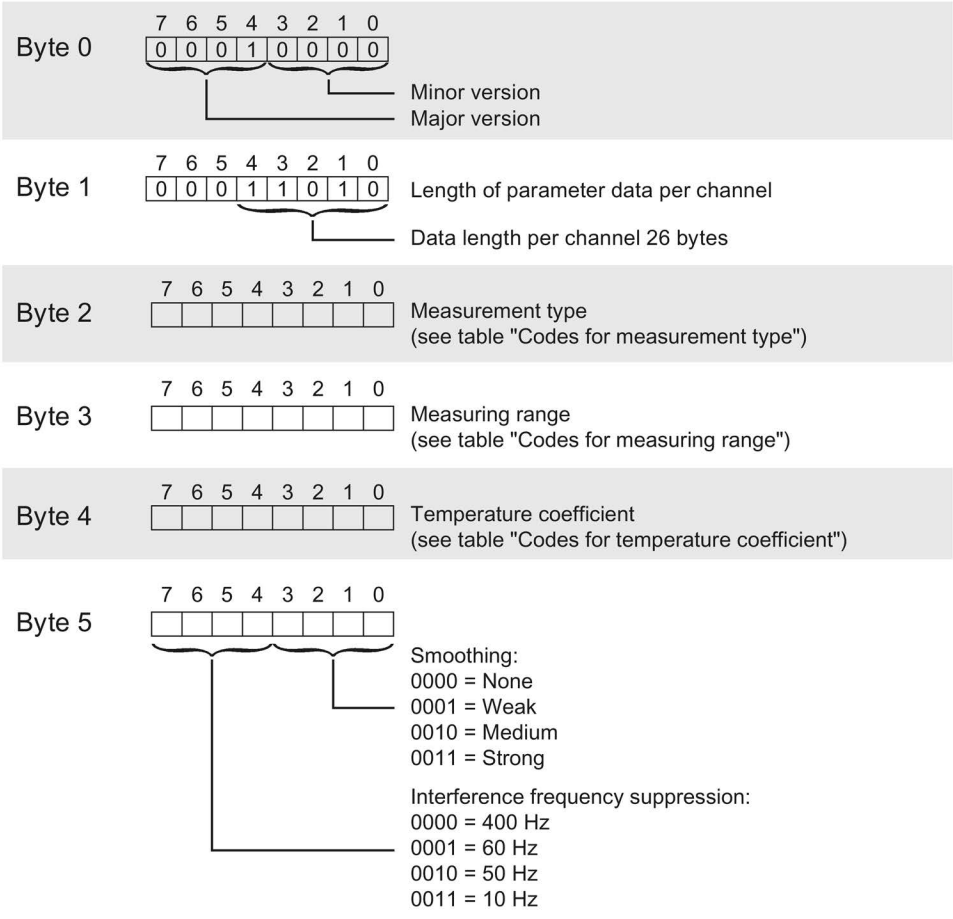

Figure B-1 Structure of data record 0: Byte 0 to 5

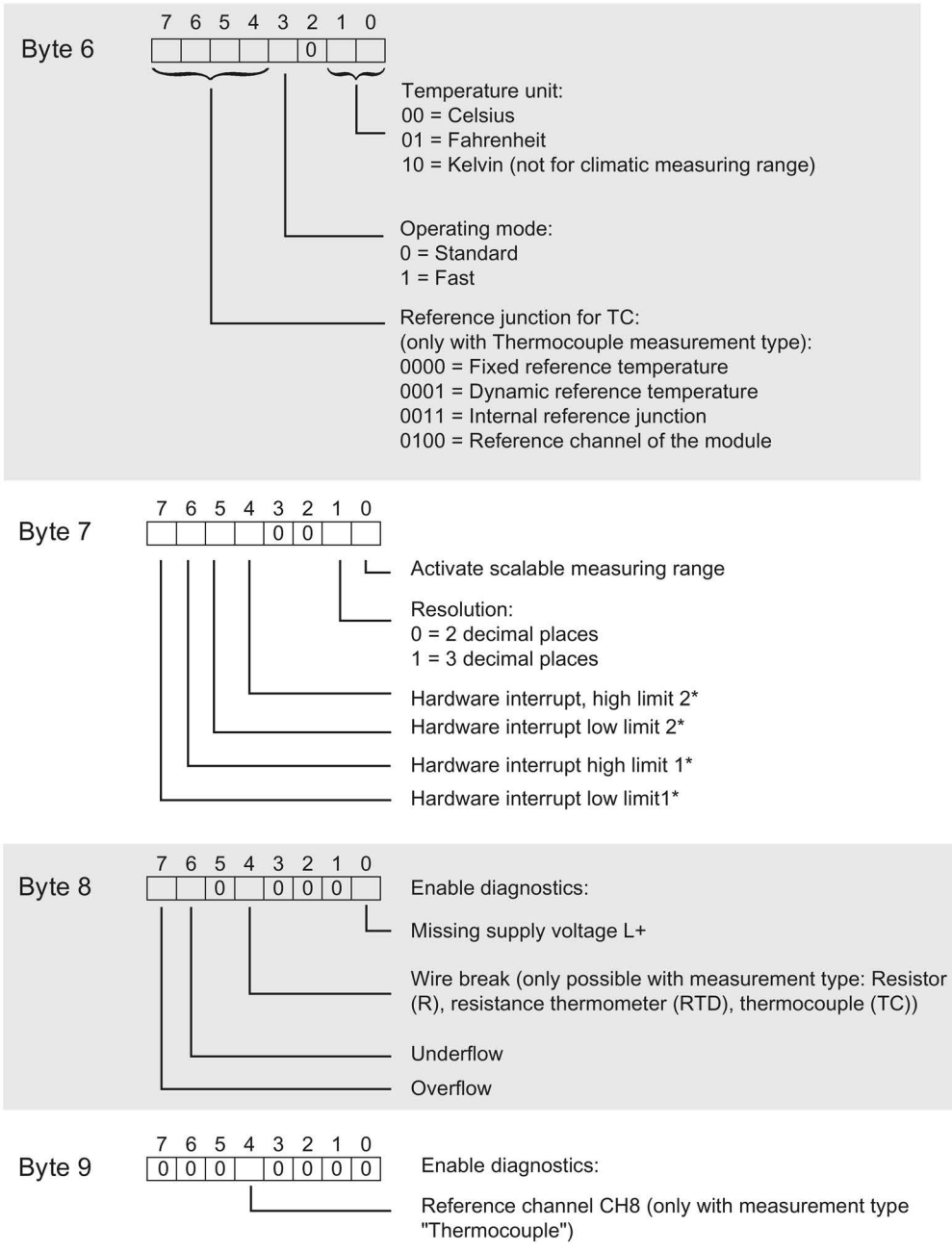

* Hardware interrupts can only be activated via data record if the channel is assigned a hardware interrupt OB in STEP 7

Figure B-2 Structure of data record 0: Byte 6 to 9

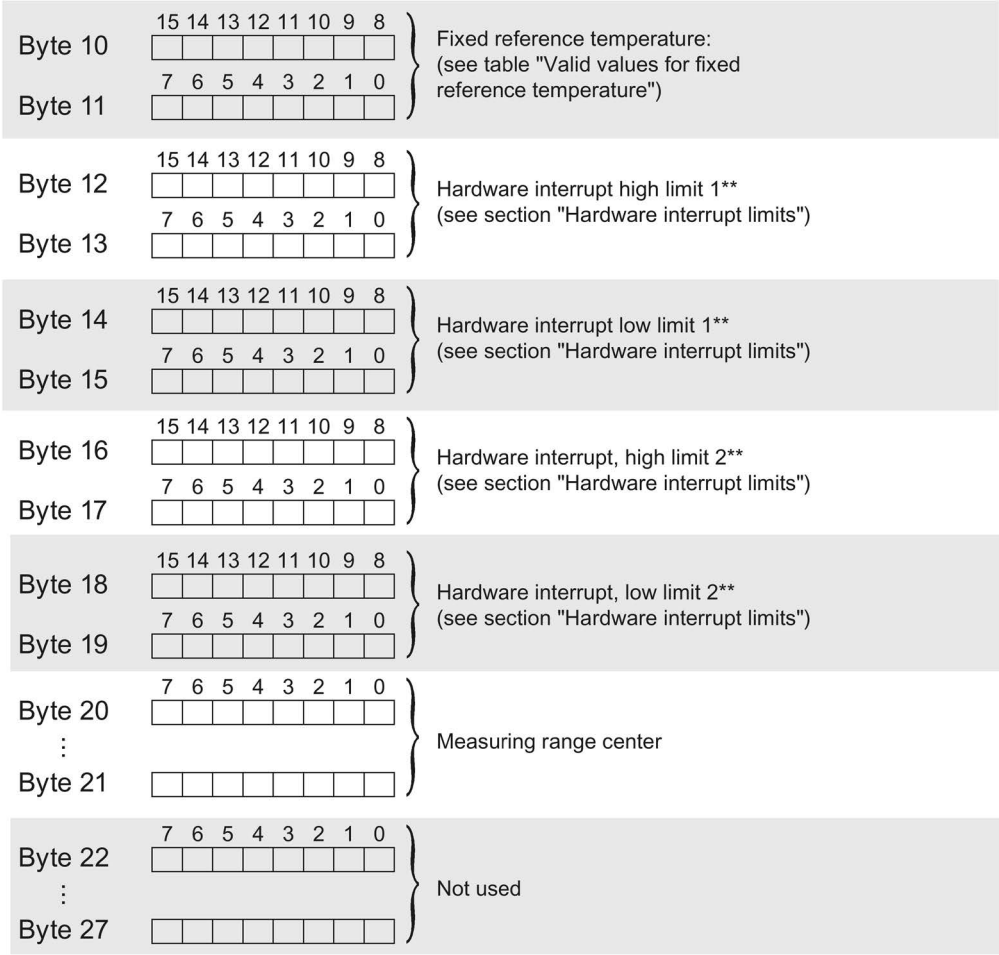

** High limit must be greater than low limit

Figure B-3 Structure of data record 0: Byte 10 to 27:

Codes for measuring types

The following table lists all measuring types of the analog input module along with their codes. Enter these codes at byte 2 of the data record for the corresponding channel (see the figure Structure of data record 0: Bytes 7 to 27).

Table B- 2 Code for the measuring type

Measurement type	Code
Deactivated	0000 0000
Voltage	0000 0001
Resistor, 4-wire connection *)	0000 0100
Resistor, 3-wire connection *)	0000 0101
Resistor, 2-wire connection	0000 0110
Thermal resistor linear, 4-wire connection	0000 0111
Thermal resistor linear, 3-wire connection	0000 1000
Thermal resistor linear, 2-wire connection	0000 1001
Thermocouple TC	0000 1010

*) Only for the following measuring ranges: 150 Ω, 300 Ω, 600 Ω, 6 kΩ

Codes for measuring ranges

The following table lists all measuring ranges of the analog input module along with their codes. Enter these codes accordingly at byte 3 of the data record for the corresponding channel (see the figure Structure of data record 0: Bytes 7 to 27).

Table B- 3 Code for the measuring range

Measuring range	Code
Voltage	
±25 mV	0000 0000
±50 mV	0000 0001
±80 mV	0000 0010
±250 mV	0000 0011
±500 mV	0000 0100
±1 V	0000 0101
Resistor	
150 Ω	0000 0001
300 Ω	0000 0010
600 Ω	0000 0011
6000 Ω	0000 0101
PTC	0000 1111

Thermal resistor	
Pt100 climate	0000 0000
Ni100 climate	0000 0001
Pt100 standard	0000 0010
Ni100 standard	0000 0011
Pt500 standard	0000 0100
Pt1000 standard	0000 0101
Ni1000 standard	0000 0110
Pt200 climate	0000 0111
Pt500 climate	0000 1000
Pt1000 climate	0000 1001
Ni1000 climate	0000 1010
Pt200 standard	0000 1011
Ni120 Standard	0000 1100
Ni120 Climatic	0000 1101
Cu10 Climatic	0000 1110
Cu10 Standard	0000 1111
Ni200 Standard	0001 0000
Ni200 Climatic	0001 0001
Ni500 Standard	0001 0010
Ni500 Climatic	0001 0011
Pt10 Standard	0001 0100
Pt10 Climatic	0001 0101
Pt50 Standard	0001 0110
Pt50 Climatic	0001 0111
Cu50 Standard	0001 1000
Cu50 Climatic	0001 1001
Cu100 Standard	0001 1010
Cu100 Climatic	0001 1011
LG-Ni1000 standard	0001 1100
LG-Ni1000 climate	0001 1101
Ni10 Standard	0001 1110
Ni10 Climatic	0001 1111
Thermocouple	
B	0000 0000
N	0000 0001
E	0000 0010
R	0000 0011
S	0000 0100
J	0000 0101
T	0000 0111
K	0000 1000
C	0000 1010
TXK	0000 1011

Codes for temperature coefficients

The following table lists all temperature coefficients along with their codes for temperature measurements with the resistance thermometers. You need to enter these codes in byte 4 of the data records 0, 2, 4, 6 and 8 (see Fig. Structure of data record 0: bytes 0 to 6).

Table B- 4 Codes for temperature coefficient

Temperature coefficient	Code
Pt xxx	
0.003851	0000 0000
0.003916	0000 0001
0.003902	0000 0010
0.003920	0000 0011
0.003910 GOST	0000 0101
Ni xxx	
0.006180	0000 1000
0.006720	0000 1001
0.006170 GOST	0000 0111
LG-Ni	
0.005000	0000 1010
Cu xxx	
0.00426 GOST	0000 1011
0.00427	0000 1100
0.00428 GOST	0000 1101

Valid values for fixed reference temperatures

The values that you can set for fixed reference temperatures must be within the nominal range of the thermocouple used and within the permitted value range. See table below. The resolution is a tenth of a degree.

Table B- 5 Valid values for fixed reference temperatures

Temperature unit	Decimal	Hexadecimal
Celsius (default)	-1450 to 1550	$FA56_H$ to $60E_H$
Fahrenheit (default)	-2290 to 3110	$F70E_H$ to CCC_H
Kelvin (default)	1282 to 3276	502_H to $10BA_H$

Hardware interrupt limits

The values that you can set for hardware interrupts (high/low limit) must not exceed the over/underrange of respective rated measuring range.

The following tables list the valid hardware interrupt limits. The limit values depend on the selected measuring type and range.

Table B- 6 Limits for voltage and resistance

Voltage	Resistor	
±25 mV, ±50 mV, ±80 mV, ±250 mV, ±500 mV, ±1 V	150 Ω, 300 Ω, 600 Ω, 6 kΩ	
32510	32510	High limit
-32511	1	Low limit

Table B- 7 Limits for thermocouple types B, C, E, and J

Thermocouple												
Type B			Type C			Type E			Type J			
°C	°F	K	°C	°F	K	°C	°F	K	°C	°F	K	
20699	32765	23431	24999	32765	27731	11999	21919	14731	14499	26419	17231	High limit
1	321	2733	-1199	-1839	1533	-2699	-4539	33	-2099	-3459	633	Low limit

Table B- 8 Limits for thermocouples type K, N, R, and S

Thermocouple									
Type K			Type N			Types R, S			
°C	°F	K	°C	°F	K	°C	°F	K	
16219	29515	18951	15499	28219	18231	20189	32765	22921	High limit
-2699	-4539	33	-2699	-4539	33	-1699	-2739	1033	Low limit

Table B- 9 Limits for thermocouple type T and TXK

Thermocouple						
Type T			Type TXK			
°C	°F	K	°C	°F	K	
5399	10039	8131	10499	19219	13231	High limit
-2699	-4539	33	-1999	-3279	733	Low limit

Table B- 10 Limits for resistance thermometer Pt xxx Standard and Pt xxx Climate

Thermal resistor						
Pt xxx standard (0.003851, 0.003902, 0.003910, 0.003916, 0.003920)			Pt xxx climate (0.003851, 0.003902, 0.003916, 0.003910, 0.003920)			
°C	°F	K	°C	°F	K	
9999	18319	12731	15499	31099	---	High limit
-2429	-4053	303	-14499	-22899	---	Low limit

Table B- 11 Limits for resistance thermometer Ni xxx Standard and Ni xxx Climate

Thermal resistor						
Ni xxx Standard (0.006180, 0.006720)			Ni xxx Climate (0.006180, 0.006720)			
°C	°F	K	°C	°F	K	
2949	5629	5681	15499	31099	---	High limit
-1049	-1569	1683	-10499	-15699	---	Low limit

Table B- 12 Limits for resistance thermometer Ni 0.006170 Standard and Ni 0.006170 Air

Thermal resistor						
Ni 0.006170 Standard			Ni 0.006170 Climatic			
°C	°F	K	°C	°F	K	
2123	4142	4855	15499	31099	---	High limit
-1049	-1569	1683	-10499	-15699	---	Low limit

Table B- 13 Limits for resistance thermometer Cu xxx Standard

Thermal resistor									
Cu 0.00426 Standard			Cu 0.00427 Standard			Cu 0.00428 Standard			
°C	°F	K	°C	°F	K	°C	°F	K	
2399	4639	5131	3119	5935	5851	2399	4639	5131	High limit
-599	-759	2133	-2399	-3999	333	-2199	-3639	533	Low limit

Table B- 14 Limits for resistance thermometer Cu xxx Climatic

Thermal resistor			
Cu xxx Climatic (0.00426, 0.00427, 0.00428)			
°C	°F	K	
17999	32765	---	High limit
-5999	-7599	---	Low limit

B.2 Structure of the data record for dynamic reference temperature

The **WRREC** instruction is used to transfer the reference junction temperature via data record 192 to data record 200 to the module.

The description of the WRREC instruction can be found in the online help from STEP 7.

If you have set the "Dynamic reference temperature" value for the "Reference junction" parameter, the module expects a new data record at least every 5 minutes. If the module does not receive a new data record within this time, it generates the "Reference channel error" diagnostics message.

Assignment of data record and channel

The following assignment applies if no submodules (1 x 9-channel) are configured for the module:

- Data record 192 for channel 0
- Data record 193 for channel 1
- Data record 194 for channel 2
- Data record 195 for channel 3
- Data record 196 for channel 4
- Data record 197 for channel 5
- Data record 198 for channel 6
- Data record 199 for channel 7
- Data record 200 for channel 8

If nine submodules (9 x 1-channel) are configured for the module, each submodule has only one channel. The parameters of the channel are in data record 192.

Background: Each submodule you address for the data record transfer has only one channel.

Structure of data record 192 for dynamic reference temperature

The following figure shows you an example of the structure of data record 192 for channel 0. The structure for data records 193 to 200 is identical.

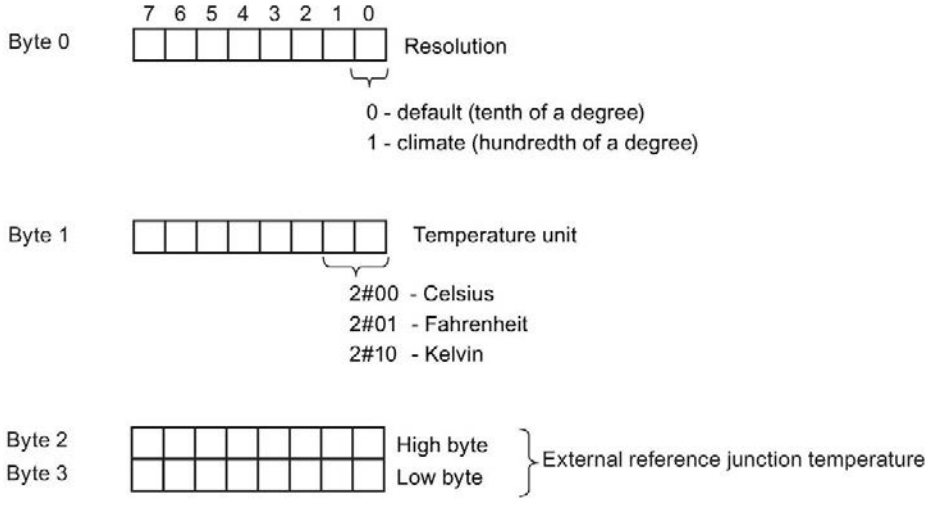

Figure B-4 Structure of data record 192

Valid values for fixed temperature compensation

You can enter the selectable values at byte 1 of the data record for the corresponding channel. The values that you can set must be within the nominal range of the thermocouple used and within the permitted value range. See table below. The resolution corresponds to one tenth of a degree with the "Standard" temperature unit and one hundredth of a degree with the "Climatic" temperature unit.

Table B- 15 Valid values for temperature compensation via data record

Temperature unit	Decimal	Hexadecimal
Celsius (default)	-1450 to 1550	$FA56_H$ to $60E_H$
Fahrenheit (default)	-2290 to 3110	$F70E_H$ to $C26_H$
Kelvin (default)	1282 to 3276	502_H to CCC_H
Celsius (climatic)	-14500 to 15500	$C75C_H$ to $3C8C_H$
Fahrenheit (climatic)	-22900 to 31100	$A68C_H$ to $797C_H$
Kelvin (climatic)	12820 to 32760	3214_H to $7FF8_H$

Additional information

You can find additional information on compensation of the reference junction temperature via data record in the Analog value processing function manual (https://support.industry.siemens.com/cs/ww/en/view/67989094) on the Internet.

B.3 Structure of data record 235 for scalable measuring range

Evaluation in the user program

In the user program, you can evaluate the status and the limits of the scalable measuring range with data record 235, which may result by reaching underflow/overflow.

Structure of data record 235

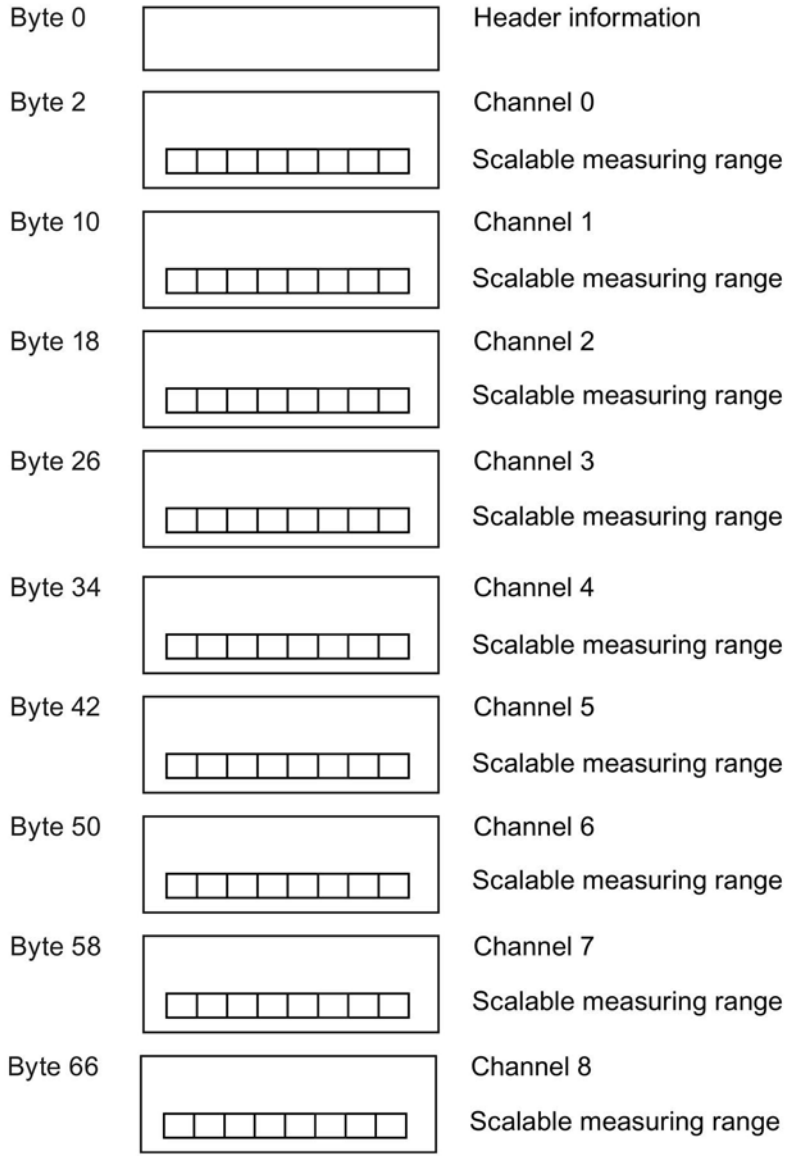

Figure B-5 Structure of data record 235

Header information

The figure below shows the structure of the header information.

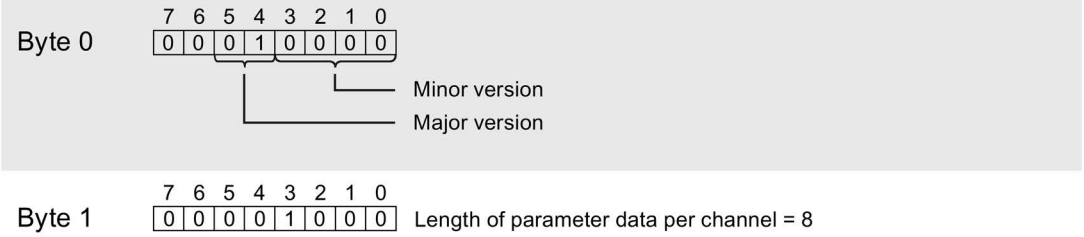

Figure B-6 Structure header information of data record 235

Parameters

The figure below shows the structure of the parameter.

If the corresponding bit is set to "1", the parameter is activated.

* x = 2 + (channel number x 8)

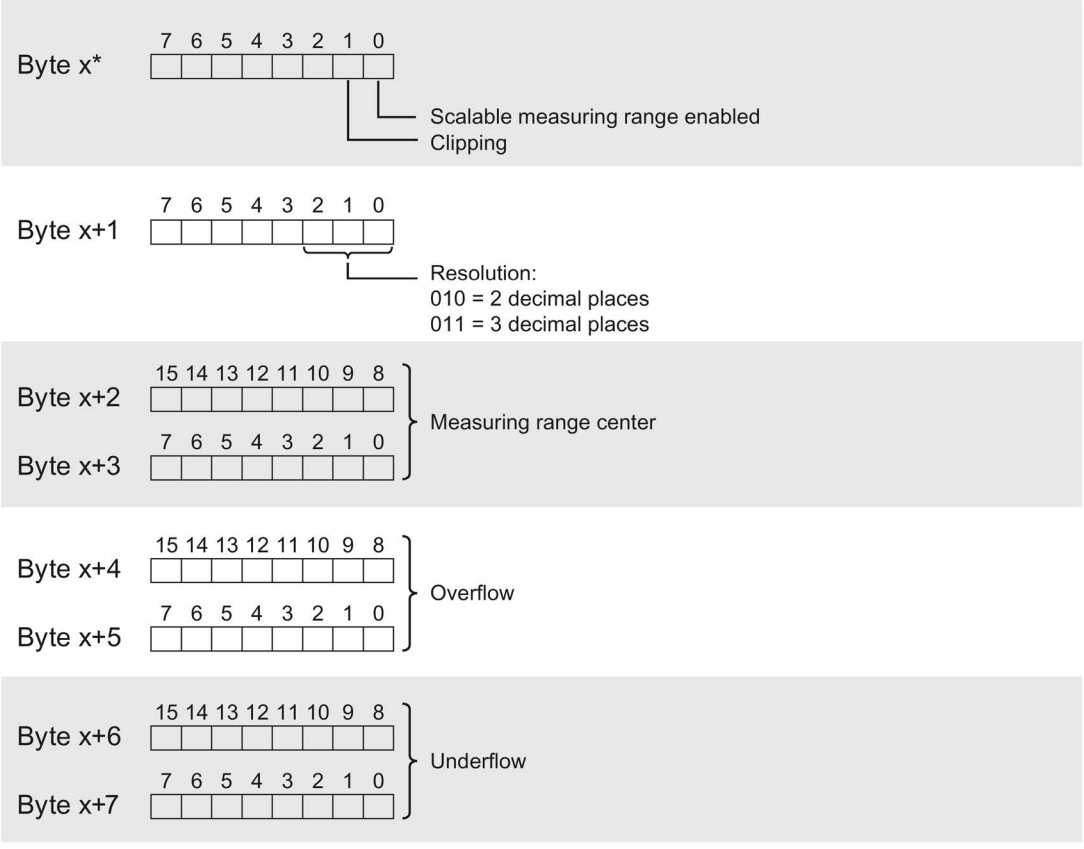

Figure B-7 Structure of data record 235 - channel parameter byte x to x+7

Description of the parameters from data record 235

Table B- 16 **Description of the parameters from data record 235**

Parameter	Description
Scalable measuring range enabled	1 = Function is active for this channel.
Clipping	1 = Scalable measuring range cut off at the overflow/underflow of the underlying measuring range.
Resolution	2 or 3 decimal places
Measuring range center	Temperature in whole °C / °F / K ("working point" for the scaling)
Overflow/underflow	Limits of the scalable measuring range

Example

The following example shows the values for a thermal resistor Pt 100 Standard, °C:

Table B- 17 Example of a thermal resistor Pt 100 Standard

Hex. value	Dec. value	Evaluation of data record 235
10_H	16	V1.0
08_H	8	8 bytes
03_H	3	Scalable measuring range active and clipped (clipping)
02_H	2	Resolution: 2 decimal places
$02EE_H$	750	Measuring range center: 750 °C
$61A8_H$	25000	Overflow (Maximum): 250.00 + 750 = 1000.00 °C Scalable measuring range is clipped at the overflow.
8100_H	-32512	Underflow (Minimum): -325.12 + 750 = 424.88 °C

Representation of analog values

C

Introduction

This appendix shows the analog values for all measuring ranges supported by the AI 8xU/R/RTD/TC HF analog module.

Measured value resolution

Each analog value is written left aligned to the tags. The bits marked with "x" are set to "0".

Note

This resolution does not apply to temperature values. The digitalized temperature values are the result of a conversion in the analog module.

Table C- 1 Resolution of the analog values

Resolution in bits including sign	Values		Analog value	
	Decimal	Hexadecimal	High byte	Low byte
16	1	1_H	Sign 0 0 0 0 0 0 0	0 0 0 0 0 0 0 1

C.1 Representation of input ranges

The tables below set out the digitized representation of the input ranges separately for bipolar and unipolar input ranges. The resolution is 16 bits.

Table C- 2 Bipolar input ranges

Dec. value	Measured value in %	Data word																Range
		2^{15}	2^{14}	2^{13}	2^{12}	2^{11}	2^{10}	2^{9}	2^{8}	2^{7}	2^{6}	2^{5}	2^{4}	2^{3}	2^{2}	2^{1}	2^{0}	
32767	>117.589	0	1	1	1	1	1	1	1	1	1	1	1	1	1	1	1	Overflow
32511	117.589	0	1	1	1	1	1	1	0	1	1	1	1	1	1	1	1	Overshoot range
27649	100.004	0	1	1	0	1	1	0	0	0	0	0	0	0	0	0	1	
27648	100.000	0	1	1	0	1	1	0	0	0	0	0	0	0	0	0	0	Rated range
1	0.003617	0	0	0	0	0	0	0	0	0	0	0	0	0	0	0	1	
0	0.000	0	0	0	0	0	0	0	0	0	0	0	0	0	0	0	0	
-1	-0.003617	1	1	1	1	1	1	1	1	1	1	1	1	1	1	1	1	
-27648	-100.000	1	0	0	1	0	1	0	0	0	0	0	0	0	0	0	0	
-27649	-100.004	1	0	0	1	0	0	1	1	1	1	1	1	1	1	1	1	Undershoot range
-32512	-117.593	1	0	0	0	0	0	0	1	0	0	0	0	0	0	0	0	
-32768	<-117.593	1	0	0	0	0	0	0	0	0	0	0	0	0	0	0	0	Underflow

Table C- 3 Unipolar input ranges

Dec. value	Measured value in %	Data word																Range
		2^{15}	2^{14}	2^{13}	2^{12}	2^{11}	2^{10}	2^{9}	2^{8}	2^{7}	2^{6}	2^{5}	2^{4}	2^{3}	2^{2}	2^{1}	2^{0}	
32767	>117.589	0	1	1	1	1	1	1	1	1	1	1	1	1	1	1	1	Overflow
32511	117.589	0	1	1	1	1	1	1	0	1	1	1	1	1	1	1	1	Overshoot range
27649	100.004	0	1	1	0	1	1	0	0	0	0	0	0	0	0	0	1	
27648	100.000	0	1	1	0	1	1	0	0	0	0	0	0	0	0	0	0	
1	0.003617	0	0	0	0	0	0	0	0	0	0	0	0	0	0	0	1	Rated range
0	0.000	0	0	0	0	0	0	0	0	0	0	0	0	0	0	0	0	
-1	-0.003617	1	1	1	1	1	1	1	1	1	1	1	1	1	1	1	1	Undershoot range
-4864	-17.593	1	1	1	0	1	1	0	1	0	0	0	0	0	0	0	0	
-32768	<-17.593	1	0	0	0	0	0	0	0	0	0	0	0	0	0	0	0	Underflow

C.2 Representation of analog values in voltage measuring ranges

The following tables list the decimal and hexadecimal values (codes) of the possible voltage measuring ranges.

Table C- 4 Voltage measuring ranges ±25 mV and ±1 V,

Values		Voltage measuring range		Range
dec	hex	±25 mV	±1 V	
32767	7FFF	>29.4 mV	> 1.176 V	Overflow
32511	7EFF	29.4 mV	1.176 V	Overshoot range
27649	6C01			
27648	6C00	25 mV	1 V	Rated range
20736	5100	18.75 mV	0.75 V	
1	1	904.2 µV	36.17 µV	
0	0	0 V	0 V	
-1	FFFF			
-20736	AF00	-18.75 mV	-0.75 V	
-27648	9400	-25 mV	-1 V	
-27649	93FF			Undershoot range
-32512	8100	-29.4 mV	-1.176 V	
-32768	8000	<-29.40 mV	< -1.176 V	Underflow

Table C- 5 Voltage measuring ranges ±500 mV, ±250 mV, ±80 mV, and ±50 mV,

Values		Voltage measuring range				Range
dec	hex	±500 mV	±250 mV	±80 mV	±50 mV	
32767	7FFF	>587.9 mV	> 294.0 mV	> 94.1 mV	> 58.8 mV	Overflow
32511	7EFF	587.9 mV	294.0 mV	94.1 mV	58.8 mV	Overshoot range
27649	6C01					
27648	6C00	500 mV	250 mV	80 mV	50 mV	Rated range
20736	5100	375 mV	187.5 mV	60 mV	37.5 mA	
1	1	18.08 µV	9.04 µV	2.89 µV	1.81 µV	
0	0	0 mV	0 mV	0 mV	0 mV	
-1	FFFF					
-20736	AF00	-375 mV	-187.5 mV	-60 mV	-37.5 mV	
-27648	9400	-500 mV	-250 mV	-80 mV	-50 mV	
-27649	93FF					Undershoot range
-32512	8100	-587.9 mV	-294.0 mV	-94.1 mV	-58.8 mV	
-32768	8000	<-587.9 mV	< -294.0 mV	< -94.1 mV	< -58.8 mV	Underflow

C.3 Analog value representation for resistance-type transmitters / resistance thermometers

C.3.1 Resistance-type transmitters 150, 300, 600, 6000 Ohm

The following tables list the decimal and hexadecimal values (codes) of the possible resistance-based sensor ranges.

Table C- 6 Resistance-based sensors of 150 Ω, 300 Ω, 600 Ω, and 6000 Ω

Values		Resistive transmitter range				
dec	hex	150 Ω	300 Ω	600 Ω	6000 Ω	
32767	7FFF	>176.38 Ω	>352.77 Ω	>705.53 Ω	>7055.3 Ω	Overflow
32511	7EFF	176.38 Ω	352.77 Ω	705.53 Ω	7055.3 Ω	Overshoot range
27649	6C01					
27648	6C00	150 Ω	300 Ω	600 Ω	6000 Ω	Rated range
20736	5100	112.5 Ω	225 Ω	450 Ω	4500 Ω	
1	1	5.43 mΩ	10.85 mΩ	21.70 mΩ	217 mΩ	
0	0	0 Ω	0 Ω	0 Ω	0 Ω	

C.3.2 Thermal resistor Pt 10, 50, 100, 200, 500, 1000 Standard/GOST

Thermal resistor Pt x0 Standard and Pt x0 GOST Standard

Table C- 7 Thermal resistor Pt x0 Standard (0.003851, 0.003916, 0.003902, 0.003920) and Pt x0 GOST Standard (0.003910)

Pt x0 Standard in °C (1 digit = 0.1°C)	Units		Pt x0 Standard in °F (1 digit = 0.1 °F)	Units		Pt x00 Standard in K (1 digit = 0.1 K)	Units		Range
	dec	hex		dec	hex		dec	hex	
> 1000.0	32767	7FFF	> 1832.0	32767	7FFF	> 1273.2	32767	7FFF	Overflow
1000.0 : 850.1	10000 : 8501	2710 : 2135	1832.0 : 1562.1	18320 : 15621	4790 : 3D05	1273.2 : 1123.3	12732 : 11233	31BC : 2BE1	Overshoot range
850.0 : -200.0	8500 : -2000	2134 : F830	1562.0 : -328.0	15620 : -3280	3D04 : F330	1123.2 : 73.2	11232 : 732	2BE0 : 2DC	Rated range
-200.1 : -243.0	-2001 : -2430	F82F : F682	-328.1 : -405.4	-3281 : -4054	F32F : F02A	73.1 : 30.2	731 : 302	2DB : 12E	Undershoot range
< -243.0	-32768	8000	< -405.4	-32768	8000	< 30.2	32768	8000	Underflow

Thermal resistor Pt x0 and Pt x0 GOST Climatic

Table C- 8 Thermal resistor Pt x0 Standard (0.003851, 0.003916, 0.003902, 0.003920) and Pt x0 GOST Climatic (0.003910)

Pt x0 Climatic in °C (1 digit = 0.01 °C)	Units		Pt x0 Climatic in °F (1 digit = 0.01 °F)	Units		Range
	dec	hex		dec	hex	
> 155.00	32767	7FFF	> 311.00	32767	7FFF	Overflow
155.00 : 130.01	15500 : 13001	3C8C : 32C9	311.00 : 266.01	31100 : 26601	797C : 67E9	Overshoot range
130.00 : -120.00	13000 : -12000	32C8 : D120	266.00 : -184.00	26600 : -18400	67E8 : B820	Rated range
-120.01 : -145.00	-12001 : -14500	D11F : C75C	-184.01 : -229.00	-18401 : -22900	B81F : A68C	Undershoot range
< -145.00	-32768	8000	< -229.00	-32768	8000	Underflow

C.3.3 Thermal resistor Ni 10, 100, 120, 200, 500, 1000, LG-Ni 1000 Standard

The following tables list the decimal and hexadecimal values (codes) of the possible resistance thermometer ranges.

Table C- 9 Thermal resistor Ni x0, LG-Ni 1000 Standard (0.00500, 0.006180, 0.006720)

Ni x0 Standard in °C (1 digit = 0.1 °C)	Units		Ni x0 Standard in °F (1 digit = 0.1 °F)	Units		Ni x0 Standard in K (1 digit = 0.1 K)	Units		Range
	dec	hex		dec	hex		dec	hex	
> 295.0	32767	7FFF	> 563.0	32767	7FFF	> 568.2	32767	7FFF	Overflow
295.0 : 250.1	2950 : 2501	B86 : 9C5	563.0 : 482.1	5630 : 4821	15FE : 12D5	568.2 : 523.3	5682 : 5233	1632 : 1471	Overshoot range
250.0 : -60.0	2500 : -600	9C4 : FDA8	482.0 : -76.0	4820 : -760	12D4 : FD08	523.2 : 213.2	5232 : 2132	1470 : 854	Rated range
-60.1 : -105.0	-601 : -1050	FDA7 : FBE6	-76.1 : -157.0	-761 : -1570	FD07 : F9DE	213.1 : 168.2	2131 : 1682	853 : 692	Undershoot range
< -105.0	-32768	8000	< -157.0	-32768	8000	< 168.2	32768	8000	Underflow

C.3.4 Thermal resistor Ni 10, 100, 120, 200, 500, 1000, LG-Ni 1000 Climatic

The following tables list the decimal and hexadecimal values (codes) of the possible resistance thermometer ranges.

Table C- 10 Thermal resistor Ni x0 and LG-Ni 1000 Climatic (0.00500. 0.006180. 0.006720) and Ni x0 GOST Climatic (0.006170)

Ni x0 Climatic in °C (1 digit = 0.01 °C)	Units		Ni x0 Climatic in °F (1 digit = 0.01 °F)	Units		Range
	dec	hex		dec	hex	
> 155.00	32767	7FFF	> 311.00	32767	7FFF	Overflow
155.00 : 130.01	15500 : 13001	3C8C : 32C9	311.00 : 266.01	31100 : 26601	797C : 67E9	Overshoot range
130.00 : -60.00	13000 : -6000	32C8 : E890	266.00 : -76.00	26600 : -7600	67E8 : E250	Rated range
-60.01 : -105.00	-6001 : -10500	E88F : D6FC	-76.01 : -157.00	-7601 : -15700	E24F : C2AC	Undershoot range
< - 105.00	-32768	8000	< - 157.00	-32768	8000	Underflow

C.3.5 Thermal resistor Ni 10, 100, 120, 200, 500, 1000 GOST Standard

The following tables list the decimal and hexadecimal values (codes) of the possible resistance thermometer ranges.

Table C- 11 Thermal resistor Ni x0 GOST Standard (0.006170)

Ni x0 GOST Standard in °C (1 digit = 0.1 °C)	Units		Ni x0 GOST Standard in °F (1 digit = 0.1 °F)	Units		Ni x0 GOST Standard in K (1 digit = 0.1 K)	Units		Range
	dec.	hex.		dec.	hex.		dec.	hex.	
> 212.4	32767	7FFF	> 414.3	32767	7FFF	> 485.6	32767	7FFF	Overflow
212.4 : 180.1	2124 : 1801	084C : 0709	414.3 : 356.1	4143 : 3561	102F : 0DE9	486.6 : 453.3	4856 : 4533	12F8 : 11B5	Overrange
180.0 : -60.0	1800 : -600	0708 : FDA8	356.0 : -76.0	3560 : -760	0DE8 : FD08	453.2 : 213.2	4532 : 2132	11B4 : 854	Rated range
-60.1 : -105.0	-601 : -1050	FDA7 : FBE6	-76.1 : -157.0	-761 : -1570	FD07 : F9DE	213.1 : 168.2	2131 : 1682	853 : 692	Underrange
< -105.0	-32768	8000	< -157.0	-32768	8000	< 168.2	32768	8000	Underflow

C.3.6 Thermal resistor Cu 10, 50, 100 Standard/Climatic/GOST

Thermal resistor Cu 10, 50, 100 Standard (0.00427)

Table C- 12 Thermal resistor Cu 10, 50, 100 Standard (0.00427)

Cu 10 standard in °C (1 digit = 0.1 °C)	Units		Cu 10 standard in °F (1 digit = 0.1 °F)	Units		Cu 10 standard in K (1 digit = 0.1 K)	Units		Range
	dec.	hex.		dec.	hex.		dec.	hex.	
> 312.0	32767	7FFF	> 593.6	32767	7FFF	> 585.2	32767	7FFF	Overflow
312.0 : 260.1	3120 : 2601	C30 : A29	593.6 : 500.1	5936 : 5001	1730 : 12D5	585.2 : 533.3	5852 : 5333	16DC : 14D5	Overrange
260.0 : -200.0	2600 : -2000	A28 : F830	500.0 : -328.0	5000 : -3280	1389 : F330	533.2 : 73.2	5332 : 732	14D4 : 2DC	Nominal range
-200.1 : -240.0	-2001 : -2400	F82F : F6A0	-328.1 : -400.0	-3281 : -4000	F32F : F060	73.1 : 33.2	731 : 332	2DB : 14C	Underrange
< -240.0	-32768	8000	< -400.0	-32768	8000	< 33.2	32768	8000	Underflow

Thermal resistor Cu 10, 50, 100 GOST Standard (0.00426)

Table C- 13 Thermal resistor Cu 10, 50, 100 GOST Standard (0.00426)

Cu x0 Standard in °C (1 digit = 0.1 °C)	Units		Cu x0 standard in °F (1 digit = 0.1 °F)	Units		Cu x0 standard in K (1 digit = 0.1 K)	Units		Range
	dec.	hex.		dec.	hex.		dec.	hex.	
> 240.0	32767	7FFF	> 464.0	32767	7FFF	> 513.2	32767	7FFF	Overflow
240.0 : 200.1	2400 : 2001	0960 : 07D1	464.0 : 392.1	4640 : 3921	1220 : 0F51	513.2 : 473.3	5132 : 4733	140C : 127D	Overrange
200.0 : -50.0	2000 : -500	07D0 : FE0C	392.0 : -58.0	3920 : -580	0F50 : FDBC	473.2 : 222.2	4732 : 2232	127C : 8B8	Nominal range
-50.1 : -60.0	-501 : -600	FE0B : FDA8	-58.1 : -76.0	-581 : -760	FDBB : FD08	223.1 : 213.2	2231 : 2132	8B7 : 854	Under-range
< - 60.00	-32768	8000	< - 76.0	-32768	8000	< 213.2	32768	8000	Underflow

Thermal resistor Cu 10, 50, 100 GOST Standard (0.00428)

Table C- 14 Thermal resistor Cu 10, 50, 100 GOST Standard (0.00428)

Cu x0 standard in °C (1 digit = 0.1 °C)	Units		Cu x0 standard in °F (1 digit = 0.1 °F)	Units		Cu x0 standard in K (1 digit = 0.1 K)	Units		Range
	dec.	hex.		dec.	hex.		dec.	hex.	
> 240.0	32767	7FFF	> 464.0	32767	7FFF	> 513.2	32767	7FFF	Overflow
240.0 : 200.1	2400 : 2001	0960 : 07D1	464.0 : 392.1	4640 : 3921	1220 : 0F51	513.2 : 473.3	5132 : 4733	140C : 127D	Overrange
200.0 : -180.0	2000 : -1800	07D0 : F8F8	392.0 : -292.0	3920 : -2920	0F50 : F498	473.2 : 93.2	4732 : 932	127C : 3A4	Nominal range
-180.1 : -220.0	-1801 : -2200	F8F7 : F768	-292.1 : -364.0	-2921 : -3640	F497 : F1C8	93.1 : 53.2	931 : 532	3A3 : 214	Under-range
< - 220.0	-32768	8000	< - 364.0	-32768	8000	< 53.2	32768	8000	Underflow

Thermal resistor Cu x0 Climatic (0.00427) and Cu x0 Gost Climatic (0.00426 and 0.00428)

Table C- 15 Thermal resistor Cu 10, 50, 100 Climatic and Cu 10, 50, 100 GOST Climatic

Cu x0 Climatic in °C (1 digit = 0.01 °C)	Units		Cu x0 Climatic in °F (1 digit = 0.01 °F)	Units		Range
	dec.	hex.		dec.	hex.	
> 180.00	32767	7FFF	> 325.11	32767	7FFF	Overflow
180.00 : 150.01	18000 : 15001	4650 : 3A99	327.66 : 280.01	32766 : 28001	7FFE : 6D61	Overrange
150.00 : -50.00	15000 : -5000	3A98 : EC78	280.00 : - 58.00	28000 : -5800	6D60 : I958	Nominal range
-50.01 : -60.00	-5001 : -6000	EC77 : E890	-58.01 : -76.00	-5801 : -7600	E957 : E250	Underrange
< - 60.00	-32768	8000	< - 76.00	-32768	8000	Underflow

C.4 Representation of analog values for thermocouples

The following tables list the decimal and hexadecimal values (codes) of the supported thermocouples.

Table C- 16 Thermocouple type B

Type B in °C	Values		Type B in °F	Values		Type B in K	Values		Range
	dec.	hex.		dec.	hex.		dec.	hex.	
> 2070.0	32767	7FFF	> 3276.6	32767	7FFF	> 2343.2	32767	7FFF	Overflow
2070.0 : 1820.1	20700 : 18201	50DC : 4719	3276.6 : 2786.6	32766 : 27866	7FFE : 6CDA	2343.2 : 2093.3	23432 : 20933	5B88 : 51C5	Overrange
1820.0 : 250.0	18200 : 2500	4718 : 09C4	2786.5 : 482.0	27865 : 4820	6CD9 : 12D4	2093.2 : 523.2	20932 : 5232	51C4 : 1470	Nominal range
249.9 : 0.0	2499 : 0	09C3 : 0	481.9 : 32.0	4819 : 320	12D3 : 0140	523.1 : 273.2	5231 : 2732	1469 : 0AAC	Underrange
< 0.0	-32768	8000	< 32.0	-32768	8000	< 273.2	32768	8000	Underflow

Table C- 17 Thermocouple Type C

Type C in °C	Values		Type C in °F	Values		Type C in °K	Values		Range
	dec.	hex.		dec.	hex.		dec.	hex.	
> 2500.0	32767	7FFF	> 3276.6	32767	7FFF	> 2773.2	32767	7FFF	Overflow
2500.0 : 2300.1	25000 : 23001	61A8 : 59D9	3276.6 : 2786.6	32766 : 27866	7FFE : 6CDA	2773.2 : 2573.3	27732 : 25733	6C54 : 6485	Overrange
2300.0 : 0.0	23000 : 0	59D8 : 0000	2786.5 : 32.0	27865 : 320	6CD9 : 0140	2573.2 : 273.2	25732 : 2732	6484 : 0AAC	Nominal range
-0.1 : -120.0	-1 : -1200	FFFF : FB50	31.9 : -184.0	319 : -1840	013F : F8D0	273.1 : 153.2	2731 : 1532	0AAB : 05FC	Underrange
< -120.0	-32768	8000	< -184.0	-32768	8000	< 153.2	32768	8000	Underflow

Table C- 18 Thermocouple type E

Type E in °C	Values		Type E in °F	Values		Type E in K	Values		Range
	dec.	hex.		dec.	hex.		dec.	hex.	
> 1200.0	32767	7FFF	> 2192.0	32767	7FFF	> 1473.2	32767	7FFF	Overflow
1200.0 : 1000.1	12000 : 10001	2EE0 : 2711	2192.0 : 1832.2	21920 : 18322	55A0 : 4792	1473.2 : 1273.3	14732 : 12733	398C : 31BD	Overrange
1000.0 : -270.0	10000 : -2700	2710 : F574	1832.0 : -454.0	18320 : -4540	4790 : EE44	1273.2 : 3.2	12732 : 32	31BC : 0020	Nominal range
< -270.0	-32768	8000	< -454.0	-32768	8000	< 3.2	-32768	8000	Underflow

Table C- 19 Thermocouple type J

Type J in °C	Values		Type J in °F	Values		Type J in K	Values		Range
	dec.	hex.		dec.	hex.		dec.	hex.	
> 1450.0	32767	7FFF	> 2642.0	32767	7FFF	> 1723.2	32767	7FFF	Overflow
1450.0 : 1200.1	14500 : 12001	38A4 : 2EE1	2642.0 : 2192.2	26420 : 21922	6734 : 55A2	1723.2 : 1473.3	17232 : 14733	4350 : 398D	Overrange
1200.0 : -210.0	12000 : -2100	2EE0 : F7CC	2192.0 : -346.0	21920 : -3460	55A0 : F27C	1473.2 : 63.2	14732 : 632	398C : 0278	Nominal range
< -210.0	-32768	8000	< -346.0	-32768	8000	< 63.2	-32768	8000	Underflow

Table C- 20 Thermocouple type K

Type K in °C	Values		Type K in °F	Values		Type K in K	Values		Range
	dec.	hex.		dec.	hex.		dec.	hex.	
> 1622.0	32767	7FFF	> 2951.6	32767	7FFF	> 1895.2	32767	7FFF	Overflow
1622.0 : 1372.1	16220 : 13721	3F5C : 3599	2951.6 : 2501.7	29516 : 25017	734C : 61B9	1895.2 : 1645.3	18952 : 16453	4A08 : 4045	Overrange
1372.0 : -270.0	13720 : -2700	3598 : F574	2501.6 : -454.0	25016 : -4540	61B8 : EE44	1645.2 : 3.2	16452 : 32	4044 : 0020	Nominal range
< -270.0	-32768	8000	< -454.0	-32768	8000	< 3.2	-32768	8000	Underflow

Table C- 21 Thermocouple type N

Type N in °C	Values		Type N in °F	Values		Type N in K	Values		Range
	dec.	hex.		dec.	hex.		dec.	hex.	
> 1550.0	32767	7FFF	> 2822.0	32767	7FFF	> 1823.2	32767	7FFF	Overflow
1550.0 : 1300.1	15500 : 13001	3C8C : 32C9	2822.0 : 2372.2	28220 : 23722	6E3C : 5CAA	1823.2 : 1573.3	18232 : 15733	4738 : 3D75	Overrange
1300.0 : -270.0	13000 : -2700	32C8 : F574	2372.0 : -454.0	23720 : -4540	5CA8 : EE44	1573.2 : 3.2	15732 : 32	3D74 : 0020	Nominal range
< -270.0	-32768	8000	< -454.0	-32768	8000	< 3.2	-32768	8000	Underflow

Table C- 22 Thermocouple type R and S

Type R, S in °C	Values		Type R, S in °F	Values		Types R, S in K	Values		Range
	dec.	hex.		dec.	hex.		dec.	hex.	
> 2019.0	32767	7FFF	> 3276.6	32767	7FFF	> 2292.2	32767	7FFF	Overflow
2019.0 : 1769.1	20190 : 17691	4EDE : 451B	3276.6 : 3216.4	32766 : 32164	7FFE : 7DA4	2292.2 : 2042.3	22922 : 20423	598A : 4FC7	Overrange
1769.0 : -50.0	17690 : -500	451A : FE0C	3216.2 : -58.0	32162 : -580	7DA2 : FDBC	2042.2 : 223.2	20422 : 2232	4FC6 : 08B8	Nominal range
-50.1 : -170.0	-501 : -1700	FE0B : F95C	-58.1 : -274.0	-581 : -2740	FDBB : F54C	223.1 : 103.2	2231 : 1032	08B7 : 0408	Underrange
< -170.0	-32768	8000	< -274.0	-32768	8000	< 103.2	< 1032	8000	Underflow

Table C- 23 Thermocouple type T

Type T in °C	Values		Type T in °F	Values		Type T in K	Values		Range
	dec.	hex.		dec.	hex.		dec.	hex.	
> 540.0	32767	7FFF	> 1004.0	32767	7FFF	> 813.2	32767	7FFF	Overflow
540.0 : 400.1	5400 : 4001	1518 : 0FA1	1004.0 : 752.2	10040 : 7522	2738 : 1D62	813.2 : 673.3	8132 : 6733	1FC4 : 1AAD	Overrange
400.0 : -270.0	4000 : -2700	0FA0 : F574	752.0 : -454.0	7520 : -4540	1D60 : EE44	673.2 : 3.2	6732 : 32	1AAC : 0020	Nominal range
< -270.0	-32768	8000	< -454.0	-32768	8000	< 3.2	-32768	8000	Underflow

Table C- 24 Thermocouple type TXK/XKL GOST

Type TXK /XKL in °C	Values		Type TXK /XKL in °F	Values		Type TXK/XKL in K	Values		Range
	dec.	hex.		dec.	hex.		dec.	hex.	
> 1050.0	32767	7FFF	> 1922.0	32767	7FFF	> 1323.2	32767	7FFF	Overflow
1050.0 : 800.1	10500 : 8001	2904 : 1FA1	1922.0 : 1472.1	19220 : 14721	4B14 : 3981	1323.2 : 1073.3	13232 : 10733	33B0 : 29ED	Overrange
800.0 : -200.0	8000 : -2000	1F40 : F830	1472.0 : -328.0	14720 : -3280	3980 : F330	1073.2 : 73.2	10732 : 732	29EC : 02DC	Nominal range
< -200.0	-32768	8000	< -328.0	-32768	8000	< 73.2	-32768	8000	Underflow

SIEMENS

Manual

SIMATIC

S7-1500 / ET 200MP

Analog Input Module
AI 16xI BA (6ES7531-7MH00-0AB0)

Edition 09/2020

support.industry.siemens.com

SIEMENS

SIMATIC

S7-1500/ET 200MP
Analog input module AI 16xI BA
(6ES7531-7MH00-0AB0)

Equipment Manual

Preface

S7-1500 / ET 200MP Documentation Guide 1

Product overview 2

Wiring 3

Parameters/address space 4

Interrupts/diagnostics alarms 5

Technical specifications 6

Dimensional drawing A

Parameter data records B

Representation of analog values C

09/2020

A5E47052837-AA

Legal information

Warning notice system

This manual contains notices you have to observe in order to ensure your personal safety, as well as to prevent damage to property. The notices referring to your personal safety are highlighted in the manual by a safety alert symbol, notices referring only to property damage have no safety alert symbol. These notices shown below are graded according to the degree of danger.

⚠ DANGER
indicates that death or severe personal injury **will** result if proper precautions are not taken.

⚠ WARNING
indicates that death or severe personal injury **may** result if proper precautions are not taken.

⚠ CAUTION
indicates that minor personal injury can result if proper precautions are not taken.

NOTICE
indicates that property damage can result if proper precautions are not taken.

If more than one degree of danger is present, the warning notice representing the highest degree of danger will be used. A notice warning of injury to persons with a safety alert symbol may also include a warning relating to property damage.

Qualified Personnel

The product/system described in this documentation may be operated only by **personnel qualified** for the specific task in accordance with the relevant documentation, in particular its warning notices and safety instructions. Qualified personnel are those who, based on their training and experience, are capable of identifying risks and avoiding potential hazards when working with these products/systems.

Proper use of Siemens products

Note the following:

⚠ WARNING
Siemens products may only be used for the applications described in the catalog and in the relevant technical documentation. If products and components from other manufacturers are used, these must be recommended or approved by Siemens. Proper transport, storage, installation, assembly, commissioning, operation and maintenance are required to ensure that the products operate safely and without any problems. The permissible ambient conditions must be complied with. The information in the relevant documentation must be observed.

Trademarks

All names identified by ® are registered trademarks of Siemens AG. The remaining trademarks in this publication may be trademarks whose use by third parties for their own purposes could violate the rights of the owner.

Disclaimer of Liability

We have reviewed the contents of this publication to ensure consistency with the hardware and software described. Since variance cannot be precluded entirely, we cannot guarantee full consistency. However, the information in this publication is reviewed regularly and any necessary corrections are included in subsequent editions.

Siemens AG
Digital Industries
Postfach 48 48
90026 NÜRNBERG
GERMANY

A5E47052837-AA
Ⓟ 09/2020 Subject to change

Copyright © Siemens AG 2020.
All rights reserved

Preface

Purpose of the documentation

This manual supplements the system manual S7-1500/ET 200MP (https://support.industry.siemens.com/cs/ww/en/view/59191792).

Functions that relate in general to the systems are described in this system manual.

The information provided in this manual and in the system/function manuals supports you in commissioning the systems.

Conventions

The term "CPU" is used in this manual both for the CPUs of the S7-1500 automation system, as well as for interface modules of the ET 200MP distributed I/O system.

Please also observe notes marked as follows:

Note

A note contains important information on the product described in the documentation, on the handling of the product or on the section of the documentation to which particular attention should be paid.

Recycling and disposal

For environmentally friendly recycling and disposal of your old equipment, contact a certified electronic waste disposal company and dispose of the equipment according to the applicable regulations in your country.

Security information

Siemens provides products and solutions with industrial security functions that support the secure operation of plants, systems, machines and networks.

In order to protect plants, systems, machines and networks against cyber threats, it is necessary to implement – and continuously maintain – a holistic, state-of-the-art industrial security concept. Siemens' products and solutions constitute one element of such a concept.

Customers are responsible for preventing unauthorized access to their plants, systems, machines and networks. Such systems, machines and components should only be connected to an enterprise network or the internet if and to the extent such a connection is necessary and only when appropriate security measures (e.g. firewalls and/or network segmentation) are in place.

For additional information on industrial security measures that may be implemented, please visit (https://www.siemens.com/industrialsecurity).

Siemens' products and solutions undergo continuous development to make them more secure. Siemens strongly recommends that product updates are applied as soon as they are available and that the latest product versions are used. Use of product versions that are no longer supported, and failure to apply the latest updates may increase customers' exposure to cyber threats.

To stay informed about product updates, subscribe to the Siemens Industrial Security RSS Feed visit (https://www.siemens.com/industrialsecurity).

Open Source Software

Open-source software is used in the firmware of the I/O modules. Open Source Software is provided free of charge. We are liable for the product described, including the open-source software contained in it, pursuant to the conditions applicable to the product. Siemens accepts no liability for the use of the open source software over and above the intended program sequence, or for any faults caused by modifications to the software.

For legal reasons, we are obliged to publish the original text of the license conditions and copyright notices. Please read the information relating to this on the Internet (https://support.industry.siemens.com/cs/ww/en/view/109757558).

Table of contents

Preface **3**

1 S7-1500 / ET 200MP Documentation Guide **6**

2 Product overview **8**

2.1 Properties 8

3 Wiring **10**

4 Parameters/address space **13**

4.1 Measuring types and ranges 13

4.2 Parameters 14

4.3 Declaration of parameters 16

4.4 Address space 18

5 Interrupts/diagnostics alarms **23**

5.1 Status and error displays 23

5.2 Interrupts 25

5.3 Diagnostics alarms 27

6 Technical specifications **28**

A Dimensional drawing **32**

B Parameter data records **34**

B.1 Parameter assignment and structure of the parameter data records 34

C Representation of analog values **39**

C.1 Representation of input ranges 40

C.2 Representation of analog values in the current measuring ranges 41

C.3 Measured values for wire break diagnostic 42

S7-1500 / ET 200MP Documentation Guide

1

The documentation for the SIMATIC S7-1500 automation system and the SIMATIC ET 200MP distributed I/O system is arranged into three areas.
This arrangement enables you to access the specific content you require.

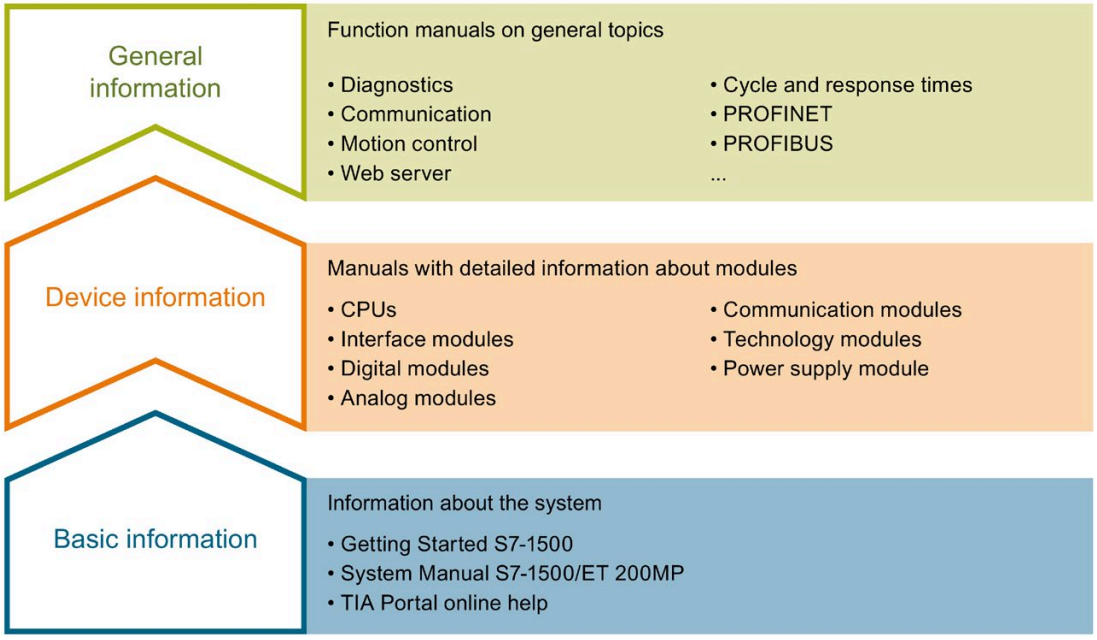

Basic information

The System Manual and Getting Started describe in detail the configuration, installation, wiring and commissioning of the SIMATIC S7-1500 and ET 200MP systems. The STEP 7 online help supports you in the configuration and programming.

Device information

Product manuals contain a compact description of the module-specific information, such as properties, wiring diagrams, characteristics and technical specifications.

General information

The function manuals contain detailed descriptions on general topics regarding the SIMATIC S7-1500 and ET 200MP systems, e.g. diagnostics, communication, motion control, Web server, OPC UA.

You can download the documentation free of charge from the Internet (https://support.industry.siemens.com/cs/ww/en/view/109742691).

Changes and supplements to the manuals are documented in a Product Information.

You can download the product information free of charge from the Internet (https://support.industry.siemens.com/cs/us/en/view/68052815).

Manual Collection S7-1500/ET 200MP

The Manual Collection contains the complete documentation on the SIMATIC S7-1500 automation system and the ET 200MP distributed I/O system gathered together in one file.

You can find the Manual Collection on the Internet (https://support.industry.siemens.com/cs/ww/en/view/86140384).

SIMATIC S7-1500 comparison list for programming languages

The comparison list contains an overview of which instructions and functions you can use for which controller families.

You can find the comparison list on the Internet (https://support.industry.siemens.com/cs/ww/en/view/86630375).

"mySupport"

With "mySupport", your personal workspace, you make the best out of your Industry Online Support.

In "mySupport", you can save filters, favorites and tags, request CAx data and compile your personal library in the Documentation area. In addition, your data is already filled out in support requests and you can get an overview of your current requests at any time.

You must register once to use the full functionality of "mySupport".

You can find "mySupport" on the Internet (https://support.industry.siemens.com/My/ww/en).

Application examples

The application examples support you with various tools and examples for solving your automation tasks. Solutions are shown in interplay with multiple components in the system - separated from the focus on individual products.

You will find the application examples on the Internet (https://support.industry.siemens.com/sc/ww/en/sc/2054).

Product overview

2

2.1 Properties

Article number

6ES7531-7MH00-0AB0

View of the module

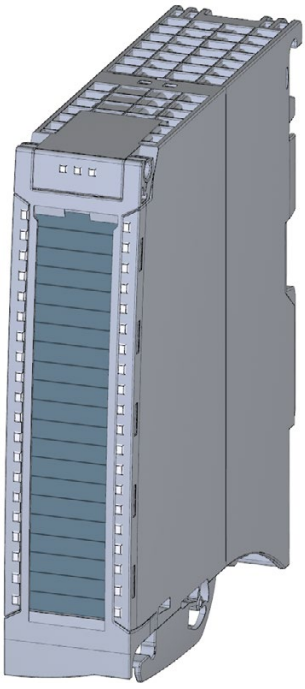

Figure 2-1 View of the AI 16xI BA module

Properties

The module has the following technical properties:

- 16 analog inputs
- Measurement type current

  Measuring range +/- 20 mA; 0/4 .. 20 mA can be set per channel
- Resolution 16 bits including sign
- Configurable diagnostics (per channel)
- Hardware interrupt on limit violation can be set per channel (two low and two high limits per channel)

The module supports the following functions:

Table 2- 1 Version dependencies of the module functions

Function	Firmware version of the module	Configuration software	
		STEP 7 (TIA Portal) as of V16 and HSP 0312	GSD file in STEP 7 (TIA Portal) V12 or higher, or STEP 7 V5.5 SP3 or higher
Firmware update	V1.0.0 or higher	X	X
Identification data I&M0 to I&M3	V1.0.0 or higher	X	X
Parameter assignment in RUN	V1.0.0 or higher	X	X
Module-internal Shared Input (MSI)	V1.0.0 or higher	X (PROFINET IO only)	X (PROFINET IO only)

You can configure the module with STEP 7 (TIA Portal) and with a GSD file.

Accessories

The following accessories are supplied with the module and can also be ordered separately as spare parts:

- Shield bracket
- Shield terminal
- Power supply element
- Labeling strips
- U connector
- Universal front door

Other components

You can find additional information on accessories and the article number in the system manual S7-1500/ET 200MP (https://support.industry.siemens.com/cs/ww/en/view/59191792).

Wiring

3

This section contains the block diagram of the module and outlines various connection options.

You can find information on wiring the front connector, creating a cable shield, etc. in the Wiring section of the system manual S7-1500/ET 200MP (https://support.industry.siemens.com/cs/ww/en/view/59191792).

Note

- You may use and combine the different wiring options for all channels.
- Do not insert the potential jumpers supplied with the front connector.

Abbreviations used

Meaning of the abbreviations used in the following figures:

I_n+/I_n-	Current input channel n (current only)
M_{ANA}	Reference potential of the analog circuit

Infeed element

The module does not require supply voltage through the infeed element. The infeed element is inserted on the front connector and serves solely for shielding.

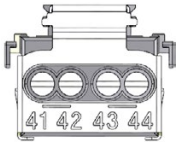

Figure 3-1 Infeed element

Connection: 4-wire transmitters for current measurement

The example in the following figure shows the pin assignment for current measurement with 4-wire transmitters.

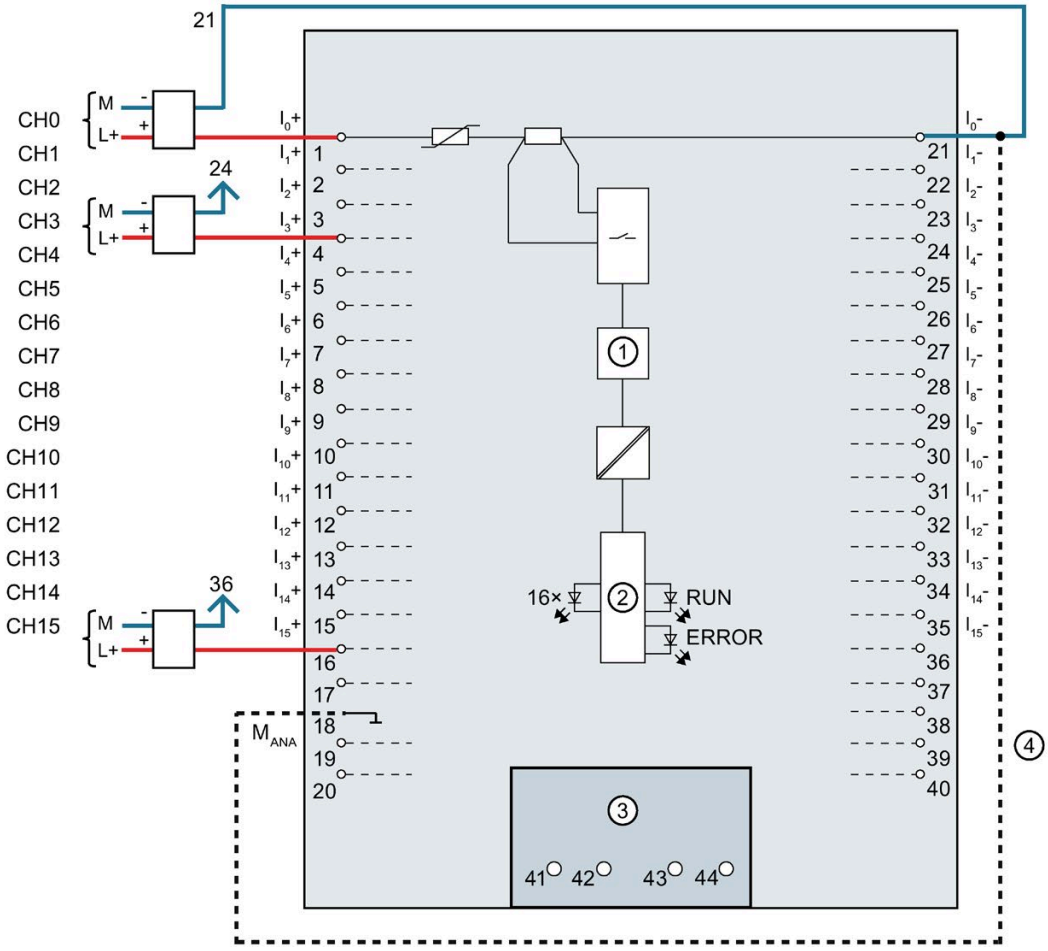

① Analog-to-digital converter (ADC)

② Backplane bus interface

③ Infeed element (for shielding only)

④ Equipotential bonding cable (optional)

CHx Channel or 16 x channel status (green/red)

RUN Status display LED (green)

ERROR Error display LED (red)

Figure 3-2 Block diagram and pin assignment for current measurement

Connection: 2-wire transmitters for current measurement

The example in the following figure shows the pin assignment for current measurement with 2-wire transmitters.

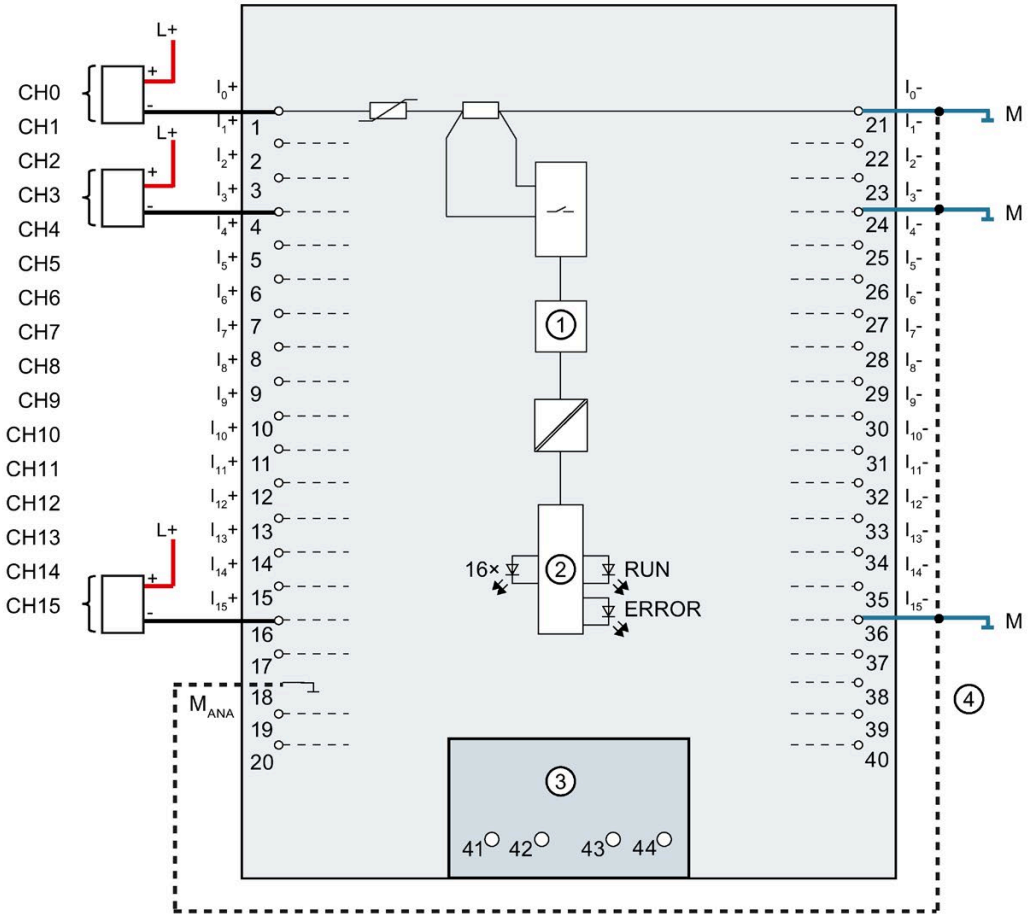

①	Analog-to-digital converter (ADC)	CHx	Channel or 16 x channel status (green/red)
②	Backplane bus interface	RUN	Status display LED (green)
③	Infeed element (for shielding only)	ERROR	Error display LED (red)
④	Equipotential bonding cable (optional)		

Figure 3-3 Block diagram and pin assignment for current measurement

Parameters/address space

4

4.1 Measuring types and ranges

Introduction

The module has the default measurement type current 4WMT and the measuring range ±20 mA. You need to reassign the module parameters with STEP 7 if you want to use a different measurement type or measuring range.

Deactivate the input if it is not going to be used. The module cycle time is shortened and the interference factors that lead to failure of the module (for example, triggering a hardware interrupt) are avoided.

The following table shows the measurement types and the respective measuring range.

Table 4- 1 Measurement types and measuring ranges

Measurement type	Measuring range	Representation of analog values
Current 2WMT (2-wire transmitter)	4 mA to 20 mA	See Representation of analog values in the current measuring ranges (Page 41)
Current 4WMT (4-wire transmitter)	0 mA to 20 mA 4 mA to 20 mA ±20 mA	
Disabled	-	-

The tables of the input ranges, overflow, underrange, etc. are available in the appendix Representation of analog values (Page 39).

4.2 Parameters

Parameters of AI 16xI BA

When you assign the module parameters in STEP 7, you use various parameters to specify the module properties. The following table lists the configurable parameters. The effective range of the configurable parameters depends on the type of configuration. The following configurations are possible:

- Central operation with a S7-1500 CPU
- Distributed operation on PROFINET IO in an ET 200MP system
- Distributed operation on PROFIBUS DP in an ET 200MP system

When assigning parameters in the user program, use the WRREC instruction to transfer the parameters to the module by means of data records; refer to the section Parameter assignment and structure of the parameter data records (Page 34).

The following parameter settings for the channels are possible:

Table 4- 2 Configurable parameters and their defaults

Parameters	Range of values	Default setting	Parameter assignment in RUN	Scope with configuration software, e.g., STEP 7 (TIA Portal)	
				GSD file PROFINET IO	GSD file PROFIBUS DP
Diagnostics					
• Overflow	Yes/No	No	Yes	Channel	Module [2]
• Underflow	Yes/No	No	Yes	Channel	Module [2]
• Common mode error	Yes/No	No	Yes	Channel	Module [2]
• Wire break [1]	Yes/No	No	Yes	Channel	Module [2]
Measuring					
• Measurement type	See chapter Measuring types and ranges (Page 13)	Current 4WMT	Yes	Channel	Channel
• Measuring range		±20 mA	Yes	Channel	Channel
• Interference frequency suppression	400 Hz 60 Hz 50 Hz 10 Hz	50 Hz	Yes	Channel	Module
• Smoothing	None/low/medium/high	None	Yes	Channel	Channel

Parameters	Range of values	Default setting	Parameter assignment in RUN	Scope with configuration software, e.g., STEP 7 (TIA Portal)	
				GSD file PROFINET IO	GSD file PROFIBUS DP
Hardware interrupts					
• Hardware interrupt low limit 1	Yes/No	No	Yes	Channel	--- [3]
• Hardware interrupt high limit 1	Yes/No	No	Yes	Channel	--- [3]
• Hardware interrupt low limit 2	Yes/No	No	Yes	Channel	--- [3]
• Hardware interrupt high limit 2	Yes/No	No	Yes	Channel	--- [3]

[1] "Wire break" diagnostics is only available in the measuring range 4 .. 20 mA.

[2] You can set the effective range of the diagnostics for each channel in the user program with data records 0 to 15.

[3] You can configure the limits for hardware interrupts in the user program with data records 0 to 15.

4.3 Declaration of parameters

Overflow

Enabling of the diagnostics if the measured value violates the high limit.

Underflow

Enabling of the diagnostics when the measured value violates the low limit.

Common mode error

Enabling of diagnostics if the valid common mode voltage is exceeded.

Wire break

Enabling of the diagnostics if the module has no current flow or the current is too weak to be measured at the relevant input.

"Wire break" diagnostics is only available in the measuring range 4 .. 20 mA.

Interference frequency suppression

At analog input modules, this suppresses interference caused by the frequency of the AC network.

The frequency of the AC voltage network may interfere with measured values, particularly for measurements within narrow voltage ranges. For this parameter, the user defines the mains frequency prevailing on his system.

Smoothing

The individual measured values are smoothed using filtering. The smoothing can be set in 4 levels.

Smoothing time = number of module cycles (k) x cycle time of the module.

The following figure shows the number of module cycles after which the smoothed analog value is almost 100%, depending on the set smoothing. It is valid for each signal change at the analog input.

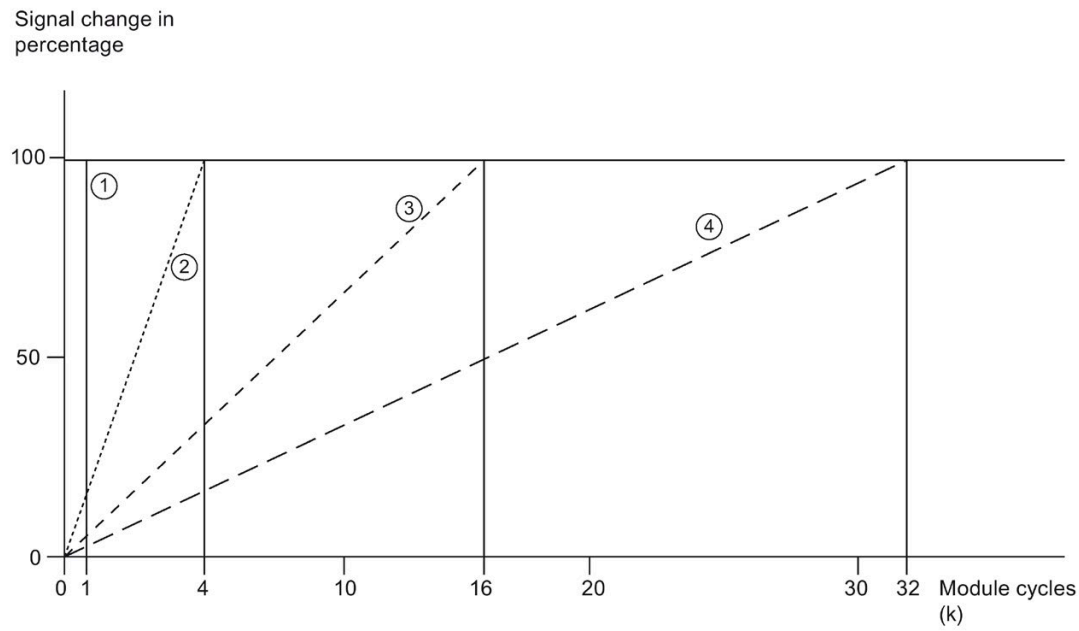

① None (k = 1)
② Weak (k = 4)
③ Medium (k = 16)
④ Strong (k = 32)

Figure 4-1 Smoothing for AI 16xI BA

Hardware interrupt 1 or 2

Enabling of a hardware interrupt at violation of high limit 1 or 2 or low limit 1 or 2.

Low limit 1 or 2

Specifies the low limit threshold that triggers hardware interrupt 1 or 2.

High limit 1 or 2

Specifies the high limit threshold that triggers hardware interrupt 1 or 2.

4.4 Address space

The module can be configured differently in STEP 7; see following table. Depending on the configuration, additional/different addresses are assigned in the process image of the inputs.

Configuration options of AI 16xI BA

You can configure the module with STEP 7 (TIA Portal) or with a GSD file.

When you configure the module by means of the GSD file, the configurations are available under different abbreviations/module names.

The following configurations are possible:

Table 4- 3 Configuration options

Configuration	Short designation/ module name in the GSD file	Configuration software, e.g., with STEP 7 (TIA Portal)	
		Integrated in the hardware catalog STEP 7 (TIA Portal) as of V16 and HSP 0312	GSD file in STEP 7 (TIA Portal) V12 or higher or STEP 7 V5.5 SP3 or higher
1 x 16-channel without value status	AI 16xI BA	X	X
1 x 16-channel with value status	AI 16xI BA QI	X	X
1 x 16-channel with value status for module-internal shared input with up to 4 submodules	AI 16xI BA MSI	X (PROFINET IO only)	X (PROFINET IO only)

Value status (Quality Information, QI)

The value status is always activated for the following module names:

- AI 16xI BA QI
- AI 16xI BA MSI

An additional bit is assigned to each channel for the value status. The value status bit indicates if the read in digital value is valid. (0 = value is incorrect).

Address space of AI 16xI BA

The figure below shows the address space allocation for the configuration as 16-channel module. You can freely assign the start address for the module. The addresses of the channels are derived from the start address.

"IB x" stands, for example, for the module start address input byte x.

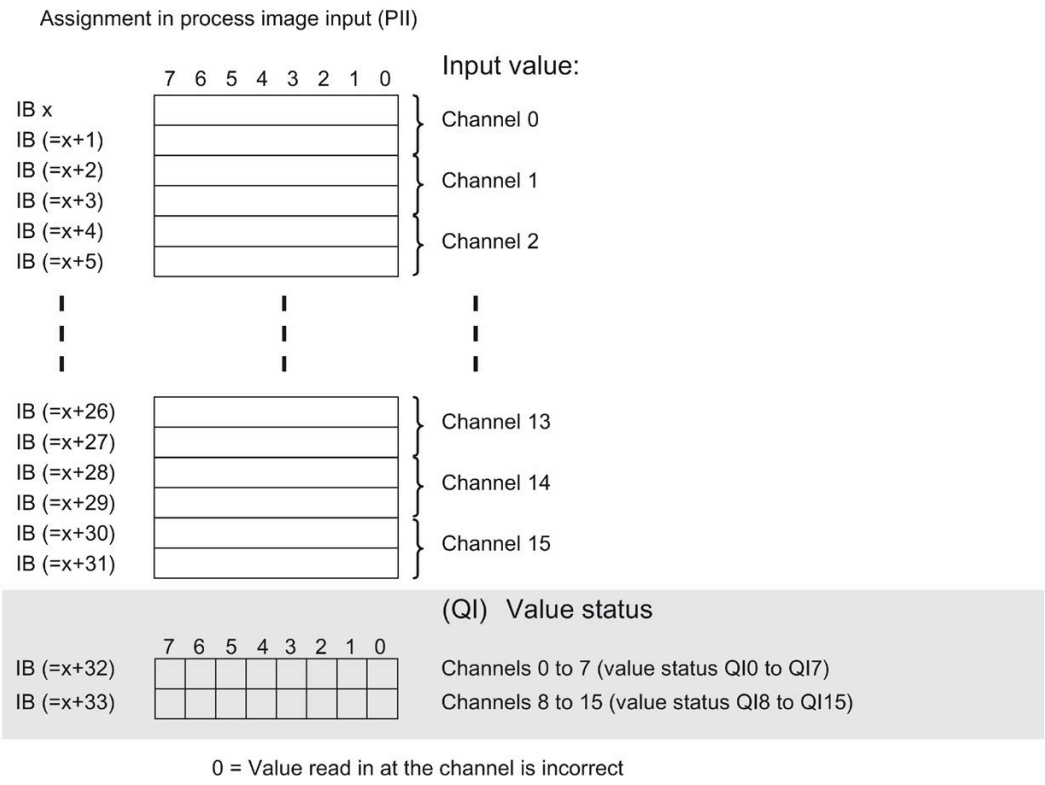

Figure 4-2 Address space for configuration as 1 x 16-channel AI 16xI BA with value status

Address space for configuration as 1 x 16-channel AI 16xI BA MSI

The channels 0 to 15 of the module are copied in up to four submodules with configuration 1 x 16-channel module (module-internal shared input, MSI). Channels 0 to 15 are then available with identical input values in different submodules. These submodules can be assigned to up to four IO controllers when the module is used in a shared device. Each IO controller has read access to the same channels.

The number of usable IO controllers depends on the interface module used. Please observe the information in the manual for the particular interface module.

Value status (Quality Information, QI)

The meaning of the value status depends on the submodule on which it occurs.

For the first submodule (=basic submodule), the value status 0 indicates that the value is incorrect.

For the 2nd to 4th submodule (=MSI submodule), the value status 0 indicates that the value is incorrect or the basic submodule has not yet been configured (not ready).

The figure below shows the assignment of the address space with submodules 1 and 2.

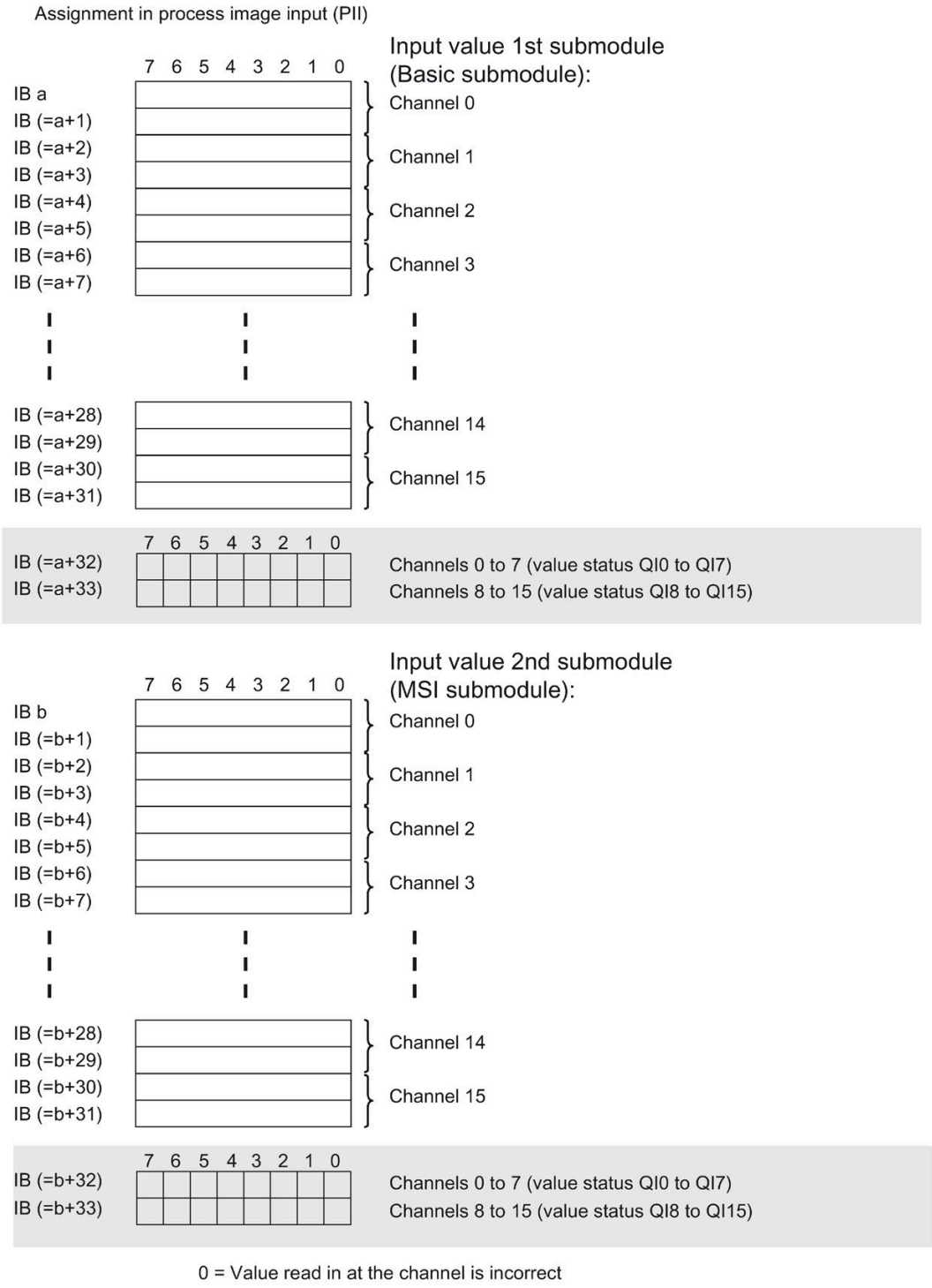

Figure 4-3 Address space for configuration as 1 x 16-channel AI 16xI BA MSI with value status

The following figure shows the assignment of the address space with submodule 3 and 4.

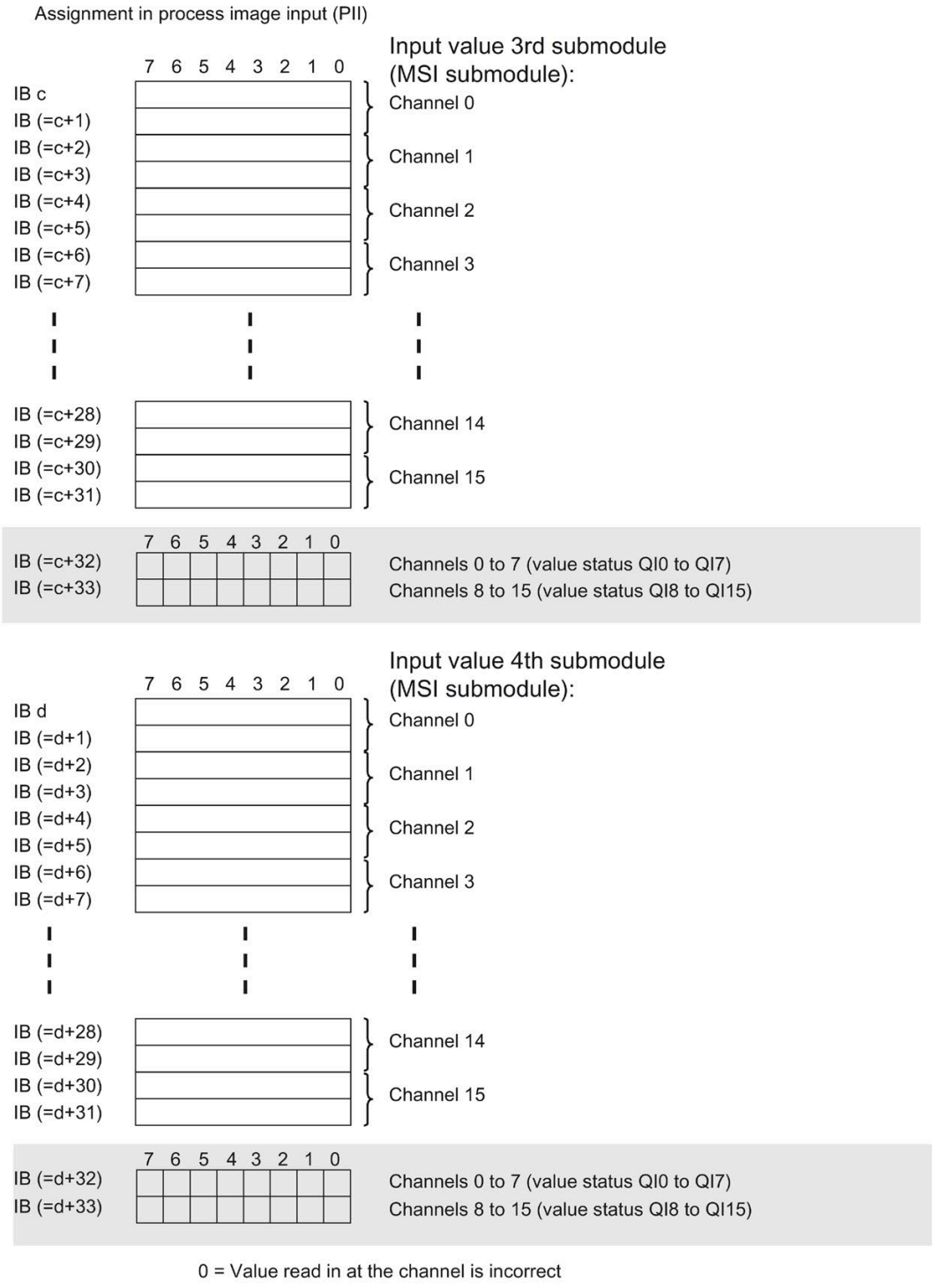

Figure 4-4 Address space for configuration as 1 x 16-channel AI 16xI BA MSI with value status

Reference

You can find information on the Shared Input/Output (MSI/MSO) function in the section Module-Internal Shared Input/Output (MSI/MSO) of the PROFINET with STEP 7 V16 (https://support.industry.siemens.com/cs/ww/en/view/49948856) function manual.

Interrupts/diagnostics alarms

5

5.1 Status and error displays

LED displays

The figure below shows the LED displays (status and error displays) of AI 16xI BA.

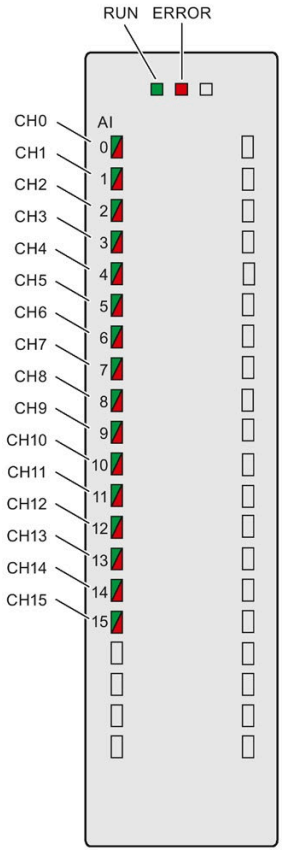

Figure 5-1 LED displays of the AI 16xI BA module

Meaning of the LED displays

The following tables explain the meaning of the status and error displays. Remedial measures for diagnostic alarms can be found in section Diagnostic alarms (Page 27).

RUN and ERROR LED

Table 5- 1 Status and error displays RUN and ERROR

LEDs		Meaning	Remedy
RUN	ERROR		
□ Off	□ Off	Voltage missing or too low at backplane bus.	• Switch on the CPU and/or the system power supply modules. • Verify that the U connectors are inserted. • Check whether too many modules are inserted.
☼ Flashes	□ Off	The module starts and flashes until the valid parameter assignment is set.	---
■ On	□ Off	Module is configured.	
■ On	☼ Flashes	Indicates module errors (at least one error at one channel, e.g., wire break).	Evaluate the diagnostics data and eliminate the error (e.g., wire break).
☼ Flashes	☼ Flashes	Hardware defective.	Replace the module.

CHx LED

Table 5- 2 CHx status display

LED CHx/COMP	Meaning	Remedy
□ Off	Channel disabled	---
■ On	Channel configured and OK.	---
■ On	Channel is configured (channel error pending). Diagnostic alarm: e.g. wire break	Check the wiring. Disable diagnostics.

5.2 Interrupts

Analog input module AI 16xI BA supports the following diagnostic and hardware interrupts.

You can find detailed information on the event in the error organization block with the "RALRM" instruction (read additional interrupt info) and in the STEP 7 online help.

Diagnostic interrupt

The module generates a diagnostic interrupt at the following events:

- Wire break
- Overflow
- Underflow
- Common mode error
- Parameter assignment error

Hardware interrupt

The module generates a hardware interrupt at the following events:

- Low limit violated 1
- High limit violated 1
- Low limit violated 2
- Above high limit 2

The module channel that triggered the hardware interrupt is entered in the start information of the organization block. The diagram below shows the assignment to the bits of double word 8 in local data.

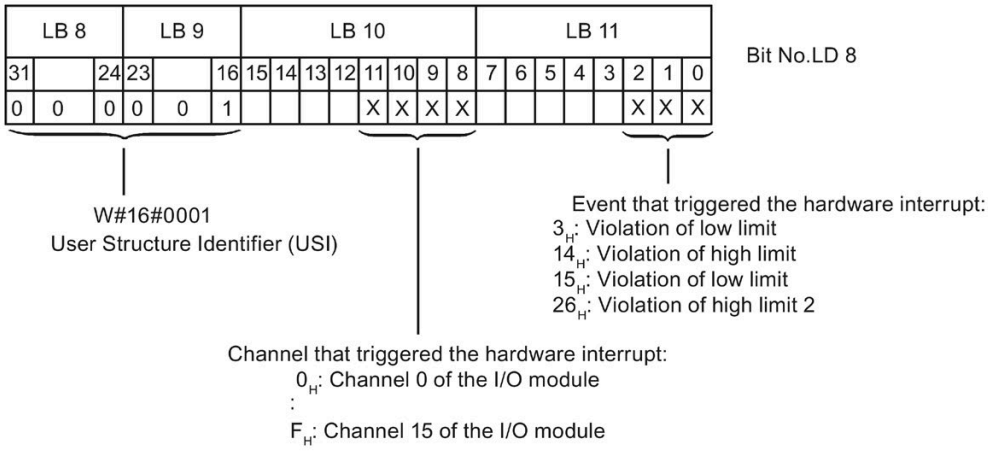

Figure 5-2 OB start information

Reaction when reaching limits 1 and 2 at the same time

If the two high limits 1 and 2 are reached at the same time, the module always signals the hardware interrupt for high limit 1 first. The configured value for high limit 2 is irrelevant. After processing the hardware interrupt for high limit 1, the module triggers the hardware interrupt for high limit 2.

The module has the same reaction when the low limits are reached at the same time. If the two low limits 1 and 2 are reached at the same time, the module always signals the hardware interrupt for low limit 1 first. After processing the hardware interrupt for low limit 1, the module triggers the hardware interrupt for low limit 2.

Structure of the additional interrupt information

Table 5- 3 Structure of USI = W#16#0001

Data block name		Contents	Remark	Bytes
USI (User Structure Identifier)		W#16#0001	Additional interrupt info for hardware interrupts of the I/O module	2
The channel that triggered the hardware interrupt follows.				
	Channel	B#16#00 to B#16#n	Number of the event-triggering channel (n = number of module channels -1)	1
The event that triggered the hardware interrupt follows.				
	Event	B#16#03	Low limit violated 1	1
		B#16#04	High limit violated 1	
		B#16#05	Low limit violated 2	
		B#16#06	Violation of high limit 2	

5.3 Diagnostics alarms

A diagnostics alarm is generated and the ERROR LED flashes on the module for each diagnostics event. The diagnostics alarms can be read out in the diagnostics buffer of the CPU, for example. You can evaluate the error codes with the user program.

If the module is operated distributed with PROFIBUS DP in an ET 200MP system, you have the option to read out diagnostics data with the instruction RDREC or RD_REC using data record 0 and 1. The structure of the data records is available in the "Manual for interface module IM 155-5 DP ST (6ES7155-5BA00-0AB0)" on the Internet (https://support.industry.siemens.com/cs/ww/en/view/78324181).

Table 5- 4 Diagnostics alarms, their meaning and corrective measures

Diagnostics alarm	Error code	Meaning	Solution
Wire break	6H	Impedance of encoder circuit too high	Use a different encoder type or modify the wiring, for example, using cables with larger cross-section
		Wire break between the module and sensor	Connect the cable
		Channel not connected (open)	• Disable diagnostics • Connect the channel
Overflow	7H	Measuring range violated	Check the measuring range
Underflow	8H	Measuring range violated	Check the measuring range
Parameter assignment error	10H	• The module cannot evaluate parameters for the channel • Incorrect parameter assignment	Correct the parameter assignment
Common mode error	118H	Valid common mode voltage exceeded	Check the wiring, e.g. sensor ground connections, use equipotential cables

Diagnostics alarms with value status (QI)

If you configure the module with value status (QI), the module always checks all errors even if the respective diagnostics is not enabled. But the module cancels the inspection as soon as it detects the first error, regardless if the respective diagnostics has been enabled or not. The result may be that enabled diagnostics may not be displayed.

Example: You have enabled "Underflow" diagnostics, but the module detects the "Wire break" diagnostics first and aborts after this error message. The "Underflow" diagnostics is not detected.

Recommendation: To ensure that all errors can be diagnosed reliably, select all check boxes under "Diagnostics".

Technical specifications

6

Technical specifications of AI 16xI BA

The following table shows the technical specifications as of 09/2020. You can find a data sheet including daily updated technical specifications on the Internet (https://support.industry.siemens.com/cs/ww/en/ps/td).

Enter the article number or the short designation of the module on the website.

Article number	6ES7531-7MH00-0AB0
General information	
Product type designation	AI 16xI BA
HW functional status	FS01
Firmware version	V1.0.0
• FW update possible	Yes
Product function	
• I&M data	Yes; I&M0 to I&M3
• Prioritized startup	No
Engineering with	
• STEP 7 TIA Portal configurable/integrated from version	V16 with HSP 312 / V17
• STEP 7 configurable/integrated from version	V5.5 SP3 / -
• PROFIBUS from GSD version/GSD revision	V1.0 / V5.1
• PROFINET from GSD version/GSD revision	V2.3 / -
Operating mode	
• Oversampling	No
• MSI	Yes
CiR - Configuration in RUN	
Reparameterization possible in RUN	Yes
Calibration possible in RUN	No
Power	
Power available from the backplane bus	0.85 W
Power loss	
Power loss, typ.	1.2 W
Analog inputs	
Number of analog inputs	16
• For current measurement	16
permissible input current for current input (destruction limit), max.	40 mA

Article number	6ES7531-7MH00-0AB0
Input ranges (rated values), currents	
• 0 to 10 mA	No
• 0 to 20 mA	Yes
– Input resistance (0 to 20 mA)	25 Ω; Plus approx. 42 ohms for overvoltage protection by PTC
• -20 mA to +20 mA	Yes
– Input resistance (-20 mA to +20 mA)	25 Ω; Plus approx. 42 ohms for overvoltage protection by PTC
• 4 mA to 20 mA	Yes
– Input resistance (4 mA to 20 mA)	25 Ω; Plus approx. 42 ohms for overvoltage protection by PTC
Cable length	
• shielded, max.	800 m
Analog value generation for the inputs	
Measurement principle	integrating
Integration and conversion time/resolution per channel	
• Resolution with overrange (bit including sign), max.	16 bit
• Integration time, parameterizable	Yes
• Integration time (ms)	2,5 / 16,67 / 20 / 100 ms
• Basic conversion time, including integration time (ms)	10 / 24 / 27 / 107 ms
• Interference voltage suppression for interference frequency f1 in Hz	400 / 60 / 50 / 10 Hz
Smoothing of measured values	
• parameterizable	Yes
• Step: None	Yes
• Step: low	Yes
• Step: Medium	Yes
• Step: High	Yes
Encoder	
Connection of signal encoders	
• for current measurement as 2-wire transducer	Yes; with external supply
• for current measurement as 4-wire transducer	Yes

Article number	6ES7531-7MH00-0AB0
Errors/accuracies	
Linearity error (relative to input range), (+/-)	0.1 %
Temperature error (relative to input range), (+/-)	0.006 %/K
Crosstalk between the inputs, max.	-50 dB
Repeat accuracy in steady state at 25 °C (relative to input range), (+/-)	0.1 %
Operational error limit in overall temperature range	
• Current, relative to input range, (+/-)	0.5 %
Basic error limit (operational limit at 25 °C)	
• Current, relative to input range, (+/-)	0.3 %
Interference voltage suppression for f = n x (f1 +/- 1 %), f1 = interference frequency	
• Series mode interference (peak value of interference < rated value of input range), min.	40 dB
• Common mode voltage, max.	4 V
• Common mode interference, min.	60 dB
Interrupts/diagnostics/status information	
Diagnostics function	Yes
Alarms	
• Diagnostic alarm	Yes
• Limit value alarm	Yes; two upper and two lower limit values in each case
Diagnoses	
• Monitoring the supply voltage	No
• Wire-break	Yes; Only for 4 ... 20 mA
• Short-circuit	No
• Group error	No
• Overflow/underflow	Yes
Diagnostics indication LED	
• RUN LED	Yes; green LED
• ERROR LED	Yes; red LED
• MAINT LED	No
• Monitoring of the supply voltage (PWR-LED)	No
• Channel status display	Yes; green LED
• for channel diagnostics	Yes; red LED
• for module diagnostics	Yes; red LED

Article number	6ES7531-7MH00-0AB0
Potential separation	
Potential separation channels	
• between the channels	No
• between the channels, in groups of	16
• between the channels and backplane bus	Yes
Permissible potential difference	
between the inputs (UCM)	8 V DC
Between the inputs and MANA (UCM)	4 V DC
Isolation	
Isolation tested with	707 V DC (type test)
Ambient conditions	
Ambient temperature during operation	
• horizontal installation, min.	-30 °C; No condensation
• horizontal installation, max.	60 °C
• vertical installation, min.	-30 °C; No condensation
• vertical installation, max.	40 °C
Altitude during operation relating to sea level	
• Installation altitude above sea level, max.	5 000 m; Restrictions for installation altitudes > 2 000 m, see manual
Dimensions	
Width	35 mm
Height	147 mm
Depth	129 mm
Weights	
Weight, approx.	250 g

Dimensional drawing

A

The dimensional drawing of the module on the mounting rail, as well as a dimensional drawing with open front panel are provided in the appendix. Always adhere to the specified dimensions for installations in cabinets, control rooms, etc.

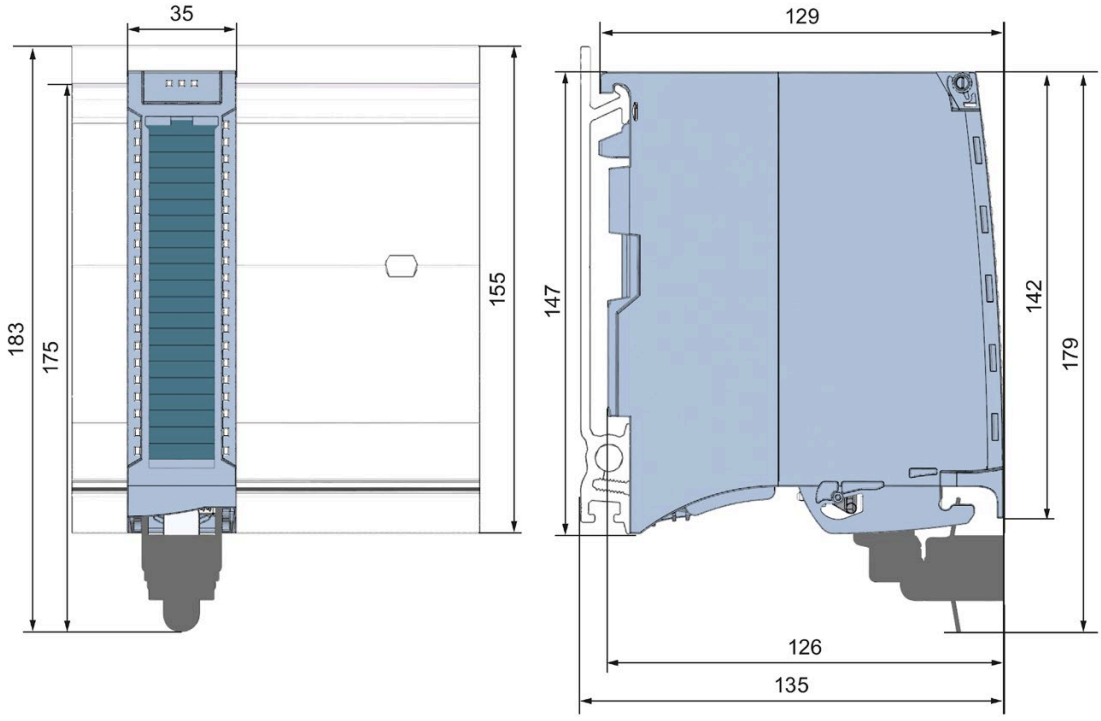

Figure A-1 Dimensional drawing of the AI 16xI BA module

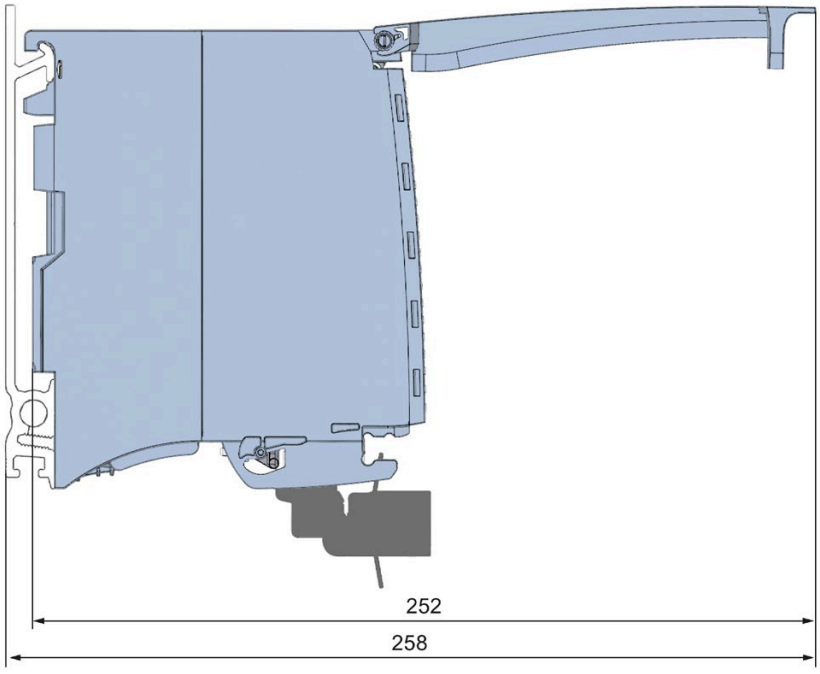

Figure A-2 Dimensional drawing of the AI 16xI BA module, side view with open front cover

Parameter data records

B

B.1 Parameter assignment and structure of the parameter data records

The data records of the module have an identical structure, regardless of whether you configure the module with PROFIBUS DP or PROFINET IO.

Dependencies for configuration with GSD file

When configuring the module with a GSD file, remember that the settings of some parameters are dependent on each other. The parameters are only checked for plausibility by the module after the transfer to the module.

The following table lists the parameters that depend on one another.

Table B- 1 Dependencies of parameters for configuration with GSD file

Device-specific parameters (GSD file)	Dependent parameters
Wire break	Only for current with **measuring range** 4 mA to 20 mA.
Hardware interrupt limits	Only if hardware interrupts are enabled.

Parameter assignment in the user program

The module parameters can be assigned in RUN (for example, measuring ranges of selected channels can be edited in RUN without having an effect on the other channels).

Parameter assignment in RUN

The WRREC instruction is used to transfer the parameters to the module using data records 0 to 15. The parameters set in STEP 7 do not change in the CPU, which means the parameters set in STEP 7 are still valid after a restart.

The parameters are only checked for plausibility by the module after the transfer to the module.

Output parameter STATUS

The module ignores errors that occurred during the transfer of parameters with the WRREC instruction and continues operation with the previous parameter assignment. However, a corresponding error code is written to the STATUS output parameter.

The description of the WRREC instruction and the error codes is available in the STEP 7 online help.

Operation of the module behind a PROFIBUS DP interface module

If the module is operated behind a PROFIBUS DP interface module, the parameter data records 0 and 1 are not read back. You obtain the diagnostics data records 0 and 1 with the read back parameter data records 0 and 1. You can find additional information in the Interrupts section of the manual for the PROFIBUS DP interface module on the Internet (http://support.automation.siemens.com/WW/view/en/78324181).

Assignment of data record and channel

For the configuration with 1 x 16-channel, the parameters are located in data records 0 to 15 and are assigned as follows:

- Data record 0 for channel 0
- Data record 1 for channel 1
- ...
- Data record 14 for channel 14
- Data record 15 for channel 15

Data record structure

The figure below shows the structure of data record 0 for channel 0 as an example. The structure is identical for channels 1 to 15. The values in byte 0 and byte 1 are fixed and may not be changed.

Enable a parameter by setting the corresponding bit to "1".

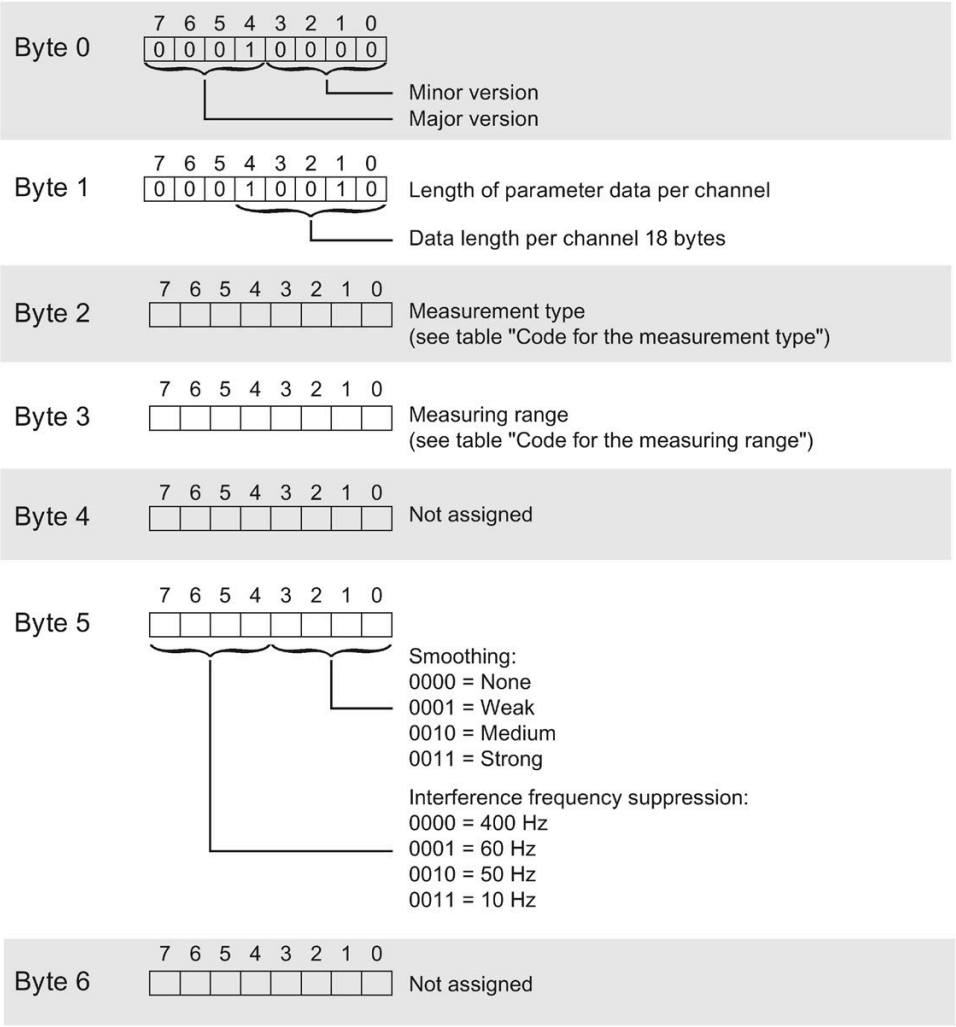

Figure B-1 Structure of data record 0: Bytes 0 to 6

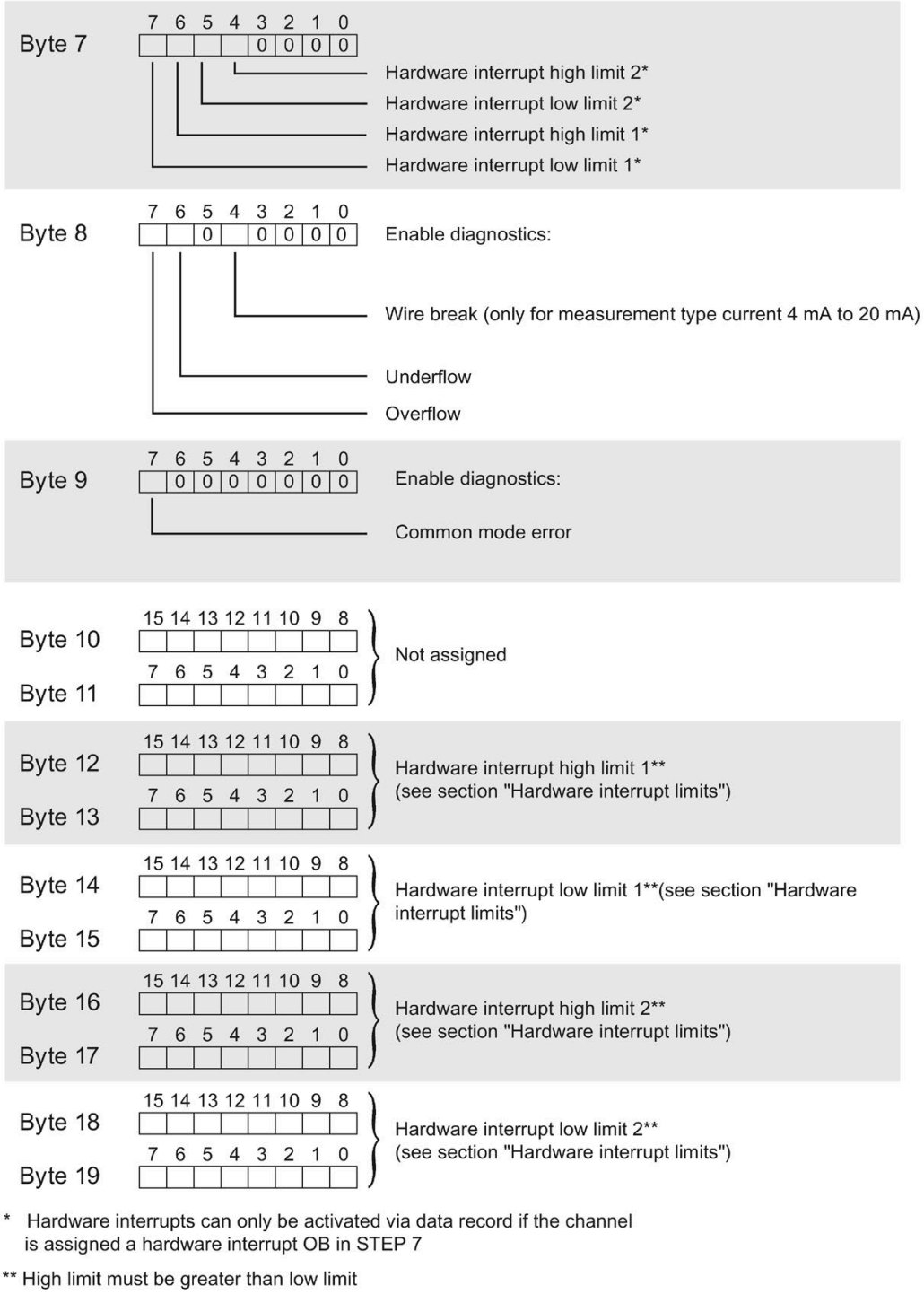

* Hardware interrupts can only be activated via data record if the channel is assigned a hardware interrupt OB in STEP 7

** High limit must be greater than low limit

Figure B-2 Structure of data record 0: Bytes 7 to 19

Codes for measurement types

The following table lists all measurement types of the analog input module along with their codes. Enter these codes at byte 2 of the data record for the corresponding channel (see the figure Structure of data record 0: Bytes 7 to 19).

Table B- 2 Code for the measurement type

Measurement type	Code
Deactivated	0000 0000
Current, 2-wire transmitter	0000 0011
Current, 4-wire transmitter	0000 0010

Codes for measuring ranges

The following table lists all measuring ranges of the analog input module along with their codes. Enter these codes accordingly at byte 3 of the data record for the corresponding channel (see the figure Structure of data record 0: Bytes 7 to 19).

Table B- 3 Code for the measuring range

Measuring range	Code
Current, 4-wire transmitter	
0 mA to 20 mA	0000 0010
4 mA to 20 mA	0000 0011
±20 mA	0000 0100
Current, 2-wire transmitter	
4 mA to 20 mA	0000 0011

Hardware interrupt limits

The values that you can set for hardware interrupts (high/low limit) must not violate the over/underrange of the respective rated measuring range.

The following tables list the valid hardware interrupt limits. The limits depend on the selected measurement type and measuring range.

Table B- 4 Current limits

Current		
±20 mA	4 mA to 20 mA / 0 mA to 20 mA	
32510	32510	High limit
-32511	-4863	Low limit

Representation of analog values

C

Introduction

This appendix shows the analog values for all measuring ranges supported by the AI 16xI BA analog module.

Measured value resolution

Each analog value is written left aligned to the tags. The bits marked with "x" are set to "0".

Table C- 1 Resolution of the analog values

Resolution in bits including sign	Values		Analog value	
	Decimal	Hexadecimal	High byte	Low byte
16	1	1_H	Sign 0 0 0 0 0 0 0	0 0 0 0 0 0 0 1

C.1 Representation of input ranges

The tables below set out the digitized representation of the input ranges separately for bipolar and unipolar input ranges. The resolution is 16 bits.

Table C- 2 Bipolar input ranges

Dec. value	Measured value in %	Data word																Range
		2^{15}	2^{14}	2^{13}	2^{12}	2^{11}	2^{10}	2^{9}	2^{8}	2^{7}	2^{6}	2^{5}	2^{4}	2^{3}	2^{2}	2^{1}	2^{0}	
32767	>117.589	0	1	1	1	1	1	1	1	1	1	1	1	1	1	1	1	Overflow
32511	117.589	0	1	1	1	1	1	1	0	1	1	1	1	1	1	1	1	Overshoot range
27649	100.004	0	1	1	0	1	1	0	0	0	0	0	0	0	0	0	1	
27648	100.000	0	1	1	0	1	1	0	0	0	0	0	0	0	0	0	0	Rated range
1	0.003617	0	0	0	0	0	0	0	0	0	0	0	0	0	0	0	1	
0	0.000	0	0	0	0	0	0	0	0	0	0	0	0	0	0	0	0	
-1	-0.003617	1	1	1	1	1	1	1	1	1	1	1	1	1	1	1	1	
-27648	-100.000	1	0	0	1	0	1	0	0	0	0	0	0	0	0	0	0	
-27649	-100.004	1	0	0	1	0	0	1	1	1	1	1	1	1	1	1	1	Undershoot range
-32512	-117.593	1	0	0	0	0	0	0	1	0	0	0	0	0	0	0	0	
-32768	<-117.593	1	0	0	0	0	0	0	0	0	0	0	0	0	0	0	0	Underflow

Table C- 3 Unipolar input ranges

Dec. value	Measured value in %	Data word																Range
		2^{15}	2^{14}	2^{13}	2^{12}	2^{11}	2^{10}	2^{9}	2^{8}	2^{7}	2^{6}	2^{5}	2^{4}	2^{3}	2^{2}	2^{1}	2^{0}	
32767	>117.589	0	1	1	1	1	1	1	1	1	1	1	1	1	1	1	1	Overflow
32511	117.589	0	1	1	1	1	1	1	0	1	1	1	1	1	1	1	1	Overshoot range
27649	100.004	0	1	1	0	1	1	0	0	0	0	0	0	0	0	0	1	
27648	100.000	0	1	1	0	1	1	0	0	0	0	0	0	0	0	0	0	Nominal range
1	0.003617	0	0	0	0	0	0	0	0	0	0	0	0	0	0	0	1	
0	0.000	0	0	0	0	0	0	0	0	0	0	0	0	0	0	0	0	
-1	-0.003617	1	1	1	1	1	1	1	1	1	1	1	1	1	1	1	1	Undershoot range
-4864	-17.593	1	1	1	0	1	1	0	1	0	0	0	0	0	0	0	0	
-32768	<-17.593	1	0	0	0	0	0	0	0	0	0	0	0	0	0	0	0	Underflow

C.2 Representation of analog values in the current measuring ranges

The following tables list the decimal and hexadecimal values (codes) of the possible current measuring ranges.

Table C- 4 Current measuring range ±20 mA

Values		Current measuring range	
dec	**hex**	**±20 mA**	
32767	7FFF	>23.52 mA	Overflow
32511	7EFF	23.52 mA	Overshoot range
27649	6C01		
27648	6C00	20 mA	Rated range
20736	5100	15 mA	
1	1	723.4 nA	
0	0	0 mA	
-1	FFFF		
-20736	AF00	-15 mA	
-27648	9400	-20 mA	
-27649	93FF		Undershoot range
-32512	8100	-23.52 mA	
-32768	8000	< -23.52 mA	Underflow

Table C- 5 Current measuring ranges 0 to 20 mA and 4 to 20 mA

Values		Current measuring range		
dec	**hex**	**0 to 20 mA**	**4 to 20 mA**	
32767	7FFF	>23.52 mA	>22.81 mA	Overflow
32511	7EFF	23.52 mA	22.81 mA	Overshoot range
27649	6C01			
27648	6C00	20 mA	20 mA	Rated range
20736	5100	15 mA	16 mA	
1	1	723.4 nA	4 mA + 578.7 nA	
0	0	0 mA	4 mA	
-1	FFFF			Undershoot range
-4864	ED00	-3.52 mA	1.185 mA	
-32768	8000	<- 3.52 mA	< 1.185 mA	Underflow

C.3 Measured values for wire break diagnostic

Measured values on diagnostic event "wire break", dependent on diagnostics enables

Error events initiate a diagnostics entry and trigger a diagnostics interrupt if configured accordingly.

Table C- 6 Measured values for wire break diagnostic

Format	Parameter assignment	Measured values		Explanation
S7	• "Wire break" diagnostics enabled • "Overflow/Underflow" diagnostics enabled or disabled ("Wire break" diagnostics takes priority over "Overflow/Underflow" diagnostics)	32767	7FFF$_H$	"Wire break" or "Open circuit" diagnostic alarm
	• "Wire break" diagnostics disabled • "Overflow/Underflow" diagnostics enabled	-32768	8000$_H$	• Measured value after leaving the undershoot range • Diagnostic alarm "Low limit violated"
	• "Wire break" diagnostics disabled • "Overflow/Underflow" diagnostics disabled	-32768	8000$_H$	Measured value after leaving the undershoot range

SIEMENS

Manual

SIMATIC

S7-1500 / ET 200MP

Analog Input Module
AI 16xU BA (6ES7531-7LH00-0AB0)

Edition 09/2020

support.industry.siemens.com

SIEMENS

SIMATIC

S7-1500/ET 200MP Analog input module AI 16xU BA (6ES7531-7LH00-0AB0)

Equipment Manual

Preface

S7-1500 / ET 200MP Documentation Guide 1

Product overview 2

Wiring 3

Parameters/address space 4

Interrupts/ diagnostics alarms 5

Technical specifications 6

Dimensional drawing A

Parameter data records B

Representation of analog values C

09/2020

A5E47052556-AA

Legal information

Warning notice system

This manual contains notices you have to observe in order to ensure your personal safety, as well as to prevent damage to property. The notices referring to your personal safety are highlighted in the manual by a safety alert symbol, notices referring only to property damage have no safety alert symbol. These notices shown below are graded according to the degree of danger.

⚠ DANGER
indicates that death or severe personal injury **will** result if proper precautions are not taken.

⚠ WARNING
indicates that death or severe personal injury **may** result if proper precautions are not taken.

⚠ CAUTION
indicates that minor personal injury can result if proper precautions are not taken.

NOTICE
indicates that property damage can result if proper precautions are not taken.

If more than one degree of danger is present, the warning notice representing the highest degree of danger will be used. A notice warning of injury to persons with a safety alert symbol may also include a warning relating to property damage.

Qualified Personnel

The product/system described in this documentation may be operated only by **personnel qualified** for the specific task in accordance with the relevant documentation, in particular its warning notices and safety instructions. Qualified personnel are those who, based on their training and experience, are capable of identifying risks and avoiding potential hazards when working with these products/systems.

Proper use of Siemens products

Note the following:

⚠ WARNING
Siemens products may only be used for the applications described in the catalog and in the relevant technical documentation. If products and components from other manufacturers are used, these must be recommended or approved by Siemens. Proper transport, storage, installation, assembly, commissioning, operation and maintenance are required to ensure that the products operate safely and without any problems. The permissible ambient conditions must be complied with. The information in the relevant documentation must be observed.

Trademarks

All names identified by ® are registered trademarks of Siemens AG. The remaining trademarks in this publication may be trademarks whose use by third parties for their own purposes could violate the rights of the owner.

Disclaimer of Liability

We have reviewed the contents of this publication to ensure consistency with the hardware and software described. Since variance cannot be precluded entirely, we cannot guarantee full consistency. However, the information in this publication is reviewed regularly and any necessary corrections are included in subsequent editions.

Siemens AG
Digital Industries
Postfach 48 48
90026 NÜRNBERG
GERMANY

A5E47052556-AA
Ⓟ 09/2020 Subject to change

Copyright © Siemens AG 2020.
All rights reserved

Preface

Purpose of the documentation

This manual supplements the system manual S7-1500/ET 200MP (https://support.industry.siemens.com/cs/ww/en/view/59191792).

Functions that relate in general to the systems are described in this system manual.

The information provided in this manual and in the system/function manuals supports you in commissioning the systems.

Conventions

The term "CPU" is used in this manual both for the CPUs of the S7-1500 automation system, as well as for interface modules of the ET 200MP distributed I/O system.

Please also observe notes marked as follows:

Note

A note contains important information on the product described in the documentation, on the handling of the product or on the section of the documentation to which particular attention should be paid.

Recycling and disposal

For environmentally friendly recycling and disposal of your old equipment, contact a certified electronic waste disposal company and dispose of the equipment according to the applicable regulations in your country.

Security information

Siemens provides products and solutions with industrial security functions that support the secure operation of plants, systems, machines and networks.

In order to protect plants, systems, machines and networks against cyber threats, it is necessary to implement – and continuously maintain – a holistic, state-of-the-art industrial security concept. Siemens' products and solutions constitute one element of such a concept.

Customers are responsible for preventing unauthorized access to their plants, systems, machines and networks. Such systems, machines and components should only be connected to an enterprise network or the internet if and to the extent such a connection is necessary and only when appropriate security measures (e.g. firewalls and/or network segmentation) are in place.

For additional information on industrial security measures that may be implemented, please visit (https://www.siemens.com/industrialsecurity).

Siemens' products and solutions undergo continuous development to make them more secure. Siemens strongly recommends that product updates are applied as soon as they are available and that the latest product versions are used. Use of product versions that are no longer supported, and failure to apply the latest updates may increase customers' exposure to cyber threats.

To stay informed about product updates, subscribe to the Siemens Industrial Security RSS Feed visit (https://www.siemens.com/industrialsecurity).

Open Source Software

Open-source software is used in the firmware of the I/O modules. Open Source Software is provided free of charge. We are liable for the product described, including the open-source software contained in it, pursuant to the conditions applicable to the product. Siemens accepts no liability for the use of the open source software over and above the intended program sequence, or for any faults caused by modifications to the software.

For legal reasons, we are obliged to publish the original text of the license conditions and copyright notices. Please read the information relating to this on the Internet (https://support.industry.siemens.com/cs/ww/en/view/109757558).

Table of contents

Preface **3**

1 S7-1500 / ET 200MP Documentation Guide **6**

2 Product overview **8**

2.1 Properties 8

3 Wiring **10**

4 Parameters/address space **12**

4.1 Measuring types and ranges 12

4.2 Parameters 13

4.3 Declaration of parameters 14

4.4 Address space 16

5 Interrupts/diagnostics alarms **21**

5.1 Status and error displays 21

5.2 Interrupts 23

5.3 Diagnostics alarms 25

6 Technical specifications **26**

A Dimensional drawing **30**

B Parameter data records **32**

B.1 Parameter assignment and structure of the parameter data records 32

C Representation of analog values **37**

C.1 Representation of input ranges 37

C.2 Representation of analog values in voltage measuring ranges 39

C.3 Measured values for wire break diagnostic 40

S7-1500 / ET 200MP Documentation Guide 1

The documentation for the SIMATIC S7-1500 automation system and the SIMATIC ET 200MP distributed I/O system is arranged into three areas.
This arrangement enables you to access the specific content you require.

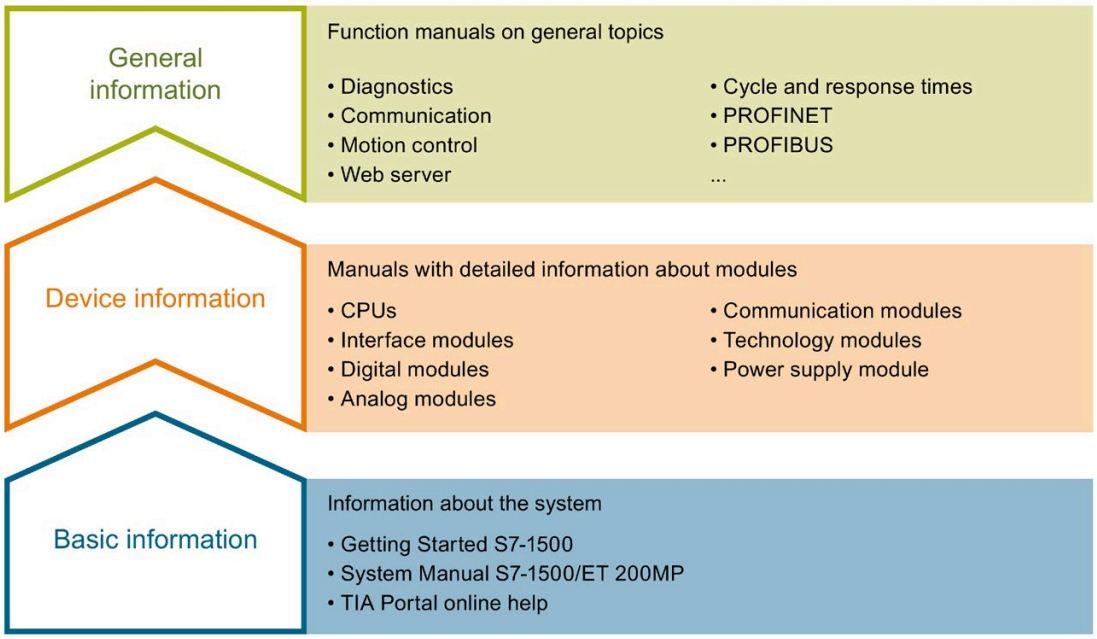

Basic information

The System Manual and Getting Started describe in detail the configuration, installation, wiring and commissioning of the SIMATIC S7-1500 and ET 200MP systems. The STEP 7 online help supports you in the configuration and programming.

Device information

Product manuals contain a compact description of the module-specific information, such as properties, wiring diagrams, characteristics and technical specifications.

General information

The function manuals contain detailed descriptions on general topics regarding the SIMATIC S7-1500 and ET 200MP systems, e.g. diagnostics, communication, motion control, Web server, OPC UA.

You can download the documentation free of charge from the Internet (https://support.industry.siemens.com/cs/ww/en/view/109742691).

Changes and supplements to the manuals are documented in a Product Information.

You can download the product information free of charge from the Internet (https://support.industry.siemens.com/cs/us/en/view/68052815).

Manual Collection S7-1500/ET 200MP

The Manual Collection contains the complete documentation on the SIMATIC S7-1500 automation system and the ET 200MP distributed I/O system gathered together in one file.

You can find the Manual Collection on the Internet (https://support.industry.siemens.com/cs/ww/en/view/86140384).

SIMATIC S7-1500 comparison list for programming languages

The comparison list contains an overview of which instructions and functions you can use for which controller families.

You can find the comparison list on the Internet (https://support.industry.siemens.com/cs/ww/en/view/86630375).

"mySupport"

With "mySupport", your personal workspace, you make the best out of your Industry Online Support.

In "mySupport", you can save filters, favorites and tags, request CAx data and compile your personal library in the Documentation area. In addition, your data is already filled out in support requests and you can get an overview of your current requests at any time.

You must register once to use the full functionality of "mySupport".

You can find "mySupport" on the Internet (https://support.industry.siemens.com/My/ww/en).

Application examples

The application examples support you with various tools and examples for solving your automation tasks. Solutions are shown in interplay with multiple components in the system - separated from the focus on individual products.

You will find the application examples on the Internet (https://support.industry.siemens.com/sc/ww/en/sc/2054).

Product overview

2

2.1 Properties

Article number

6ES7531-7LH00-0AB0

View of the module

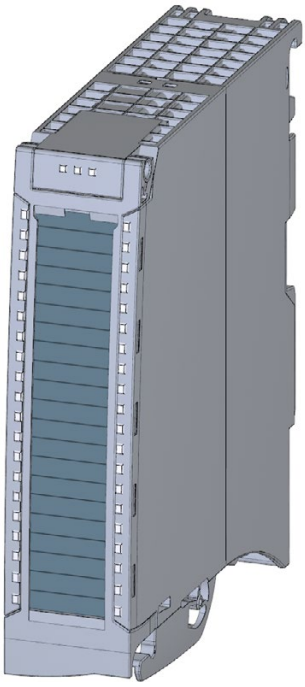

Figure 2-1 View of the AI 16xU BA module

Properties

The module has the following technical properties:

- 16 analog inputs
- Measurement type voltage

  Measuring ranges +/- 1 V, +/- 5 V, +/- 10 V, 1 to 5 V can be set per channel
- Resolution 16 bits including sign
- Configurable diagnostics (per channel)
- Hardware interrupt on limit violation can be set per channel (two low and two high limits per channel)

The module supports the following functions:

Table 2- 1 Version dependencies of the module functions

Function	Firmware version of the module	Configuration software	
		STEP 7 (TIA Portal) as of V16 and HSP 0312	GSD file in STEP 7 (TIA Portal) V12 or higher, or STEP 7 V5.5 SP3 or higher
Firmware update	V1.0.0 or higher	X	X
Identification data I&M0 to I&M3	V1.0.0 or higher	X	X
Parameter assignment in RUN	V1.0.0 or higher	X	X
Module-internal Shared Input (MSI)	V1.0.0 or higher	X (PROFINET IO only)	X (PROFINET IO only)

You can configure the module with STEP 7 (TIA Portal) and with a GSD file.

Accessories

The following accessories are supplied with the module and can also be ordered separately as spare parts:

- Shield bracket
- Shield terminal
- Power supply element
- Labeling strips
- U connector
- Universal front door

Other components

You can find additional information on accessories and the article number in the system manual S7-1500/ET 200MP (https://support.industry.siemens.com/cs/ww/en/view/59191792).

Wiring

3

This section contains the block diagram of the module and outlines various connection options.

You can find information on wiring the front connector, creating a cable shield, etc. in the Wiring section of the system manual S7-1500/ET 200MP (https://support.industry.siemens.com/cs/ww/en/view/59191792).

Note

Do not insert the potential jumpers supplied with the front connector.

Abbreviations used

Meaning of the abbreviations used in the following figures:

U_n+/U_n-	Voltage input channel n
M_{ANA}	Reference potential of the analog circuit

Infeed element

The module does not require supply voltage through the infeed element. The infeed element is inserted on the front connector and serves solely for shielding.

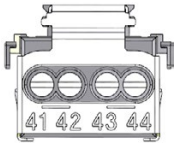

Figure 3-1 Infeed element

Block diagram and pin assignment for voltage measurement

The example in the following figure shows the pin assignment for voltage measurement.

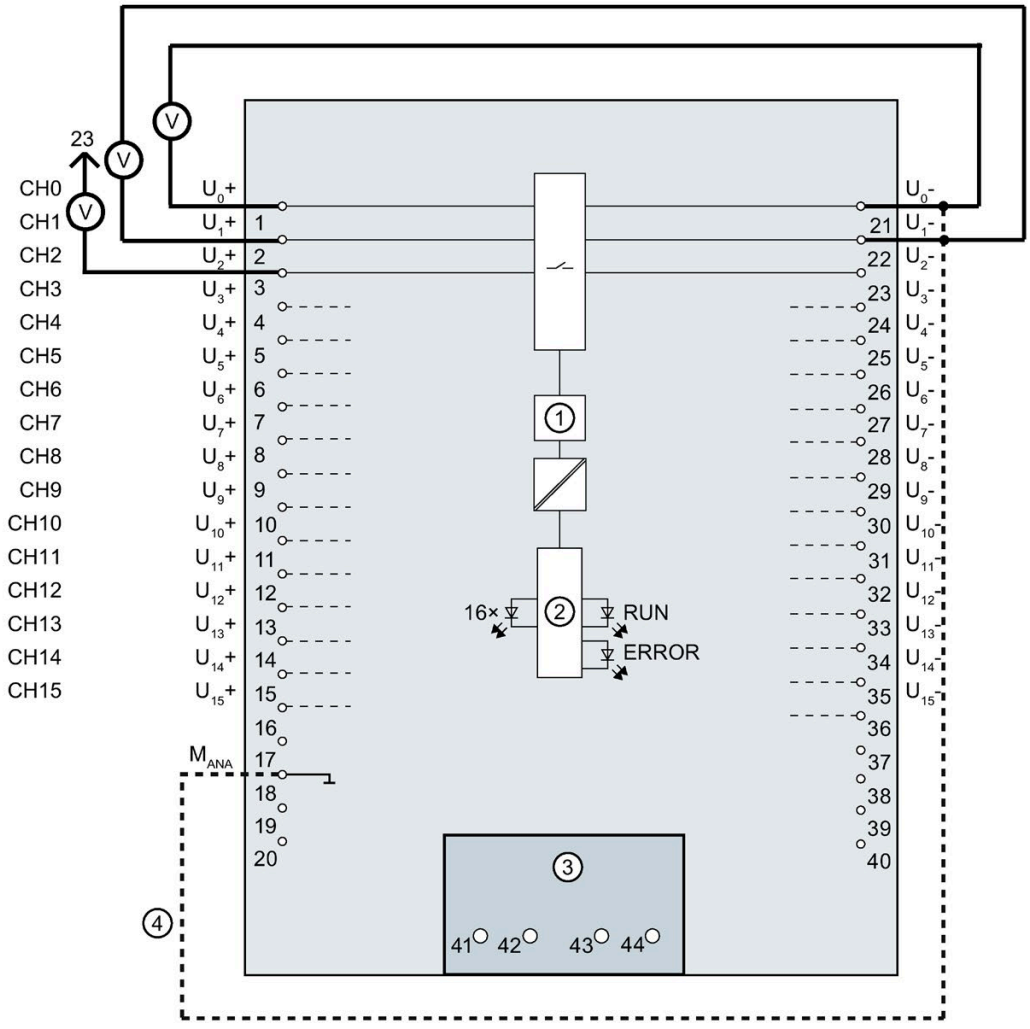

①	Analog-to-digital converter (ADC)	CHx	Channel or 16 x channel status (green/red)
②	Backplane bus interface	RUN	Status display LED (green)
③	Infeed element (for shielding only)	ERROR	Error display LED (red)
④	Equipotential bonding cable (optional)		

Figure 3-2 Block diagram and pin assignment for voltage measurement

Parameters/address space

4

4.1 Measuring types and ranges

Introduction

The module is set to voltage measurement type with measuring range ±10 V by default. You need to reassign the module parameters with STEP 7 if you want to use a different measuring range.

Deactivate the input if it is not going to be used. The module cycle time is shortened and the interference factors that lead to failure of the module (for example, triggering a hardware interrupt) are avoided.

The following table shows the measurement type and the respective measuring range.

Table 4- 1 Measurement type and measuring range

Measurement type	Measuring range	Representation of analog values
Voltage	±1 V 1 V to 5 V ±5 V ±10 V	See Representation of analog values in voltage measuring ranges (Page 39)
Disabled	-	-

The tables of the input ranges, overflow, underrange, etc. are available in the appendix Representation of analog values (Page 37).

Note

Wire break in voltage measuring ranges

"Wire break" diagnostics can be configured for the "Voltage" measurement type with the "Measuring range 1 to 5 V". No "Wire break" diagnostics is available for the other measuring ranges.

If there is a wire break for these measuring ranges, the channel supplies a random value as an input value. This random value can also lie within the valid value range.

4.2 Parameters

Parameters of AI 16xU BA

When you assign the module parameters in STEP 7, you use various parameters to specify the module properties. The following table lists the configurable parameters. The effective range of the configurable parameters depends on the type of configuration. The following configurations are possible:

- Central operation with a S7-1500 CPU
- Distributed operation on PROFINET IO in an ET 200MP system
- Distributed operation on PROFIBUS DP in an ET 200MP system

When assigning parameters in the user program, use the WRREC instruction to transfer the parameters to the module by means of data records; refer to the section Parameter assignment and structure of the parameter data records (Page 32).

The following parameter settings for the channels are possible:

Table 4- 2 Configurable parameters and their defaults

Parameters	Range of values	Default setting	Parameter assignment in RUN	Scope with configuration software, e.g., STEP 7 (TIA Portal)	
				GSD file PROFINET IO	GSD file PROFIBUS DP
Diagnostics					
• Overflow	Yes/No	No	Yes	Channel	Module [2]
• Underflow	Yes/No	No	Yes	Channel	Module [2]
• Common mode error	Yes/No	No	Yes	Channel	Module [2]
• Wire break [1]	Yes/No	No	Yes	Channel	Module [2]
Measuring					
• Measurement type	Voltage	Voltage	Yes	Channel	Channel
• Measuring range	±1 V 1 to 5 V ±5 V ±10 V	±10 V	Yes	Channel	Channel
• Interference frequency suppression	400 Hz 60 Hz 50 Hz 10 Hz	50 Hz	Yes	Channel	Module
• Smoothing	None/low/medium/high	None	Yes	Channel	Channel

Parameters	Range of values	Default setting	Parameter assignment in RUN	Scope with configuration software, e.g., STEP 7 (TIA Portal)	
				GSD file PROFINET IO	GSD file PROFIBUS DP
Hardware interrupts					
• Hardware interrupt low limit 1	Yes/No	No	Yes	Channel	--- [3]
• Hardware interrupt high limit 1	Yes/No	No	Yes	Channel	--- [3]
• Hardware interrupt low limit 2	Yes/No	No	Yes	Channel	--- [3]
• Hardware interrupt high limit 2	Yes/No	No	Yes	Channel	--- [3]

[1] If "Wire break" diagnostics and "Value status" are deactivated, the module reports overflow / underflow (7FFF$_H$ / 8000$_H$) in the event of a wiring error. The alarm depends on whether the connected cables are faulty. "Wire break" diagnostics is only available in the measuring range 1 V to 5 V.

Recommendation: Activate the "Wire break" diagnostics to obtain the correct value.

[2] You can set the effective range of the diagnostics for each channel in the user program with data records 0 to 15.

[3] You can configure the limits for hardware interrupts in the user program with data records 0 to 15.

4.3 Declaration of parameters

Overflow

Enabling of the diagnostics if the measured value violates the high limit.

Underflow

Enabling of the diagnostics when the measured value violates the low limit.

Common mode error

Enabling of diagnostics if the valid common mode voltage is exceeded.

Wire break

Enabling of the diagnostics if the module detects voltage that is too low at the configured input.

"Wire break" diagnostics is only available in the measuring range 1 V to 5 V.

Interference frequency suppression

At analog input modules, this suppresses interference caused by the frequency of the AC network.

The frequency of the AC voltage network may interfere with measured values, particularly for measurements within narrow voltage ranges. For this parameter, the user defines the mains frequency prevailing on his system.

Smoothing

The individual measured values are smoothed using filtering. The smoothing can be set in 4 levels.

Smoothing time = number of module cycles (k) x cycle time of the module.

The following figure shows the number of module cycles after which the smoothed analog value is almost 100%, depending on the set smoothing. It is valid for each signal change at the analog input.

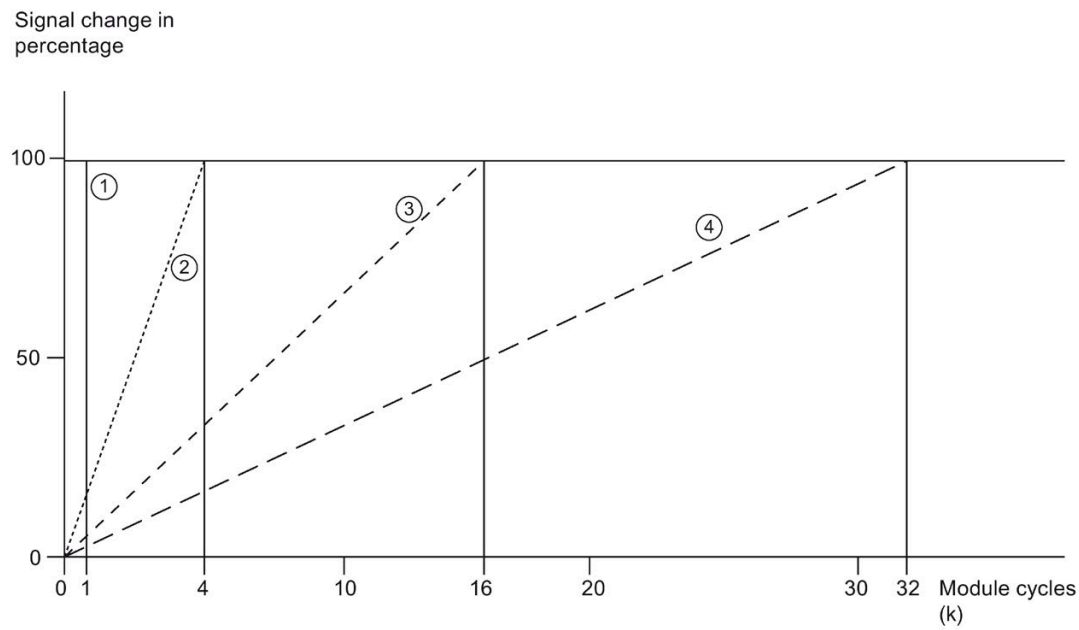

① None (k = 1)
② Weak (k = 4)
③ Medium (k = 16)
④ Strong (k = 32)

Figure 4-1 Smoothing for AI 16xU BA

Hardware interrupt 1 or 2

Enabling of a hardware interrupt at violation of high limit 1 or 2 or low limit 1 or 2.

Low limit 1 or 2

Specifies the low limit threshold that triggers hardware interrupt 1 or 2.

High limit 1 or 2

Specifies the high limit threshold that triggers hardware interrupt 1 or 2.

4.4 Address space

The module can be configured differently in STEP 7; see following table. Depending on the configuration, additional/different addresses are assigned in the process image of the inputs.

Configuration options of AI 16xU BA

You can configure the module with STEP 7 (TIA Portal) or with a GSD file.

When you configure the module by means of the GSD file, the configurations are available under different abbreviations/module names.

The following configurations are possible:

Table 4- 3 Configuration options

Configuration	Short designation/ module name in the GSD file	Configuration software, e.g., with STEP 7 (TIA Portal)	
		Integrated in the hardware catalog STEP 7 (TIA Portal) as of V16 and HSP 0312	GSD file in STEP 7 (TIA Portal) V12 or higher or STEP 7 V5.5 SP3 or higher
1 x 16-channel without value status	AI 16xU BA	X	X
1 x 16-channel with value status	AI 16xU BA QI	X	X
1 x 16-channel with value status for module-internal shared input with up to 4 submodules	AI 16xU BA MSI	X (PROFINET IO only)	X (PROFINET IO only)

Value status (Quality Information, QI)

The value status is always activated for the following module names:

- AI 16xU BA QI
- AI 16xU BA MSI

An additional bit is assigned to each channel for the value status. The value status bit indicates if the read in digital value is valid. (0 = value is incorrect).

Address space of AI 16xU BA

The figure below shows the address space allocation for the configuration as 16-channel module. You can freely assign the start address for the module. The addresses of the channels are derived from the start address.

"IB x" stands, for example, for the module start address input byte x.

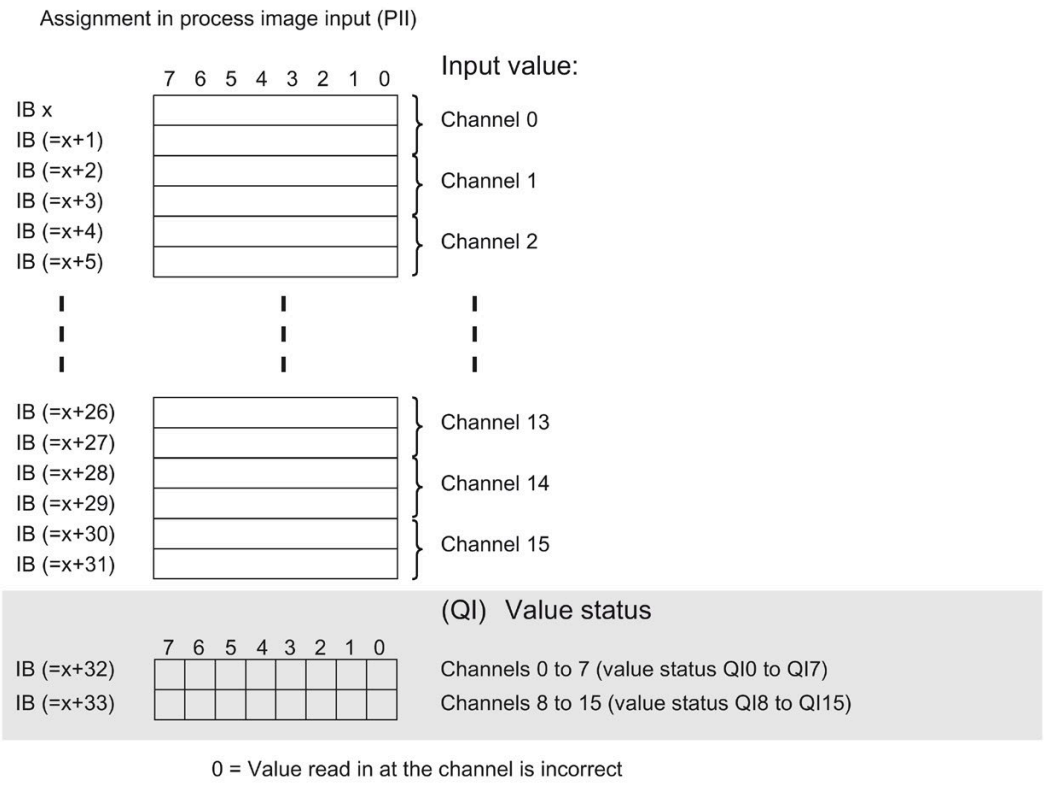

Figure 4-2 Address space for configuration as 1 x 16-channel AI 16xU BA with value status

Address space for configuration as 1 x 16-channel AI 16xU BA MSI

The channels 0 to 15 of the module are copied in up to four submodules with configuration 1 x 16-channel module (module-internal shared input, MSI). Channels 0 to 15 are then available with identical input values in different submodules. These submodules can be assigned to up to four IO controllers when the module is used in a shared device. Each IO controller has read access to the same channels.

The number of usable IO controllers depends on the interface module used. Please observe the information in the manual for the particular interface module.

Value status (Quality Information, QI)

The meaning of the value status depends on the submodule on which it occurs.

For the first submodule (=basic submodule), the value status 0 indicates that the value is incorrect.

For the 2nd to 4th submodule (=MSI submodule), the value status 0 indicates that the value is incorrect or the basic submodule has not yet been configured (not ready).

The figure below shows the assignment of the address space with submodules 1 and 2.

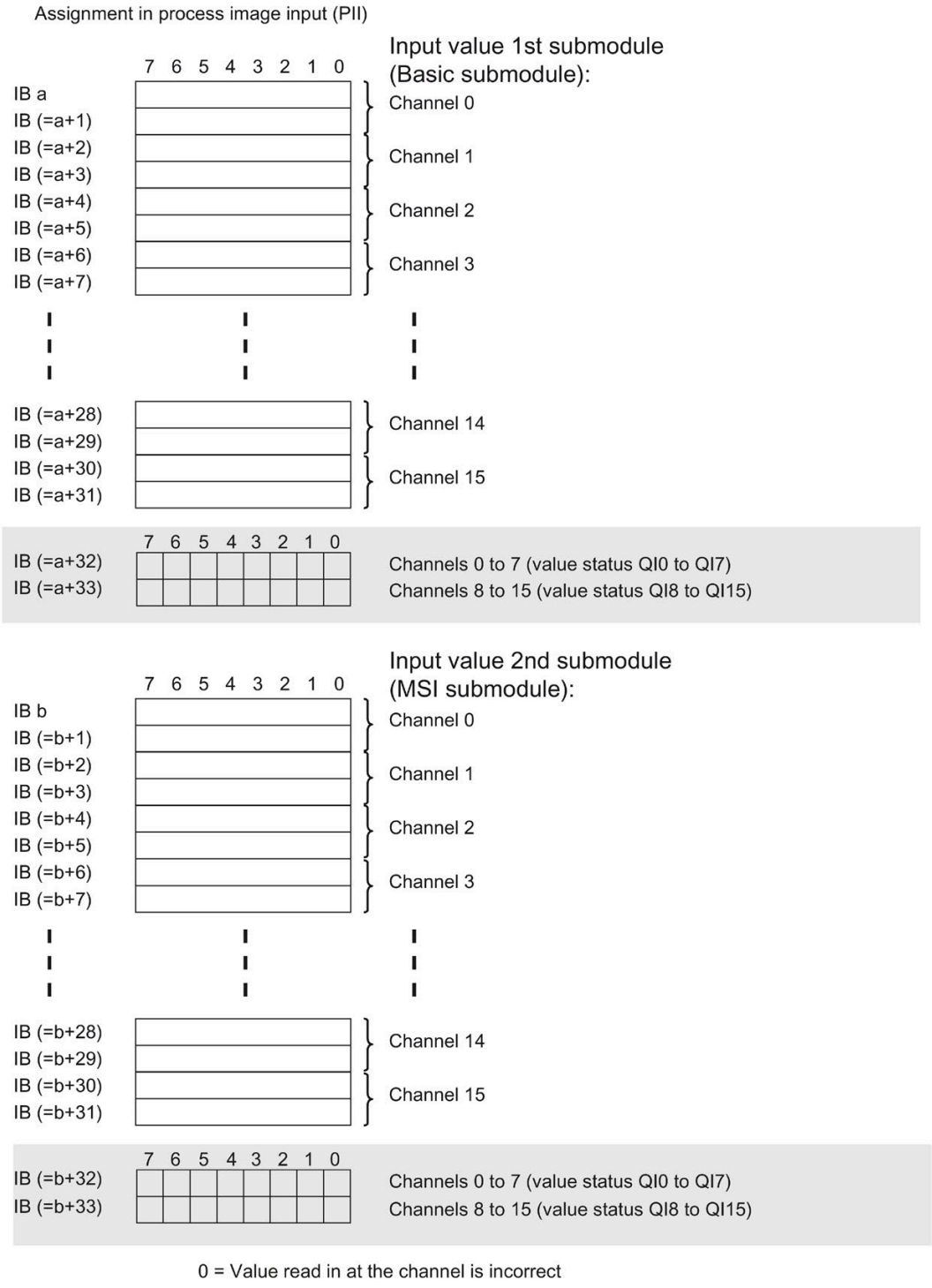

Figure 4-3 Address space for configuration as 1 x 16-channel AI 16xU BA MSI with value status

The following figure shows the assignment of the address space with submodule 3 and 4.

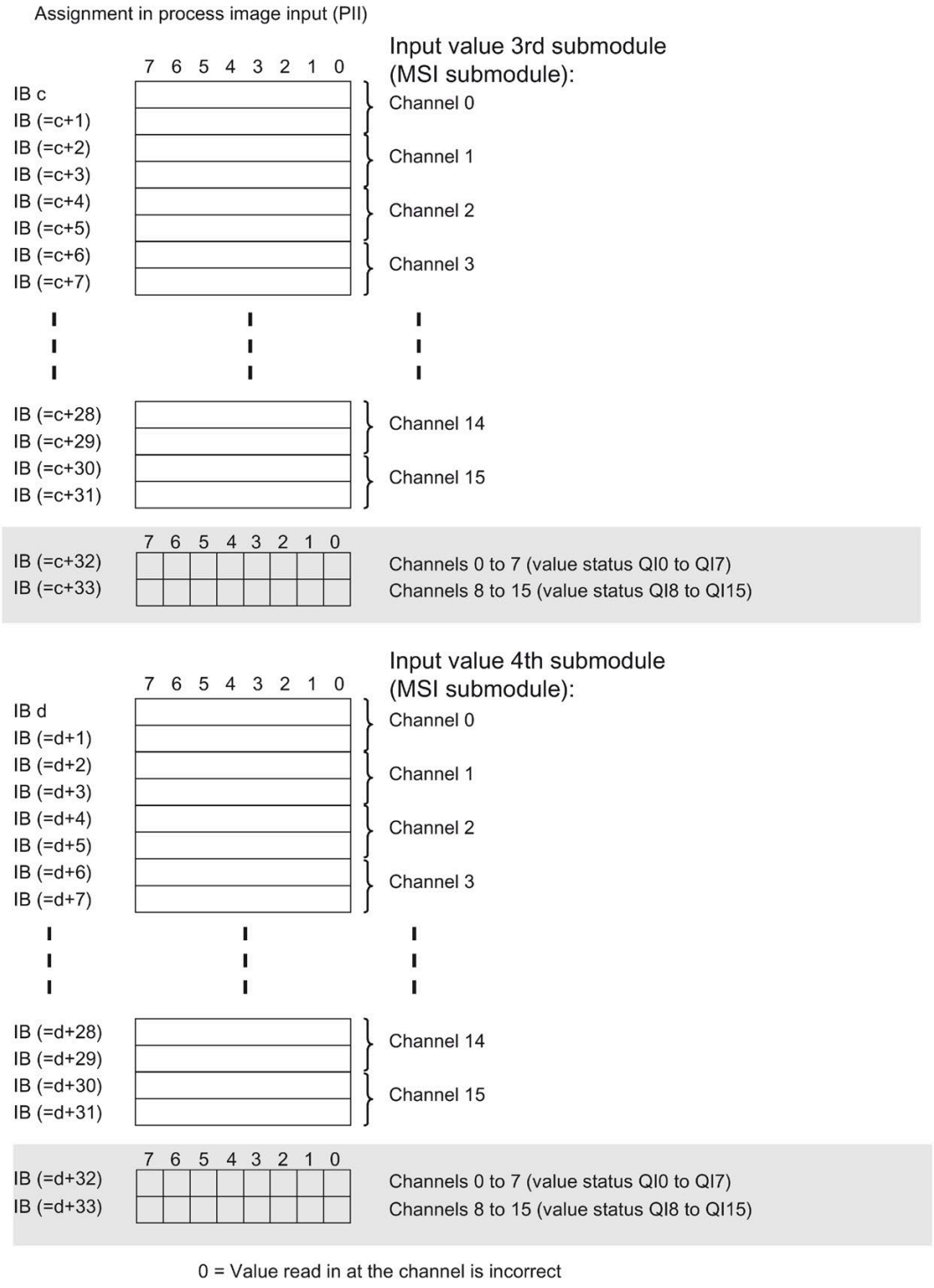

Figure 4-4 Address space for configuration as 1 x 16-channel AI 16xU BA MSI with value status

Reference

You can find information on the Shared Input/Output (MSI/MSO) function in the section Module-Internal Shared Input/Output (MSI/MSO) of the PROFINET with STEP 7 V16 (https://support.industry.siemens.com/cs/ww/en/view/49948856) function manual.

Interrupts/diagnostics alarms

5

5.1 Status and error displays

LED displays

The figure below shows the LED displays (status and error displays) of AI 16xU BA.

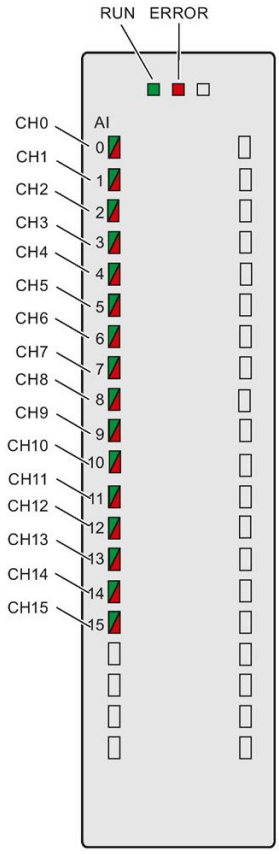

Figure 5-1 LED displays of the AI 16xU BA module

Meaning of the LED displays

The following tables explain the meaning of the status and error displays. Remedial measures for diagnostic alarms can be found in section Diagnostic alarms (Page 25).

RUN and ERROR LED

Table 5- 1 Status and error displays RUN and ERROR

LEDs		Meaning	Remedy
RUN	ERROR		
□ Off	□ Off	Voltage missing or too low at backplane bus.	• Switch on the CPU and/or the system power supply modules. • Verify that the U connectors are inserted. • Check whether too many modules are inserted.
☼ Flashes	□ Off	The module starts and flashes until the valid parameter assignment is set.	---
■ On	□ Off	Module is configured.	
■ On	☼ Flashes	Indicates module errors (at least one error at one channel, e.g., wire break).	Evaluate the diagnostics data and eliminate the error (e.g., wire break).
☼ Flashes	☼ Flashes	Hardware defective.	Replace the module.

CHx LED

Table 5- 2 CHx status display

LED CHx/COMP	Meaning	Remedy
□ Off	Channel disabled	---
■ On	Channel configured and OK.	---
■ On	Channel is configured (channel error pending). Diagnostic alarm: e.g. wire break	Check the wiring. Disable diagnostics.

5.2 Interrupts

Analog input module AI 16xU BA supports the following diagnostic and hardware interrupts.

You can find detailed information on the event in the error organization block with the "RALRM" instruction (read additional interrupt info) and in the STEP 7 online help.

Diagnostic interrupt

The module generates a diagnostic interrupt at the following events:

- Wire break
- Overflow
- Underflow
- Common mode error
- Parameter assignment error

Hardware interrupt

The module generates a hardware interrupt at the following events:

- Low limit violated 1
- High limit violated 1
- Low limit violated 2
- Above high limit 2

The module channel that triggered the hardware interrupt is entered in the start information of the organization block. The diagram below shows the assignment to the bits of double word 8 in local data.

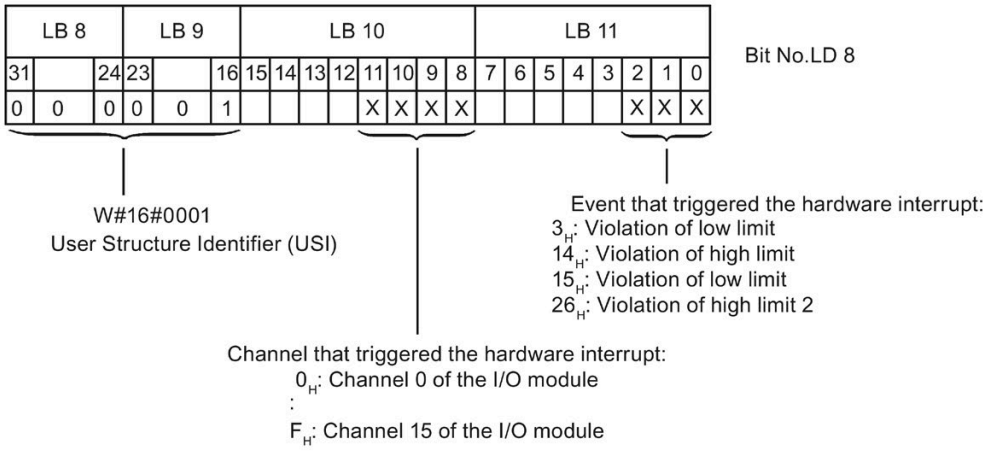

Figure 5-2 OB start information

Reaction when reaching limits 1 and 2 at the same time

If the two high limits 1 and 2 are reached at the same time, the module always signals the hardware interrupt for high limit 1 first. The configured value for high limit 2 is irrelevant. After processing the hardware interrupt for high limit 1, the module triggers the hardware interrupt for high limit 2.

The module has the same reaction when the low limits are reached at the same time. If the two low limits 1 and 2 are reached at the same time, the module always signals the hardware interrupt for low limit 1 first. After processing the hardware interrupt for low limit 1, the module triggers the hardware interrupt for low limit 2.

Structure of the additional interrupt information

Table 5- 3 Structure of USI = W#16#0001

Data block name		Contents	Remark	Bytes
USI (User Structure Identifier)		W#16#0001	Additional interrupt info for hardware interrupts of the I/O module	2
The channel that triggered the hardware interrupt follows.				
	Channel	B#16#00 to B#16#n	Number of the event-triggering channel (n = number of module channels -1)	1
The event that triggered the hardware interrupt follows.				
	Event	B#16#03	Low limit violated 1	1
		B#16#04	High limit violated 1	
		B#16#05	Low limit violated 2	
		B#16#06	Violation of high limit 2	

5.3 Diagnostics alarms

A diagnostics alarm is generated and the ERROR LED flashes on the module for each diagnostics event. The diagnostics alarms can be read out in the diagnostics buffer of the CPU, for example. You can evaluate the error codes with the user program.

If the module is operated distributed with PROFIBUS DP in an ET 200MP system, you have the option to read out diagnostics data with the instruction RDREC or RD_REC using data record 0 and 1. The structure of the data records is available in the "Manual for interface module IM 155-5 DP ST (6ES7155-5BA00-0AB0)" on the Internet (https://support.industry.siemens.com/cs/ww/en/view/78324181).

Table 5- 4 Diagnostics alarms, their meaning and corrective measures

Diagnostics alarm	Error code	Meaning	Solution
Wire break	6H	Impedance of encoder circuit too high	Use a different encoder type or modify the wiring, for example, using cables with larger cross-section
		Wire break between the module and sensor	Connect the cable
		Channel not connected (open)	• Disable diagnostics • Connect the channel
Overflow	7H	Measuring range violated	Check the measuring range
Underflow	8H	Measuring range violated	Check the measuring range
Parameter assignment error	10H	• The module cannot evaluate parameters for the channel • Incorrect parameter assignment	Correct the parameter assignment
Common mode error	118H	Valid common mode voltage exceeded	Check the wiring, e.g. sensor ground connections, use equipotential cables

Diagnostics alarms with value status (QI)

If you configure the module with value status (QI), the module always checks all errors even if the respective diagnostics is not enabled. But the module cancels the inspection as soon as it detects the first error, regardless if the respective diagnostics has been enabled or not. The result may be that enabled diagnostics may not be displayed.

Example: You have enabled "Underflow" diagnostics, but the module detects the "Wire break" diagnostics first and aborts after this error message. The "Underflow" diagnostics is not detected.

Recommendation: To ensure that all errors can be diagnosed reliably, select all check boxes under "Diagnostics".

Technical specifications 6

Technical specifications of AI 16xU BA

The following table shows the technical specifications as of 09/2020. You can find a data sheet including daily updated technical specifications on the Internet (https://support.industry.siemens.com/cs/ww/en/ps/td).

Enter the article number or the short designation of the module on the website.

Article number	6ES7531-7LH00-0AB0
General information	
Product type designation	AI 16xU BA
HW functional status	FS01
Firmware version	V1.0.0
• FW update possible	Yes
Product function	
• I&M data	Yes; I&M0 to I&M3
• Prioritized startup	No
Engineering with	
• STEP 7 TIA Portal configurable/integrated from version	V16 with HSP 312 / V17
• STEP 7 configurable/integrated from version	V5.5 SP3 / -
• PROFIBUS from GSD version/GSD revision	V1.0 / V5.1
• PROFINET from GSD version/GSD revision	V2.3 / -
Operating mode	
• Oversampling	No
• MSI	Yes
CiR - Configuration in RUN	
Reparameterization possible in RUN	Yes
Calibration possible in RUN	No
Power	
Power available from the backplane bus	0.85 W
Power loss	
Power loss, typ.	0.75 W

Article number	6ES7531-7LH00-0AB0
Analog inputs	
Number of analog inputs	16
• For voltage measurement	16
permissible input voltage for voltage input (destruction limit), max.	12 V; 12 V continuous, 30 V for max. 1 s
Input ranges (rated values), voltages	
• 0 to +5 V	No
• 0 to +10 V	No
• 1 V to 5 V	Yes
– Input resistance (1 V to 5 V)	10 MΩ
• -1 V to +1 V	Yes
– Input resistance (-1 V to +1 V)	10 MΩ
• -10 V to +10 V	Yes
– Input resistance (-10 V to +10 V)	10 MΩ
• -2.5 V to +2.5 V	No
• -25 mV to +25 mV	No
• -250 mV to +250 mV	No
• -5 V to +5 V	Yes
– Input resistance (-5 V to +5 V)	10 MΩ
• -50 mV to +50 mV	No
• -500 mV to +500 mV	No
• -80 mV to +80 mV	No
Cable length	
• shielded, max.	200 m
Analog value generation for the inputs	
Measurement principle	integrating
Integration and conversion time/resolution per channel	
• Resolution with overrange (bit including sign), max.	16 bit
• Integration time, parameterizable	Yes
• Integration time (ms)	2,5 / 16,67 / 20 / 100 ms
• Basic conversion time, including integration time (ms)	10 / 24 / 27 / 107 ms
– additional conversion time for wire-break monitoring	4 ms (to be considered for 1 to 5 V measurement)
• Interference voltage suppression for interference frequency f1 in Hz	400 / 60 / 50 / 10 Hz

Article number	6ES7531-7LH00-0AB0
Smoothing of measured values	
• parameterizable	Yes
• Step: None	Yes
• Step: low	Yes
• Step: Medium	Yes
• Step: High	Yes
Encoder	
Connection of signal encoders	
• for voltage measurement	Yes
Errors/accuracies	
Linearity error (relative to input range), (+/-)	0.1 %
Temperature error (relative to input range), (+/-)	0.006 %/K
Crosstalk between the inputs, max.	-50 dB
Repeat accuracy in steady state at 25 °C (relative to input range), (+/-)	0.1 %
Operational error limit in overall temperature range	
• Voltage, relative to input range, (+/-)	0.5 %
Basic error limit (operational limit at 25 °C)	
• Voltage, relative to input range, (+/-)	0.3 %
Interference voltage suppression for f = n x (f1 +/- 1 %), f1 = interference frequency	
• Series mode interference (peak value of interference < rated value of input range), min.	40 dB
• Common mode voltage, max.	4 V
• Common mode interference, min.	60 dB
Interrupts/diagnostics/status information	
Diagnostics function	Yes
Alarms	
• Diagnostic alarm	Yes
• Limit value alarm	Yes; two upper and two lower limit values in each case
Diagnoses	
• Monitoring the supply voltage	No
• Wire-break	Yes; Only for 1 ... 5 V
• Short-circuit	No
• Group error	No
• Overflow/underflow	Yes

Article number	6ES7531-7LH00-0AB0
Diagnostics indication LED	
• RUN LED	Yes; green LED
• ERROR LED	Yes; red LED
• MAINT LED	No
• Monitoring of the supply voltage (PWR-LED)	No
• Channel status display	Yes; green LED
• for channel diagnostics	Yes; red LED
• for module diagnostics	Yes; red LED
Potential separation	
Potential separation channels	
• between the channels	No
• between the channels, in groups of	16
• between the channels and backplane bus	Yes
Permissible potential difference	
between the inputs (UCM)	8 V DC
Between the inputs and MANA (UCM)	4 V DC
Isolation	
Isolation tested with	707 V DC (type test)
Ambient conditions	
Ambient temperature during operation	
• horizontal installation, min.	-30 °C; No condensation
• horizontal installation, max.	60 °C
• vertical installation, min.	-30 °C; No condensation
• vertical installation, max.	40 °C
Altitude during operation relating to sea level	
• Installation altitude above sea level, max.	5 000 m; Restrictions for installation altitudes > 2 000 m, see manual
Dimensions	
Width	35 mm
Height	147 mm
Depth	129 mm
Weights	
Weight, approx.	250 g

Dimensional drawing

A

The dimensional drawing of the module on the mounting rail, as well as a dimensional drawing with open front panel are provided in the appendix. Always adhere to the specified dimensions for installations in cabinets, control rooms, etc.

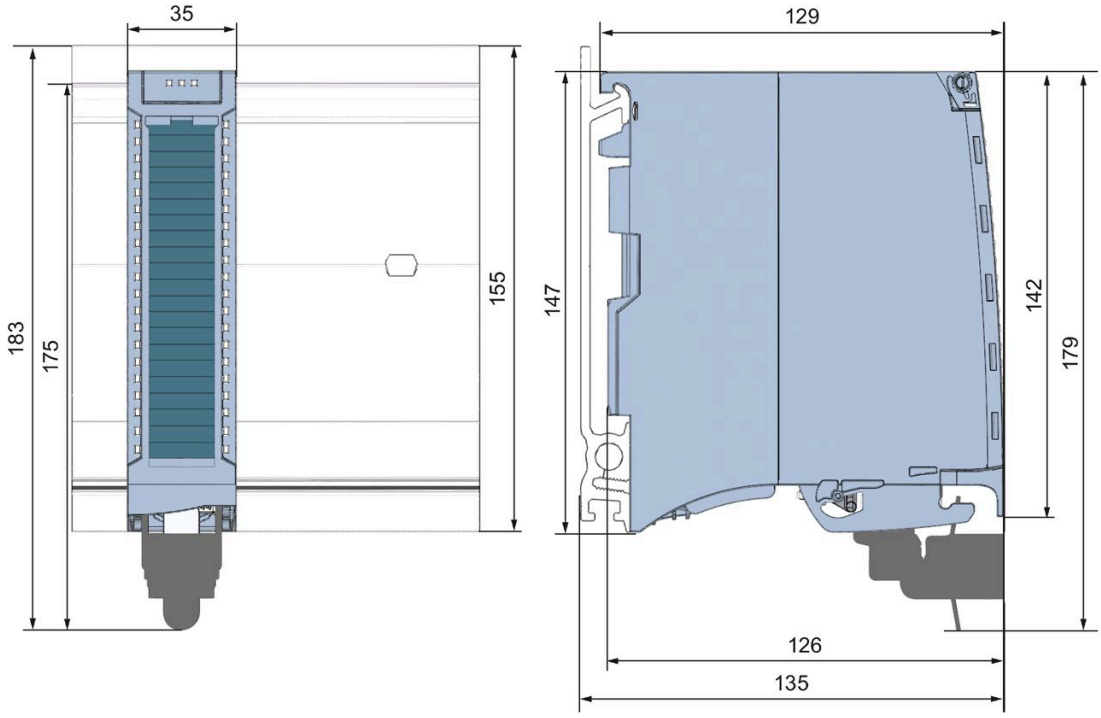

Figure A-1 Dimensional drawing of the AI 16xU BA module

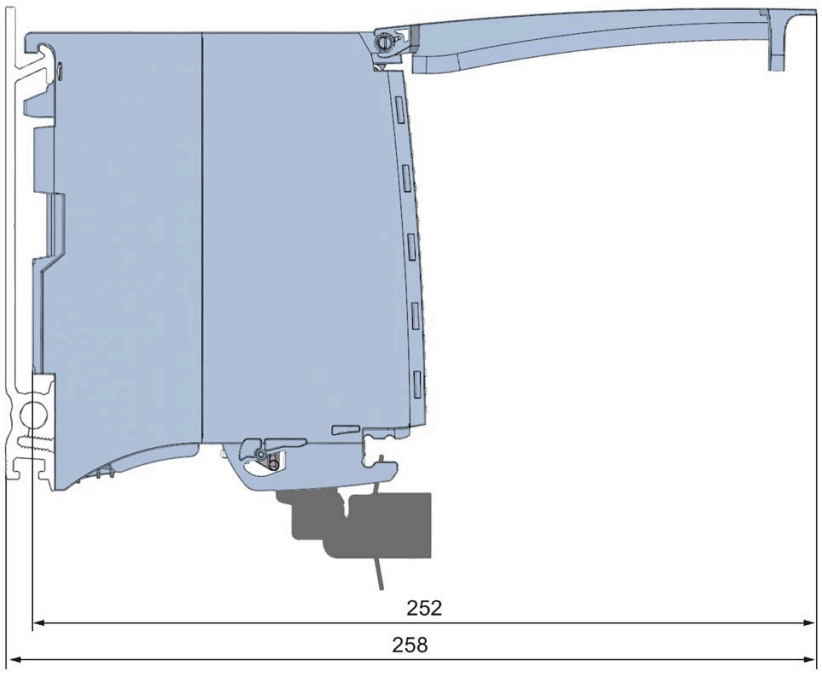

Figure A-2 Dimensional drawing of the AI 16xU BA module in side view with open front cover

Parameter data records

B

B.1 Parameter assignment and structure of the parameter data records

The data records of the module have an identical structure, regardless of whether you configure the module with PROFIBUS DP or PROFINET IO.

Dependencies for configuration with GSD file

When configuring the module with a GSD file, remember that the settings of some parameters are dependent on each other. The parameters are only checked for plausibility by the module after the transfer to the module.

The following table lists the parameters that depend on one another.

Table B- 1 Dependencies of parameters for configuration with GSD file

Device-specific parameters (GSD file)	Dependent parameters
Wire break	Only for **measurement type** voltage with **measuring range** 1 to 5 V
Hardware interrupt limits	Only if hardware interrupts are enabled.

Parameter assignment in the user program

The module parameters can be assigned in RUN (for example, measuring ranges of selected channels can be edited in RUN without having an effect on the other channels).

Parameter assignment in RUN

The WRREC instruction is used to transfer the parameters to the module using data records 0 to 15. The parameters set in STEP 7 do not change in the CPU, which means the parameters set in STEP 7 are still valid after a restart.

The parameters are only checked for plausibility by the module after the transfer to the module.

Output parameter STATUS

The module ignores errors that occurred during the transfer of parameters with the WRREC instruction and continues operation with the previous parameter assignment. However, a corresponding error code is written to the STATUS output parameter.

The description of the WRREC instruction and the error codes is available in the STEP 7 online help.

Operation of the module behind a PROFIBUS DP interface module

If the module is operated behind a PROFIBUS DP interface module, the parameter data records 0 and 1 are not read back. You obtain the diagnostics data records 0 and 1 with the read back parameter data records 0 and 1. You can find additional information in the Interrupts section of the manual for the PROFIBUS DP interface module on the Internet (http://support.automation.siemens.com/WW/view/en/78324181).

Assignment of data record and channel

For the configuration with 1 x 16-channel, the parameters are located in data records 0 to 15 and are assigned as follows:

- Data record 0 for channel 0
- Data record 1 for channel 1
- ...
- Data record 14 for channel 14
- Data record 15 for channel 15

Data record structure

The figure below shows the structure of data record 0 for channel 0 as an example. The structure is identical for channels 1 to 15. The values in byte 0 and byte 1 are fixed and may not be changed.

Enable a parameter by setting the corresponding bit to "1".

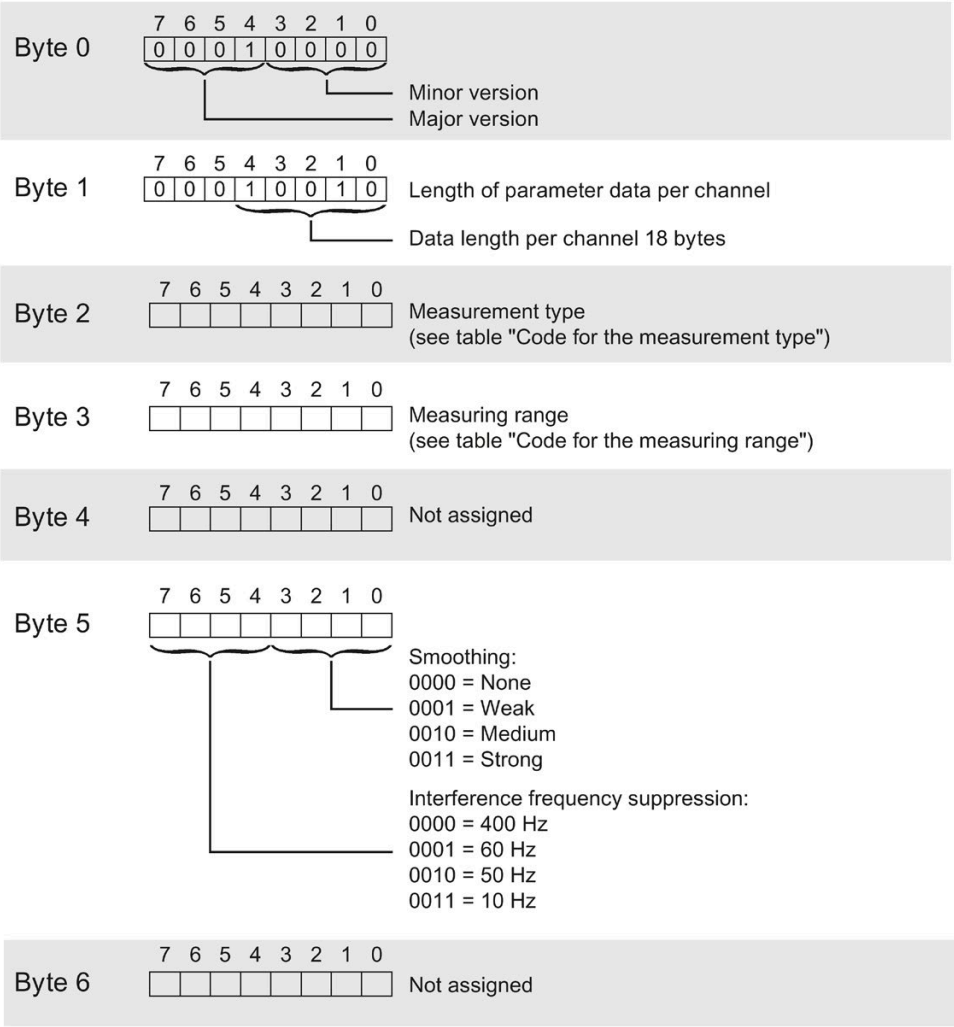

Figure B-1 Structure of data record 0: Bytes 0 to 6

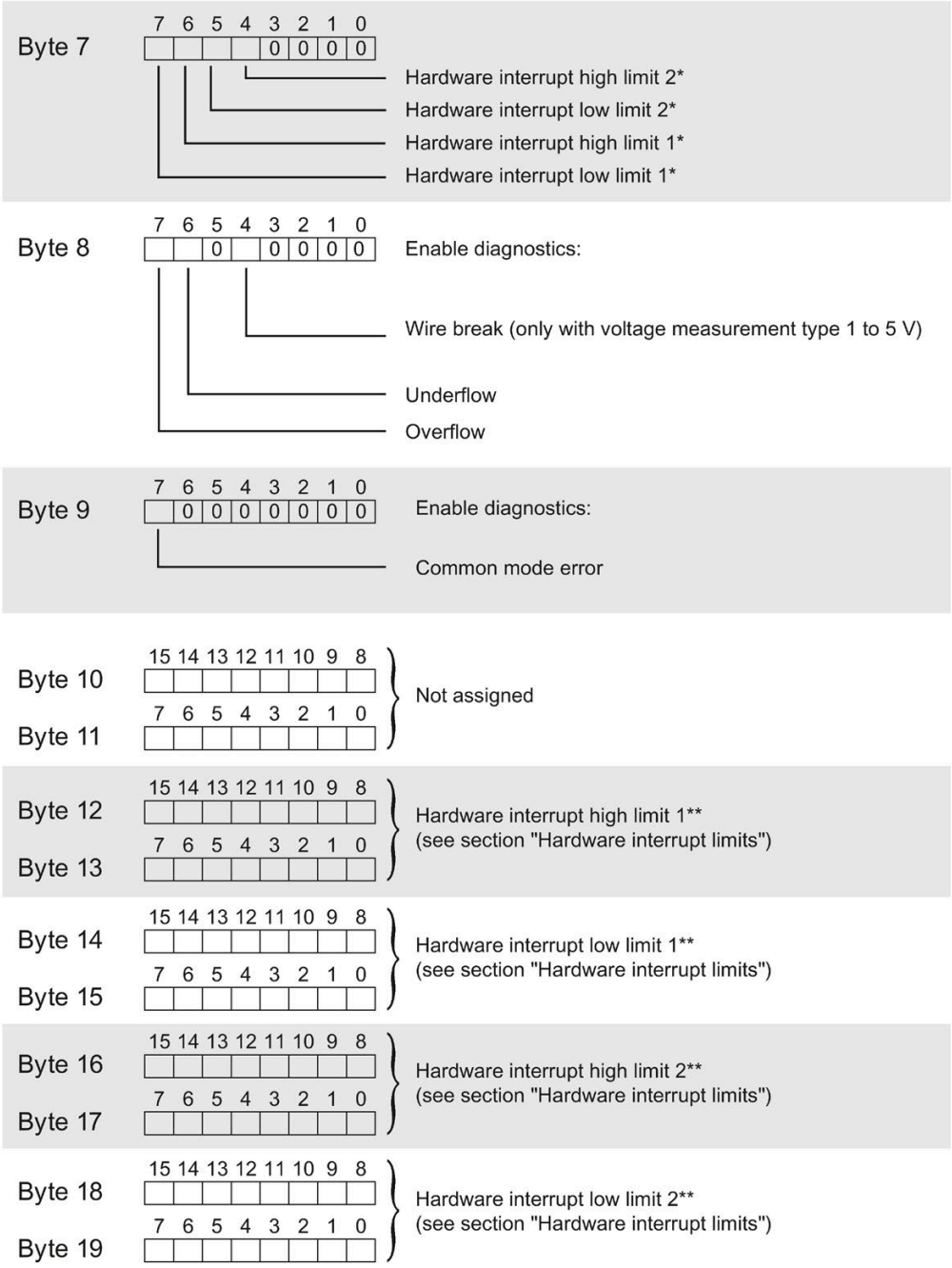

Figure B-2 Structure of data record 0: Bytes 7 to 19

Codes for measurement types

The following table lists all measurement types of the analog input module along with their codes. Enter these codes at byte 2 of the data record for the corresponding channel (see the figure Structure of data record 0: Bytes 7 to 19).

Table B- 2 Code for the measurement type

Measurement type	Code
Deactivated	0000 0000
Voltage	0000 0001

Codes for measuring ranges

The following table lists all measuring ranges of the analog input module along with their codes. Enter these codes accordingly at byte 3 of the data record for the corresponding channel (see the figure Structure of data record 0: Bytes 7 to 19).

Table B- 3 Code for the measuring range

Measuring range	Code
Voltage	
±1 V	0000 0101
±5 V	0000 1000
±10 V	0000 1001
1 V to 5 V	0000 1010

Hardware interrupt limits

The values that you can set for hardware interrupts (high/low limit) must not violate the over/underrange of the respective rated measuring range.

The following tables list the valid hardware interrupt limits. The limits depend on the selected measurement type and measuring range.

Table B- 4 Voltage limits

Voltage		
±1 V, ±5 V, ±10 V	1 V to 5 V	
32510	32510	High limit
-32511	-4863	Low limit

Representation of analog values

C

Introduction

This appendix shows the analog values for all measuring ranges supported by the AI 16xU BA analog module.

Measured value resolution

Each analog value is written left aligned to the tags. The bits marked with "x" are set to "0".

Table C- 1 Resolution of the analog values

Resolution in bits including sign	Values		Analog value	
	Decimal	Hexadecimal	High byte	Low byte
16	1	1_H	Sign 0 0 0 0 0 0 0	0 0 0 0 0 0 0 1

C.1 Representation of input ranges

The tables below set out the digitized representation of the input ranges separately for bipolar and unipolar input ranges. The resolution is 16 bits.

Table C- 2 Bipolar input ranges

Dec. value	Measured value in %	Data word																Range
		2^{15}	2^{14}	2^{13}	2^{12}	2^{11}	2^{10}	2^9	2^8	2^7	2^6	2^5	2^4	2^3	2^2	2^1	2^0	
32767	>117.589	0	1	1	1	1	1	1	1	1	1	1	1	1	1	1	1	Overflow
32511	117.589	0	1	1	1	1	1	1	0	1	1	1	1	1	1	1	1	Overshoot range
27649	100.004	0	1	1	0	1	1	0	0	0	0	0	0	0	0	0	1	
27648	100.000	0	1	1	0	1	1	0	0	0	0	0	0	0	0	0	0	Rated range
1	0.003617	0	0	0	0	0	0	0	0	0	0	0	0	0	0	0	1	
0	0.000	0	0	0	0	0	0	0	0	0	0	0	0	0	0	0	0	
-1	-0.003617	1	1	1	1	1	1	1	1	1	1	1	1	1	1	1	1	
-27648	-100.000	1	0	0	1	0	1	0	0	0	0	0	0	0	0	0	0	
-27649	-100.004	1	0	0	1	0	0	1	1	1	1	1	1	1	1	1	1	Undershoot range
-32512	-117.593	1	0	0	0	0	0	0	1	0	0	0	0	0	0	0	0	
-32768	<-117.593	1	0	0	0	0	0	0	0	0	0	0	0	0	0	0	0	Underflow

Table C- 3 Unipolar input ranges

Dec. value	**Measured value in %**	**Data word**																**Range**
		2^{15}	2^{14}	2^{13}	2^{12}	2^{11}	2^{10}	2^{9}	2^{8}	2^{7}	2^{6}	2^{5}	2^{4}	2^{3}	2^{2}	2^{1}	2^{0}	
32767	>117.589	0	1	1	1	1	1	1	1	1	1	1	1	1	1	1	1	Overflow
32511	117.589	0	1	1	1	1	1	1	0	1	1	1	1	1	1	1	1	Overshoot range
27649	100.004	0	1	1	0	1	1	0	0	0	0	0	0	0	0	0	1	
27648	100.000	0	1	1	0	1	1	0	0	0	0	0	0	0	0	0	0	Nominal range
1	0.003617	0	0	0	0	0	0	0	0	0	0	0	0	0	0	0	1	
0	0.000	0	0	0	0	0	0	0	0	0	0	0	0	0	0	0	0	
-1	-0.003617	1	1	1	1	1	1	1	1	1	1	1	1	1	1	1	1	Undershoot range
-4864	-17.593	1	1	1	0	1	1	0	1	0	0	0	0	0	0	0	0	
-32768	<-17.593	1	0	0	0	0	0	0	0	0	0	0	0	0	0	0	0	Underflow

C.2 Representation of analog values in voltage measuring ranges

The following tables list the decimal and hexadecimal values (codes) of the possible voltage measuring ranges.

Table C- 4 Voltage measuring ranges ±10 V, ±5 V, ±1 V,

Values		Voltage measuring range			Range
dec	**hex**	**±10 V**	**±5 V**	**±1 V**	
32767	7FFF	>11.759 V	>5.879 V	> 1.176 V	Overflow
32511	7EFF	11.759 V	5.879 V	1.176 V	Overshoot range
27649	6C01				
27648	6C00	10 V	5 V	1 V	Rated range
20736	5100	7.5 V	3.75 V	0.75 V	
1	1	361.7 µV	180.8 µV	36.17 µV	
0	0	0 V	0 V	0 V	
-1	FFFF				
-20736	AF00	-7.5 V	-3.75 V	-0.75 V	
-27648	9400	-10 V	-5 V	-1 V	
-27649	93FF				Undershoot range
-32512	8100	-11.759 V	-5.879 V	-1.176 V	
-32768	8000	< -11.759 V	< -5.879 V	< -1.176 V	Underflow

Table C- 5 Voltage measuring range 1 to 5 V

Values		Voltage measuring range	Range
dec	**hex**	**1 to 5 V**	
32767	7FFF	>5.704 V	Overflow
32511	7EFF	5.704 V	Overshoot range
27649	6C01		
27648	6C00	5 V	Rated range
20736	5100	4 V	
1	1	1 V + 144.7 µV	
0	0	1 V	
-1	FFFF		Undershoot range
-4864	ED00	0.296 V	
-32768	8000	< 0.296 V	Underflow

C.3 Measured values for wire break diagnostic

Measured values on diagnostic event "wire break", dependent on diagnostics enables

Error events initiate a diagnostics entry and trigger a diagnostics interrupt if configured accordingly.

Table C- 6 Measured values for wire break diagnostic

Format	Parameter assignment	Measured values		Explanation
S7	• "Wire break" diagnostics enabled • "Overflow/Underflow" diagnostics enabled or disabled ("Wire break" diagnostics takes priority over "Overflow/Underflow" diagnostics)	32767	7FFF$_H$	"Wire break" or "Open circuit" diagnostic alarm
	• "Wire break" diagnostics disabled • "Overflow/Underflow" diagnostics enabled	-32768	8000$_H$	• Measured value after leaving the under-shoot range • Diagnostic alarm "Low limit violated"
	• "Wire break" diagnostics disabled • "Overflow/Underflow" diagnostics disabled	-32768	8000$_H$	Measured value after leaving the undershoot range

SIEMENS

SIMATIC

S7-1500 / ET 200MP

Analog Input Module AI 4xU/I/RTD/TC ST (6ES7531-7QD00-0AB0)

Manual

Edition 09/2016

siemens.com

SIEMENS

SIMATIC

S7-1500/ET 200MP Analog Input Module AI 4xU/I/RTD/TC ST (6ES7531-7QD00-0AB0)

Manual

Preface

Guide to documentation 1

Product overview 2

Wiring 3

Parameters/address space 4

Interrupts/diagnostics alarms 5

Technical specifications 6

Dimension drawing A

Parameter data records B

Representation of analog values C

09/2016

A5E32366209-AC

Legal information

Warning notice system

This manual contains notices you have to observe in order to ensure your personal safety, as well as to prevent damage to property. The notices referring to your personal safety are highlighted in the manual by a safety alert symbol, notices referring only to property damage have no safety alert symbol. These notices shown below are graded according to the degree of danger.

⚠ DANGER

indicates that death or severe personal injury **will** result if proper precautions are not taken.

⚠ WARNING

indicates that death or severe personal injury **may** result if proper precautions are not taken.

⚠ CAUTION

indicates that minor personal injury can result if proper precautions are not taken.

NOTICE

indicates that property damage can result if proper precautions are not taken.

If more than one degree of danger is present, the warning notice representing the highest degree of danger will be used. A notice warning of injury to persons with a safety alert symbol may also include a warning relating to property damage.

Qualified Personnel

The product/system described in this documentation may be operated only by **personnel qualified** for the specific task in accordance with the relevant documentation, in particular its warning notices and safety instructions. Qualified personnel are those who, based on their training and experience, are capable of identifying risks and avoiding potential hazards when working with these products/systems.

Proper use of Siemens products

Note the following:

⚠ WARNING

Siemens products may only be used for the applications described in the catalog and in the relevant technical documentation. If products and components from other manufacturers are used, these must be recommended or approved by Siemens. Proper transport, storage, installation, assembly, commissioning, operation and maintenance are required to ensure that the products operate safely and without any problems. The permissible ambient conditions must be complied with. The information in the relevant documentation must be observed.

Trademarks

All names identified by ® are registered trademarks of Siemens AG. The remaining trademarks in this publication may be trademarks whose use by third parties for their own purposes could violate the rights of the owner.

Disclaimer of Liability

We have reviewed the contents of this publication to ensure consistency with the hardware and software described. Since variance cannot be precluded entirely, we cannot guarantee full consistency. However, the information in this publication is reviewed regularly and any necessary corrections are included in subsequent editions.

Siemens AG
Division Digital Factory
Postfach 48 48
90026 NÜRNBERG
GERMANY

A5E32366209-AC
℗ 11/2016 Subject to change

Copyright © Siemens AG 2014 - 2016.
All rights reserved

Preface

Purpose of the documentation

This manual supplements the system manual S7-1500/ET 200MP (https://support.industry.siemens.com/cs/ww/en/view/59191792).

Functions that relate in general to the systems are described in this system manual.

The information provided in this manual and in the system/function manuals supports you in commissioning the systems.

Changes compared to previous version

Compared to the previous version, this manual contains the following change:

Original texts of the license conditions and copyright notes for open-source software are available on the Internet as of 09/2016.

Conventions

The term "CPU" is used in this manual both for the CPUs of the S7-1500 automation system, as well as for interface modules of the ET 200MP distributed I/O system.

Please also observe notes marked as follows:

Note

A note contains important information on the product described in the documentation, on the handling of the product or on the section of the documentation to which particular attention should be paid.

Security information

Siemens provides products and solutions with industrial security functions that support the secure operation of plants, systems, machines and networks.

In order to protect plants, systems, machines and networks against cyber threats, it is necessary to implement – and continuously maintain – a holistic, state-of-the-art industrial security concept. Siemens' products and solutions only form one element of such a concept.

Customer is responsible to prevent unauthorized access to its plants, systems, machines and networks. Systems, machines and components should only be connected to the enterprise network or the internet if and to the extent necessary and with appropriate security measures (e.g. use of firewalls and network segmentation) in place.

Additionally, Siemens' guidance on appropriate security measures should be taken into account. For more information about industrial security, please visit (http://www.siemens.com/industrialsecurity).

Siemens' products and solutions undergo continuous development to make them more secure. Siemens strongly recommends to apply product updates as soon as available and to always use the latest product versions. Use of product versions that are no longer supported, and failure to apply latest updates may increase customer's exposure to cyber threats.

To stay informed about product updates, subscribe to the Siemens Industrial Security RSS Feed under (http://www.siemens.com/industrialsecurity).

Open Source Software

Open-source software is used in the firmware of the I/O modules. Open Source Software is provided free of charge. We are liable for the product described, including the open-source software contained in it, pursuant to the conditions applicable to the product. Siemens accepts no liability for the use of the open source software over and above the intended program sequence, or for any faults caused by modifications to the software.

For legal reasons, we are obliged to publish the original text of the license conditions and copyright notices. Please read the information relating to this on the Internet (https://support.industry.siemens.com/cs/ww/en/view/109741045).

Table of contents

Preface 4
1 Guide to documentation 7
2 Product overview 11
2.1 Properties 11
3 Wiring 14
3.1 Wiring and block diagrams 14
4 Parameters/address space 23
4.1 Measurement types and ranges 23
4.2 Parameters 26
4.3 Declaration of parameters 29
4.4 Address space 32
5 Interrupts/diagnostics alarms 37
5.1 Status and error displays 37
5.2 Interrupts 39
5.3 Diagnostics alarms 41
6 Technical specifications 42
A Dimension drawing 50
B Parameter data records 52
B.1 Parameter assignment and structure of the parameter data records 52
B.2 Structure of a data record for dynamic reference temperature 61
C Representation of analog values 63
C.1 Representation of input ranges 64
C.2 Representation of analog values in voltage measuring ranges 65
C.3 Representation of analog values in the current measuring ranges 66
C.4 Representation of the analog values of resistance-based sensors/resistance thermometers 67
C.5 Representation of analog values for thermocouples 70
C.6 Measured values for wire break diagnostics 73

Guide to documentation

1

The documentation for the SIMATIC S7-1500 automation system, the CPU 1516pro-2 PN based on SIMATIC S7-1500 and the SIMATIC ET 200MP distributed I/O system is arranged into three areas.
This arrangement enables you to access the specific content you require.

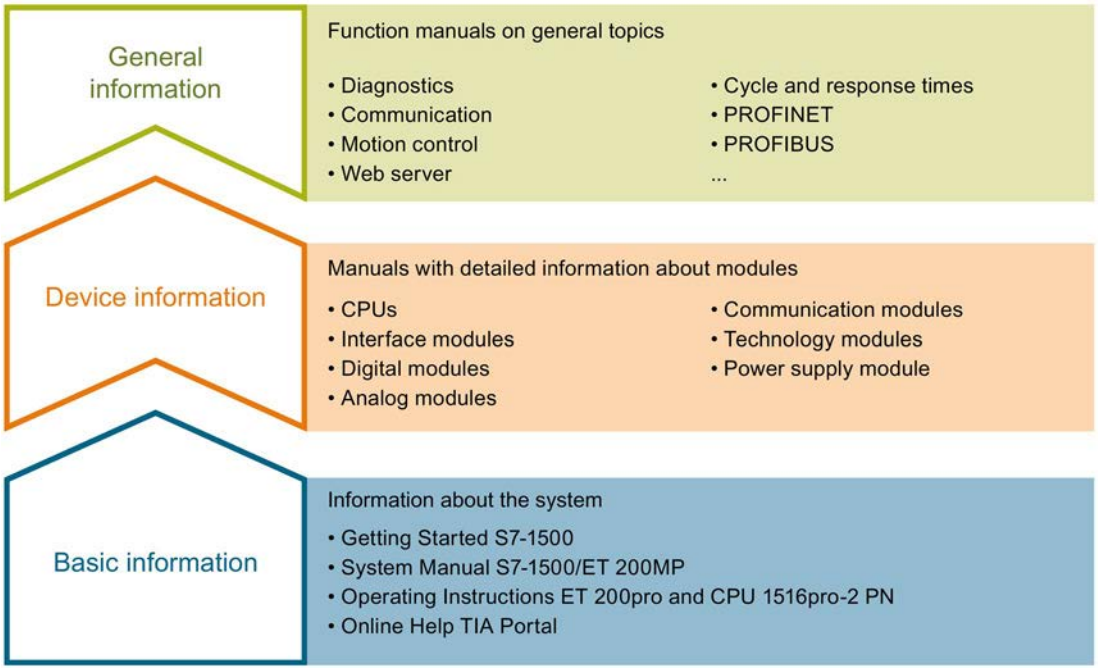

Basic information

The System Manual and Getting Started describe in detail the configuration, installation, wiring and commissioning of the SIMATIC S7-1500 and ET 200MP systems. For CPU 1516pro-2 PN you use the corresponding operating instructions. The STEP 7 online help supports you in the configuration and programming.

Device information

Product manuals contain a compact description of the module-specific information, such as properties, wiring diagrams, characteristics and technical specifications.

General information

The function manuals contain detailed descriptions on general topics regarding the SIMATIC S7-1500 and ET 200MP systems, e.g. diagnostics, communication, motion control, Web server, OPC UA.

You can download the documentation free of charge from the Internet (http://w3.siemens.com/mcms/industrial-automation-systems-simatic/en/manual-overview/Pages/Default.aspx).

Changes and supplements to the manuals are documented in a Product Information.

You can download the product information free of charge from the Internet (https://support.industry.siemens.com/cs/us/en/view/68052815).

Manual Collection S7-1500/ET 200MP

The Manual Collection contains the complete documentation on the SIMATIC S7-1500 automation system and the ET 200MP distributed I/O system gathered together in one file.

You can find the Manual Collection on the Internet (https://support.industry.siemens.com/cs/ww/en/view/86140384).

SIMATIC S7-1500 comparison list for programming languages

The comparison list contains an overview of which instructions and functions you can use for which controller families.

You can find the comparison list on the Internet (https://support.industry.siemens.com/cs/ww/en/view/86630375).

"mySupport"

With "mySupport", your personal workspace, you make the best out of your Industry Online Support.

In "mySupport", you can save filters, favorites and tags, request CAx data and compile your personal library in the Documentation area. In addition, your data is already filled out in support requests and you can get an overview of your current requests at any time.

You must register once to use the full functionality of "mySupport".

You can find "mySupport" on the Internet (https://support.industry.siemens.com/My/ww/en).

"mySupport" - Documentation

In the Documentation area in "mySupport" you can combine entire manuals or only parts of these to your own manual.
You can export the manual as PDF file or in a format that can be edited later.

You can find "mySupport" - Documentation on the Internet (http://support.industry.siemens.com/My/ww/en/documentation).

"mySupport" - CAx data

In the CAx data area in "mySupport", you can access the current product data for your CAx or CAe system.

You configure your own download package with a few clicks.

In doing so you can select:

- Product images, 2D dimension drawings, 3D models, internal circuit diagrams, EPLAN macro files
- Manuals, characteristics, operating manuals, certificates
- Product master data

You can find "mySupport" - CAx data on the Internet (http://support.industry.siemens.com/my/ww/en/CAxOnline).

Application examples

The application examples support you with various tools and examples for solving your automation tasks. Solutions are shown in interplay with multiple components in the system - separated from the focus on individual products.

You will find the application examples on the Internet (https://support.industry.siemens.com/sc/ww/en/sc/2054).

TIA Selection Tool

With the TIA Selection Tool, you can select, configure and order devices for Totally Integrated Automation (TIA).
This tool is the successor of the SIMATIC Selection Tool and combines the known configurators for automation technology into one tool.
With the TIA Selection Tool, you can generate a complete order list from your product selection or product configuration.

You can find the TIA Selection Tool on the Internet (http://w3.siemens.com/mcms/topics/en/simatic/tia-selection-tool).

SIMATIC Automation Tool

You can use the SIMATIC Automation Tool to run commissioning and maintenance activities simultaneously on various SIMATIC S7 stations as a bulk operation independently of the TIA Portal.

The SIMATIC Automation Tool provides a multitude of functions:

- Scanning of a PROFINET/Ethernet network and identification of all connected CPUs
- Address assignment (IP, subnet, gateway) and station name (PROFINET device) to a CPU
- Transfer of the date and the programming device/PC time converted to UTC time to the module
- Program download to CPU
- Operating mode switchover RUN/STOP
- Localization of the CPU by means of LED flashing
- Reading out CPU error information
- Reading the CPU diagnostic buffer
- Reset to factory settings
- Updating the firmware of the CPU and connected modules

You can find the SIMATIC Automation Tool on the Internet (https://support.industry.siemens.com/cs/ww/en/view/98161300).

PRONETA

With SIEMENS PRONETA (PROFINET network analysis), you analyze the PROFINET network during commissioning. PRONETA features two core functions:

- The topology overview independently scans PROFINET and all connected components.
- The IO check is a fast test of the wiring and the module configuration of a system.

You can find SIEMENS PRONETA on the Internet (https://support.industry.siemens.com/cs/ww/en/view/67460624).

Product overview

2

2.1 Properties

Article number

6ES7531-7QD00-0AB0

View of the module

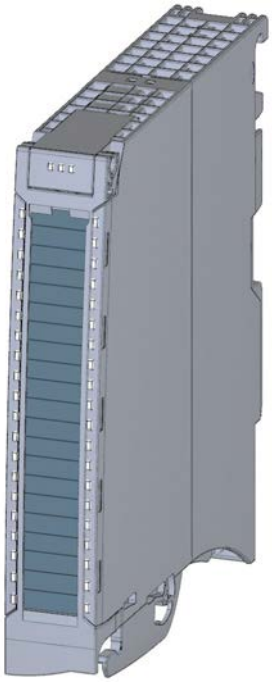

Figure 2-1 View of the AI 4xU/I/RTD/TC ST module

Properties

The module has the following technical properties:

- 4 analog inputs
- Resolution 16 bits including sign
- Voltage measurement type can be set per channel
- Current measurement type can be set per channel
- Resistance measurement type can be set for channel 0 and 2
- Resistance thermometer (RTD) measurement type can be set for channel 0 and 2
- Thermocouple (TC) measurement type can be set per channel
- Configurable diagnostics (per channel)
- Hardware interrupt on limit violation can be set per channel (two low and two high limits per channel)

The module supports the following functions:

Table 2- 1 Version dependencies of the module functions

Function	Firmware version of the module	Configuration software	
		STEP 7 (TIA Portal)	GSD file in STEP 7 (TIA Portal) V12 or higher, or STEP 7 V5.5 SP3 or higher
Firmware update	V1.0.0 or higher	V13 or higher with HSP 0102	X
Calibration in runtime	V1.0.0 or higher	V13 or higher with HSP 0102	X
Identification data I&M0 to I&M3	V1.0.0 or higher	V13 or higher with HSP 0102	X
Parameter assignment in RUN	V1.0.0 or higher	V13 or higher with HSP 0102	X
Module-internal Shared Input (MSI)	V1.0.0 or higher	V13 Update 3 or higher (PROFINET IO only)	X (PROFINET IO only)
Configurable submodules / submodules for Shared Device	V1.0.0 or higher	V13 Update 3 or higher (PROFINET IO only)	X (PROFINET IO only)

You can configure the module with STEP 7 (TIA Portal) and with a GSD file.

Accessories

The following accessories are supplied with the module and can also be ordered separately as spare parts:

- Front connector (push-in terminals) including cable tie
- Shield bracket
- Shield terminal
- Power supply element (push-in terminals)
- Labeling strips
- U connector
- Universal front door

You can find additional information on accessories in the system manual System manual S7-1500/ET 200MP (https://support.industry.siemens.com/cs/ww/en/view/59191792)

Wiring 3

3.1 Wiring and block diagrams

This section contains the block diagram of the module and outlines various connection options.

You can find information on wiring the front connector, creating a cable shield, etc. in the Wiring section of the system manual S7-1500/ET 200MP (https://support.industry.siemens.com/cs/ww/en/view/59191792).

You can find additional information on compensating the reference junction temperature in the function manual Analog value processing (http://support.automation.siemens.com/WW/view/en/67989094), the structure of a data record in the section Structure of a data record for dynamic reference temperature (Page 61).

Note

You may use and combine the different wiring options for all channels.

Abbreviations used

U_n+/U_n-	Voltage input channel n (voltage only)
M_n+/M_n-	Measuring input channel n
I_n+/I_n-	Current input channel n (current only)
$I_{c\,n}$+/$I_{c\,n}$-	Current output for RTD, channel n
U_{Vn}	Supply voltage at channel n for 2-wire transmitters (2WMT)
L+	Connection for supply voltage
M	Ground connection
M_{ANA}	Reference potential of the analog circuit

Pin assignment for the power supply element

The power supply element is plugged onto the front connector for powering the analog module. Wire the supply voltage to terminals 41 (L+) and 43 (M).

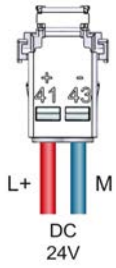

Figure 3-1 Power supply element wiring

Connection: Voltage measurement

The example in the following figure shows the pin assignment for voltage measurement.

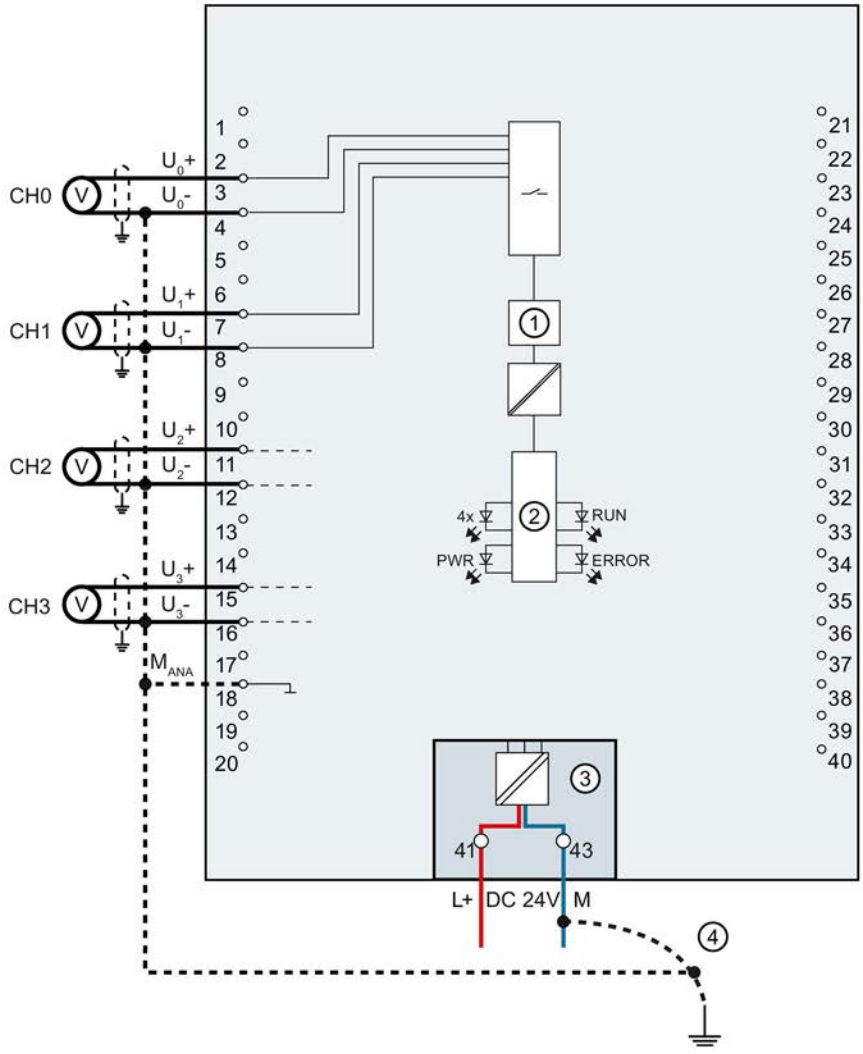

①	Analog-to-digital converter (ADC)	CHx	Channel or 4 x channel status (green/red)
②	Backplane bus interface	RUN	Status display LED (green)
③	Supply voltage via power supply element	ERROR	Error display LED (red)
④	Equipotential bonding cable (optional)	PWR	LED for power supply (green)

Figure 3-2 Block diagram and pin assignment for voltage measurement

Connection: 4-wire transmitters for current measurement

The example in the following figure shows the pin assignment for current measurement with 4-wire transmitters.

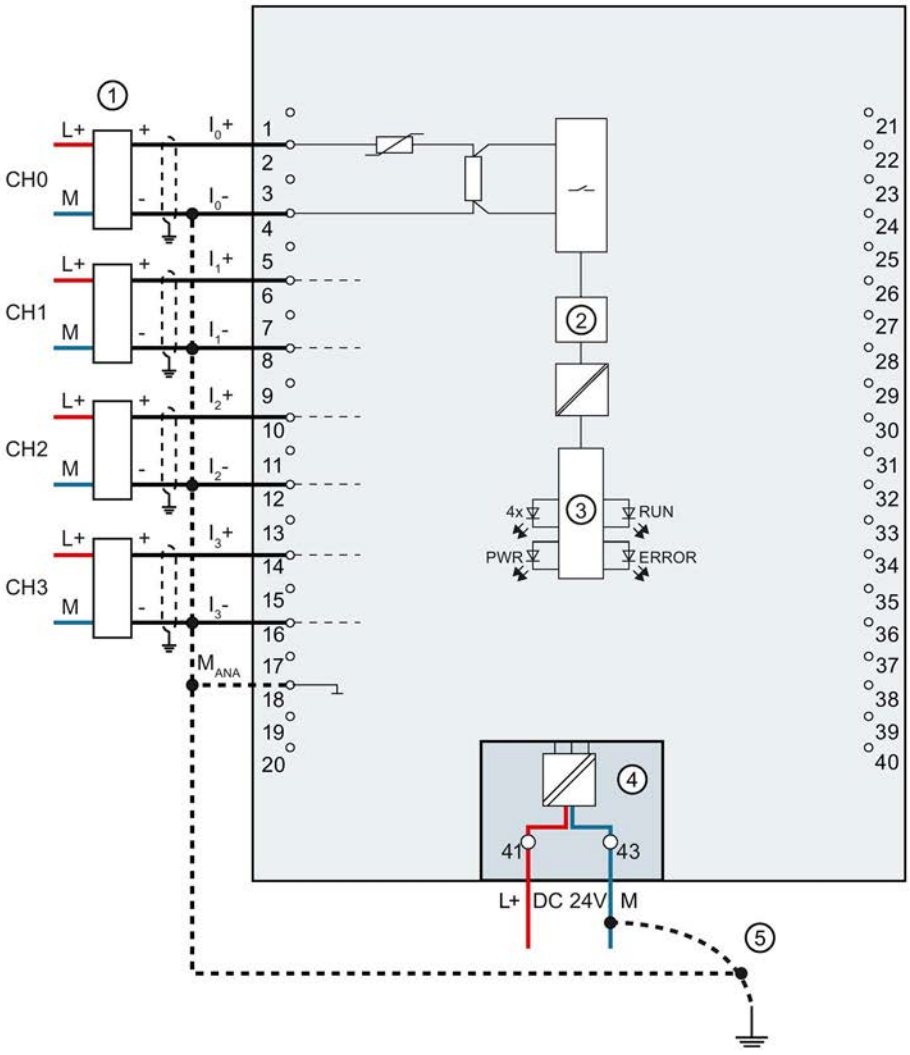

①	Wiring 4-wire transmitter	CHx	Channel or 4 x channel status (green/red)
②	Analog-to-digital converter (ADC)	RUN	Status display LED (green)
③	Backplane bus interface	ERROR	Error display LED (red)
④	Supply voltage via power supply element	PWR	LED for power supply (green)
⑤	Equipotential bonding cable (optional)		

Figure 3-3 Block diagram and pin assignment for current measurement

Connection: 2-wire transmitters for current measurement

The example in the following figure shows the pin assignment for current measurement with 2-wire transmitters.

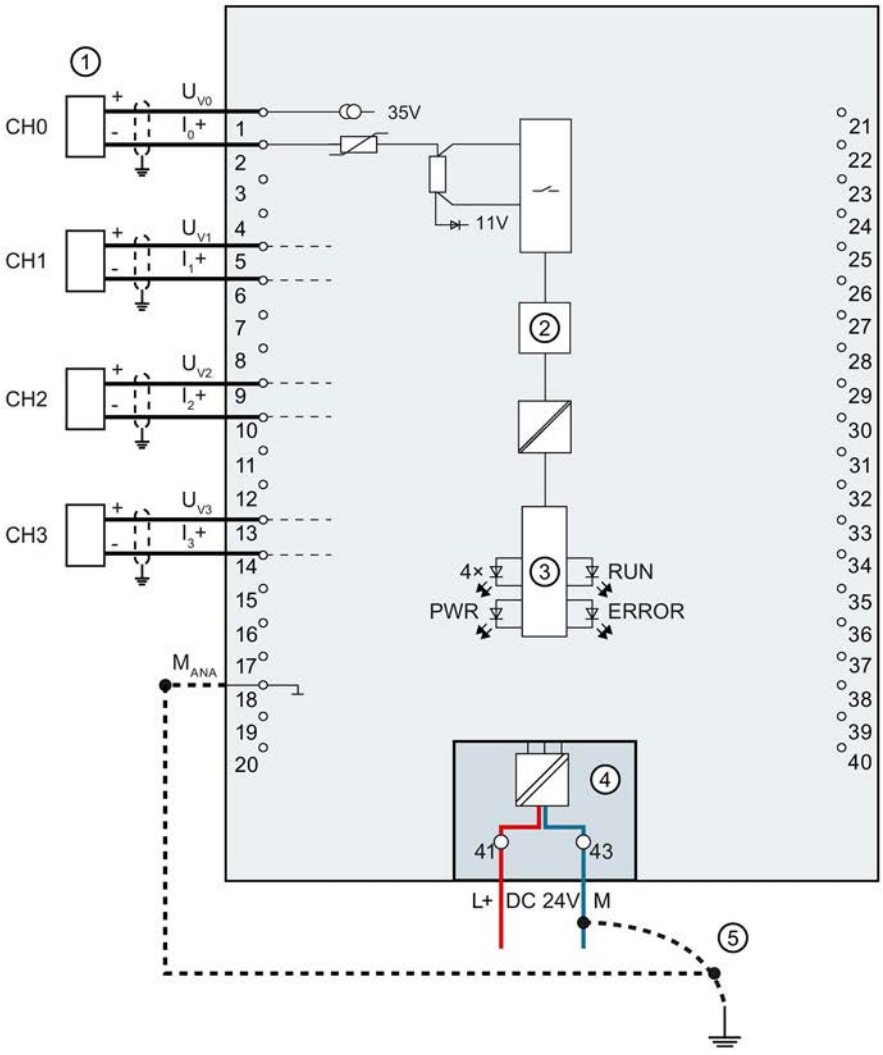

①	Wiring 2-wire transmitter	CHx	Channel or 4 x channel status (green/red)
②	Analog-to-digital converter (ADC)	RUN	Status display LED (green)
③	Backplane bus interface	ERROR	Error display LED (red)
④	Supply voltage via power supply element	PWR	LED for power supply (green)
⑤	Equipotential bonding cable (optional)		

Figure 3-4 Block diagram and pin assignment for current measurement with 2-wire transmitter

Connection: 2-wire connection of resistance-based sensors or thermal resistors (RTD)

The example in the figure below shows the pin assignment for 2-wire connection of resistance sensors or thermal resistors.

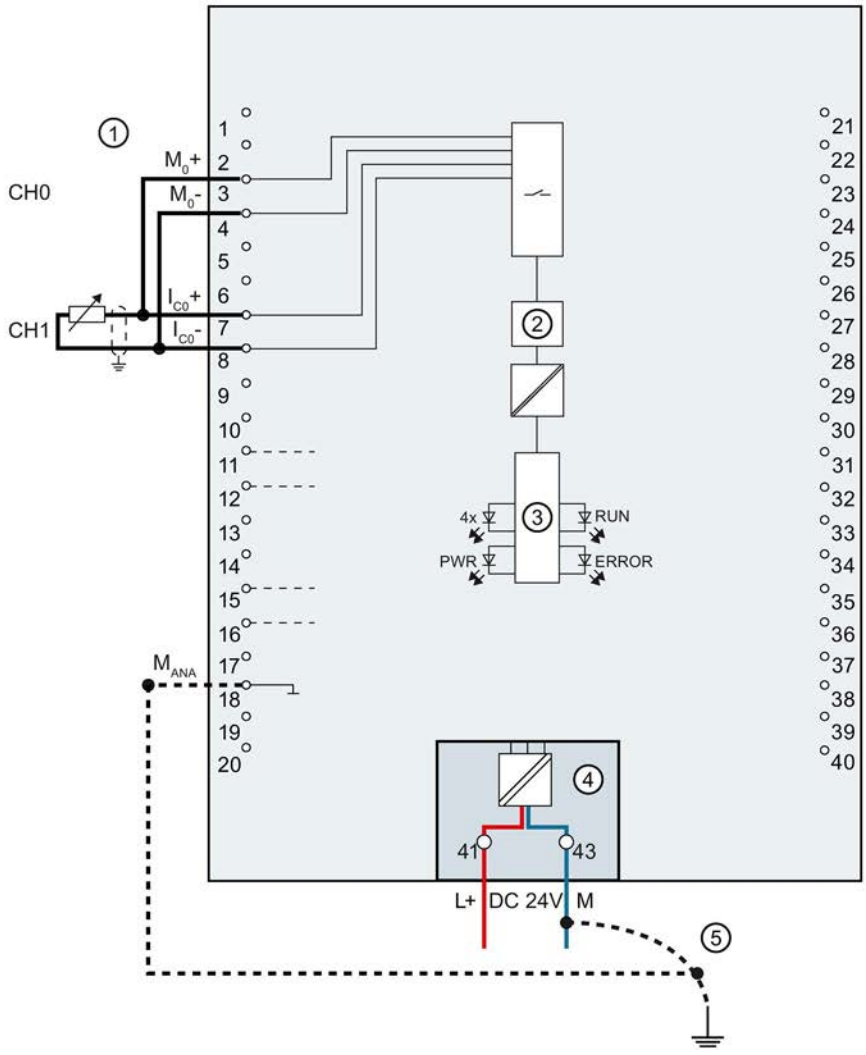

①	2-wire connection	CHx	Channel or 4 x channel status (green/red)
②	Analog-to-digital converter (ADC)	RUN	Status display LED (green)
③	Backplane bus interface	ERROR	Error display LED (red)
④	Supply voltage via power supply element	PWR	LED for power supply (green)
⑤	Equipotential bonding cable (optional)		

Figure 3-5 Block diagram and pin assignment for 2-wire connection

Connection: 3- and 4-wire connection of resistance sensors or thermal resistors (RTD)

The example in the figure below shows the pin assignment for 3- and 4-wire connection of resistance-based sensors or thermal resistors.

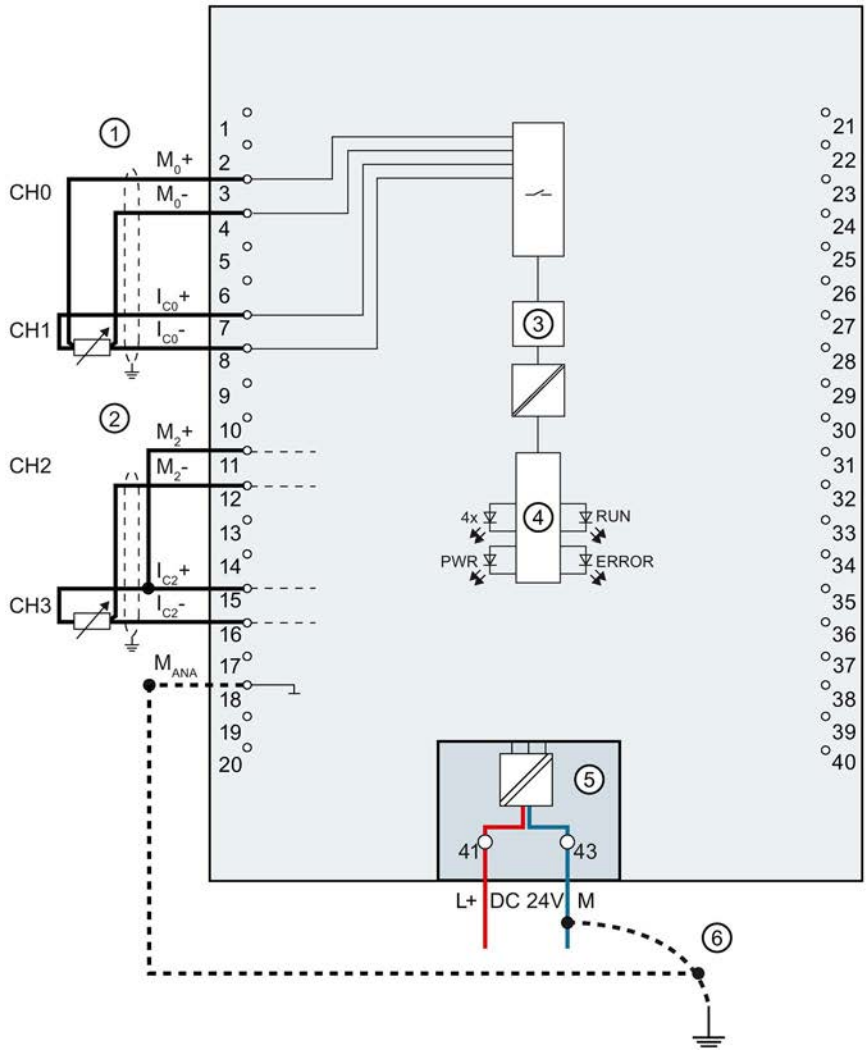

①	4-wire connection	CHx	Channel or 4 x channel status (green/red)
②	3-wire connection	RUN	Status display LED (green)
③	Analog-to-digital converter (ADC)	ERROR	Error display LED (red)
④	Backplane bus interface	PWR	LED for power supply (green)
⑤	Supply voltage via power supply element		
⑥	Equipotential bonding cable (optional)		

Figure 3-6 Block diagram and pin assignment for 3- and 4-wire connection

Connection: Thermocouples for external/internal compensation

The figure below shows an example of the pin assignment for thermocouples for external or internal compensation.

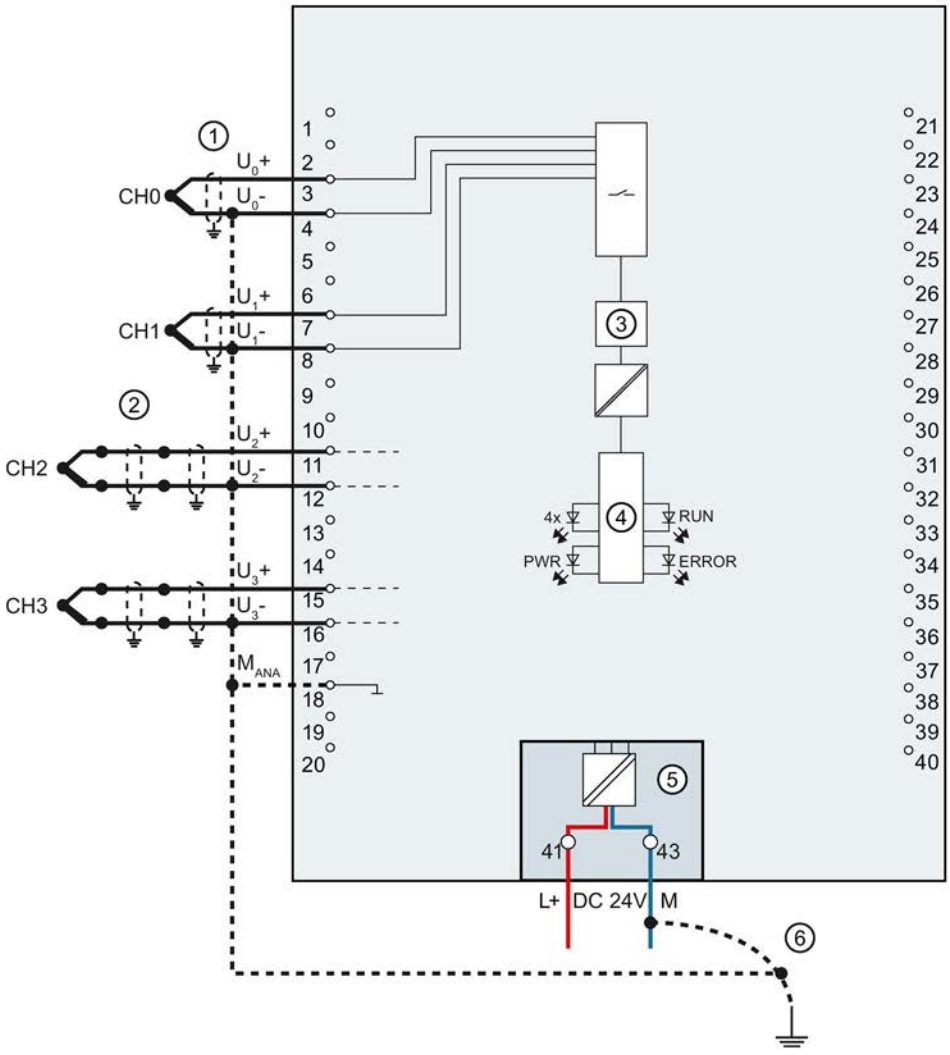

①	Wiring of a thermocouple for internal compensation	CHx	Channel or 4 x channel status (green/red)
②	Wiring of a thermocouple for external compensation	RUN	Status display LED (green)
③	Analog digital converter	ERROR	Error display LED (red)
④	Backplane bus interface	PWR	LED for power supply (green)
⑤	Supply voltage via power supply element		
⑥	Equipotential bonding cable (optional)		

Figure 3-7 Block diagram and pin assignment for the thermocouple

Connection: Grounded thermocouples for internal compensation

The following figure shows an example of the pin assignment for grounded thermocouples for internal compensation.

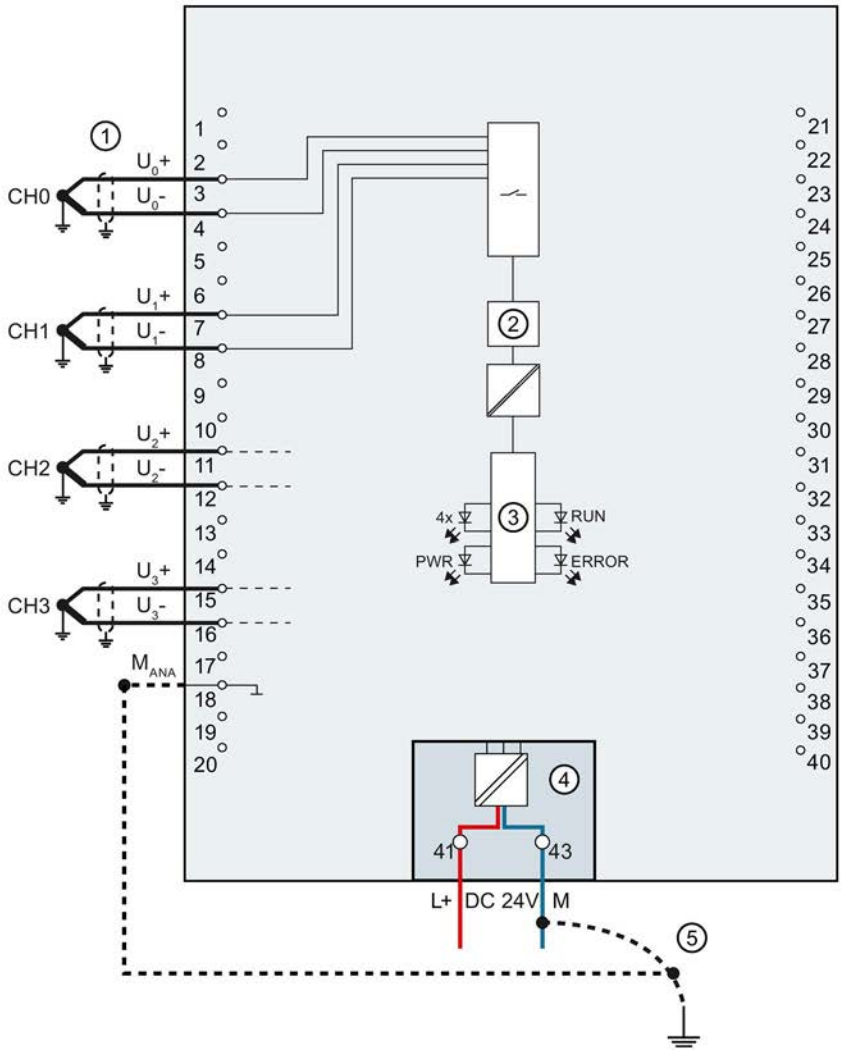

①	Wiring of a thermocouple (grounded) for internal compensation	CHx	Channel or 4 x channel status (green/red)
②	Analog-to-digital converter (ADC)	RUN	Status display LED (green)
③	Backplane bus interface	ERROR	Error display LED (red)
④	Supply voltage via power supply element	PWR	LED for power supply (green)
⑤	Equipotential bonding cable (optional)		

Figure 3-8 Block diagram and pin assignment for grounded thermocouple

Parameters/address space 4

4.1 Measurement types and ranges

Introduction

The module is set to voltage measurement type with measuring range ±10 V by default. You need to reassign the module parameters with STEP 7 if you want to use a different measurement type or range.

Deactivate the input if it is not going to be used. The module cycle time is shortened and the interference factors that lead to failure of the module (for example, triggering a hardware interrupt) are avoided.

Measurement types and ranges

The following table shows the measurement types and the respective measuring range.

Table 4- 1 Measurement types and measuring ranges

Measurement type	Measuring range	Representation of analog values
Voltage	±50 mV ±80 mV ±250 mV ±500 mV ±1 V ±2.5 V 1 V to 5 V ±5 V ±10 V	See Representation of analog values in voltage measuring ranges (Page 65)
Current 2WMT (2-wire transmitter)	4 mA to 20 mA	See Representation of analog values in the current measuring ranges (Page 66)
Current 4WMT (4-wire transmitter)	0 mA to 20 mA 4 mA to 20 mA ±20 mA	
Resistor (2-wire connection)	PTC	See Representation of the analog values of resistance-based sensors/resistance thermometers (Page 67)
Resistor (3-wire connection) (4-wire connection)	150 Ω 300 Ω 600 Ω 6000 Ω	

Measurement type	Measuring range	Representation of analog values
Thermal resistor RTD (3-wire connection) (4-wire connection)	PT100 Standard/Climate PT200 Standard/Climate PT500 Standard/Climate PT1000 Standard/Climate Ni100 Standard/Climate Ni1000 Standard/Climate LG-Ni1000 Standard/Climatic	
Thermocouple (TC)	Type B Type E Type J Type K Type N Type R Type S Type T	See Representation of analog values for thermocouples (Page 70)
Disabled	-	

The tables of the input ranges, overflow, underrange, etc. are available in the appendix Representation of analog values (Page 63).

Special features for the use of PTC resistors

PTC resistors are suitable for temperature monitoring of electrical devices, such as motors, drives, and transformers.

Use Type A PTC resistors (PTC thermistor) in accordance with DIN/VDE 0660, part 302. In doing so, follow these steps:

1. Choose "Resistor (2-wire terminal)" and "PTC" in STEP 7.
2. Connect the PTC using 2-wire connection technology.

If you enable the "Underflow" diagnostics in STEP 7, it will be signaled for resistance values <18 Ω. In this case, this diagnostic signifies "Short-circuit in the wiring".

The figure below shows the address space assignment for AI 4xU/I/RTD/TC ST with PTC resistors.

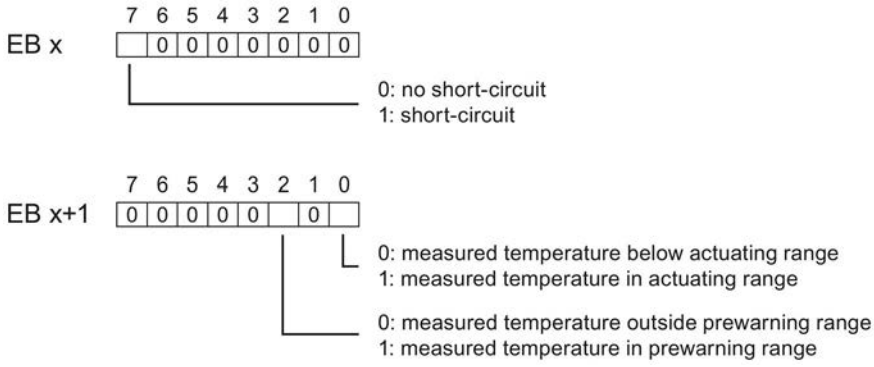

Figure 4-1 Address space for AI 4xU/I/RTD/TC ST with PTC resistors

The diagram below shows the temperature profile and the corresponding switching points.

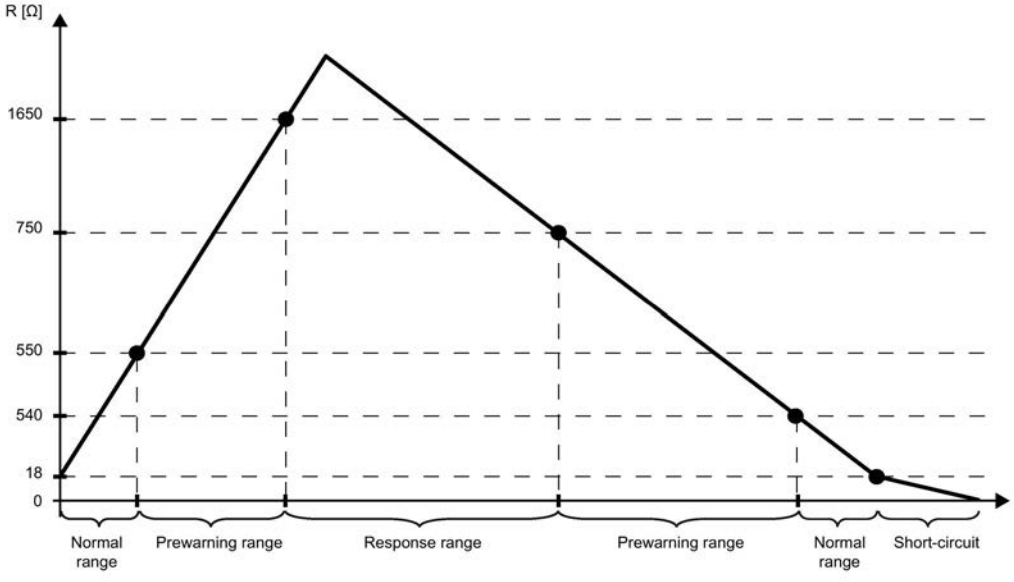

Figure 4-2 Temperature profile and the corresponding switching points

Special features of the measured value acquisition with PTC resistors

If faults occur (for example supply voltage L+ missing) that make it impossible to acquire measured values with PTC resistors, the corresponding channels (IB x/IB x+1) report overflow ($7FFF_H$). If the value status (QI) is enabled, the value 0 = incorrect is output in the corresponding bit.

4.2 Parameters

AI 4xU/I/RTD/TC ST parameters

When you assign the module parameters in STEP 7, you use various parameters to specify the module properties. The following table lists the configurable parameters. The effective range of the configurable parameters depends on the type of configuration. The following configurations are possible:

- Central operation with a S7-1500 CPU
- Distributed operation on PROFINET IO in an ET 200MP system
- Distributed operation on PROFIBUS DP in an ET 200MP system

When assigning parameters in the user program, use the WRREC instruction to transfer the parameters to the module by means of data records; refer to the section Parameter assignment and structure of the parameter data records (Page 52).

The following parameter settings are possible:

Table 4- 2 Configurable parameters and their defaults

Parameters	Range of values	Default setting	Reconfiguration in RUN	Scope with configuration software, e.g., STEP 7 (TIA Portal)	
				Integrated in the hardware catalog STEP 7, as of V13 or GSD file PROFINET IO	GSD file PROFIBUS DP
Diagnostics					
• No supply voltage L+	Yes/No	No	Yes	Channel [1]	Module [3]
• Overflow	Yes/No	No	Yes	Channel	Module [3]
• Underflow	Yes/No	No	Yes	Channel	Module [3]
• Common mode error	Yes/No	No	Yes	Channel	Module [3]
• Reference junction	Yes/No	No	Yes	Channel	Module [3]
• Wire break	Yes/No	No	Yes	Channel	Module [3]
• Current limit for wire break diagnostics [2]	1.185 mA or 3.6 mA	1.185 mA	Yes	Channel	--- [4]

Parameters	Range of values	Default setting	Reconfiguration in RUN	Scope with configuration software, e.g., STEP 7 (TIA Portal)	
				Integrated in the hardware catalog STEP 7, as of V13 or GSD file PROFINET IO	GSD file PROFIBUS DP
Measuring					
• Measurement type	See section Measurement types and ranges (Page 23)	Voltage	Yes	Channel	Channel
• Measuring range		±10 V	Yes	Channel	Channel
• Temperature coefficient	Pt: 0.003851 Pt: 0.003902 Pt: 0.003916 Pt: 0.003920 Ni: 0.00618 Ni: 0.00672 LG-Ni: 0.005000	0.003851	Yes	Channel	Channel
• Temperature unit	• Kelvin (K) • Fahrenheit (°F) • Celsius (°C)	°C	Yes	Channel	Module
• Interference frequency suppression	400 Hz 60 Hz 50 Hz 10 Hz	50 Hz	Yes	Channel	Module
• Smoothing	None/low/medium/high	None	Yes	Channel	Channel
• Reference junction	• Fixed reference temperature • Dynamic reference temperature • Internal reference junction	Internal reference junction	Yes	Channel	Module [4)] • Dynamic reference temperature • Internal reference junction
• Fixed reference temperature	Temperature	25 °C	Yes	Channel	--- [4)]

Parameters	Range of values	Default setting	Reconfigu-ration in RUN	Scope with configuration software, e.g., STEP 7 (TIA Portal)	
				Integrated in the hardware catalog STEP 7, as of V13 or GSD file PROFINET IO	GSD file PROFIBUS DP
Hardware interrupts					
• Hardware interrupt low limit 1	Yes/No	No	Yes	Channel	--- [4]
• Hardware interrupt high limit 1	Yes/No	No	Yes	Channel	--- [4]
• Hardware interrupt low limit 2	Yes/No	No	Yes	Channel	--- [4]
• Hardware interrupt high limit 2	Yes/No	No	Yes	Channel	--- [4]

[1] If you enable diagnostics for multiple channels, you will receive an alarm surge on failure of the supply voltage because each enabled channel will detect this fault. You can prevent this alarm surge by assigning the diagnostics function to one channel only.

[2] When "Wire break" diagnostics is disabled, the current limit of 1.185 mA is applied to the value status. For measured values below 1.185 mA, the value status is always: 0 = fault.

[3] You can set the effective range of the diagnostics for each channel in the user program with data records 0 to 3.

[4] You can set the current limit for wire break diagnostics, the setting "Fixed reference temperature" as well as the limits for hardware interrupts in the user program with data records 0 to 3.

4.3 Declaration of parameters

No supply voltage L+

Enabling of the diagnostics, with missing or too little supply voltage L+.

Overflow

Enabling of the diagnostics if the measured value violates the high limit.

Underflow

Enabling of the diagnostics when the measured value falls below the underrange or for voltage measurement ranges of ± 50 mV to ± 2.5 V if the inputs are not connected.

Common mode error

Enabling of diagnostics if the valid common mode voltage is exceeded.

Enable the Common mode error diagnostics when 2WMT is connected, for example, to check for a short circuit to $ground_{ANA}$ or a wire break. If you do not need the Common mode error diagnostics, disable the parameter.

Reference junction

Enabling of the diagnostics reference junction when the TC channel has no reference temperature or incorrect reference temperature.

Wire break

Enabling of the diagnostics if the module has no current flow or the current is too weak for the measurement at the corresponding configured input or the applied voltage is too low.

Current limit for wire break diagnostics

Threshold for reporting wire breaks. The value can be set to 1.185 mA or 3.6 mA, depending on the sensor used.

Temperature coefficient

The temperature coefficient depends on the chemical composition of the material. In Europe, only one value is used per sensor type (default value).

The temperature coefficient (α value) indicates by how much the resistance of a specific material changes relatively if the temperature increases by 1 °C.

The further values facilitate a sensor-specific setting of the temperature coefficient and enhance accuracy.

Interference frequency suppression

At analog input modules, this suppresses interference caused by the frequency of AC mains.

The frequency of AC network may corrupt measurements, particularly in the low voltage ranges, and when thermocouples are being used. For this parameter, the user defines the mains frequency prevailing on his system.

Smoothing

The individual measured values are smoothed using filtering. The smoothing can be set in 4 levels.

Smoothing time = number of module cycles (k) x cycle time of the module.

The following figure shows the number of module cycles after which the smoothed analog value is almost 100%, depending on the set smoothing. It is valid for each signal change at the analog input.

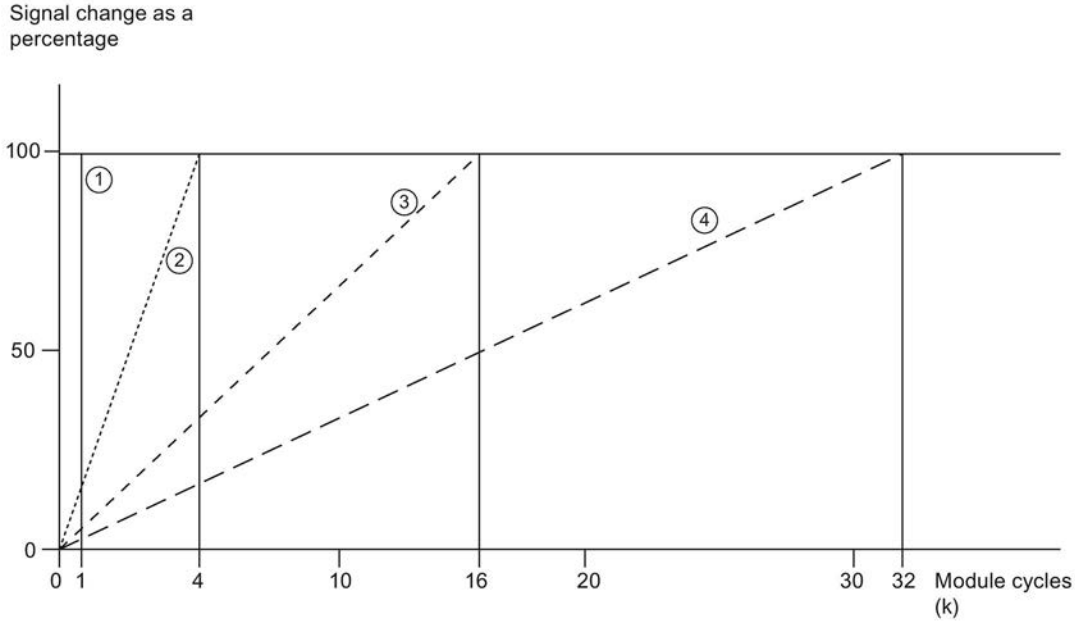

① None (k = 1)
② Weak (k = 4)
③ Medium (k = 16)
④ Strong (k = 32)

Figure 4-3 Smoothing with AI 4xU/I/RTD/TC ST

Reference junction

The following settings can be configured for the reference junction parameter:

Table 4- 3 Possible parameter assignments for the reference junction parameter TC

Setting	Description
Fixed reference temperature	The reference junction temperature is configured and stored in the module as a fixed value.
Dynamic reference temperature	The reference junction temperature is transferred in the user program from the CPU to the module by data records 192 to 195 using the WRREC (SFB 53) instruction.
Internal reference junction	The reference junction temperature is determined using an integrated sensor of the module.

Hardware interrupt 1 or 2

Enabling of a hardware interrupt at violation of high limit 1 or 2 or low limit 1 or 2.

Low limit 1 or 2

Specifies the low limit threshold that triggers hardware interrupt 1 or 2.

High limit 1 or 2

Specifies the high limit threshold that triggers hardware interrupt 1 or 2.

4.4 Address space

The module can be configured in various ways in STEP 7. Depending on the configuration, additional/different addresses are assigned in the process image of the inputs.

Configuration options of AI 4xU/I/RTD/TC ST

You can configure the module with STEP 7 (TIA Portal) or with a GSD file.

When you configure the module by means of the GSD file, the configurations are available under different abbreviations/module names.

The following configurations are possible:

Table 4- 4 Configuration options

Configuration	Short designation/module name in the GSD file	Configuration software, e.g., with STEP 7 (TIA Portal)	
		Integrated in hardware catalog STEP 7 (TIA Portal)	GSD file in STEP 7 (TIA Portal) V12 or higher or STEP 7 V5.5 SP3 or higher
1 x 4-channel without value status	AI 4xU/I/RTD/TC ST	V13 or higher with HSP 0102	X
1 x 4-channel with value status	AI 4xU/I/RTD/TC ST QI	V13 or higher with HSP 0102	X
4 x 1-channel without value status	AI 4xU/I/RTD/TC ST S	V13 Update 3 or higher (PROFINET IO only)	X (PROFINET IO only)
4 x 1-channel with value status	AI 4xU/I/RTD/TC ST S QI	V13 Update 3 or higher (PROFINET IO only)	X (PROFINET IO only)
1 x 4-channel with value status for module-internal shared input with up to 4 submodules	AI 4xU/I/RTD/TC ST MSI	V13 Update 3 or higher (PROFINET IO only)	X (PROFINET IO only)

Value status (Quality Information, QI)

The value status is always activated for the following module names:

- AI 4xU/I/RTD/TC ST QI
- AI 4xU/I/RTD/TC ST S QI
- AI 4xU/I/RTD/TC ST MSI

An additional bit is assigned to each channel for the value status. The value status bit indicates if the read in digital value is valid. (0 = value is incorrect).

Address space for configuration as 1 x 4-channel AI 4xU/I/RTD/TC ST QI

The figure below shows the address space assignment for configuration as a 1 x 4-channel module. You can freely assign the start address for the module. The addresses of the channels are derived from the start address.

"IB x" stands, for example, for the module start address input byte x.

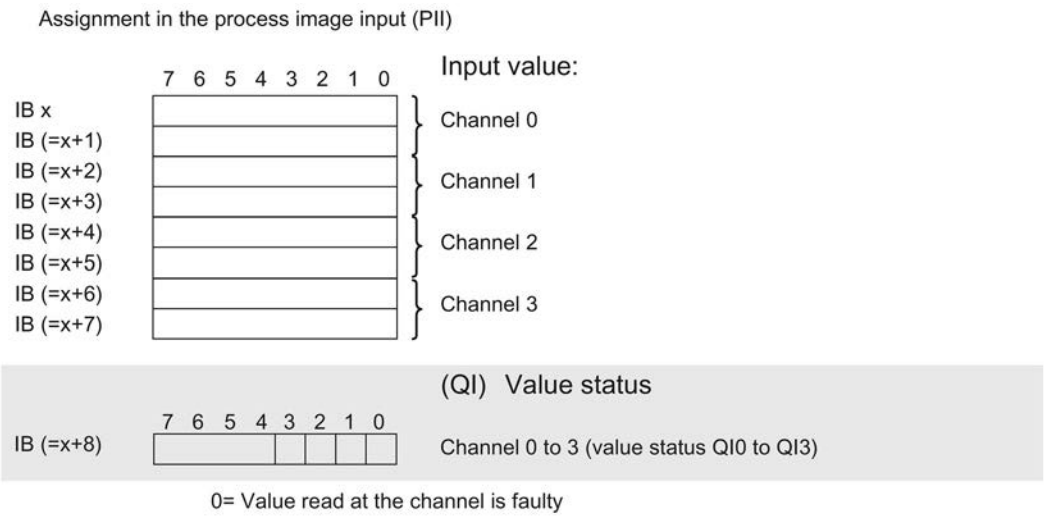

Figure 4-4 Address space for configuration as 1 x 4-channel AI 4xU/I/RTD/TC ST QI with value status

Address space for configuration as 4 x 1-channel AI 4xU/I/RTD/TC ST S QI

For the configuration as a 4 x 1-channel module, the channels of the module are divided into multiple submodules. The submodules can be assigned to different IO controllers when the module is used in a shared device.

The number of usable IO controllers depends on the interface module used. Please observe the information in the manual for the particular interface module.

Unlike the 1 x 4-channel module configuration, each of the four submodules has a freely assignable start address.

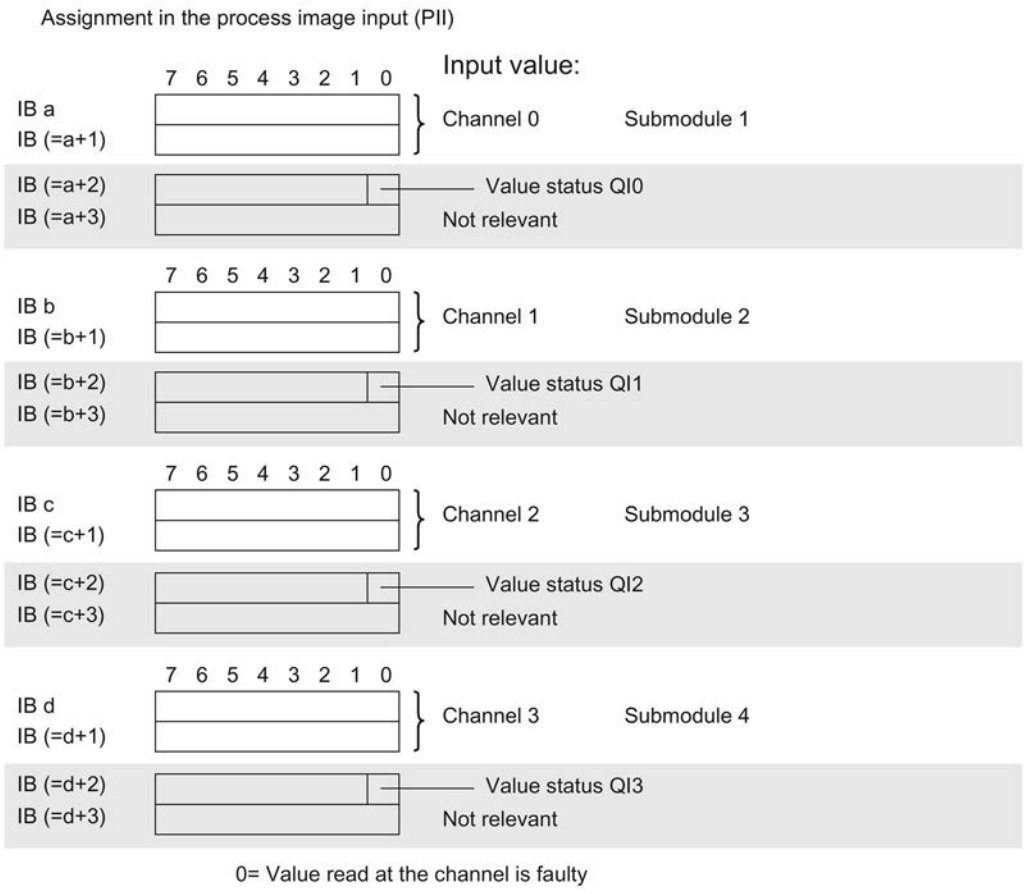

Figure 4-5 Address space for configuration as 4 x 1-channel AI 4xU/I/RTD/TC ST S QI with value status

Address space for configuration as 1 x 4-channel AI 4xU/I/RTD/TC ST MSI

The channels 0 to 3 of the module are copied in up to 4 submodules with configuration 1 x 4-channel module (Module-internal shared input, MSI). Channels 0 to 3 are then available with identical input values in different submodules. These submodules can be assigned to up to four IO controllers when the module is used in a shared device. Each IO controller has read access to the same channels.

The number of available submodules depends on the used interface module. Please observe the information in the manual for the particular interface module.

Value status (Quality Information, QI)

The meaning of the value status depends on the submodule on which it occurs.

For the 1st submodule (= basic submodule), the value status 0 indicates that the value is incorrect.

For the 2nd to 4th submodule (=MSI submodule), the value status 0 indicates that the value is incorrect or the basic submodule has not yet been configured (not ready).

The figure below shows the assignment of the address space with submodules 1 and 2.

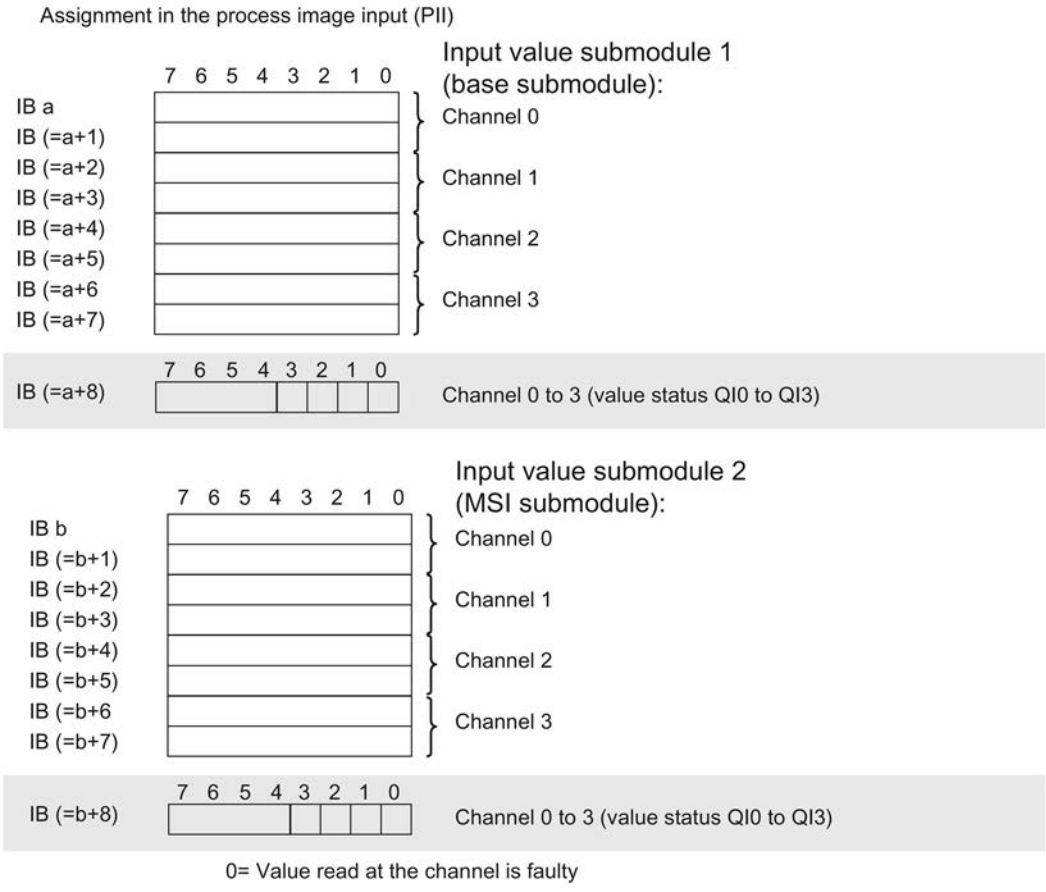

Figure 4-6 Address space for configuration as 1 x 4-channel AI 4xU/I/RTD/TC ST MSI with value status

The following figure shows the assignment of the address space with submodule 3 and 4.

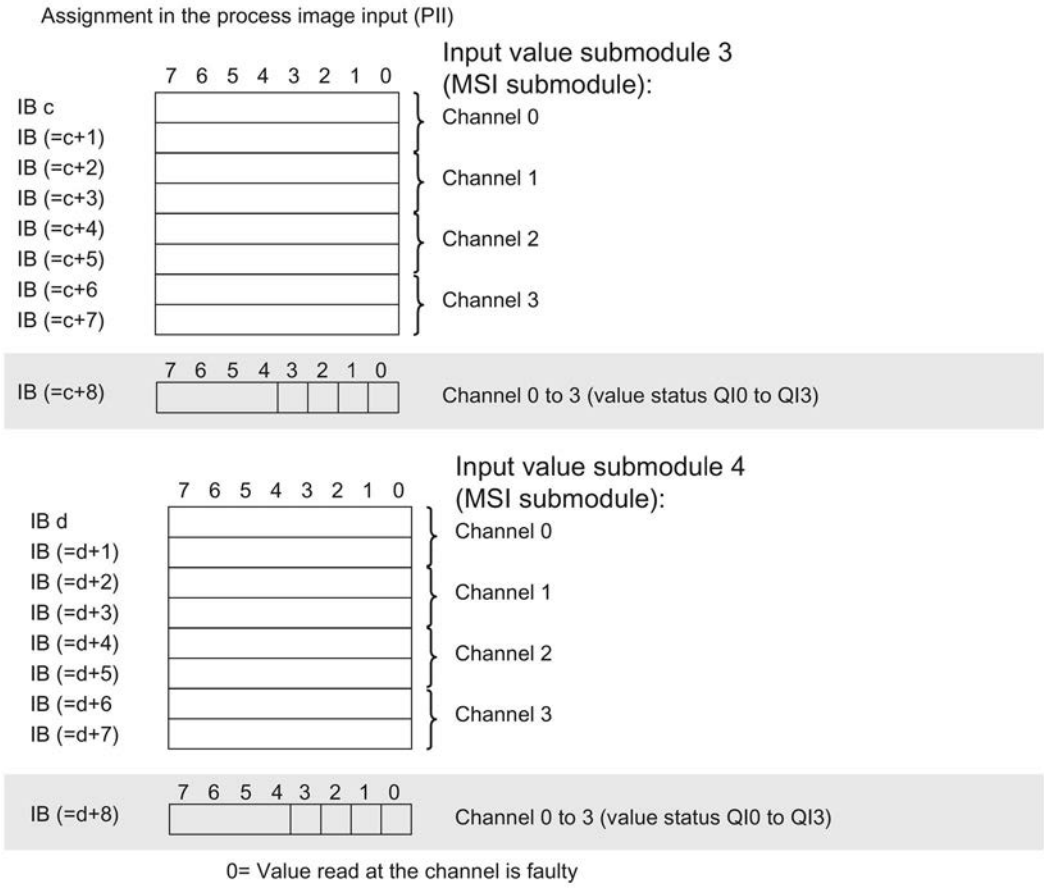

Figure 4-7 Address space for configuration as 1 x 4-channel AI 4xU/I/RTD/TC ST MSI with value status

Reference

You can find information on the Shared Input/Output (MSI/MSO) function in the section Module-Internal Shared Input/Output (MSI/MSO) of the PROFINET with STEP 7 V13 (https://support.industry.siemens.com/cs/ww/en/view/49948856) function manual.

Interrupts/diagnostics alarms

5

5.1 Status and error displays

LED displays

The figure below shows the LED displays (status and error displays) of AI 4xU/I/RTD/TC ST.

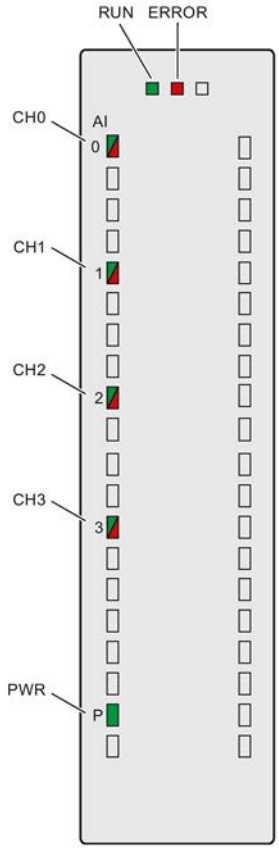

Figure 5-1 LED displays of the module AI 4xU/I/RTD/TC ST

Meaning of the LED displays

The following tables explain the meaning of the status and error displays. Corrective measures for diagnostics alarms can be found in the section Diagnostics alarms (Page 41).

LED RUN/ERROR

Table 5- 1 RUN/ERROR status and error displays

LEDs		Meaning	Solution
RUN	ERROR		
□ Off	□ Off	Voltage missing or too low at backplane bus.	• Switch on the CPU and/or the system power supply modules. • Verify that the U connectors are inserted. • Check to see if too many modules are inserted.
☼ Flashes	□ Off	The module starts and flashes until the valid configuration is set.	---
■ On	□ Off	Module is configured.	
■ On	☼ Flashes	Indicates module errors (at least one error at one channel, e.g., wire break).	Evaluate the diagnostics data and eliminate the error (e.g., wire break).
☼ Flashes	☼ Flashes	Hardware defective.	Replace the module.

PWR LED

Table 5- 2 PWR status display

LED PWR	Meaning	Solution
□ Off	Supply voltage L+ to module too low or missing	Check supply voltage L+.
■ On	Supply voltage L+ is present and OK.	---

CHx LED

Table 5- 3 CHx status display

LED CHx	Meaning	Solution
□ Off	Channel disabled.	---
■ On	Channel configured and OK.	---
■ On	Channel is configured (channel error pending). Diagnostics alarm: e.g. wire break	Check the wiring Disable diagnostics.

5.2 Interrupts

Analog input module AI 4xU/I/RTD/TC ST supports the following diagnostic and hardware interrupts.

You can find detailed information on the event in the error organization block with the "RALRM" instruction (read additional interrupt info) and in the STEP 7 online help.

Diagnostic interrupt

The module generates a diagnostic interrupt at the following events:

- Missing supply voltage L+
- Wire break
- Overflow
- Underflow
- Common mode error
- Reference junction
- Parameter assignment error

Hardware interrupt

The module generates a hardware interrupt at the following events:

- Low limit violated 1
- High limit violated 1
- Low limit violated 2
- Above high limit 2

The module channel that triggered the hardware interrupt is entered in the start information of the organization block. The diagram below shows the assignment to the bits of double word 8 in local data.

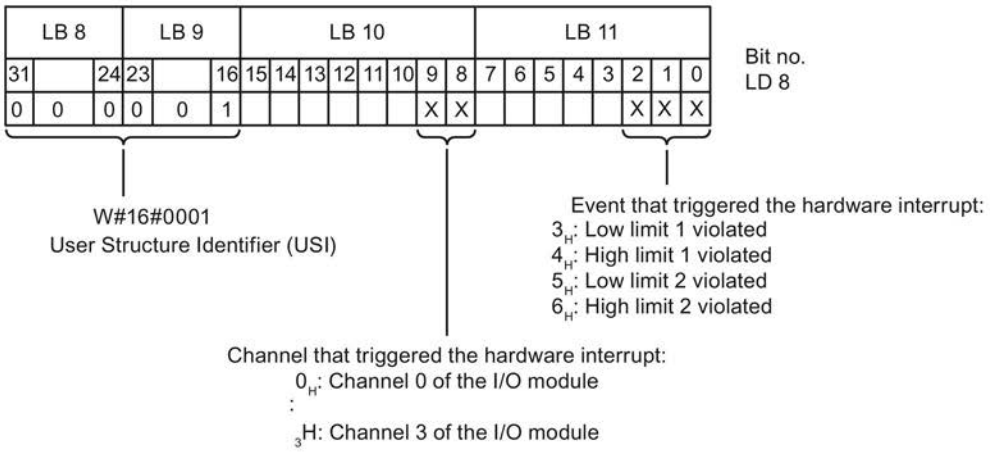

Figure 5-2 OB start information

Reaction when reaching limits 1 and 2 at the same time

If the two high limits 1 and 2 are reached at the same time, the module always signals the hardware interrupt for high limit 1 first. The configured value for high limit 2 is irrelevant. After processing the hardware interrupt for high limit 1, the module triggers the hardware interrupt for high limit 2.

The module has the same reaction when the low limits are reached at the same time. If the two low limits 1 and 2 are reached at the same time, the module always signals the hardware interrupt for low limit 1 first. After processing the hardware interrupt for low limit 1, the module triggers the hardware interrupt for low limit 2.

Structure of the additional interrupt information

Table 5- 4 Structure of USI = W#16#0001

Data block name		Contents	Remark	Bytes
USI (User Structure Identifier)		W#16#0001	Additional interrupt info for hardware interrupts of the I/O module	2
The channel that triggered the hardware interrupt follows.				
	Channel	B#16#00 to B#16#n	Number of the event-triggering channel (n = number of module channels -1)	1
The event that triggered the hardware interrupt follows.				
	Event	B#16#03	Low limit violated 1	1
		B#16#04	High limit violated 1	
		B#16#05	Low limit violated 2	
		B#16#06	Violation of high limit 2	

5.3 Diagnostics alarms

A diagnostics alarm is generated and the ERROR LED flashes on the module for each diagnostics event. The diagnostics alarms can be read out in the diagnostics buffer of the CPU, for example. You can evaluate the error codes with the user program.

Table 5- 5 Diagnostics alarms, their meaning and corrective measures

Diagnostics alarm	Error code	Meaning	Solution
Wire break	6_H	Impedance of encoder circuit too high	Use a different encoder type or modify the wiring, for example, using cables with larger cross-section
		Wire break between the module and sensor	Connect the cable
		Channel not connected (open)	• Disable diagnostics • Connect the channel
Overflow	7_H	Measuring range violated	Check the measuring range
Underflow	8_H	Measuring range violated	Check the measuring range
Parameter assignment error	10_H	• The module cannot evaluate parameters for the channel • Incorrect parameter assignment	Correct the parameter assignment
Load voltage missing	11_H	Supply voltage L+ of the module is missing	Connect supply voltage L+ to module/channel
Reference channel error	15_H	Reference temperature of the reference junction for the operated TC channel with compensation is invalid.	Check the resistance thermometer. For the compensation with data record, restore communication to the module/station.
Common mode error	118_H	Valid common mode voltage exceeded Causes when a 2WT is connected, e.g.: • Wire break • Galvanic connection to M_{ANA}	Check the wiring, e.g. sensor ground connections, use equipotential cables
Channel temporarily unavailable	$1F_H$	User calibration is active. Channel currently not providing current/valid values.	Exit user calibration.

Diagnostics alarms with value status (QI)

If you configure the module with value status (QI), the module always checks all errors even if the respective diagnostics is not enabled. But the module cancels the inspection as soon as it detects the first error, regardless if the respective diagnostics has been enabled or not. The result may be that enabled diagnostics may not be displayed.

Example: You have enabled "Underflow" diagnostics, but the module detects the "Wire break" diagnostics first and aborts after this error message. The "Underflow" diagnostics is not detected.

Recommendation: To ensure that all errors can be diagnosed reliably, select all check boxes under "Diagnostics".

Technical specifications

6

Technical specifications of the AI 4xU/I/RTD/TC ST

	6ES7531-7QD00-0AB0
General information	
Product type designation	AI 4xU/I/RTD/TC ST
Hardware functional status	FS01
Firmware version	V1.0.0
• FW update possible	Yes
Product function	
I&M data	Yes; I&M0 to I&M3
Scalable measuring range	No
Scalable measured values	No
Measuring range adjustment	No
Engineering with	
STEP 7 TIA Portal can be configured/integrated as of version	V13 / V13.0.2
STEP 7 can be configured/integrated as of version	V5.5 SP3 / -
PROFIBUS as of GSD version/GSD revision	V1.0 / V5.1
PROFINET as of GSD version/GSD revision	V2.3 / -
Operating mode	
Oversampling	No
MSI	Yes
CiR Configuration in RUN	
Parameter assignment in RUN possible	Yes
Calibration in RUN possible	Yes
Supply voltage	
Rated value (DC)	24 V
Valid range, low limit (DC)	20.4 V
Valid range, high limit (DC)	28.8 V
Reverse polarity protection	Yes
Input current	
Current consumption, max.	140 mA; with 24 V DC supply
Encoder supply	
24 V encoder supply	
Short-circuit protection	Yes
Output current, max.	53 mA
Power	
Power consumption from backplane bus	0.7 W

	6ES7531-7QD00-0AB0
Power loss	
Power loss, typ.	2.3 W
Analog inputs	
Number of analog inputs	4
• For current measurement	4
• For voltage measurement	4
• For resistance/resistance thermometer measurement	2
• For thermocouple measurement	4
Permissible input voltage for voltage input (destruction limit), max.	28.8 V
Permissible input current for current input (destruction limit), max.	40 mA
Technical unit for temperature measurement, can be set	Yes; °C / °F / K
Analog input with oversampling	No
Standardization of measured values	No
Input ranges (rated values), voltages	
0 to +5 V	No
0 to +10 V	No
1 V to 5 V	Yes
Input resistance (1 V to 5 V)	100 kΩ
-1 V to +1 V	Yes
Input resistance (-1 V to +1 V)	10 MΩ
-10 V to +10 V	Yes
Input resistance (-10 V to +10 V)	100 kΩ
-2.5 V to +2.5 V	Yes
Input resistance (-2.5 V to +2.5 V)	10 MΩ
-25 mV to +25 mV	No
-250 mV to +250 mV	Yes
Input resistance (-250 mV to +250 mV)	10 MΩ
-5 V to +5 V	Yes
Input resistance (-5 V to +5 V)	100 kΩ
-50 mV to +50 mV	Yes
Input resistance (-50 mV to +50 mV)	10 MΩ
-500 mV to +500 mV	Yes
Input resistance (-500 mV to +500 mV)	10 MΩ
-80 mV to +80 mV	Yes
Input resistance (-80 mV to +80 mV)	10 MΩ

	6ES7531-7QD00-0AB0
Input ranges (rated values), currents	
0 mA to 20 mA	Yes
Input resistance (0 mA to 20 mA)	25 Ω; plus approx. 42 ohm for overvoltage protection by PTC
-20 mA to +20 mA	Yes
Input resistance (-20 mA to +20 mA)	25 Ω; plus approx. 42 ohm for overvoltage protection by PTC
4 mA to 20 mA	Yes
Input resistance (4 mA to 20 mA)	25 Ω; plus approx. 42 ohm for overvoltage protection by PTC
Input ranges (rated values), thermocouples	
Type B	Yes
Input resistance (type B)	10 MΩ
Type C	No
Type E	Yes
Input resistance (type E)	10 MΩ
Type J	Yes
Input resistance (type J)	10 MΩ
Type K	Yes
Input resistance (type K)	10 MΩ
Type L	No
Type N	Yes
Input resistance (type N)	10 MΩ
Type R	Yes
Input resistance (type R)	10 MΩ
Type S	Yes
Input resistance (type S)	10 MΩ
Type T	Yes
Input resistance (type T)	10 MΩ
Type U	No
Type TXK/TXK(L) according to GOST	No
Input ranges (rated values), resistance thermometer	
Cu 10	No
Cu 10 according to GOST	No
Cu 50	No
Cu 50 according to GOST	No
Cu 100	No
Cu 100 according to GOST	No
Ni 10	No
Ni 10 according to GOST	No
Ni 100	Yes; Standard/Climate
Input resistance (Ni 100)	10 MΩ
Ni 100 according to GOST	No

	6ES7531-7QD00-0AB0
Ni 1000	Yes; Standard/Climate
Input resistance (Ni 1000)	10 MΩ
Ni 1000 according to GOST	No
LG-Ni 1000	Yes; Standard/Climate
Input resistance (LG-Ni 1000)	10 MΩ
Ni 120	No
Ni 120 according to GOST	No
Ni 200	No
Ni 200 according to GOST	No
Ni 500	No
Ni 500 according to GOST	No
Pt 10	No
Pt 10 according to GOST	No
Pt 50	No
Pt 50 according to GOST	No
Pt 100	Yes; Standard/Climate
Input resistance (Pt 100)	10 MΩ
Pt 100 according to GOST	No
Pt 1000	Yes; Standard/Climate
Input resistance (Pt 1000)	10 MΩ
Pt 1000 according to GOST	No
Pt 200	Yes; Standard/Climate
Input resistance (Pt 200)	10 MΩ
Pt 200 according to GOST	No
Pt 500	Yes; Standard/Climate
Input resistance (Pt 500)	10 MΩ
Pt 500 according to GOST	No
Input ranges (rated values), resistors	
0 ohm to 150 ohm	Yes
Input resistance (0 ohm to 150 ohm)	10 MΩ
0 ohm to 300 ohm	Yes
Input resistance (0 ohm to 300 ohm)	10 MΩ
0 ohm to 600 ohm	Yes
Input resistance (0 ohm to 600 ohm)	10 MΩ
0 to 3000 Ohm	No
0 ohm to 6000 ohm	Yes
Input resistance (0 ohm to 6000 ohm)	10 MΩ
PTC	Yes
Input resistance (PTC)	10 MΩ

	6ES7531-7QD00-0AB0
Thermocouple (TC)	
Temperature compensation	
• Configurable	Yes
• Internal temperature compensation	Yes
• External temperature compensation via RTD	Yes
• Compensation for 0 °C reference point temperature	Yes, fixed value can be set
• Reference channel of the module	No
Cable length	
shielded, max.	800 m; for U/I, 200 m for R/RTD, 50 m for TC
Analog value generation for the inputs	
Integration and conversion time/resolution per channel	
Resolution with overrange (bit including sign), max.	16 bit
Configurable integration time	Yes
Integration time (ms)	2.5 / 16.67 / 20 / 100 ms
Basic conversion time including integration time (ms)	9 / 23 / 27 / 107 ms
• Additional conversion time for wire break monitoring	9 ms (to be included in R/RTD/TC measurement)
• Additional conversion time for wire break measurement	150 Ohm, 300 Ohm, 600 Ohm, Pt100. Pt200. Ni100: 2 ms, 6000 Ohm, Pt500. Pt1000. Ni1000. LG-Ni1000. PTC: 4 ms
Interference voltage suppression at interference frequency f1 in Hz	400 / 60 / 50 / 10
Time for offset calibration (per module)	Basic conversion time of the slowest channel
Smoothing of the measured values	
Configurable	Yes
Level: None	Yes
Level: Weak	Yes
Level: Medium	Yes
Level: Strong	Yes
Encoders	
Connection of the signal encoders	
For voltage measurement	Yes
for current measurement as 2-wire transducer	Yes
• Load of 2-wire transmitter, max.	820 Ω
for current measurement as 4-wire transducer	Yes
for resistance measurement with two-wire connection	Yes; only for PTC
for resistance measurement with three-wire connection	Yes; all measuring ranges except PTC; internal compensation of line resistance
For resistance measurement with four-wire connection	Yes; all measuring ranges except PTC

	6ES7531-7QD00-0AB0
Errors/accuracies	
Linearity error (in relation to input range), (+/-)	0.02%
Temperature error (in relation to input range), (+/-)	0.005%/K; for TC typ. T 0.02 +/- %/K
Crosstalk between the inputs, max.	-80 dB
Repeat accuracy in settled state at 25 °C (in relation to input range), (+/-)	0.02%
Temperature errors of internal compensation	+/-6 °C
Operational limit in the entire temperature range	
Voltage in relation to input range, (+/-)	0.3%
Current in relation to input range, (+/-)	0.3%
Resistance in relation to input range, (+/-)	0.3%
Resistance thermometer in relation to input range, (+/-)	0.3%; Ptxxx Standard: ±1.5 K, Ptxxx Climatic: ±0.5 K, Nixxx Standard: ±0.5 K, Nixxx Climatic: ±0.3 K
Thermocouple in relation to input range, (+/-)	0.3%; Type B: > 600 °C ±4.6 K, Type E: > -200 °C ±1.5 K, Type J: > -210 °C ±1.9 K, Type K: > -200 °C ±2.4 K, Type N: > -200 °C ±2.9 K, Type R: > 0 °C ±4.7 K, Type S: > 0 °C ±4.6 K, Type T: > -200 °C ±2.4 K
Basic error limit (operational limit at 25 °C)	
Voltage in relation to input range, (+/-)	0.1%
Current in relation to input range, (+/-)	0.1%
Resistance in relation to input range, (+/-)	0.1%
Resistance thermometer in relation to input range, (+/-)	0.1%; Ptxxx Standard: ±0.7 K, Ptxxx Climatic: ±0.2 K, Nixxx Standard: ±0.3 K, Nixxx Climatic: ±0.15 K
Thermocouple in relation to input range, (+/-)	0.1%; Type B: > 600 °C ±1.7 K, Type E: > -200 °C ±0.7 K, Type J: > -210 °C ±0.8 K, Type K: > -200 °C ±1.2 K, Type N: > -200 °C ±1.2 K, Type R: > 0 °C ±1.9 K, Type S: > 0 °C ±1.9 K, Type T: > -200 °C ±0.8 K
Interference voltage suppression for f = n x (f1 +/- 1 %), f1 = interference frequency	
Series mode interference (peak value of interference < rated value of input range), min.	40 dB
Common mode voltage, max.	10 V
Common mode interference, min.	60 dB
Isochronous mode	
Isochronous mode (application synchronized up to terminal)	No
Interrupts/diagnostics/status information	
Diagnostics function	Yes
Interrupts	
Diagnostic interrupt	Yes
Limit interrupt	Yes; two high limits and two low limits each

	6ES7531-7QD00-0AB0
Diagnostics alarms	
Monitoring of supply voltage	Yes
Wire break	Yes; only for 1 ... 5 V, 4 ... 20 mA, TC, R and RTD
Overflow/underflow	Yes
Diagnostics display LED	
RUN LED	Yes; green LED
ERROR LED	Yes; red LED
Monitoring of supply voltage (PWR LED)	Yes; green LED
Channel status display	Yes; green LED
For channel diagnostics	Yes; red LED
For module diagnostics	Yes; red LED
Electrical isolation	
Electrical isolation of channels	
Between the channels	No
Between the channels, in groups of	4
Between the channels and backplane bus	Yes
Between the channels and power supply of the electronics	Yes
Permissible potential difference	
Between the inputs (UCM)	20 V DC
Between the inputs and MANA (UCM)	10 V DC
Insulation	
Insulation tested with	707 V DC (type test)
Ambient conditions	
Ambient temperature during operation	
Horizontal mounting position, min.	0 °C
Horizontal mounting position, max.	60 °C
Vertical mounting position, min.	0 °C
Vertical mounting position, max.	40 °C
Distributed mode	
Prioritized startup	No

	6ES7531-7QD00-0AB0
Dimensions	
Width	25 mm
Height	147 mm
Depth	129 mm
Weights	
Weight, approx.	210 g
Miscellaneous	
Note:	Package includes 40-pin push-in front connector Additional basic error and noise for integration time = 2.5 ms: Voltage: ±250 mV (±0.02%), ±80 mV (±0.05%), ±50 mV (±0.05%); resistance: 150 Ohm (±0.02%); resistance thermometer: Pt100 Climatic: ±0.08 K, Ni100 Climatic: ±0.08 K; thermocouple: Type B, R, S: ±3 K, Type E, J, K, N, T: ±1 K

Dimension drawing

A

The dimension drawing of the module on the mounting rail, as well as a dimension drawing with open front panel are provided in the appendix. Always adhere to the specified dimensions for installation in cabinets, control rooms, etc.

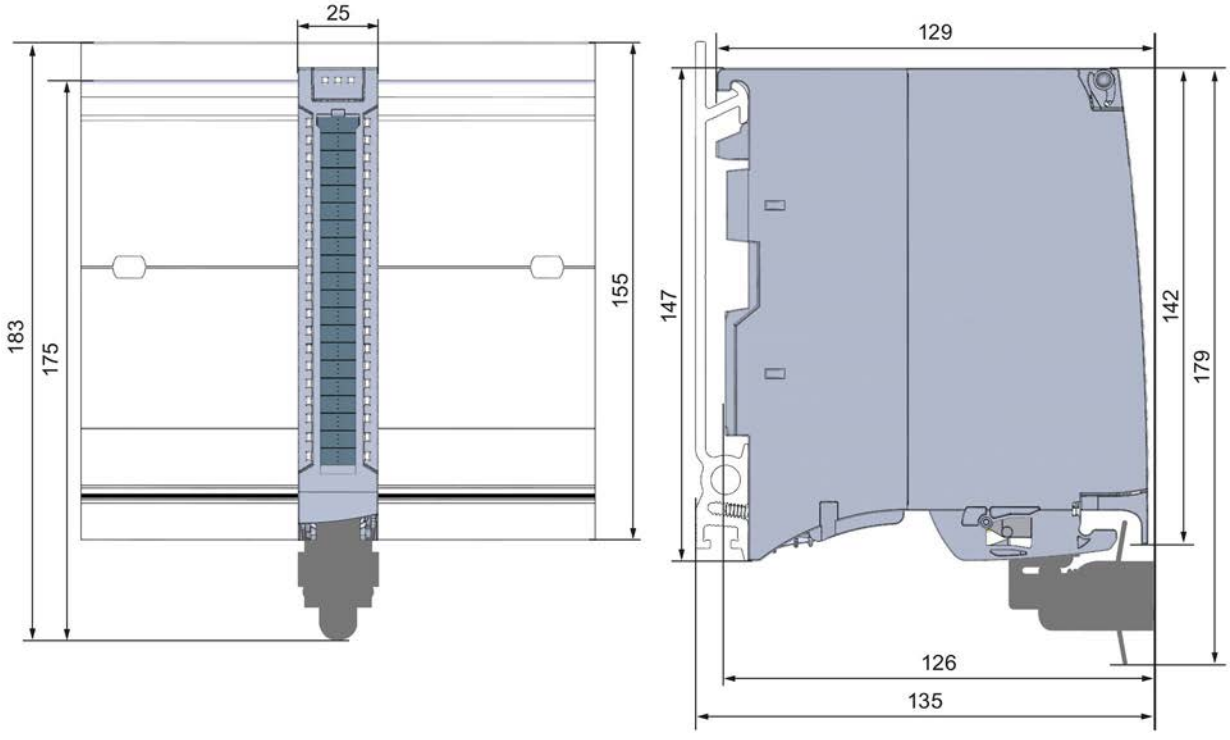

Figure A-1 Dimension drawing of the AI 4xU/I/RTD/TC ST module

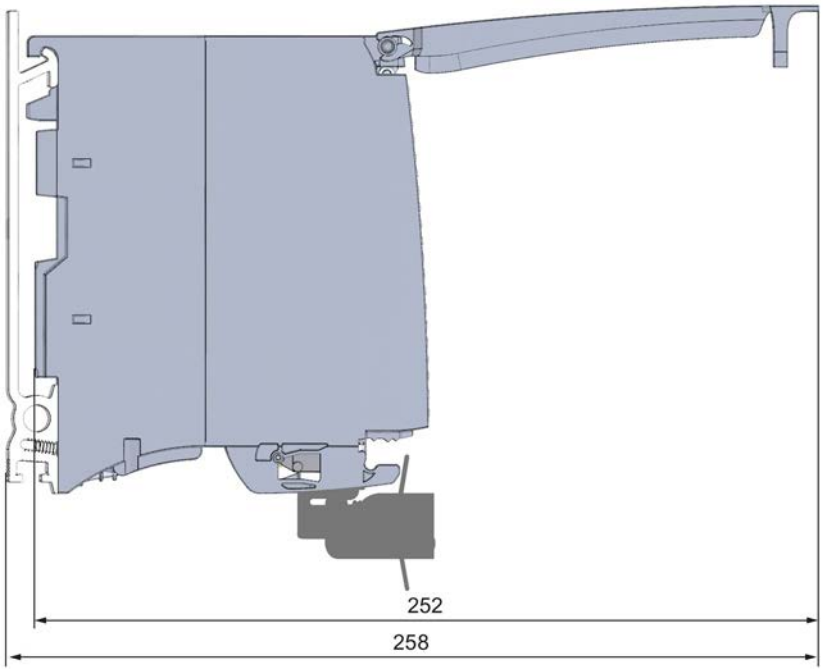

Figure A-2 Dimension drawing of the AI 4xU/I/RTD/TC ST module, side view with open front panel

Parameter data records

B

B.1 Parameter assignment and structure of the parameter data records

The data records of the module have an identical structure, regardless of whether you configure the module with PROFIBUS DP or PROFINET IO.

Dependencies for configuration with GSD file

When configuring the module with a GSD file, remember that the settings of some parameters are dependent on each other. The parameters are only checked for plausibility by the module after the transfer to the module.

The following table lists the parameters that depend on one another.

Table B- 1 Dependencies of parameters for configuration with GSD file

Device-specific parameters (GSD file)	Dependent parameters
Current limit for wire break	Only for **measurement type** current with **measuring range** 4 to 20 mA.
Wire break	Only for **measurement type** resistance, thermistor RTD, thermocouple TC, voltage with **measuring range** 1V to 5 V and current with **measuring range** 4 to 20 mA.
Common mode error	Only for **measuring type** voltage, current and thermocouple TC.
Reference junction	Only for **measurement type** thermocouple TC.
Measurement type resistance (4-wire connection, 3-wire connection, 2-wire connection)	Configurable for even channels (0 and 2) only. The next odd channel (1 and 3) must be disabled.
Measurement type thermistor RTD (4-wire connection, 3-wire connection)	
Hardware interrupt limits	Only if hardware interrupts are enabled.
Fixed reference temperature	Only if the **Reference junction** parameter and the **Fixed reference temperature** value is configured.

Parameter assignment in the user program

The module parameters can be assigned in RUN (for example, measuring ranges of selected channels can be edited in RUN without having an effect on the other channels).

Parameter assignment in RUN

The WRREC instruction is used to transfer the parameters to the module using data records 0 to 3. The parameters set in STEP 7 do not change in the CPU, which means the parameters set in STEP 7 are still valid after a restart.

The parameters are only checked for plausibility by the module after the transfer to the module.

Output parameter STATUS

If errors occur during the transfer of parameters with the WRREC instruction, the module continues operation with the previous parameter assignment. However, a corresponding error code is written to the STATUS output parameter.

The description of the WRREC instruction and the error codes is available in the STEP 7 online help.

Operation of the module downstream from a PROFIBUS DP interface module

If the module is operated downstream from a IM PROFIBUS DP interface module, the parameter data records 0 and 1 cannot be read back. You get the diagnostics data records 0 and 1 for the read back parameter data records 0 and 1. You can find more information in the Interrupts section of the PROFIBUS DP interface module product manual on the Internet (http://support.automation.siemens.com/WW/view/en/78324181).

Assignment of data record and channel

For the configuration as a 1 x 4-channel module, the parameters are located in data records 0 to 3 and are assigned as follows:

- Data record 0 for channel 0
- Data record 1 for channel 1
- Data record 2 for channel 2
- Data record 3 for channel 3

For configuration 1 x 4-channel, the module has 4 submodules with one channel each. The parameters for the channel are available in data record 0 and are assigned as follows:

- Data record 0 for channel 0 (submodule 1)
- Data record 0 for channel 1 (submodule 2)
- Data record 0 for channel 2 (submodule 3)
- Data record 0 for channel 3 (submodule 4)

Address the respective submodule for data record transfer.

Data record structure

The example in the following figure shows the structure of data record 0 for channel 0. The structure of channels 1 to 3 is identical. The values in byte 0 and byte 1 are fixed and may not be changed.

Enable a parameter by setting the corresponding bit to "1".

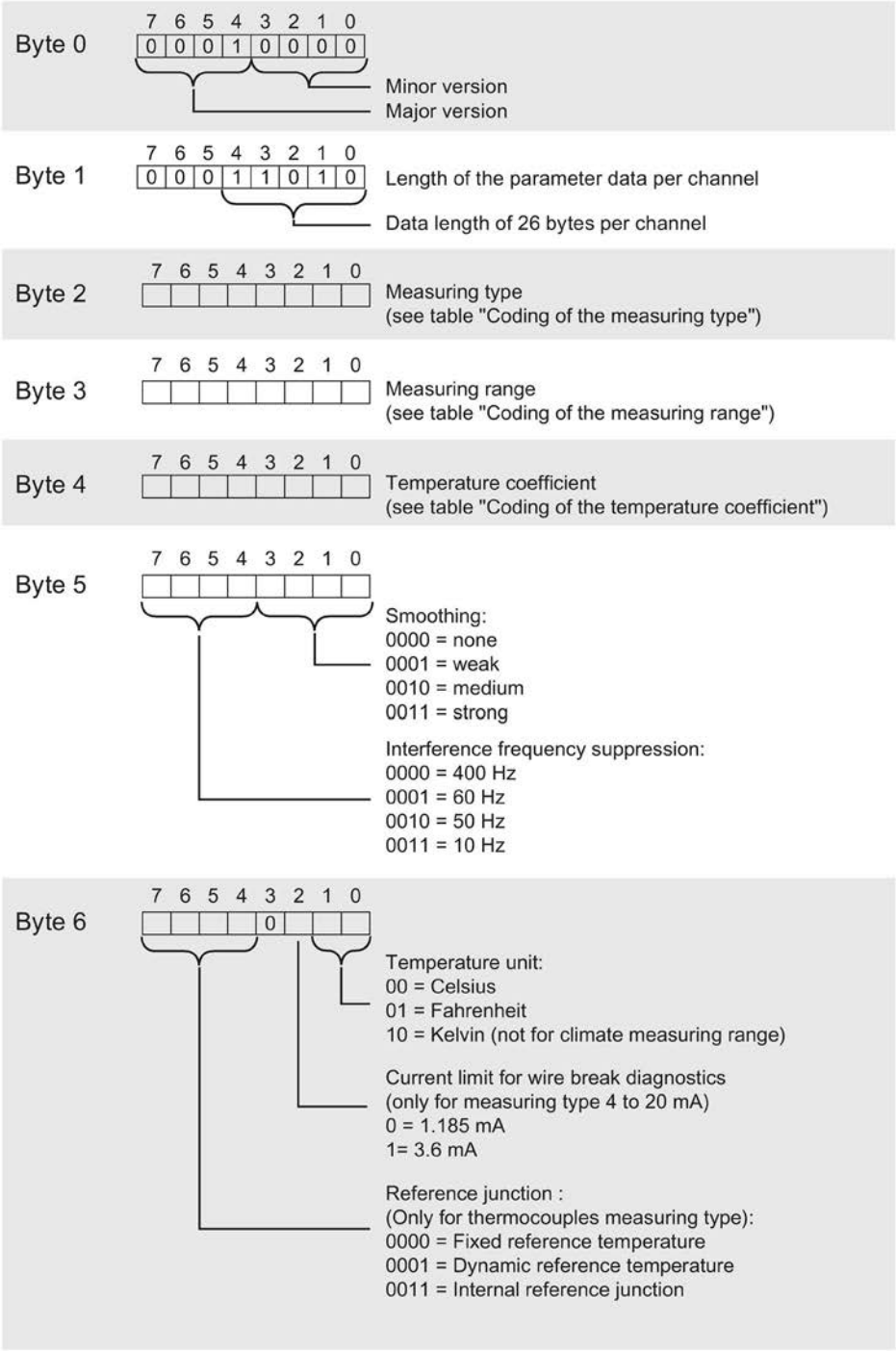

Figure B-1 Structure of data record 0: Bytes 0 to 6

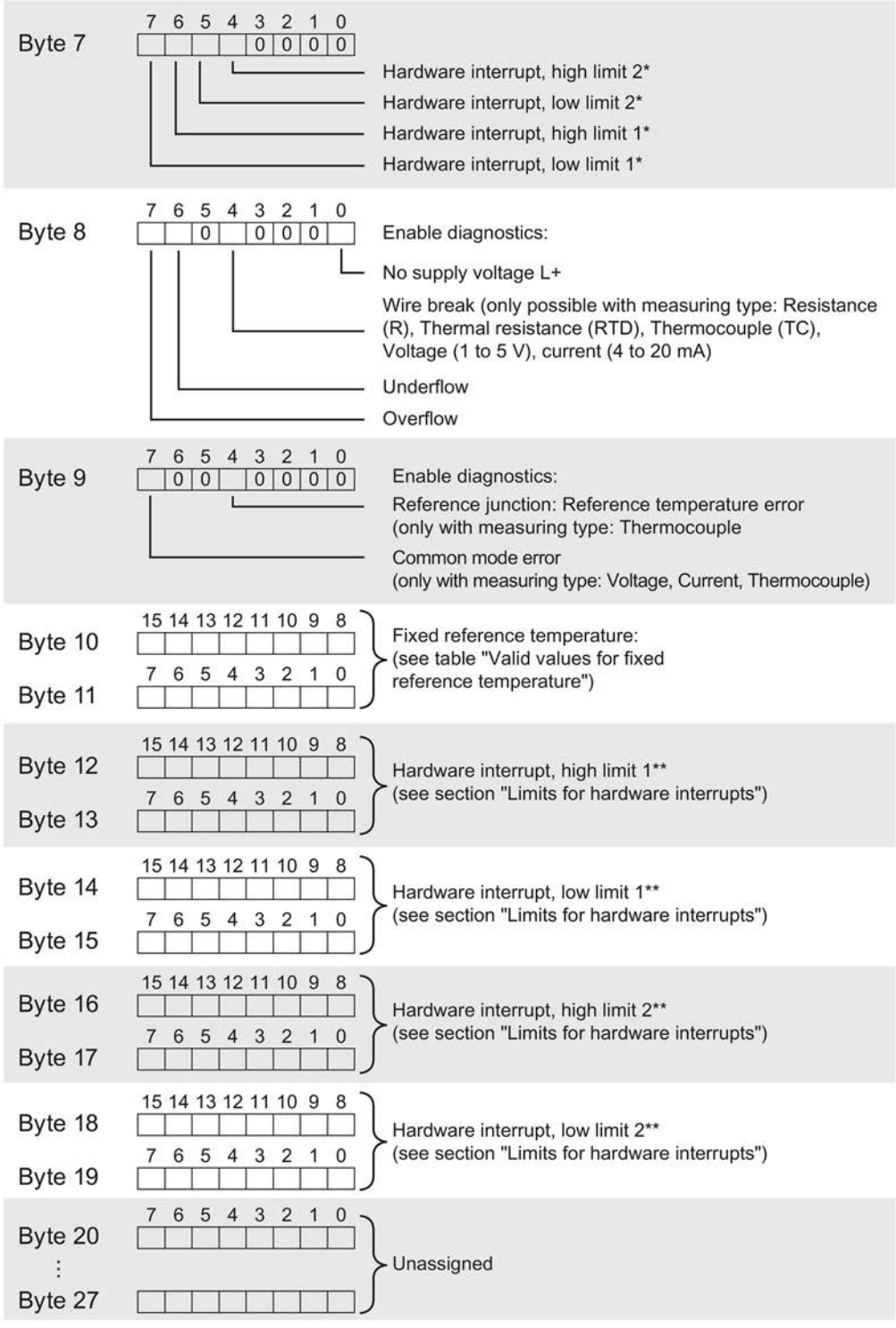

* Enabling of hardware interrupts via data record is only possible if the channel is assigned to a hardware interrupt OB in STEP 7

** High limit must be greater than low limit

Figure B-2 Structure of data record 0: Bytes 7 to 27

Codes for measurement types

The following table lists all measurement types of the analog input module along with their codes. Enter these codes at byte 2 of the data record for the corresponding channel (see the figure Structure of data record 0: Bytes 7 to 27).

Table B- 2 Code for the measurement type

Measurement type	Code
Disabled	0000 0000
Voltage	0000 0001
Current, 2-wire transmitter	0000 0011
Current, 4-wire transmitter	0000 0010
Resistance, 4-wire connection *) **)	0000 0100
Resistance, 3-wire connection *) **)	0000 0101
Resistance, 2-wire connection *) ***)	0000 0110
Thermal resistor linear, 4-wire connection *)	0000 0111
Thermal resistor linear, 3-wire connection *)	0000 1000
Thermocouple	0000 1010

*) only possible for channels 0 and 2

**) only for the following measuring ranges: 150 Ω, 300 Ω, 600 Ω, 6 kΩ

***) only for measuring range PTC

Special feature for configuration

When you set one of the following measurement types at channel 0 or channel 2:

- Resistance, 4-wire connection
- Resistance, 3-wire connection
- Resistance, 2-wire connection
- Thermal resistor linear, 4-wire connection
- Thermal resistor linear, 3-wire connection

then one of the following channels must be disabled.

Example:

You have configured "Resistance, 4-wire connection" at channel 0; channel 1 must be disabled. You have configured "Resistance, 2-wire connection" at channel 2; channel 3 must be disabled.

Codes for measuring ranges

The following table lists all measuring ranges of the analog input module along with their codes. Enter these codes accordingly at byte 3 of the data record for the corresponding channel (see the figure Structure of data record 0: Bytes 7 to 27).

Table B- 3 Code for the measuring range

Measuring range	Code
Voltage	
±50 mV	0000 0001
±80 mV	0000 0010
±250 mV	0000 0011
±500 mV	0000 0100
±1 V	0000 0101
±2.5 V	0000 0111
±5 V	0000 1000
±10 V	0000 1001
1 V to 5 V	0000 1010
Current, 4-wire transmitter	
0 mA to 20 mA	0000 0010
4 mA to 20 mA	0000 0011
±20 mA	0000 0100
Current, 2-wire transmitter	
4 mA to 20 mA	0000 0011
Resistor	
150 Ω	0000 0001
300 Ω	0000 0010
600 Ω	0000 0011
6 kΩ	0000 0101
PTC	0000 1111

Thermal resistor	
Pt100 climatic	0000 0000
Ni100 climatic	0000 0001
Pt100 standard	0000 0010
Ni100 standard	0000 0011
Pt500 standard	0000 0100
Pt1000 standard	0000 0101
Ni1000 standard	0000 0110
Pt200 Climatic	0000 0111
Pt500 climatic	0000 1000
Pt1000 climatic	0000 1001
Ni1000 Climatic	0000 1010
Pt200 standard	0000 1011
LG-Ni1000 standard	0001 1100
LG-Ni1000 Climatic	0001 1101
Thermocouple	
B	0000 0000
N	0000 0001
E	0000 0010
R	0000 0011
S	0000 0100
J	0000 0101
T	0000 0111
K	0000 1000

Codes for temperature coefficients

The following table lists all temperature coefficients along with their codes for temperature measurements with the thermal resistors. These codes must be entered in byte 4 of the corresponding data record.

Table B- 4 Codes for temperature coefficient

Temperature coefficient	Code
Pt xxx	
0.003851	0000 0000
0.003916	0000 0001
0.003902	0000 0010
0.003920	0000 0011
Ni xxx	
0.006180	0000 1000
0.006720	0000 1001
LG-Ni	
0.005000	0000 1010

Valid values for fixed reference temperatures

The values that you can set for fixed reference temperatures must be in the valid range of values. The resolution is a tenth of a degree.

Table B- 5 Valid values for fixed reference temperatures

Temperature unit	Dec	Hex
Celsius (default)	-1450 to 1550	$FA56_H$ to $60E_H$
Fahrenheit (default)	-2290 to 3110	$F70E_H$ to CCC_H
Kelvin (default)	1282 to 3276	502_H to $10BA_H$

Hardware interrupt limits

The values that you can set for hardware interrupts (high/low limit) must not violate the over/underrange of the respective rated measuring range.

The following tables list the valid hardware interrupt limits. The limits depend on the selected measurement type and measuring range.

Table B- 6 Voltage limits

Voltage		
±50 mV, ±80 mV, ±250 mV, ±500 mV, ±1 V, ±2.5 V, ±5 V, ±10 V	1 V to 5 V	
32510	32510	High limit
-32511	-4863	Low limit

Table B- 7 Current and resistance limits

Current		Resistor	
±20 mA	4 to 20 mA / 0 to 20 mA	(all configurable measuring ranges)	
32510	32510	32510	High limit
-32511	-4863	1	Low limit

Table B- 8 Limits for thermocouple types B, C, E, and J

Thermocouple									
Type B			Type E			Type J			
°C	°F	K	°C	°F	K	°C	°F	K	
20699	32765	23431	11999	21919	14731	14499	26419	17231	High limit
1	321	2733	-2699	-4539	33	-2099	-3459	633	Low limit

Table B- 9 Limits for thermocouples type K, N, R, and S

Thermocouple									
Type K			Type N			Types R, S			
°C	°F	K	°C	°F	K	°C	°F	K	
16219	29515	18951	15499	28219	18231	20189	32765	22921	High limit
-2699	-4539	33	-2699	-4539	33	-1699	-2739	1033	Low limit

Table B- 10 Limits for thermocouple type T

Thermocouple			
Type T			
°C	°F	K	
5399	10039	8131	High limit
-2699	-4539	33	Low limit

Table B- 11 Limits for thermal resistor Pt xxx Standard and Pt xxx Climatic

Thermal resistor						
Pt xxx Standard			Pt xxx Climatic			
°C	°F	K	°C	°F	K	
9999	18319	12731	15499	31099	---	High limit
-2429	-4053	303	-14499	-22899	---	Low limit

Table B- 12 Limits for thermal resistor Ni xxx Standard and Ni xxx Climatic

Thermal resistor						
Ni xxx Standard			Ni xxx Climatic			
°C	°F	K	°C	°F	K	
2949	5629	5681	15499	31099	---	High limit
-1049	-1569	1683	-10499	-15699	---	Low limit

B.2 Structure of a data record for dynamic reference temperature

The **WRREC** instruction is used to transfer the reference junction temperature via data record 192 to data record 195 to the module.

The description of the WRREC instruction can be found in the online help from STEP 7.

If you have set the "Dynamic reference temperature" value for the "Reference junction" parameter, the module expects a new data record at least every 5 minutes. If the module does not receive a new data record within this time, it generates the "Reference channel error" diagnostics message.

Assignment of data record and channel

The following assignment applies if no submodules (1 x 4-channel) are configured for the module:

- Data record 192 for channel 0
- Data record 193 for channel 1
- Data record 194 for channel 2
- Data record 195 for channel 3

Structure of data record 192 for dynamic reference temperature

The following figure shows an example of the structure of data record 192 for channel 0. The structure for data records 193 to 195 is identical.

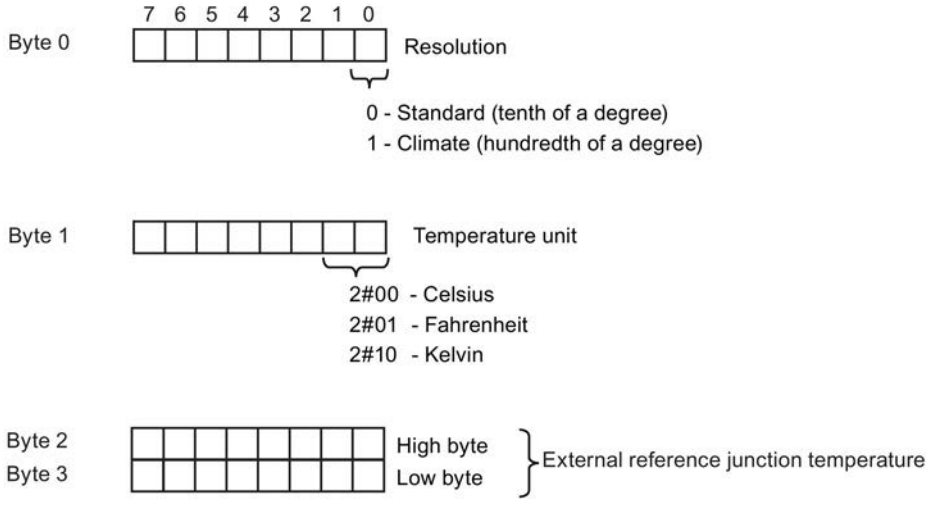

Figure B-3 Structure of data record 192

Valid values for fixed temperature compensation

You can enter the selectable values at bytes 2 and 3 of the data record for the corresponding channel. The selectable values must lie within the permitted value range, see following table. The resolution is a tenth of a degree.

Table B- 13 Valid values for temperature compensation via data record

Temperature unit	Dec	Hex
Celsius (default)	-1450 to 1550	$FA56_H$ to $60E_H$
Fahrenheit (default)	-2290 to 3110	$F70E_H$ to $C26_H$
Kelvin (default)	1282 to 3276	502_H to CCC_H
Celsius (climatic)	-14500 to 15500	$C75C_H$ to $3C8C_H$
Fahrenheit (climatic)	-22900 to 31100	$A68C_H$ to $797C_H$
Kelvin (climatic)	12820 to 32760	3214_H to $7FF8_H$

Additional information

For more information on compensation of the reference junction temperature via data record refer to the Analog value processing (http://support.automation.siemens.com/WW/view/en/67989094) function manual in the internet.

Representation of analog values

C

Introduction

This section shows the analog values for all measuring ranges supported by the AI 4xU/I/RTD/TC ST analog module.

Measured value resolution

Each analog value is written left aligned to the tags. The bits marked with "x" are set to "0".

Note

This resolution does not apply to temperature values. The digitalized temperature values are the result of a conversion in the analog module.

Table C- 1 Resolution of the analog values

Resolution in bits including sign	Values		Analog value	
	Dec	Hex	High byte	Low byte
16	1	1_H	Sign 0 0 0 0 0 0 0	0 0 0 0 0 0 0 1

C.1 Representation of input ranges

The tables below set out the digitized representation of the input ranges by bipolar and unipolar input ranges. The resolution is 16 bits.

Table C- 2 Bipolar input ranges

Dec. value	Measured value in %	Data word																Range
		2^{15}	2^{14}	2^{13}	2^{12}	2^{11}	2^{10}	2^{9}	2^{8}	2^{7}	2^{6}	2^{5}	2^{4}	2^{3}	2^{2}	2^{1}	2^{0}	
32767	>117.589	0	1	1	1	1	1	1	1	1	1	1	1	1	1	1	1	Overflow
32511	117.589	0	1	1	1	1	1	1	0	1	1	1	1	1	1	1	1	Overshoot range
27649	100.004	0	1	1	0	1	1	0	0	0	0	0	0	0	0	0	1	
27648	100.000	0	1	1	0	1	1	0	0	0	0	0	0	0	0	0	0	Rated range
1	0.003617	0	0	0	0	0	0	0	0	0	0	0	0	0	0	0	1	
0	0.000	0	0	0	0	0	0	0	0	0	0	0	0	0	0	0	0	
-1	-0.003617	1	1	1	1	1	1	1	1	1	1	1	1	1	1	1	1	
-27648	-100.000	1	0	0	1	0	1	0	0	0	0	0	0	0	0	0	0	
-27649	-100.004	1	0	0	1	0	0	1	1	1	1	1	1	1	1	1	1	Undershoot range
-32512	-117.593	1	0	0	0	0	0	0	1	0	0	0	0	0	0	0	0	
-32768	<-117.593	1	0	0	0	0	0	0	0	0	0	0	0	0	0	0	0	Underflow

Table C- 3 Unipolar input ranges

Dec. value	Measured value in %	Data word																Range
		2^{15}	2^{14}	2^{13}	2^{12}	2^{11}	2^{10}	2^{9}	2^{8}	2^{7}	2^{6}	2^{5}	2^{4}	2^{3}	2^{2}	2^{1}	2^{0}	
32767	>117.589	0	1	1	1	1	1	1	1	1	1	1	1	1	1	1	1	Overflow
32511	117.589	0	1	1	1	1	1	1	0	1	1	1	1	1	1	1	1	Overshoot range
27649	100.004	0	1	1	0	1	1	0	0	0	0	0	0	0	0	0	1	
27648	100.000	0	1	1	0	1	1	0	0	0	0	0	0	0	0	0	0	
1	0.003617	0	0	0	0	0	0	0	0	0	0	0	0	0	0	0	1	Rated range
0	0.000	0	0	0	0	0	0	0	0	0	0	0	0	0	0	0	0	
-1	-0.003617	1	1	1	1	1	1	1	1	1	1	1	1	1	1	1	1	Undershoot range
-4864	-17.593	1	1	1	0	1	1	0	1	0	0	0	0	0	0	0	0	
-32768	<-17.593	1	0	0	0	0	0	0	0	0	0	0	0	0	0	0	0	Underflow

C.2 Representation of analog values in voltage measuring ranges

The following tables list the decimal and hexadecimal values (codes) of the possible voltage measuring ranges.

Table C- 4 Voltage measuring ranges ±10 V, ±5 V, ±2.5 V, ±1 V,

Values		Voltage measuring range				Range
dec	hex	±10 V	±5 V	±2.5 V	±1 V	
32767	7FFF	>11.759 V	>5.879 V	>2.940 V	> 1.176 V	Overflow
32511	7EFF	11.759 V	5.879 V	2.940 V	1.176 V	Overshoot range
27649	6C01					
27648	6C00	10 V	5 V	2.5 V	1 V	Rated range
20736	5100	7.5 V	3.75 V	1.875 V	0.75 V	
1	1	361.7 µV	180.8 µV	90.4 µV	36.17 µV	
0	0	0 V	0 V	0 V	0 V	
-1	FFFF					
-20736	AF00	-7.5 V	-3.75 V	-1.875 V	-0.75 V	
-27648	9400	-10 V	-5 V	-2.5 V	-1 V	
-27649	93FF					Undershoot range
-32512	8100	-11.759 V	-5.879 V	-2.940 V	-1.176 V	
-32768	8000	< -11.759 V	< -5.879 V	< -2.940 V	< -1.176 V	Underflow

Table C- 5 Voltage measuring ranges ±500 mV, ±250 mV, ±80 mV, and ±50 mV,

Values		Voltage measuring range				Range
dec	hex	±500 mV	±250 mV	±80 mV	±50 mV	
32767	7FFF	>587.9 mV	> 294.0 mV	> 94.1 mV	> 58.8 mV	Overflow
32511	7EFF	587.9 mV	294.0 mV	94.1 mV	58.8 mV	Overshoot range
27649	6C01					
27648	6C00	500 mV	250 mV	80 mV	50 mV	Rated range
20736	5100	375 mV	187.5 mV	60 mV	37.5 mA	
1	1	18.08 µV	9.04 µV	2.89 µV	1.81 µV	
0	0	0 mV	0 mV	0 mV	0 mV	
-1	FFFF					
-20736	AF00	-375 mV	-187.5 mV	-60 mV	-37.5 mV	
-27648	9400	-500 mV	-250 mV	-80 mV	-50 mV	
-27649	93FF					Undershoot range
-32512	8100	-587.9 mV	-294.0 mV	-94.1 mV	-58.8 mV	
-32768	8000	<-587.9 mV	< -294.0 mV	< -94.1 mV	< -58.8 mV	Underflow

Table C- 6 Voltage measuring range 1 V to 5 V

Values		Voltage measuring range	Range
dec	hex	1 V to 5 V	
32767	7FFF	>5.704 V	Overflow
32511	7EFF	5.704 V	Overshoot range
27649	6C01		
27648	6C00	5 V	Rated range
20736	5100	4 V	
1	1	1 V + 144.7 µV	
0	0	1 V	
-1	FFFF		Undershoot range
-4864	ED00	0.296 V	
-32768	8000	< 0.296 V	Underflow

C.3 Representation of analog values in the current measuring ranges

The following tables list the decimal and hexadecimal values (codes) of the possible current measuring ranges.

Table C- 7 Current measuring range ±20 mA

Values		Current measuring range	
dec	hex	±20 mA	
32767	7FFF	>23.52 mA	Overflow
32511	7EFF	23.52 mA	Overshoot range
27649	6C01		
27648	6C00	20 mA	Rated range
20736	5100	15 mA	
1	1	723.4 nA	
0	0	0 mA	
-1	FFFF		
-20736	AF00	-15 mA	
-27648	9400	-20 mA	
-27649	93FF		Undershoot range
-32512	8100	-23.52 mA	
-32768	8000	<-23.52 mA	Underflow

Table C- 8 Current measuring ranges 0 to 20 mA and 4 to 20 mA

Values		Current measuring range		
dec	hex	0 mA to 20 mA	4 mA to 20 mA	
32767	7FFF	>23.52 mA	>22.81 mA	Overflow
32511	7EFF	23.52 mA	22.81 mA	Overshoot range
27649	6C01			
27648	6C00	20 mA	20 mA	Rated range
20736	5100	15 mA	16 mA	
1	1	723.4 nA	4 mA + 578.7 nA	
0	0	0 mA	4 mA	
-1	FFFF			Undershoot range
-4864	ED00	-3.52 mA	1.185 mA	
-32768	8000	<- 3.52 mA	< 1.185 mA	Underflow

C.4 Representation of the analog values of resistance-based sensors/resistance thermometers

The following tables list the decimal and hexadecimal values (codes) of the possible resistance-based sensor ranges.

Table C- 9 Resistance-based sensors of 150 Ω, 300 Ω, 600 Ω, and 6000 Ω

Values		Resistance-based sensor range				
dec	hex	150 Ω	300 Ω	600 Ω	6000 Ω	
32767	7FFF	>176.38 Ω	>352.77 Ω	>705.53 Ω	>7055.3 Ω	Overflow
32511	7EFF	176.38 Ω	352.77 Ω	705.53 Ω	7055.3 Ω	Overshoot range
27649	6C01					
27648	6C00	150 Ω	300 Ω	600 Ω	6000 Ω	Rated range
20736	5100	112.5 Ω	225 Ω	450 Ω	4500 Ω	
1	1	5.43 mΩ	10.85 mΩ	21.70 mΩ	217 mΩ	
0	0	0 Ω	0 Ω	0 Ω	0 Ω	

The following tables list the decimal and hexadecimal values (codes) of the supported resistance thermometers.

Table C- 10 Resistance thermometers Pt 100, Pt 200, Pt 500 and Pt 1000 Standard

Pt x00 Standard in °C (1 digit = 0.1°C)	Values		Pt x00 Standard in °F (1 digit = 0.1 °F)	Values		Pt x00 Standard in K (1 digit = 0.1 K)	Values		Range
	dec	hex		dec	hex		dec	hex	
> 1000.0	32767	7FFF	> 1832.0	32767	7FFF	> 1273.2	32767	7FFF	Overflow
1000.0 : 850.1	10000 : 8501	2710 : 2135	1832.0 : 1562.1	18320 : 15621	4790 : 3D05	1273.2 : 1123.3	12732 : 11233	31BC : 2BE1	Overshoot range
850.0 : -200.0	8500 : -2000	2134 : F830	1562.0 : -328.0	15620 : -3280	3D04 : F330	1123.2 : 73.2	11232 : 732	2BE0 : 2DC	Rated range
-200.1 : -243.0	-2001 : -2430	F82F : F682	-328.1 : -405.4	-3281 : -4054	F32F : F02A	73.1 : 30.2	731 : 302	2DB : 12E	Undershoot range
< -243.0	-32768	8000	< -405.4	-32768	8000	< 30.2	32768	8000	Underflow

Table C- 11 Thermal resistors Pt 100, Pt 200, Pt 500 and Pt 1000 Climatic

Pt x00 Climatic/ in °C (1 digit = 0.01 °C)	Values		Pt x00 Climatic/ in °F (1 digit = 0.01 °F)	Values		Range
	dec	hex		dec	hex	
> 155.00	32767	7FFF	> 311.00	32767	7FFF	Overflow
155.00 : 130.01	15500 : 13001	3C8C : 32C9	311.00 : 266.01	31100 : 26601	797C : 67E9	Overshoot range
130.00 : -120.00	13000 : -12000	32C8 : D120	266.00 : -184.00	26600 : -18400	67E8 : B820	Rated range
-120.01 : -145.00	-12001 : -14500	D11F : C75C	-184.01 : -229.00	-18401 : -22900	B81F : A68C	Undershoot range
< -145.00	-32768	8000	< -229.00	-32768	8000	Underflow

Table C- 12 Thermal resistors Ni 100, Ni 1000, LG-Ni 1000 Standard

Ni x00 standard in °C (1 digit = 0.1 °C)	Values		Ni x00 Standard in °F (1 digit = 0.1 °F)	Values		Ni x00 Standard in K (1 digit = 0.1 K)	Values		Range
	dec	hex		dec	hex		dec	hex	
> 295.0	32767	7FFF	> 563.0	32767	7FFF	> 568.2	32767	7FFF	Overflow
295.0 : 250.1	2950 : 2501	B86 : 9C5	563.0 : 482.1	5630 : 4821	15FE : 12D5	568.2 : 523.3	5682 : 5233	1632 : 1471	Overshoot range
250.0 : -60.0	2500 : -600	9C4 : FDA8	482.0 : -76.0	4820 : -760	12D4 : FD08	523.2 : 213.2	5232 : 2132	1470 : 854	Rated range
-60.1 : -105.0	-601 : -1050	FDA7 : FBE6	-76.1 : -157.0	-761 : -1570	FD07 : F9DE	213.1 : 168.2	2131 : 1682	853 : 692	Undershoot range
< -105.0	-32768	8000	< -157.0	-32768	8000	< 168.2	32768	8000	Underflow

Table C- 13 Thermal resistors Ni 100, Ni 1000, LG-Ni 1000 Climatic

Ni x00 Climatic in °C (1 digit = 0.01 °C)	Values		Ni x00 climatic in °F (1 digit = 0.01 °F)	Values		Range
	dec	hex		dec	hex	
> 155.00	32767	7FFF	> 311.00	32767	7FFF	Overflow
155.00 : 130.01	15500 : 13001	3C8C : 32C9	311.00 : 266.01	31100 : 26601	797C : 67E9	Overshoot range
130.00 : -60.00	13000 : -6000	32C8 : E890	266.00 : -76.00	26600 : -7600	67E8 : E250	Rated range
-60.01 : -105.00	-6001 : -10500	E88F : D6FC	-76.01 : -157.00	-7601 : -15700	E24F : C2AC	Undershoot range
< - 105.00	-32768	8000	< - 157.00	-32768	8000	Underflow

C.5 Representation of analog values for thermocouples

The following tables list the decimal and hexadecimal values (codes) of the supported thermocouples.

Table C- 14 Thermocouple type B

Type B in °C	Values		Type B in °F	Values		Type B in K	Values		Range
	dec	hex		dec	hex		dec	hex	
> 2070,0	32767	7FFF	> 3276.6	32767	7FFF	> 2343.2	32767	7FFF	Overflow
2070,0 : 1820.1	20700 : 18201	50DC : 4719	3276.6 : 2786.6	32766 : 27866	7FFE : 6CDA	2343.2 : 2093.3	23432 : 20933	5B88 : 51C5	Overshoot range
1820.0 : 250.0	18200 : 2500	4718 : 09C4	2786.5 : 482.0	27865 : 4820	6CD9 : 12D4	2093.2 : 523.2	20932 : 5232	51C4 : 1470	Rated range
249.9 : 0,0	2499 : 0	09C3 : 0	481,9 : 32,0	4819 : 320	12D3 : 0140	523,1 : 273,2	5231 : 2732	1469 : 0AAC	Undershoot range
< 0.0	-32768	8000	< 32.0	-32768	8000	< 273.2	32768	8000	Underflow

Table C- 15 Thermocouple type E

Type E in °C	Values		Type E in °F	Values		Type E in K	Values		Range
	dec	hex		dec	hex		dec	hex	
> 1200.0	32767	7FFF	> 2192,0	32767	7FFF	> 1473.2	32767	7FFF	Overflow
1200,0 : 1000.1	12000 : 10001	2EE0 : 2711	2192.0 : 1832.2	21920 : 18322	55A0 : 4792	1473.2 : 1273.3	14732 : 12733	398C : 31BD	Overshoot range
1000.0 : -270.0	10000 : -2700	2710 : F574	1832.0 : -454.0	18320 : -4540	4790 : EE44	1273.2 : 0	12732 : 0	31BC : 0000	Rated range
< -270.0	-32768	8000	< -454.0	-32768	8000	<0	-32768	8000	Underflow

Table C- 16 Thermocouple type J

Type J in °C	Values		Type J in °F	Values		Type J in K	Values		Range
	dec	hex		dec	hex		dec	hex	
> 1450.0	32767	7FFF	> 2642.0	32767	7FFF	> 1723.2	32767	7FFF	Overflow
1450,0 : 1200.1	14500 : 12001	38A4 : 2EE1	2642.0 : 2192.2	26420 : 21922	6734 : 55A2	1723.2 : 1473.3	17232 : 14733	4350 : 398D	Overshoot range
1200.0 : -210.0	12000 : -2100	2EE0 : F7CC	2192.0 : -346.0	21920 : -3460	55A0 : F27C	1473.2 : 63.2	14732 : 632	398C : 0278	Rated range
< -210.0	-32768	8000	< -346.0	-32768	8000	< 63.2	-32768	8000	Underflow

Table C- 17 Thermocouple type K

Type K in °C	Values		Type K in °F	Values		Type K in K	Values		Range
	dec	hex		dec	hex		dec	hex	
> 1622.0	32767	7FFF	> 2951.6	32767	7FFF	> 1895,2	32767	7FFF	Overflow
1622.0 : 1372.1	16220 : 13721	3F5C : 3599	2951.6 : 2501.7	29516 : 25017	734C : 61B9	1895.2 : 1645.3	18952 : 16453	4A08 : 4045	Overshoot range
1372.0 : -270.0	13720 : -2700	3598 : F574	2501.6 : -454.0	25016 : -4540	61B8 : EE44	1645,2 : 0	16452 : 0	4044 : 0000	Rated range
< -270.0	-32768	8000	< -454.0	-32768	8000	< 0	-32768	8000	Underflow

Table C- 18 Thermocouple type N

Type N in °C	Values		Type N in °F	Values		Type N in K	Values		Range
	dec	hex		dec	hex		dec	hex	
> 1550,0	32767	7FFF	> 2822,0	32767	7FFF	> 1823,2	32767	7FFF	Overflow
1550,0 : 1300,1	15500 : 13001	3C8C : 32C9	2822,0 : 2372,2	28220 : 23722	6E3C : 5CAA	1823,2 : 1573,3	18232 : 15733	4738 : 3D75	Overshoot range
1300,0 : -270,0	13000 : -2700	32C8 : F574	2372,0 : -454,0	23720 : -4540	5CA8 : EE44	1573,2 : 0	15732 : 0	3D74 : 0000	Rated range
< -270,0	-32768	8000	< -454,0	-32768	8000	< 0	-32768	8000	Underflow

Table C- 19 Thermocouple type R and S

Type R, S in °C	Values		Type R, S in °F	Values		Types R, S in K	Values		Range
	dec	hex		dec	hex		dec	hex	
> 2019.0	32767	7FFF	> 3276.6	32767	7FFF	> 2292.2	32767	7FFF	Overflow
2019.0 : 1769.1	20190 : 17691	4EDE : 451B	3276.6 : 3216.4	32766 : 32164	7FFE : 7DA4	2292.2 : 2042.3	22922 : 20423	598A : 4FC7	Overshoot range
1769.0 : -50.0	17690 : -500	451A : FE0C	3216.2 : -58.0	32162 : -580	7DA2 : FDBC	2042,2 : 223,2	20422 : 2232	4FC6 : 08B8	Rated range
-50,1 : -170,0	-501 : -1700	FE0B : F95C	-58,1 : -274,0	-581 : -2740	FDBB : F54C	223.1 : 103.2	2231 : 1032	08B7 : 0408	Undershoot range
< -170.0	-32768	8000	< -274.0	-32768	8000	< 103.2	< 1032	8000	Underflow

Table C- 20 Thermocouple type T

Type T in °C	Values		Type T in °F	Values		Type T in K	Values		Range
	dec	hex		dec	hex		dec	hex	
> 540,0	32767	7FFF	> 1004,0	32767	7FFF	> 813,2	32767	7FFF	Overflow
540,0 : 400,1	5400 : 4001	1518 : 0FA1	1004,0 : 752,2	10040 : 7522	2738 : 1D62	813,2 : 673,3	8132 : 6733	1FC4 : 1AAD	Overshoot range
400,0 : -270,0	4000 : -2700	0FA0 : F574	752,0 : -454,0	7520 : -4540	1D60 : EE44	673,2 : 3,2	6732 : 32	1AAC : 0020	Rated range
< -270,0	-32768	8000	< -454,0	-32768	8000	< 3,2	-32768	8000	Underflow

C.6 Measured values for wire break diagnostics

Measured values on diagnostics event "wire break", dependent on diagnostics enables

Error events initiate a diagnostics entry and trigger a diagnostics interrupt if configured accordingly.

Table C- 21 Measured values for wire break diagnostics

Format	Parameter assignment	Measured values		Explanation
S7	• "Wire break" diagnostics enabled • "Overflow/Underflow" diagnostics enabled or disabled ("Wire break" diagnostics takes priority over "Overflow/Underflow" diagnostics)	32767	$7FFF_H$	"Wire break" or "Open circuit" diagnostics alarm
	• "Wire break" diagnostics disabled • "Overflow/Underflow" diagnostics enabled	-32767	8000_H	• Measured value after leaving the under-shoot range • Diagnostics alarm "Low limit violated"
	• "Wire break" diagnostics disabled • "Overflow/Underflow" diagnostics disabled	-32767	8000_H	Measured value after leaving the undershoot range

SIEMENS

SIMATIC

S7-1500 / ET 200MP

Analog output module AQ 8xU/I HS (6ES7532-5HF00-0AB0)

Manual

Edition 09/2016

siemens.com

SIEMENS

SIMATIC

S7-1500/ET 200MP
Analog output module AQ 8xU/I HS
(6ES7532-5HF00-0AB0)

Manual

Preface

Documentation guide 1

Product overview 2

Wiring 3

Parameters/address space 4

Interrupts/diagnostics alarms 5

Technical specifications 6

Dimensional drawing A

Parameter data records B

Representation of analog values C

09/2016

A5E03484776-AD

Legal information

Warning notice system

This manual contains notices you have to observe in order to ensure your personal safety, as well as to prevent damage to property. The notices referring to your personal safety are highlighted in the manual by a safety alert symbol, notices referring only to property damage have no safety alert symbol. These notices shown below are graded according to the degree of danger.

⚠ DANGER

indicates that death or severe personal injury **will** result if proper precautions are not taken.

⚠ WARNING

indicates that death or severe personal injury **may** result if proper precautions are not taken.

⚠ CAUTION

indicates that minor personal injury can result if proper precautions are not taken.

NOTICE

indicates that property damage can result if proper precautions are not taken.

If more than one degree of danger is present, the warning notice representing the highest degree of danger will be used. A notice warning of injury to persons with a safety alert symbol may also include a warning relating to property damage.

Qualified Personnel

The product/system described in this documentation may be operated only by **personnel qualified** for the specific task in accordance with the relevant documentation, in particular its warning notices and safety instructions. Qualified personnel are those who, based on their training and experience, are capable of identifying risks and avoiding potential hazards when working with these products/systems.

Proper use of Siemens products

Note the following:

⚠ WARNING

Siemens products may only be used for the applications described in the catalog and in the relevant technical documentation. If products and components from other manufacturers are used, these must be recommended or approved by Siemens. Proper transport, storage, installation, assembly, commissioning, operation and maintenance are required to ensure that the products operate safely and without any problems. The permissible ambient conditions must be complied with. The information in the relevant documentation must be observed.

Trademarks

All names identified by ® are registered trademarks of Siemens AG. The remaining trademarks in this publication may be trademarks whose use by third parties for their own purposes could violate the rights of the owner.

Disclaimer of Liability

We have reviewed the contents of this publication to ensure consistency with the hardware and software described. Since variance cannot be precluded entirely, we cannot guarantee full consistency. However, the information in this publication is reviewed regularly and any necessary corrections are included in subsequent editions.

Siemens AG
Division Digital Factory
Postfach 48 48
90026 NÜRNBERG
GERMANY

A5E03484776-AD
℗ 09/2016 Subject to change

Copyright © Siemens AG 2013 - 2016.
All rights reserved

Preface

Purpose of the documentation

This manual supplements the system manual: S7-1500/ET 200MP (https://support.industry.siemens.com/cs/ww/en/view/59191792) automation system.

Functions that relate in general to the systems are described in these manuals.

The information provided in this manual and in the system/function manuals supports you in commissioning the systems.

Changes compared to previous version

Compared to the previous version, this manual contains the following changes:

- As of firmware version V2.1.0, the module supports the oversampling function.
- Original texts of the license conditions and copyright notes for open-source software are available on the Internet as of 09/2016.

Conventions

The term "CPU" is used in this manual both for the CPUs of the S7-1500 automation system, as well as for interface modules of the ET 200MP distributed I/O system.

Please also observe notes marked as follows:

Note

A note contains important information regarding the product described in the documentation or its handling, or draws special attention to a section of the documentation.

Security information

Siemens provides products and solutions with industrial security functions that support the secure operation of plants, systems, machines and networks.

In order to protect plants, systems, machines and networks against cyber threats, it is necessary to implement – and continuously maintain – a holistic, state-of-the-art industrial security concept. Siemens' products and solutions only form one element of such a concept.

Customer is responsible to prevent unauthorized access to its plants, systems, machines and networks. Systems, machines and components should only be connected to the enterprise network or the internet if and to the extent necessary and with appropriate security measures (e.g. use of firewalls and network segmentation) in place.

Additionally, Siemens' guidance on appropriate security measures should be taken into account. For more information about industrial security, please visit (http://www.siemens.com/industrialsecurity).

Siemens' products and solutions undergo continuous development to make them more secure. Siemens strongly recommends to apply product updates as soon as available and to always use the latest product versions. Use of product versions that are no longer supported, and failure to apply latest updates may increase customer's exposure to cyber threats.

To stay informed about product updates, subscribe to the Siemens Industrial Security RSS Feed under (http://www.siemens.com/industrialsecurity).

Open Source Software

Open-source software is used in the firmware of the I/O modules. Open Source Software is provided free of charge. We are liable for the product described, including the open-source software contained in it, pursuant to the conditions applicable to the product. Siemens accepts no liability for the use of the open source software over and above the intended program sequence, or for any faults caused by modifications to the software.

For legal reasons, we are obliged to publish the original text of the license conditions and copyright notices. Please read the information relating to this on the Internet (https://support.industry.siemens.com/cs/ww/en/view/109739516).

Table of contents

Preface 4

1 Documentation guide 7

2 Product overview 11

2.1 Properties 11

2.2 Functions 13

2.2.1 Oversampling for outputs 13

3 Wiring 15

4 Parameters/address space 18

4.1 Output ranges 18

4.2 Parameters 19

4.3 Declaration of parameters 21

4.4 Address space 22

5 Interrupts/diagnostics alarms 30

5.1 Status and error displays 30

5.2 Interrupts 32

5.3 Diagnostics alarms 33

6 Technical specifications 34

A Dimensional drawing 40

B Parameter data records 42

B.1 Parameter assignment and structure of the parameter data records 42

C Representation of analog values 46

C.1 Representation of output ranges 47

C.2 Representation of analog values in the voltage output ranges 48

C.3 Representation of analog values in the current output ranges 49

Documentation guide

1

The documentation for the SIMATIC S7-1500 automation system, the CPU 1516pro-2 PN based on SIMATIC S7-1500 and the SIMATIC ET 200MP distributed I/O system is arranged into three areas.
This arrangement enables you to access the specific content you require.

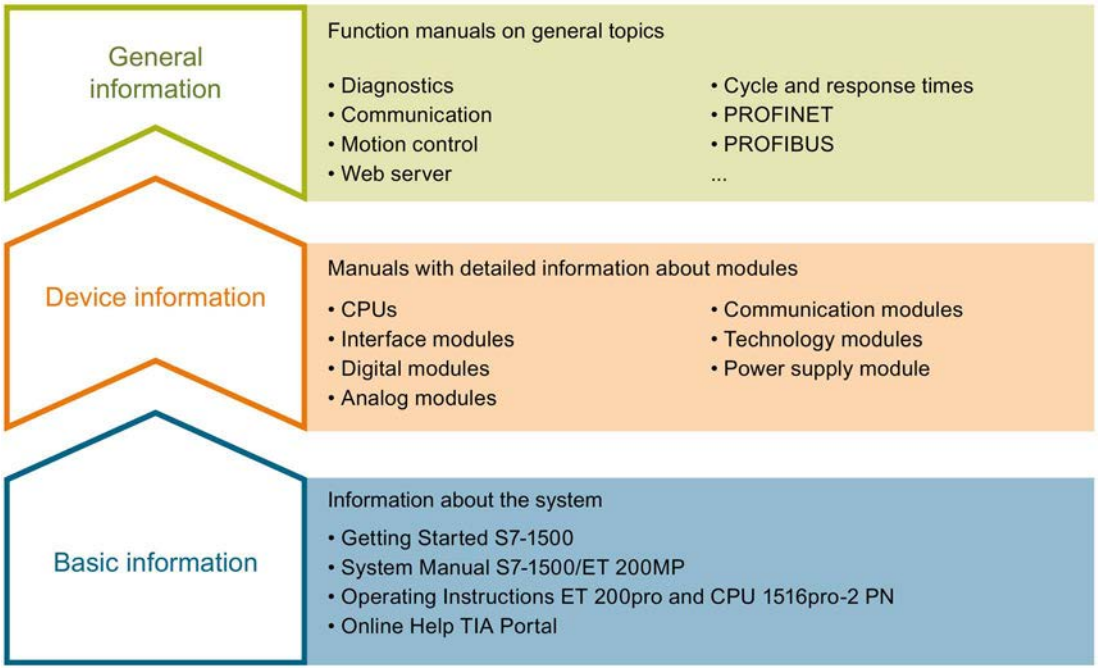

Basic information

The System Manual and Getting Started describe in detail the configuration, installation, wiring and commissioning of the SIMATIC S7-1500 and ET 200MP systems. For CPU 1516pro-2 PN you use the corresponding operating instructions. The STEP 7 online help supports you in the configuration and programming.

Device information

Product manuals contain a compact description of the module-specific information, such as properties, wiring diagrams, characteristics and technical specifications.

General information

The function manuals contain detailed descriptions on general topics regarding the SIMATIC S7-1500 and ET 200MP systems, e.g. diagnostics, communication, motion control, Web server, OPC UA.

You can download the documentation free of charge from the Internet (http://w3.siemens.com/mcms/industrial-automation-systems-simatic/en/manual-overview/Pages/Default.aspx).

Changes and supplements to the manuals are documented in a Product Information.

You can download the product information free of charge from the Internet (https://support.industry.siemens.com/cs/us/en/view/68052815).

Manual Collection S7-1500/ET 200MP

The Manual Collection contains the complete documentation on the SIMATIC S7-1500 automation system and the ET 200MP distributed I/O system gathered together in one file.

You can find the Manual Collection on the Internet (https://support.industry.siemens.com/cs/ww/en/view/86140384).

SIMATIC S7-1500 comparison list for programming languages

The comparison list contains an overview of which instructions and functions you can use for which controller families.

You can find the comparison list on the Internet (https://support.industry.siemens.com/cs/ww/en/view/86630375).

"mySupport"

With "mySupport", your personal workspace, you make the best out of your Industry Online Support.

In "mySupport", you can save filters, favorites and tags, request CAx data and compile your personal library in the Documentation area. In addition, your data is already filled out in support requests and you can get an overview of your current requests at any time.

You must register once to use the full functionality of "mySupport".

You can find "mySupport" on the Internet (https://support.industry.siemens.com/My/ww/en).

"mySupport" - Documentation

In the Documentation area in "mySupport" you can combine entire manuals or only parts of these to your own manual.
You can export the manual as PDF file or in a format that can be edited later.

You can find "mySupport" - Documentation on the Internet (http://support.industry.siemens.com/My/ww/en/documentation).

"mySupport" - CAx data

In the CAx data area in "mySupport", you can access the current product data for your CAx or CAe system.

You configure your own download package with a few clicks.

In doing so you can select:

- Product images, 2D dimension drawings, 3D models, internal circuit diagrams, EPLAN macro files
- Manuals, characteristics, operating manuals, certificates
- Product master data

You can find "mySupport" - CAx data on the Internet (http://support.industry.siemens.com/my/ww/en/CAxOnline).

Application examples

The application examples support you with various tools and examples for solving your automation tasks. Solutions are shown in interplay with multiple components in the system - separated from the focus on individual products.

You will find the application examples on the Internet (https://support.industry.siemens.com/sc/ww/en/sc/2054).

TIA Selection Tool

With the TIA Selection Tool, you can select, configure and order devices for Totally Integrated Automation (TIA).
This tool is the successor of the SIMATIC Selection Tool and combines the known configurators for automation technology into one tool.
With the TIA Selection Tool, you can generate a complete order list from your product selection or product configuration.

You can find the TIA Selection Tool on the Internet (http://w3.siemens.com/mcms/topics/en/simatic/tia-selection-tool).

SIMATIC Automation Tool

You can use the SIMATIC Automation Tool to run commissioning and maintenance activities simultaneously on various SIMATIC S7 stations as a bulk operation independently of the TIA Portal.

The SIMATIC Automation Tool provides a multitude of functions:

- Scanning of a PROFINET/Ethernet network and identification of all connected CPUs
- Address assignment (IP, subnet, gateway) and station name (PROFINET device) to a CPU
- Transfer of the date and the programming device/PC time converted to UTC time to the module
- Program download to CPU
- Operating mode switchover RUN/STOP
- Localization of the CPU by means of LED flashing
- Reading out CPU error information
- Reading the CPU diagnostic buffer
- Reset to factory settings
- Updating the firmware of the CPU and connected modules

You can find the SIMATIC Automation Tool on the Internet (https://support.industry.siemens.com/cs/ww/en/view/98161300).

PRONETA

With SIEMENS PRONETA (PROFINET network analysis), you analyze the PROFINET network during commissioning. PRONETA features two core functions:

- The topology overview independently scans PROFINET and all connected components.
- The IO check is a fast test of the wiring and the module configuration of a system.

You can find SIEMENS PRONETA on the Internet (https://support.industry.siemens.com/cs/ww/en/view/67460624).

Product overview

2

2.1 Properties

Article number

6ES7532-5HF00-0AB0

View of the module

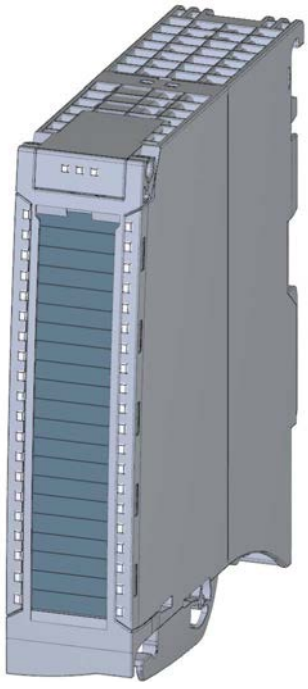

Figure 2-1 View of the AQ 8xU/I HS module

Properties

The module has the following technical properties:

- Channel-based selection of 8 analog outputs
- Selection of channels for current output
- Selection of channels for voltage output
- Resolution: 16 bits including sign
- Configurable diagnostics (per channel)
- Fast updating of the output values

The module supports the following functions:

Table 2- 1 Version dependencies of the module functions

Function	Firmware version of the module	Configuration software	
		STEP 7 (TIA Portal)	GSD file in STEP 7 (TIA Portal) V12 or higher, or STEP 7 V5.5 SP3 or higher
Firmware update	V1.0.0 or higher	V12 or higher	X
Identification data I&M0 to I&M3	V1.0.0 or higher	V12 or higher	X
Parameter assignment in RUN	V1.0.0 or higher	V12 or higher	X
Isochronous mode	V1.0.0 or higher	V12 or higher	---
Calibration in runtime	V1.0.0 or higher	V12 or higher	X
Module-internal Shared Output (MSO)	V2.0.0 or higher	V13 Update 3 or higher (PROFINET IO only)	X (PROFINET IO only)
Configurable submodules / submodules for Shared Device	V2.0.0 or higher	V13 Update 3 or higher (PROFINET IO only)	X (PROFINET IO only)
Oversampling	V2.1.0 or higher	V14 or higher and HSP 0186 (PROFINET IO only)	---

You can configure the module with STEP 7 (TIA Portal) and with a GSD file. The oversampling function requires isochronous mode and can therefore only be configured with STEP 7 (TIA Portal).

Accessories

The following accessories are supplied with the module and can also be ordered separately as spare parts:

- Shield bracket
- Shield terminal
- Power supply element
- Labeling strips
- U connector
- Universal front door

Other components

The following component can be ordered separately:

Front connectors, including potential jumpers and cable ties

You can find additional information on accessories in the S7-1500/ET 200MP (http://support.automation.siemens.com/WW/view/en/59191792) system manual.

2.2 Functions

2.2.1 Oversampling for outputs

Function

Oversampling is defined as the transfer of data in constant bus cycle segments (sub-cycles), whereby n sub-cycles correspond to one PROFINET bus cycle. A data packet is transmitted from the controller to the module, which outputs the packet in n constant bus sub-cycles.

Oversampling is useful whenever you require output of data with high time resolution but without using an extremely short PROFINET bus cycle and thus fast CPU cycles.

With oversampling, a PROFINET bus cycle is divided into constant bus sub-cycles:

- Each sub-cycle outputs a 16-bit value per channel.
- The shortest possible sub-cycle is 125 µs.
- Sub-cycles are possible in increments of 2 to 16. The following applies here: Isochronous data cycle / number of sub-cycles ≥ permitted sub-cycle duration (125 µs).

Typical area of application

Controlling of a feed valve because output data can be controlled exactly at the current position of the machine.

Requirements

- Firmware version V2.1.0 or higher of the module.
- Isochronous mode has to be set.

Configuration

You configure the oversampling function by means of the output rate parameter.

Chronological sequence

The existing output data of a data cycle (send clock) is copied into the interface module in the next data cycle and is available for the module in the data cycle after that.

The figure below shows the chronological sequence for oversampling with 10 sub-cycles.

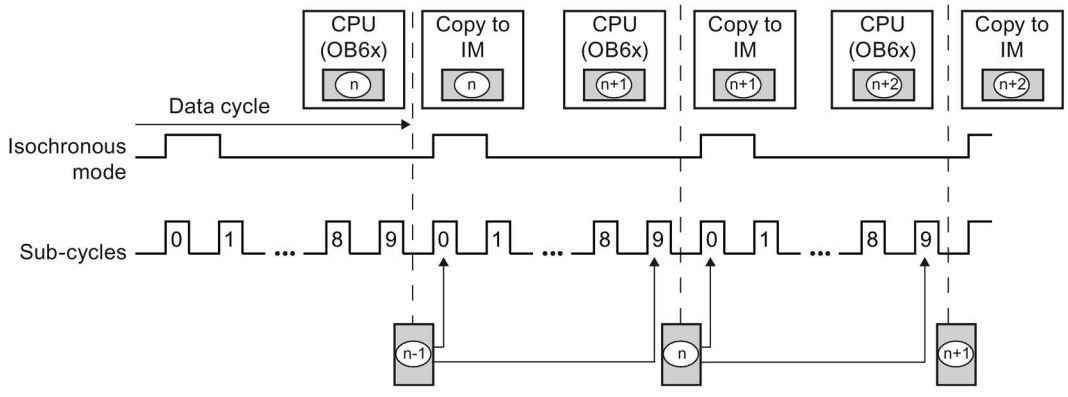

n Output value from cycle n

Figure 2-2 Chronological sequence with oversampling

Output interval

The duration of a sub-cycle corresponds to the output interval. The bus cycle time T_{DP} (send clock for isochronous mode) is specified in the configuration software. The actual output interval of the module results from this time divided by the set sampling rate (2-16).

$$\text{Output interval} = \frac{T_{DP}}{n_{Sample}} = \frac{2\ \text{ms}}{16} = 125\ \mu\text{s}$$

Figure 2-3 Example for the calculation of the output interval

Wiring 3

This section contains the block diagram of the module and outlines various connection options.

You can find information on wiring the front connector, establishing a cable shield, etc in the Wiring section of the S7-1500/ET 200MP (http://support.automation.siemens.com/WW/view/en/59191792) system manual.

Note

- You may use and combine the different wiring options for all channels.
- Do not insert the potential jumpers included with the front connector!

Abbreviations used

Meaning of the abbreviations used in the figures below:

QV_n	Voltage output channel
QI_n	Current output channel
Sn+/Sn-	Sense line channel
L+	Supply voltage connection
M	Ground connection
M_{ANA}	Reference potential of the analog circuit
CHx	Channel or display of the channel status
PWR	Display for the supply voltage

Pin assignment for the power supply element

The power supply element is plugged onto the front connector for powering the analog module. Wire the supply voltage to terminals 41 (L+) and 44 (M). Use terminals 42 (L+) and 43 (M) to loop the potential to the next module.

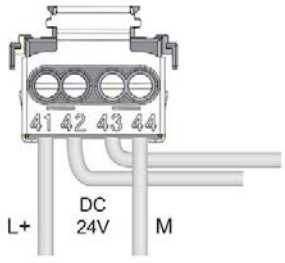

Figure 3-1 Power supply element wiring

Block diagram and terminal assignment for the voltage output

The example in the figure below shows the pin assignment for a voltage measurement.

- 2-wire connection, no compensation for line impedance.
- 4-wire connection with compensation for line impedance is displayed.

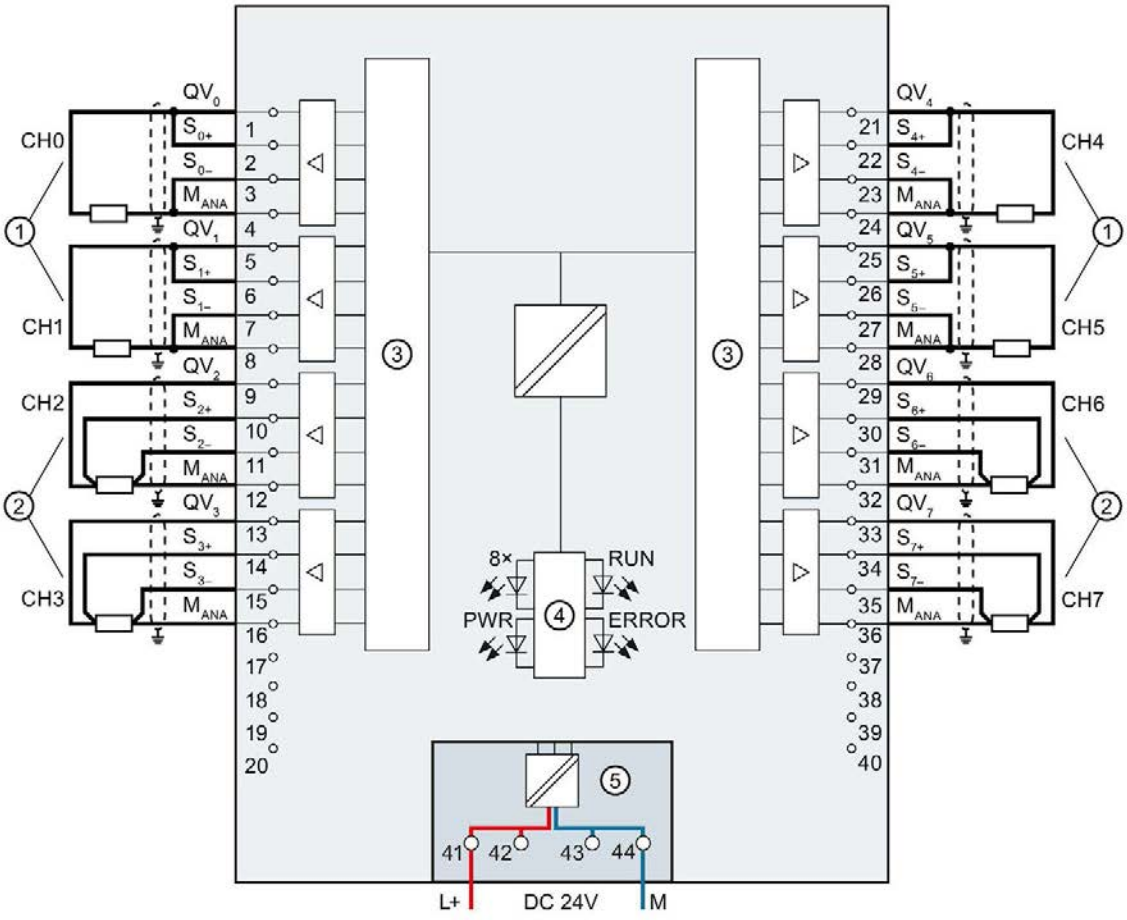

①	2-wire connection (jumper at the front connector)	CHx	Channel or 8 x channel status (green/red)
②	4-wire connection	RUN	Status display LED (green)
③	Digital Analog Converter (DAC)	ERROR	Error display LED (red)
④	Backplane bus interface	PWR	LED for power supply (green)
⑤	Supply voltage via power supply element		

Figure 3-2 Block diagram and terminal assignment for the voltage output

Block diagram and terminal assignment for a current output

The following figure shows an example of the terminal assignment for current output circuitry.

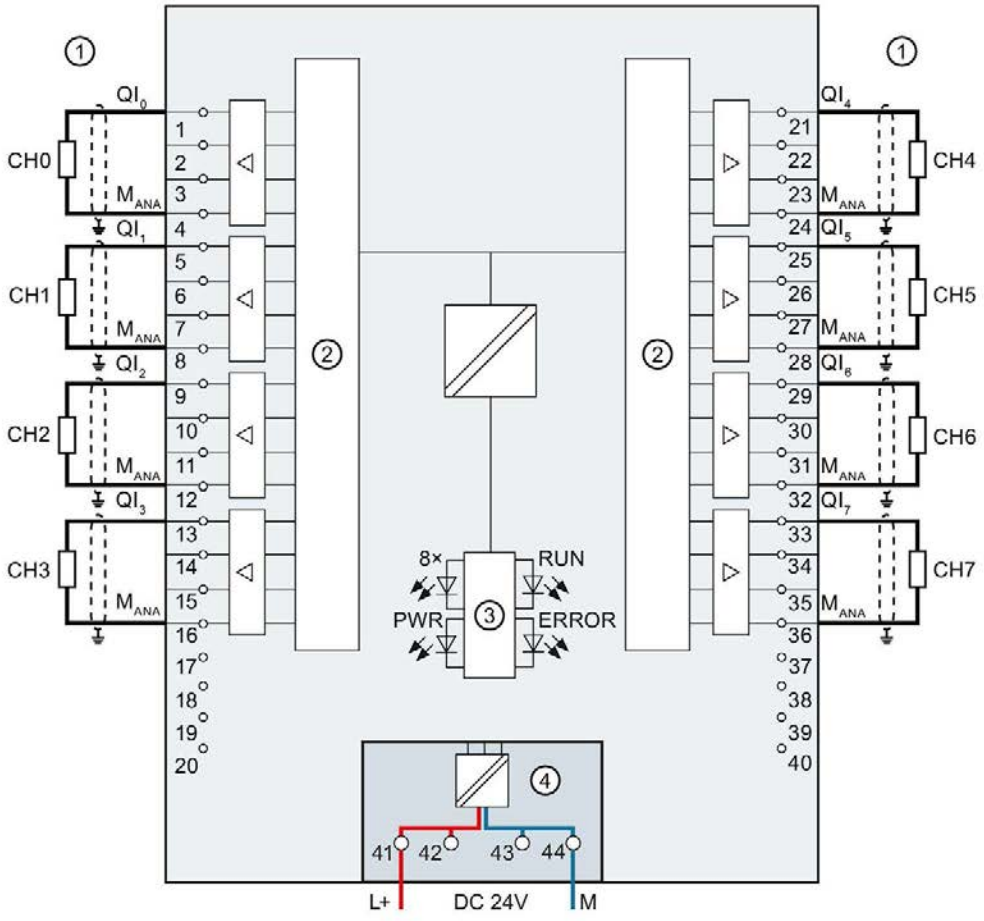

①	Load on current outputs	CHx	Channel or 8 x channel status (green/red)
②	Digital Analog Converter (DAC)	RUN	Status display LED (green)
③	Backplane bus interface	ERROR	Error display LED (red)
④	Supply voltage via power supply element	PWR	LED for power supply (green)

Figure 3-3 Block diagram and terminal assignment for a current output

Parameters/address space 4

4.1 Output ranges

The module is set to voltage output type by default with output range ±10 V. You need to edit the module parameters with STEP 7 if you want to use a different output range or output type.

Output type and output ranges

Output type	Output range	Representation of analog values
Voltage	1 V to 5 V 0 V to 10 V ±10 V	See Appendix Representation of analog values in the voltage output ranges (Page 48).
Current	0 mA to 20 mA 4 mA to 20 mA ±20 mA	See Appendix Representation of analog values in the current output ranges (Page 49).
Deactivated	-	

The tables of the output ranges, overflow, overrange, etc. are available in the Appendix Representation of analog values (Page 46).

4.2 Parameters

Parameters of AQ 8xU/I HS

The AQ 8xU/I HS is usually already integrated in the hardware catalog of STEP 7 (TIA Portal). In this case, STEP 7 (TIA Portal) checks the configured properties for plausibility during configuration.

However, you can also assign parameters to the module by means of a GSD file and the configuration software of any provider. The module does not check the validity of the configured properties until after the configuration has been loaded.

When you assign the module parameters in STEP 7, you use various parameters to specify the module properties. The following table lists the configurable parameters. The effective range of the configurable parameters depends on the type of configuration. The following configurations are possible:

- Central operation with a S7-1500 CPU
- Distributed operation on PROFINET IO in an ET 200MP system
- Distributed operation on PROFIBUS DP in an ET 200MP system

When assigning parameters in the user program, use the WRREC instruction to transfer the parameters to the module by means of data records; refer to chapter Parameter assignment and structure of the parameter data records (Page 42).

Table 4- 1 Configurable parameters and their defaults

Parameters	Range of values	Default setting	Parameter assignment in RUN	Scope with configuration software, e.g., STEP 7 (TIA Portal)	
				Integrated in the hardware catalog STEP 7 (TIA Portal) as of V12 or GSD file PROFINET IO	GSD file PROFIBUS DP
AQ configuration					
Output rate (for the oversampling function)	1...16 values/cycle	1	No	Module (not GSD file)	---
Diagnostics					
• Missing supply voltage L+	Yes/No	No	No	Channel [1]	Module [2]
• Wire break	Yes/No	No	No	Channel	Module [2]
• Short circuit to ground	Yes/No	No	No	Channel	Module [2]
• Overflow	Yes/No	No	No	Channel	Module [2]
• Underflow	Yes/No	No	No	Channel	Module [2]

Parameters	Range of values	Default setting	Parameter assignment in RUN	Scope with configuration software, e.g., STEP 7 (TIA Portal)	
				Integrated in the hardware catalog STEP 7 (TIA Portal) as of V12 or GSD file PROFINET IO	GSD file PROFIBUS DP
Output					
• Output type	Voltage/current	Voltage	Yes	Channel	Channel
• Output range	See chapter output ranges (Page 18)	±10 V	Yes	Channel	Channel
• Reaction to CPU STOP	• Turn off • Keep last value • Output substitute value [4]	Turn off	Yes	Channel	Channel [3] • Turn off • Keep last value
• Substitute value	See Parameter assignment and structure of the parameter data records (Page 42)	0	Yes	Channel	--- [3]

[1] If you enable diagnostics for multiple channels, you will receive an alarm surge on failure of the supply voltage because each enabled channel will detect this fault.

You can prevent this message burst by assigning the diagnostics function to one channel only.

[2] You can set the effective range of the diagnostics for each channel in the user program with data records 64 to 71.

[3] You can configure the setting "Output substitute value" and the substitute value in the user program by means of data records 64 to 71.

Short-circuit detection

The diagnostics for short circuit to ground can be configured for the voltage output type. A short-circuit detection is not possible for small output values; the output voltages must therefore be below -0.5 V or above +0.5 V.

Open-circuit detection

The diagnostics for open circuit can be configured for the current output type. An open-circuit detection is not possible for small output values; the output voltages must therefore be below -3 mA or above +3 mA.

4.3 Declaration of parameters

Output rate

Specifies the number of sub-cycles per isochronous data cycle for the for the oversampling function.

Missing supply voltage L+

Enabling of the diagnostics, with missing or too little supply voltage L+.

Wire break

Enabling of the diagnostics if the line to the actuator is broken.

Short circuit to ground

Enabling of the diagnostics if a short-circuit of the output to M_{ANA} occurs.

Overflow

Enabling of the diagnostics when the output value exceeds the overrange.

Underflow

Enabling of the diagnostics when the output value violates the underrange.

Reaction to CPU STOP

Determines the reaction of the output to the CPU going into STOP state.

Substitute value

The substitute value is the value that the module outputs in case of a CPU STOP.

4.4 Address space

The module can be configured differently in STEP 7; see following table. Depending on the configuration, additional/different addresses are assigned in the process image of the outputs/inputs.

Configuration options of AQ 8xU/I HS

You can configure the module with STEP 7 (TIA Portal) or with a GSD file.

When you configure the module by means of the GSD file, the configurations are available under different abbreviations/module names.

The following configurations are possible:

Table 4- 2 Configuration options

Configuration	Abbreviation/module name in the GSD file	Configuration software, e.g., with STEP 7 (TIA Portal)	
		Integrated in hardware catalog STEP 7 (TIA Portal)	GSD file in STEP 7 (TIA Portal) V12 or higher or STEP 7 V5.5 SP3 or higher
1 x 8-channel without value status	AQ 8xU/I HS	V12 or higher	X
1 x 8-channel with value status	AQ 8xU/I HS QI	V12 or higher	X
8 x 1-channel without value status	AQ 8xU/I HS S	V13 Update 3 or higher (PROFINET IO only)	X (PROFINET IO only)
8 x 1-channel with value status	AQ 8xU/I HS S QI	V13 Update 3 or higher (PROFINET IO only)	X (PROFINET IO only)
1 x 8-channel with value status for module-internal Shared Output with up to 4 submodules	AQ 8xU/I HS MSO	V13 Update 3 or higher (PROFINET IO only)	X (PROFINET IO only)
1 x 8-channel without value status for oversampling	---	V14 or higher with HSP 0186 (PROFINET IO only)	---

Value status (Quality Information, QI)

The value status is always activated for the following module names:

- AQ 8xU/I HS QI
- AQ 8xU/I HS S QI
- AQ 8xU/I HS MSO

An additional bit is assigned to each channel for the value status. The bit for the value status indicates if the output value specified by the user program is actually pending at the module terminal (0 = value is incorrect).

Address space of the AQ 8xU/I HS and AQ 8xU/I HS QI

The following figure shows the address space allocation for the configuration as 8-channel module. You can freely assign the start address for the module. The addresses of the channels are derived from the start address.

"QB x" stands, for example, for the module start address output byte x.

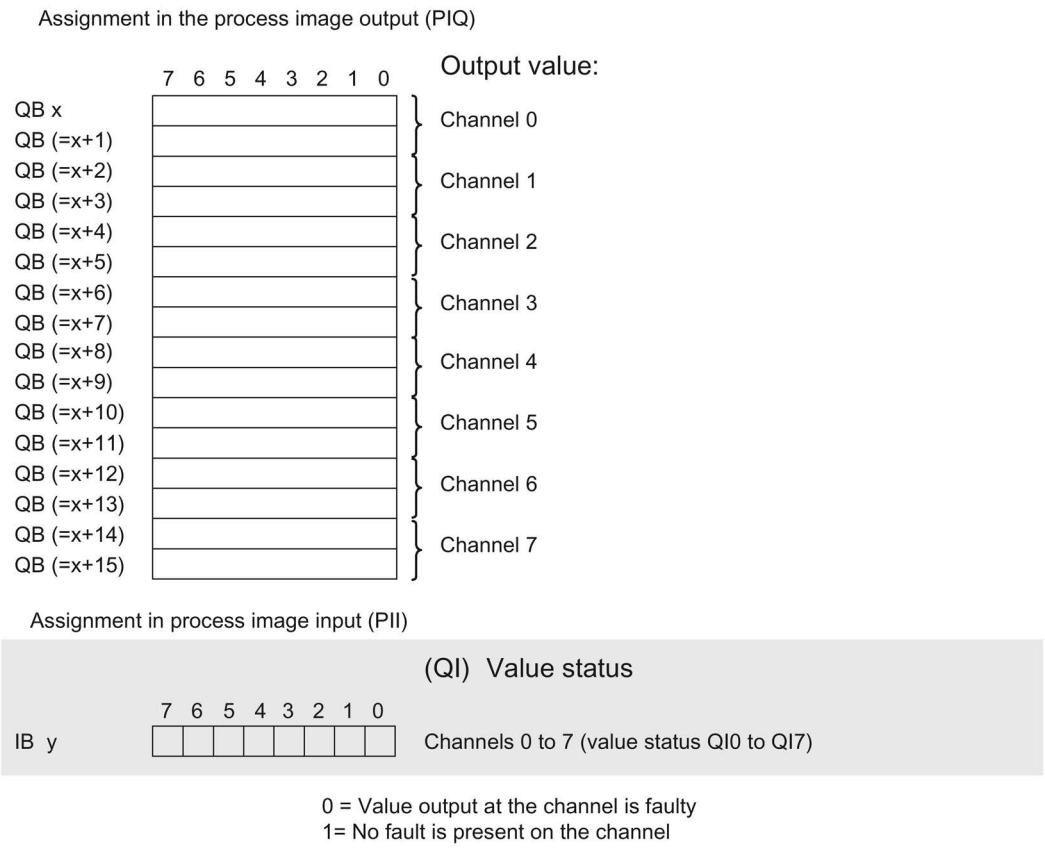

Figure 4-1 Address space for configuration as 1 x 8-channel AQ 8xU/I HS with value status

Address space for configuration as 8 x 1-channel AQ 8xU/I HS QI and AQ 8xU/I HS S QI

For the configuration as a 8 x 1-channel module, the channels of the module are divided into multiple submodules. The submodules can be assigned to different IO controllers when the module is used in a shared device.

The number of usable submodules is dependent on the interface module used. Observe the information in the manual for the particular interface module.

Contrary to the 1 x 8-channel module configuration, each of the eight submodules has a freely assignable start address.

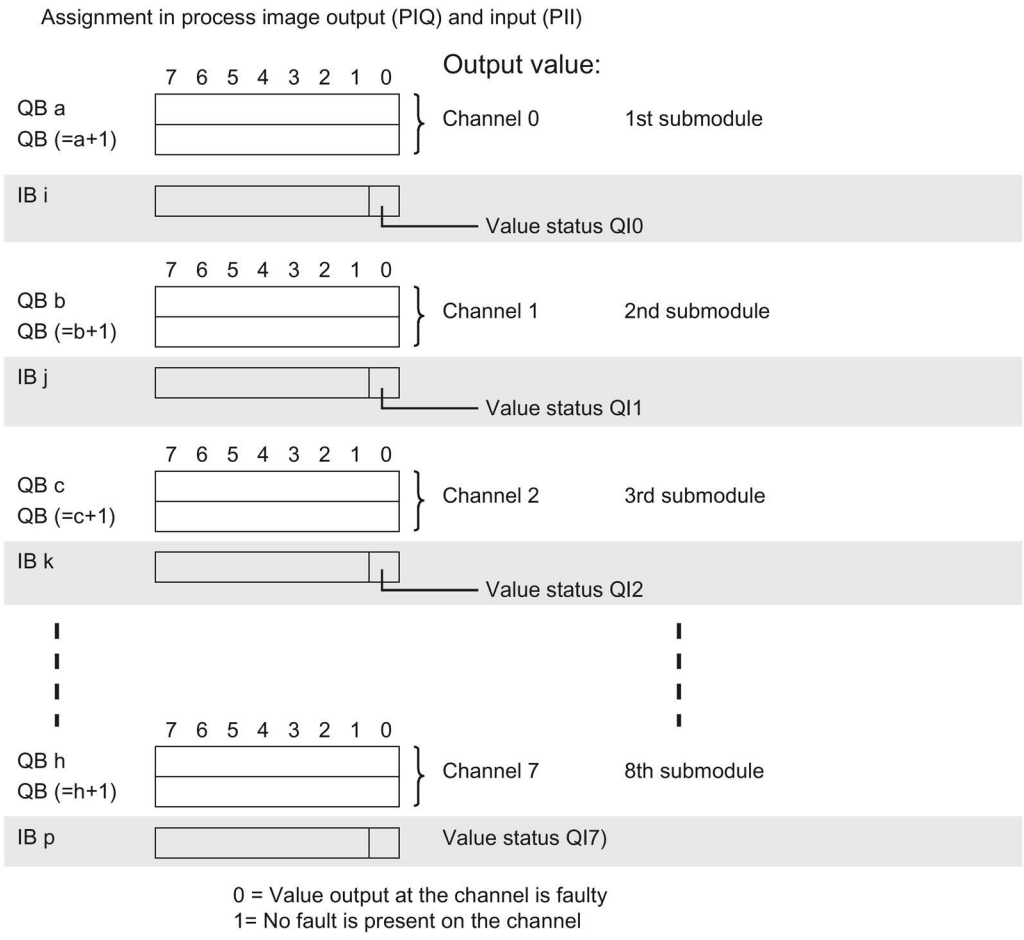

Figure 4-2 Address space for configuration as 8 x 1-channel AQ 8xU/I HS S QI with value status

Address space for configuration as 1 x 8-channel AQ 8xU/I HS MSO

For the configuration as a 1 x 8-channel module (module-internal Shared Output, MSO), channels 0 to 7 of the module are copied to multiple submodules. Channels 0 to 7 are then available with identical values in various submodules. These submodules can be assigned to up to four IO controllers when the module is used in a shared device.

- The IO controller to which submodule 1 is assigned has write access to outputs 0 to 7.
- The IO controllers to which submodule 2, 3, or 4 is assigned have read access to outputs 0 to 7.

The number of usable IO controllers depends on the interface module used. Please observe the information in the manual for the particular interface module.

Value status (Quality Information, QI)

The meaning of the value status depends on the submodule on which it occurs.

For the 1st submodule (=basic submodule), the value status 0 indicates that the value is incorrect or that the IO controller of the basic submodule is in STOP state.

For the 2nd to 4th submodule (=MSO submodule), the value status 0 indicates that the value is incorrect or one of the following errors has occurred:

- The basic submodule is not yet configured (not ready).
- The connection between the IO controller and the basic submodule has been interrupted.
- The IO controller of the basic submodule is in STOP or POWER OFF state.

The following figure shows the assignment of the address space with submodules 1 and 2.

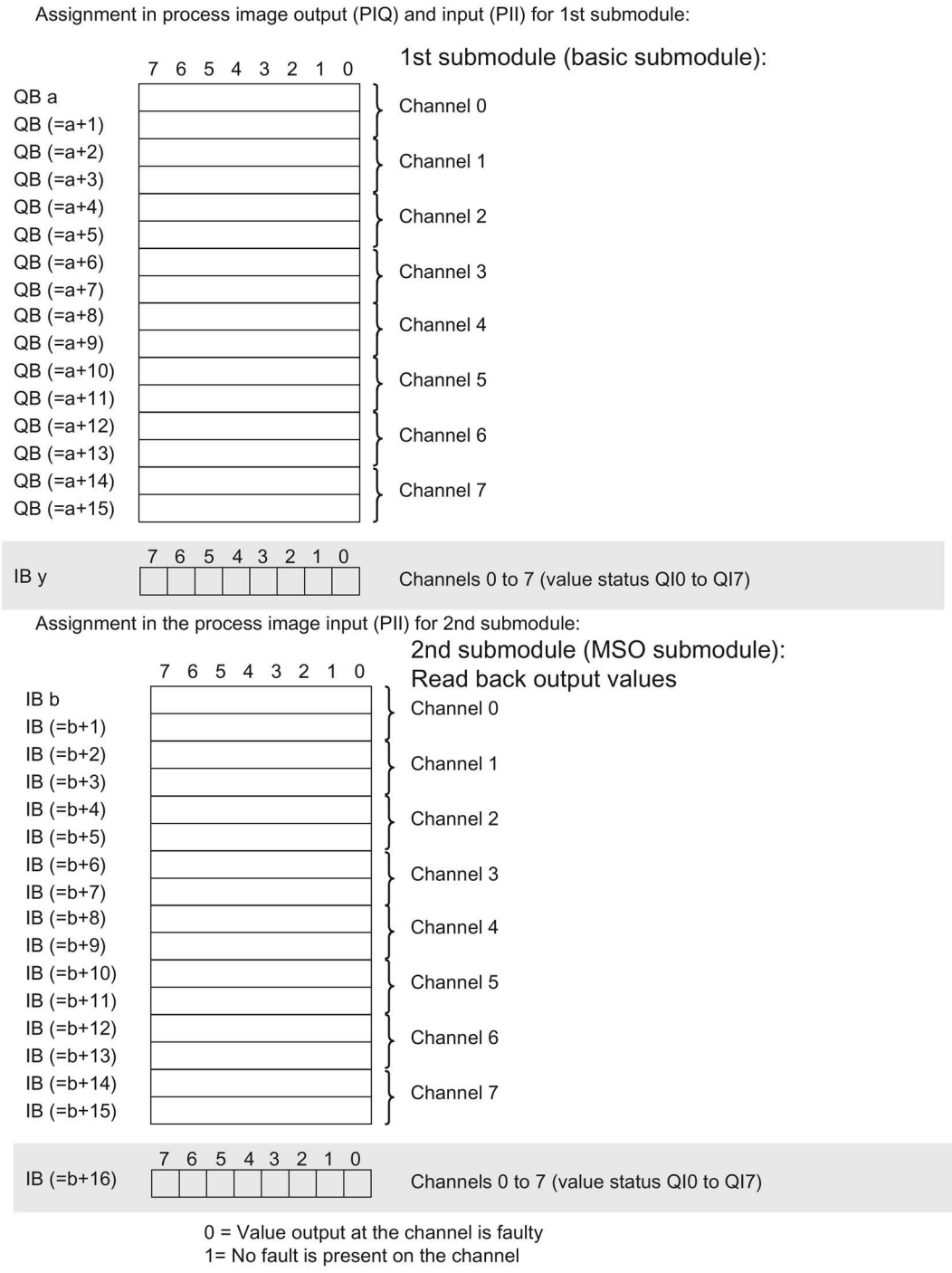

Figure 4-3 Address space for configuration as 1 x 8-channel AQ 8xU/I HS MSO with value status

The following figure shows the assignment of the address space with submodules 3 and 4.

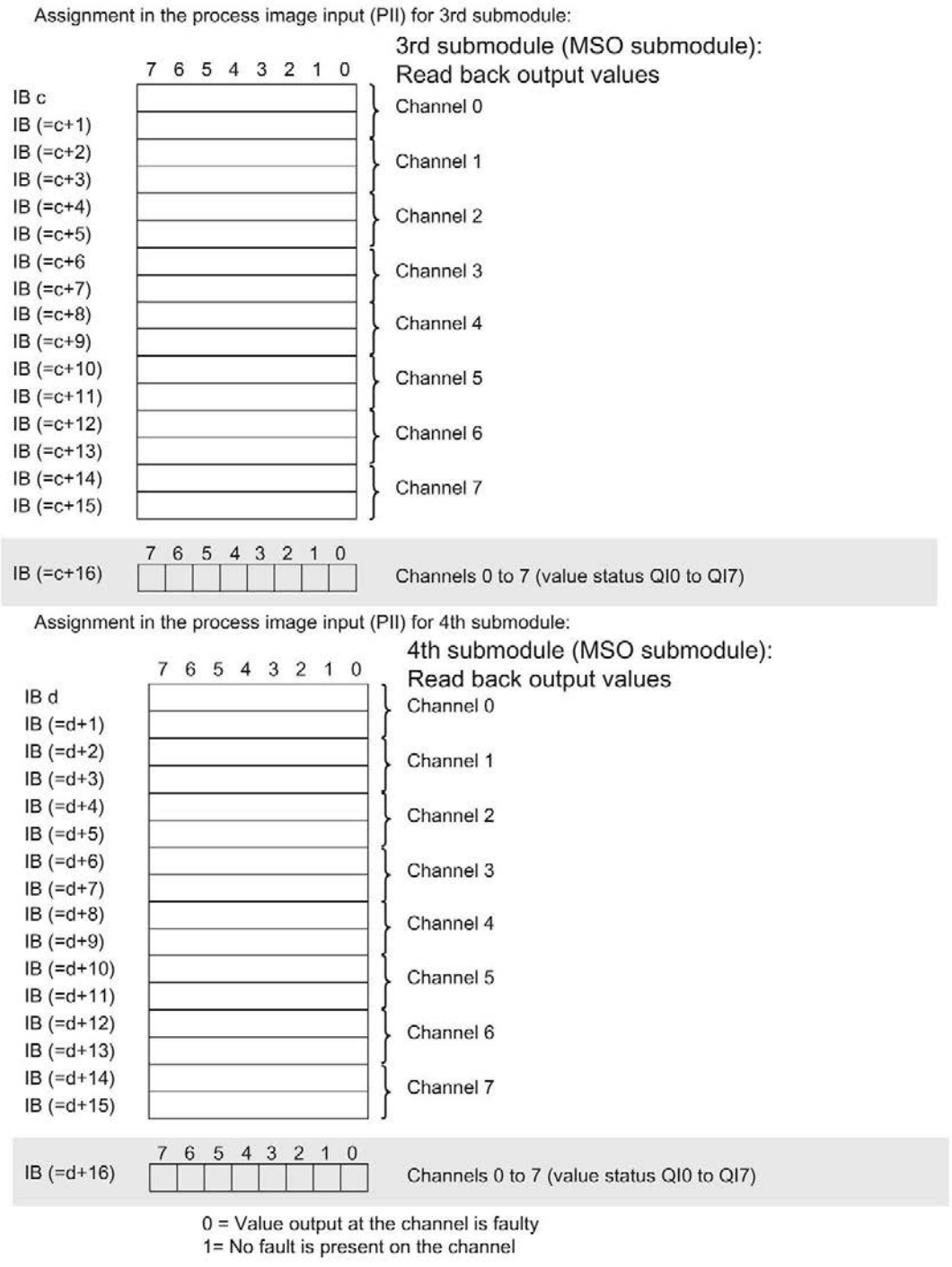

Figure 4-4 Address space for configuration as 1 x 8-channel AQ 8xU/I HS MSO with value status

Reference

You can find information on the Shared Input/Output (MSI/MSO) function in the section Module-Internal Shared Input/Output (MSI/MSO) of the PROFINET with STEP 7 V13 (https://support.industry.siemens.com/cs/ww/en/view/49948856) function manual.

Address space for configuration as 1 x 8-channel AQ 8xU/I HS for oversampling

The following figure shows the address space assignment with the configuration as 8-channel module for the oversampling function. You can freely assign the start address for the module. The addresses of the channels are derived from the start address.

Writing always starts from QB x. If fewer than 16 sub-cycles are set, the addresses that are then unused are ignored.

"QB x" stands, for example, for the module start address output byte x.

Assignment in process image input (PIQ)

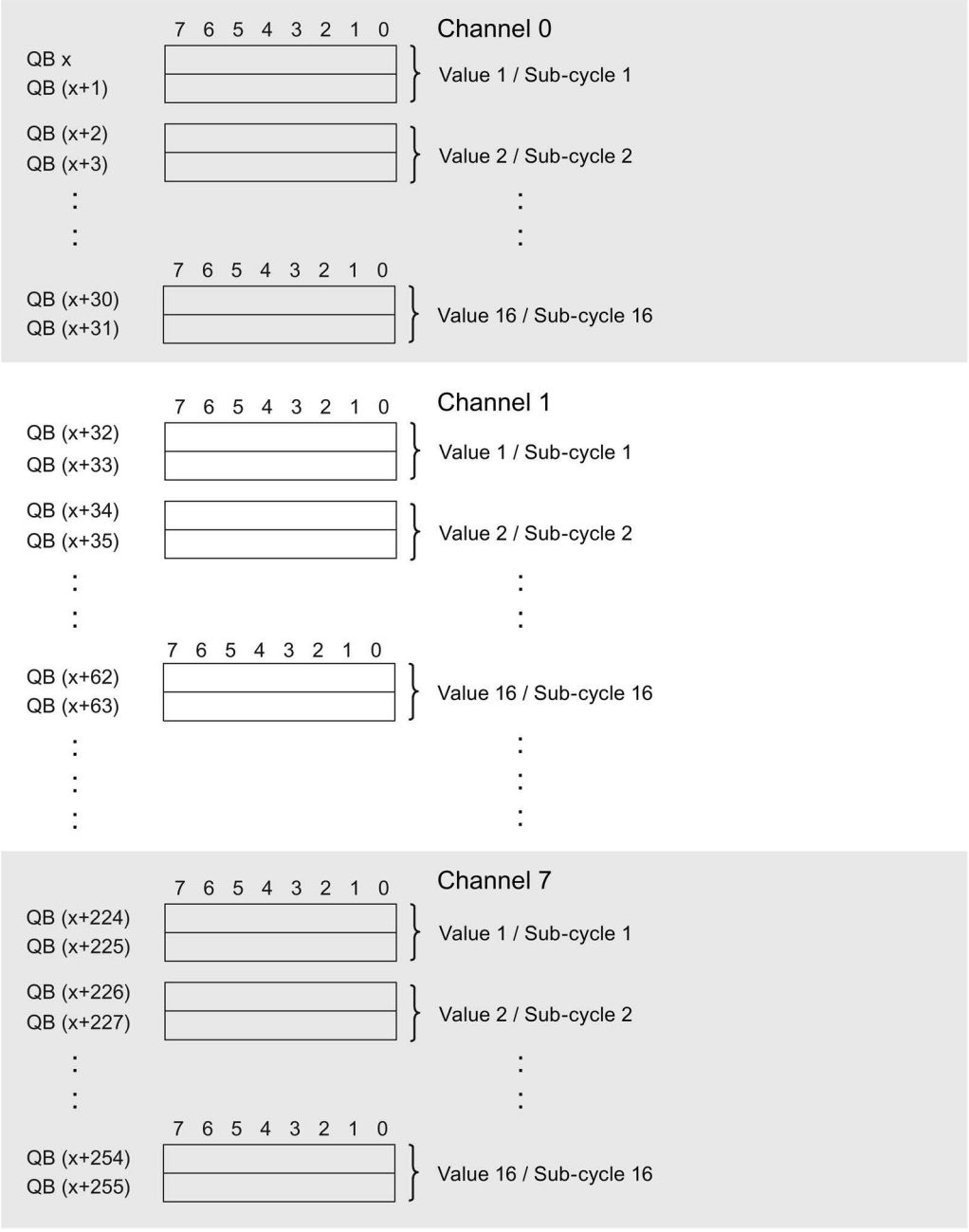

Figure 4-5 Address space for configuration as 1 x 8-channel AI 8xU/I HS for oversampling

Interrupts/diagnostics alarms

5

5.1 Status and error displays

LED displays

The figure below shows the LED displays (status and error displays) of the AQ 8xU/I HS.

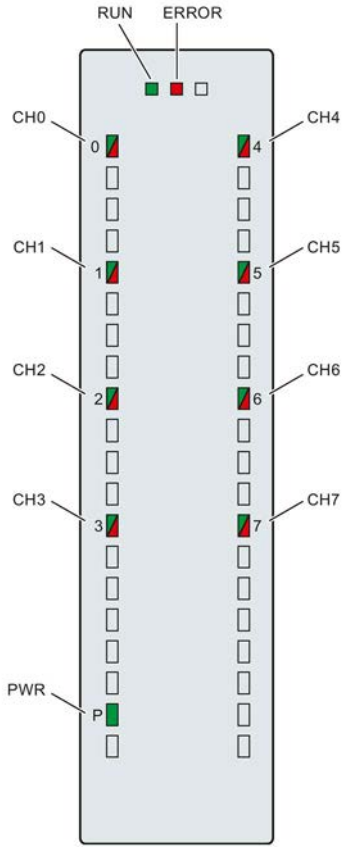

Figure 5-1 LED displays of the AQ 8xU/I HS module

Meaning of the LED displays

The following tables explain the meaning of the status and error displays. Remedial measures for diagnostic alarms can be found in section Diagnostic alarms.

RUN and ERROR LED

Table 5- 1 Status and error displays RUN and ERROR

LED		Meaning	Remedy
RUN	ERROR		
□ Off	□ Off	Voltage missing or too low at backplane bus	• Switch on the CPU and/or the system power supply modules. • Verify that the U connectors are inserted. • Check to see if too many modules are inserted.
☼ Flashes	□ Off	The module starts and flashes until the valid parameter assignment is set.	---
■ On	□ Off	Module is configured	
■ On	☼ Flashes	Indicates module errors (at least one error at one channel, e.g., wire break).	Evaluate the diagnostics data and eliminate the error (e.g., wire break).
☼ Flashes	☼ Flashes	Hardware defective	Replace the module.

PWR LED

Table 5- 2 PWR status display

LED PWR	Meaning	Remedy
□ Off	Supply voltage L+ too low or missing	Check the L+ supply voltage.
■ On	Supply voltage L+ is present and OK	---

CHx LED

Table 5- 3 CHx status display

LED CHx	Meaning	Remedy
□ Off	Channel deactivated	---
■ On	Channel configured and OK	---
■ On	Diagnostic alarm: e.g., wire break, overflow, underflow	Check the wiring. Disable diagnostics.

See also

Diagnostics alarms (Page 33)

5.2 Interrupts

The analog output module AQ 8xU/I HS supports diagnostic interrupts.

You can find detailed information on the event in the error organization block with the RALRM instruction (read additional interrupt info) and in the STEP 7 online help.

Diagnostic interrupt

The module generates a diagnostic interrupt at the following events:

- Missing supply voltage L+
- Short circuit to ground
- Wire break
- Overflow
- Underflow
- Parameter assignment error

5.3 Diagnostics alarms

A diagnostics alarm is generated and the ERROR LED flashes on the module for each diagnostics event. The diagnostics alarms can be read out in the diagnostics buffer of the CPU, for example. You can evaluate the error codes with the user program.

If the module is operated distributed with PROFIBUS DP in an ET 200MP system, you have the option to read out diagnostics data with the instruction RDREC or RD_REC using data record 0 and 1. The structure of the data records is available on the Internet in the "Manual for interface module IM 155-5 DP ST (6ES7155-5BA00-0AB0)".

Table 5- 4 Diagnostics alarms, their meaning and corrective measures

Diagnostics alarm	Error code	Meaning	Remedy
Short circuit to ground	1_H	Overload at output	Eliminate overload
		Short-circuit of output Q_V to M_{ANA}	Eliminate the short-circuit
Wire break	6_H	Encoder circuit impedance too high	Use a different actuator type or modify the wiring, for example, use cables with larger cross-section
		Wirebreak between the module and actuator	Connect the cable
		Channel not connected (open)	• Disable the channel ("output type" parameter) • Connect the channel
Overflow	7_H	The output value set by the user program exceeds the valid rated range/overshoot range.	Correct the output value
Underflow	8_H	The output value set by the user program undershoots the valid rated range/undershoot range.	Correct the output value
Parameter assignment error	10_H	• The module cannot evaluate parameters for the channel • Incorrect parameter assignment.	Correct the parameter assignment
Load voltage missing	11_H	Supply voltage L+ of the module is missing	Connect supply voltage L+ to module

Technical specifications

6

Technical specifications of the AQ 8xU/I HS

	6ES7532-5HF00-0AB0
General information	
Product type designation	AQ 8xU/I HS
Hardware functional status	FS01
Firmware version	V2.1.0
• FW update possible	Yes
Product function	
I&M data	Yes; I&M0 to I&M3
Scalable output range	No
Engineering with	
STEP 7 TIA Portal can be configured/integrated as of version	V14 / -
STEP 7 can be configured/integrated as of version	V5.5 SP3 / -
PROFIBUS as of GSD version/GSD revision	V1.0 / V5.1
PROFINET as of GSD version/GSD revision	V2.3 / -
Operating mode	
Oversampling	Yes
MSO	Yes
CiR Configuration in RUN	
Configuration in RUN possible	Yes
Calibration in RUN possible	Yes
Supply voltage	
Rated value (DC)	24 V
Valid range, low limit (DC)	20.4 V
Valid range, high limit (DC)	28.8 V
Reverse polarity protection	Yes
Input current	
Current consumption, max.	260 mA; with 24 V DC supply
Power	
Power consumption from the backplane bus	1.15 W
Power loss	
Power loss, typ.	7 W

	6ES7532-5HF00-0AB0
Analog outputs	
Number of analog outputs	8
Voltage output, short-circuit protection	Yes
Voltage output, short-circuit current, max.	45 mA
Current output, open-circuit voltage, max.	20 V
Cycle time (all channels), min.	125 µs; regardless of the number of activated channels
Output ranges, voltage	
0 V to 10 V	Yes
1 V to 5 V	Yes
-10 V to +10 V	Yes
Output ranges, current	
0 mA to 20 mA	Yes
-20 mA to +20 mA	Yes
4 mA to 20 mA	Yes
Connection of actuators	
for voltage output two-wire connection	Yes
for voltage output four-wire connection	Yes
for current output two-wire connection	Yes
Load resistance (in the rated output range)	
for voltage outputs, min.	1 kΩ
for voltage outputs, capacitive load, max.	100 nF
for current outputs, max.	500 Ω
for current outputs, inductive load, max.	1 mH
Cable length	
shielded, max.	200 m
Analog value generation for the outputs	
Integration and conversion time/resolution per channel	
Resolution with overrange (bit including sign), max.	16 bit
Conversion time (per channel)	50 µs; regardless of the number of activated channels
Settling time	
for resistive load	30 µs; see additional description in the manual
for capacitive load	100 µs; see additional description in the manual
for inductive load	100 µs; see additional description in the manual

	6ES7532-5HF00-0AB0
Errors/accuracies	
Output ripple (relative to output range, bandwidth 0 to 50 kHz), (+/-)	0.02%
Linearity error (relative to output range), (+/-)	0.15%
Temperature error (in relation to output range), (+/-)	0.002%/K
Crosstalk between outputs, max.	-100 dB
Repeat accuracy in settled state at 25 °C (in relation to output range), (+/-)	0.05%
Operational limit in overall temperature range	
Voltage in relation to output range, (+/-)	0.3%
Current in relation to output range, (+/-)	0.3%
Basic error limit (operational limit at 25 °C)	
Voltage in relation to output range, (+/-)	0.2%
Current in relation to output range, (+/-)	0.2%
Isochronous mode	
Isochronous mode (application synchronized up to terminal)	Yes
Execution and activation time (TCO), min.	100 µs
Bus cycle time (TDP), min.	250 µs
Interrupts/diagnostics/status information	
Diagnostics function	Yes
Substitute values can be applied	Yes
Interrupts	
Diagnostic interrupt	Yes
Diagnostics alarms	
Monitoring of supply voltage	Yes
Wire break	Yes; only for output type current
Short-circuit	Yes; only for output type voltage
Overflow/underflow	Yes
Diagnostics indicator LED	
RUN LED	Yes; green LED
ERROR LED	Yes; red LED
Monitoring of supply voltage (PWR LED)	Yes; green LED
Channel status display	Yes; green LED
For channel diagnostics	Yes; red LED
For module diagnostics	Yes; red LED
Electrical isolation	
Electrical isolation of channels	
Between the channels	No
Between the channels, in groups of	8
Between the channels and backplane bus	Yes
Between the channels and load voltage L+	Yes

	6ES7532-5HF00-0AB0
Permitted potential difference	
between S- and MANA (UCM)	8 V DC
Isolation	
Isolation tested with	707 V DC (type test)
Distributed mode	
Prioritized startup	No
Dimensions	
Width	35 mm
Height	147 mm
Depth	129 mm
Weights	
Weight, approx.	325 g

Derating depending on overall length, ambient temperature and output type (per module)

The following trends show the number of channels (CHx) that can be used simultaneously in horizontal and vertical installation of the S7-1500 automation system/ET 200MP distributed I/O system depending on the ambient temperature.

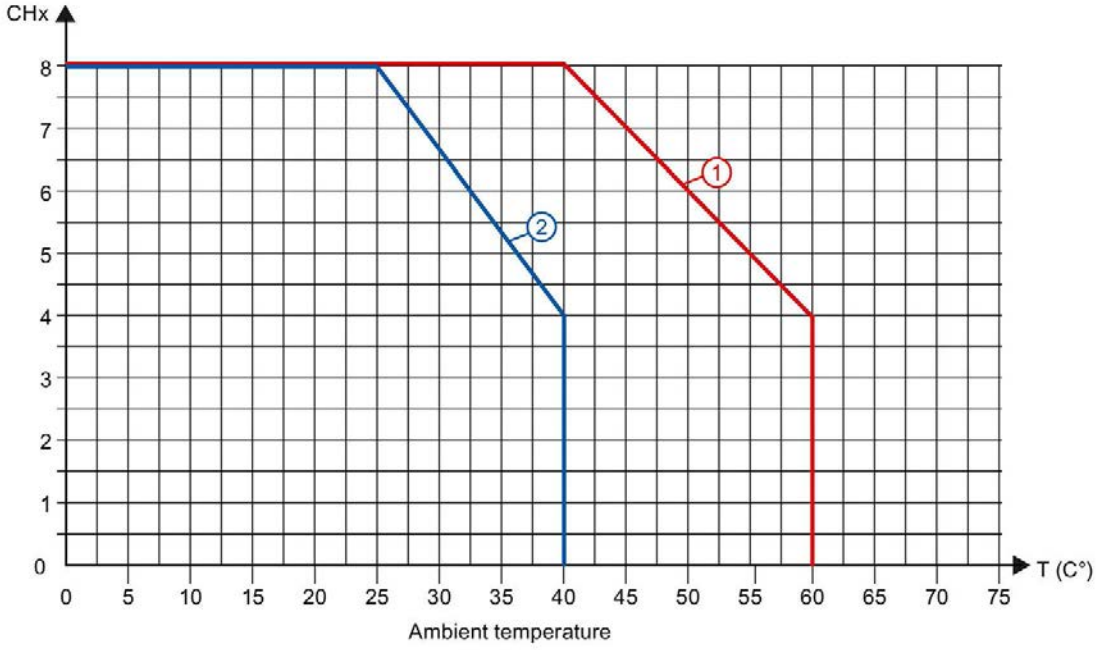

① Horizontal mounting of the system

② Vertical mounting of the system

Figure 6-1 Information on channels used simultaneously (per module) for output type: Current and voltage

Note

All eight channels can be used in the case of voltage outputs with load resistances > 5 kΩ and ambient temperatures up to 40° (vertical installation) or up to 60° (horizontal installation).

Settling times for voltage outputs

The settling time for voltage outputs is influenced mainly by the capacitive load.

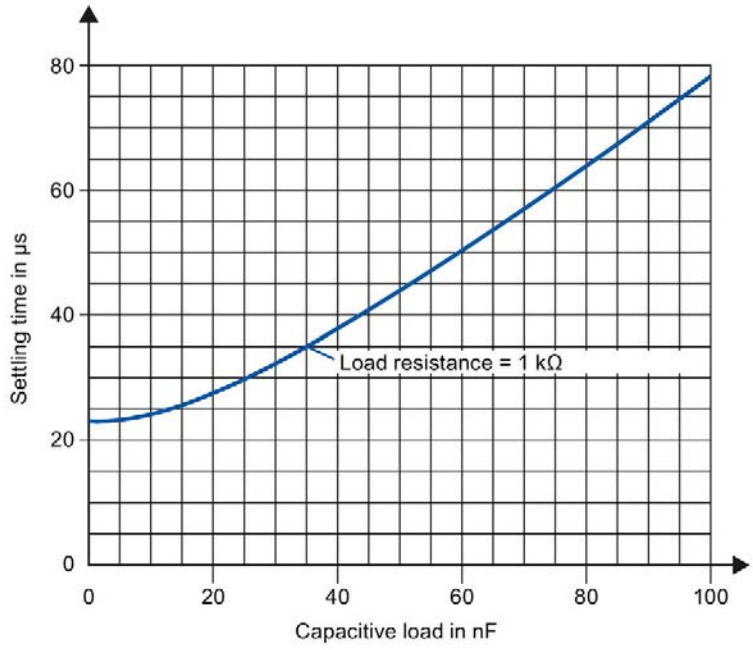

Figure 6-2 Typical settling times for voltage outputs

Settling times for current outputs

The settling time for current outputs increases when the load impedance rises.

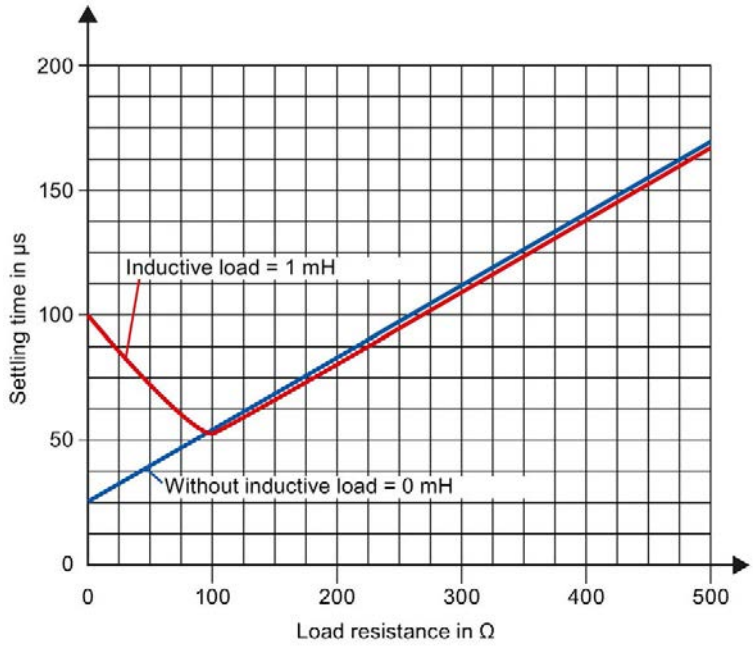

Figure 6-3 Typical settling times for current outputs

See also

Parameters (Page 19)

Dimensional drawing

A

This appendix contains the dimensional drawing of the module installed on a mounting rail and with a shield bracket. Always observe the specified dimensions for installation in cabinets, control rooms, etc.

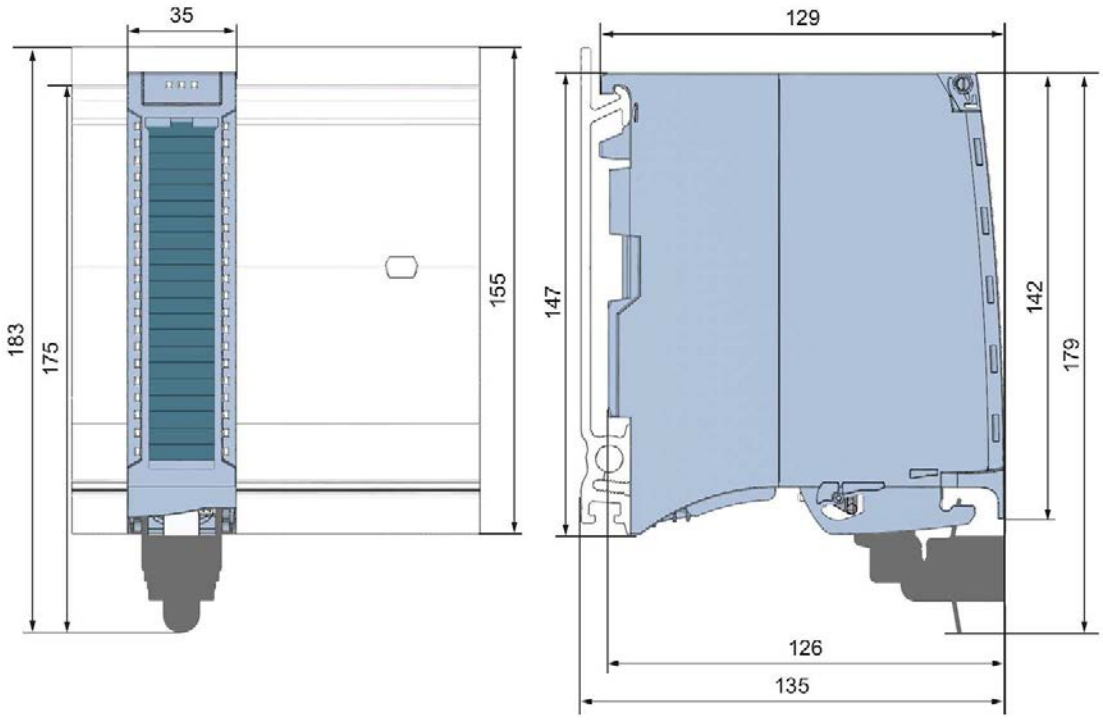

Figure A-1 Dimensional drawing of the AQ 8xU/I HS module

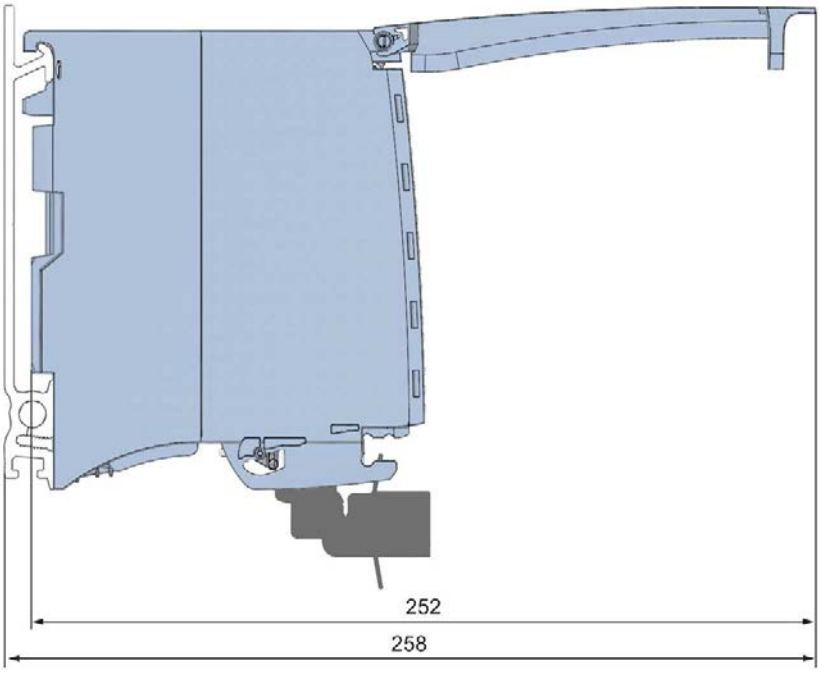

Figure A-2 Dimensional drawing of the AQ 8xU/I HS module, side view with open front panel

Parameter data records B

B.1 Parameter assignment and structure of the parameter data records

The data records of the module have an identical structure, regardless of whether you configure the module with PROFIBUS DP or PROFINET IO.

Dependencies for configuration with GSD file

When configuring the module with a GSD file, remember that the settings of some parameters are dependent on each other. The parameters are only checked for plausibility by the module after the transfer to the module.

The following table lists the parameters that depend on one another.

Table B- 1 Dependencies of parameters for configuration with GSD file

Device-specific parameters (GSD file)	Dependent parameters
Short circuit to ground	With **output type** voltage only
Wire break	With **output type** current only
Substitute value	Only if **Reaction to CPU STOP** -> **Output substitute value** is configured

Parameter assignment in the user program

You have the option to assign module parameters in RUN (e.g., the voltage or current values of selected channels can be edited in RUN without having an effect on the other channels).

Parameter assignment in RUN

The WRREC instruction is used to transfer the parameters to the module using data records 64 to 71. The parameters set in STEP 7 do not change in the CPU, which means the parameters set in STEP 7 are still valid after a restart.

The parameters are only checked for plausibility by the module after the transfer to the module.

Output parameter STATUS

The module ignores errors that occurred during the transfer of parameters with the WRREC instruction and continues operation with the previous parameter assignment. However, a corresponding error code is written to the STATUS output parameter.

The description of the WRREC instruction and the error codes is available in the STEP 7 online help.

Operation of the module behind a PROFIBUS DP interface module

If the module is operated behind a PROFIBUS DP interface module, the parameter data records 0 and 1 are not read back. You obtain the diagnostics data records 0 and 1 with the read back parameter data records 0 and 1. You can find additional information in the Interrupts section of the manual for the PROFIBUS DP interface module on the Internet (http://support.automation.siemens.com/WW/view/en/78324181).

Assignment of data record and channel

The channel parameters in data records 64 to 71 are available for 1x 8-channel configuration and are assigned as follows:

- Data record 64 for channel 0
- Data record 65 for channel 1
- ...
- Data record 70 for channel 6
- Data record 71 for channel 7

For configuration 8 x 1-channel, the module has 8 submodules with one channel each. The parameters for the channel are available in data record 64 and are assigned as follows:

- Data record 64 for channel 0 (submodule 1)
- Data record 64 for channel 1 (submodule 2)
- ...
- Data record 64 for channel 5 (submodule 6)
- Data record 64 for channel 6 (submodule 7)
- Data record 64 for channel 7 (submodule 8)

Address the respective submodule for data record transfer.

Data record structure

The figure below shows the structure of data record 64 for channel 0 as an example. The structure is identical for channels 1 to 7. The values in byte 0 and byte 1 are fixed and may not be changed.

Enable a parameter by setting the corresponding bit to "1".

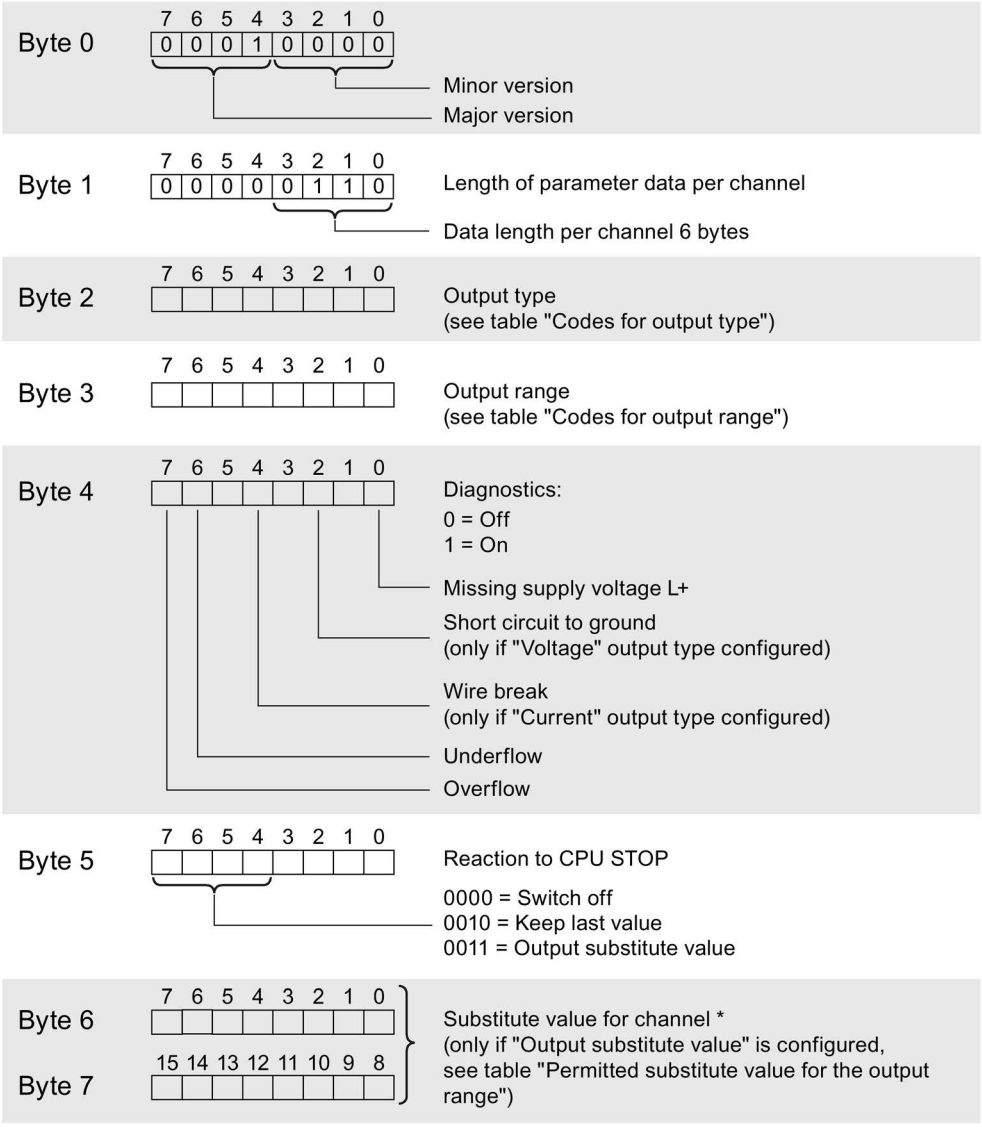

Figure B-1 Data record structure: Bytes 0 to 7

Note

You can only configure the oversampling function with STEP 7 (TIA Portal) via the output rate parameter.

Output type codes

The following table lists all output types of the analog output module along with their codes. Enter these codes at byte 2 of the data record for the corresponding channel (see the previous figure).

Table B- 2 Code for the output type

Output type	Code
Deactivated	0000 0000
Voltage	0000 0001
Current	0000 0010

Codes for the output ranges

The table below contains all output ranges of the analog output module with their codes. Enter these codes at byte 3 of the data record for the corresponding channel (see the previous figure).

Table B- 3 Output range code

Output range for voltage	Code
1 V to 5 V	0000 0011
0 V to 10 V	0000 0010
±10 V	0000 0000
Output range for current	**Code**
0 mA to 20 mA	0000 0001
4 mA to 20 mA	0000 0010
±20 mA	0000 0000

Valid substitute values

The following table lists all output ranges for the valid substitute values. Enter these substitute values at bytes 6 and 7 of the data record for the corresponding channel (see the previous figure). You can find the binary representation of the output ranges in section Representation of analog values (Page 46).

Table B- 4 Valid substitute value for the output range

Output range	Valid substitute value
±10 V	-32512 ... +32511
1 V to 5 V	-6912 ... +32511
0 V to 10 V	0 ... +32511
±20 mA	-32512 ... +32511
4 mA to 20 mA	-6912 ... +32511
0 mA to 20 mA	0 ... +32511

Representation of analog values

C

Introduction

This appendix describes the analog values for all output ranges supported by the AQ 8xU/I HS analog module.

Measured value resolution

Each analog value is written left aligned to the tags. The bits marked with "x" are set to "0".

Table C- 1 Resolution of the analog values

Resolution in bits including sign	Values		Analog value	
	dec	hex	high byte	low byte
16	1	1_H	Sign 0 0 0 0 0 0 0	0 0 0 0 0 0 0 1

C.1 Representation of output ranges

The tables below set out the digitalized representation of the output ranges by bipolar and unipolar range. The resolution is 16 bits.

Table C- 2 Bipolar output ranges

Value dec.	Output value in %	Data word																Range
		2^{15}	2^{14}	2^{13}	2^{12}	2^{11}	2^{10}	2^{9}	2^{8}	2^{7}	2^{6}	2^{5}	2^{4}	2^{3}	2^{2}	2^{1}	2^{0}	
32511	117,589	0	1	1	1	1	1	1	0	1	1	1	1	1	1	1	1	Maximum output value*
32511	117,589	0	1	1	1	1	1	1	0	1	1	1	1	1	1	1	1	Overshoot range
27649	100,004	0	1	1	0	1	1	0	0	0	0	0	0	0	0	0	1	
27648	100,000	0	1	1	0	1	1	0	0	0	0	0	0	0	0	0	0	Rated range
1	0,003617	0	0	0	0	0	0	0	0	0	0	0	0	0	0	0	1	
0	0,000	0	0	0	0	0	0	0	0	0	0	0	0	0	0	0	0	
-1	-0,003617	1	1	1	1	1	1	1	1	1	1	1	1	1	1	1	1	
-27648	-100,000	1	0	0	1	0	1	0	0	0	0	0	0	0	0	0	0	
-27649	-100,004	1	0	0	1	0	0	1	1	1	1	1	1	1	1	1	1	Undershoot range
-32512	-117,593	1	0	0	0	0	0	0	1	0	0	0	0	0	0	0	0	
-32512	-117,593	1	0	0	0	0	0	0	1	0	0	0	0	0	0	0	0	Minimum output value**

* When values > 32511 are specified, the output value is limited to 117.589%.

** When values < -32512 are specified, the output value is limited to -117.593%.

Table C- 3 Unipolar output ranges

Value dec.	Output value in %	Data word																Range
		2^{15}	2^{14}	2^{13}	2^{12}	2^{11}	2^{10}	2^{9}	2^{8}	2^{7}	2^{6}	2^{5}	2^{4}	2^{3}	2^{2}	2^{1}	2^{0}	
32511	117,589	0	1	1	1	1	1	1	1	x	x	x	x	x	x	x	x	Maximum output value*
32511	117,589	0	1	1	1	1	1	1	0	1	1	1	1	1	1	1	1	Overshoot range
27649	100,004	0	1	1	0	1	1	0	0	0	0	0	0	0	0	0	1	
27648	100,000	0	1	1	0	1	1	0	0	0	0	0	0	0	0	0	0	Rated range
1	0,003617	0	0	0	0	0	0	0	0	0	0	0	0	0	0	0	1	
0	0,000	0	0	0	0	0	0	0	0	0	0	0	0	0	0	0	0	
0	0	0	0	0	0	0	0	0	0	0	0	0	0	0	0	0	0	Minimum output value**

* When values > 32511 are specified, the output value is limited to 117.589%.

** When values < 0 are specified, the output value is limited to 0%.

C.2 Representation of analog values in the voltage output ranges

The tables below list the decimal and hexadecimal values (codes) of the possible voltage output ranges.

Table C- 4 Voltage output range ±10 V

Values			Voltage output range	Range
	dec	hex	±10 V	
>117.589 %	>32511	>7EFF	11.76 V	Maximum output value
117.589 %	32511	7EFF	11.76 V	Overshoot range
	27649	6C01		
100 %	27648	6C00	10 V	Rated range
75 %	20736	5100	7.5 V	
0.003617 %	1	1	361.7 µV	
0 %	0	0	0 V	
	-1	FFFF	-361.7 µV	
-75 %	-20736	AF00	-7.5 V	
-100 %	-27648	9400	-10 V	
	-27649	93FF		Undershoot range
-117.593 %	-32512	8100	-11.76 V	
<-117.593 %	<-32512	<8100	-11.76 V	Minimum output value

Table C- 5 Voltage output range 0 V to 10 V

Values			Voltage output range	Range
	dec	hex	0 V to 10 V	
>117.589 %	>32511	>7EFF	11.76 V	Maximum output value
117.589 %	32511	7EFF	11.76 V	Overshoot range
	27649	6C01		
100 %	27648	6C00	10 V	Rated range
75 %	20736	5100	7.5 V	
0.003617 %	1	1	361.7 µV	
0 %	0	0	0 V	
<0 %	<0	<0	0 V	Minimum output value

Table C- 6 Voltage output range 1 V to 5 V

Values			Voltage output range	Range
	dec	hex	1 V to 5 V	
>117.589 %	>32511	>7EFF	5.70 V	Maximum output value
117.589 %	32511	7EFF	5.70 V	Overshoot range
	27649	6C01		
100 %	27648	6C00	5 V	Rated range
75 %	20736	5100	4 V	
0.003617 %	1	1	1 V +144.7 µV	
0 %	0	0	1 V	
	-1	FFFF	1 V -144.7 µV	Undershoot range
-25 %	-6912	E500	0 V	
<-25 %	<-6912	<E500	0 V	Minimum output value

C.3 Representation of analog values in the current output ranges

The tables below list the decimal and hexadecimal values (codes) of the possible current output ranges.

Table C- 7 Current output range ±20 mA

Values			Current output range	Range
	dec	hex	±20 mA	
>117.589 %	>32511	>7EFF	23.52 mA	Maximum output value
117.589 %	32511	7EFF	23.52 mA	Overshoot range
	27649	6C01		
100 %	27648	6C00	20 mA	Rated range
75 %	20736	5100	15 mA	
0.003617 %	1	1	723.4 nA	
0 %	0	0	0 mA	
	-1	FFFF	-723.4 nA	
-75 %	-20736	AF00	-15 mA	
-100 %	-27648	9400	-20 mA	
	-27649	93FF		Undershoot range
-117.593 %	-32512	8100	-23.52 mA	
<-117.593 %	<-32512	<8100	-23.52 mA	Minimum output value

Table C- 8 Current output range 0 to 20 mA

Values			Current output range	Range
	dec	hex	0 mA to 20 mA	
>117.589 %	>32511	>7EFF	23.52 mA	Maximum output value
117.589 %	32511	7EFF	23.52 mA	Overshoot range
	27649	6C01		
100 %	27648	6C00	20 mA	Rated range
75 %	20736	5100	15 mA	
0.003617 %	1	1	723.4 nA	
0 %	0	0	0 mA	
<0 %	<0	<0	0 mA	Minimum output value

Table C- 9 Current output range 4 to 20 mA

Values			Current output range	Range
	dec	hex	4 mA to 20 mA	
>117.589 %	>32511	>7EFF	22.81 mA	Maximum output value
117.589 %	32511	7EFF	22.81 mA	Overshoot range
	27649	6C01		
100 %	27648	6C00	20 mA	Rated range
75 %	20736	5100	16 mA	
0.003617 %	1	1	4 mA	
0 %	0	0	4 mA	
	-1	FFFF		Undershoot range
-25 %	-6912	E500	0 mA	
<-25 %	<-6912	<E500	0 mA	Minimum output value

SIEMENS

SIMATIC

S7-1500 / ET 200MP

Analog Output Module AQ 4xU/I HF (6ES7532-5ND00-0AB0)

Manual

Edition 09/2016

siemens.com

SIEMENS

SIMATIC

S7-1500/ET 200MP
Analog Output Module AQ 4xU/I HF
(6ES7532-5ND00-0AB0)

Manual

Preface

Documentation guide 1

Product overview 2

Wiring 3

Parameters/address space 4

Interrupts/diagnostics alarms 5

Technical specifications 6

Dimensional drawing A

Parameter data records B

Representation of analog values C

09/2016

A5E36633205-AB

Legal information

Warning notice system

This manual contains notices you have to observe in order to ensure your personal safety, as well as to prevent damage to property. The notices referring to your personal safety are highlighted in the manual by a safety alert symbol, notices referring only to property damage have no safety alert symbol. These notices shown below are graded according to the degree of danger.

⚠ DANGER

indicates that death or severe personal injury **will** result if proper precautions are not taken.

⚠ WARNING

indicates that death or severe personal injury **may** result if proper precautions are not taken.

⚠ CAUTION

indicates that minor personal injury can result if proper precautions are not taken.

NOTICE

indicates that property damage can result if proper precautions are not taken.

If more than one degree of danger is present, the warning notice representing the highest degree of danger will be used. A notice warning of injury to persons with a safety alert symbol may also include a warning relating to property damage.

Qualified Personnel

The product/system described in this documentation may be operated only by **personnel qualified** for the specific task in accordance with the relevant documentation, in particular its warning notices and safety instructions. Qualified personnel are those who, based on their training and experience, are capable of identifying risks and avoiding potential hazards when working with these products/systems.

Proper use of Siemens products

Note the following:

⚠ WARNING

Siemens products may only be used for the applications described in the catalog and in the relevant technical documentation. If products and components from other manufacturers are used, these must be recommended or approved by Siemens. Proper transport, storage, installation, assembly, commissioning, operation and maintenance are required to ensure that the products operate safely and without any problems. The permissible ambient conditions must be complied with. The information in the relevant documentation must be observed.

Trademarks

All names identified by ® are registered trademarks of Siemens AG. The remaining trademarks in this publication may be trademarks whose use by third parties for their own purposes could violate the rights of the owner.

Disclaimer of Liability

We have reviewed the contents of this publication to ensure consistency with the hardware and software described. Since variance cannot be precluded entirely, we cannot guarantee full consistency. However, the information in this publication is reviewed regularly and any necessary corrections are included in subsequent editions.

Siemens AG
Division Digital Factory
Postfach 48 48
90026 NÜRNBERG
GERMANY

A5E36633205-AB
℗ 09/2016 Subject to change

Copyright © Siemens AG 2016.
All rights reserved

Preface

Purpose of the documentation

This manual supplements the S7-1500/ET 200MP (http://support.automation.siemens.com/WW/view/en/59191792) system manual.

Functions that relate in general to the systems are described in these manuals.

The information provided in this manual and in the system/function manuals supports you in commissioning the systems.

Changes compared to previous version

Compared to the previous version, this manual contains the following changes:

- As of firmware version V1.1.0, the module supports the isochronous mode function.
- Original texts of the license conditions and copyright notes for open-source software are available on the Internet as of 09/2016:

Conventions

The term "CPU" is used in this manual both for the CPUs of the S7-1500 automation system, as well as for interface modules of the ET 200MP distributed I/O system.

Please also observe notes marked as follows:

Note

A note contains important information regarding the product described in the documentation or its handling, or draws special attention to a section of the documentation.

Security information

Siemens provides products and solutions with industrial security functions that support the secure operation of plants, systems, machines and networks.

In order to protect plants, systems, machines and networks against cyber threats, it is necessary to implement – and continuously maintain – a holistic, state-of-the-art industrial security concept. Siemens' products and solutions only form one element of such a concept.

Customer is responsible to prevent unauthorized access to its plants, systems, machines and networks. Systems, machines and components should only be connected to the enterprise network or the internet if and to the extent necessary and with appropriate security measures (e.g. use of firewalls and network segmentation) in place.

Additionally, Siemens' guidance on appropriate security measures should be taken into account. For more information about industrial security, please visit (http://www.siemens.com/industrialsecurity).

Siemens' products and solutions undergo continuous development to make them more secure. Siemens strongly recommends to apply product updates as soon as available and to always use the latest product versions. Use of product versions that are no longer supported, and failure to apply latest updates may increase customer's exposure to cyber threats.

To stay informed about product updates, subscribe to the Siemens Industrial Security RSS Feed under (http://www.siemens.com/industrialsecurity).

Open Source Software

Open-source software is used in the firmware of the I/O modules. Open Source Software is provided free of charge. We are liable for the product described, including the open-source software contained in it, pursuant to the conditions applicable to the product. Siemens accepts no liability for the use of the open source software over and above the intended program sequence, or for any faults caused by modifications to the software.

For legal reasons, we are obliged to publish the original text of the license conditions and copyright notices. Please read the information relating to this on the Internet (https://support.industry.siemens.com/cs/ww/en/view/109739516).

Table of contents

Preface 4
1 Documentation guide 7
2 Product overview 11
2.1 Properties 11
3 Wiring 13
4 Parameters/address space 16
4.1 Output ranges 16
4.2 Parameters 17
4.3 Declaration of parameters 19
4.4 Address space 20
5 Interrupts/diagnostics alarms 25
5.1 Status and error displays 25
5.2 Interrupts 27
5.3 Diagnostics alarms 28
6 Technical specifications 29
A Dimensional drawing 35
B Parameter data records 37
B.1 Parameter assignment and structure of the parameter data records 37
C Representation of analog values 41
C.1 Representation of output ranges 42
C.2 Representation of analog values in the voltage output ranges 43
C.3 Representation of analog values in the current output ranges 45

Documentation guide

1

The documentation for the SIMATIC S7-1500 automation system, the CPU 1516pro-2 PN based on SIMATIC S7-1500 and the SIMATIC ET 200MP distributed I/O system is arranged into three areas.
This arrangement enables you to access the specific content you require.

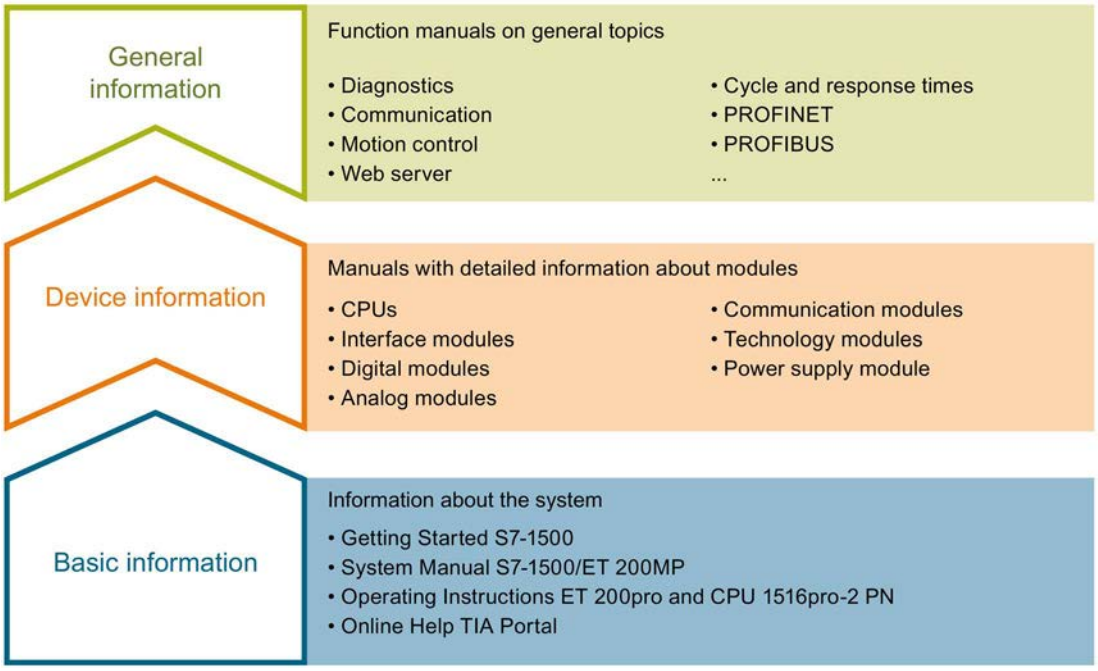

Basic information

The System Manual and Getting Started describe in detail the configuration, installation, wiring and commissioning of the SIMATIC S7-1500 and ET 200MP systems. For CPU 1516pro-2 PN you use the corresponding operating instructions. The STEP 7 online help supports you in the configuration and programming.

Device information

Product manuals contain a compact description of the module-specific information, such as properties, wiring diagrams, characteristics and technical specifications.

General information

The function manuals contain detailed descriptions on general topics regarding the SIMATIC S7-1500 and ET 200MP systems, e.g. diagnostics, communication, motion control, Web server, OPC UA.

You can download the documentation free of charge from the Internet (http://w3.siemens.com/mcms/industrial-automation-systems-simatic/en/manual-overview/Pages/Default.aspx).

Changes and supplements to the manuals are documented in a Product Information.

You can download the product information free of charge from the Internet (https://support.industry.siemens.com/cs/us/en/view/68052815).

Manual Collection S7-1500/ET 200MP

The Manual Collection contains the complete documentation on the SIMATIC S7-1500 automation system and the ET 200MP distributed I/O system gathered together in one file.

You can find the Manual Collection on the Internet (https://support.industry.siemens.com/cs/ww/en/view/86140384).

SIMATIC S7-1500 comparison list for programming languages

The comparison list contains an overview of which instructions and functions you can use for which controller families.

You can find the comparison list on the Internet (https://support.industry.siemens.com/cs/ww/en/view/86630375).

"mySupport"

With "mySupport", your personal workspace, you make the best out of your Industry Online Support.

In "mySupport", you can save filters, favorites and tags, request CAx data and compile your personal library in the Documentation area. In addition, your data is already filled out in support requests and you can get an overview of your current requests at any time.

You must register once to use the full functionality of "mySupport".

You can find "mySupport" on the Internet (https://support.industry.siemens.com/My/ww/en).

"mySupport" - Documentation

In the Documentation area in "mySupport" you can combine entire manuals or only parts of these to your own manual.
You can export the manual as PDF file or in a format that can be edited later.

You can find "mySupport" - Documentation on the Internet (http://support.industry.siemens.com/My/ww/en/documentation).

"mySupport" - CAx data

In the CAx data area in "mySupport", you can access the current product data for your CAx or CAe system.

You configure your own download package with a few clicks.

In doing so you can select:

- Product images, 2D dimension drawings, 3D models, internal circuit diagrams, EPLAN macro files
- Manuals, characteristics, operating manuals, certificates
- Product master data

You can find "mySupport" - CAx data on the Internet (http://support.industry.siemens.com/my/ww/en/CAxOnline).

Application examples

The application examples support you with various tools and examples for solving your automation tasks. Solutions are shown in interplay with multiple components in the system - separated from the focus on individual products.

You will find the application examples on the Internet (https://support.industry.siemens.com/sc/ww/en/sc/2054).

TIA Selection Tool

With the TIA Selection Tool, you can select, configure and order devices for Totally Integrated Automation (TIA).
This tool is the successor of the SIMATIC Selection Tool and combines the known configurators for automation technology into one tool.
With the TIA Selection Tool, you can generate a complete order list from your product selection or product configuration.

You can find the TIA Selection Tool on the Internet (http://w3.siemens.com/mcms/topics/en/simatic/tia-selection-tool).

SIMATIC Automation Tool

You can use the SIMATIC Automation Tool to run commissioning and maintenance activities simultaneously on various SIMATIC S7 stations as a bulk operation independently of the TIA Portal.

The SIMATIC Automation Tool provides a multitude of functions:

- Scanning of a PROFINET/Ethernet network and identification of all connected CPUs
- Address assignment (IP, subnet, gateway) and station name (PROFINET device) to a CPU
- Transfer of the date and the programming device/PC time converted to UTC time to the module
- Program download to CPU
- Operating mode switchover RUN/STOP
- Localization of the CPU by means of LED flashing
- Reading out CPU error information
- Reading the CPU diagnostic buffer
- Reset to factory settings
- Updating the firmware of the CPU and connected modules

You can find the SIMATIC Automation Tool on the Internet (https://support.industry.siemens.com/cs/ww/en/view/98161300).

PRONETA

With SIEMENS PRONETA (PROFINET network analysis), you analyze the PROFINET network during commissioning. PRONETA features two core functions:

- The topology overview independently scans PROFINET and all connected components.
- The IO check is a fast test of the wiring and the module configuration of a system.

You can find SIEMENS PRONETA on the Internet (https://support.industry.siemens.com/cs/ww/en/view/67460624).

Product overview

2

2.1 Properties

Article number

6ES7532-5ND00-0AB0

View of the module

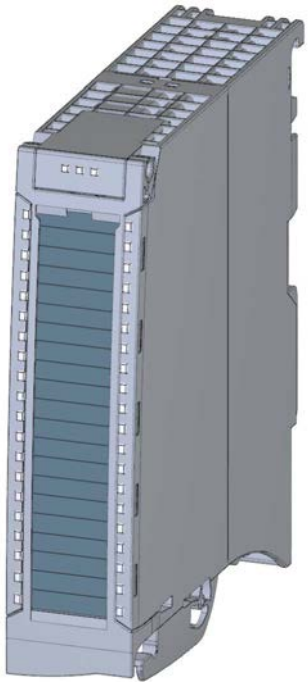

Figure 2-1 View of the AQ 4xU/I HF module

Properties

The module has the following technical properties:

- 4 electrically isolated analog outputs
- Selection of channels for voltage output
- Selection of channels for current output
- Resolution: 16 bits including sign
- Configurable diagnostics (per channel)

The module supports the following functions:

Table 2- 1 Version dependencies of the module functions

Function	Firmware version of the module	Configuration software	
		STEP 7 (TIA Portal) as of V13, SP1 and HSP 0166	GSD file in STEP 7 (TIA Portal) as of V12 or STEP 7 as of V5.5 SP3
Firmware update	V1.0.0 or higher	X	--- / X
Identification data I&M0 to I&M3	V1.0.0 or higher	X	X
Parameter assignment in RUN	V1.0.0 or higher	X	X
Isochronous mode	V1.1.0 or higher	V14 or higher and HSP 0186 (PROFINET IO only)	---
Calibration in runtime	V1.0.0 or higher	X	---
Module-internal Shared Output (MSO)	V1.0.0 or higher	X (PROFINET IO only)	X (PROFINET IO only)
Configurable submodules / submodules for Shared Device	V1.0.0 or higher	X (PROFINET IO only)	X (PROFINET IO only)

You can configure the module with STEP 7 (TIA Portal) and with a GSD file.

Accessories

The following accessories are supplied with the module and can also be ordered separately as spare parts:

- Shield bracket
- Shield terminal
- Power supply element
- Labeling strips
- U connector
- Universal front cover

Other components

The following component can be ordered separately:

Front connectors, including potential jumpers and cable ties

You can find additional information on accessories in the S7-1500/ET 200MP (http://support.automation.siemens.com/WW/view/en/59191792) system manual.

Wiring

3

This section contains the block diagram of the module and outlines various connection options.

You can find information on wiring the front connector, creating a cable shield, etc. in the Wiring section of the S7-1500/ET 200MP (http://support.automation.siemens.com/WW/view/en/59191792) system manual.

Note

- You may use and combine the different wiring options for all channels.
- Do not insert the potential jumpers included with the front connector!

Abbreviations used

Meaning of the abbreviations used in the following figures:

QV_n	Voltage output channel
QI_n	Current output channel
S_n+/S_n-	Sense line channel
L+	Supply voltage connection
M	Ground connection
$M_{ANA\ 0\ bis\ 3}$	Reference potential of the analog circuit

Pin assignment for the power supply element

The power supply element is plugged onto the front connector for powering the analog module. Wire the supply voltage to terminals 41 (L+) and 44 (M). Use terminals 42 (L+) and 43 (M) to loop the potential to the next module.

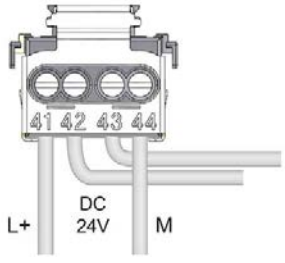

Figure 3-1 Power supply element wiring

Block diagram and terminal assignment for the voltage output

The following figure shows an example of the wiring options:

- 2-wire connection, without compensation for line resistances.
- 4-wire connection, with compensation for line resistances.

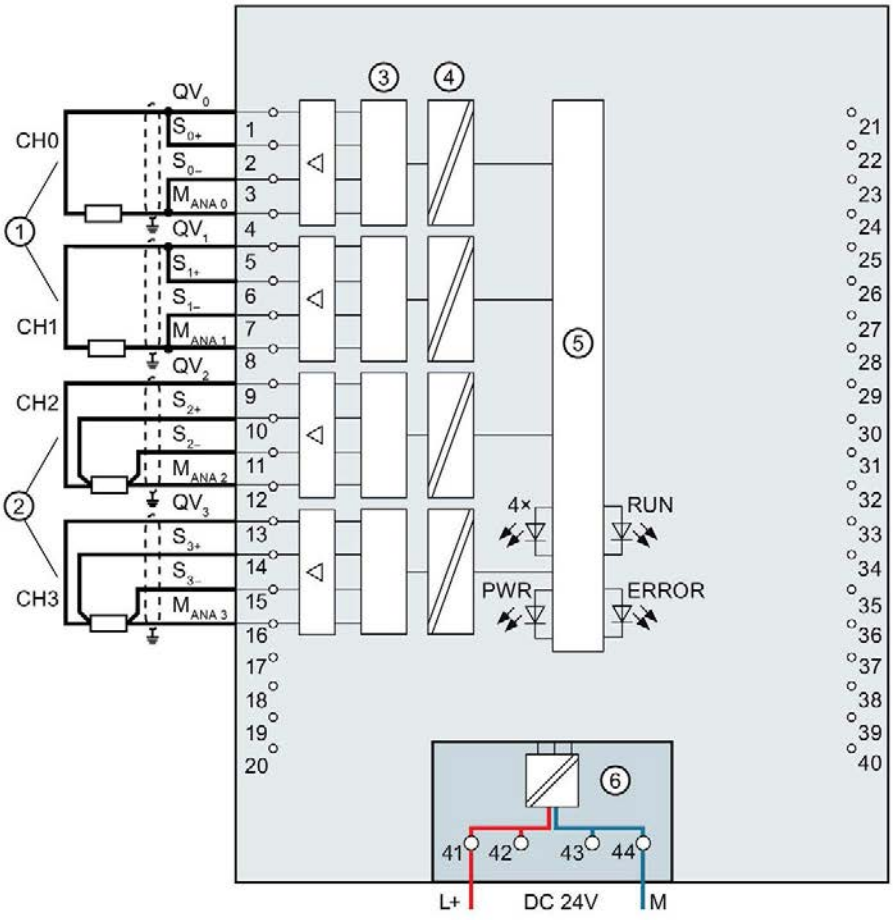

①	2-wire connection (jumper at the front connector)	CHx	Channel or 4 x channel status (green/red)
②	4-wire connection	RUN	Status display LED (green)
③	Digital Analog Converter (DAC)	ERROR	Error display LED (red)
④	Electrical isolation	PWR	LED for power supply (green)
⑤	Backplane bus interface		
⑥	Power via supply module		

Figure 3-2 Block diagram and terminal assignment for the voltage output

Block diagram and terminal assignment for the current output

The following figure shows an example of the terminal assignment for current output circuitry.

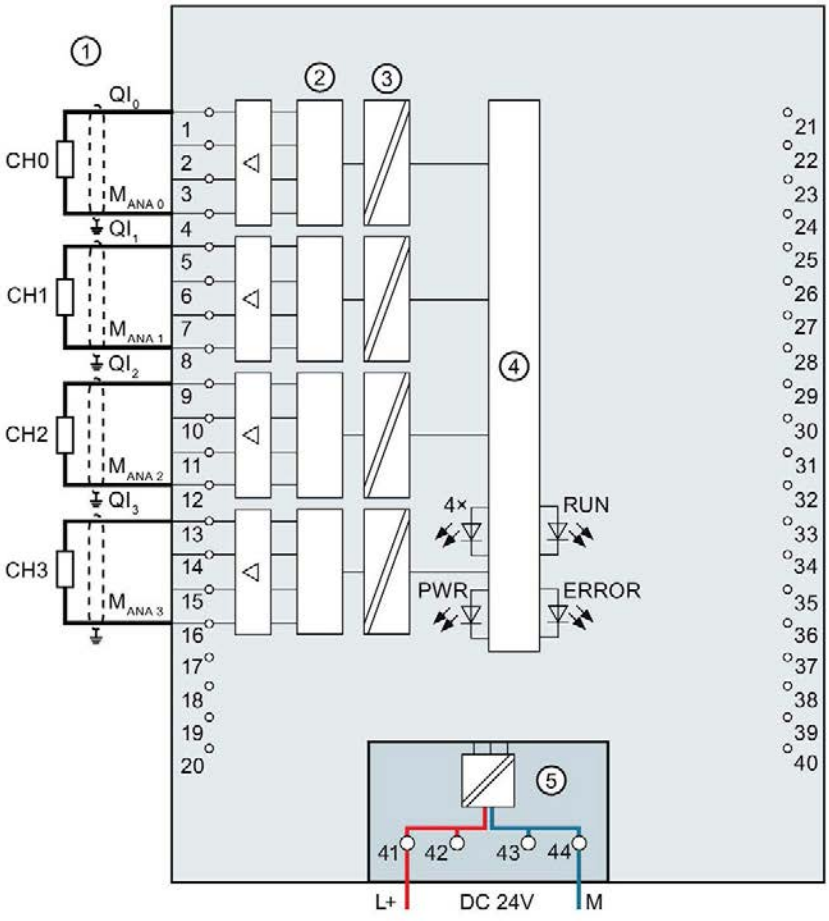

①	Load on current outputs	CHx	Channel or 4 x channel status (green/red)
②	Digital Analog Converter (DAC)	RUN	Status display LED (green)
③	Electrical isolation	ERROR	Error display LED (red)
④	Backplane bus interface	PWR	LED for power supply (green)
⑤	Power via supply module		

Figure 3-3 Block diagram and terminal assignment for the current output

Parameters/address space 4

4.1 Output ranges

The module is set to voltage output type by default with output range ±10 V. You need to edit the module parameters with STEP 7 if you want to use a different output range or output type.

Output type and output ranges

The following table shows the output type and the respective output ranges.

Table 4- 1 Output type and output ranges

Output type	Output range	Representation of analog values
Voltage	1 V to 5 V 0 V to 10 V ±10 V	See Appendix Representation of analog values in the voltage output ranges (Page 43).
Current	0 to 20 mA 4 to 20 mA ±20 mA	See Appendix Representation of analog values in the current output ranges (Page 45).
Deactivated	-	-

The tables of the output ranges, overflow, overshoot range, etc. are available in the appendix Representation of analog values (Page 41).

4.2 Parameters

Parameters of AQ 4xU/I HF

The AQ 4xU/I HF is usually already integrated in the hardware catalog of STEP 7 (TIA Portal). In this case, STEP 7 (TIA Portal) checks the configured properties for plausibility during configuration.

However, you can also assign parameters to the module by means of the GSD file and the configuration software of any provider. The module does not check the validity of the parameterized properties until after the configuration has been loaded.

When you assign the module parameters in STEP 7, you use various parameters to specify the module properties. The following table lists the configurable parameters. The effective range of the configurable parameters depends on the type of configuration. The following configurations are possible:

- Central operation with a S7-1500 CPU
- Distributed operation on PROFINET IO in an ET 200MP system
- Distributed operation on PROFIBUS DP in an ET 200MP system

When assigning parameters in the user program, use the WRREC instruction to transfer the parameters to the module by means of data records; see chapter Parameter assignment and structure of the parameter data record. (Page 37)

The following parameter settings for the channels are possible:

Table 4- 2 Configurable parameters and their defaults

Parameters	Range of values	Default setting	Parameter assignment in RUN	Scope with configuration software, e.g., STEP 7 (TIA Portal)	
				Integrated in the hardware catalog as of STEP 7 (TIA Portal) as of V13 or GSD file PROFINET IO	GSD file PROFIBUS DP
Diagnostics					
• Missing supply voltage L+	Yes/No	No	Yes	Channel [1]	Module [2]
• Wire break	Yes/No	No	Yes	Channel	Module [2]
• Short circuit to M	Yes/No	No	Yes	Channel	Module [2]
• Underflow	Yes/No	No	Yes	Channel	Module [2]
• Overflow	Yes/No	No	Yes	Channel	Module [2]

Parameters	Range of values	Default setting	Parameter assignment in RUN	Scope with configuration software, e.g., STEP 7 (TIA Portal)	
				Integrated in the hardware catalog as of STEP 7 (TIA Portal) as of V13 or GSD file PROFINET IO	GSD file PROFIBUS DP
Output					
• Output type	Current/voltage	Voltage	Yes	Channel	Channel
• Output range	See section Output ranges (Page 16)	±10 V	Yes	Channel	Channel
• Reaction to CPU STOP	• Turn off • Keep last value • Output substitute value	Turn off	Yes	Channel	Channel
• Substitute value	See Table B-4 Valid substitute value for the output range (Page 40)	0	Yes	Channel	Channel

1) If you enable diagnostics for multiple channels, you will receive an alarm surge on failure of the supply voltage because each
enabled channel will detect this fault. You can prevent this message burst by assigning the diagnostics function to one channel only.

2) You can set the effective range of the diagnostics for each channel in the user program with data records 64 to 67.

Short-circuit detection

The diagnostics for short circuit to ground can be configured for the voltage output type. Short-circuit detection is not possible for small output values. The output voltages must therefore be below -0.1 V or above +0.1 V.

Open-circuit detection

The diagnostics for open circuit can be configured for the current output type. Wire break detection is not possible for small output values; the output voltages must therefore be below -0.4 mA or above +0.4 mA.

4.3 Declaration of parameters

Missing supply voltage L+

Enabling of the diagnostics, with missing or too little supply voltage L+.

Wire break

Enabling of the diagnostics if the line to the actuator is broken.

Short-circuit to ground

Enabling of the diagnostics if a short-circuit of the output to M_{ANA} occurs.

Overflow

Enabling of the diagnostics when the output value exceeds the overrange.

Underflow

Enabling of the diagnostics when the output value violates the underrange.

Reaction to CPU STOP

Determines the reaction of the output to the CPU going into STOP state.

Substitute value

The substitute value is the value that the module outputs in case of a CPU STOP.

4.4 Address space

The module can be configured differently in STEP 7; see following table. Depending on the configuration, additional/different addresses are assigned in the process image of the outputs/inputs.

Configuration options of AQ 4xU/I HF

You can configure the module with STEP 7 (TIA Portal) or with a GSD file.

When you configure the module by means of the GSD file, the configurations are available under different abbreviations/module names.

The following configurations are possible:

Table 4- 3 Configuration options

Configuration	Abbreviation/module name in the GSD file	Configuration software, e.g., with STEP 7 (TIA Portal)	
		Integrated in the hardware catalog STEP 7 (TIA Portal) as of V13 SP1 with HSP 0166	GSD file in STEP 7 (TIA Portal) V12 or higher or STEP 7 V5.5 SP3 or higher
1 x 4-channel without value status	AQ 4xU/I HF	X	X
1 x 4-channel with value status	AQ 4xU/I HF QI	X	X
4 x 1-channel without value status	AQ 4xU/I HF S	X (PROFINET IO only)	X (PROFINET IO only)
4 x 1-channel with value status	AQ 4xU/I HF S QI	X (PROFINET IO only)	X (PROFINET IO only)
1 x 4-channel with value status for module-internal Shared Output with up to 4 sub-modules	AQ 4xU/I HF MSO	X (PROFINET IO only)	X (PROFINET IO only)

Value status (Quality Information, QI)

The value status is always activated for the following module names:

- AQ 4xU/I HF QI
- AQ 4xU/I HF S QI
- AQ 4xU/I HF MSO

An additional bit is assigned to each channel for the value status. The bit for the value status indicates if the output value specified by the user program is actually pending at the module terminal (0 = value is incorrect).

Address space of the AQ 4xU/I HF

The following figure shows the address space allocation for the configuration as 4-channel module. You can freely assign the start address for the module. The addresses of the channels are derived from the start address.

"QB x" stands, for example, for the module start address output byte x.

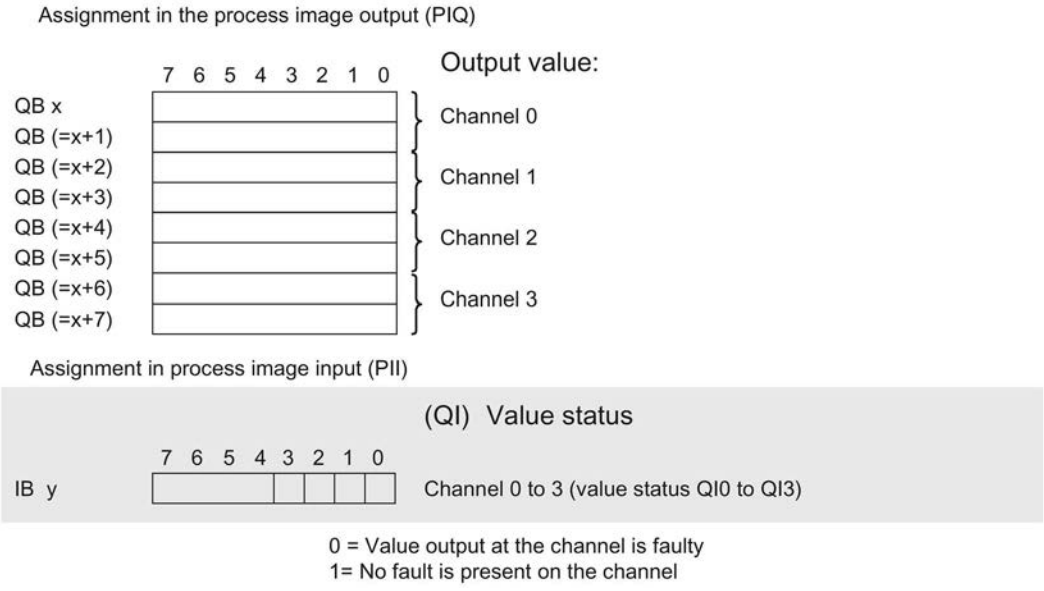

Figure 4-1 Address space for configuration as 1 x 4-channel AQ 4xU/I HF with value status

Address space for configuration as 4 x 1-channel AQ 4xU/I HF S QI

For the configuration as a 4 x 1-channel module, the channels of the module are divided into multiple submodules. The submodules can be assigned to different IO controllers when the module is used in a shared device.

The number of usable submodules is dependent on the interface module used. Observe the information in the manual for the particular interface module.

Contrary to the 1 x 4-channel module configuration, each of the four submodules has a freely assignable start address.

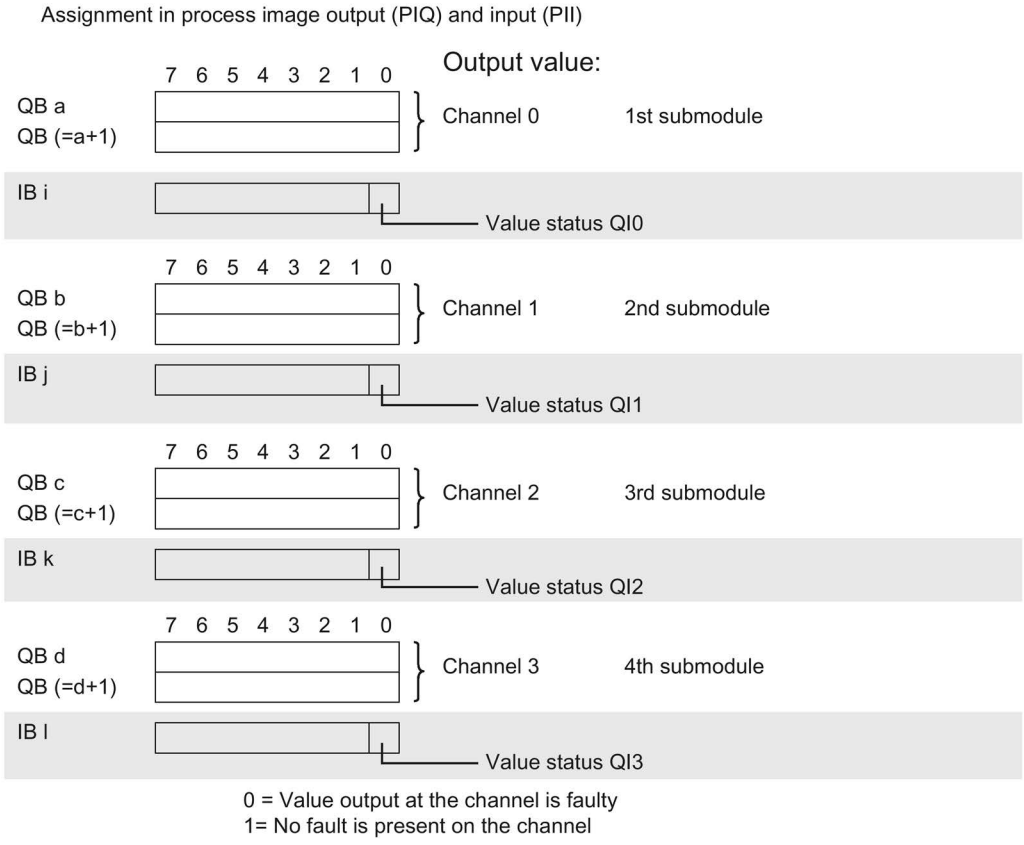

Figure 4-2 Address space for configuration as 4 x 1-channel AQ 4xU/I HF S QI with value status

Address space for configuration as 1 x 4-channel AQ 4xU/I HF MSO

For the configuration as a 1 x 4-channel module (module-internal Shared Output, MSO), channels 0 to 3 of the module are copied to multiple submodules. Channels 0 to 3 are then available with identical values in various submodules. These submodules can be assigned to up to four IO controllers when the module is used in a shared device.

- The IO controller to which submodule 1 is assigned has write access to outputs 0 to 3.
- The IO controllers to which submodule 2, 3, or 4 is assigned have read access to outputs 0 to 3.

The number of usable IO controllers depends on the interface module used. Please observe the information in the manual for the particular interface module.

Value status (Quality Information, QI)

The meaning of the value status depends on the submodule on which it occurs.

For the 1st submodule (=basic submodule), the value status 0 indicates that the value is incorrect or that the IO controller of the basic submodule is in STOP state.

For the 2nd to 4th submodule (=MSO submodule), the value status 0 indicates that the value is incorrect or one of the following errors has occurred:

- The basic submodule is not yet configured (not ready).
- The connection between the IO controller and the basic submodule has been interrupted.
- The IO controller of the basic submodule is in STOP or POWER OFF state.

The following figure shows the assignment of the address space with submodules 1 and 2.

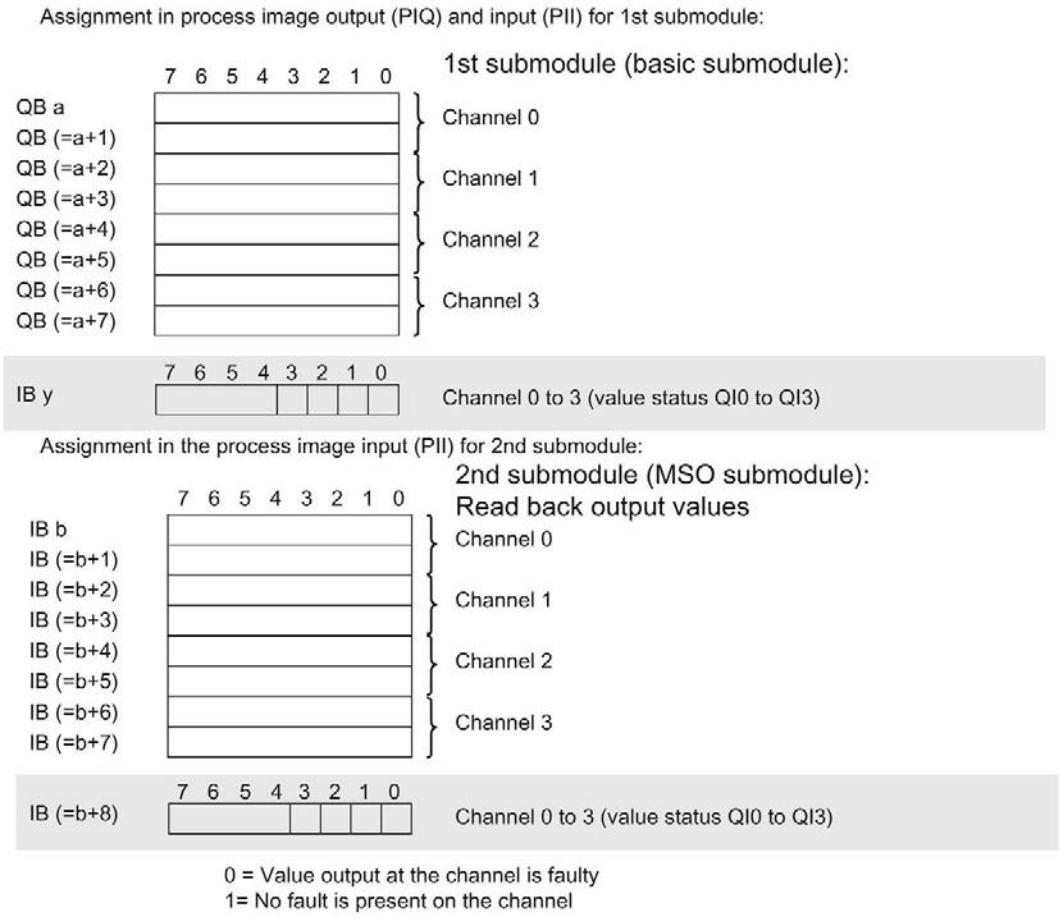

Figure 4-3 Address space for configuration as 1 x 4-channel AQ 4xU/I HF MSO with value status

The following figure shows the assignment of the address space with submodules 3 and 4.

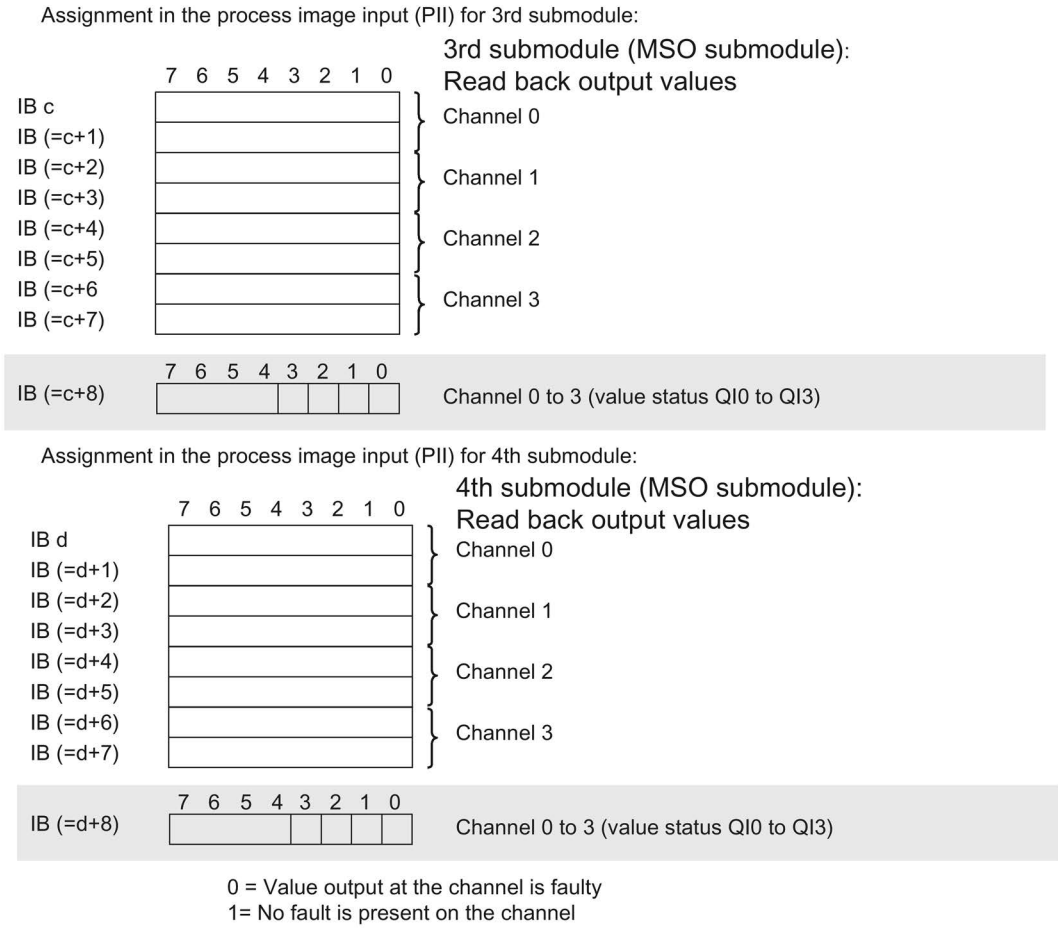

Figure 4-4 Address space for configuration as 1 x 4-channel AQ 4xU/I HF MSO with value status

Reference

You can find information on the Shared Input/Output (MSI/MSO) function in the section Module-Internal Shared Input/Output (MSI/MSO) of the PROFINET with STEP 7 V13 (https://support.industry.siemens.com/cs/ww/en/view/49948856) function manual.

Interrupts/diagnostics alarms

5

5.1 Status and error displays

LED displays

The figure below shows the LED displays (status and error displays) of AQ 4xU/I HF.

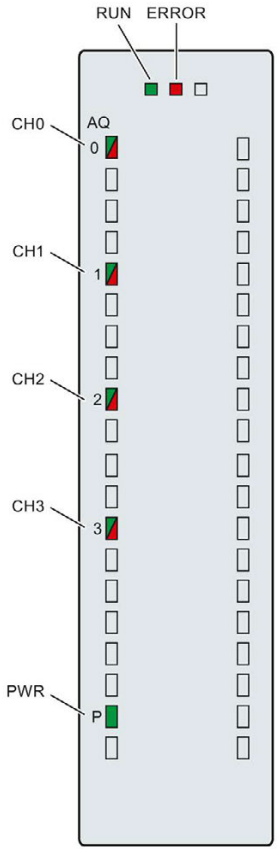

Figure 5-1 LED displays of the module AQ 4xU/I HF

Meaning of the LED displays

The following tables explain the meaning of the status and error displays. Remedial measures for diagnostic reports can be found in chapter Diagnostics alarms (Page 28).

RUN and ERROR LED

Table 5- 1 Status and error displays RUN and ERROR

LED		Meaning	Remedy
RUN	ERROR		
Off	Off	Voltage missing or too low at backplane bus	• Switch on the CPU and/or the system power supply modules. • Verify that the U connectors are inserted. • Check whether too many modules are inserted.
Flashes	Off	The module starts and flashes until the valid parameter assignment is set.	---
On	Off	Module is configured	
On	Flashes	Indicates module errors (at least one error at one channel, e.g., wire break).	Evaluate the diagnostics data and eliminate the error (e.g., wire break).
Flashes	Flashes	Hardware defective	Replace the module.

PWR LED

Table 5- 2 PWR status display

LED PWR	Meaning	Remedy
Off	Supply voltage L+ too low or missing	Check the supply voltage.
On	Supply voltage L+ is present and OK	---

CHx LED

Table 5- 3 CHx status display

LED CHx	Meaning	Remedy
Off	Channel deactivated	---
On	Channel configured and OK	---
On	Diagnostic alarm: e.g., wire break, overflow, underflow	Check the wiring. Disable diagnostics.

5.2 Interrupts

The analog output module AQ 4xU/I HF supports diagnostics interrupts.

You can find detailed information on the event in the error organization block with the RALRM instruction (read additional interrupt info) and in the STEP 7 online help.

Diagnostic interrupt

The module generates a diagnostic interrupt at the following events:

- Missing supply voltage L+
- Short circuit to ground
- Wire break
- Overflow
- Underflow
- Parameter assignment error

5.3 Diagnostics alarms

A diagnostics alarm is generated and the ERROR LED flashes for each diagnostics event on the module. The diagnostics alarms can be read out in the diagnostics buffer of the CPU, for example. You can evaluate the error codes with the user program.

If the module is operated distributed with PROFIBUS DP in an ET 200MP system, you have the option to read out diagnostics data with the instruction RDREC or RD_REC using data record 0 and 1. The structure of the data records is available on the Internet in the "Manual for interface module IM 155-5 DP ST (6ES7155-5BA00-0AB0)".

Table 5- 4 Diagnostics alarms, their meaning and corrective measures

Diagnostics alarm	Error code	Meaning	Remedy
Short-circuit to ground	1_H	Overload at output	Eliminate overload
		Short-circuit of output Q_V to M_{ANA}	Eliminate the short-circuit
Wire break	6_H	Encoder circuit impedance too high	Use a different actuator type or modify the wiring, for example, use cables with larger cross-section
		Wirebreak between the module and actuator	Connect the cable
		Channel not connected (open)	• Disable the channel ("output type" parameter) • Connect the channel
Overflow	7_H	The output value set by the user program exceeds the valid rated range/overshoot range.	Correct the output value
Underflow	8_H	The output value set by the user program undershoots the valid rated range/undershoot range.	Correct the output value
Parameter assignment error	10_H	• The module cannot evaluate parameters for the channel • Incorrect parameter assignment.	Correct the parameter assignment
Load voltage missing	11_H	Supply voltage L+ of the module is missing	Connect supply voltage L+ to module

Technical specifications

6

Technical specifications of the AQ 4xU/I HF

	6ES7532-5ND00-0AB0
General information	
Product type designation	AQ 4xU/I HF
Hardware functional status	FS01
Firmware version	V1.1.0
• FW update possible	Yes
Product function	
I&M data	Yes; I&M0 to I&M3
Engineering with	
STEP 7 TIA Portal can be configured/integrated as of version	V14 / -
STEP 7 can be configured/integrated as of version	V5.5 SP3 / -
PROFIBUS as of GSD version/GSD revision	V1.0 / V5.1
PROFINET as of GSD version/GSD revision	V2.3 / -
Operating mode	
Oversampling	No
MSO	Yes
CiR Configuration in RUN	
Configuration in RUN possible	Yes
Calibration in RUN possible	Yes
Supply voltage	
Rated value (DC)	24 V
Valid range, low limit (DC)	20.4 V
Valid range, high limit (DC)	28.8 V
Reverse polarity protection	Yes
Input current	
Current consumption, max.	160 mA; with 24 V DC supply
Power	
Power consumption from the backplane bus	0.95 W
Power loss	
Power loss, typ.	5 W

	6ES7532-5ND00-0AB0
Analog outputs	
Number of analog outputs	4
Voltage output, short-circuit protection	Yes
Voltage output, short-circuit current, max.	24 mA
Current output, open-circuit voltage, max.	22 V
Cycle time (all channels), min.	125 µs; regardless of the number of activated channels
Output ranges, voltage	
0 V to 10 V	Yes
1 V to 5 V	Yes
-10 V to +10 V	Yes
Output ranges, current	
0 mA to 20 mA	Yes
-20 mA to +20 mA	Yes
4 mA to 20 mA	Yes
Connection of actuators	
for voltage output two-wire connection	Yes
for voltage output four-wire connection	Yes
for current output two-wire connection	Yes
Load resistance (in the rated output range)	
for voltage outputs, min.	1 kOhm; 0.5 kOhm at 1 to 5 V
for voltage outputs, capacitive load, max.	1 µF
for current outputs, max.	750 Ω
for current outputs, inductive load, max.	10 mH
Cable length	
shielded, max.	800 m; for current, 200 m for voltage
Analog value generation for the outputs	
Integration and conversion time/resolution per channel	
Resolution with overrange (bit including sign), max.	16 bit
Conversion time (per channel)	125 µs; regardless of the number of activated channels
Settling time	
for resistive load	0.2 ms; see additional description in the manual
for capacitive load	1.8 ms; see additional description in the manual
for inductive load	2 ms; see additional description in the manual

	6ES7532-5ND00-0AB0
Errors/accuracies	
Output ripple (relative to output range, bandwidth 0 to 50 kHz), (+/-)	0.02%
Linearity error (relative to output range), (+/-)	0.015 %
Temperature error (in relation to output range), (+/-)	0.002%/K
Crosstalk between outputs, max.	-100 dB
Repeat accuracy in settled state at 25 °C (in relation to output range), (+/-)	0.005 %
Operational limit in overall temperature range	
Voltage in relation to output range, (+/-)	±10 V; 0 V to 10 V: ±0.12 %; 1 V to 5 V: ±0.1 %
Current in relation to output range, (+/-)	±20 mA; 0 mA to 20 mA: ±0.2 %; 4 mA to 20 mA: ±0.12 %
Basic error limit (operational limit at 25 °C)	
Voltage in relation to output range, (+/-)	0.06 %
Current in relation to output range, (+/-)	0.1%
Isochronous mode	
Isochronous mode (application synchronized up to terminal)	Yes
Execution and activation time (TCO), min.	100 µs
Bus cycle time (TDP), min.	250 µs
Interrupts/diagnostics/status information	
Diagnostics function	Yes
Substitute values can be applied	Yes
Interrupts	
Diagnostic interrupt	Yes
Diagnostics alarms	
Monitoring of supply voltage	Yes
Wire break	Yes; only for output type current
Short-circuit	Yes; only for output type voltage
Overflow/underflow	Yes
Diagnostics indicator LED	
RUN LED	Yes; green LED
ERROR LED	Yes; red LED
Monitoring of supply voltage (PWR LED)	Yes; green LED
Channel status display	Yes; green LED
For channel diagnostics	Yes; red LED
For module diagnostics	Yes; red LED

	6ES7532-5ND00-0AB0
Electrical isolation	
Electrical isolation of channels	
Between the channels	Yes
Between the channels, in groups of	1
Between the channels and backplane bus	Yes
Between the channels and load voltage L+	Yes
Permitted potential difference	
Between different circuits	60 V DC / 30 V AC; Isolation measured for 120 V AC basic isolation: Between the channels and supply voltage L+, between the channels and the backplane bus, between the channels
Isolation	
Isolation tested with	2000 V DC between the channels and the supply voltage L+, 2000 V DC between the channels and the backplane bus, 2000 V DC between the channels, 707 V DC (type test) between the supply voltage L+ and the backplane bus
Distributed mode	
Prioritized startup	Yes
Dimensions	
Width	35 mm
Height	147 mm
Depth	129 mm
Weights	
Weight, approx.	300 g

Settling times for voltage outputs

The settling time for voltage outputs is influenced mainly by the capacitive load.

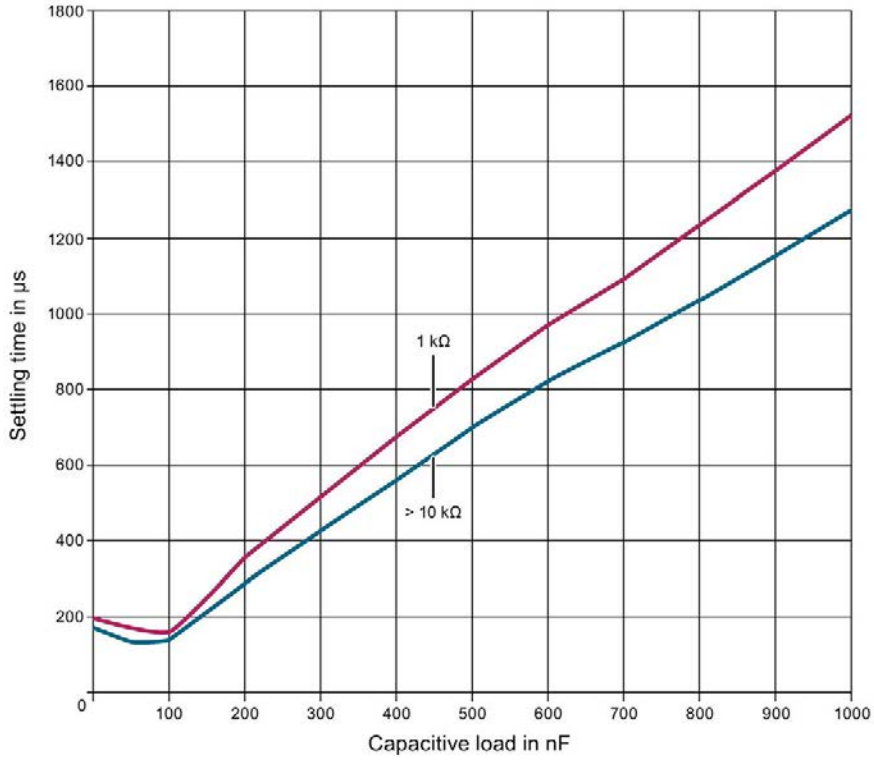

Figure 6-1 Typical settling times for voltage outputs

Settling times for current outputs

The figure below illustrates the dependence of the settling time of load resistance and the inductive load.

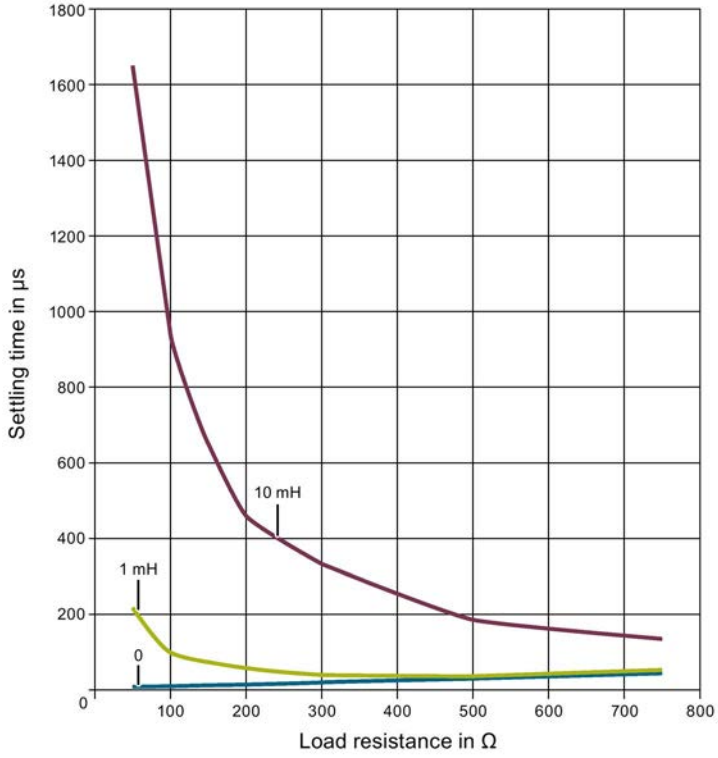

Figure 6-2 Typical settling times for current outputs

Dimensional drawing

A

The dimensional drawing of the module on the mounting rail, as well as a dimensional drawing with open front panel are provided in the appendix. Always observe the specified dimensions for installation in cabinets, control rooms, etc.

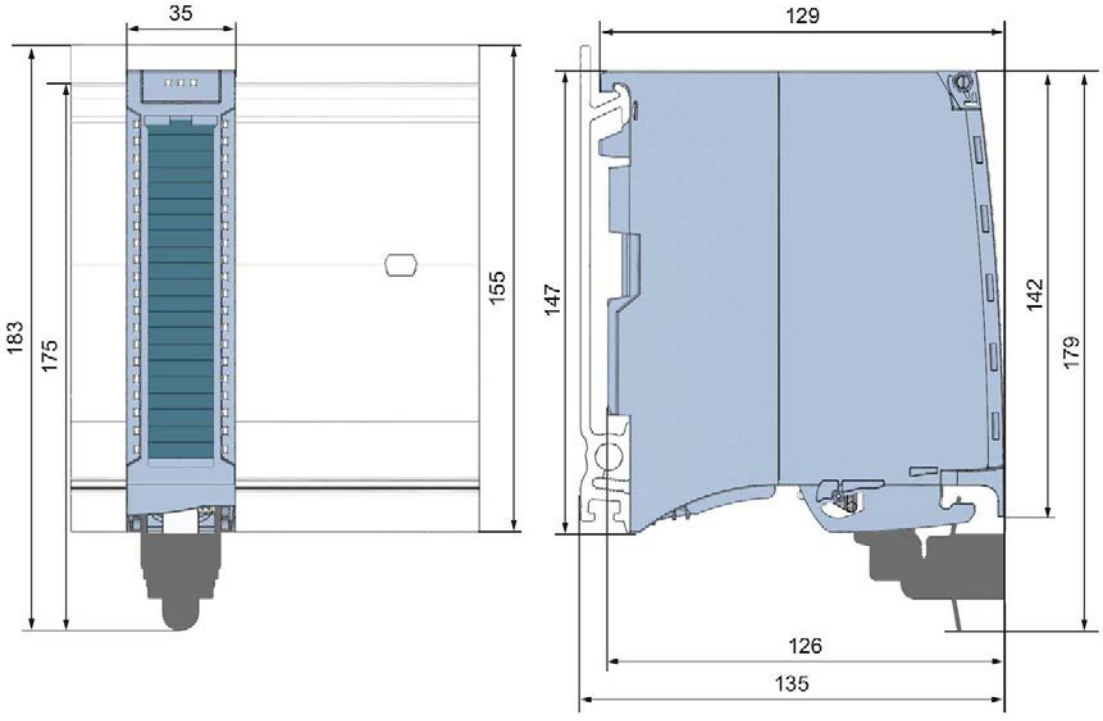

Figure A-1 Dimension drawing of the AQ 4xU/I HF module

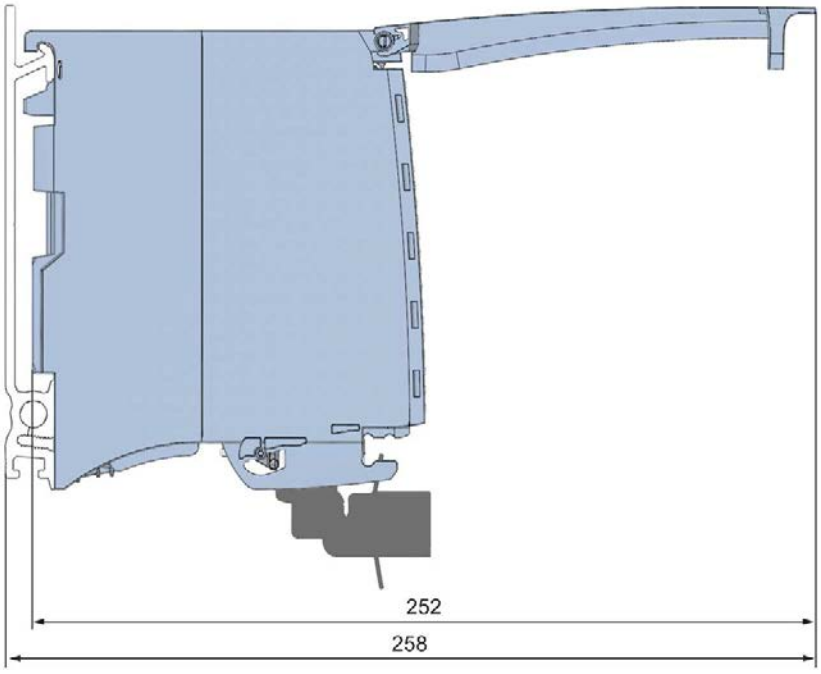

Figure A-2 Dimension drawing of the AQ 4xU/I HF module, side view with open front cover

Parameter data records

B

B.1 Parameter assignment and structure of the parameter data records

The data records of the module have an identical structure, regardless of whether you configure the module with PROFIBUS DP or PROFINET IO.

Dependencies for configuration with GSD file

When configuring the module with a GSD file, remember that the settings of some parameters are dependent on each other.

The following table lists the parameters that depend on one another.

Table B- 1 Dependencies of parameters for configuration with GSD file

Device-specific parameters (GSD file)	Dependent parameters
Short circuit to M	With **output type** voltage only
Wire break	With **output type** current only
Substitute value	Only if **Reaction to CPU STOP** -> **Output substitute value** is configured

Parameter assignment in the user program

You have the option to assign module parameters in RUN (e.g., the voltage or current values of selected channels can be edited in RUN without having an effect on the other channels).

Parameter assignment in RUN

The WRREC instruction is used to transfer the parameters to the module using data records 64 to 67. The parameters set in STEP 7 do not change in the CPU, which means the parameters set in STEP 7 are still valid after a restart.

The parameters are only checked for plausibility by the module after the transfer to the module.

Output parameter STATUS

The module ignores errors that occurred during the transfer of parameters with the WRREC instruction and continues operation with the previous parameter assignment. However, a corresponding error code is written to the STATUS output parameter.

The description of the WRREC instruction and the error codes is available in the STEP 7 online help.

Assignment of data record and channel

The channel parameters in data records 64 to 67 are available for 1x 4-channel configuration and are assigned as follows:

- Data record 64 for channel 0
- Data record 65 for channel 1
- Data record 66 for channel 2
- Data record 67 for channel 3

For configuration 4 x 1-channel, the module has 4 submodules with one channel each. The parameters for the channel are available in data record 64 and are assigned as follows:

- Data record 64 for channel 0 (submodule 1)
- Data record 64 for channel 1 (submodule 2)
- Data record 64 for channel 2 (submodule 3)
- Data record 64 for channel 3 (submodule 4)

Address the respective submodule for data record transfer.

Data record structure

The figure below shows the structure of data record 64 for channel 0 as an example. The structure is identical for channels 1 to 3. The values in byte 0 and byte 1 are fixed and may not be changed.

Enable a parameter by setting the corresponding bit to "1".

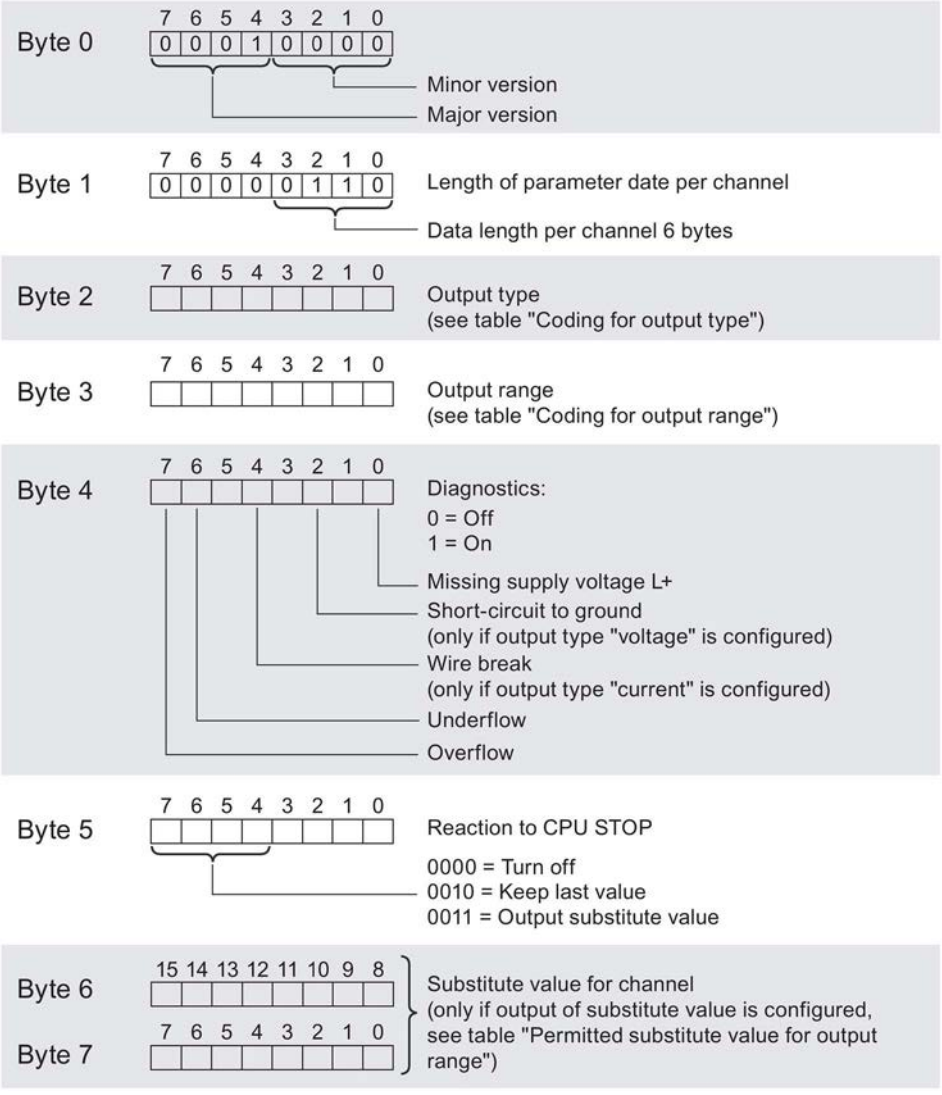

Figure B-1 Structure of data record 64: Bytes 0 to 7

Output type codes

The following table lists all output types of the analog output module along with their codes. Enter these codes at byte 2 of the data record for the corresponding channel (see the previous figure).

Table B- 2 Code for the output type

Output type	Code
Deactivated	0000 0000
Voltage	0000 0001
Current	0000 0010

Codes for the output ranges

The following table lists all voltage and current output ranges of the analog output module along with their codes. In each case, enter these codes at byte 3 of the respective data record (see previous figure).

Table B- 3 Output range code

Output range for voltage	Code
1 V to 5 V	0000 0011
0 V to 10 V	0000 0010
±10 V	0000 0000
Output range for current	**Code**
0 mA to 20 mA	0000 0001
4 mA to 20 mA	0000 0010
±20 mA	0000 0000

Valid substitute values

The following table lists all output ranges for the valid substitute values. Enter these substitute values at bytes 6 and 7 of the data record for the corresponding channel (see the previous figure). The binary representation of output ranges is available on the Internet in the function manual Analog value processing for SIMATIC in the appendix (Page 42).

Table B- 4 Valid substitute value for the output range

Output range	Valid substitute value
±10 V	-32512 ... +32511
1 V to 5 V	-6912 ... +32511
0 V to 10 V	0 ... +32511
±20 mA	-32512 ... +32511
4 mA to 20 mA	-6912 ... +32511
0 mA to 20 mA	0 ... +32511

Representation of analog values

C

Introduction

This appendix describes the analog values for all output ranges supported by the AQ 4xU/I HF analog module.

Measured value resolution

Each analog value is written left aligned to the tags. The bits marked with "x" are set to "0".

Table C- 1 Resolution of the analog values

Resolution in bits including sign	Values		Analog value	
	dec	hex	high byte	low byte
16	1	1_H	Sign 0 0 0 0 0 0 0	0 0 0 0 0 0 0 1

C.1 Representation of output ranges

The tables below set out the digitalized representation of the output ranges separately for bipolar and unipolar ranges. The resolution is 16 bits.

Table C- 2 Bipolar output ranges

Value dec.	Output value in %	Data word																Range
		2^{15}	2^{14}	2^{13}	2^{12}	2^{11}	2^{10}	2^{9}	2^{8}	2^{7}	2^{6}	2^{5}	2^{4}	2^{3}	2^{2}	2^{1}	2^{0}	
32511	117.589	0	1	1	1	1	1	1	0	1	1	1	1	1	1	1	1	Maximum output value*
32511	117.589	0	1	1	1	1	1	1	0	1	1	1	1	1	1	1	1	Overshoot range
27649	100.004	0	1	1	0	1	1	0	0	0	0	0	0	0	0	0	1	
27648	100.000	0	1	1	0	1	1	0	0	0	0	0	0	0	0	0	0	Rated range
1	0.003617	0	0	0	0	0	0	0	0	0	0	0	0	0	0	0	1	
0	0.000	0	0	0	0	0	0	0	0	0	0	0	0	0	0	0	0	
-1	-0.003617	1	1	1	1	1	1	1	1	1	1	1	1	1	1	1	1	
-27648	-100.000	1	0	0	1	0	1	0	0	0	0	0	0	0	0	0	0	
-27649	-100.004	1	0	0	1	0	0	1	1	1	1	1	1	1	1	1	1	Undershoot range
-32512	-117.593	1	0	0	0	0	0	0	1	0	0	0	0	0	0	0	0	
-32512	-117.593	1	0	0	0	0	0	0	1	0	0	0	0	0	0	0	0	Minimum output value**

* When values > 32511 are specified, the output value is limited to 117.589%.

** When values < -32512 are specified, the output value is limited to -117.593%.

Table C- 3 Unipolar output ranges

Value dec.	Output value in %	Data word																Range
		2^{15}	2^{14}	2^{13}	2^{12}	2^{11}	2^{10}	2^{9}	2^{8}	2^{7}	2^{6}	2^{5}	2^{4}	2^{3}	2^{2}	2^{1}	2^{0}	
32511	117.589	0	1	1	1	1	1	1	1	x	x	x	x	x	x	x	x	Maximum output value*
32511	117.589	0	1	1	1	1	1	1	0	1	1	1	1	1	1	1	1	Overshoot range
27649	100.004	0	1	1	0	1	1	0	0	0	0	0	0	0	0	0	1	
27648	100.000	0	1	1	0	1	1	0	0	0	0	0	0	0	0	0	0	Rated range
1	0.003617	0	0	0	0	0	0	0	0	0	0	0	0	0	0	0	1	
0	0.000	0	0	0	0	0	0	0	0	0	0	0	0	0	0	0	0	
0	0	0	0	0	0	0	0	0	0	0	0	0	0	0	0	0	0	Minimum output value**

* When values > 32511 are specified, the output value is limited to 117.589%.

** When values < 0 are specified, the output value is limited to 0%.

C.2 Representation of analog values in the voltage output ranges

The tables below list the decimal and hexadecimal values (codes) of the possible voltage output ranges.

Table C- 4 Voltage output range ±10 V

Values			Voltage output range	Range
	dec	hex	±10 V	
>117.589 %	>32511	>7EFF	11.76 V	Maximum output value
117.589 %	32511	7EFF	11.76 V	Overshoot range
	27649	6C01		
100 %	27648	6C00	10 V	Rated range
75 %	20736	5100	7.5 V	
0.003617 %	1	1	361.7 µV	
0 %	0	0	0 V	
	-1	FFFF	-361.7 µV	
-75 %	-20736	AF00	-7.5 V	
-100 %	-27648	9400	-10 V	
	-27649	93FF		Undershoot range
-117.593 %	-32512	8100	-11.76 V	
<-117.593 %	<-32512	< 8100	-11.76 V	Minimum output value

Table C- 5 Voltage output range 0 V to 10 V

Values			Voltage output range	Range
	dec	hex	0 V to 10 V	
>117.589 %	>32511	>7EFF	11.76 V	Maximum output value
117.589 %	32511	7EFF	11.76 V	Overshoot range
	27649	6C01		
100 %	27648	6C00	10 V	Rated range
75 %	20736	5100	7.5 V	
0.003617 %	1	1	361.7 µV	
0 %	0	0	0 V	
<0 %	<0	<0	0 V	Minimum output value

Table C- 6 Voltage output range 1 V to 5 V

Values			Voltage output range	Range
	dec	hex	1 V to 5 V	
>117.589 %	>32511	>7EFF	5.70 V	Maximum output value
117.589 %	32511	7EFF	5.70 V	Overshoot range
	27649	6C01		
100 %	27648	6C00	5 V	Rated range
75 %	20736	5100	4 V	
0.003617 %	1	1	1 V +144.7 µV	
0 %	0	0	1 V	
	-1	FFFF	1 V -144.7 µV	Undershoot range
-25 %	-6912	E500	0 V	
<-25 %	<-6912	< E500	0 V	Minimum output value

C.3 Representation of analog values in the current output ranges

The tables below list the decimal and hexadecimal values (codes) of the possible current output ranges.

Table C- 7 Current output range ±20 mA

Values			Current output range	Range
	dec	hex	±20 mA	
>117.589 %	>32511	>7EFF	23.52 mA	Maximum output value
117.589 %	32511	7EFF	23.52 mA	Overshoot range
	27649	6C01		
100 %	27648	6C00	20 mA	Rated range
75 %	20736	5100	15 mA	
0.003617 %	1	1	723.4 nA	
0 %	0	0	0 mA	
	-1	FFFF	-723.4 nA	
-75 %	-20736	AF00	-15 mA	
-100 %	-27648	9400	-20 mA	
	-27649	93FF		Undershoot range
-117.593 %	-32512	8100	-23.52 mA	
<-117.593 %	<-32512	<8100	-23.52 mA	Minimum output value

Table C- 8 Current output range 0 to 20 mA

Values			Current output range	Range
	dec	hex	0 mA to 20 mA	
>117.589 %	>32511	>7EFF	23.52 mA	Maximum output value
117.589 %	32511	7EFF	23.52 mA	Overshoot range
	27649	6C01		
100 %	27648	6C00	20 mA	Rated range
75 %	20736	5100	15 mA	
0.003617 %	1	1	723.4 nA	
0 %	0	0	0 mA	
<0 %	<0	<0	0 mA	Minimum output value

Table C- 9 Current output range 4 to 20 mA

Values			Current output range	Range
	dec	hex	4 mA to 20 mA	
>117.589 %	>32511	>7EFF	22.81 mA	Maximum output value
117.589 %	32511	7EFF	22.81 mA	Overshoot range
	27649	6C01		
100 %	27648	6C00	20 mA	Rated range
75 %	20736	5100	16 mA	
0.003617 %	1	1	4 mA	
0 %	0	0	4 mA	
	-1	FFFF		Undershoot range
-25 %	-6912	E500	0 mA	
<-25 %	<-6912	<E500	0 mA	Minimum output value

SIEMENS

Manual

SIMATIC

S7-1500 / ET 200MP

Analog output module AQ 4xU/I ST
(6ES7532-5HD00-0AB0)

Edition 08/2018

support.industry.siemens.com

SIEMENS

SIMATIC

S7-1500/ET 200MP
Analog output module AQ 4xU/I ST
(6ES7532-5HD00-0AB0)

Manual

Preface

Documentation guide 1

Product overview 2

Wiring 3

Parameters/address space 4

Interrupts/diagnostics alarms 5

Technical specifications 6

Dimensional drawing A

Parameter data records B

Representation of analog values C

08/2018

A5E03484696-AE

Legal information

Warning notice system

This manual contains notices you have to observe in order to ensure your personal safety, as well as to prevent damage to property. The notices referring to your personal safety are highlighted in the manual by a safety alert symbol, notices referring only to property damage have no safety alert symbol. These notices shown below are graded according to the degree of danger.

⚠ DANGER

indicates that death or severe personal injury **will** result if proper precautions are not taken.

⚠ WARNING

indicates that death or severe personal injury **may** result if proper precautions are not taken.

⚠ CAUTION

indicates that minor personal injury can result if proper precautions are not taken.

NOTICE

indicates that property damage can result if proper precautions are not taken.

If more than one degree of danger is present, the warning notice representing the highest degree of danger will be used. A notice warning of injury to persons with a safety alert symbol may also include a warning relating to property damage.

Qualified Personnel

The product/system described in this documentation may be operated only by **personnel qualified** for the specific task in accordance with the relevant documentation, in particular its warning notices and safety instructions. Qualified personnel are those who, based on their training and experience, are capable of identifying risks and avoiding potential hazards when working with these products/systems.

Proper use of Siemens products

Note the following:

⚠ WARNING

Siemens products may only be used for the applications described in the catalog and in the relevant technical documentation. If products and components from other manufacturers are used, these must be recommended or approved by Siemens. Proper transport, storage, installation, assembly, commissioning, operation and maintenance are required to ensure that the products operate safely and without any problems. The permissible ambient conditions must be complied with. The information in the relevant documentation must be observed.

Trademarks

All names identified by ® are registered trademarks of Siemens AG. The remaining trademarks in this publication may be trademarks whose use by third parties for their own purposes could violate the rights of the owner.

Disclaimer of Liability

We have reviewed the contents of this publication to ensure consistency with the hardware and software described. Since variance cannot be precluded entirely, we cannot guarantee full consistency. However, the information in this publication is reviewed regularly and any necessary corrections are included in subsequent editions.

Siemens AG
Division Digital Factory
Postfach 48 48
90026 NÜRNBERG
GERMANY

A5E03484696-AE
℗ 07/2018 Subject to change

Copyright © Siemens AG 2012 - 2018.
All rights reserved

Preface

Purpose of the documentation

This manual supplements the system manual S7-1500/ET 200MP (https://support.industry.siemens.com/cs/ww/en/view/59191792).

Functions that relate in general to the systems are described in these manuals.

The information provided in this manual and in the system/function manuals supports you in commissioning the systems.

Changes compared to previous version

Compared to the previous version, this manual contains the following changes:

- New licensing conditions and copyright information of the Open Source Software
- New technical specifications

Conventions

The term "CPU" is used in this manual both for the CPUs of the S7-1500 automation system, as well as for interface modules of the ET 200MP distributed I/O system.

Please also observe notes marked as follows:

Note

A note contains important information on the product described in the documentation, on the handling of the product or on the section of the documentation to which particular attention should be paid.

Security information

Siemens provides products and solutions with industrial security functions that support the secure operation of plants, systems, machines and networks.

In order to protect plants, systems, machines and networks against cyber threats, it is necessary to implement – and continuously maintain – a holistic, state-of-the-art industrial security concept. Siemens' products and solutions constitute one element of such a concept.

Customers are responsible for preventing unauthorized access to their plants, systems, machines and networks. Such systems, machines and components should only be connected to an enterprise network or the internet if and to the extent such a connection is necessary and only when appropriate security measures (e.g. firewalls and/or network segmentation) are in place.

For additional information on industrial security measures that may be implemented, please visit (https://www.siemens.com/industrialsecurity).

Siemens' products and solutions undergo continuous development to make them more secure. Siemens strongly recommends that product updates are applied as soon as they are available and that the latest product versions are used. Use of product versions that are no longer supported, and failure to apply the latest updates may increase customers' exposure to cyber threats.

To stay informed about product updates, subscribe to the Siemens Industrial Security RSS Feed under (https://www.siemens.com/industrialsecurity).

Open Source Software

Open-source software is used in the firmware of the I/O modules. Open Source Software is provided free of charge. We are liable for the product described, including the open-source software contained in it, pursuant to the conditions applicable to the product. Siemens accepts no liability for the use of the open source software over and above the intended program sequence, or for any faults caused by modifications to the software.

For legal reasons, we are obliged to publish the original text of the license conditions and copyright notices. Please read the information relating to this on the Internet (https://support.industry.siemens.com/cs/ww/en/view/109757558).

Table of contents

Preface 3
1 Documentation guide 6
2 Product overview 10
2.1 Properties 10
3 Wiring 13
4 Parameters/address space 16
4.1 Output ranges 16
4.2 Parameters 17
4.3 Declaration of parameters 19
4.4 Address space 20
5 Interrupts/diagnostics alarms 25
5.1 Status and error displays 25
5.2 Interrupts 27
5.3 Diagnostics alarms 28
6 Technical specifications 29
A Dimensional drawing 33
B Parameter data records 35
B.1 Parameter assignment and structure of the parameter data records 35
C Representation of analog values 39
C.1 Representation of output ranges 40
C.2 Representation of analog values in the voltage output ranges 41
C.3 Representation of analog values in the current output ranges 43

Documentation guide

1

The documentation for the SIMATIC S7-1500 automation system and the SIMATIC ET 200MP distributed I/O system is arranged into three areas.
This arrangement enables you to access the specific content you require.

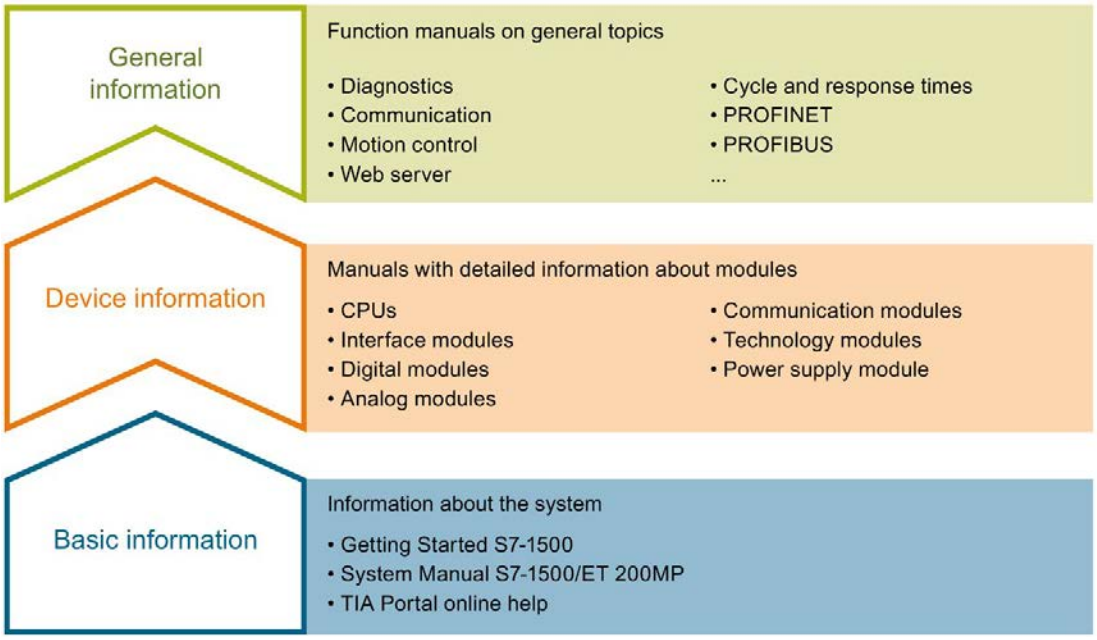

Basic information

The System Manual and Getting Started describe in detail the configuration, installation, wiring and commissioning of the SIMATIC S7-1500 and ET 200MP systems. The STEP 7 online help supports you in the configuration and programming.

Device information

Product manuals contain a compact description of the module-specific information, such as properties, wiring diagrams, characteristics and technical specifications.

General information

The function manuals contain detailed descriptions on general topics regarding the SIMATIC S7-1500 and ET 200MP systems, e.g. diagnostics, communication, motion control, Web server, OPC UA.

You can download the documentation free of charge from the Internet (https://support.industry.siemens.com/cs/ww/en/view/109742691).

Changes and supplements to the manuals are documented in a Product Information.

You can download the product information free of charge from the Internet (https://support.industry.siemens.com/cs/us/en/view/68052815).

Manual Collection S7-1500/ET 200MP

The Manual Collection contains the complete documentation on the SIMATIC S7-1500 automation system and the ET 200MP distributed I/O system gathered together in one file.

You can find the Manual Collection on the Internet (https://support.industry.siemens.com/cs/ww/en/view/86140384).

SIMATIC S7-1500 comparison list for programming languages

The comparison list contains an overview of which instructions and functions you can use for which controller families.

You can find the comparison list on the Internet (https://support.industry.siemens.com/cs/ww/en/view/86630375).

"mySupport"

With "mySupport", your personal workspace, you make the best out of your Industry Online Support.

In "mySupport", you can save filters, favorites and tags, request CAx data and compile your personal library in the Documentation area. In addition, your data is already filled out in support requests and you can get an overview of your current requests at any time.

You must register once to use the full functionality of "mySupport".

You can find "mySupport" on the Internet (https://support.industry.siemens.com/My/ww/en).

"mySupport" - Documentation

In the Documentation area in "mySupport" you can combine entire manuals or only parts of these to your own manual.
You can export the manual as PDF file or in a format that can be edited later.

You can find "mySupport" - Documentation on the Internet (http://support.industry.siemens.com/My/ww/en/documentation).

"mySupport" - CAx data

In the CAx data area in "mySupport", you can access the current product data for your CAx or CAe system.

You configure your own download package with a few clicks.

In doing so you can select:

- Product images, 2D dimension drawings, 3D models, internal circuit diagrams, EPLAN macro files
- Manuals, characteristics, operating manuals, certificates
- Product master data

You can find "mySupport" - CAx data on the Internet (http://support.industry.siemens.com/my/ww/en/CAxOnline).

Application examples

The application examples support you with various tools and examples for solving your automation tasks. Solutions are shown in interplay with multiple components in the system - separated from the focus on individual products.

You will find the application examples on the Internet (https://support.industry.siemens.com/sc/ww/en/sc/2054).

TIA Selection Tool

With the TIA Selection Tool, you can select, configure and order devices for Totally Integrated Automation (TIA).
This tool is the successor of the SIMATIC Selection Tool and combines the known configurators for automation technology into one tool.
With the TIA Selection Tool, you can generate a complete order list from your product selection or product configuration.

You can find the TIA Selection Tool on the Internet (http://w3.siemens.com/mcms/topics/en/simatic/tia-selection-tool).

SIMATIC Automation Tool

You can use the SIMATIC Automation Tool to perform commissioning and maintenance activities simultaneously on various SIMATIC S7 stations as a bulk operation independent of the TIA Portal.

General function overview:

- Network browsing and creation of a table showing the accessible devices in the network.
- Flashing of device LEDs or HMI display to locate a device
- Downloading of addresses (IP, subnet, gateway) to a device
- Downloading the PROFINET name (station name) to a device
- Placing a CPU in RUN or STOP mode
- Setting the time in a CPU to the current time of your PG/PC
- Downloading a new program to a CPU or an HMI device
- Downloading from CPU, downloading to CPU or deleting recipe data from a CPU
- Downloading from CPU or deleting data log data from a CPU
- Backup/restore of data from/to a backup file for CPUs and HMI devices
- Downloading service data from a CPU
- Reading the diagnostics buffer of a CPU
- Performing a CPU memory reset
- Resetting devices to factory settings
- Downloading a firmware update to a device

You can find the SIMATIC Automation Tool on the Internet (https://support.industry.siemens.com/cs/ww/en/view/98161300).

PRONETA

With SIEMENS PRONETA (PROFINET network analysis), you analyze the PROFINET network during commissioning. PRONETA features two core functions:

- The topology overview independently scans PROFINET network and all connected components.
- The IO check is a fast test of the wiring and the module configuration of a system.

You can find SIEMENS PRONETA on the Internet (https://support.industry.siemens.com/cs/ww/en/view/67460624).

SINETPLAN

SINETPLAN, the Siemens Network Planner, supports you in planning automation systems and networks based on PROFINET. The tool facilitates professional and predictive dimensioning of your PROFINET installation as early as in the planning stage. In addition, SINETPLAN supports you during network optimization and helps you to exploit network resources optimally and to plan reserves. This helps to prevent problems in commissioning or failures during productive operation even in advance of a planned operation. This increases the availability of the production plant and helps improve operational safety.

The advantages at a glance

- Network optimization thanks to port-specific calculation of the network load
- Increased production availability thanks to online scan and verification of existing systems
- Transparency before commissioning through importing and simulation of existing STEP 7 projects
- Efficiency through securing existing investments in the long term and optimal exploitation of resources

You can find SINETPLAN on the Internet (https://www.siemens.com/sinetplan).

Product overview

2

2.1 Properties

Article number

6ES7532-5HD00-0AB0

View of the module

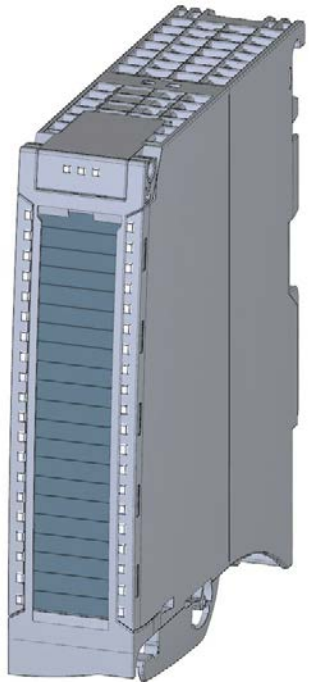

Figure 2-1 View of the AQ 4xU/I ST module

Properties

The module has the following technical properties:

- 4 analog outputs
- Selection of channels for voltage output
- Selection of channels for current output
- Resolution: 16 bits including sign
- Configurable diagnostics (per channel)

The module supports the following functions:

Table 2- 1 Version dependencies of the module functions

Function	Firmware version of the module	Configuration software	
		STEP 7 (TIA Portal)	GSD file in STEP 7 (TIA Portal) V12 or higher, or STEP 7 V5.5 SP3 or higher
Firmware update	V1.0.0 or higher	V12 or higher	--- / X
Identification data I&M0 to I&M3	V1.0.0 or higher	V12 or higher	X
Parameter assignment in RUN	V1.0.0 or higher	V12 or higher	X
Calibration in runtime	V1.0.0 or higher	V12 or higher	X
Module-internal Shared Output (MSO)	V2.0.0 or higher	V13 Update 3 or higher (PROFINET IO only)	X (PROFINET IO only)
Configurable submodules / submodules for Shared Device	V2.0.0 or higher	V13 Update 3 or higher (PROFINET IO only)	X (PROFINET IO only)
Configurable after interface module IM 155-5 DP ST	V2.0.0 or higher	V13 or higher	X

You can configure the module with STEP 7 (TIA Portal) and with a GSD file.

Compatibility

The following table shows the compatibility of the modules and the dependencies between hardware functional status (FS) and firmware version (FW) used:

Hardware functional status	Firmware version	Note
FS01	V1.0.0 to V2.0.x	Upgrade to downgrade possible between V1.0.0 and V2.0.x
FS02	V1.0.0 to V2.0.x	
FS03	V2.1.0	No upgrade or downgrade possible
FS04	V2.2.0 or higher	Upgrade and downgrade possible between V2.2.0 and higher

Accessories

The following accessories are supplied with the module and can also be ordered separately as spare parts:

- Shield bracket
- Shield terminal
- Power supply element
- Labeling strips
- U connector
- Universal front door

Other components

The following component can be ordered separately:

Front connectors, including potential jumpers and cable ties

You can find additional information on accessories in the system manual S7-1500/ET 200MP (https://support.industry.siemens.com/cs/ww/en/view/59191792).

Wiring

3

This section contains the block diagram of the module and outlines various connection options.

You can find information on wiring the front connector, creating a cable shield, etc. in the Wiring section of the system manual S7-1500/ET 200MP (https://support.industry.siemens.com/cs/ww/en/view/59191792).

Note

You may use and combine the different wiring options for all channels.

Do not insert the potential jumpers supplied with the front connector.

Abbreviations used

QV_n	Voltage output channel
QI_n	Current output channel
S_n+/S_n-	Sense line channel
L+	Connection for supply voltage
M	Ground connection
M_{ANA}	Reference potential of the analog circuit

Pin assignment for the power supply element

The power supply element is plugged onto the front connector for powering the analog module. Wire the supply voltage to terminals 41 (L+) and 44 (M). Use terminals 42 (L+) and 43 (M) to loop the potential to the next module.

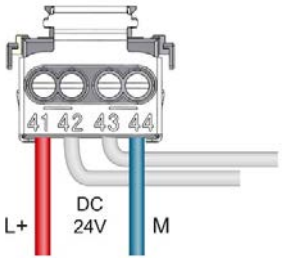

Figure 3-1 Power supply element wiring

Block diagram and pin assignment for the voltage output

The following figure shows an example of the wiring options:

- 2-wire connection, without compensation for line resistances.
- 4-wire connection, with compensation for line resistances.

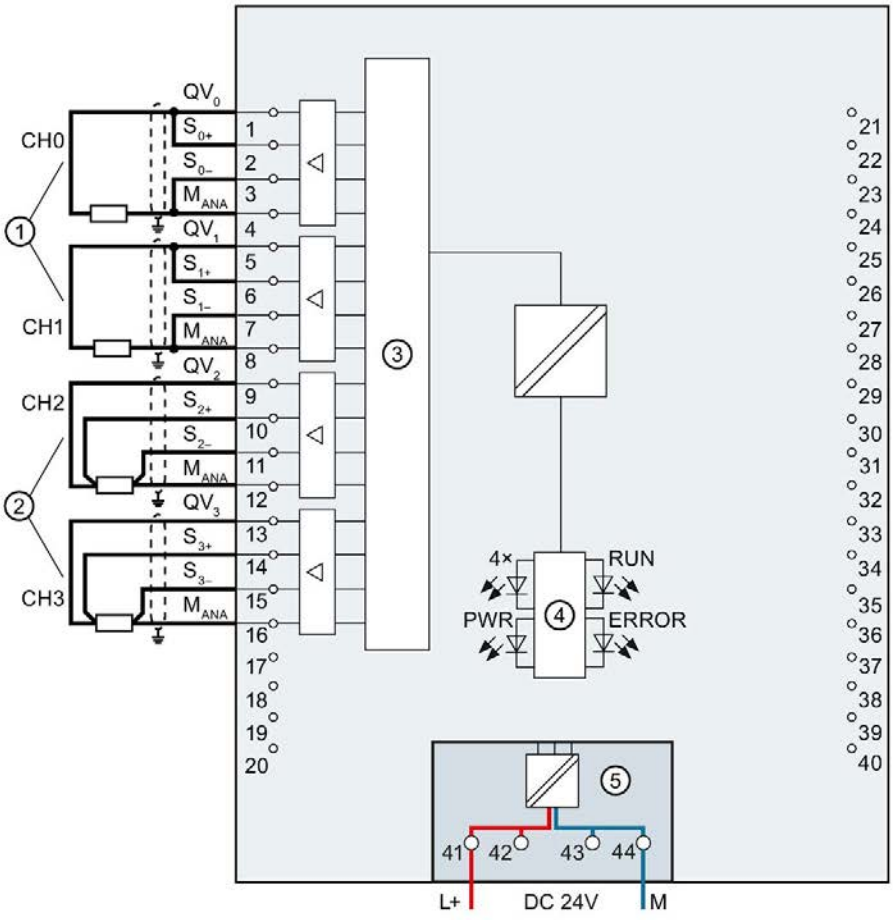

①	2-wire connection (jumper at the front connector)	CHx	Channel or 4 x channel status (green/red)
②	4-wire connection	RUN	Status display LED (green)
③	Digital-to-analog converter (DAC)	ERROR	Error display LED (red)
④	Backplane bus interface	PWR	LED for power supply (green)
⑤	Supply voltage via power supply module		

Figure 3-2 Block diagram and pin assignment for the voltage output

Block diagram and pin assignment for the current output

The following figure shows an example of the pin assignment for current output circuitry.

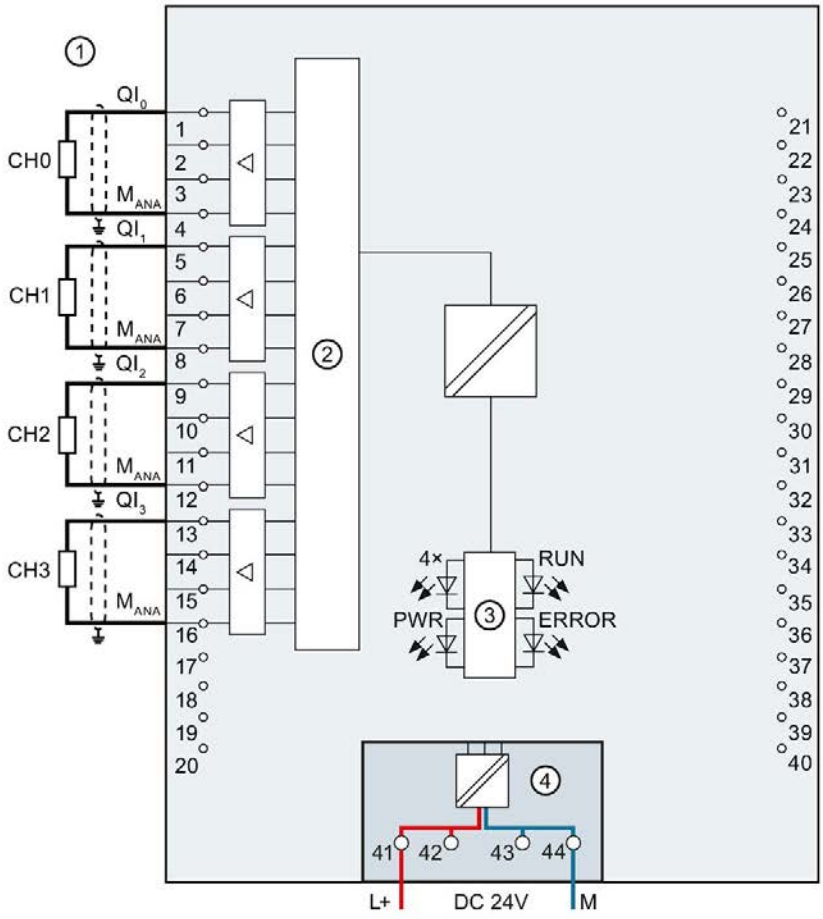

①	Load on current outputs	CHx	Channel or 4 x channel status (green/red)
②	Digital-to-analog converter (DAC)	RUN	Status display LED (green)
③	Backplane bus interface	ERROR	Error display LED (red)
④	Supply voltage via power supply module	PWR	LED for power supply (green)

Figure 3-3 Block diagram and pin assignment for the current output

Parameters/address space 4

4.1 Output ranges

The module is set to voltage output type by default with output range ±10 V. You need to edit the module parameters with STEP 7 if you want to use a different output range or output type.

Output type and output ranges

The following table shows the output type and the respective output ranges.

Table 4- 1 Output type and output ranges

Output type	Output range	Representation of analog values
Voltage	1 V to 5 V 0 V to 10 V ±10 V	See Representation of analog values in the voltage output ranges (Page 41)
Current	0 mA to 20 mA 4 mA to 20 mA ±20 mA	See Representation of analog values in the current output ranges (Page 43)
Disabled	-	-

The tables of the output ranges, overflow, overrange, etc. are provided in the appendix Representation of analog values (Page 39).

4.2 Parameters

AQ 4xU/I ST parameters

When you assign the module parameters in STEP 7, you use various parameters to specify the module properties. The following table lists the configurable parameters. The effective range of the configurable parameters depends on the type of configuration. The following configurations are possible:

- Central operation with a S7-1500 CPU
- Distributed operation on PROFINET IO in an ET 200MP system
- Distributed operation on PROFIBUS DP in an ET 200MP system

When assigning parameters in the user program, use the WRREC instruction to transfer the parameters to the module by means of data records; see chapter Parameter assignment and structure of the parameter data record. (Page 35)

Table 4- 2 Configurable parameters and their defaults

Parameters	Range of values	Default setting	Parameter assignment in RUN	Scope with configuration software, e.g., STEP 7 (TIA Portal)	
				GSD file PROFINET IO	GSD file PROFIBUS DP
Diagnostics					
• Missing supply voltage L+	Yes/No	No	Yes	Channel*	Module**
• Wire break	Yes/No	No	Yes	Channel	Module**
• Short circuit to M	Yes/No	No	Yes	Channel	Module**
• Underflow	Yes/No	No	Yes	Channel	Module**
• Overflow	Yes/No	No	Yes	Channel	Module**

Parameters	Range of values	Default setting	Parameter assignment in RUN	Scope with configuration software, e.g., STEP 7 (TIA Portal)	
				GSD file PROFINET IO	GSD file PROFIBUS DP
Output					
• Output type	Current/voltage	Voltage	Yes	Channel	Channel
• Output range	See chapter Output ranges (Page 16)	±10 V	Yes	Channel	Channel
• Reaction to CPU STOP	• Turn off • Keep last value • Output substitute value	Turn off	Yes	Channel	Channel
• Substitute value	See Table B-4 Valid substitute value for the output range (Page 38)	0	Yes	Channel	Channel

* If you enable diagnostics for multiple channels, you will receive an alarm surge on failure of the supply voltage because each enabled channel will detect this fault. You can prevent this message burst by assigning the diagnostics function to one channel only.

** You can set the effective range of the diagnostics for each channel in the user program with data records 64 to 67.

Short-circuit detection

The diagnostics for short circuit to ground can be configured for the voltage output type. A short-circuit detection is not possible for small output values; the output voltages must therefore be below -0.1 V or above +0.1 V.

Open-circuit detection

The diagnostics for open circuit can be configured for the current output type. An open-circuit detection is not possible for small output values; the output voltages must therefore be below -0.2 mA or above +0.2 mA.

4.3 Declaration of parameters

Missing supply voltage L+

Enabling of the diagnostics, with missing or too little supply voltage L+.

Wire break

Enabling of the diagnostics if the line to the actuator is broken.

Short-circuit to ground

Enabling of the diagnostics if a short-circuit of the output to M_{ANA} occurs.

Overflow

Enabling of the diagnostics when the output value exceeds the overrange.

Underflow

Enabling of the diagnostics when the output value violates the underrange.

Reaction to CPU STOP

Determines the reaction of the output to the CPU going into STOP state.

Substitute value

The substitute value is the value that the module outputs in case of a CPU STOP.

4.4 Address space

The module can be configured differently in STEP 7; see following table. Depending on the configuration, additional/different addresses are assigned in the process image of the outputs/inputs.

Configuration options of AQ 4xU/I ST

You can configure the module with STEP 7 (TIA Portal) or with a GSD file.

When you configure the module by means of the GSD file, the configurations are available under different abbreviations/module names.

The following configurations are possible:

Table 4- 3 Configuration options

Configuration	Abbreviation/module name in the GSD file	Configuration software, e.g., with STEP 7 (TIA Portal)	
		Integrated in hardware catalog STEP 7 (TIA Portal)	GSD file in STEP 7 (TIA Portal) V12 or higher or STEP 7 V5.5 SP3 or higher
1 x 4-channel without value status	AQ 4xU/I ST	V12 or higher	X
1 x 4-channel with value status	AQ 4xU/I ST QI	V12 or higher	X
4 x 1-channel without value status	AQ 4xU/I ST S	V13 Update 3 or higher (PROFINET IO only)	X (PROFINET IO only)
4 x 1-channel with value status	AQ 4xU/I ST S QI	V13 Update 3 or higher (PROFINET IO only)	X (PROFINET IO only)
1 x 4-channel with value status for module-internal Shared Output with up to 4 sub-modules	AQ 4xU/I ST MSO	V13 Update 3 or higher (PROFINET IO only)	X (PROFINET IO only)

Value status (Quality Information, QI)

The value status is always activated for the following module names:

- AQ 4xU/I ST QI
- AQ 4xU/I ST S QI
- AQ 4xU/I ST MSO

An additional bit is assigned to each channel for the value status. The bit for the value status indicates if the output value specified by the user program is actually pending at the module terminal (0 = value is incorrect).

Address space of the AQ 4xU/I ST

The following figure shows the address space allocation for the configuration as 4-channel module. You can freely assign the start address for the module. The addresses of the channels are derived from the start address.

"QB x" stands, for example, for the module start address output byte x.

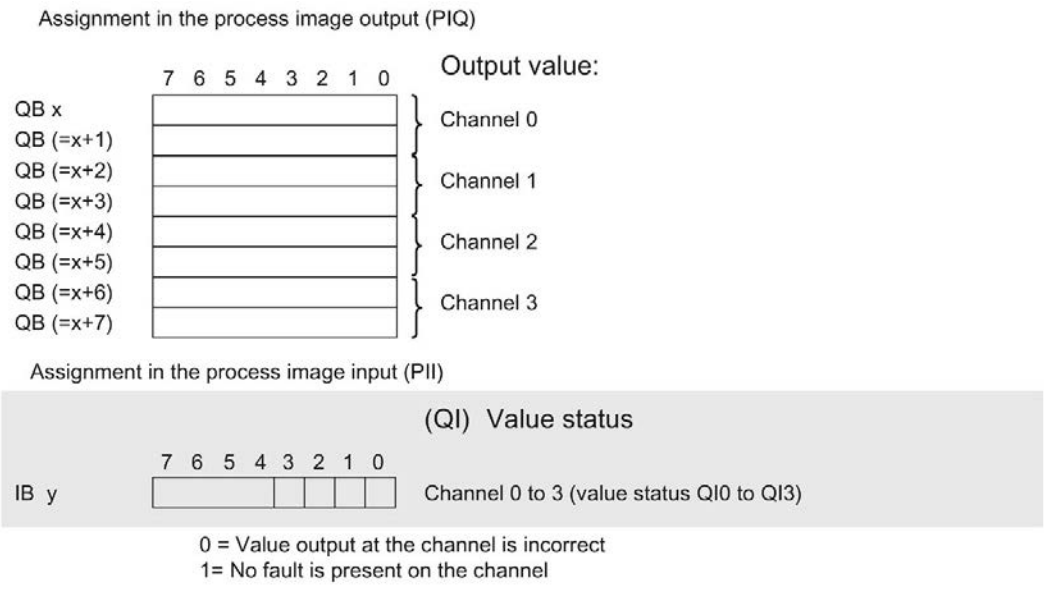

Figure 4-1 Address space for configuration as 1 x 4-channel AQ 4xU/I ST with value status

Address space for configuration as 4 x 1-channel AQ 4xU/I ST S QI

For the configuration as a 4 x 1-channel module, the channels of the module are divided into multiple submodules. The submodules can be assigned to different IO controllers when the module is used in a shared device.

The number of usable IO controllers depends on the interface module used. Observe the information in the manual for the particular interface module.

Unlike the 1 x 4-channel module configuration, each of the four submodules has a freely assignable start address.

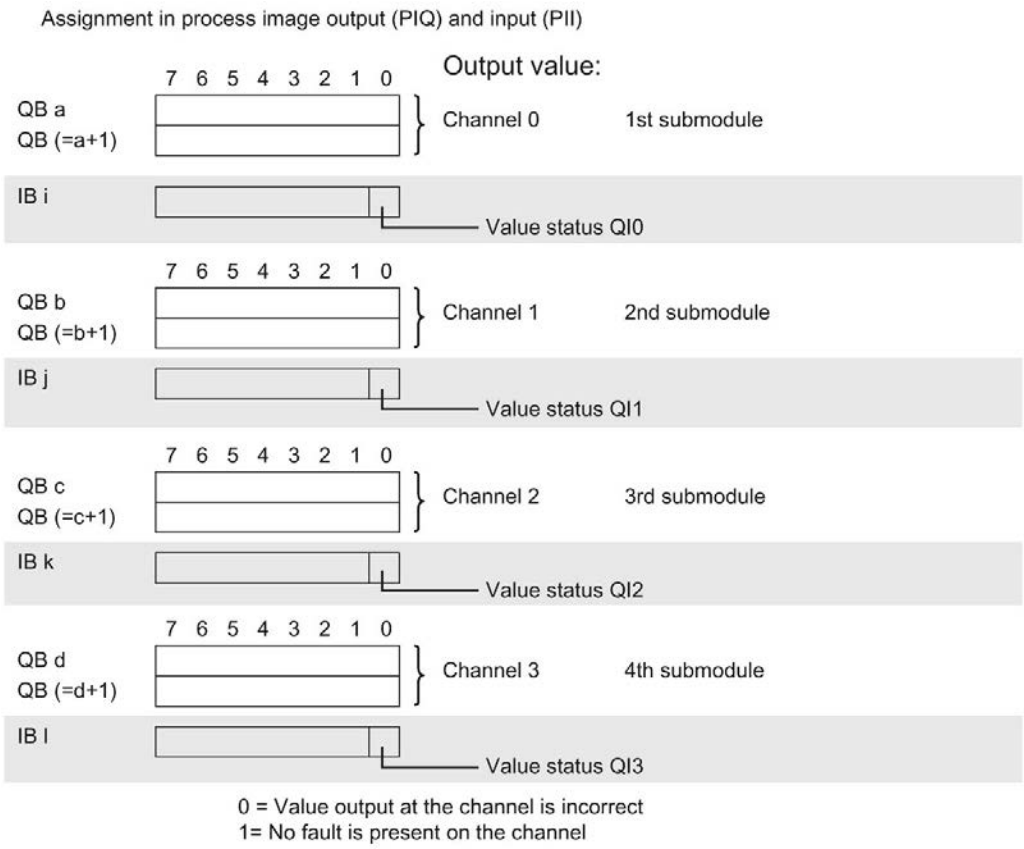

Figure 4-2 Address space for configuration as 4 x 1-channel AQ 4xU/I ST S QI with value status

Address space for configuration as 1 x 4-channel AQ 4xU/I ST MSO

For the configuration as a 1 x 4-channel module (module-internal Shared Output, MSO), channels 0 to 3 of the module are copied to multiple submodules. Channels 0 to 3 are then available with identical values in various submodules. These submodules can be assigned to up to four IO controllers when the module is used in a shared device.

- The IO controller to which submodule 1 is assigned has write access to outputs 0 to 3.
- The IO controllers to which submodule 2, 3, or 4 is assigned have read access to outputs 0 to 3.

The number of usable IO controllers depends on the interface module used. Please observe the information in the manual for the particular interface module.

Value status (Quality Information, QI)

The meaning of the value status depends on the submodule on which it occurs.

For the 1st submodule (=basic submodule), the value status 0 indicates that the value is incorrect or that the IO controller of the basic submodule is in STOP state.

For the 2nd to 4th submodule (=MSO submodule), the value status 0 indicates that the value is incorrect or one of the following errors has occurred:

- The basic submodule is not yet configured (not ready).
- The connection between the IO controller and the basic submodule has been interrupted.
- The IO controller of the basic submodule is in STOP or POWER OFF state.

The figure below shows the assignment of the address space with submodules 1 and 2.

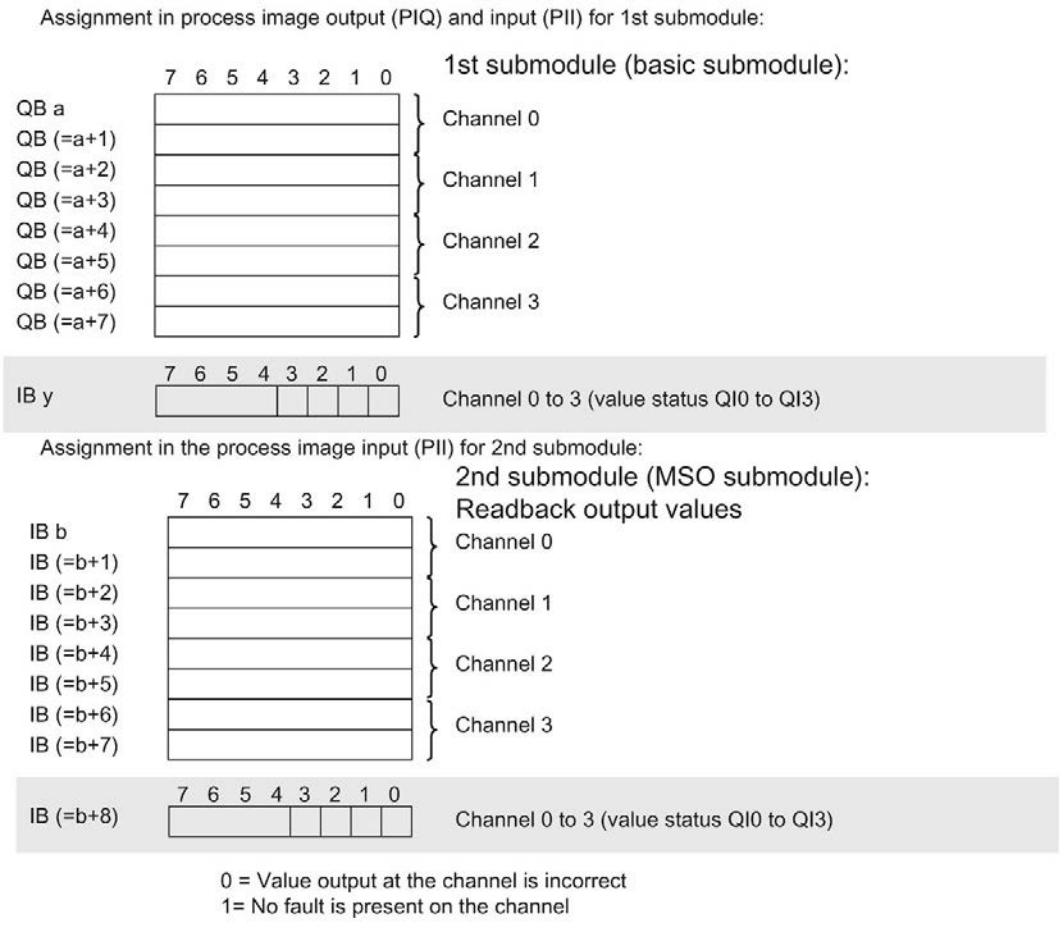

Figure 4-3 Address space for configuration as 1 x 4-channel AQ 4xU/I ST MSO with value status

The following figure shows the assignment of the address space with submodule 3 and 4.

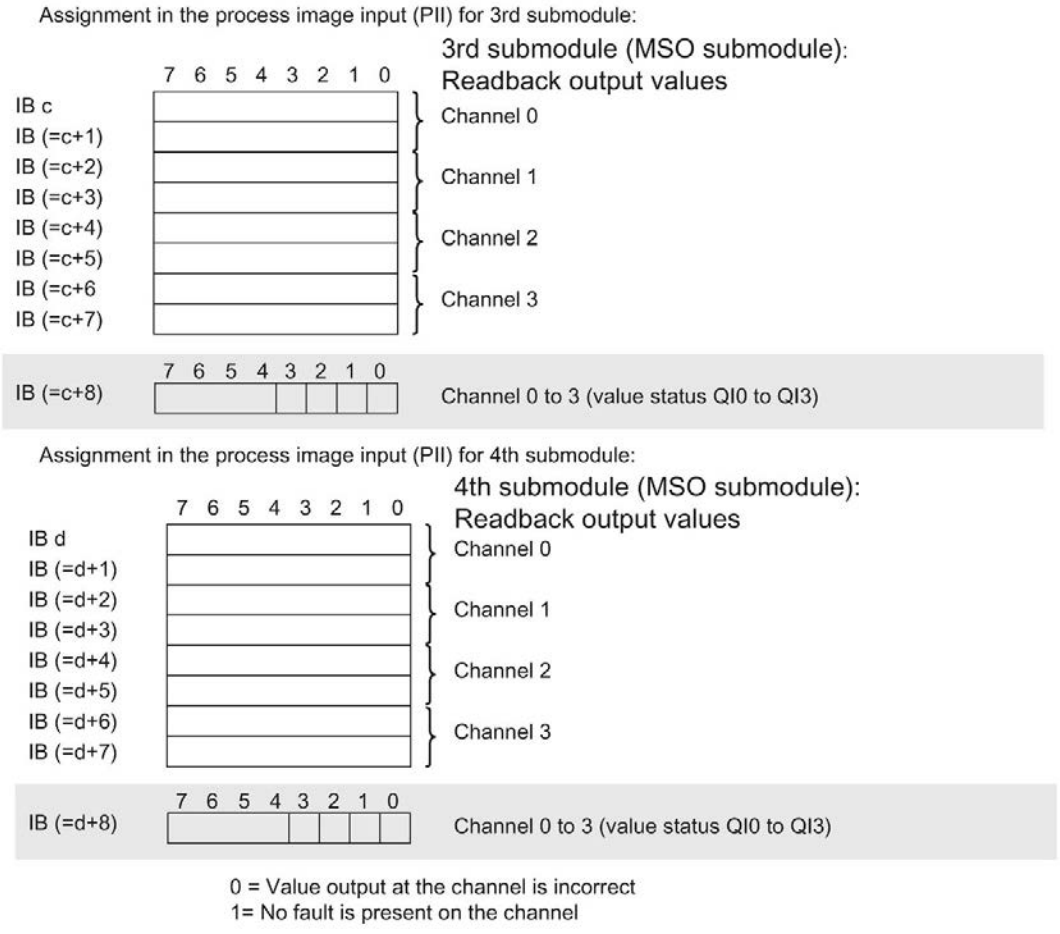

Figure 4-4 Address space for configuration as 1 x 4-channel AQ 4xU/I ST MSO with value status

Reference

You can find information on the Shared Input/Output (MSI/MSO) function in the section Module-Internal Shared Input/Output (MSI/MSO) of the PROFINET with STEP 7 V13 (https://support.industry.siemens.com/cs/ww/en/view/49948856) function manual.

Interrupts/diagnostics alarms

5

5.1 Status and error displays

LED displays

The following figure shows the LED displays (status and error displays) of AQ 4xU/I ST.

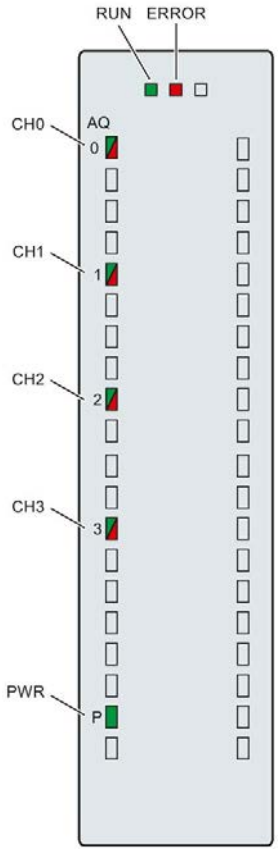

Figure 5-1 LED displays of the AQ 4xU/I ST module

Meaning of the LED displays

The following tables explain the meaning of the status and error displays. Remedial measures for diagnostic reports can be found in chapter Diagnostics alarms (Page 28).

RUN and ERROR LED

Table 5- 1 Status and error displays RUN and ERROR

LED		Meaning	Solution
RUN	ERROR		
□ Off	□ Off	Voltage missing or too low at backplane bus	• Switch on the CPU and/or the system power supply modules. • Verify that the U connectors are inserted. • Check whether too many modules are inserted.
☼ Flashes	□ Off	The module starts and flashes until the valid parameter assignment is set.	---
■ On	□ Off	Module is configured	
■ On	☼ Flashes	Indicates module errors (at least one error at one channel, e.g., wire break).	Evaluate the diagnostics data and eliminate the error (e.g., wire break).
☼ Flashes	☼ Flashes	Hardware defective	Replace the module.

PWR LED

Table 5- 2 PWR status display

LED PWR	Meaning	Solution
□ Off	Supply voltage L+ too low or missing	Check the supply voltage.
■ On	Supply voltage L+ is present and OK	---

CHx LED

Table 5- 3 CHx status display

LED CHx	Meaning	Solution
□ Off	Channel deactivated	---
■ On	Channel configured and OK	---
■ On	Diagnostics alarm: e.g., wire break, overflow, underflow	Check the wiring. Disable diagnostics.

5.2 Interrupts

The analog output module AQ 4xU/I ST supports diagnostic interrupts.

You can find detailed information on the event in the error organization block with the "RALRM" instruction (read additional interrupt info) and in the STEP 7 online help.

Diagnostic interrupt

The module generates a diagnostic interrupt at the following events:

- Missing supply voltage L+
- Short-circuit to ground
- Wire break
- Overflow
- Underflow
- Parameter assignment error

5.3 Diagnostics alarms

A diagnostics alarm is generated and the ERROR LED flashes on the module for each diagnostics event. The diagnostics alarms can be read out in the diagnostics buffer of the CPU, for example. You can evaluate the error codes with the user program.

If the module is operated distributed with PROFIBUS DP in an ET 200MP system, you have the option to read out diagnostics data with the instruction RDREC or RD_REC using data record 0 and 1. The structure of the data records is available on the Internet in the "Manual for interface module IM 155-5 DP ST (6ES7155-5BA00-0AB0)".

Table 5- 4 Diagnostics alarms, their meaning and corrective measures

Diagnostics alarm	Error code	Meaning	Solution
Short-circuit to ground	1_H	Overload at output	Eliminate overload
		Short-circuit of output Q_V to M_{ANA}	Eliminate the short-circuit
Wire break	6_H	Actuator circuit impedance too high	Use a different actuator type or modify the wiring, for example, use cables with larger cross-section
		Wirebreak between the module and actuator	Connect the cable
		Channel not connected (open)	• Disable the channel ("output type" parameter) • Connect the channel
Overflow	7_H	The output value set by the user program violates the valid rated range/overrange.	Correct the output value
Underflow	8_H	The output value set by the user program violates the valid rated range/underrange.	Correct the output value
Parameter assignment error	10^H	• The module cannot evaluate parameters for the channel • Incorrect parameter assignment	Correct the parameter assignment
Load voltage missing	11_H	Supply voltage L+ of the module is missing	Connect supply voltage L+ to module

Technical specifications

6

Technical specifications of the AQ 4xU/I ST

The following table shows the technical specifications as of 08/2018. You will find a data sheet including daily updated technical specifications on the Internet (https://support.industry.siemens.com/cs/de/en/pv/6ES7532-5HD00-0AB0/td?dl=en).

Article number	6ES7532-5HD00-0AB0
General information	
Product type designation	AQ 4xU/I ST
HW functional status	FS04
Firmware version	V2.2.0
• FW update possible	Yes
Product function	
• I&M data	Yes; I&M0 to I&M3
• Output range scalable	No
Engineering with	
• STEP 7 TIA Portal configurable/integrated as of version	V12 / V12
• STEP 7 configurable/integrated as of version	V5.5 SP3 / -
• PROFIBUS as of GSD version/GSD revision	V1.0 / V5.1
• PROFINET as of GSD version/GSD revision	V2.3 / -
Operating mode	
• Oversampling	No
• MSO	Yes
CiR – Configuration in RUN	
Reparameterization possible in RUN	Yes
Calibration possible in RUN	Yes
Supply voltage	
Rated value (DC)	24 V
permissible range, lower limit (DC)	20.4 V
permissible range, upper limit (DC)	28.8 V
Reverse polarity protection	Yes
Input current	
Current consumption, max.	190 mA; with 24 V DC supply

Article number	6ES7532-5HD00-0AB0
Power	
Power available from the backplane bus	0.6 W
Power loss	
Power loss, typ.	4 W
Analog outputs	
Number of analog outputs	4
Voltage output, short-circuit protection	Yes
Voltage output, short-circuit current, max.	24 mA
Current output, no-load voltage, max.	22 V
Cycle time (all channels), min.	3.2 ms; independent of number of activated channels
Output ranges, voltage	
• 0 to 10 V	Yes
• 1 V to 5 V	Yes
• -5 V to +5 V	No
• -10 V to +10 V	Yes
Output ranges, current	
• 0 to 20 mA	Yes
• -20 mA to +20 mA	Yes
• 4 mA to 20 mA	Yes
Connection of actuators	
• for voltage output two-wire connection	Yes
• for voltage output four-wire connection	Yes
• for current output two-wire connection	Yes
Load impedance (in rated range of output)	
• with voltage outputs, min.	1 kΩ; 0.5 kOhm at 1 to 5 V
• with voltage outputs, capacitive load, max.	1 µF
• with current outputs, max.	750 Ω
• with current outputs, inductive load, max.	10 mH
Cable length	
• shielded, max.	800 m; for current, 200 m for voltage
Analog value generation for the outputs	
Integration and conversion time/resolution per channel	
• Resolution with overrange (bit including sign), max.	16 bit
• Conversion time (per channel)	0.5 ms

Article number	6ES7532-5HD00-0AB0
Settling time	
• for resistive load	1.5 ms
• for capacitive load	2.5 ms
• for inductive load	2.5 ms
Errors/accuracies	
Output ripple (relative to output range, bandwidth 0 to 50 kHz), (+/-)	0.02 %
Linearity error (relative to output range), (+/-)	0.15 %
Temperature error (relative to output range), (+/-)	0.002 %/K
Crosstalk between the outputs, max.	-100 dB
Repeat accuracy in steady state at 25 °C (relative to output range), (+/-)	0.05 %
Operational error limit in overall temperature range	
• Voltage, relative to output range, (+/-)	0.3 %
• Current, relative to output range, (+/-)	0.3 %
Basic error limit (operational limit at 25 °C)	
• Voltage, relative to output range, (+/-)	0.2 %
• Current, relative to output range, (+/-)	0.2 %
Isochronous mode	
Isochronous operation (application synchronized up to terminal)	No
Interrupts/diagnostics/status information	
Diagnostics function	Yes
Substitute values connectable	Yes
Alarms	
• Diagnostic alarm	Yes
Diagnostic messages	
• Monitoring the supply voltage	Yes
• Wire-break	Yes; Only for output type "current"
• Short-circuit	Yes; Only for output type "voltage"
• Overflow/underflow	Yes
Diagnostics indication LED	
• RUN LED	Yes; Green LED
• ERROR LED	Yes; Red LED
• Monitoring of the supply voltage (PWR-LED)	Yes; Green LED
• Channel status display	Yes; Green LED
• for channel diagnostics	Yes; Red LED

Article number	6ES7532-5HD00-0AB0
• for module diagnostics	Yes; Red LED
Potential separation	
Potential separation channels	
• between the channels	No
• between the channels, in groups of	4
• between the channels and backplane bus	Yes
• Between the channels and load voltage L+	Yes
Permissible potential difference	
between S- and MANA (UCM)	8 V DC
Isolation	
Isolation tested with	707 V DC (type test)
Decentralized operation	
Prioritized startup	No
Dimensions	
Width	35 mm
Height	147 mm
Depth	129 mm
Weights	
Weight, approx.	310 g

Dimensional drawing

A

The dimensional drawing of the module on the mounting rail, as well as a dimensional drawing with open front panel are provided in the appendix. Always observe the specified dimensions for installation in cabinets, control rooms, etc.

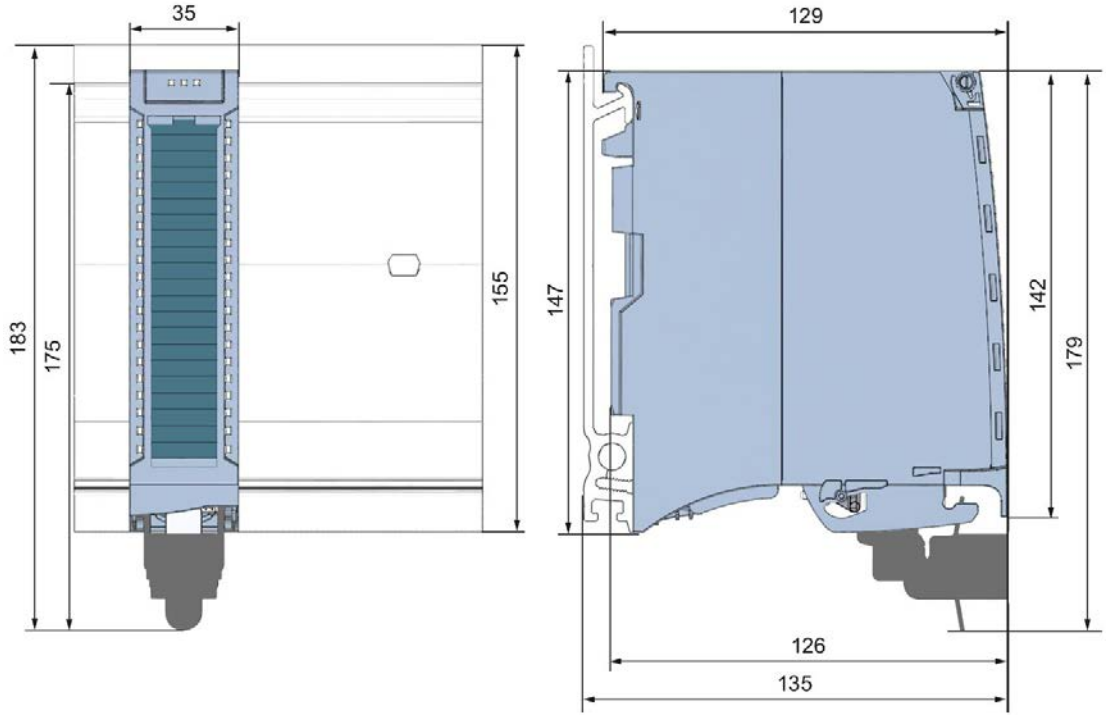

Figure A-1 Dimensional drawing of the AQ 4xU/I ST module

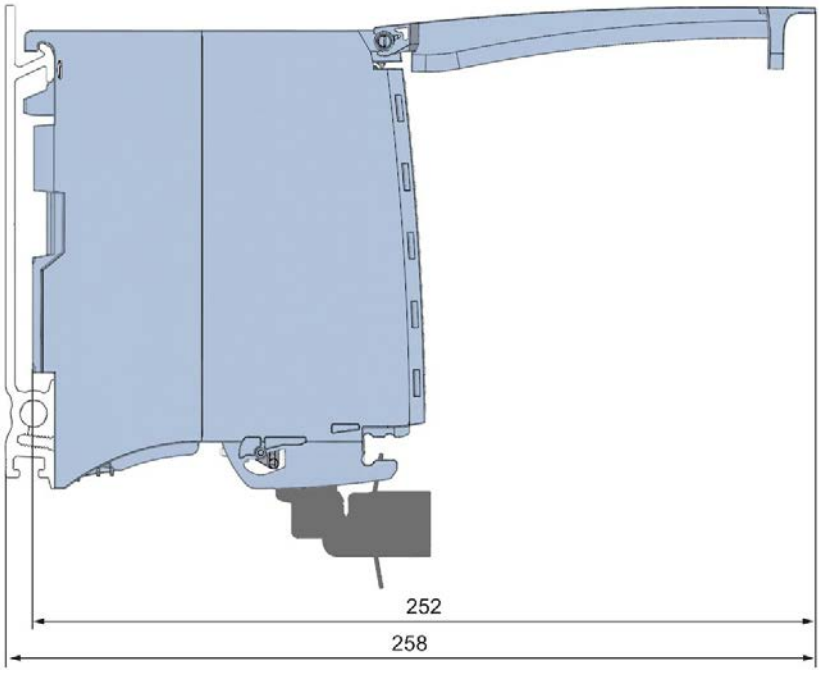

Figure A-2 Dimensional drawing of the AQ 4xU/I ST module, side view with open front panel

Parameter data records

B

B.1 Parameter assignment and structure of the parameter data records

The data records of the module have an identical structure, regardless of whether you configure the module with PROFIBUS DP or PROFINET IO.

Dependencies for configuration with GSD file

When configuring the module with a GSD file, remember that the settings of some parameters are dependent on each other. The parameters are only checked for plausibility by the module after the transfer to the module.

The following table lists the parameters that depend on one another.

Table B- 1 Dependencies of parameters for configuration with GSD file

Device-specific parameters (GSD file)	Dependent parameters
Short circuit to M	With **output type** voltage only
Wire break	With **output type** current only
Substitute value	Only if **Reaction to CPU STOP** -> **Output substitute value** is configured

Parameter assignment in the user program

You have the option to assign module parameters in RUN (e.g., the voltage or current values of selected channels can be edited in RUN without having an effect on the other channels).

Parameter assignment in RUN

The WRREC instruction is used to transfer the parameters to the module using data records 64 to 67. The parameters set in STEP 7 do not change in the CPU, which means the parameters set in STEP 7 are still valid after a restart.

The parameters are only checked for plausibility by the module after the transfer to the module.

Output parameter STATUS

The module ignores errors that occurred during the transfer of parameters with the WRREC instruction and continues operation with the previous parameter assignment. However, a corresponding error code is written to the STATUS output parameter.

The description of the WRREC instruction and the error codes is available in the STEP 7 online help.

Operation of the module behind a PROFIBUS DP interface module

If the module is operated behind a PROFIBUS DP interface module, the parameter data records 0 and 1 are not read back. You get the diagnostics data records 0 and 1 for the read back parameter data records 0 and 1. You can find more information in the Interrupts section of the PROFIBUS DP interface module device manual on the Internet (http://support.automation.siemens.com/WW/view/en/78324181).

Assignment of data record and channel

The channel parameters in data records 64 to 67 are available for 1x 4-channel configuration and are assigned as follows:

- Data record 64 for channel 0
- Data record 65 for channel 1
- Data record 66 for channel 2
- Data record 67 for channel 3

For configuration 4 x 1-channel, the module has 4 submodules with one channel each. The parameters for the channel are available in data record 64 and are assigned as follows:

- Data record 64 for channel 0 (submodule 1)
- Data record 64 for channel 1 (submodule 2)
- Data record 64 for channel 2 (submodule 3)
- Data record 64 for channel 3 (submodule 4)

Address the respective submodule for data record transfer.

Data record structure

The example in the following figure shows the structure of data record 64 for channel 0. The structure of channels 1 to 3 is identical. The values in byte 0 and byte 1 are fixed and may not be changed.

Enable a parameter by setting the corresponding bit to "1".

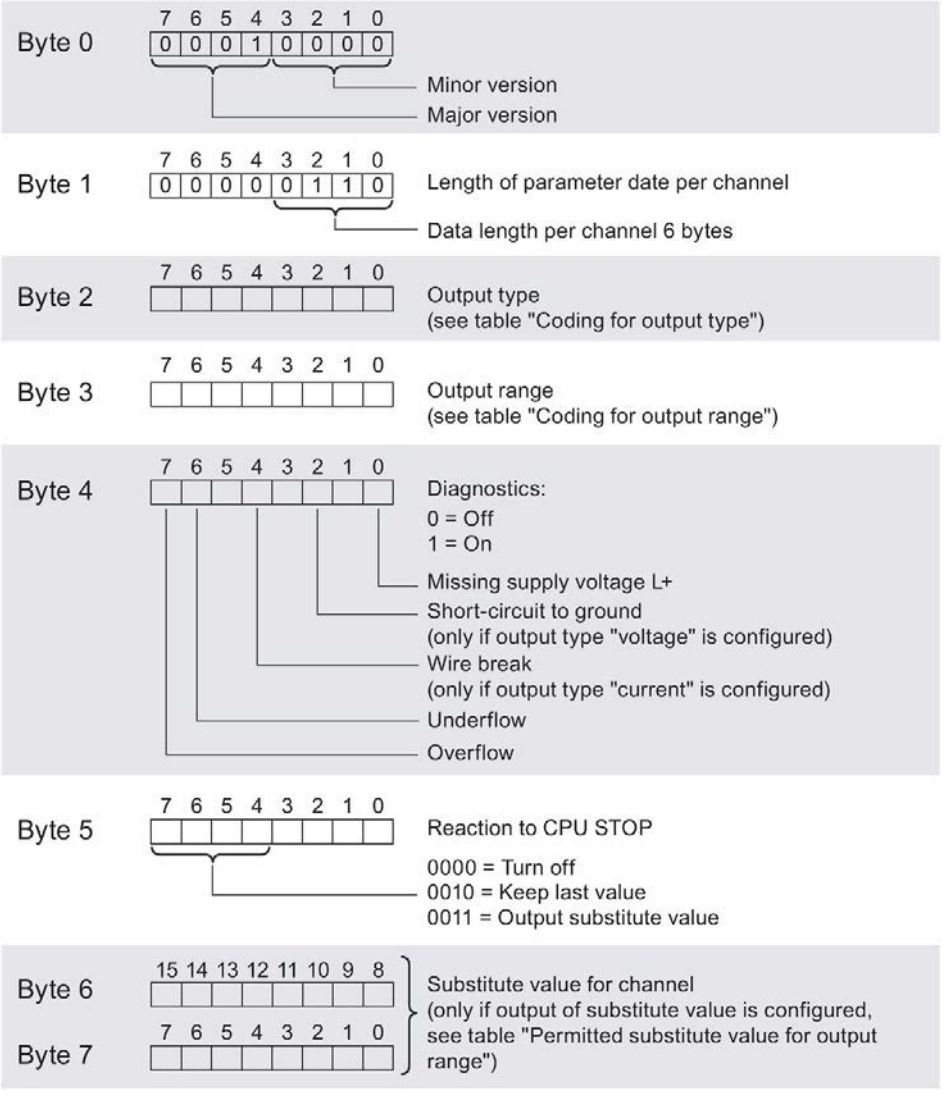

Figure B-1 Structure of data record 64: Bytes 0 to 7

Output type codes

The following table lists all output types of the analog output module along with their codes. Enter these codes at byte 2 of the data record for the corresponding channel (see the previous figure).

Table B- 2 Code for the output type

Output type	Code
Deactivated	0000 0000
Voltage	0000 0001
Current	0000 0010

Codes for the output ranges

The following table lists all voltage and current output ranges of the analog output module along with their codes. In each case, enter these codes at byte 3 of the respective data record (see previous figure).

Table B- 3 Output range code

Output range for voltage	Code
1 V to 5 V	0000 0011
0 V to 10 V	0000 0010
±10 V	0000 0000
Output range for current	**Code**
0 mA to 20 mA	0000 0001
4 mA to 20 mA	0000 0010
±20 mA	0000 0000

Valid substitute values

The following table lists all output ranges for the valid substitute values. Enter these substitute values at bytes 6 and 7 of the data record for the corresponding channel (see the previous figure). The binary representation of output ranges is available on the Internet in Function Manual Analog value processing for SIMATIC.

Table B- 4 Valid substitute value for the output range

Output range	Valid substitute value
±10 V	-32512 ... +32511
1 V to 5 V	-6912 ... +32511
0 V to 10 V	0 ... +32511
±20 mA	-32512 ... +32511
4 mA to 20 mA	-6912 ... +32511
0 mA to 20 mA	0 ... +32511

Representation of analog values

C

Introduction

This appendix describes the analog values for all output ranges supported by the AQ 4xU/I ST analog module.

Measured value resolution

Each analog value is written left aligned to the tags. The bits marked with "x" are set to "0".

Table C- 1 Resolution of the analog values

Resolution in bits including sign	Values		Analog value	
	dec	hex	high byte	low byte
16	1	1_H	Sign 0 0 0 0 0 0 0	0 0 0 0 0 0 0 1

C.1 Representation of output ranges

The tables below set out the digitalized representation of the output ranges by bipolar and unipolar range. The resolution is 16 bits.

Table C- 2 Bipolar output ranges

Value dec.	Output value in %	Data word																Range
		2^{15}	2^{14}	2^{13}	2^{12}	2^{11}	2^{10}	2^{9}	2^{8}	2^{7}	2^{6}	2^{5}	2^{4}	2^{3}	2^{2}	2^{1}	2^{0}	
32511	117,589	0	1	1	1	1	1	1	0	1	1	1	1	1	1	1	1	Maximum output value*
32511	117,589	0	1	1	1	1	1	1	0	1	1	1	1	1	1	1	1	Overshoot range
27649	100,004	0	1	1	0	1	1	0	0	0	0	0	0	0	0	0	1	
27648	100,000	0	1	1	0	1	1	0	0	0	0	0	0	0	0	0	0	Rated range
1	0,003617	0	0	0	0	0	0	0	0	0	0	0	0	0	0	0	1	
0	0,000	0	0	0	0	0	0	0	0	0	0	0	0	0	0	0	0	
-1	-0,003617	1	1	1	1	1	1	1	1	1	1	1	1	1	1	1	1	
-27648	-100,000	1	0	0	1	0	1	0	0	0	0	0	0	0	0	0	0	
-27649	-100,004	1	0	0	1	0	0	1	1	1	1	1	1	1	1	1	1	Undershoot range
-32512	-117,593	1	0	0	0	0	0	0	1	0	0	0	0	0	0	0	0	
-32512	-117,593	1	0	0	0	0	0	0	1	0	0	0	0	0	0	0	0	Minimum output value**

* When values > 32511 are specified, the output value is limited to 117.589%.

** When values < -32512 are specified, the output value is limited to -117.593%.

Table C- 3 Unipolar output ranges

Value dec.	Output value in %	Data word																Range
		2^{15}	2^{14}	2^{13}	2^{12}	2^{11}	2^{10}	2^{9}	2^{8}	2^{7}	2^{6}	2^{5}	2^{4}	2^{3}	2^{2}	2^{1}	2^{0}	
32511	117,589	0	1	1	1	1	1	1	1	x	x	x	x	x	x	x	x	Maximum output value*
32511	117,589	0	1	1	1	1	1	1	0	1	1	1	1	1	1	1	1	Overshoot range
27649	100,004	0	1	1	0	1	1	0	0	0	0	0	0	0	0	0	1	
27648	100,000	0	1	1	0	1	1	0	0	0	0	0	0	0	0	0	0	Rated range
1	0,003617	0	0	0	0	0	0	0	0	0	0	0	0	0	0	0	1	
0	0,000	0	0	0	0	0	0	0	0	0	0	0	0	0	0	0	0	
0	0	0	0	0	0	0	0	0	0	0	0	0	0	0	0	0	0	Minimum output value**

* When values > 32511 are specified, the output value is limited to 117.589%.

** When values < 0 are specified, the output value is limited to 0%.

C.2 Representation of analog values in the voltage output ranges

The tables below list the decimal and hexadecimal values (codes) of the possible voltage output ranges.

Table C- 4 Voltage output range ±10 V

Values			Voltage output range	Range
	dec	hex	±10 V	
>117.589 %	>32511	>7EFF	11.76 V	Maximum output value
117.589 %	32511	7EFF	11.76 V	Overshoot range
	27649	6C01		
100 %	27648	6C00	10 V	Rated range
75 %	20736	5100	7.5 V	
0.003617 %	1	1	361.7 µV	
0 %	0	0	0 V	
	-1	FFFF	-361.7 µV	
-75 %	-20736	AF00	-7.5 V	
-100 %	-27648	9400	-10 V	
	-27649	93FF		Undershoot range
-117.593 %	-32512	8100	-11.76 V	
<-117.593 %	<-32512	< 8100	-11.76 V	Minimum output value

Table C- 5 Voltage output range 0 V to 10 V

Values			Voltage output range	Range
	dec	hex	0 V to 10 V	
>117.589 %	>32511	>7EFF	11.76 V	Maximum output value
117.589 %	32511	7EFF	11.76 V	Overshoot range
	27649	6C01		
100 %	27648	6C00	10 V	Rated range
75 %	20736	5100	7.5 V	
0.003617 %	1	1	361.7 µV	
0 %	0	0	0 V	
<0 %	<0	<0	0 V	Minimum output value

Table C- 6 Voltage output range 1 V to 5 V

Values			Voltage output range	Range
	dec	hex	1 V to 5 V	
>117.589 %	>32511	>7EFF	5.70 V	Maximum output value
117.589 %	32511	7EFF	5.70 V	Overshoot range
	27649	6C01		
100 %	27648	6C00	5 V	Rated range
75 %	20736	5100	4 V	
0.003617 %	1	1	1 V +144.7 µV	
0 %	0	0	1 V	
	-1	FFFF	1 V -144.7 µV	Undershoot range
-25 %	-6912	E500	0 V	
<-25 %	<-6912	< E500	0 V	Minimum output value

C.3 Representation of analog values in the current output ranges

The tables below list the decimal and hexadecimal values (codes) of the possible current output ranges.

Table C- 7 Current output range ±20 mA

Values			Current output range	Range
	dec	hex	±20 mA	
>117.589%	>32511	>7EFF	23.52 mA	Maximum output value
117.589%	32511	7EFF	23.52 mA	Overshoot range
	27649	6C01		
100%	27648	6C00	20 mA	Rated range
75%	20736	5100	15 mA	
0.003617%	1	1	723.4 nA	
0%	0	0	0 mA	
	-1	FFFF	-723.4 nA	
-75%	-20736	AF00	-15 mA	
-100%	-27648	9400	-20 mA	
	-27649	93FF		Undershoot range
-117.593%	-32512	8100	-23.52 mA	
<-117.593%	<-32512	<8100	-23.52 mA	Minimum output value

Table C- 8 Current output range 0 mA to 20 mA

Values			Current output range	Range
	dec	hex	0 mA to 20 mA	
>117.589%	>32511	>7EFF	23.52 mA	Maximum output value
117.589%	32511	7EFF	23.52 mA	Overshoot range
	27649	6C01		
100%	27648	6C00	20 mA	Rated range
75%	20736	5100	15 mA	
0.003617%	1	1	723.4 nA	
0%	0	0	0 mA	
<0%	<0	<0	0 mA	Minimum output value

Table C- 9 Current output range 4 mA to 20 mA

Values			Current output range	Range
	dec	hex	4 mA to 20 mA	
>117.589%	>32511	>7EFF	22.81 mA	Maximum output value
117.589%	32511	7EFF	22.81 mA	Overshoot range
	27649	6C01		
100%	27648	6C00	20 mA	Rated range
75%	20736	5100	16 mA	
0.003617%	1	1	4 mA + 578.7 nA	
0%	0	0	4 mA	
	-1	FFFF	4 mA - 578.7 nA	Undershoot range
-25%	-6912	E500	0 mA	
<-25%	<-6912	<E500	0 mA	Minimum output value

SIEMENS

SIMATIC

S7-1500 / ET 200MP

Analog Output Module AQ 2xU/I ST (6ES7532-5NB00-0AB0)

Manual

Edition 09/2016

siemens.com

SIEMENS

SIMATIC

S7-1500/ET 200MP
Analog Output Module AQ 2xU/I ST
(6ES7532-5NB00-0AB0)

Manual

Preface

Guide to documentation 1

Product overview 2

Wiring 3

Parameters/address space 4

Interrupts/diagnostics alarms 5

Technical specifications 6

Dimension drawing A

Parameter data records B

Representation of analog values C

09/2016

A5E32366632-AC

Legal information

Warning notice system

This manual contains notices you have to observe in order to ensure your personal safety, as well as to prevent damage to property. The notices referring to your personal safety are highlighted in the manual by a safety alert symbol, notices referring only to property damage have no safety alert symbol. These notices shown below are graded according to the degree of danger.

⚠ DANGER

indicates that death or severe personal injury **will** result if proper precautions are not taken.

⚠ WARNING

indicates that death or severe personal injury **may** result if proper precautions are not taken.

⚠ CAUTION

indicates that minor personal injury can result if proper precautions are not taken.

NOTICE

indicates that property damage can result if proper precautions are not taken.

If more than one degree of danger is present, the warning notice representing the highest degree of danger will be used. A notice warning of injury to persons with a safety alert symbol may also include a warning relating to property damage.

Qualified Personnel

The product/system described in this documentation may be operated only by **personnel qualified** for the specific task in accordance with the relevant documentation, in particular its warning notices and safety instructions. Qualified personnel are those who, based on their training and experience, are capable of identifying risks and avoiding potential hazards when working with these products/systems.

Proper use of Siemens products

Note the following:

⚠ WARNING

Siemens products may only be used for the applications described in the catalog and in the relevant technical documentation. If products and components from other manufacturers are used, these must be recommended or approved by Siemens. Proper transport, storage, installation, assembly, commissioning, operation and maintenance are required to ensure that the products operate safely and without any problems. The permissible ambient conditions must be complied with. The information in the relevant documentation must be observed.

Trademarks

All names identified by ® are registered trademarks of Siemens AG. The remaining trademarks in this publication may be trademarks whose use by third parties for their own purposes could violate the rights of the owner.

Disclaimer of Liability

We have reviewed the contents of this publication to ensure consistency with the hardware and software described. Since variance cannot be precluded entirely, we cannot guarantee full consistency. However, the information in this publication is reviewed regularly and any necessary corrections are included in subsequent editions.

Siemens AG
Division Digital Factory
Postfach 48 48
90026 NÜRNBERG
GERMANY

A5E32366632-AC
℗ 11/2016 Subject to change

Copyright © Siemens AG 2014 - 2016.
All rights reserved

Preface

Purpose of the documentation

This manual supplements the system manual S7-1500/ET 200MP (https://support.industry.siemens.com/cs/ww/en/view/59191792).

Functions that relate in general to the systems are described in these manuals.

The information provided in this manual and in the system/function manuals supports you in commissioning the systems.

Changes compared to previous version

Compared to the previous version, this manual contains the following change:

Original texts of the license conditions and copyright notes for open-source software are available on the Internet as of 09/2016.

Conventions

The term "CPU" is used in this manual both for the CPUs of the S7-1500 automation system, as well as for interface modules of the ET 200MP distributed I/O system.

Please also observe notes marked as follows:

Note

A note contains important information on the product described in the documentation, on the handling of the product or on the section of the documentation to which particular attention should be paid.

Security information

Siemens provides products and solutions with industrial security functions that support the secure operation of plants, systems, machines and networks.

In order to protect plants, systems, machines and networks against cyber threats, it is necessary to implement – and continuously maintain – a holistic, state-of-the-art industrial security concept. Siemens' products and solutions only form one element of such a concept.

Customer is responsible to prevent unauthorized access to its plants, systems, machines and networks. Systems, machines and components should only be connected to the enterprise network or the internet if and to the extent necessary and with appropriate security measures (e.g. use of firewalls and network segmentation) in place.

Additionally, Siemens' guidance on appropriate security measures should be taken into account. For more information about industrial security, please visit (http://www.siemens.com/industrialsecurity).

Siemens' products and solutions undergo continuous development to make them more secure. Siemens strongly recommends to apply product updates as soon as available and to always use the latest product versions. Use of product versions that are no longer supported, and failure to apply latest updates may increase customer's exposure to cyber threats.

To stay informed about product updates, subscribe to the Siemens Industrial Security RSS Feed under (http://www.siemens.com/industrialsecurity).

Open Source Software

Open-source software is used in the firmware of the I/O modules. Open Source Software is provided free of charge. We are liable for the product described, including the open-source software contained in it, pursuant to the conditions applicable to the product. Siemens accepts no liability for the use of the open source software over and above the intended program sequence, or for any faults caused by modifications to the software.

For legal reasons, we are obliged to publish the original text of the license conditions and copyright notices. Please read the information relating to this on the Internet (https://support.industry.siemens.com/cs/ww/en/view/109741045).

Table of contents

Preface 4
1 Guide to documentation 7
2 Product overview 11
2.1 Properties 11
3 Wiring 13
3.1 Wiring and block diagrams 13
4 Parameters/address space 16
4.1 Output ranges 16
4.2 Parameters 17
4.3 Explanation of parameters 18
4.4 Address space 19
5 Interrupts/diagnostics alarms 23
5.1 Status and error displays 23
5.2 Interrupts 25
5.3 Diagnostics alarms 25
6 Technical specifications 26
A Dimension drawing 30
B Parameter data records 32
B.1 Parameter assignment and structure of the parameter data records 32
C Representation of analog values 36
C.1 Representation of output ranges 36
C.2 Representation of analog values in the voltage output ranges 37
C.3 Representation of analog values in the current output ranges 39

Guide to documentation

1

The documentation for the SIMATIC S7-1500 automation system, the CPU 1516pro-2 PN based on SIMATIC S7-1500 and the SIMATIC ET 200MP distributed I/O system is arranged into three areas.
This arrangement enables you to access the specific content you require.

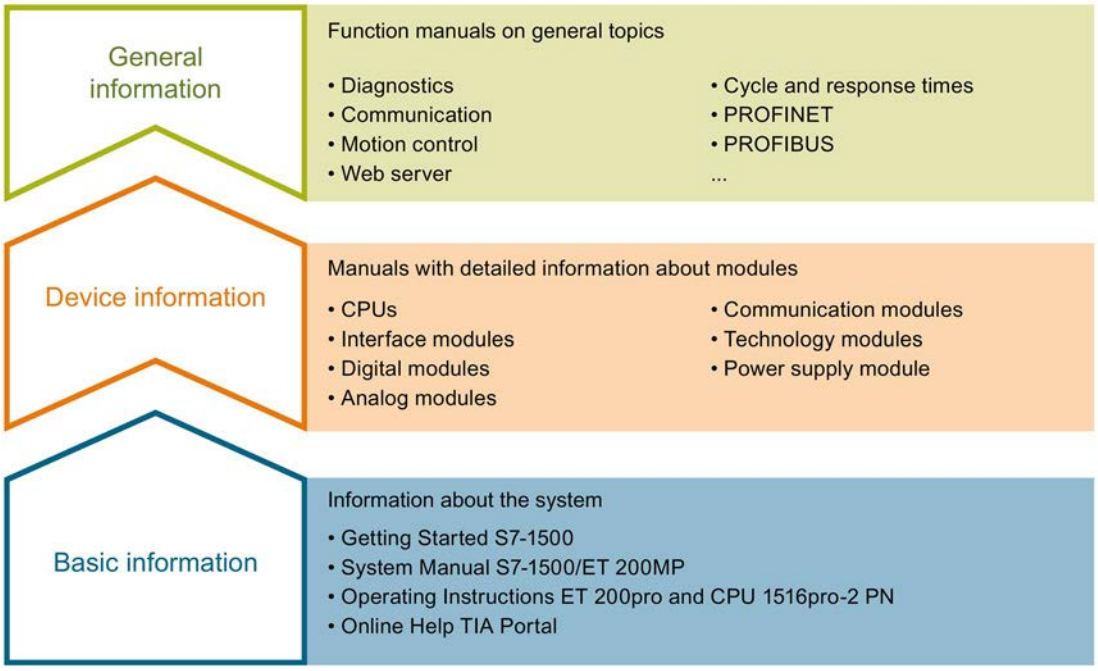

Basic information

The System Manual and Getting Started describe in detail the configuration, installation, wiring and commissioning of the SIMATIC S7-1500 and ET 200MP systems. For CPU 1516pro-2 PN you use the corresponding operating instructions. The STEP 7 online help supports you in the configuration and programming.

Device information

Product manuals contain a compact description of the module-specific information, such as properties, wiring diagrams, characteristics and technical specifications.

General information

The function manuals contain detailed descriptions on general topics regarding the SIMATIC S7-1500 and ET 200MP systems, e.g. diagnostics, communication, motion control, Web server, OPC UA.

You can download the documentation free of charge from the Internet (http://w3.siemens.com/mcms/industrial-automation-systems-simatic/en/manual-overview/Pages/Default.aspx).

Changes and supplements to the manuals are documented in a Product Information.

You can download the product information free of charge from the Internet (https://support.industry.siemens.com/cs/us/en/view/68052815).

Manual Collection S7-1500/ET 200MP

The Manual Collection contains the complete documentation on the SIMATIC S7-1500 automation system and the ET 200MP distributed I/O system gathered together in one file.

You can find the Manual Collection on the Internet (https://support.industry.siemens.com/cs/ww/en/view/86140384).

SIMATIC S7-1500 comparison list for programming languages

The comparison list contains an overview of which instructions and functions you can use for which controller families.

You can find the comparison list on the Internet (https://support.industry.siemens.com/cs/ww/en/view/86630375).

"mySupport"

With "mySupport", your personal workspace, you make the best out of your Industry Online Support.

In "mySupport", you can save filters, favorites and tags, request CAx data and compile your personal library in the Documentation area. In addition, your data is already filled out in support requests and you can get an overview of your current requests at any time.

You must register once to use the full functionality of "mySupport".

You can find "mySupport" on the Internet (https://support.industry.siemens.com/My/ww/en).

"mySupport" - Documentation

In the Documentation area in "mySupport" you can combine entire manuals or only parts of these to your own manual.
You can export the manual as PDF file or in a format that can be edited later.

You can find "mySupport" - Documentation on the Internet (http://support.industry.siemens.com/My/ww/en/documentation).

"mySupport" - CAx data

In the CAx data area in "mySupport", you can access the current product data for your CAx or CAe system.

You configure your own download package with a few clicks.

In doing so you can select:

- Product images, 2D dimension drawings, 3D models, internal circuit diagrams, EPLAN macro files
- Manuals, characteristics, operating manuals, certificates
- Product master data

You can find "mySupport" - CAx data on the Internet (http://support.industry.siemens.com/my/ww/en/CAxOnline).

Application examples

The application examples support you with various tools and examples for solving your automation tasks. Solutions are shown in interplay with multiple components in the system - separated from the focus on individual products.

You will find the application examples on the Internet (https://support.industry.siemens.com/sc/ww/en/sc/2054).

TIA Selection Tool

With the TIA Selection Tool, you can select, configure and order devices for Totally Integrated Automation (TIA).
This tool is the successor of the SIMATIC Selection Tool and combines the known configurators for automation technology into one tool.
With the TIA Selection Tool, you can generate a complete order list from your product selection or product configuration.

You can find the TIA Selection Tool on the Internet (http://w3.siemens.com/mcms/topics/en/simatic/tia-selection-tool).

SIMATIC Automation Tool

You can use the SIMATIC Automation Tool to run commissioning and maintenance activities simultaneously on various SIMATIC S7 stations as a bulk operation independently of the TIA Portal.

The SIMATIC Automation Tool provides a multitude of functions:

- Scanning of a PROFINET/Ethernet network and identification of all connected CPUs
- Address assignment (IP, subnet, gateway) and station name (PROFINET device) to a CPU
- Transfer of the date and the programming device/PC time converted to UTC time to the module
- Program download to CPU
- Operating mode switchover RUN/STOP
- Localization of the CPU by means of LED flashing
- Reading out CPU error information
- Reading the CPU diagnostic buffer
- Reset to factory settings
- Updating the firmware of the CPU and connected modules

You can find the SIMATIC Automation Tool on the Internet (https://support.industry.siemens.com/cs/ww/en/view/98161300).

PRONETA

With SIEMENS PRONETA (PROFINET network analysis), you analyze the PROFINET network during commissioning. PRONETA features two core functions:

- The topology overview independently scans PROFINET and all connected components.
- The IO check is a fast test of the wiring and the module configuration of a system.

You can find SIEMENS PRONETA on the Internet (https://support.industry.siemens.com/cs/ww/en/view/67460624).

Product overview

2

2.1 Properties

Article number

6ES7532-5NB00-0AB0

View of the module

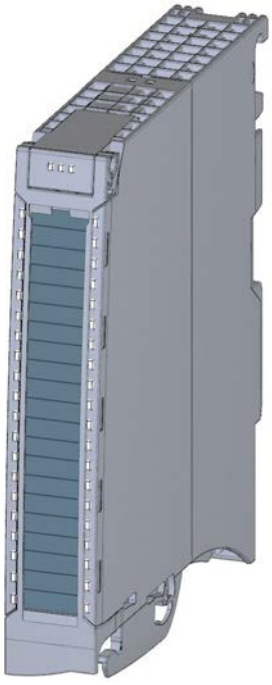

Figure 2-1 View of the AQ 2xU/I ST module

Properties

The module has the following technical properties:

- 2 analog outputs
- Resolution: 16 bits including sign
- Selection of channels for voltage output
- Selection of channels for current output
- Configurable diagnostics (per channel)

The module supports the following functions:

Table 2- 1 Version dependencies of the module functions

Function	Firmware version of the module	Configuration software	
		STEP 7 (TIA Portal)	GSD file in STEP 7 (TIA Portal) V12 or higher, or STEP 7 V5.5 SP3 or higher
Firmware update	V1.0.0 or higher	V13 or higher with HSP 0102	--- / X
Calibration in runtime	V1.0.0 or higher	V13 or higher with HSP 0102	X
Identification data I&M0 to I&M3	V1.0.0 or higher	V13 or higher with HSP 0102	X
Parameter assignment in RUN	V1.0.0 or higher	V13 or higher with HSP 0102	X
Module-internal Shared Output (MSO)	V1.0.0 or higher	V13 Update 3 or higher (PROFINET IO only)	X (PROFINET IO only)
Configurable submodules / sub-modules for Shared Device	V1.0.0 or higher	V13 Update 3 or higher (PROFINET IO only)	X (PROFINET IO only)

You can configure the module with STEP 7 (TIA Portal) and with a GSD file.

Accessories

The following accessories are supplied with the module and can also be ordered separately as spare parts:

- Front connector (push-in terminals) including cable tie
- Shield bracket
- Shield terminal
- Power supply element (push-in terminals)
- Labeling strips
- U connector
- Universal front door

You can find additional information on accessories in the system manual S7-1500/ET 200MP (https://support.industry.siemens.com/cs/ww/en/view/59191792).

Wiring 3

3.1 Wiring and block diagrams

This section contains the block diagram of the module and outlines various connection options.

You can find information on wiring the front connector, creating a cable shield, etc. in the Wiring section of the system manual S7-1500/ET 200MP (https://support.industry.siemens.com/cs/ww/en/view/59191792).

Note

You may use and combine the different wiring options for all channels.

Abbreviations used

QV_n	Voltage output channel
QI_n	Current output channel
S_n+/S_n-	Sense line channel
L+	Connection for supply voltage
M	Ground connection
M_{ANA}	Reference potential of the analog circuit

Pin assignment for the power supply element

The power supply element is plugged onto the front connector for powering the analog module. Wire the supply voltage to terminals 41 (L+) and 43 (M).

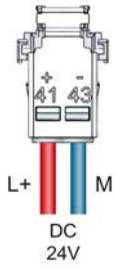

Figure 3-1 Power supply element wiring

Connection: Voltage output

The example in the figure below shows the pin assignment for voltage outputs with:

- 2-wire connection, without compensation for line resistances.
- 4-wire connection, with compensation for line resistances.

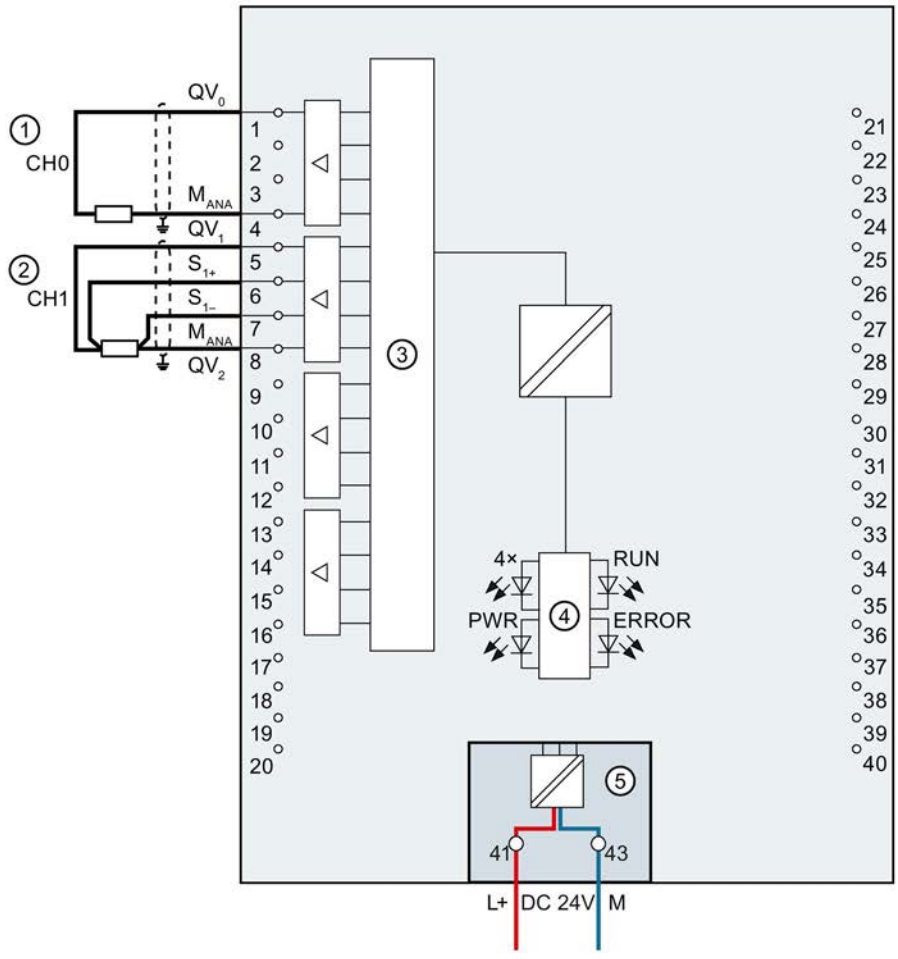

①	2-wire connection	CHx	Channel or 2 x channel status (green/red)
②	4-wire connection	RUN	Status display LED (green)
③	Digital-to-analog converter (DAC)	ERROR	Error display LED (red)
④	Backplane bus interface	PWR	LED for power supply (green)
⑤	Supply voltage via power supply module		

Figure 3-2 Block diagram and pin assignment for the voltage output

Connection: Current output

The example in the figure below shows the pin assignment for current outputs.

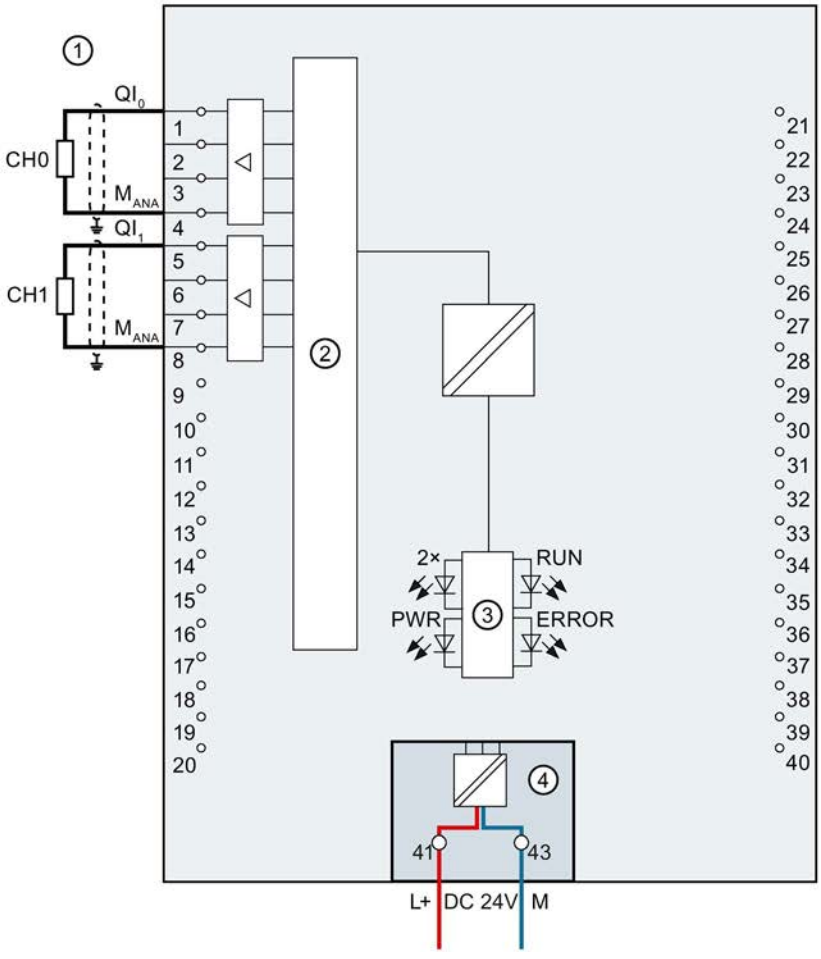

①	Load on current outputs	CHx	Channel or 2 x channel status (green/red)
②	Digital-to-analog converter (DAC)	RUN	Status display LED (green)
③	Backplane bus interface	ERROR	Error display LED (red)
④	Supply voltage via power supply module	PWR	LED for power supply (green)

Figure 3-3 Block diagram and pin assignment for the current output

Parameters/address space 4

4.1 Output ranges

Introduction

The module is set to voltage output type by default with output range ±10 V. You need to edit the module parameters with STEP 7 if you want to use a different output range or output type.

Output type and output ranges

The following table shows the output type and the respective output ranges.

Table 4- 1 Output type and output ranges

Output type	Output range	Representation of analog values
Voltage	1 V to 5 V 0 V to 10 V ±10 V	See Representation of analog values in the voltage output ranges (Page 37)
Current	0 mA to 20 mA 4 mA to 20 mA ±20 mA	See Representation of analog values in the current output ranges (Page 39)
Disabled	-	-

The tables of the output ranges, overflow, overrange, etc. are provided in the appendix Representation of analog values (Page 36).

4.2 Parameters

AQ 2xU/I ST parameters

When you assign the module parameters in STEP 7, you use various parameters to specify the module properties. The following table lists the configurable parameters. The effective range of the configurable parameters depends on the type of configuration. The following configurations are possible:

- Central operation with a S7-1500 CPU
- Distributed operation on PROFINET IO in an ET 200MP system
- Distributed operation on PROFIBUS DP in an ET 200MP system

When assigning parameters in the user program, use the WRREC instruction to transfer the parameters to the module by means of data records; see section Parameter assignment and structure of the parameter data record. (Page 32)

Table 4- 2 Configurable parameters and their defaults

Parameters	Range of values	Default setting	Parameter assign-ment in RUN	Scope with configuration software, e.g., STEP 7 (TIA Portal)	
				Integrated in the hardware catalog STEP 7, as of V13 or GSD file PROFINET IO	GSD file PROFIBUS DP
Diagnostics					
• No supply voltage L+	Yes/No	No	Yes	Channel*	Module
• Wire break	Yes/No	No	Yes	Channel	Module
• Short-circuit to ground	Yes/No	No	Yes	Channel	Module
• Underflow	Yes/No	No	Yes	Channel	Module
• Overflow	Yes/No	No	Yes	Channel	Module
Output parameters					
• Output type	Current/voltage	Voltage	Yes	Channel	Channel
• Output range	See section Output ranges (Page 16)	±10 V	Yes	Channel	Channel
• Reaction to CPU STOP	• Turn off • Keep last value • Output substitute value	Turn off	Yes	Channel	Channel
• Substitute value	Must be in the valid volt-age/current output range; see Table B-4 Valid substitute value for the output range (Page 35)	0	Yes	Channel	Channel

* If you enable diagnostics for multiple channels, you will receive an alarm surge on failure of the supply voltage because each enabled channel will detect this fault. You can prevent this alarm surge by assigning the diagnostics function to one channel only.

Short-circuit detection

The diagnostics for short circuit to ground can be configured for the voltage output type. A short-circuit detection is not possible for small output values; the output voltages must therefore be below -0.1 V or above +0.1 V.

Wire break detection

The diagnostics for wire break can be configured for the current output type. Wire break detection is not possible for small output values; the output voltages must therefore be below -0.2 mA or above +0.2 mA.

4.3 Explanation of parameters

No supply voltage L+

Enabling of the diagnostics, with missing or too little supply voltage L+.

Wire break

Enabling of the diagnostics if the line to the actuator is broken.

Short-circuit to ground

Enabling of the diagnostics if a short-circuit of the output to M_{ANA} occurs.

Overflow

Enabling of the diagnostics when the output value exceeds the over range.

Underflow

Enabling of the diagnostics when the output value violates the under range.

Reaction to CPU STOP

Determines the reaction of the output to the CPU going into STOP state.

Substitute value

The substitute value is the value that the module outputs in case of a CPU STOP.

4.4 Address space

The module can be configured in various ways in STEP 7. Depending on the configuration, additional/different addresses are assigned in the process image of the outputs/inputs.

Configuration options of AQ 2xU/I ST

You can configure the module with STEP 7 (TIA Portal) or with a GSD file.

When you configure the module by means of the GSD file, the configurations are available under different abbreviations/module names.

The following configurations are possible:

Table 4- 3 Configuration options

Configuration	Short designation/module name in the GSD file	Configuration software, e.g., with STEP 7 (TIA Portal)	
		Integrated in hardware catalog STEP 7 (TIA Portal)	GSD file in STEP 7 (TIA Portal) V12 or higher or STEP 7 V5.5 SP3 or higher
1 x 2-channel without value status	AQ 2xU/I ST	V13 or higher with HSP 0102	X
1 x 2-channel with value status	AQ 2xU/I ST QI	V13 or higher with HSP 0102	X
2 x 1-channel without value status	AQ 2xU/I ST S	V13 Update 3 or higher (PROFINET IO only)	X (PROFINET IO only)
2 x 1-channel with value status	AQ 2xU/I ST S QI	V13 Update 3 or higher (PROFINET IO only)	X (PROFINET IO only)
1 x 2-channel with value status for module-internal shared output with up to 4 submodules	AQ 2xU/I ST MSO	V13 Update 3 or higher (PROFINET IO only)	X (PROFINET IO only)

Value status (Quality Information, QI)

The value status is always activated for the following module names:

- AQ 2xU/I ST QI
- AQ 2xU/I ST S QI
- AQ 2xU/I ST MSO

An additional bit is assigned to each channel for the value status. The bit for the value status indicates if the output value specified by the user program is actually pending at the module terminal (0 = value is incorrect).

Address space for configuration as 1 x 2-channel AQ 2xU/I ST

The figure below shows the address space assignment for configuration as a 1 x 2-channel module. You can freely assign the start address for the module. The addresses of the channels are derived from the start address.

"QB x" stands, for example, for the module start address output byte x.

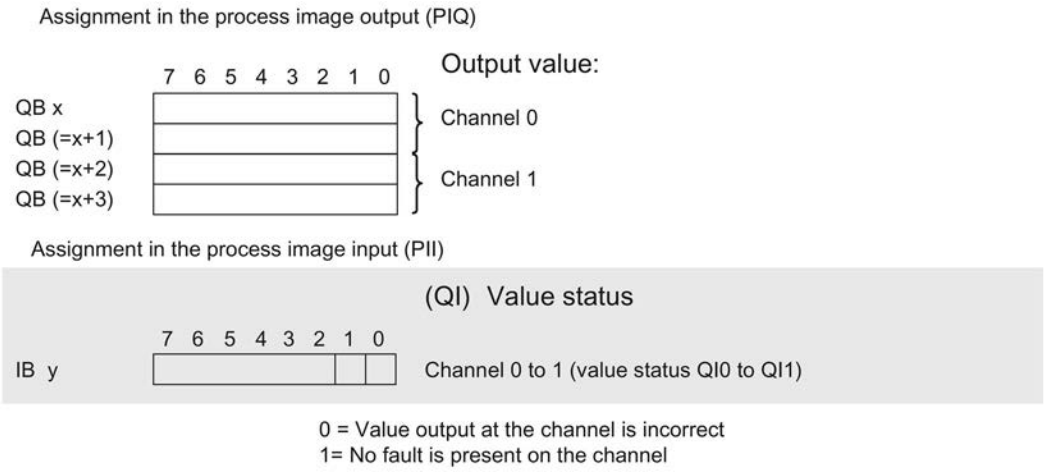

Figure 4-1 Address space for configuration as 1 x 2-channel AQ 2xU/I ST with value status

Address space for configuration as 2 x 1-channel AQ 2xU/I ST S QI

The channels of the module are divided up into several submodules with configuration as 2 x 1-channel module. The submodules can be assigned to different IO controllers when the module is used in a shared device.

The number of usable IO controllers depends on the interface module used. Observe the information in the manual for the particular interface module.

Unlike the 1 x 2-channel module configuration, each of the four submodules has a freely assignable start address.

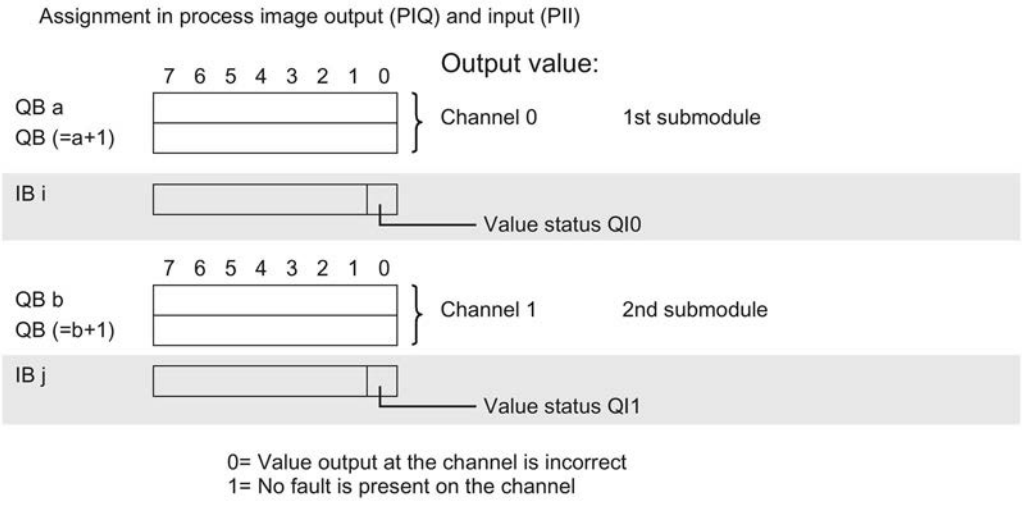

Figure 4-2 Address space for configuration as 2 x 1-channel AQ 2xU/I ST S QI with value status

Address space for configuration as 1 x 2-channel AQ 2xU/I ST MSO

The channels 0 to 1 of the module are copied to several submodules with configuration as 1 x 2-channel module (module internal Shared Output, MSO). Channels 0 to 1 are then available with identical values in different submodules. These submodules can be assigned to up to four IO controllers when the module is used in a shared device.

- The IO controller to which submodule 1 is assigned has write access to the outputs 0 and 1.
- The IO controllers to which submodules 2, 3 or 4 are assigned have write access to the outputs 0 and 1.

The number of IO controllers depends on the interface module used. Please observe the information in the manual for the particular interface module.

Value status (Quality Information, QI)

The meaning of the value status depends on the submodule on which it occurs.

For the 1st submodule (= basic submodule), the value status 0 indicates that the value is incorrect or that the IO controller of the basic submodule is in STOP state.

For the 2nd to 4th submodule (=MSO submodule), the value status 0 indicates that the value is incorrect or one of the following errors has occurred:

- The basic submodule is not yet configured (not ready).
- The connection between the IO controller and the basic submodule has been interrupted.
- The IO controller of the basic submodule is in STOP or POWER OFF state.

The figure below shows the assignment of the address space with submodules 1 and 2.

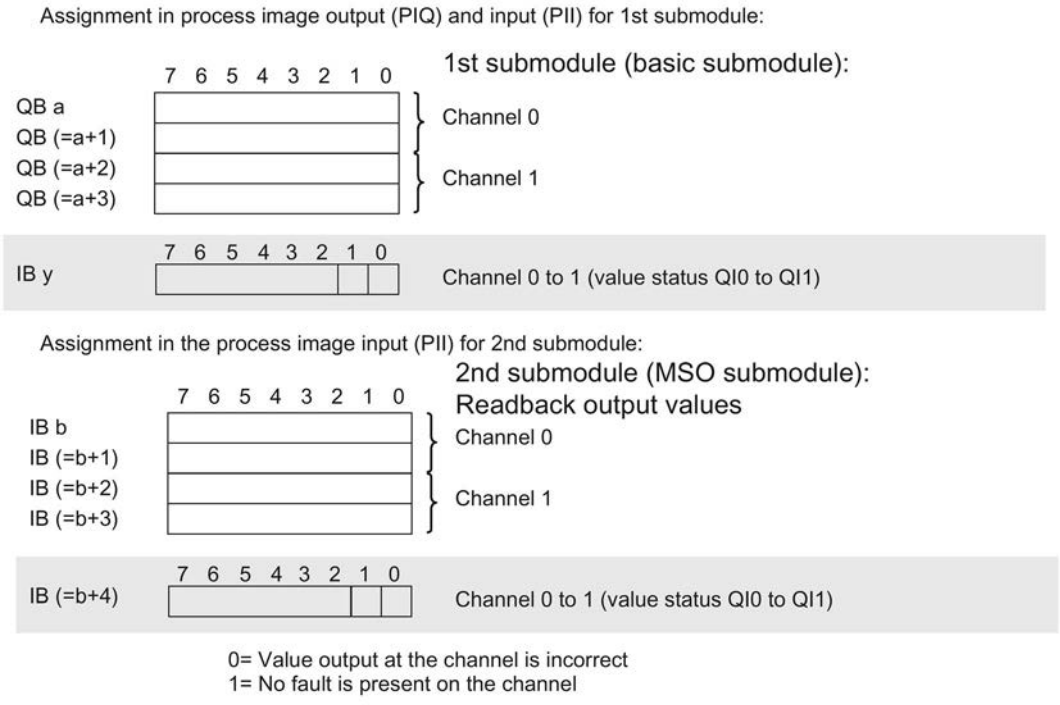

Figure 4-3 Address space for configuration as 1 x 2-channel AQ 2xU/I ST MSO with value status

The following figure shows the assignment of the address space with submodule 3 and 4.

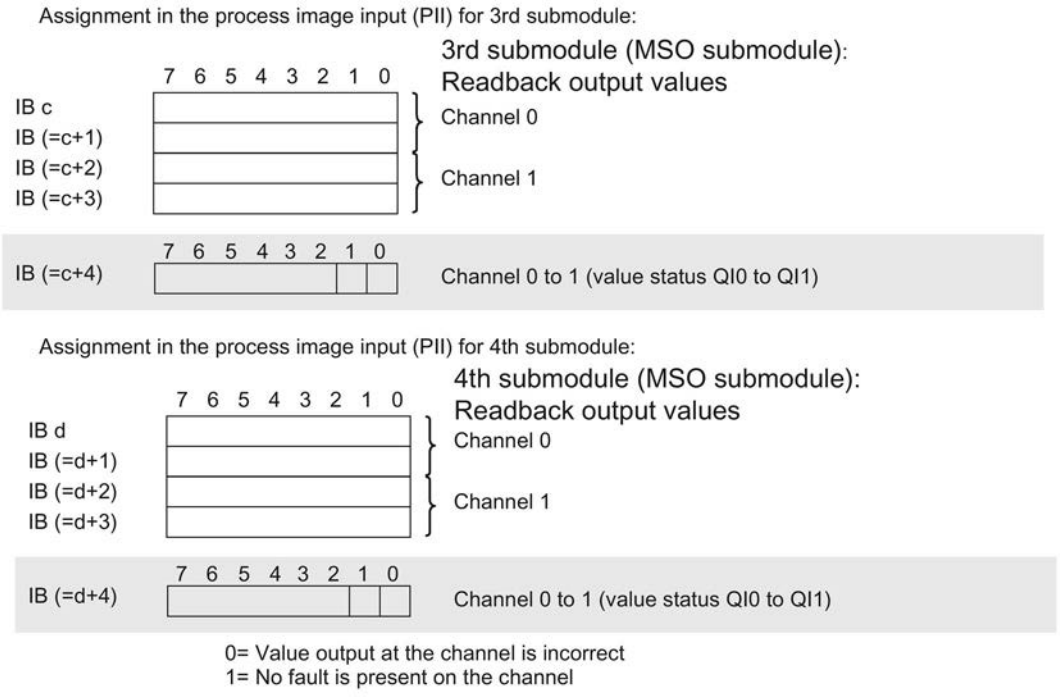

Figure 4-4 Address space for configuration as 1 x 2-channel AQ 2xU/I ST MSO with value status

Reference

You can find information on the Shared Input/Output (MSI/MSO) function in the section Module-Internal Shared Input/Output (MSI/MSO) of the PROFINET with STEP 7 V13 (https://support.industry.siemens.com/cs/ww/en/view/49948856) function manual.

Interrupts/diagnostics alarms

5

5.1 Status and error displays

LED displays

The following figure shows you the LED displays (status and error displays) of AQ 2xU/I ST.

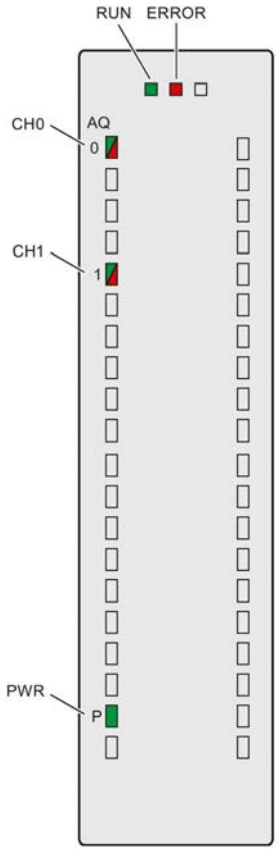

Figure 5-1 LED displays of the module AQ 2xU/I ST

Meaning of the LED displays

The following tables explain the meaning of the status and error displays. Corrective measures for diagnostics alarms can be found in section Diagnostics alarms (Page 25).

LED RUN/ERROR

Table 5- 1 RUN/ERROR status and error displays

LED		Meaning	Solution
RUN	ERROR		
□ Off	□ Off	Voltage missing or too low at backplane bus	• Switch on the CPU and/or the system power supply modules. • Verify that the U connectors are inserted. • Check to see if too many modules are inserted.
☼ Flashes	□ Off	The module starts and flashes until the valid configuration is set.	---
■ On	□ Off	Module is configured	
■ On	☼ Flashes	Indicates module errors (at least one error at one channel, e.g., wire break).	Evaluate the diagnostics data and eliminate the error (e.g., wire break).
☼ Flashes	☼ Flashes	Hardware defective	Replace the module.

PWR LED

Table 5- 2 PWR status display

LED PWR	Meaning	Solution
□ Off	Supply voltage L+ too low or missing	Check supply voltage L+.
■ On	Supply voltage L+ is present and OK	---

CHx LED

Table 5- 3 CHx status display

LED CHx	Meaning	Solution
□ Off	Channel disabled	---
■ On	Channel configured and OK	---
■ On	Diagnostics alarm: e.g., wire break, overflow, underflow	Check the wiring. Disable diagnostics.

5.2 Interrupts

The analog output module AQ 2xU/I ST supports diagnostic interrupts.

You can find detailed information on the error event in the error organization block with the "RALRM" instruction (read additional interrupt info) and in the STEP 7 online help.

Diagnostic interrupt

The module generates a diagnostic interrupt at the following events:

- Missing supply voltage L+
- Short-circuit to ground
- Wire break
- Overflow
- Underflow
- Parameter assignment error

5.3 Diagnostics alarms

A diagnostics alarm is generated and the ERROR LED flashes on the module for each diagnostics event. The diagnostics alarms can be read out in the diagnostics buffer of the CPU, for example. You can evaluate the error codes with the user program.

Table 5- 4 Diagnostics alarms, their meaning and corrective measures

Diagnostics alarm	Error code	Meaning	Solution
Short-circuit to ground	1_H	Overload at output	Eliminate overload
		Short-circuit of output Q_V to M_{ANA}	Eliminate the short-circuit
Wire break	6_H	Actuator circuit impedance too high	Use a different actuator type or modify the wiring, for example, use cables with larger cross-section
		Wirebreak between the module and actuator	Connect the cable
		Channel not connected (open)	• Disable the channel ("output type" parameter) • Connect the channel
Overflow	7_H	The output value set by the user program violates the valid rated range/overrange.	Correct the output value
Underflow	8_H	The output value set by the user program violates the valid rated range/underrange.	Correct the output value
Parameter assignment error	10^H	• The module cannot evaluate parameters for the channel • Incorrect parameter assignment	Correct the parameter assignment
Load voltage missing	11_H	Supply voltage L+ of the module is missing	Connect supply voltage L+ to module
Channel temporarily unavailable	$1F_H$	User calibration is active. Channel currently not providing current/valid values.	Exit user calibration.

Technical specifications 6

Technical specifications of the AQ 2xU/I ST

	6ES7532-5NB00-0AB0
General information	
Product type designation	AQ 2xU/I ST
Hardware functional status	FS01
Firmware version	V1.0.0
• FW update possible	Yes
Product function	
I&M data	Yes; I&M0 to I&M3
Scalable output range	No
Engineering with	
STEP 7 TIA Portal can be configured/integrated as of version	V13 / V13.0.2
STEP 7 can be configured/integrated as of version	V5.5 SP3 / -
PROFIBUS as of GSD version/GSD revision	V1.0 / V5.1
PROFINET as of GSD version/GSD revision	V2.3 / -
Operating mode	
Oversampling	No
MSO	Yes
CiR Configuration in RUN	
Parameter assignment in RUN possible	Yes
Calibration in RUN possible	Yes
Supply voltage	
Rated value (DC)	24 V
Valid range, low limit (DC)	20.4 V
Valid range, high limit (DC)	28.8 V
Reverse polarity protection	Yes
Input current	
Current consumption, max.	110 mA; with 24 V DC supply
Power	
Power consumption from backplane bus	0.65 W
Power loss	
Power loss, typ.	2.7 W

	6ES7532-5NB00-0AB0
Analog outputs	
Number of analog outputs	2
Voltage output, short-circuit protection	Yes
Voltage output, short-circuit current, max.	24 mA
Current output, open-circuit voltage, max.	22 V
Cycle time (all channels), min.	3.2 ms; regardless of the number of activated channels
Output ranges, voltage	
0 V to 10 V	Yes
1 V to 5 V	Yes
-5 V to +5 V	No
-10 V to +10 V	Yes
Output ranges, current	
0 mA to 20 mA	Yes
-20 mA to +20 mA	Yes
4 mA to 20 mA	Yes
Connection of actuators	
for voltage output two-wire connection	Yes
for voltage output four-wire connection	Yes
for current output two-wire connection	Yes
Load resistance (in the rated output range)	
for voltage outputs, min.	1 kOhm; 0.5 kOhm at 1 to 5 V
for voltage outputs, capacitive load, max.	1 µF
for current outputs, max.	750 Ω
for current outputs, inductive load, max.	10 mH
Cable length	
shielded, max.	800 m; for current, 200 m for voltage
Analog value generation for the outputs	
Integration and conversion time/resolution per channel	
Resolution with overrange (bit including sign), max.	16 bit
Conversion time (per channel)	0.5 ms
Settling time	
for resistive load	1.5 ms
for capacitive load	2.5 ms
for inductive load	2.5 ms
Errors/accuracies	
Output ripple (in relation to output range, bandwidth 0 kHz to 50 kHz), (+/-)	0.02%
Linearity error (in relation to output range), (+/-)	0.15%
Temperature error (in relation to output range), (+/-)	0.002%/K
Crosstalk between outputs, max.	-100 dB
Repeat accuracy in settled state at 25 °C (in relation to output range), (+/-)	0.05%

	6ES7532-5NB00-0AB0
Operational limit in the entire temperature range	
Voltage in relation to output range, (+/-)	0.3%
Current in relation to output range, (+/-)	0.3%
Basic error limit (operational limit at 25 °C)	
Voltage in relation to output range, (+/-)	0.2%
Current in relation to output range, (+/-)	0.2%
Isochronous mode	
Isochronous mode (application synchronized up to terminal)	No
Interrupts/diagnostics/status information	
Diagnostics function	Yes
Substitute values can be applied	Yes
Interrupts	
Diagnostic interrupt	Yes
Diagnostics alarms	
Monitoring of supply voltage	Yes
Wire break	Yes; only for output type current
Short-circuit	Yes; only for output type voltage
Overflow/underflow	Yes
Diagnostics display LED	
RUN LED	Yes; green LED
ERROR LED	Yes; red LED
Monitoring of supply voltage (PWR LED)	Yes; green LED
Channel status display	Yes; green LED
For channel diagnostics	Yes; red LED
For module diagnostics	Yes; red LED
Electrical isolation	
Electrical isolation of channels	
Between the channels	No
Between the channels, in groups of	2
Between the channels and backplane bus	Yes
Between the channels and load voltage L+	Yes
Permissible potential difference	
between S- and MANA (UCM)	8 V DC
Insulation	
Insulation tested with	707 V DC (type test)
Ambient conditions	
Ambient temperature during operation	
Horizontal mounting position, min.	0 °C
Horizontal mounting position, max.	60 °C
Vertical mounting position, min.	0 °C
Vertical mounting position, max.	40 °C

	6ES7532-5NB00-0AB0
Distributed mode	
Prioritized startup	No
Dimensions	
Width	25 mm
Height	147 mm
Depth	129 mm
Weights	
Weight, approx.	200 g
Miscellaneous	
Note:	Package includes 40-pin push-in front connector

Dimension drawing

A

The dimension drawing of the module on the mounting rail, as well as a dimension drawing with open front panel are provided in the appendix. Always adhere to the specified dimensions for installation in cabinets, control rooms, etc.

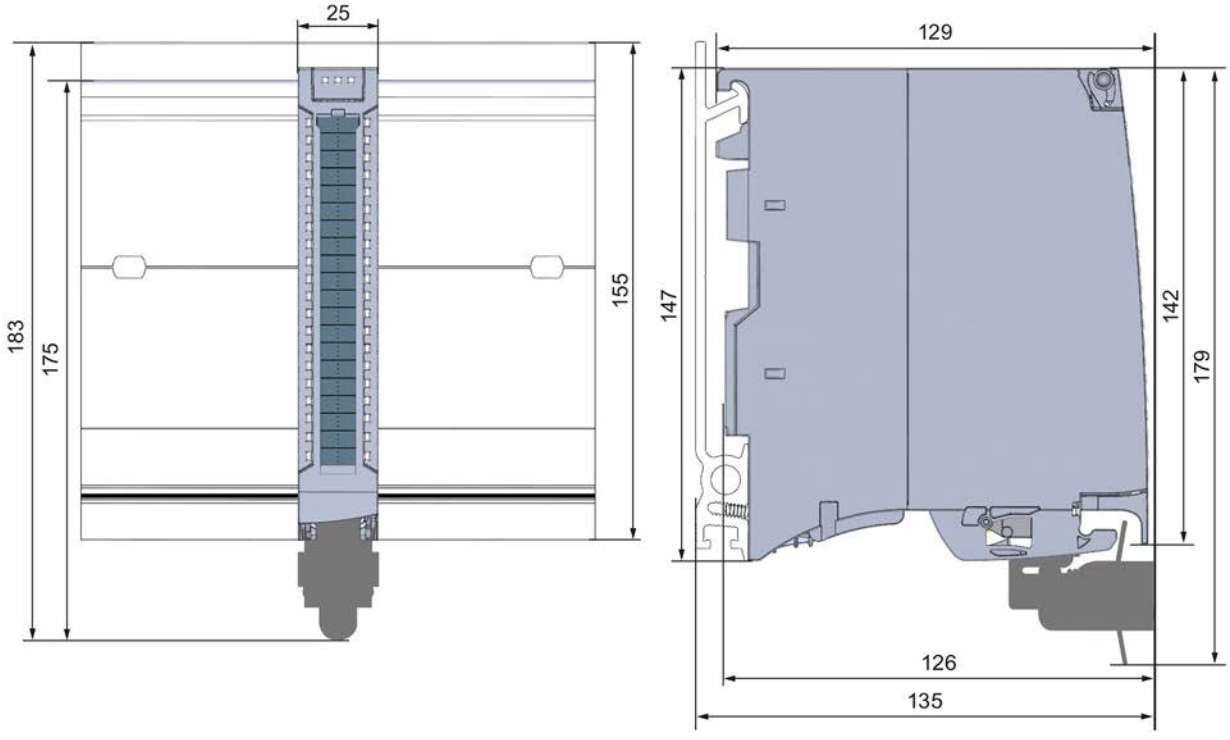

Figure A-1 Dimension drawing of the AQ 2xU/I ST module

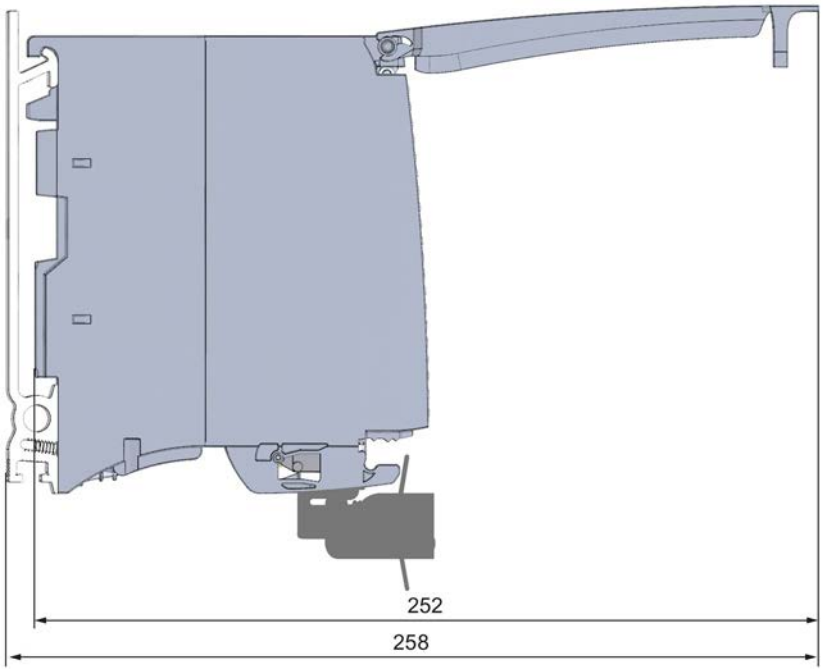

Figure A-2 Dimension drawing of the AQ 2xU/I ST module, side view with open front panel

Parameter data records

B

B.1 Parameter assignment and structure of the parameter data records

The data records of the module have an identical structure, regardless of whether you configure the module with PROFIBUS DP or PROFINET IO.

Dependencies for configuration with GSD file

When configuring the module with a GSD file, remember that the settings of some parameters are dependent on each other. The parameters are only checked for plausibility by the module after the transfer to the module.

The following table lists the parameters that depend on one another.

Table B- 1 Dependencies of parameters for configuration with GSD file

Device-specific parameters (GSD file)	Dependent parameters
Short-circuit to ground	Only with voltage **output type**
Wire break	With current **output type** only
Substitute value	Only if **Reaction to CPU STOP** -> **Output substitute value** is configured

Parameter assignment in the user program

You have the option to assign module parameters in RUN (e.g., the voltage or current values of selected channels can be edited in RUN without having an effect on the other channels).

Parameter assignment in RUN

The WRREC instruction is used to transfer the parameters to the module using data records 64 and 65. The parameters set in STEP 7 do not change in the CPU, which means the parameters set in STEP 7 are still valid after a restart.

The parameters are only checked for plausibility by the module after the transfer to the module.

Output parameter STATUS

If errors occur during the transfer of parameters with the WRREC instruction, the module continues operation with the previous parameter assignment. However, a corresponding error code is written to the STATUS output parameter.

The description of the WRREC instruction and the error codes is available in the STEP 7 online help.

Assignment of data record and channel

For the configuration as a 1 x 2-channel module, the parameters are located in data records 64 and 65 and are assigned as follows:

- Data record 64 for channel 0
- Data record 65 for channel 1

For configuration 2 x 1-channel, the module has 2 submodules with one channel each. The parameters for the channel are available in data record 64 and are assigned as follows:

- Data record 64 for channel 0 (submodule 1)
- Data record 64 for channel 1 (submodule 2)

Address the respective submodule for data record transfer.

Data record structure

The example in the figure below shows the structure of data record 64 for channel 0. The structure of channel 1 is identical. The values in byte 0 and byte 1 are fixed and may not be changed.

Enable a parameter by setting the corresponding bit to "1".

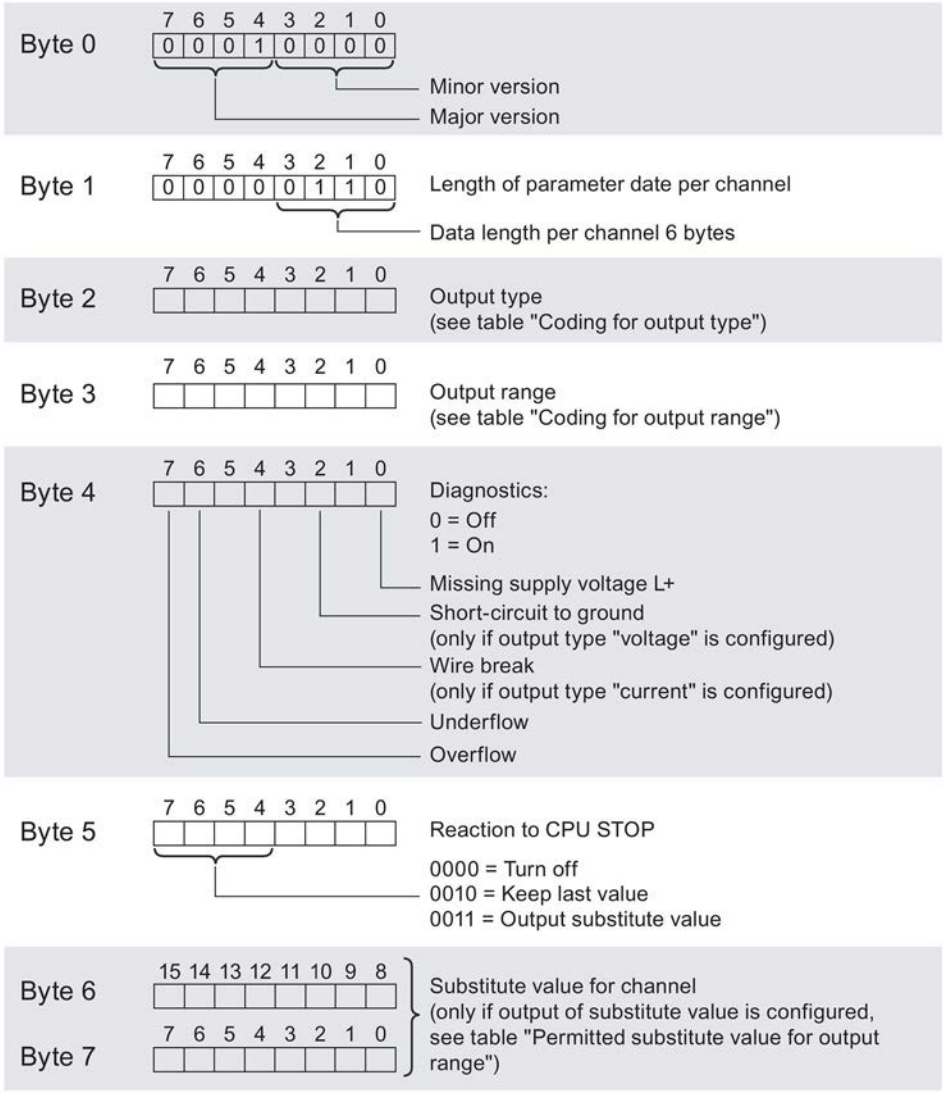

Figure B-1 Structure of data record 64: Bytes 0 to 7

Codes for the output type

The following table lists all output types of the analog output module along with their codes. Enter these codes at byte 2 of the data record for the corresponding channel (see the previous figure).

Table B- 2 Code for the output type

Output type	Code
Disabled	0000 0000
Voltage	0000 0001
Current	0000 0010

Codes for the output ranges

The following table lists all voltage and current output ranges of the analog output module along with their codes. In each case, enter these codes at byte 3 of the respective data record (see previous figure).

Table B- 3 Code for the output range

Output range for voltage	Code
1 V to 5 V	0000 0011
0 V to 10 V	0000 0010
±10 V	0000 0000
Output range for current	**Code**
0 mA to 20 mA	0000 0001
4 mA to 20 mA	0000 0010
±20 mA	0000 0000

Valid substitute values

The following table lists all output ranges for the valid substitute values. Enter these substitute values at bytes 6 and 7 of the data record for the corresponding channel (see the previous figure). The binary representation of output ranges is available on the Internet in the function manual Analog value processing for SIMATIC.

Table B- 4 Valid substitute value for the output range

Output range	Valid substitute value
±10 V	-32512 ... +32511
1 V to 5 V	-6912 ... +32511
0 V to 10 V	0 ... +32511
±20 mA	-32512 ... +32511
4 mA to 20 mA	-6912 ... +32511
0 mA to 20 mA	0 ... +32511

Representation of analog values

C

Introduction

This appendix describes the analog values for all output ranges supported by the AQ 2xU/I ST analog module.

Measured value resolution

Each analog value is written left aligned to the tags. The bits marked with "x" are set to "0".

Table C- 1 Resolution of the analog values

Resolution in bits including sign	Values		Analog value	
	Dec	Hex	High byte	Low byte
16	1	1_H	Sign 0 0 0 0 0 0 0	0 0 0 0 0 0 0 1

C.1 Representation of output ranges

The tables below set out the digitized representation of the output ranges, separated by bipolar and unipolar input ranges. The resolution is 16 bits.

Table C- 2 Bipolar output ranges

Dec. value	Output value in %	Data word																Range
		2^{15}	2^{14}	2^{13}	2^{12}	2^{11}	2^{10}	2^9	2^8	2^7	2^6	2^5	2^4	2^3	2^2	2^1	2^0	
32511	117.589	0	1	1	1	1	1	1	0	1	1	1	1	1	1	1	1	Maximum output value*
32511	117.589	0	1	1	1	1	1	1	0	1	1	1	1	1	1	1	1	Overshoot range
27649	100.004	0	1	1	0	1	1	0	0	0	0	0	0	0	0	0	1	
27648	100.000	0	1	1	0	1	1	0	0	0	0	0	0	0	0	0	0	Rated range
1	0.003617	0	0	0	0	0	0	0	0	0	0	0	0	0	0	0	1	
0	0.000	0	0	0	0	0	0	0	0	0	0	0	0	0	0	0	0	
-1	-0.003617	1	1	1	1	1	1	1	1	1	1	1	1	1	1	1	1	
-27648	-100.000	1	0	0	1	0	1	0	0	0	0	0	0	0	0	0	0	
-27649	-100.004	1	0	0	1	0	0	1	1	1	1	1	1	1	1	1	1	Undershoot range
-32512	-117.593	1	0	0	0	0	0	0	1	0	0	0	0	0	0	0	0	
-32512	-117.593	1	0	0	0	0	0	0	1	0	0	0	0	0	0	0	0	Minimum output value**

* When values > 32511 are specified, the output value is limited to 117.589%.

** When values < -32512 are specified, the output value is limited to -117.593%.

Table C- 3 Unipolar output ranges

Dec. value	Output value in %	Data word																Range
		2^{15}	2^{14}	2^{13}	2^{12}	2^{11}	2^{10}	2^{9}	2^{8}	2^{7}	2^{6}	2^{5}	2^{4}	2^{3}	2^{2}	2^{1}	2^{0}	
32511	117.589	0	1	1	1	1	1	1	1	x	x	x	x	x	x	x	x	Maximum output value*
32511	117.589	0	1	1	1	1	1	1	0	1	1	1	1	1	1	1	1	Overshoot range
27649	100.004	0	1	1	0	1	1	0	0	0	0	0	0	0	0	0	1	
27648	100.000	0	1	1	0	1	1	0	0	0	0	0	0	0	0	0	0	Rated range
1	0.003617	0	0	0	0	0	0	0	0	0	0	0	0	0	0	0	1	
0	0.000	0	0	0	0	0	0	0	0	0	0	0	0	0	0	0	0	
0	0	0	0	0	0	0	0	0	0	0	0	0	0	0	0	0	0	Minimum output value**

* When values > 32511 are specified, the output value is limited to 117.589%.

** When values < 0 are specified, the output value is limited to 0%.

C.2 Representation of analog values in the voltage output ranges

The tables below list the decimal and hexadecimal values (codes) of the possible voltage output ranges.

Table C- 4 Voltage output range ±10 V

Values			Voltage output range	Range
	dec	hex	±10 V	
>117.589%	>32511	>7EFF	11.76 V	Maximum output value
117.589%	32511	7EFF	11.76 V	Overshoot range
	27649	6C01		
100%	27648	6C00	10 V	Rated range
75%	20736	5100	7.5 V	
0.003617%	1	1	361.7 µV	
0%	0	0	0 V	
	-1	FFFF	-361.7 µV	
-75%	-20736	AF00	-7.5 V	
-100%	-27648	9400	-10 V	
	-27649	93FF		Undershoot range
-117.593%	-32512	8100	-11.76 V	
<-117.593%	<-32512	< 8100	-11.76 V	Minimum output value

Table C- 5 Voltage output range 0 V to 10 V

Values			Voltage output range	Range
	dec	hex	0 V to 10 V	
>117.589%	>32511	>7EFF	11.76 V	Maximum output value
117.589%	32511	7EFF	11.76 V	Overshoot range
	27649	6C01		
100%	27648	6C00	10 V	Rated range
75%	20736	5100	7.5 V	
0.003617%	1	1	361.7 µV	
0%	0	0	0 V	
<0%	<0	<0	0 V	Minimum output value

Table C- 6 Voltage output range 1 V to 5 V

Values			Voltage output range	Range
	dec	hex	1 V to 5 V	
>117.589%	>32511	>7EFF	5.70 V	Maximum output value
117.589%	32511	7EFF	5.70 V	Overshoot range
	27649	6C01		
100%	27648	6C00	5 V	Rated range
75%	20736	5100	4 V	
0.003617%	1	1	1 V +144.7 µV	
0%	0	0	1 V	
	-1	FFFF	1 V -144.7 µV	Undershoot range
-25%	-6912	E500	0 V	
<-25%	<-6912	< E500	0 V	Minimum output value

C.3 Representation of analog values in the current output ranges

The tables below list the decimal and hexadecimal values (codes) of the possible current output ranges.

Table C- 7 Current output range ±20 mA

Values			Current output range	Range
	dec	hex	±20 mA	
>117.589%	>32511	>7EFF	23.52 mA	Maximum output value
117.589%	32511	7EFF	23.52 mA	Overshoot range
	27649	6C01		
100%	27648	6C00	20 mA	Rated range
75%	20736	5100	15 mA	
0.003617%	1	1	723.4 nA	
0%	0	0	0 mA	
	-1	FFFF	-723.4 nA	
-75%	-20736	AF00	-15 mA	
-100%	-27648	9400	-20 mA	
	-27649	93FF		Undershoot range
-117.593%	-32512	8100	-23.52 mA	
<-117.593%	<-32512	<8100	-23.52 mA	Minimum output value

Table C- 8 Current output range 0 mA to 20 mA

Values			Current output range	Range
	dec	hex	0 mA to 20 mA	
>117.589%	>32511	>7EFF	23.52 mA	Maximum output value
117.589%	32511	7EFF	23.52 mA	Overshoot range
	27649	6C01		
100%	27648	6C00	20 mA	Rated range
75%	20736	5100	15 mA	
0.003617%	1	1	723.4 nA	
0%	0	0	0 mA	
<0%	<0	<0	0 mA	Minimum output value

Table C- 9 Current output range 4 mA to 20 mA

Values			Current output range	Range
	dec	hex	4 mA to 20 mA	
>117.589%	>32511	>7EFF	22.81 mA	Maximum output value
117.589%	32511	7EFF	22.81 mA	Overshoot range
	27649	6C01		
100%	27648	6C00	20 mA	Rated range
75%	20736	5100	16 mA	
0.003617%	1	1	4 mA + 578.7 nA	
0%	0	0	4 mA	
	-1	FFFF	4 mA - 578.7 nA	Undershoot range
-25%	-6912	E500	0 mA	
<-25%	<-6912	<E500	0 mA	Minimum output value

SIEMENS

SIMATIC

S7-1500 / ET 200MP

Analog Input/Output Module AI 4xU/I/RTD/TC / AQ 2xU/I ST (6ES7534-7QE00-0AB0)

Manual

Edition 09/2016

siemens.com

SIEMENS

SIMATIC

S7-1500/ET 200MP Analog Input/Output Module AI 4xU/I/RTD/TC/ AQ 2xU/I ST (6ES7534-7QE00-0AB0)

Manual

Preface

Guide to documentation 1

Product overview 2

Wiring 3

Parameters/address space 4

Interrupts/diagnostics alarms 5

Technical specifications 6

Dimension drawing A

Parameter data records B

Analog value processing C

09/2016

A5E32368757-AC

Legal information

Warning notice system

This manual contains notices you have to observe in order to ensure your personal safety, as well as to prevent damage to property. The notices referring to your personal safety are highlighted in the manual by a safety alert symbol, notices referring only to property damage have no safety alert symbol. These notices shown below are graded according to the degree of danger.

⚠ DANGER

indicates that death or severe personal injury **will** result if proper precautions are not taken.

⚠ WARNING

indicates that death or severe personal injury **may** result if proper precautions are not taken.

⚠ CAUTION

indicates that minor personal injury can result if proper precautions are not taken.

NOTICE

indicates that property damage can result if proper precautions are not taken.

If more than one degree of danger is present, the warning notice representing the highest degree of danger will be used. A notice warning of injury to persons with a safety alert symbol may also include a warning relating to property damage.

Qualified Personnel

The product/system described in this documentation may be operated only by **personnel qualified** for the specific task in accordance with the relevant documentation, in particular its warning notices and safety instructions. Qualified personnel are those who, based on their training and experience, are capable of identifying risks and avoiding potential hazards when working with these products/systems.

Proper use of Siemens products

Note the following:

⚠ WARNING

Siemens products may only be used for the applications described in the catalog and in the relevant technical documentation. If products and components from other manufacturers are used, these must be recommended or approved by Siemens. Proper transport, storage, installation, assembly, commissioning, operation and maintenance are required to ensure that the products operate safely and without any problems. The permissible ambient conditions must be complied with. The information in the relevant documentation must be observed.

Trademarks

All names identified by ® are registered trademarks of Siemens AG. The remaining trademarks in this publication may be trademarks whose use by third parties for their own purposes could violate the rights of the owner.

Disclaimer of Liability

We have reviewed the contents of this publication to ensure consistency with the hardware and software described. Since variance cannot be precluded entirely, we cannot guarantee full consistency. However, the information in this publication is reviewed regularly and any necessary corrections are included in subsequent editions.

Siemens AG
Division Digital Factory
Postfach 48 48
90026 NÜRNBERG
GERMANY

A5E32368757-AC
℗ 11/2016 Subject to change

Copyright © Siemens AG 2014 - 2016.
All rights reserved

Preface

Purpose of the documentation

This manual supplements the system manual S7-1500/ET 200MP (https://support.industry.siemens.com/cs/ww/en/view/59191792).

Functions that relate in general to the systems are described in this system manual.

The information provided in this manual and in the system/function manuals supports you in commissioning the systems.

Changes compared to previous version

Compared to the previous version, this manual contains the following change:

Original texts of the license conditions and copyright notes for open-source software are available on the Internet as of 09/2016.

Conventions

The term "CPU" is used in this manual both for the CPUs of the S7-1500 automation system, as well as for interface modules of the ET 200MP distributed I/O system.

Please also observe notes marked as follows:

Note

A note contains important information on the product described in the documentation, on the handling of the product or on the section of the documentation to which particular attention should be paid.

Security information

Siemens provides products and solutions with industrial security functions that support the secure operation of plants, systems, machines and networks.

In order to protect plants, systems, machines and networks against cyber threats, it is necessary to implement – and continuously maintain – a holistic, state-of-the-art industrial security concept. Siemens' products and solutions only form one element of such a concept.

Customer is responsible to prevent unauthorized access to its plants, systems, machines and networks. Systems, machines and components should only be connected to the enterprise network or the internet if and to the extent necessary and with appropriate security measures (e.g. use of firewalls and network segmentation) in place.

Additionally, Siemens' guidance on appropriate security measures should be taken into account. For more information about industrial security, please visit (http://www.siemens.com/industrialsecurity).

Siemens' products and solutions undergo continuous development to make them more secure. Siemens strongly recommends to apply product updates as soon as available and to always use the latest product versions. Use of product versions that are no longer supported, and failure to apply latest updates may increase customer's exposure to cyber threats.

To stay informed about product updates, subscribe to the Siemens Industrial Security RSS Feed under (http://www.siemens.com/industrialsecurity).

Open Source Software

Open-source software is used in the firmware of the I/O modules. Open Source Software is provided free of charge. We are liable for the product described, including the open-source software contained in it, pursuant to the conditions applicable to the product. Siemens accepts no liability for the use of the open source software over and above the intended program sequence, or for any faults caused by modifications to the software.

For legal reasons, we are obliged to publish the original text of the license conditions and copyright notices. Please read the information relating to this on the Internet (https://support.industry.siemens.com/cs/ww/en/view/109741045).

Table of contents

Preface 4

1 Guide to documentation 7

2 Product overview 11

2.1 Properties 11

3 Wiring 14

3.1 Wiring and block diagrams 14

4 Parameters/address space 25

4.1 Measurement types and ranges 25

4.2 Output type and output ranges 28

4.3 Parameters 29

4.4 Explanation of parameters 33

4.5 Address space 37

5 Interrupts/diagnostics alarms 45

5.1 Status and error displays 45

5.2 Interrupts 47

5.3 Diagnostics alarms 49

6 Technical specifications 51

A Dimension drawing 60

B Parameter data records 62

B.1 Parameter assignment and structure of the parameter data records 62

B.2 Structure of a data record for input channels 64

B.3 Structure of a data record for output channels 72

B.4 Structure of a data record for dynamic reference temperature 75

C Analog value processing 77

C.1 Representation of input ranges 78

C.1.1 Representation of analog values in voltage measuring ranges 79

C.1.2 Representation of analog values in the current measuring ranges 80

C.1.3 Representation of the analog values of resistance-based sensors/resistance thermometers 81

C.1.4 Representation of analog values for thermocouples 84

C.1.5 Measured values for wire break diagnostics 87

C.2 Representation of output ranges 88

C.2.1 Representation of analog values in the voltage output ranges 89

C.2.2 Representation of analog values in the current output ranges 90

Guide to documentation

1

The documentation for the SIMATIC S7-1500 automation system, the CPU 1516pro-2 PN based on SIMATIC S7-1500 and the SIMATIC ET 200MP distributed I/O system is arranged into three areas.
This arrangement enables you to access the specific content you require.

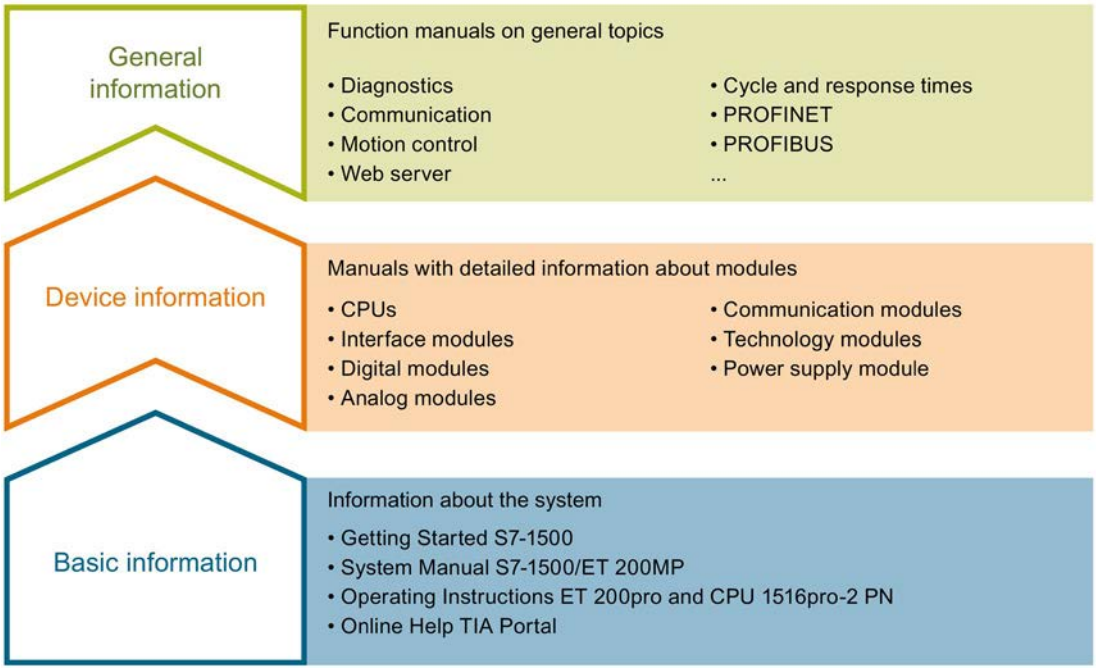

Basic information

The System Manual and Getting Started describe in detail the configuration, installation, wiring and commissioning of the SIMATIC S7-1500 and ET 200MP systems. For CPU 1516pro-2 PN you use the corresponding operating instructions. The STEP 7 online help supports you in the configuration and programming.

Device information

Product manuals contain a compact description of the module-specific information, such as properties, wiring diagrams, characteristics and technical specifications.

General information

The function manuals contain detailed descriptions on general topics regarding the SIMATIC S7-1500 and ET 200MP systems, e.g. diagnostics, communication, motion control, Web server, OPC UA.

You can download the documentation free of charge from the Internet (http://w3.siemens.com/mcms/industrial-automation-systems-simatic/en/manual-overview/Pages/Default.aspx).

Changes and supplements to the manuals are documented in a Product Information.

You can download the product information free of charge from the Internet (https://support.industry.siemens.com/cs/us/en/view/68052815).

Manual Collection S7-1500/ET 200MP

The Manual Collection contains the complete documentation on the SIMATIC S7-1500 automation system and the ET 200MP distributed I/O system gathered together in one file.

You can find the Manual Collection on the Internet (https://support.industry.siemens.com/cs/ww/en/view/86140384).

SIMATIC S7-1500 comparison list for programming languages

The comparison list contains an overview of which instructions and functions you can use for which controller families.

You can find the comparison list on the Internet (https://support.industry.siemens.com/cs/ww/en/view/86630375).

"mySupport"

With "mySupport", your personal workspace, you make the best out of your Industry Online Support.

In "mySupport", you can save filters, favorites and tags, request CAx data and compile your personal library in the Documentation area. In addition, your data is already filled out in support requests and you can get an overview of your current requests at any time.

You must register once to use the full functionality of "mySupport".

You can find "mySupport" on the Internet (https://support.industry.siemens.com/My/ww/en).

"mySupport" - Documentation

In the Documentation area in "mySupport" you can combine entire manuals or only parts of these to your own manual.
You can export the manual as PDF file or in a format that can be edited later.

You can find "mySupport" - Documentation on the Internet (http://support.industry.siemens.com/My/ww/en/documentation).

"mySupport" - CAx data

In the CAx data area in "mySupport", you can access the current product data for your CAx or CAe system.

You configure your own download package with a few clicks.

In doing so you can select:

- Product images, 2D dimension drawings, 3D models, internal circuit diagrams, EPLAN macro files
- Manuals, characteristics, operating manuals, certificates
- Product master data

You can find "mySupport" - CAx data on the Internet (http://support.industry.siemens.com/my/ww/en/CAxOnline).

Application examples

The application examples support you with various tools and examples for solving your automation tasks. Solutions are shown in interplay with multiple components in the system - separated from the focus on individual products.

You will find the application examples on the Internet (https://support.industry.siemens.com/sc/ww/en/sc/2054).

TIA Selection Tool

With the TIA Selection Tool, you can select, configure and order devices for Totally Integrated Automation (TIA).
This tool is the successor of the SIMATIC Selection Tool and combines the known configurators for automation technology into one tool.
With the TIA Selection Tool, you can generate a complete order list from your product selection or product configuration.

You can find the TIA Selection Tool on the Internet (http://w3.siemens.com/mcms/topics/en/simatic/tia-selection-tool).

SIMATIC Automation Tool

You can use the SIMATIC Automation Tool to run commissioning and maintenance activities simultaneously on various SIMATIC S7 stations as a bulk operation independently of the TIA Portal.

The SIMATIC Automation Tool provides a multitude of functions:

- Scanning of a PROFINET/Ethernet network and identification of all connected CPUs
- Address assignment (IP, subnet, gateway) and station name (PROFINET device) to a CPU
- Transfer of the date and the programming device/PC time converted to UTC time to the module
- Program download to CPU
- Operating mode switchover RUN/STOP
- Localization of the CPU by means of LED flashing
- Reading out CPU error information
- Reading the CPU diagnostic buffer
- Reset to factory settings
- Updating the firmware of the CPU and connected modules

You can find the SIMATIC Automation Tool on the Internet (https://support.industry.siemens.com/cs/ww/en/view/98161300).

PRONETA

With SIEMENS PRONETA (PROFINET network analysis), you analyze the PROFINET network during commissioning. PRONETA features two core functions:

- The topology overview independently scans PROFINET and all connected components.
- The IO check is a fast test of the wiring and the module configuration of a system.

You can find SIEMENS PRONETA on the Internet (https://support.industry.siemens.com/cs/ww/en/view/67460624).

Product overview 2

2.1 Properties

Article number

6ES7534-7QE00-0AB0

View of the module

Figure 2-1 View of the AI 4xU/I/RTD/TC/ AQ 2xU/I ST module

Properties

The module has the following technical properties:

- Analog inputs
  - 4 analog inputs
  - Resolution 16 bits including sign
  - Voltage measurement type can be set per channel
  - Current measurement type can be set per channel
  - Resistance measurement type can be set for channel 0 and 2
  - Resistance thermometer (RTD) measurement type can be set for channel 0 and 2
  - Thermocouple (TC) measurement type can be set per channel
  - Configurable diagnostics (per channel)
  - Hardware interrupt on limit violation can be set per channel (two low and two high limits per channel)
- Analog outputs
  - 2 analog outputs
  - Resolution: 16 bits including sign
  - Selection of channels for voltage output
  - Selection of channels for current output
  - Configurable diagnostics (per channel)

The module supports the following functions:

Table 2- 1 Version dependencies of the module functions

Function	Firmware version of the module	Configuration software	
		STEP 7 (TIA Portal)	GSD file in STEP 7 (TIA Portal) V12 or higher, or STEP 7 V5.5 SP3 or higher
Firmware update	V1.0.0 or higher	V13 or higher with HSP 0102	X
Calibration in runtime	V1.0.0 or higher	V13 or higher with HSP 0102	X
Identification data I&M0 to I&M3	V1.0.0 or higher	V13 or higher with HSP 0102	X
Parameter assignment in RUN	V1.0.0 or higher	V13 or higher with HSP 0102	X
Module-internal Shared Input (MSI) / Shared Output (MSO)	V1.0.0 or higher	V13 Update 3 or higher (PROFINET IO only)	X (PROFINET IO only)
Configurable submodules / submodules for Shared Device	V1.0.0 or higher	V13 Update 3 or higher (PROFINET IO only)	X (PROFINET IO only)

You can configure the module with STEP 7 (TIA Portal) and with a GSD file.

Accessories

The following accessories are supplied with the module and can also be ordered separately as spare parts:

- Front connector (push-in terminals) including cable tie
- Shield bracket
- Shield terminal
- Power supply element (push-in terminals)
- Labeling strips
- U connector
- Universal front door

You can find additional information on accessories in the system manual S7-1500/ET 20MP (https://support.industry.siemens.com/cs/ww/en/view/59191792).

Wiring 3

3.1 Wiring and block diagrams

This section contains the block diagram of the module and outlines various connection options.

You can find information on wiring the front connector, creating a cable shield, etc. in the Wiring section of the system manual S7-1500/ET 200MP (https://support.industry.siemens.com/cs/ww/en/view/59191792).

You can find additional information on compensating the reference junction temperature in the function manual Analog value processing (http://support.automation.siemens.com/WW/view/en/67989094), the structure of a data record in the section Structure of a data record for dynamic reference temperature (Page 75).

Note

You may use and combine the different wiring options for all channels.

Abbreviations used

U_n+/U_n-	Voltage input channel n (voltage only)
M_n+/M_n-	Measuring input channel n
I_n+/I_n-	Current input channel n (current only)
$I_{c\,n}$+/$I_{c\,n}$-	Current output for RTD, channel n
U_{Vn}	Supply voltage at channel n for 2-wire transmitters (2WMT)
QV_n	Voltage output channel
QI_n	Current output channel
S_n+/S_n-	Sense line channel
L+	Connection for supply voltage
M	Ground connection
M_{ANA}	Reference potential of the analog circuit

Pin assignment for the power supply element

The power supply element is plugged onto the front connector for powering the analog module. Wire the supply voltage to terminals 41 (L+) and 43 (M).

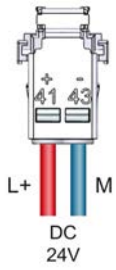

Figure 3-1 Power supply element wiring

Connection: Voltage measurement

The example in the following figure shows the pin assignment for voltage measurement.

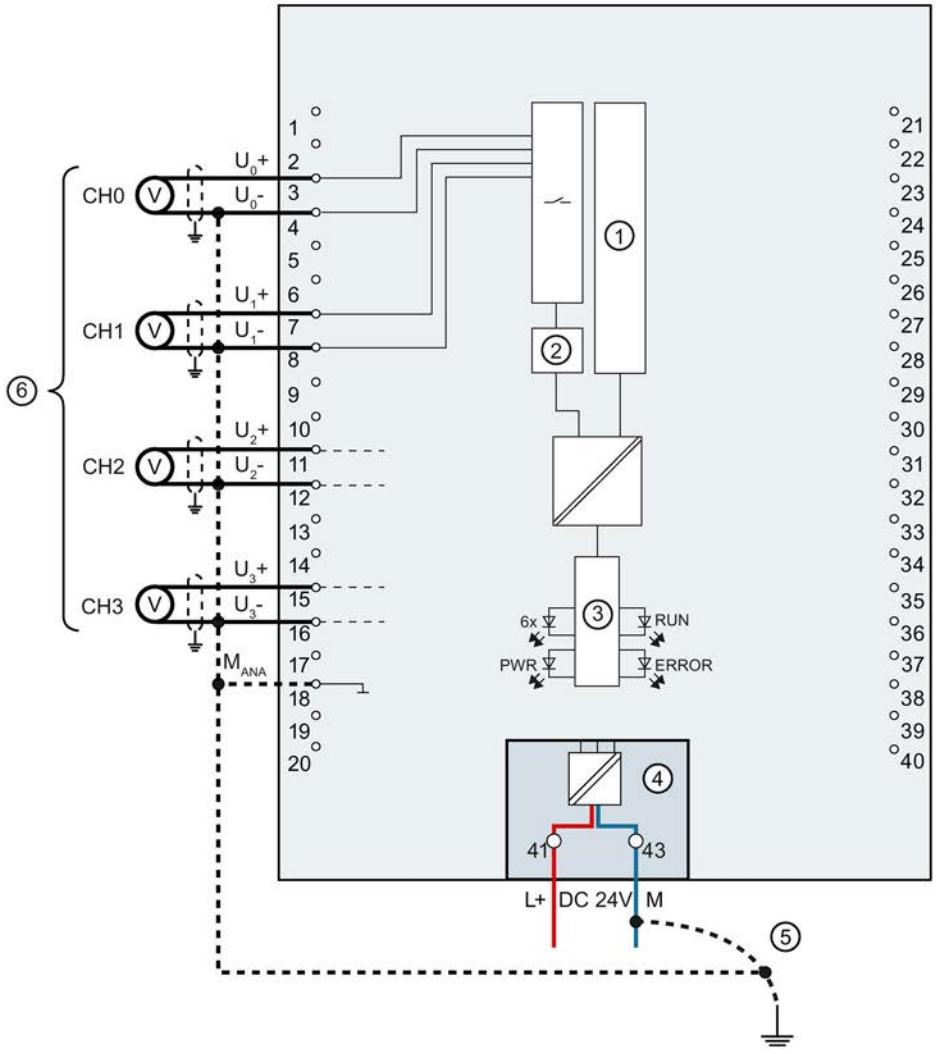

①	Digital-to-analog converter (DAC)	CHx	Channel or 6 x channel status (green/red)
②	Analog-to-digital converter (ADC)	RUN	Status display LED (green)
③	Backplane bus interface	ERROR	Error display LED (red)
④	Supply voltage via power supply element	PWR	LED for power supply (green)
⑤	Equipotential bonding cable (optional)		
⑥	Voltage measurement		

Figure 3-2 Block diagram and pin assignment for voltage measurement

Connection: 4-wire transmitters for current measurement

The example in the following figure shows the pin assignment for current measurement with 4-wire transmitters.

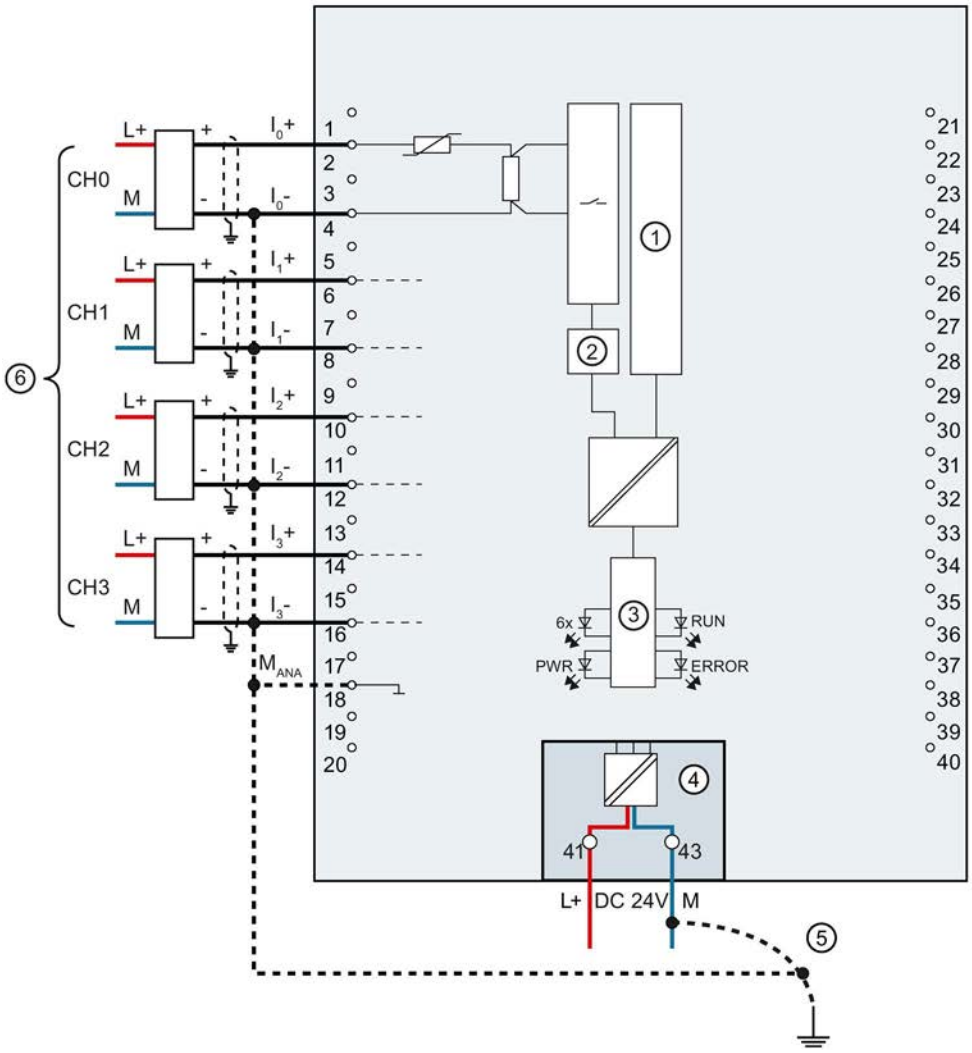

①	Digital-to-analog converter (DAC)	CHx	Channel or 6 x channel status (green/red)
②	Analog-to-digital converter (ADC)	RUN	Status display LED (green)
③	Backplane bus interface	ERROR	Error display LED (red)
④	Supply voltage via power supply element	PWR	LED for power supply (green)
⑤	Equipotential bonding cable (optional)		
⑥	Wiring 4-wire transmitter		

Figure 3-3 Block diagram and pin assignment for 4-wire transmitters for current measurement

Connection: 2-wire transmitters for current measurement

The example in the following figure shows the pin assignment for current measurement with 2-wire transmitters.

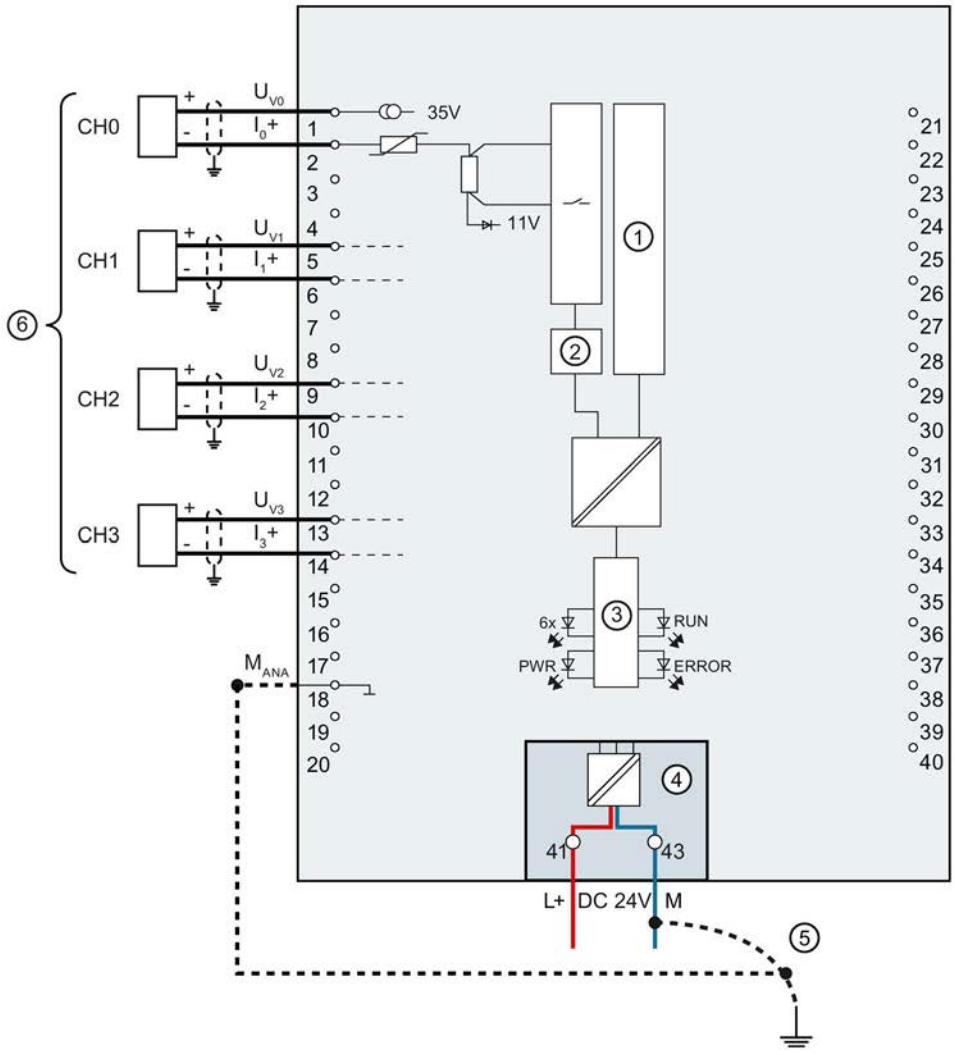

①	Digital-to-analog converter (DAC)	CHx	Channel or 6 x channel status (green/red)
②	Analog-to-digital converter (ADC)	RUN	Status display LED (green)
③	Backplane bus interface	ERROR	Error display LED (red)
④	Supply voltage via power supply element	PWR	LED for power supply (green)
⑤	Equipotential bonding cable (optional)		
⑥	Wiring 2-wire transmitter		

Figure 3-4 Block diagram and pin assignment for 2-wire transmitters for current measurement

Connection: 2-wire connection of resistance-based sensors or thermal resistors (RTD)

The example in the figure below shows the pin assignment for 2-wire connection of resistance sensors or thermal resistors.

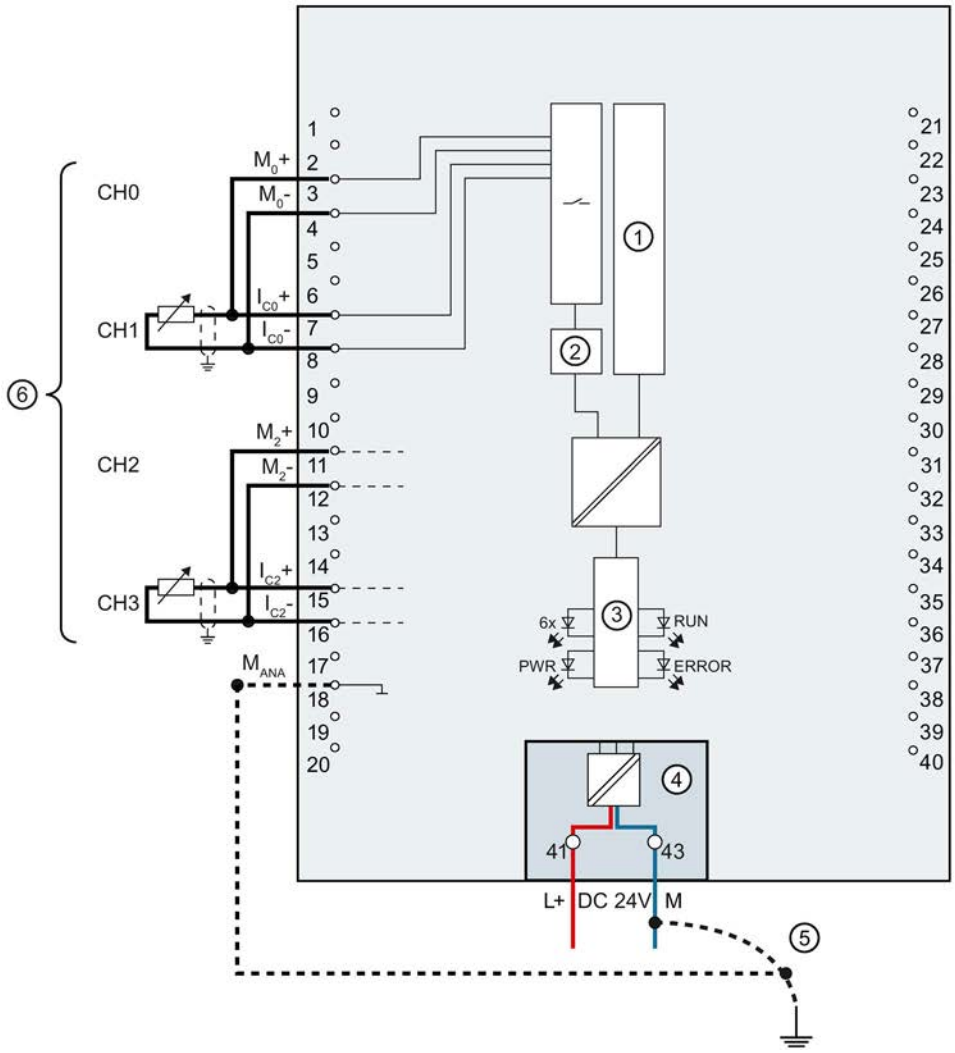

①	Digital-to-analog converter (DAC)	CHx	Channel or 6 x channel status (green/red)
②	Analog-to-digital converter (ADC)	RUN	Status display LED (green)
③	Backplane bus interface	ERROR	Error display LED (red)
④	Supply voltage via power supply element	PWR	LED for power supply (green)
⑤	Equipotential bonding cable		
⑥	2-wire connection		

Figure 3-5 Block diagram and pin assignment for 2-wire connection

Connection: 3- and 4-wire connection of resistance-based sensors or thermal resistors (RTD)

The example in the figure below shows the pin assignment for 3- and 4-wire connection of resistance-based sensors or thermal resistors.

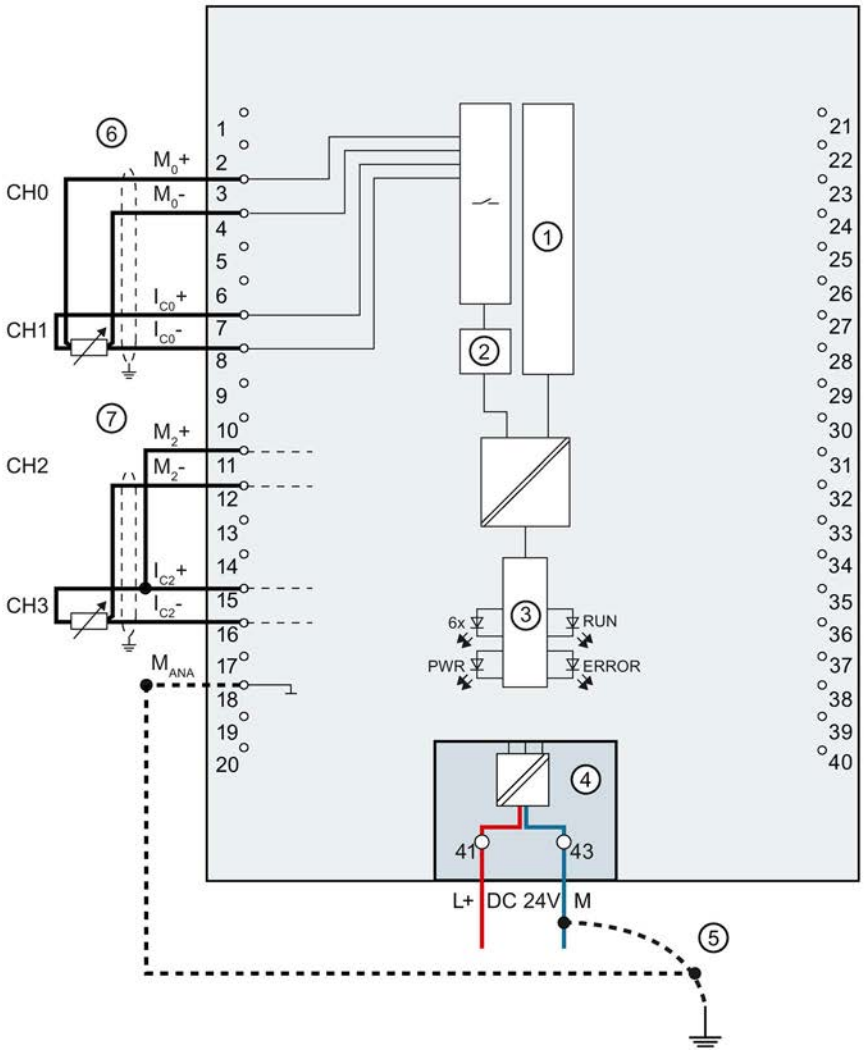

①	Digital-to-analog converter (DAC)	CHx	Channel or 6 x channel status (green/red)
②	Analog-to-digital converter (ADC)	RUN	Status display LED (green)
③	Backplane bus interface	ERROR	Error display LED (red)
④	Supply voltage via power supply element	PWR	LED for power supply (green)
⑤	Equipotential bonding cable		
⑥	4-wire connection		
⑦	3-wire connection		

Figure 3-6 Block diagram and pin assignment for 3- and 4-wire connection

Connection: Thermocouples for external / internal compensation

The figure below shows an example of the pin assignment for thermocouples for external or internal compensation.

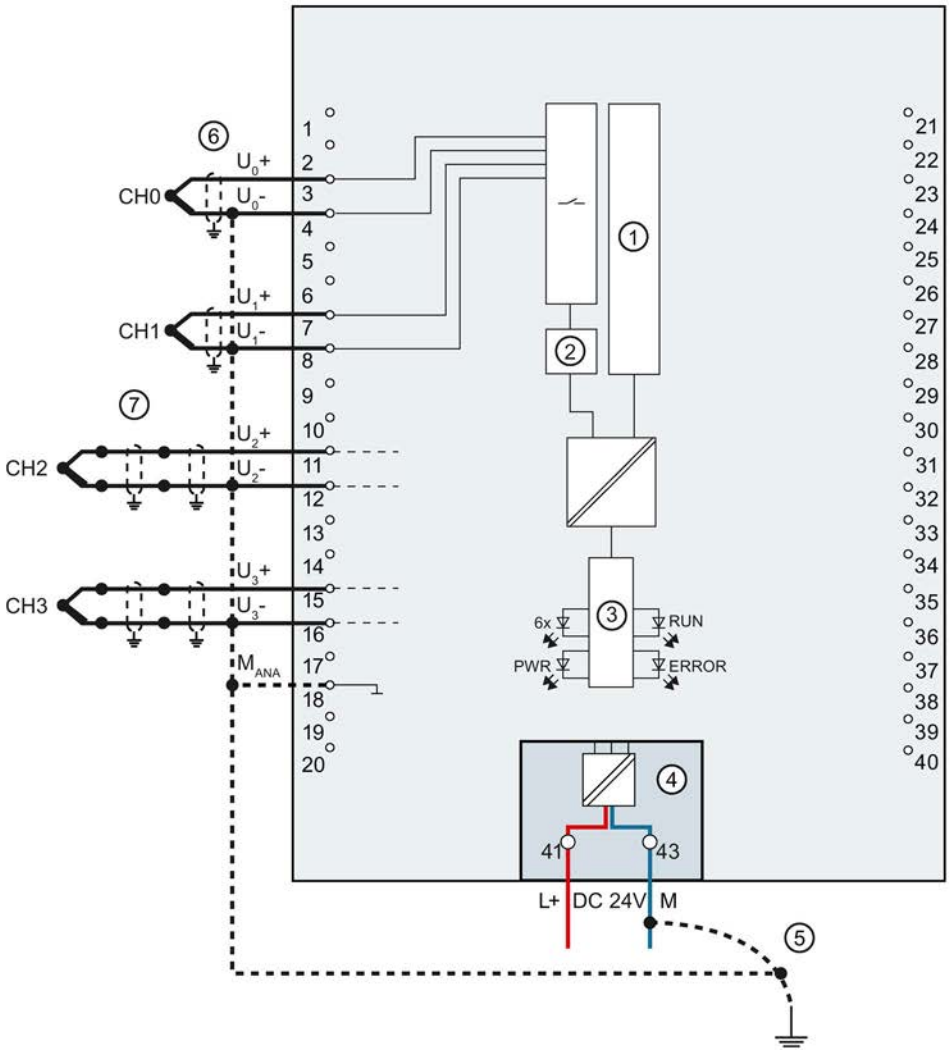

①	Digital-to-analog converter (DAC)	CHx	Channel or 6 x channel status (green/red)
②	Analog-to-digital converter (ADC)	RUN	Status display LED (green)
③	Backplane bus interface	ERROR	Error display LED (red)
④	Supply voltage via power supply element	PWR	LED for power supply (green)
⑤	Equipotential bonding cable		
⑥	Wiring of a thermocouple for internal compensation		
⑦	Wiring of a thermocouple for external compensation		

Figure 3-7 Block diagram and pin assignment for thermocouples and resistance thermometers

Connection: Grounded thermocouples for internal compensation

The following figure shows an example of the pin assignment for grounded thermocouples for internal compensation.

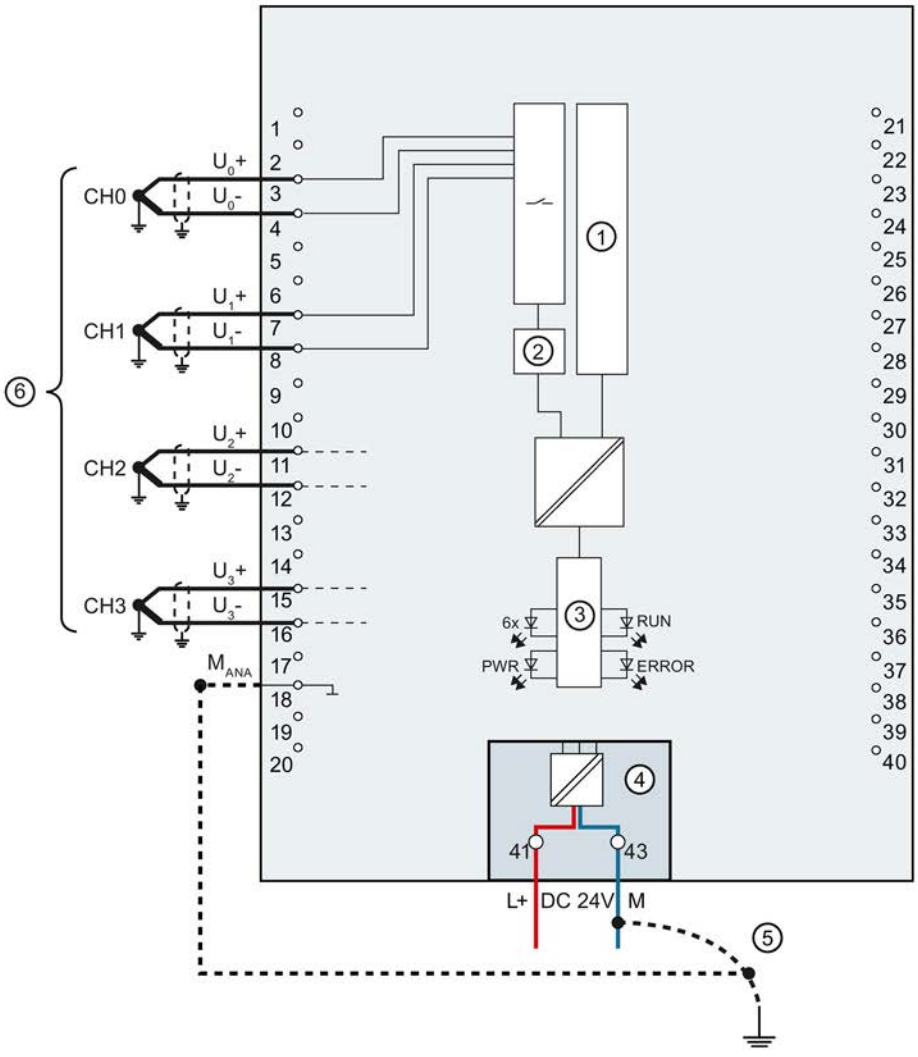

①	Digital-to-analog converter (DAC)	CHx	Channel or 6 x channel status (green/red)
②	Analog-to-digital converter (ADC)	RUN	Status display LED (green)
③	Backplane bus interface	ERROR	Error display LED (red)
④	Supply voltage via power supply element	PWR	LED for power supply (green)
⑤	Equipotential bonding cable		
⑥	Wiring of a thermocouple (grounded) for internal compensation		

Figure 3-8 Block diagram and pin assignment for grounded thermocouples

Connection: Voltage output

The figure below shows an example of the pin assignment for the circuits of the voltage outputs with:

- 2-wire connection, without compensation for line resistances.
- 4-wire connection, with compensation for line resistances.

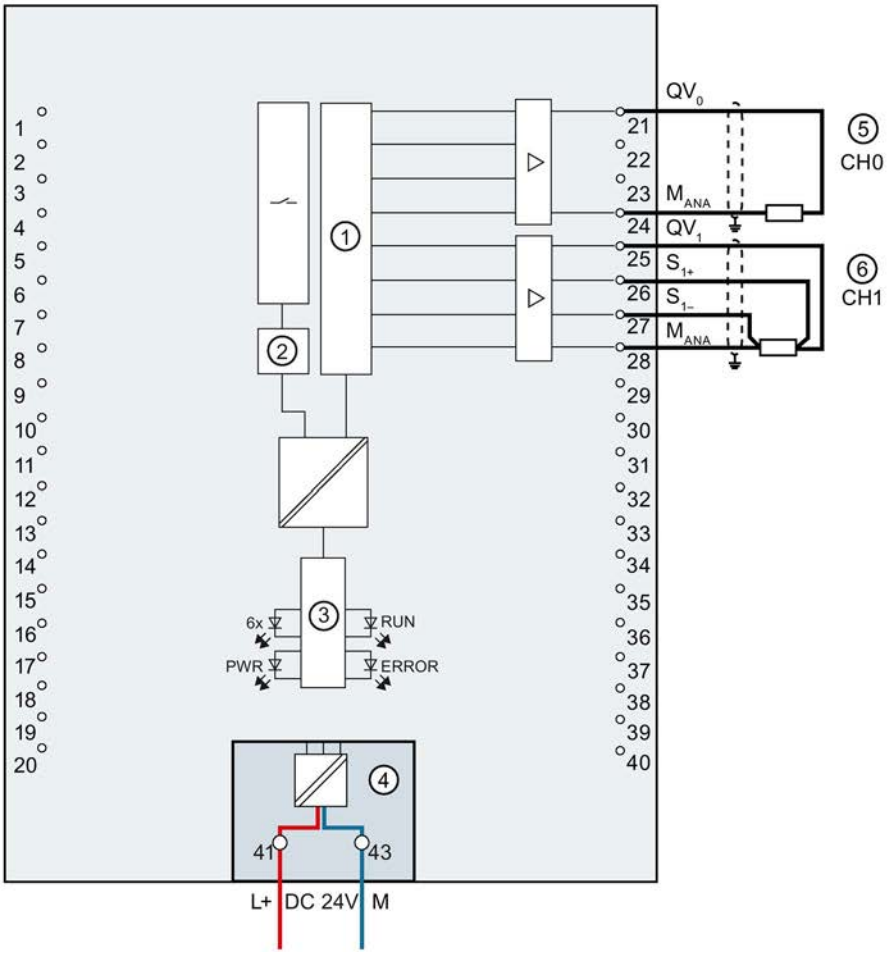

①	Digital-to-analog converter (DAC)	CHx	Channel or 6 x channel status (green/red)
②	Analog-to-digital converter (ADC)	RUN	Status display LED (green)
③	Backplane bus interface	ERROR	Error display LED (red)
④	Supply voltage via power supply element	PWR	LED for power supply (green)
⑤	2-wire connection		
⑥	4-wire connection		

Figure 3-9 Block diagram and pin assignment for the voltage output

Connection: Current output

The following figure shows an example of the pin assignment for current output circuitry.

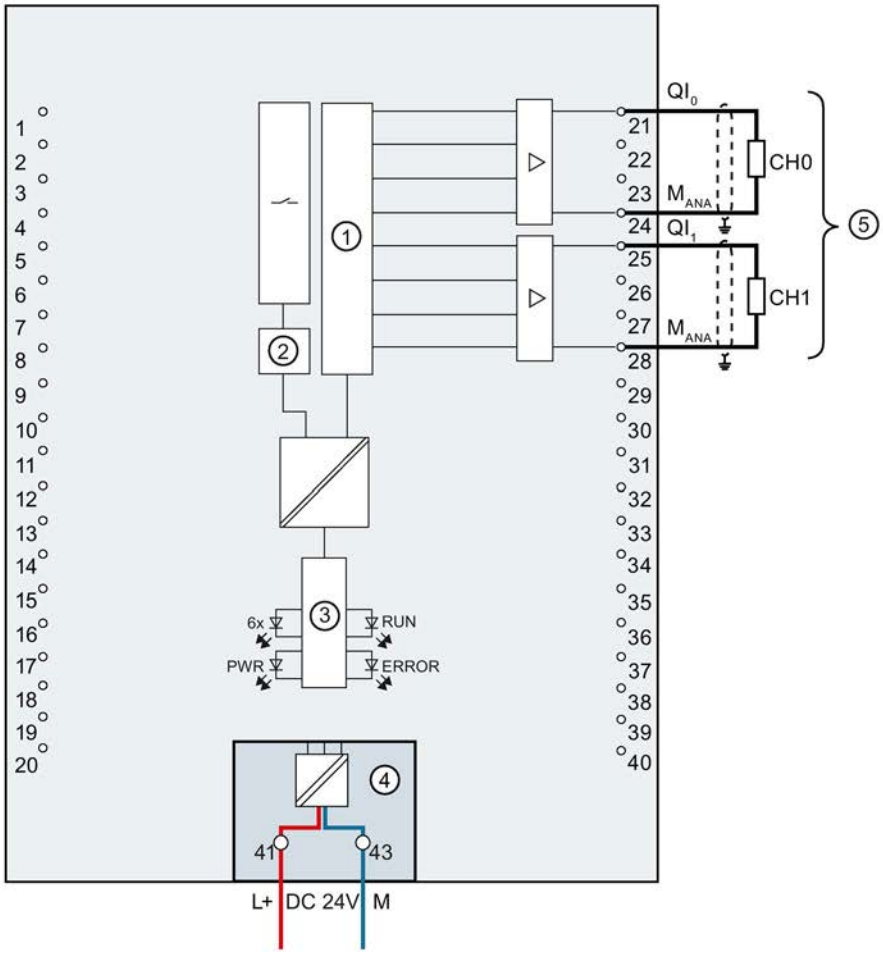

①	Digital-to-analog converter (DAC)	CHx	Channel or 6 x channel status (green/red)
②	Analog-to-digital converter (ADC)	RUN	Status display LED (green)
③	Backplane bus interface	ERROR	Error display LED (red)
④	Supply voltage via power supply element	PWR	LED for power supply (green)
⑤	Current output		

Figure 3-10 Block diagram and pin assignment for the current output

Parameters/address space 4

4.1 Measurement types and ranges

Introduction

By default, the module has the voltage measurement type and the measuring range ±10 V for the inputs You need to reassign the module parameters with STEP 7 if you want to use a different measurement type or range.

Deactivate the input if it is not going to be used. The module cycle time is shortened and the interference factors that lead to failure of the module (for example, triggering a hardware interrupt) are avoided.

Measurement types and ranges

The following table shows the measurement types and the respective measuring range.

Table 4- 1 Measurement types and measuring ranges

Measurement type	Measuring range	Representation of analog values
Voltage	±50 mV ±80 mV ±250 mV ±500 mV ±1 V ±2.5 V 1 V to 5 V ±5 V ±10 V	See Representation of analog values in voltage measuring ranges (Page 79)
Current 2WMT (2-wire transmitter)	4 mA to 20 mA	See Representation of analog values in the current measuring ranges (Page 80)
Current 4WMT (4-wire transmitter)	0 mA to 20 mA 4 mA to 20 mA ±20 mA	
Resistor (2-wire connection)	PTC	
Resistor (3-wire connection) (4-wire connection)	150 Ω 300 Ω 600 Ω 6000 Ω	

Measurement type	Measuring range	Representation of analog values
Thermal resistor RTD (3-wire connection) (4-wire connection)	PT100 Standard/Climate PT200 Standard/Climate PT500 Standard/Climate PT1000 Standard/Climate Ni100 Standard/Climate Ni1000 Standard/Climate LG-Ni1000 Standard/Climatic	See Representation of the analog values of resistance-based sensors/resistance thermometers (Page 81)
Thermocouple (TC)	Type B Type E Type J Type K Type N Type R Type S Type T	See Representation of analog values for thermocouples (Page 84)
Disabled	-	

The tables of the input ranges, overflow, underrange, etc. are available in the appendix Representation of input ranges (Page 78).

Special features for the use of PTC resistors

PTC resistors are suitable for temperature monitoring of electrical devices, such as motors, drives, and transformers.

Use Type A PTC resistors (PTC thermistor) in accordance with DIN/VDE 0660, part 302. In doing so, follow these steps:

1. Choose "Resistor (2-wire terminal)" and "PTC" in STEP 7.
2. Connect the PTC using 2-wire connection technology.

If you enable the "Underflow" diagnostics in STEP 7, it will be signaled for resistance values <18 Ω. In this case, this diagnostic signifies "Short-circuit in the wiring".

The figure below shows the address space assignment for AI 4xU/I/RTD/TC/ AQ 2xU/I ST with PTC resistors.

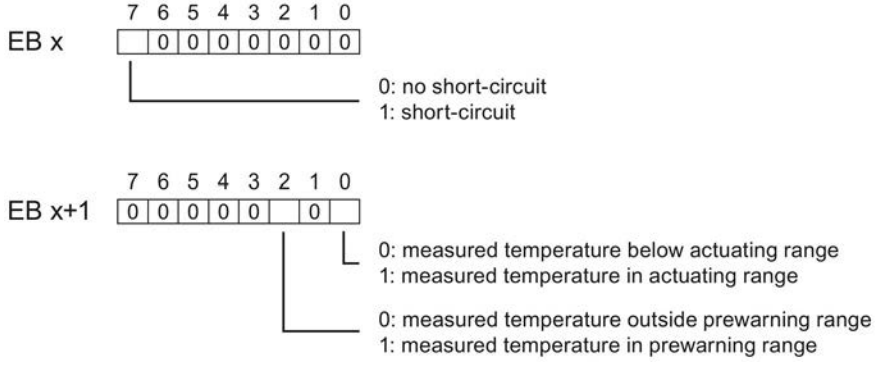

Figure 4-1 Address space for AI 4xU/I/RTD/TC/ AQ 2xU/I ST with PTC resistors

The diagram below shows the temperature profile and the corresponding switching points.

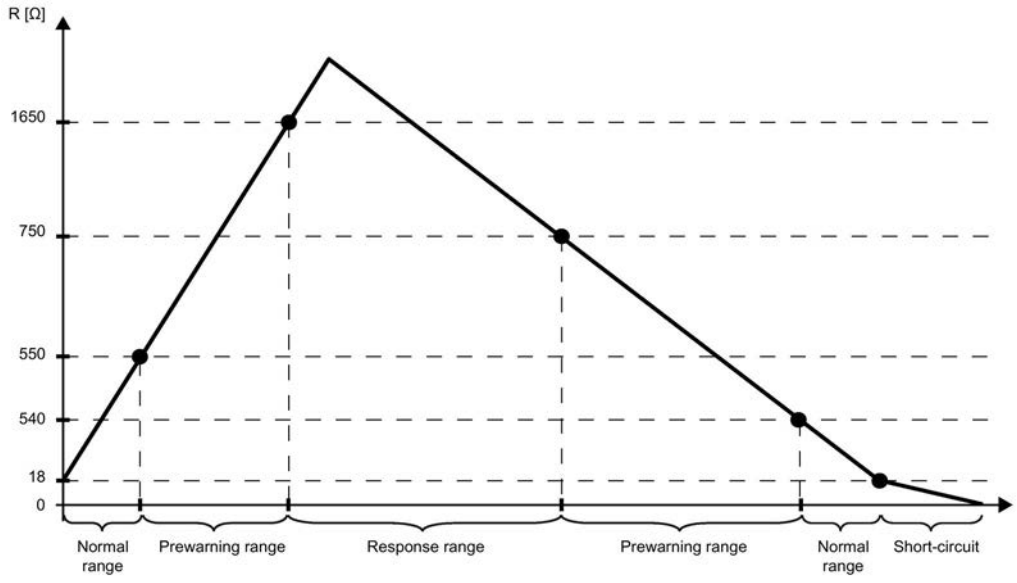

Figure 4-2 Temperature profile and the corresponding switching points

Special features of the measured value acquisition with PTC resistors

If faults occur (for example supply voltage L+ missing) that make it impossible to acquire measured values with PTC resistors, the corresponding channels (IB x/IB x+1) report overflow ($7FFF_H$). If the value status (QI) is enabled, the value 0 = incorrect is output in the corresponding bit.

4.2 Output type and output ranges

Introduction

The module is set to voltage output type for the outputs by default with output range ±10 V. You need to edit the module parameters with STEP 7 if you want to use a different output range or output type.

Output types and output ranges

The following table shows the output type and the respective output ranges.

Table 4- 2 Output type and output ranges

Output type	Output range	Representation of analog values
Voltage	1 V to 5 V 0 V to 10 V ±10 V	See Representation of analog values in the voltage output ranges (Page 89)
Current	0 mA to 20 mA 4 mA to 20 mA ±20 mA	See Representation of analog values in the current output ranges (Page 90)
Disabled	-	-

The tables of the output ranges, nominal range, overrange, etc. are provided in the appendix Representation of output ranges (Page 88).

4.3 Parameters

AI 4xU/I/RTD/TC/ AQ 2xU/I ST parameters

When you assign the module parameters in STEP 7, you use various parameters to specify the module properties. The following table lists the configurable parameters. The effective range of the configurable parameters depends on the type of configuration. The following configurations are possible:

- Central operation with a S7-1500 CPU
- Distributed operation on PROFINET IO in an ET 200MP system
- Distributed operation on PROFIBUS DP in an ET 200MP system

When assigning parameters in the user program, use the WRREC instruction to transfer the parameters to the module by means of data records; refer to the section Parameter assignment and structure of the parameter data records (Page 62).

The following parameter settings are possible:

Table 4- 3 Configurable parameters and their defaults

Parameters	Range of values	Default setting	Reconfiguration in RUN	Scope with configuration software, e.g., STEP 7 (TIA Portal)	
				Integrated in the hardware catalog STEP 7, as of V13 or GSD file PROFINET IO	GSD file PROFIBUS DP
Inputs					
Diagnostics					
• No supply voltage L+	Yes/No	No	Yes	Channel [1]	Module [3]
• Overflow	Yes/No	No	Yes	Channel	Module [3]
• Underflow	Yes/No	No	Yes	Channel	Module [3]
• Common mode error	Yes/No	No	Yes	Channel	Module [3]
• Reference junction	Yes/No	No	Yes	Channel	Module [3]
• Wire break	Yes/No	No	Yes	Channel	Module [3]
• Current limit for wire break diagnostics [2]	1.185 mA or 3.6 mA	1.185 mA	Yes	Channel	--- [4]

Parameters	Range of values	Default setting	Reconfiguration in RUN	Scope with configuration software, e.g., STEP 7 (TIA Portal)	
				Integrated in the hardware catalog STEP 7, as of V13 or GSD file PROFINET IO	GSD file PROFIBUS DP
Measuring					
• Measurement type	See section Measurement types and ranges (Page 25)	Voltage	Yes	Channel	Channel
• Measuring range		±10 V	Yes	Channel	Channel
• Temperature coefficient	Pt: 0.003851 Pt: 0.003902 Pt: 0.003916 Pt: 0.003920 Ni: 0.00618 Ni: 0.00672 LG-Ni: 0.005000	0.003851	Yes	Channel	Channel
• Temperature unit	• Kelvin (K) • Fahrenheit (°F) • Celsius (°C)	°C	Yes	Channel	Module
• Reference junction	• Fixed reference temperature • Dynamic reference temperature • Internal reference junction	Internal reference junction	Yes	Channel	Module [4)] • Dynamic reference temperature • Internal reference junction
• Fixed reference temperature	Temperature	25 °C	Yes	Channel	--- [4)]
• Interference frequency suppression	400 Hz 60 Hz 50 Hz 10 Hz	50 Hz	Yes	Channel	Module
• Smoothing	None/low/medium/high	None	Yes	Channel	Channel

Parameters	Range of values	Default setting	Reconfi-guration in RUN	Scope with configuration software, e.g., STEP 7 (TIA Portal)	
				Integrated in the hard-ware catalog STEP 7, as of V13 or GSD file PROFINET IO	GSD file PROFIBUS DP
Hardware interrupts					
• Hardware interrupt low limit 1	Yes/No	No	Yes	Channel	--- 4)
• Hardware interrupt high limit 1	Yes/No	No	Yes	Channel	--- 4)
• Hardware interrupt low limit 2	Yes/No	No	Yes	Channel	--- 4)
• Hardware interrupt high limit 2	Yes/No	No	Yes	Channel	--- 4)
Outputs					
Diagnostics					
• No supply voltage L+	Yes/No	No	Yes	Channel 1)	Module 3)
• Wire break	Yes/No	No	Yes	Channel	Module 3)
• Short-circuit to ground	Yes/No	No	Yes	Channel	Module 3)
• Overflow	Yes/No	No	Yes	Channel	Module 3)
• Underflow	Yes/No	No	Yes	Channel	Module 3)
Output parameters					
• Output type	See section Output type and output ranges (Page 28)	Voltage	Yes	Channel	Channel
• Output range		±10 V	Yes	Channel	Channel
• Reaction to CPU STOP	• Turn off • Keep last value • Output substitu-te value	Turn off	Yes	Channel	Channel

Parameters	Range of values	Default setting	Reconfi-guration in RUN	Scope with configuration software, e.g., STEP 7 (TIA Portal)	
				Integrated in the hard-ware catalog STEP 7, as of V13 or GSD file PROFINET IO	GSD file PROFIBUS DP
• Substitute value	Must be in the valid voltage/current output range; see table Valid substi-tute value for the output range	0	Yes	Channel	Channel

1) If you enable diagnostics for multiple channels, you will receive an alarm surge on failure of the supply voltage because each enabled channel will detect this fault. You can prevent this alarm surge by assigning the diagnostics function to one channel only.

2) When "Wire break" diagnostics is disabled, the current limit of 1.185 mA is applied to the value status. For measured values below 1.185 mA, the value status is always: 0 = fault.

3) You can set the effective range of the diagnostics for each channel in the user program with data records 0 to 3.

4) You can set the current limit for wire break diagnostics, the setting "Fixed reference temperature" as well as the limits for hardware interrupts in the user program with data records 0 to 3.

Short-circuit detection

The diagnostics for short circuit to ground can be configured for the voltage output type. A short-circuit detection is not possible for small output values; the output voltages must therefore be below -0.1 V or above +0.1 V.

Wire break detection

The diagnostics for wire break can be configured for the current output type. Wire break detection is not possible for small output values; the output voltages must therefore be below -0.2 mA or above +0.2 mA.

4.4 Explanation of parameters

Missing supply voltage L+

Enabling of the diagnostics, with missing or too little supply voltage L+.

Overflow

Enabling of the diagnostics when the measured value or output value violates the overrange.

Underflow

Enabling of the diagnostics when the measured value or output value violates the underrange.

Common mode error

Enabling of diagnostics if the valid common mode voltage is exceeded.

Enable the Common mode error diagnostics when 2WMT is connected, for example, to check for a short circuit to $ground_{ANA}$ or a wire break. If you do not need the Common mode error diagnostics, disable the parameter.

Reference junction

Enabling of the diagnostics reference junction when the TC channel has no reference temperature or incorrect reference temperature.

Wire break

Enabling of the diagnostics if the module has no current flow or the current is too weak for the measurement at the corresponding configured input, the applied voltage is too low, or the wire to the actuator is broken.

Current limit for wire break diagnostics

Threshold for reporting wire breaks. The value can be set to 1.185 mA or 3.6 mA, depending on the sensor used.

Temperature coefficient

The temperature coefficient depends on the chemical composition of the material. In Europe, only one value is used per sensor type (default value).

The temperature coefficient (α value) indicates by how much the resistance of a specific material changes relatively if the temperature increases by 1 °C.

The further values facilitate a sensor-specific setting of the temperature coefficient and enhance accuracy.

Reference junction

The following settings can be configured for the reference junction parameter:

Table 4- 4 Possible settings for the reference junction parameter

Setting	Description
Fixed reference temperature	The reference junction temperature is configured and stored in the module as a fixed value.
Dynamic reference temperature	The reference junction temperature is transferred in the user program from the CPU to the module by data records 192 to 195 using the WRREC (SFB 53) instruction.
Internal reference junction	The reference junction temperature is determined using an integrated sensor of the module.

Interference frequency suppression

At analog input modules, this suppresses interference caused by the frequency of the AC network.

The frequency of the AC network may corrupt measurements, particularly in the low voltage ranges and when thermocouples are being used. For this parameter, the user defines the mains frequency prevailing on his system.

Smoothing

The individual measured values are smoothed using filtering. The smoothing can be set in 4 levels.

Smoothing time = number of module cycles (k) x cycle time of the module.

The following figure shows the number of module cycles after which the smoothed analog value is almost 100%, depending on the set smoothing. It is valid for each signal change at the analog input.

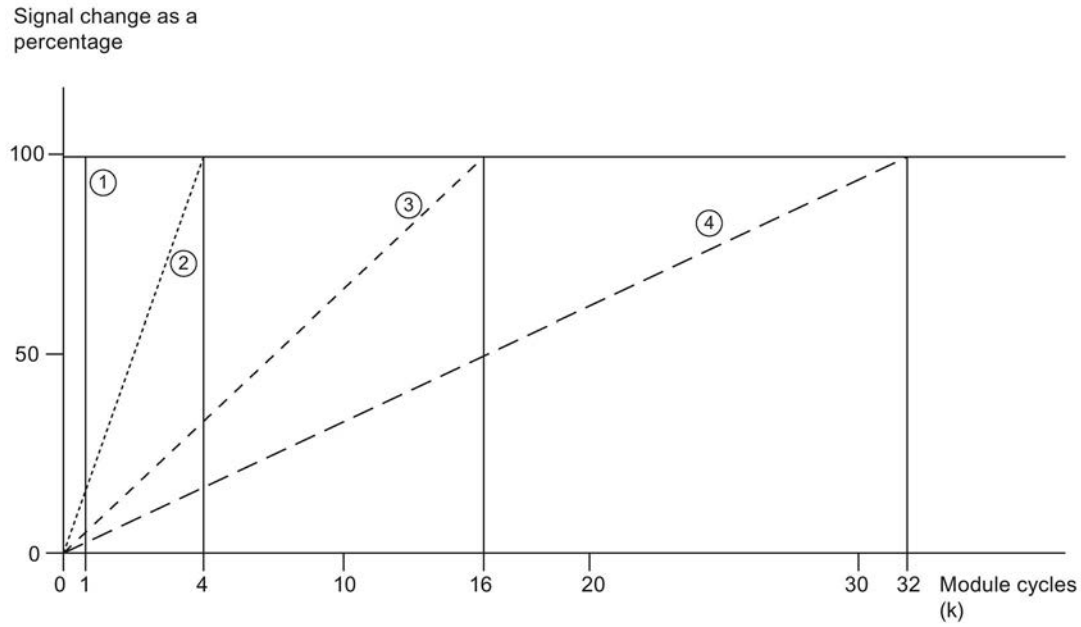

① None (k = 1)
② Weak (k = 4)
③ Medium (k = 16)
④ Strong (k = 32)

Figure 4-3 Smoothing with AI 4xU/I/RTD/TC/ AQ 2xU/I ST

Hardware interrupt 1 or 2

Enabling of a hardware interrupt at violation of high limit 1 or 2 or low limit 1 or 2.

Low limit 1 or 2

Specifies the low limit threshold that triggers hardware interrupt 1 or 2.

High limit 1 or 2

Specifies the high limit threshold that triggers hardware interrupt 1 or 2.

Short-circuit to ground

Enabling of the diagnostics if a short-circuit of the output to M_{ANA} occurs.

Reaction to CPU STOP

Determines the reaction of the output to the CPU going into STOP state.

Substitute value

The substitute value is the value that the module outputs in case of a CPU STOP.

4.5 Address space

The module can be configured differently in STEP 7; see following table. Depending on the configuration, additional/different addresses are assigned in the process image input/output.

Configuration options of AI 4xU/I/RTD/TC/ AQ 2xU/I ST

You can configure the module with STEP 7 (TIA Portal) or with a GSD file.

When you configure the module by means of the GSD file, the configurations are available under different abbreviations/module names.

The following configurations are possible:

Table 4- 5 Configuration options

Configuration	Short designation/module name in the GSD file	Configuration software, e.g., with STEP 7 (TIA Portal)	
		Integrated in hardware catalog STEP 7 (TIA Portal)	GSD file in STEP 7 (TIA Portal) V12 or higher or STEP 7 V5.5 SP3 or higher
1 x 6-channel without value status	AI 4xU/I/RTD/TC/ AQ 2xU/I ST	V13 or higher with HSP 0102	X
1 x 6-channel with value status	AI 4xU/I/RTD/TC/ AQ 2xU/I ST QI	V13 or higher with HSP 0102	X
6 x 1-channel without value status	AI 4xU/I/RTD/TC/ AQ 2xU/I ST S	V13 Update 3 or higher (PROFINET IO only)	X (PROFINET IO only)
6 x 1-channel with value status	AI 4xU/I/RTD/TC/ AQ 2xU/I ST S QI	V13 Update 3 or higher (PROFINET IO only)	X (PROFINET IO only)
1 x 6-channel with value status with up to 4 submodules (1 x 4-channel for module-internal Shared Input and 1 x 2-channel for module-internal Shared Output)	AI 4xU/I/RTD/TC/ AQ 2xU/I ST MSI or MSO	V13 Update 3 or higher (PROFINET IO only)	X (PROFINET IO only)

Value status (Quality Information, QI)

The value status is always activated for the following module names:

- AI 4xU/I/RTD/TC/ AQ 2xU/I ST QI
- AI 4xU/I/RTD/TC/ AQ 2xU/I ST S QI
- AI 4xU/I/RTD/TC/ AQ 2xU/I ST MSI

An additional bit is assigned to each channel for the value status. The value status bit indicates

- whether the read in digital value is valid. (0 = value is incorrect).
- whether the output value specified by the user program is actually pending at the module terminal (0 = value is incorrect).

Address space for configuration as 1 x 6-channel AI 4xU/I/RTD/TC/ AQ 2xU/I ST QI

The figure below shows the address space assignment for configuration as a 1 x 6-channel module. You can freely assign the start address for the module. The addresses of the channels are derived from the start address.

"IB x" for example, stands for module start address input byte x. "QB x" for example, stands for module start address output byte x.

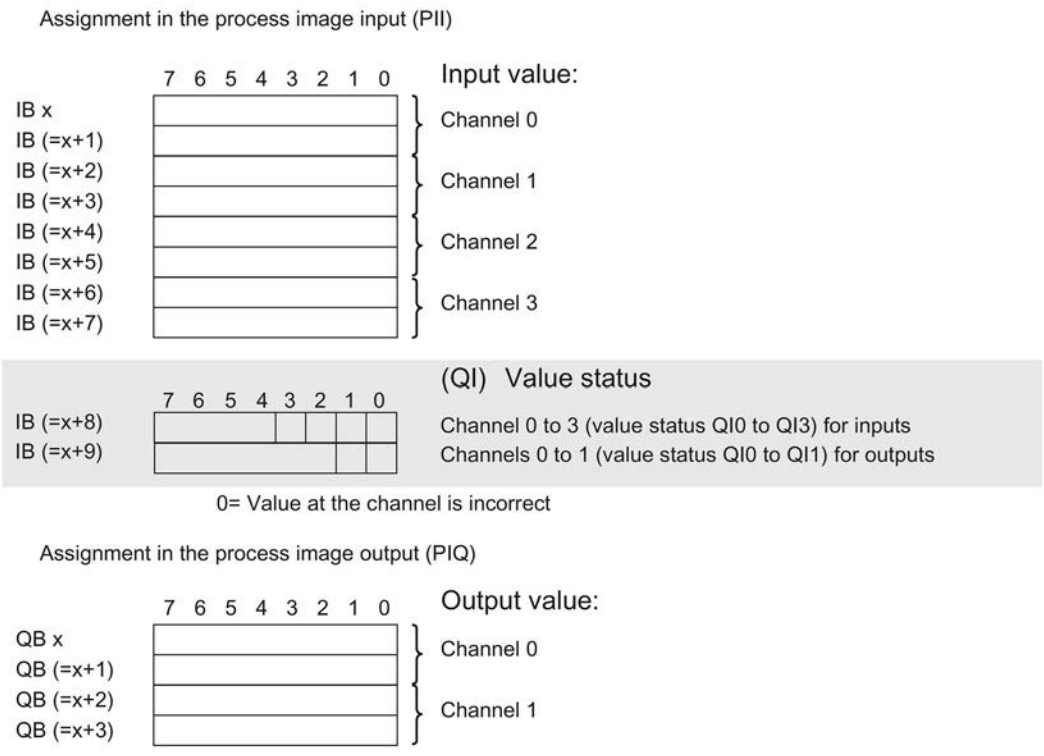

Figure 4-4 Address space for configuration as 1 x 6-channel AI 4xU/I/RTD/TC/ AQ 2xU/I ST QI with value status

Address space for configuration as 6 x 1-channel AI 4xU/I/RTD/TC/ AQ 2xU/I ST S QI

The channels of the module are divided up into several submodules with configuration as 6 x 1-channel module. The submodules can be assigned to different IO controllers when the module is used in a shared device.

The number of usable IO controllers depends on the interface module used. Please observe the information in the manual for the particular interface module.

Unlike the 1 x 6-channel module configuration, each of the six submodules has a freely assignable start address.

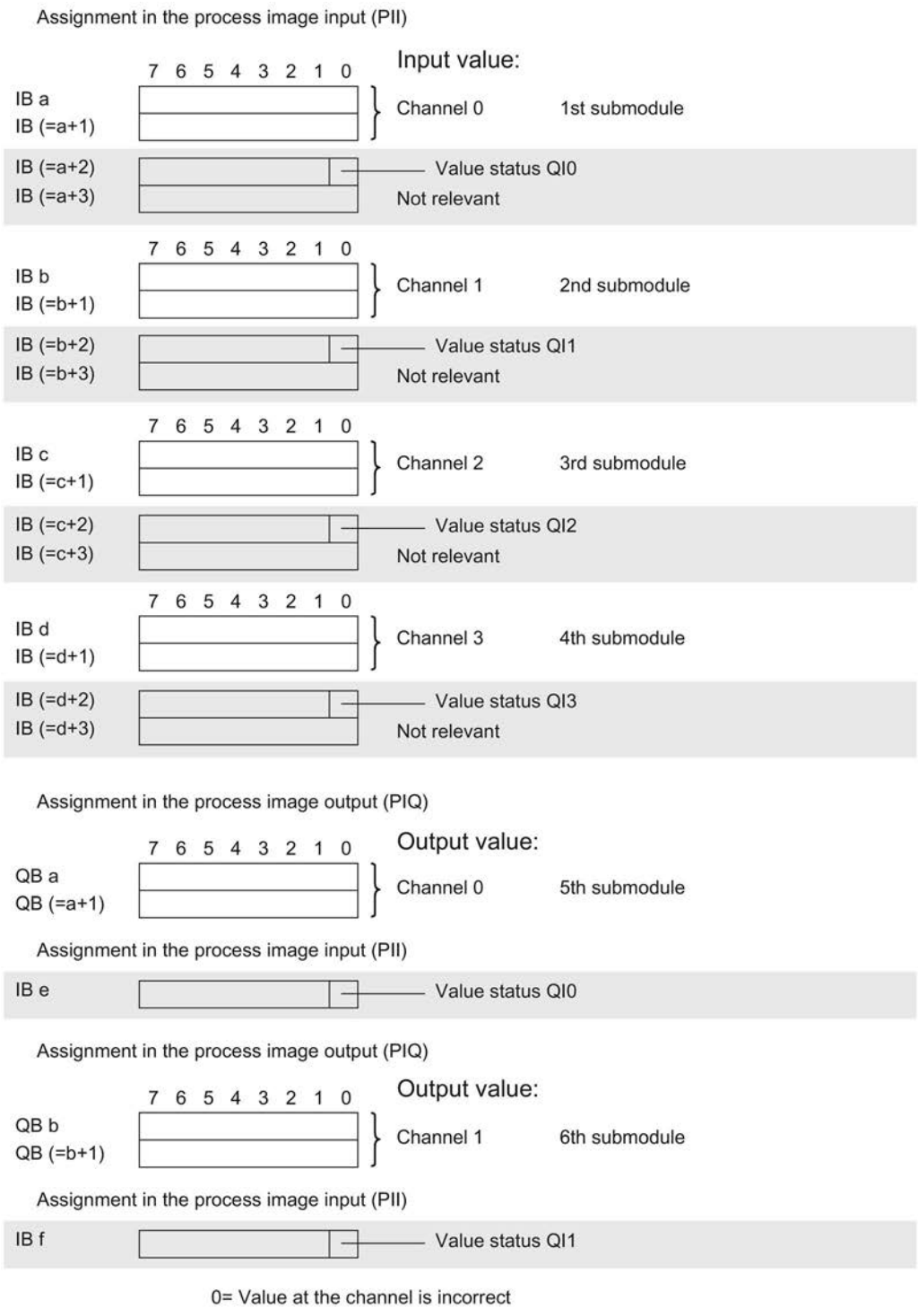

Figure 4-5 Address space for configuration as 6 x 1-channel AI 4xU/I/RTD/TC/ AQ 2xU/I ST S QI with value status

Address space for configuration as 1 x 6-channel AI 4xU/I/RTD/TC/ AQ 2xU/I ST MSI/MSO

For the configuration as a 1 x 6-channel module (module-internal Shared Input, MSI/Shared Output, MSO), the channels for inputs 0 to 3 and outputs 0 to 1 of the module are copied to 4 submodules. Each of the input/output channels are then available with identical values in various submodules. These submodules can be assigned to up to four IO controllers when the module is used in a shared device.

- The IO controller to which submodule 1 is assigned has write access to output channels 0 and 1 and read access to the input channels 0 to 3.
- The IO controllers to which submodule 2, 3 or 4 is assigned have read access to output channels 0 and 1 and read access to the input channels 0 to 3.

The number of usable IO controllers depends on the interface module used. Please observe the information in the manual for the particular interface module.

Value status (Quality Information, QI) for inputs

The meaning of the value status depends on the submodule on which it occurs.

For the 1st submodule (= basic submodule), the value status 0 indicates that the value is incorrect.

For the 2nd to 4th submodule (=MSI submodule), the value status 0 indicates that the value is incorrect or the basic submodule has not yet been configured (not ready).

Value status (Quality Information, QI) for outputs

The meaning of the value status depends on the submodule on which it occurs.

For the 1st submodule (=basic submodule), the value status 0 indicates that the value is incorrect or that the IO controller of the basic submodule is in STOP state.

For the 2nd to 4th submodule (=MSO submodule), the value status 0 indicates that the value is incorrect or one of the following errors has occurred:

- The basic submodule is not yet configured (not ready).
- The connection between the IO controller and the basic submodule has been interrupted.
- The IO controller of the basic submodule is in STOP or POWER OFF state.

The figure below shows the assignment of the address space with submodules 1 and 2.

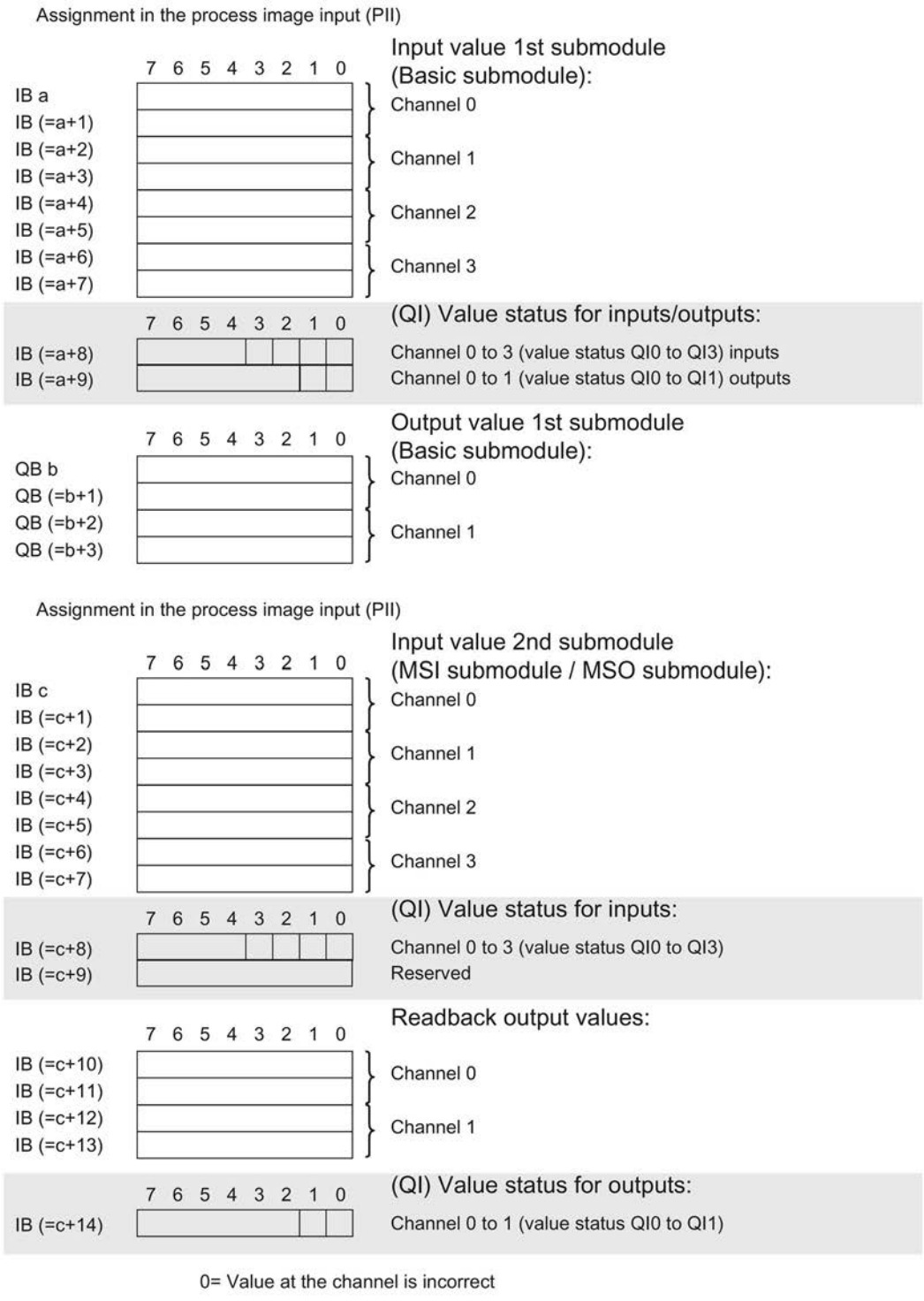

Figure 4-6 Address space for configuration as 1 x 6-channel AI 4xU/I/RTD/TC/ AQ 2xU/I ST MSI/MSO with value status

The following figure shows the assignment of the address space with submodule 3 and 4.

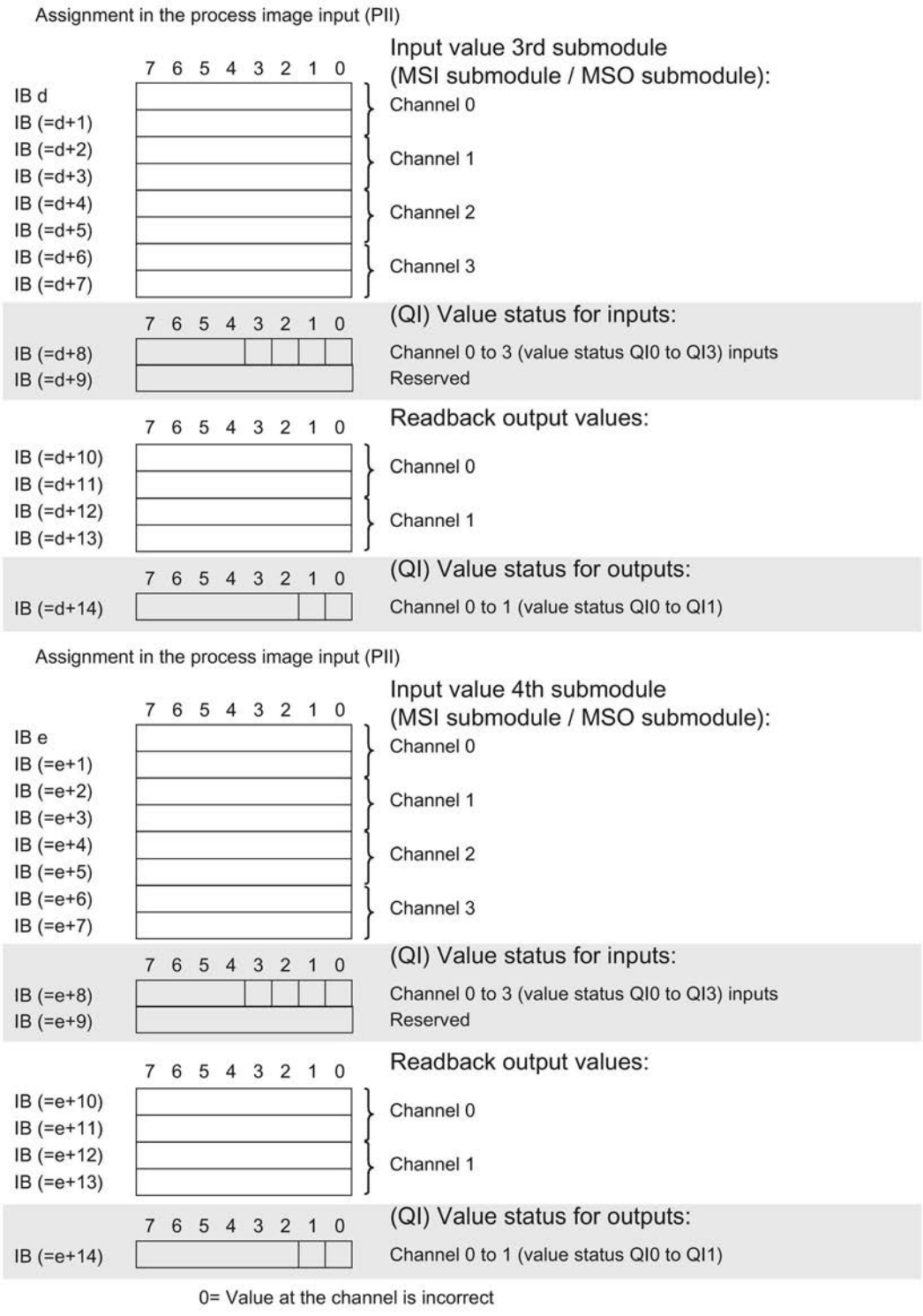

Figure 4-7 Address space for configuration as 1 x 6-channel AI 4xU/I/RTD/TC/ AQ 2xU/I ST MSI/MSO with value status

Reference

You can find information on the Shared Input/Output (MSI/MSO) function in the section Module-Internal Shared Input/Output (MSI/MSO) of the PROFINET with STEP 7 V13 (https://support.industry.siemens.com/cs/ww/en/view/49948856) function manual.

Interrupts/diagnostics alarms

5

5.1 Status and error displays

LED displays

The figure below shows the LED displays (status and error displays) of AI 4xU/I/RTD/TC/ AQ2xU/I ST.

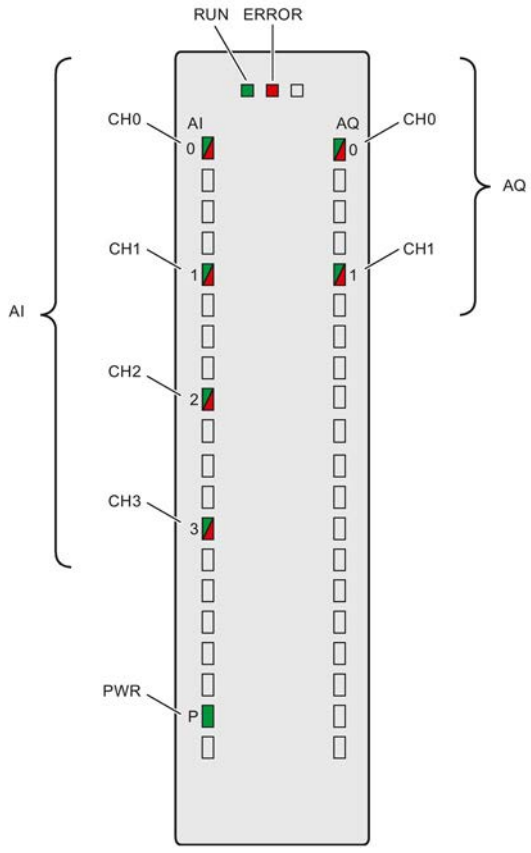

Figure 5-1 LED displays of the module AI 4xU/I/RTD/TC/ AQ2xU/I ST

Meaning of the LED displays

The following tables explain the meaning of the status and error displays. Corrective measures for diagnostics alarms can be found in the section Diagnostics alarms (Page 49).

LED RUN/ERROR

Table 5- 1 RUN/ERROR status and error displays

LEDs		Meaning	Solution
RUN	ERROR		
Off	Off	Voltage missing or too low at backplane bus.	• Switch on the CPU and/or the system power supply modules. • Verify that the U connectors are inserted. • Check to see if too many modules are inserted.
Flashes	Off	The module starts and flashes until the valid configuration is set.	---
On	Off	Module is configured.	
On	Flashes	Indicates module errors (at least one error at one channel, e.g., wire break).	Evaluate the diagnostics data and eliminate the error (e.g., wire break).
Flashes	Flashes	Hardware defective.	Replace the module.

PWR LED

Table 5- 2 PWR status display

LED PWR	Meaning	Solution
Off	Supply voltage L+ to module too low or missing	Check supply voltage L+.
On	Supply voltage L+ is present and OK.	---

CHx LED

Table 5- 3 CHx status display

LED CHx	Meaning	Solution
Off	Channel disabled.	---
On	Channel configured and OK.	---
On	Channel is configured (channel error pending). Diagnostics alarm: e.g. wire break	Check the wiring. Disable diagnostics.

5.2 Interrupts

Analog input module AI 4xU/I/RTD/TC/ AQ 2xU/I ST supports diagnostics and hardware interrupts.

You can find detailed information on the event in the error organization block with the "RALRM" instruction (read additional interrupt info) and in the STEP 7 online help.

Diagnostic interrupt

The module generates a diagnostic interrupt at the following events:

Table 5- 4 Diagnostics interrupt for inputs and outputs

Event	Diagnostic interrupt	
	Inputs	Outputs
Missing supply voltage L+	x	x
Overflow	x	x
Underflow	x	x
Common mode error	x	---
Reference junction	x	---
Wire break	x	x
Short-circuit to ground	---	x
Parameter assignment error	x	x

Hardware interrupt for inputs

The module generates a hardware interrupt at the following events:

- Low limit violated 1
- High limit violated 1
- Low limit violated 2
- Above high limit 2

The module channel that triggered the hardware interrupt is entered in the start information of the organization block. The diagram below shows the assignment to the bits of double word 8 in local data.

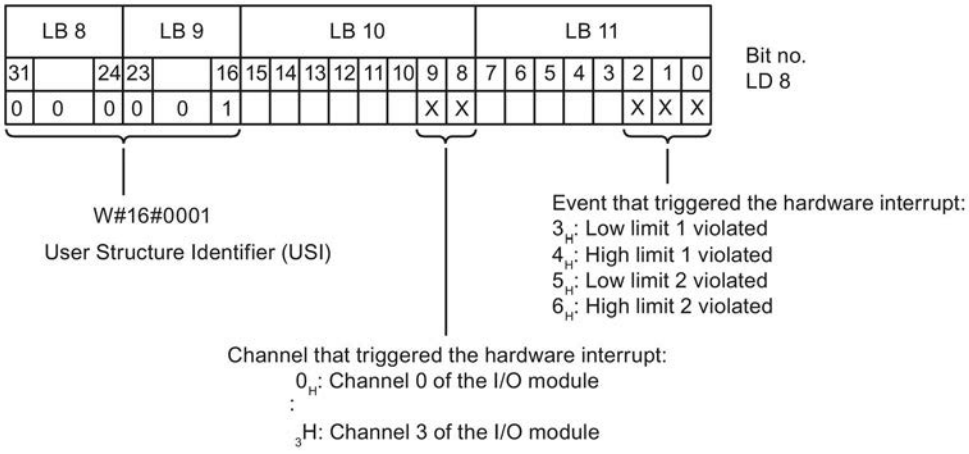

Figure 5-2 OB start information

Reaction when reaching limits 1 and 2 at the same time

If the two high limits 1 and 2 are reached at the same time, the module always signals the hardware interrupt for high limit 1 first. The configured value for high limit 2 is irrelevant. After processing the hardware interrupt for high limit 1, the module triggers the hardware interrupt for high limit 2.

The module has the same reaction when the low limits are reached at the same time. If the two low limits 1 and 2 are reached at the same time, the module always signals the hardware interrupt for low limit 1 first. After processing the hardware interrupt for low limit 1, the module triggers the hardware interrupt for low limit 2.

Structure of the additional interrupt information

Table 5- 5 Structure of USI = W#16#0001

Data block name		Contents	Remark	Bytes
USI (User Structure Identifier)		W#16#0001	Additional interrupt info for hardware interrupts of the I/O module	2
The channel that triggered the hardware interrupt follows.				
	Channel	B#16#00 to B#16#n	Number of the event-triggering channel (n = number of module channels -1)	1
The event that triggered the hardware interrupt follows.				
	Event	B#16#03	Low limit violated 1	1
		B#16#04	High limit violated 1	
		B#16#05	Low limit violated 2	
		B#16#06	Violation of high limit 2	

5.3 Diagnostics alarms

A diagnostics alarm is generated and the ERROR LED flashes on the module for each diagnostics event. The diagnostics alarms can be read out in the diagnostics buffer of the CPU, for example. You can evaluate the error codes with the user program.

Table 5- 6 Diagnostics alarms, their meaning and corrective measures

Diagnostics alarm	Error code	Meaning	Solution
Short-circuit to ground	1_H	Overload at output	Eliminate overload
		Short-circuit of output Q_V to M_{ANA}	Eliminate the short-circuit
Wire break	6_H	Impedance of encoder circuit too high	Use a different encoder type or modify the wiring, for example, using cables with larger cross-section
		Wire break between the module and sensor	Connect the cable
		Channel not connected (open)	• Disable diagnostics • Connect the channel
Overflow	7_H	Measuring range violated	Check the measuring range
		The output value set by the user program violates the valid rated range/overrange	Correct the output value
Underflow	8_H	Measuring range violated	Check the measuring range
		The output value set by the user program violates the valid rated range/underrange	Correct the output value
Parameter assignment error	10_H	• The module cannot evaluate parameters for the channel • Incorrect parameter assignment	Correct the parameter assignment
Load voltage missing	11_H	Supply voltage L+ of the module is missing	Connect supply voltage L+ to module/channel
Reference channel error	15_H	Reference temperature of the reference junction for the operated TC channel with compensation is invalid.	Check the resistance thermometer. For the compensation with data record, restore communication to the module/station.
Common mode error	118_H	Valid common mode voltage exceeded Causes when a 2WT is connected, e.g.: • Wire break • Galvanic connection to M_{ANA}	Check the wiring, e.g. sensor ground connections, use equipotential cables
Channel temporarily unavailable	$1F_H$	User calibration is active. Channel currently not providing current/valid values.	Exit user calibration.

Diagnostics alarms with value status (QI)

If you configure the module with value status (QI), the module always checks all errors even if the respective diagnostics is not enabled. But the module cancels the inspection as soon as it detects the first error, regardless if the respective diagnostics has been enabled or not. The result may be that enabled diagnostics may not be displayed.

Example: You have enabled "Underflow" diagnostics, but the module detects the "Wire break" diagnostics first and aborts after this error message. The "Underflow" diagnostics is not detected.

Recommendation: To ensure that all errors can be diagnosed reliably, select all check boxes under "Diagnostics".

Technical specifications 6

Technical specifications of the AI 4xU/I/RTD/TC/ AQ 2xU/I ST

	6ES7534-7QE00-0AB0
General information	
Product type designation	AI 4xU/I/RTD/TC / AQ 2xU/I ST
Hardware functional status	FS01
Firmware version	V1.0.0
• FW update possible	Yes
Product function	
I&M data	Yes; I&M0 to I&M3
Scalable measuring range	No
Scalable measured values	No
Measuring range adjustment	No
Scalable output range	No
Engineering with	
STEP 7 TIA Portal can be configured/integrated as of version	V13 / V13.0.2
STEP 7 can be configured/integrated as of version	V5.5 SP3 / -
PROFIBUS as of GSD version/GSD revision	V1.0 / V5.1
PROFINET as of GSD version/GSD revision	V2.3 / -
Operating mode	
Oversampling	No
MSI	Yes
MSO	Yes
CiR Configuration in RUN	
Parameter assignment in RUN possible	Yes
Calibration in RUN possible	Yes
Supply voltage	
Rated value (DC)	24 V
Valid range, low limit (DC)	20.4 V
Valid range, high limit (DC)	28.8 V
Reverse polarity protection	Yes
Input current	
Current consumption, max.	200 mA; with 24 V DC supply
Encoder supply	
24 V encoder supply	
Short-circuit protection	Yes
Output current, max.	61 mA

	6ES7534-7QE00-0AB0
Power	
Power consumption from backplane bus	0.7 W
Power loss	
Power loss, typ.	3.3 W
Analog inputs	
Number of analog inputs	4
• For current measurement	4
• For voltage measurement	4
• For resistance/resistance thermometer measurement	2
• For thermocouple measurement	4
Permissible input voltage for voltage input (destruction limit), max.	28.8 V
Permissible input current for current input (destruction limit), max.	40 mA
Technical unit for temperature measurement, can be set	Yes; °C / °F / K
Analog input with oversampling	No
Standardization of measured values	No
Input ranges (rated values), voltages	
0 to +5 V	No
0 to +10 V	No
1 V to 5 V	Yes
Input resistance (1 V to 5 V)	100 kΩ
-1 V to +1 V	Yes
Input resistance (-1 V to +1 V)	10 MΩ
-10 V to +10 V	Yes
Input resistance (-10 V to +10 V)	100 kΩ
-2.5 V to +2.5 V	Yes
Input resistance (-2.5 V to +2.5 V)	10 MΩ
-25 mV to +25 mV	No
-250 mV to +250 mV	Yes
Input resistance (-250 mV to +250 mV)	10 MΩ
-5 V to +5 V	Yes
Input resistance (-5 V to +5 V)	100 kΩ
-50 mV to +50 mV	Yes
Input resistance (-50 mV to +50 mV)	10 MΩ
-500 mV to +500 mV	Yes
Input resistance (-500 mV to +500 mV)	10 MΩ
-80 mV to +80 mV	Yes
Input resistance (-80 mV to +80 mV)	10 MΩ

	6ES7534-7QE00-0AB0
Input ranges (rated values), currents	
0 mA to 20 mA	Yes
Input resistance (0 mA to 20 mA)	25 Ω; plus approx. 42 ohm for overvoltage protection by PTC
-20 mA to +20 mA	Yes
Input resistance (-20 mA to +20 mA)	25 Ω; plus approx. 42 ohm for overvoltage protection by PTC
4 mA to 20 mA	Yes
Input resistance (4 mA to 20 mA)	25 Ω; plus approx. 42 ohm for overvoltage protection by PTC
Input ranges (rated values), thermocouples	
Type B	Yes
Input resistance (type B)	10 MΩ
Type C	No
Type E	Yes
Input resistance (type E)	10 MΩ
Type J	Yes
Input resistance (type J)	10 MΩ
Type K	Yes
Input resistance (type K)	10 MΩ
Type L	No
Type N	Yes
Input resistance (type N)	10 MΩ
Type R	Yes
Input resistance (type R)	10 MΩ
Type S	Yes
Input resistance (type S)	10 MΩ
Type T	Yes
Input resistance (type T)	10 MΩ
Type U	No
Type TXK/TXK(L) according to GOST	No
Input ranges (rated values), resistance thermometer	
Cu 10	No
Cu 10 according to GOST	No
Cu 50	No
Cu 50 according to GOST	No
Cu 100	No
Cu 100 according to GOST	No
Ni 10	No
Ni 10 according to GOST	No
Ni 100	Yes; Standard/Climate
Input resistance (Ni 100)	10 MΩ
Ni 100 according to GOST	No

	6ES7534-7QE00-0AB0
Ni 1000	Yes; Standard/Climate
Input resistance (Ni 1000)	10 MΩ
Ni 1000 according to GOST	No
LG-Ni 1000	Yes; Standard/Climate
Input resistance (LG-Ni 1000)	10 MΩ
Ni 120	No
Ni 120 according to GOST	No
Ni 200	No
Ni 200 according to GOST	No
Ni 500	No
Ni 500 according to GOST	No
Pt 10	No
Pt 10 according to GOST	No
Pt 50	No
Pt 50 according to GOST	No
Pt 100	Yes; Standard/Climate
Input resistance (Pt 100)	10 MΩ
Pt 100 according to GOST	No
Pt 1000	Yes; Standard/Climate
Input resistance (Pt 1000)	10 MΩ
Pt 1000 according to GOST	No
Pt 200	Yes; Standard/Climate
Input resistance (Pt 200)	10 MΩ
Pt 200 according to GOST	No
Pt 500	Yes; Standard/Climate
Input resistance (Pt 500)	10 MΩ
Pt 500 according to GOST	No
Input ranges (rated values), resistors	
0 ohm to 150 ohm	Yes
Input resistance (0 ohm to 150 ohm)	10 MΩ
0 ohm to 300 ohm	Yes
Input resistance (0 ohm to 300 ohm)	10 MΩ
0 ohm to 600 ohm	Yes
Input resistance (0 ohm to 600 ohm)	10 MΩ
0 to 3000 Ohm	No
0 ohm to 6000 ohm	Yes
Input resistance (0 ohm to 6000 ohm)	10 MΩ
PTC	Yes
Input resistance (PTC)	10 MΩ

	6ES7534-7QE00-0AB0
Thermocouple (TC)	
Temperature compensation	
• Configurable	Yes
• Internal temperature compensation	Yes
• External temperature compensation via RTD	Yes
• Compensation for 0 °C reference point temperature	Yes, fixed value can be set
• Reference channel of the module	No
Cable length	
shielded, max.	800 m; for U/I, 200 m for R/RTD, 50 m for TC
Analog outputs	
Number of analog outputs	2
Voltage output, short-circuit protection	Yes
Voltage output, short-circuit current, max.	24 mA
Current output, open-circuit voltage, max.	22 V
Cycle time (all channels), min.	3.2 ms; ±0.5 ms, regardless of the number of activated channels
Output ranges, voltage	
0 V to 10 V	Yes
1 V to 5 V	Yes
-5 V to +5 V	No
-10 V to +10 V	Yes
Output ranges, current	
0 mA to 20 mA	Yes
-20 mA to +20 mA	Yes
4 mA to 20 mA	Yes
Connection of actuators	
for voltage output two-wire connection	Yes
for voltage output four-wire connection	Yes
for current output two-wire connection	Yes
Load resistance (in the rated output range)	
for voltage outputs, min.	1 kOhm; 0.5 kOhm at 1 to 5 V
for voltage outputs, capacitive load, max.	1 µF
for current outputs, max.	750 Ω
for current outputs, inductive load, max.	10 mH
Cable length	
shielded, max.	800 m; for current, 200 m for voltage

	6ES7534-7QE00-0AB0
Analog value generation for the inputs	
Integration and conversion time/resolution per channel	
Resolution with overrange (bit including sign), max.	16 bit
Configurable integration time	Yes
Integration time (ms)	2.5 / 16.67 / 20 / 100 ms
Basic conversion time including integration time (ms)	9 / 23 / 27 / 107 ms
• Additional conversion time for wire break monitoring	9 ms
• Additional conversion time for wire break measurement	150 Ohm, 300 Ohm, 600 Ohm, Pt100. Pt200. Ni100: 2 ms, 6000 Ohm, Pt500. Pt1000. Ni1000. LG-Ni1000. PTC: 4 ms
Interference voltage suppression at interference frequency f1 in Hz	400 / 60 / 50 / 10
Time for offset calibration (per module)	Basic conversion time of the slowest channel
Smoothing of the measured values	
Configurable	Yes
Level: None	Yes
Level: Weak	Yes
Level: Medium	Yes
Level: Strong	Yes
Analog value generation for the outputs	
Integration and conversion time/resolution per channel	
Resolution with overrange (bit including sign), max.	16 bit
Conversion time (per channel)	0.5 ms
Settling time	
for resistive load	1.5 ms
for capacitive load	2.5 ms
for inductive load	2.5 ms
Encoders	
Connection of the signal encoders	
For voltage measurement	Yes
for current measurement as 2-wire transducer	Yes
• Load of 2-wire transmitter, max.	820 Ω
for current measurement as 4-wire transducer	Yes
for resistance measurement with two-wire connection	Yes; only for PTC
for resistance measurement with three-wire connection	Yes; all measuring ranges except PTC; internal compensation of line resistance
For resistance measurement with four-wire connection	Yes; all measuring ranges except PTC

	6ES7534-7QE00-0AB0
Errors/accuracies	
Linearity error (in relation to input range), (+/-)	0.02%
Temperature error (in relation to input range), (+/-)	0.005%/K; for TC typ. T 0.02 +/- %/K
Crosstalk between the inputs, max.	-80 dB
Repeat accuracy in settled state at 25 °C (in relation to input range), (+/-)	0.02%
Output ripple (in relation to output range, bandwidth 0 kHz to 50 kHz), (+/-)	0.02%
Linearity error (in relation to output range), (+/-)	0.15%
Temperature error (in relation to output range), (+/-)	0.002%/K
Crosstalk between outputs, max.	-100 dB
Repeat accuracy in settled state at 25 °C (in relation to output range), (+/-)	0.05%
Temperature errors of internal compensation	+/-6 °C
Operational limit in the entire temperature range	
Voltage in relation to input range, (+/-)	0.3%
Current in relation to input range, (+/-)	0.3%
Resistance in relation to input range, (+/-)	0.3%
Resistance thermometer in relation to input range, (+/-)	0.3%; Ptxxx Standard: ±1.5 K, Ptxxx Climatic: ±0.5 K, Nixxx Standard: ±0.5 K, Nixxx Climatic: ±0.3 K
Thermocouple in relation to input range, (+/-)	0.3%; Type B: > 600 °C ±4.6 K, Type E: > -200 °C ±1.5 K, Type J: > -210 °C ±1.9 K, Type K: > -200 °C ±2.4 K, Type N: > -200 °C ±2.9 K, Type R: > 0 °C ±4.7 K, Type S: > 0 °C ±4.6 K, Type T: > -200 °C ±2.4 K
Voltage in relation to output range, (+/-)	0.3%
Current in relation to output range, (+/-)	0.3%
Basic error limit (operational limit at 25 °C)	
Voltage in relation to input range, (+/-)	0.1%
Current in relation to input range, (+/-)	0.1%
Resistance in relation to input range, (+/-)	0.1%
Resistance thermometer in relation to input range, (+/-)	0.1%; Ptxxx Standard: ±0.7 K, Ptxxx Climatic: ±0.2 K, Nixxx Standard: ±0.3 K, Nixxx Climatic: ±0.15 K
Thermocouple in relation to input range, (+/-)	0.1%; Type B: > 600 °C ±1.7 K, Type E: > -200 °C ±0.7 K, Type J: > -210 °C ±0.8 K, Type K: > -200 °C ±1.2 K, Type N: > -200 °C ±1.2 K, Type R: > 0 °C ±1.9 K, Type S: > 0 °C ±1.9 K, Type T: > -200 °C ±0.8 K
Voltage in relation to output range, (+/-)	0.2%
Current in relation to output range, (+/-)	0.2%

	6ES7534-7QE00-0AB0
Interference voltage suppression for f = n x (f1 +/- 1 %), f1 = interference frequency	
Series mode interference (peak value of interference < rated value of input range), min.	40 dB
Common mode voltage, max.	10 V
Common mode interference, min.	60 dB
Isochronous mode	
Isochronous mode (application synchronized up to terminal)	No
Interrupts/diagnostics/status information	
Diagnostics function	Yes
Substitute values can be applied	Yes
Interrupts	
Diagnostic interrupt	Yes
Limit interrupt	Yes; two high limits and two low limits each
Diagnostics alarms	
Monitoring of supply voltage	Yes
Wire break	Yes; only for input type 1 ... 5 V, 4 ... 20 mA, TC, R, RTD and output type current
Short-circuit	Yes; only for output type voltage
Overflow/underflow	Yes
Diagnostics display LED	
RUN LED	Yes; green LED
ERROR LED	Yes; red LED
Monitoring of supply voltage (PWR LED)	Yes; green LED
Channel status display	Yes; green LED
For channel diagnostics	Yes; red LED
For module diagnostics	Yes; red LED
Electrical isolation	
Electrical isolation analog inputs	
Between the channels	No
Between the channels, in groups of	4
Between the channels and backplane bus	Yes
Between the channels and load voltage L+	Yes
Electrical isolation analog outputs	
Between the channels	No
Between the channels, in groups of	2
Between the channels and backplane bus	Yes
Between the channels and load voltage L+	Yes
Permissible potential difference	
Between the inputs (UCM)	20 V DC
Between the inputs and MANA (UCM)	10 V DC
between S- and MANA (UCM)	8 V DC

	6ES7534-7QE00-0AB0
Insulation	
Insulation tested with	707 V DC (type test)
Ambient conditions	
Ambient temperature during operation	
Horizontal mounting position, min.	0 °C
Horizontal mounting position, max.	60 °C
Vertical mounting position, min.	0 °C
Vertical mounting position, max.	40 °C
Distributed mode	
Prioritized startup	No
Dimensions	
Width	25 mm
Height	147 mm
Depth	129 mm
Weights	
Weight, approx.	250 g
Miscellaneous	
Note:	Package includes 40-pin push-in front connector Additional basic error and noise for integration time = 2.5 ms: Voltage: ±250 mV (±0.02%), ±80 mV (±0.05%), ±50 mV (±0.05%); resistance: 150 Ohm (±0.02%); resistance thermometer: Pt100 Climatic: ±0.08 K, Ni100 Climatic: ±0.08 K; thermocouple: Type B, R, S: ±3 K, Type E, J, K, N, T: ±1 K

Dimension drawing

A

The dimension drawing of the module on the mounting rail, as well as a dimension drawing with open front panel are provided in the appendix. Always adhere to the specified dimensions for installation in cabinets, control rooms, etc.

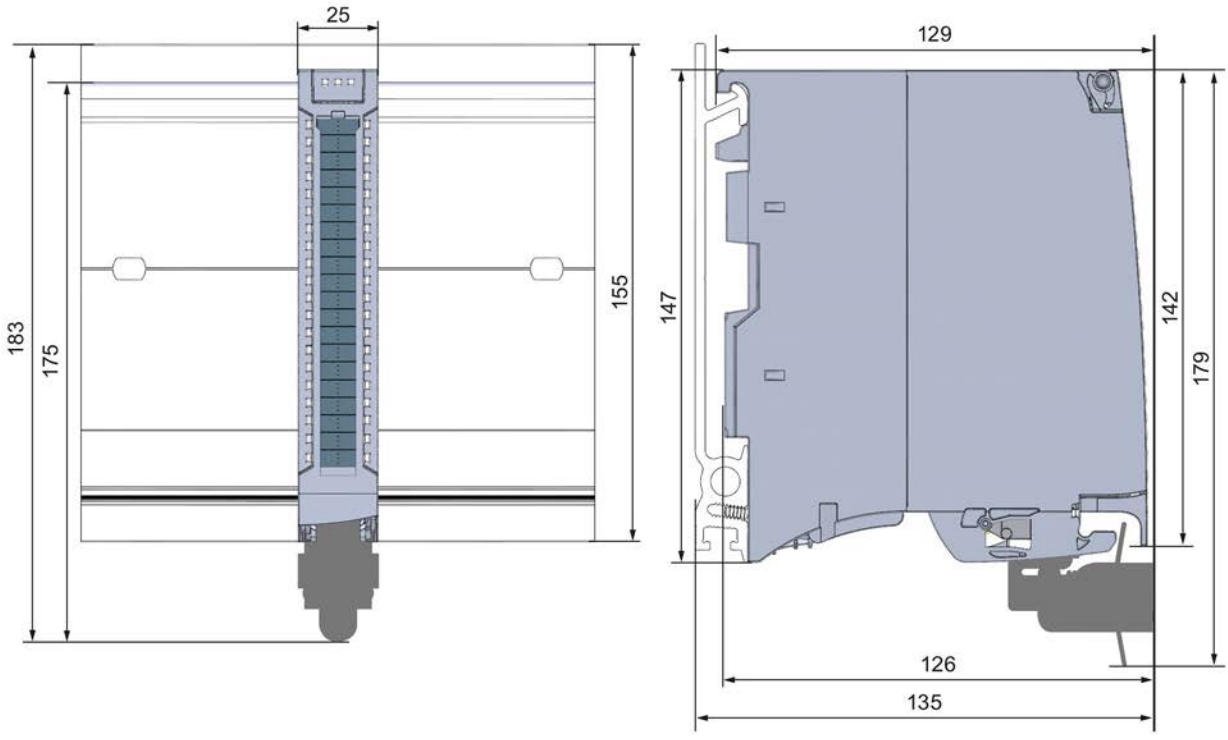

Figure A-1 Dimension drawing of the AI 4xU/I/RTD/TC/ AQ 2xU/I ST module

Figure A-2 Dimension drawing of the AI 4xU/I/RTD/TC/ AQ 2xU/I ST module, side view with open front panel

Parameter data records

B

B.1 Parameter assignment and structure of the parameter data records

The data records of the module have an identical structure, regardless of whether you configure the module with PROFIBUS DP or PROFINET IO.

Dependencies for configuration with GSD file

When configuring the module with a GSD file, remember that the settings of some parameters are dependent on each other. The parameters are only checked for plausibility by the module after the transfer to the module.

The following table lists the parameters that depend on one another.

Table B- 1 Dependencies of parameters for configuration with GSD file

Device-specific parameters (GSD file)	Dependent parameters
Current limit for wire break	Only for **measurement type** current with **measuring range** 4 mA to 20 mA.
Wire break	Only for **measurement type** resistance, thermistor RTD, thermocouple TC, voltage with **measuring range** 1V to 5 V and current with **measuring range** 4 to 20 mA.
Common mode error	Only for **measuring type** voltage, current and thermocouple TC.
Reference junction	Only for **measurement type** thermocouple TC.
Measurement type resistance (4-wire connection, 3-wire connection, 2-wire connection)	Configurable for even channels (0 and 2) only. The next odd channel (1 and 3) must be disabled.
Measurement type thermistor RTD (4-wire connection, 3-wire connection)	
Hardware interrupt limits	Only if hardware interrupts are enabled.
Fixed reference temperature	Only if the **Reference junction** parameter and the **Fixed reference temperature** value is configured.
Short-circuit to ground	With **output type** voltage only
Wire break	With **output type** current only
Substitute value	Only if **Reaction to CPU STOP** -> **Output substitute value** is configured

Parameter assignment in the user program

The module parameters can be assigned in RUN (for example, measuring ranges of selected channels can be edited in RUN without having an effect on the other channels).

Parameter assignment in RUN

The WRREC instruction is used to transfer the parameters to the module using data records. The parameters set with STEP 7 are not changed in the CPU, which means the parameters set in STEP 7 will be valid after a restart.

The parameters are only checked for plausibility by the module after the transfer to the module.

Output parameter STATUS

If errors occur during the transfer of parameters with the WRREC instruction, the module continues operation with the previous parameter assignment. However, a corresponding error code is written to the STATUS output parameter.

The description of the WRREC instruction and the error codes is available in the STEP 7 online help.

Operation of the module downstream from a PROFIBUS DP interface module

If the module is operated downstream from a IM PROFIBUS DP interface module, the parameter data records 0 and 1 cannot be read back. You get the diagnostics data records 0 and 1 for the read back parameter data records 0 and 1. You can find more information in the Interrupts section of the PROFIBUS DP interface module product manual on the Internet (http://support.automation.siemens.com/WW/view/en/78324181).

B.2 Structure of a data record for input channels

Assignment of data record and channel

For the configuration as a 1 x 4-channel module, the parameters are located in data records 0 to 3 and are assigned as follows:

- Data record 0 for channel 0
- Data record 1 for channel 1
- Data record 2 for channel 2
- Data record 3 for channel 3

For configuration 4 x 1-channel, the module has 4 submodules with one channel each. The parameters for the channel are available in data record 0 and are assigned as follows:

- Data record 0 for channel 0 (submodule 1)
- Data record 0 for channel 1 (submodule 2)
- Data record 0 for channel 2 (submodule 3)
- Data record 0 for channel 3 (submodule 4)

Address the respective submodule for data record transfer.

Data record structure

The figure below shows the structure of data record 0 for channel 0 as an example. The structure is identical for channels 1 to 3. The values in byte 0 and byte 1 are fixed and may not be changed.

Enable a parameter by setting the corresponding bit to "1".

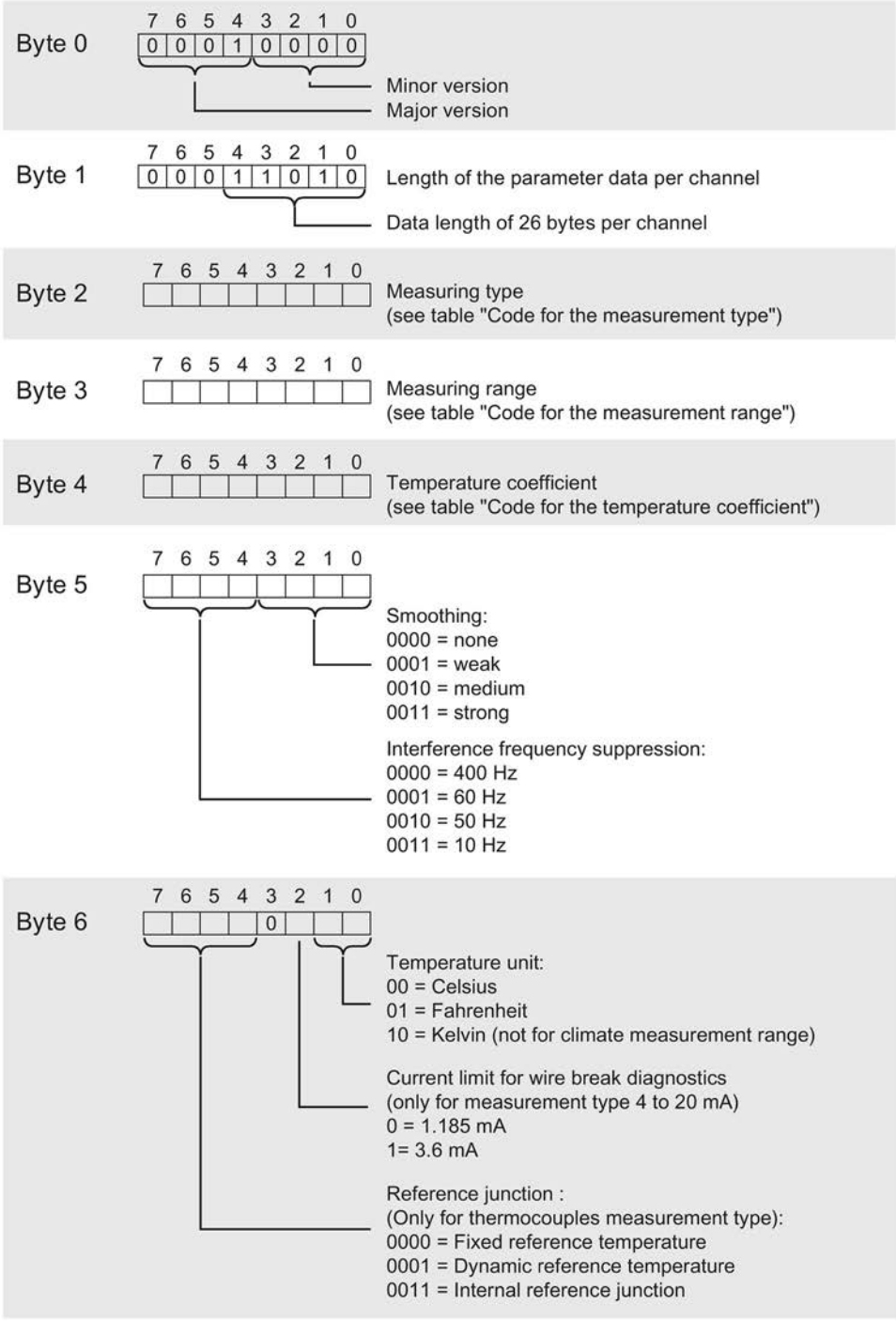

Figure B-1 Structure of data record 0: Bytes 0 to 6

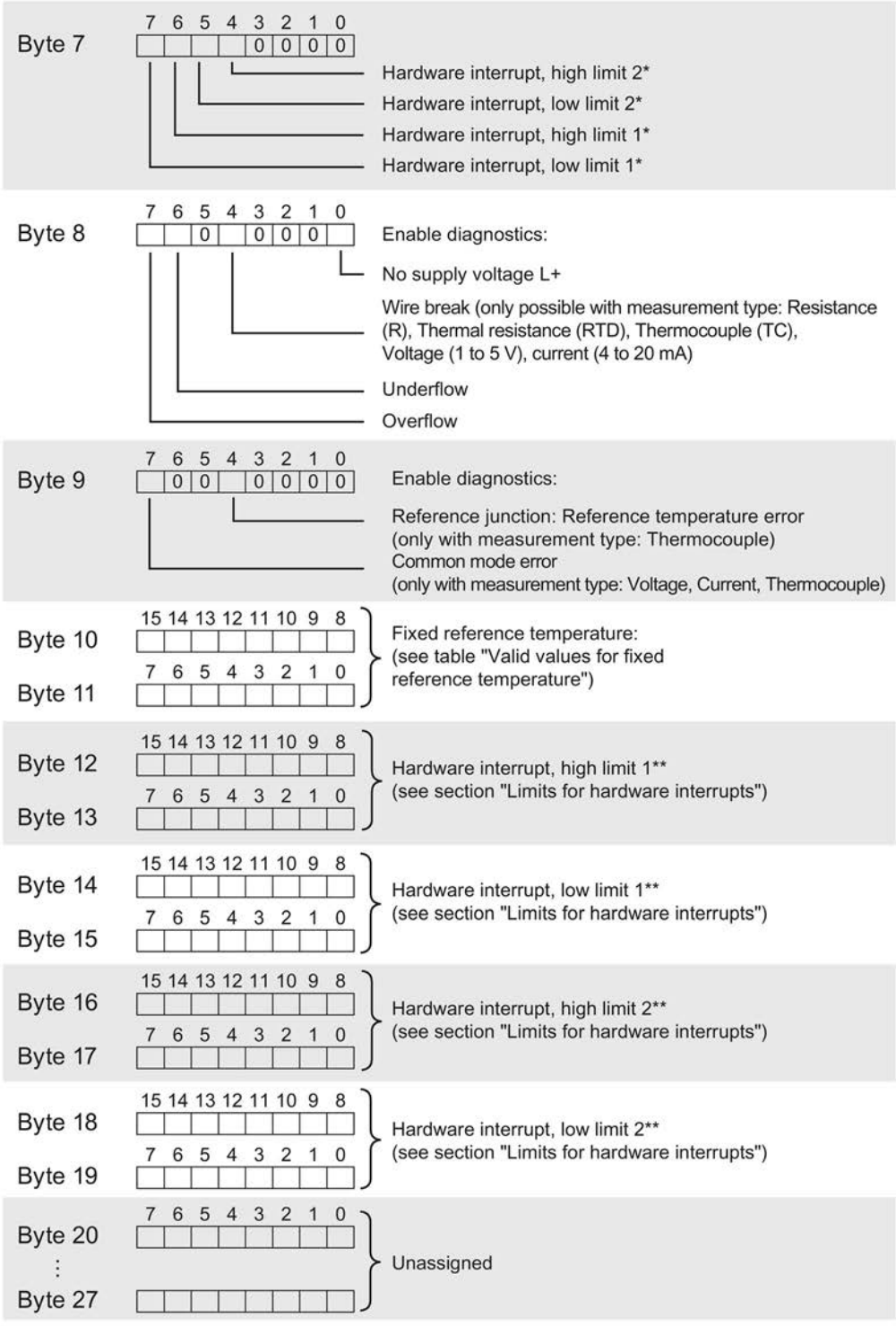

* Enabling of hardware interrupts via data record is only possible if a hardware interrupt OB is assigned to the channel in STEP 7

** High limit must be greater than low limit

Figure B-2 Structure of data record 0: Bytes 7 to 27

Codes for measurement types

The following table lists all measurement types of the analog input module along with their codes. Enter these codes at byte 2 of the data record for the corresponding channel (see the figure Structure of data record 0: Bytes 7 to 27).

Table B- 2 Code for the measurement type

Measurement type	Code
Disabled	0000 0000
Voltage	0000 0001
Current, 2-wire transmitter	0000 0011
Current, 4-wire transmitter	0000 0010
Resistance, 4-wire connection *) **)	0000 0100
Resistance, 3-wire connection *) **)	0000 0101
Resistance, 2-wire connection *) ***)	0000 0110
Thermal resistor linear, 4-wire connection *)	0000 0111
Thermal resistor linear, 3-wire connection *)	0000 1000
Thermocouple	0000 1010

*) only possible for channels 0 and 2

**) only for the following measuring ranges: 150 Ω, 300 Ω, 600 Ω, 6 kΩ

***) only for measuring range PTC

Special feature for configuration

If you assign one of the following measurement types on channel 0 or 2, then the next channel must always be disabled.

- Resistance, 4-wire connection
- Resistance, 3-wire connection
- Resistance, 2-wire connection
- Thermal resistor linear, 4-wire connection
- Thermal resistor linear, 3-wire connection

Example:

You have configured "Resistance, 4-wire connection" at channel 0; channel 1 must be disabled. You have configured "Resistance, 2-wire connection" at channel 2; channel 3 must be disabled.

Codes for measuring ranges

The following table lists all measuring ranges of the analog input module along with their codes. Enter these codes accordingly at byte 3 of the data record for the corresponding channel (see the figure Structure of data record 0: Bytes 7 to 27).

Table B- 3 Code for the measuring range

Measuring range	Code
Voltage	
±50 mV	0000 0001
±80 mV	0000 0010
±250 mV	0000 0011
±500 mV	0000 0100
±1 V	0000 0101
±2.5 V	0000 0111
±5 V	0000 1000
±10 V	0000 1001
1 V to 5 V	0000 1010
Current, 4-wire transmitter	
0 mA to 20 mA	0000 0010
4 mA to 20 mA	0000 0011
±20 mA	0000 0100
Current, 2-wire transmitter	
4 mA to 20 mA	0000 0011
Resistor	
150 Ω	0000 0001
300 Ω	0000 0010
600 Ω	0000 0011
6 kΩ	0000 0101
PTC	0000 1111

Thermal resistor	
Pt100 Climate	0000 0000
Ni100 Climate	0000 0001
Pt100 standard	0000 0010
Ni100 standard	0000 0011
Pt500 standard	0000 0100
Pt1000 standard	0000 0101
Ni1000 standard	0000 0110
Pt200 Climate	0000 0111
Pt500 Climate	0000 1000
Pt1000 Climate	0000 1001
Ni1000 Climate	0000 1010
Pt200 standard	0000 1011
LG-Ni1000 standard	0001 1100
LG-Ni1000 Climate	0001 1101
Thermocouple	
B	0000 0000
N	0000 0001
E	0000 0010
R	0000 0011
S	0000 0100
J	0000 0101
T	0000 0111
K	0000 1000

Codes for temperature coefficient

The following table lists all temperature coefficients along with their codes for temperature measurements with the thermal resistors. You must enter these codes in each case in byte 4 of the data record for the corresponding channel (refer to the figure Structure of data record 0: Bytes 0 to 6)

Table B- 4 Codes for temperature coefficient

Temperature coefficient	Code
Pt xxx	
0.003851	0000 0000
0.003916	0000 0001
0.003902	0000 0010
0.003920	0000 0011
Ni xxx	
0.006180	0000 1000
0.006720	0000 1001
LG-Ni	
0.005000	0000 1010

Valid values for fixed reference temperatures

The values that you can set for fixed reference temperatures must be in the valid range of values. The resolution is a tenth of a degree.

Table B- 5 Valid values for fixed reference temperatures

Temperature unit	Dec	Hex
Celsius (default)	-1450 to 1550	$FA56_H$ to $60E_H$
Fahrenheit (default)	-2290 to 3110	$F70E_H$ to CCC_H
Kelvin (default)	1282 to 3276	502_H to $10BA_H$

Hardware interrupt limits

The values that you can set for hardware interrupts (high/low limit) must not violate the over/underrange of the respective rated measuring range.

The following tables list the valid hardware interrupt limits. The limits depend on the selected measurement type and measuring range.

Table B- 6 Voltage limits

Voltage		
±50 mV, ±80 mV, ±250 mV, ±500 mV, ±1 V, ±2.5 V, ±5 V, ±10 V	1 V to 5 V	
32510	32510	High limit
-32511	-4863	Low limit

Table B- 7 Current and resistance limits

Current		Resistor	
±20 mA	4 mA to 20 mA / 0 mA to 20 mA	(all configurable measuring ranges)	
32510	32510	32510	High limit
-32511	-4863	1	Low limit

Table B- 8 Limits for thermocouple types B, C, E, and J

Thermocouple									
Type B			Type E			Type J			
°C	°F	K	°C	°F	K	°C	°F	K	
20699	32765	23431	11999	21919	14731	14499	26419	17231	High limit
1	321	2733	-2699	-4539	33	-2099	-3459	633	Low limit

Table B- 9 Limits for thermocouples type K, N, R, and S

Thermocouple									
Type K			Type N			Types R, S			
°C	°F	K	°C	°F	K	°C	°F	K	
16219	29515	18951	15499	28219	18231	20189	32765	22921	High limit
-2699	-4539	33	-2699	-4539	33	-1699	-2739	1033	Low limit

Table B- 10 Limits for thermocouple type T

Thermocouple			
Type T			
°C	°F	K	
5399	10039	8131	High limit
-2699	-4539	33	Low limit

Table B- 11 Limits for thermal resistor Pt xxx Standard and Pt xxx Climatic

Thermal resistor						
Pt xxx Standard			Pt xxx Climate			
°C	°F	K	°C	°F	K	
9999	18319	12731	15499	31099	---	High limit
-2429	-4053	303	-14499	-22899	---	Low limit

Table B- 12 Limits for thermal resistor Ni xxx Standard and Ni xxx Climatic

Thermal resistor						
Ni xxx Standard			Ni xxx Climate			
°C	°F	K	°C	°F	K	
2949	5629	5681	15499	31099	---	High limit
-1049	-1569	1683	-10499	-15699	---	Low limit

B.3 Structure of a data record for output channels

Assignment of data record and channel

For the configuration as a 1 x 2-channel module, the parameters are located in data records 64 and 65 and are assigned as follows:

- Data record 64 for channel 0
- Data record 65 for channel 1

For configuration 2 x 1-channel, the module has 2 submodules with one channel each. The parameters for the channel are available in data record 64 and are assigned as follows:

- Data record 64 for channel 0 (submodule 1)
- Data record 64 for channel 1 (submodule 2)

Address the respective submodule for data record transfer.

Data record structure

The example in the figure below shows the structure of data record 64 for channel 0. The structure of channel 1 is identical. The values in byte 0 and byte 1 are fixed and may not be changed.

Enable a parameter by setting the corresponding bit to "1".

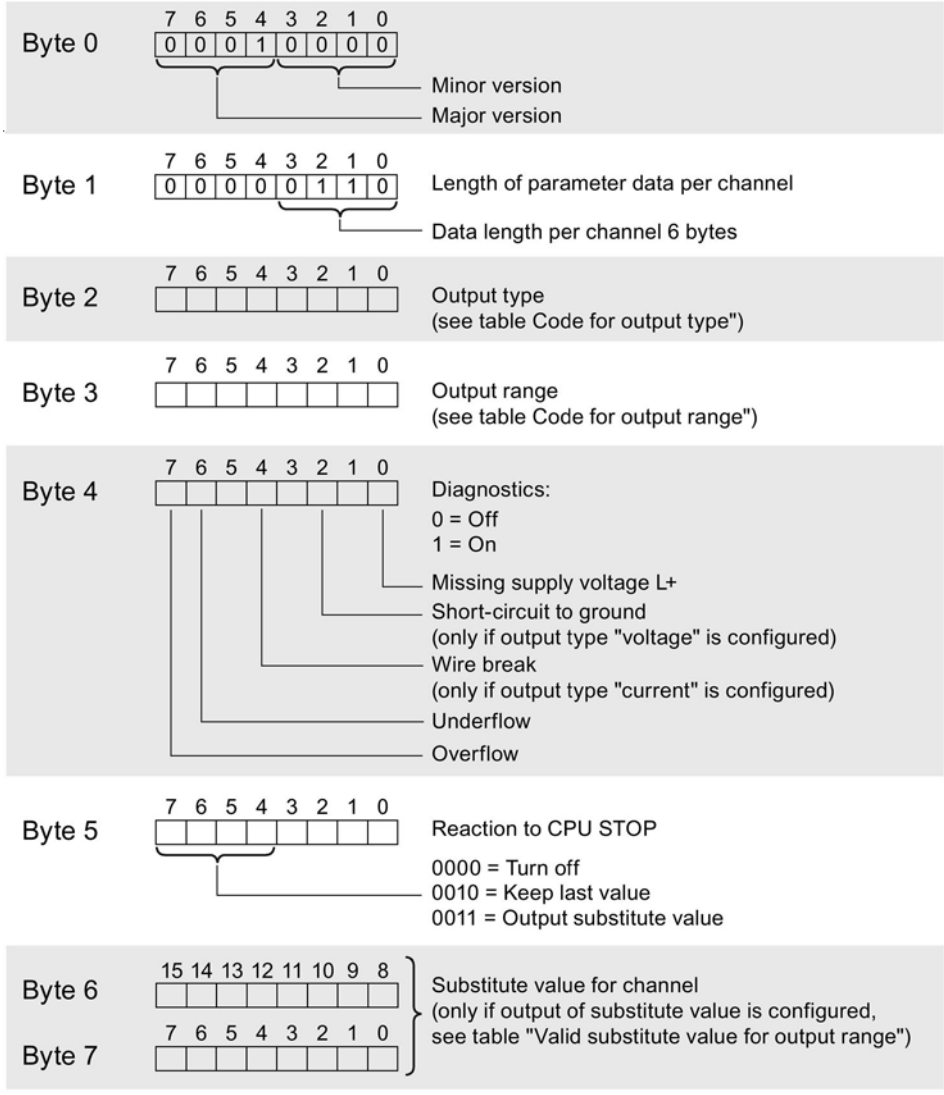

Figure B-3 Structure of data record 64: Bytes 0 to 7

Codes for the output type

The following table lists all output types of the analog output module along with their codes. Enter these codes at byte 2 of the data record for the corresponding channel (see the previous figure).

Table B- 13 Code for the output type

Output type	Code
Disabled	0000 0000
Voltage	0000 0001
Current	0000 0010

Codes for the output ranges

The following table lists all voltage and current output ranges of the analog output module along with their codes. In each case, enter these codes at byte 3 of the respective data record (see previous figure).

Table B- 14 Code for the output range

Output range for voltage	Code
1 V to 5 V	0000 0011
0 V to 10 V	0000 0010
±10 V	0000 0000
Output range for current	**Code**
0 mA to 20 mA	0000 0001
4 mA to 20 mA	0000 0010
±20 mA	0000 0000

Valid substitute values

The following table lists all output ranges for the valid substitute values. Enter these substitute values at bytes 6 and 7 of the data record for the corresponding channel (see the previous figure). The binary representation of output ranges is available on the Internet in the function manual Analog value processing for SIMATIC.

Table B- 15 Valid substitute value for the output range

Output range	Valid substitute value
±10 V	-32512 ... +32511
1 V to 5 V	-6912 ... +32511
0 V to 10 V	0 ... +32511
±20 mA	-32512 ... +32511
4 mA to 20 mA	-6912 ... +32511
0 mA to 20 mA	0 ... +32511

B.4 Structure of a data record for dynamic reference temperature

The **WRREC** instruction is used to transfer the reference junction temperature via data record 192 to data record 195 to the module. Data records 192 to 195 cannot be read back.

The description of the WRREC instruction can be found in the STEP 7 online help.

If you have set the "Dynamic reference temperature" value for the "Reference junction" parameter, the module expects a new data record at least every 5 minutes. If the module does not receive a new data record within this time, it generates the "Reference channel error" diagnostics message.

Assignment of data record and channel

Data records and channels are assigned as follows:

- Data record 192 for channel 0
- Data record 193 for channel 1
- Data record 194 for channel 2
- Data record 195 for channel 3

Structure of data record 192 for dynamic reference temperature

The following figure shows an example of the structure of data record 192 for channel 0. The structure for data records 193 to 195 is identical.

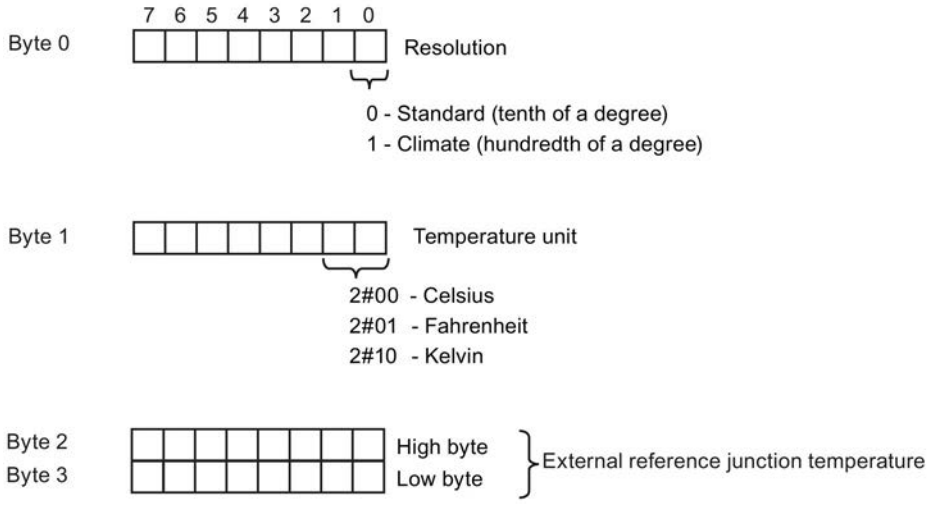

Figure B-4 Structure of data record 192

Valid values for temperature compensation

You can enter the selectable values at bytes 2 and 3 of the data record for the corresponding channel. The selectable values must lie within the permitted value range, see following table. The resolution is a tenth of a degree.

Table B- 16 Valid values for temperature compensation via data record

Temperature unit	Dec	Hex
Celsius (standard)	-1450 to 1550	$FA56_H$ to $60E_H$
Fahrenheit (standard)	-2290 to 3110	$F70E_H$ to $C26_H$
Kelvin (standard)	1282 to 3276	502_H to CCC_H
Celsius (climatic)	-14500 to 15500	$C75C_H$ to $3C8C_H$
Fahrenheit (climatic)	-22900 to 31100	$A68C_H$ to $797C_H$
Kelvin (climatic)	12820 to 32760	3214_H to $7FF8_H$

Additional information

For more information on compensation of the reference junction temperature via data record refer to the Analog value processing (http://support.automation.siemens.com/WW/view/en/67989094) function manual in the internet.

Analog value processing

C

Introduction

This section shows the analog values for all measuring ranges supported by the AI 4xU/I/RTD/TC/ AQ 2xU/I ST analog module.

Measured value resolution

Each analog value is written left aligned to the tags. The bits marked with "x" are set to "0".

Note

This resolution does not apply to temperature values. The digitalized temperature values are the result of a conversion in the analog module.

Table C- 1 Resolution of the analog values

Resolution in bits including sign	Values		Analog value	
	Dec	Hex	High byte	Low byte
16	1	1_H	Sign 0 0 0 0 0 0 0	0 0 0 0 0 0 0 1

C.1 Representation of input ranges

The tables below set out the digitized representation of the input ranges by bipolar and unipolar input ranges. The resolution is 16 bits.

Table C- 2 Bipolar input ranges

Dec. value	Measured value in %	Data word																Range
		2^{15}	2^{14}	2^{13}	2^{12}	2^{11}	2^{10}	2^{9}	2^{8}	2^{7}	2^{6}	2^{5}	2^{4}	2^{3}	2^{2}	2^{1}	2^{0}	
32767	>117.589	0	1	1	1	1	1	1	1	1	1	1	1	1	1	1	1	Overflow
32511	117.589	0	1	1	1	1	1	1	0	1	1	1	1	1	1	1	1	Overshoot range
27649	100.004	0	1	1	0	1	1	0	0	0	0	0	0	0	0	0	1	
27648	100.000	0	1	1	0	1	1	0	0	0	0	0	0	0	0	0	0	Rated range
1	0.003617	0	0	0	0	0	0	0	0	0	0	0	0	0	0	0	1	
0	0.000	0	0	0	0	0	0	0	0	0	0	0	0	0	0	0	0	
-1	-0.003617	1	1	1	1	1	1	1	1	1	1	1	1	1	1	1	1	
-27648	-100.000	1	0	0	1	0	1	0	0	0	0	0	0	0	0	0	0	
-27649	-100.004	1	0	0	1	0	0	1	1	1	1	1	1	1	1	1	1	Undershoot range
-32512	-117.593	1	0	0	0	0	0	0	1	0	0	0	0	0	0	0	0	
-32768	<-117.593	1	0	0	0	0	0	0	0	0	0	0	0	0	0	0	0	Underflow

Table C- 3 Unipolar input ranges

Dec. value	Measured value in %	Data word																Range
		2^{15}	2^{14}	2^{13}	2^{12}	2^{11}	2^{10}	2^{9}	2^{8}	2^{7}	2^{6}	2^{5}	2^{4}	2^{3}	2^{2}	2^{1}	2^{0}	
32767	>117.589	0	1	1	1	1	1	1	1	1	1	1	1	1	1	1	1	Overflow
32511	117.589	0	1	1	1	1	1	1	0	1	1	1	1	1	1	1	1	Overshoot range
27649	100.004	0	1	1	0	1	1	0	0	0	0	0	0	0	0	0	1	
27648	100.000	0	1	1	0	1	1	0	0	0	0	0	0	0	0	0	0	
1	0.003617	0	0	0	0	0	0	0	0	0	0	0	0	0	0	0	1	Rated range
0	0.000	0	0	0	0	0	0	0	0	0	0	0	0	0	0	0	0	
-1	-0.003617	1	1	1	1	1	1	1	1	1	1	1	1	1	1	1	1	Undershoot range
-4864	-17.593	1	1	1	0	1	1	0	1	0	0	0	0	0	0	0	0	
-32768	<-17.593	1	0	0	0	0	0	0	0	0	0	0	0	0	0	0	0	Underflow

C.1.1 Representation of analog values in voltage measuring ranges

The following tables list the decimal and hexadecimal values (codes) of the possible voltage measuring ranges.

Table C- 4 Voltage measuring ranges ±10 V, ±5 V, ±2.5 V, ±1 V,

Values		Voltage measuring range				Range
dec	hex	±10 V	±5 V	±2.5 V	±1 V	
32767	7FFF	>11.759 V	>5.879 V	>2.940 V	> 1.176 V	Overflow
32511	7EFF	11.759 V	5.879 V	2.940 V	1.176 V	Over range
27649	6C01					
27648	6C00	10 V	5 V	2.5 V	1 V	Rated range
20736	5100	7.5 V	3.75 V	1.875 V	0.75 V	
1	1	361.7 µV	180.8 µV	90.4 µV	36.17 µV	
0	0	0 V	0 V	0 V	0 V	
-1	FFFF					
-20736	AF00	-7.5 V	-3.75 V	-1.875 V	-0.75 V	
-27648	9400	-10 V	-5 V	-2.5 V	-1 V	
-27649	93FF					Under range
-32512	8100	-11.759 V	-5.879 V	-2.940 V	-1.176 V	
-32768	8000	<-11.759 V	<-5.879 V	<-2.940 V	<-1.176 V	Underflow

Table C- 5 Voltage measuring ranges ±500 mV, ±250 mV, ±80 mV, and ±50 mV

Values		Voltage measuring range				Range
dec	hex	±500 mV	±250 mV	±80 mV	±50 mV	
32767	7FFF	>587.9 mV	> 294.0 mV	> 94.1 mV	> 58.8 mV	Overflow
32511	7EFF	587.9 mV	294.0 mV	94.1 mV	58.8 mV	Over range
27649	6C01					
27648	6C00	500 mV	250 mV	80 mV	50 mV	Rated range
20736	5100	375 mV	187.5 mV	60 mV	37.5 mA	
1	1	18.08 µV	9.04 µV	2.89 µV	1.81 µV	
0	0	0 mV	0 mV	0 mV	0 mV	
-1	FFFF					
-20736	AF00	-375 mV	-187.5 mV	-60 mV	-37.5 mV	
-27648	9400	-500 mV	-250 mV	-80 mV	-50 mV	
-27649	93FF					Under range
-32512	8100	-587.9 mV	-294.0 mV	-94.1 mV	-58.8 mV	
-32768	8000	<-587.9 mV	<-294.0 mV	<-94.1 mV	<-58.8 mV	Underflow

Table C- 6 Voltage measuring range 1 V to 5 V

Values		Voltage measuring range	Range
dec	hex	1 V to 5 V	
32767	7FFF	>5.704 V	Overflow
32511	7EFF	5.704 V	Over range
27649	6C01		
27648	6C00	5 V	Rated range
20736	5100	4 V	
1	1	1 V + 144.7 µV	
0	0	1 V	
-1	FFFF		Under range
-4864	ED00	0.296 V	
-32768	8000	< 0.296 V	Underflow

C.1.2 Representation of analog values in the current measuring ranges

The following tables list the decimal and hexadecimal values (codes) of the possible current measuring ranges.

Table C- 7 Current measuring range ±20 mA

Values		Current measuring range	
dec	hex	±20 mA	
32767	7FFF	>23.52 mA	Overflow
32511	7EFF	23.52 mA	Overshoot range
27649	6C01		
27648	6C00	20 mA	Rated range
20736	5100	15 mA	
1	1	723.4 nA	
0	0	0 mA	
-1	FFFF		
-20736	AF00	-15 mA	
-27648	9400	-20 mA	
-27649	93FF		Undershoot range
-32512	8100	-23.52 mA	
-32768	8000	<-23.52 mA	Underflow

Table C- 8 Current measuring ranges 0 mA to 20 mA and 4 mA to 20 mA

Values		Current measuring range		
dec	hex	0 mA to 20 mA	4 mA to 20 mA	
32767	7FFF	>23.52 mA	>22.81 mA	Overflow
32511	7EFF	23.52 mA	22.81 mA	Overshoot range
27649	6C01			
27648	6C00	20 mA	20 mA	Rated range
20736	5100	15 mA	16 mA	
1	1	723.4 nA	4 mA + 578.7 nA	
0	0	0 mA	4 mA	
-1	FFFF			Undershoot range
-4864	ED00	-3.52 mA	1.185 mA	
-32768	8000	<- 3.52 mA	< 1.185 mA	Underflow

C.1.3 Representation of the analog values of resistance-based sensors/resistance thermometers

The following tables list the decimal and hexadecimal values (codes) of the possible resistance-based sensor ranges.

Table C- 9 Resistance-based sensors of 150 Ω, 300 Ω, 600 Ω, and 6000 Ω

Values		Resistance-based sensor range				
dec	hex	150 Ω	300 Ω	600 Ω	6000 Ω	
32767	7FFF	>176.38 Ω	>352.77 Ω	>705.53 Ω	>7055.3 Ω	Overflow
32511	7EFF	176.38 Ω	352.77 Ω	705.53 Ω	7055.3 Ω	Overshoot range
27649	6C01					
27648	6C00	150 Ω	300 Ω	600 Ω	6000 Ω	Rated range
20736	5100	112.5 Ω	225 Ω	450 Ω	4500 Ω	
1	1	5.43 mΩ	10.85 mΩ	21.70 mΩ	217 mΩ	
0	0	0 Ω	0 Ω	0 Ω	0 Ω	

The following tables list the decimal and hexadecimal values (codes) of the supported resistance thermometers.

Table C- 10 Resistance thermometers Pt 100, Pt 200, Pt 500 and Pt 1000 Standard

Pt x00 Standard in °C (1 digit = 0.1°C)	Values		Pt x00 Standard in °F (1 digit = 0.1 °F)	Values		Pt x00 Standard in K (1 digit = 0.1 K)	Values		Range
	dec	hex		dec	hex		dec	hex	
> 1000.0	32767	7FFF	> 1832.0	32767	7FFF	> 1273.2	32767	7FFF	Overflow
1000.0 : 850.1	10000 : 8501	2710 : 2135	1832.0 : 1562.1	18320 : 15621	4790 : 3D05	1273.2 : 1123.3	12732 : 11233	31BC : 2BE1	Overshoot range
850.0 : -200.0	8500 : -2000	2134 : F830	1562.0 : -328.0	15620 : -3280	3D04 : F330	1123.2 : 73.2	11232 : 732	2BE0 : 2DC	Rated range
-200.1 : -243.0	-2001 : -2430	F82F : F682	-328.1 : -405.4	-3281 : -4054	F32F : F02A	73.1 : 30.2	731 : 302	2DB : 12E	Under range
< -243.0	-32768	8000	< -405.4	-32768	8000	< 30.2	32768	8000	Underflow

Table C- 11 Resistance thermometers Pt 100, Pt 200, Pt 500 and Pt 1000 Climatic

Pt x00 Climatic/ in °C (1 digit = 0.01 °C)	Values		Pt x00 Climatic/ in °F (1 digit = 0.01 °F)	Values		Range
	dec	hex		dec	hex	
> 155.00	32767	7FFF	> 311.00	32767	7FFF	Overflow
155.00 : 130.01	15500 : 13001	3C8C : 32C9	311.00 : 266.01	31100 : 26601	797C : 67E9	Overshoot range
130.00 : -120.00	13000 : -12000	32C8 : D120	266.00 : -184.00	26600 : -18400	67E8 : B820	Rated range
-120.01 : -145.00	-12001 : -14500	D11F : C75C	-184.01 : -229.00	-18401 : -22900	B81F : A68C	Under range
< -145.00	-32768	8000	< -229.00	-32768	8000	Underflow

Table C- 12 Resistance thermometers Ni 100, Ni 1000, LG-Ni 1000 Standard

Ni x00 standard in °C (1 digit = 0.1 °C)	Values		Ni x00 Standard in °F (1 digit = 0.1 °F)	Values		Ni x00 Standard in K (1 digit = 0.1 K)	Values		Range
	dec	hex		dec	hex		dec	hex	
> 295.0	32767	7FFF	> 563.0	32767	7FFF	> 568.2	32767	7FFF	Overflow
295.0 : 250.1	2950 : 2501	B86 : 9C5	563.0 : 482.1	5630 : 4821	15FE : 12D5	568.2 : 523.3	5682 : 5233	1632 : 1471	Overshoot range
250.0 : -60.0	2500 : -600	9C4 : FDA8	482.0 : -76.0	4820 : -760	12D4 : FD08	523.2 : 213.2	5232 : 2132	1470 : 854	Rated range
-60.1 : -105.0	-601 : -1050	FDA7 : FBE6	-76.1 : -157.0	-761 : -1570	FD07 : F9DE	213.1 : 168.2	2131 : 1682	853 : 692	Under range
< -105.0	-32768	8000	< -157.0	-32768	8000	< 168.2	32768	8000	Underflow

Table C- 13 Resistance thermometers Ni 100, Ni 1000, LG-Ni 1000 Climatic

Ni x00 Climatic in °C (1 digit = 0.01 °C)	Values		Ni x00 climatic in °F (1 digit = 0.01 °F)	Values		Range
	dec	hex		dec	hex	
> 155.00	32767	7FFF	> 311.00	32767	7FFF	Overflow
155.00 : 130.01	15500 : 13001	3C8C : 32C9	311.00 : 266.01	31100 : 26601	797C : 67E9	Overshoot range
130.00 : -60.00	13000 : -6000	32C8 : E890	266.00 : -76.00	26600 : -7600	67E8 : E250	Rated range
-60.01 : -105.00	-6001 : -10500	E88F : D6FC	-76.01 : -157.00	-7601 : -15700	E24F : C2AC	Under range
< - 105.00	-32768	8000	< - 157.00	-32768	8000	Underflow

C.1.4 Representation of analog values for thermocouples

The following tables list the decimal and hexadecimal values (codes) of the supported thermocouples.

Table C- 14 Thermocouple type B

Type B in C	Values		Type B in °F	Values		Type B in K	Values		Range
	dec	hex		dec	hex		dec	hex	
> 2070.0	32767	7FFF	> 3276.6	32767	7FFF	> 2343.2	32767	7FFF	Overflow
2070.0 : 1820.1	20700 : 18201	50DC : 4719	3276.6 : 2786.6	32766 : 27866	7FFE : 6CDA	2343.2 : 2093.3	23432 : 20933	5B88 : 51C5	Over range
1820.0 : 250.0	18200 : 2500	4718 : 09C4	2786.5 : 482.0	27865 : 4820	6CD9 : 12D4	2093.2 : 523.2	20932 : 5232	51C4 : 1470	Rated range
249.9 : 0.0	2499 : 0	09C3 : 0	481.9 : 32.0	4819 : 320	12D3 : 0140	523.1 : 273.2	5231 : 2732	1469 : 0AAC	Under range
< 0.0	-32768	8000	< 32.0	-32768	8000	< 273.2	32768	8000	Underflow

Table C- 15 Thermocouple type E

Type E in °C	Values		Type E in °F	Values		Type E in K	Values		Range
	dec	hex		dec	hex		dec	hex	
> 1200.0	32767	7FFF	> 2192.0	32767	7FFF	> 1473.2	32767	7FFF	Overflow
1200.0 : 1000.1	12000 : 10001	2EE0 : 2711	2192.0 : 1832.2	21920 : 18322	55A0 : 4792	1473.2 : 1273.3	14732 : 12733	398C : 31BD	Over range
1000.0 : -270.0	10000 : -2700	2710 : F574	1832.0 : -454.0	18320 : -4540	4790 : EE44	1273.2 : 0	12732 : 0	31BC : 0000	Rated range
< -270.0	-32768	8000	< -454.0	-32768	8000	<0	-32768	8000	Underflow

Table C- 16 Thermocouple type J

Type J in °C	Values		Type J in °F	Values		Type J in K	Values		Range
	dec	hex		dec	hex		dec	hex	
> 1450.0	32767	7FFF	> 2642.0	32767	7FFF	> 1723.2	32767	7FFF	Overflow
1450.0 : 1200.1	14500 : 12001	38A4 : 2EE1	2642.0 : 2192.2	26420 : 21922	6734 : 55A2	1723.2 : 1473.3	17232 : 14733	4350 : 398D	Over range
1200.0 : -210.0	12000 : -2100	2EE0 : F7CC	2192.0 : -346.0	21920 : -3460	55A0 : F27C	1473.2 : 63.2	14732 : 632	398C : 0278	Rated range
< -210.0	-32768	8000	< -346.0	-32768	8000	< 63.2	-32768	8000	Underflow

Table C- 17 Thermocouple type K

Type K in °C	Values		Type K in °F	Values		Type K in K	Values		Range
	dec	hex		dec	hex		dec	hex	
> 1622.0	32767	7FFF	> 2951.6	32767	7FFF	> 1895.2	32767	7FFF	Overflow
1622.0 : 1372.1	16220 : 13721	3F5C : 3599	2951.6 : 2501.7	29516 : 25017	734C : 61B9	1895.2 : 1645.3	18952 : 16453	4A08 : 4045	Over range
1372.0 : -270.0	13720 : -2700	3598 : F574	2501.6 : -454.0	25016 : -4540	61B8 : EE44	1645.2 : 0	16452 : 0	4044 : 0000	Rated range
< -270.0	-32768	8000	< -454.0	-32768	8000	< 0	-32768	8000	Underflow

Table C- 18 Thermocouple type N

Type N in °C	Values		Type N in °F	Values		Type N in K	Values		Range
	dec	hex		dec	hex		dec	hex	
> 1550.0	32767	7FFF	> 2822.0	32767	7FFF	> 1823.2	32767	7FFF	Overflow
1550.0 : 1300.1	15500 : 13001	3C8C : 32C9	2822.0 : 2372.2	28220 : 23722	6E3C : 5CAA	1823.2 : 1573.3	18232 : 15733	4738 : 3D75	Over range
1300.0 : -270.0	13000 : -2700	32C8 : F574	2372.0 : -454.0	23720 : -4540	5CA8 : EE44	1573.2 : 0	15732 : 0	3D74 : 0000	Rated range
< -270.0	-32768	8000	< -454.0	-32768	8000	< 0	-32768	8000	Underflow

Table C- 19 Thermocouple type R and S

Type R, S in °C	Values		Type R, S in °F	Values		Types R, S in K	Values		Range
	dec	hex		dec	hex		dec	hex	
> 2019.0	32767	7FFF	> 3276.6	32767	7FFF	> 2292.2	32767	7FFF	Overflow
2019.0 : 1769.1	20190 : 17691	4EDE : 451B	3276.6 : 3216.4	32766 : 32164	7FFE : 7DA4	2292.2 : 2042.3	22922 : 20423	598A : 4FC7	Over range
1769.0 : -50.0	17690 : -500	451A : FE0C	3216.2 : -58.0	32162 : -580	7DA2 : FDBC	2042.2 : 223.2	20422 : 2232	4FC6 : 08B8	Rated range
-50.1 : -170.0	-501 : -1700	FE0B : F95C	-58.1 : -274.0	-581 : -2740	FDBB : F54C	223.1 : 103.2	2231 : 1032	08B7 : 0408	Under range
< -170.0	-32768	8000	< -274.0	-32768	8000	< 103.2	< 1032	8000	Underflow

Table C- 20 Thermocouple type T

Type T in °C	Values		Type T in °F	Values		Type T in K	Values		Range
	dec	hex		dec	hex		dec	hex	
> 540.0	32767	7FFF	> 1004.0	32767	7FFF	> 813.2	32767	7FFF	Overflow
540.0 : 400.1	5400 : 4001	1518 : 0FA1	1004.0 : 752.2	10040 : 7522	2738 : 1D62	813.2 : 673.3	8132 : 6733	1FC4 : 1AAD	Over range
400.0 : -270.0	4000 : -2700	0FA0 : F574	752.0 : -454.0	7520 : -4540	1D60 : EE44	673.2 : 3.2	6732 : 32	1AAC : 0020	Rated range
< -270.0	-32768	8000	< -454.0	-32768	8000	< 3.2	-32768	8000	Underflow

C.1.5 Measured values for wire break diagnostics

Measured values on diagnostics event "wire break", dependent on diagnostics enables

Error events initiate a diagnostics entry and trigger a diagnostics interrupt if configured accordingly.

Table C- 21 Measured values for wire break diagnostics

Format	Parameter assignment	Measured values		Explanation
S7	• "Wire break" diagnostics enabled • "Overflow/Underflow" diagnostics enabled or disabled ("Wire break" diagnostics takes priority over "Overflow/Underflow" diagnostics)	32767	$7FFF_H$	"Wire break" or "Open circuit" diagnostics alarm
	• "Wire break" diagnostics disabled • "Overflow/Underflow" diagnostics enabled	-32767	8000_H	• Measured value after leaving the under range • Diagnostics alarm "Low limit violated"
	• "Wire break" diagnostics disabled • "Overflow/Underflow" diagnostics disabled	-32767	8000_H	Measured value after leaving the under range

C.2 Representation of output ranges

The tables below set out the digitalized representation of the output ranges by bipolar and unipolar range. The resolution is 16 bits.

Table C- 22 Bipolar output ranges

Dec. value	Output value in %	Data word																Range
		2^{15}	2^{14}	2^{13}	2^{12}	2^{11}	2^{10}	2^{9}	2^{8}	2^{7}	2^{6}	2^{5}	2^{4}	2^{3}	2^{2}	2^{1}	2^{0}	
32511	117.589	0	1	1	1	1	1	1	0	1	1	1	1	1	1	1	1	Maximum output value*
32511	117.589	0	1	1	1	1	1	1	0	1	1	1	1	1	1	1	1	Overshoot range
27649	100.004	0	1	1	0	1	1	0	0	0	0	0	0	0	0	0	1	
27648	100.000	0	1	1	0	1	1	0	0	0	0	0	0	0	0	0	0	Rated range
1	0.003617	0	0	0	0	0	0	0	0	0	0	0	0	0	0	0	1	
0	0.000	0	0	0	0	0	0	0	0	0	0	0	0	0	0	0	0	
-1	-0.003617	1	1	1	1	1	1	1	1	1	1	1	1	1	1	1	1	
-27648	-100.000	1	0	0	1	0	1	0	0	0	0	0	0	0	0	0	0	
-27649	-100.004	1	0	0	1	0	0	1	1	1	1	1	1	1	1	1	1	Undershoot range
-32512	-117.593	1	0	0	0	0	0	0	1	0	0	0	0	0	0	0	0	
-32512	-117.593	1	0	0	0	0	0	0	1	0	0	0	0	0	0	0	0	Minimum output value**

* When values > 32511 are specified, the output value is limited to 117.589%.

** When values < -32512 are specified, the output value is limited to -117.593%.

Table C- 23 Unipolar output ranges

Dec. value	Output value in %	Data word																Range
		2^{15}	2^{14}	2^{13}	2^{12}	2^{11}	2^{10}	2^{9}	2^{8}	2^{7}	2^{6}	2^{5}	2^{4}	2^{3}	2^{2}	2^{1}	2^{0}	
32511	117.589	0	1	1	1	1	1	1	1	x	x	x	x	x	x	x	x	Maximum output value*
32511	117.589	0	1	1	1	1	1	1	0	1	1	1	1	1	1	1	1	Overshoot range
27649	100.004	0	1	1	0	1	1	0	0	0	0	0	0	0	0	0	1	
27648	100.000	0	1	1	0	1	1	0	0	0	0	0	0	0	0	0	0	Rated range
1	0.003617	0	0	0	0	0	0	0	0	0	0	0	0	0	0	0	1	
0	0.000	0	0	0	0	0	0	0	0	0	0	0	0	0	0	0	0	
0	0	0	0	0	0	0	0	0	0	0	0	0	0	0	0	0	0	Minimum output value**

* When values > 32511 are specified, the output value is limited to 117.589%.

** When values < 0 are specified, the output value is limited to 0%.

C.2.1 Representation of analog values in the voltage output ranges

The tables below list the decimal and hexadecimal values (codes) of the possible voltage output ranges.

Table C- 24 Voltage output range ±10 V

Values			Voltage output range	Range
	dec	hex	±10 V	
>117.589%	>32511	>7EFF	11.76 V	Maximum output value
117.589%	32511	7EFF	11.76 V	Over range
	27649	6C01		
100%	27648	6C00	10 V	Rated range
75%	20736	5100	7.5 V	
0.003617%	1	1	361.7 µV	
0%	0	0	0 V	
	-1	FFFF	-361.7 µV	
-75%	-20736	AF00	-7.5 V	
-100%	-27648	9400	-10 V	
	-27649	93FF		Under range
-117.593%	-32512	8100	-11.76 V	
<-117.593%	<-32512	< 8100	-11.76 V	Minimum output value

Table C- 25 Voltage output range 0 V to 10 V

Values			Voltage output range	Range
	dec	hex	0 V to 10 V	
>117.589%	>32511	>7EFF	11.76 V	Maximum output value
117.589%	32511	7EFF	11.76 V	Over range
	27649	6C01		
100%	27648	6C00	10 V	Rated range
75%	20736	5100	7.5 V	
0.003617%	1	1	361.7 µV	
0%	0	0	0 V	
<0%	<0	<0	0 V	Minimum output value

Table C- 26 Voltage output range 1 V to 5 V

Values			Voltage output range	Range
	dec	hex	1 V to 5 V	
>117.589%	>32511	>7EFF	5.70 V	Maximum output value
117.589%	32511	7EFF	5.70 V	Over range
	27649	6C01		
100%	27648	6C00	5 V	Rated range
75%	20736	5100	4 V	
0.003617%	1	1	1 V +144.7 µV	
0%	0	0	1 V	
	-1	FFFF	1 V -144.7 µV	Under range
-25%	-6912	E500	0 V	
<-25%	<-6912	< E500	0 V	Minimum output value

C.2.2 Representation of analog values in the current output ranges

The tables below list the decimal and hexadecimal values (codes) of the possible current output ranges.

Table C- 27 Current output range ±20 mA

Values			Current output range	Range
	dec	hex	±20 mA	
>117.589%	>32511	>7EFF	23.52 mA	Maximum output value
117.589%	32511	7EFF	23.52 mA	Over range
	27649	6C01		
100 %	27648	6C00	20 mA	Rated range
75%	20736	5100	15 mA	
0.003617 %	1	1	723.4 nA	
0%	0	0	0 mA	
	-1	FFFF	-723.4 nA	
-75%	-20736	AF00	-15 mA	
-100%	-27648	9400	-20 mA	
	-27649	93FF		Under range
-117.593%	-32512	8100	-23.52 mA	
<-117.593%	<-32512	<8100	-23.52 mA	Minimum output value

Table C- 28 Current output range 0 mA to 20 mA

Values			Current output range	Range
	dec	hex	0 mA to 20 mA	
>117.589%	>32511	>7EFF	23.52 mA	Maximum output value
117.589%	32511	7EFF	23.52 mA	Over range
	27649	6C01		
100%	27648	6C00	20 mA	Rated range
75%	20736	5100	15 mA	
0.003617%	1	1	723.4 nA	
0%	0	0	0 mA	
<0%	<0	<0	0 mA	Minimum output value

Table C- 29 Current output range 4 mA to 20 mA

Values			Current output range	Range
	dec	hex	4 mA to 20 mA	
>117.589%	>32511	>7EFF	22.81 mA	Maximum output value
117.589%	32511	7EFF	22.81 mA	Over range
	27649	6C01		
100%	27648	6C00	20 mA	Rated range
75%	20736	5100	16 mA	
0.003617%	1	1	4 mA	
0%	0	0	4 mA	
	-1	FFFF		Under range
-25%	-6912	E500	0 mA	
<-25%	<-6912	<E500	0 mA	Minimum output value

SIEMENS

Manual

SIMATIC

S7-1500/ET 200MP

Technology module
TM Count 2x24V (6ES7550-1AA01-0AB0)

Edition 12/2020

support.industry.siemens.com

SIEMENS

SIMATIC

S7-1500/ET 200MP Technology module TM Count 2x24V (6ES7550-1AA01-0AB0)

Equipment Manual

Preface

Documentation guide 1

Product overview 2

Wiring 3

Configuring address space 4

Interrupts/diagnostic messages 5

Technical specifications 6

Dimensional drawing A

Parameter data record B

12/2020
A5E31870371-AC

Legal information

Warning notice system

This manual contains notices you have to observe in order to ensure your personal safety, as well as to prevent damage to property. The notices referring to your personal safety are highlighted in the manual by a safety alert symbol, notices referring only to property damage have no safety alert symbol. These notices shown below are graded according to the degree of danger.

⚠ DANGER
indicates that death or severe personal injury **will** result if proper precautions are not taken.

⚠ WARNING
indicates that death or severe personal injury **may** result if proper precautions are not taken.

⚠ CAUTION
indicates that minor personal injury can result if proper precautions are not taken.

NOTICE
indicates that property damage can result if proper precautions are not taken.

If more than one degree of danger is present, the warning notice representing the highest degree of danger will be used. A notice warning of injury to persons with a safety alert symbol may also include a warning relating to property damage.

Qualified Personnel

The product/system described in this documentation may be operated only by **personnel qualified** for the specific task in accordance with the relevant documentation, in particular its warning notices and safety instructions. Qualified personnel are those who, based on their training and experience, are capable of identifying risks and avoiding potential hazards when working with these products/systems.

Proper use of Siemens products

Note the following:

⚠ WARNING
Siemens products may only be used for the applications described in the catalog and in the relevant technical documentation. If products and components from other manufacturers are used, these must be recommended or approved by Siemens. Proper transport, storage, installation, assembly, commissioning, operation and maintenance are required to ensure that the products operate safely and without any problems. The permissible ambient conditions must be complied with. The information in the relevant documentation must be observed.

Trademarks

All names identified by ® are registered trademarks of Siemens AG. The remaining trademarks in this publication may be trademarks whose use by third parties for their own purposes could violate the rights of the owner.

Disclaimer of Liability

We have reviewed the contents of this publication to ensure consistency with the hardware and software described. Since variance cannot be precluded entirely, we cannot guarantee full consistency. However, the information in this publication is reviewed regularly and any necessary corrections are included in subsequent editions.

Siemens AG
Division Digital Factory
Postfach 48 48
90026 NÜRNBERG
GERMANY

A5E31870371-AC
Ⓟ 11/2020 Subject to change

Copyright © Siemens AG 2020.
All rights reserved

Preface

Purpose of the documentation

This manual includes module-specific information on wiring, diagnostics and the technical specifications of the technology module.

General information regarding design and commissioning of the S7-1500 or ET 200MP is available in the S7-1500 or ET 200MP system manuals.

The counting and measuring functions of the TM Count 2x24V technology module are described in more detail in the Counting, Measurement and Position Detection (http://support.automation.siemens.com/WW/view/en/59709820) Function Manual.

Conventions

Please observe notes marked as follows:

Note

A note contains important information on the product described in the documentation, on the handling of the product and on the section of the documentation to which particular attention should be paid.

Document history

The following table shows the most important changes to the documentation compared to the previous edition.

Manual edition	Comments
12/2020	The following sections have been revised: • Product overview (Page 10) • Wiring (Page 17) • Configuring/address space (Page 22) • Interrupts/diagnostic messages (Page 69) • Technical specifications (Page 77)
06/2018	The following sections have been revised: • Product overview (Page 10) • Configuring/address space (Page 22) • Interrupts/diagnostic messages (Page 69) • Parameter data record (Page 87)
06/2013	First edition

Siemens Industry Online Support

You can find current information on the following topics quickly and easily here:

- **Product support**

  All the information and extensive know-how on your product, technical specifications, FAQs, certificates, downloads, and manuals.

- **Application examples**

  Tools and examples to solve your automation tasks – as well as function blocks, performance information and videos.

- **Services**

  Information about Industry Services, Field Services, Technical Support, spare parts and training offers.

- **Forums**

  For answers and solutions concerning automation technology.

- **mySupport**

  Your personal working area in Industry Online Support for messages, support queries, and configurable documents.

This information is provided by the Siemens Industry Online Support in the Internet (https://support.industry.siemens.com).

Industry Mall

The Industry Mall is the catalog and order system of Siemens AG for automation and drive solutions on the basis of Totally Integrated Automation (TIA) and Totally Integrated Power (TIP).

You can find catalogs for all automation and drive products on the Internet (https://mall.industry.siemens.com) and in the Information and Download Center (https://www.siemens.com/automation/infocenter).

Security information

Siemens provides products and solutions with industrial security functions that support the secure operation of plants, systems, machines and networks.

In order to protect plants, systems, machines and networks against cyber threats, it is necessary to implement – and continuously maintain – a holistic, state-of-the-art industrial security concept. Siemens' products and solutions form one element of such a concept.

Customers are responsible for preventing unauthorized access to their plants, systems, machines and networks. Such systems, machines and components should only be connected to an enterprise network or the internet if and to the extent such a connection is necessary and only when appropriate security measures (e.g. firewalls and/or network segmentation) are in place.

For additional information on industrial security measures that may be implemented, please visit (https://www.siemens.com/industrialsecurity).

Siemens' products and solutions undergo continuous development to make them more secure. Siemens strongly recommends that product updates are applied as soon as they are available and that the latest product versions are used. Use of product versions that are no longer supported, and failure to apply latest updates may increase customer's exposure to cyber threats.

To stay informed about product updates, subscribe to the Siemens Industrial Security RSS Feed under (https://www.siemens.com/industrialsecurity).

Open Source Software

Open-source software is used in the firmware of the product described. Open Source Software is provided free of charge. We are liable for the product described, including the open-source software contained in it, pursuant to the conditions applicable to the product. Siemens accepts no liability for the use of the open source software over and above the intended program sequence, or for any faults caused by modifications to the software.

For legal reasons, we are obliged to publish the original text of the license conditions and copyright notices. Please read the information on this on the Internet (https://support.industry.siemens.com/cs/ww/en/view/109740777).

Table of contents

Preface **3**

1 Documentation guide **8**

2 Product overview **10**

2.1 Properties 10

2.2 Functions 13
2.2.1 Detection of counting signals 13
2.2.2 Measured value determination 14
2.2.3 Switching the outputs at comparison values 14
2.2.4 Position input for Motion Control 15
2.2.5 Fast Mode 15
2.2.6 Additional functions 15

3 Wiring **17**

3.1 Pin assignment and block diagram 17

4 Configuring/address space **22**

4.1 Operating with "Counting and measurement" technology object 22
4.1.1 Configuring 22
4.1.2 Reaction to CPU STOP 24
4.1.3 Parameter setting 24
4.1.4 Address space 29
4.1.5 Isochronous mode 29

4.2 Position input for "Motion Control" technology object 31
4.2.1 Configuring 31
4.2.2 Parameter setting 33
4.2.3 Address space 35
4.2.4 Control interface and feedback interface 35
4.2.4.1 Assignment of the control interface 35
4.2.4.2 Assignment of the feedback interface 35
4.2.5 Isochronous mode 36

4.3 Manual operation (without technology object) 37
4.3.1 Configuring 37
4.3.2 Reaction to CPU STOP 39
4.3.3 Parameter setting 40
4.3.4 Address space 45
4.3.5 Control and feedback interface 45
4.3.5.1 Assignment of the control interface 45
4.3.5.2 Assignment of the feedback interface 49
4.3.6 Isochronous mode 52

4.4 Fast Mode ... 53
4.4.1 Configuring ... 53
4.4.2 Reaction to CPU STOP ... 55
4.4.3 Parameter setting ... 55
4.4.4 Explanation of parameters ... 59
4.4.5 Address space ... 66
4.4.6 Assignment of the feedback interface ... 67
4.4.7 Isochronous mode ... 68

5 Interrupts/diagnostic messages ... 69

5.1 Status and error display ... 69

5.2 Diagnostic alarms ... 72

5.3 Hardware interrupts ... 75

6 Technical specifications ... 77

A Dimensional drawing ... 85

B Parameter data record ... 87

B.1 Parameter assignment and structure of parameter data record ... 87

B.2 Parameter validation error ... 96

Documentation guide

1

The documentation for the SIMATIC S7-1500 automation system and the SIMATIC ET 200MP distributed I/O system is arranged into three areas.
This arrangement enables you to access the specific content you require.

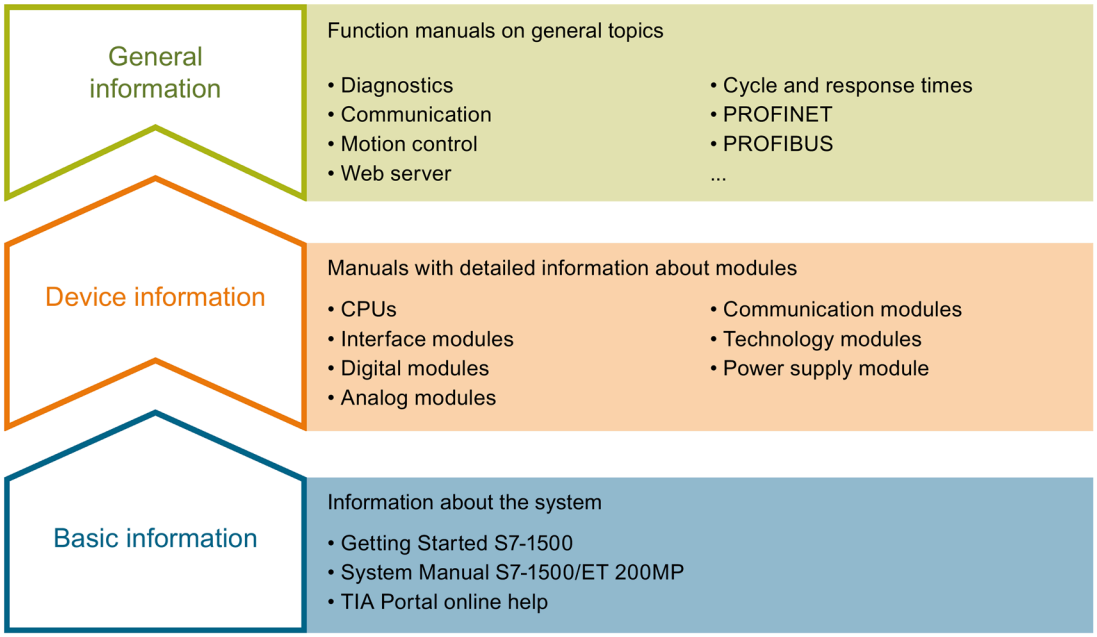

Basic information

The System Manual and Getting Started describe in detail the configuration, installation, wiring and commissioning of the SIMATIC S7-1500 and ET 200MP systems. The STEP 7 online help supports you in the configuration and programming.

Device information

Product manuals contain a compact description of the module-specific information, such as properties, wiring diagrams, characteristics and technical specifications.

General information

The function manuals contain detailed descriptions on general topics regarding the SIMATIC S7-1500 and ET 200MP systems, e.g. diagnostics, communication, motion control, Web server, OPC UA.

You can download the documentation free of charge from the Internet (http://w3.siemens.com/mcms/industrial-automation-systems-simatic/en/manual-overview/Pages/Default.aspx).

Changes and supplements to the manuals are documented in a Product Information.

You can download the product information free of charge from the Internet (https://support.industry.siemens.com/cs/us/en/view/68052815).

Manual Collection S7-1500/ET 200MP

The Manual Collection contains the complete documentation on the SIMATIC S7-1500 automation system and the ET 200MP distributed I/O system gathered together in one file.

You can find the Manual Collection on the Internet (https://support.industry.siemens.com/cs/ww/en/view/86140384).

SIMATIC S7-1500 comparison list for programming languages

The comparison list contains an overview of which instructions and functions you can use for which controller families.

You can find the comparison list on the Internet (https://support.industry.siemens.com/cs/ww/en/view/86630375).

"mySupport"

With "mySupport", your personal workspace, you make the best out of your Industry Online Support.

In "mySupport", you can save filters, favorites and tags, request CAx data and compile your personal library in the Documentation area. In addition, your data is already filled out in support requests and you can get an overview of your current requests at any time.

You must register once to use the full functionality of "mySupport".

You can find "mySupport" on the Internet (https://support.industry.siemens.com/My/ww/en).

Application examples

The application examples support you with various tools and examples for solving your automation tasks. Solutions are shown in interplay with multiple components in the system - separated from the focus on individual products.

You will find the application examples on the Internet (https://support.industry.siemens.com/sc/ww/en/sc/2054).

Product overview 2

2.1 Properties

Article number

6ES7550-1AA01-0AB0

The TM Count 2x24V technology module with article number 6ES7550-1AA01-0AB0 and firmware version V2.0 is a compatible replacement for the TM Count 2x24V with article number 6ES7550-1AA00-0AB0.

Firmware version

This manual describes the properties of firmware version V2.0 of the module.

View of the module

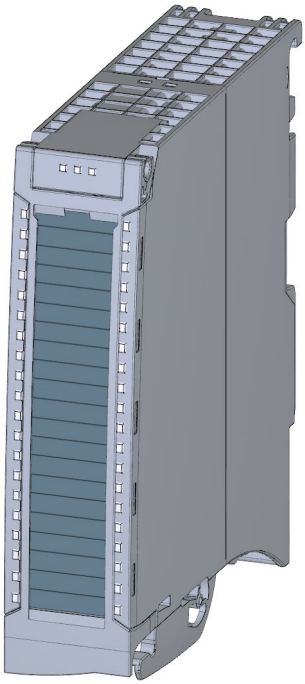

Figure 2-1 View of the TM Count 2x24V module

Properties

The TM Count 2x24V technology module has the following properties:

- Technical properties
  - Two channels
  - Interfaces:

    24 V encoder signals A, B and N from sourcing, sinking or push-pull encoders and sensors

    24 V encoder supply, short-circuit-proof

    DI0, DI1 and DI2 digital input signals (per channel)

    DQ0 and DQ1 digital output signals (per channel)

    Supply voltage L+
  - Count range: 32 bits
  - Monitoring of encoder signals for wire break channel by channel
  - Hardware interrupts can be configured channel by channel
  - Input filters for suppression of interferences at encoder inputs and digital inputs can be configured
- Supported encoder/signal types
  - 24 V incremental encoder with N signal
  - 24 V incremental encoder without N signal
  - 24 V pulse encoder with direction signal
  - 24 V pulse encoder without direction signal
  - 24 V pulse encoder with up/down counting signal

The module supports the following functions:

Table 2- 1 Version dependencies of the functions

Function	Firmware version of module	Configurable as of		
		STEP 7 (TIA Portal)	GSD	
			PROFINET IO	PROFIBUS DP
Firmware update	V1.0 or higher	V13	X	—
I&M identification data	V1.0 or higher	V13	X	X
Parameter reassignment in RUN	V1.0 or higher	V13	X	X
Isochronous mode	V1.0 or higher	V13	—	—
Counting/measuring	V1.0 or higher	V13	X	X
Operating with "Counting and measurement" technology object	V1.0 or higher	V13	—	—
Position input for "Motion Control" technology object	V1.0 or higher	V13	—	—
Operating with "Measuring input" technology object	V1.3 or higher	V15 with HSP0256	—	—
Fast Mode	V2.0 or higher	V16 with HSP0332	X	X
Display of digital input states in the process image for position detection for "Motion Control" technology object	V2.0 or higher	V16 with HSP0332	—	—

Firmware versions V1.x are available for the article number 6ES7550-1AA00-0AB0. Firmware version V2.0 is available for the article number 6ES7550-1AA01-0AB0.

Accessories

The following components are supplied with the technology module and can also be ordered separately as spare parts:

- Shield bracket
- Shield terminal
- Power supply element
- Labeling strip
- U-connector

Other components

The following component needs to be ordered separately:

- Front connectors, including potential jumpers and cable ties

You can find information on the front connector in system manual S7-1500 / ET 200MP Automation System (http://support.automation.siemens.com/WW/view/en/59191792), section "Accessories".

2.2 Functions

2.2.1 Detection of counting signals

Counting is the detecting and adding up of events. The counters of the technology module detect encoder signals and pulses and evaluate them accordingly. The count direction can be specified using encoder or pulse signals or through the user program.

You can control the counting processes with the digital inputs. In addition, you can read the signal state of the respective digital input via the feedback interface.

You can specify the counter characteristics using the functions described below.

Counting limits

The counting limits define the counter value range used. The counting limits are configurable and can be modified during runtime with the user program.

You can configure the behavior of the counter at the counting limits.

Start value

You can configure a start value within the counting limits. The start value can be modified during runtime with the user program.

Gate control

You can define the time window in which the count signals are acquired with the hardware gate (HW gate) and software gate (SW gate).

Capture (Latch)

You can configure an external reference signal edge that triggers the saving of the current counter value as Capture value. The following external signals can trigger the Capture function:

- Rising or falling edge of a digital input
- Both edges of a digital input
- Rising edge of the N signal at the encoder input

The "Frequency of Capture function" parameter specifies whether the function is executed at each configured edge or only once after each enable.

Measuring input

If you use Position input for Motion Control (Page 15), you can use the "Measuring input" technology object to execute a measuring input function with a hardware digital input.

Hardware interrupts

The technology module can trigger a hardware interrupt in the CPU, for example, if a comparison event occurs, in the event of overflow or underflow, in the event of a zero crossing of the counter and/or of a change of count direction (direction reversal). You can specify which events during operation are to trigger a hardware interrupt.

2.2.2 Measured value determination

The following high-accuracy measurement functions are available (accuracy up to 100 ppm):

- Frequency measurement with the unit of hertz
- Period measurement with the unit of seconds
- Velocity measurement with a flexibly adaptable unit

Update time

You can configure the interval at which the technology module updates the measured values cyclically as the update time.

Gate control

You can define the time window in which the count signals are acquired with the hardware gate (HW gate) and software gate (SW gate).

2.2.3 Switching the outputs at comparison values

The available digital outputs DQ0 and DQ1 can be directly activated/switched by the specified comparison values or via the user program. The comparison values are configurable and can be modified during runtime with the user program. This enables very fast reaction times to be achieved.

Comparison values in the Counting mode

You define two comparison values in the Counting mode. If the current counter value meets the configured comparison condition, the corresponding digital output can be set to directly initiate control processes in the process.

Comparison values in the Measuring mode

You define two comparison values in the Measuring mode. If the current measured value meets the configured comparison condition, the corresponding digital output can be set to directly initiate control processes in the process.

2.2.4 Position input for Motion Control

You can use the technology module for position detection for the following axis technology objects of S7-1500 Motion Control :

- TO_PositioningAxis
- TO_SynchronousAxis
- TO_ExternalEncoder

In this operating mode, you can use the measuring input technology object (TO_MeasuringInput) to execute a measuring input function with hardware digital input DI1.

Additional information

You can find a detailed description of the use of Motion Control and its configuration in the following:

- Function manual S7-1500 Motion Control available for download on the Internet (https://support.industry.siemens.com/cs/ww/en/view/59381279)
- Function manual S7-1500T Motion Control available for download on the Internet (https://support.industry.siemens.com/cs/ww/en/view/109481326)

2.2.5 Fast Mode

You can use the technology module in Fast Mode for very fast input of the counter value in case of compressed functionality. A reduced feedback interface but no control interface is available in Fast Mode. This allows you to use a shorter send clock for the CPU.

2.2.6 Additional functions

Synchronization

You can configure the edge of an external reference signal that loads the counter with the specified start value. The following external signals can trigger a synchronization:

- Rising or falling edge of a digital input
- Rising edge of signal N at the encoder input
- Rising edge of signal N at the encoder input depending on the level of the assigned digital input

The "Frequency of synchronization" parameter specifies whether the function is executed at each configured edge or only once after each enable.

Hysteresis

You can specify a hysteresis for the comparison values within which a digital output will be prevented from switching again.

Diagnostic interrupt

The technology module can trigger diagnostic interrupts. You enable the diagnostic interrupts in the device configuration.

Input filter

To suppress interference, you can configure an input filter for the 24 V encoder inputs and for the digital inputs.

Isochronous mode

The technology module supports the "Isochronous mode" system function. This system function enables counter values and measured values to be acquired in a defined system cycle.

Wiring

3

3.1 Pin assignment and block diagram

You connect the encoder signals, the digital input and output signals and the encoder supplies to the 40-pin front connector of the technology module. In addition, you connect the supply voltage for supplying the module and digital outputs and for producing the encoder supply voltages to the 4-pin power supply element.

You can find the pin assignment of the front connector and the power supply element in the following two sections.

You can find information on wiring the front connector, shielding the cable, etc., in system manual S7-1500 / ET 200MP Automation System (http://support.automation.siemens.com/WW/view/en/59191792), section Wiring.

Pin assignment for the power supply element

The power supply element is plugged onto the front connector and serves to supply the technology module. For this, you must connect the supply voltage to terminal 41 (L+) and terminal 44 (M). Use terminal 42 (L+) and terminal 43 (M) to loop the supply voltage through to the next module.

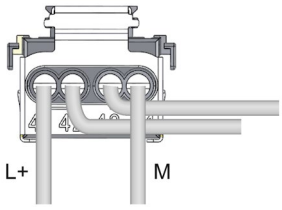

Figure 3-1 Connection of power supply element

L+	Supply voltage 24 V DC
M	Ground for supply voltage

An internal protective circuit protects the technology module from polarity reversal of the supply voltage. The technology module monitors the connection of the supply voltage.

Encoder supply

For supplying the encoders and sensors connected to the digital inputs, the technology module provides a 24 V DC supply voltage at output 24VDC (terminal 9) with reference to M (terminal 10). The voltage is monitored for short-circuit and overload.

Digital inputs DI0, DI1 and DI2

The digital inputs are used for gate control, synchronization and the Capture function.

The digital inputs of the two counter channels are not isolated from one another.

Input delay for digital inputs

In order to suppress signal noise you can configure an input delay for the digital inputs.

Note

If you select the "None" or "0.05 ms" option, you must use shielded cables for connection of the digital inputs.

Digital outputs DQ0 and DQ1

The digital outputs of the two counter channels are not isolated from one another.

The digital outputs are 24 V sourcing outputs in reference to M and can carry a rated load current of 0.5 A. They are protected against overload and short-circuit.

Relays and contactors can be directly connected without an external protective circuit. You can find information on the maximum possible operating frequencies and the inductance values of the inductive loads connected to the digital outputs in section Technical specifications (Page 77).

24 V encoder signals/count signals

The 24 V encoder signals are designated with the letters A, B and N. You can connect the following encoder types:

- Incremental encoder with N signal:

  The A, B and N signals are connected using the correspondingly marked terminals. The A and B signals are the two 90° phase-shifted incremental signals. N is the zero mark signal that supplies one pulse per revolution.

- Incremental encoder without N signal:

  The A and B signals are connected using the correspondingly marked terminals. The A and B signals are the two 90° phase-shifted incremental signals. The N terminal remains unconnected.

- Pulse encoder without direction signal:

  The counting signal is connected to the A terminal. The count direction can be specified via the control interface. The B and N terminals remain unconnected.

- Pulse encoder with direction signal:

  The counting signal is connected to the A terminal. The direction signal is connected to the B terminal. Counting down takes place at a high level of the direction signal. The N terminal remains unconnected.

- Pulse encoder with up/down counting signal:

  The up count signal is connected to the A terminal. The down counting signal is connected to the B terminal. The N terminal remains unconnected.

The inputs of the two counter channels are not isolated from each other. The inputs are isolated from the backplane bus.

You can connect the following encoders or sensors to the A, B and N inputs:

- Sourcing output:
  The A, B and N inputs are switched by the encoder or sensor to 24VDC .
- Sinking output:
  The A, B and N inputs are switched by the encoder or sensor to ground M .
- Push-pull:
  The A, B and N inputs are switched by the encoder or sensor alternately to 24VDC and ground M . Monitoring for wire break is possible with this type of encoder/sensor.

Pin assignment for the front connector

The table below shows the pin assignment of the front connector.

Table 3- 1 Pin assignment of the front connector

View	Signal name		Designation				
			24 V incremental encoder		24 V pulse encoder		
			with signal N	without signal N	with direction signal	without direction signal	Up/ Down
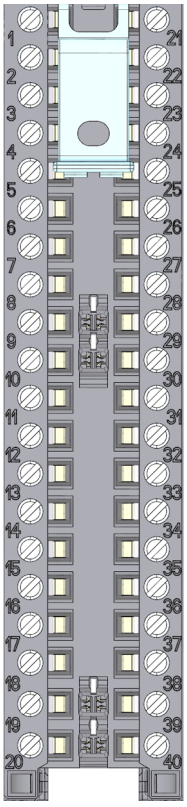	**Counter channel 0**						
	1	CH0.A	Encoder signal A		Counting signal A		Up counting signal A
	2	CH0.B	Encoder signal B		Direction signal B	—	Down counting signal B
	3	CH0.N	Encoder signal N	—			
	4	DI0.0	Digital input DI0				
	5	DI0.1	Digital input DI1				
	6	DI0.2	Digital input DI2				
	7	DQ0.0	Digital output DQ0				
	8	DQ0.1	Digital output DQ1				
	Encoder supply and ground of the two counter channels						
	9	24VDC	Encoder supply 24 V DC				
	10	M	Ground for encoder supply, digital inputs and digital outputs				
	Counter channel 1						
	11	CH1.A	Encoder signal A		Counting signal A		Up counting signal A
	12	CH1.B	Encoder signal B		Direction signal B	—	Down counting signal B
	13	CH1.N	Encoder signal N	—			
	14	DI1.0	Digital input DI0				
	15	DI1.1	Digital input DI1				
	16	DI1.2	Digital input DI2				
	17	DQ1.0	Digital output DQ0				
	18	DQ1.1	Digital output DQ1				
	19 - 40	—	—				

Block diagram

You must ground the shields of the cables between encoder and technology module both through the shield support at the front connector (shield bracket and terminal) and at the encoder.

The figure below shows the block diagram of the technology module with two connected incremental encoders.

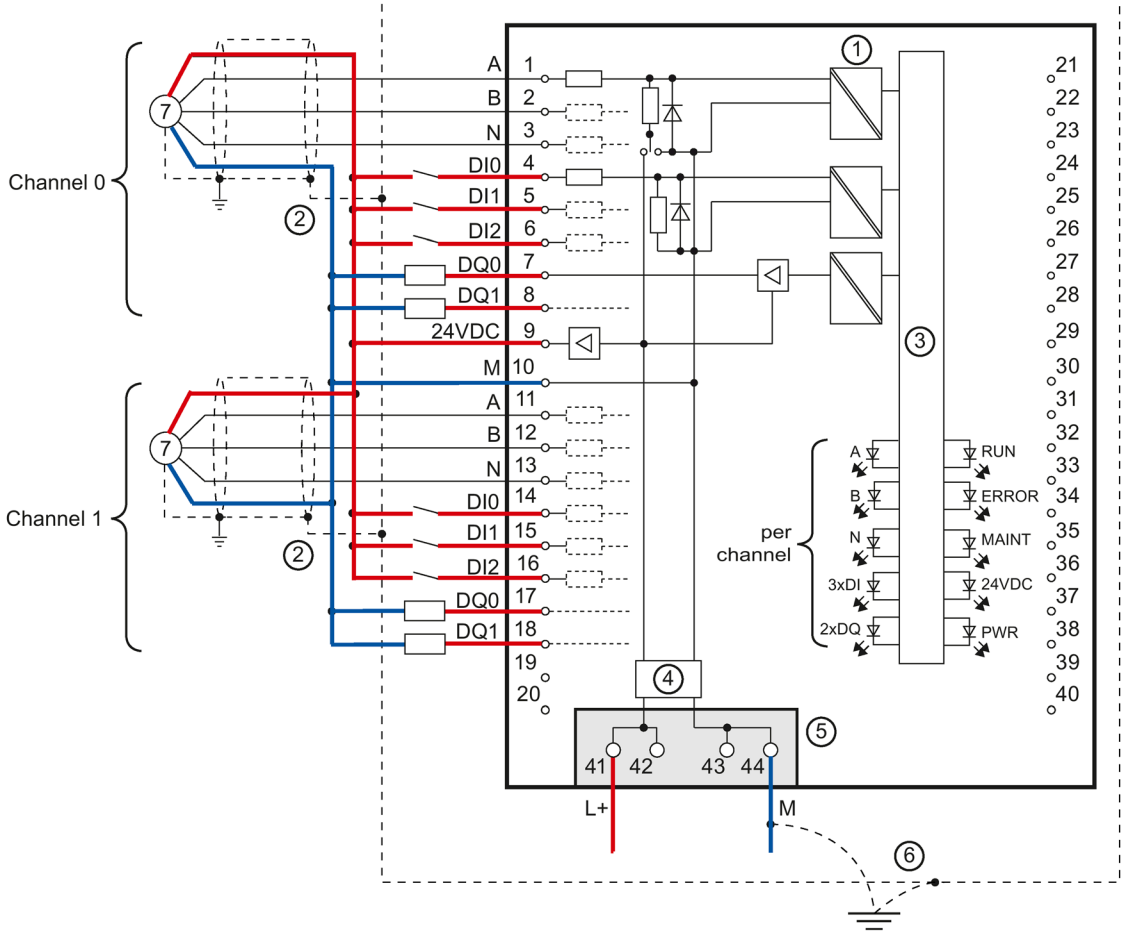

① Electrical isolation
② Shield support at the front connector
③ Technology and backplane bus interface
④ Input filter
⑤ Supply voltage via power supply element
⑥ Equipotential bonding
⑦ Incremental encoder

Figure 3-2 Block diagram with two incremental encoders

Configuring/address space

4

4.1 Operating with "Counting and measurement" technology object

4.1.1 Configuring

Introduction

You configure the technology module and assign its parameters with STEP 7 (TIA Portal).

The technology object is used to control and monitor the functions of the technology module.

System environment

The technology module can be used in the following system environments:

Applications	Components required	Configuration software	In the user program
Central operation with an S7-1500 CPU	• S7-1500 automation system • TM Count 2x24V	STEP 7 (TIA Portal): • Device configuration with hardware configuration • Parameter setting with High_Speed_Counter technology object	High_Speed_Counter instruction
Distributed operation with an S7-1500 CPU	• S7-1500 automation system • ET 200MP distributed I/O system • TM Count 2x24V		

Additional information

You can find a detailed description of the counting and measurement functions and their configuration in the following:

- Function manual Counting, Measurement and Position Detection available for download on the Internet (http://support.automation.siemens.com/WW/view/en/59709820)
- Information system of STEP 7 (TIA Portal) under "Using technology functions > Counting, measurement and position input > Counting, measurement and position input (S7-1500)"

Hardware Support Packages (HSP)

If you are using TIA Portal version V16, firmware versions ≤ V1.3 of the module (6ES7550-1AA00-0AB0) are integrated. You can configure the module with the article number 6ES7550-1AA01-0AB0 as replacement part compatible with firmware version V1.3. You integrate the firmware version V2.0 of the module (6ES7550-1AA01-0AB0) using HSP0332. Firmware version V2.0 of the module is integrated into the following TIA Portal versions.

You can find the Hardware Support Packages (HSP) for download on the Internet (https://support.industry.siemens.com/cs/ww/en/view/72341852).

You can also access this download from the menu bar of STEP 7 (TIA Portal): "Options > Support packages > Download from the Internet".

4.1.2 Reaction to CPU STOP

You set the reaction of the technology module to a STOP of the CPU on a channel-by-channel basis in the basic parameters of the device configuration.

Table 4- 1 Reaction of technology module to CPU STOP

Option	Meaning
Continue operation	The technology module remains fully functional. Incoming count pulses are processed. The digital outputs continue to switch according to the parameter assignment.
Output substitute value	The technology module outputs the configured substitute values at the digital outputs until the next CPU STOP-RUN transition. The technology module is returned to its startup state after a STOP-RUN transition: The counter value is set to the start value and the digital outputs switch according to the parameter assignment.
Keep last value	The technology module outputs the values at the digital outputs that were valid when the transition to STOP took place until the next CPU STOP-RUN transition. If a digital output with the "At comparison value for a pulse duration" function is set at CPU STOP, the digital output is reset after the pulse duration elapses. The technology module is returned to its startup state after a STOP-RUN transition: The counter value is set to the start value and the digital outputs switch according to the parameter assignment.

4.1.3 Parameter setting

You specify the properties of the technology module using various parameters. Depending on the settings, not all parameters are available. When parameters are assigned in the user program, the parameters are transferred to the module with the "WRREC" instruction and data record 128 (Page 87).

You set the parameters of the module as follows in this operating mode:

1. Insert the module from the hardware catalog under "Technology modules".
2. Set the mode "Operating with technology object "Counting and measurement"" and the further device configuration in the hardware configuration.
3. Insert the High_Speed_Counter technology object from the project tree in folder "Technology objects > Add new object > Counting and measurement".
   You can find information on configuring with a technology object in function manual Counting, measurement and position detection (http://support.automation.siemens.com/WW/view/en/59709820).
4. Open the configuration of the High_Speed_Counter technology object, e.g. using the Configuration button in the instruction for the technology object.
5. Set the parameters of the technology object.
6. Download the project to the CPU.

Note

The "Operating with "Counting and measurement" technology object" and "Manual operation (without technology object)" operating modes apply to one channel in each case. As a result, you can also use a module with both operating modes.

Parameters of the TM Count 2x24V

The following parameter settings are possible in the hardware configuration. The default settings of the parameters are shown in bold in the "Value range" column.

Table 4- 2 Settable parameters and their default setting

Parameter	Value range	Scope
Reaction to CPU STOP	• **Output substitute value** • Keep last value • Continue operation	Channel
Enable diagnostic interrupt on wire break	• **Deactivated** • Activated	Channel
Enable additional diagnostic interrupts	• **Deactivated** • Activated	Channel
Hardware interrupt: New Capture value available	• **Deactivated** • Activated	Channel
Hardware interrupt: Synchronization of the counter by an external signal	• **Deactivated** • Activated	Channel
Hardware interrupt: Gate start	• **Deactivated** • Activated	Channel
Hardware interrupt: Gate stop	• **Deactivated** • Activated	Channel
Hardware interrupt: Overflow (high counting limit violated)	• **Deactivated** • Activated	Channel
Hardware interrupt:Underflow (low counting limit violated)	• **Deactivated** • Activated	Channel
Hardware interrupt: Direction reversal	• **Deactivated** • Activated	Channel
Hardware interrupt: Zero crossing	• **Deactivated** • Activated	Channel
Hardware interrupt: Comparison event for DQ0 occurred	• **Deactivated** • Activated	Channel
Hardware interrupt: Comparison event for DQ1 occurred	• **Deactivated** • Activated	Channel

The following parameter settings are possible in the technology object:

Table 4- 3 Settable parameters and their default setting

Parameter	Value range	Scope
Signal type	• Pulse (A) • **Pulse (A) and direction (B)** • Count up (A), count down (B) • Incremental encoder (A, B phase-shifted) • Incremental encoder (A, B, N)	Channel
Signal evaluation for counter inputs	• **Single** • Double • Quadruple	Channel
Invert direction (counter inputs)	• **Deactivated** • Activated	Channel
Filter frequency for counter inputs	• 100 Hz • 200 Hz • 500 Hz • 1 kHz • 2 kHz • 5 kHz • 10 kHz • 20 kHz • 50 kHz • 100 kHz • **200 kHz**	Channel
Sensor type	• **Sourcing output** • Sinking output • Push-pull (sinking and sourcing output)	Channel
Reaction to signal N	• **No reaction to signal N** • Synchronization at signal N • Capture at signal N	Channel
Frequency of synchronization	• **Once** • Periodic	Channel
Frequency of Capture function	• Once • **Periodic**	Channel
Counting high limit	-2147483648...**2147483647**	Channel
Start value	-2147483648...**0**...2147483647	Channel
Counting low limit	**-2147483648**...2147483647	Channel

Parameter	Value range	Scope
Reaction to violation of a counting limit	• Stop counting • **Continue counting**	Channel
Reset when counting limit is violated	• **To opposite counting limit** • To start value	Channel
Reaction to gate start	• Set to start value • **Continue with current value**	Channel
Set function of DI	• Gate start/stop (level-triggered) • Gate start (edge-triggered) • Gate stop (edge-triggered) • Synchronization • Enable synchronization at signal N • Capture • **Digital input without function**	Channel
Input delay for digital inputs	• None • 0.05 ms • **0.1 ms** • 0.4 ms • 0.8 ms • 1.6 ms • 3.2 ms • 12.8 ms • 20 ms	Channel
Edge selection for DI	• **At rising edge** • At falling edge • At rising and falling edge	Channel
Select level for DI	• **Active with high level** • Active with low level	Channel
Behavior of counter value after Capture with DI	• **Continue counting** • Set to start value and continue counting	Channel
Comparison value 0	-2147483648...**0**...2147483647	Channel
Comparison value 1	-2147483648...**10**...2147483647	Channel
Operating mode	• **Use count value as reference** • Use measured value as reference	Channel

Parameter	Value range	Scope
Set output	• **Between comparison value and count high limit / measured value >= comparison value** • Between comparison value and low limit / measured value <= comparison value • Between comparison value 0 and 1 • Not between comparison values 0 and 1 • At comparison value for a pulse duration • After set command from CPU until comparison value • Use by user program	Channel
Count direction of DQ function	• Up • Down • **In both directions**	Channel
Pulse duration	0.0...**500.0**...6553.5 ms	Channel
Substitute value for DQ0	• **0** • 1	Channel
Substitute value for DQ1	• **0** • 1	Channel
Hysteresis (in increments)	**0**...255	Channel
Measured variable	• **Frequency** • Period • Velocity	Channel
Update time of the measuring function	0...**10**...25000 ms	Channel
Time base for velocity measurement	• 1 ms • 10 ms • 100 ms • 1 s • **60 s**	Channel
Increments per unit	**1**...65535	Channel

Explanation of parameters

You can find a detailed description of the parameters in function manual Counting, Measurement and Position Detection in sections Basic parameters and Configuring the High_Speed_Counter available for download on the Internet (http://support.automation.siemens.com/WW/view/en/59709820).

4.1.4 Address space

Address space of the technology module

Table 4- 4 Size of input and output addresses of the TM Count 2x24V when operating with "Counting and measurement" technology object

	Inputs	Outputs
Size per counting channel	16 bytes	12 bytes
Total size	32 bytes	24 bytes

The control and feedback interface is compatible with manual operation (Page 37) and is operated by the instruction High_Speed_Counter.

4.1.5 Isochronous mode

The technology module supports the "Isochronous mode" system function. This system function enables counter values and measured values to be acquired in a defined system cycle.

In isochronous mode, the cycle of the user program, the transmission of the input signals and processing in the technology module are synchronized. The output signals switch immediately if the relevant comparison condition is met. A change in the state of a digital input immediately affects the planned reaction of the technology module.

For clock synchronization in this operating mode, use an OB of the type "Synchronous Cycle" (such as OB61). The High_Speed_Counter instruction is called in the assigned OB.

The update time for the measured value is synchronized with the system cycle in a suitable ratio and, if necessary, adapted in length. If you set "0", the measured value is updated once per system cycle.

Data processing

The data that was transmitted to the technology module in the current bus cycle via the control interface takes effect when it is processed in the internal technology module cycle. At the time the input data is read in (T_i), the counter value and the measured value as well as status bits are acquired and made available in the feedback interface for retrieval in the current bus cycle.

Isochronous mode parameters

In isochronous mode, the "Filter frequency" parameter can affect the isochronous mode parameters of the sync domain.

Because the isochronous parameters are not checked in RUN, changing the parameter in RUN can result in the technology module no longer processing the control and feedback interface correctly. You prevent this by selecting the option with the greatest time demand as early as during the offline parameter assignment.

Additional information

You can find a detailed description of isochronous mode in the following:

- In the Isochronous mode function manual as a download from the Internet (https://support.industry.siemens.com/cs/ww/en/view/109755401).
- Function manual PROFINET with STEP 7 available for download on the Internet (https://support.industry.siemens.com/cs/ww/en/view/49948856)

4.2 Position input for "Motion Control" technology object

4.2.1 Configuring

Introduction

You configure the technology module and assign its parameters with STEP 7 (TIA Portal).

The technology object is used to control and monitor the functions of the technology module.

System environment

The technology module can be used in the following system environments:

Applications	Components required	Configuration software	In the user program
Central operation with an S7-1500 CPU	• S7-1500 automation system • TM Count 2x24V	STEP 7 (TIA Portal): • Device configuration with hardware configuration • Parameter setting with axis and measuring input technology objects	Motion Control instructions
Distributed operation with an S7-1500 CPU	• S7-1500 automation system • ET 200MP distributed I/O system • TM Count 2x24V		

Additional information

You can find a detailed description of the use of Motion Control and its configuration in the following:

- Function manual S7-1500 Motion Control available for download on the Internet (https://support.industry.siemens.com/cs/ww/en/view/59381279)
- Function manual S7-1500T Motion Control available for download on the Internet (https://support.industry.siemens.com/cs/ww/en/view/109481326)
- Information system of STEP 7 (TIA Portal) under "Using technology functions > Motion Control > Motion Control (S7-1200, S7-1500)"

You can find a description of configuring the technology module for position detection in the following:

- Function manual Counting, Measurement and Position Detection available for download on the Internet (http://support.automation.siemens.com/WW/view/en/59709820)
- Information system of STEP 7 (TIA Portal) under "Using technology functions > Counting, measurement and position input > Counting, measurement and position input (S7-1500)"

Hardware Support Packages (HSP)

When you are using TIA Portal version V16, firmware versions ≤ V1.3 of the module (6ES7550-1AA00-0AB0) are integrated. You can configure the module with the article number 6ES7550-1AA01-0AB0 as replacement part compatible with firmware version V1.3. You integrate the firmware version V2.0 of the module (6ES7550-1AA01-0AB0) using HSP0332. Firmware version V2.0 of the module is integrated into the following TIA Portal versions.

You can find the Hardware Support Packages (HSP) for download on the Internet (https://support.industry.siemens.com/cs/ww/en/view/72341852).

You can also access this download from the menu bar of STEP 7 (TIA Portal): "Options > Support packages > Download from the Internet".

4.2.2 Parameter setting

You specify the properties of the technology module using various parameters. Depending on the settings, not all parameters are available.

You set the parameters of the module as follows in this operating mode:

1. Insert the module from the hardware catalog under "Technology modules".
2. Set the mode "Position detection for technology object "Motion Control"" and the other module parameters in the hardware configuration.
3. Insert the axis technology object and, if necessary, the measuring input technology object from the project tree in folder "Technology objects > Add new object > Motion Control". You can find information on configuring with axis technology objects in function manual S7-1500T Motion Control (https://support.industry.siemens.com/cs/ww/en/view/109481326).
4. Open the configuration of the axis technology object, e.g. using the Configuration button in the respective instruction for the technology object.
5. Set the parameters of the technology objects.
6. Download the project to the CPU.

Note

This operating mode applies automatically to both channels of the technology module.

Parameters of the TM Count 2x24V

The following parameter settings are possible. The default settings of the parameters are shown in bold in the "Value range" column.

Table 4- 5 Programmable parameters

Parameter	Value range	Scope
Signal type	• Pulse (A) • Pulse (A) and direction (B) • Count up (A), count down (B) • Incremental encoder (A, B phase-shifted) • **Incremental encoder (A, B, N)**	Channel
Invert direction (counter inputs)	• **Deactivated** • Activated	Channel
Signal evaluation for counter inputs	• **Single** • Double • Quadruple	Channel

Parameter	Value range	Scope
Filter frequency for counter inputs	• 100 Hz • 200 Hz • 500 Hz • 1 kHz • 2 kHz • 5 kHz • 10 kHz • 20 kHz • 50 kHz • 100 kHz • **200 kHz**	Channel
Sensor type	• **Sourcing output** • Sinking output • Push-pull (sinking and sourcing output)	Channel
Signal selection for reference mark 0	• DI0 • **Signal N of incremental encoder**	Channel
Measuring input	**DI1**	Channel
Encoder type	• Linear • **Rotary**	Channel
Increments per revolution / steps per revolution	**1**...65535	Channel
Reference speed	6.00...**3000.00**...210000.00 U/min	Channel
Distance between increments	1...**16000**...25000000 nm	Channel
Fine-resolution increment distance	is calculated automatically (read-only)	Channel
Reference velocity	0,60...**16,00**...600,00 m/min	Channel
Enable diagnostic interrupt on wire break	• **Deactivated** • Activated	Channel
Enable additional diagnostic interrupts	• **Deactivated** • Activated	Channel

Explanation of parameters

You can find a detailed description of the parameters in function manual Counting, Measurement and Position Detection, section Module parameters (position input for Motion Control) available for download on the Internet (http://support.automation.siemens.com/WW/view/en/59709820).

4.2.3 Address space

Address space of the technology module

Table 4- 6 Size of input and output addresses of the TM Count 2x24V with position input for "Motion Control" technology object

	Inputs	Outputs
Size per counting channel	16 bytes	4 bytes
Total size	32 bytes	8 bytes

4.2.4 Control interface and feedback interface

4.2.4.1 Assignment of the control interface

The control interface is reserved for Motion Control instructions.

4.2.4.2 Assignment of the feedback interface

The feedback interface is reserved for Motion Control instructions with the exception of status information via the digital inputs.

Byte offset relative to start address Channel 0/1 ↓ ↓		Bit 7	Bit 6	Bit 5	Bit 4	Bit 3	Bit 2	Bit 1	Bit 0
0	16	Reserved				STS_DI0	STS_DI1	Reserved	STS_DI2
1 ... 15	17 ... 31	Reserved							

4.2.5 Isochronous mode

The technology module supports the "Isochronous mode" system function. Counter values can be acquired in a fixed system cycle with this system function.

In isochronous mode, the cycle of the user program, the transmission of the input signals and processing in the technology module are synchronized. A change in the state of a digital input immediately affects the planned reaction of the technology module.

For clock synchronization in this operating mode, use an OB of type "MC-Servo". Isochronous mode is needed when using the output cam and cam track technology objects. When the measuring input technology is used in combination with hardware digital input DI1, isochronous mode is not needed.

Data processing

The data that was transmitted to the technology module in the current bus cycle via the control interface takes effect when it is processed in the internal technology module cycle. At the time the input data is read in (T_i), the counter value and the status bits are acquired and made available in the feedback interface for retrieval in the current bus cycle.

Isochronous mode parameters

In isochronous mode, the "Filter frequency" parameter can affect the isochronous mode parameters of the sync domain.

Because the isochronous parameters are not checked in RUN, changing the parameter in RUN can result in the technology module no longer processing the control and feedback interface correctly. You prevent this by selecting the option with the greatest time demand as early as during the offline parameter assignment.

Additional information

You can find a detailed description of isochronous mode in the following:

- In the Isochronous mode function manual as a download from the Internet (https://support.industry.siemens.com/cs/ww/en/view/109755401).
- Function manual PROFINET with STEP 7 available for download on the Internet (https://support.industry.siemens.com/cs/ww/en/view/49948856)

4.3 Manual operation (without technology object)

4.3.1 Configuring

Introduction

You configure the technology module and assign its parameters with the configuration software.

The functions of the technology module are controlled and checked by the user program via the control and feedback interface.

System environment

The technology module can be used in the following system environments:

Applications	Components required	Configuration software	In the user program
Central operation with an S7-1500 CPU	• S7-1500 automation system • TM Count 2x24V	STEP 7 (TIA Portal): • Device configuration and parameter setting with hardware configuration	Direct access to control and feedback interface in the I/O data
Distributed operation with an S7-1500 CPU	• S7-1500 automation system • ET 200MP distributed I/O system • TM Count 2x24V	STEP 7 (TIA Portal): • Device configuration and parameter setting with hardware configuration	
Distributed operation with an S7-1200 CPU	• S7-1200 automation system • ET 200MP distributed I/O system • TM Count 2x24V	STEP 7 (TIA Portal): Device configuration and parameter setting with hardware configuration	
Distributed operation with an S7-300/400 CPU	• S7-300/400 automation system • ET 200MP distributed I/O system • TM Count 2x24V	STEP 7 (TIA Portal): Device configuration and parameter setting with hardware configuration STEP 7: Device configuration and parameter setting with GSD file	
Distributed operation in a third-party system	• Third-party automation system • ET 200MP distributed I/O system • TM Count 2x24V	Third-party configuration software: Device configuration and parameter setting with GSD file	

Additional information

You can find a detailed description of the counting and measurement functions and their configuration in the following:

- Function manual Counting, Measurement and Position Detection available for download on the Internet (http://support.automation.siemens.com/WW/view/en/59709820)
- Information system of STEP 7 (TIA Portal) under "Using technology functions > Counting, measurement and position input > Counting, measurement and position input (S7-1500)"

Hardware Support Packages (HSP)

If you are using TIA Portal version V16, firmware versions ≤ V1.3 of the module (6ES7550-1AA00-0AB0) are integrated. You can configure the module with the article number 6ES7550-1AA01-0AB0 as replacement part compatible with firmware version V1.3. You integrate the firmware version V2.0 of the module (6ES7550-1AA01-0AB0) using HSP0332. Firmware version V2.0 of the module is integrated into the following TIA Portal versions.

You can find the Hardware Support Packages (HSP) for download on the Internet (https://support.industry.siemens.com/cs/ww/en/view/72341852).

You can also access this download from the menu bar of STEP 7 (TIA Portal): "Options > Support packages > Download from the Internet".

GSD file

You can find the respective GSD file for the ET 200SP distributed I/O system for download on the Internet:

- GSD file for PROFINET IO (http://support.automation.siemens.com/WW/view/en/68189683)
- GSD file for PROFIBUS DP (http://support.automation.siemens.com/WW/view/en/80206700)

4.3.2 Reaction to CPU STOP

You set the reaction of the technology module to a STOP of the CPU on a channel-by-channel basis in the basic parameters of the device configuration.

Table 4- 7 Reaction of technology module to CPU STOP

Option	Meaning
Continue operation	The technology module remains fully functional. Incoming count pulses are processed. The digital outputs continue to switch according to the parameter assignment.
Output substitute value	The technology module outputs the configured substitute values at the digital outputs until the next CPU STOP-RUN transition. The technology module is returned to its startup state after a STOP-RUN transition: The counter value is set to the start value and the digital outputs switch according to the parameter assignment.
Keep last value	The technology module outputs the values at the digital outputs that were valid when the transition to STOP took place until the next CPU STOP-RUN transition. If a digital output with the "At comparison value for a pulse duration" function is set at CPU STOP, the digital output is reset after the pulse duration elapses. The technology module is returned to its startup state after a STOP-RUN transition: The counter value is set to the start value and the digital outputs switch according to the parameter assignment.

4.3.3 Parameter setting

You specify the properties of the technology module using various parameters. Depending on the settings, not all parameters are available. When parameters are assigned in the user program, the parameters are transferred to the module with the "WRREC" instruction and data record 128 (Page 87).

You set the parameters of the module as follows in this operating mode:

Parameter setting using...	Basic procedure
Hardware configuration in STEP 7 (TIA Portal)	1. Insert the module from the hardware catalog under "Technology modules". 2. Set the device configuration and the parameters of the module in the hardware configuration. "Manual operation (without technology object)" must be set as the operating mode. 3. Download the project to the CPU.
Hardware configuration with GSD file for distributed operation on PROFINET IO	1. Install the current PROFINET GSD file. You will then find the module in the hardware catalog under "Other field devices > PROFINET IO > I/O". 2. Set the parameters in the hardware configuration. You can find information on the respective dependencies of the parameters in function manual Counting, Measurement and Position Detection (http://support.automation.siemens.com/WW/view/en/59709820). 3. Download the project to the CPU.
Hardware configuration with GSD file for distributed operation on PROFIBUS DP	1. Install the current PROFIBUS GSD file. You will then find the module in the hardware catalog under "Other field devices > PROFIBUS DP > I/O". 2. Set the parameters in the hardware configuration. You can find information on the respective dependencies of the parameters in function manual Counting, Measurement and Position Detection (http://support.automation.siemens.com/WW/view/en/59709820). The parameters marked with [1] in the following tables are not configurable in the PROFIBUS GSD file. 3. Download the project to the CPU. The parameters marked with [1] in the following tables are downloaded with their default setting. 4. If necessary, set the parameters marked with [1] in the user program using data record 128.

Note

The "Operating with "Counting and measurement" technology object" and "Manual operation (without technology object)" operating modes apply to one channel in each case. As a result, you can also use a module with both operating modes.

Parameters of the TM Count 2x24V

The following parameter settings are possible:

Table 4- 8 Settable parameters and their default setting

Parameter	Value range	Scope
Operating mode[3]	• **Counting** • Measuring	Channel
Reaction to CPU STOP[1]	• **Output substitute value** • Keep last value • Continue operation	Channel
Substitute value for DQ0[1]	• **0** • 1	Channel
Substitute value for DQ1[1]	• **0** • 1	Channel
Enable diagnostic interrupt on wire break[2]	• **Deactivated** • Activated	Channel
Enable additional diagnostic interrupts	• **Deactivated** • Activated	Channel
Hardware interrupt: New Capture value available[1]	• **Deactivated** • Activated	Channel
Hardware interrupt: Synchronization of the counter by an external signal[1]	• **Deactivated** • Activated	Channel
Hardware interrupt: Gate start[1]	• **Deactivated** • Activated	Channel
Hardware interrupt: Gate stop[1]	• **Deactivated** • Activated	Channel
Hardware interrupt: Overflow (high counting limit violated)[1]	• **Deactivated** • Activated	Channel
Hardware interrupt:Underflow (low counting limit violated)[1]	• **Deactivated** • Activated	Channel
Hardware interrupt: Direction reversal[1]	• **Deactivated** • Activated	Channel
Hardware interrupt: Zero crossing[1]	• **Deactivated** • Activated	Channel
Hardware interrupt: Comparison event for DQ0 occurred[1]	• **Deactivated** • Activated	Channel

Parameter	Value range	Scope
Hardware interrupt: Comparison event for DQ1 occurred[1]	• **Deactivated** • Activated	Channel
Signal type	• Pulse (A) • **Pulse (A) and direction (B)** • Count up (A), count down (B) • Incremental encoder (A, B phase-shifted) • Incremental encoder (A, B, N)	Channel
Invert direction (counter inputs)[1]	• **Deactivated** • Activated	Channel
Signal evaluation for counter inputs	• **Single** • Double • Quadruple	Channel
Filter frequency for counter inputs[1]	• 100 Hz • 200 Hz • 500 Hz • 1 kHz • 2 kHz • 5 kHz • 10 kHz • 20 kHz • 50 kHz • 100 kHz • **200 kHz**	Channel
Sensor type	• **Sourcing output** • Sinking output • Push-pull (sinking and sourcing output)	Channel
Reaction to signal N[1]	• **No reaction to signal N** • Synchronization at signal N • Capture at signal N	Channel
Frequency of synchronization[1]	• **Once** • Periodic	Channel
Frequency of Capture function[1]	• Once • **Periodic**	Channel
High counting limit[1]	-2147483648...**2147483647**	Channel
Start value[1]	-2147483648...**0**...2147483647	Channel
Counting low limit[1]	**-2147483648**...2147483647	Channel

Parameter	Value range	Scope
Reaction to violation of a counting limit	• Stop counting • **Continue counting**	Channel
Reset when counting limit is violated	• **To opposite counting limit** • To start value	Channel
Reaction to gate start	• Set to start value • **Continue with current value**	Channel
Set function of DI	• Gate start/stop (level-triggered) • Gate start (edge-triggered) • Gate stop (edge-triggered) • Synchronization • Enable synchronization at signal N • Capture • **Digital input without function**	Channel
Select level for DI[1]	• **Active with high level** • Active with low level	Channel
Edge selection for DI[1]	• **At rising edge** • At falling edge • At rising and falling edge	Channel
Behavior of counter value after Capture with DI [1]	• **Continue counting** • Set to start value and continue counting	Channel
Input delay for digital inputs[1]	• None • 0.05 ms • **0.1 ms** • 0.4 ms • 0.8 ms • 1.6 ms • 3.2 ms • 12.8 ms • 20 ms	Channel

Parameter	Value range	Scope
Set output	• **Between comparison value and count high limit / measured value >= comparison value** • Between comparison value and low limit / measured value <= comparison value • At comparison value for a pulse duration • After set command from CPU until comparison value • Between comparison value 0 and 1 • Not between comparison value 0 and 1 • Use by user program	Channel
Comparison value 0[1]	-2147483648...**0**...2147483647	Channel
Comparison value 1[1]	-2147483648...**10**...2147483647	Channel
Count direction of DQ function[1]	• Up • Down • **In both directions**	Channel
Pulse duration[1]	0.1...**500.0**...6553.5 ms	Channel
Hysteresis (in increments)[1]	**0**...255	Channel
Measured variable	• **Frequency** • Period • Velocity	Channel
Update time of the measuring function[1]	0...**10**...25000 ms	Channel
Time base for velocity measurement[1]	• 1 ms • 10 ms • 100 ms • 1 s • **60 s**	Channel
Increments per unit[1]	**1**...65535	Channel

[1] Because the number of parameters is limited to a maximum of 244 bytes per station in the PROFIBUS GSD configuration, the possible parameter assignments are limited. The parameters are preassigned default settings in the module. If your PROFIBUS master supports the "Write/read data record" function, you can set these parameters using data record 128.

[2] When a GSD file is used, this diagnostic interrupt is enabled with the "Enable additional diagnostic interrupts" parameter and is then not separately configurable.

[3] When configuring with a GSD file, you determine the operating mode when you select the module name.

Explanation of parameters

You can find a detailed description of the parameters in function manual Counting, Measurement and Position Detection, sections Basic parameters and Manual operation available for download on the Internet (http://support.automation.siemens.com/WW/view/en/59709820).

4.3.4 Address space

Address space of the technology module

Table 4- 9 Size of input and output addresses of the TM Count 2x24V with manual operation

	Inputs	Outputs
Size per counting channel	16 bytes	12 bytes
Total size	32 bytes	24 bytes

4.3.5 Control and feedback interface

Note

The control and feedback interface is compatible with the control and feedback interface of the TM Count 1x24V, TM PosInput 2 and TM PosInput 1 technology modules of the S7-1500 automation system.

4.3.5.1 Assignment of the control interface

The user program uses the control interface to influence the behavior of the technology module.

Control interface per channel

The following table shows the assignment of the control interface:

Byte offset from start address Channel 0/1 ↓ ↓		Bit 7	Bit 6	Bit 5	Bit 4	Bit 3	Bit 2	Bit 1	Bit 0
0 … 3	12 … 15	SLOT_0: DINT or REAL: Load value (meaning of the value is specified in LD_SLOT_0) Value range: –2147483648 to 2147483647D or 80000000 to 7FFFFFFFH							
4 … 7	16 … 19	SLOT_1: DINT or REAL: Load value (meaning of the value is specified in LD_SLOT_1) Value range: –2147483648 to 2147483647D or 80000000 to 7FFFFFFFH							

Byte offset from start address Channel 0/1 ↓ ↓		Bit 7	Bit 6	Bit 5	Bit 4	Bit 3	Bit 2	Bit 1	Bit 0
8	20	LD_SLOT_1				LD_SLOT_0			
9	21	EN_ CAPTURE	EN_ SYNC_DN	EN_ SYNC_UP	SET_DQ1	SET_DQ0	TM_ CTRL_DQ1	TM_ CTRL_DQ0	SW_GATE
10	22	SET_DIR	Reserved					RES_ EVENT	RES_ ERROR
11	23	Reserved							

Explanations

Control bit/value	Explanations
SLOT_m	You specify the load value with this value. You specify the meaning of the value in LD_SLOT_m. If you want to load a comparison value in the "Measuring" operating mode, specify the load value as floating-point number (REAL). In all other cases, you specify the load value as an integer (DINT). Value range: –2147483648 to 2147483647_D or 80000000 to $7FFFFFFF_H$
LD_SLOT_m	Use this load request to specify the meaning of the value in SLOT_m: • 0000_B means: No action, idle • 0001_B means: Load counter value • 0010_B not permitted • 0011_B means: Load start value • 0100_B means: Load comparison value 0 • 0101_B means: Load comparison value 1 • 0110_B means: Load counting low limit • 0111_B means: Load counting high limit • 1000 to 1111_B not permitted The technology module executes the respective action as soon as LD_SLOT_m changes. If values are loaded simultaneously using LD_SLOT_0 and LD_SLOT_1, the value from SLOT_0 is internally applied first and then the value from SLOT_1 . This can produce unexpected intermediate states.
EN_CAPTURE	Use this bit to enable the Capture function. Resetting this bit resets a set EVENT_CAP in the feedback interface.
EN_SYNC_DN	Use this bit to enable the synchronization of the counter when counting down with an incremental encoder or pulse encoder. Resetting this bit resets a set EVENT_SYNC in the feedback interface.
EN_SYNC_UP	Use this bit to enable the synchronization of the counter when counting up with an incremental encoder or pulse encoder. Resetting this bit resets a set EVENT_SYNC in the feedback interface.
SET_DQ0	Use this bit to set digital output DQ0 when TM_CTRL_DQ0 is set to 0. In the case of the function "After set command from CPU until comparison value", SET_DQ0 is effective regardless of TM_CTRL_DQ0 as long as the counter value is not equal to the comparison value.
SET_DQ1	Use this bit to set digital output DQ1 when TM_CTRL_DQ1 is set to 0. In the case of the function "After set command from CPU until comparison value", SET_DQ1 is effective regardless of TM_CTRL_DQ1 as long as the counter value is not equal to the comparison value.
TM_CTRL_DQ0	Use this bit to enable the technological function of digital output DQ0. • 0 means: SET_DQ0 defines the state of DQ0 • 1 means: assigned function defines the state of DQ0
TM_CTRL_DQ1	Use this bit to enable the technological function of digital output DQ1. • 0 means: SET_DQ1 defines the state of DQ1 • 1 means: assigned function defines the state of DQ1

Control bit/value	Explanations
SW_GATE	Use this bit to open and close the software gate when using an incremental encoder or pulse encoder. Together, the software gate and the hardware gate form the internal gate. The technology module only counts when the internal gate is open. • 0 means: Software gate closed • 1 means: Software gate open The digital inputs of the technology module externally control the hardware gate. The hardware gate can be activated by parameter assignment. The software gate cannot be deactivated.
SET_DIR	Use this bit to specify the count direction for signal type "Pulse (A)". • 0 means: Up • 1 means: Down
RES_EVENT	Use this bit to trigger the reset of the saved events in the EVENT_ZERO, EVENT_OFLW, EVENT_UFLW, EVENT_CMP0, EVENT_CMP1 feedback bits.
RES_ERROR	Use this bit to trigger the reset of the saved error states LD_ERROR and ENC_ERROR .
Reserved	Reserved bits must be set to 0.

4.3.5.2 Assignment of the feedback interface

The user program receives current values and status information from the technology module by means of the feedback interface.

Feedback interface per channel

The following table shows the assignment of the feedback interface:

Byte offset from start address Channel 0/1 ↓ ↓		Bit 7	Bit 6	Bit 5	Bit 4	Bit 3	Bit 2	Bit 1	Bit 0
0 … 3	16 … 19	COUNT_VALUE: DINT: Current counter value							
4 … 7	20 … 23	CAPTURED_VALUE: DINT: The last acquired Capture value							
8 … 11	24 … 27	MEASURED_VALUE: REAL: Current measured value							
12	28	Reserved					LD_ERROR	ENC_ ERROR	POWER_ ERROR
13	29	Reserved		STS_ SW_GATE	STS_ READY	LD_STS_ SLOT_1	LD_STS_SLO T_0	RES_EVENT_ ACK	Reserved
14	30	STS_DI2	STS_DI1	STS_DI0	STS_DQ1	STS_DQ0	STS_GATE	STS_CNT	STS_DIR
15	31	STS_M_ INTERVAL	EVENT_ CAP	EVENT_ SYNC	EVENT_ CMP1	EVENT_ CMP0	EVENT_ OFLW	EVENT_ UFLW	EVENT_ ZERO

Explanations

Feedback bit/value	Explanations
CAPTURED_VALUE	This DINT value indicates the last acquired Capture value. The following external signals can trigger the Capture function: • Rising or falling edge of a digital input • Both edges of a digital input The "Frequency of Capture function" parameter specifies whether the function is executed at each configured edge or only once after each enable.
COUNT_VALUE	This DINT value indicates the current counter value.
MEASURED_VALUE	This value indicates the current measured value with data type REAL: • Frequency: The mean frequency is calculated from the time profile of the count pulses or position value changes in one measurement interval and returned as a floating-point number in the unit of hertz. • Period: The mean period is calculated from the time profile of the count pulses or position value changes in one measurement interval and returned as a floating-point number in the unit of seconds. • Velocity: The mean velocity is calculated from the time profile of the count pulses or position value changes in one measurement interval and returned as a floating-point number in the configured unit. The measured values are returned as a signed value. The sign indicates whether the counter value went up or down in the relevant time interval. The update time is asynchronous to the opening of the internal gate, i.e. the update time is not started when the gate opens. After the internal gate closes, the last calculated measured value continues to be returned.
LD_ERROR	This bit indicates that an error occurred (latching) during loading via the control interface. The loaded values were not applied. When using an incremental or pulse encoder, one of the following conditions is not fulfilled: • Low counting limit <= counter value <= high counting limit • Low counting limit <= start value <= high counting limit • Low counting limit <= comparison value 0/1 <= high counting limit The bit is reset once you have acknowledged the error with RES_ERROR .
ENC_ERROR	This bit indicates that one of the following errors has occurred at the encoder signals (retentive) for the respective technology module: • Wire break of digital input A, B or N (with push-pull encoder) • Invalid transition of A/B signals (with incremental encoder) If you have enabled the diagnostic interrupts, the respective diagnostic interrupt is triggered in the event of encoder signal errors. For information on the meaning of the diagnostic interrupts, refer to the manual for the respective technology module. The bit is reset once you have acknowledged the error with RES_ERROR .
POWER_ERROR	This bit indicates that supply voltage L+ is not present or is too low or the front connector is not inserted. If you have enabled the diagnostic interrupts (Page 72), the diagnostics interrupt "Supply voltage missing" is triggered at a supply voltage error. When supply voltage L+ is available at a sufficient level once again, POWER_ERROR is automatically set to 0.
STS_SW_GATE	This bit indicates the status of the software gate. • 0 means: Gate closed • 1 means: Gate open

Feedback bit/value	Explanations
STS_READY	This bit indicates that the technology module supplies valid user data. The technology module has been started up and configured.
LD_STS_SLOT_0	This bit indicates by a status change (toggling) that the load request for SLOT_0 (LD_SLOT_0) was detected and performed.
LD_STS_SLOT_1	This bit indicates by a status change (toggling) that the load request for SLOT_1 (LD_SLOT_1) was detected and performed.
RES_EVENT_ACK	This bit indicates that the reset of event bit EVENT_SYNC, EVENT_CMP0, EVENT_CMP1, EVENT_OFLW, EVENT_UFLW, EVENT_ZERO is active.
STS_DI0	This bit indicates the status of digital input DI0.
STS_DI1	This bit indicates the status of digital input DI1.
STS_DI2	This bit indicates the status of digital input DI2.
STS_DQ0	This bit indicates the status of digital output DQ0.
STS_DQ1	This bit indicates the status of digital output DQ1.
STS_GATE	This bit indicates the status of the internal gate when using an incremental or pulse encoder. • 0 means: Gate closed • 1 means: Gate open
STS_CNT	This bit indicates that at least one count pulse or a position value change has been detected in the last approx. 0.5 s.
STS_DIR	This bit indicates the count direction of the last count pulse or the direction of the last position value change. • 0 means: Down • 1 means: Up
STS_M_INTERVAL	This bit indicates that at least one count pulse or a position value change was detected in the previous measurement interval.
EVENT_CAP	This bit indicates that a Capture event has occurred and a counter value has been saved in CAPTURED_VALUE . You reset the state by resetting EN_CAPTURE .
EVENT_SYNC	This bit indicates the saved state that the counter was loaded with the start value by an external reference signal (synchronization) when using an incremental or pulse encoder. You reset the state by resetting EN_SYNC_UP or EN_SYNC_DN .
EVENT_CMP0	This bit indicates the saved state that a comparison event (state change) has occurred for the digital output DQ0 based on the selected comparison condition. You reset the state by acknowledgment with RES_EVENT. If the counter value is set to the start value in counting operating mode, EVENT_CMP0 is not set.
EVENT_CMP1	This bit indicates the saved state that a comparison event (state change) has occurred for the digital output DQ1 based on the selected comparison condition. You reset the state by acknowledgment with RES_EVENT. If the counter value is set to the start value in counting operating mode, EVENT_CMP1 is not set.
EVENT_OFLW	This bit indicates the saved state which shows that there was a counter value overflow. You reset the state by acknowledgment with RES_EVENT.
EVENT_UFLW	This bit indicates the saved state which shows that there was a counter value underflow. You reset the state by acknowledgment with RES_EVENT.
EVENT_ZERO	This bit indicates the saved state that the counter value or position value experienced a zero crossing. You reset the state by acknowledgment with RES_EVENT. If the "Zero crossing" hardware interrupt is enabled, it can also be triggered by the system if "0" is outside the configured value range.
Reserved	Reserved bits are set to 0.

4.3.6 Isochronous mode

The technology module supports the "Isochronous mode" system function. This system function enables counter values and measured values to be acquired in a defined system cycle.

In isochronous mode, the cycle of the user program, the transmission of the input signals and processing in the technology module are synchronized. The output signals switch immediately if the relevant comparison condition is met. A change in the state of a digital input immediately affects the planned reaction of the technology module.

For clock synchronization in this operating mode, use an OB of the type "Synchronous Cycle" (such as OB61). The input and output data are processed in the assigned OB.

The update time for the measured value is synchronized with the system cycle in a suitable ratio and, if necessary, adapted in length. If you set "0", the measured value is updated once per system cycle.

Data processing

The data that was transmitted to the technology module in the current bus cycle via the control interface takes effect when it is processed in the internal technology module cycle. At the time the input data is read in (T_i), the counter value and the measured value as well as status bits are acquired and made available in the feedback interface for retrieval in the current bus cycle.

Isochronous mode parameters

In isochronous mode, the "Filter frequency" parameter can affect the isochronous mode parameters of the sync domain.

Because the isochronous parameters are not checked in RUN, changing the parameter in RUN can result in the technology module no longer processing the control and feedback interface correctly. You prevent this by selecting the option with the greatest time demand as early as during the offline parameter assignment.

Additional information

You can find a detailed description of isochronous mode in the following:

- In the Isochronous mode function manual as a download from the Internet (https://support.industry.siemens.com/cs/ww/en/view/109755401).
- Function manual PROFINET with STEP 7 available for download on the Internet (https://support.industry.siemens.com/cs/ww/en/view/49948856)

4.4 Fast Mode

You can use the technology module in Fast Mode for very fast acquisition of the counter value with compressed functionality. A reduced feedback interface but no control interface is available in Fast Mode. This allows you to use a shorter send clock for the CPU.

The range of functions of the technology module has the following limitations in Fast Mode:

- Parameter change in RUN only possible with data record 128
- Count/position value range: 25 bits
- No measured value available
- No software gate available
- No Capture function available
- No hardware interrupts available
- Combined error message (feedback bit) that is acknowledged automatically

4.4.1 Configuring

Introduction

You configure the technology module and assign its parameters with the configuration software.

The user program evaluates and controls the functions of the technology module via the user program and feedback interface.

System environment

The technology module can be used in the following system environments:

Applications	Components required	Configuration software	In the user program
Central operation with an S7-1500 CPU	• S7-1500 automation system • TM Count 2x24V	STEP 7 (TIA Portal): • Device configuration and parameter setting with hardware configuration	Direct access to feedback interface in the I/O data
Distributed operation with an S7-1500 CPU	• S7-1500 automation system • ET 200MP distributed I/O system • TM Count 2x24V	STEP 7 (TIA Portal): • Device configuration and parameter setting with hardware configuration	
Distributed operation with an S7-1200 CPU	• S7-1200 automation system • ET 200MP distributed I/O system • TM Count 2x24V	STEP 7 (TIA Portal): Device configuration and parameter setting with hardware configuration	

Applications	Components required	Configuration software	In the user program
Distributed operation with an S7-300/400 CPU	• S7-300/400 automation system • ET 200MP distributed I/O system • TM Count 2x24V	STEP 7 (TIA Portal): Device configuration and parameter setting with hardware configuration STEP 7: Device configuration and parameter setting with GSD file	
Distributed operation in a third-party system	• Third-party automation system • ET 200MP distributed I/O system • TM Count 2x24V	Third-party configuration software: Device configuration and parameter setting with GSD file	

Additional information

You can find a detailed description of the counting and measurement functions and their configuration in the following:

- Function manual Counting, Measurement and Position Detection available for download on the Internet (http://support.automation.siemens.com/WW/view/en/59709820)
- Information system of STEP 7 (TIA Portal) under "Using technology functions > Counting, measurement and position input > Counting, measurement and position input (S7-1500)"

Hardware Support Packages (HSP)

Fast Mode is available as of firmware version V2.0 of the module (6ES7550-1AA01-0AB0). You integrate the firmware version V2.0 using HSP0332. Firmware version V2.0 of the module is integrated into the following TIA Portal versions.

You can find the Hardware Support Packages (HSP) for download on the Internet (https://support.industry.siemens.com/cs/ww/en/view/72341852).

You can also access this download from the menu bar of STEP 7 (TIA Portal): "Options > Support packages > Download from the Internet".

GSD file

The respective GSD file for the ET 200MP distributed I/O system is available for download on the Internet:

- GSD file for PROFINET IO (http://support.automation.siemens.com/WW/view/en/68189683)
- GSD file for PROFIBUS DP (http://support.automation.siemens.com/WW/view/en/80206700)

4.4.2 Reaction to CPU STOP

You set the reaction of the technology module to a STOP of the CPU on a channel-by-channel basis in the basic parameters of the device configuration.

Table 4- 10 Reaction of technology module to CPU STOP

Option	Meaning
Continue operation	The technology module remains fully functional. Incoming count pulses are processed. The digital outputs continue to switch according to the parameter assignment.
Output substitute value	The technology module outputs the configured substitute values at the digital outputs until the next CPU STOP-RUN transition. The technology module is returned to its startup state after a STOP-RUN transition: The counter value is set to the start value and the digital outputs switch according to the parameter assignment.
Keep last value	The technology module outputs the values at the digital outputs that were valid when the transition to STOP took place until the next CPU STOP-RUN transition. If a digital output with the "At comparison value for a pulse duration" function is set at CPU STOP, the digital output is reset after the pulse duration elapses. The technology module is returned to its startup state after a STOP-RUN transition: The counter value is set to the start value and the digital outputs switch according to the parameter assignment.

4.4.3 Parameter setting

You specify the properties of the technology module using various parameters. Depending on the settings, not all parameters are available. When parameters are assigned in the user program, the parameters are transferred to the module with the "WRREC" instruction and data record 128 (Page 87).

You set the parameters of the module as follows in this operating mode:

Parameter setting using...	Basic procedure
Hardware configuration in STEP 7 (TIA Portal)	1. Insert the module from the hardware catalog under "Technology modules". 2. Set the operating mode "Fast Mode" and the other module parameters in the hardware configuration. 3. Download the project to the CPU.
Hardware configuration with GSD file for distributed operation on PROFINET IO	1. Install the current PROFINET GSD file. You will then find the module in the hardware catalog under "Other field devices > PROFINET IO > I/O". 2. Set the parameters in the hardware configuration. 3. Download the project to the CPU.

Parameter setting using...	Basic procedure
Hardware configuration with GSD file for distributed operation on PROFIBUS DP	1. Install the current PROFIBUS GSD file. You will then find the module in the hardware catalog under "Other field devices > PROFIBUS DP > I/O". 2. Set the parameters in the hardware configuration. The parameters marked with [1] in the following tables are not configurable in the PROFIBUS GSD file. 3. Download the project to the CPU. The parameters marked with [1] in the following tables are downloaded with their default setting. 4. If necessary, set the parameters marked with [1] in the user program using data record 128.

Parameters of the TM Count 2x24V

The following parameter settings are possible. The default settings of the parameters are shown in bold in the "Value range" column.

Table 4- 11 Configurable parameters

Parameter	Value range	Scope
Reaction to CPU STOP[1]	• **Output substitute value** • Keep last value • Continue operation	Channel
Substitute value for DQ0[1]	• **0** • 1	Channel
Substitute value for DQ1[1]	• **0** • 1	Channel
Enable diagnostic interrupt on wire break[2]	• **Deactivated** • Activated	Channel
Enable additional diagnostic interrupts	• **Deactivated** • Activated	Channel
Signal type	• Pulse (A) • **Pulse (A) and direction (B)** • Count up (A), count down (B) • Incremental encoder (A, B phase-shifted) • Incremental encoder (A, B, N)	Channel
Invert direction[1] (counter inputs)	• **Deactivated** • Activated	Channel

Parameter	Value range	Scope
Signal evaluation for counter inputs	• **Single** • Double • Quadruple	Channel
Filter frequency for counter inputs[1]	• 100 Hz • 200 Hz • 500 Hz • 1 kHz • 2 kHz • 5 kHz • 10 kHz • 20 kHz • 50 kHz • 100 kHz • **200 kHz**	Channel
Sensor type	• **Sourcing output** • Sinking output • Push-pull (sinking and sourcing output)	Channel
Reaction to signal N[1]	• **No reaction to signal N** • Synchronization at signal N	Channel
High counting limit[1]	1...**33554431**	Channel
Start value[1]	**0**...33554431	Channel
Counting low limit[1]	**0**...33554430	Channel
Reaction to violation of a counting limit	• Stop counting • **Continue counting**	Channel
Reset when counting limit is violated	• **To opposite counting limit** • To start value	Channel
Reaction to gate start	• Set to start value • **Continue with current value**	Channel
Set function of DI	• Gate start/stop (level-triggered) • Gate start (edge-triggered) • Gate stop (edge-triggered) • Synchronization • Enable synchronization at signal N • **Digital input without function**	Channel

Parameter	Value range	Scope
Input delay for digital inputs[1]	• None • 0.05 ms • **0.1 ms** • 0.4 ms • 0.8 ms • 1.6 ms • 3.2 ms • 12.8 ms • 20 ms	Channel
Select level for DI[1]	• **Active with high level** • Active with low level	Channel
Edge selection for DI[1]	• **At rising edge** • At falling edge	Channel
Frequency of synchronization[1]	• **Once** • Periodic	Channel
Count direction for synchronization	• Up • Down • **In both directions**	Channel
Set output	• Between comparison value and high limit • Between comparison value and low limit • Between comparison value 0 and 1 • At comparison value for a pulse duration • **Digital output without function**	Channel
Comparison value 0[1]	**0**...33554431	Channel
Comparison value 1[1]	0...**10**...33554431	Channel
Count direction of DQ function[1]	• Up • Down • **In both directions**	Channel
Pulse duration[1]	0...**500.0**...6553.5 ms	Channel
Hysteresis (in increments)[1]	**0**...255	Channel

[1] Because the number of parameters is limited to a maximum of 244 bytes per station in the PROFIBUS GSD configuration, the possible parameter assignments are limited. The parameters are preassigned default settings in the module. If your PROFIBUS master supports the "Write/read data record" function, you can set these parameters using data record 128.

[2] When a GSD file is used, this diagnostic interrupt is enabled with the "Enable additional diagnostic interrupts" parameter and is then not separately configurable.

4.4.4 Explanation of parameters

Signal type

You can select from the following signal types:

Signal type	Meaning
Incremental encoder (A, B phase-shifted)	An incremental encoder with phase-shifted A and B signals is connected.
Incremental encoder (A, B, N)	An incremental encoder with phase-shifted signals A and B and a zero signal N is connected.
Pulse (A) and direction (B)	A pulse encoder (signal A) with direction signal (signal B) is connected.
Pulse (A)	A pulse encoder (signal A) without direction signal is connected.
Count up (A), count down (B)	Signals for counting up (signal A) and down (signal B) are connected.

Invert direction

You can invert the counting direction to adapt it to the process.

The inverting of the direction is configurable and active for the following signal types:

- Incremental encoder (A, B phase-shifted)
- Incremental encoder (A, B, N)

Signal evaluation

With the parameter assignment of the signal evaluation, you specify which edges of the signals are counted.

You can select from the following options:

Signal evaluation	Meaning
Single	The edges of signal A are evaluated during a low level of signal B.
Double	Each edge of signal A is evaluated.
Quadruple	Each edge of signals A and B is evaluated.

The parameter can be assigned with the following signal types:

- Incremental encoder (A, B phase-shifted)
- Incremental encoder (A, B, N)

Filter frequency

By configuring the filter frequency, you suppress interferences at the counting inputs A, B and N.

The selected filter frequency is based on a pulse/break ratio of between around 40:60 and around 60:40. This results in a specific minimum pulse/break time. Signal changes with a duration shorter than the minimum pulse/break time are suppressed.

You can select from the following filter frequencies:

Filter frequency	Minimum pulse/break time
100 Hz	4.0 ms
200 Hz	2.0 ms
500 Hz	800 µs
1 kHz	400 µs
2 kHz	200 µs
5 kHz	80 µs
10 kHz	40 µs
20 kHz	20 µs
50 kHz	8.0 µs
100 kHz	4.0 µs
200 kHz	2.0 µs

Reaction to signal N

You use this parameter to specify which reaction to signal N is triggered.

You can select from the following options:

Option	Meaning
No reaction to signal N	The counter is not affected by signal N.
Synchronization at signal N	The counter is set to the start value at signal N. If you select the function "Enable synchronization at signal N" for a digital input, the synchronization depends on the level at the digital input.

Note

You can only select the reaction to signal N if you have selected the "Incremental encoder (A, B, N)" signal type.

Note

If you select "Synchronization at signal N", you can choose the "Enable synchronization at signal N" function for a digital input.

Frequency of synchronization

This parameter is used to define the frequency of the following events:

- Synchronization at signal N
- Synchronization as function of a digital input

You can select from the following options:

Option	Meaning
Once	The counter is only set at the first signal N or the first configured edge of the digital input.
Periodic	The counter is set at each signal N or each configured edge of the digital input.

Count direction of the synchronization

You use this parameter to specify the count direction for which the following functions are enabled:

- Synchronization at signal N
- Synchronization as function of a digital input

You can select from the following options:

Option	Meaning
In both directions	Synchronization takes place regardless of the count direction.
Up	Synchronization only takes place when the counter is counting up.
Down	Synchronization only takes place when the counter is counting down.

Sensor type

With the parameter assignment of the sensor type, you specify how the counter inputs are switched.

You can select from the following options:

Option	Meaning
Sourcing output	The encoder or sensor switches the A, B and N inputs to 24 V DC.
Sinking output	The encoder or sensor switches the A, B and N inputs to M.
Push-pull (sinking and sourcing output)	The encoder or sensor switches the A, B and N inputs to alternately to M and 24 V DC.

"Push-pull" is usually selected when incremental encoders are used. If using 2-wire sensors, such as light barriers or proximity switches, you need to select the corresponding wiring "sourcing output" or "sinking output".

The data sheet of the encoder includes information on whether your incremental encoder is a push-pull encoder.

Note

If you use a push-pull encoder and the sensor type "Push-pull (sinking and sourcing output)" is configured, you can monitor the encoder signals for wire break.

High counting limit

With the parameter assignment of the counting high limit, you limit the counting range. You can enter a value up to 33554431 (2^{25}-1). You must enter a value above the counting low limit.

Counting low limit

With the parameter assignment of the counting low limit, you limit the counting range. You can enter a value starting with 0. You must enter a value below the counting high limit.

Start value

With the parameter assignment of the start value, you specify the value at which counting is begun and is to continue in the case of defined events. You must enter a value at or within the counting limits.

Reaction to violation of a counting limit

You can configure the following reaction to violation of a counting limit:

Reaction	Meaning
Stop counting	After violation of a counting limit, counting is stopped and the internal gate is closed. To restart counting, you may have to close and reopen the hardware gate.
Continue counting	Counting is continued with the start value or at the opposite counting limit depending on the additional parameter assignment.

Reset when counting limit is violated

You can reset the counter when a counting limit is violated:

Reset the value	Meaning
To start value	The counter value is set to the start value.
To opposite counting limit	The counter value is set to the opposite counting limit in each case.

Reaction to gate start

You can configure the following reaction to gate start:

Reaction	Meaning
Set to start value	When the gate is opened, the counter value is set to the start value.
Continue with current value	When the gate is opened, counting is continued with the last counter value.

Note

The parameter is only effective when you have configured a HW gate.

Set function of DI

With the parameter assignment of a digital input, you specify which function the digital input triggers when switched.

You can select from the following options:

Function of a digital input	Meaning
Gate start/stop (level-triggered)	The level at the respective digital input opens and closes the HW gate.
Gate start (edge-triggered)	The configured edge at the respective digital input opens the HW gate.
Gate stop (edge-triggered)	The configured edge at the respective digital input closes the HW gate.
Synchronization	The configured edge at the respective digital input sets the counter to the start value.
Enable synchronization at signal N	The active level at the respective digital input enables synchronization of the counter at signal N.
Digital input without function	No technological function is assigned to the respective digital input. You can read the signal status of the digital input via the feedback interface.

Note

Each function, except "Digital input without function", can be used only once per counter and can no longer be selected for the other digital inputs in each case.

Input delay

You use this parameter to suppress signal noise at the digital inputs. Changes to the signal are only detected if they remain stable for longer than the configured input delay time.

Note

If you select the "None" or "0.05 ms" option, you must use shielded cables for connection of the digital inputs.

Note

You configure the input delay under "Behavior of DI0" for all digital inputs together. The input delay is also displayed under "Behavior of DI1" and "Behavior of DI2".

Select level

You use this parameter to specify the level at which the digital input is active.

You can select from the following options:

Level	Meaning
Active with high level	The respective digital input is active when it is set.
Active with low level	The respective digital input is active when it is not set.

The parameter can be configured for the following functions of a digital input:

- Gate start/stop (level-triggered)
- Enable synchronization at signal N

Edge selection

You use this parameter to specify the edge of the digital input at which the configured function is triggered.

You can select from the following options depending on the function selected:

- At rising edge
- At falling edge

The parameter can be configured for the following functions of a digital input:

- Gate start (edge-triggered)
- Gate stop (edge-triggered)
- Synchronization

Set output

With the parameter assignment of a digital output, you specify the condition upon which the digital output switches.

You can select from the following options:

Function of a digital output	Meaning
Between comparison value and high limit	The respective digital output is active if: Comparison value <= counter value <= counting high limit
Between comparison value and low limit	The respective digital output is active if: Low limit <= counter value <= comparison value
Between comparison value 0 and 1	The digital output DQ1 is active if: Comparison value 0 <= counter value <= comparison value 1
At comparison value for a pulse duration	The respective digital output is active once for the configured time and count direction when the counter value corresponds to the comparison value.
Digital output without function	The respective digital output is set to 0 irrespective of the reaction to CPU STOP.

Note

You can only set the "Between comparison value 0 and 1" function for digital output DQ1 and only if you have selected the "Digital output without function" function for digital output DQ0.

Comparison value 0

With the parameter assignment of the comparison value, you specify the counter value at which the digital output DQ0 switches as a result of the selected comparison event.

You must enter an integer (DINT) that is greater than or equal to the counting low limit. If you use the DQ function "Between comparison value 0 and 1", comparison value 0 must be less than comparison value 1.

Comparison value 1

With the parameter assignment of the comparison value, you specify the counter value at which the digital output DQ1 switches as a result of the selected comparison event.

You must enter an integer (DINT) that is less than or equal to the counting high limit. If you use the DQ function "Between comparison value 0 and 1", comparison value 0 must be less than comparison value 1.

Count direction

You use this parameter to specify the count direction for which the selected functions is valid:

You can select from the following options:

Count direction	Meaning
In both directions	The comparison and switching of the respective digital output takes places regardless of the count direction.
Up	The comparison and switching of the respective digital output only takes place when the counter counts up.
Down	The comparison and switching of the respective digital output only takes place when the counter counts down.

The parameter can be configured for the following functions:

- Between comparison value 0 and 1
- At comparison value for a pulse duration

Pulse duration

With the parameter assignment of the pulse duration for the "At comparison value for a pulse duration" function, you specify how many milliseconds the respective digital output is active.

If you enter "0" and the counter value corresponds to the respective comparison value, the digital output is active until the next count pulse.

Hysteresis (in increments)

With the parameter assignment of the hysteresis, you specify a range around the comparison values. Within the hysteresis range, the digital outputs cannot switch again before the counter value has left this range.

An encoder can stop at a certain position, and slight movements can cause the counter value to fluctuate around this position. If a comparison value or counting limit is within the fluctuation range and a hysteresis is not used, the associated digital output will switch on and off with corresponding frequency. The hysteresis prevents these unwanted switching actions.

Regardless of the hysteresis value, the hysteresis range ends at the low or counting high limit. If you enter "0", the hysteresis is turned off.

4.4.5 Address space

Address space of the technology module

Table 4- 12 Range of the input addresses and output addresses of the TM Count 2x24V in Fast Mode

	Inputs	Outputs
Range per counting channel	4 bytes	0 bytes
Total range	8 bytes	0 bytes

4.4.6 Assignment of the feedback interface

The user program receives current values and status information from the technology module by means of the feedback interface.

Feedback interface

The following table shows the assignment of the feedback interface:

Byte offset relative to start address Channel 0/1 ↓ ↓		Bit 7	Bit 6	Bit 5	Bit 4	Bit 3	Bit 2	Bit 1	Bit 0
0	4	LS	STS_ READY	STS_DI2	EXT_F	STS_DI0	STS_DIR	STS_DI1	COUNT_ VALUE (Bit 24)
1	5	COUNT_VALUE (Bits 0 to 23): DINT: Current counter value							
2	6								
3	7								

Explanation of feedback bits

Feedback bit	Explanations
LS	As a sign of life, this bit indicates through a state change (toggling) that isochronous mode is functioning and that the module has updated the feedback interface in the respective bus cycle. This bit is set to 0 in non-isochronous mode.
STS_READY	This bit indicates that the technology module supplies valid user data. The technology module has been started up and configured.
STS_DI2	This bit indicates the status of digital input DI2.
EXT_F	This bit indicates that one of the following errors has occurred at the encoder signals for the technology module: • Load voltage missing • Wire break of digital input A, B or N (with push-pull encoder) • Invalid transition of A/B signals (with incremental encoder) If you have enabled the diagnostic interrupts, the respective diagnostic interrupt is triggered in the event of encoder signal errors. For information on the meaning of the diagnostics interrupts, refer to the section Diagnostics alarms. The bit is reset automatically as soon as an error no longer exists.
STS_DI0	This bit indicates the status of digital input DI0.
STS_DIR	This bit indicates the count direction of the last count pulse. 0 means: Down 1 means: Up
STS_DI1	This bit indicates the status of digital input DI1.
COUNT_VALUE (Bits 0 to 24)	This value returns the current counter value in the first 25 bits of a DINT value.

See also

Diagnostic alarms (Page 72)

4.4.7 Isochronous mode

The technology module supports the "Isochronous mode" system function. Counter values can be acquired in a fixed system cycle with this system function.

In isochronous mode, the cycle of the user program, the transmission of the input signals and processing in the technology module are synchronized. The output signals switch immediately if the relevant comparison condition is met. A change in the state of a digital input immediately affects the planned reaction of the technology module.

Fast Mode is particularly suitable for short send clocks of the CPU starting from 125 µs because only input data is used.

For clock synchronization in this operating mode, use an OB of the type "Synchronous Cycle" (such as OB61).

Data processing

At the time the input data is read in (T_i), the counter value and the status bits are acquired and made available in the feedback interface for retrieval in the current bus cycle.

Isochronous mode parameters

In isochronous mode, the "Filter frequency" parameter can affect the isochronous mode parameters of the sync domain.

Because the isochronous parameters are not checked in RUN, changing the parameter in RUN can result in the technology module no longer processing the control and feedback interface correctly. You prevent this by selecting the option with the greatest time demand as early as during the offline parameter assignment.

Additional information

You can find a detailed description of isochronous mode in the following:

- In the isochronous mode function manual as a download from the Internet (https://support.industry.siemens.com/cs/ww/en/view/109755401).
- Function manual PROFINET with STEP 7 available for download on the Internet (https://support.industry.siemens.com/cs/ww/en/view/49948856)

Interrupts/diagnostic messages

5

5.1 Status and error display

LEDs

The following figure shows you the LED displays (status and error displays) of TM Count 2x24V.

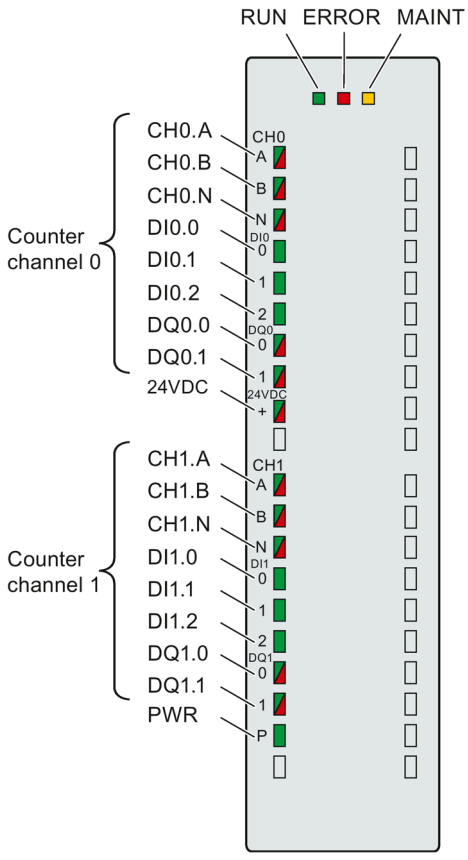

Figure 5-1 LED displays of the TM Count 2x24V

Meaning of the LED displays

The following tables explain the meaning of the status and error displays. Remedial measures for diagnostic alarms can be found in section Diagnostic alarms (Page 72).

Table 5- 1 Status and error displays RUN/ERROR/MAINT

LEDs			Meaning	Remedy
RUN	ERROR	MAINT		
Off	Off	Off	Missing or insufficient voltage on the backplane bus	Switch on the CPU and/or the system power supply modules. • Check whether the U connectors are plugged in correctly. • Check whether too many modules are plugged in.
Flashes	Off	Off	Technology module parameters not set	---
On	Off	Off	Technology module parameters set and no module diagnostics	
On	Flashes	Off	Technology module parameters set and module diagnostics (at least one error is present)	Evaluate the diagnostic alarms and eliminate the error.
Flashes	Flashes	Flashes	Hardware or firmware defective	Replace the technology module.

Table 5- 2 PWR/24VDC/ERROR status displays

LEDs			Meaning	Remedy
PWR	24VDC	ERROR		
Off	Off	Off	Supply voltage too low or missing	• Check the supply voltage. • Make sure that the front connector is correctly inserted.
Off	Off	Flashing[1]		
On	On	Off	Supply voltage is present and OK. Sensor supply is OK.	---
On	On	Off	Short-circuit or overload at the encoder supply	• Check the encoder wiring. • Check the loads connected to the encoder supply. • Check the supply voltage.
On	On	Flashing[1]		

[1] Only when diagnostic interrupts enabled

Channel LEDs

The CHn.A, CHn.B, CHn.N and DIn.m LEDs indicate the current level of the associated signals. The LEDs of the DQn.m digital outputs indicate the desired state.

The flashing frequency of the channel LEDs is limited to approximately 12 Hz. If higher frequencies are present, the channel LEDs will flash at 12 Hz instead of indicating the current status.

Table 5- 3 Status displays CHn.m/DIn.m/DQn.m

LEDs CHn.m/DIn.m/DQn.m	Meaning	Remedy
□ Off	Counter input/digital input/digital output at 0 level	---
■ On	Counter input/digital input/digital output at 1 level	---
■ On (CHn.m/DQn.m)	Diagnostic alarm: e.g. wire break, short-circuit	Check the wiring or the connected load.

5.2 Diagnostic alarms

Enabling of diagnostic interrupts

You enable the diagnostic interrupts in the device configuration with the basic parameters.

The technology module can trigger the following diagnostic interrupts:

Table 5- 4 Possible diagnostic interrupts

Diagnostic interrupt	Monitoring
• Parameter error • Hardware interrupt lost[1] • Watchdog tripped. Module is defective.	Monitoring is always active. A diagnostic interrupt is triggered each time an error is detected.
• Wire break at digital input A, B or N	Monitoring is active if a push-pull switching encoder has been configured. When an error is detected, a diagnostic interrupt is only triggered if "Enable diagnostic interrupt on wire break" is activated in the device configuration.
• Supply voltage missing • Short-circuit / overload at external encoder supply • Error at digital outputs • Invalid transition of A/B signals	Monitoring is always active. When an error is detected, a diagnostic interrupt is only triggered if "Enable additional diagnostic interrupts" is activated in the device configuration.

[1] Not available in "Position detection for "Motion Control"" technology object" and ""Fast Mode"" operating modes

Reactions to a diagnostic interrupt

The following happens when an event occurs that triggers a diagnostic interrupt:

- The ERROR LED flashes red.

  Once you have remedied the error, the ERROR LED goes out.
- The S7-1500 CPU interrupts processing of the user program. The diagnostic interrupt OB (e.g. OB 82) is called. The event that triggered the interrupt is entered in the start information of the diagnostic interrupt OB.
- The S7-1500 CPU remains in RUN even if no diagnostic interrupt OB is present in the CPU. The technology module continues working unchanged if this is possible despite the error.

You can obtain detailed information on the error event in the error organization block with instruction "RALRM" (Read additional alarm information), in the information system of STEP 7 and in function manual Diagnostics (https://support.industry.siemens.com/cs/ww/en/view/59192926), section "System diagnostics in user program".

If the module is operated as a distributed module with PROFIBUS DP in an ET 200MP system, you have the option of reading out diagnostic data with the RDREC or RD_REC instruction using data record 0 and 1. You can find the structure of the data records in the manual for the IM 155-5 DP ST interface module available for download on the Internet (https://support.industry.siemens.com/cs/ww/de/view/78324181).

Diagnostic alarms

The display of diagnostics is in plain text in STEP 7 (TIA Portal) in the online and diagnostics view. You can evaluate the error codes with the user program.

The following diagnostics can be signaled:

Table 5- 5 Diagnostic alarms, their meaning and remedies

Diagnostic alarm	Error code	Meaning	Remedy
Parameter error	10_H	The received parameter data record is invalid	Check parameter data record
Hardware interrupt lost	16_H	• Module cannot issue interrupt because a preceding interrupt has not yet been processed • Possible cause: Too many hardware interrupts in too short a time	• Change interrupt processing in the CPU and re-assign technology module parameters correspondingly • Check frequency of interrupts from the process
Watchdog tripped. Module is defective.	103_H	Firmware error	Run firmware update
		Technology module defective	Replace technology module
Supply voltage missing	$10A_H$	• Missing or insufficient supply voltage L+ • Wiring of supply voltage L+ faulty • Front connector not inserted correctly	• Check supply voltage L+ • Check wiring of supply voltage L+ • Insert front connector correctly
Short-circuit / overload at external encoder supply	$10E_H$	• Error at encoder supply • Possible causes: – Short circuit – Overload	• Check encoder wiring • Check consumers connected to encoder supply
Error at digital outputs	$10F_H$	• Error at the digital outputs (LED display DQn.m lit red) • Possible causes: – Short circuit – Overload	• Check encoder wiring at the digital outputs • Check consumers connected to the digital outputs
Invalid transition of A/B signals	500_H	• Time profile of signals A and B of the incremental encoder does not meet certain requirements (relative phase shift of the two signals is too small) • Possible causes: – Signal frequency too high – Encoder faulty – Process wiring faulty	• Check process wiring • Check encoder/sensor • Check parameter assignment

Diagnostic alarm	Error code	Meaning	Remedy
Wire break at digital input A, B or N	505H	Channel not connected	Connect the channel
		Resistance of encoder circuit too high	• Use a different encoder type or modify the wiring, for example, use shorter cables with larger cross-sections • Check encoders
		Interruption of the line between technology module and encoder	Check process wiring
		Sensor used is sourcing output or sinking output only	Correct parameter assignment

5.3 Hardware interrupts

Introduction

For the technology module, you can configure which events are to trigger a hardware interrupt during operation.

What is a hardware interrupt?

The technology module will trigger a hardware interrupt as configured in response to specific events/states. When a hardware interrupt occurs, the CPU interrupts execution of the user program and processes the assigned hardware interrupt OB. The event that triggered the interrupt is entered in the start information of the assigned hardware interrupt OB by the CPU.

Lost hardware interrupt

If an event occurs that is to trigger a hardware interrupt and the preceding event has not yet been processed, another hardware interrupt cannot be triggered. The hardware interrupt is lost and the diagnostic interrupt "Lost hardware interrupt" is triggered.

Enabling of hardware interrupts

A hardware interrupt is triggered when the condition for the change of the respective status or event bit in the feedback interface is met.

You enable the hardware interrupts in the device configuration with the basic parameters. You can configure hardware interrupts to be triggered for the following event types:

- Opening of internal gate (gate start)
- Closing of internal gate (gate stop)
- Overflow (high counting limit violated)
- Underflow (low counting limit violated)
- Comparison event for DQ0 has occurred
- Comparison event for DQ1 has occurred
- Zero crossing[3]
- New Capture value available[1]
- Synchronization of the counter by an external signal
- Direction reversal[2]

[1] Only configurable in Counting mode

[2] Feedback bit STS_DIR is preassigned with "0". If the first counter value change occurs in the *downwards direction* directly after switching on the technology module, no hardware interrupt is triggered.

[3] When the "Zero crossing" hardware interrupt is enabled, for system-related reasons it can also be triggered if "0" is outside the configured value range.

You can activate any combination of events to trigger hardware interrupts.

You can obtain detailed information on the event in the hardware interrupt organization block with instruction "RALRM" (Read additional alarm information) and in the information system of STEP 7.

Which channel of the module and which event has triggered the hardware interrupt is entered in the start information of the organization block. The following figure shows the assignment to the bits of the local data double word 8.

LB 8								LB 9								LB 10								LB 11								
31	30	29	28	27	26	25	24	23	22	21	20	19	18	17	16	15	14	13	12	11	10	9	8	7	6	5	4	3	2	1	0	Bit no.
0	0	0	0	0	0	0	0	0	0	0	0	0	0	0	1	0	0	0	0	0	0	0	X	0	0	0	0	X	X	X	X	LD 8

User Structure Identifier (USI)

Event that has triggered the hardware interrupt (EventType):

- 0001_B: Gate start
- 0010_B: Gate stop
- 0011_B: Overflow
- 0100_B: Underflow
- 0101_B: Comparison event for DQ0 has occurred
- 0110_B: Comparison event for DQ1 has occurred
- 0111_B: Zero crossing
- 1000_B: New Capture value available
- 1001_B: Synchronization
- 1010_B: Direction reversal

Channel that has triggered the hardware interrupt (IChannel):

- 0_B: Channel 0 of the technology module
- 1_B: Channel 1 of the technology module

Figure 5-2 Start information of the organization block

Technical specifications

6

Article number	6ES7550-1AA01-0AB0
General information	
Product type designation	TM Count 2x24V
Firmware version	V2.0
• FW update possible	Yes
Product function	
• I&M data	Yes; I&M0 to I&M3
• Isochronous mode	Yes
Engineering with	
• PROFIBUS from GSD version/GSD revision	GSD Revision 5
• PROFINET from GSD version/GSD revision	V2.3 / -
Installation type/mounting	
Rail mounting	Yes; S7-1500 mounting rail
Supply voltage	
Load voltage L+	
• Rated value (DC)	24 V
• permissible range, lower limit (DC)	19.2 V
• permissible range, upper limit (DC)	28.8 V
• Reverse polarity protection	Yes
Input current	
Current consumption, max.	75 mA; without load
Encoder supply	
Number of outputs	1; A common 24V encoder supply for both channels
24 V encoder supply	
• 24 V	Yes; L+ (-0.8 V)
• Short-circuit protection	Yes
• Output current, max.	1 A; total current of all encoders/channels
Power	
Power available from the backplane bus	1.3 W
Power loss	
Power loss, typ.	4 W

Article number	6ES7550-1AA01-0AB0
Address area	
Address space per module	
• Inputs	32 byte
• Outputs	24 byte
Digital inputs	
Number of digital inputs	6; 3 per channel
Digital inputs, parameterizable	Yes
Input characteristic curve in accordance with IEC 61131, type 3	Yes
Digital input functions, parameterizable	
• Gate start/stop	Yes
• Capture	Yes
• Synchronization	Yes
• Freely usable digital input	Yes
• Probe	Yes
Input voltage	
• Type of input voltage	DC
• Rated value (DC)	24 V
• for signal "0"	-5 ... +5 V
• for signal "1"	+11 to +30V
• permissible voltage at input, min.	-30 V; -5 V continuous, -30 V brief reverse polarity protection
• permissible voltage at input, max.	30 V
Input current	
• for signal "1", typ.	2.5 mA
Input delay (for rated value of input voltage)	
for standard inputs	
– parameterizable	Yes; none / 0.05 / 0.1 / 0.4 / 0.8 / 1.6 / 3.2 / 12.8 / 20 ms
– at "0" to "1", min.	6 µs; for parameterization "none"
– at "1" to "0", min.	6 µs; for parameterization "none"
for technological functions	
– parameterizable	Yes
Cable length	
• shielded, max.	1 000 m
• unshielded, max.	600 m

Article number	6ES7550-1AA01-0AB0
Digital outputs	
Type of digital output	Transistor
Number of digital outputs	4; 2 per channel
Digital outputs, parameterizable	Yes
Short-circuit protection	Yes; electronic/thermal
• Response threshold, typ.	1 A
Limitation of inductive shutdown voltage to	L+ (-53 V)
Controlling a digital input	Yes
Digital output functions, parameterizable	
• Switching tripped by comparison values	Yes
• Freely usable digital output	Yes
Switching capacity of the outputs	
• with resistive load, max.	0.5 A; Per digital output
• on lamp load, max.	5 W
Load resistance range	
• lower limit	48 Ω
• upper limit	12 kΩ
Output voltage	
• Type of output voltage	DC
• for signal "1", min.	23.2 V; L+ (-0.8 V)
Output current	
• for signal "1" rated value	0.5 A; Per digital output
• for signal "1" permissible range, max.	0.6 A; Per digital output
• for signal "1" minimum load current	2 mA
• for signal "0" residual current, max.	0.5 mA
Output delay with resistive load	
• "0" to "1", max.	50 µs
• "1" to "0", max.	50 µs
Switching frequency	
• with resistive load, max.	10 kHz
• with inductive load, max.	0.5 Hz; Acc. to IEC 60947-5-1, DC-13; observe derating curve
• on lamp load, max.	10 Hz
Total current of the outputs	
• Current per module, max.	2 A

Article number	6ES7550-1AA01-0AB0
Cable length	
• shielded, max.	1 000 m
• unshielded, max.	600 m
Connectable encoders	
• 2-wire sensor	Yes
– permissible quiescent current (2-wire sensor), max.	1.5 mA
Encoder signals, incremental encoder (asymmetrical)	
• Input voltage	24 V
• Input frequency, max.	200 kHz
• Counting frequency, max.	800 kHz; with quadruple evaluation
• Cable length, shielded, max.	600 m; depending on input frequency, encoder and cable quality; max. 50 m at 200 kHz
• Signal filter, parameterizable	Yes
• Incremental encoder with A/B tracks, 90° phase offset	Yes
• Incremental encoder with A/B tracks, 90° phase offset and zero track	Yes
• Pulse encoder	Yes
• Pulse encoder with direction	Yes
• Pulse encoder with one impulse signal per count direction	Yes
Encoder signal 24 V	
– permissible voltage at input, min.	-30 V
– permissible voltage at input, max.	30 V
Interface types	
• Source/sink input	Yes
• Input characteristic curve in accordance with IEC 61131, type 3	Yes

Article number	6ES7550-1AA01-0AB0
Interrupts/diagnostics/status information	
Alarms	
• Diagnostic alarm	Yes
• Hardware interrupt	Yes
Diagnoses	
• Monitoring the supply voltage	Yes
• Wire-break	Yes
• Short-circuit	Yes
• A/B transition error at incremental encoder	Yes
Diagnostics indication LED	
• RUN LED	Yes; green LED
• ERROR LED	Yes; red LED
• MAINT LED	Yes; Yellow LED
• Monitoring of the supply voltage (PWR-LED)	Yes; green LED
• Channel status display	Yes; green LED
• for channel diagnostics	Yes; red LED
Integrated Functions	
Number of counters	2
Counting frequency (counter) max.	800 kHz; with quadruple evaluation
Fast mode	Yes
Counting functions	
• Can be used with TO High_Speed_Counter	Yes
• Continuous counting	Yes
• Counter response parameterizable	Yes
• Hardware gate via digital input	Yes
• Software gate	Yes
• Event-controlled stop	Yes
• Synchronization via digital input	Yes
• Counting range, parameterizable	Yes
Comparator	
– Number of comparators	2; Per channel
– Direction dependency	Yes
– Can be changed from user program	Yes

Article number	6ES7550-1AA01-0AB0
Position detection	
• Incremental acquisition	Yes
• Suitable for S7-1500 Motion Control	Yes
• Suitable for Simotion	Yes
Measuring functions	
• Measuring time, parameterizable	Yes
• Dynamic measurement period adjustment	Yes
• Number of thresholds, parameterizable	2
Measuring range	
– Frequency measurement, min.	0.04 Hz
– Frequency measurement, max.	800 kHz
– Cycle duration measurement, min.	1.25 µs
– Cycle duration measurement, max.	25 s
Accuracy	
– Frequency measurement	100 ppm; depending on measuring interval and signal evaluation
– Cycle duration measurement	100 ppm; depending on measuring interval and signal evaluation
– Velocity measurement	100 ppm; depending on measuring interval and signal evaluation
Potential separation	
Potential separation channels	
• between the channels	No
• between the channels and backplane bus	Yes
• Between the channels and load voltage L+	No
Isolation	
Isolation tested with	707 V DC (type test)
Ambient conditions	
Ambient temperature during operation	
• horizontal installation, min.	-30 °C
• horizontal installation, max.	60 °C; Please note derating for inductive loads
• vertical installation, min.	-30 °C
• vertical installation, max.	40 °C; Please note derating for inductive loads
Altitude during operation relating to sea level	
• Installation altitude above sea level, max.	5 000 m; restrictions for installation altitudes > 2 000 m, see ET 200MP system manual

Article number	6ES7550-1AA01-0AB0
Decentralized operation	
to SIMATIC S7-300	Yes
to SIMATIC S7-400	Yes
to SIMATIC S7-1200	Yes
to SIMATIC S7-1500	Yes
to standard PROFIBUS master	Yes
to standard PROFINET controller	Yes
Dimensions	
Width	35 mm
Height	147 mm
Depth	129 mm
Weights	
Weight, approx.	250 g

Derating information for total current of outputs

If the digital outputs of the TM Count 2x24V are operated with inductive loads, you should derate the total current of the loads at the digital outputs of the technology module. The total current is the sum of the load currents at all digital outputs of the module (all channels, without encoder supply).

The following derating curve shows the load capacity of the digital outputs depending on the ambient temperature and mounting position under the following conditions:

- Maximum switching frequency at digital outputs of 0.5 Hz
- Load resistance: 48 Ω (IEC 947-5-1)
- Load inductance: 1150 mH (IEC 947-5-1)

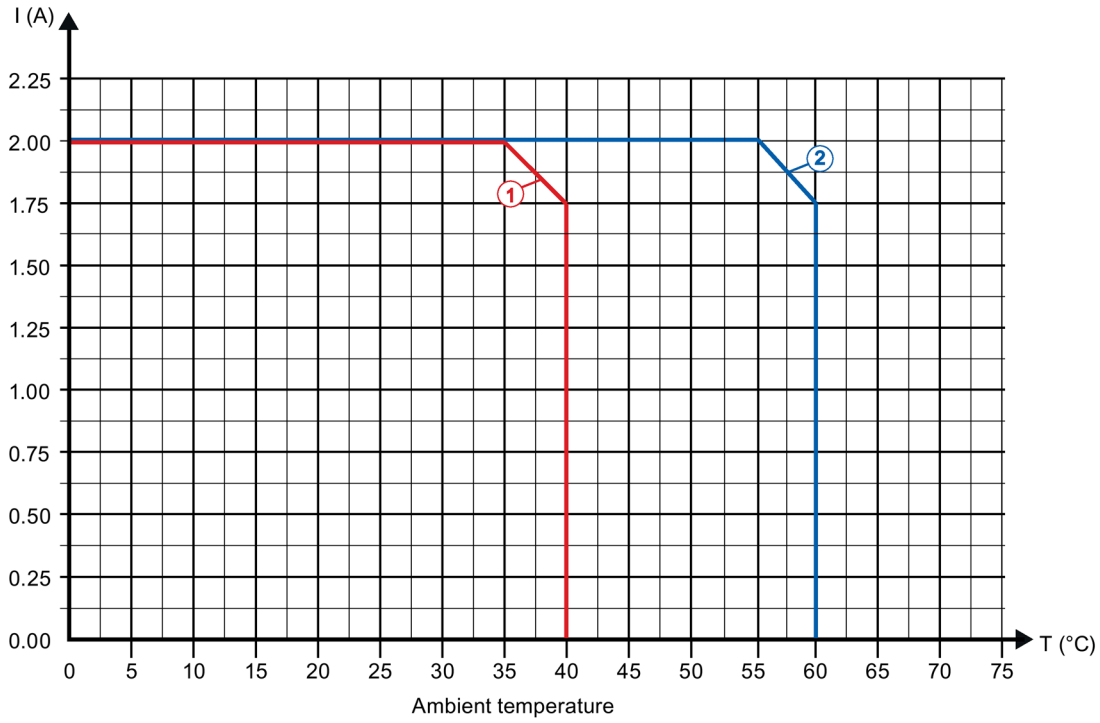

① Vertical installation of the system

② Horizontal installation of the system

Figure 6-1 Total current depending on ambient temperature and mounting position for inductive loads

Note

In the upper voltage range (28.8 V), the resistance of the load increases according to the total current, for example 57.6 Ω at 28.8 V and 0.5 A per digital output.

Note

If the switching frequency is greater than 0.5 Hz or there is greater inductance at the digital outputs, the total current must be reduced further.

Dimensional drawing

A

The dimensional drawing of the module on the mounting rail, as well as a dimensional drawing with open front panel, are provided in the appendix. Always observe the specified dimensions for installation in cabinets, control rooms, etc.

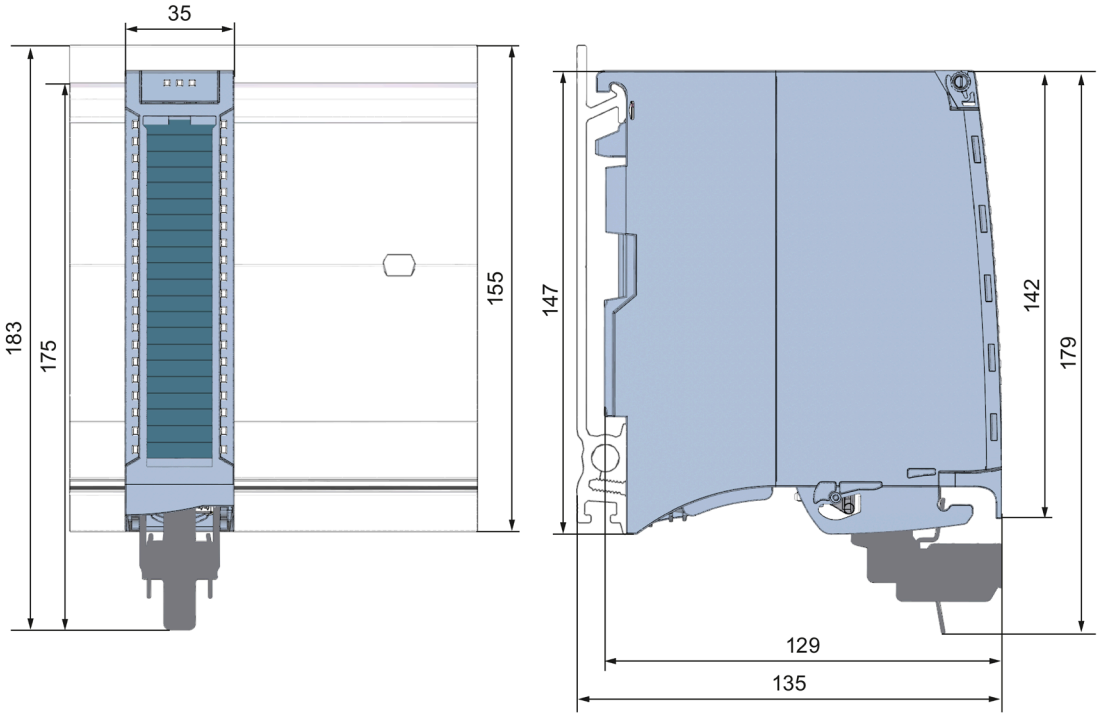

Figure A-1 Dimensional drawing of the TM Count 2x24V technology module

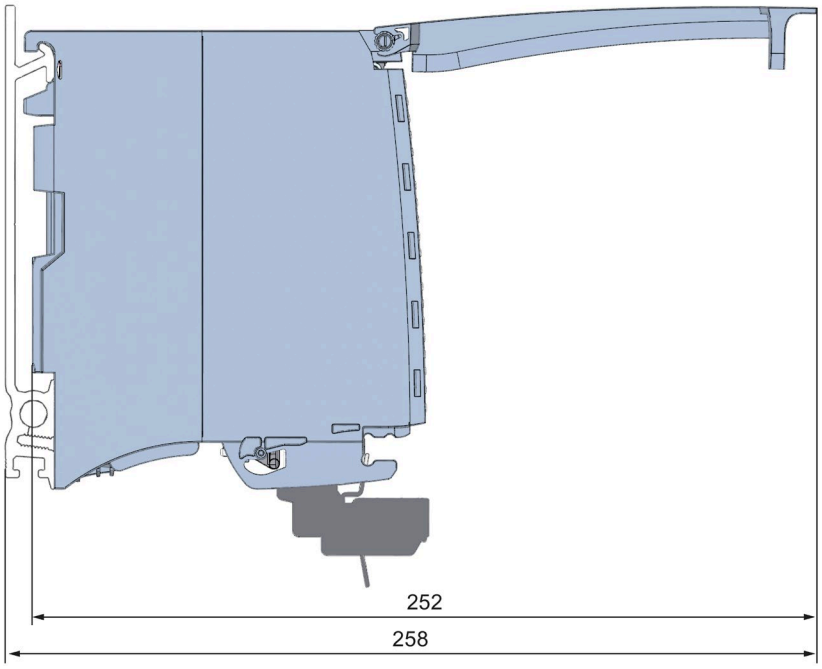

Figure A-2 Dimensional drawing of the TM Count 2x24V module, side view with open front panel

Parameter data record

B

B.1 Parameter assignment and structure of parameter data record

You have the option of reassigning module parameters with the user program while the CPU is in RUN. The parameters are transferred to the module using data record 128, e.g. with the WRREC instruction.

If an error occurs while transferring or validating parameters with the WRREC instruction, the module continues operating with the existing parameter assignment. A corresponding error code is then written to the STATUS output parameter. If no errors occur, the STATUS output parameter contains the length of the actually transferred data.

You can find a description of the WRREC instruction and the error codes in section Parameter validation error (Page 96) or in the online help of STEP 7 (TIA Portal).

Structure of data record 128 for operation with technology object and manual operation

The following table shows you the structure of data record 128 for TM Count 2x24V with 2 channels for operation with technology object and manual operation without technology object. The values in byte 0 to byte 3 are fixed and must not be changed. The value in byte 4 can only be changed by means of new parameter assignment and not in RUN mode.

Note

After each writing of data record 128, the module is set to its startup state and the counter value is set to the start value. If "Continue operation" is set for Reaction to CPU STOP, the module is then only set to its startup state when data record 128 has been changed.

Table B- 1 Data record 128: Operating modes "Operating with "Counting and measurement" technology object", "Manual operation (without technology object)"

Bit → / Byte channel 0/1 ↓	Bit 7	Bit 6	Bit 5	Bit 4	Bit 3	Bit 2	Bit 1	Bit 0
0...3	**Header**							
0	Major Version = 0				Minor Version = 2			
1	Length of the parameter data per channel = 48							
2	Reserved[2]							
3	Reserved[2]							
4...51	**Counter channel 0**							
52...99	**Counter channel 1**							

Bit → / Byte channel 0/1 ↓	**Bit 7**	**Bit 6**	**Bit 5**	**Bit 4**	**Bit 3**	**Bit 2**	**Bit 1**	**Bit 0**
4/52	**Operating mode**							
4/52	Reserved[2]				Operating mode:			
					0000_B: Not permitted			
					0001_B: Counting			
					0010_B: Measuring			
					0011 to 1111_B: Not permitted			
5/53	**Basic parameters**							
5/53	Reserved[2]					Enable additional diagnostic interrupts[1]	Reaction to CPU STOP:	
							00_B: Output substitute value	
							01_B: Keep last value	
							10_B: Continue operation	
							11_B: Not permitted	
6...7/ 54...55	**Counter inputs**							
6/54	Sensor type:		Signal evaluation:		Signal type:			
	00_B: Sourcing output		00_B: Single		0000_B: Pulse (A)			
	01_B: Sinking output		01_B: Double		0001_B: Pulse (A) and direction (B)			
	10_B: Push-pull (sinking and sourcing output)		10_B: Quadruple		0010_B: Count up (A), count down (B)			
	11_B: Not permitted		11_B: Not permitted		0011_B: Incremental encoder (A, B phase-shifted)			
					0100_B: Incremental encoder (A, B, N)			
					0101 to 1111_B: Not permitted			
7/55	Reaction to signal N:		Invert direction[1]	Enable diagnostic interrupt on wire break[1]	Filter frequency[3]:			
	00_B: No reaction to signal N				0000_B: 100 Hz			
					0001_B: 200 Hz			
	01_B: Synchronization at signal N				0010_B: 500 Hz			
					0011_B: 1 kHz			
	10_B: Capture at signal N				0100_B: 2 kHz			
	11_B: Not permitted				0101_B: 5 kHz			
					0110_B: 10 kHz			
					0111_B: 20 kHz			
					1000_B: 50 kHz			
					1001_B: 100 kHz			
					1010_B: 200 kHz			
					1011 to 1111_B: Not permitted			

Bit → / Byte channel 0/1 ↓	Bit 7	Bit 6	Bit 5	Bit 4	Bit 3	Bit 2	Bit 1	Bit 0
8...9/ 56...57	**Hardware interrupts**[1]							
8/56	Reserved[2]			Change of direction	Underflow (low counting limit violated)	Overflow (high counting limit violated)	Gate stop	Gate start
9/57	Synchronization of the counter by an external signal	New Capture value available	Reserved[2]	Zero crossing	Reserved[2]	Comparison event for DQ1 has occurred	Reserved[2]	Comparison event for DQ0 has occurred
10...15/ 58...63	**Behavior of DQ0/1**							
10/58	Set output (DQ1):				Set output (DQ0):			
	0000_B: Use by user program				0000_B: Use by user program			
	0001_B: Between comparison value and high limit; Measuring: Measured value >= comparison value				0001_B: Between comparison value and high limit; Measuring: Measured value >= comparison value			
	0010_B: Between comparison value and low limit; Measuring: Measured value <= comparison value				0010_B: Between comparison value and low limit; Measuring: Measured value <= comparison value			
	0011_B: At comparison value for a pulse duration				0011_B: At comparison value for a pulse duration			
	0100_B: Between comparison value 0 and 1				0100_B: Not permitted			
	0101_B: After set command from CPU until comparison value				0101_B: After set command from CPU until comparison value			
	0110_B: Not between comparison value 0 and 1				0110 to 1111_B: Not permitted			
	0111 to 1111_B: Not permitted							
11/59	Count direction (DQ1):		Count direction (DQ0):		Reserved[2]		Substitute value for DQ1	Substitute value for DQ0
	00_B: Not permitted		00_B: Not permitted					
	01_B: Up		01_B: Up					
	10_B: Down		10_B: Down					
	11_B: In both directions		11_B: In both directions					
12/60	Pulse duration (DQ0):							
13/61	WORD: Value range in ms/10: 0 to 65535_D							
14/62	Pulse duration (DQ1):							
15/63	WORD: Value range in ms/10: 0 to 65535_D							

Bit → / Byte channel 0/1 ↓	**Bit 7**	**Bit 6**	**Bit 5**	**Bit 4**	**Bit 3**	**Bit 2**	**Bit 1**	**Bit 0**
16/64	**Behavior of DI0**							
16/64	Behavior of counter value after Capture (DI0):	Edge selection (DI0):		Select level (DI0):	Reserved[2]	Set function of DI (DI0):		
		00_B: Not permitted[4]				000_B: Gate start/stop (level-triggered)		
		01_B: At rising edge		0_B: Active with high level		001_B: Gate start (edge-triggered)		
		10_B: At falling edge				010_B: Gate stop (edge-triggered)		
	0_B: Continue counting	11_B: At rising and falling edge		1_B: Active with low level		011_B: Synchronization		
						100_B: Enable synchronization at signal N		
	1_B: Set to start value and contin-ue counting					101_B: Capture		
						110_B: Digital input without function		
						111_B: Not permitted		
17/65	**Behavior of DI1**: See Byte 16							
18/66	**Behavior of DI2**: See Byte 16							
19/67	Frequency of synchro-nization:	Reserved[2]		Frequency of Capture function:	Input delay:			
					0000_B: None			
					0001_B: 0.05 ms			
	0_B: Once			0_B: Once	0010_B: 0.1 ms			
					0011_B: 0.4 ms			
	1_B: Periodic			1_B: Periodic	0100_B: 0.8 ms			
					0101_B: 1.6 ms			
					0110_B: 3.2 ms			
					0111_B: 12.8 ms			
					1000_B: 20 ms			
					1001 to 1111_B: Not permitted			
20...43/ 68...91	**Values**							
20...23/ 68...71	High counting limit: DWORD: Value range: –2147483648 to 2147483647_D or 80000000 to $7FFFFFFF_H$							
24...27/ 72...75	Comparison value 0: Operating mode Counting: DWORD: Value range: –2147483648 to 2147483647_D or 80000000 to $7FFFFFFF_H$; Measuring operating mode: REAL: Floating-point number in the configured unit of the measured quantity							
28...31/ 76...79	Comparison value 1: Operating mode Counting: DWORD: Value range: –2147483648 to 2147483647_D: or 80000000 to $7FFFFFFF_H$; Measuring operating mode: REAL: Floating-point number in the configured unit of the measured quantity							
32...35/ 80...83	Start value: DWORD: Value range: –2147483648 to 2147483647_D or 80000000 to $7FFFFFFF_H$							
36...39/ 84...87	Low counting limit: DWORD: Value range: –2147483648 to 2147483647_D or 80000000 to $7FFFFFFF_H$							
40...43/ 88...91	Update time: DWORD: Value range in µs: 0 to 25000000_D							

Bit → / Byte channel 0/1 ↓	Bit 7	Bit 6	Bit 5	Bit 4	Bit 3	Bit 2	Bit 1	Bit 0
44/92	**Counter behavior at limits and gate start**							
44/92	Reaction to gate start:		Reaction to violation of a counting limit:			Reset when counting limit is violated:		
	00_B: Set to start value		000_B: Stop counting			000_B: To opposite counting limit		
	01_B: Continue with current value		001_B: Continue counting			001_B: To start value		
	10 to 11_B: Not permitted		010 to 111_B: Not permitted			010 to 111_B: Not permitted		
45/93	**Specify measured value**							
45/93	Reserved[2]			Time base for velocity measurement:			Measured variable:	
				000_B: 1 ms			00_B: Frequency	
				001_B: 10 ms			01_B: Period	
				010_B: 100 ms			10_B: Velocity	
				011_B: 1 s			11_B: Not permitted	
				100_B: 60 s				
				101 to 111_B: Not permitted				
46/94	Increments per unit:							
47/95	WORD: Value range: 1 to 65535_D							
48/96	Set hysteresis range: Value range: 0 to 255_D							
49...51/ 97...99	Reserved[2]							

1 You activate the respective parameter by setting the associated bit to 1.

2 Reserved bits must be set to 0.

3 In isochronous mode, the parameter can affect the isochronous mode parameters of the sync domain. Because the isochronous parameters are not checked in RUN, changing the parameter in RUN can result in the technology module no longer processing the control and feedback interface correctly. You prevent this by selecting the option with the greatest time demand as early as during the offline parameter assignment.

4 Applies to: Set function of DI = 001_B; 010_B; 011_B; 101_B

Structure of data record 128 in Fast Mode

The following table shows you the structure of data record 128 for TM Count 2x24V in Fast Mode. The values in byte 0 to byte 3 are fixed and may not be changed.

Table B- 2 Parameter data record 128: Operating mode "Fast Mode"

Bit → / Byte ↓	Bit 7	Bit 6	Bit 5	Bit 4	Bit 3	Bit 2	Bit 1	Bit 0
0...3	**Header**							
0	Major Version = 0				Minor Version = 2			
1	Length of the parameter data per channel = 48							
2	Reserved[2)]							
3	Reserved[2)]							

Bit → / Byte ↓	Bit 7	Bit 6	Bit 5	Bit 4	Bit 3	Bit 2	Bit 1	Bit 0
4...51	**Counter channel 0**							
52...99	**Counter channel 1**							
4/52	**Operating mode**							
4/52	Reserved[2)]				Operating mode:			
					0000_B: Invalid			
					0001_B: Counting			
					0010 to 1111_B: Invalid			
5/53	**Basic parameters**							
5/53	Reserved[2)]					Enable additional diagnostic interrupts[1)]	Reaction to CPU STOP:	
							00_B: Output substitute value	
							01_B: Keep last value	
							10_B: Continue operation	
							11_B: Invalid	
6...7/ 54...55	**Counter inputs** (parameters for incremental encoders and pulse encoders)							
6/54	Sensor type:		Signal evaluation:		Signal type:			
	00_B: Sourcing output		00_B: Single		0000_B: Pulse (A)			
	01_B: Sinking output		01_B: Double		0001_B: Pulse (A) and direction (B)			
	10_B: Push-pull (sinking and sourcing output)		10_B: Quadruple		0010_B: Count up (A), count down (B)			
	11_B: Invalid		11_B: Invalid		0011_B: Incremental encoder (A, B phase-shifted)			
					0100_B: Incremental encoder (A, B, N)			
					0101 to 1111_B: Invalid			
7/55	Reaction to signal N:		Invert direction[1]	Enable diagnostic interrupt on wire break[1]	Filter frequency[3]:			
	00_B: No reaction to signal N				0000_B: 100 Hz			
					0001_B: 200 Hz			
	01_B: Synchronization at signal N				0010_B: 500 Hz			
					0011_B: 1 kHz			
	10 to 11_B: Invalid				0100_B: 2 kHz			
					0101_B: 5 kHz			
					0110_B: 10 kHz			
					0111_B: 20 kHz			
					1000_B: 50 kHz			
					1001_B: 100 kHz			
					1010_B: 200 kHz			
					1011 to 1111_B: Invalid			

Bit → / Byte ↓	**Bit 7**	**Bit 6**	**Bit 5**	**Bit 4**	**Bit 3**	**Bit 2**	**Bit 1**	**Bit 0**
8...9/ 56...57	Reserved[2)]							
10...15/ 58...63	Behavior of a **DQ**							
10/58	Set output (DQ1):				Set output (DQ0):			
	0000_B: Digital output without function				0000_B: Digital output without function			
	0001_B: Between comparison value and count high limit				0001_B: Between comparison value and count high limit			
	0010_B: Between comparison value and count low limit				0010_B: Between comparison value and count low limit			
	0011_B: At comparison value for a pulse duration				0011_B: At comparison value for a pulse duration			
	0100_B: Between comparison value 0 and 1				0100_B to 1111_B: Invalid			
	0101 to 1111_B: Invalid							
11/59	Count direction (DQ1):		Count direction (DQ0):		Reserved[2)]		Substitute value for DQ1	Substitute value for DQ0
	00_B: Reserved		00_B: Reserved					
	01_B: Up		01_B: Up					
	10_B: Down		10_B: Down					
	11_B: In both directions		11_B: In both directions					
12/60	Pulse duration (DQ0):							
13/61	UINT: Value range in ms/10: 0 to 65535_D							
14/62	Pulse duration (DQ1):							
15/63	UINT: Value range in ms/10: 0 to 65535_D							
16/64	**Behavior of DI0**							
16/64	Reserved[2)]	Edge selection (DI0):		Select level (DI0):	Reserved[2)]	Set function of DI (DI0):		
		00_B: Not permitted[4]				000_B: Gate start/stop (level-triggered)		
		01_B: At rising edge		0_B: Active with high level		001_B: Gate start (edge-triggered)		
		10_B: At falling edge				010_B:Gate stop (edge-triggered)		
		11_B: Invalid		1_B: Active with low level		011_B: Synchronization		
						100_B: Enable synchronization at signal N		
						101_B: Invalid		
						110_B: Digital input without function		
						111_B: Invalid		

Bit → / Byte ↓	Bit 7	Bit 6	Bit 5	Bit 4	Bit 3	Bit 2	Bit 1	Bit 0
17/65	**Behavior of DI1**: See Byte 16							
18/66	**Behavior of DI2**: See Byte 16							
19/67	Frequency of synchronization:	Count direction for synchronization:		Reserved[2)]	Input delay:			
	0_B: Once	00_B: Invalid			0000_B: None			
	1_B: Periodic	01_B: Up			0001_B: 0.05 ms			
		10_B: Down			0010_B: 0.1 ms			
		11_B: In both directions			0011_B: 0.4 ms			
					0100_B: 0.8 ms			
					0101_B: 1.6 ms			
					0110_B: 3.2 ms			
					0111_B: 12.8 ms			
					1000_B: 20 ms			
					1001 to 1111_B: Invalid			
20...43/ 68...91	**Values**							
20...23/ 68...71	High counting limit: DWORD: Value range: 1 to 33554431_D or 1 to $01FFFFFF_H$							
24...27/ 72...75	Comparison value 0: DWORD: Value range: 0 to 33554431_D or 0 to $01FFFFFF_H$							
28...31/ 76...79	Comparison value 1: DWORD: Value range: 0 to 33554431_D or 0 to $01FFFFFF_H$							
32...35/ 80...83	Start value: DWORD: Value range: 0 to 33554431_D or 0 to $01FFFFFF_H$							
36...39/ 84...87	Low counting limit: DWORD: Value range: 0 to 33554430_D or 0 to $01FFFFFE_H$							
40...43/ 88...91	Reserved[2)]							

Bit → Byte ↓	Bit 7	Bit 6	Bit 5	Bit 4	Bit 3	Bit 2	Bit 1	Bit 0
44/92	**Counter behavior at limits and gate start**							
44/92	Reaction to gate start:		Reaction to violation of a counting limit:			Reset when counting limit is violated:		
	00_B: Set to start value		000_B: Stop counting			000_B: To opposite counting limit		
	01_B: Continue with current value		001_B: Continue counting			001_B: To start value		
	10 to 11_B: Invalid		010 to 111_B: Invalid			010 to 111_B: Invalid		
45...47/ 93...95	Reserved[2)]							
48/96	Set hysteresis range: Value range: 0 to 255_D:							
49...51/ 97...99	Reserved[2)]							

1 You enable the respective parameter by setting the associated bit to 1.

2 Reserved bits must be set to 0.

3 In isochronous mode, the parameter can have an effect on the isochronous parameters of the Sync domain. Because the isochronous parameters are not checked in RUN, changing the parameter in RUN can result in the technology module no longer processing the control and feedback interface correctly. You prevent this by selecting the option with the greatest time demand as early as during the offline parameter assignment.

4 Applies to: Set function of DI = 001_B; 010_B; 011_B

B.2 Parameter validation error

If you make the parameter settings in STEP 7 (TIA Portal) or in STEP 7 , the parameter values are checked before they are transferred to the technology module. This process prevents parameter errors.

In other use cases, the technology module checks the transferred parameter data record. If the technology module finds invalid or inconsistent parameter values, it outputs an error code (see below). The new parameter data record is rejected in this case, and work continues with the current parameter values until a valid parameter data record has been transferred.

WRREC

When the CPU is in RUN, you can change the parameter data record with the instruction WRREC (Write Record). In case of errors, the WRREC instruction returns corresponding error codes in the STATUS parameter.

Example:

Let us assume that an invalid value, for example 9, is written to the module for the operating mode with WRREC. As a consequence, the module rejects the entire parameter data record. You can recognize this by evaluating the STATUS output parameter of the WRREC instruction. The STATUS output parameter is output as an ARRAY[1..4] of BYTE data with the value 16#DF80E111:

Example of WRREC STATUS data	Address	Meaning
DF_H	STATUS[1]	Error when writing a data record via PROFINET IO (IEC 61158-6)
80_H	STATUS[2]	Error when reading or writing a data record via PROFINET IO (IEC 61158-6)
$E1_H$	STATUS[3]	Module-specific error
11_H	STATUS[4]	Error code from the table below: The "Operating mode" parameter has an invalid value.

Error codes

The following table shows the module-specific error codes and their meaning for parameter data record 128.

Table B- 3 Error codes for parameter validation

Error code in STATUS parameter (hexadecimal)				Meaning	Remedy
Byte 0	Byte 1	Byte 2	Byte 3		
DF	80	B0	00	Data record number unknown	Enter valid number for data record.
DF	80	B1	01	Length of data record incorrect	Enter valid value for data record length.
DF	80	B2	00	Slot invalid or not accessible	• Check whether module is inserted or removed. • Check assigned values for parameters of the WRREC instruction.
DF	80	E0	01	Wrong version	• Check byte 0. • Enter valid values.
DF	80	E0	02	Error in the header information	• Check byte 1. • Correct the length of the parameter blocks.
DF	80	E1	00	Parameter invalid: No detailed information available	Check all parameter values.
DF	80	E1	11	"Operating mode" parameter invalid	Enter valid parameter value.
DF	80	E1	12	"Reaction to CPU STOP" parameter invalid	Enter valid parameter value.
DF	80	E1	13	"Signal type" parameter invalid	Enter valid parameter value.
DF	80	E1	14	"Sensor type" parameter invalid	Enter valid parameter value.
DF	80	E1	15	"Filter frequency" parameter invalid	Enter valid parameter value.
DF	80	E1	16	"Reaction to signal N" parameter invalid	Enter valid parameter value.
DF	80	E1	17	"Set function of DI" parameter invalid	Enter valid parameter value.
DF	80	E1	18	"Set function of DI" parameter configured the same for DIn.0 and DIn.1.	Enter different parameter values for DIn.0 and DIn.1.
DF	80	E1	19	• "Edge selection" parameter invalid • "Gate start (edge-triggered)" configured as function for DIn.m and "At rising and falling edge" • "Gate stop (edge-triggered)" configured as function for DIn.m and "At rising and falling edge" • "Synchronization" configured as function for DIn.m and "At rising and falling edge"	• Enter valid parameter value. • Configure "Gate start (edge-triggered)" as function for DIn.m only together with "At rising edge" or "At falling edge" • Configure "Gate stop (edge-triggered)" as function for DIn.m only together with "At rising edge" or "At falling edge" • Configure "Synchronization" as function for DIn.m only together with "At rising edge" or "At falling edge"
DF	80	E1	1A	"Input delay" parameter invalid	Enter valid parameter value.
DF	80	E1	1B	"Set output" parameter invalid	Enter valid parameter value.
DF	80	E1	1C	"Count direction" parameter invalid	Enter valid parameter value.
DF	80	E1	1D	"Reset when counting limit is violated" parameter invalid	Enter valid parameter value.

Error code in STATUS parameter (hexadecimal)				Meaning	Remedy
Byte 0	Byte 1	Byte 2	Byte 3		
DF	80	E1	1E	"Reaction to violation of a counting limit" parameter invalid	Enter valid parameter value.
DF	80	E1	20	"Reaction to gate start" parameter invalid	Enter valid parameter value.
DF	80	E1	21[1,5]	• Low counting limit > comparison value 0 • Low counting limit > comparison value 1	• Low counting limit < comparison value 0 • Low counting limit < comparison value 1
DF	80	E1	22[1,5]	• Counting high limit < comparison value 0 • Counting high limit < comparison value 1	• High counting limit > comparison value 0 • High counting limit > comparison value 1
DF	80	E1	23	• "Start value" parameter invalid • "Low counting limit" parameter invalid	Enter valid parameter value: Start value > low counting limit
DF	80	E1	24	• "Start value" parameter invalid • "High counting limit" parameter invalid	Enter valid parameter value: Start value < high counting limit
DF	80	E1	25	"Update time" parameter invalid	Enter parameter value from range 0 to 25000000_D.
DF	80	E1	26[2]	"Reference speed" parameter invalid	Enter parameter value from range 6.00 to 210000.00_D.
DF	80	E1	27	"Measured variable" parameter invalid	Enter valid parameter value.
DF	80	E1	28	"Time base for velocity measurement" parameter invalid	Enter valid parameter value.
DF	80	E1	29	"Increments per unit" parameter invalid	Enter valid parameter value.
DF	80	E1	2A	• "High counting limit" parameter invalid • "Low counting limit" parameter invalid	Enter valid parameter value: Low counting limit < high counting limit
DF	80	E1	2B[3]	• "Comparison value 0" parameter invalid • "Comparison value 1" parameter invalid	Enter valid parameter value: Comparison value 0 < comparison value 1
DF	80	E1	2C	"Signal evaluation" parameter invalid	Enter valid parameter value.
DF	80	E1	2D	• "Between comparison value 0 and 1" configured for DQn.0 • "Not between comparison value 0 and 1" configured for DQn.0 • "Between comparison value 0 and 1" configured for DQn.1, but "Use by user program" not configured for DQn.0 • "Not between comparison value 0 and 1" configured for DQn.1, but "Use by user program" not configured for DQn.0	• Configure "Between comparison value 0 and 1" only for DQn.1 • "Not between comparison value 0 and 1" configured only for DQn.1 • Only configure "Between comparison value 0 and 1" for DQn.1 when "Use by user program" is configured for DQn.0 • Only configure "Not between comparison value 0 and 1" for DQn.1 when "Use by user program" is configured for DQn.0
DF	80	E1	2E	"Capture" configured for DIn.m in "Measuring" operating mode	Do not configure "Capture" for DIn.m in "Measuring" operating mode.
DF	80	E1	36[4]	"Counting high limit" parameter invalid	Enter valid parameter value.
DF	80	E1	37[4,5]	• "Comparison value 0" parameter invalid • "Comparison value 1" parameter invalid	Enter valid parameter value.

Error code in STATUS parameter (hexadecimal)				Meaning	Remedy
Byte 0	**Byte 1**	**Byte 2**	**Byte 3**		
DF	80	E1	38[4]	"Start value" parameter invalid	Enter valid parameter value.
DF	80	E1	39[4]	"Counting low limit" parameter invalid	Enter valid parameter value.
DF	80	E1	3A[4]	"Count direction for synchronization" parameter invalid	Enter valid parameter value.
DF	80	E1	F0	Reserved bit is not set to 0.	Set reserved bit to 0.
DF	80	E1	FF	Conflict with the isochronous times configured in the hardware configuration.	Enter suitable isochronous times in the hardware configuration.

1 Only for "Counting" operating mode

2 Only for "Position input for technology object "Motion Control"" operating mode

3 Only for DQn.1 functions "Between comparison value 0 and 1" and "Not between comparison value 0 and 1"

4 Only for operating mode "Fast Mode"

5 Not for DQn.m function "Use by user program" or "Digital output without function"

SIEMENS

Manual

SIMATIC

S7-1500/ET 200MP

Technology module
TM PosInput 2 (6ES7551-1AB01-0AB0)

Edition 06/2022

support.industry.siemens.com

SIEMENS

SIMATIC

S7-1500/ET 200MP Technology module TM PosInput 2 (6ES7551-1AB01-0AB0)

Equipment Manual

Preface

Documentation guide 1

Product overview 2

Wiring 3

Configuring/address space 4

Interrupts/diagnostic messages 5

Technical specifications 6

Dimensional drawing A

Parameter data record B

06/2022

A5E03982218-AC

Legal information

Warning notice system

This manual contains notices you have to observe in order to ensure your personal safety, as well as to prevent damage to property. The notices referring to your personal safety are highlighted in the manual by a safety alert symbol, notices referring only to property damage have no safety alert symbol. These notices shown below are graded according to the degree of danger.

⚠ DANGER
indicates that death or severe personal injury **will** result if proper precautions are not taken.

⚠ WARNING
indicates that death or severe personal injury **may** result if proper precautions are not taken.

⚠ CAUTION
indicates that minor personal injury can result if proper precautions are not taken.

NOTICE
indicates that property damage can result if proper precautions are not taken.

If more than one degree of danger is present, the warning notice representing the highest degree of danger will be used. A notice warning of injury to persons with a safety alert symbol may also include a warning relating to property damage.

Qualified Personnel

The product/system described in this documentation may be operated only by **personnel qualified** for the specific task in accordance with the relevant documentation, in particular its warning notices and safety instructions. Qualified personnel are those who, based on their training and experience, are capable of identifying risks and avoiding potential hazards when working with these products/systems.

Proper use of Siemens products

Note the following:

⚠ WARNING
Siemens products may only be used for the applications described in the catalog and in the relevant technical documentation. If products and components from other manufacturers are used, these must be recommended or approved by Siemens. Proper transport, storage, installation, assembly, commissioning, operation and maintenance are required to ensure that the products operate safely and without any problems. The permissible ambient conditions must be complied with. The information in the relevant documentation must be observed.

Trademarks

All names identified by ® are registered trademarks of Siemens AG. The remaining trademarks in this publication may be trademarks whose use by third parties for their own purposes could violate the rights of the owner.

Disclaimer of Liability

We have reviewed the contents of this publication to ensure consistency with the hardware and software described. Since variance cannot be precluded entirely, we cannot guarantee full consistency. However, the information in this publication is reviewed regularly and any necessary corrections are included in subsequent editions.

Siemens AG
Digital Industries
Postfach 48 48
90026 NÜRNBERG
GERMANY

A5E03982218-AC
Ⓟ 06/2022 Subject to change

Copyright © Siemens AG 2022.
All rights reserved

Preface

Purpose of the documentation

This manual includes module-specific information on wiring, diagnostics and the technical specifications of the technology module.

Generally-applicable information on installation and commissioning of the S7-1500 or ET 200MP is available in the S7-1500 / ET 200MP automation system (http://support.automation.siemens.com/WW/view/en/59191792) System Manual.

The counting and measuring functions and position input of the TM PosInput 2 technology module are described in more detail in the Counting, measurement and position input (http://support.automation.siemens.com/WW/view/en/59709820) Function Manual.

Conventions

Please observe notes marked as follows:

Note

A note contains important information on the product described in the documentation, on the handling of the product and on the section of the documentation to which particular attention should be paid.

Document history

The following table shows the most important changes to the documentation compared to the previous edition.

Manual edition	Comments
06/2022	The following sections have been revised: • Product overview (Page 10) • Wiring (Page 19) • Configuring/address space (Page 31) • Interrupts/diagnostic messages (Page 82) • Technical specifications (Page 90)
06/2018	The following sections have been revised: • Product overview (Page 10) • Configuring/address space (Page 31) • Interrupts/diagnostic messages (Page 82) • Technical specifications (Page 90) • Parameter data record (Page 100)
06/2013	First edition

Siemens Industry Online Support

You can find current information on the following topics quickly and easily here:

- **Product support**

  All the information and extensive know-how on your product, technical specifications, FAQs, certificates, downloads, and manuals.

- **Application examples**

  Tools and examples to solve your automation tasks – as well as function blocks, performance information and videos.

- **Services**

  Information about Industry Services, Field Services, Technical Support, spare parts and training offers.

- **Forums**

  For answers and solutions concerning automation technology.

- **mySupport**

  Your personal working area in Industry Online Support for messages, support queries, and configurable documents.

This information is provided by the Siemens Industry Online Support in the Internet (https://support.industry.siemens.com).

Industry Mall

The Industry Mall is the catalog and order system of Siemens AG for automation and drive solutions on the basis of Totally Integrated Automation (TIA) and Totally Integrated Power (TIP).

You can find catalogs for all automation and drive products on the Internet (https://mall.industry.siemens.com) and in the Information and Download Center (https://www.siemens.com/automation/infocenter).

Security information

Siemens provides products and solutions with industrial security functions that support the secure operation of plants, systems, machines and networks.

In order to protect plants, systems, machines and networks against cyber threats, it is necessary to implement – and continuously maintain – a holistic, state-of-the-art industrial security concept. Products and solutions from Siemens form one element of such a concept.

Customers are responsible for preventing unauthorized access to their plants, systems, machines and networks. Such systems, machines and components should only be connected to an enterprise network or the internet if and to the extent such a connection is necessary and only when appropriate security measures (e.g. firewalls and/or network segmentation) are in place.

You can find additional information on industrial security measures that may be implemented here (https://www.siemens.com/industrialsecurity).

Siemens' products and solutions undergo continuous development to make them more secure. Siemens strongly recommends that product updates are applied as soon as they are available and that the latest product versions are used. Use of product versions that are no longer supported, and failure to apply latest updates may increase customer's exposure to cyber threats.

To stay informed about product updates, subscribe to the Siemens Industrial Security RSS Feed under (https://www.siemens.com/cert).

Open Source Software

Open-source software is used in the firmware of the product described. Open Source Software is provided free of charge. We are liable for the product described, including the open-source software contained in it, pursuant to the conditions applicable to the product. Siemens accepts no liability for the use of the open source software over and above the intended program sequence, or for any faults caused by modifications to the software.

For legal reasons, we are obliged to publish the original text of the license conditions and copyright notices. Please read the information on this on the Internet (https://support.industry.siemens.com/cs/ww/en/view/109740777).

Table of contents

Preface **3**

1 Documentation guide **8**

2 Product overview **10**

2.1 Properties 10

2.2 Functions 14
2.2.1 Acquisition of encoder signals 14
2.2.1.1 Position input with SSI absolute encoder 14
2.2.1.2 Counting with incremental or pulse encoder 15
2.2.2 Measured value determination 16
2.2.3 Switching the outputs at comparison values 16
2.2.4 Position input for Motion Control 17
2.2.5 Fast Mode 17
2.2.6 Additional functions 17

3 Wiring **19**

3.1 SSI encoder signals 20

3.2 RS422 encoder signals 23

3.3 TTL encoder signals 27

4 Configuring/address space **31**

4.1 Operating with "Counting and measurement" technology object 31
4.1.1 Configuring 31
4.1.2 Parameter setting 32
4.1.2.1 Parameters (SSI absolute encoder) 33
4.1.2.2 Parameters (incremental or pulse encoder) 37
4.1.3 Address space 41
4.1.4 Reaction to CPU STOP 41
4.1.5 Isochronous mode 42

4.2 Position input for ""Motion Control"" technology object 43
4.2.1 Configuring 43
4.2.2 Parameter setting 44
4.2.2.1 Parameters (SSI absolute encoder) 45
4.2.2.2 Parameters (incremental or pulse encoder) 46
4.2.3 Address space 48
4.2.4 Control interface and feedback interface 48
4.2.4.1 Assignment of the control interface 48
4.2.4.2 Assignment of the feedback interface 48
4.2.5 Isochronous mode 49

4.3 Manual operation (without technology object) ... 50
4.3.1 Configuring ... 50
4.3.2 Parameter setting ... 52
4.3.2.1 Parameters (SSI absolute encoder) ... 53
4.3.2.2 Parameters (incremental or pulse encoder) ... 57
4.3.3 Address space ... 61
4.3.4 Control and feedback interface ... 61
4.3.4.1 Assignment of the control interface ... 61
4.3.4.2 Assignment of the feedback interface ... 64
4.3.4.3 Reaction to CPU STOP ... 68
4.3.5 Isochronous mode ... 69

4.4 Fast Mode ... 70
4.4.1 Configuring ... 70
4.4.2 Parameter setting ... 73
4.4.2.1 Parameter setting ... 73
4.4.2.2 Parameters (SSI absolute encoder) ... 74
4.4.2.3 Parameters (incremental or pulse encoder) ... 76
4.4.3 Address space ... 78
4.4.4 Assignment of the feedback interface ... 79
4.4.5 Reaction to CPU STOP ... 80
4.4.6 Isochronous mode ... 81

5 Interrupts/diagnostic messages ... 82

5.1 Status and error display ... 82

5.2 Diagnostic alarms ... 85

5.3 Hardware interrupts ... 88

6 Technical specifications ... 90

A Dimensional drawing ... 98

B Parameter data record ... 100

B.1 Parameter assignment and structure of parameter data record ... 100

B.2 Parameter validation error ... 111

Documentation guide

1

The documentation for the SIMATIC S7-1500 automation system and the SIMATIC ET 200MP distributed I/O system is arranged into three areas.
This arrangement enables you to access the specific content you require.

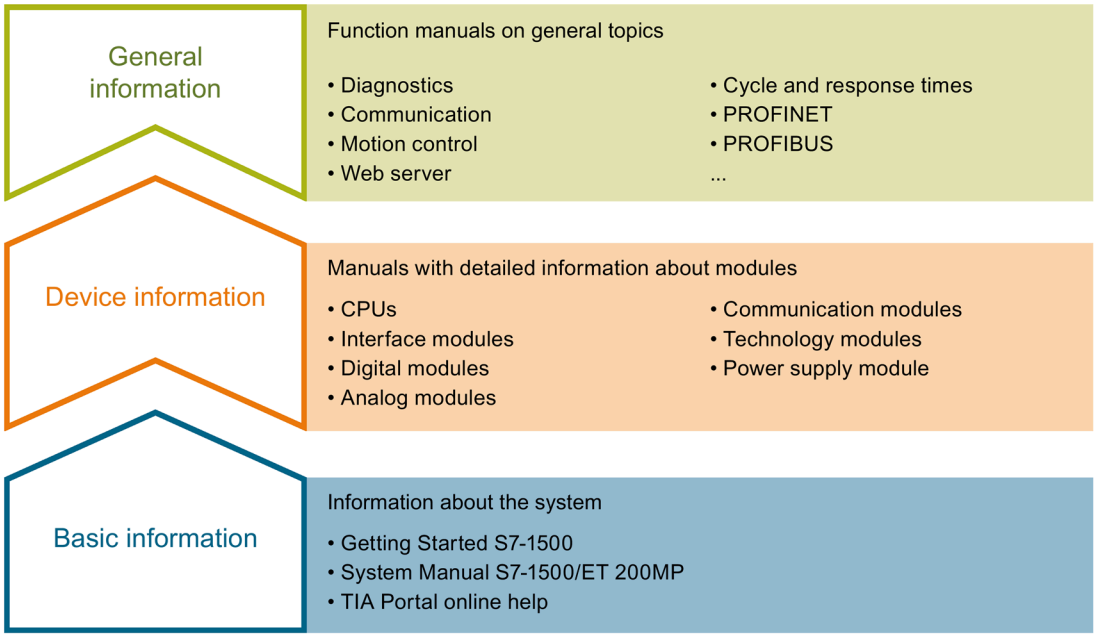

Basic information

The System Manual and Getting Started describe in detail the configuration, installation, wiring and commissioning of the SIMATIC S7-1500 and ET 200MP systems. The STEP 7 online help supports you in the configuration and programming.

Device information

Product manuals contain a compact description of the module-specific information, such as properties, wiring diagrams, characteristics and technical specifications.

General information

The function manuals contain detailed descriptions on general topics regarding the SIMATIC S7-1500 and ET 200MP systems, e.g. diagnostics, communication, motion control, Web server, OPC UA.

You can download the documentation free of charge from the Internet (https://support.industry.siemens.com/cs/ww/en/view/109742691).

Changes and supplements to the manuals are documented in a Product Information.

You can download the product information free of charge from the Internet (https://support.industry.siemens.com/cs/us/en/view/68052815).

Manual Collection S7-1500/ET 200MP

The Manual Collection contains the complete documentation on the SIMATIC S7-1500 automation system and the ET 200MP distributed I/O system gathered together in one file.

You can find the Manual Collection on the Internet (https://support.industry.siemens.com/cs/ww/en/view/86140384).

SIMATIC S7-1500 comparison list for programming languages

The comparison list contains an overview of which instructions and functions you can use for which controller families.

You can find the comparison list on the Internet (https://support.industry.siemens.com/cs/ww/en/view/86630375).

"mySupport"

With "mySupport", your personal workspace, you make the best out of your Industry Online Support.

In "mySupport", you can save filters, favorites and tags, request CAx data and compile your personal library in the Documentation area. In addition, your data is already filled out in support requests and you can get an overview of your current requests at any time.

You must register once to use the full functionality of "mySupport".

You can find "mySupport" on the Internet (https://support.industry.siemens.com/My/ww/en).

Application examples

The application examples support you with various tools and examples for solving your automation tasks. Solutions are shown in interplay with multiple components in the system - separated from the focus on individual products.

You will find the application examples on the Internet (https://support.industry.siemens.com/sc/ww/en/sc/2054).

Product overview 2

2.1 Properties

Article number

6ES7551-1AB01-0AB0

The TM PosInput 2 technology module with article number 6ES7551-1AB01-0AB0 and firmware version V2.0 is a compatible replacement for the TM PosInput 2 with article number 6ES7551-1AB00-0AB0.

The TM PosInput 2 with article number 6ES7551-1AB01-0AB0 can be used in configurations in which the TM PosInput 2 with article number 6ES7551-1AB00-0AB0 is configured. It then has the functional scope of the TM PosInput 2 with article number 6ES7551-1AB00-0AB0.

Firmware version

This manual describes the properties of firmware version V2.0 of the module.

View of the module

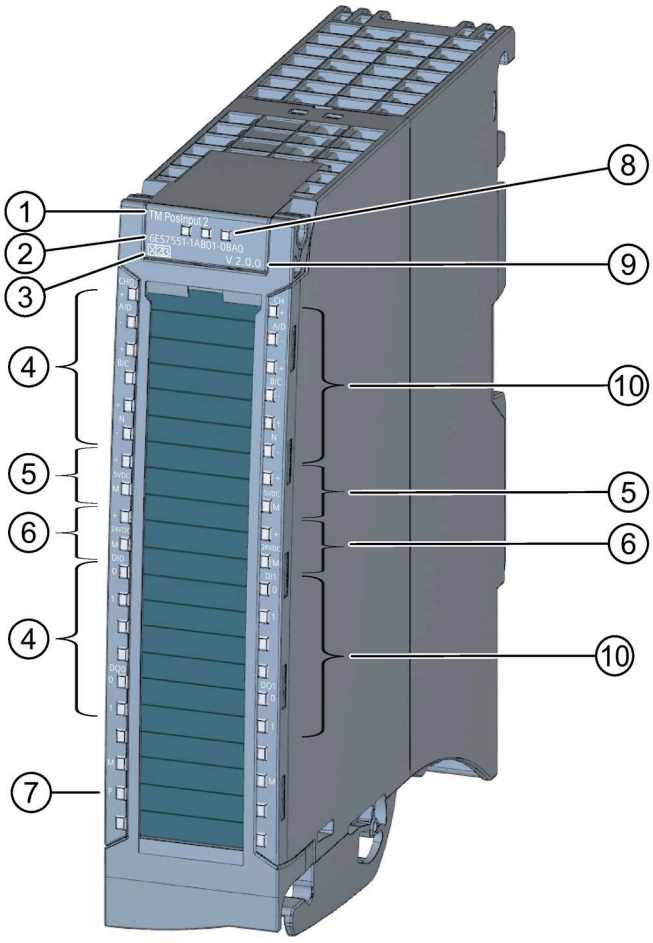

① Module type and designation
② Article number
③ Release number
④ LEDs for status channel 0
⑤ LED for 5 V encoder supply
⑥ LED for 24 V encoder supply
⑦ LED for supply voltage
⑧ LEDs for diagnostics
⑨ Firmware version
⑩ LEDs for status channel 1

Figure 2-1 View of the TM PosInput 2 module

Properties

The TM PosInput 2 technology module has the following properties:

- Technical properties
  - Two channels
  - Interfaces:

    SSI encoder signals D (SSI data) and C (SSI clock) or RS422/TTL encoder signals A, B and N

    5 V and 24 V encoder supply, short-circuit proof

    DI0 and DI1 digital input signals (per channel)

    DQ0 and DQ1 digital output signals (per channel, short-circuit proof)

    Supply voltage L+
  - Count range: 32 bits
  - Channel-by-channel monitoring of encoder signals for wire break
  - Channel-by-channel monitoring of digital outputs for short-circuit
  - Monitoring for faulty supply voltage
  - Hardware interrupts can be configured channel by channel
  - Input filters for suppression of interferences at encoder inputs and digital inputs can be configured
- Supported encoder/signal types
  - SSI absolute encoder
  - RS422/TTL incremental encoder with N signal
  - RS422/TTL incremental encoder without N signal
  - RS422/TTL pulse encoder with direction signal
  - RS422/TTL pulse encoder without direction signal
  - RS422/TTL pulse encoder with up/down count signal

The module supports the following functions:

Table 2- 1 Version dependencies of the functions

Function	Firmware version of module	Configurable as of		
		STEP 7 (TIA Portal)	GSD	
			PROFINET IO	PROFIBUS DP
Firmware update	V1.0 or higher	V13	X	—
I&M identification data	V1.0 or higher	V13	X	X
Parameter reassignment in RUN	V1.0 or higher	V13	X	X
Isochronous mode	V1.0 or higher	V13	—	—
Counting/measuring	V1.0 or higher	V13	X	X
Operating with "Counting and measurement" technology object	V1.0 or higher	V13	—	—
Position input for "Motion Control" technology object	V1.0 or higher	V13	—	—
Operating with "Measuring input" technology object	V1.3 or higher	V15 with HSP0256	—	—
Use SSI absolute encoder with position value range of 32 bits	V1.3 or higher	V15 with HSP0256	X	X
Fast Mode	V2.0 or higher	V17 with HSP0355	X	X
Display of digital input states in the process image for position detection for "Motion Control" technology object	V2.0 or higher	V17 with HSP0355	—	—

Firmware versions V1.x are available for the article number 6ES7551-1AB00-0AB0. Firmware version V2.0 is available for article number 6ES7551-1AB01-0AB0.
You can configure the module with the article number 6ES7551-1AB01-0AB0 as **replacement part compatible** with the article number 6ES7551-1AB00-0AB0.

Accessories

The following components are supplied with the technology module and can also be ordered separately as spare parts:

- Shield bracket
- Shield terminal
- Power supply element
- Labeling strip
- U-connector

Other components

The following component needs to be ordered separately:

- Front connectors, including potential jumpers and cable ties

You can find information on the front connector in system manual S7-1500 / ET 200MP Automation System (http://support.automation.siemens.com/WW/view/en/59191792), section "Accessories".

2.2 Functions

2.2.1 Acquisition of encoder signals

2.2.1.1 Position input with SSI absolute encoder

You can use the TM PosInput 2 technology module per channel with one SSI absolute encoder for position detection. The technology module reads the position value via a synchronous serial interface from the SSI absolute encoder and makes it available to the controller.

You can switch the digital outputs of the technology module exactly at defined position values, independently of the user program. Position input with an SSI absolute encoder does not involve gate control.

Gray-code and dual-code

Gray-code and dual-code SSI absolute encoders are supported.

Range for position value

You can specify a frame length of 10 bits to 40 bits for the SSI absolute encoder. The configurable bit numbers of the LSB and the MSB of the position value in the frame define the value range. The technology module can read in a position value with a maximum length of 32 bits and transfer it to the controller.

Complete SSI frame

Instead of having a measured variable returned, you can choose to have the least significant 32 bit of the current unprocessed SSI frame returned. This provides you with encoder-specific additional bits, such as error bits, in addition to the position value. If the SSI frame is shorter than 32 bits, the complete SSI frame is returned right-aligned and the top unused bits are returned with "0" in the feedback interface.

Capture (Latch)

You can configure the edge of an external reference signal that triggers saving of the current position value as a Capture value. The following external signals can trigger the Capture function:

- Rising or falling edge of a digital input
- Both edges of a digital input

The "Frequency of Capture function" parameter specifies whether the function is executed at each configured edge or only once after each enable.

Measuring input

If you use Position input for Motion Control (Page 17), you can use the "Measuring input" technology object to execute a measuring input function with a hardware digital input.

Hardware interrupts

The technology module can trigger a hardware interrupt in the CPU when a comparison event, zero crossing and/or direction reversal occurs. You can specify which events during operation are to trigger a hardware interrupt.

2.2.1.2 Counting with incremental or pulse encoder

Counting is the detecting and adding up of events. The counters of the technology module detect encoder signals and pulses and evaluate them accordingly. The count direction can be specified using encoder or pulse signals or through the user program.

You can control the counting processes with the digital inputs. In addition, you can read the signal state of the respective digital input via the feedback interface.

You can specify the counter characteristics using the functions described below.

Counting limits

The counting limits define the counter value range used. The counting limits are configurable and can be modified during runtime with the user program.

You can configure the behavior of the counter at the counting limits.

Start value

You can configure a start value within the counting limits. The start value can be modified during runtime with the user program.

Gate control

You can define the time window in which the count signals are acquired with the hardware gate (HW gate) and software gate (SW gate).

Capture (Latch)

You can configure an external reference signal edge that triggers the saving of the current counter value as Capture value. The following external signals can trigger the Capture function:

- Rising or falling edge of a digital input
- Both edges of a digital input
- Rising edge of signal N at the encoder input

The "Frequency of Capture function" parameter specifies whether the function is executed at each configured edge or only once after each enable.

Measuring input

If you use Position input for Motion Control (Page 17), you can use the "Measuring input" technology object to execute a measuring input function with a hardware digital input.

Hardware interrupts

The technology module can trigger a hardware interrupt in the CPU when, for example, a comparison event, zero crossing and/or a change of count direction (direction reversal) occurs. You can specify which events during operation are to trigger a hardware interrupt.

2.2.2 Measured value determination

The following high-accuracy measurement functions are available (accuracy up to 100 ppm):

- Frequency measurement with the unit of hertz
- Period measurement with the unit of seconds
- Velocity measurement with a flexibly adaptable unit
- Complete SSI frame instead of a measured quantity

Update time

You can configure the interval at which the technology module updates the measured values cyclically as the update time.

Gate control for incremental and pulse encoders

You can define the time window in which the count signals are acquired with the hardware gate (HW gate) and software gate (SW gate).

2.2.3 Switching the outputs at comparison values

The available digital outputs DQ0 and DQ1 can be directly activated/switched by the specified comparison values or via the user program. The comparison values are configurable and can be modified during runtime with the user program. This enables very fast reaction times to be achieved.

Comparison values in the Counting/Position input operating mode

In Counting/Position input operating mode you specify two position or counter values as comparison values depending on the encoder. If the current position or counter value meets the configured comparison condition, the corresponding digital output can be set to directly initiate control processes in the process.

Comparison values in the Measuring mode

You define two comparison values in the Measuring mode. If the current measured value meets the configured comparison condition, the corresponding digital output can be set to directly initiate control processes in the process.

2.2.4 Position input for Motion Control

You can use the technology module for position detection for the following axis technology objects of S7-1500 Motion Control :

- TO_PositioningAxis
- TO_SynchronousAxis
- TO_ExternalEncoder

In this operating mode, you can use the measuring input technology object (TO_MeasuringInput) to execute a measuring input function with hardware digital input DI1.

Additional information

You can find a detailed description of the use of Motion Control and its configuration in the following:

- Function manual S7-1500 Motion Control available for download on the Internet (https://support.industry.siemens.com/cs/ww/en/view/59381279)
- Function manual S7-1500T Motion Control available for download on the Internet (https://support.industry.siemens.com/cs/ww/en/view/109481326)

2.2.5 Fast Mode

You can use the technology module in Fast Mode for very fast acquisition of counter or position value with compressed functionality. A reduced feedback interface but no control interface is available in Fast Mode. This allows you to use a shorter send clock for the CPU.

2.2.6 Additional functions

Synchronization for incremental and pulse encoder

You can configure the edge of an external reference signal that loads the counter with the specified start value. The following external signals can trigger a synchronization:

- Rising or falling edge of a digital input
- Rising edge of signal N at the encoder input
- Rising edge of signal N at the encoder input depending on the level of the assigned digital input

The "Frequency of synchronization" parameter specifies whether the function is executed at each configured edge or only once after each enable.

Hysteresis

You can specify a hysteresis for the comparison values within which a digital output will be prevented from switching again.

Diagnostic interrupt

The technology module can trigger diagnostic interrupts. You enable the diagnostic interrupts in the device configuration.

Input filter

To suppress interference, you can configure an input filter for the RS422/TTL encoder inputs and for the digital inputs.

Isochronous mode

The technology module supports the "Isochronous mode" system function. This system function enables position, counter and measured values to be acquired in a defined system cycle.

Wiring

3

You connect the encoder signals, the digital input and output signals and the encoder supplies to the 40-pin front connector of the technology module. In addition, you connect the supply voltage for supplying the module and digital outputs and for producing the encoder supply voltages to the 4-pin power supply element.

You can find the pin assignment of the front connector and the power supply element in the following two sections.

You can find information on wiring the front connector, shielding the cable, etc., in system manual S7-1500 / ET 200MP Automation System (http://support.automation.siemens.com/WW/view/en/59191792), section Wiring.

Pin assignment for the power supply element

The power supply element is plugged onto the front connector and serves to supply the technology module. For this, you must connect the supply voltage to terminal 41 (L+) and terminal 44 (M). Use terminal 42 (L+) and terminal 43 (M) to loop the supply voltage to the next module.

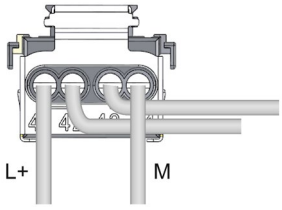

Figure 3-1 Connection of power supply element

L+	Supply voltage 24 V DC
M	Ground for supply voltage

An internal protective circuit protects the technology module from polarity reversal of the supply voltage. The technology module monitors the connection of the supply voltage.

Encoder supplies

For supplying the encoders and sensors connected to the digital inputs, the technology module provides supply voltages of 24 V DC (terminal 9/29) and 5 V DC (terminal 7/27) with reference to ground (terminals 8/28 and 10/30). Both voltages are monitored for short-circuit and overload.

Digital inputs DI0 and DI1

The digital inputs are used for gate control, synchronization and the Capture function.

The digital inputs of the two channels are not isolated from one another.

Input delay for digital inputs

To suppress interference, you can configure an input delay for the digital inputs.

Note

If you select the "None" or "0.05 ms" option, you must use shielded cables for connection of the digital inputs.

Digital outputs DQ0 and DQ1

The digital outputs of the two channels are not isolated from one another.

The digital outputs are 24 V sourcing outputs in reference to M and can carry a rated load current of 0.5 A. They are protected against overload and short-circuit.

Relays and contactors can be directly connected without an external protective circuit. You can find information on the maximum possible operating frequencies and the inductive loads at the digital outputs in the section Technical specifications (Page 90).

3.1 SSI encoder signals

SSI encoder signals

The TM PosInput 2 can process SSI encoder signals. These are designated with data and clock and use the RS422 signal standard.

An RS422 encoder signal uses a pair of wires and the information is transmitted as differential voltage. This ensures interference-free transmission of RS422 encoder signals even with high frequencies over long distances. The RS422 wire pairs must each be twisted in the cable as well as outside the cable up to the terminal.

The SSI encoder signals data and clock are connected via the D and C terminals. The N terminals remain unconnected. The inputs are not isolated from each other. The inputs are isolated from the backplane bus.

Pin assignment for the front connector

The table below shows the pin assignment of the front connector.

Table 3- 1 Pin assignment of the front connector

Designation	Signal name		View	Signal name		Designation
Channel 0			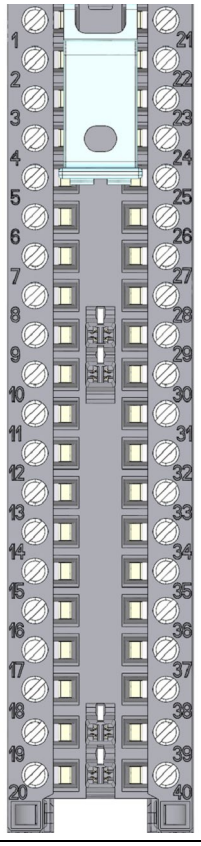	**Channel 1**		
SSI data signal +D	+CH0.A/**D**	1		21	+CH1.A/**D**	SSI data signal +D
SSI data signal -D	-CH0.A/**D**	2		22	-CH1.A/**D**	SSI data signal -D
SSI clock signal +C	+CH0.B/**C**	3		23	+CH1.B/**C**	SSI clock signal +C
SSI clock signal -C	-CH0.B/**C**	4		24	-CH1.B/**C**	SSI clock signal -C
—	+CH0.N	5		25	+CH1.N	—
—	-CH0.N	6		26	-CH1.N	—
Encoder supply 5 V DC	5VDC	7		27	5VDC	Encoder supply 5 V DC
Ground[1]	M	8		28	M	Ground[1]
Encoder supply 24 V DC	24VDC	9		29	24VDC	Encoder supply 24 V DC
Ground[1]	M	10		30	M	Ground[1]
Digital input DI0	DI0.0	11		31	DI1.0	Digital input DI0
Digital input DI1	DI0.1	12		32	DI1.1	Digital input DI1
—	—	13		33	—	—
—	—	14		34	—	—
Digital output DQ0	DQ0.0	15		35	DQ1.0	Digital output DQ0
Digital output DQ1	DQ0.1	16		36	DQ1.1	Digital output DQ1
—	—	17		37	—	—
Ground[1]	M	18		38	M	Ground[1]
—	—	19		39	—	—
		20		40		

[1] Can be used for encoder supplies, digital inputs and digital outputs

Note

Potential jumpers may not be inserted in the front connector.

Block diagram

You must ground the shields of the cables between encoder and technology module both through the shield support at the front connector (shield bracket and terminal) and at the encoder.

The figure below shows the block diagram of the technology module with one connected SSI absolute encoder.

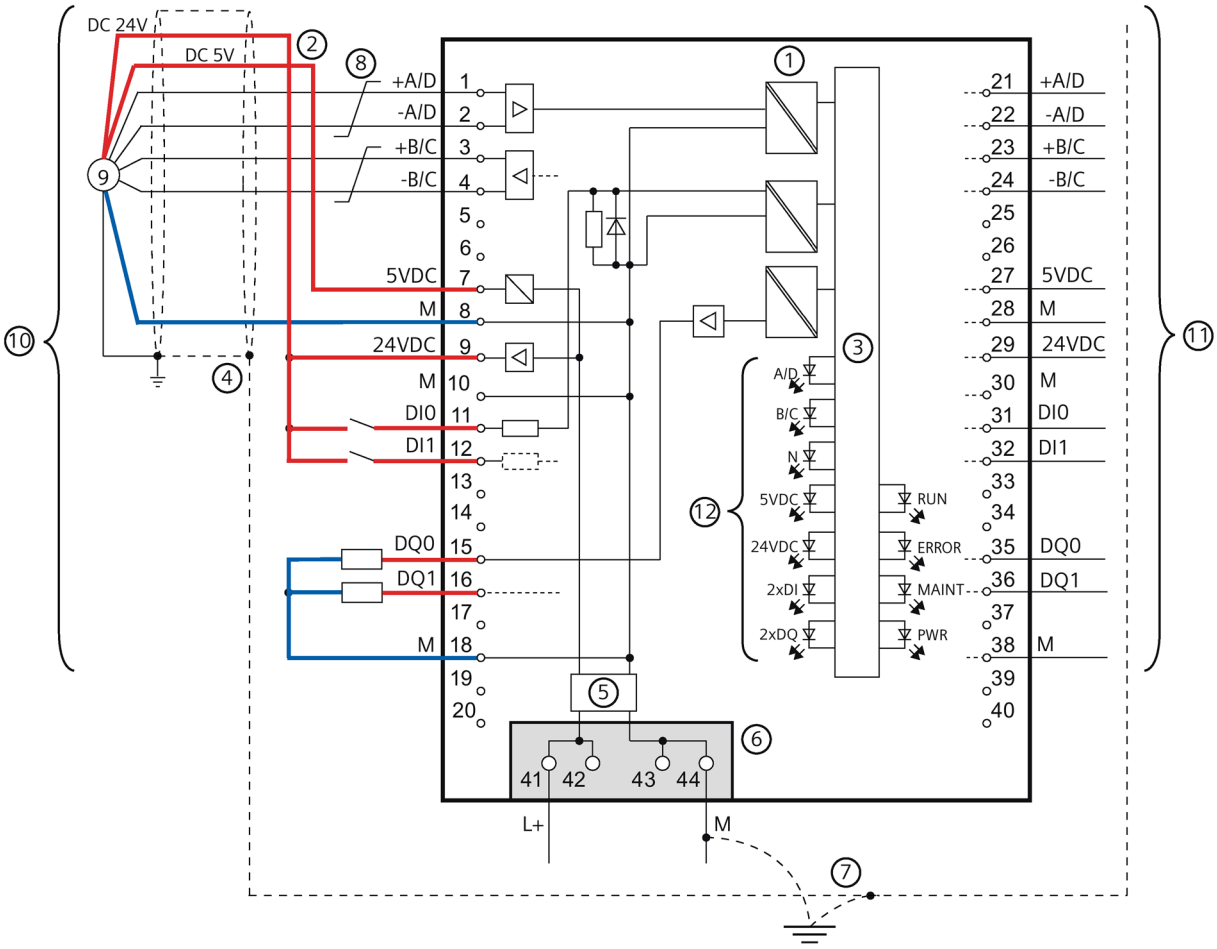

① Electrical isolation
② Encoder supply, optionally 5 V DC or 24 V DC, according to the specification of the encoder manufacturer
③ Technology and backplane bus interface
④ Shield support at the front connector
⑤ Input filter
⑥ Supply voltage via power supply element
⑦ Equipotential bonding
⑧ Twisted in pairs
⑨ SSI absolute encoder
⑩ Channel 0
⑪ Channel 1
⑫ Per channel

Figure 3-2 Block diagram with SSI absolute encoder

3.2 RS422 encoder signals

RS422 encoder signals/count signals

The TM PosInput 2 can process RS422 encoder signals. These counting encoder signals are designated with the letters A, B and N.

An RS422 encoder signal uses a pair of wires and the counter information is transmitted as differential voltage. This ensures interference-free transmission of RS422 encoder signals even with high frequencies over long distances. The RS422 wire pairs must each be twisted in the cable as well as outside the cable up to the terminal.

You can connect the following encoder types:

- RS422 incremental encoder with N signal:

  The encoder signals A, B and N are connected using the correspondingly marked terminals. A and B are the two incremental signals phase-shifted by 90°. N is the zero mark signal that supplies one pulse per revolution.

- RS422 incremental encoder without N signal:

  The encoder signals A and B are connected using the correspondingly marked terminals. A and B are the two incremental signals phase-shifted by 90°. The N terminals remain unconnected.

- RS422 pulse encoder without direction signal:

  The counting signal is connected to the A terminals. The count direction can be specified via the control interface. The B and N terminals remain unconnected.

- RS422 pulse encoder with direction signal:

  The counting signal is connected to the A terminals. The direction signal is connected to the B terminals. Counting down takes place at a high level of the direction signal. The N terminals remain unconnected.

- RS422 pulse encoder with up/down count signal

  The up counting signal is connected to the A terminals. The down counting signal is connected to the B terminals. The N terminals remain unconnected.

The inputs are not isolated from each other. The inputs are isolated from the backplane bus.

Note

The RS422 signal standard offers greater interference immunity than the TTL signal standard. Therefore, if your incremental or pulse encoder supports the RS422 **and** the TTL signal standard, it is recommended to use the RS422 signal standard.

Pin assignment for the front connector

The table below shows the pin assignment of the front connector.

Table 3- 2 Pin assignment of the front connector: Channel 0

Designation					Signal name		View
RS422 incremental encoder		**RS422 pulse encoder**					
with signal N	**without signal N**	**with direction signal**	**without direction signal**	**Up/ Down**			
Encoder signal +A		Counting signal +A		Up counting signal +A	+CH0.**A**/D	1	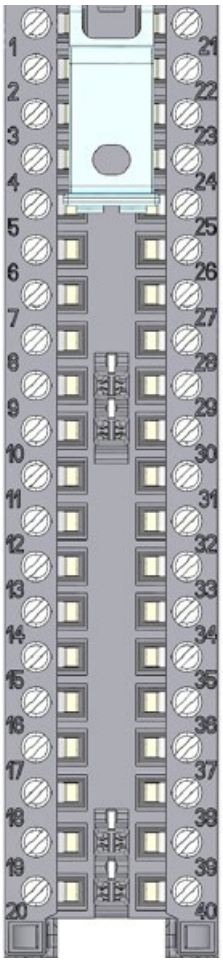
Encoder signal -A		Counting signal -A		Up counting signal -A	-CH0.**A**/D	2	
Encoder signal +B		Direction signal +B	—	Down counting signal +B	+CH0.**B**/C	3	
Encoder signal -B		Direction signal -B	—	Down counting signal -B	-CH0.**B**/C	4	
Encoder signal +N	—				+CH0.N	5	
Encoder signal -N	—				-CH0.N	6	
Encoder supply 5 V DC					5VDC	7	
Ground for encoder supplies and digital inputs					M	8	
Encoder supply 24 V DC					24VDC	9	
Ground for encoder supplies and digital inputs					M	10	
Digital input DI0					DI0.0	11	
Digital input DI1					DI0.1	12	
—					—	13	
—					—	14	
Digital output DQ0					DQ0.0	15	
Digital output DQ1					DQ0.1	16	
—					—	17	
Ground for digital outputs					M	18	
—					—	19	
						20	

Table 3- 3 Pin assignment of the front connector: Channel 1

View	Signal name		Designation				
			RS422 incremental encoder		RS422 pulse encoder		
			with signal N	without signal N	with direction signal	without direction signal	up/ down
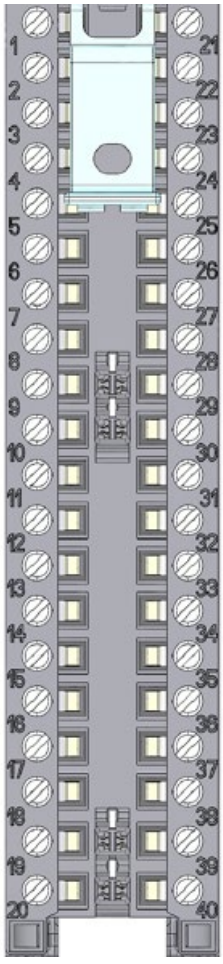	21	+CH1.**A**/D	Encoder signal +A		Counting signal +A		Up counting signal +A
	22	-CH1.**A**/D	Encoder signal -A		Counting signal -A		Up counting signal -A
	23	+CH1.**B**/C	Encoder signal +B		Direction signal +B	—	Down counting signal +B
	24	-CH1.**B**/C	Encoder signal -B		Direction signal -B	—	Down counting signal -B
	25	+CH1.N	Encoder signal +N	—			
	26	-CH1.N	Encoder signal -N	—			
	27	5VDC	Encoder supply 5 V DC				
	28	M	Ground for encoder supplies and digital inputs				
	29	24VDC	Encoder supply 24 V DC				
	30	M	Ground for encoder supplies and digital inputs				
	31	DI1.0	Digital input DI0				
	32	DI1.1	Digital input DI1				
	33	—	—				
	34	—	—				
	35	DQ1.0	Digital output DQ0				
	36	DQ1.1	Digital output DQ1				
	37	—	—				
	38	M	Digital output ground				
	39	—	—				
	40						

Note

Potential jumpers may not be inserted in the front connector.

Block diagram

You must ground the shields of the cables between encoder and technology module both through the shield support at the front connector (shield bracket and terminal) and at the encoder.

The figure below shows the block diagram of the technology module with one connected RS422 incremental encoder.

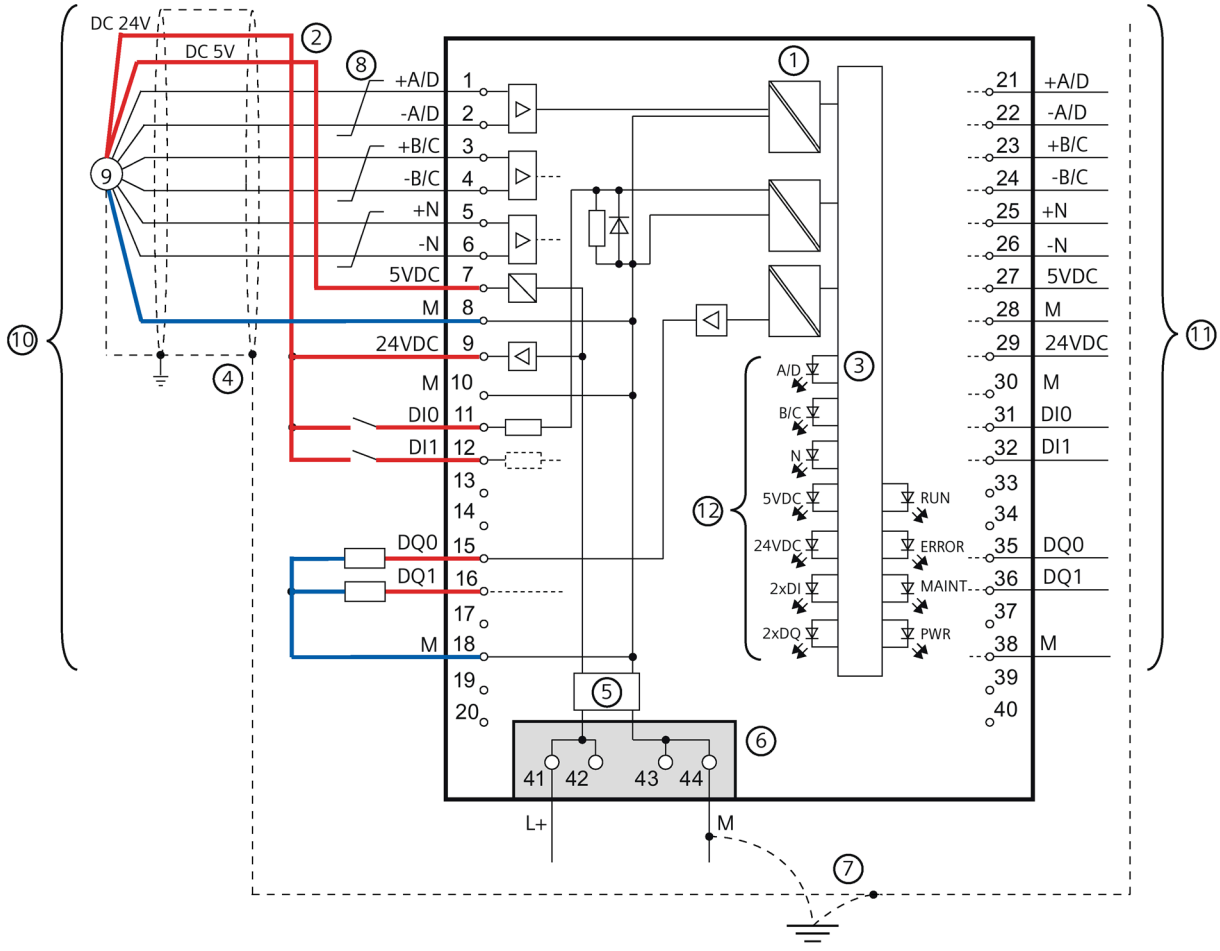

① Electrical isolation
② Encoder supply, optionally 5 V DC or 24 V DC, according to the specification of the encoder manufacturer
③ Technology and backplane bus interface
④ Shield support at the front connector
⑤ Input filter
⑥ Supply voltage via power supply element
⑦ Equipotential bonding
⑧ Twisted in pairs
⑨ RS422 incremental encoder
⑩ Channel 0
⑪ Channel 1
⑫ Per channel

Figure 3-3 Block diagram with RS422 incremental encoder

3.3 TTL encoder signals

TTL encoder signals/counting signals

The TM PosInput 2 can process TTL encoder signals. The counting encoder signals are designated with the letters A, B and N. An encoder signal with TTL standard uses a single cable.

You can connect the following encoder types:

- TTL incremental encoder with N signal:

  The encoder signals A, B and N are connected using the correspondingly marked terminals. A and B are the two incremental signals phase-shifted by 90°. N is the zero mark signal that supplies one pulse per revolution.

- TTL incremental encoder without N signal:

  The encoder signals A and B are connected using the correspondingly marked terminals. A and B are the two incremental signals phase-shifted by 90°. The N terminal remains unconnected.

- TTL pulse encoder without direction signal:

  The counting signal is connected to the A terminal. The count direction can be specified via the control interface. The B and N terminals remain unconnected.

- TTL pulse encoder with direction signal:

  The counting signal is connected to the A terminal. The direction signal is connected to the B terminal. Counting down takes place at a high level of the direction signal. The N terminal remains unconnected.

- TTL pulse encoder with up/down counting signal

  The up counting signal is connected to the A terminal. The down counting signal is connected to the B terminal. The N terminal remains unconnected.

The inputs are not isolated from each other. The inputs are isolated from the backplane bus.

Note

The RS422 signal standard offers greater interference immunity than the TTL signal standard. If your incremental encoder or pulse encoder supports the RS422 **and** the TTL signal standard, we recommend using the RS422 signal standard.

Pin assignment for the front connector

The table below shows the pin assignment of the front connector.

Table 3- 4 Pin assignment of the front connector: Channel 0

Designation					Signal name		View
TTL incremental encoder		**TTL pulse encoder**					
with signal N	**without signal N**	**with direction signal**	**without direction signal**	**Up/ Down**			
Encoder signal A		Counting signal A		Up counting signal A	+CH0.**A**/D	1	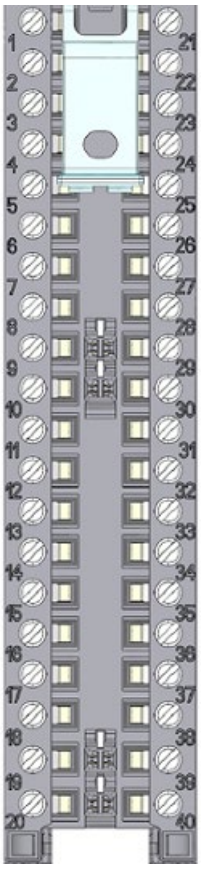
—					-CH0.**A**/D	2	
Encoder signal B		Direction signal B	—	Down counting signal B	+CH0.**B**/C	3	
—					-CH0.**B**/C	4	
Encoder signal N	—				+CH0.N	5	
					-CH0.N	6	
Encoder supply 5 V DC					5VDC	7	
Ground for encoder supplies and digital inputs					M	8	
Encoder supply 24 V DC					24VDC	9	
Ground for encoder supplies and digital inputs					M	10	
Digital input DI0					DI0.0	11	
Digital input DI1					DI0.1	12	
—					—	13	
—					—	14	
Digital output DQ0					DQ0.0	15	
Digital output DQ1					DQ0.1	16	
—					—	17	
Ground for digital outputs					M	18	
—					—	19	
						20	

Table 3- 5 Pin assignment of the front connector: Channel 1

View	Signal name		Designation				
			TTL incremental encoder		TTL pulse encoder		
			with signal N	without signal N	with direction signal	without direction signal	up/ down
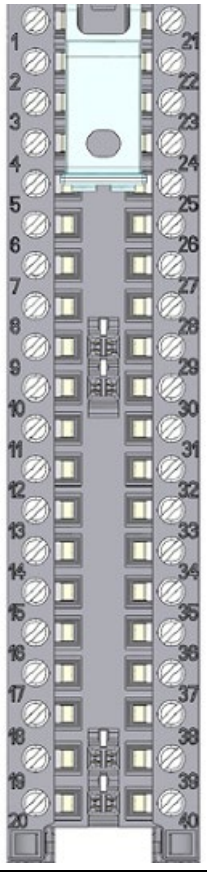	21	+CH1.**A**/D	Encoder signal A		Counting signal A		Up counting signal A
	22	-CH1.**A**/D	—				
	23	+CH1.**B**/C	Encoder signal B		Direction signal B	—	Down counting signal B
	24	-CH1.**B**/C	—				
	25	+CH1.N	Encoder signal N	—			
	26	-CH1.N	—				
	27	5VDC	Encoder supply 5 V DC				
	28	M	Ground for encoder supplies and digital inputs				
	29	24VDC	Encoder supply 24 V DC				
	30	M	Ground for encoder supplies and digital inputs				
	31	DI1.0	Digital input DI0				
	32	DI1.1	Digital input DI1				
	33	—	—				
	34	—	—				
	35	DQ1.0	Digital output DQ0				
	36	DQ1.1	Digital output DQ1				
	37	—	—				
	38	M	Digital output ground				
	39	—	—				
	40						

Note

Potential jumpers may not be inserted in the front connector.

Block diagram

You must ground the shields of the cables between encoder and technology module both through the shield support at the front connector (shield bracket and terminal) and at the encoder.

The figure below shows the block diagram of the technology module with one connected TTL incremental encoder.

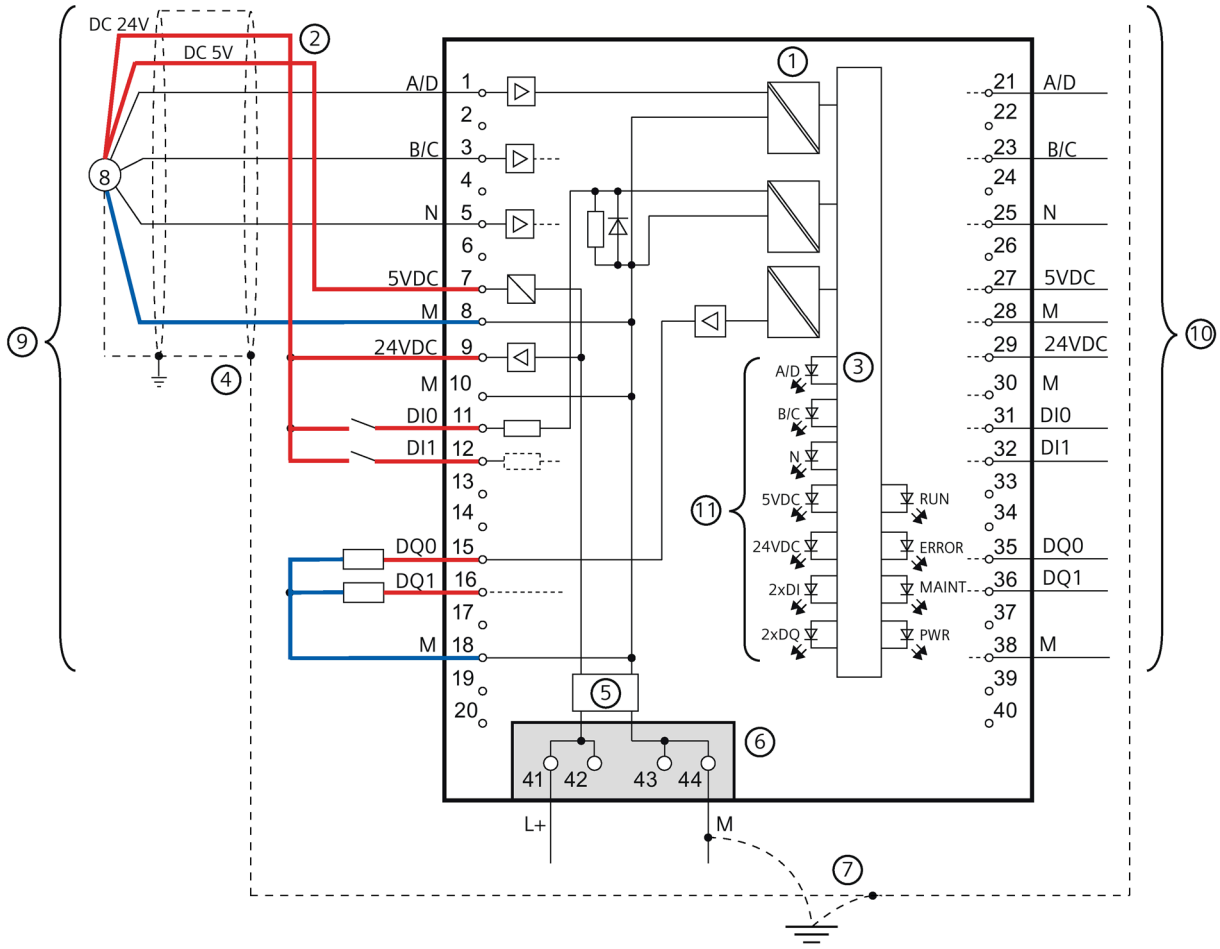

① Electrical isolation
② Encoder supply, optionally 5 V DC or 24 V DC, according to the specification of the encoder manufacturer
③ Technology and backplane bus interface
④ Shield support at the front connector
⑤ Input filter
⑥ Supply voltage via power supply element
⑦ Equipotential bonding
⑧ TTL incremental encoder
⑨ Channel 0
⑩ Channel 1
⑪ Per channel

Figure 3-4 Circuit diagram with TTL incremental encoder

Configuring/address space

4

4.1 Operating with "Counting and measurement" technology object

4.1.1 Configuring

Introduction

You configure the technology module and assign its parameters with STEP 7 (TIA Portal).

The technology object is used to control and monitor the functions of the technology module.

System environment

The technology module can be used in the following system environments:

Applications	Components required	Configuration software	In the user program
Central operation with an S7-1500 CPU	• S7-1500 automation system • TM PosInput 2	STEP 7 (TIA Portal): • Device configuration with hardware configuration • Parameter setting with "Counting and measurement" technology object	For incremental / pulse encoders: High_Speed_Counter instruction For SSI absolute encoder: SSI_Absolute_Encoder instruction
Distributed operation with an S7-1500 CPU	• S7-1500 automation system • ET 200MP distributed I/O system • TM PosInput 2		

Additional information

You can find a detailed description of the counting and measurement functions and their configuration in the following:

- Function manual Counting, Measurement and Position Detection available for download on the Internet (http://support.automation.siemens.com/WW/view/en/59709820)
- Information system of STEP 7 (TIA Portal) under "Using technology functions > Counting, measurement and position input > Counting, measurement and position input (S7-1500)"

Hardware Support Packages (HSP)

If you are using TIA Portal version V17, firmware versions ≤ V1.3 of the module (6ES7551-1AB00-0AB0) are integrated. You can configure the module with the article number 6ES7551-1AB01-0AB0 as replacement part compatible with the article number 6ES7551-1AB00-0AB0. You integrate the firmware version V2.0 of the module (6ES7551-1AB01-0AB0) using HSP0355. Firmware version V2.0 of the module is integrated into the following TIA Portal versions.

You can find the Hardware Support Packages (HSP) for download on the Internet (https://support.industry.siemens.com/cs/ww/en/view/72341852).

You can also access this download from the menu bar of STEP 7 (TIA Portal): "Options > Support packages > Download from the Internet".

4.1.2 Parameter setting

You specify the properties of the technology module using various parameters. Depending on the settings, not all parameters are available.

You set the parameters of the module as follows in this operating mode:

1. Insert the module from the hardware catalog under "Technology modules".
2. Set the operating mode "Operating with technology object "Counting and measurement"" and the additional device configuration in the hardware configuration.
3. Insert the High_Speed_Counter or SSI_Absolute_Encoder technology object from the project tree in folder "Technology objects > Add new object > Counting and measurement".
   You can find information on configuring with a technology object in function manual Counting, Measurement and Position Detection (http://support.automation.siemens.com/WW/view/en/59709820).
4. Open the configuration of the respective technology object, e.g. using the Configuration button in the respective instruction for the technology object.
5. Set the parameters of the technology object.
6. Download the project to the CPU.

Note

The "Operating with "Counting and measurement" technology object" and "Manual operation (without technology object)" operating modes apply to one channel in each case. As a result, you can also use a module with both operating modes.

4.1.2.1 Parameters (SSI absolute encoder)

Parameters of the TM PosInput 2 with SSI absolute encoder

The following parameter settings are possible in the hardware configuration. The default settings of the parameters are shown in bold in the "Value range" column.

Table 4- 1 Settable parameters and their default setting (SSI absolute encoder)

Parameter	Value range	Scope
Reaction to CPU STOP	• **Output substitute value** • Keep last value • Continue operation	Channel
Enable diagnostic interrupt on wire break	• **Deactivated** • Activated	Channel
Enable additional diagnostic interrupts	• **Deactivated** • Activated	Channel
Hardware interrupt: New Capture value available	• **Deactivated** • Activated	Channel
Hardware interrupt: Direction reversal	• **Deactivated** • Activated	Channel
Hardware interrupt: Zero crossing	• **Deactivated** • Activated	Channel
Hardware interrupt: Comparison event for DQ0 occurred	• **Deactivated** • Activated	Channel
Hardware interrupt: Comparison event for DQ1 occurred	• **Deactivated** • Activated	Channel

The following parameter settings are possible in the technology object:

Table 4- 2 Settable parameters and their default setting (SSI absolute encoder)

Parameter	Value range	Scope
Frame length	10 bits...**13 bits**...40 bits	Channel
Code type	• **Gray** • Dual	Channel
Transmission rate	• **125 kHz** • 250 kHz • 500 kHz • 1 MHz • 1.5 MHz • 2 MHz	Channel
Monoflop time	• **Automatically** • 16 µs • 32 µs • 48 µs • 64 µs	Channel
Parity	• **None** • Even • Odd	Channel
Bit number LSB of the position value	**0**...38	Channel
Bit number MSB of the position value	1...**12**...39	Channel
Invert direction (position value)	**Deactivated** Activated	Channel
Set function of DI	• Capture • **Digital input without function**	Channel
Input delay for digital inputs	• None • 0.05 ms • **0.1 ms** • 0.4 ms • 0.8 ms • 1.6 ms • 3.2 ms • 12.8 ms • 20 ms	Channel

Parameter	Value range	Scope
Edge selection for DI	• **At rising edge** • At falling edge • At rising and falling edge	Channel
Frequency of Capture function	• Once • **Periodic**	Channel
Comparison value 0	-2147483648...**0**...2147483647	Channel
Comparison value 1	-2147483648...**10**...2147483647	Channel
Operating mode	• **Use position value (SSI absolute value) as reference** • Use measured value as reference	Channel
Set output	• **Between comparison value and count high limit / measured value >= comparison value** • Between comparison value and low limit / measured value <= comparison value • At comparison value for a pulse duration • After set command from CPU until comparison value • Between comparison value 0 and 1 • Not between comparison value 0 and 1 • Use by user program	Channel
Count direction of DQ function	• Up • Down • **In both directions**	Channel
Pulse duration	0,0...**500,0**...6553,5 ms	Channel
Substitute value for DQ0	• **0** • 1	Channel
Substitute value for DQ1	• **0** • 1	Channel
Hysteresis (in increments)	**0**...255	Channel
Measured variable	• **Frequency** • Period • Velocity • Complete SSI frame	Channel

Parameter	Value range	Scope
Update time of the measuring function	0...**10**...25000 ms	Channel
Time base for velocity measurement	• 1 ms • 10 ms • 100 ms • 1 s • **60 s**	Channel
Increments per unit	**1**...65535	Channel

NOTICE

Excessive axis speed can provide wrong direction of rotation

If an axis connected to an SSI absolute encoder rotates so quickly that more than half of the value range is covered within one module cycle[1], the velocity and direction of rotation can no longer be determined correctly. As a result, the following may function incorrectly:

- DQ functions
- Feedback bits EVENT_OFLW, EVENT_UFLW, EVENT_ZERO, EVENT_CMP0, EVENT_CMP1 and STS_DIR

[1] Non-isochronous mode: 500 µs; isochronous mode: PROFINET cycle time

Note

If you use an SSI absolute encoder whose value range does not correspond to a power of 2, the calculated velocity measurement can be incorrect at the moment of the overflow.

Explanation of parameters

You can find a detailed description of the parameters in function manual Counting, Measurement and Position Detection in sections Basic parameters and Configuring the SSI_Absolute_Encoder available for download on the Internet (http://support.automation.siemens.com/WW/view/en/59709820).

4.1.2.2 Parameters (incremental or pulse encoder)

Parameters of the TM PosInput 2 with incremental or pulse encoder

The following parameter settings are possible in the hardware configuration. The default settings of the parameters are shown in bold in the "Value range" column.

Table 4- 3 Settable parameters and their default setting (incremental or pulse encoder)

Parameter	Value range	Scope
Reaction to CPU STOP	• **Output substitute value** • Keep last value • Continue operation	Channel
Enable diagnostic interrupt on wire break	• **Deactivated** • Activated	Channel
Enable additional diagnostic interrupts	• **Deactivated** • Activated	Channel
Hardware interrupt: New Capture value available	• **Deactivated** • Activated	Channel
Hardware interrupt: Synchronization of the counter by an external signal	• **Deactivated** • Activated	Channel
Hardware interrupt: Gate start	• **Deactivated** • Activated	Channel
Hardware interrupt: Gate stop	• **Deactivated** • Activated	Channel
Hardware interrupt: Overflow (high counting limit violated)	• **Deactivated** • Activated	Channel
Hardware interrupt:Underflow (low counting limit violated)	• **Deactivated** • Activated	Channel
Hardware interrupt: Direction reversal	• **Deactivated** • Activated	Channel
Hardware interrupt: Zero crossing	• **Deactivated** • Activated	Channel
Hardware interrupt: Comparison event for DQ0 occurred	• **Deactivated** • Activated	Channel
Hardware interrupt: Comparison event for DQ1 occurred	• **Deactivated** • Activated	Channel

The following parameter settings are possible in the technology object:

Table 4- 4 Settable parameters and their default setting (incremental or pulse encoder)

Parameter	Value range	Scope
Signal type	• Pulse (A) • **Pulse (A) and direction (B)** • Count up (A), count down (B) • Incremental encoder (A, B phase-shifted) • Incremental encoder (A, B, N)	Channel
Signal evaluation for counter inputs	• **Single** • Double • Quadruple	Channel
Invert direction (counter inputs)	• **Deactivated** • Activated	Channel
Filter frequency for counter inputs	• 100 Hz • 200 Hz • 500 Hz • 1 kHz • 2 kHz • 5 kHz • 10 kHz • 20 kHz • 50 kHz • 100 kHz • 200 kHz • 500 kHz • **1 MHz**	Channel
Interface standard	• **RS422, symmetrical** • TTL (5 V), asymmetrical	Channel
Reaction to signal N	• **No reaction to signal N** • Synchronization at signal N • Capture at signal N	Channel
Frequency of synchronization	• **Once** • Periodic	Channel
Frequency of Capture function	• Once • **Periodic**	Channel

Parameter	Value range	Scope
Counting high limit	-2147483648...**2147483647**	Channel
Start value	-2147483648...**0**...2147483647	Channel
Counting low limit	**-2147483648**...2147483647	Channel
Reaction to violation of a counting limit	• Stop counting • **Continue counting**	Channel
Reset when counting limit is violated	• **To opposite counting limit** • To start value	Channel
Reaction to gate start	• Set to start value • **Continue with current value**	Channel
Set function of DI	• Gate start/stop (level-triggered) • Gate start (edge-triggered) • Gate stop (edge-triggered) • Synchronization • Enable synchronization at signal N • Capture • **Digital input without function**	Channel
Input delay for digital inputs	• None • 0.05 ms • **0.1 ms** • 0.4 ms • 0.8 ms • 1.6 ms • 3.2 ms • 12.8 ms • 20 ms	Channel
Edge selection for DI	• **At rising edge** • At falling edge • At rising and falling edge	Channel
Select level for DI	• **Active with high level** • Active with low level	Channel
Behavior of counter value after Capture with DI	• **Continue counting** • Set to start value and continue counting	Channel
Comparison value 0	-2147483648...**0**...2147483647	Channel
Comparison value 1	-2147483648...**10**...2147483647	Channel
Operating mode	• **Use counter value as reference** • Use measured value as reference	Channel

Parameter	Value range	Scope
Set output	• **Between comparison value and count high limit / measured value >= comparison value** • Between comparison value and low limit / measured value <= comparison value • At comparison value for a pulse duration • After set command from CPU until comparison value • Between comparison value 0 and 1 • Not between comparison value 0 and 1 • Use by user program	Channel
Count direction of DQ function	• Up • Down • **In both directions**	Channel
Pulse duration	0,0...**500,0**...6553,5 ms	Channel
Substitute value for DQ0	• **0** • 1	Channel
Substitute value for DQ1	• **0** • 1	Channel
Hysteresis (in increments)	**0**...255	Channel
Measured variable	• **Frequency** • Period • Velocity	Channel
Update time of the measuring function	0...**10**...25000 ms	Channel
Time base for velocity measurement	• 1 ms • 10 ms • 100 ms • 1 s • **60 s**	Channel
Increments per unit	**1**...65535	Channel

Explanation of parameters

You can find a detailed description of the parameters in function manual Counting, Measurement and Position Detection in sections Basic parameters and Configuring the High_Speed_Counter available for download on the Internet (http://support.automation.siemens.com/WW/view/en/59709820).

4.1.3 Address space

Address space of the technology module

Table 4- 5 Size of input and output addresses of the TM PosInput 2 when operating with "Counting and measurement" technology object

	Inputs	Outputs
Size per channel	16 bytes	12 bytes
Total size	32 bytes	24 bytes

The control and feedback interface is compatible with manual operation (Page 50) and is operated by the instruction High_Speed_Counter or SSI_Absolute_Encoder.

4.1.4 Reaction to CPU STOP

Reaction to CPU STOP

You set the reaction of the technology module to a STOP of the CPU on a channel-by-channel basis in the basic parameters of the device configuration.

Table 4- 6 Reaction of technology module to CPU STOP

Option	Meaning
Continue operation	The technology module remains fully functional. Incoming count pulses are processed or the position value is read in. The digital outputs continue to switch according to the parameter assignment.
Output substitute value	The technology module outputs the configured substitute values at the digital outputs until the next CPU STOP-RUN transition. The technology module is returned to its startup state after a STOP-RUN transition: The counter value is set to the Start value (with incremental encoders or pulse encoders) and the digital outputs switch according to the parameter assignment.
Keep last value	The technology module outputs the values at the digital outputs that were valid when the transition to STOP took place until the next CPU STOP-RUN transition. If a digital output with the "At comparison value for a pulse duration" function is set at CPU STOP, the digital output is reset after the pulse duration elapses. The technology module is returned to its startup state after a STOP-RUN transition: The counter value is set to the Start value (with incremental encoders or pulse encoders) and the digital outputs switch according to the parameter assignment.

4.1.5 Isochronous mode

The technology module supports the "Isochronous mode" system function. This system function enables position, counter and measured values to be acquired in a defined system cycle.

In isochronous mode, the cycle of the user program, the transmission of the input signals and processing in the technology module are synchronized. The output signals switch immediately if the relevant comparison condition is met. A status change of a digital input immediately triggers the specified reaction of the technology module and the change of the status bit of the digital input in the feedback interface.

Use an OB of type "Synchronous Cycle" (e.g. OB61) in this operating mode. The High_Speed_Counter or SSI_Absolute_Encoder instruction is called in the assigned OB.

The update time for the measured value is synchronized with the system cycle in a suitable ratio and, if necessary, adapted in length. If you set "0", the measured value is updated once per system cycle.

Data processing

The data that was transmitted to the technology module in the current bus cycle via the control interface takes effect when it is processed in the internal technology module cycle. At the time the input data is read in (T_i), the position or counter value and the measured value as well as status bits are acquired and made available in the feedback interface for retrieval in the current bus cycle.

Isochronous mode parameters

In isochronous mode, the following parameter can affect the isochronous mode parameters of the sync domain.

- Filter frequency
- Frame length
- Transmission rate
- Monoflop time
- Parity

Because the isochronous mode parameters are not checked in RUN, overflows can occur if you change one or more of the indicated parameters in RUN. To prevent overflows, select the option with the largest time required in the offline parameter assignment.

Additional information

You can find a detailed description of isochronous mode in the following:

- In the Isochronous Mode Function Manual as a download from the Internet (https://support.industry.siemens.com/cs/ww/en/view/109755401)
- Function manual PROFINET with STEP 7 available for download on the Internet (https://support.industry.siemens.com/cs/ww/en/view/49948856)

4.2 Position input for "Motion Control" technology object

4.2.1 Configuring

Introduction

You configure the technology module and assign its parameters with STEP 7 (TIA Portal).

The technology object is used to control and monitor the functions of the technology module.

System environment

The technology module can be used in the following system environments:

Applications	Components required	Configuration software	In the user program
Central operation with an S7-1500 CPU	• S7-1500 automation system • TM PosInput 2	STEP 7 (TIA Portal): • Device configuration with hardware configuration • Parameter setting with axis and measuring input technology objects	Motion Control instructions
Distributed operation with an S7-1500 CPU	• S7-1500 automation system • ET 200MP distributed I/O system • TM PosInput 2		

Additional information

You can find a detailed description of the use of Motion Control and its configuration in the following:

- Function manual S7-1500 Motion Control available for download on the Internet (https://support.industry.siemens.com/cs/ww/en/view/59381279)
- Function manual S7-1500T Motion Control available for download on the Internet (https://support.industry.siemens.com/cs/ww/en/view/109481326)
- Information system of STEP 7 (TIA Portal) under "Using technology functions > Motion Control > Motion Control (S7-1200, S7-1500)"

You can find a description of configuring the technology module for position detection in the following:

- Function manual Counting, Measurement and Position Detection available for download on the Internet (http://support.automation.siemens.com/WW/view/en/59709820)
- Information system of STEP 7 (TIA Portal) under "Using technology functions > Counting, measurement and position input > Counting, measurement and position input (S7-1500)"

Hardware Support Packages (HSP)

If you are using TIA Portal version V17, firmware versions ≤ V1.3 of the module (6ES7551-1AB00-0AB0) are integrated. You can configure the module with the article number 6ES7551-1AB01-0AB0 as replacement part compatible with the article number 6ES7551-1AB00-0AB0. You integrate the firmware version V2.0 of the module (6ES7551-1AB01-0AB0) using HSP0355. Firmware version V2.0 of the module is integrated into the following TIA Portal versions.

You can find the Hardware Support Packages (HSP) for download on the Internet (https://support.industry.siemens.com/cs/ww/en/view/72341852).

You can also access this download from the menu bar of STEP 7 (TIA Portal): "Options > Support packages > Download from the Internet".

4.2.2 Parameter setting

You specify the properties of the technology module using various parameters. Depending on the settings, not all parameters are available.

You set the parameters of the module as follows in this operating mode:

1. Insert the module from the hardware catalog under "Technology modules".
2. Set the operating mode "Position detection for technology object "Motion Control"" and the other module parameters in the hardware configuration.
3. From the project tree in the "Technology objects > Add new object > Motion control" folder, add an axis technology object and, if required, the measuring input technology object.
   For information on the configuration with axis technology objects, refer to the S7-1500T Motion Control (https://support.industry.siemens.com/cs/ww/en/view/109481326) Function Manual.
4. Open the configuration of the axis technology object, e.g. using the Configuration button in the respective instruction for the technology object.
5. Set the parameters of the technology objects.
6. Download the project to the CPU.

Note

This operating mode applies automatically to both channels of the technology module.

4.2.2.1 Parameters (SSI absolute encoder)

Parameters of the TM PosInput 2 with SSI absolute encoder

The following parameter settings are possible. The default settings of the parameters are shown in bold in the "Value range" column.

Table 4- 7 Settable parameters and their default setting (SSI absolute encoder)

Parameter	Value range	Scope
Invert direction (position value)	• **Deactivated** • Activated	Channel
Frame length	10 bits...**13 bits**...40 bits	Channel
Code type	• **Gray** • Dual	Channel
Transmission rate	• **125 kHz** • 250 kHz • 500 kHz • 1 MHz • 1.5 MHz • 2 MHz	Channel
Monoflop time	• **Automatically** • 16 µs • 32 µs • 48 µs • 64 µs	Channel
Parity	• **None** • Even • Odd	Channel
Bit number LSB of the position value	**0**...38	Channel
Bit number MSB of the position value	1...**12**...39	Channel
Measuring input	**DI1**	Channel
Encoder type	• Linear • **Rotary**	Channel
Steps per revolution	**1**...65535	Channel
Number of revolutions	is calculated automatically (read-only)	Channel
Reference speed	6.00...**3000.00**...210000.00 U/min	Channel
Distance between increments	**16000 nm**	Channel
Reference velocity	0,60...**16,00**...600,00 m/min	Channel

Parameter	Value range	Scope
Enable diagnostic interrupt on wire break	• **Deactivated** • Activated	Channel
Enable additional diagnostic interrupts	• **Deactivated** • Activated	Channel

NOTICE
Excessive axis speed can result in an incorrect position value The function of an axis technology object is based on the assumption that the axis position within a module cycle[1] never changes by more than half of the value range. Ensure that this condition is always met when configuring your system. [1] Non-isochronous mode: 500 µs; isochronous mode: PROFINET cycle time

Explanation of parameters

You can find a detailed description of the parameters in function manual Counting, Measurement and Position Detection, section Module parameters (position input for Motion Control) available for download on the Internet (http://support.automation.siemens.com/WW/view/en/59709820).

4.2.2.2 Parameters (incremental or pulse encoder)

Parameters of the TM PosInput 2 with incremental or pulse encoder

The following parameter settings are possible. The default settings of the parameters are shown in bold in the "Value range" column.

Table 4- 8 Settable parameters and their default setting (incremental or pulse encoder)

Parameter	Value range	Scope
Signal type	• Pulse (A) • **Pulse (A) and direction (B)** • Count up (A), count down (B) • Incremental encoder (A, B phase-shifted) • Incremental encoder (A, B, N)	Channel
Invert direction (counter inputs)	• **Deactivated** • Activated	Channel

Parameter	Value range	Scope
Signal evaluation for counter inputs	• **Single** • Double • Quadruple	Channel
Filter frequency for counter inputs	• 100 Hz • 200 Hz • 500 Hz • 1 kHz • 2 kHz • 5 kHz • 10 kHz • 20 kHz • 50 kHz • 100 kHz • 200 kHz • 500 kHz • **1 MHz**	Channel
Interface standard	• **RS422, symmetrical** • TTL (5 V), asymmetrical	Channel
Signal selection for reference mark 0	• DI0 • **Signal N of incremental encoder**	Channel
Measuring input	**DI1**	Channel
Encoder type	• Linear • **Rotary**	Channel
Increments per revolution / steps per revolution	**1**...65535	Channel
Reference speed	6.00...**3000.00**...210000.00 U/min	Channel
Distance between increments	1...**16000**...25000000 nm	Channel
Fine-resolution increment distance	is calculated automatically (read-only)	Channel
Reference velocity	0,60...**16,00**...600,00 m/min	Channel
Enable diagnostic interrupt on wire break	• **Deactivated** • Activated	Channel
Enable additional diagnostic interrupts	• **Deactivated** • Activated	Channel

Explanation of parameters

You can find a detailed description of the parameters in function manual Counting, Measurement and Position Detection, section Module parameters (position input for Motion Control) available for download on the Internet (http://support.automation.siemens.com/WW/view/en/59709820).

4.2.3 Address space

Address space of the technology module

Table 4- 9 Size of input and output addresses of the TM PosInput 2 with position input for "Motion Control" technology object

	Inputs	Outputs
Size per channel	16 bytes	4 bytes
Total size	32 bytes	8 bytes

4.2.4 Control interface and feedback interface

4.2.4.1 Assignment of the control interface

The control interface is reserved for Motion Control instructions.

4.2.4.2 Assignment of the feedback interface

The feedback interface is reserved for Motion Control instructions with the exception of status information via the digital inputs.

Byte offset relative to start address Channel 0/1 ↓ ↓		Bit 7	Bit 6	Bit 5	Bit 4	Bit 3	Bit 2	Bit 1	Bit 0
0	16	Reserved				STS_DI0	STS_DI1	Reserved	
1 ... 15	17 ... 31	Reserved							

4.2.5 Isochronous mode

The technology module supports the "Isochronous mode" system function. Position and counter values can be acquired in a fixed system cycle with this system function.

In isochronous mode, the cycle of the user program, the transmission of the input signals and processing in the technology module are synchronized. A status change of a digital input immediately triggers the specified reaction of the technology module and the change of the status bit of the digital input in the feedback interface.

Use an OB of type "MC-Servo" in this operating mode. Isochronous mode is needed when using the output cam and cam track technology objects. When the measuring input technology is used in combination with hardware digital input DI1, isochronous mode is not needed.

Data processing

The data that was transmitted to the technology module in the current bus cycle via the control interface takes effect when it is processed in the internal technology module cycle. At the time the input data is read in (T_i), the position or counter value as well as status bits are acquired and made available in the feedback interface for retrieval in the current bus cycle.

Isochronous mode parameters

In isochronous mode, the following parameter can affect the isochronous mode parameters of the sync domain.

- Filter frequency
- Frame length
- Transmission rate
- Monoflop time
- Parity

To prevent overflows, select the option with the largest time required in the offline parameter assignment.

Additional information

You can find a detailed description of isochronous mode in the following:

- In the Isochronous Mode Function Manual as a download from the Internet (https://support.industry.siemens.com/cs/ww/en/view/109755401).
- Function manual PROFINET with STEP 7 available for download on the Internet (https://support.industry.siemens.com/cs/ww/en/view/49948856)

4.3 Manual operation (without technology object)

4.3.1 Configuring

Introduction

You configure the technology module and assign its parameters with the configuration software.

The functions of the technology module are controlled and checked by the user program via the control and feedback interface.

System environment

The technology module can be used in the following system environments:

Applications	Components required	Configuration software	In the user program
Central operation with an S7-1500 CPU	• S7-1500 automation system • TM PosInput 2	STEP 7 (TIA Portal): • Device configuration and parameter setting with hardware configuration	Direct access to control and feedback interface in the I/O data
Distributed operation with an S7-1500 CPU	• S7-1500 automation system • ET 200MP distributed I/O system • TM PosInput 2	STEP 7 (TIA Portal): • Device configuration and parameter setting with hardware configuration	
Distributed operation with an S7-1200 CPU	• S7-1200 automation system • ET 200MP distributed I/O system • TM PosInput 2	STEP 7 (TIA Portal): Device configuration and parameter setting with hardware configuration	
Distributed operation with an S7-300/400 CPU	• S7-300/400 automation system • ET 200MP distributed I/O system • TM PosInput 2	STEP 7 (TIA Portal): Device configuration and parameter setting with hardware configuration STEP 7: Device configuration and parameter setting with GSD file	
Distributed operation in a third-party system	• Third-party automation system • ET 200MP distributed I/O system • TM PosInput 2	Third-party configuration software: Device configuration and parameter setting with GSD file	

Additional information

You can find a detailed description of the counting and measurement functions and their configuration in the following:

- Function manual Counting, Measurement and Position Detection available for download on the Internet (http://support.automation.siemens.com/WW/view/en/59709820)
- Information system of STEP 7 (TIA Portal) under "Using technology functions > Counting, measurement and position input > Counting, measurement and position input (S7-1500)"

Hardware Support Packages (HSP)

If you are using TIA Portal version V17, firmware versions ≤ V1.3 of the module (6ES7551-1AB00-0AB0) are integrated. You can configure the module with the article number 6ES7551-1AB01-0AB0 as replacement part compatible with the article number 6ES7551-1AB00-0AB0. You integrate the firmware version V2.0 of the module (6ES7551-1AB01-0AB0) using HSP0355. Firmware version V2.0 of the module is integrated into the following TIA Portal versions.

You can find the Hardware Support Packages (HSP) for download on the Internet (https://support.industry.siemens.com/cs/ww/en/view/72341852).

You can also access this download from the menu bar of STEP 7 (TIA Portal): "Options > Support packages > Download from the Internet".

GSD file

You can find the respective GSD file for the ET 200MP distributed I/O system for download on the Internet:

- GSD file for PROFINET IO (http://support.automation.siemens.com/WW/view/en/68189683)
- GSD file for PROFIBUS DP (http://support.automation.siemens.com/WW/view/en/80206700)

4.3.2 Parameter setting

You specify the properties of the technology module using various parameters. Depending on the settings, not all parameters are available. When parameters are assigned in the user program, the parameters are transferred to the module with the "WRREC" instruction and data record 128 (Page 100).

You set the parameters of the module as follows in this operating mode:

Parameter setting using...	Basic procedure
Hardware configuration in STEP 7 (TIA Portal)	1. Insert the module from the hardware catalog under "Technology modules". 2. Set the operating mode "Manual operation (without technology object)" and the additional device configuration in the hardware configuration. 3. Download the project to the CPU.
Hardware configuration with GSD file for distributed operation on PROFINET IO	1. Install the current PROFINET GSD file. You will then find the module in the hardware catalog under "Other field devices > PROFINET IO > I/O". 2. Set the parameters in the hardware configuration. You can find information on the respective dependencies of the parameters in function manual Counting, Measurement and Position Detection (http://support.automation.siemens.com/WW/view/en/59709820). 3. Download the project to the CPU.
Hardware configuration with GSD file for distributed operation on PROFIBUS DP	1. Install the current PROFIBUS GSD file. You will then find the module in the hardware catalog under "Other field devices > PROFIBUS DP > I/O". 2. Set the parameters in the hardware configuration. You can find information on the respective dependencies of the parameters in function manual Counting, Measurement and Position Detection (http://support.automation.siemens.com/WW/view/en/59709820). The parameters marked with [1] in the following tables are not configurable in the PROFIBUS GSD file. 3. Download the project to the CPU. The parameters marked with [1] in the following tables are downloaded with their default setting. 4. If necessary, set the parameters marked with [1] in the user program using data record 128.

Note

The "Operating with "Counting and measurement" technology object" and "Manual operation (without technology object)" operating modes apply to one channel in each case. As a result, you can also use a module with both operating modes.

4.3.2.1 Parameters (SSI absolute encoder)

Parameters of the TM PosInput 2 with SSI absolute encoder

The following parameter settings are possible:

Table 4- 10 Settable parameters and their default setting (SSI absolute encoder)

Parameter	Value range	Scope
Operating mode[3]	• **Position input** • Measuring	Channel
Reaction to CPU STOP[1]	• **Output substitute value** • Keep last value • Continue operation	Channel
Substitute value for DQ0[1]	• **0** • 1	Channel
Substitute value for DQ1[1]	• **0** • 1	Channel
Enable diagnostic interrupt on wire break[2]	• **Deactivated** • Activated	Channel
Enable additional diagnostic interrupts	• **Deactivated** • Activated	Channel
Hardware interrupt: New Capture value available[1]	• **Deactivated** • Activated	Channel
Hardware interrupt: Direction reversal[1]	• **Deactivated** • Activated	Channel
Hardware interrupt: Zero crossing[1]	• **Deactivated** • Activated	Channel
Hardware interrupt: Comparison event for DQ0 occurred[1]	• **Deactivated** • Activated	Channel
Hardware interrupt: Comparison event for DQ1 occurred[1]	• **Deactivated** • Activated	Channel
Invert direction[1] (position value)	• **Deactivated** • Activated	Channel
Frame length	10 bits...**13 bits**...40 bits	Channel
Code type	• **Gray** • Dual	Channel

Parameter	Value range	Scope
Transmission rate	• **125 kHz** • 250 kHz • 500 kHz • 1 MHz • 1.5 MHz • 2 MHz	Channel
Monoflop time[1]	• **Automatically** • 16 µs • 32 µs • 48 µs • 64 µs	Channel
Parity	• **None** • Even • Odd	Channel
Bit number LSB of the position value	**0**...38	Channel
Bit number MSB of the position value	1...**12**...39	Channel
Set function of DI	• Capture • **Digital input without function**	Channel
Input delay for digital inputs[1]	• None • 0.05 ms • **0.1 ms** • 0.4 ms • 0.8 ms • 1.6 ms • 3.2 ms • 12.8 ms • 20 ms	Channel
Edge selection for DI[1]	• **At rising edge** • At falling edge • At rising and falling edge	Channel
Frequency of Capture function[1]	• Once • **Periodic**	Channel

Parameter	Value range	Scope
Set output	• **Between comparison value and count high limit / measured value >= comparison value** • Between comparison value and low limit / measured value <= comparison value • At comparison value for a pulse duration • After set command from CPU until comparison value • Between comparison value 0 and 1 • Not between comparison value 0 and 1 • Use by user program	Channel
Comparison value 0[1]	-2147483648...**0**...2147483647	Channel
Comparison value 1[1]	-2147483648...**10**...2147483647	Channel
Count direction of DQ function[1]	• Up • Down • **In both directions**	Channel
Pulse duration[1]	0,0...**500,0**...6553,5 ms	Channel
Hysteresis (in increments)[1]	**0**...255	Channel
Measured variable	• **Frequency** • Period • Velocity • Complete SSI frame	Channel
Update time of the measuring function[1]	0...**10**...25000 ms	Channel
Time base for velocity measurement[1]	• 1 ms • 10 ms • 100 ms • 1 s • **60 s**	Channel
Increments per unit[1]	**1**...65535	Channel

[1] Because the number of parameters is limited to a maximum of 244 bytes per station in the PROFIBUS GSD configuration, the possible parameter assignments are limited. The parameters are preassigned default settings in the module. If your PROFIBUS master supports the "Write/read data record" function, you can set these parameters using data record 128.

[2] When a GSD file is used, this diagnostic interrupt is enabled with the "Enable additional diagnostic interrupts" parameter and is then not separately configurable.

[3] When configuring with a GSD file, you determine the operating mode when you select the module name.

NOTICE

Excessive axis speed can provide wrong direction of rotation

If an axis connected to an SSI absolute encoder rotates so quickly that more than half of the value range is covered within one module cycle[1], the velocity and direction of rotation can no longer be determined correctly. As a result, the following may function incorrectly:

- DQ functions
- Feedback bits EVENT_OFLW, EVENT_UFLW, EVENT_ZERO, EVENT_CMP0, EVENT_CMP1 and STS_DIR

[1] Non-isochronous mode: 500 µs; isochronous mode: PROFINET cycle time

Note

If you use an SSI absolute encoder whose value range does not correspond to a power of 2, the calculated velocity measurement can be incorrect at the moment of the overflow.

Explanation of parameters

You can find a detailed description of the parameters in function manual Counting, Measurement and Position Detection, sections Basic parameters and Manual operation available for download on the Internet (http://support.automation.siemens.com/WW/view/en/59709820).

4.3.2.2 Parameters (incremental or pulse encoder)

Parameters of the TM PosInput 2 with incremental or pulse encoder

The following parameter settings are possible:

Table 4- 11 Settable parameters and their default setting (incremental or pulse encoder)

Parameter	Value range	Scope
Operating mode[3]	• **Counting** • Measuring	Channel
Reaction to CPU STOP[1]	• **Output substitute value** • Keep last value • Continue operation	Channel
Substitute value for DQ0[1]	• **0** • 1	Channel
Substitute value for DQ1[1]	• **0** • 1	Channel
Enable diagnostic interrupt on wire break[2]	• **Deactivated** • Activated	Channel
Enable additional diagnostic interrupts	• **Deactivated** • Activated	Channel
Hardware interrupt: New Capture value available[1]	• **Deactivated** • Activated	Channel
Hardware interrupt: Synchronization of the counter by an external signal[1]	• **Deactivated** • Activated	Channel
Hardware interrupt: Gate start[1]	• **Deactivated** • Activated	Channel
Hardware interrupt: Gate stop[1]	• **Deactivated** • Activated	Channel
Hardware interrupt: Overflow (high counting limit violated)[1]	• **Deactivated** • Activated	Channel
Hardware interrupt:Underflow (low counting limit violated)[1]	• **Deactivated** • Activated	Channel
Hardware interrupt: Direction reversal[1]	• **Deactivated** • Activated	Channel
Hardware interrupt: Zero crossing[1]	• **Deactivated** • Activated	Channel
Hardware interrupt: Comparison event for DQ0 occurred[1]	• **Deactivated** • Activated	Channel
Hardware interrupt: Comparison event for DQ1 occurred[1]	• **Deactivated** • Activated	Channel

Parameter	Value range	Scope
Signal type	• Pulse (A) • **Pulse (A) and direction (B)** • Count up (A), count down (B) • Incremental encoder (A, B phase-shifted) • Incremental encoder (A, B, N)	Channel
Signal evaluation for counter inputs	• **Single** • Double • Quadruple	Channel
Filter frequency for counter inputs[1]	• 100 Hz • 200 Hz • 500 Hz • 1 kHz • 2 kHz • 5 kHz • 10 kHz • 20 kHz • 50 kHz • 100 kHz • 200 kHz • 500 kHz • **1 MHz**	Channel
Invert direction[1] (counter inputs)	• **Deactivated** • Activated	Channel
Reaction to signal N[1]	• **No reaction to signal N** • Synchronization at signal N • Capture at signal N	Channel
Frequency of synchronization[1]	• **Once** • Periodic	Channel
Frequency of Capture function[1]	• Once • **Periodic**	Channel
Interface standard	• **RS422, symmetrical** • TTL (5 V), asymmetrical	Channel

Parameter	Value range	Scope
Counting high limit[1]	-2147483648...**2147483647**	Channel
Start value[1]	-2147483648...**0**...2147483647	Channel
Counting low limit[1]	**-2147483648**...2147483647	Channel
Reaction to violation of a counting limit	• Stop counting • **Continue counting**	Channel
Reset when counting limit is violated	• **To opposite counting limit** • To start value	Channel
Reaction to gate start	• Set to start value • **Continue with current value**	Channel
Set function of DI	• Gate start/stop (level-triggered) • Gate start (edge-triggered) • Gate stop (edge-triggered) • Synchronization • Enable synchronization at signal N • Capture • **Digital input without function**	Channel
Select level for DI[1]	• **Active with high level** • Active with low level	Channel
Edge selection for DI[1]	• **At rising edge** • At falling edge • At rising and falling edge	Channel
Behavior of counter value after Capture with DI [1]	• **Continue counting** • Set to start value and continue counting	Channel
Input delay for digital inputs[1]	• None • 0.05 ms • **0.1 ms** • 0.4 ms • 0.8 ms • 1.6 ms • 3.2 ms • 12.8 ms • 20 ms	Channel
Set output	• **Between comparison value and count high limit / measured value >= comparison value** • Between comparison value and low limit / measured value <= comparison value • At comparison value for a pulse duration • After set command from CPU until comparison value • Between comparison value 0 and 1 • Not between comparison value 0 and 1 • Use by user program	Channel

Parameter	Value range	Scope
Comparison value 0[1]	-2147483648...**0**...2147483647	Channel
Comparison value 1[1]	-2147483648...**10**...2147483647	Channel
Count direction of DQ function[1]	• Up • Down • **In both directions**	Channel
Pulse duration[1]	0,0...**500,0**...6553,5 ms	Channel
Hysteresis (in increments)[1]	**0**...255	Channel
Measured variable	• **Frequency** • Period • Velocity	Channel
Update time of the measuring function[1]	0...**10**...25000 ms	Channel
Time base for velocity measurement[1]	• 1 ms • 10 ms • 100 ms • 1 s • **60 s**	Channel
Increments per unit[1]	**1**...65535	Channel

[1] Because the number of parameters is limited to a maximum of 244 bytes per station in the PROFIBUS GSD configuration, the possible parameter assignments are limited. The parameters are preassigned default settings in the module. If your PROFIBUS master supports the "Write/read data record" function, you can set these parameters using data record 128.

[2] When a GSD file is used, this diagnostic interrupt is enabled with the "Enable additional diagnostic interrupts" parameter and is then not separately configurable.

[3] When configuring with a GSD file, you determine the operating mode when you select the module name.

Explanation of parameters

You can find a detailed description of the parameters in function manual Counting, Measurement and Position Detection, sections Basic parameters and Manual operation available for download on the Internet (http://support.automation.siemens.com/WW/view/en/59709820).

4.3.3 Address space

Address space of the technology module

Table 4- 12 Size of input and output addresses of the TM PosInput 2 with manual operation

	Inputs	Outputs
Size per channel	16 bytes	12 bytes
Total size	32 bytes	24 bytes

4.3.4 Control and feedback interface

Note

The control and feedback interface is compatible with the control and feedback interface of the TM PosInput 1, TM Count 2x24V and TM Count 1x24V technology modules of the S7-1500 automation system.

4.3.4.1 Assignment of the control interface

The user program uses the control interface to influence the behavior of the technology module.

Control interface per channel

The following table shows the assignment of the control interface:

Byte offset from start address Channel 0/1 ↓ ↓		Bit 7	Bit 6	Bit 5	Bit 4	Bit 3	Bit 2	Bit 1	Bit 0
0 … 3	12 … 15	SLOT_0: DINT or REAL: Load value (meaning of the value is specified in LD_SLOT_0) Value range: –2147483648 to 2147483647D or 80000000 to 7FFFFFFFH							
4 … 7	16 … 19	SLOT_1: DINT or REAL: Load value (meaning of the value is specified in LD_SLOT_1) Value range: –2147483648 to 2147483647D or 80000000 to 7FFFFFFFH							

Byte offset from start address Channel 0/1 ↓ ↓		Bit 7	Bit 6	Bit 5	Bit 4	Bit 3	Bit 2	Bit 1	Bit 0
8	20	LD_SLOT_1				LD_SLOT_0			
9	21	EN_ CAPTURE	EN_ SYNC_DN	EN_ SYNC_UP	SET_DQ1	SET_DQ0	TM_ CTRL_DQ1	TM_ CTRL_DQ0	SW_GATE
10	22	SET_DIR	Reserved					RES_ EVENT	RES_ ERROR
11	23	Reserved							

Explanations

Control bit/value	Explanations
SLOT_m	You specify the load value with this value. You specify the meaning of the value in LD_SLOT_m. If you want to load a comparison value in the "Measuring" operating mode, specify the load value as floating-point number (REAL). In all other cases, you specify the load value as an integer (DINT). Value range: –2147483648 to 2147483647$_D$ or 80000000 to 7FFFFFFF$_H$
LD_SLOT_m	Use this load request to specify the meaning of the value in SLOT_m: • 0000 means: No action, idle • 0001 means: Load counter value (for incremental or pulse encoder) • 0010 not permitted • 0011 means: Load start value (for incremental or pulse encoder) • 0100 means: Load comparison value 0 • 0101 means: Load comparison value 1 • 0110 means: Load counting low limit (for incremental or pulse encoder) • 0111 means: Load counting high limit (for incremental or pulse encoder) • 1000 to 1111 not permitted The technology module executes the respective action as soon as LD_SLOT_m changes. If values are loaded simultaneously using LD_SLOT_0 and LD_SLOT_1, the value from SLOT_0 is internally applied first and then the value from SLOT_1 . This can produce unexpected intermediate states.
EN_CAPTURE	Use this bit to enable the Capture function. Resetting this bit resets a set EVENT_CAP in the feedback interface.
EN_SYNC_DN	Use this bit to enable the synchronization of the counter when counting down with an incremental encoder or pulse encoder. Resetting this bit resets a set EVENT_SYNC in the feedback interface.
EN_SYNC_UP	Use this bit to enable the synchronization of the counter when counting up with an incremental encoder or pulse encoder. Resetting this bit resets a set EVENT_SYNC in the feedback interface.
SET_DQ0	Use this bit to set digital output DQ0 when TM_CTRL_DQ0 is set to 0. In the case of the function "After set command from CPU until comparison value", SET_DQ0 is effective regardless of TM_CTRL_DQ0 as long as the counter value is not equal to the comparison value.

Control bit/value	Explanations
SET_DQ1	Use this bit to set digital output DQ1 when TM_CTRL_DQ1 is set to 0. In the case of the function "After set command from CPU until comparison value", SET_DQ1 is effective regardless of TM_CTRL_DQ1 as long as the counter value is not equal to the comparison value.
TM_CTRL_DQ0	Use this bit to enable the technological function of digital output DQ0. • 0 means: SET_DQ0 defines the state of DQ0 • 1 means: assigned function defines the state of DQ0
TM_CTRL_DQ1	Use this bit to enable the technological function of digital output DQ1. • 0 means: SET_DQ1 defines the state of DQ1 • 1 means: assigned function defines the state of DQ1
SW_GATE	Use this bit to open and close the software gate when using an incremental encoder or pulse encoder. Together, the software gate and the hardware gate form the internal gate. The technology module only counts when the internal gate is open. • 0 means: Software gate closed • 1 means: Software gate open The digital inputs of the technology module externally control the hardware gate. The hardware gate can be activated by parameter assignment. The software gate cannot be deactivated.
SET_DIR	Use this bit to specify the count direction for signal type "Pulse (A)". • 0 means: Up • 1 means: Down
RES_EVENT	Use this bit to trigger the reset of the saved events in the EVENT_ZERO, EVENT_OFLW, EVENT_UFLW, EVENT_CMP0, EVENT_CMP1 feedback bits.
RES_ERROR	Use this bit to trigger the reset of the saved error states LD_ERROR and ENC_ERROR .
Reserved	Reserved bits must be set to 0.

4.3.4.2 Assignment of the feedback interface

The user program receives current values and status information from the technology module by means of the feedback interface.

Feedback interface per channel

The following table shows the assignment of the feedback interface:

Byte offset from start address Channel 0/1 ↓ ↓		Bit 7	Bit 6	Bit 5	Bit 4	Bit 3	Bit 2	Bit 1	Bit 0
0 … 3	16 … 19	COUNT_VALUE: DINT: Current counter value or position value							
4 … 7	20 … 23	CAPTURED_VALUE: DINT: The last acquired Capture value							
8 … 11	24 … 27	MEASURED_VALUE: REAL: Current measured value or DWORD: Complete SSI frame							
12	28	Reserved					LD_ERROR	ENC_ ERROR	POWER_ ERROR
13	29	Reserved		STS_SW_ GATE	STS_ READY	LD_STS_ SLOT_1	LD_STS_ SLOT_0	RES_EVENT_ ACK	Reserved
14	30	Reserved	STS_DI1	STS_DI0	STS_DQ1	STS_DQ0	STS_GATE	STS_CNT	STS_DIR
15	31	STS_M_ INTERVAL	EVENT_ CAP	EVENT_ SYNC	EVENT_ CMP1	EVENT_ CMP0	EVENT_ OFLW	EVENT_ UFLW	EVENT_ ZERO

Note

Validity of the position value

The position value of an SSI absolute encoder is valid when STS_READY is set to 1 and ENC_ERROR is set to 0. STS_READY is set to 0 while the module starts up.

Explanations

Feedback bit/value	Explanations
COUNT_VALUE	This DINT value indicates the current counter value or position value. If you use an SSI absolute encoder with a position value length up to 31 bits, the position value is treated as unsigned and as a positive value and can assume values between 0 and $2^{(MSB-LSB+1)}-1$. If you use an SSI absolute encoder with a position value length of 32 bits, the MSB of the position value corresponds to the sign and the position value can assume values between –2147483648 and 2147483647. If you use a 32-bit position value for the comparison function, the position value is interpreted as DINT.
CAPTURED_VALUE	This DINT value indicates the last acquired Capture value. The following external signals can trigger the Capture function: • Rising or falling edge of a digital input • Both edges of a digital input The "Frequency of Capture function" parameter specifies whether the function is executed at each configured edge or only once after each enable.
MEASURED_VALUE	This value indicates the current measured value with data type REAL or the complete SSI frame with data type DWORD: • Frequency: The mean frequency is calculated from the time profile of the count pulses or position value changes in one measurement interval and returned as a floating-point number in the unit of hertz. • Period: The mean period is calculated from the time profile of the count pulses or position value changes in one measurement interval and returned as a floating-point number in the unit of seconds. • Velocity: The mean velocity is calculated from the time profile of the count pulses or position value changes in one measurement interval and returned as a floating-point number in the configured unit. • Complete SSI frame: Instead of a measured quantity, the least significant 32 bits of the unprocessed current SSI frame are returned. This provides you with encoder-specific additional bits, such as error bits, in addition to the position value. If the SSI frame is shorter than 32 bits, the complete SSI frame is returned right-aligned and the top unused bits are returned with "0" in the feedback interface. The measured values are returned as a signed value. The sign indicates whether the counter value or position value went up or down in the relevant time interval. The update time is asynchronous to the opening of the internal gate, i.e. the update time is not started when the gate opens. After the internal gate closes, the last calculated measured value continues to be returned.
LD_ERROR	This bit indicates that an error occurred (latching) during loading via the control interface. The loaded values were not applied. When using an incremental or pulse encoder, one of the following conditions is not fulfilled: • Low counting limit <= counter value <= high counting limit • Low counting limit <= start value <= high counting limit • Low counting limit <= comparison value 0/1 <= high counting limit When using an SSI absolute encoder (position value length 31 bits), the following condition is not met: • 0 <= comparison value 0/1 <= maximum position value When using an SSI absolute encoder (position value length 32 bits), the following condition is not met: • –2147483648 <= comparison value 0/1 <= maximum position value The bit is reset once you have acknowledged the error with RES_ERROR .

Feedback bit/value	Explanations
ENC_ERROR	This bit indicates that one of the following errors has occurred at the encoder signals (retentive) for the respective technology module: • Invalid transition of A/B signals (with incremental encoder) • RS422/TTL error • SSI encoder error or SSI frame error (with SSI absolute encoder) If you have enabled the diagnostic interrupts, the respective diagnostic interrupt is triggered in the event of encoder signal errors. For information on the meaning of the diagnostics interrupts, refer to the section Diagnostic interrupts (Page 85). The bit is reset once you have acknowledged the error with RES_ERROR .
POWER_ERROR	This bit indicates that supply voltage L+ is not present or is too low or the front connector is not inserted. If you have enabled the diagnostic interrupts (Page 85), the diagnostic interrupt "Load voltage missing" is triggered at a supply voltage error. When supply voltage L+ is available at a sufficient level once again, POWER_ERROR is automatically set to 0.
STS_SW_GATE	This bit indicates the status of the software gate. • 0 means: Gate closed • 1 means: Gate open
STS_READY	This bit indicates that the technology module supplies valid user data. The technology module has been started up and configured.
LD_STS_SLOT_0	This bit indicates by a status change (toggling) that the load request for SLOT_0 (LD_SLOT_0) was detected and performed.
LD_STS_SLOT_1	This bit indicates by a status change (toggling) that the load request for SLOT_1 (LD_SLOT_1) was detected and performed.
RES_EVENT_ACK	This bit indicates that the reset of event bit EVENT_SYNC, EVENT_CMP0, EVENT_CMP1, EVENT_OFLW, EVENT_UFLW, EVENT_ZERO is active.
STS_DI0	This bit indicates the status of digital input DI0.
STS_DI1	This bit indicates the status of digital input DI1.
STS_DQ0	This bit indicates the status of the digital output DQ0.
STS_DQ1	This bit indicates the status of the digital output DQ1.
STS_GATE	This bit indicates the status of the internal gate when using an incremental or pulse encoder. • 0 means: Gate closed • 1 means: Gate open Note: In order for the counting logic including the gate control to operate correctly, the startup of the technology module must finish correctly at least once with a connected incremental or pulse encoder (STS_READY auf 1). If a connected encoder is not yet ready during the startup, the function of feedback bit STS_GATE is delayed until the encoder for the technology module is available. When the technology module starts up without a connected encoder, the startup does not finish correctly and STS_READY as well as STS_GATE remain set to 0. As soon as an encoder is connected, the startup finishes and STS_GATE functions correctly. An encoder error after a finished startup has no effect on STS_GATE.
STS_CNT	This bit indicates that at least one count pulse or a position value change has been detected in the last approx. 0.5 s.
STS_DIR	This bit indicates the count direction of the last count pulse or the direction of the last position value change. • 0 means: Down • 1 means: Up
STS_M_INTERVAL	This bit indicates that at least one count pulse or a position value change was detected in the previous measurement interval.

Feedback bit/value	Explanations
EVENT_CAP	This bit indicates that a Capture event has occurred and a counter value has been saved in CAPTURED_VALUE . You reset the state by resetting EN_CAPTURE .
EVENT_SYNC	This bit indicates the saved state that the counter was loaded with the start value by an external reference signal (synchronization) when using an incremental or pulse encoder. You reset the state by resetting EN_SYNC_UP or EN_SYNC_DN .
EVENT_CMP0	This bit indicates the saved state that a comparison event (state change) has occurred for the digital output DQ0 based on the selected comparison condition. You reset the state by acknowledgment with RES_EVENT. If the counter value is set to the start value in counting operating mode, EVENT_CMP0 is not set.
EVENT_CMP1	This bit indicates the saved state that a comparison event (state change) has occurred for the digital output DQ1 based on the selected comparison condition. You reset the state by acknowledgment with RES_EVENT. If the counter value is set to the start value in counting operating mode, EVENT_CMP1 is not set.
EVENT_OFLW	This bit indicates the saved state which shows that there was a counter value overflow. You reset the state by acknowledgment with RES_EVENT.
EVENT_UFLW	This bit indicates the saved state which shows that there was a counter value underflow. You reset the state by acknowledgment with RES_EVENT.
EVENT_ZERO	This bit indicates the saved state that the counter value or position value experienced a zero crossing. You reset the state by acknowledgment with RES_EVENT. If the "Zero crossing" hardware interrupt is enabled, it can also be triggered by the system if "0" is outside the configured value range.
Reserved	Reserved bits are set to 0.

4.3.4.3 Reaction to CPU STOP

Reaction to CPU STOP

You set the reaction of the technology module to a STOP of the CPU on a channel-by-channel basis in the basic parameters of the device configuration.

Table 4- 13 Reaction of technology module to CPU STOP

Option	Meaning
Continue operation	The technology module remains fully functional. Incoming count pulses are processed or the position value is read in. The digital outputs continue to switch according to the parameter assignment.
Output substitute value	The technology module outputs the configured substitute values at the digital outputs until the next CPU STOP-RUN transition. The technology module is returned to its startup state after a STOP-RUN transition: The counter value is set to the Start value (with incremental encoders or pulse encoders) and the digital outputs switch according to the parameter assignment.
Keep last value	The technology module outputs the values at the digital outputs that were valid when the transition to STOP took place until the next CPU STOP-RUN transition. If a digital output with the "At comparison value for a pulse duration" function is set at CPU STOP, the digital output is reset after the pulse duration elapses. The technology module is returned to its startup state after a STOP-RUN transition: The counter value is set to the Start value (with incremental encoders or pulse encoders) and the digital outputs switch according to the parameter assignment.

4.3.5 Isochronous mode

The technology module supports the "Isochronous mode" system function. This system function enables position, counter and measured values to be acquired in a defined system cycle.

In isochronous mode, the cycle of the user program, the transmission of the input signals and processing in the technology module are synchronized. The output signals switch immediately if the relevant comparison condition is met. A status change of a digital input immediately triggers the specified reaction of the technology module and the change of the status bit of the digital input in the feedback interface.

Use an OB of type "Synchronous Cycle" (e.g. OB61) in this operating mode. The input and output data are processed in the assigned OB.

The update time for the measured value is synchronized with the system cycle in a suitable ratio and, if necessary, adapted in length. If you set "0", the measured value is updated once per system cycle.

Data processing

The data that was transmitted to the technology module in the current bus cycle via the control interface takes effect when it is processed in the internal technology module cycle. At the time the input data is read in (T_i), the position or counter value and the measured value as well as status bits are acquired and made available in the feedback interface for retrieval in the current bus cycle.

Isochronous mode parameters

In isochronous mode, the following parameter can affect the isochronous mode parameters of the sync domain.

- Filter frequency
- Frame length
- Transmission rate
- Monoflop time
- Parity

Because the isochronous mode parameters are not checked in RUN, overflows can occur if you change one or more of the indicated parameters in RUN. To prevent overflows, select the option with the largest time required in the offline parameter assignment.

Additional information

You can find a detailed description of isochronous mode in the following:

- In the Isochronous Mode Function Manual as a download from the Internet (https://support.industry.siemens.com/cs/ww/en/view/109755401).
- Function manual PROFINET with STEP 7 available for download on the Internet (https://support.industry.siemens.com/cs/ww/en/view/49948856)

4.4 Fast Mode

You can use the technology module in Fast Mode for very fast acquisition of counter or position value with compressed functionality. A reduced feedback interface but no control interface is available in Fast Mode. This allows you to use a shorter send clock for the CPU.

The range of functions of the technology module has the following limitations in Fast Mode:

- Parameter change in RUN only possible with data record 128
- Count/position value range: 25 bits
- No measured value available
- No software gate available
- No complete SSI frame available
- No Capture function available
- No hardware interrupts available
- Combined error message (feedback bit) that is acknowledged automatically

4.4.1 Configuring

Introduction

You configure the technology module and assign its parameters with the configuration software.

The functions of the technology module are controlled and checked by the user program via the feedback interface.

System environment

The technology module can be used in the following system environments:

Applications	Components required	Configuration software	In the user program
Central operation with an S7-1500 CPU	• S7-1500 automation system • TM PosInput 2	STEP 7 (TIA Portal): Device configuration and parameter setting with hardware configuration	Direct access to feedback interface in the I/O data
Distributed operation with an S7-1500 CPU	• S7-1500 automation system • ET 200MP distributed I/O system • TM PosInput 2	STEP 7 (TIA Portal): Device configuration and parameter setting with hardware configuration	
Distributed operation with an S7-1200 CPU	• S7-1200 automation system • ET 200MP distributed I/O system • TM PosInput 2	STEP 7 (TIA Portal): Device configuration and parameter setting with hardware configuration	
Distributed operation with an S7-300/400 CPU	• S7-300/400 automation system • ET 200MP distributed I/O system • TM PosInput 2	STEP 7 (TIA Portal): Device configuration and parameter setting with hardware configuration STEP 7: Device configuration and parameter setting with GSD file	
Distributed operation in a third-party system	• Third-party automation system • ET 200MP distributed I/O system • TM PosInput 2	Third-party configuration software: Device configuration and parameter setting with GSD file	

Additional information

You can find a detailed description of the counting and measurement functions and their configuration in the following:

- Function manual Counting, Measurement and Position Detection available for download on the Internet (http://support.automation.siemens.com/WW/view/en/59709820)
- Information system of STEP 7 (TIA Portal) under "Using technology functions > Counting, measurement and position input > Counting, measurement and position input (S7-1500)"

Hardware Support Packages (HSP)

Fast Mode is available as of firmware version V2.0 of the module (6ES7551-1AB01-0AB0). In STEP 7 (TIA Portal) V17, you integrate the firmware version V2.0 using HSP0355. Firmware version V2.0 of the module is integrated into the following TIA Portal versions.

You can find the Hardware Support Packages (HSP) for download on the Internet (https://support.industry.siemens.com/cs/ww/en/view/72341852).

You can also access this download from the menu bar of STEP 7 (TIA Portal): "Options > Support packages > Download from the Internet".

GSD file

The respective GSD file for the ET 200MP distributed I/O system is available for download on the Internet:

- GSD file for PROFINET IO (http://support.automation.siemens.com/WW/view/en/68189683)
- GSD file for PROFIBUS DP (http://support.automation.siemens.com/WW/view/en/80206700)

4.4.2 Parameter setting

4.4.2.1 Parameter setting

You specify the properties of the technology module using various parameters. Depending on the settings, not all parameters are available. When parameters are assigned in the user program, the parameters are transferred to the module with the "WRREC" instruction and data record 128 (Page 100).

You set the parameters of the module as follows in this operating mode:

Parameter setting using...	Basic procedure
Hardware configuration in STEP 7 (TIA Portal)	1. Insert the module from the hardware catalog under "Technology modules". 2. Set "Fast Mode" and the other module parameters in the hardware configuration. 3. Download the project to the CPU.
Hardware configuration with GSD file for distributed operation on PROFINET IO	1. Install the current PROFINET GSD file. You will then find the module in the hardware catalog under "Other field devices > PROFINET IO > I/O". 2. Set the parameters in the hardware configuration. 3. Download the project to the CPU.
Hardware configuration with GSD file for distributed operation on PROFIBUS DP	1. Install the current PROFIBUS GSD file. You will then find the module in the hardware catalog under "Other field devices > PROFIBUS DP > I/O". 2. Set the parameters in the hardware configuration. The parameters marked with [1] in the following tables are not configurable in the PROFIBUS GSD file. 3. Download the project to the CPU. The parameters marked with [1] in the following tables are downloaded with their default setting. 4. If necessary, set the parameters marked with [1] in the user program using data record 128.

4.4.2.2 Parameters (SSI absolute encoder)

Parameters of the TM PosInput 2 with SSI absolute encoder

The following parameter settings are possible. The default settings of the parameters are shown in bold in the "Value range" column.

Table 4- 14 Adjustable parameters (SSI absolute encoder)

Parameter	Value range	Scope
Reaction to CPU STOP[1]	• **Output substitute value** • Keep last value • Continue operation	Channel
Substitute value for DQ0	• **0** • 1	Channel
Substitute value for DQ1	• **0** • 1	
Enable diagnostic interrupt on wire break[2]	• **Deactivated** • Activated	Channel
Enable additional diagnostic interrupts	• **Deactivated** • Activated	Channel
Invert direction[1] (position value)	• **Deactivated** • Activated	Channel
Frame length	10...**13**...40 bits	Channel
Code type	• **Gray** • Dual	Channel
Transmission rate	• **125 kHz** • 250 kHz • 500 kHz • 1 MHz • 1.5 MHz • 2 MHz	Channel
Monoflop time[1]	• **Automatically** • 16 µs • 32 µs • 48 µs • 64 µs	Channel
Parity	• **None** • Even • Odd	Channel
Bit number LSB of the position value	**0**...38	Channel
Bit number MSB of the position value	1...**12**...39	Channel
Set function of DI	**Digital input without function**	Channel

Parameter	Value range	Scope
Input delay for digital inputs[1]	• None • 0.05 ms • **0.1 ms** • 0.4 ms • 0.8 ms • 1.6 ms • 3.2 ms • 12.8 ms • 20 ms	Channel
Set output	• Between comparison value and count high limit • Between comparison value and count low limit • At comparison value for a pulse duration • **Digital output without function**	Channel
Comparison value 0[1]	**0**...33554431	Channel
Comparison value 1[1]	0...**10**...33554431	Channel
Count direction of DQ function[1]	• Up • Down • **In both directions**	Channel
Pulse duration[1]	0,1...**500,0**...6553,5 ms	Channel
Hysteresis (in increments)[1]	**0**...255	Channel

[1] Because the number of parameters is limited to a maximum of 244 bytes per station in the PROFIBUS GSD configuration, the possible parameter assignments are limited. The parameters are preassigned default settings in the module. If your PROFIBUS master supports the "Write/read data record" function, you can set these parameters using data record 128.

[2] When a GSD file is used, this diagnostic interrupt is enabled with the "Enable additional diagnostic interrupts" parameter and is then not separately configurable.

NOTICE

Excessive axis speed can provide wrong direction of rotation

If an axis connected to an SSI absolute encoder rotates so quickly that more than half of the value range is covered within one module cycle[1], the velocity and direction of rotation can no longer be determined correctly. As a result, the following may function incorrectly:

- DQ functions
- Feedback bit STS_DIR

[1] Non-isochronous mode: 500 µs; isochronous mode: PROFINET cycle time

Explanation of parameters

A detailed description of the parameters can be found in the Basic parameters and Fast Mode sections of the Counting, Measurement and Position Detection Function Manual which is available for downloaded on the Internet (http://support.automation.siemens.com/WW/view/en/59709820).

4.4.2.3 Parameters (incremental or pulse encoder)

Parameters of the TM PosInput 2 with incremental or pulse encoder

The following parameter settings are possible. The default settings of the parameters are shown in bold in the "Value range" column.

Table 4- 15 Adjustable parameters (incremental or pulse encoder)

Parameter	Value range	Scope
Reaction to CPU STOP[1]	• **Output substitute value** • Keep last value • Continue operation	Channel
Substitute value for DQ0[1]	• **0** • 1	Channel
Substitute value for DQ1[1]	• **0** • 1	Channel
Enable diagnostic interrupt on wire break[2]	• **Deactivated** • Activated	Channel
Enable additional diagnostic interrupts	• **Deactivated** • Activated	Channel
Signal type	• Pulse (A) • **Pulse (A) and direction (B)** • Count up (A), count down (B) • Incremental encoder (A, B phase-shifted) • Incremental encoder (A, B, N)	Channel
Invert direction[1] (counter inputs)	• **Deactivated** • Activated	Channel
Signal evaluation for counter inputs	• **Single** • Double • Quadruple	Channel
Filter frequency for counter inputs[1]	• 100 Hz • 200 Hz • 500 Hz • 1 kHz • 2 kHz • 5 kHz • 10 kHz • 20 kHz • 50 kHz • 100 kHz • 200 kHz • 500 kHz • **1 MHz**	Channel
Reaction to signal N[1]	• **No reaction to signal N** • Synchronization at signal N	Channel
Interface standard	• **RS422, symmetrical** • TTL (5 V), asymmetrical	Channel

Parameter	Value range	Scope
High counting limit[1]	1...**33554431**	Channel
Start value[1]	**0**...33554431	Channel
Counting low limit[1]	**0**...33554430	Channel
Reaction to violation of a counting limit	• Stop counting • **Continue counting**	Channel
Reset when counting limit is violated	• **To opposite counting limit** • To start value	Channel
Reaction to gate start	• Set to start value • **Continue with current value**	Channel
Set function of DI	• Gate start/stop (level-triggered) • Gate start (edge-triggered) • Gate stop (edge-triggered) • Synchronization • Enable synchronization at signal N • **Digital input without function**	Channel
Input delay for digital inputs[1]	• None • 0.05 ms • **0.1 ms** • 0.4 ms • 0.8 ms • 1.6 ms • 3.2 ms • 12.8 ms • 20 ms	Channel
Select level for DI[1]	• **Active with high level** • Active with low level	Channel
Edge selection for DI[1]	• **At rising edge** • At falling edge	Channel
Frequency of synchronization[1]	• **Once**[3] • Periodic	Channel
Count direction for synchronization	• **Up** • Down • In both directions	Channel
Set output	• Between comparison value and count high limit • Between comparison value and count low limit • At comparison value for a pulse duration • Between comparison value 0 and 1 • **Digital output without function**	Channel
Comparison value 0[1]	**0**...33554431	Channel
Comparison value 1[1]	0...**10**...33554431	Channel

Parameter	Value range	Scope
Count direction of DQ function[1]	• Up • Down • **In both directions**	Channel
Pulse duration[1]	0,0...**500,0**...6553,5 ms	Channel
Hysteresis (in increments)[1]	**0**...255	Channel

[1] Because the number of parameters is limited to a maximum of 244 bytes per station in the PROFIBUS GSD configuration, the possible parameter assignments are limited. The parameters are preassigned default settings in the module. If your PROFIBUS master supports the "Write/read data record" function, you can set these parameters using data record 128.

[2] When a GSD file is used, this diagnostic interrupt is enabled with the "Enable additional diagnostic interrupts" parameter and is then not separately configurable.

[3] Note: in Fast Mode no control interface (bits EN_SYNC_UP/EN_SYNC_DN) is available to reset the function.

Explanation of parameters

A detailed description of the parameters can be found in the Basic parameters and Fast Mode sections of the Counting, Measurement and Position Detection Function Manual which is available for downloaded on the Internet (http://support.automation.siemens.com/WW/view/en/59709820).

4.4.3 Address space

Address space of the technology module

Table 4- 16 Range of the input addresses and output addresses of the TM PosInput 2 in Fast Mode

	Inputs	Outputs
Size per channel	4 bytes	0 bytes
Total size	8 bytes	0 bytes

4.4.4 Assignment of the feedback interface

The user program receives current values and status information from the technology module by means of the feedback interface.

Feedback interface

The following table shows the assignment of the feedback interface:

Byte offset relative to start address Channel 0/1 ↓ ↓		Bit 7	Bit 6	Bit 5	Bit 4	Bit 3	Bit 2	Bit 1	Bit 0
0	4	LS	STS_ READY	Reserved	EXT_F	STS_DI0	STS_DIR	STS_DI1	COUNT_ VALUE
1	5	COUNT_VALUE: DINT: Current counter value or position value							
2	6								
3	7								

Explanations

Feedback bit/value	Explanations
LS	As a sign of life, this bit indicates through a state change (toggling) that isochronous mode is functioning and that the module has updated the feedback interface in the respective bus cycle. This bit is set to 0 in non-isochronous mode.
STS_READY	This bit indicates that the technology module supplies valid user data. The technology module has been started up and configured.
EXT_F	This bit indicates that one of the following errors has occurred at the encoder signals for the technology module: • Load voltage missing • Invalid transition of A/B signals (with incremental encoder) • RS422/TTL error • SSI encoder error or SSI frame error (with SSI absolute encoder) If you have enabled the diagnostic interrupts, the respective diagnostic interrupt is triggered in the event of encoder signal errors. For information on the meaning of the diagnostic interrupts, refer to the section Diagnostic alarms (Page 85). The bit is reset automatically as soon as an error no longer exists.
STS_DI0	This bit indicates the status of digital input DI0.
STS_DIR	This bit indicates the count direction of the last count pulse or the direction of the last position value change. 0 means: Down 1 means: Up
STS_DI1	This bit indicates the status of digital input DI1.
COUNT_VALUE	This value returns the current counter value or position value in the first 25 bits of a DINT value.
Reserved	Reserved bits are set to 0.

4.4.5 Reaction to CPU STOP

Reaction to CPU STOP

You set the reaction of the technology module to a STOP of the CPU on a channel-by-channel basis in the basic parameters of the device configuration.

Table 4- 17 Reaction of technology module to CPU STOP

Option	Meaning
Continue operation	The technology module remains fully functional. Incoming count pulses are processed or the position value is read in. The digital outputs continue to switch according to the parameter assignment.
Output substitute value	The technology module outputs the configured substitute values at the digital outputs until the next CPU STOP-RUN transition. The technology module is returned to its startup state after a STOP-RUN transition: The counter value is set to the Start value (with incremental encoders or pulse encoders) and the digital outputs switch according to the parameter assignment.
Keep last value	The technology module outputs the values at the digital outputs that were valid when the transition to STOP took place until the next CPU STOP-RUN transition. If a digital output with the "At comparison value for a pulse duration" function is set at CPU STOP, the digital output is reset after the pulse duration elapses. The technology module is returned to its startup state after a STOP-RUN transition: The counter value is set to the Start value (with incremental encoders or pulse encoders) and the digital outputs switch according to the parameter assignment.

4.4.6 Isochronous mode

The technology module supports the "Isochronous mode" system function. Position and counter values can be acquired in a fixed system cycle with this system function.

In isochronous mode, the cycle of the user program, the transmission of the input signals and processing in the technology module are synchronized. The output signals switch immediately if the relevant comparison condition is met. A status change of a digital input immediately triggers the specified reaction of the technology module and the change of the status bit of the digital input in the feedback interface.

Since no control interface and a shortened feedback interface are used in the operating mode Fast Mode, particularly short transmission cycles can be realized. The smallest send clock supported by the module is 125 µs.

Use an OB of type "Synchronous Cycle" (e.g. OB61) in this operating mode.

Data processing

At the time the input data is read in (T_i), the position or counter value as well as status bits are acquired and made available in the feedback interface for retrieval in the current bus cycle.

Isochronous mode parameters

In isochronous mode, the following parameter can affect the isochronous mode parameters of the sync domain.

- Filter frequency
- Frame length
- Transmission rate
- Monoflop time
- Parity

Because the isochronous mode parameters are not checked in RUN, overflows can occur if you change one or more of the indicated parameters in RUN. To prevent overflows, select the option with the largest time required in the offline parameter assignment.

Additional information

You can find a detailed description of isochronous mode in the following:

- In the Isochronous mode function manual as a download from the Internet (https://support.industry.siemens.com/cs/ww/en/view/109755401).
- Function manual PROFINET with STEP 7 available for download on the Internet (https://support.industry.siemens.com/cs/ww/en/view/49948856)

Interrupts/diagnostic messages

5

5.1 Status and error display

LEDs

The following figure shows you the LED displays (status and error displays) of TM PosInput 2.

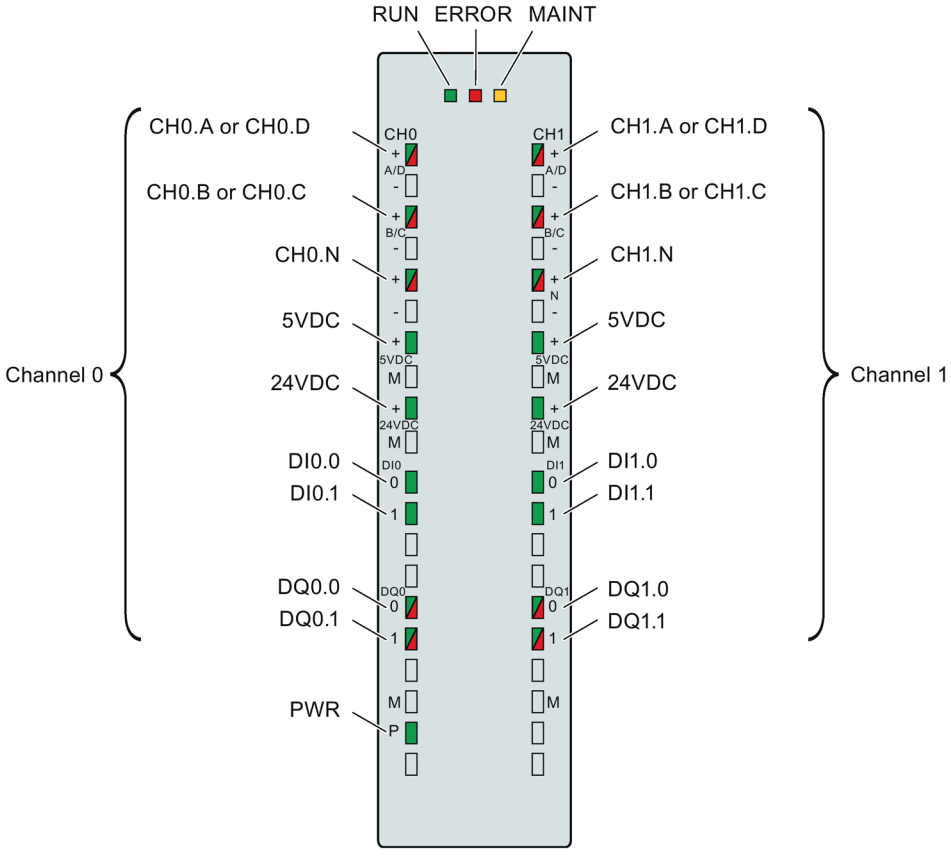

Figure 5-1 LED displays of the TM PosInput 2

Meaning of the LED displays

The following tables explain the meaning of the status and error displays. Remedial measures for diagnostic alarms can be found in section Diagnostic alarms (Page 85).

Table 5- 1 Status and error displays RUN/ERROR/MAINT

LEDs			Meaning	Remedy
RUN	ERROR	MAINT		
Off	Off	Off	Missing or insufficient voltage on the backplane bus	Switch on the CPU and/or the system power supply modules. • Check whether the U connectors are plugged in correctly. • Check whether too many modules are plugged in.
Flashes	Off	Off	Technology module parameters not set	---
On	Off	Off	Technology module parameters set and no module diagnostics	
On	Flashes	Off	Technology module parameters set and module diagnostics (at least one error is present)	Evaluate the diagnostic alarms and eliminate the error.
Flashes	Flashes	Flashes	Hardware or firmware defective	Replace the technology module.

Table 5- 2 PWR/24VDC/5VDC/ERROR status displays

LEDs			Meaning	Remedy
PWR	24VDC/ 5VDC	ERROR		
Off	Off	Off	Supply voltage too low or missing *and* "Enable additional diagnostic interrupts" not enabled	• Check the supply voltage. • Make sure that the front connector is correctly inserted. • In the device configuration, enable "Enable additional diagnostic interrupts".
Off	Off	Flashes	Supply voltage too low or missing	• Check the supply voltage. • Make sure that the front connector is correctly inserted.
On	On	Off	Supply voltage is present and OK. Encoder supply is OK.	---

LEDs			Meaning	Remedy
PWR	24VDC/ 5VDC	ERROR		
■ On	□ Off	□ Off	Short circuit or overload at the encoder supply *and* "Enable additional diagnostic interrupts" not enabled	• Check the encoder wiring. • Check the loads connected to the encoder supply. • Check the supply voltage. • In the device configuration, enable "Enable additional diagnostic interrupts".
■ On	□ Off	☼ Flashes	Short-circuit or overload at the encoder supply	• Check the encoder wiring. • Check the loads connected to the encoder supply. • Check the supply voltage.

Channel LEDs

The CHn.A, CHn.B, CHn.N and DIn.m LEDs indicate the current level of the associated signals. The LEDs of the DQn.m digital outputs indicate the desired state.

The flashing frequency of the channel LEDs is limited to approximately 12 Hz. If higher frequencies are present, the channel LEDs will flash at 12 Hz instead of indicating the current status.

When an SSI absolute encoder is used, the CHn.D and CHn.C LEDs are lit green during transfer of the encoder frame and are lit red if an error occurred. The CHn.D and CHn.C LEDs are off when no encoder frame is being transferred or if an error has occurred for which the diagnostic interrupt is not enabled.

Table 5- 3 Status displays CHn.m/DIn.m/DQn.m

LEDs CHn.m/DIn.m/ DQn.m	Meaning	Remedy
□ Off	Counter input/digital input/digital output at 0 level	---
■ On	Counter input/digital input/digital output at 1 level	---
■ On (CHn.m/DQn.m)	Diagnostic alarm: e.g. wire break, short-circuit	Check the wiring or the connected load.

5.2 Diagnostic alarms

Enabling of diagnostic interrupts

You enable the diagnostic interrupts in the device configuration with the basic parameters.

The technology module can trigger the following diagnostic interrupts:

Table 5- 4 Possible diagnostic interrupts

Diagnostic interrupt	Monitoring
• Parameter error • Hardware interrupt lost[1] • Watchdog tripped. Module is defective.	Monitoring is always active. A diagnostic interrupt is triggered each time an error is detected.
• RS422/TTL error	Monitoring is always active. When an error is detected, a diagnostic interrupt is only triggered if "Enable diagnostic interrupt on wire break" is activated in the device configuration.
• Supply voltage missing • Short-circuit / overload at external encoder supply • Error at digital outputs • SSI encoder error • Invalid transition of A/B signals	Monitoring is always active. When an error is detected, a diagnostic interrupt is only triggered if "Enable additional diagnostic interrupts" is activated in the device configuration.

[1] Not available in operating modes "Position detection for technology object "Motion Control"" and "Fast Mode"

Reactions to a diagnostic interrupt

The following happens when an event occurs that triggers a diagnostic interrupt:

- The ERROR LED flashes red.

  Once you have remedied the error, the ERROR LED goes out.
- The S7-1500 CPU interrupts processing of the user program. The diagnostic interrupt OB (e.g. OB 82) is called. The event that triggered the interrupt is entered in the start information of the diagnostic interrupt OB.
- The S7-1500 CPU remains in RUN even if no diagnostic interrupt OB is present in the CPU. The technology module continues working unchanged if this is possible despite the error.

You can obtain detailed information on the error event in the error organization block with instruction "RALRM" (Read additional alarm information), in the information system of STEP 7 and in function manual Diagnostics (https://support.industry.siemens.com/cs/ww/en/view/59192926), section "System diagnostics in user program".

If the module is operated as a distributed module with PROFIBUS DP in an ET 200MP system, you have the option of reading out diagnostic data with the RDREC or RD_REC instruction using data record 0 and 1. You can find the structure of the data records in the manual for the IM 155-5 DP ST interface module available for download on the Internet (https://support.industry.siemens.com/cs/ww/de/view/78324181).

Diagnostic alarms

The display of diagnostics is in plain text in STEP 7 (TIA Portal) in the online and diagnostics view. You can evaluate the error codes with the user program.

The following diagnostics can be signaled:

Table 5- 5 Diagnostic alarms, their meaning and remedies

Diagnostic alarm	Error code	Meaning	Remedy
Parameter error	10H	The received parameter data record is invalid	Check parameter data record
Hardware interrupt lost	16H	• Module cannot issue interrupt because a preceding interrupt has not yet been processed • Possible cause: Too many hardware interrupts in too short a time	• Change interrupt processing in the CPU and re-assign technology module parameters correspondingly • Check frequency of interrupts from the process
Watchdog tripped. Module is defective.	103H	Firmware error	Run firmware update
		Technology module defective	Replace technology module
Supply voltage missing	10AH	• Missing or insufficient supply voltage L+ • Possible causes: – Wiring of supply voltage L+ faulty – Front connector not inserted correctly	• Check supply voltage L+ • Check wiring of supply voltage L+ • Insert front connector correctly
Short-circuit / overload at external encoder supply	10EH	• Error at encoder supply • Possible causes: – Short circuit – Overload	• Check encoder wiring • Check consumers connected to encoder supply
Error at digital outputs	10FH	• Error at the digital outputs (LED display DQn.m lit red) • Possible causes: – Short circuit – Overload	• Check encoder wiring at the digital outputs • Check consumers connected to the digital outputs
Invalid transition of A/B signals	500H	• Time profile of signals A and B of the incremental encoder does not meet certain requirements (relative phase shift of the two signals is too small) • Possible causes: – Signal frequency too high – Encoder faulty – Process wiring faulty	• Check process wiring • Check encoder/sensor • Check parameter assignment

Diagnostic alarm	Error code	Meaning	Remedy
RS422/TTL error	502H	• Error at connection of the RS422 encoder, TTL encoder or SSI absolute encoder • Possible causes: – Wire break – No encoder connected – Cable too long – Short circuit – Overload – External voltage – Overtemperature – Parameter assignment error	• Check process wiring • Check encoder/sensor • Check parameter assignment
SSI encoder error	503H	• Error at SSI absolute encoder connection • Possible causes: – Wire break – Cable too long – Frame error (error of the start bit or stop bit) – Parity error – Parameter assignment error	• Check process wiring • Check SSI absolute encoder • Check parameter assignment

5.3 Hardware interrupts

Introduction

For the technology module, you can configure which events are to trigger a hardware interrupt during operation.

What is a hardware interrupt?

The technology module will trigger a hardware interrupt as configured in response to specific events/states. When a hardware interrupt occurs, the CPU interrupts execution of the user program and processes the assigned hardware interrupt OB. The event that triggered the interrupt is entered in the start information of the assigned hardware interrupt OB by the CPU.

Lost hardware interrupt

If an event occurs that is to trigger a hardware interrupt and the preceding event has not yet been processed, another hardware interrupt cannot be triggered. The hardware interrupt is lost and the diagnostic interrupt "Lost hardware interrupt" is triggered.

Enabling of hardware interrupts

A hardware interrupt is triggered when the condition for the change of the respective status or event bit in the feedback interface is met.

You enable the hardware interrupts in the device configuration with the basic parameters. You can configure hardware interrupts to be triggered for the following event types:

- Opening of internal gate (gate start)[1]
- Closing of internal gate (gate stop)[1]
- Overflow (counting high limit violated)[1]
- Underflow (counting low limit violated)[1]
- Comparison event for DQ0 has occurred
- Comparison event for DQ1 has occurred
- Zero crossing[4]
- New Capture value available[2]
- Synchronization of the counter by an external signal[1]
- Direction reversal[3]

[1] Not for SSI absolute encoder

[2] Only configurable in the Counting/Position input operating mode

[3] Feedback bit STS_DIR is preassigned with "0". A hardware interrupt is not triggered when the first counter value or position value is changed immediately after switching on the technology module in *down direction*.

[4] When the hardware interrupt is enabled, for system-related reasons it can also be triggered if "0" is outside the configured value range.

You can activate any combination of events to trigger hardware interrupts.

You can obtain detailed information on the event in the hardware interrupt organization block with instruction "RALRM" (Read additional alarm information) and in the information system of STEP 7.

Which channel of the module and which event has triggered the hardware interrupt is entered in the start information of the organization block. The following figure shows the assignment to the bits of the local data double word 8.

LB 8								LB 9								LB 10								LB 11								
31	30	29	28	27	26	25	24	23	22	21	20	19	18	17	16	15	14	13	12	11	10	9	8	7	6	5	4	3	2	1	0	Bit no.
0	0	0	0	0	0	0	0	0	0	0	0	0	0	0	1	0	0	0	0	0	0	0	X	0	0	0	0	X	X	X	X	LD 8

User Structure Identifier (USI)

Event that has triggered the hardware interrupt (EventType):

- 0001_B: Gate start
- 0010_B: Gate stop
- 0011_B: Overflow
- 0100_B: Underflow
- 0101_B: Comparison event for DQ0 has occurred
- 0110_B: Comparison event for DQ1 has occurred
- 0111_B: Zero crossing
- 1000_B: New Capture value available
- 1001_B: Synchronization
- 1010_B: Direction reversal

Channel that has triggered the hardware interrupt (IChannel):

- 0_B: Channel 0 of the technology module
- 1_B: Channel 1 of the technology module

Figure 5-2 Start information of the organization block

Technical specifications

6

Article number	6ES7551-1AB01-0AB0
General information	
Product type designation	TM PosInput 2
Firmware version	V2.0
• FW update possible	Yes
Number of channels	2
Product function	
• I&M data	Yes; I&M0 to I&M3
• Isochronous mode	Yes
Engineering with	
• STEP 7 TIA Portal configurable/integrated from version	V17
• PROFIBUS from GSD version/GSD revision	GSD Revision 5
• PROFINET from GSD version/GSD revision	V2.3 / -
Installation type/mounting	
Rail mounting	Yes; S7-1500 mounting rail
Supply voltage	
Load voltage L+	
• Rated value (DC)	24 V
• permissible range, lower limit (DC)	19.2 V
• permissible range, upper limit (DC)	28.8 V
• Reverse polarity protection	Yes
Input current	
Current consumption, max.	75 mA; without load
Encoder supply	
Number of outputs	4; One 5V and 24V encoder supply per channel
5 V encoder supply	
• 5 V	Yes; 5.2 V ±2 %
• Short-circuit protection	Yes
• Output current, max.	300 mA; Per channel
24 V encoder supply	
• 24 V	Yes; L+ (-0.8 V)
• Short-circuit protection	Yes
• Output current, max.	300 mA; Per channel

Article number	6ES7551-1AB01-0AB0
Power	
Power available from the backplane bus	1.3 W
Power loss	
Power loss, typ.	5.5 W
Address area	
Address space per module	
• Inputs	32 byte; 16 bytes per channel; 4 bytes for fast mode
• Outputs	24 byte; 12 bytes per channel; 4 bytes for Motion Control, 0 bytes for fast mode
Digital inputs	
Number of digital inputs	4; 2 per channel
Digital inputs, parameterizable	Yes
Input characteristic curve in accordance with IEC 61131, type 3	Yes
Digital input functions, parameterizable	
• Gate start/stop	Yes; only for pulse and incremental encoders
• Capture	Yes
• Synchronization	Yes; only for pulse and incremental encoders
• Freely usable digital input	Yes
Input voltage	
• Type of input voltage	DC
• Rated value (DC)	24 V
• for signal "0"	-5 ... +5 V
• for signal "1"	+11 to +30V
• permissible voltage at input, min.	-30 V; -5 V continuous, -30 V brief reverse polarity protection
• permissible voltage at input, max.	30 V
Input current	
• for signal "1", typ.	2.5 mA
Input delay (for rated value of input voltage)	
for standard inputs	
– parameterizable	Yes; none / 0.05 / 0.1 / 0.4 / 0.8 / 1.6 / 3.2 / 12.8 / 20 ms
– at "0" to "1", min.	6 µs; for parameterization "none"
– at "1" to "0", min.	6 µs; for parameterization "none"
for technological functions	
– parameterizable	Yes
Cable length	
• shielded, max.	1 000 m
• unshielded, max.	600 m

Article number	6ES7551-1AB01-0AB0
Digital outputs	
Type of digital output	Transistor
Number of digital outputs	4; 2 per channel
Digital outputs, parameterizable	Yes
Short-circuit protection	Yes; electronic/thermal
• Response threshold, typ.	1 A
Limitation of inductive shutdown voltage to	L+ (-33 V)
Controlling a digital input	Yes
Digital output functions, parameterizable	
• Switching tripped by comparison values	Yes
• Freely usable digital output	Yes
Switching capacity of the outputs	
• with resistive load, max.	0.5 A; Per digital output
• on lamp load, max.	5 W
Load resistance range	
• lower limit	48 Ω
• upper limit	12 kΩ
Output voltage	
• Type of output voltage	DC
• for signal "1", min.	23.2 V; L+ (-0.8 V)
Output current	
• for signal "1" rated value	0.5 A; Per digital output
• for signal "1" permissible range, max.	0.6 A; Per digital output
• for signal "1" minimum load current	2 mA
• for signal "0" residual current, max.	0.5 mA
Output delay with resistive load	
• "0" to "1", max.	50 µs
• "1" to "0", max.	50 µs
Switching frequency	
• with resistive load, max.	10 kHz
• with inductive load, max.	0.5 Hz; Acc. to IEC 60947-5-1, DC-13; observe derating curve
• on lamp load, max.	10 Hz
Total current of the outputs	
• Current per module, max.	2 A
Cable length	
• shielded, max.	1 000 m
• unshielded, max.	600 m

Article number	6ES7551-1AB01-0AB0
Encoder	
Encoder signals, incremental encoder (symmetrical)	
• Input voltage	RS 422
• Input frequency, max.	1 MHz
• Counting frequency, max.	4 MHz; with quadruple evaluation
• Cable length, shielded, max.	32 m; at 1 MHz
• Signal filter, parameterizable	Yes
• Incremental encoder with A/B tracks, 90° phase offset	Yes
• Incremental encoder with A/B tracks, 90° phase offset and zero track	Yes
• pulse encoder	Yes
• Pulse encoder with direction	Yes
• pulse encoder with one impulse signal per count direction	Yes
Encoder signals, incremental encoder (asymmetrical)	
• Input voltage	5 V TTL (push-pull encoders only)
• Input frequency, max.	1 MHz
• Counting frequency, max.	4 MHz; with quadruple evaluation
• Signal filter, parameterizable	Yes
• Incremental encoder with A/B tracks, 90° phase offset	Yes
• Incremental encoder with A/B tracks, 90° phase offset and zero track	Yes
• pulse encoder	Yes
• pulse encoder with direction	Yes
• pulse encoder with one impulse signal per count direction	Yes

Article number	6ES7551-1AB01-0AB0
Encoder signals, absolute encoder (SSI)	
• Input signal	to RS-422
• Telegram length, parameterizable	10 ... 40 bit
• Clock frequency, max.	2 MHz; 125 kHz, 250 kHz, 500 kHz, 1 MHz, 1.5 MHz or 2 MHz
• Binary code	Yes
• Gray code	Yes
• Cable length, shielded, max.	320 m; Cable length, RS-422 SSI absolute encoders, Siemens type 6FX2001-5, 24 V supply: 125 kHz, 320 meters shielded, max.; 250 kHz, 160 meters shielded, max.; 500 kHz, 60 meters shielded, max.; 1 MHz, 20 meters shielded, max. 1.5 MHz, 10 meters shielded, max.; 2 MHz, 8 meters shielded, max.
• Parity bit, parameterizable	Yes
• Monoflop time	16, 32, 48, 64 µs & automatic
• Multiturn	Yes
• Singleturn	Yes
Interface types	
• TTL 5 V	Yes; push-pull encoders only
• RS 422	Yes
Interrupts/diagnostics/status information	
Alarms	
• Diagnostic alarm	Yes
• Hardware interrupt	Yes
Diagnoses	
• Monitoring the supply voltage	Yes
• Wire-break	Yes
• Short-circuit	Yes
• A/B transition error at incremental encoder	Yes
• Telegram error at SSI encoder	Yes
Diagnostics indication LED	
• RUN LED	Yes; green LED
• ERROR LED	Yes; red LED
• MAINT LED	Yes; Yellow LED
• Monitoring of the supply voltage (PWR-LED)	Yes; green LED
• Channel status display	Yes; green LED
• for channel diagnostics	Yes; red LED

Article number	6ES7551-1AB01-0AB0
Integrated Functions	
Counter	Yes
• Number of counters	2
• Counting frequency, max.	4 MHz; with quadruple evaluation
Fast mode	Yes
Counting functions	
• Can be used with TO High_Speed_Counter	Yes; only for pulse and incremental encoders
• Continuous counting	Yes
• Counter response parameterizable	Yes
• Hardware gate via digital input	Yes
• Software gate	Yes
• Event-controlled stop	Yes
• Synchronization via digital input	Yes
• Counting range, parameterizable	Yes
Comparator	
– Number of comparators	2; Per channel
– Direction dependency	Yes
– Can be changed from user program	Yes
Position detection	
• Incremental acquisition	Yes
• Absolute acquisition	Yes
• Suitable for S7-1500 Motion Control	Yes
Measuring functions	
• Measuring time, parameterizable	Yes
• Dynamic measurement period adjustment	Yes
• Number of thresholds, parameterizable	2
Measuring range	
– Frequency measurement, min.	0.04 Hz
– Frequency measurement, max.	4 MHz
– Cycle duration measurement, min.	0.25 µs
– Cycle duration measurement, max.	25 s
Accuracy	
– Frequency measurement	100 ppm; depending on measuring interval and signal evaluation
– Cycle duration measurement	100 ppm; depending on measuring interval and signal evaluation
– Velocity measurement	100 ppm; depending on measuring interval and signal evaluation

Article number	6ES7551-1AB01-0AB0
Potential separation	
Potential separation channels	
• between the channels	No
• between the channels and backplane bus	Yes
• Between the channels and load voltage L+	No
Isolation	
Isolation tested with	707 V DC (type test)
Ambient conditions	
Ambient temperature during operation	
• horizontal installation, min.	-30 °C
• horizontal installation, max.	60 °C; Please note derating for inductive loads
• vertical installation, min.	-30 °C
• vertical installation, max.	40 °C; Please note derating for inductive loads
Ambient temperature during storage/transportation	
• min.	-40 °C
• max.	70 °C
Altitude during operation relating to sea level	
• Installation altitude above sea level, max.	5 000 m; restrictions for installation altitudes > 2 000 m, see ET 200MP system manual
Decentralized operation	
to SIMATIC S7-300	Yes
to SIMATIC S7-400	Yes
to SIMATIC S7-1200	Yes
to SIMATIC S7-1500	Yes
to standard PROFIBUS master	Yes
to standard PROFINET controller	Yes
Dimensions	
Width	35 mm
Height	147 mm
Depth	129 mm
Weights	
Weight, approx.	325 g

Derating information for total current of outputs

If the digital outputs of the TM PosInput 2 are operated with inductive loads, you should derate the total current of the loads at the digital outputs of the respective channel. The total current is the sum of the load currents at all digital outputs of a channel (without encoder supply).

The following derating curve shows the load capacity of the digital outputs depending on the ambient temperature and mounting position under the following conditions:

- Maximum switching frequency at digital outputs of 0.5 Hz
- Load resistance: 48 Ω (IEC 947-5-1)
- Load inductance: 1150 mH (IEC 947-5-1)

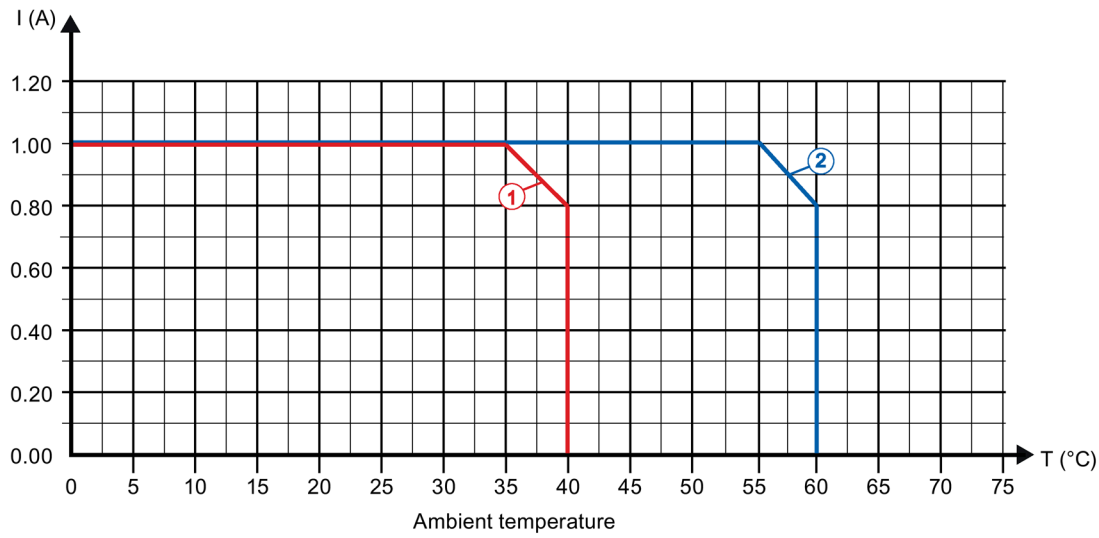

① Vertical installation of the system

② Horizontal installation of the system

Figure 6-1 Total current depending on ambient temperature and mounting position for inductive loads

Note

In the upper voltage range (28.8 V), the resistance of the load increases according to the total current, for example 57.6 Ω at 28.8 V and 0.5 A per digital output.

Note

If the switching frequency is greater than 0.5 Hz or there is greater inductance at the digital outputs, the total current must be reduced further.

Dimensional drawing

A

The dimensional drawing of the module on the mounting rail, as well as a dimensional drawing with open front panel, are provided in the appendix. Always observe the specified dimensions for installation in cabinets, control rooms, etc.

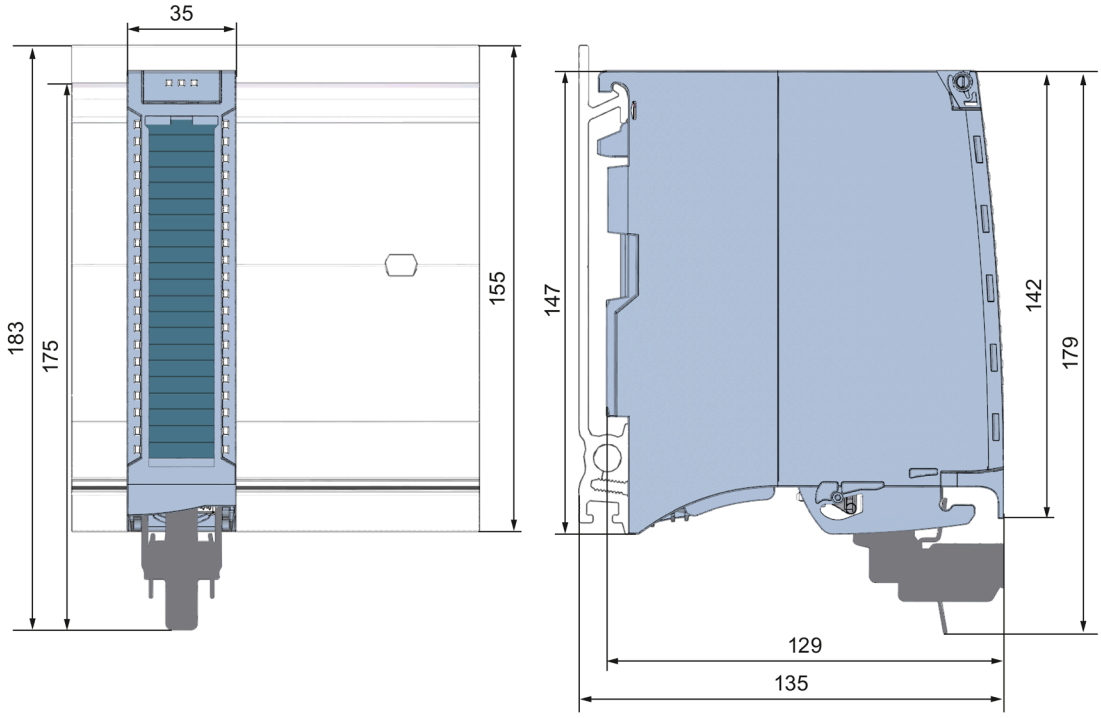

Figure A-1 Dimensional drawing of the TM PosInput 2 technology module

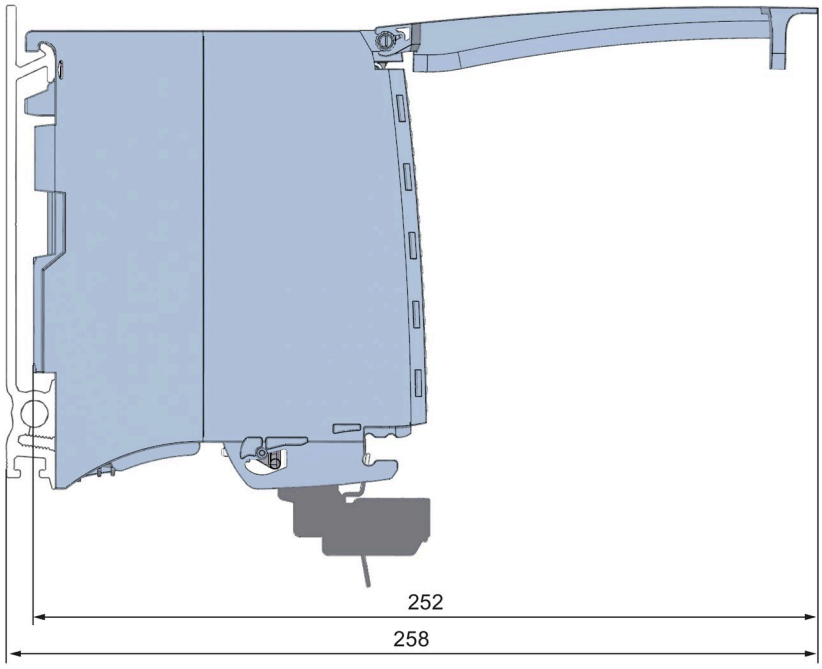

Figure A-2 Dimensional drawing of the TM PosInput 2 module, side view with open front panel

Parameter data record

B

B.1 Parameter assignment and structure of parameter data record

You have the option of reassigning module parameters with the user program while the CPU is in RUN. The parameters are transferred to the module using data record 128, e.g. with the WRREC instruction.

If an error occurs while transferring or validating parameters with the WRREC instruction, the module continues operating with the existing parameter assignment. A corresponding error code is then written to the STATUS output parameter. If no errors occur, the STATUS output parameter contains the length of the actually transferred data.

You can find a description of the WRREC instruction and the error codes in section Parameter validation error (Page 111) or in the online help of STEP 7 (TIA Portal).

Structure of data record 128 for operation with technology object and manual operation

The following table shows you the structure of data record 128 for TM PosInput 2 with 2 channels for operation with technology object and manual operation without technology object. The values in byte 0 to byte 3 are fixed and must not be changed. The value in byte 4 can only be changed by means of new parameter assignment and not in RUN mode.

Note

After each writing of data record 128, the module is set to its startup state and the counter value is set to the start value. If "Continue operation" is set for Reaction to CPU STOP, the module is then only set to its startup state when data record 128 has been changed.

Table B- 1 Data record 128: Operating modes "Operating with "Counting and measurement" technology object", "Manual operation (without technology object)"

Bit → / Byte channel 0/1 ↓	Bit 7	Bit 6	Bit 5	Bit 4	Bit 3	Bit 2	Bit 1	Bit 0
0...3	**Header**							
0	Major Version = 0				Minor Version = 2			
1	Length of the parameter data per channel = 48							
2	Reserved[2]							
3								
4...51	**Channel 0**							
52...99	**Channel 1**							

Bit → / Byte channel 0/1 ↓	Bit 7	Bit 6	Bit 5	Bit 4	Bit 3	Bit 2	Bit 1	Bit 0
4/52	**Operating mode**							
4/52	Reserved[2]				Operating mode:			
					0000B: Not permitted			
					0001B: Counting / Position input			
					0010B: Measuring			
					0011 to 1111B: Not permitted			
5/53	**Basic parameters**							
5/53	Interface standard:	Reserved[2]				Enable additional diagnostic interrupts[1]	Reaction to CPU STOP:	
							00B: Output substitute value	
							01B: Keep last value	
	0B: RS422, symmetrical						10B: Continue operation	
	1B: TTL (5 V), asymmet-rical						11B: Not permitted	
6...7/ 54...55	**Counter inputs** (parameters for incremental and pulse encoders)							
6/54	Reserved[2]		Signal evaluation:		Signal type:			
			00B: Single		0000B: Pulse (A)			
			01B: Double		0001B: Pulse (A) and direction (B)			
			10B: Quadruple		0010B: Count up (A), count down (B)			
			11B: Not permitted		0011B: Incremental encoder (A, B phase-shifted)			
					0100B: Incremental encoder (A, B, N)			
					0101B: Absolute encoder (SSI)			
					0110 to 1111B: Not permitted			
7/55	Reaction to signal N:		Invert direc-tion[1]	Enable diagnostic interrupt on wire break[1]	Filter frequency[4]:			
	00B: No reaction to sig-nal N				0000B: 100 Hz			
	01B: Synchronization at signal N				0001B: 200 Hz			
	10B: Capture at signal N				0010B: 500 Hz			
	11B: Not permitted				0011B: 1 kHz			
					0100B: 2 kHz			
					0101B: 5 kHz			
					0110B: 10 kHz			
					0111B: 20 kHz			
					1000B: 50 kHz			
					1001B: 100 kHz			
					1010B: 200 kHz			
					1011B: 500 kHz			
					1100B: 1 MHz			
					1101 to 1111B: Not permitted			

Bit → / Byte channel 0/1 ↓	**Bit 7**	**Bit 6**	**Bit 5**	**Bit 4**	**Bit 3**	**Bit 2**	**Bit 1**	**Bit 0**
6...7/ 54...55	**Counter inputs** (parameters for SSI absolute encoder)							
6/54	Monoflop time[4]:			Code type:	Signal type:			
	000_B: Automatically			0_B: Gray	0000_B: Pulse (A)			
	001_B: 16 µs			1_B: Dual	0001_B: Pulse (A) and direction (B)			
	010_B: 32 µs				0010_B: Count up (A), count down (B)			
	011_B: 48 µs				0011_B: Incremental encoder (A, B phase-shifted)			
	100_B: 64 µs				0100_B: Incremental encoder (A, B, N)			
	101 to 111_B: Not permitted				0101_B: Absolute encoder (SSI)			
					0110 to 1111_B: Not permitted			
7/55	Parity[4]:		Invert direction[1]	Enable diagnostic interrupt on wire break[1]	Reserved[2]	Transmission rate[4]:		
	00_B: None					000_B: 125 kHz		
	01_B: Even					001_B: 250 kHz		
	10_B: Odd					010_B: 500 kHz		
	11_B: Not permitted					011_B: 1 MHz		
						100_B: 1.5 MHz		
						101_B: 2 MHz		
						110 to 111_B: Not permitted		
8...9/ 56...57	**Hardware interrupts**[1]							
8/56	Reserved[2]			Change of direction	Underflow (low counting limit violated)	Overflow (high counting limit violated)	Gate stop[3]	Gate start[3]
9/57	Synchronization of the counter by an external signal[3)]	New Capture value available	Reserved[2]	Zero crossing	Reserved[2]	Comparison event for DQ1 has occurred	Reserved[2]	Comparison event for DQ0 has occurred
10...15/ 58...63	**Behavior of a DQ**							
10/58	Set output (DQ1):				Set output (DQ0):			
	0000_B: Use by user program				0000_B: Use by user program			
	0001_B: Between comparison value and high limit; Measuring: Measured value >= comparison value				0001_B: Between comparison value and high limit; Measuring: Measured value >= comparison value			
	0010_B: Between comparison value and low limit; Measuring: Measured value <= comparison value				0010_B: Between comparison value and low limit; Measuring: Measured value <= comparison value			
	0011_B: At comparison value for a pulse duration				0011_B: At comparison value for a pulse duration			
	0100_B: Between comparison value 0 and 1				0100_B: Not permitted			
	0101_B: After set command from CPU until comparison value				0101_B: After set command from CPU until comparison value			
	0110_B: Not between comparison value 0 and 1				0110 to 1111_B: Not permitted			
	0111 to 1111_B: Not permitted							

Bit → / Byte channel 0/1 ↓	Bit 7	Bit 6	Bit 5	Bit 4	Bit 3	Bit 2	Bit 1	Bit 0
11/59	Count direction (DQ1):		Count direction (DQ0):		Reserved[2]		Substitute value for DQ1	Substitute value for DQ0
	00_B: Not permitted		00_B: Not permitted					
	01_B: Up		01_B: Up					
	10_B: Down		10_B: Down					
	11_B: In both directions		11_B: In both directions					
12/60	Pulse duration (DQ0):							
13/61	WORD: Value range in ms/10: 0 to 65535_D							
14/62	Pulse duration (DQ1):							
15/63	WORD: Value range in ms/10: 0 to 65535_D							
16/64	**Behavior of DI0**							
16/64	Behavior of counter value after Capture[3] (DI0):	Edge selection (DI0):		Select level (DI0):	Reserved[2]	Set function of DI (DI0):		
		00_B: Not permitted[5]				000_B: Gate start/stop (level-triggered)[3]		
		01_B: At rising edge		0_B: Active with high level		001_B: Gate start (edge-triggered)[3]		
		10_B: At falling edge				010_B: Gate stop (edge-triggered)[3]		
	0_B: Continue counting	11_B: At rising and falling edge		1_B: Active with low level		011_B: Synchronization[3]		
						100_B: Enable synchronization at signal N[3]		
	1_B: Set to start value and continue counting					101_B: Capture		
						110_B: Digital input without function		
						111_B: Not permitted		
17/65	**Behavior of DI1**: See Byte 16							
18/66	Reserved[2]							
19/67	Frequency of synchronization:4	Reserved[2]		Frequency of Capture function:	Input delay:			
					0_B: Once			
					0001_B: 0.05 ms			
	0_B: Once			0_B: Once	0010_B: 0.1 ms			
					0011_B: 0.4 ms			
	1_B: Periodic			1_B: Periodic	0100_B: 0.8 ms			
					0101_B: 1.6 ms			
					0110_B: 3.2 ms			
					0111_B: 12.8 ms			
					1000_B: 20 ms			
					1001 to 1111_B: Not permitted			

Bit → / Byte channel 0/1 ↓	**Bit 7**	**Bit 6**	**Bit 5**	**Bit 4**	**Bit 3**	**Bit 2**	**Bit 1**	**Bit 0**
20...43/ 68...91	**Values**							
20...23/ 68...71	Counting high limit[3]: DWORD: Value range: –2147483648 to 2147483647$_D$ or 80000001 to 7FFFFFFF$_H$							
24...27/ 72...75	Comparison value 0: Operating mode Counting: DWORD: Value range: –2147483648 to 2147483647$_D$ or 80000000 to 7FFFFFFF$_H$; Measuring operating mode: REAL: Floating-point number in the configured unit of the measured quantity							
28...31/ 76...79	Comparison value 1: Operating mode Counting: DWORD: Value range: –2147483648 to 2147483647$_D$ or 80000000 to 7FFFFFFF$_H$; Measuring operating mode: REAL: Floating-point number in the configured unit of the measured quantity							
32...35/ 80...83	Start value[3]: DWORD: Value range: –2147483648 to 2147483647$_D$ or 80000000 to 7FFFFFFF$_H$							
36...39/ 84...87	Counting low limit[3] DWORD: Value range: –2147483648 to 2147483647$_D$ or 80000000 to 7FFFFFFF$_H$							
40...43/ 88...91	Update time: DWORD: Value range in µs: 0 to 25000000$_D$							
44/92	**Counter behavior at limits and gate start**							
44/92	Behavior at gate start[3]:		Reaction to violation of a counting limit[3]:			Reset when counting limit is violated[3]:		
	00$_B$: Set to start value		000$_B$: Stop counting			000$_B$: To opposite counting limit		
	01$_B$: Continue with current value		001$_B$: Continue counting			001$_B$: To start value		
	10 to 11$_B$: Not permitted		010 to 111$_B$: Not permitted			010 to 111$_B$: Not permitted		
45/93	**Specify measured value**							
45/93	Reserved[2]			Time base for velocity measurement:			Measured variable:	
				000$_B$: 1 ms			00$_B$: Frequency	
				001$_B$: 10 ms			01$_B$: Period	
				010$_B$: 100 ms			10$_B$: Velocity	
				011$_B$: 1 s			11$_B$: Complete SSI frame	
				100$_B$: 60 s/1 min				
				101 to 111$_B$: Not permitted				
46/94	Increments per unit: WORD: Value range: 1 to 65535$_D$							
47/95								
48/96	Set hysteresis range: Value range: 0 to 255$_D$							

Bit → / Byte channel 0/1 ↓	Bit 7	Bit 6	Bit 5	Bit 4	Bit 3	Bit 2	Bit 1	Bit 0
49...51/ 97...99	**Parameters for SSI absolute encoder**							
49/97	Reserved[2]		Frame length[4]: Value range: 10 to 40_D					
50/98			Bit number LSB of the position value: Value range: 0 to 38_D					
51/99			Bit number MSB of the position value: Value range: 1 to 39_D					

1 You activate the respective parameter by setting the associated bit to 1.

2 Reserved bits must be set to 0

3 For signal type "Absolute encoder (SSI)", the following applies: Reserved[2]

4 In isochronous mode, the parameter can affect the isochronous mode parameters of the sync domain. Because the isochronous mode parameters are not checked in RUN, overflows can occur if you change the parameter in RUN. To prevent overflows, select the option with the largest time required in the offline parameter assignment.

5 Applies to: Set function of DI = 001_B; 010_B; 011_B; 101_B

Structure of data record 128 in Fast Mode

The following table shows you the structure of data record 128 for TM PosInput 2 in Fast Mode. The values in byte 0 to byte 3 are fixed and must not be changed.

Table B- 2 Parameter data record 128: "Fast Mode" operating mode

Bit → / Byte ↓	Bit 7	Bit 6	Bit 5	Bit 4	Bit 3	Bit 2	Bit 1	Bit 0
0...3	**Header**							
0	Major Version = 0				Minor Version = 2			
1	Length of the parameter data per channel = 48							
2	Reserved[2]							
3								
4...51	**Channel 0**							
52...99	**Channel 1**							
4/52	**Operating mode**							
4/52	Reserved[2]				Operating mode:			
					0000_B: Not permitted			
					0001_B: Counting / Position input			
					0010 to 1111_B: Not permitted			
5/53	**Basic parameters**							
5/53	Interface standard:	Reserved[2]				Enable additional diagnostic interrupts[1)]	Reaction to CPU STOP:	
							00_B: Output substitute value	
							01_B: Keep last value	
	0_B: RS422, symmetrical						10_B: Continue operation	
	1_B:TTL (5 V), asymmet-rical						11_B: Not permitted	
6...7/ 54...55	**Counter inputs** (parameters for incremental and pulse encoders)							
6/54	Reserved[2]		Signal evaluation:		Signal type:			
			00_B: Single		0000_B: Pulse (A)			
			01_B: Double		0001_B: Pulse (A) and direction (B)			
			10_B: Quadruple		0010_B: Count up (A), count down (B)			
			11_B: Not permitted		0011_B: Incremental encoder (A, B phase-shifted)			
					0100_B: Incremental encoder (A, B, N)			
					0101_B: Absolute encoder (SSI)			
					0110 to 1111_B: Not permitted			

Bit → / Byte ↓	Bit 7	Bit 6	Bit 5	Bit 4	Bit 3	Bit 2	Bit 1	Bit 0
7/55	Reaction to signal N:		Invert direction[1]	Enable diagnostic interrupt on wire break[1]	Filter frequency[4]:			
	00_B: No reaction to signal N				0000_B: 100 Hz			
	01_B: Synchronization at signal N				0001_B: 200 Hz			
	10 to 11_B: Not permitted				0011_B: 1 kHz			
					0100_B: 2 kHz			
					0101_B: 5 kHz			
					0110_B: 10 kHz			
					0111_B: 20 kHz			
					1000_B: 50 kHz			
					1001_B: 100 kHz			
					1010_B: 200 kHz			
					1011_B: 500 kHz			
					1100_B: 1 MHz			
					1101 to 1111_B: Not permitted			
6...7/ 54...55	**Counter inputs** (parameters for SSI absolute encoder)							
6/54	Monoflop time[4]:			Code type:	Signal type:			
	000_B: Automatically			0_B: Gray	0000_B: Pulse (A)			
	001_B: 16 µs			1_B: Dual	0001_B: Pulse (A) and direction (B)			
	010_B: 32 µs				0010_B: Count up (A), count down (B)			
	011_B: 48 µs				0011_B: Incremental encoder (A, B phase-shifted)			
	100_B: 64 µs				0100_B: Incremental encoder (A, B, N)			
	101 to 111_B: Not permitted				0101_B: Absolute encoder (SSI)			
					0110 to 1111_B: Not permitted			
7/55	Parity[4]:		Invert direction[1]	Enable diagnostic interrupt on wire break[1]	Reserved[2]	Transmission rate[4]:		
	00_B: None					000_B: 125 kHz		
	01_B:Even					001_B: 250 kHz		
	10_B:Odd					010_B: 500 kHz		
	11_B: Not permitted					011_B: 1 MHz		
						100_B: 1.5 MHz		
						101_B: 2 MHz		
						110 to 111_B: Not permitted		
8...9/ 56...57	Reserved[2]							

Bit → / Byte ↓	Bit 7	Bit 6	Bit 5	Bit 4	Bit 3	Bit 2	Bit 1	Bit 0
10...15/ 58...63	**Behavior of a DQ**							
10/58	Set output (DQ1):				Set output (DQ0):			
	0000_B: Digital output without function				0000_B: Digital output without function			
	0001_B: Between comparison value and high counting limit				0001_B: Between comparison value and high counting limit			
	0010_B: Between comparison value and low counting limit				0010_B: Between comparison value and low counting limit			
	0011_B: At comparison value for a pulse duration				0011_B: At comparison value for a pulse duration			
	0100_B: Between comparison value 0 and 1				0100_B to 1111_B: Not permitted			
	0101 to 1111_B: Not permitted							
11/59	Count direction (DQ1):		Count direction (DQ0):		Reserved[2]		Substitute value for DQ1	Substitute value for DQ0
	00_B: Reserved		00_B: Reserved					
	01_B: Up		01_B: Up					
	10_B: Down		10_B: Down					
	11_B: In both directions		11_B: In both directions					
12/60	Pulse duration (DQ0):							
13/61	Incremental and pulse encoder: UINT: Value range in ms/10: 0 to 65535_D SSI absolute encoder: UINT: Value range in ms/10: 1 to 65535_D							
14/62	Pulse duration (DQ1):							
15/63	Incremental and pulse encoder: UINT: Value range in ms/10: 0 to 65535_D SSI absolute encoder: UINT: Value range in ms/10: 1 to 65535_D							
16/64	**Behavior of DI0**							
16/64	Reserved[2)]	Edge selection (DI0):		Select level (DI0):	Reserved[2]	Set function of DI (DI0):		
		00_B: Not permitted[5]				000_B: Gate start/stop (level-triggered)[3]		
		01_B: At rising edge		0_B: Active with high level		001_B: Gate start (edge-triggered)[3]		
		10_B: At falling edge				010_B:Gate stop (edge-triggered)[3]		
		11_B: Not permitted		1_B: Active with low level		011_B:Synchronization[3]		
						100_B: Enable synchronization at signal N[3]		
						101_B: Not permitted		
						110_B: Digital input without function		
						111_B: Not permitted		

Bit → / Byte ↓	Bit 7	Bit 6	Bit 5	Bit 4	Bit 3	Bit 2	Bit 1	Bit 0
17/65	**Behavior of DI1**: See Byte 16							
18/66	Reserved[2]							
19/67	Frequency of synchronization:	Count direction for synchronization:		Reserved[2]	Input delay:			
	0_B: Once	00_B: Not permitted			0000_B: None			
	1_B: Periodic	01_B: Up			0001_B: 0.05 ms			
		10_B: Down			0010_B: 0.1 ms			
		11_B: In both directions			0011_B: 0.4 ms			
					0100_B: 0.8 ms			
					0101_B: 1.6 ms			
					0110_B: 3.2 ms			
					0111_B: 12.8 ms			
					1000_B: 20 ms			
					1001 to 1111_B: Not permitted			
20...43/ 68...91	**Values**							
20...23/ 68...71	High counting limit[3]: Value range: 1 to 33554431_D or 1 to $01FFFFFF_H$							
24...27/ 72...75	Comparison value 0: Value range: 0 to 33554431_D or 0 to $01FFFFFF_H$							
28...31/ 76...79	Comparison value 1: Value range: 0 to 33554431_D or 0 to $01FFFFFF_H$							
32...35/ 80...83	Start value[3]: Value range: 0 to 33554431_D or 0 to $01FFFFFF_H$							
36...39/ 84...87	Counting low limit[3] Value range: 0 to 33554430_D or 0 to $01FFFFFE_H$							
40...43/ 88...91	Reserved[2]							

Bit → / Byte ↓	Bit 7	Bit 6	Bit 5	Bit 4	Bit 3	Bit 2	Bit 1	Bit 0
44/92	**Counter behavior at limits and gate start**							
44/92	Reaction to gate start[3]:		Reaction to violation of a counting limit[3]:			Reset when counting limit is violated[3]:		
	00_B: Set to start value		000_B: Stop counting			000_B: To opposite counting limit		
	01_B: Continue with current value		001_B: Continue counting			001_B: To start value		
	10 to 11_B: Not permitted		010 to 111_B: Not permitted			010 to 111_B: Not permitted		
45...47/ 93...95	Reserved[2]							
48/96	Set hysteresis range: Value range: 0 to 255_D:							
49...51/ 97...99	**Parameters for SSI absolute encoder**							
49/97	Reserved[2]		Frame length[4]: 10 to 40_D: Value range					
50/98			Bit number LSB of the position value: 0 to 38_D: Value range					
51/99			Bit number MSB of the position value: 1 to 39_D: Value range					

1 You activate the respective parameter by setting the associated bit to 1.

2 Reserved bits must be set to 0.

3 For signal type "Absolute encoder (SSI)", the following applies: Reserved[2]

4 In isochronous mode, the parameter can affect the isochronous mode parameters of the sync domain. Because the isochronous mode parameters are not checked in RUN, overflows can occur if you change the parameter in RUN. To prevent overflows, select the option with the largest time required in the offline parameter assignment.

5 Applies to: Set function of DI = 001_B; 010_B; 011_B

B.2 Parameter validation error

If you make the parameter settings in STEP 7 (TIA Portal) or in STEP 7 , the parameter values are checked before they are transferred to the technology module. This process prevents parameter errors.

In other use cases, the technology module checks the transferred parameter data record. If the technology module finds invalid or inconsistent parameter values, it outputs an error code (see below). The new parameter data record is rejected in this case, and work continues with the current parameter values until a valid parameter data record has been transferred.

WRREC

When the CPU is in RUN, you can change the parameter data record with the instruction WRREC (Write Record). In case of errors, the WRREC instruction returns corresponding error codes in the STATUS parameter.

Example:

Let us assume that an invalid value, for example 9, is written to the module for the operating mode with WRREC. As a consequence, the module rejects the entire parameter data record. You can recognize this by evaluating the STATUS output parameter of the WRREC instruction. The STATUS output parameter is output as an ARRAY[1..4] of BYTE data with the value 16#DF80E111:

Example of WRREC STATUS data	Address	Meaning
DF_H	STATUS[1]	Error when writing a data record via PROFINET IO (IEC 61158-6)
80_H	STATUS[2]	Error when reading or writing a data record via PROFINET IO (IEC 61158-6)
$E1_H$	STATUS[3]	Module-specific error
11_H	STATUS[4]	Error code from the table below: The "Operating mode" parameter has an invalid value.

Error codes

The following table shows the module-specific error codes and their meaning for parameter data record 128 when using an incremental or pulse encoder.

Table B- 3 Error codes for parameter validation (incremental or pulse encoder)

Error code in STATUS parameter (hexadecimal)				Meaning	Remedy
Byte 0	Byte 1	Byte 2	Byte 3		
DF	80	B0	00	Data record number unknown	Enter valid number for data record.
DF	80	B1	01	Length of data record incorrect	Enter valid value for data record length.
DF	80	B2	00	Slot invalid or not accessible	• Check whether module is inserted or removed. • Check assigned values for parameters of the WRREC instruction.
DF	80	E0	01	Wrong version	• Check byte 0. • Enter valid values.
DF	80	E0	02	Error in the header information	• Check byte 1. • Correct the length of the parameter blocks.
DF	80	E1	00	Parameter invalid: No detailed information available	Check all parameter values.
DF	80	E1	11	"Operating mode" parameter invalid	Enter valid parameter value.
DF	80	E1	12	"Reaction to CPU STOP" parameter invalid	Enter valid parameter value.
DF	80	E1	13	"Signal type" parameter invalid	Enter valid parameter value.
DF	80	E1	15	"Filter frequency" parameter invalid	Enter valid parameter value.
DF	80	E1	16	"Reaction to signal N" parameter invalid	Enter valid parameter value.
DF	80	E1	17	"Set function of DI" parameter invalid	Enter valid parameter value.
DF	80	E1	18	"Set function of DI" parameter configured the same for DIn.0 and DIn.1.	Enter different parameter values for DIn.0 and DIn.1.
DF	80	E1	19	• "Edge selection" parameter invalid • "Gate start (edge-triggered)" configured as function for DIn.m and "At rising and falling edge" • "Gate stop (edge-triggered)" configured as function for DIn.m and "At rising and falling edge" • "Synchronization" configured as function for DIn.m and "At rising and falling edge"	• Enter valid parameter value. • Configure "Gate start (edge-triggered)" as function for DIn.m only together with "At rising edge" or "At falling edge" • Configure "Gate stop (edge-triggered)" as function for DIn.m only together with "At rising edge" or "At falling edge" • Configure "Synchronization" as function for DIn.m only together with "At rising edge" or "At falling edge"
DF	80	E1	1A	"Input delay" parameter invalid	Enter valid parameter value.
DF	80	E1	1B	"Set output" parameter invalid	Enter valid parameter value.
DF	80	E1	1C	"Count direction" parameter invalid	Enter valid parameter value.
DF	80	E1	1D	"Reset when counting limit is violated" parameter invalid	Enter valid parameter value.
DF	80	E1	1E	"Reaction to violation of a counting limit" parameter invalid	Enter valid parameter value.
DF	80	E1	20	"Reaction to gate start" parameter invalid	Enter valid parameter value.

Error code in STATUS parameter (hexadecimal)				Meaning	Remedy
Byte 0	Byte 1	Byte 2	Byte 3		
DF	80	E1	21[1,4]	• Low counting limit > comparison value 0 • Low counting limit > comparison value 1	• Low counting limit < comparison value 0 • Low counting limit < comparison value 1
DF	80	E1	22[1,4]	• Counting high limit < comparison value 0 • Counting high limit < comparison value 1	• High counting limit > comparison value 0 • High counting limit > comparison value 1
DF	80	E1	23	• "Start value" parameter invalid • "Low counting limit" parameter invalid	Enter valid parameter value: Start value > low counting limit
DF	80	E1	24	• "Start value" parameter invalid • "High counting limit" parameter invalid	Enter valid parameter value: Start value < high counting limit
DF	80	E1	25	"Update time" parameter invalid	Enter parameter value from range 0 to 25000000_D.
DF	80	E1	26[2]	"Reference speed" parameter invalid	Enter parameter value from range 6.00 to 210000.00_D.
DF	80	E1	27	"Measured variable" parameter invalid	Enter valid parameter value.
DF	80	E1	28	"Time base for velocity measurement" parameter invalid	Enter valid parameter value.
DF	80	E1	29	"Increments per unit" parameter invalid	Enter valid parameter value.
DF	80	E1	2A	• "High counting limit" parameter invalid • "Low counting limit" parameter invalid	Enter valid parameter value: Low counting limit < high counting limit
DF	80	E1	2B[3]	• "Comparison value 0" parameter invalid • "Comparison value 1" parameter invalid	Enter valid parameter value: Comparison value 0 < comparison value 1
DF	80	E1	2C	"Signal evaluation" parameter invalid	Enter valid parameter value.
DF	80	E1	2D	• "Between comparison value 0 and 1" configured for DQn.0 • "Not between comparison value 0 and 1" configured for DQn.0 • "Between comparison value 0 and 1" configured for DQn.1, but "Use by user program" not configured for DQn.0 • "Not between comparison value 0 and 1" configured for DQn.1, but "Use by user program" not configured for DQn.0	• Configure "Between comparison value 0 and 1" only for DQn.1 • "Not between comparison value 0 and 1" configured only for DQn.1 • Only configure "Between comparison value 0 and 1" for DQn.1 when "Use by user program" is configured for DQn.0 • Only configure "Not between comparison value 0 and 1" for DQn.1 when "Use by user program" is configured for DQn.0
DF	80	E1	2E	"Capture" configured for DIn.m in "Measuring" operating mode	Do not configure "Capture" for DIn.m in "Measuring" operating mode.
DF	80	E1	36[5]	"High counting limit" parameter invalid	Enter valid parameter value.
DF	80	E1	37[4,5]	• "Comparison value 0" parameter invalid • "Comparison value 1" parameter invalid	Enter valid parameter value.
DF	80	E1	38[5]	"Start value" parameter invalid	Enter valid parameter value.
DF	80	E1	39[5]	"Low counting limit" parameter invalid	Enter valid parameter value.
DF	80	E1	3A[5]	"Count direction for synchronization" parameter invalid	Enter valid parameter value.

Error code in STATUS parameter (hexadecimal)				Meaning	Remedy
Byte 0	**Byte 1**	**Byte 2**	**Byte 3**		
DF	80	E1	F0	Reserved bit is not set to 0.	Set reserved bit to 0.
DF	80	E1	FF	Conflict with the isochronous times configured in the hardware configuration.	Enter suitable isochronous times in the hardware configuration.

[1] Only for "Counting" operating mode

[2] Only for "Position input for "Motion Control"" technology object

[3] Only for DQn.1 functions "Between comparison value 0 and 1" and "Not between comparison value 0 and 1"

[4] Not for DQn.m function "Use by user program"

[5] Only with operating mode "Fast Mode"

The following table shows the module-specific error codes and their meaning for parameter data record 128 when using an SSI absolute encoder.

Table B- 4 Error codes for parameter validation (SSI absolute encoder)

Error code in STATUS parameter (hexadecimal)				Meaning	Remedy
Byte 0	Byte 1	Byte 2	Byte 3		
DF	80	B0	00	Data record number unknown	Enter valid number for data record.
DF	80	B1	01	Length of data record incorrect	Enter valid value for data record length.
DF	80	B2	00	Slot invalid or not accessible	• Check whether module is inserted or removed. • Check assigned values for parameters of the WRREC instruction.
DF	80	E0	01	Wrong version	• Check byte 0. • Enter valid values.
DF	80	E0	02	Error in the header information	• Check byte 1. • Correct the length of the parameter blocks.
DF	80	E1	00	Parameter invalid: No detailed information available	Check all parameter values.
DF	80	E1	11	"Operating mode" parameter invalid	Enter valid parameter value.
DF	80	E1	12	"Reaction to CPU STOP" parameter invalid	Enter valid parameter value.
DF	80	E1	13	"Signal type" parameter invalid	Enter valid parameter value.
DF	80	E1	18	"Set function of DI" parameter configured the same for DIn.0 and DIn.1.	Enter different parameter values for DIn.0 and DIn.1.
DF	80	E1	19	• "Edge selection" parameter invalid	Enter valid parameter value.
DF	80	E1	1A	"Input delay" parameter invalid	Enter valid parameter value.
DF	80	E1	1B	"Set output" parameter invalid	Enter valid parameter value.
DF	80	E1	1C	"Count direction" parameter invalid	Enter valid parameter value.
DF	80	E1	25	"Update time" parameter invalid	Enter parameter value from range 0 to 25000000_D.
DF	80	E1	26[1]	"Reference speed" parameter invalid	Enter parameter value from range 6.00 to 210000.00_D.
DF	80	E1	27	"Measured variable" parameter invalid	Enter valid parameter value.
DF	80	E1	28	"Time base for velocity measurement" parameter invalid	Enter valid parameter value.
DF	80	E1	29	"Increments per unit" parameter invalid	Enter valid parameter value.
DF	80	E1	2B[2]	• "Comparison value 0" parameter invalid • "Comparison value 1" parameter invalid	Enter valid parameter value: Comparison value 0 < comparison value 1
DF	80	E1	2D	• "Between comparison value 0 and 1" configured for DQn.0 • "Not between comparison value 0 and 1" configured for DQn.0 • "Between comparison value 0 and 1" configured for DQn.1, but "Use by user program" not configured for DQn.0 • "Not between comparison value 0 and 1" configured for DQn.1, but "Use by user program" not configured for DQn.0	• Configure "Between comparison value 0 and 1" only for DQn.1 • "Not between comparison value 0 and 1" configured only for DQn.1 • Only configure "Between comparison value 0 and 1" for DQn.1 when "Use by user program" is configured for DQn.0 • Only configure "Not between comparison value 0 and 1" for DQn.1 when "Use by user program" is configured for DQn.0

Error code in STATUS parameter (hexadecimal)				Meaning	Remedy
Byte 0	**Byte 1**	**Byte 2**	**Byte 3**		
DF	80	E1	2E	"Capture" configured for DIn.m in "Measuring" operating mode	Do not configure "Capture" for DIn.m in "Measuring" operating mode.
DF	80	E1	2F	"Set function of DI" parameter invalid	Enter valid parameter value.
DF	80	E1	30	"Monoflop time" parameter invalid	Enter valid parameter value.
DF	80	E1	31	"Transmission rate" parameter invalid	Enter valid parameter value.
DF	80	E1	32	"Parity" parameter invalid	Enter valid parameter value.
DF	80	E1	33	"Frame length" parameter invalid	Enter valid parameter value.
DF	80	E1	34	• Bit number LSB of the position value < 0 • Bit number LSB of the position value > Bit number MSB of the position value • (Bit number MSB of the position value) – (Bit number LSB of the position value) >= 31 • Bit number MSB of the position value > Frame length	• Bit number LSB of the position value >= 0 • Bit number LSB of the position value < Bit number MSB of the position value • (Bit number MSB of the position value) – (Bit number LSB of the position value) < 32 • Bit number MSB of the position value <= Frame length
DF	80	E1	35	"0" configured for "Pulse duration" parameter	Enter valid parameter value.
DF	80	E1	37[3]	• "Comparison value 0" parameter invalid • "Comparison value 1" parameter invalid	Enter valid parameter value.
DF	80	E1	F0	Reserved bit is not set to 0.	Set reserved bit to 0.
DF	80	E1	FF	Conflict with the isochronous times configured in the hardware configuration.	Enter suitable isochronous times in the hardware configuration.

[1] Only for "Position input for "Motion Control"" technology object" operating mode

[2] Only for DQn.1 functions "Between comparison value 0 and 1" and "Not between comparison value 0 and 1"

[3] Only for "Fast Mode" operating mode; not with DQm function "Digital output without function"

SIEMENS

SIMATIC

S7-1500/ET 200MP

Technology Module TM Timer DIDQ 16x24V (6ES7552-1AA00-0AB0)

Device manual

Version 08/2014

Answers for industry.

SIEMENS

SIMATIC

ET 200MP/S7-1500 Technology module TM Timer DIDQ 16x24V (6ES7552-1AA00-0AB0)

Manual

Preface

Documentation guide 1

Product overview 2

Connecting 3

Configuring/address space 4

Interrupts/diagnostic messages 5

Technical specifications 6

Dimension drawing A

Parameter data record B

Open Source Software C

08/2014

A5E34078538-AA

Legal information

Warning notice system

This manual contains notices you have to observe in order to ensure your personal safety, as well as to prevent damage to property. The notices referring to your personal safety are highlighted in the manual by a safety alert symbol, notices referring only to property damage have no safety alert symbol. These notices shown below are graded according to the degree of danger.

⚠ DANGER

indicates that death or severe personal injury **will** result if proper precautions are not taken.

⚠ WARNING

indicates that death or severe personal injury **may** result if proper precautions are not taken.

⚠ CAUTION

indicates that minor personal injury can result if proper precautions are not taken.

NOTICE

indicates that property damage can result if proper precautions are not taken.

If more than one degree of danger is present, the warning notice representing the highest degree of danger will be used. A notice warning of injury to persons with a safety alert symbol may also include a warning relating to property damage.

Qualified Personnel

The product/system described in this documentation may be operated only by **personnel qualified** for the specific task in accordance with the relevant documentation, in particular its warning notices and safety instructions. Qualified personnel are those who, based on their training and experience, are capable of identifying risks and avoiding potential hazards when working with these products/systems.

Proper use of Siemens products

Note the following:

⚠ WARNING

Siemens products may only be used for the applications described in the catalog and in the relevant technical documentation. If products and components from other manufacturers are used, these must be recommended or approved by Siemens. Proper transport, storage, installation, assembly, commissioning, operation and maintenance are required to ensure that the products operate safely and without any problems. The permissible ambient conditions must be complied with. The information in the relevant documentation must be observed.

Trademarks

All names identified by ® are registered trademarks of Siemens AG. The remaining trademarks in this publication may be trademarks whose use by third parties for their own purposes could violate the rights of the owner.

Disclaimer of Liability

We have reviewed the contents of this publication to ensure consistency with the hardware and software described. Since variance cannot be precluded entirely, we cannot guarantee full consistency. However, the information in this publication is reviewed regularly and any necessary corrections are included in subsequent editions.

Siemens AG
Industry Sector
Postfach 48 48
90026 NÜRNBERG
GERMANY

A5E34078538-AA
Ⓟ 08/2014 Subject to change

Copyright © Siemens AG 2014.
All rights reserved

Preface

Purpose of the documentation

This manual includes module-specific information on wiring, diagnostics and the technical specifications of the technology module.

General information regarding design and commissioning of the ET 200MP or S7-1500 is available in the ET 200MP or S7-1500 system manuals.

The "Time-based IO" technology supported by the TM Timer DIDQ 16x24V technology module is described in detail in the function manual High-precision input/output with Time-based IO (http://support.automation.siemens.com/WW/view/en/82527590).

Conventions

Please observe notes marked as follows:

Note

A note contains important information on the product described in the documentation, on the handling of the product and on the section of the documentation to which particular attention should be paid.

Security information

Siemens provides products and solutions with industrial security functions that support the secure operation of plants, solutions, machines, equipment and/or networks. They are important components in a holistic industrial security concept. With this in mind, Siemens' products and solutions undergo continuous development. Siemens recommends strongly that you regularly check for product updates.

For the secure operation of Siemens products and solutions, it is necessary to take suitable preventive action (e.g. cell protection concept) and integrate each component into a holistic, state-of-the-art industrial security concept. Third-party products that may be in use should also be considered. You can find more information about industrial security on the Internet (http://www.siemens.com/industrialsecurity).

To stay informed about product updates as they occur, sign up for a product-specific newsletter. You can find more information on the Internet (http://support.automation.siemens.com).

Open Source Software

Open-source software is used in the firmware of the product described. Open Source Software is provided free of charge. We are liable for the product described, including the open-source software contained in it, pursuant to the conditions applicable to the product. Siemens accepts no liability for the use of the open source software over and above the intended program sequence, or for any faults caused by modifications to the software.

For legal reasons, we are obliged to publish the original text of the license conditions and copyright notices. Please read the information relating to this in the appendix.

Table of contents

Preface 4

1 Documentation guide 7

2 Product overview 9

2.1 Properties 9

2.2 Functions 12
2.2.1 Detection of the input signals 12
2.2.2 Switching the outputs 14
2.2.3 Additional functions 16

3 Connecting 17

3.1 Pin assignment 17

4 Configuring/address space 29

4.1 Configuring 29

4.2 Reaction to CPU STOP 30

4.3 Address space 31

4.4 Parameters 31

4.5 Control and feedback interface 33
4.5.1 Assignment of the control interface 33
4.5.2 Assignment of the feedback interface 37

5 Interrupts/diagnostic messages 41

5.1 Status and error displays 41

5.2 Trigger a diagnostic interrupt 44

5.3 Diagnostic alarms 45

6 Technical specifications 46

A Dimension drawing 54

B Parameter data record 56

C Open Source Software 61

Documentation guide

1

Introduction

This modular documentation of the SIMATIC products covers diverse topics concerning your automation system.

The complete documentation for the ET 200MP and S7-1500 systems consists of the respective system manuals, function manuals and device manuals.

The STEP 7 information system (TIA Portal) also helps you to configure and program your automation system.

Overview of the documentation for TM Timer DIDQ 16x24V technology module

The following table lists further documentation that you will need when using the TM Timer DIDQ 16x24V technology module.

Table 1- 1 Documentation for TM Timer DIDQ 16x24V technology module

Topic	Documentation	Most important contents
System description	System Manual ET 200MP Distributed I/O System (http://support.automation.siemens.com/WW/view/en/59193214)	• Application planning • Installation • Connecting • Commissioning
	S7-1500 Automation System (http://support.automation.siemens.com/WW/view/en/59191792) system manual	
Configuring interference-free controllers	Designing interference-free controllers (http://support.automation.siemens.com/WW/view/en/59193566) Function Manual	• Basics • Electromagnetic compatibility • Lightning protection
Time-based IO	Function manual High-precision input/output with Time-based IO (http://support.automation.siemens.com/WW/view/en/82527590)	• Basics • Configuration • Programming • Diagnostics
Isochronous mode	PROFINET with STEP 7 (http://support.automation.siemens.com/WW/view/en/49948856) function manual	• Benefits • Use • Parameter settings

SIMATIC manuals

All current manuals for the SIMATIC products are available for download free of charge from the Internet (http://www.siemens.com/automation/service&support).

Product overview

2

2.1 Properties

Article number

6ES7552-1AA00-0AB0

View of the module

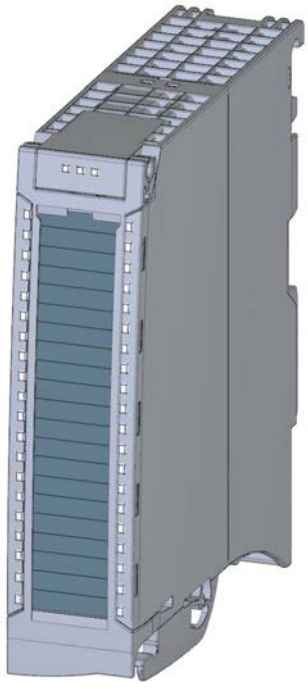

Figure 2-1 View of the TM Timer DIDQ 16x24V module

Properties

The TM Timer DIDQ 16x24V technology module has the following properties:

- Technical properties
  - 16 digital inputs and outputs, electrically isolated in groups of 8
  - Various combinations of digital inputs and outputs can be configured:
    0 digital inputs and 16 digital outputs (for cam applications with numerous outputs)
    3 digital inputs and 13 digital outputs (for applications similar to FM 352 applications)
    4 digital inputs and 12 digital outputs (for flexible mixed operation)
    8 digital inputs and 8 digital outputs (for probe and incremental encoder)
  - Rated output voltage 24V DC
  - Rated output current 0.5 A or 0.1 A (high-speed operation) per digital output
  - 24 V encoder supply output, short-circuit proof
  - Configurable substitute values (per digital output)
  - Two supply voltages L+
  - Configurable diagnostics
  - Configurable input filters for suppression of interference at digital inputs
- Supported encoder/signal types for digital inputs
  - 24 V incremental encoder with A and B signals
  - 24 V pulse encoder with one signal
- Supported functions
  - Time stamp function for inputs and outputs (resolution 1 µs)
  - Counting (counting range 32-bit)
  - Oversampling for inputs and outputs
  - Pulse width modulation
- Supported system functions
  - Isochronous mode
  - Firmware Update
  - Identification data I&M

Accessories

The following components are supplied with the technology module and can also be ordered separately as spare parts:

- Shield bracket
- Shield terminal
- Labeling strip
- U-connector

Other components

The following component needs to be ordered separately:

- Front connectors, including potential jumpers and cable ties

2.2 Functions

2.2.1 Detection of the input signals

You can configure up to eight digital inputs for the technology module. You can evaluate the signals at the digital inputs for the following functions:

Time stamp detection (Timer DI)

The technology module can detect an associated time stamp for an edge at a digital input. The time stamp indicates when the edge was detected in relation to a time base. These time stamps can be used, for example, to calculate a time difference.

The time stamp is based on the "Time-based IO" technology supported by the technology module and requires isochronous mode.

Hardware enable (HW enable)

You can configure a hardware enable by a digital input for the detection of time stamps. A hardware enable defines the time window in which the time stamps are acquired. You can override the hardware enable via the control interface (Page 33) with the respective SETEN bit.

The figure below shows an example for the detection of time stamps at rising and falling edges with enable of the DI0 through the high level of the DI1:

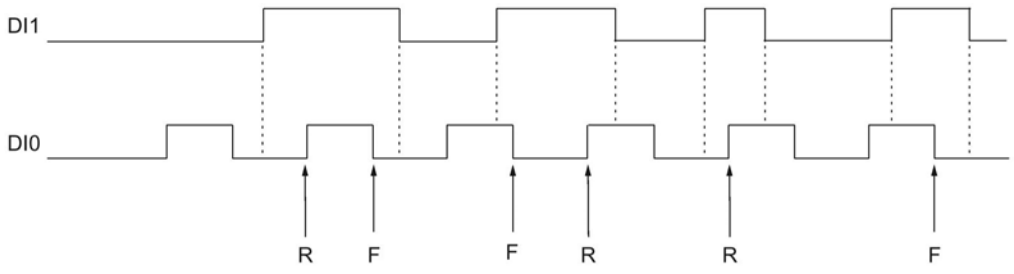

R Associated time stamp detected at rising DI0-edge

F Associated time stamp detected at falling DI0 edge

Counting

Counting refers to the recording and adding up of events. You can configure up to four counters for the technology module. You can use incremental encoders and pulse encoders at the digital inputs. The two phase-shifted signals from an incremental encoder are evaluated four times. Only the rising or falling edges are counted with the signal of a pulse encoder.

A counter starts at 0, goes up to 2^{32}-1 and starts again at 0 (overflow). The technology module can also count down if an incremental encoder is used. The counter value is returned in the feedback interface (Page 37) as a 32-bit value for each digital input.

Oversampling

The Oversampling function is used by the technology module to detect the status of the respective digital input for each application cycle (for example, OB61) at 32 points in time at regular intervals. The 32 states are returned together in the feedback interface (Page 37) as a 32-bit value.

Oversampling requires isochronous mode. If the OB of the type "Synchronous Cycle" works with a clock different than the send clock, you must use the TIO_SYNC instruction.

The figure below shows an example for Oversampling of DI0:

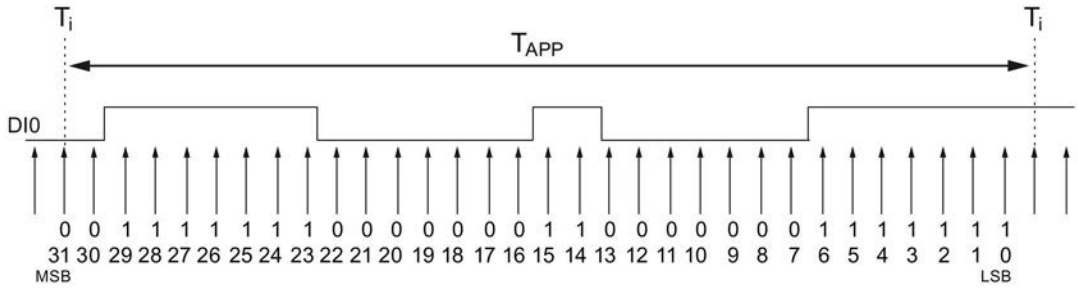

T_{APP} Application cycle

MSB Most significant bit

LSB Least significant bit

2.2.2 Switching the outputs

You can configure up to 16 digital outputs for the technology module. You can configure the following functions for switching the digital outputs:

Time-controlled switching (Timer DQ)

The use of time stamps enables reproducibility of controlled operations with very accurate time. Using this function, the technology module outputs edges at the respective digital output at precisely defined points in time. For example, you can implement a defined reaction time between input and output in conjunction with a digital input.

The Timer function is based on Time-based IO and requires isochronous mode.

Hardware enable (HW enable)

You can configure a hardware enable by means of a digital input for a Timer digital output. A hardware enable defines the time window in which the respective digital output can be set. The resetting of the digital output is independent of the hardware enable. You can override the hardware enable via the control interface (Page 33) with the respective SETEN bit.

The figure below shows an example for the output of rising and falling edges with enable of the DQ0 through the high level of the DI1:

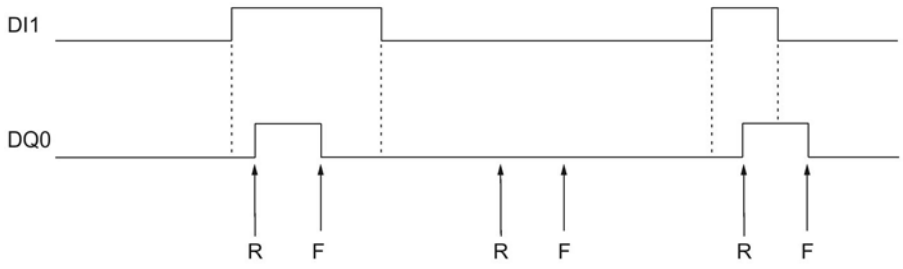

R Specified time of a rising DQ0-edge

F Specified time of a falling DQ0-edge

Pulse width modulation (PWM)

The Pulse width modulation function enables you to specify the time period in the hardware configuration and the pulse-pause ratio in the control interface (Page 33) for the respective digital output. The setpoint for the pulse-pause ratio is a percentage and is evaluated with an accuracy of about 3%.

Oversampling

The Oversampling function is used by the technology module to output 32 states at regular intervals for each application cycle (for example, OB61). This allows up to 32 edges at the respective digital output per application cycle.

The 32 states are sent via the control interface (Page 33) as a 32-bit string for the respective digital output to the technology module.

Oversampling requires isochronous mode. If the OB of the type "Synchronous Cycle" works with a clock different than the send clock, you must use the TIO_SYNC instruction.

The figure below shows an example for Oversampling of DQ0:

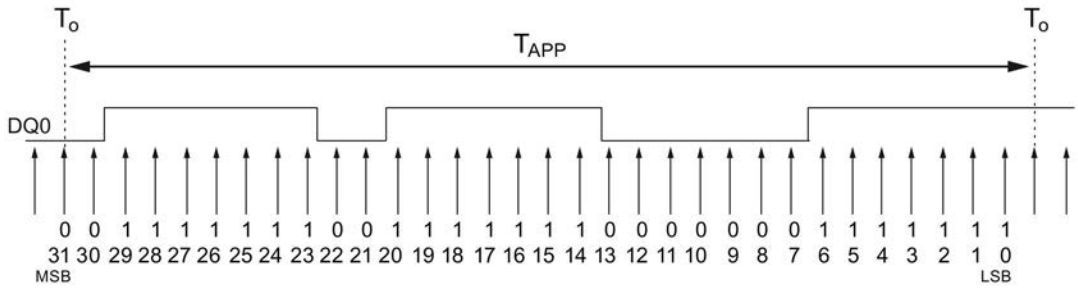

T_{APP} Application cycle

MSB Most significant bit

LSB Least significant bit

2.2.3 Additional functions

Isochronous mode

The technology module supports the system function "isochronous mode" in distributed mode on PROFINET. This system function is required for the following functions of the technology module:

- Time stamp detection (Timer DI)
- Time-controlled switching (Timer DQ)
- Oversampling of digital input
- Oversampling of digital output

In isochronous mode, the cycle of the user program, the transmission of the input signals and processing in the technology module are synchronized.

Data processing

The time stamp, counter values and Oversampling bit string as well as status bits are detected at the time T_i and made available in the feedback interface for retrieval in the current bus cycle. The output of the current Oversampling bit stings is started at the time T_o.

Diagnostic interrupt

The technology module can trigger a diagnostic interrupt (Page 44), among other things, if no supply voltage is available or if there is an error at the digital outputs.

Input filter

To suppress interferences, you can configure an input filter for the digital inputs.

Distributed application

You can use the technology module in a distributed system by means of an interface module in the ET 200MP distributed I/O device. The following applications are possible:

- Distributed operation in an S7-1500 system
- Distributed operation in an S7-300/400 system

Centralized application

You can use the technology module centrally in the S7-1500 automation system.

Connecting 3

3.1 Pin assignment

You connect the encoder signals, digital input and digital output signals, encoder supplies and the supply voltage to the 40-pin front connector of the technology module to supply the module and the digital outputs.

Information on wiring the front connector, creating the cable shield, etc. is available in the ET 200MP Distributed I/O System (http://support.automation.siemens.com/WW/view/en/59193214) system manual and in the Connecting section of the S7-1500 Automation System (http://support.automation.siemens.com/WW/view/en/59191792) system manual.

Pin assignment for the front connector

The pin assignment of the front connector depends on the channel configuration of the TM Timer DIDQ 16x24V.

The following table shows the pin assignment of the front connector for channel configuration "0 inputs, 16 outputs".

Table 3- 1 Pin assignment of the front connector , channel configuration "0 inputs, 16 outputs"

Designation	Signal name		View	Signal name		Designation
—	—	1	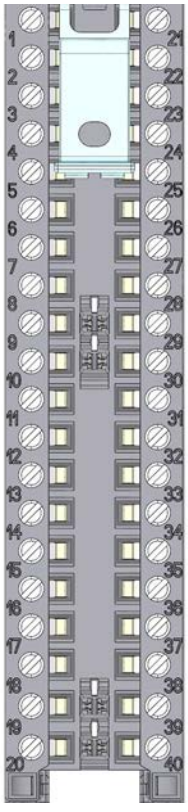	21	DQ0	Digital output DQ0
		2		22	DQ1	Digital output DQ1
		3		23	DQ2	Digital output DQ2
		4		24	DQ3	Digital output DQ3
		5		25	DQ4	Digital output DQ4
		6		26	DQ5	Digital output DQ5
		7		27	DQ6	Digital output DQ6
		8		28	DQ7	Digital output DQ7
		9		29	—	—
Ground for digital outputs DQ0 to DQ7	1M	10		30		
	1M	11		31	DQ8	Digital output DQ8
	1M	12		32	DQ9	Digital output DQ9
	1M	13		33	DQ10	Digital output DQ10
	1M	14		34	DQ11	Digital output DQ11
	1M	15		35	DQ12	Digital output DQ12
	1M	16		36	DQ13	Digital output DQ13
	1M	17		37	DQ14	Digital output DQ14
	1M	18		38	DQ15	Digital output DQ15
Supply voltage DC 24 V for digital outputs DQ0 to DQ7*	1L+	19		39	2L+	Supply voltage DC 24 V for digital outputs DQ8 to DQ15*
Ground for supply voltage 1L+	1M	20		40	2M	Ground for supply voltage 2L+

* If you would like to supply both load groups with a shared voltage, insert the potential jumpers between terminals 19 and 39 as well as 20 and 40.

The following table shows the pin assignment of the front connector for channel configuration "3 inputs, 13 outputs".

Table 3- 2 Pin assignment of the front connector , channel configuration "3 inputs, 13 outputs"

Designation	Signal name		View	Signal name		Designation
Digital input DI0	DI0	1	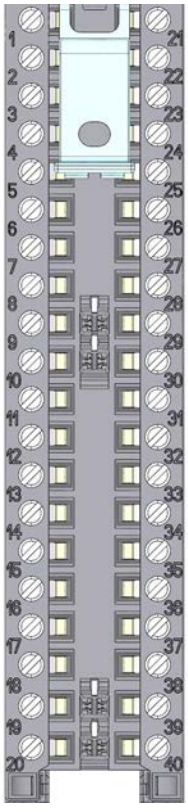	21	DQ0	Encoder supply 24 V for DI0
Digital input DI1	DI1	2		22	DQ1	Encoder supply 24 V for DI1
—	—	3		23	DQ2	Digital output DQ2
Digital input DI3	DI3	4		24	DQ3	Encoder supply 24 V for DI3
—	—	5		25	DQ4	Digital output DQ4
		6		26	DQ5	Digital output DQ5
		7		27	DQ6	Digital output DQ6
		8		28	DQ7	Digital output DQ7
		9		29	—	—
Ground for encoder supply, digital inputs DI0, DI1 and DI3 and digital outputs DQ2 and DQ4 to DQ7	1M	10		30		
	1M	11		31	DQ8	Digital output DQ8
	1M	12		32	DQ9	Digital output DQ9
	1M	13		33	DQ10	Digital output DQ10
	1M	14		34	DQ11	Digital output DQ11
	1M	15		35	DQ12	Digital output DQ12
	1M	16		36	DQ13	Digital output DQ13
	1M	17		37	DQ14	Digital output DQ14
	1M	18		38	DQ15	Digital output DQ15
Supply voltage DC 24 V for digital inputs DI0, DI1 and DI3 and digital outputs DQ2 and DQ4 to DQ7*	1L+	19		39	2L+	Supply voltage DC 24 V for digital outputs DQ8 to DQ15*
Ground for supply voltage 1L+	1M	20		40	2M	Ground for supply voltage 2L+

* If you would like to supply both load groups with a shared voltage, insert the potential jumpers between terminals 19 and 39 as well as 20 and 40.

The following table shows the pin assignment of the front connector for channel configuration "4 inputs, 12 outputs".

Table 3- 3 Pin assignment of the front connector , channel configuration "4 inputs, 12 outputs"

Designation	Signal name		View	Signal name		Designation
—	—	1	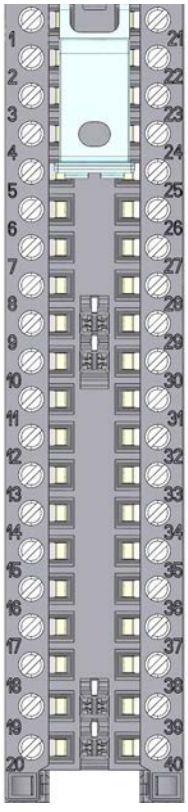	21	DQ0	Digital output DQ0
Digital input DI1	DI1	2		22	DQ1	Encoder supply 24 V for DI1
—	—	3		23	DQ2	Digital output DQ2
Digital input DI3	DI3	4		24	DQ3	Encoder supply 24 V for DI3
—	—	5		25	DQ4	Digital output DQ4
Digital input DI5	DI5	6		26	DQ5	Encoder supply 24 V for DI5
—	—	7		27	DQ6	Digital output DQ6
Digital input DI7	DI7	8		28	DQ7	Encoder supply 24 V for DI7
—	—	9		29	—	—
Ground for encoder supply, digital inputs DI1, DI3, DI5 and DI7 and digital outputs DQ0, DQ2, DQ4 and DQ6	1M	10		30		
	1M	11		31	DQ8	Digital output DQ8
	1M	12		32	DQ9	Digital output DQ9
	1M	13		33	DQ10	Digital output DQ10
	1M	14		34	DQ11	Digital output DQ11
	1M	15		35	DQ12	Digital output DQ12
	1M	16		36	DQ13	Digital output DQ13
	1M	17		37	DQ14	Digital output DQ14
	1M	18		38	DQ15	Digital output DQ15
Supply voltage DC 24 V for digital inputs DI1, DI3, DI5 and DI7 and digital outputsDQ0, DQ2, DQ4 and DQ6*	1L+	19		39	2L+	Supply voltage DC 24 V for digital outputs DQ8 to DQ15*
Ground for supply voltage 1L+	1M	20		40	2M	Ground for supply voltage 2L+

* If you would like to supply both load groups with a shared voltage, insert the potential jumpers between terminals 19 and 39 as well as 20 and 40.

The following table shows the pin assignment of the front connector for channel configuration "8 inputs, 8 outputs".

Table 3- 4 Pin assignment of the front connector , channel configuration "8 inputs, 8 outputs"

Designation	Signal name		View	Signal name		Designation
Digital input DI0	DI0	1	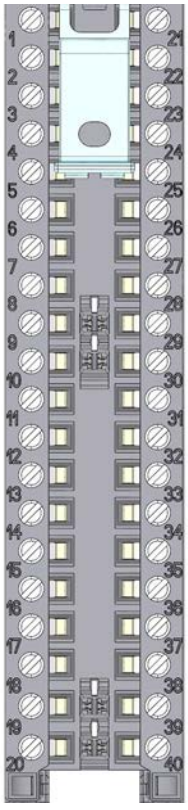	21	DQ0	Encoder supply 24 V for DI0
Digital input DI1	DI1	2		22	DQ1	Encoder supply 24 V for DI1
Digital input DI2	DI2	3		23	DQ2	Encoder supply 24 V for DI2
Digital input DI3	DI3	4		24	DQ3	Encoder supply 24 V for DI3
Digital input DI4	DI4	5		25	DQ4	Encoder supply 24 V for DI4
Digital input DI5	DI5	6		26	DQ5	Encoder supply 24 V for DI5
Digital input DI6	DI6	7		27	DQ6	Encoder supply 24 V for DI6
Digital input DI7	DI7	8		28	DQ7	Encoder supply 24 V for DI7
—	—	9		29	—	—
Ground for encoder supply and digital inputs DI0 to DI7	1M	10		30		
	1M	11		31	DQ8	Digital output DQ8
	1M	12		32	DQ9	Digital output DQ9
	1M	13		33	DQ10	Digital output DQ10
	1M	14		34	DQ11	Digital output DQ11
	1M	15		35	DQ12	Digital output DQ12
	1M	16		36	DQ13	Digital output DQ13
	1M	17		37	DQ14	Digital output DQ14
	1M	18		38	DQ15	Digital output DQ15
Supply voltage DC 24 V for digital inputs DI0 to DI7*	1L+	19		39	2L+	Supply voltage DC 24 V for digital outputs DQ8 to DQ15*
Ground for supply voltage 1L+	1M	20		40	2M	Ground for supply voltage 2L+

* If you would like to supply both load groups with a shared voltage, insert the potential jumpers between terminals 19 and 39 as well as 20 and 40.

Block diagram

The figure below shows the block diagram of the technology module for the use of all 16 digital outputs.

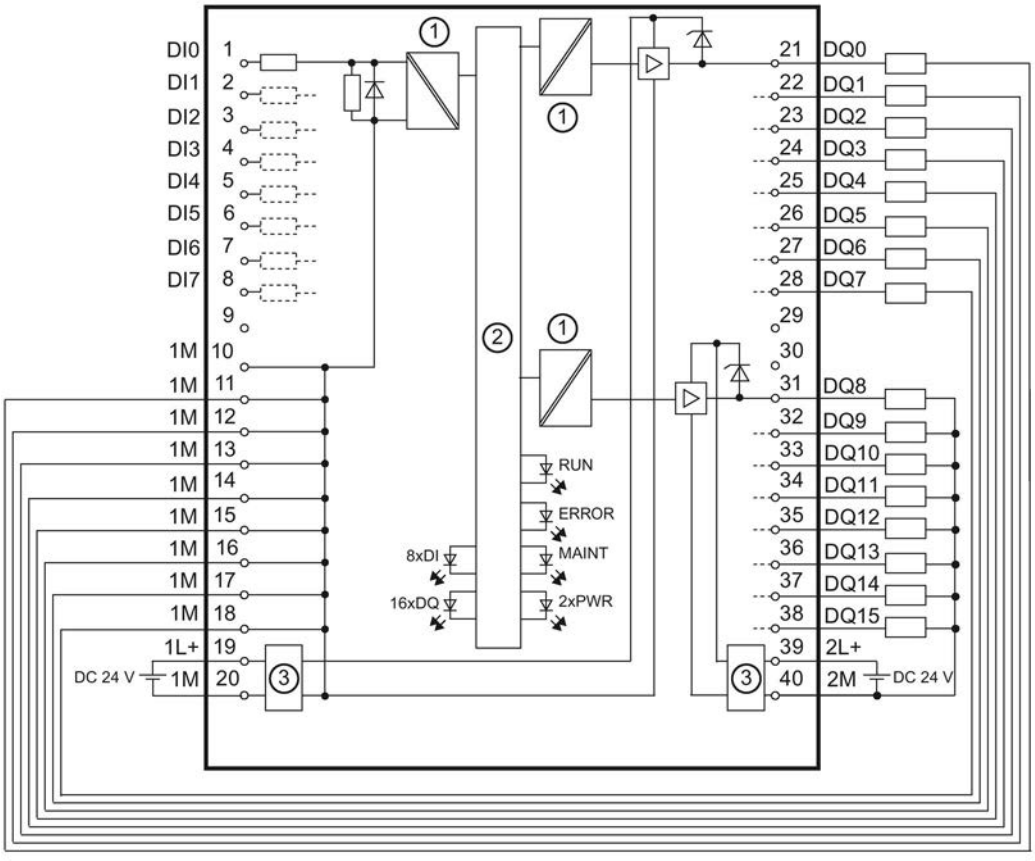

① Electrical isolation

② Technology and backplane bus interface

③ Input filter for supply voltage

Figure 3-1 Block diagram for use of 16 digital outputs

When you connect the encoder you must, depending on the configured input delay and potential effect of interference, ground the shields of the cables between encoder and technology module both through the shield connection element at the front connector (shield bracket and terminal) and at the encoder.

The figure below shows the block diagram of the technology module with four connected incremental encoders.

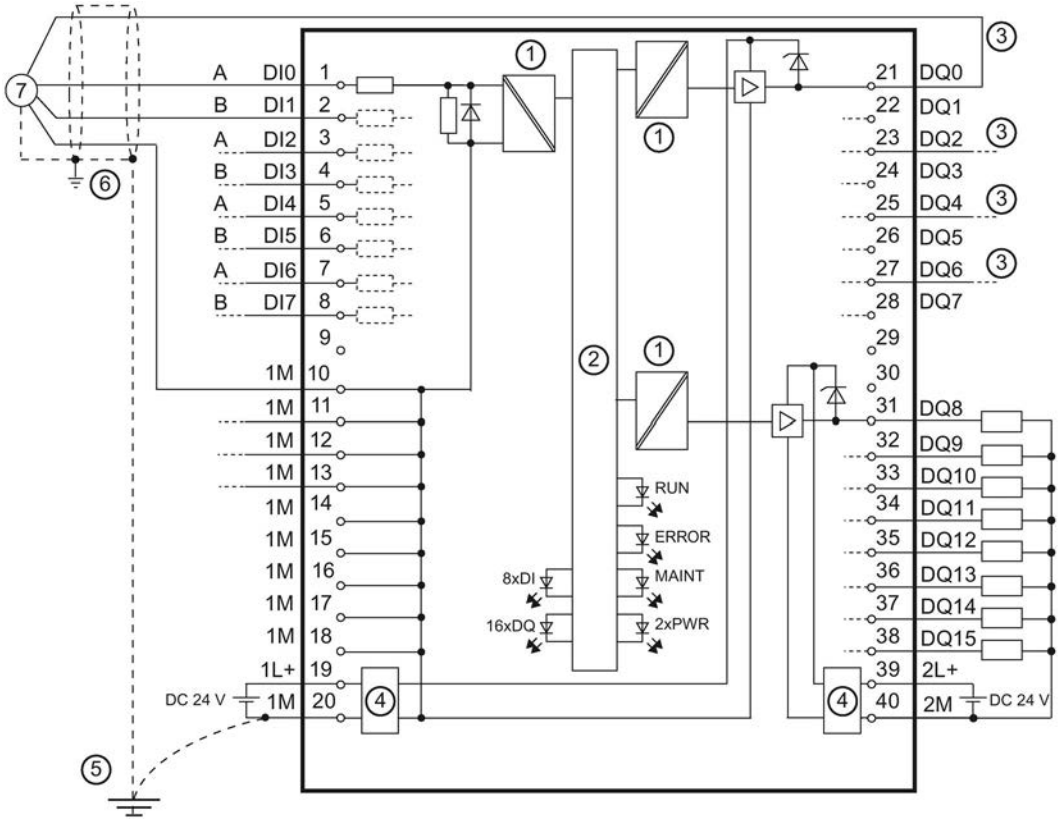

① Electrical isolation
② Technology and backplane bus interface
③ 24 V supply for respective incremental encoder
④ Input filter for supply voltage
⑤ Equipotential bonding
⑥ Shield support at the front connector
⑦ Incremental encoder with A and B signals

Figure 3-2 Block diagram with incremental encoders

The following figure shows the block diagram of the technology module to which four pulse encoders and four sensors are connected.

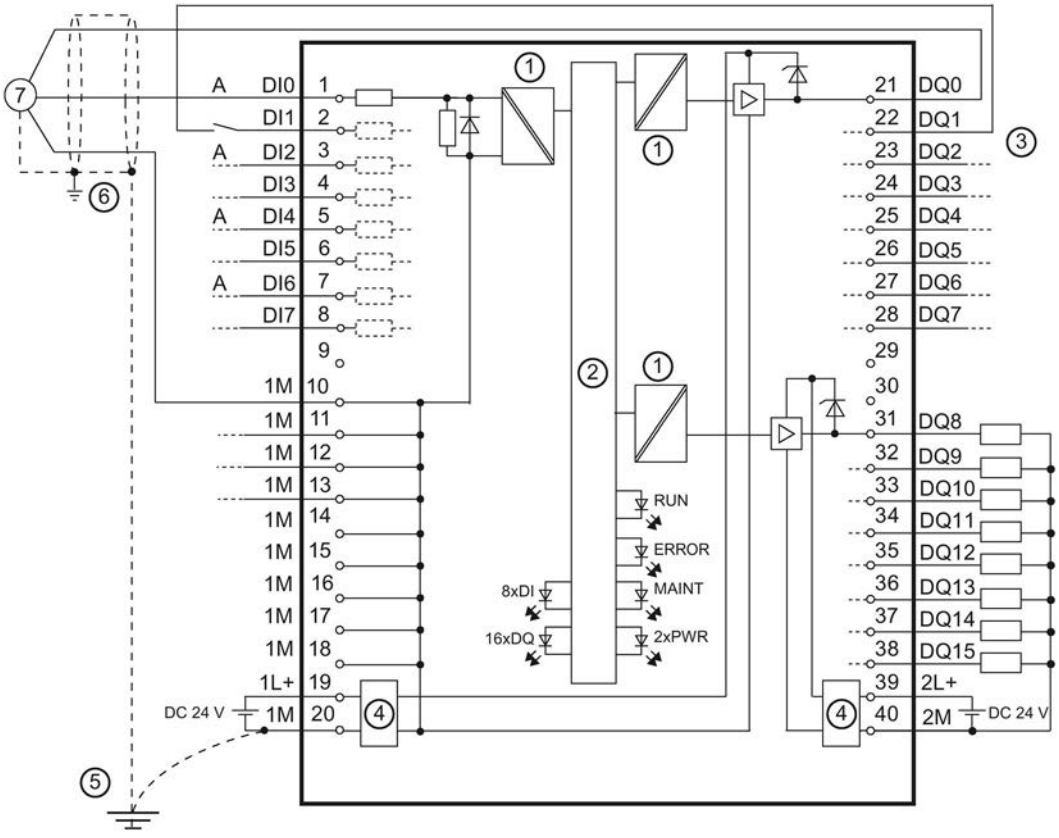

① Electrical isolation
② Technology and backplane bus interface
③ 24 V supplies for pulse encoders and sensors
④ Input filter for supply voltage
⑤ Equipotential bonding
⑥ Shield support at the front connector
⑦ Pulse encoder with signal A

Figure 3-3 Block diagram with pulse encoders and sensors

Note

If you want to use Timer digital inputs and high-speed outputs at the same time, you should minimize the effects of interference by electrically isolating the supply to the inputs and outputs via the terminal pairs 19 and 20 and 39 and 40.

Supply voltage

The digital inputs and outputs of the technology module are divided into two load groups that are supplied with DC 24 V. The digital inputs DI0 to DI7 and digital outputs DQ0 to DQ7 are supplied via the 1L+ and 1M connections. The digital outputs DQ8 to DQ15 are supplied via the 2L+ and 2M connections.

You can supply both load groups electrically isolated or non-isolated. If you want to supply both load groups with the same potential (non-isolated), use potential jumpers to loop-through the supply voltage from the load group already supplied to another load group.

The technology module monitors the supply voltage connections. When a load group is not supplied, the lack of supply voltage generates a diagnostic interrupt (Page 45). If you want to prevent this reaction when using only *one* load group, insert the potential jumpers.

An internal protective circuit protects the technology module against damage due to reversed polarity of the supply voltage. Unexpected conditions can occur at the digital outputs with reversed polarity of the supply voltage.

Note

Note that a maximum current load of 8 A per potential jumper must not be exceeded.

Digital inputs DI0 to DI7

You can use three, four or eight digital inputs, whereby the number of digital outputs that can be used is reduced accordingly. The technology module can evaluate the edges at the digital inputs for the following functions:

Table 3- 5 Evaluation of the signals at the digital inputs

Evaluation of the signals for ...	Usable digital inputs							
	DI0	DI1	DI2	DI3	DI4	DI5	DI6	DI7
Time stamp detection	✓	✓	✓	✓	✓	✓	✓	✓
Hardware enable for time stamp detection	—	✓	—	✓	—	✓	—	✓
Hardware enable for time-controlled switching	—	✓	—	✓	—	✓	—	✓
Counting with incremental encoder with signals A and B	✓	✓	✓	✓	✓	✓	✓	✓
Counting with pulse encoder with signal A	✓	—	✓	—	✓	—	✓	—
Oversampling	✓	✓	✓	✓	✓	✓	✓	✓

When you use the counting function, you can connect the following encoder types with 24 V signals to the digital inputs:

- Incremental encoder with signals A and B:

  Signals A and B are each connected via the connections of the digital input pairs DI0/DI1, DI2/DI3, DI4/DI5 and DI6/DI7. Signals A and B are the two incremental signals phase-shifted by 90°.

- Pulse encoder / sensor with signal A:

  Signal A is connected via the connection of the digital input DI0, DI2, DI4 or DI6.

The digital inputs are not electrically isolated from each other or from the digital outputs DQ0 to DQ7. The digital inputs are electrically isolated from the digital outputs DQ8 to DQ15 and the backplane bus.

Input filters for digital inputs

You can configure an input filter for each digital input to suppress interference. Signals with a pulse duration below the configured input delay are suppressed.

You can specify the following values for the input delay:

- None
  (input delay of 4 µs, minimum pulse width of 3 µs)
- 0.05 ms
- 0.1 ms (default)
- 0.4 ms
- 0.8 ms

The input delay has the following effect on the functions of the signal evaluation at the digital inputs:

Table 3- 6 Influence of the input delay

Function	Influence of the input delay
Time stamp detection	The detected time stamp is moved by the input delay.
Counting	The counter value that was valid at time T_i minus the input delay is returned.
Oversampling	The detected states are moved together by the input delay.

Note

If you select the "None" or "0.05 ms" option, you have to use shielded cables for connection of the digital inputs. To increase the accuracy of the time stamp function, we recommend the use of shielded cables even for longer input delays. The use of shielded cables limits the jitter to maximum of 1 µs.

Encoder supply

When you use the digital inputs, you can connect incremental encoders and pulse encoders. The terminal opposite the digital input provides the respective DC 24 V supply voltage with reference to 1M and a rated load current of 0.5 A to supply an encoder. The voltage is fed from the 1L+/1M supply voltage and monitored for short-circuit and overload.

Note

Note that a total current of 1.2 A for all encoder supplies must not be exceeded.

Note

The outputs of the technology module are disabled during its startup. As a result. the encoder supply can be disabled briefly after an interruption of the PROFINET connection of the associated system.

Digital outputs DQ0 to DQ15

You can use 8, 12, 13 or 16 digital outputs, whereby the number of digital inputs that can be used is reduced accordingly. The digital outputs can be switched directly at defined points in time or via the user program. Alternatively, you can output pulse width modulation or Oversampling at the respective digital output.

The digital outputs DQ0 to DQ7 are electrically isolated from the digital outputs DQ8 to DQ15 and the backplane bus, but not from the digital inputs. The digital outputs DQ8 to DQ15 are electrically isolated from the digital outputs DQ0 to DQ7; the digital inputs are electrically isolated from the backplane bus.

You can use each of the digital outputs as a high-speed output or as a sourcing output:

- High-speed output (default):
  The digital output works as fast push-pull switch and can carry a rated load current of 0.1 A. A push-pull switch is alternately switched to DC 24 V and ground. This makes for very steep edges.
- Sourcing output:
  The digital output works as 24 V sourcing output in reference to M and can carry a rated load current of 0.5 A.

The digital outputs are protected from overload and short-circuit.

NOTICE
Overtemperature from unsuitable loads A high-speed output generates edges that are very steep. This creates very powerful charge reversals for the connected load, which can overheat the load at very high switching frequencies. The connected load must therefore be approved for high input frequencies.

Note

If you use a digital output as sourcing output, the switch-off response / switch-off edge depends on the load. Thus, it is possible that very short pulses cannot be output correctly.

Note

Relays and contactors can be connected direct without external circuitry.

Configuring/address space 4

4.1 Configuring

Introduction

The technology module is configured and assigned parameters with the configuration software.

The technology module functions are controlled and monitored by the user program.

System environment

The technology module can be used in the following system environments:

Table 4- 1 Applications of the technology module with PROFINET IO

Applications	Components required	Configuration software	In the user program
Distributed operation in an S7-1500 system	• S7-1500 automation system • ET 200MP distributed I/O system • TM Timer DIDQ 16x24V	STEP 7 (TIA Portal): Device configuration and parameter settings with hardware configuration (HWCN)	Time stamp functions: TIO instructions TIO_SYNC, TIO_DI and TIO_DQ Counting, PWM and Oversampling: Direct access to the control and feedback interface (Page 33) of the TM Timer DIDQ 16x24V in the I/O data
Central operation in an S7-1500 system	• S7-1500 automation system • TM Timer DIDQ 16x24V	STEP 7 (TIA Portal): Device configuration and parameter settings with hardware configuration (HWCN)	Counting and PWM: Direct access to the control and feedback interface (Page 33) of the TM Timer DIDQ 16x24V in the I/O data
Distributed operation in an S7-300/400 system	• S7-300/400 automation system • ET 200MP distributed I/O system • TM Timer DIDQ 16x24V	STEP 7 (TIA Portal): Device configuration and parameter settings with hardware configuration (HWCN)	Time stamp functions*, counting, PWM and Oversampling: Direct access to the control and feedback interface (Page 33) of the TM Timer DIDQ 16x24V in the I/O data

* on request

Additional information

You can find a detailed description of the time stamp functions and their configuration with the TIO instructions TIO_SYNC, TIO_DI and TIO_DQ in:

- High-precision input/output with Time-based IO function manual available as download on the Internet (http://support.automation.siemens.com/WW/view/en/82527590)
- In the STEP 7 (TIA Portal) information system under "Using technology functions > Counting, measurement and position input > Counting, measurement and position input (S7-1500)"

4.2 Reaction to CPU STOP

You set the response of the technology module to CPU STOP for each channel in the basic parameters.

Table 4- 2 Response of the technology module to CPU STOP depending on parameter assignment

Reaction to CPU STOP	Meaning
Output substitute value	The technology module outputs the configured substitute values at the digital outputs until the next CPU STOP-RUN transition. The technology module is returned to its startup state after a STOP-RUN transition: If you are using counters, the counter values are set to 0 and the digital outputs switch according to the parameter assignment and the setpoints.
Keep last value	The technology module outputs the values at the digital outputs that were valid when the transition to STOP took place until the next CPU STOP-RUN transition. The last valid period duration with the last valid pulse-pause ratio is output for a configured pulse width modulation until the next STOP-RUN transition. The technology module is returned to its startup state after a STOP-RUN transition: If you are using counters, the counter values are set to 0 and the digital outputs switch according to the parameter assignment and the setpoints.

4.3 Address space

Address space of the technology module

Table 4- 3 Range of the input addresses and output addresses of the TM Timer DIDQ 16x24V

	Inputs	Outputs
Range	44 bytes	74 bytes

Additional information

A description on how to use the control and feedback interface of TM Timer DIDQ 16x24V can be found in the chapter Control and feedback interface (Page 33).

4.4 Parameters

You can use various parameters in the hardware configuration to define the properties of the technology module in STEP 7 (TIA Portal). Depending on the settings, not all parameters are available. You can change the parameter assignment in the user program using data record 128 (Page 56).

Parameters of the TM Timer DIDQ 16x24V

You can configure the following parameters:

Table 4- 4 Configurable parameters and their defaults

Parameter	Value range	Default setting
Basic parameters		
Channel configuration of the module	• 0 inputs, 16 outputs • 3 inputs, 13 outputs • 4 inputs, 12 outputs • 8 inputs, 8 outputs	0 inputs, 16 outputs
PWM period for the digital outputs	• 10 ms • 5 ms • 2 ms • 1 ms • 0.5 ms • 0.2 ms	10 ms
Reaction to CPU STOP	• Output substitute value • Keep last value	Output substitute value

Parameter	Value range	Default setting
Enable diagnostic interrupts	• Disabled • Enabled	Disabled
Channel parameters		
Operating mode of the digital output	• Timer DQ • Oversampling • Pulse width modulation PWM	Timer DQ
Substitute value for the digital output	• 0 • 1	0
High-speed output (0.1 A)	• Disabled • Enabled	Enabled
Invert input or output signal	• Disabled • Enabled	Disabled
HW enable by the digital input	• Level-triggered • Edge-triggered	Level-triggered
Level selection for HW enable	• Active with high level • Active with low level	Active with high level
Configuration DI group	• Incremental encoder (A, B phase-shifted) • Timer-DI with enable input • Use inputs individually	Incremental encoder (A, B phase-shifted)
Invert counting direction (incremental encoder)	• Disabled • Enabled	Disabled
Operating mode of the digital input	• Counter • Timer-DI • Oversampling	Timer-DI
Input delay for the digital input	• None • 0.05 ms • 0.1 ms • 0.4 ms • 0.8 ms	0.1 ms
Signal evaluation for counters	• At rising edge • At falling edge	At rising edge
Configuration DQ/DI group	• Timer DQ with enable input • Use input/output individually	Timer DQ with enable input

4.5 Control and feedback interface

Direct access to the control and feedback interface on the PROFINET is not necessary for distributed operation in a S7-1500 system to use the time stamp functions. The TIO instructions TIO_SYNC, TIO_DI and TIO_DQ are available for this case. You can find a detailed description of the use of the TIO instructions in the High-precision input/output with Time-based IO function manual available as download on the Internet (http://support.automation.siemens.com/WW/view/en/82527590).

Additional information on using the control and feedback interface is available in the section Configuring (Page 29).

4.5.1 Assignment of the control interface

The user program uses the control interface to influence the behavior of the technology module.

Control interface

The following table shows control interface assignment:

Table 4- 5 Control interface of the technology module

Offset to the start address	Parameter	Meaning
Byte 0	SET_DQ (DQ0 ... DQ7)	Bit 7: Set DQ7
		Bit 6: Set DQ6
		Bit 5: Set DQ5
		Bit 4: Set DQ4
		Bit 3: Set DQ3
		Bit 2: Set DQ2
		Bit 1: Set DQ1
		Bit 0: Set DQ0
Byte 1	SET_DQ (DQ8 ... DQ15)	Bit 7: Set DQ15
		Bit 6: Set DQ14
		Bit 5: Set DQ13
		Bit 4: Set DQ12
		Bit 3: Set DQ11
		Bit 2: Set DQ10
		Bit 1: Set DQ9
		Bit 0: Set DQ8

Offset to the start address	Parameter	Meaning		
Byte 2	SETEN (DI0/DQ0 ... DI7/DQ7)	Bit 7: Override hardware enable for DI7 or DQ7		
		Bit 6: Override hardware enable for DI6 or DQ6		
		Bit 5: Override hardware enable for DI5 or DQ5		
		Bit 4: Override hardware enable for DI4 or DQ4		
		Bit 3: Override hardware enable for DI3 or DQ3		
		Bit 2: Override hardware enable for DI2 or DQ2		
		Bit 1: Override hardware enable for DI1 or DQ1		
		Bit 0: Override hardware enable for DI0 or DQ0		
Byte 3	SETEN (DQ8 ... DQ15)	Bits 0 to 7: Override hardware enable for DQ8 to DQ15		
Bytes 4 to 7	TEC_OUT (DQ0)	For DQ operating mode "Timer DQ":	For DQ operating mode "Over-sampling":	For DQ operating mode "Pulse width modulation PWM":
		Byte 0...1: OFF TIME: Starting time stamp of the module for resetting the DQ0	Bytes 0 to 3: 32 states for Over-sampling	Bytes 0 to 2: Reserved; bits must be set to 0
		Bytes 2 to 3: ON TIME: Starting time stamp of the module for setting the DQ0		Byte 3: Pulse-pause ratio for PWM as a per-centage
Bytes 8 to 11	TEC_OUT (DQ1)	See bytes 4 to 7		
Bytes 12 to 15	TEC_OUT (DQ2)			
Bytes 16 to 19	TEC_OUT (DQ3)			
Bytes 20 to 23	TEC_OUT (DQ4)			
Bytes 24 to 27	TEC_OUT (DQ5)			
Bytes 28 to 31	TEC_OUT (DQ6)			
Bytes 32 to 35	TEC_OUT (DQ7)			
Bytes 36 to 39	TEC_OUT (DQ8)			
Bytes 40 to 43	TEC_OUT (DQ9)			
Bytes 44 to 47	TEC_OUT (DQ10)			
Bytes 48 to 51	TEC_OUT (DQ11)			
Bytes 52 to 55	TEC_OUT (DQ12)			
Bytes 56 to 59	TEC_OUT (DQ13)			
Bytes 60 to 63	TEC_OUT (DQ14)			
Bytes 64 to 67	TEC_OUT (DQ15)			

Offset to the start address	Parameter		Meaning
Byte 68	SEL (DI1)	EDGESEL	Bits 5...7: edge selection for time stamp detection DI1:
			000_B: Reserved
			001_B: Rising edges only
			010_B: Falling edges only
			011_B: Rising and falling edge (order depending on occurrence)
			100_B: Reserved
			101_B: First rising, then falling edge
			110_B: First falling, then rising edge
			111_B: Reserved
		REARM	Bit 4: cyclic time stamp detection for DI1
	SEL (DI0)	EDGESEL	Bits 0...3: See SEL (DI1)
		REARM	
Byte 69	SEL (DI3)		See byte 68
	SEL (DI2)		
Byte 70	SEL (DI5)		See byte 68
	SEL (DI4)		
Byte 71	SEL (DI7)		See byte 68
	SEL (DI6)		
Bytes 72 to 73	STW	MSL	Bits 12...15: sign of life counter (Master Sign of Life)
		—	Bits 1...11: Reserved; bits must be set to 0
		SYN	Bit 0: Synchronization of the module with the user program

Notes on the control bits

Control bit	Notes
SEL (DIm)	This value is supplied by the TIO instruction TIO_DI.
SET_DQm	You can use this bit to set the DQm digital output in the DQ operating mode "Timer DQ".
SETEN (DIm/DQm)	You can use this bit to override the hardware enable that is configured for a digital input DIm or digital output DQm.
STW	This value is controlled by the TIO instruction TIO_SYNC. Detailed information is available on request.
TEC_OUT (DQm)	If you use the time stamp function for the respective digital output DQm, the TIO instruction TIO_DQ returns the two output time stamps for the module in this value. If you use the Oversampling function for the respective digital output DQm, you specify the 32 states with this value. If you use pulse width modulation for the respective digital output DQm, you specify the pulse-pause ratio with this value as percentage. The following overview shows how the technology module evaluates the specified percentage.

Pulse-pause ratio for PWM

You specify the setpoint for the pulse-pause ratio as a percentage. The technology module outputs the following pulse-pause ratio in each case:

Setpoint in %	0	1	2	3	4	5	6	7	8	9	10	11	12	13	14	15	16	17	18	19	20	21	22	23
Output value in %	0		3.13			6.25			9.38			12.50				15.63			18.75			21.88		

24	25	26	27	28	29	30	31	32	33	34	35	36	37	38	39	40	41	42	43	44	45	46	47	48	49	50	51
25			28.13			31.25			34.38			37.50				40.63			43.75			46.88			50		

52	53	54	55	56	57	58	59	60	61	62	63	64	65	66	67	68	69	70	71	72	73	74	75	76	77	78	79
53.13			56.25			59.38			62.50				65.63			68.75			71.88			75			78.13		

80	81	82	83	84	85	86	87	88	89	90	91	92	93	94	95	96	97	98	99	100
81.25			84.38			87.50			90.63				93.75			96.88			100	

Additional information

Detailed information about the time stamp function is available from Technical Supporton request.

4.5.2 Assignment of the feedback interface

The user program receives current values and status information from the technology module by means of the feedback interface.

Feedback interface

The following table shows the assignment of the feedback interface:

Table 4- 6 Feedback interface of the technology module

Offset to the start address	Parameter	Meaning
Byte 0	STS_DI (DI0 ... DI7)	Bit 7: Status DI7 (when DI7 is used)
		Bit 6: Status DI6 (when DI6 is used)
		Bit 5: Status DI5 (when DI5 is used)
		Bit 4: Status DI4 (when DI4 is used)
		Bit 3: Status DI3 (when DI3 is used)
		Bit 2: Status DI2 (when DI2 is used)
		Bit 1: Status DI1 (when DI1 is used)
		Bit 0: Status DI0 (when DI0 is used)
Byte 1	QI (DI0 ... DI7)	Bit 7: Quality Information DI7
		Bit 6: Quality Information DI6
		Bit 5: Quality Information DI5
		Bit 4: Quality Information DI4
		Bit 3: Quality Information DI3
		Bit 2: Quality Information DI2
		Bit 1: Quality Information DI1
		Bit 0: Quality Information DI0
Byte 2	QI (DQ0 ... DQ7)	Bit 7: Quality Information DQ7
		Bit 6: Quality Information DQ6
		Bit 5: Quality Information DQ5
		Bit 4: Quality Information DQ4
		Bit 3: Quality Information DQ3
		Bit 2: Quality Information DQ2
		Bit 1: Quality Information DQ1
		Bit 0: Quality Information DQ0
Byte 3	QI (DQ08 ... DQ15)	Bit 7: Quality Information DQ15
		Bit 6: Quality Information DQ14
		Bit 5: Quality Information DQ13
		Bit 4: Quality Information DQ12
		Bit 3: Quality Information DQ11
		Bit 2: Quality Information DQ10
		Bit 1: Quality Information DQ9
		Bit 0: Quality Information DQ8

Offset to the start address	Parameter	Meaning		
Bytes 4 to 7	TEC_IN (DI0)	For DI operating mode "Timer DI":	For DI operating mode "Incremental encoder (A, B phase-shifted)" or "Counter":	For DI operating mode "Over-sampling":
		Byte 0...1: 2nd TIME/OFF TIME: Second input time stamp of module	Current counter value	Oversampling value
		Byte 2...3: 1st TIME/ON TIME: First input time stamp of module		
Bytes 8 to 11	TEC_IN (DI1)	See bytes 4 to 7		
Bytes 12 to 15	TEC_IN (DI2)			
Bytes 16 to 19	TEC_IN (DI3)			
Bytes 20 to 23	TEC_IN (DI4)			
Bytes 24 to 27	TEC_IN (DI5)			
Bytes 28 to 31	TEC_IN (DI6)			
Bytes 32 to 35	TEC_IN (DI7)			
Byte 36	EN (DI1/DQ1)	Bit 7: DI1 active as Timer DI or DQ1 active as Timer DQ		
	LEC (DI1)	Bit 4...6: Lost edge counter for DI1		
	EN (DI0/DQ0)	Bit 3: DI0 active as Timer DI or DQ0 active as Timer DQ		
	LEC (DI0)	Bit 0...2: Lost edge counter for DI0		
Byte 37	EN (DI3/DQ3)	See byte 36		
	LEC (DI3)			
	EN (DI2/DQ2)			
	LEC (DI2)			
Byte 38	EN (DI5/DQ5)			
	LEC (DI5)			
	EN (DI4/DQ4)			
	LEC (DI4)			
Byte 39	EN (DI7/DQ7)			
	LEC (DI7)			
	EN (DI6/DQ6)			
	LEC (DI6)			
Byte 40	EN (DQ15)	Bit 7: DQ15 active as Timer DQ		
	EN (DQ14)	Bit 6: DQ14 active as Timer DQ		
	EN (DQ13)	Bit 5: DQ13 active as Timer DQ		
	EN (DQ12)	Bit 4: DQ12 active as Timer DQ		
	EN (DQ11)	Bit 3: DQ11 active as Timer DQ		
	EN (DQ10)	Bit 2: DQ10 active as Timer DQ		
	EN (DQ9)	Bit 1: DQ9 active as Timer DQ		
	EN (DQ8)	Bit 0: DQ8 active as Timer DQ		

Offset to the start address	Parameter		Meaning
Byte 41	Layout Property		Module-specific value
Bytes 42 to 43	ZSW	SSL	Bits 12...15: sign of life counter (Slave Sign of Life)
		—	Bits 10 to 11: Reserved
		SYNC	Bit 8: Module is synchronized with the user program
		Channel address	Bits 4 to 7 and 9: Number of the respective DI or DQ
		Channel mode	Bits 0 to 3: Operating mode of the respective DI or DQ

Notes on the feedback bits

Feedback bit	Notes
STS_DI (DIm)	This bit indicates the status of respective digital input DIm.
EN (DIm/DQm)	This bit indicates that • The respective digital input is active as Timer DI and, if required, is enabled, or • The respective digital output is active as Timer DQ and, if required, is enabled. For digital inputs and digital outputs with the operating modes "Counter", "Oversampling", "Pulse Width Modulation PWM" and for level-controlled hardware enable, this bit is permanently "0".
Layout Property	This value is a module-specific constant and used by the TIO instructions for the recognition of the technology module.
LEC (DIm)	This value indicates the number of edges at the respective digital input DIm for which no time stamp could be stored. The module can count a maximum of seven edges per application cycle. The counter is reset with each new application cycle.
QI (DIm)	This bit indicates that an error has occurred at the respective digital input. 0 means: Supply voltage 1L+ not available or too low or front connector is not plugged 1 means: Supply voltage is present and OK If the diagnostic interrupts are enabled, a diagnostic interrupt is triggered when there is a problem with the 1L+ supply voltage. Refer to the section Diagnostic alarms (Page 45) for details on the diagnostic interrupts.
QI (DQm)	This bit indicates that an error has occurred at the respective digital output. 0 means: Short-circuit, overload or overtemperature 1 means: Supply voltage is present and OK If the diagnostic interrupts are enabled, a diagnostic interrupt is triggered when there is fault at the digital output. Refer to the section Diagnostic alarms (Page 45) for details on the diagnostic interrupts.
TEC_IN (DIm)	If you use the time stamp function for the respective digital input DIm, this value returns the two input time stamps for the module. The input time stamps are read by the TIO instruction TIO_DI and converted to the TIO_Time. If you use the counting function for the respective digital input DIm, this value returns the current counter value. If you use the Oversampling function for the respective digital input DIm, this value returns the 32 states of the DIm.
ZSW	This value is controlled by the technology module and is used for communication with the TIO instruction TIO_SYNC.

Additional information

Detailed information about the time stamp function is available from Technical Supporton request.

Interrupts/diagnostic messages 5

5.1 Status and error displays

LEDs

The figure below shows the LEDs (status and error displays) of the TM Timer DIDQ 16x24V.

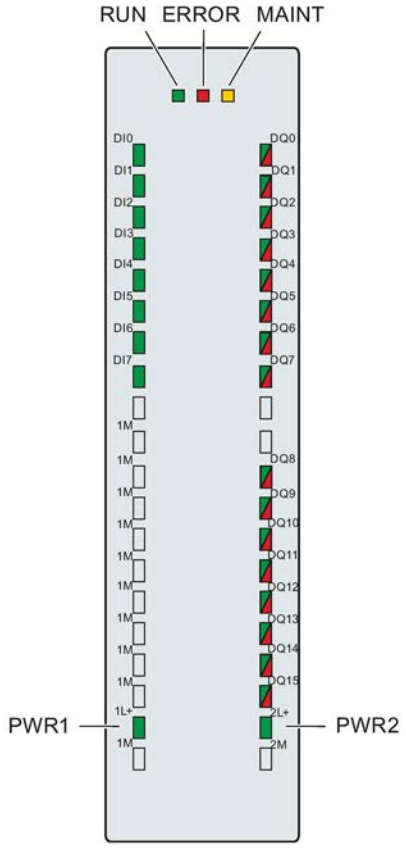

Figure 5-1 LEDs of the TM Timer DIDQ 16x24V

Meaning of the LED displays

The following tables explain the meaning of the status and error displays. Remedial measures for diagnostic alarms can be found in the section Diagnostic alarms (Page 45).

Table 5- 1 Status and error displays RUN/ERROR/MAINT

LEDs			Meaning	To correct or avoid errors
RUN	ERROR	MAINT		
Off	Off	Off	Supply voltage from CPU/power supply module not present or too low	Check or switch on the supply voltage at the PS, at the CPU or at the interface module.
Flashes	Off	Off	The technology module starts and flashes until parameter assignment is complete	—
On	Off	Off	The parameters of the technology module have been assigned.	
On	Flashes	Off	Indicates a group error (at least one error pending)	Evaluate the diagnostic alarms and eliminate the error.
Flashes	Flashes	Flashes	Hardware or firmware defective	Replace the technology module.

Table 5- 2 PWRm/DQm*/ERROR status displays

LEDs			Meaning	To correct or avoid errors
PWRm	DQm*	ERROR		
Off	Off	Flashes	Supply voltage too low or missing	• Check the supply voltage. • Make sure that the front connector is correctly inserted.
On	On	Off	Supply voltage is present and OK	—
On	On	Flashes	Short-circuit or overload at the encoder supply	• Correct the encoder wiring. • Check the loads connected to the encoder supply.

* Applies for DQ0 to DQ7 when used as encoder supply

ChannelLEDs

The DIm LEDs indicate the current level of the associated signals. The LEDs of the digital outputs DQm indicate the desired state.

The flashing frequency of the channel LEDs is limited to approximately 14 Hz. If higher frequencies are present, the channel LEDs will flash at 14 Hz instead of indicating the current status.

Table 5- 3 Status displays DIm/DQm*

LEDs DIm/DQm*	Meaning	To correct or avoid errors
□ Off	Digital input / digital output at 0 level	—
■ On	Digital input / digital output at 1 level	—
■ On (DQm)	Diagnostic alarm: e.g. "Error at digital outputs"	Check the wiring or the connected load.

* Applies for DQm when used as digital output

5.2 Trigger a diagnostic interrupt

Enabling the diagnostic interrupts

You enable the diagnostic interrupts at the basic parameters.

The technology module can trigger the following diagnostic interrupts:

Table 5- 4 Possible diagnostic interrupts

Diagnostic interrupt	Monitoring
• Internal error • Watchdog tripped. Module is defective.	Monitoring is always active. A diagnostic interrupt is triggered each time an error is detected.
• No supply voltage • Short-circuit or overload at encoder supply • Error at the digital outputs • Supply voltage error • Overtemperature	Monitoring is always active. A detected error only triggers a diagnostic interrupt if "Enable diagnostic interrupts" has been enabled in the device parameters. The diagnostic interrupts are not enabled in the default setting.

Reactions to a diagnostic interrupt

The following happens when an event occurs that triggers a diagnostic interrupt:

- The ERROR LED flashes.

  Once you have remedied the error, the ERROR LED goes out.
- The S7-1500 CPU interrupts processing of the user program. The diagnostic interrupt OB (e.g. OB 82) is called. The event that triggered the interrupt is entered in the start information of the diagnostic interrupt OB.
- The S7-1500 CPU remains in RUN even if no diagnostic interrupt OB is present in the CPU. The technology module continues working unchanged if this is possible despite the error.

Detailed information on the error event is available with the instruction "RALRM" (read additional interrupt information).

5.3 Diagnostic alarms

Diagnostic alarms

If a diagnostic alarm is pending, the ERROR-LED is flashing.

The diagnostics are displayed as plain text in STEP 7 (TIA Portal) in the online and diagnostics view. You can evaluate the error codes with the user program.

The technology module only has one channel as far as diagnostics is concerned. Channel number "0" is therefore displayed for each diagnostic.

The following diagnostics can be signaled:

Table 5- 5 Diagnostic alarms, their meaning and remedies

Diagnostic alarm	Error code	Meaning	To correct or avoid errors
Internal error	100_H	Technology module defective	Replace technology module
Watchdog tripped. Module is defective.	103_H	Firmware error	Run firmware update
		Technology module defective	Replace technology module
No supply voltage	$10A_H$	No 1L+ and/or 2L+ supply voltage for the technology module	Feed 1L+ supply voltage (terminal 19) and/or 2L+ (terminal 39) to the technology module
		Front connector not inserted correctly	Insert front connector correctly
Short-circuit or overload at encoder supply	$10E_H$	• Error at encoder supply • Possible causes: – Short-circuit – Overload	• Correct encoder wiring • Check consumers connected to encoder supply
Error at the digital outputs	$10F_H$	• Error at the digital outputs (DQm LED lights up red) • Possible causes: – Short-circuit – Overload	• Correct wiring at the digital outputs • Check consumers connected to the digital outputs
Supply voltage error	110_H	• Error at 1L+ and/or 2L+ supply voltage • Possible causes: – Low voltage – Wiring of 1L+ and/or 2L+ supply voltage defective	• Check the 1L+ and/or 2L+ supply voltage • Check the wiring of 1L+ and/or 2L+ supply voltage
Overtemperature	506_H	• Possible causes: – Short-circuit or overload at the digital outputs or output of the encoder supply – Ambient temperature outside specifications	• Correct process wiring • Improve cooling • Check connected loads

Technical specifications

6

	6ES7552-1AA00-0AB0
Product type designation	TM Timer DIDQ 16x24V
General information	
Product function	
I&M data	Yes; I&M 0
Engineering with	
STEP 7 TIA Portal can be configured/integrated as of version	V13 Update 3
Installation type/mounting	
Rail mounting possible	Yes; S7-1500 mounting rail
Supply voltage	
Load voltage 1L+	
Rated value (DC)	24 V
Low limit of valid range (DC)	19.2 V
High limit of valid range (DC)	28.8 V
Reverse polarity protection	Yes; against destruction
Load voltage 2L+	
Rated value (DC)	24 V
Low limit of valid range (DC)	19.2 V
High limit of valid range (DC)	28.8 V
Reverse polarity protection	Yes; against destruction
Input current	
from load voltage 1L+ (no load), max.	40 mA; without load
from load voltage 2L+ (no load), max.	30 mA; without load
Encoder supply	
Number of outputs	8; max. depending on parameter assignment
24 V encoder supply	
24 V	Yes; L+ (-0.8 V)
Short-circuit protection	Yes
Output current, max.	1.2 A; total current of all encoders / channels, max. 0.5 A per output
Power	
Power from the backplane bus	1.3 W
Power loss	
Power loss, typ.	5 W

	6ES7552-1AA00-0AB0
Address area	
Occupied address area	
Inputs	44 bytes
Outputs	74 bytes
Digital inputs	
Number of inputs	8; max. depending on parameter assignment
• In groups of	8
Digital inputs, configurable	Yes
Input characteristics to IEC 61131, Type 3	Yes
Digital input functions, configurable	
Digital input with time stamp	Yes
• Number, max.	8
Counter	Yes
• Number, max.	4
Counter for incremental encoder	Yes
• Number, max.	4
Digital input with oversampling	Yes
• Number, max.	8
Hardware enable for digital input	Yes
• Number, max.	4
Hardware enable for digital output	Yes
• Number, max.	4
Input voltage	
Type of input voltage	DC
Rated value, DC	24 V
For signal "0"	-30 V to +5 V
For signal "1"	+11 V to +30 V
Permitted voltage at input, min.	-30 V
Permitted voltage at input, max.	30 V
Input current	
for signal "1", typ.	2.5 mA
Input delay (at rated value of input voltage)	
Minimum pulse width for program reaction	3 µs; with parameter assignment "none"
For standard inputs	
• Configurable	Yes; none / 0.05 / 0.1 / 0.4 / 0.8 ms)
• at "0" to "1", min.	4 µs; with parameter assignment "none"
• at "1" to "0", min.	4 µs; with parameter assignment "none"

	6ES7552-1AA00-0AB0
Cable length	
Cable length shielded, max.	1000 m; depending on sensor, cable quality and edge slope
Cable length unshielded, max.	600 m; depending on sensor, cable quality and edge slope
Digital outputs	
Type of digital output	Transistor
Number of outputs	16; max. depending on parameter assignment
• In groups of	8
M switching	Yes; with high-speed output
Sourcing	Yes
Digital outputs, configurable	Yes
Short-circuit protection	Yes; electronic/thermal
• Response threshold, typ.	1.7 A with standard output; 0.5 A with high-speed output
Limiting of inductive shutdown voltage to	-0.8 V
Control of a digital input	Yes
Digital output functions, configurable	
Digital output with time stamp	Yes
• Number, max.	16
PWM output	Yes
• Number, max.	16
Digital output with oversampling	Yes
• Number, max.	16
Output switching capacity	
With resistive load, max.	0.5 A; 0.1 A with high-speed output
With lamp load, max.	5 W; 1 W with high-speed output
Load resistance range	
Low limit	48 Ω; 240 Ohm with high-speed output
High limit	12 kΩ
Output voltage	
Type of output voltage	DC
for signal "0", max.	1 V; with high-speed output
for signal "1", min.	23.2 V; L+ (-0.8 V)
Output current	
for signal "1" rated value	0.5 A; 0.1 A with high-speed output, note derating
for signal "1" permissible range, max.	0.6 A; 0.12 A with high-speed output, note derating
for signal "1" minimum load current	2 mA
for signal "0" residual current, max.	0.5 mA

	6ES7552-1AA00-0AB0
Output delay with resistive load	
"0" to "1", max.	1 µs; for high-speed output, 5 µs with standard output
"1" to "0", max.	1 µs; for high-speed output, 6 µs with standard output
Switching frequency	
With resistive load, max.	100 kHz; for high-speed output, 10 kHz with standard output
With lamp load, max.	10 Hz
Total current of outputs	
Max. current per group	4 A
Max. current per module	8 A; note derating
Cable length	
Cable length shielded, max.	1000 m; depending on load and cable quality
Cable length unshielded, max.	600 m; depending on load and cable quality
Encoders	
Supported encoders	
Incremental encoder (asymmetric)	Yes
24 V initiator	Yes
2-wire sensor	Yes
• Permitted quiescent current (2-wire sensor), max.	1.5 mA
Encoder signals, incremental encoders (asymmetrical)	
Input voltage	24 V
Input frequency, max.	50 kHz
Counting frequency, max.	200 kHz; with quadruple evaluation
Cable length shielded, max.	600 m; depends on input frequency, encoder and cable quality; max. 200 m with 50 kHz
Incremental encoder with A/B tracks, phase-shifted by 90°	Yes
Pulse encoder	Yes
24 V encoder signal	
• Permitted voltage at input, min.	-30 V
• Permitted voltage at input, max.	30 V
Interface hardware	
Input characteristics to IEC 61131, Type 3	Yes
Isochronous mode	
Isochronous mode (application synchronized until terminal)	Yes
Bus cycle time (TDP), min.	250 µs
Jitter, max.	1 µs

	6ES7552-1AA00-0AB0
Interrupts/diagnostics/status information	
Activation of substitute values	Yes
Interrupts	
Diagnostic interrupt	Yes
Diagnostic alarms	
Diagnostics	Yes
Monitoring of supply voltage	Yes
Short-circuit	Yes
LED diagnostics display	
RUN LED	Yes; green LED
ERROR LED	Yes; red LED
MAINT LED	Yes; yellow LED
Monitoring of supply voltage (PWR LED)	Yes; green LED
Channel status display	Yes; green LED
For channel diagnostics	Yes; red LED
Integrated functions	
Number of counters	4
Counting frequency (counters), max.	200 kHz; with quadruple evaluation
Counting functions	
Continuous counting	Yes
Electrical isolation	
Electrical isolation channels	
Between the channels and the backplane bus	Yes
Permitted potential difference	
Between different circuits	75 V DC / 60 V AC (basic isolation)
Isolation	
Isolation tested with	707 V DC (type test)
Ambient conditions	
Operating temperature	
Horizontal installation, min.	0 °C
Horizontal installation, max.	60 °C
Vertical installation, min.	0 °C
Vertical installation, max.	40 °C; note derating
Distributed operation	
At SIMATIC S7-1500	Yes
Dimensions	
Width	35 mm
Height	147 mm
Depth	129 mm
Weights	
Weight, approx.	320 g

Derating information for standardized total current of outputs

If the digital outputs of the TM Timer DIDQ 16x24V are operated with resistive loads, you should derate the standardized total current of the loads at the digital outputs for each load group of the technology module. The standardized total current is the standardized total of the mean output currents at all digital outputs and encoder supplies related to its nominal current in each case.

You should derate only if the system is mounted vertically. The following derating curve shows the load capacity of the digital outputs for each load group depending on the ambient temperature and mounting position:

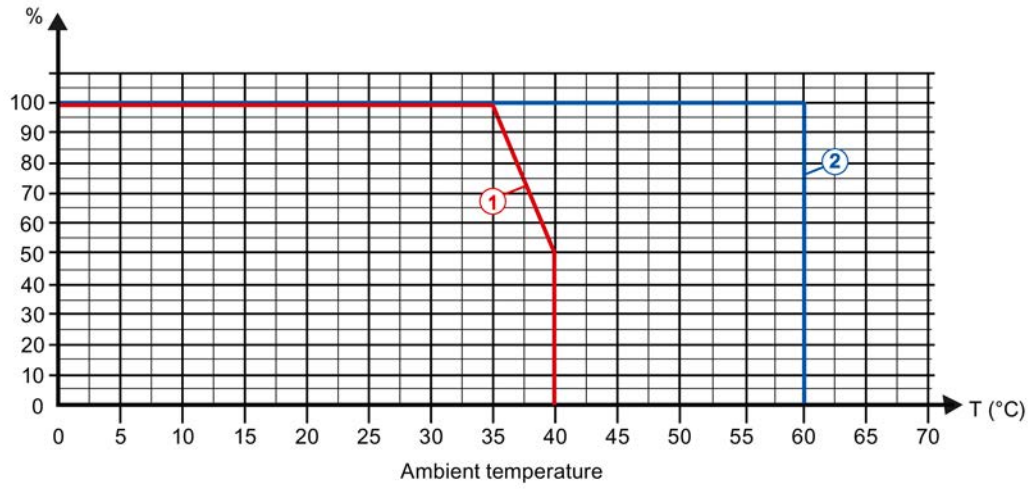

① Vertical installation of the system

② Horizontal installation of the system

Figure 6-1 Standardized total current for each load group depending on ambient temperature and mounting position for resistive loads

Example

The following table shows the calculation of the standardized total current for each load group for the channel configuration "3 inputs, 13 outputs":

Table 6- 1 Calculation of the standardized total current (1L+)

Load group of the supply voltage 1L+					
Digital output	Use as encoder supply	High-speed output (0.1 A)	Output current		
			Nominal value according to parameter assignment	Mean value	Mean value in relation to the nominal value
DQ0	Yes	—	0.5 A	0.3 A	60 %
DQ1	Yes	—	0.5 A	0.4 A	80 %
DQ2	No	No	0.5 A	0.5 A	100 %
DQ3	Yes	—	0.5 A	0.4 A	80 %
DQ4	No	Yes	0.1 A	0.05 A	50 %
DQ5	No	No	0.5 A	0.15 A	30 %
DQ6	No	Yes	0.1 A	0.09 A	90 %
DQ7	No	No	0.5 A	0.35 A	70 %
Total					560 %
Standardized total current = total / number of outputs = 560 % / 8 outputs					**70 %**

Table 6- 2 Calculation of the standardized total current (2L+)

Load group of the supply voltage 2L+					
Digital output	Use as encoder supply	High-speed output (0.1 A)	Output current		
			Nominal value according to parameter assignment	Mean value	Mean value in relation to the nominal value
DQ8	—	Yes	0.1 A	0.05 A	50 %
DQ9	—	Yes	0.1 A	0.07 A	70 %
DQ10	—	No	0.5 A	0.5 A	100 %
DQ11	—	No	0.5 A	0.4 A	80 %
DQ12	—	Yes	0.1 A	0.09 A	90 %
DQ13	—	No	0.5 A	0.15 A	30 %
DQ14	—	Yes	0.1 A	0.04 A	40 %
DQ15	—	No	0.5 A	0.25 A	50 %
Total					510 %
Standardized total current = total / number of outputs = 510 % / 8 outputs					**64 %**

For the determination of the maximum ambient temperature for the technology module, the higher standardized total current of the two load groups is considered. In this example, it amounts to 70 %. With a standardized total current of 70 % and vertical mounting of the system, the ambient temperature according to the derating curve may amount to a maximum of approx. 38 °C.

Dimension drawing

A

The dimensional drawing of the module on the mounting rail, as well as a dimensional drawing with open front panel, are provided in the appendix. Always observe the specified dimensions for installation in cabinets, control rooms, etc.

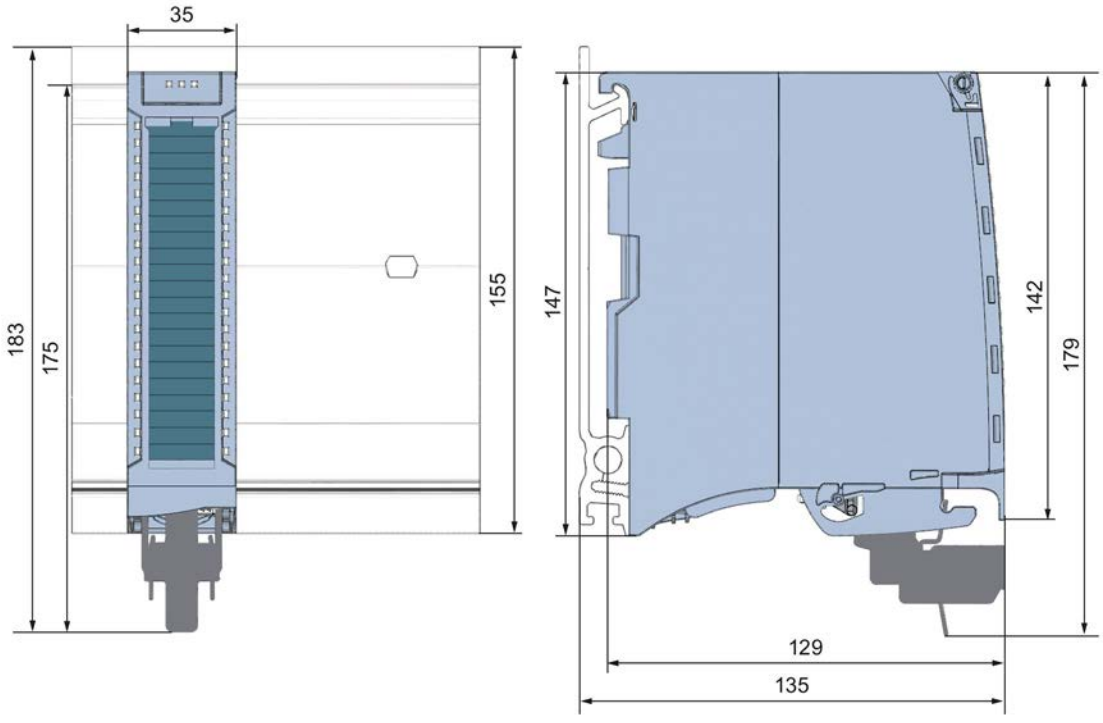

Figure A-1 Dimensional drawing of the TM Timer DIDQ 16x24V technology module

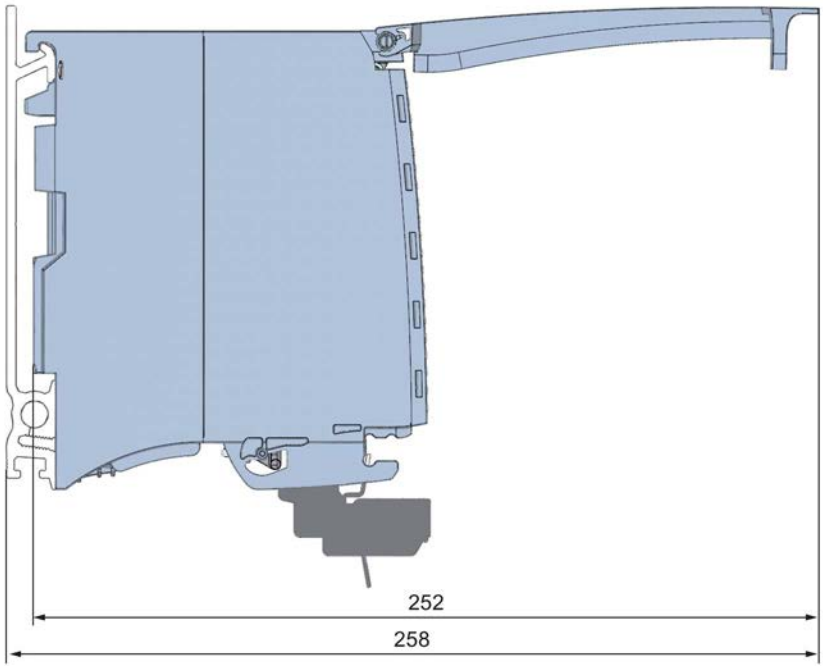

Figure A-2 Dimensional drawing of the TM Timer DIDQ 16x24V module, side view with open front panel

Parameter data record

B

You may edit the module parameters in RUN. The WRREC instruction is used to transfer the parameters to the module using data record 128.

If errors occur during the transfer or validation of parameters with the WRREC instruction, the module continues operation with the previous parameter assignment. A corresponding error code is then written to the STATUS output parameter. If no errors occur, the STATUS output parameter contains the length of the actually transferred data.

The description of the WRREC instruction and the error codes is available in the STEP 7 online help (TIA Portal).

Structure of data record

The following table shows you the structure of data record 128 for TM Timer DIDQ 16x24V. The values in byte 0 to byte 3 are fixed and may not be changed.

Table B- 1 Parameter data record 128

Bit → / Byte ↓	Bit 7	Bit 6	Bit 5	Bit 4	Bit 3	Bit 2	Bit 1	Bit 0
0...3	Header							
0	Reserved[2]		Major Version = 0		Minor Version = 1			
1	Length of the parameter data = 36							
2	Reserved[2]							
3								
4...7	Basic parameters							
4	Reserved[2]				PWM period for the digital outputs:			
					0000_B: 10 ms			
					0001_B: 5 ms			
					0010_B: 2 ms			
					0011_B: 1 ms			
					0100_B: 0.5 ms			
					0101_B: 0.2 ms			
					0110 to 1111_B: Reserved			
5	Reserved[2]					Enable diagnostic interrupt[1]	Reaction to CPU STOP:	
							00_B: Output substitute value	
							01_B: Keep last value	
							10 to 11_B: Reserved	
6	Reserved[2]							
7								

Bit → / Byte ↓	Bit 7	Bit 6	Bit 5	Bit 4	Bit 3	Bit 2	Bit 1	Bit 0
8...9	Channel parameters for DI0							
8	Reserved[2)]		Invert input signal[1]	HW enable with next digital input[1]	Operating mode of the digital input:			
					0000_B: Timer-DI			
					0001_B: Reserved			
					0010_B: Oversampling			
					0011_B: Counter			
					0100_B: Incremental encoder (A, B phase-shifted)			
					0101 to 1111_B: Reserved			
9	Reserved[2)]				Input delay / Filter frequency:			
					0000_B: None			
					0001_B: 0.05 ms			
					0010_B: 0.1 ms			
					0011_B: 0.4 ms			
					0100_B: 0.8 ms			
					0101 to 1110_B: Reserved			
					1111_B: 50 kHz			
8...9	Channel parameters for DQ0							
8	High-speed output (0.1 A)[1]	Substitute value	Invert out-put signal[1]	HW enable with next digital input[1]	Operating mode of the digital output:			
					0000 to 0111_B: Reserved			
					1000_B: Timer DQ			
					1001_B: Reserved			
					1010_B: Oversampling			
					1011_B: PWM			
					1100 to 1111_B: Reserved			
9	Reserved[2)]							
10...11	Channel parameters for DI1							
10	Reserved[2)]		Invert input signal[1]	Reserved[2)]	Operating mode of the digital input:			
					0000_B: Timer-DI			
					0001_B: Reserved			
					0010_B: Oversampling			
					0011 to 1111_B: Reserved			
11	Reserved[2)]				Input delay:			
					0000_B: None			
					0001_B: 0.05 ms			
					0010_B: 0.1 ms			
					0011_B: 0.4 ms			
					0100_B: 0.8 ms			
					0101 to 1111_B: Reserved			

Bit → / Byte ↓	Bit 7	Bit 6	Bit 5	Bit 4	Bit 3	Bit 2	Bit 1	Bit 0
10...11	**Channel parameters for DQ1**							
10	High-speed output (0.1 A)[1]	Substitute value	Invert output signal[1]	Reserved[2]	Operating mode of the digital output:			
					0000 to 0111_B: Reserved			
					1000_B: Timer DQ			
					1001_B: Reserved			
					1010_B: Oversampling			
					1011_B: PWM			
					1100 to 1111_B: Reserved			
11	Reserved[2]							
12...13	**Channel parameters for DI2/DQ2:** See bytes 8 and 9							
14...15	**Channel parameters for DI3/DQ3:** See bytes 10 and 11							
16...17	**Channel parameters for DI4/DQ4:** See bytes 8 and 9							
18...19	**Channel parameters for DI5/DQ5:** See bytes 10 and 11							
20...21	**Channel parameters for DI6/DQ6:** See bytes 8 and 9							
22...23	**Channel parameters for DI7/DQ7:** See bytes 10 and 11							
24...25	**Channel parameters for DQ8:** See bytes 10 and 11							
26...27	**Channel parameters for DQ9:** See bytes 10 and 11							
28...29	**Channel parameters for DQ10:** See bytes 10 and 11							
30...31	**Channel parameters for DQ11:** See bytes 10 and 11							
32...33	**Channel parameters for DQ12:** See bytes 10 and 11							
34...35	**Channel parameters for DQ13:** See bytes 10 and 11							
36...37	**Channel parameters for DQ14:** See bytes 10 and 11							
38...39	**Channel parameters for DQ15:** See bytes 10 and 11							

1) You enable a specific parameter by setting the corresponding bit to 1.

2) Must be set to 0.

Counting

The following table shows the properties for counting that you can set in the channel parameters of the respective digital input:

Table B- 2 Setting options for counting

Operating mode for counting	Usable digital inputs	"Invert input signal" set to...	
		0	1
Counter (0011_B)	• DI0 • DI1 • DI2	Counting of **rising** edges	Counting of **falling** edges
Incremental encoder (A, B phase-shifted) (0100_B)	• DI0 with DI1 (all bits of the channel parameters for DI1 are set to 0) • DI2 with DI3 (all bits of the channel parameters for DI3 are set to 0) • DI4 with DI5 (all bits of the channel parameters for DI5 are set to 0) • DI6 with DI7 (all bits of the channel parameters for DI7 are set to 0)	Counting direction **not inverted**	Counting direction **inverted**

Hardware enable (HW enable)

You can use a hardware enable by an enable input for the operating modes "Timer DI" and "Timer DQ". You set a hardware enable with bit 4 of the respective channel parameter.

You can set a hardware enable for the following inputs and outputs:

Table B- 3 Hardware enable options

Digital input / digital output	Hardware enable by digital input...
DI0 or DQ0	DI1
DI2 or DQ2	DI3
DI4 or DQ4	DI5
DI6 or DQ6	DI7

You set a hardware enable with the channel parameters of the enable input "Operating mode" and "Invert" signal input:

Table B- 4 Setting options for enable input

Operating mode	"Invert input signal" set to...	
	0	1
Oversampling (0010_B)	Hardware enable by **High** level	Hardware enable by **Low** level
Timer DI (0000_B)	When using the SIMOTION control system only	

Input filter

The following overview shows the input filters that can be set for specific operating modes of a digital input:

Table B- 5 Setting options for the input filter

Operating mode of the digital input	Type of input filter	Assignable values
• Timer DI (0000_B) • Oversampling (0010_B)	Input delay	• None • 0.05 ms • 0.1 ms • 0.4 ms • 0.8 ms
• Counter (0011_B) • Incremental encoder (A, B phase-shifted) (0100_B)	Filter frequency	50 kHz (cannot be changed)

Open Source Software

C

For Resellers: In order to avoid infringements of the license conditions by the reseller or the buyer, the instructions and license conditions provided here must be passed on to the buyers.

License Conditions and Disclaimers for Open Source Software and other licensing software

The Open Source software listed below is used in unmodified form or in a form we have modified as well as other license software listed below in the "digital modules, analog modules, technology modules, communication modules and power supply modules of the SIMATIC S7-1500, ET 200MP" Copyright Siemens AG, 2013-2014 (hereinafter referred to as "Product").

Liability for Open Source Software

The Open Source software is provided free of charge. We are liable for the Product including the Open Source software contained in it pursuant to the license conditions applicable to the Product. We explicitly reject any liability for the use of Open Source software beyond the program sequence intended for the Product. Furthermore, any liability for defects resulting from modifications to the Open Source software is excluded.

We do not provide any technical support for the Product if it has been modified.

Please read the license conditions and copyright information of Open Source software as well as other licensing software:

Component	Open Source Software[Yes/No]	Acknowledgements	Copyright Information / File
Dinkumware C/C++ Library - 5.01	NO		LICENSE AND COPYRIGHT INFORMATION FOR COMPONENT DINKUMWARE C/C++ LIBRARY - 5.01
GNU GCC libstdc++ / libsupc++ - 4.4.1	YES		LICENSE AND COPYRIGHT INFORMATION FOR COMPONENT GNU GCC LIBSTDC++ / LIBSUPC++ - 4.4.1
libgcc - 4.4.1	YES		LICENSE AND COPYRIGHT INFORMATION FOR COMPONENT LIBGCC - 4.4.1

Commercial Software: Dinkumware C/C++ Library - 5.01

Enclosed you'll find the license conditions and copyright notices applicable for Commercial Software Dinkumware C/C++ Library - 5.01

License conditions:

1 Copyright (c) 1991-1999 Unicode, Inc. All Rights reserved. This file is provided as-is by Unicode, Inc. (The Unicode Consortium).No claims are made as to fitness for any particular purpose. Nowarranties of any kind are expressed or implied. The recipientagrees to determine applicability of information provided. If thisfile has been provided on optical media by Unicode, Inc., the soleremedy for any claim will be exchange of defective media within 90days of receipt.Unicode, Inc. hereby grants the right to freely use the informationsupplied in this file in the creation of products supporting theUnicode Standard, and to make copies of this file in any form forinternal or external distribution as long as this notice remainsattached.

2 © Copyright William E. Kempf 2001 Permission to use, copy, modify, distribute and sell this software and its documentation for any purpose is hereby granted without fee, provided that the above copyright notice appear in all copies and that both that copyright notice and this permission notice appear in supporting documentation. William E. Kempf makes no representations about the suitability of this software for any purpose. It is provided "as is" without express or implied warranty.

3 Copyright © 1994 Hewlett-Packard CompanyPermission to use, copy, modify, distribute and sell this software and its documentation for any purpose is hereby granted without fee, provided that the above copyright notice appear in all copies and that both that copyright notice and this permission notice appear in supporting documentation. Hewlett-Packard Company makes no representations about the suitability of this software for any purpose. It is provided ``as is'' without express or implied warranty.

Copyrights:

copyright 1992 - 2006 by p.j. plauger and jim brodie. all rights reserved.

copyright 1992-2006 by p.j. plauger. all rights reserved.ip

copyright 1992-2006 by p.j. plauger. portions derived from work copyright 1994 by hewlettpackard company. all rights reserved

Copyright 1992-2006 by dinkumware, ltd. all rights reserved

copyright 1992-2006 by dinkumware, ltd. portions derived from work copyright 2001 by william e. kempf. all rights reserved

copyright 1994 hewlettpackard company

copyright 1994 by hewlettpackard company

copyright william e. kempf 2001

copyright 1989-2006 by p.j. plauger. all rights reserved

copyright (c) by p.j. plauger. all rights reserved.

copyright (c) by dinkumware, ltd. all rights reserved.

copyright (c) unicode, inc. all rights reserved.

(c) copyright william e. kempf 2001

copyright (c) hewlettpackard company

copyright (c) by p.j. plauger. all rights reserved.

copyright 2006 by dinkumware, ltd.

copyright (c) by p.j. plauger, licensed by dinkumware, ltd. all rights reserved.

the dinkum cec++ library reference is copyright (c) by p.j. plauger. this code is protected by copyright. all rights reserved.

the dinkum cc++ library reference is copyright (c) by p.j. plauger. this code is protected by copyright. all rights reserved.

dinkum compleat library, vc++ package (vc++ compilers only) the dinkum compleat library and the dinkum compleat library reference are copyright (c) by p.j. plauger. all rights reserved.

Open Source Software: GNU GCC libstdc++ / libsupc++ - 4.4.1

Enclosed you'll find the license conditions and copyright notices applicable for Open Source Software GNU GCC libstdc++ / libsupc++ - 4.4.1

License conditions:

1 License

There are two licenses affecting GNU libstdc++: one for the code, and one for the documentation.

There is a license section in the FAQ regarding common questions. If you have more questions, ask the FSF or the gcc mailing list.
The Code: GPL

The source code is distributed under the GNU General Public License version 3, with the addition under section 7 of an exception described in the “GCC Runtime Library Exception, version 3.1” as follows (or see the file COPYING.RUNTIME):

GCC RUNTIME LIBRARY EXCEPTION

Version 3.1, 31 March 2009

Copyright (C) 2009 Free Software Foundation, Inc.

Everyone is permitted to copy and distribute verbatim copies of this license document, but changing it is not allowed.

This GCC Runtime Library Exception ("Exception") is an additional permission under section 7 of the GNU General Public License, version 3 ("GPLv3"). It applies to a given file (the "Runtime Library") that bears a notice placed by the copyright holder of the file stating that the file is governed by GPLv3 along with this Exception.

When you use GCC to compile a program, GCC may combine portions of certain GCC header files and runtime libraries with the compiled program. The purpose of this Exception is to allow compilation of non-GPL (including proprietary) programs to use, in this way, the header files and runtime libraries covered by this Exception.

0. Definitions.

A file is an "Independent Module" if it either requires the Runtime Library for execution after a Compilation Process, or makes use of an interface provided by the Runtime Library, but is not otherwise based on the Runtime Library.

"GCC" means a version of the GNU Compiler Collection, with or without modifications, governed by version 3 (or a specified later version) of the GNU General Public License (GPL) with the option of using any subsequent versions published by the FSF.

"GPL-compatible Software" is software whose conditions of propagation, modification and use would permit combination with GCC in accord with the license of GCC.

"Target Code" refers to output from any compiler for a real or virtual target processor architecture, in executable form or suitable for input to an assembler, loader, linker and/or execution phase. Notwithstanding that, Target Code does not include data in any format that is used as a compiler intermediate representation, or used for producing a compiler intermediate representation.

The "Compilation Process" transforms code entirely represented in non-intermediate languages designed for human-written code, and/or in Java Virtual Machine byte code, into Target Code. Thus, for example, use of source code generators and preprocessors need not be considered part of the Compilation Process, since the Compilation Process can be understood as starting with the output of the generators or preprocessors.

A Compilation Process is "Eligible" if it is done using GCC, alone or with other GPL-compatible software, or if it is done without using any work based on GCC. For example, using non-GPL-compatible Software to optimize any GCC intermediate representations would not qualify as an Eligible Compilation Process.

1. Grant of Additional Permission.

You have permission to propagate a work of Target Code formed by combining the Runtime Library with Independent Modules, even if such propagation would otherwise violate the terms of GPLv3, provided that all Target Code was generated by Eligible Compilation Processes. You may then convey such a combination under terms of your choice, consistent with the licensing of the Independent Modules.

2. No Weakening of GCC Copyleft.

The availability of this Exception does not imply any general presumption that third-party software is unaffected by the copyleft requirements of the license of GCC.

Hopefully that text is self-explanatory. If it isn't, you need to speak to your lawyer, or the Free Software Foundation.
The Documentation: GPL, FDL

The documentation shipped with the library and made available over the web, excluding the pages generated from source comments, are copyrighted by the Free Software Foundation, and placed under the GNU Free Documentation License version 1.2. There are no Front-Cover Texts, no Back-Cover Texts, and no Invariant Sections.

For documentation generated by doxygen or other automated tools via processing source code comments and markup, the original source code license applies to the generated files. Thus, the doxygen documents are licensed GPL.

If you plan on making copies of the documentation, please let us know. We can probably offer suggestions.

2 This library is free
software; you can redistribute it and/or modify it under the
terms of the GNU General Public License as published by the
Free Software Foundation; either version 3, or (at your option)
any later version.
This library is distributed in the hope that it will be useful,
but WITHOUT ANY WARRANTY; without even the implied warranty of
MERCHANTABILITY or FITNESS FOR A PARTICULAR PURPOSE. See the
GNU General Public License for more details.
Under Section 7 of GPL version 3, you are granted additional
permissions described in the GCC Runtime Library Exception, version
3.1, as published by the Free Software Foundation.
You should have received a copy of the GNU General Public License and
a copy of the GCC Runtime Library Exception along with this program;
see the files COPYING3 and COPYING.RUNTIME respectively. If not, see
<http://www.gnu.org/licenses/>.

3 // This file is part of the GNU ISO C++ Library. This library is free
// software; you can redistribute it and/or modify it under the
// terms of the GNU General Public License as published by the
// Free Software Foundation; either version 3, or (at your option)
// any later version.
// This library is distributed in the hope that it will be useful,
// but WITHOUT ANY WARRANTY; without even the implied warranty of
// MERCHANTABILITY or FITNESS FOR A PARTICULAR PURPOSE. See the
// GNU General Public License for more details.
// Under Section 7 of GPL version 3, you are granted additional
// permissions described in the GCC Runtime Library Exception, version
// 3.1, as published by the Free Software Foundation.
// You should have received a copy of the GNU General Public License and
// a copy of the GCC Runtime Library Exception along with this program;
// see the files COPYING3 and COPYING.RUNTIME respectively. If not, see
// <http://www.gnu.org/licenses/>.
// (C) Copyright Jeremy Siek 2000. Permission to copy, use, modify,
// sell and distribute this software is granted provided this
// copyright notice appears in all copies. This software is provided
// "as is" without express or implied warranty, and with no claim as
// to its suitability for any purpose.

4 // This file is part of the GNU ISO C++ Library. This library is free
// software; you can redistribute it and/or modify it under the
// terms of the GNU General Public License as published by the
// Free Software Foundation; either version 3, or (at your option)
// any later version.
// This library is distributed in the hope that it will be useful,
// but WITHOUT ANY WARRANTY; without even the implied warranty of
// MERCHANTABILITY or FITNESS FOR A PARTICULAR PURPOSE. See the
// GNU General Public License for more details.
// Under Section 7 of GPL version 3, you are granted additional
// permissions described in the GCC Runtime Library Exception, version
// 3.1, as published by the, 2009 Free Software Foundation.
// You should have received a copy of the GNU General Public License and
// a copy of the GCC Runtime Library Exception along with this program;
// see the files COPYING3 and COPYING.RUNTIME respectively. If not, see
// <http://www.gnu.org/licenses/>.
/*
*
* Copyright (c) 1994
* Hewlett-Packard Company
*
* Permission to use, copy, modify, distribute and sell this software
* and its documentation for any purpose is hereby granted without fee,
* provided that the above copyright notice appear in all copies and
* that both that copyright notice and this permission notice appear
* in supporting documentation. Hewlett-Packard Company makes no
* representations about the suitability of this software for any
* purpose. It is provided "as is" without express or implied warranty.
*
* Copyright (c) 1996,1997
* Silicon Graphics
*
* Permission to use, copy, modify, distribute and sell this software
* and its documentation for any purpose is hereby granted without fee,
* provided that the above copyright notice appear in all copies and
* that both that copyright notice and this permission notice appear
* in supporting documentation. Silicon Graphics makes no
* representations about the suitability of this software for any
* purpose. It is provided "as is" without express or implied warranty.

5 // This file is part of the GNU ISO C++ Library. This library is free
// software; you can redistribute it and/or modify it under the
// terms of the GNU General Public License as published by the
// Free Software Foundation; either version 3, or (at your option)
// any later version.
// This library is distributed in the hope that it will be useful,
// but WITHOUT ANY WARRANTY; without even the implied warranty of
// MERCHANTABILITY or FITNESS FOR A PARTICULAR PURPOSE. See the
// GNU General Public License for more details.
// Under Section 7 of GPL version 3, you are granted additional
// permissions described in the GCC Runtime Library Exception, version
// 3.1, as published by the Free Software Foundation.
// You should have received a copy of the GNU General Public License and
// a copy of the GCC Runtime Library Exception along with this program;
// see the files COPYING3 and COPYING.RUNTIME respectively. If not, see
// <http://www.gnu.org/licenses/>.
/*
*
* Copyright (c) 1996,1997
* Silicon Graphics Computer Systems, Inc.
*
* Permission to use, copy, modify, distribute and sell this software
* and its documentation for any purpose is hereby granted without fee,
* provided that the above copyright notice appear in all copies and
* that both that copyright notice and this permission notice appear
* in supporting documentation. Silicon Graphics makes no
* representations about the suitability of this software for any
* purpose. It is provided "as is" without express or implied warranty.
*
*
* Copyright (c) 1994
* Hewlett-Packard Company
*
* Permission to use, copy, modify, distribute and sell this software
* and its documentation for any purpose is hereby granted without fee,
* provided that the above copyright notice appear in all copies and
* that both that copyright notice and this permission notice appear
* in supporting documentation. Hewlett-Packard Company makes no
* representations about the suitability of this software for any
* purpose. It is provided "as is" without express or implied warranty.

6 This library is free
// software; you can redistribute it and/or modify it under the terms
// of the GNU General Public License as published by the Free Software
// Foundation; either version 3, or (at your option) any later
// version.
// This library is distributed in the hope that it will be useful, but
// WITHOUT ANY WARRANTY; without even the implied warranty of
// MERCHANTABILITY or FITNESS FOR A PARTICULAR PURPOSE. See the GNU
// General Public License for more details.
// Under Section 7 of GPL version 3, you are granted additional
// permissions described in the GCC Runtime Library Exception, version
// 3.1, as published by the Free Software Foundation.
// You should have received a copy of the GNU General Public License and
// a copy of the GCC Runtime Library Exception along with this program;
// see the files COPYING3 and COPYING.RUNTIME respectively. If not, see
// <http://www.gnu.org/licenses/>.
// Copyright (C) 2004 Ami Tavory and Vladimir Dreizin, IBM-HRL.
// Permission to use, copy, modify, sell, and distribute this software
// is hereby granted without fee, provided that the above copyright
// notice appears in all copies, and that both that copyright notice
// and this permission notice appear in supporting documentation. None
// of the above authors, nor IBM Haifa Research Laboratories, make any
// representation about the suitability of this software for any
// purpose. It is provided "as is" without express or implied
// warranty.
/**
* @file splay_tree_.hpp
* Contains an implementation class for splay_tree_.
*/
/*
* This implementation uses an idea from the SGI STL (using a "header" node
* which is needed for efficient iteration). Following is the SGI STL
* copyright.
*
* Copyright (c) 1996,1997
* Silicon Graphics Computer Systems, Inc.
*
* Permission to use, copy, modify, distribute and sell this software
* and its documentation for any purpose is hereby granted without fee,
* provided that the above copyright notice appear in all copies and
* that both that copyright notice and this permission notice appear
* in supporting documentation. Silicon Graphics makes no
* representations about the suitability of this software for any
* purpose. It is provided "as is" without express or implied warranty.
*
*
* Copyright (c) 1994
* Hewlett-Packard Company
*

```
* Permission to use, copy, modify, distribute and sell this software
* and its documentation for any purpose is hereby granted without fee,
* provided that the above copyright notice appear in all copies and
* that both that copyright notice and this permission notice appear
* in supporting documentation. Hewlett-Packard Company makes no
* representations about the suitability of this software for any
* purpose. It is provided "as is" without express or implied warranty.
```

7 This library is free

```
// software; you can redistribute it and/or modify it under the
// terms of the GNU General Public License as published by the
// Free Software Foundation; either version 3, or (at your option)
// any later version.
// This library is distributed in the hope that it will be useful,
// but WITHOUT ANY WARRANTY; without even the implied warranty of
// MERCHANTABILITY or FITNESS FOR A PARTICULAR PURPOSE. See the
// GNU General Public License for more details.
// Under Section 7 of GPL version 3, you are granted additional
// permissions described in the GCC Runtime Library Exception, version
// 3.1, as published by the Free Software Foundation.
// You should have received a copy of the GNU General Public License and
// a copy of the GCC Runtime Library Exception along with this program;
// see the files COPYING3 and COPYING.RUNTIME respectively. If not, see
// <http://www.gnu.org/licenses/>.
/*
* Copyright (c) 1997
* Silicon Graphics Computer Systems, Inc.
*
* Permission to use, copy, modify, distribute and sell this software
* and its documentation for any purpose is hereby granted without fee,
* provided that the above copyright notice appear in all copies and
* that both that copyright notice and this permission notice appear
* in supporting documentation. Silicon Graphics makes no
* representations about the suitability of this software for any
* purpose. It is provided "as is" without express or implied warranty.
```

8 Verbatim copying and distribution of this entire article are permitted worldwide, without royalty, in any medium, provided this notice is preserved.

9 GNU GENERAL PUBLIC LICENSE
Version 3, 29 June 2007

Copyright (C) 2007 Free Software Foundation, Inc. <http://fsf.org/>
Everyone is permitted to copy and distribute verbatim copies
of this license document, but changing it is not allowed.

Preamble

The GNU General Public License is a free, copyleft license for
software and other kinds of works.

The licenses for most software and other practical works are designed
to take away your freedom to share and change the works. By contrast,
the GNU General Public License is intended to guarantee your freedom to
share and change all versions of a program--to make sure it remains free
software for all its users. We, the Free Software Foundation, use the
GNU General Public License for most of our software; it applies also to
any other work released this way by its authors. You can apply it to
your programs, too.

When we speak of free software, we are referring to freedom, not
price. Our General Public Licenses are designed to make sure that you
have the freedom to distribute copies of free software (and charge for
them if you wish), that you receive source code or can get it if you
want it, that you can change the software or use pieces of it in new
free programs, and that you know you can do these things.

To protect your rights, we need to prevent others from denying you
these rights or asking you to surrender the rights. Therefore, you have
certain responsibilities if you distribute copies of the software, or if
you modify it: responsibilities to respect the freedom of others.

For example, if you distribute copies of such a program, whether
gratis or for a fee, you must pass on to the recipients the same
freedoms that you received. You must make sure that they, too, receive
or can get the source code. And you must show them these terms so they
know their rights.

Developers that use the GNU GPL protect your rights with two steps:
(1) assert copyright on the software, and (2) offer you this License
giving you legal permission to copy, distribute and/or modify it.

For the developers' and authors' protection, the GPL clearly explains
that there is no warranty for this free software. For both users' and
authors' sake, the GPL requires that modified versions be marked as
changed, so that their problems will not be attributed erroneously to
authors of previous versions.

Some devices are designed to deny users access to install or run modified versions of the software inside them, although the manufacturer can do so. This is fundamentally incompatible with the aim of protecting users' freedom to change the software. The systematic pattern of such abuse occurs in the area of products for individuals to use, which is precisely where it is most unacceptable. Therefore, we have designed this version of the GPL to prohibit the practice for those products. If such problems arise substantially in other domains, we stand ready to extend this provision to those domains in future versions of the GPL, as needed to protect the freedom of users.

Finally, every program is threatened constantly by software patents. States should not allow patents to restrict development and use of software on general-purpose computers, but in those that do, we wish to avoid the special danger that patents applied to a free program could make it effectively proprietary. To prevent this, the GPL assures that patents cannot be used to render the program non-free.

The precise terms and conditions for copying, distribution and modification follow.

TERMS AND CONDITIONS

0. Definitions.

"This License" refers to version 3 of the GNU General Public License.

"Copyright" also means copyright-like laws that apply to other kinds of works, such as semiconductor masks.

"The Program" refers to any copyrightable work licensed under this License. Each licensee is addressed as "you". "Licensees" and "recipients" may be individuals or organizations.

To "modify" a work means to copy from or adapt all or part of the work in a fashion requiring copyright permission, other than the making of an exact copy. The resulting work is called a "modified version" of the earlier work or a work "based on" the earlier work.

A "covered work" means either the unmodified Program or a work based on the Program.

To "propagate" a work means to do anything with it that, without permission, would make you directly or secondarily liable for infringement under applicable copyright law, except executing it on a computer or modifying a private copy. Propagation includes copying, distribution (with or without modification), making available to the public, and in some countries other activities as well.

To "convey" a work means any kind of propagation that enables other parties to make or receive copies. Mere interaction with a user through a computer network, with no transfer of a copy, is not conveying.

An interactive user interface displays "Appropriate Legal Notices" to the extent that it includes a convenient and prominently visible feature that (1) displays an appropriate copyright notice, and (2) tells the user that there is no warranty for the work (except to the extent that warranties are provided), that licensees may convey the work under this License, and how to view a copy of this License. If the interface presents a list of user commands or options, such as a menu, a prominent item in the list meets this criterion.

1. Source Code.

The "source code" for a work means the preferred form of the work for making modifications to it. "Object code" means any non-source form of a work.

A "Standard Interface" means an interface that either is an official standard defined by a recognized standards body, or, in the case of interfaces specified for a particular programming language, one that is widely used among developers working in that language.

The "System Libraries" of an executable work include anything, other than the work as a whole, that (a) is included in the normal form of packaging a Major Component, but which is not part of that Major Component, and (b) serves only to enable use of the work with that Major Component, or to implement a Standard Interface for which an implementation is available to the public in source code form. A "Major Component", in this context, means a major essential component (kernel, window system, and so on) of the specific operating system (if any) on which the executable work runs, or a compiler used to produce the work, or an object code interpreter used to run it.

The "Corresponding Source" for a work in object code form means all the source code needed to generate, install, and (for an executable work) run the object code and to modify the work, including scripts to control those activities. However, it does not include the work's System Libraries, or general-purpose tools or generally available free programs which are used unmodified in performing those activities but which are not part of the work. For example, Corresponding Source includes interface definition files associated with source files for the work, and the source code for shared libraries and dynamically linked subprograms that the work is specifically designed to require, such as by intimate data communication or control flow between those subprograms and other parts of the work.

The Corresponding Source need not include anything that users can regenerate automatically from other parts of the Corresponding Source.

The Corresponding Source for a work in source code form is that same work.

2. Basic Permissions.

All rights granted under this License are granted for the term of copyright on the Program, and are irrevocable provided the stated conditions are met. This License explicitly affirms your unlimited permission to run the unmodified Program. The output from running a covered work is covered by this License only if the output, given its content, constitutes a covered work. This License acknowledges your rights of fair use or other equivalent, as provided by copyright law.

You may make, run and propagate covered works that you do not convey, without conditions so long as your license otherwise remains in force. You may convey covered works to others for the sole purpose of having them make modifications exclusively for you, or provide you with facilities for running those works, provided that you comply with the terms of this License in conveying all material for which you do not control copyright. Those thus making or running the covered works for you must do so exclusively on your behalf, under your direction and control, on terms that prohibit them from making any copies of your copyrighted material outside their relationship with you.

Conveying under any other circumstances is permitted solely under the conditions stated below. Sublicensing is not allowed; section 10 makes it unnecessary.

3. Protecting Users' Legal Rights From Anti-Circumvention Law.

No covered work shall be deemed part of an effective technological measure under any applicable law fulfilling obligations under article 11 of the WIPO copyright treaty adopted on 20 December 1996, or similar laws prohibiting or restricting circumvention of such measures.

When you convey a covered work, you waive any legal power to forbid circumvention of technological measures to the extent such circumvention is effected by exercising rights under this License with respect to the covered work, and you disclaim any intention to limit operation or modification of the work as a means of enforcing, against the work's users, your or third parties' legal rights to forbid circumvention of technological measures.

4. Conveying Verbatim Copies.

You may convey verbatim copies of the Program's source code as you receive it, in any medium, provided that you conspicuously and appropriately publish on each copy an appropriate copyright notice; keep intact all notices stating that this License and any non-permissive terms added in accord with section 7 apply to the code; keep intact all notices of the absence of any warranty; and give all recipients a copy of this License along with the Program.

You may charge any price or no price for each copy that you convey, and you may offer support or warranty protection for a fee.

5. Conveying Modified Source Versions.

You may convey a work based on the Program, or the modifications to produce it from the Program, in the form of source code under the terms of section 4, provided that you also meet all of these conditions:

a) The work must carry prominent notices stating that you modified it, and giving a relevant date.

b) The work must carry prominent notices stating that it is released under this License and any conditions added under section 7. This requirement modifies the requirement in section 4 to "keep intact all notices".

c) You must license the entire work, as a whole, under this License to anyone who comes into possession of a copy. This License will therefore apply, along with any applicable section 7 additional terms, to the whole of the work, and all its parts, regardless of how they are packaged. This License gives no permission to license the work in any other way, but it does not invalidate such permission if you have separately received it.

d) If the work has interactive user interfaces, each must display Appropriate Legal Notices; however, if the Program has interactive interfaces that do not display Appropriate Legal Notices, your work need not make them do so.

A compilation of a covered work with other separate and independent works, which are not by their nature extensions of the covered work, and which are not combined with it such as to form a larger program, in or on a volume of a storage or distribution medium, is called an "aggregate" if the compilation and its resulting copyright are not used to limit the access or legal rights of the compilation's users beyond what the individual works permit. Inclusion of a covered work in an aggregate does not cause this License to apply to the other parts of the aggregate.

6. Conveying Non-Source Forms.

You may convey a covered work in object code form under the terms of sections 4 and 5, provided that you also convey the machine-readable Corresponding Source under the terms of this License, in one of these ways:

a) Convey the object code in, or embodied in, a physical product (including a physical distribution medium), accompanied by the Corresponding Source fixed on a durable physical medium customarily used for software interchange.

b) Convey the object code in, or embodied in, a physical product (including a physical distribution medium), accompanied by a written offer, valid for at least three years and valid for as long as you offer spare parts or customer support for that product model, to give anyone who possesses the object code either (1) a copy of the Corresponding Source for all the software in the product that is covered by this License, on a durable physical medium customarily used for software interchange, for a price no more than your reasonable cost of physically performing this conveying of source, or (2) access to copy the Corresponding Source from a network server at no charge.

c) Convey individual copies of the object code with a copy of the written offer to provide the Corresponding Source. This alternative is allowed only occasionally and noncommercially, and only if you received the object code with such an offer, in accord with subsection 6b.

d) Convey the object code by offering access from a designated place (gratis or for a charge), and offer equivalent access to the Corresponding Source in the same way through the same place at no further charge. You need not require recipients to copy the Corresponding Source along with the object code. If the place to copy the object code is a network server, the Corresponding Source may be on a different server (operated by you or a third party) that supports equivalent copying facilities, provided you maintain clear directions next to the object code saying where to find the Corresponding Source. Regardless of what server hosts the Corresponding Source, you remain obligated to ensure that it is available for as long as needed to satisfy these requirements.

e) Convey the object code using peer-to-peer transmission, provided you inform other peers where the object code and Corresponding Source of the work are being offered to the general public at no charge under subsection 6d.

A separable portion of the object code, whose source code is excluded from the Corresponding Source as a System Library, need not be included in conveying the object code work.

A "User Product" is either (1) a "consumer product", which means any tangible personal property which is normally used for personal, family, or household purposes, or (2) anything designed or sold for incorporation into a dwelling. In determining whether a product is a consumer product, doubtful cases shall be resolved in favor of coverage. For a particular product received by a particular user, "normally used" refers to a typical or common use of that class of product, regardless of the status of the particular user or of the way in which the particular user actually uses, or expects or is expected to use, the product. A product is a consumer product regardless of whether the product has substantial commercial, industrial or non-consumer uses, unless such uses represent the only significant mode of use of the product.

"Installation Information" for a User Product means any methods, procedures, authorization keys, or other information required to install and execute modified versions of a covered work in that User Product from a modified version of its Corresponding Source. The information must suffice to ensure that the continued functioning of the modified object code is in no case prevented or interfered with solely because modification has been made.

If you convey an object code work under this section in, or with, or specifically for use in, a User Product, and the conveying occurs as part of a transaction in which the right of possession and use of the User Product is transferred to the recipient in perpetuity or for a fixed term (regardless of how the transaction is characterized), the Corresponding Source conveyed under this section must be accompanied by the Installation Information. But this requirement does not apply if neither you nor any third party retains the ability to install modified object code on the User Product (for example, the work has been installed in ROM).

The requirement to provide Installation Information does not include a requirement to continue to provide support service, warranty, or updates for a work that has been modified or installed by the recipient, or for the User Product in which it has been modified or installed. Access to a network may be denied when the modification itself materially and adversely affects the operation of the network or violates the rules and protocols for communication across the network.

Corresponding Source conveyed, and Installation Information provided, in accord with this section must be in a format that is publicly documented (and with an implementation available to the public in source code form), and must require no special password or key for unpacking, reading or copying.

7. Additional Terms.

"Additional permissions" are terms that supplement the terms of this License by making exceptions from one or more of its conditions. Additional permissions that are applicable to the entire Program shall be treated as though they were included in this License, to the extent that they are valid under applicable law. If additional permissions apply only to part of the Program, that part may be used separately under those permissions, but the entire Program remains governed by this License without regard to the additional permissions.

When you convey a copy of a covered work, you may at your option remove any additional permissions from that copy, or from any part of it. (Additional permissions may be written to require their own removal in certain cases when you modify the work.) You may place additional permissions on material, added by you to a covered work, for which you have or can give appropriate copyright permission.

Notwithstanding any other provision of this License, for material you add to a covered work, you may (if authorized by the copyright holders of that material) supplement the terms of this License with terms:

a) Disclaiming warranty or limiting liability differently from the terms of sections 15 and 16 of this License; or

b) Requiring preservation of specified reasonable legal notices or author attributions in that material or in the Appropriate Legal Notices displayed by works containing it; or

c) Prohibiting misrepresentation of the origin of that material, or requiring that modified versions of such material be marked in reasonable ways as different from the original version; or

d) Limiting the use for publicity purposes of names of licensors or authors of the material; or

e) Declining to grant rights under trademark law for use of some trade names, trademarks, or service marks; or

f) Requiring indemnification of licensors and authors of that material by anyone who conveys the material (or modified versions of it) with contractual assumptions of liability to the recipient, for any liability that these contractual assumptions directly impose on those licensors and authors.

All other non-permissive additional terms are considered "further restrictions" within the meaning of section 10. If the Program as you received it, or any part of it, contains a notice stating that it is governed by this License along with a term that is a further restriction, you may remove that term. If a license document contains a further restriction but permits relicensing or conveying under this License, you may add to a covered work material governed by the terms of that license document, provided that the further restriction does not survive such relicensing or conveying.

If you add terms to a covered work in accord with this section, you must place, in the relevant source files, a statement of the additional terms that apply to those files, or a notice indicating where to find the applicable terms.

Additional terms, permissive or non-permissive, may be stated in the form of a separately written license, or stated as exceptions; the above requirements apply either way.

8. Termination.

You may not propagate or modify a covered work except as expressly provided under this License. Any attempt otherwise to propagate or modify it is void, and will automatically terminate your rights under this License (including any patent licenses granted under the third paragraph of section 11).

However, if you cease all violation of this License, then your license from a particular copyright holder is reinstated (a) provisionally, unless and until the copyright holder explicitly and finally terminates your license, and (b) permanently, if the copyright holder fails to notify you of the violation by some reasonable means prior to 60 days after the cessation.

Moreover, your license from a particular copyright holder is reinstated permanently if the copyright holder notifies you of the violation by some reasonable means, this is the first time you have received notice of violation of this License (for any work) from that copyright holder, and you cure the violation prior to 30 days after your receipt of the notice.

Termination of your rights under this section does not terminate the licenses of parties who have received copies or rights from you under this License. If your rights have been terminated and not permanently reinstated, you do not qualify to receive new licenses for the same material under section 10.

9. Acceptance Not Required for Having Copies.

You are not required to accept this License in order to receive or run a copy of the Program. Ancillary propagation of a covered work occurring solely as a consequence of using peer-to-peer transmission to receive a copy likewise does not require acceptance. However, nothing other than this License grants you permission to propagate or modify any covered work. These actions infringe copyright if you do not accept this License. Therefore, by modifying or propagating a covered work, you indicate your acceptance of this License to do so.

10. Automatic Licensing of Downstream Recipients.

Each time you convey a covered work, the recipient automatically receives a license from the original licensors, to run, modify and propagate that work, subject to this License. You are not responsible for enforcing compliance by third parties with this License.

An "entity transaction" is a transaction transferring control of an organization, or substantially all assets of one, or subdividing an organization, or merging organizations. If propagation of a covered work results from an entity transaction, each party to that transaction who receives a copy of the work also receives whatever licenses to the work the party's predecessor in interest had or could give under the previous paragraph, plus a right to possession of the Corresponding Source of the work from the predecessor in interest, if the predecessor has it or can get it with reasonable efforts.

You may not impose any further restrictions on the exercise of the rights granted or affirmed under this License. For example, you may not impose a license fee, royalty, or other charge for exercise of rights granted under this License, and you may not initiate litigation (including a cross-claim or counterclaim in a lawsuit) alleging that any patent claim is infringed by making, using, selling, offering for sale, or importing the Program or any portion of it.

11. Patents.

A "contributor" is a copyright holder who authorizes use under this License of the Program or a work on which the Program is based. The work thus licensed is called the contributor's "contributor version".

A contributor's "essential patent claims" are all patent claims owned or controlled by the contributor, whether already acquired or hereafter acquired, that would be infringed by some manner, permitted by this License, of making, using, or selling its contributor version, but do not include claims that would be infringed only as a consequence of further modification of the contributor version. For purposes of this definition, "control" includes the right to grant patent sublicenses in a manner consistent with the requirements of this License.

Each contributor grants you a non-exclusive, worldwide, royalty-free patent license under the contributor's essential patent claims, to make, use, sell, offer for sale, import and otherwise run, modify and propagate the contents of its contributor version.

In the following three paragraphs, a "patent license" is any express agreement or commitment, however denominated, not to enforce a patent (such as an express permission to practice a patent or covenant not to sue for patent infringement). To "grant" such a patent license to a party means to make such an agreement or commitment not to enforce a patent against the party.

If you convey a covered work, knowingly relying on a patent license, and the Corresponding Source of the work is not available for anyone to copy, free of charge and under the terms of this License, through a publicly available network server or other readily accessible means, then you must either (1) cause the Corresponding Source to be so available, or (2) arrange to deprive yourself of the benefit of the patent license for this particular work, or (3) arrange, in a manner consistent with the requirements of this License, to extend the patent license to downstream recipients. "Knowingly relying" means you have actual knowledge that, but for the patent license, your conveying the covered work in a country, or your recipient's use of the covered work in a country, would infringe one or more identifiable patents in that country that you have reason to believe are valid.

If, pursuant to or in connection with a single transaction or arrangement, you convey, or propagate by procuring conveyance of, a covered work, and grant a patent license to some of the parties receiving the covered work authorizing them to use, propagate, modify or convey a specific copy of the covered work, then the patent license you grant is automatically extended to all recipients of the covered work and works based on it.

A patent license is "discriminatory" if it does not include within the scope of its coverage, prohibits the exercise of, or is conditioned on the non-exercise of one or more of the rights that are specifically granted under this License. You may not convey a covered work if you are a party to an arrangement with a third party that is in the business of distributing software, under which you make payment to the third party based on the extent of your activity of conveying the work, and under which the third party grants, to any of the parties who would receive the covered work from you, a discriminatory patent license (a) in connection with copies of the covered work

conveyed by you (or copies made from those copies), or (b) primarily for and in connection with specific products or compilations that contain the covered work, unless you entered into that arrangement, or that patent license was granted, prior to 28 March 2007.

Nothing in this License shall be construed as excluding or limiting any implied license or other defenses to infringement that may otherwise be available to you under applicable patent law.

12. No Surrender of Others' Freedom.

If conditions are imposed on you (whether by court order, agreement or otherwise) that contradict the conditions of this License, they do not excuse you from the conditions of this License. If you cannot convey a covered work so as to satisfy simultaneously your obligations under this License and any other pertinent obligations, then as a consequence you may not convey it at all. For example, if you agree to terms that obligate you to collect a royalty for further conveying from those to whom you convey the Program, the only way you could satisfy both those terms and this License would be to refrain entirely from conveying the Program.

13. Use with the GNU Affero General Public License.

Notwithstanding any other provision of this License, you have permission to link or combine any covered work with a work licensed under version 3 of the GNU Affero General Public License into a single combined work, and to convey the resulting work. The terms of this License will continue to apply to the part which is the covered work, but the special requirements of the GNU Affero General Public License, section 13, concerning interaction through a network will apply to the combination as such.

14. Revised Versions of this License.

The Free Software Foundation may publish revised and/or new versions of the GNU General Public License from time to time. Such new versions will be similar in spirit to the present version, but may differ in detail to address new problems or concerns.

Each version is given a distinguishing version number. If the Program specifies that a certain numbered version of the GNU General Public License "or any later version" applies to it, you have the option of following the terms and conditions either of that numbered version or of any later version published by the Free Software Foundation. If the Program does not specify a version number of the GNU General Public License, you may choose any version ever published by the Free Software Foundation.

If the Program specifies that a proxy can decide which future versions of the GNU General Public License can be used, that proxy's public statement of acceptance of a version permanently authorizes you to choose that version for the Program.

Later license versions may give you additional or different permissions. However, no additional obligations are imposed on any author or copyright holder as a result of your choosing to follow a later version.

15. Disclaimer of Warranty.

THERE IS NO WARRANTY FOR THE PROGRAM, TO THE EXTENT PERMITTED BY APPLICABLE LAW. EXCEPT WHEN OTHERWISE STATED IN WRITING THE COPYRIGHT
HOLDERS AND/OR OTHER PARTIES PROVIDE THE PROGRAM "AS IS" WITHOUT WARRANTY
OF ANY KIND, EITHER EXPRESSED OR IMPLIED, INCLUDING, BUT NOT LIMITED TO,
THE IMPLIED WARRANTIES OF MERCHANTABILITY AND FITNESS FOR A PARTICULAR
PURPOSE. THE ENTIRE RISK AS TO THE QUALITY AND PERFORMANCE OF THE PROGRAM
IS WITH YOU. SHOULD THE PROGRAM PROVE DEFECTIVE, YOU ASSUME THE COST OF
ALL NECESSARY SERVICING, REPAIR OR CORRECTION.

16. Limitation of Liability.

IN NO EVENT UNLESS REQUIRED BY APPLICABLE LAW OR AGREED TO IN WRITING
WILL ANY COPYRIGHT HOLDER, OR ANY OTHER PARTY WHO MODIFIES AND/OR CONVEYS
THE PROGRAM AS PERMITTED ABOVE, BE LIABLE TO YOU FOR DAMAGES, INCLUDING ANY
GENERAL, SPECIAL, INCIDENTAL OR CONSEQUENTIAL DAMAGES ARISING OUT OF THE
USE OR INABILITY TO USE THE PROGRAM (INCLUDING BUT NOT LIMITED TO LOSS OF
DATA OR DATA BEING RENDERED INACCURATE OR LOSSES SUSTAINED BY YOU OR THIRD
PARTIES OR A FAILURE OF THE PROGRAM TO OPERATE WITH ANY OTHER PROGRAMS),
EVEN IF SUCH HOLDER OR OTHER PARTY HAS BEEN ADVISED OF THE POSSIBILITY OF
SUCH DAMAGES.

17. Interpretation of Sections 15 and 16.

If the disclaimer of warranty and limitation of liability provided
above cannot be given local legal effect according to their terms,
reviewing courts shall apply local law that most closely approximates
an absolute waiver of all civil liability in connection with the
Program, unless a warranty or assumption of liability accompanies a
copy of the Program in return for a fee.

END OF TERMS AND CONDITIONS

How to Apply These Terms to Your New Programs

If you develop a new program, and you want it to be of the greatest
possible use to the public, the best way to achieve this is to make it
free software which everyone can redistribute and change under these terms.

To do so, attach the following notices to the program. It is safest
to attach them to the start of each source file to most effectively
state the exclusion of warranty; and each file should have at least
the "copyright" line and a pointer to where the full notice is found.

<one line to give the program's name and a brief idea of what it does.>
Copyright (C) <year> <name of author>

This program is free software: you can redistribute it and/or modify
it under the terms of the GNU General Public License as published by
the Free Software Foundation, either version 3 of the License, or
(at your option) any later version.

This program is distributed in the hope that it will be useful,
but WITHOUT ANY WARRANTY; without even the implied warranty of
MERCHANTABILITY or FITNESS FOR A PARTICULAR PURPOSE. See the
GNU General Public License for more details.

You should have received a copy of the GNU General Public License
along with this program. If not, see <http://www.gnu.org/licenses/>.

Also add information on how to contact you by electronic and paper mail.

If the program does terminal interaction, make it output a short
notice like this when it starts in an interactive mode:

<program> Copyright (C) <year> <name of author>
This program comes with ABSOLUTELY NO WARRANTY; for details type `show w'.
This is free software, and you are welcome to redistribute it
under certain conditions; type `show c' for details.

The hypothetical commands `show w' and `show c' should show the appropriate
parts of the General Public License. Of course, your program's commands
might be different; for a GUI interface, you would use an "about box".

You should also get your employer (if you work as a programmer) or school, if any, to sign a "copyright disclaimer" for the program, if necessary. For more information on this, and how to apply and follow the GNU GPL, see <http://www.gnu.org/licenses/>.

The GNU General Public License does not permit incorporating your program into proprietary programs. If your program is a subroutine library, you may consider it more useful to permit linking proprietary applications with the library. If this is what you want to do, use the GNU Lesser General Public License instead of this License. But first, please read <http://www.gnu.org/philosophy/why-not-lgpl.html>.

10 Disclaimer and Copyright</h2>
Revised 16 February, 2004 © Copyright Ami Tavory and Vladimir Dreizin, IBM-HRL, 2004, and Benjamin Kosnik, Red Hat, 2004.
Permission to use, copy, modify, sell, and distribute this software is hereby granted without fee, provided that the above copyright notice appears in all copies, and that both that copyright notice and this permission notice appear in supporting documentation.
None of the above authors, nor IBM Haifa Research Laboratories, Red Hat, or both, make any representation about the suitability of this software for any purpose. It is provided "as is" without express or implied warranty.<

11 # This file file be copied and used freely without restrictions. It can
be used in projects which are not available under the GNU Public License
but which still want to provide support for the GNU gettext functionality.
Please note that the actual code is *not* freely available.

12 This is free software; see the source for copying conditions. There is NO warranty; not even for MERCHANTABILITY or FITNESS FOR A PARTICULAR PURPOSE.

13 Free Software Foundation, Inc.
This file is free software; the Free Software Foundation gives unlimited permission to copy and/or distribute it, with or without modifications, as long as this notice is preserved.
This program is distributed in the hope that it will be useful, but WITHOUT ANY WARRANTY, to the extent permitted by law; without even the implied warranty of MERCHANTABILITY or FITNESS FOR A PARTICULAR PURPOSE.

14 This file is free software; the Free Software Foundation gives unlimited permission to copy and/or distribute it, with or without modifications, as long as this notice is preserved.

15 Permission to use, copy, modify, sell, and distribute this software is hereby granted without fee, provided that the above copyright notice appears in all copies, and that both that copyright notice and this permission notice appear in supporting documentation. None of the above authors, nor IBM Haifa Research Laboratories, make any representation about the suitability of this software for any purpose. It is provided "as is" without express or implied warranty.

16 This configure script is free software; the Free Software Foundation
gives unlimited permission to copy, distribute and modify it.

17 This Makefile.in is free software; the Free Software Foundation
gives unlimited permission to copy and/or distribute it,
with or without modifications, as long as this notice is preserved.
This program is distributed in the hope that it will be useful,
but WITHOUT ANY WARRANTY, to the extent permitted by law; without
even the implied warranty of MERCHANTABILITY or FITNESS FOR A
PARTICULAR PURPOSE.

18 Distributed under the Boost
Software License, Version 1.0. (See accompanying file
LICENSE_1_0.txt or copy at http:www.boost.org/LICENSE_1_0.txt)

Boost Software License - Version 1.0 - August 17th, 2003

Permission is hereby granted, free of charge, to any person or organization
obtaining a copy of the software and accompanying documentation covered by
this license (the "Software") to use, reproduce, display, distribute,
execute, and transmit the Software, and to prepare derivative works of the
Software, and to permit third-parties to whom the Software is furnished to
do so, all subject to the following:

The copyright notices in the Software and this entire statement, including
the above license grant, this restriction and the following disclaimer,
must be included in all copies of the Software, in whole or in part, and
all derivative works of the Software, unless such copies or derivative
works are solely in the form of machine-executable object code generated by
a source language processor.

THE SOFTWARE IS PROVIDED "AS IS", WITHOUT WARRANTY OF ANY KIND, EXPRESS OR
IMPLIED, INCLUDING BUT NOT LIMITED TO THE WARRANTIES OF MERCHANTABILITY,
FITNESS FOR A PARTICULAR PURPOSE, TITLE AND NON-INFRINGEMENT. IN NO EVENT
SHALL THE COPYRIGHT HOLDERS OR ANYONE DISTRIBUTING THE SOFTWARE BE LIABLE
FOR ANY DAMAGES OR OTHER LIABILITY, WHETHER IN CONTRACT, TORT OR OTHERWISE,
ARISING FROM, OUT OF OR IN CONNECTION WITH THE SOFTWARE OR THE USE OR OTHER
DEALINGS IN THE SOFTWARE.

Copyrights:

C) Copyright Jeremy Siek 2000

Copyright 1994 Hewlett-Packard Company

Copyright 1998 by Information Technology Industry Council

Copyright © 2007 Free Software Foundation, Inc

Copyright (C) Microsoft Corporation 1984-2002

Copyright (C) 1994, 1995, 1996, 1997, 1998, 1999, 2000, 2001, 2002, 2003, 2004, 2005 Free Software Foundation, Inc.

Copyright (C) 1994, 1995, 1996, 1997, 1998, 1999, 2000, 2001, 2002, 2003, 2004, 2005, 2006, 2007, 2009 Free Software Foundation

Copyright (C) 1994, 1995, 1996, 1997, 1998, 1999, 2000, 2001, 2002, 2003, 2004, 2005, 2006, 2007, 2009 Free Software Foundation, Inc.

Copyright (C) 1994, 1995, 1996, 1997, 1998, 1999, 2000, 2001, 2002, 2009 Free Software Foundation

Copyright (C) 1994, 1995, 1996, 1997, 1998, 1999, 2000, 2001, 2009 Free Software Foundation

Copyright (C) 1994, 1995, 1996, 1998, 1999, 2000, 2001, 2004, 2009 Free Software Foundation

Copyright (C) 1994, 1996, 1997, 1998, 1999, 2000, 2001, 2002, 2007, 2009 Free Software Foundation

Copyright (C) 1994, 1996, 1997, 1998, 1999, 2000, 2001, 2002, 2007, 2009 Free Software Foundation

Copyright (C) 1994, 1996, 1997, 1998, 1999, 2000, 2001, 2002, 2007, 2009 Free Software Foundation

Copyright (C) 1994, 1996, 1997, 1998, 1999, 2000, 2001, 2002, 2009 Free Software Foundation

Copyright (C) 1994, 1999, 2000, 2003, 2005, 2009 Free Software Foundation, Inc.

Copyright (C) 1994, 1999, 2000, 2003, 2009 Free Software Foundation, Inc.

Copyright (C) 1994, 1999, 2001, 2002, 2003, 2009 Free Software Foundation, Inc.

Copyright (C) 1994, 1999, 2001, 2003, 2009 Free Software Foundation, Inc.

Copyright (C) 1995, 1996, 1997, 1998, 1999, 2000, 2001, 2002, 2003, 2004, 2005, 2006, 2007, 2008, 2009 Free Software Foundation

Copyright (C) 1996, 1997, 1998, 1999, 2000, 2001, 2002, 2003, 2004, 2005 Free Software Foundation, Inc.

Copyright (C) 1996, 1997, 1998, 1999, 2000, 2001, 2002, 2003, 2004, 2005, 2006, 2007, 2009 Free Software Foundation

Copyright (C) 1996, 1997, 1998, 1999, 2000, 2001, 2002, 2003, 2004, 2005 Free Software Foundation, Inc.

Copyright (C) 1996, 1997, 2000, 2001, 2003, 2005 Free Software Foundation, Inc.

Copyright (C) 1996, 1998, 2000, 2001, 2002, 2003, 2004, 2005 Free Software Foundation, Inc.

Copyright (C) 1997, 1998, 1999, 2000, 2001, 2002, 2003, 2004, 2005, 2006, 2007, 2009 Free Software Foundation, Inc.

Copyright (C) 1997, 1998, 1999, 2000, 2001, 2002, 2003, 2004, 2005, 2006, 2007, 2009 Free Software Foundation, Inc.

Copyright (C) 1997, 1998, 1999, 2000, 2001, 2002, 2003, 2004, 2005, 2006, 2007, 2008, 2009 Free Software Foundation, Inc.

Copyright (C) 1997, 1998, 1999, 2000, 2001, 2002, 2003, 2004, 2005 2006, 2007, 2009 Free Software Foundation, Inc.

Copyright (C) 1997, 1998, 1999, 2000, 2001, 2002, 2003, 2004, 2005, 2006, 2007, 2008, 2009 Free Software Foundation, Inc.

Copyright (C) 1997, 1998, 1999, 2000, 2001, 2002, 2003, 2004, 2005, 2006, 2007, 2008, 2009 Free Software Foundation, Inc.

Copyright (C) 1997, 1998, 1999, 2000, 2001, 2002, 2003, 2004, 2005, 2006, 2007, 2009 Free Software Foundation, Inc.

Copyright (C) 1997, 1998, 1999, 2000, 2001, 2002, 2003, 2004, 2005, 2006, 2008, 2009 Free Software Foundation, Inc.

Copyright (C) 1997, 1998, 1999, 2000, 2001, 2002, 2003, 2004, 2005, 2006, 2009 Free Software Foundation, Inc.

Copyright (C) 1997, 1998, 1999, 2000, 2001, 2002, 2003, 2004, 2005, 2009 Free Software Foundation, Inc.

Copyright (C) 1997, 1998, 1999, 2000, 2001, 2002, 2003, 2004, 2005, 2006, 2007, 2008, 2009 Free Software Foundation, Inc.

Copyright (C) 1997, 1998, 1999, 2000, 2001, 2002, 2003, 2004, 2005, 2006, 2009 Free Software Foundation, Inc.

Copyright (C) 1997, 1998, 1999, 2000, 2001, 2002, 2003, 2004, 2005, 2006, 2009 Free Software Foundation, Inc.

Copyright (C) 1997, 1998, 1999, 2000, 2001, 2002, 2003, 2004, 2005, 2009 Free Software Foundation, Inc.

Copyright (C) 1997, 1998, 1999, 2000, 2001, 2002, 2003, 2004, 2009 Free Software Foundation, Inc.

Copyright (C) 1997, 1998, 1999, 2000, 2001, 2002, 2003, 2005, 2009 Free Software Foundation, Inc.

Copyright (C) 1997, 1998, 1999, 2000, 2001, 2002, 2003, 2008, 2009 Free Software Foundation, Inc.

Copyright (C) 1997, 1998, 1999, 2000, 2001, 2002, 2003, 2009 Free Software Foundation, Inc.

Copyright (C) 1997, 1998, 1999, 2000, 2001, 2002, 2004, 2005, 2006, 2007, 2008, 2009 Free Software Foundation, Inc.

Copyright (C) 1997, 1998, 1999, 2000, 2001, 2002, 2004, 2005, 2006, 2009 Free Software Foundation, Inc.

Copyright (C) 1997, 1998, 1999, 2000, 2001, 2002, 2004, 2005, 2009 Free Software Foundation, Inc.

Copyright (C) 1997, 1998, 1999, 2000, 2001, 2002, 2004, 2006, 2009 Free Software Foundation, Inc.

Copyright (C) 1997, 1998, 1999, 2000, 2001, 2002, 2004, 2009 Free Software Foundation

Copyright (C) 1997, 1998, 1999, 2000, 2001, 2002, 2005, 2006, 2009 Free Software Foundation, Inc.

Copyright (C) 1997, 1998, 1999, 2000, 2001, 2002, 2005, 2009 Free Software Foundation, Inc.

Copyright (C) 1997, 1998, 1999, 2000, 2001, 2002, 2009 Free Software Foundation, Inc.

Copyright (C) 1997, 1998, 1999, 2000, 2001, 2002, 2009 Free Software Foundation, Inc.

Copyright (C) 1997, 1998, 1999, 2000, 2001, 2004, 2005, 2006, 2009 Free Software Foundation, Inc.

Copyright (C) 1997, 1998, 1999, 2000, 2001, 2004, 2005, 2009 Free Software Foundation, Inc.

Copyright (C) 1997, 1998, 1999, 2000, 2001, 2004, 2009 Free Software Foundation

Copyright (C) 1997, 1998, 1999, 2000, 2002, 2003, 2004, 2006, 2009 Free Software Foundation, Inc.

Copyright (C) 1997, 1998, 1999, 2000, 2002, 2003, 2004, 2009 Free Software Foundation, Inc.

Copyright (C) 1997, 1998, 1999, 2000, 2002, 2007, 2009 Free Software Foundation, Inc.

Copyright (C) 1997, 1998, 1999, 2000, 2003, 2009 Free Software Foundation, Inc.

Copyright (C) 1997, 1998, 1999, 2000, 2004, 2007, 2009 Free Software Foundation

Copyright (C) 1997, 1998, 1999, 2000, 2004, 2009 Free Software Foundation

Copyright (C) 1997, 1998, 1999, 2001, 2002, 2005, 2008, 2009 Free Software Foundation, Inc.

Copyright (C) 1997, 1998, 1999, 2001, 2002, 2009 Free Software Foundation, Inc.

Copyright (C) 1997, 1998, 1999, 2002, 2004, 2009 Free Software Foundation, Inc.

Copyright (C) 1997, 1998, 1999, 2002, 2009 Free Software Foundation, Inc.

Copyright (C) 1997, 1998, 1999, 2003, 2005, 2009 Free Software Foundation, Inc.

Copyright (C) 1997, 1998, 1999, 2003, 2009 Free Software Foundation, Inc.

Copyright (C) 1997, 1998, 1999, 2007, 2009 Free Software Foundation, Inc.

Copyright (C) 1997, 1998, 2009, 1999, 2000, 2001, 2002, 2003, 2004, 2005, 2006 Free Software Foundation, Inc.

Copyright (C) 1997, 1999, 2000, 2001, 2003, 2005 Free Software Foundation, Inc.

Copyright (C) 1997, 1999, 2000, 2001, 2004, 2009 Free Software Foundation, Inc.

Copyright (C) 1997, 1999, 2001, 2002, 2005, 2009 Free Software Foundation, Inc.

Copyright (C) 1997, 2000, 2001, 2003, 2004, 2005 Free Software Foundation, Inc.

Copyright (C) 1997-1999, 2001, 2009 Free Software Foundation, Inc.

Copyright (C) 1997-1999, 2009 Free Software Foundation, Inc.

Copyright (C) 1998, 1999 Greg Colvin and Beman Dawes

Copyright (C) 1998, 1999, 2000, 2001, 2002, 2003, 2004, 2005, 2006, 2007, 2009 Free Software Foundation, Inc.

Copyright (C) 1998, 1999, 2003, 2004, 2009 Free Software Foundation, Inc.

Copyright (C) 1998, 1999, 2003, 2009 Free Software Foundation, Inc.

Copyright (C) 1999, 2000, 2001, 2002, 2003, 2004, 2005, 2006, 2007, 2008, 2009 Free Software Foundation, Inc.

Copyright (C) 1999, 2000, 2001, 2002, 2003, 2004, 2005, 2006, 2007, 2008, 2009 Free Software Foundation

Copyright (C) 1999, 2000, 2001, 2002, 2003, 2004, 2005, 2006, 2007, 2009 Free Software Foundation, Inc.

Copyright (C) 1999, 2000, 2001, 2002, 2003, 2004, 2005, 2006, 2007, 2008, 2009 Free Software Foundation, Inc.

Copyright (C) 1999, 2000, 2001, 2002, 2003, 2004, 2005, 2006, 2007, 2009 Free Software Foundation, Inc.

Copyright (C) 1999, 2000, 2001, 2002, 2003, 2004, 2005, 2006, 2009 Free Software Foundation

Copyright (C) 1999, 2000, 2001, 2002, 2003, 2004, 2005, 2009 Free Software Foundation, Inc.

Copyright (C) 1999, 2000, 2001, 2002, 2003, 2004, 2009 Free Software Foundation

Copyright (C) 1999, 2000, 2001, 2002, 2003, 2004, 2009 Free Software Foundation, Inc.

Copyright (C) 1999, 2000, 2001, 2002, 2003, 2005, 2009 Free Software Foundation

Copyright (C) 1999, 2000, 2001, 2002, 2003, 2005, 2009 Free Software Foundation, Inc.

Copyright (C) 1999, 2000, 2001, 2002, 2003, 2006, 2009 Free Software Foundation, Inc.

Copyright (C) 1999, 2000, 2001, 2002, 2003, 2009 Free Software Foundation

Copyright (C) 1999, 2000, 2001, 2002, 2004, 2005, 2009 Free Software Foundation, Inc.

Copyright (C) 1999, 2000, 2001, 2003, 2004, 2005, 2009 Free Software Foundation, Inc.

Copyright (C) 1999, 2000, 2001, 2003, 2009 Free Software Foundation

Copyright (C) 1999, 2000, 2001, 2004, 2005, 2009 Free Software Foundation, Inc.

Copyright (C) 1999, 2000, 2002, 2003, 2004, 2005, 2009 Free Software Foundation, Inc.

Copyright (C) 1999, 2000, 2002, 2003, 2005, 2009 Free Software Foundation

Copyright (C) 1999, 2000, 2002, 2003, 2009 Free Software Foundation

Copyright (C) 1999, 2000, 2002, 2003, 2009 Free Software Foundation, Inc.

Copyright (C) 1999, 2000, 2003, 2009 Free Software Foundation

Copyright (C) 1999, 2000, 2003, 2009 Free Software Foundation, Inc.

Copyright (C) 1999, 2000, 2009 Free Software Foundation, Inc.

Copyright (C) 1999, 2001, 2002, 2003, 2004, 2005, 2006, 2009 Free Software Foundation

Copyright (C) 1999, 2001, 2002, 2003, 2004, 2005, 2006, 2009 Free Software Foundation, Inc.

Copyright (C) 1999, 2001, 2002, 2003, 2004, 2005, 2009 Free Software Foundation, Inc.

Copyright (C) 1999, 2001, 2002, 2003, 2004, 2009 Free Software Foundation

Copyright (C) 1999, 2001, 2002, 2005, 2006, 2009 Free Software Foundation, Inc.

Copyright (C) 1999, 2001, 2003, 2004, 2009 Free Software Foundation

Copyright (C) 1999, 2001, 2003, 2007, 2009 Free Software Foundation, Inc.

Copyright (C) 1999, 2001, 2003, 2009 Free Software Foundation

Copyright (C) 1999, 2001, 2003, 2009 Free Software Foundation, Inc.

Copyright (C) 1999, 2001, 2004, 2005, 2009 Free Software Foundation, Inc.

Copyright (C) 1999, 2002, 2003, 2004, 2005, 2009 Free Software Foundation, Inc.

Copyright (C) 1999, 2002, 2003, 2004, 2009 Free Software Foundation, Inc.

Copyright (C) 1999, 2002, 2003, 2005, 2009 Free Software Foundation, Inc.

Copyright (C) 1999, 2002, 2003, 2009 Free Software Foundation, Inc.

Copyright (C) 1999, 2002, 2004, 2005, 2009 Free Software Foundation, Inc.

Copyright (C) 1999, 2002, 2009 Free Software Foundation, Inc.

Copyright (C) 1999, 2003, 2004, 2005, 2009 Free Software Foundation, Inc.

Copyright (C) 1999, 2003, 2005, 2009 Free Software Foundation

Copyright (C) 1999, 2003, 2005, 2009 Free Software Foundation, Inc.

Copyright (C) 1999, 2003, 2009 Free Software Foundation

Copyright (C) 1999, 2003, 2009 Free Software Foundation, Inc.

Copyright (C) 1999, 2004, 2005, 2009 Free Software Foundation, Inc.

Copyright (C) 1999, 2007, 2009 Free Software Foundation, Inc.

Copyright (C) 1999, 2009 Free Software Foundation, Inc.

Copyright (C) 1999-2001, 2002, 2003, 2004, 2005, 2009 Free Software Foundation, Inc.

Copyright (C) 1999-2001, 2002, 2003, 2009 Free Software Foundation, Inc.

Copyright (C) 2000, 2001, 2002 Free Software Foundation

Copyright (C) 2000, 2001, 2002 Free Software Foundation

Copyright (C) 2000, 2001, 2002, 2003, 2004, 2005, 2006, 2007, 2008, 2009 Free Software Foundation, Inc.

Copyright (C) 2000, 2001, 2002, 2003, 2004, 2005, 2006, 2007, 2008, 2009 Free Software Foundation, Inc.

Copyright (C) 2000, 2001, 2002, 2003, 2004, 2005, 2006, 2007, 2008, 2009 Free Software Foundation, Inc.

Copyright (C) 2000, 2001, 2002, 2003, 2004, 2005, 2006, 2007, 2009 Free Software Foundation, Inc.

Copyright (C) 2000, 2001, 2002, 2003, 2004, 2005, 2006, 2007, 2009 Free Software Foundation

Copyright (C) 2000, 2001, 2002, 2003, 2004, 2005, 2006, 2007, 2009 Free Software Foundation, Inc.

Copyright (C) 2000, 2001, 2002, 2003, 2004, 2005, 2006, 2009 Free Software Foundation

Copyright (C) 2000, 2001, 2002, 2003, 2004, 2005, 2006, 2009 Free Software Foundation, Inc.

Copyright (C) 2000, 2001, 2002, 2003, 2004, 2005, 2009 Free Software Foundation, Inc.

Copyright (C) 2000, 2001, 2002, 2003, 2004, 2006, 2007, 2009 Free Software Foundation, Inc.

Copyright (C) 2000, 2001, 2002, 2003, 2004, 2009 Free Software Foundation

Copyright (C) 2000, 2001, 2002, 2003, 2005, 2009 Free Software Foundation

Copyright (C) 2000, 2001, 2002, 2003, 2006, 2009 Free Software Foundation, Inc.

Copyright (C) 2000, 2001, 2002, 2003, 2007, 2009 Free Software Foundation

Copyright (C) 2000, 2001, 2002, 2003, 2009 Free Software Foundation

Copyright (C) 2000, 2001, 2002, 2003, 2009 Free Software Foundation, Inc.

Copyright (C) 2000, 2001, 2002, 2009 Free Software Foundation, Inc.

Copyright (C) 2000, 2001, 2003, 2004, 2005, 2006, 2009 Free Software Foundation, Inc.

Copyright (C) 2000, 2001, 2003, 2004, 2005, 2009 Free Software Foundation, Inc.

Copyright (C) 2000, 2001, 2003, 2004, 2009 Free Software Foundation, Inc.

Copyright (C) 2000, 2001, 2003, 2005, 2009 Free Software Foundation, Inc.

Copyright (C) 2000, 2001, 2003, 2009 Free Software Foundation, Inc.

Copyright (C) 2000, 2001, 2004, 2005, 2009 Free Software Foundation, Inc.

Copyright (C) 2000, 2001, 2005, 2006, 2009 Free Software Foundation, Inc.

Copyright (C) 2000, 2001, 2009 Free Software Foundation

Copyright (C) 2000, 2002, 2003, 2004, 2006, 2007, 2009 Free Software Foundation, Inc.

Copyright (C) 2000, 2002, 2003, 2004, 2009 Free Software Foundation

Copyright (C) 2000, 2002, 2003, 2005, 2009 Free Software Foundation

Copyright (C) 2000, 2002, 2003, 2009 Free Software Foundation

Copyright (C) 2000, 2002, 2003, 2009 Free Software Foundation, Inc.

Copyright (C) 2000, 2002, 2004, 2005, 2008, 2009 Free Software Foundation, Inc.

Copyright (C) 2000, 2002, 2004, 2005, 2009 Free Software Foundation, Inc.

Copyright (C) 2000, 2002, 2005, 2008, 2009 Free Software Foundation, Inc.

Copyright (C) 2000, 2002, 2005, 2009 Free Software Foundation, Inc.

Copyright (C) 2000, 2002, 2006, 2009 Free Software Foundation, Inc.

Copyright (C) 2000, 2002, 2009 Free Software Foundation, Inc.

Copyright (C) 2000, 2003, 2004, 2005, 2009 Free Software Foundation, Inc.

Copyright (C) 2000, 2003, 2004, 2009 Free Software Foundation

Copyright (C) 2000, 2003, 2004, 2009 Free Software Foundation, Inc.

Copyright (C) 2000, 2003, 2009 Free Software Foundation

Copyright (C) 2000, 2003, 2009 Free Software Foundation, Inc.

Copyright (C) 2000, 2005, 2009 Free Software Foundation, Inc.

Copyright (C) 2000, 2009 Free Software Foundation, Inc.

Copyright (C) 2001 Free Software Foundation, Inc.

Copyright (C) 2001 Free Software Foundation, Inc Benjamin Kosnik <bkoz@redhat.com>, 2001.

Copyright (C) 2001, 2002, 2003 Peter Dimov

Copyright (C) 2001, 2002, 2003, 2004, 2005, 2006, 2006, 2007, 2008, 2009 Free Software Foundation, Inc.

Copyright (C) 2001, 2002, 2003, 2004, 2005, 2006, 2007, 2008, 2009 Free Software Foundation, Inc.

Copyright (C) 2001, 2002, 2003, 2004, 2005, 2006, 2007, 2008, 2009 Free Software Foundation, Inc.

Copyright (C) 2001, 2002, 2003, 2004, 2005, 2006, 2007, 2008, 2009 Free Software Foundation

Copyright (C) 2001, 2002, 2003, 2004, 2005, 2006, 2007, 2008, 2009 Free Software Foundation, Inc.

Copyright (C) 2001, 2002, 2003, 2004, 2005, 2006, 2007, 2009 Free Software Foundation

Copyright (C) 2001, 2002, 2003, 2004, 2005, 2006, 2007, 2009 Free Software Foundation, Inc.

Copyright (C) 2001, 2002, 2003, 2004, 2005, 2006, 2008, 2009 Free Software Foundation, Inc.

Copyright (C) 2001, 2002, 2003, 2004, 2005, 2006, 2009 Free Software Foundation

Copyright (C) 2001, 2002, 2003, 2004, 2005, 2006, 2009 Free Software Foundation, Inc.

Copyright (C) 2001, 2002, 2003, 2004, 2005, 2006, 2009 Free Software Foundation

Copyright (C) 2001, 2002, 2003, 2004, 2005, 2009 Free Software Foundation, Inc.

Copyright (C) 2001, 2002, 2003, 2004, 2005, 2009 Free Software Foundation

Copyright (C) 2001, 2002, 2003, 2004, 2005, 2009 Free Software Foundation, Inc.

Copyright (C) 2001, 2002, 2003, 2004, 2008, 2009 Free Software Foundation, Inc.

Copyright (C) 2001, 2002, 2003, 2004, 2009 Free Software Foundation

Copyright (C) 2001, 2002, 2003, 2004, 2009 Free Software Foundation, Inc.

Copyright (C) 2001, 2002, 2003, 2005 Free Software Foundation, Inc.

Copyright (C) 2001, 2002, 2003, 2005, 2006, 2009 Free Software Foundation

Copyright (C) 2001, 2002, 2003, 2005, 2007, 2009 Free Software Foundation, Inc.

Copyright (C) 2001, 2002, 2003, 2005, 2009 Free Software Foundation

Copyright (C) 2001, 2002, 2003, 2005, 2009 Free Software Foundation, Inc.

Copyright (C) 2001, 2002, 2003, 2006, 2009 Free Software Foundation, Inc.

Copyright (C) 2001, 2002, 2003, 2009 Free Software Foundation

Copyright (C) 2001, 2002, 2003, 2009 Free Software Foundation, Inc.

Copyright (C) 2001, 2002, 2004, 2005, 2006, 2009 Free Software Foundation, Inc.

Copyright (C) 2001, 2002, 2004, 2005, 2007, 2008, 2009 Free Software Foundation, Inc.

Copyright (C) 2001, 2002, 2004, 2005, 2008 Free Software Foundation, Inc.

Copyright (C) 2001, 2002, 2004, 2005, 2009 Free Software Foundation

Copyright (C) 2001, 2002, 2004, 2005, 2009 Free Software Foundation, Inc.

Copyright (C) 2001, 2002, 2004, 2006, 2009 Free Software Foundation, Inc.

Copyright (C) 2001, 2002, 2004, 2009 Free Software Foundation, Inc.

Copyright (C) 2001, 2002, 2005, 2007, 2009 Free Software Foundation, Inc.

Copyright (C) 2001, 2002, 2005, 2008, 2009 Free Software Foundation, Inc.

Copyright (C) 2001, 2002, 2005, 2009 Free Software Foundation, Inc.

Copyright (C) 2001, 2002, 2009 Free Software Foundation, Inc.

Copyright (C) 2001, 2003, 2004, 2005, 2009 Free Software Foundation, Inc.

Copyright (C) 2001, 2003, 2004, 2009 Free Software Foundation, Inc.

Copyright (C) 2001, 2003, 2005 Free Software Foundation, Inc.

Copyright (C) 2001, 2003, 2005, 2009 Free Software Foundation

Copyright (C) 2001, 2003, 2007, 2009 Free Software Foundation, Inc.

Copyright (C) 2001, 2003, 2009 Free Software Foundation

Copyright (C) 2001, 2003, 2009 Free Software Foundation

Copyright (C) 2001, 2003, 2009 Free Software Foundation, Inc.

Copyright (C) 2001, 2004, 2005, 2008, 2009 Free Software Foundation, Inc.

Copyright (C) 2001, 2004, 2005, 2009 Free Software Foundation, Inc.

Copyright (C) 2001, 2004, 2009 Free Software Foundation, Inc.

Copyright (C) 2001, 2005, 2009 Free Software Foundation, Inc.

Copyright (C) 2001, 2007, 2009 Free Software Foundation, Inc.

Copyright (C) 2001, 2008, 2009 Free Software Foundation, Inc.

Copyright (C) 2001, 2009 Free Software Foundation

Copyright (C) 2001, 2009 Free Software Foundation, Inc.

Copyright (C) 2002 Peter Dimov

Copyright (C) 2002, 2003, 2004, 2005, 2006, 2007, 2008, 2009 Free Software Foundation, Inc.

Copyright (C) 2002, 2003, 2004, 2005, 2006, 2007, 2008, 2009 Free Software Foundation, Inc.

Copyright (C) 2002, 2003, 2004, 2005, 2006, 2007, 2008, 2009 Free Software Foundation

Copyright (C) 2002, 2003, 2004, 2005, 2006, 2007, 2009 Free Software Foundation, Inc.

Copyright (C) 2002, 2003, 2004, 2005, 2007, 2009 Free Software Foundation, Inc.

Copyright (C) 2002, 2003, 2004, 2005, 2009 Free Software Foundation

Copyright (C) 2002, 2003, 2004, 2005, 2009 Free Software Foundation, Inc.

Copyright (C) 2002, 2003, 2004, 2007, 2009 Free Software Foundation, Inc.

Copyright (C) 2002, 2003, 2005 Free Software Foundation, Inc.

Copyright (C) 2002, 2003, 2005, 2009 Free Software Foundation, Inc.

Copyright (C) 2002, 2003, 2007, 2009 Free Software Foundation, Inc.

Copyright (C) 2002, 2003, 2009 Free Software Foundation

Copyright (C) 2002, 2003, 2009 Free Software Foundation, Inc.

Copyright (C) 2002, 2004, 2005, 2007, 2009 Free Software Foundation, Inc.

Copyright (C) 2002, 2004, 2005, 2009 Free Software Foundation, Inc.

Copyright (C) 2002, 2004, 2006, 2008, 2009 Free Software Foundation, Inc.

Copyright (C) 2002, 2004, 2009 Free Software Foundation

Copyright (C) 2002, 2004, 2009 Free Software Foundation, Inc.

Copyright (C) 2002, 2005, 2007, 2009 Free Software Foundation, Inc.

Copyright (C) 2002, 2007, 2009 Free Software Foundation, Inc.

Copyright (C) 2002, 2009 Free Software Foundation

Copyright (C) 2002, 2009 Free Software Foundation, Inc.

Copyright (C) 2003 Free Software Foundation, Inc.

Copyright (C) 2003, 2004, 2005 Free Software Foundation, Inc.

Copyright (C) 2003, 2004, 2005, 2006, 2007, 2008, 2009 Free Software Foundation

Copyright (C) 2003, 2004, 2005, 2006, 2007, 2008, 2009 Free Software Foundation, Inc.

Copyright (C) 2003, 2004, 2005, 2006, 2007, 2008, 2009 Free Software Foundation, Inc.

Copyright (C) 2003, 2004, 2005, 2006, 2007, 2009 Free Software Foundation, Inc.

Copyright (C) 2003, 2004, 2005, 2006, 2007, 2009 Free Software Foundation

Copyright (C) 2003, 2004, 2005, 2006, 2007, 2009 Free Software Foundation, Inc.

Copyright (C) 2003, 2004, 2005, 2006, 2009 Free Software Foundation, Inc.

Copyright (C) 2003, 2004, 2005, 2006, 2009 Free Software Foundation

Copyright (C) 2003, 2004, 2005, 2006, 2009 Free Software Foundation, Inc.

Copyright (C) 2003, 2004, 2005, 2007, 2008, 2009 Free Software Foundation, Inc.

Copyright (C) 2003, 2004, 2005, 2007, 2009 Free Software Foundation

Copyright (C) 2003, 2004, 2005, 2009 Free Software Foundation, Inc.

Copyright (C) 2003, 2004, 2005, 2009 Free Software Foundation, Inc.

Copyright (C) 2003, 2004, 2006, 2009 Free Software Foundation, Inc.

Copyright (C) 2003, 2004, 2009 Free Software Foundation, Inc.

Copyright (C) 2003, 2004, 2009 Free Software Foundation

Copyright (C) 2003, 2004, 2009 Free Software Foundation, Inc.

Copyright (C) 2003, 2005, 2006, 2009 Free Software Foundation, Inc.

Copyright (C) 2003, 2005, 2006, 2009 Free Software Foundation, Inc.

Copyright (C) 2003, 2005, 2009 Free Software Foundation

Copyright (C) 2003, 2005, 2009 Free Software Foundation, Inc.

Copyright (C) 2003, 2006, 2009 Free Software Foundation, Inc.

Copyright (C) 2003, 2007, 2009 Free Software Foundation, Inc.

Copyright (C) 2003, 2009 Free Software Foundation, Inc.

Copyright (C) 2003, 2009 Free Software Foundation

Copyright (C) 2003, 2009 Free Software Foundation, Inc.

Copyright (C) 2004 Ami Tavory and Vladimir Dreizin, IBM-HRL.

Copyright (C) 2004, 2005 Free Software Foundation, Inc.

Copyright (C) 2004, 2005, 2006, 2007, 2008, 2009 Free Software Foundation, Inc.

Copyright (C) 2004, 2005, 2006, 2007, 2008, 2009 Free Software Foundation, Inc.

Copyright (C) 2004, 2005, 2006, 2007, 2008, 2009 Free Software Foundation, Inc.

Copyright (C) 2004, 2005, 2006, 2007, 2008, 2009 Free Software Foundation

Copyright (C) 2004, 2005, 2006, 2007, 2008, 2009 Free Software Foundation, Inc.

Copyright (C) 2004, 2005, 2006, 2007, 2009 Free Software Foundation

Copyright (C) 2004, 2005, 2006, 2007, 2009 Free Software Foundation, Inc.

Copyright (C) 2004, 2005, 2006, 2008, 2009 Free Software Foundation, Inc.

Copyright (C) 2004, 2005, 2006, 2009 Free Software Foundation

Copyright (C) 2004, 2005, 2006, 2009 Free Software Foundation, Inc.

Copyright (C) 2004, 2005, 2007, 2009 Free Software Foundation

Copyright (C) 2004, 2005, 2007, 2009 Free Software Foundation, Inc.

Copyright (C) 2004, 2005, 2008, 2009 Free Software Foundation, Inc.

Copyright (C) 2004, 2005, 2009 Free Software Foundation

Copyright (C) 2004, 2005, 2009 Free Software Foundation, Inc.

Copyright (C) 2004, 2006, 2008, 2009 Free Software Foundation, Inc.

Copyright (C) 2004, 2006, 2009 Free Software Foundation, Inc.

Copyright (C) 2004, 2007, 2009 Free Software Foundation, Inc.

Copyright (C) 2004, 2008, 2009 Free Software Foundation, Inc.

Copyright (C) 2004, 2009 Free Software Foundation

Copyright (C) 2004, 2009 Free Software Foundation, Inc.

Copyright (C) 2005 Free Software Foundation, Inc.

Copyright (C) 2005, 2006, 2007, 2008, 2009 Free Software Foundation, Inc.

Copyright (C) 2005, 2006, 2007, 2008, 2009 Free Software Foundation

Copyright (C) 2005, 2006, 2007, 2008, 2009 Free Software Foundation, Inc.

Copyright (C) 2005, 2006, 2007, 2009 Free Software Foundation

Copyright (C) 2005, 2006, 2007, 2009 Free Software Foundation, Inc.

Copyright (C) 2005, 2006, 2008, 2009 Free Software Foundation, Inc.

Copyright (C) 2005, 2006, 2009 Free Software Foundation, Inc.

Copyright (C) 2005, 2006, 2009 Free Software Foundation, Inc.

Copyright (C) 2005, 2007, 2009 Free Software Foundation, Inc.

Copyright (C) 2005, 2008, 2009 Free Software Foundation

Copyright (C) 2005, 2009 Free Software Foundation

Copyright (C) 2005, 2009 Free Software Foundation, Inc.

Copyright (C) 2006 Free Software Foundation, Inc.

Copyright (C) 2006, 2007, 2008, 2009 Free Software Foundation, Inc.

Copyright (C) 2006, 2007, 2008, 2009 Free Software Foundation

Copyright (C) 2006, 2007, 2008, 2009 Free Software Foundation, Inc.

Copyright (C) 2006, 2007, 2009 Free Software Foundation

Copyright (C) 2006, 2007, 2009 Free Software Foundation, Inc.

Copyright (C) 2006, 2008, 2009 Free Software Foundation, Inc.

Copyright (C) 2006, 2009 Free Software Foundation, Inc.

Copyright (C) 2006, 2009 Free Software Foundation

Copyright (C) 2006, 2009 Free Software Foundation

Copyright (C) 2006, 2009 Free Software Foundation, Inc.

Copyright (C) 2006-2007, 2009 Free Software Foundation, Inc.

Copyright (C) 2007, 2008, 2009 Free Software Foundation, Inc.

Copyright (C) 2007, 2008, 2009 Free Software Foundation

Copyright (C) 2007, 2008, 2009 Free Software Foundation, Inc.

Copyright (C) 2007, 2009 Free Software Foundation, Inc.

Copyright (C) 2007, 2009 Free Software Foundation

Copyright (C) 2007, 2009 Free Software Foundation, Inc.

Copyright (C) 2008, 2009 Free Software Foundation, Inc.

Copyright (C) 2008, 2009 Free Software Foundation

Copyright (C) 2008, 2009 Free Software Foundation, Inc.

Copyright (C) 2009 Free Software Foundation

Copyright (C) 2009 Free Software Foundation, Inc.

Copyright (c) 1994 Hewlett-Packard Company

Copyright (c) 1996 Silicon Graphics Computer Systems, Inc.

Copyright (c) 1996,1997 Silicon Graphics

Copyright (c) 1996,1997 Silicon Graphics Computer Systems, Inc.

Copyright (c) 1996-1997 Silicon Graphics Computer Systems, Inc.

Copyright (c) 1996-1998 Silicon Graphics Computer Systems, Inc.

Copyright (c) 1996-1999 Silicon Graphics Computer Systems, Inc.

Copyright (c) 1997 Silicon Graphics Computer Systems, Inc.

Copyright (c) 1997-1999 Silicon Graphics Computer Systems, Inc.

Copyright (c) 1998 Silicon Graphics Computer Systems, Inc.

Copyright (c) 2001, 2002, 2003 Peter Dimov and Multi Media Ltd.

Copyright 2008 FSF

Copyright Ami Tavory and Vladimir Dreizin, IBM-HRL, 2004, and Benjamin Kosnik, Red Hat, 2004.

Copyright © 1999 The Open Group/The Institute of Electrical and Electronics Engineers, Inc.

Copyright © 1999 ISO

Copyright © 2000 Addison Wesley Longman, Inc.

Copyright © 2000 Addison Wesley, Inc.

Copyright © 2002 OOPSLA

Copyright © 2004, 2005, 2006, 2007 Free Software Foundation, Inc

Copyright © 2004, 2005, 2006, 2007 Free Software Foundation, Inc

Copyright © 2007 FSF

Copyright © 2007 Free Software Foundation, Inc.

Open Source Software: libgcc - 4.4.1

Enclosed you'll find the license conditions and copyright notices applicable for Open Source Software libgcc - 4.4.1

License conditions:

1 GCC is free software; you can redistribute it and/or modify it under the terms of the GNU General Public License as published by the Free Software Foundation; either version 3, or (at your option) any later version.
GCC is distributed in the hope that it will be useful, but WITHOUT ANY WARRANTY; without even the implied warranty of MERCHANTABILITY or FITNESS FOR A PARTICULAR PURPOSE. See the GNU General Public License for more details.
Under Section 7 of GPL version 3, you are granted additional permissions described in the GCC Runtime Library Exception, version 3.1, as published by the Free Software Foundation.
You should have received a copy of the GNU General Public License and a copy of the GCC Runtime Library Exception along with this program; see the files COPYING3 and COPYING.RUNTIME respectively. If not, see <http://www.gnu.org/licenses/>.

GCC RUNTIME LIBRARY EXCEPTION

Version 3.1, 31 March 2009

Copyright (C) 2009 Free Software Foundation, Inc. <http://fsf.org/>

Everyone is permitted to copy and distribute verbatim copies of this license document, but changing it is not allowed.

This GCC Runtime Library Exception ("Exception") is an additional permission under section 7 of the GNU General Public License, version 3 ("GPLv3"). It applies to a given file (the "Runtime Library") that bears a notice placed by the copyright holder of the file stating that the file is governed by GPLv3 along with this Exception.

When you use GCC to compile a program, GCC may combine portions of certain GCC header files and runtime libraries with the compiled program. The purpose of this Exception is to allow compilation of non-GPL (including proprietary) programs to use, in this way, the header files and runtime libraries covered by this Exception.

0. Definitions.

A file is an "Independent Module" if it either requires the Runtime Library for execution after a Compilation Process, or makes use of an interface provided by the Runtime Library, but is not otherwise based on the Runtime Library.

"GCC" means a version of the GNU Compiler Collection, with or without modifications, governed by version 3 (or a specified later version) of the GNU General Public License (GPL) with the option of using any subsequent versions published by the FSF.

"GPL-compatible Software" is software whose conditions of propagation, modification and use would permit combination with GCC in accord with the license of GCC.

"Target Code" refers to output from any compiler for a real or virtual target processor architecture, in executable form or suitable for input to an assembler, loader, linker and/or execution phase. Notwithstanding that, Target Code does not include data in any format that is used as a compiler intermediate representation, or used for producing a compiler intermediate representation.

The "Compilation Process" transforms code entirely represented in non-intermediate languages designed for human-written code, and/or in Java Virtual Machine byte code, into Target Code. Thus, for example, use of source code generators and preprocessors need not be considered part of the Compilation Process, since the Compilation Process can be understood as starting with the output of the generators or preprocessors.

A Compilation Process is "Eligible" if it is done using GCC, alone or with other GPL-compatible software, or if it is done without using any work based on GCC. For example, using non-GPL-compatible Software to optimize any GCC intermediate representations would not qualify as an Eligible Compilation Process.

1. Grant of Additional Permission.

You have permission to propagate a work of Target Code formed by combining the Runtime Library with Independent Modules, even if such propagation would otherwise violate the terms of GPLv3, provided that all Target Code was generated by Eligible Compilation Processes. You may then convey such a combination under terms of your choice, consistent with the licensing of the Independent Modules.

2. No Weakening of GCC Copyleft.

The availability of this Exception does not imply any general presumption that third-party software is unaffected by the copyleft requirements of the license of GCC.

GNU GENERAL PUBLIC LICENSE

Version 3, 29 June 2007

Copyright © 2007 Free Software Foundation, Inc. <http://fsf.org/>

Everyone is permitted to copy and distribute verbatim copies of this license document, but changing it is not allowed.
Preamble

The GNU General Public License is a free, copyleft license for software and other kinds of works.

The licenses for most software and other practical works are designed to take away your freedom to share and change the works. By contrast, the GNU General Public License is intended to guarantee your freedom to share and change all versions of a program--to make sure it remains free software for all its users. We, the Free Software Foundation, use the GNU General Public License for most of our software; it applies also to any other work released this way by its authors. You can apply it to your programs, too.

When we speak of free software, we are referring to freedom, not price. Our General Public Licenses are designed to make sure that you have the freedom to distribute copies of free software (and charge for them if you wish), that you receive source code or can get it if you want it, that you can change the software or use pieces of it in new free programs, and that you know you can do these things.

To protect your rights, we need to prevent others from denying you these rights or asking you to surrender the rights. Therefore, you have certain responsibilities if you distribute copies of the software, or if you modify it: responsibilities to respect the freedom of others.

For example, if you distribute copies of such a program, whether gratis or for a fee, you must pass on to the recipients the same freedoms that you received. You must make sure that they, too, receive or can get the source code. And you must show them these terms so they know their rights.

Developers that use the GNU GPL protect your rights with two steps: (1) assert copyright on the software, and (2) offer you this License giving you legal permission to copy, distribute and/or modify it.

For the developers' and authors' protection, the GPL clearly explains that there is no warranty for this free software. For both users' and authors' sake, the GPL requires that modified versions be marked as changed, so that their problems will not be attributed erroneously to authors of previous versions.

Some devices are designed to deny users access to install or run modified versions of the software inside them, although the manufacturer can do so. This is fundamentally incompatible with the aim of protecting users' freedom to change the software. The systematic pattern of such abuse occurs in the area of products for individuals to use, which is precisely where it is most unacceptable. Therefore, we have designed this version of the GPL to prohibit the practice for those products. If such problems arise substantially in other domains, we stand ready to extend this provision to those domains in future versions of the GPL, as needed to protect the freedom of users.

Finally, every program is threatened constantly by software patents. States should not allow patents to restrict development and use of software on general-purpose computers, but in those that do, we wish to avoid the special danger that patents applied to a free program could make it effectively proprietary. To prevent this, the GPL assures that patents cannot be used to render the program non-free.

The precise terms and conditions for copying, distribution and modification follow.
TERMS AND CONDITIONS

0. Definitions.

“This License” refers to version 3 of the GNU General Public License.

“Copyright” also means copyright-like laws that apply to other kinds of works, such as semiconductor masks.

“The Program” refers to any copyrightable work licensed under this License. Each licensee is addressed as “you”. “Licensees” and “recipients” may be individuals or organizations.

To “modify” a work means to copy from or adapt all or part of the work in a fashion requiring copyright permission, other than the making of an exact copy. The resulting work is called a “modified version” of the earlier work or a work “based on” the earlier work.

A “covered work” means either the unmodified Program or a work based on the Program.

To “propagate” a work means to do anything with it that, without permission, would make you directly or secondarily liable for infringement under applicable copyright law, except executing it on a computer or modifying a private copy. Propagation includes copying, distribution (with or without modification), making available to the public, and in some countries other activities as well.

To “convey” a work means any kind of propagation that enables other parties to make or receive copies. Mere interaction with a user through a computer network, with no transfer of a copy, is not conveying.

An interactive user interface displays “Appropriate Legal Notices” to the extent that it includes a convenient and prominently visible feature that (1) displays an appropriate copyright notice, and (2) tells the user that there is no warranty for the work (except to the extent that warranties are provided),

that licensees may convey the work under this License, and how to view a copy of this License. If the interface presents a list of user commands or options, such as a menu, a prominent item in the list meets this criterion.

1. Source Code.

The “source code” for a work means the preferred form of the work for making modifications to it. “Object code” means any non-source form of a work.

A “Standard Interface” means an interface that either is an official standard defined by a recognized standards body, or, in the case of interfaces specified for a particular programming language, one that is widely used among developers working in that language.

The “System Libraries” of an executable work include anything, other than the work as a whole, that (a) is included in the normal form of packaging a Major Component, but which is not part of that Major Component, and (b) serves only to enable use of the work with that Major Component, or to implement a Standard Interface for which an implementation is available to the public in source code form. A “Major Component”, in this context, means a major essential component (kernel, window system, and so on) of the specific operating system (if any) on which the executable work runs, or a compiler used to produce the work, or an object code interpreter used to run it.

The “Corresponding Source” for a work in object code form means all the source code needed to generate, install, and (for an executable work) run the object code and to modify the work, including scripts to control those activities. However, it does not include the work's System Libraries, or general-purpose tools or generally available free programs which are used unmodified in performing those activities but which are not part of the work. For example, Corresponding Source includes interface definition files associated with source files for the work, and the source code for shared libraries and dynamically linked subprograms that the work is specifically designed to require, such as by intimate data communication or control flow between those subprograms and other parts of the work.

The Corresponding Source need not include anything that users can regenerate automatically from other parts of the Corresponding Source.

The Corresponding Source for a work in source code form is that same work.

2. Basic Permissions.

All rights granted under this License are granted for the term of copyright on the Program, and are irrevocable provided the stated conditions are met. This License explicitly affirms your unlimited permission to run the unmodified Program. The output from running a covered work is covered by this License only if the output, given its content, constitutes a covered work. This License acknowledges your rights of fair use or other equivalent, as provided by copyright law.

You may make, run and propagate covered works that you do not convey, without conditions so long as your license otherwise remains in force. You may convey covered works to others for the sole purpose of having them make modifications exclusively for you, or provide you with facilities for running those works, provided that you comply with the terms of this License in conveying all material for which you do not control copyright. Those thus making or running the covered works for you must do so exclusively on your behalf, under your direction and control, on terms that prohibit them from making any copies of your copyrighted material outside their relationship with you.

Conveying under any other circumstances is permitted solely under the conditions stated below. Sublicensing is not allowed; section 10 makes it unnecessary.

3. Protecting Users' Legal Rights From Anti-Circumvention Law.

No covered work shall be deemed part of an effective technological measure under any applicable law fulfilling obligations under article 11 of the WIPO copyright treaty adopted on 20 December 1996, or similar laws prohibiting or restricting circumvention of such measures.

When you convey a covered work, you waive any legal power to forbid circumvention of technological measures to the extent such circumvention is effected by exercising rights under this License with respect to the covered work, and you disclaim any intention to limit operation or modification of the work as a means of enforcing, against the work's users, your or third parties' legal rights to forbid circumvention of technological measures.

4. Conveying Verbatim Copies.

You may convey verbatim copies of the Program's source code as you receive it, in any medium, provided that you conspicuously and appropriately publish on each copy an appropriate copyright notice; keep intact all notices stating that this License and any non-permissive terms added in accord with section 7 apply to the code; keep intact all notices of the absence of any warranty; and give all recipients a copy of this License along with the Program.

You may charge any price or no price for each copy that you convey, and you may offer support or warranty protection for a fee.

5. Conveying Modified Source Versions.

You may convey a work based on the Program, or the modifications to produce it from the Program, in the form of source code under the terms of section 4, provided that you also meet all of these conditions:

a) The work must carry prominent notices stating that you modified it, and giving a relevant date.
b) The work must carry prominent notices stating that it is released under this License and any conditions added under section 7. This requirement modifies the requirement in section 4 to “keep intact all notices”.
c) You must license the entire work, as a whole, under this License to anyone who comes into possession of a copy. This License will therefore apply, along with any applicable section 7 additional terms, to the whole of the work, and all its parts, regardless of how they are packaged. This License gives no permission to license the work in any other way, but it does not invalidate such permission if you have separately received it.
d) If the work has interactive user interfaces, each must display Appropriate Legal Notices; however, if the Program has interactive interfaces that do not display Appropriate Legal Notices, your work need not make them do so.

A compilation of a covered work with other separate and independent works, which are not by their nature extensions of the covered work, and which are not combined with it such as to form a larger program, in or on a volume of a storage or distribution medium, is called an “aggregate” if the compilation and its resulting copyright are not used to limit the access or legal rights of the compilation's users beyond what the individual works permit. Inclusion of a covered work in an aggregate does not cause this License to apply to the other parts of the aggregate.

6. Conveying Non-Source Forms.

You may convey a covered work in object code form under the terms of sections 4 and 5, provided that you also convey the machine-readable Corresponding Source under the terms of this License, in one of these ways:

a) Convey the object code in, or embodied in, a physical product (including a physical distribution medium), accompanied by the Corresponding Source fixed on a durable physical medium customarily used for software interchange.
b) Convey the object code in, or embodied in, a physical product (including a physical distribution medium), accompanied by a written offer, valid for at least three years and valid for as long as you offer spare parts or customer support for that product model, to give anyone who possesses the object code either (1) a copy of the Corresponding Source for all the software in the product that is covered by this License, on a durable physical medium customarily used for software interchange, for a price no more than your reasonable cost of physically performing this conveying of source, or (2) access to copy the Corresponding Source from a network server at no charge.
c) Convey individual copies of the object code with a copy of the written offer to provide the Corresponding Source. This alternative is allowed only occasionally and noncommercially, and only if you received the object code with such an offer, in accord with subsection 6b.

d) Convey the object code by offering access from a designated place (gratis or for a charge), and offer equivalent access to the Corresponding Source in the same way through the same place at no further charge. You need not require recipients to copy the Corresponding Source along with the object code. If the place to copy the object code is a network server, the Corresponding Source may be on a different server (operated by you or a third party) that supports equivalent copying facilities, provided you maintain clear directions next to the object code saying where to find the Corresponding Source. Regardless of what server hosts the Corresponding Source, you remain obligated to ensure that it is available for as long as needed to satisfy these requirements.
e) Convey the object code using peer-to-peer transmission, provided you inform other peers where the object code and Corresponding Source of the work are being offered to the general public at no charge under subsection 6d.

A separable portion of the object code, whose source code is excluded from the Corresponding Source as a System Library, need not be included in conveying the object code work.

A “User Product” is either (1) a “consumer product”, which means any tangible personal property which is normally used for personal, family, or household purposes, or (2) anything designed or sold for incorporation into a dwelling. In determining whether a product is a consumer product, doubtful cases shall be resolved in favor of coverage. For a particular product received by a particular user, “normally used” refers to a typical or common use of that class of product, regardless of the status of the particular user or of the way in which the particular user actually uses, or expects or is expected to use, the product. A product is a consumer product regardless of whether the product has substantial commercial, industrial or non-consumer uses, unless such uses represent the only significant mode of use of the product.

“Installation Information” for a User Product means any methods, procedures, authorization keys, or other information required to install and execute modified versions of a covered work in that User Product from a modified version of its Corresponding Source. The information must suffice to ensure that the continued functioning of the modified object code is in no case prevented or interfered with solely because modification has been made.

If you convey an object code work under this section in, or with, or specifically for use in, a User Product, and the conveying occurs as part of a transaction in which the right of possession and use of the User Product is transferred to the recipient in perpetuity or for a fixed term (regardless of how the transaction is characterized), the Corresponding Source conveyed under this section must be accompanied by the Installation Information. But this requirement does not apply if neither you nor any third party retains the ability to install modified object code on the User Product (for example, the work has been installed in ROM).

The requirement to provide Installation Information does not include a requirement to continue to provide support service, warranty, or updates for a work that has been modified or installed by the recipient, or for the User Product in which it has been modified or installed. Access to a network may be denied when the modification itself materially and adversely affects the operation of the network or violates the rules and protocols for communication across the network.

Corresponding Source conveyed, and Installation Information provided, in accord with this section must be in a format that is publicly documented (and with an implementation available to the public in source code form), and must require no special password or key for unpacking, reading or copying.

7. Additional Terms.

Additional permissions" are terms that supplement the terms of this License by making exceptions from one or more of its conditions. Additional permissions that are applicable to the entire Program shall be treated as though they were included in this License, to the extent that they are valid under applicable law. If additional permissions apply only to part of the Program, that part may be used separately under those permissions, but the entire Program remains governed by this License without regard to the additional permissions.

When you convey a copy of a covered work, you may at your option remove any additional permissions from that copy, or from any part of it. (Additional permissions may be written to require their own removal in certain cases when you modify the work.) You may place additional permissions on material, added by you to a covered work, for which you have or can give appropriate copyright permission.

Notwithstanding any other provision of this License, for material you add to a covered work, you may (if authorized by the copyright holders of that material) supplement the terms of this License with terms:

a) Disclaiming warranty or limiting liability differently from the terms of sections 15 and 16 of this License; or
b) Requiring preservation of specified reasonable legal notices or author attributions in that material or in the Appropriate Legal Notices displayed by works containing it; or
c) Prohibiting misrepresentation of the origin of that material, or requiring that modified versions of such material be marked in reasonable ways as different from the original version; or
d) Limiting the use for publicity purposes of names of licensors or authors of the material; or
e) Declining to grant rights under trademark law for use of some trade names, trademarks, or service marks; or
f) Requiring indemnification of licensors and authors of that material by anyone who conveys the material (or modified versions of it) with contractual assumptions of liability to the recipient, for any liability that these contractual assumptions directly impose on those licensors and authors.

All other non-permissive additional terms are considered “further restrictions” within the meaning of section 10. If the Program as you received it, or any part of it, contains a notice stating that it is governed by this License along with a term that is a further restriction, you may remove that term. If a license document contains a further restriction but permits relicensing or conveying under this License, you may add to a covered work material governed by the terms of that license document, provided that the further restriction does not survive such relicensing or conveying.

If you add terms to a covered work in accord with this section, you must place, in the relevant source files, a statement of the additional terms that apply to those files, or a notice indicating where to find the applicable terms.

Additional terms, permissive or non-permissive, may be stated in the form of a separately written license, or stated as exceptions; the above requirements apply either way.

8. Termination.

You may not propagate or modify a covered work except as expressly provided under this License. Any attempt otherwise to propagate or modify it is void, and will automatically terminate your rights under this License (including any patent licenses granted under the third paragraph of section 11).

However, if you cease all violation of this License, then your license from a particular copyright holder is reinstated (a) provisionally, unless and until the copyright holder explicitly and finally terminates your license, and (b) permanently, if the copyright holder fails to notify you of the violation by some reasonable means prior to 60 days after the cessation.

Moreover, your license from a particular copyright holder is reinstated permanently if the copyright holder notifies you of the violation by some reasonable means, this is the first time you have received notice of violation of this License (for any work) from that copyright holder, and you cure the violation prior to 30 days after your receipt of the notice.

Termination of your rights under this section does not terminate the licenses of parties who have received copies or rights from you under this License. If your rights have been terminated and not permanently reinstated, you do not qualify to receive new licenses for the same material under section 10.

9. Acceptance Not Required for Having Copies.

You are not required to accept this License in order to receive or run a copy of the Program. Ancillary propagation of a covered work occurring solely as a consequence of using peer-to-peer transmission to receive a copy likewise does not require acceptance. However, nothing other than this License grants you permission to propagate or modify any covered work. These actions infringe copyright if you do not accept this License. Therefore, by modifying or propagating a covered work, you indicate your acceptance of this License to do so.

10. Automatic Licensing of Downstream Recipients.

Each time you convey a covered work, the recipient automatically receives a license from the original licensors, to run, modify and propagate that work, subject to this License. You are not responsible for enforcing compliance by third parties with this License.

An “entity transaction” is a transaction transferring control of an organization, or substantially all assets of one, or subdividing an organization, or merging organizations. If propagation of a covered work results from an entity transaction, each party to that transaction who receives a copy of the work also receives whatever licenses to the work the party's predecessor in interest had or could give under the previous paragraph, plus a right to possession of the Corresponding Source of the work from the predecessor in interest, if the predecessor has it or can get it with reasonable efforts.

You may not impose any further restrictions on the exercise of the rights granted or affirmed under this License. For example, you may not impose a license fee, royalty, or other charge for exercise of rights granted under this License, and you may not initiate litigation (including a cross-claim or counterclaim in a lawsuit) alleging that any patent claim is infringed by making, using, selling, offering for sale, or importing the Program or any portion of it.

11. Patents.

A “contributor” is a copyright holder who authorizes use under this License of the Program or a work on which the Program is based. The work thus licensed is called the contributor's “contributor version”.

A contributor's “essential patent claims” are all patent claims owned or controlled by the contributor, whether already acquired or hereafter acquired, that would be infringed by some manner, permitted by this License, of making, using, or selling its contributor version, but do not include claims that would be infringed only as a consequence of further modification of the contributor version. For purposes of this definition, “control” includes the right to grant patent sublicenses in a manner consistent with the requirements of this License.

Each contributor grants you a non-exclusive, worldwide, royalty-free patent license under the contributor's essential patent claims, to make, use, sell, offer for sale, import and otherwise run, modify and propagate the contents of its contributor version.

In the following three paragraphs, a “patent license” is any express agreement or commitment, however denominated, not to enforce a patent (such as an express permission to practice a patent or covenant not to sue for patent infringement). To “grant” such a patent license to a party means to make such an agreement or commitment not to enforce a patent against the party.

If you convey a covered work, knowingly relying on a patent license, and the Corresponding Source of the work is not available for anyone to copy, free of charge and under the terms of this License, through a publicly available network server or other readily accessible means, then you must either (1) cause the Corresponding Source to be so available, or (2) arrange to deprive yourself of the benefit of the patent license for this particular work, or (3) arrange, in a manner consistent with the requirements of this License, to extend the patent license to downstream recipients. “Knowingly relying” means you have actual knowledge that, but for the patent license, your conveying the covered work in a country, or your recipient's use of the covered work in a country, would infringe one or more identifiable patents in that country that you have reason to believe are valid.

If, pursuant to or in connection with a single transaction or arrangement, you convey, or propagate by procuring conveyance of, a covered work, and grant a patent license to some of the parties receiving the covered work authorizing them to use, propagate, modify or convey a specific copy of the covered work, then the patent license you grant is automatically extended to all recipients of the covered work and works based on it.

A patent license is “discriminatory” if it does not include within the scope of its coverage, prohibits the exercise of, or is conditioned on the non-exercise of one or more of the rights that are specifically granted under this License. You may not convey a covered work if you are a party to an arrangement with a third party that is in the business of distributing software, under which you make payment to the third party based on the extent of your activity of conveying the work, and under which the third party grants, to any of the parties who would receive the covered work from you, a discriminatory patent license (a) in connection with copies of the covered work conveyed by you (or copies made from those copies), or (b) primarily for and in connection with specific products or compilations that contain the covered work, unless you entered into that arrangement, or that patent license was granted, prior to 28 March 2007.

Nothing in this License shall be construed as excluding or limiting any implied license or other defenses to infringement that may otherwise be available to you under applicable patent law.

12. No Surrender of Others' Freedom.

If conditions are imposed on you (whether by court order, agreement or otherwise) that contradict the conditions of this License, they do not excuse you from the conditions of this License. If you cannot convey a covered work so as to satisfy simultaneously your obligations under this License and any other pertinent obligations, then as a consequence you may not convey it at all. For example, if you agree to terms that obligate you to collect a royalty for further conveying from those to whom you convey the Program, the only way you could satisfy both those terms and this License would be to refrain entirely from conveying the Program.

13. Use with the GNU Affero General Public License.

Notwithstanding any other provision of this License, you have permission to link or combine any covered work with a work licensed under version 3 of the GNU Affero General Public License into a single combined work, and to convey the resulting work. The terms of this License will continue to apply to the part which is the covered work, but the special requirements of the GNU Affero General Public License, section 13, concerning interaction through a network will apply to the combination as such.

14. Revised Versions of this License.

The Free Software Foundation may publish revised and/or new versions of the GNU General Public License from time to time. Such new versions will be similar in spirit to the present version, but may differ in detail to address new problems or concerns.

Each version is given a distinguishing version number. If the Program specifies that a certain numbered version of the GNU General Public License “or any later version” applies to it, you have the option of following the terms and conditions either of that numbered version or of any later version published by the Free Software Foundation. If the Program does not specify a version number of the GNU General Public License, you may choose any version ever published by the Free Software Foundation.

If the Program specifies that a proxy can decide which future versions of the GNU General Public License can be used, that proxy's public statement of acceptance of a version permanently authorizes you to choose that version for the Program.

Later license versions may give you additional or different permissions. However, no additional obligations are imposed on any author or copyright holder as a result of your choosing to follow a later version.

15. Disclaimer of Warranty.

THERE IS NO WARRANTY FOR THE PROGRAM, TO THE EXTENT PERMITTED BY APPLICABLE LAW. EXCEPT WHEN OTHERWISE STATED IN WRITING THE COPYRIGHT HOLDERS AND/OR OTHER PARTIES PROVIDE THE PROGRAM “AS IS” WITHOUT WARRANTY OF ANY KIND, EITHER EXPRESSED OR IMPLIED, INCLUDING, BUT NOT LIMITED TO, THE IMPLIED WARRANTIES OF MERCHANTABILITY AND FITNESS FOR A PARTICULAR PURPOSE. THE ENTIRE RISK AS TO THE QUALITY AND PERFORMANCE OF THE PROGRAM IS WITH YOU. SHOULD THE PROGRAM PROVE DEFECTIVE, YOU ASSUME THE COST OF ALL NECESSARY SERVICING, REPAIR OR CORRECTION.

16. Limitation of Liability.

IN NO EVENT UNLESS REQUIRED BY APPLICABLE LAW OR AGREED TO IN WRITING WILL ANY COPYRIGHT HOLDER, OR ANY OTHER PARTY WHO MODIFIES AND/OR CONVEYS THE PROGRAM AS PERMITTED ABOVE, BE LIABLE TO YOU FOR DAMAGES, INCLUDING ANY GENERAL, SPECIAL, INCIDENTAL OR CONSEQUENTIAL DAMAGES ARISING OUT OF THE USE OR INABILITY TO USE THE PROGRAM (INCLUDING BUT NOT LIMITED TO LOSS OF DATA OR DATA BEING RENDERED INACCURATE OR LOSSES SUSTAINED BY YOU OR THIRD PARTIES OR A FAILURE OF THE PROGRAM TO OPERATE WITH ANY OTHER PROGRAMS), EVEN IF SUCH HOLDER OR OTHER PARTY HAS BEEN ADVISED OF THE POSSIBILITY OF SUCH DAMAGES.

17. Interpretation of Sections 15 and 16.

If the disclaimer of warranty and limitation of liability provided above cannot be given local legal effect according to their terms, reviewing courts shall apply local law that most closely approximates an absolute waiver of all civil liability in connection with the Program, unless a warranty or assumption of liability accompanies a copy of the Program in return for a fee.

END OF TERMS AND CONDITIONS
How to Apply These Terms to Your New Programs

If you develop a new program, and you want it to be of the greatest possible use to the public, the best way to achieve this is to make it free software which everyone can redistribute and change under these terms.

To do so, attach the following notices to the program. It is safest to attach them to the start of each source file to most effectively state the exclusion of warranty; and each file should have at least the “copyright” line and a pointer to where the full notice is found.

<one line to give the program's name and a brief idea of what it does.>
Copyright (C) <year> <name of author>

This program is free software: you can redistribute it and/or modify
it under the terms of the GNU General Public License as published by
the Free Software Foundation, either version 3 of the License, or
(at your option) any later version.

This program is distributed in the hope that it will be useful,
but WITHOUT ANY WARRANTY; without even the implied warranty of
MERCHANTABILITY or FITNESS FOR A PARTICULAR PURPOSE. See the
GNU General Public License for more details.

You should have received a copy of the GNU General Public License
along with this program. If not, see <http://www.gnu.org/licenses/>.

Also add information on how to contact you by electronic and paper mail.

If the program does terminal interaction, make it output a short notice like this when it starts in an interactive mode:

<program> Copyright (C) <year> <name of author>
This program comes with ABSOLUTELY NO WARRANTY; for details type `show w'.
This is free software, and you are welcome to redistribute it
under certain conditions; type `show c' for details.

The hypothetical commands `show w' and `show c' should show the appropriate parts of the General Public License. Of course, your program's commands might be different; for a GUI interface, you would use an “about box”.

You should also get your employer (if you work as a programmer) or school, if any, to sign a “copyright disclaimer” for the program, if necessary. For more information on this, and how to apply and follow the GNU GPL, see <http://www.gnu.org/licenses/>.

The GNU General Public License does not permit incorporating your program into proprietary programs. If your program is a subroutine library, you may consider it more useful to permit linking proprietary applications with the library. If this is what you want to do, use the GNU Lesser General Public License instead of this License. But first, please read <http://www.gnu.org/philosophy/why-not-lgpl.html>.

2 This configure script is free software; the Free Software Foundation
gives unlimited permission to copy, distribute and modify it.

Copyrights:

Copyright (C) 2003 Free Software Foundation, Inc.

Copyright (C) 2005, 2006, 2009 Free Software Foundation

Copyright (C) 2007, 2009 Free Software Foundation, Inc.

Copyright (C) 2008, 2009 Free Software Foundation, Inc.

Copyright 1997, 1998, 1999, 2000, 2001, 2002, 2003, 2004, 2005, 2006, 2007, 2008, 2009 Free Software Foundation, Inc.

SIEMENS

SIMATIC

S7-1500/ET 200MP

Technology Module TM PTO 4 (6ES7553-1AA00-0AB0)

Manual

Edition 12/2016

Answers for industry.

SIEMENS

SIMATIC

S7-1500/ET 200MP Technology Module TM PTO 4 (6ES7553-1AA00-0AB0)

Manual

Preface

Documentation guide 1

Product overview 2

Connecting 3

Configuring/address space 4

Interrupts/diagnostic alarms 5

Technical specifications 6

Dimensional drawing A

Parameter data record B

12/2016

A5E38896703-AA

Legal information

Warning notice system

This manual contains notices you have to observe in order to ensure your personal safety, as well as to prevent damage to property. The notices referring to your personal safety are highlighted in the manual by a safety alert symbol, notices referring only to property damage have no safety alert symbol. These notices shown below are graded according to the degree of danger.

⚠ DANGER

indicates that death or severe personal injury **will** result if proper precautions are not taken.

⚠ WARNING

indicates that death or severe personal injury **may** result if proper precautions are not taken.

⚠ CAUTION

indicates that minor personal injury can result if proper precautions are not taken.

NOTICE

indicates that property damage can result if proper precautions are not taken.

If more than one degree of danger is present, the warning notice representing the highest degree of danger will be used. A notice warning of injury to persons with a safety alert symbol may also include a warning relating to property damage.

Qualified Personnel

The product/system described in this documentation may be operated only by **personnel qualified** for the specific task in accordance with the relevant documentation, in particular its warning notices and safety instructions. Qualified personnel are those who, based on their training and experience, are capable of identifying risks and avoiding potential hazards when working with these products/systems.

Proper use of Siemens products

Note the following:

⚠ WARNING

Siemens products may only be used for the applications described in the catalog and in the relevant technical documentation. If products and components from other manufacturers are used, these must be recommended or approved by Siemens. Proper transport, storage, installation, assembly, commissioning, operation and maintenance are required to ensure that the products operate safely and without any problems. The permissible ambient conditions must be complied with. The information in the relevant documentation must be observed.

Trademarks

All names identified by ® are registered trademarks of Siemens AG. The remaining trademarks in this publication may be trademarks whose use by third parties for their own purposes could violate the rights of the owner.

Disclaimer of Liability

We have reviewed the contents of this publication to ensure consistency with the hardware and software described. Since variance cannot be precluded entirely, we cannot guarantee full consistency. However, the information in this publication is reviewed regularly and any necessary corrections are included in subsequent editions.

Siemens AG
Division Digital Factory
Postfach 48 48
90026 NÜRNBERG
GERMANY

A5E38896703-AA
℗ 12/2016 Subject to change

Copyright © Siemens AG 2016.
All rights reserved

Preface

Purpose of the documentation

This manual includes module-specific information on wiring, diagnostics and the technical specifications of the technology module.

Generally-applicable information on installation and commissioning of the S7-1500 or ET 200MP is available in System Manual "S7-1500, ET 200MP Automation System".

Conventions

Please observe notes marked as follows:

Note

A note contains important information on the product described in the documentation, on the handling of the product and on the section of the documentation to which particular attention should be paid.

Security information

Siemens provides products and solutions with industrial security functions that support the secure operation of plants, systems, machines and networks.

In order to protect plants, systems, machines and networks against cyber threats, it is necessary to implement – and continuously maintain – a holistic, state-of-the-art industrial security concept. Siemens' products and solutions only form one element of such a concept.

Customer is responsible to prevent unauthorized access to its plants, systems, machines and networks. Systems, machines and components should only be connected to the enterprise network or the internet if and to the extent necessary and with appropriate security measures (e.g. use of firewalls and network segmentation) in place.

Additionally, Siemens' guidance on appropriate security measures should be taken into account. For more information about industrial security, please visit (http://www.siemens.com/industrialsecurity).

Siemens' products and solutions undergo continuous development to make them more secure. Siemens strongly recommends to apply product updates as soon as available and to always use the latest product versions. Use of product versions that are no longer supported, and failure to apply latest updates may increase customer's exposure to cyber threats.

To stay informed about product updates, subscribe to the Siemens Industrial Security RSS Feed under (http://www.siemens.com/industrialsecurity).

Open Source Software

Open-source software is used in the firmware of the product described. Open Source Software is provided free of charge. We are liable for the product described, including the open-source software contained in it, pursuant to the conditions applicable to the product. Siemens accepts no liability for the use of the open source software over and above the intended program sequence, or for any faults caused by modifications to the software.

For legal reasons, we are obliged to publish the original text of the license conditions and copyright notices. Please read the information on this on the Internet (https://support.industry.siemens.com/cs/ww/en/view/109740777).

Table of contents

Preface 4

1 Documentation guide 7

2 Product overview 11

2.1 Properties 11

2.2 Functions 14
2.2.1 Pulse Train Output (PTO) 14
2.2.2 Isochronous mode 16

3 Connecting 17

3.1 Pin assignment 17

4 Configuring/address space 26

4.1 Configuring 26

4.2 Reaction to CPU STOP 28

4.3 Address space 28

4.4 Parameters 29

4.5 Control and feedback interface 34
4.5.1 Assignment of the control interface 34
4.5.2 Assignment of the feedback interface 38
4.5.3 Enabling the pulse output 42

5 Interrupts/diagnostic alarms 44

5.1 Status and error displays 44

5.2 Diagnostic alarms 47

6 Technical specifications 49

A Dimensional drawing 54

B Parameter data record 56

B.1 Parameter assignment and structure of the parameter data record 56

B.2 Parameter validation error 61

Documentation guide

1

The documentation for the SIMATIC S7-1500 automation system, the CPU 1516pro-2 PN based on SIMATIC S7-1500 and the SIMATIC ET 200MP distributed I/O system is arranged into three areas.
This arrangement enables you to access the specific content you require.

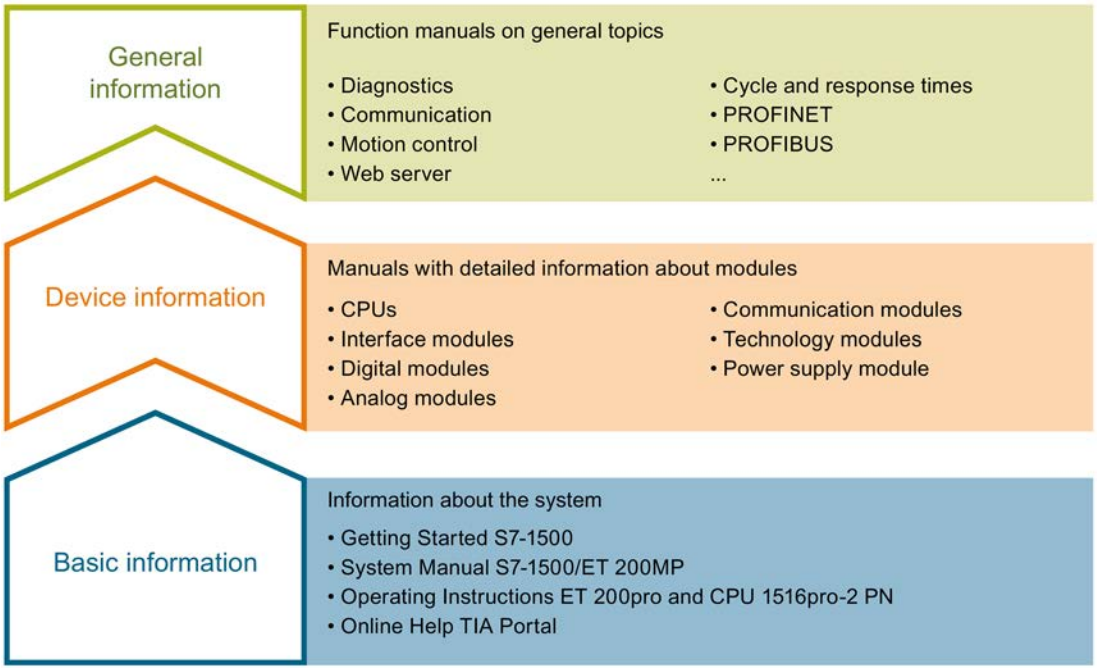

Basic information

The System Manual and Getting Started describe in detail the configuration, installation, wiring and commissioning of the SIMATIC S7-1500 and ET 200MP systems. For CPU 1516pro-2 PN you use the corresponding operating instructions. The STEP 7 online help supports you in the configuration and programming.

Device information

Product manuals contain a compact description of the module-specific information, such as properties, wiring diagrams, characteristics and technical specifications.

General information

The function manuals contain detailed descriptions on general topics regarding the SIMATIC S7-1500 and ET 200MP systems, e.g. diagnostics, communication, motion control, Web server, OPC UA.

You can download the documentation free of charge from the Internet (http://w3.siemens.com/mcms/industrial-automation-systems-simatic/en/manual-overview/Pages/Default.aspx).

Changes and supplements to the manuals are documented in a Product Information.

You can download the product information free of charge from the Internet (https://support.industry.siemens.com/cs/us/en/view/68052815).

Manual Collection S7-1500/ET 200MP

The Manual Collection contains the complete documentation on the SIMATIC S7-1500 automation system and the ET 200MP distributed I/O system gathered together in one file.

You can find the Manual Collection on the Internet (https://support.industry.siemens.com/cs/ww/en/view/86140384).

SIMATIC S7-1500 comparison list for programming languages

The comparison list contains an overview of which instructions and functions you can use for which controller families.

You can find the comparison list on the Internet (https://support.industry.siemens.com/cs/ww/en/view/86630375).

"mySupport"

With "mySupport", your personal workspace, you make the best out of your Industry Online Support.

In "mySupport", you can save filters, favorites and tags, request CAx data and compile your personal library in the Documentation area. In addition, your data is already filled out in support requests and you can get an overview of your current requests at any time.

You must register once to use the full functionality of "mySupport".

You can find "mySupport" on the Internet (https://support.industry.siemens.com/My/ww/en).

"mySupport" - Documentation

In the Documentation area in "mySupport" you can combine entire manuals or only parts of these to your own manual.
You can export the manual as PDF file or in a format that can be edited later.

You can find "mySupport" - Documentation on the Internet (http://support.industry.siemens.com/My/ww/en/documentation).

"mySupport" - CAx data

In the CAx data area in "mySupport", you can access the current product data for your CAx or CAe system.

You configure your own download package with a few clicks.

In doing so you can select:

- Product images, 2D dimension drawings, 3D models, internal circuit diagrams, EPLAN macro files
- Manuals, characteristics, operating manuals, certificates
- Product master data

You can find "mySupport" - CAx data on the Internet (http://support.industry.siemens.com/my/ww/en/CAxOnline).

Application examples

The application examples support you with various tools and examples for solving your automation tasks. Solutions are shown in interplay with multiple components in the system - separated from the focus on individual products.

You will find the application examples on the Internet (https://support.industry.siemens.com/sc/ww/en/sc/2054).

TIA Selection Tool

With the TIA Selection Tool, you can select, configure and order devices for Totally Integrated Automation (TIA).
This tool is the successor of the SIMATIC Selection Tool and combines the known configurators for automation technology into one tool.
With the TIA Selection Tool, you can generate a complete order list from your product selection or product configuration.

You can find the TIA Selection Tool on the Internet (http://w3.siemens.com/mcms/topics/en/simatic/tia-selection-tool).

SIMATIC Automation Tool

You can use the SIMATIC Automation Tool to run commissioning and maintenance activities simultaneously on various SIMATIC S7 stations as a bulk operation independently of the TIA Portal.

The SIMATIC Automation Tool provides a multitude of functions:

- Scanning of a PROFINET/Ethernet network and identification of all connected CPUs
- Address assignment (IP, subnet, gateway) and station name (PROFINET device) to a CPU
- Transfer of the date and the programming device/PC time converted to UTC time to the module
- Program download to CPU
- Operating mode switchover RUN/STOP
- Localization of the CPU by means of LED flashing
- Reading out CPU error information
- Reading the CPU diagnostic buffer
- Reset to factory settings
- Updating the firmware of the CPU and connected modules

You can find the SIMATIC Automation Tool on the Internet (https://support.industry.siemens.com/cs/ww/en/view/98161300).

PRONETA

With SIEMENS PRONETA (PROFINET network analysis), you analyze the PROFINET network during commissioning. PRONETA features two core functions:

- The topology overview independently scans PROFINET and all connected components.
- The IO check is a fast test of the wiring and the module configuration of a system.

You can find SIEMENS PRONETA on the Internet (https://support.industry.siemens.com/cs/ww/en/view/67460624).

Product overview

2

2.1 Properties

Article number

6ES7553-1AA00-0AB0

View of the module

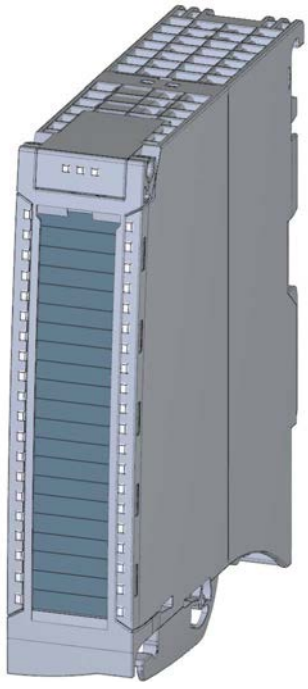

Figure 2-1 View of the TM PTO 4 module

Introduction

The technology module enables you to connect up to four stepper motor axes to an S7-1500 system. The module is linked to technology objects by means of an implementation of the PROFIdrive frame 3 and forms the interface to the drive. The number of steps that are output is returned as the actual position value.

Properties

The TM PTO 4 technology module has the following properties:

- Technical properties
  - 4 channels, quantity can be configured, channel-by-channel parameter assignment
  - Interfaces:

    RS422/TTL(5 V) or 24 V pulse output signals P/A and D/B for the PTO function (per channel, max. 1 MHz for RS422, max. 200 kHz for 24 V / TTL (5 V))

    Digital input signals DI0 and DI1 for the reference switch, measuring input, ready input functions (per channel)

    Digital output signal DQ0 for the PTO or drive enable function (per channel)

    Digital output signal DQ1 for the PTO function (per channel)

    Digital input/output signal DIQ2 for the drive enable or ready input function (per channel)

    Supply voltage L+
  - Configurable diagnostics (per channel)
  - Configurable interpulse period for auto reverse
  - Configurable input delay: none, 0.05 ms ... 20 ms
- Supported signal types for pulse output
  - Pulse encoder with direction signal
  - Pulse encoder with forward signal and backward signal
  - Incremental encoder with two signals with a 90° phase shift
- Supported system functions
  - Isochronous mode
  - Firmware Update
  - Identification data I&M

Accessories

The following components are supplied with the technology module and can also be ordered separately as spare parts:

- Shield bracket
- Shield clamp
- Infeed element
- Labeling strip
- U-connector

Other components

The following component needs to be ordered separately:

- Front connectors, including potential jumpers and cable ties

See also

For more information on accessories, see System Manual S7-1500, ET 200MP Automation System (http://support.automation.siemens.com/WW/view/en/59191792).

2.2 Functions

2.2.1 Pulse Train Output (PTO)

Applications

Pulse Train Output is a simple and universal interface between a SIMATIC controller and a drive. PTO is supported worldwide by many stepper and servo drives and is used in many positioning applications, such as for adjustment axes and feed axes.

PTO is also referred to as the pulse/direction interface. The pulse/direction interface comprises two signals. The frequency of the pulse output represents the speed and the number of pulses that are output represents the distance to be traversed. The direction output defines the traversing direction. The position specification is thereby accurate to within one increment. The pulse/direction interface is especially well-suited for operation with the technology objects TO_SpeedAxis, TO_PositioningAxis and TO_SynchronousAxis.

Control

The control of the pulse output channels is provided above all with S7-1500 Motion Control by means of the technology objects TO_SpeedAxis, TO_PositioningAxis and TO_SynchronousAxis . The control and feedback interface (Page 34) of the channels is an implementation of the PROFIdrive interface with standard frame 3.

For a detailed description of configuring the technology module with the axis technology objects, see Function Manual S7-1500T Motion Control, section "Configuring", which is available for download on theInternet (https://support.industry.siemens.com/cs/ww/en/view/109481326).

Signal types

The technology module supports the following four signal types:

- Pulse (P) and direction (D):
  One output (P) controls the pulses and one output (D) controls the direction. D is 'high' (active) when pulses are generated in the negative direction. D is 'low' (inactive) when pulses are generated in the positive direction.

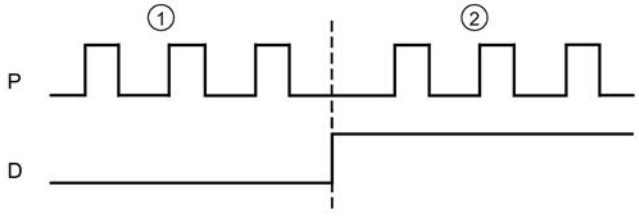

① Positive direction of rotation
② Negative direction of rotation

- Count up (A), count down (B):
  One output (A) outputs pulses for positive directions and another output (B) outputs pulses for negative directions.

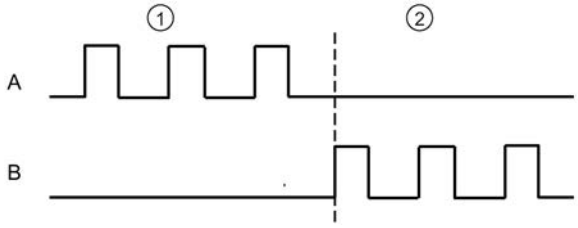

① Positive direction of rotation
② Negative direction of rotation

- Incremental encoder (A, B phase-shifted):
  Output pulses are output by both outputs at the specified velocity, but phase-shifted by 90 degrees. This involves a single pulse output in which the duration of the pulse is the time between two transitions of signal A while signal B is in low state.
  A positive direction of rotation is generated at a positive edge of signal A while signal B is in low state. A negative direction of rotation is generated at a negative edge of signal A while signal B is in low state.

A precedes B (positive direction of rotation)	A follows B (negative direction of rotation)
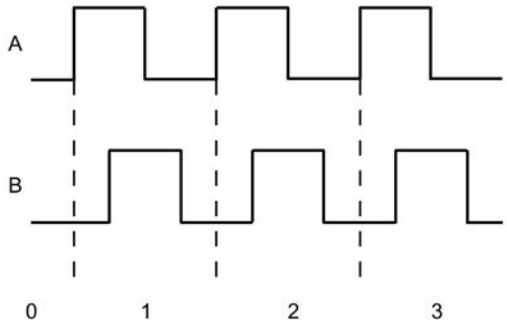	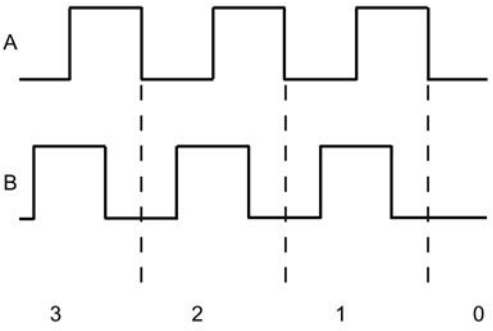
Number of pulses	Number of pulses

- Incremental encoder (A, B phase-shifted, quadruple):
  Output pulses are output by both outputs at the specified velocity, but phase-shifted by 90 degrees. This signal type involves a quadruple pulse output in which each edge transition corresponds to one increment. Therefore, a complete period of signal A contains four increments. In this way, it is possible, for example, to use two outputs, each with 100 kHz signal frequency, to output a control signal that supplies 400,000 increments per second.
  Whether count pulses are generated in the positive or negative direction of rotation depends on the edge direction of one signal and the logic state of the other signal in each case.

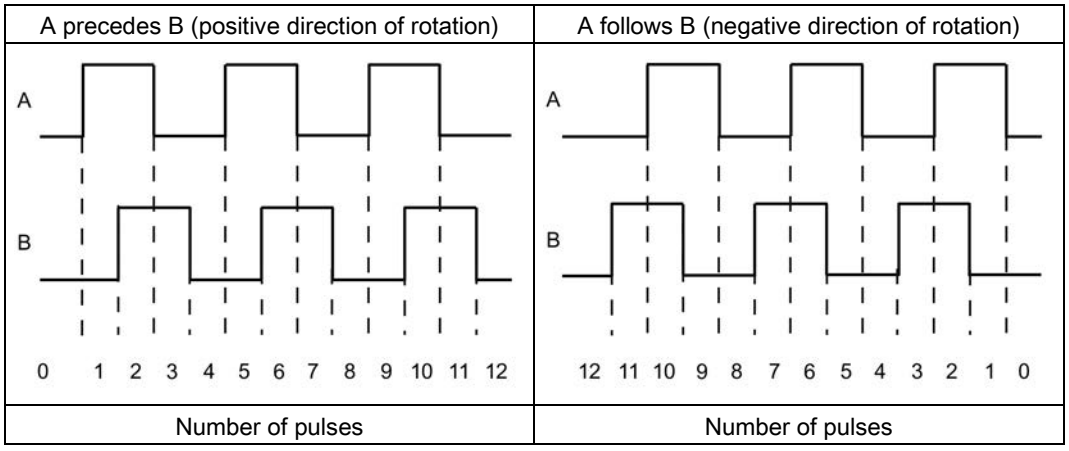

2.2.2 Isochronous mode

The technology module supports the system function "isochronous mode" in distributed mode on PROFINET.

In isochronous mode, the cycle of the user program, the transmission of the input and output data and the processing in the technology module are synchronized with each other.

Data processing

At time T_i the current position value is acquired and made available in the feedback interface for retrieval in the current bus cycle. At time T_o the pulse output is adjusted to the current speed setpoint.

Connecting 3

3.1 Pin assignment

You connect the pulse output signals, digital input signals and digital output signals to the 40-pin front connector of the technology module. In addition, you connect the supply voltage for supplying the module and the digital outputs to the 4-pin infeed element.

For information on wiring the front connector, connecting the cable shield, etc., see System ManualS7-1500, ET 200MP Automation System (http://support.automation.siemens.com/WW/view/en/59191792), section Wiring.

Pin assignment for the front connector

The table below shows the pin assignment of the front connector for the respective signal interface.

Table 3- 1 Pin assignment of the front connector

View	Signal name		Designation		
			24 V, asymmetrical	RS422, symmetrical	TTL (5 V), asymmetrical
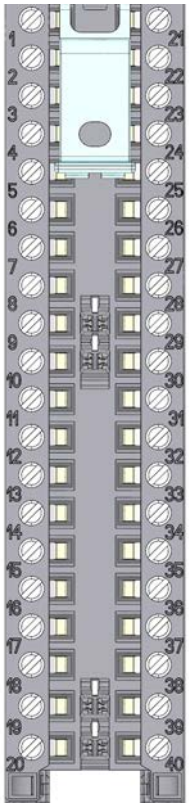	Channel 0				
	1	CH0.P/A	—	Pulse signal P/A	Pulse signal P/A
	2	/CH0.P/A		Inverted pulse signal P/A	—
	3	CH0.D/B		Pulse signal D/B	Pulse signal D/B
	4	/CH0.D/B		Inverted pulse signal D/B	—
	5	DQ0.0	Pulse signal P/A	Digital output DQ0	Digital output DQ0
	6	DQ0.1	Pulse signal D/B	—	—
	7	DI0.0	Digital input DI0		
	8	DI0.1	Digital input DI1		
	9	DIQ0.2	Digital input/output DIQ2		
	Channel 1				
	10	CH1.P/A	—	Pulse signal P/A	Pulse signal P/A
	11	/CH1.P/A		Inverted pulse signal P/A	—
	12	CH1.D/B		Pulse signal D/B	Pulse signal D/B
	13	/CH1.D/B		Inverted pulse signal D/B	—
	14	DQ1.0	Pulse signal P/A	Digital output DQ0	Digital output DQ0
	15	DQ1.1	Pulse signal D/B	—	—
	16	DI1.0	Digital input DI0		
	17	DI1.1	Digital input DI1		
	18	DIQ1.2	Digital input/output DIQ2		
	19	—	—		
	20				

View	Signal name		Designation		
			24 V, asymmetrical	RS422, symmetrical	TTL (5 V), asymmetrical
	Channel 2				
	21	CH2.P/A	—	Pulse signal P/A	Pulse signal P/A
	22	/CH2.P/A		Inverted pulse signal P/A	—
	23	CH2.D/B		Pulse signal D/B	Pulse signal D/B
	24	/CH2.D/B		Inverted pulse signal D/B	—
	25	DQ2.0	Pulse signal P/A	Digital output DQ0	Digital output DQ0
	26	DQ2.1	Pulse signal D/B	—	—
	27	DI2.0	Digital input DI0		
	28	DI2.1	Digital input DI1		
	29	DIQ2.2	Digital input/output DIQ2		
	Channel 3				
	30	CH3.P/A	—	Pulse signal P/A	Pulse signal P/A
	31	/CH3.P/A		Inverted pulse signal P/A	—
	32	CH3.D/B		Pulse signal D/B	Pulse signal D/B
	33	/CH3.D/B		Inverted pulse signal D/B	—
	34	DQ3.0	Pulse signal P/A	Digital output DQ0	Digital output DQ0
	35	DQ3.1	Pulse signal D/B	—	—
	36	DI3.0	Digital input DI0		
	37	DI3.1	Digital input DI1		
	38	DIQ3.2	Digital input/output DIQ2		
	39	M	Ground for digital outputs, digital inputs and pulse signals of the technology module		
	40	M			

Note

Use of jumper links in the front connector is not permitted.

Pin assignment for the infeed element

The infeed element is inserted into the front connector and serves to supply power to the technology module. You must connect the supply voltage to terminal 41 (L+) and terminal 44 (M) for this.

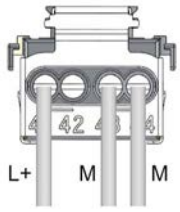

Figure 3-1 Infeed element wiring

L+	24 V DC supply voltage
M	Ground for supply voltage

Behavior of the digital outputs following a wire break at the ground connection of the outputs

Due to the characteristics of the output driver used in the module, a wire break causes approximately 10 mA supply current to drain from the digital outputs via a parasitic diode. This behavior may lead to a high signal state even at outputs that are not set. Depending on the nature of the load, 10 mA may be enough to activate a load with high signal state.

Duplicate wiring of ground

To prevent unintended switching of the outputs in the event of a ground connection wire break, follow these steps:

1. Route the first ground connection from terminal 44 to the ground connection of the central power supply of the system.
2. Route the second ground connection from terminal 43 to the ground connection of the central power supply of the system.

If one of the two ground connection cables is interrupted, the outputs are maintained at the required potential by the remaining ground connection.

⚠ WARNING

Wire break at ground connection

Always connect *two* cables to the ground connection of the central power supply of the system.

Circuit diagram

The figure below shows an example circuit diagram of the technology module. In this example, four channels are used with the RS422, 5 V-TTL and 24 V signal interfaces:

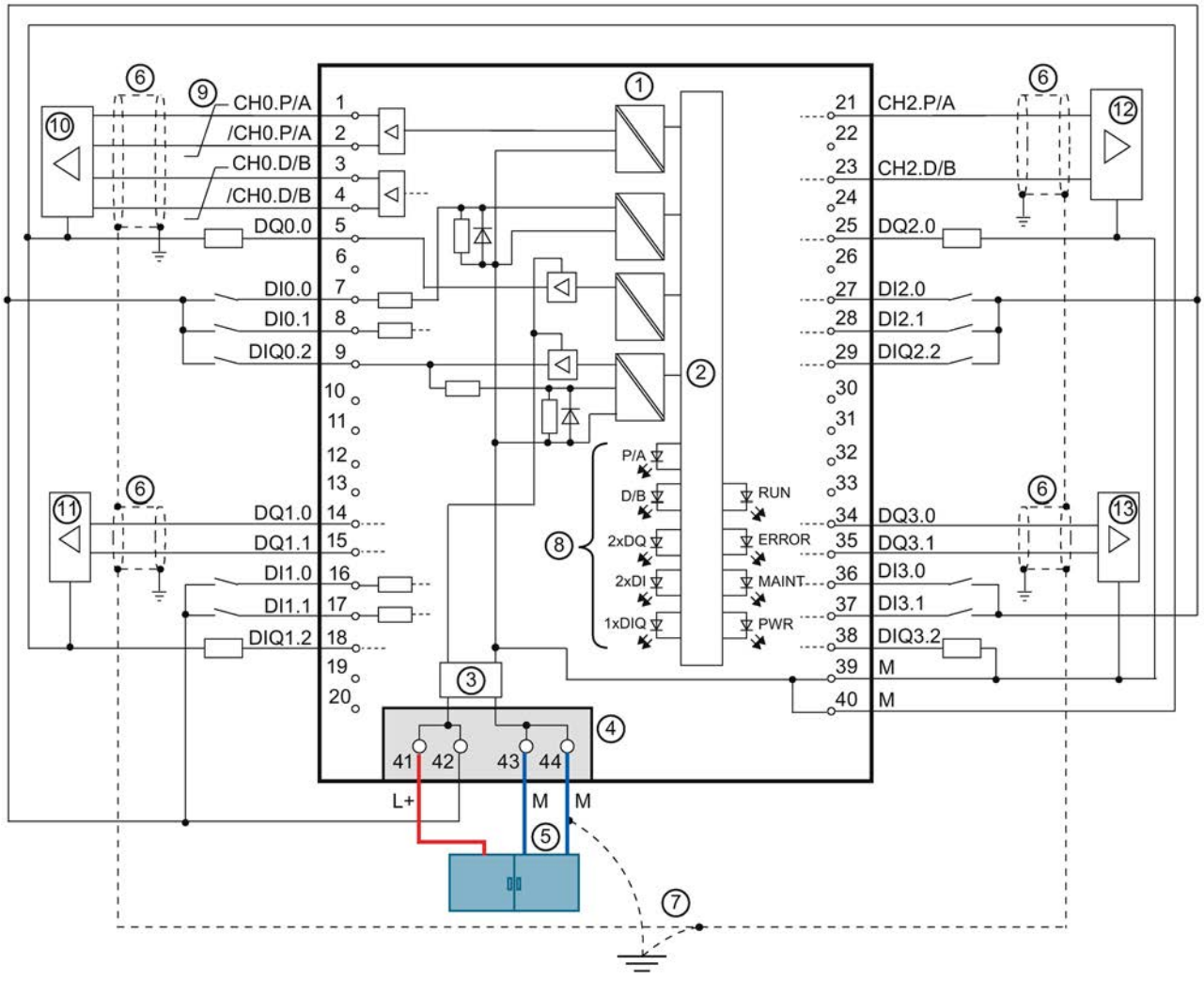

① Electrical isolation
② Technology and backplane bus interface
③ Input filter for supply voltage
④ Supply voltage via infeed element
⑤ Duplicate wiring to the ground connection of the central power supply of the system
⑥ Shield connection at the front connector
⑦ Equipotential bonding
⑧ LEDs per channel
⑨ Twisted-pair cables
⑩ Motor with drive stage at RS422 signal interface
⑪,⑬ Motor with drive stage at 24 V signal interface
⑫ Motor with drive stage at TTL signal interface

Figure 3-2 Circuit diagram when using RS422, 5 V-TTL and 24 V signal interfaces

Supply voltage L+/M

Connect the supply voltage (24 V DC) to the L+ and M connections. An internal protective circuit protects the technology module from polarity reversal of the supply voltage. The technology module monitors the connection of the supply voltage.

ThePWR LED (Page 44) at terminal 19 indicates the presence of supply voltage.

RS422/TTL and 24 V pulse output signals

The technology module can output pulse signals either via the RS422/TTL or 24 V signal interface for each channel. The pulse signals are designated with P/A and D/B.

A TTL pulse signal and a 24 V pulse signal use a single wire. An RS422 pulse signal uses a pair of wires and the pulse information is transmitted as differential voltage. This ensures interference-free transmission of RS422 encoder signals, even of higher-frequency signals over longer distances. The RS422 wire pairs must be twisted in the cable and terminated with a 100 Ω resistance.

For an overview of the signal types you can output, see section Pulse Train Output (PTO) (Page 14).

When the RS422/TTL signal interface is used, you connect the P/A signal to the Chn.P/A connections and the D/B signal to the CHn.D/B connections. When the 24 V signal interface is used, you connect the P/A signal to digital output DQn.0 and the D/B signal to digital output DQn.1. When the 5 V TTL signal interface is used, you must provide a resistance of 220 Ω to 1 kΩ between connection CHn.P/A and ground M as well as between connection CHn.D/B and ground M.

The outputs of the channels are not electrically isolated from each other. The outputs are electrically isolated from the backplane bus.

Digital inputs DI0, DI1 and DIQ2

Up to three digital inputs are available per channel. The digital inputs are used for additional functions for the respective drive control:

Function	Meaning
Reference switch input	You can use a reference switch at digital input DIn.0 to synchronize the reference mark with the current position of the drive axis.
Measuring input	You can use a measuring input at digital input DIn.1 to save the current position of the drive axis.
"Drive ready" input	You can use digital input DIn.0, DIn.1 or DIQn.2 as an input for the ready signal of the drive.

The digital inputs of the channels are not electrically isolated from each other. The digital inputs are electrically isolated from the backplane bus.

Interpulse period following auto reverse

You can configure the minimum amount of time the technology module must pause the pulse output following reversal of the direction of rotation. After the interpulse period elapses, the pulse output is resumed.

You can specify the following values for the interpulse period:

- 0 (default)
- 1 ms
- 4 ms
- 10 ms

Input delay

This parameter can be used to suppress signal noise at the digital inputs of a channel. Changes to the signal are only detected if they remain stable for longer than the configured input delay time.

You can specify the following values for the input delay:

- None
  (input delay of 4 µs, minimum pulse width of 3 µs)
- 0.05 ms
- 0.1 ms (default)
- 0.4 ms
- 0.8 ms
- 1.6 ms
- 3.2 ms
- 12.8 ms
- 20 ms

Note

If you select the "None" or "0.05 ms" option, you have to use shielded cables for connection of the digital inputs.

Digital outputs DQ0, DQ1 and DIQ2

Up to three digital outputs are available per channel. When you use the "RS422, symmetrical / TTL (5 V), asymmetrical" signal interface, you can use digital output DQn.0 to enable the drive. When the "24 V, asymmetrical" signal interface is used, you connect the P/A signal to digital output DQn.0 and the D/B signal to digital output DQn.1. In this case, you can use digital output DIQn.2 to enable the drive.

The digital outputs of the channels are not electrically isolated from each other. The digital outputs are electrically isolated from the backplane bus.

The digital outputs are 24 V current-sourcing switches in relation to M. DQn.0 and DQn.1 can be loaded with 0.1 A rated load current and DQn.2 can be loaded with 0.5 A rated load current. The digital outputs are protected from overload and short-circuit.

Note

Relays and contactors can be connected direct without external circuitry.

Possible combinations of the DI and DQ functions

The possible combinations of additional DI and DQ functions are dependent on the signal interface:

- Reference switch input (RS, Reference Switch)
- Measuring input (MI, Measuring Input)
- "Drive ready" input (DR, Drive Ready)
- Drive enable output (ED, Enable Drive)

When you use the "RS422, symmetrical / TTL (5 V), asymmetrical" signal interface, you have the following possible combinations for the named functions:

Table 3- 2 Possible combinations for "RS422, symmetrical / TTL (5 V), asymmetrical" signal interface

DIn.0	DIn.1	DIQn.2		DQn.0	DQn.1
		Input	Output		
—	—	—	—	—	Not supported
RS	—	—	—	—	
RS	—	DR	—	—	
RS	—	DR	—	ED	
RS	—	—	ED	—	
RS	MI	—	—	—	
RS	MI	DR	—	—	
RS	MI	DR	—	ED	
RS	MI	—	ED	—	
—	MI	—	—	—	
—	MI	DR	—	—	
—	MI	DR	—	ED	
—	MI	—	ED	—	
DR	—	—	—	—	
DR	—	—	—	ED	
DR	—	—	ED	—	
DR	MI	—	—	—	
DR	MI	—	—	ED	
DR	MI	—	ED	—	
—	DR	—	—	—	
—	DR	—	—	ED	
—	DR	—	ED	—	
RS	DR	—	—	—	
RS	DR	—	—	ED	
RS	DR	—	ED	—	

When you use the "24 V, asymmetrical" signal interface, you have the following possible combinations for the named functions:

Table 3- 3 Possible combinations for "24 V, asymmetrical" signal interface

DIn.0	DIn.1	DIQn.2		DQn.0	DQn.1
		Input	Output		
—	—	—	—	P/A signal	D/B signal
RS	—	—	—		
—	—	DR	—		
RS	—	DR	—		
—	—	—	ED		
RS	—	—	ED		
RS	MI	—	—		
RS	MI	DR	—		
RS	MI	—	ED		
—	MI	—	—		
—	MI	DR	—		
—	MI	—	ED		
DR	—	—	—		
DR	—	—	ED		
DR	MI	—	—		
DR	MI	—	ED		
—	DR	—	—		
—	DR	—	ED		
RS	DR	—	—		
RS	DR	—	ED		

Configuring/address space 4

4.1 Configuring

Introduction

The technology module is configured and assigned parameters with the configuration software.

The technology module functions are controlled and monitored by the user program.

System environment

The technology module can be used in the following system environments:

Table 4- 1 Possible applications of the technology module

Possible applications	Components required	Configuration software	In the user program
Central operation in an S7-1500 system	• S7-1500 automation system • TM PTO 4	STEP 7 (TIA Portal): • Device configuration and parameter setting with hardware configuration • Parameter setting with axis technology object for Motion Control	Motion Control instructions
Distributed operation in an S7-1500 system	• S7-1500 automation system • ET 200MP distributed I/O system • TM PTO 4	STEP 7 (TIA Portal): • Device configuration and parameter setting with hardware configuration • Parameter setting with axis technology object for Motion Control (PROFINET IO and PROFIBUS DP[1])	
Distributed operation in an S7-1200 system	• S7-1200 automation system • ET 200MP distributed I/O system • TM PTO 4	STEP 7 (TIA Portal): • Device configuration and parameter setting with hardware configuration • Parameter setting with TO_PositioningAxis technology object (PROFINET IO and PROFIBUS DP[1])	
Distributed operation in an S7-300/400 system	• S7-300/400 automation system • ET 200MP distributed I/O system • TM PTO 4	STEP 7 (TIA Portal): Device configuration and parameter setting with hardware configuration (PROFINET IO and PROFIBUS DP[1]) STEP 7: Device configuration and parameter setting of the module with GSD file (PROFINET IO)	Direct access to control and feedback interface (Page 34) of the technology module control in the IO data

Possible applications	Components required	Configuration software	In the user program
Distributed operation in a third-party system	• Third-party automation system • ET 200MP distributed I/O system • TM PTO 4	Third-party configuration software: Device configuration and parameter setting of the module with GSD file (PROFINET IO)	

[1] When using the technology module on PROFIBUS DP, you can use a maximum of three channels.

Control using a technology object

For a detailed description of configuring the technology module with axis technology objects TO_SpeedAxis, TO_PositioningAxis and TO_SynchronousAxis, refer to the following:

- Function Manual S7-1500T Motion Control, section "Configuring", which is available for download on theInternet (https://support.industry.siemens.com/cs/ww/en/view/109481326)
- Information system of STEP 7 (TIA Portal), under "Using technology functions > Motion Control > Motion Control (S7-1200, S7-1500, S7-1500T) > Configuring (S7-1500, S7-1500T) > Configuring technology modules for Motion Control (S7-1500, S7-1500T)"

Hardware Support Package (HSP)

If the technology module is not yet integrated in your TIA Portal version, you can integrate it as of TIA Portal V14 with HSP0181.

The Hardware Support Packages (HSP) are available for download on the Internet (https://support.industry.siemens.com/cs/ww/en/view/72341852).

Alternatively, they can be accessed for downloading via the menu bar of STEP 7 (TIA Portal): "Options > Support Packages > Download from the Internet".

GSD file for PROFINET IO

The GSD file for the ET 200MP distributed I/O system on PROFINET IO is available for download on the Internet (https://support.industry.siemens.com/cs/ww/en/view/68189683).

4.2 Reaction to CPU STOP

The following overview shows the reaction of the technology module to a transition of the CPU to STOP. The reaction is not configurable.

Table 4- 2 Reaction of technology module to CPU STOP

	Reaction of technology module
RUN-STOP transition	The technology module executes a Coast Stop (OFF2), which causes the pulse output to stop. If you are using a drive enable, the corresponding digital output is reset immediately. The control interface is no longer evaluated. The feedback interface continues returning the last acquired values. The feedback interface continues signaling diagnostic information using the Fault_Present and Sensor_Error bits. Active functions, such as for the reference switch, are aborted.
STOP-RUN transition	The configuration of the technology module is not reset. The feedback interface keeps the last acquired position value (G1_XIST1).

4.3 Address space

Address space of the technology module

Table 4- 3 Range of the input addresses and output addresses of the TM PTO 4

Channel configuration	Address space	
	Inputs	Outputs
1 channel	18 bytes	10 bytes
2 channels	36 bytes	20 bytes
3 channels	54 bytes	30 bytes
4 channels	72 bytes	40 bytes

Additional information

For a description of the control and feedback interface of the technology module, see section Control and feedback interface (Page 34).

4.4 Parameters

You can use various parameters to define the properties of the technology module. Depending on the settings, not all parameters are available. When parameters are assigned in the user program, the parameters are transferred to the module with the "WRREC" instruction and data record 128 (Page 56).

You have the following options for setting the module's parameters:

Parameter setting via ...	Basic procedure
Hardware configuration in STEP 7 (TIA Portal) with HSP in the case of centralized operation in an S7-1500 system	1. Install the appropriate HSP file. 2. Select an appropriate CPU under "Add new device > Controller > SIMATIC S7-1500". 3. Select the module in the hardware catalog under "Technology modules". 4. Set the device configuration and the parameters of the module in the hardware configuration. 5. Set the parameters of the technology object. 6. Download the parameter assignment to the module.
Hardware configuration in STEP 7 (TIA Portal) with HSP in the case of distributed operation in an S7-1500 system	1. Install the appropriate HSP file. 2. Select an appropriate IM in the hardware catalog under "Distributed I/O > ET200MP". 3. Select the module in the hardware catalog under "Technology modules". 4. Set the device configuration and the parameters of the module in the hardware configuration. 5. Set the parameters of the technology object. 6. Download the parameter assignment to the module.
Hardware configuration using GSD file for distributed operation on the PROFINET IO	1. Install the current PROFINET GSD file. 2. Select an appropriate IM in the hardware catalog under "Other field devices > PROFINET IO > I/O". 3. Select the module in the hardware catalog under "Technology modules". 4. Set the parameters of the module in the hardware configuration. 5. Download the parameter assignment to the module.

You will find the parameters in the following table.

Parameters of the TM PTO 4

The following parameter settings are possible:

Table 4- 4 Configurable parameters and their defaults

Parameter	Value range	Default setting	Re-configuration in RUN	Effective range with configuration software: HSP or GSD file for PROFINET IO
Channel configuration	• 4 channels • 3 channels • 2 channels • 1 channel	4 channels	No	Module
Signal type	• Pulse (P) and direction (D) • Count up (A), count down (B) • Incremental encoder (A, B phase-shifted) • Incremental encoder (A, B phase-shifted, quadruple)	Pulse (P) and direction (D)	Yes	Channel
Signal interface	• 24 V, asymmetrical • RS422, symmetrical / TTL (5 V), asymmetrical	24 V, asymmetrical	Yes	Channel
Interpulse period following auto reverse	• 0 ms • 1 ms • 4 ms • 10 ms	0 ms	Yes	Channel
Enable diagnostic interrupts	• Disabled • Enabled	Disabled	Yes	Channel
Increments per revolution	1...1000000	200	Yes	Channel
Reference speed	1,0...20000,0 U/min	3000,0	Yes	Channel
Maximum speed	Dependent on signal interface, signal evaluation, increments per revolution and reference speed (see following table)	3000,0	Yes	Channel

Parameter	Value range	Default setting	Re-configuration in RUN	Effective range with configuration software: HSP or GSD file for PROFINET IO
Quick stop time (OFF3)	1...65535 ms	1000 ms	Yes	Channel
Ramp stop time (OFF1)	1...65535 ms	5000 ms	Yes	Channel
Use drive enable	• Disabled • Enabled	Disabled	Yes	Channel
Drive enable output	• DQ0 • DIQ2	DQ0	Yes	Channel
Use DI0 as reference switch	• Disabled • Enabled	Disabled	Yes	Channel
Reference switch edge selection	• At positive edge • At negative edge	At positive edge	Yes	Channel
Use DI1 as measuring input	• Disabled • Enabled	Disabled	Yes	Channel
Use "Drive ready"	• Disabled • Enabled	Disabled	Yes	Channel
"Drive ready" input	• DI0 • DI1 • DIQ2	DI0	Yes	Channel
Input delay	• None • 0.05 ms • 0.1 ms • 0.4 ms • 0.8 ms • 1.6 ms • 3.2 ms • 12.8 ms • 20 ms	0.1 ms	Yes	Channel
Tolerated number of sign-of-life errors	0...65535	1	Yes	Channel

The following table shows the calculation of the value range of the maximum speed:

Table 4- 5 Value range of the maximum speed

Signal interface	Value range of the maximum speed			
	Low limit		High limit (the smaller of the two values applies)	
	Signal evaluation "Single"	Signal evaluation "Quadruple"	Signal evaluation "Single"	Signal evaluation "Quadruple"
24 V, asymmetrical	0.1 Hz * 60 / (increments per revolution)	0.1 Hz * 60 *4 / (increments per revolution)	• 2 * reference speed • 200000 Hz * 60 / (increments per revolution)	• 2 * reference speed • 200000 Hz * 60 *4 / (increments per revolution)
TTL (5 V), asymmetrical				
RS422, symmetrical			• 2 * reference speed • 1000000 Hz * 60 / (increments per revolution)	• 2 * reference speed • 1000000 Hz * 60 *4 / (increments per revolution)

Description of parameters

Parameter	Description
Channel configuration	Selection of the number of channels used. The channels are assigned in ascending order.
Signal type	Selection of the type of PTO pulse output (Page 14).
Signal interface	Selection of the interface used for the pulse output: • 24 V, asymmetrical: The channel outputs 24 V signals at terminals DQm.0 and DQm.1. • RS422, symmetrical / TTL (5 V), asymmetrical: The channel outputs either RS422 signals at terminals P/A and D/B and the respective inverted terminals or 5 V TTL signals at terminals P/A and D/B.
Interpulse period following auto reverse	Selection of the minimum time between a change in direction and the output of the first pulse in the new direction.
Enable diagnostic interrupts	Enables the following diagnostic interrupts (Page 47): • Supply voltage missing • Error at digital outputs The detected error is indicated for the respective channel with feedback bits (Page 38)Fault_Present and Sensor_Error.
Increments per revolution	Input of the number of steps (also micro steps) that correspond to one revolution of the drive. This parameter must match the "Increments per revolution" parameter in the "Data exchange with encoder" tab of the axis technology object.

Parameter	Description
Reference speed	Input of the speed at which the drive rotates with a speed setpoint of 100%. The permitted value range for the speed setpoint is -200% ... +200%. This parameter must match the "Reference speed" parameter in the "Data exchange with drive" tab of the axis technology object.
Maximum speed	Input of the maximum permitted speed for the application. The value must not exceed twice the reference speed. This parameter must match the "Maximum speed" parameter in the "Data exchange with drive" tab of the axis technology object.
Bits in incr. actual value (G1_XIST1)	Specifies the number of bits for the fine resolution coding in the incremental actual position value G1_XIST1. The value is always "0" for this module. This parameter must match the "Bits in incr. actual value (Gn_XIST1)" parameter in the "Data exchange with encoder" tab of the axis technology object.
Quick stop time (OFF3)	Input of the time taken to execute a fast stop from maximum speed to standstill.
Ramp stop time (OFF1)	Input of the time taken to execute a stop from maximum speed to standstill.
Use drive enable	Enables use of the drive enable signal at a hardware output (Page 17).
Drive enable output	Selection of the hardware output (Page 17) that is used to enable the drive. Only available for selection and effective if "Use drive enable" is enabled.
Use DI0 as reference switch	Enables use of the reference switch signal at the hardware input DI0 (Page 17). You can synchronize the reference mark with the current position of the drive axis using the reference switch signal.
Reference switch edge selection	Selection of the edge at DI0 that triggers detection of the reference mark. Only available for selection and effective if "Use DI0 as reference switch" is enabled.
Use DI1 as measuring input	Enables use of the measuring input signal at hardware input DI1 (Page 17). You can save the current position of the drive axis using the measuring input signal.
Use "Drive ready"	Enables use of the ready signal of the drive at a hardware input (Page 17).
"Drive ready" input	Selection of the hardware input (Page 17) to which the ready signal of the drive is connected and read in. Only available for selection and effective if "Use "Drive ready"" is enabled.
Input delay	Selection of the input delay for the signal at the respective digital input for noise suppression. Changes to the signal are only detected if they remain stable for longer than the configured input delay time. The input delay applies to all the used hardware inputs of the channel.
Tolerated number of sign-of-life errors	Input of how many Master Sign-Of-Life errors are tolerated by the module. If the number is exceeded, this triggers an error message via return bit (Page 38) Sensor_Error. 65535 means: No monitoring for sign-of-life errors

4.5 Control and feedback interface

Direct access to the control and feedback interface is not needed for use of the module in an S7-1500 or S7-1200 system. For this case an S7-1500 system has the TO_SpeedAxis, TO_PositioningAxis and TO_SynchronousAxis technology objects, and an S7-1200 system has the TO_PositioningAxis technology object. For a detailed description of configuring the technology module with the axis technology objects, see Function Manual S7-1500T Motion Control, section "Configuring", which is available for download on theInternet (https://support.industry.siemens.com/cs/ww/en/view/109481326).

The control and feedback interface of the channels is a partial implementation of the PROFIdrive interface "frame 3". Additional information on using the control and feedback interface is available in the section Configuring (Page 26).

4.5.1 Assignment of the control interface

The user program uses the control interface to influence the behavior of the technology module.

Control interface

The following table shows control interface assignment:

Table 4- 6 Control interface of the technology module

Byte offset from start address ↓	Bit 7	Bit 6	Bit 5	Bit 4	Bit 3	Bit 2	Bit 1	Bit 0
0...1	STW1: Control word 1							
0	Reserved[1]					Control_ by_PLC	Reserved[1]	
1	Fault_ Acknowl-edge	Enable_ Setpoint	Unfreeze_ Ramp_ Generator[6]	Enable_ Ramp_ Generator	Enable_ Operation	No_Quick_ Stop_OFF3	No_Coast_ Stop_OFF2	On_OFF1
2...5	NSOLL_B: DINT: Normalized speed setpoint in N4 format							
6...7	STW2: Control word 2							
6	UINT: Master_Sign-Of-Life				Reserved[1]			
7	Reserved[1]							

Byte offset from start address ↓	Bit 7	Bit 6	Bit 5	Bit 4	Bit 3	Bit 2	Bit 1	Bit 0
8...9	G1_STW: Encoder control word							
8	Acknowl-edging_ Sensor_ Error	Activate_ Parking_ Sensor[7]	Request_ Absolute_ value_ Cyclically[3]	Request_ Set_Home_ Position[2]	Home_ Position_ Mode[2]	Reserved[1]		
9	Mode	Command_ 2_Request	Command_ 1_Request	Command_ 0_Request	Function_4_ Request [4,5]	Function_3_ Request [4,5]	Function_2_ Request [5]	Function_1_ Request

1 Must be set to 0.

2 This command is not supported by the module. If you set the bit, error code $F01_H$ is returned in G1_XIST2.

3 This command is not supported by the module. If you set the bit, error code 8_H is returned in G1_XIST2.

4 This command is not supported for the "Acquire measuring input value" function. If you set the bit, error code 6_H is returned in G1_XIST2.

5 This command is not supported for the "Detect reference mark" function. If you set the bit, error code 4_H is returned in G1_XIST2.

6 This command is not supported by the module. The bit is not evaluated.

7 This command is not supported by the module. If you set the bit, error code 3_H is returned in G1_XIST2.

Description of control bits

Control bit/value	Description
STW1	
Control_by_PLC	0 means: Coast Stop (OFF2): Pulse output cannot be controlled by the user program on the CPU. 1 means: Valid values for control of the pulse output will be sent to the module from the user program on the CPU.
On_OFF1	0 means: OFF1: The pulse output returns to state S2 (Page 42). If you are using a drive enable, the corresponding digital output is reset as soon as the drive comes to a standstill. 1 means: Pulse output is switched on.
No_Coast_Stop_OFF2	0 means: Coast Stop (OFF2): The pulse output is stopped and returns to state S1 (Page 42). If you are using a drive enable, the corresponding digital output is reset imme-diately. 1 means: The "Coast Stop (OFF2)" command is withdrawn.
No_Quick_Stop_OFF3	0 means: Quick stop (OFF3): The drive stops within the configured quick stop time. The pulse output is stopped and returns to state S1 (Page 42). If you are using a drive enable, the corresponding digital output is reset as soon as the drive comes to a standstill. 1 means: The "Quick stop (OFF3)" command is withdrawn.
Enable_Operation	0 means: The pulse output returns to state S3 (Page 42). 1 means: Pulse output is enabled. The drive accelerates to the speed setpoint.

Control bit/value	Description
Enable_Ramp_Generator	0 means: The pulse output is stopped but remains in state S4 (Page 42). 1 means: Each speed change is controlled along on a ramp by the ramp generator.
Enable_Setpoint	0 means: The ramp generator stops the drive within the configured ramp stop time. State S4 (Page 42) is retained. 1 means: The speed setpoint is specified in NSOLL_B for the ramp generator.
Fault_Acknowledge	You use this bit to acknowledge an error.
NSOLL_B	You use this value to specify the setpoint for the drive axis velocity as a percentage in N4 format. The permitted value range for the speed setpoint is -200% ... +200%[1] of the reference speed. The DINT value maps the value range linearly. This means 100% corresponds to the value 40000000_H. The resolution is $9.3 * 10^{-8}$%.
STW2	
Master_Sign-Of-Life	When you control the module in isochronous mode using technology objects, this value is used by the technology object as the Master sign-of-life. When you control the module in non-isochronous mode without technology objects, you must set this value to 0. When you control the module in isochronous mode without a technology object, we recommend that you also set this value to 0.
G1_STW	
Acknowledging_Sensor_Error	You use this bit to acknowledge an error that occurred during feedback of the actual encoder value.
Function_1_Request	When you use the "Reference mark search" function, you use this bit to specify that the reference mark is to be detected using the configured edge (Page 56) of reference switch input DIn.0 and saved in G1_XIST2. When you use the "Measurement on the fly" function, you use this bit to specify that a measuring input value is to be acquired using the positive edge of digital input DIn.1 and saved in G1_XIST2.
Function_2_Request	You use this bit to specify that a measuring input value is to be acquired using the negative edge of digital input DIn.1.
Command_0_Request, Command_1_Request, Command_2_Request	You use this value to specify how the function selected with the Mode bit will be used: 000 means: Do nothing 001 means: Enable function 010 means: Read out value in G1_XIST2 011 means: Disable function 100 to 111 means: Invalid
Mode	0 means: Reference mark search: Detect reference mark using the configured edge of reference switch input DIn.0 1 means: Measurement on the fly: Acquire measuring input value using measuring input DIn.1

[1] The exact maximum speed setpoint is $+(200 – 2^{-30})$%

Reference mark search

The following figure shows an example of the sequence of the detection and readout of the reference mark:

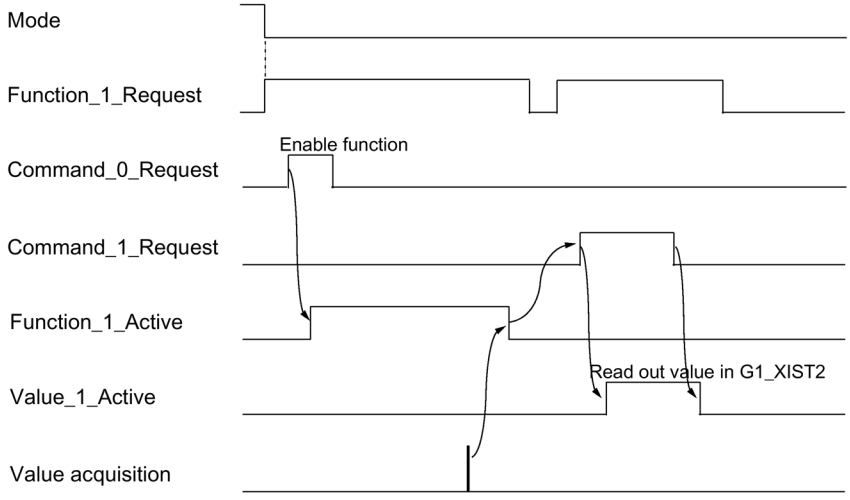

Figure 4-1 Detecting the reference mark

Measurement on the fly

The following figure shows an example of the sequence of the acquisition and the readout of the measuring input value:

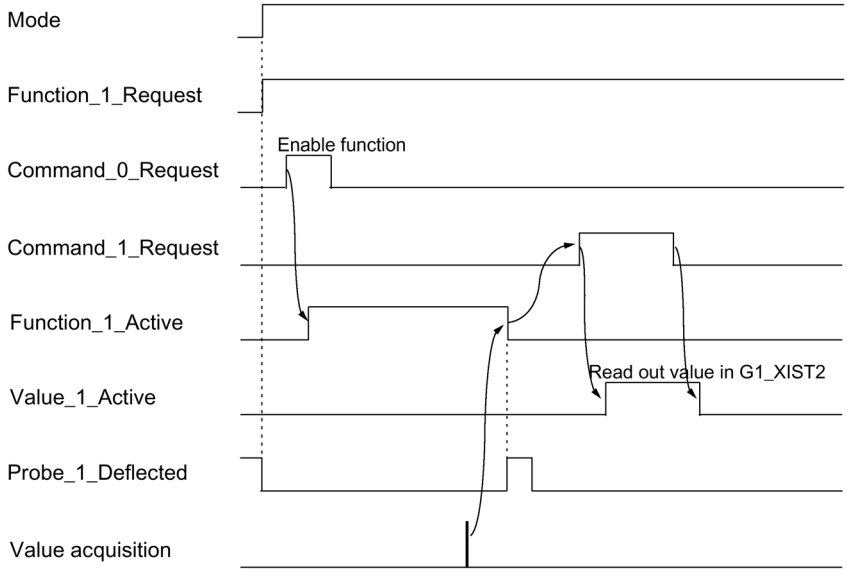

Figure 4-2 Acquiring the measuring input value

4.5.2 Assignment of the feedback interface

The user program receives current values and status information from the technology module by means of the feedback interface.

Feedback interface

The following table shows the assignment of the feedback interface:

Table 4- 7 Feedback interface of the technology module

Byte offset from start address ↓	Bit 7	Bit 6	Bit 5	Bit 4	Bit 3	Bit 2	Bit 1	Bit 0
0...1	ZSW1: Status word 1							
0	Reserved					f_or_n_ reached_ or_ exceeded	Control_ Requested	Reserved
1	Reserved	Switching_ On_ Inhibited	Quick_ Stop_Not_ Activated_ OFF3	Coast_ Stop_Not_ Activated_ OFF2	Fault_ Present	Operation_ Enabled	Ready_ To_Operate	Ready_ To_Switch_ On
2...5	NIST_B: DINT: Current normalized actual speed value in N4 format							
6...7	ZSW2: Status word 2							
6	UINT: Slave_Sign-Of-Life				Reserved			
7	Reserved							
8...9	G1_ZSW: Encoder status word							
8	Sensor_ Error	Parking_ Sensor_ Executed[1]	Transmit_ Absolute_ Value_ Cyclically[1]	Reserved	Require-ment_of_ Acknowl-edgement_ Detected	Reserved		Probe_1_D eflected
9	Reserved		Value_2_ Active	Value_1_ Active	Reserved		Function_2_ Active	Function_1_ Active
10...13	G1_XIST1: DINT: Current actual encoder value							
14...17	G1_XIST2: DINT: Error code or measuring input value or reference mark							

[1] Not supported by the module.

Description of feedback bits

Feedback bit/value	Description
ZSW1	
Control_Requested	This bit indicates that the module is ready to receive values from the user program for controlling the pulse output.
f_or_n_reached_or_exceeded	This bit indicates that the actual speed value has reached or exceeded the configured maximum speed.
Ready_To_Switch_On	This bit indicates that the pulse output is ready to switch on.
Ready_To_Operate	This bit indicates that the pulse output is ready to operate.
Operation_Enabled	This bit indicates that operation of the drive is enabled and the speed setpoint is being output.
Fault_Present	This bit indicates that a fault has occurred in the supply voltage or at a digital output. Error code 1_H is returned.
Coast_Stop_Not_Activated_OFF2	This bit indicates that the drive will not perform a Coast Stop (OFF2).
Quick_Stop_Not_Activated_OFF3	This bit indicates that the drive will not perform a Quick Stop (OFF3)
Switching_On_Inhibited	This bit indicates that the pulse output is not yet ready to switch on.
NIST_B	This value indicates the actual value of the drive axis velocity as a percentage in N4 format relative to the reference speed.
ZSW2	
Slave_Sign-Of-Life	When you control the module in isochronous mode using technology objects, this value is used by the technology object as the Slave sign-of-life. When you control the module without technology objects, this bit is set to 0.
G1_ZSW	
Probe_1_Deflected	When you use the "Measurement on the fly" function, this bit indicates the state of digital input DIn.1.
Requirement_of_Acknowledge-ment_Detected	This bit indicates that the acknowledgement of an error is being processed.
Sensor_Error	This bit indicates that an error has occurred during feedback of position value G1_XIST1. The meaning of the returned error codes can be found in the following table.
Function_1_Active	If you use the "Reference mark search" function, this bit indicates that use of reference switch input DIn.0 is enabled. When you use the "Measurement on the fly" function, this bit indicates that use of the positive edge of measurement sensing input DIn.1 is enabled.
Function_2_Active	This bit indicates that use of the negative edge of measurement sensing input DIn.1 is enabled.
Value_1_Active	When you use the "Reference mark search" function, this bit indicates that the reference mark has been saved in G1_XIST2 using reference switch input DIn.0. When you use the "Measurement on the fly" function, this bit indicates that a measuring input value has been saved in G1_XIST2 using the positive edge of digital input DIn.1.
Value_2_Active	This bit indicates that a measuring input value has been saved in G1_XIST2 using the negative edge of digital input DIn.1.

Feedback bit/value	Description
G1_XIST1	This value is the incremental actual position value. G1_XIST1 corresponds to the number of output pulses, which control the speed of the drive.
G1_XIST2	If an error has occurred, G1_XIST2 indicates the associated error code. For the meaning of the error codes, see the table below. When you use the "Reference mark search" function, this value returns the detected reference mark. When you use the "Measurement on the fly" function, this value returns the acquired measuring input value.

Error codes

G1_XIST2 can contain the following error codes:

Error code	Name	Meaning
1_H	Sensor group error	G1_XIST1 is invalid. One of the following errors occurred during feedback of the actual position value. • Missing supply voltage • Undervoltage • Short-circuit or overload at the digital output
3_H	Sensor pause failed	A sensor pause (Sensor parking) is not supported.
4_H	Reference mark detection aborted	• The Function_2_Request, Function_3_Request or Function_4_Request bit was set to 1 while the "Reference mark search" function was active. • The Mode bit was set to 1 while the "Reference mark search" function was active. • CPU STOP while the "Reference mark search" function was active.
5_H	Read reference mark aborted	• G1_XIST2 does not contain a valid value for the reference mark. • The Mode bit was set to 1 while the reference mark was being read from G1_XIST2. • CPU STOP while the reference mark was being read from G1_XIST2.
6_H	Measuring input value acquisition aborted	• The Function_3_Request or Function_4_Request bit was set to 1 while the "Measurement on the fly" function was active. • The Mode bit was set to 0 while the "Measurement on the fly" function was active. • CPU STOP while the "Measurement on the fly" function was active.

Error code	Name	Meaning
7_H	Read measuring input value aborted	• G1_XIST2 does not contain a valid value of the measuring input. • The Mode bit was set to 0 while the measuring input value was being read from G1_XIST2. • CPU STOP while the measuring input value was being read from G1_XIST2.
8_H	Absolute value acquisition aborted	The Request_Absolute_value_Cyclically bit is not supported by the module. The module returns only incremental encoder values.
$F01_H$	Command not supported	The command is not supported by the module.
$F02_H$	Sign-of-life error (Master Sign-Of-Life)	The number of tolerated errors of the Master sign-of-life (control value Master_Sign-Of-Life) was exceeded.

4.5.3 Enabling the pulse output

State diagram

The following figure shows the state diagram for enabling the pulse output:

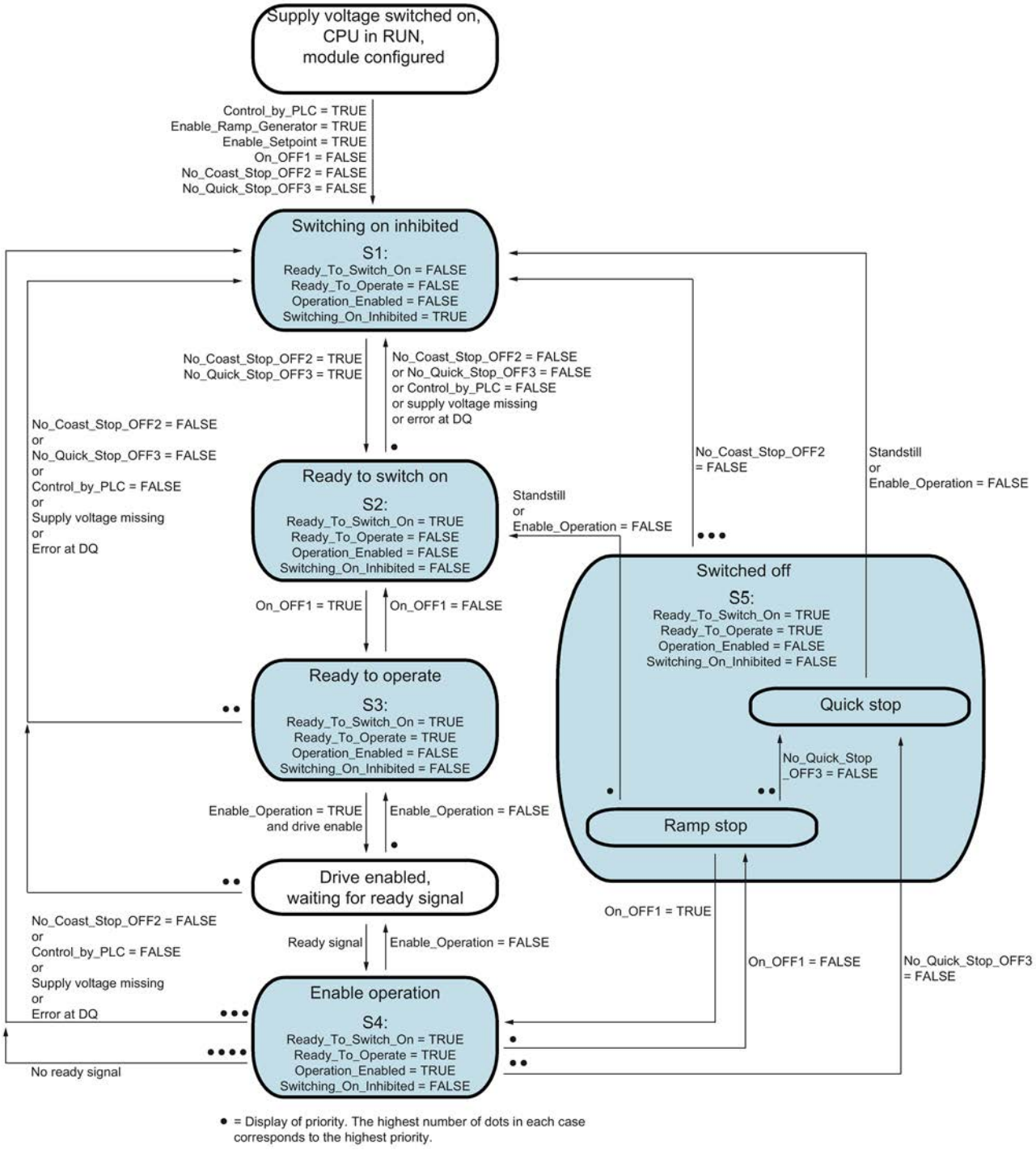

Figure 4-3 State diagram for the operation enable

Procedure

To enable the pulse output, follow these steps:

1. Set the Control_by_PLC, Enable_Setpoint and Enable_Ramp_Generator control bits to TRUE and the On_OFF1, No_Coast_Stop_OFF2, No_Quick_Stop_OFF3 and Enable_Operation bits to FALSE.
   State S1 is reached: Switching on of the pulse output is still inhibited. The feedback bit Switching_On_Inhibited is set to TRUE.
2. Set the On_OFF1 and No_Quick_Stop_OFF3 control bits to TRUE.
   State S2 is reached: The pulse output is ready to switch on. The feedback bit Ready_To_Switch_On is set to TRUE. The feedback bit Switching_On_Inhibited is set to FALSE.
3. Set the On_OFF1 control bit to TRUE.
   State S3 is reached: The pulse output is ready to switch on. The feedback bit Ready_To_Operate is set to TRUE.
4. Set the Enable_Operation control bit to TRUE.
5. If you have configured a drive enable output, set it to high level.
   The drive is enabled.
6. If you have configured a ready input, wait for the ready signal of the drive.
   As soon as the ready input is at high level, state S4 is reached: Operation is enabled. The pulse output starts. The feedback bit Operation_Enabled is set to TRUE.

Interrupts/diagnostic alarms

5

5.1 Status and error displays

LEDs

The figure below shows the LED displays (status and error displays) of the TM PTO 4.

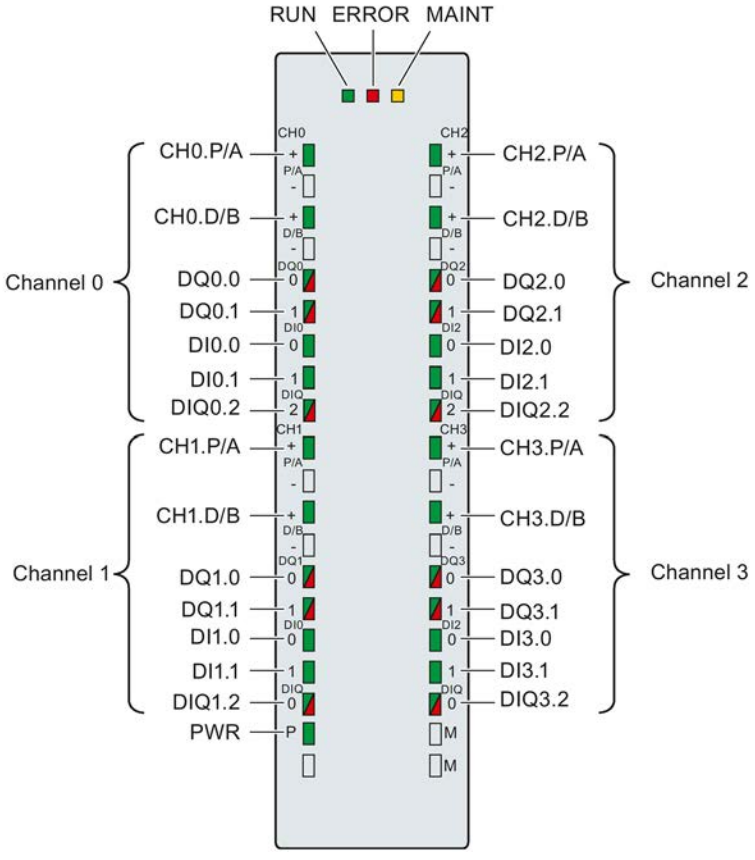

Figure 5-1 LED displays of the TM PTO 4

Meaning of the LED displays

The following tables explain the meaning of the status and error displays. Remedial measures for diagnostic alarms can be found in the section Diagnostic alarms (Page 47).

Table 5- 1 Status and error displays RUN/ERROR/MAINT

LEDs			Meaning	To correct or avoid errors
RUN	ERROR	MAINT		
□ Off	□ Off	□ Off	No voltage or too low voltage on back-plane bus	• Switch on the CPU/IM and/or the system power supply modules. • Check whether the voltage connect-ors are inserted. • Check whether too many modules are inserted.
☼ Flashes	□ Off	□ Off	Technology module starts up and flashes until completion of the valid parameter assignment	—
■ On	□ Off	□ Off	The parameters of the technology module have been assigned.	
■ On	☼ Flashes	□ Off	Indicates module errors (an error is present on at least one channel)	Evaluate the diagnostic alarms and eliminate the error.
☼ Flashes	☼ Flashes	☼ Flashes	Hardware or firmware defective	Replace the technology module.

Table 5- 2 PWR/ERROR status displays

LEDs		Meaning	To correct or avoid errors
PWR	ERROR		
□ Off	☼ Flashes	Supply voltage too low or missing	• Check the supply voltage. • Make sure that the front connect-or is correctly inserted.
■ On	□ Off	Supply voltage is present and OK	—
■ On	☼ Flashes	Indicates module errors (an error is present on at least one channel)	Evaluate the diagnostic alarms and eliminate the error.

Channel LEDs

The CHn.P/A, CHn.D/B, and DIn.m LEDs and the LEDs of DIQn.2 used as digital inputs indicate the current level of the associated signals. The LEDs of digital outputs DQn.m and of DIQn.2 used as digital outputs indicate the desired state.

The flashing frequency of the channel LEDs is limited to approximately 24 Hz. If higher frequencies are present, the channel LEDs do not indicate the current status but instead flash at 24 Hz.

Table 5- 3 Status displays CHn.m/DIn.m/DQn.m/DIQn.2

LEDs CHn.m/DIn.m/ DQn.m/DIQn.2	Meaning	To correct or avoid errors
□ Off	Pulse output/digital input/digital output at 0 level	—
■ On	Pulse output/digital input/digital output at 1 level	—
■ On (DQn.m/DIQn.2)	Diagnostic alarm: e.g. "Error at digital outputs"	• Evaluate the diagnostic alarm. • Check the wiring or the connected load.

5.2 Diagnostic alarms

Enabling the diagnostic interrupts

You enable the diagnostic interrupts at the basic parameters.

The technology module can trigger the following diagnostic interrupts:

Table 5- 4 Possible diagnostic interrupts

Diagnostic interrupt	Monitoring
• Parameter assignment error • Internal error • Watchdog tripped. Module is defective.	Monitoring is always active. A diagnostic interrupt is triggered each time an error is detected.
• Supply voltage missing • Error at the digital outputs	Monitoring is always active. A detected error only triggers a diagnostic interrupt if "Enable diagnostic interrupts" has been enabled during device configuration. The diagnostic interrupts are not enabled in the default setting.

Reactions to a diagnostic interrupt

The following happens when an event occurs that triggers a diagnostic interrupt:

- The ERROR LED flashes.

  Once you have remedied the error, the ERROR LED goes out.
- The S7-1500 CPU interrupts processing of the user program. The diagnostic interrupt OB (e.g. OB 82) is called. The event that triggered the interrupt is entered in the start information of the diagnostic interrupt OB.
- The S7-1500 CPU remains in RUN even if no diagnostic interrupt OB is present in the CPU. The technology module continues working unchanged if this is possible despite the error.

Detailed information on the error event is available with the instruction "RALRM" (read additional interrupt information).

Diagnostic alarms

The diagnostics are displayed as plain text in STEP 7 (TIA Portal) in the online and diagnostics view. You can evaluate the error codes with the user program. The respective channel number is shown for each diagnostic information.

The following diagnostics can be signaled:

Table 5- 5 Diagnostic alarms, their meaning and remedies

Diagnostic alarm	Error code	Meaning	To correct or avoid errors
Parameter assignment error	10_H	Received parameter data record invalid	Check parameter data record
Supply voltage missing	11_H	Undervoltage	Check supply voltage L+
		Wiring of supply voltage L+ faulty	Check wiring of supply voltage L+
		Supply voltage L+ of the technology module missing	Feed supply voltage L+ to the technology module via terminal 41
		Front connector not inserted correctly	Insert front connector correctly
Internal error	100_H	Technology module defective	Replace technology module
Watchdog tripped. Module is defective.	103_H	Firmware error	Run firmware update
		Technology module defective	Replace technology module
Error at the digital outputs[1,2]	$10F_H$	• Error at the digital outputs (LED display DQn.m lights up red) • Possible causes: – Short-circuit – Overload	• Correct wiring at the digital outputs • Check consumers connected to the digital outputs

1 Digital outputs DQ0.0, DQ0.1, DQ1.0 and DQ1.1 have shared diagnostics. Digital outputs DQ2.0, DQ2.1, DQ3.0 and DQ3.1 have shared diagnostics.

2 Diagnostics for short-circuit and overload are effective only for 24 V outputs and only up to an output frequency of approximately 100 Hz. The module is otherwise protected from irrevocable damage caused by short-circuit at the outputs, and the diagnostic alarm is not displayed.

⚠ CAUTION

Cross-channel diagnostics of the digital outputs

The digital outputs of channels 0 and 1 as well as channels 2 and 3 have shared diagnostics. As a result, when there is an error at one digital output, faults are automatically signaled for *two* channels and the pulse output of both channels is stopped.

Ensure that this fault scenario is taken into consideration when using multiple channels.

Technical specifications

6

	6ES7553-1AA00-0AB0
General information	
Product type designation	TM PTO 4
Number of channels	4; axes
Product function	
I&M data	Yes; I&M0 to I&M3
Isochronous mode	Yes
Engineering with	
STEP 7 TIA Portal can be configured/integrated as of version	STEP 7 V14
STEP 7 can be configured/integrated as of version	V5.5 SP3 with GSD file / -
PROFINET as of GSD version/GSD revision	GSDML V2.32
Installation type/mounting	
Rail mounting possible	Yes; S7-1500 mounting rail
Supply voltage	
Load voltage L+	
Rated value (DC)	24 V
Low limit of valid range (DC)	19.2 V
High limit of valid range (DC)	28.8 V
Reverse polarity protection	Yes
Input current	
Current consumption, max.	70 mA; without load
Power	
Power from the backplane bus	1.3 W
Power loss	
Power loss, typ.	4 W
Address area	
• Inputs	18 bytes; per channel
• Outputs	10 bytes; per channel

	6ES7553-1AA00-0AB0
Digital inputs	
Number of inputs	12; 3 per channel, including 1 DIQ
Digital inputs configurable	Yes
Input characteristics to IEC 61131, Type 3	Yes
Digital input functions, configurable	
Synchronization	Yes
Measuring input	Yes
Drive ready	Yes
Input voltage	
Type of input voltage	DC
Nominal value (DC)	24 V
For signal "0"	-5 ... +5 V
For signal "1"	+11 ... +30 V
Permitted voltage at input, min.	-5 V
Permitted voltage at input, max.	30 V
Input current	
for signal "1", typ.	2.5 mA
Input delay (at rated value of input voltage)	
For standard inputs	
• Configurable	Yes; none / 0.05 / 0.1 / 0.4 / 0.8 / 1.6 / 3.2 / 12.8 / 20 ms
• at "0" to "1", min.	4 µs; with parameter assignment "none"
• at "1" to "0", min.	4 µs; with parameter assignment "none"
For technological functions	
• Configurable	Yes
Cable length	
Shielded, max.	1000 m
Unshielded, max.	600 m
Digital outputs	
Number of outputs	12; 3 per channel, including 1 DIQ
• In groups of	
Current sinking	Yes; push-pull for DQn.0 und DQn.1
Current sourcing	Yes
Digital outputs configurable	Yes
Short-circuit protection	
• Response threshold, typ.	0.2 A for DQn.0 and DQn.1, 0.9 A for DIQn.2
Control of a digital input	Yes

	6ES7553-1AA00-0AB0
Digital output functions, configurable	
PTO (Pulse Train Output) signal interface	
• 24 V asymmetrical	Yes
• RS 422 symmetrical	Yes
• TTL (5 V) asymmetrical	Yes; min. 2.4 V, min. 220 ohm
PTO (Pulse Train Output) signal type	
• Pulse and direction	Yes
• Count up, count down	Yes
• Incremental encoder (A, B phase-shifted)	Yes
• Incremental encoder (A, B phase-shifted, quadruple)	Yes
Output switching capacity	
With resistive load, max.	0.1 A; 0.5 A for DIQn.2
With lamp load, max.	1 W; 5 W for DIQn.2
Load resistance range	
Low limit	240 Ω; 48 Ω for DIQn.2
High limit	12 kΩ
Output voltage	
Type of output voltage	DC
for signal "1", min.	23 V; L+ (-2.0 V)
Output current	
for signal "1" rated value	0.1 A; 0.5 A for DIQn.2
for signal "1" permissible range, max.	0.12 A; 0.6 A for DIQn.2
for signal "1" minimum load current	2 mA
for signal "0" residual current, max.	0.5 mA
Output delay with resistive load	
"0" to "1", typ.	1 µs; 28 µs for DIQn.2
"1" to "0", typ.	1 µs; 25 µs for DIQn.2
Switching frequency	
With resistive load, max.	1 kHz; for DIQn.2
With inductive load, max.	0.5 Hz; according to IEC 60947-5-1, DC-13, for DIQn.2
With lamp load, max.	10 Hz; for DIQn.2
With 24 V asymmetrical signal interface	200 kHz; for DQn.0 and DQn.1
With RS 422 symmetrical signal interface	1 MHz
With TTL (5 V) asymmetrical signal interface	200 kHz
Cable length	
Shielded, max.	320 m; RS422 / TTL Siemens Type 6FX2001-5: 125 kHz, 320 m; 250 kHz, 160 m; 500 kHz, 60 m; 1 MHz, 32 m; 24 V (DQn.m / DIQn.2): 10 kHz, 600 m; 200 kHz, 50 m

	6ES7553-1AA00-0AB0
Isochronous mode	
Isochronous mode (application synchronized until terminal)	Yes
Bus cycle time (TDP), min.	250 µs; 375 µs, when all 4 channels are used
Jitter, max.	1 µs
Interrupts/diagnostics/status information	
Diagnostics function	Yes
Interrupts	
Diagnostic interrupt	Yes
Diagnostic alarms	
Monitoring of supply voltage	Yes
Short-circuit	Yes; thermal overload protection
Group error	Yes
LED diagnostics display	
RUN LED	Yes; green LED
ERROR LED	Yes; red LED
MAINT LED	Yes; yellow LED
Monitoring of supply voltage (PWR LED)	Yes; green LED
Channel status display	Yes; green LED
For channel diagnostics	Yes; red LED
Electrical isolation	
Electrical isolation channels	
Between channels	No
Between the channels and backplane bus	Yes
Between the channels and load voltage L+	No
Isolation	
Isolation tested with	707 V DC (type test)
Ambient conditions	
Ambient temperature in operation	
Horizontal installation, min.	0 °C
Horizontal installation, max.	60 °C; note derating
Vertical installation, min.	0 °C
Vertical installation, max.	40 °C; note derating
Distributed operation	
on SIMATIC S7-300	Yes; via control and feedback interface
on SIMATIC S7-400	Yes; via control and feedback interface
on SIMATIC S7-1200	Yes
on SIMATIC S7-1500	Yes
on Standard PROFINET Controller	Yes; via control and feedback interface

	6ES7553-1AA00-0AB0
Dimensions	
Width	35 mm
Height	147 mm
Depth	129 mm
Weights	
Weight, approx.	300 g

Note

Derating information for output current

In the following cases, the maximum output current is reduced to 0.05 A for digital outputs DQn.m and 0.1 A for digital outputs DIQn.2:

- When the system is mounted vertically, as of an ambient temperature of 30 °C.
  In addition, you may only use channels 0 to 2 in this case.
- When the system is mounted horizontally, as of an ambient temperature of 50 °C.

Dimensional drawing

A

The dimensional drawing of the module on the mounting rail, as well as a dimensional drawing with open front panel, are provided in the appendix. Always observe the specified dimensions for installation in cabinets, control rooms, etc.

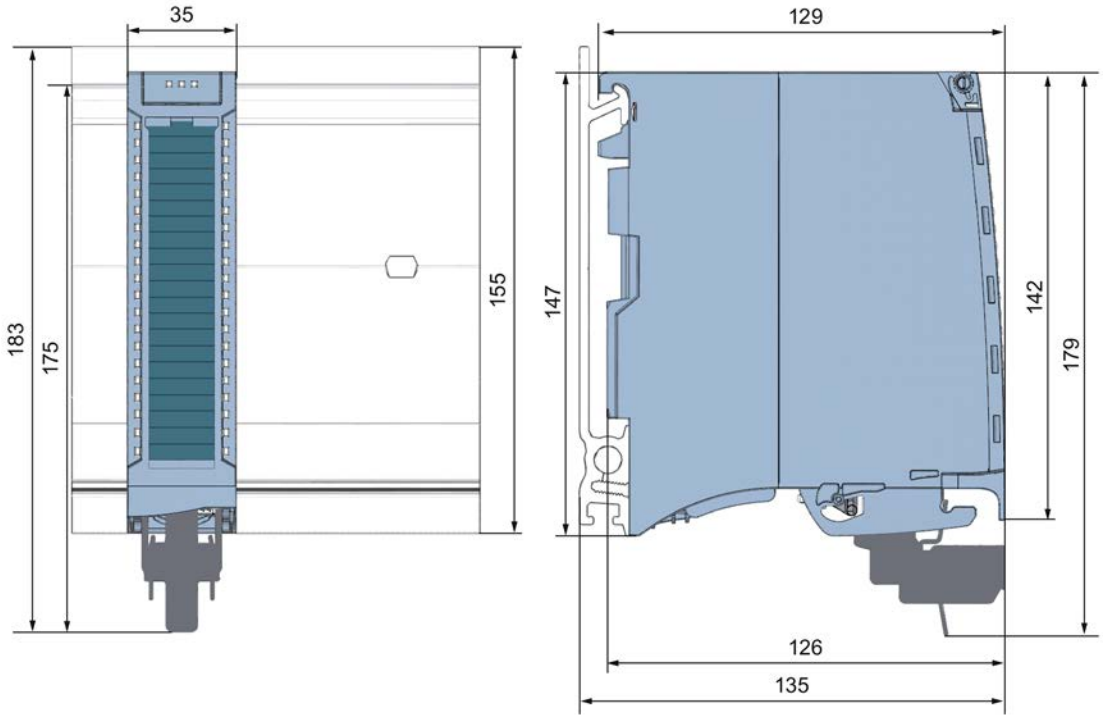

Figure A-1 Dimensional drawing of technology module TM PTO 4

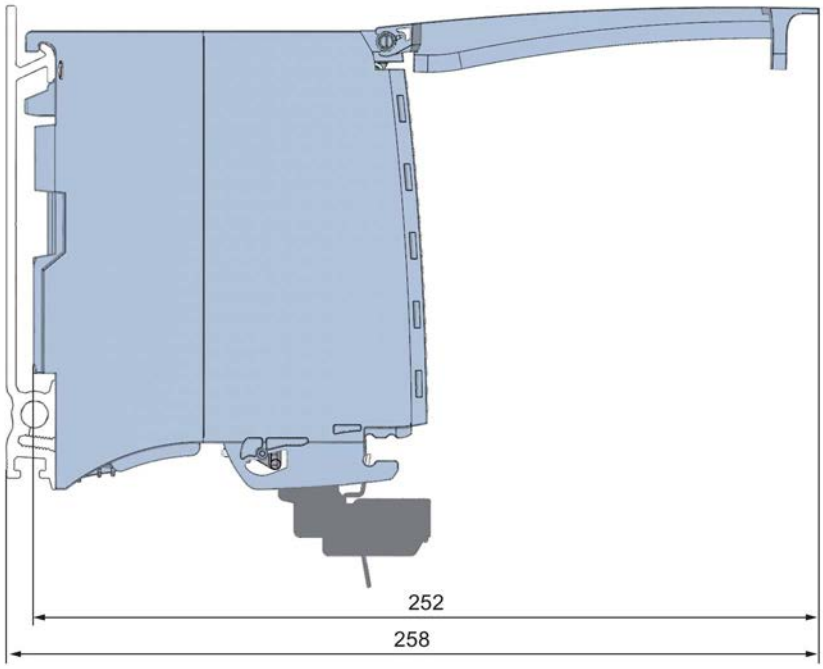

Figure A-2 Dimensional drawing of the TM PTO 4 module, side view with open front panel

Parameter data record B

B.1 Parameter assignment and structure of the parameter data record

You have the option to change the parameter assignment of the module with the user program while the CPU is in RUN. The parameters are transferred to the module using the using data record 128, for example with the instruction WRREC.

If errors occur during the transfer or validation of parameters with the WRREC instruction, the module continues operation with the previous parameter assignment. A corresponding error code is then written to the STATUS output parameter. If no errors occur, the STATUS output parameter contains the length of the actually transferred data.

The description of the WRREC instruction and the error codes is available in the section Parameter validation error (Page 61) or in the online help of STEP 7 (TIA Portal).

Structure of data record 128

The following tables show you the structure of data record 128 for TM PTO 4. The values in byte 0 to byte 3 are fixed and may not be changed. The channels are assigned in ascending order.

Note

The impulse output will be stopped for transfer of data record 128. For this reason, only transfer the data record when the drive is at a standstill.

Note

If you are using less than four channels, data record 128 is shortened accordingly.

When using the technology module on PROFIBUS DP, you can use a maximum of three channels.

Table B- 1 Parameter data record 128: Overall module

Bit → / Byte ↓	Bit 7	Bit 6	Bit 5	Bit 4	Bit 3	Bit 2	Bit 1	Bit 0
0...3	**Header**							
0	Major Version = 0				Minor Version = 1			
1	Length of parameter data per channel = 28							
2	Reserved[2]							
3	Reserved[2]							
4...31	**Channel 0**							
32...59	**Channel 1 (if used)**							
60...87	**Channel 2 (if used)**							
88...115	**Channel 3 (if used)**							

[2] Reserved bits must be set to 0.

Table B- 2 Parameter data record 128: Channel parameters

Bit → / Byte ↓	Bit 7	Bit 6	Bit 5	Bit 4	Bit 3	Bit 2	Bit 1	Bit 0
	Basic parameters							
4/32/ 60/88	Reserved[2]				Enable diagnostic interrupts[1]	Reaction to CPU STOP:		
						000_B: Coast Stop and reset drive enable		
						001 to 111_B: Invalid		
	Operating mode							
5/33/ 61/89	Reserved[2]	Signal interface:	Signal evaluation[3]		Signal type:			
			00_B: Single		0000_B: Invalid			
		0_B: 24 V, asymmetrical	01_B: Invalid		0001_B: Pulse (P) and direction (D)			
			10_B: Quadruple		0010_B: Count up (A), count down (B)			
		1_B: RS422, symmetrical / TTL (5 V), asymmetrical	11_B: Invalid		0011_B: Incremental encoder (A, B phase-shifted)			
					0100 to 1111_B: Invalid			

<table>
<tr><td>Bit →
Byte ↓</td><td>Bit 7</td><td>Bit 6</td><td>Bit 5</td><td>Bit 4</td><td>Bit 3</td><td>Bit 2</td><td>Bit 1</td><td>Bit 0</td></tr>
<tr><td></td><td colspan="8">Digital inputs</td></tr>
<tr><td rowspan="12">6/34/
62/90</td><td rowspan="3">Reference switch edge selection:</td><td colspan="4" rowspan="12"></td><td colspan="4">Input delay:</td></tr>
<tr><td colspan="4">0000_B: None</td></tr>
<tr><td colspan="4">0001_B: 0.05 ms</td></tr>
<tr><td rowspan="2">0_B: At positive edge</td><td colspan="4">0010_B: 0.1 ms</td></tr>
<tr><td colspan="4">0011_B: 0.4 ms</td></tr>
<tr><td rowspan="2">1_B: At negative edge</td><td colspan="4">0100_B: 0.8 ms</td></tr>
<tr><td colspan="4">0101_B: 1.6 ms</td></tr>
<tr><td rowspan="4"></td><td colspan="4">0110_B: 3.2 ms</td></tr>
<tr><td colspan="4">0111_B: 12.8 ms</td></tr>
<tr><td colspan="4">1000_B: 20 ms</td></tr>
<tr><td colspan="4">1001 to 1111_B: Invalid</td></tr>
<tr><td></td><td colspan="8">Values</td></tr>
<tr><td>7/35/
63/91</td><td colspan="8">Interpulse period at direction reversal:
UINT: Value range in ms: 0 to 255_D</td></tr>
<tr><td>8...11/
36...39/
64...67/
92...95</td><td colspan="8">Reference speed:
REAL: Value range in rpm: 1.0 to 20000.0_D:</td></tr>
<tr><td>12...15/
40...43/
68...71/
96...99</td><td colspan="8">Increments per revolution:
DINT: Value range in rpm: 1 to 1000000_D</td></tr>
<tr><td>16...19/
44...47/
72...75/
100...103</td><td colspan="8">Maximum speed:
REAL: Value range is dependent on signal interface, signal evaluation, increments per revolution and reference speed, see following table</td></tr>
<tr><td>20...21/
48...49/
76...77/
104...105</td><td colspan="8">Quick stop time (OFF3):
UINT: Value range in ms: 1 to 65535_D</td></tr>
<tr><td>22...23/
50...51/
78...79/
106...107</td><td colspan="8">Ramp stop time (OFF1):
UINT: Value range in ms: 1 to 65535_D</td></tr>
</table>

Bit → / Byte ↓	Bit 7	Bit 6	Bit 5	Bit 4	Bit 3	Bit 2	Bit 1	Bit 0
	Hardware inputs/outputs							
24...25/ 52...53/ 80...81/ 108...109	Reserved[2]							
26/54/ 82/110	Use drive enable[1]	Reserved[2]		Drive enable output:				
				00000_B: DQn.0[4]				
				00001_B: Invalid				
				00010_B: DIQn.2				
				00011 to 11111_B: Invalid				
27/55/ 83/111	Use DI0 as reference switch[1]	Reserved[2]		Reference switch input:				
				00000_B: DIn.0				
				00001 to 11111_B: Invalid				
28/56/ 84/112	Use DI1 as measuring input[1]	Reserved[2]		Measuring input:				
				00000_B: Invalid				
				00001_B: DIn.1				
				00010 to 11111_B: Invalid				
29/57/ 85/113	Use "Drive ready"[1]	Reserved[2]		"Drive ready" input:				
				00000_B: DIn.0				
				00001_B: DIn.1				
				00010_B: DIQn.2				
				00011 to 11111_B: Invalid				
30...31/ 58...59/ 86...87/ 114...115	Tolerated number of sign-of-life errors: UINT: Value range: 0 to 65535_D 65535_D means: No monitoring for errors of Master sign-of-life							

1 You enable the respective parameter by setting the corresponding bit to 1.

2 Reserved bits must be set to 0.

3 Only available for signal type "Incremental encoder (A, B phase-shifted)"

4 Only available for "RS422, symmetrical / TTL (5 V), asymmetrical"signal interface

Maximum speed

The following table shows the calculation of the value range of the maximum speed:

Table B- 3 Value range of the maximum speed

Signal interface	Value range of the maximum speed			
	Low limit		High limit (the smaller of the two values applies)	
	Signal evaluation "Single"	Signal evaluation "Quadruple"	Signal evaluation "Single"	Signal evaluation "Quadruple"
24 V, asymmetrical	0.1 Hz * 60 / (increments per revolution)	0.1 Hz * 60 *4 / (increments per revolution)	• 2 * reference speed • 200000 Hz * 60 / (increments per revolution)	• 2 * reference speed • 200000 Hz * 60 *4 / (increments per revolution)
TTL (5 V), asymmetrical				
RS422, symmetrical			• 2 * reference speed • 1000000 Hz * 60 / (increments per revolution)	• 2 * reference speed • 1000000 Hz * 60 *4 / (increments per revolution)

B.2 Parameter validation error

If you make the parameter setting in STEP 7 (TIA Portal) , the parameter values are checked before they are transferred to the technology module. This process prevents parameter errors.

In other use cases, the technology module checks the transferred parameter data record. If the technology module finds invalid or inconsistent parameter values, it outputs an error code (see below). The new parameter data record is rejected in this case, and work continues with the current parameter values until a valid parameter data record has been transferred.

WRREC

When the CPU is in RUN, you can change the parameter data record with the instruction WRREC (Write Record). In case of errors, the WRREC instruction returns corresponding error codes in the STATUS parameter.

Example:

Let us assume that when WRREC is executed, an invalid value, for example 9, is written to the module for the signal type. As a consequence, the module rejects the entire parameter data record. You can recognize this by evaluating the STATUS output parameter of the WRREC instruction. The STATUS output parameter is output as an ARRAY[1..4] of BYTE data with the value 16#DF80E111:

Example of WRREC STATUS data	Address	Meaning
DF_H	STATUS[1]	Error when writing a data record via PROFINET IO (IEC 61158-6)
80_H	STATUS[2]	Error when reading or writing a data record via PROFINET IO (IEC 61158-6)
$E1_H$	STATUS[3]	Module-specific error
13_H	STATUS[4]	Error code from the table below: The "Signal type" parameter has an invalid value.

Error codes

The following table shows the module-specific error codes and their meaning for parameter data record 128.

Table B- 4 Error codes for parameter validation

Error code in STATUS parameter (hexadecimal)				Meaning	Remedy
Byte 0	Byte 1	Byte 2	Byte 3		
DF	80	B0	00	Data record number unknown	Enter valid number for data record
DF	80	B1	00	Length of data record incorrect	Enter valid value for data record length.
DF	80	B2	00	Slot invalid or not accessible	• Check whether module is inserted or removed. • Check assigned values for parameters of the WRREC instruction.
DF	80	E0	01	Wrong version	• Check byte 0. • Enter valid values.
DF	80	E0	02	Error in the header information	• Check byte 1. • Correct length of parameter blocks.
DF	80	E1	00	Parameter invalid: No detailed information available	Check all parameter values.
DF	80	E1	12	"Reaction to CPU STOP" parameter invalid	Enter parameter value 000_B.
DF	80	E1	13	"Signal type" parameter invalid	Enter valid parameter value.
DF	80	E1	1A	"Input delay" parameter invalid	Enter valid parameter value.
DF	80	E1	26	"Reference speed" parameter invalid	Enter parameter value from range 1.0 to 20000.0_D taking into account the dependencies (Page 60).
DF	80	E1	29	"Increments per revolution" parameter invalid	Enter parameter value from range 1 to 1000000_D taking into account the dependencies (Page 60).
DF	80	E1	50	"Maximum speed" parameter invalid	Enter parameter value from the valid range (Page 60) in each case.
DF	80	E1	51	"Quick stop time (OFF3)" parameter invalid	Enter parameter value from range 1 to 65535_D.
DF	80	E1	52	"Ramp stop time (OFF1)" parameter invalid	Enter parameter value from range 1 to 65535_D.
DF	80	E1	2C	"Signal evaluation" parameter invalid	Enter valid parameter value.
DF	80	E1	40	"Reference switch input" parameter invalid	Enter valid parameter value.
DF	80	E1	41	"Measuring input" parameter invalid	Enter valid parameter value.
DF	80	E1	44	"Drive enable output" parameter invalid	Enter valid parameter value.
DF	80	E1	45	""Drive ready" input" parameter invalid	Enter valid parameter value.
DF	80	E1	46	DIQn.2 configured as ready input and drive enable output	Configure DIQn.2 either as ready input or as drive enable output.
DF	80	E1	47	• DIn.0 configured as reference switch input and ready input • DIn.1 configured as measuring input and ready input	• Configure DIQn.0 either as reference switch input or as ready input. • Configure DIQn.1 either as measuring input or as ready input.

SIEMENS

Manual

SIMATIC

S7-1500 / ET 200MP

Technology Module
TM NPU (6ES7556-1AA00-0AB0)

Edition 09/2020

support.industry.siemens.com

SIEMENS

SIMATIC

S7-1500/ET 200MP Technology Module TM NPU

Equipment Manual

Introduction 1

Security information 2

Product overview 3

Wiring 4

Configuration / address space 5

Programming 6

Diagnostics 7

Technical specifications 8

Parameter data record 128 A

Dimension drawing B

Interlock of the TM NPU C

09/2020

A5E46384784-AA

Legal information

Warning notice system

This manual contains notices you have to observe in order to ensure your personal safety, as well as to prevent damage to property. The notices referring to your personal safety are highlighted in the manual by a safety alert symbol, notices referring only to property damage have no safety alert symbol. These notices shown below are graded according to the degree of danger.

⚠ DANGER
indicates that death or severe personal injury **will** result if proper precautions are not taken.

⚠ WARNING
indicates that death or severe personal injury **may** result if proper precautions are not taken.

⚠ CAUTION
indicates that minor personal injury can result if proper precautions are not taken.

NOTICE
indicates that property damage can result if proper precautions are not taken.

If more than one degree of danger is present, the warning notice representing the highest degree of danger will be used. A notice warning of injury to persons with a safety alert symbol may also include a warning relating to property damage.

Qualified Personnel

The product/system described in this documentation may be operated only by **personnel qualified** for the specific task in accordance with the relevant documentation, in particular its warning notices and safety instructions. Qualified personnel are those who, based on their training and experience, are capable of identifying risks and avoiding potential hazards when working with these products/systems.

Proper use of Siemens products

Note the following:

⚠ WARNING
Siemens products may only be used for the applications described in the catalog and in the relevant technical documentation. If products and components from other manufacturers are used, these must be recommended or approved by Siemens. Proper transport, storage, installation, assembly, commissioning, operation and maintenance are required to ensure that the products operate safely and without any problems. The permissible ambient conditions must be complied with. The information in the relevant documentation must be observed.

Trademarks

All names identified by ® are registered trademarks of Siemens AG. The remaining trademarks in this publication may be trademarks whose use by third parties for their own purposes could violate the rights of the owner.

Disclaimer of Liability

We have reviewed the contents of this publication to ensure consistency with the hardware and software described. Since variance cannot be precluded entirely, we cannot guarantee full consistency. However, the information in this publication is reviewed regularly and any necessary corrections are included in subsequent editions.

Siemens AG
Digital Industries
Postfach 48 48
90026 NÜRNBERG
GERMANY

A5E46384784-AA
Ⓟ 09/2020 Subject to change

Copyright © Siemens AG 2019 - 2020.
All rights reserved

Table of contents

1 Introduction ... 4

1.1 Open Source Software ... 4

2 Security information ... 5

2.1 Security information ... 5

3 Product overview ... 6

3.1 S7-1500 / ET 200MP Documentation Guide ... 6

3.2 Properties ... 8

3.3 Operator controls and display elements ... 10

3.4 Functions ... 11

4 Wiring ... 13

4.1 Terminal assignment ... 13

4.2 Block diagram ... 16

5 Configuration / address space ... 17

5.1 Configuration of the TM NPU ... 17

5.2 Address space and address assignment ... 18

6 Programming ... 20

7 Diagnostics ... 21

7.1 Status and error displays ... 21

7.2 Diagnostics alarms ... 23

8 Technical specifications ... 25

A Parameter data record 128 ... 28

B Dimension drawing ... 30

C Interlock of the TM NPU ... 32

Introduction 1

Purpose of the documentation

This manual supplements the system manual S7-1500, ET 200MP automation system (https://support.industry.siemens.com/cs/ww/en/view/59191792). Functions that generally relate to the system are described in this manual.

The information provided in this manual and in the system/function manuals support you in commissioning the system.

Conventions

Please also observe notes marked as follows:

Note

A note contains important information on the product, on the handling of the product and on the section of the documentation to which particular attention should be paid.

1.1 Open Source Software

Open-source software is used in the firmware of the module. Open Source Software is provided free of charge. We are liable for the product described, including the open-source software contained in it, pursuant to the conditions applicable to the product. Siemens accepts no liability for the use of the open source software over and above the intended program sequence, or for any faults caused by modifications to the software.

For legal reasons, we are obliged to publish the original text of the license conditions and copyright notices. Please read the information relating to this on the Internet (https://support.industry.siemens.com/cs/ww/en/view/109765637).

Security information 2

2.1 Security information

Siemens provides products and solutions with industrial security functions that support the secure operation of plants, systems, machines and networks.

In order to protect plants, systems, machines and networks against cyber threats, it is necessary to implement – and continuously maintain – a holistic, state-of-the-art industrial security concept. Siemens' products and solutions constitute one element of such a concept.

Customers are responsible for preventing unauthorized access to their plants, systems, machines and networks. Such systems, machines and components should only be connected to an enterprise network or the internet if and to the extent such a connection is necessary and only when appropriate security measures (e.g. firewalls and/or network segmentation) are in place.

For additional information on industrial security measures that may be implemented, please visit (https://www.siemens.com/industrialsecurity).

Siemens' products and solutions undergo continuous development to make them more secure. Siemens strongly recommends that product updates are applied as soon as they are available and that the latest product versions are used. Use of product versions that are no longer supported, and failure to apply the latest updates may increase customers' exposure to cyber threats.

To stay informed about product updates, subscribe to the Siemens Industrial Security RSS Feed visit (https://www.siemens.com/industrialsecurity).

Product overview

3

3.1 S7-1500 / ET 200MP Documentation Guide

The documentation for the SIMATIC S7-1500 automation system and the SIMATIC ET 200MP distributed I/O system is arranged into three areas.
This arrangement enables you to access the specific content you require.

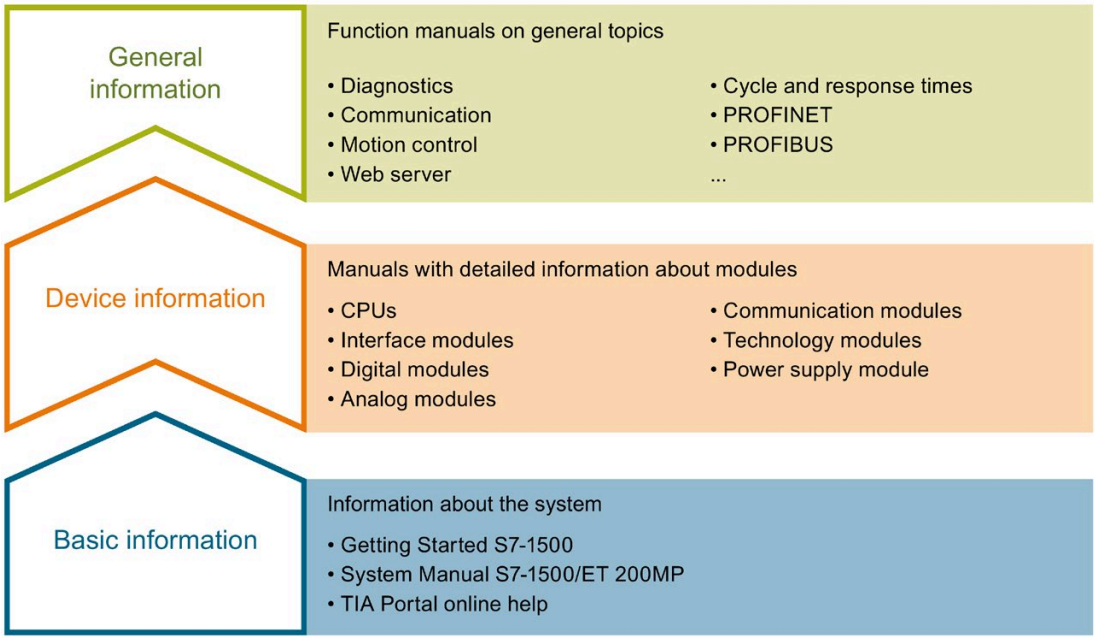

Basic information

The System Manual and Getting Started describe in detail the configuration, installation, wiring and commissioning of the SIMATIC S7-1500 and ET 200MP systems. The STEP 7 online help supports you in the configuration and programming.

Device information

Product manuals contain a compact description of the module-specific information, such as properties, wiring diagrams, characteristics and technical specifications.

General information

The function manuals contain detailed descriptions on general topics regarding the SIMATIC S7-1500 and ET 200MP systems, e.g. diagnostics, communication, motion control, Web server, OPC UA.

You can download the documentation free of charge from the Internet (https://support.industry.siemens.com/cs/ww/en/view/109742691).

Changes and supplements to the manuals are documented in a Product Information.

You can download the product information free of charge from the Internet (https://support.industry.siemens.com/cs/us/en/view/68052815).

Manual Collection S7-1500/ET 200MP

The Manual Collection contains the complete documentation on the SIMATIC S7-1500 automation system and the ET 200MP distributed I/O system gathered together in one file.

You can find the Manual Collection on the Internet (https://support.industry.siemens.com/cs/ww/en/view/86140384).

SIMATIC S7-1500 comparison list for programming languages

The comparison list contains an overview of which instructions and functions you can use for which controller families.

You can find the comparison list on the Internet (https://support.industry.siemens.com/cs/ww/en/view/86630375).

"mySupport"

With "mySupport", your personal workspace, you make the best out of your Industry Online Support.

In "mySupport", you can save filters, favorites and tags, request CAx data and compile your personal library in the Documentation area. In addition, your data is already filled out in support requests and you can get an overview of your current requests at any time.

You must register once to use the full functionality of "mySupport".

You can find "mySupport" on the Internet (https://support.industry.siemens.com/My/ww/en).

Application examples

The application examples support you with various tools and examples for solving your automation tasks. Solutions are shown in interplay with multiple components in the system - separated from the focus on individual products.

You will find the application examples on the Internet (https://support.industry.siemens.com/cs/ww/en/ps/ae).

3.2 Properties

Article number

6ES7556-1AA00-0AB0

View of the module

Figure 3-1 View of the TM NPU technology module

Technical properties

- Processing of neural networks
- Processing of data from connected sensors
- Processing data from the user program
- Data exchange between CPU and TM NPU via process image
- USB 3.1 port, type A
- Gigabit Ethernet IO connection via RJ45 bus connector (metal)

SIMATIC memory cards

You download the application-specific files with the help of a SIMATIC memory card to the TM NPU. The application-specific files include the files for the application and the neural networks.

You can use the following SIMATIC memory card:

Article number	Capacity
6ES7954-8LPxx-0AA0	2 GB

Applicable sensors

Sensors can be connected via the integrated USB interface or the Ethernet interface of the TM NPU.

The following cameras are released for TM NPU:

- USB camera from Intel, type RealSense D435
- Gigabit Ethernet Vision camera from Basler, type Basler ace (acA1300-60gc)

Accessories

The following accessories are supplied with the module and can also be ordered separately as spare parts:

- Supply voltage connection plug
- U connector
- Universal front door

You can find additional information on accessories and the article numbers in the system manual of the S7-1500, ET 200MP Automation System (https://support.industry.siemens.com/cs/ww/en/view/59191792).

3.3 Operator controls and display elements

The following figure shows the operator control and display elements of the TM NPU technology module.

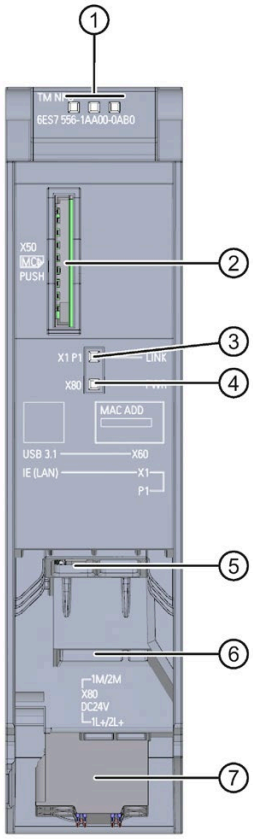

① RUN, ERROR and MAINTENANCE LEDs
② Slot for the SIMATIC memory card
③ LINK: LED display for the Ethernet interface port
④ PWR: LED display for external 24 V DC supply voltage
⑤ USB 3.1 interface
⑥ Gigabit Ethernet interface
⑦ Connection for external 24 V DC supply voltage

Figure 3-2 Operator controls and display elements

The location of the interfaces and the pin assignment of the external power supply is described in the section Terminal assignment (Page 13).

3.4 Functions

Ongoing automation requires more and more computing power and the use of technologies with artificial intelligence (AI). The TM NPU technology module comes equipped with a processor with AI capability; this processor enables fast and efficient processing of large amounts of data over neural networks. The AI processor is particularly well suited for image processing by means of so-called Convolutional Neural Networks (CNN).

Field of application

The TM NPU can be used in the S7-1500 automation system and in the ET 200MP distributed I/O system; it enables scalable solutions from the field level over the control and edge level all the way to the business management level and cloud.

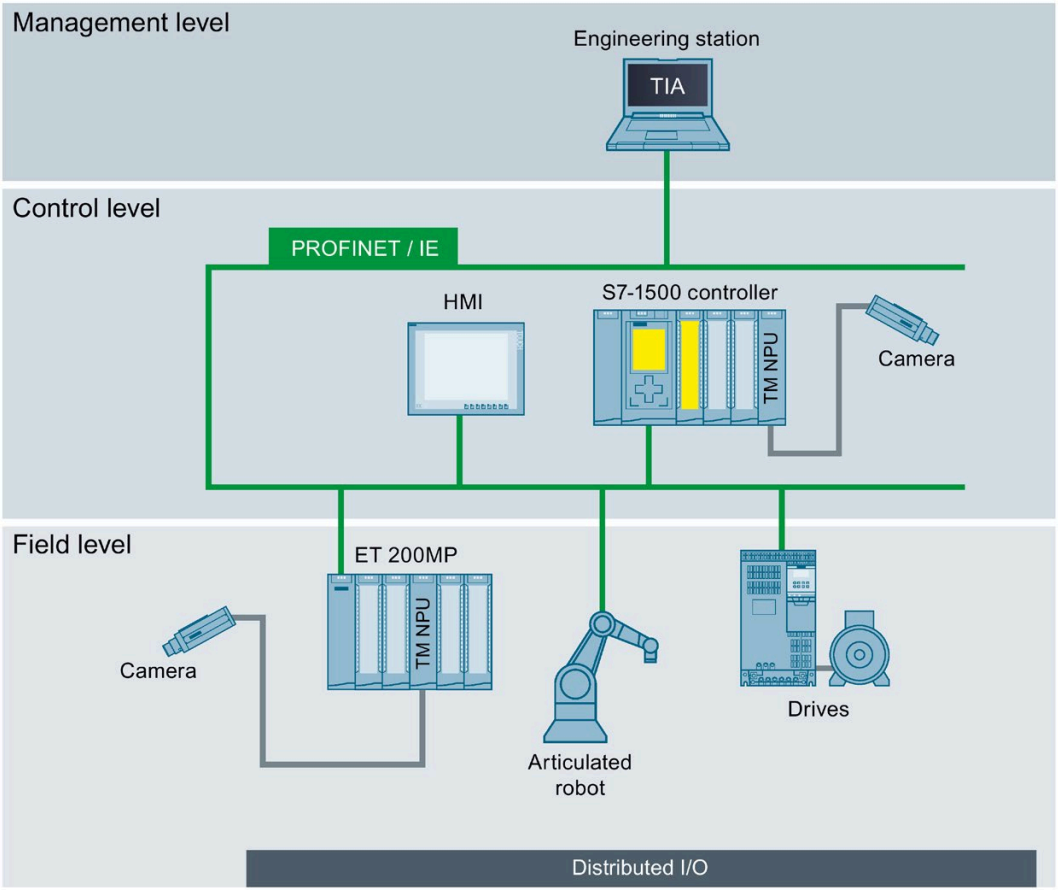

Figure 3-3 Automation levels of the TM NPU

Principle of operation

The TM NPU enables the evaluation of input data, such as video and process data, through neural networks.

The data of connected sensors (e.g. cameras) as well as data from the CPU user program, is processed at high speed in the TM NPU over neural networks. The TM NPU transmits the processing result via the backplane bus to the CPU which then evaluates the data in the user program.

A typical area of application is a visual quality check in production plants.

Advantages

- Less programming and engineering work
- Design of flexible and precise production processes

Wiring

4

4.1 Terminal assignment

Introduction

The plug connectors for the following are located on the bottom of the TM NPU:

- Connection of external 24 V DC supply voltage (X80)
- Connection of USB 3.1 interface, type A (X60)
- Connection of Gigabit Ethernet interface, RJ 45 (X1P1)

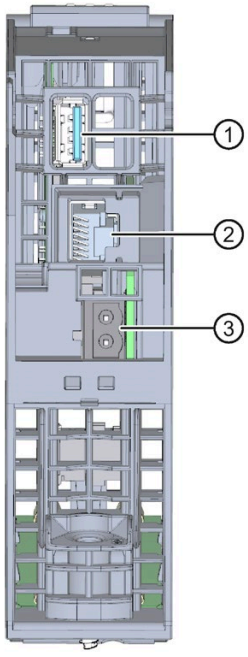

① USB 3.1 interface
② Gigabit Ethernet interface
③ Connector for power supply

Figure 4-1 TM NPU interfaces - Bottom view

24 V DC supply voltage

The following table shows the signal names and the descriptions of the terminal assignment for a 24 V DC supply voltage.

Table 4- 1 Terminal assignment 24 V DC supply voltage

View	Signal name[1]	Description
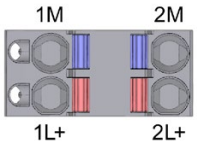	1L+	24 V DC
	2L+	24 V DC (for looping through)[2]
	1M	Ground
	2M	Ground (for looping through)[2]

[1] 1L+ and 2L+ as well as 1M and 2M are bridged internally

[2] Maximum 10 A permitted

The length of the connectable 24 V DC supply cable is limited to max. 30 m for EMC reasons.

USB 3.1 interface

The USB 3.1 interface is designed with a type A connection socket. The plug connector does not have a strain relief. You should therefore use a cable tie for strain relief of the USB cable. Use a 2.5 mm wide cable tie for strain relief.

The figure below shows the TM NPU with installed cable tie.

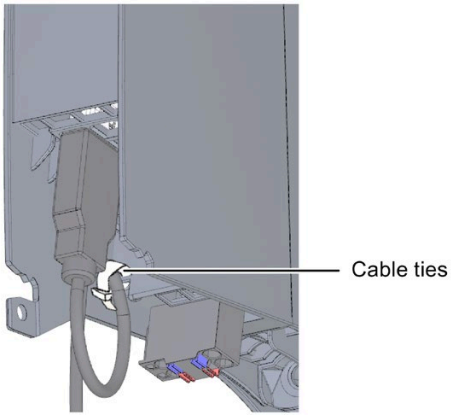

Figure 4-2 Strain relief for USB cable

Only connect sensors and cables to the USB interface in which the shield and ground signal are galvanically isolated.

For sensors and cables whose shield and ground (PIN 4) are connected to each other, an impermissible current flows over the cable shield in the event of a ground fault of the 24 V DC supply. The impermissible current flows over the shield spring of the module and the grounded mounting rail.

When you use components in which the shield and ground signal are already connected to each other, the power supply of the TM NPU should come from an electrically isolated 24 V DC supply. Do not connect the ground of this 24 V DC supply to the functional earth (FE).

Note that the shield and the ground signal in the camera are connected to each other in the recommended USB camera RealSense D435.

Ethernet interface

The Ethernet interface has been designed as an RJ 45 socket (X1 Port 1). The interface is released for use as an input for Gigabit Ethernet Vision Cameras as of hardware function level FS03 of the TM NPU.

We recommend the use of GigE Vision cameras of the type acA1300-60gc from Basler.

Reference

You can find additional information on connecting the technology module in the system manual of the S7-1500, ET 200MP Automation System (https://support.industry.siemens.com/cs/ww/en/view/59191792).

4.2 Block diagram

Block diagram

The following figure shows the block diagram of the TM NPU technology module.

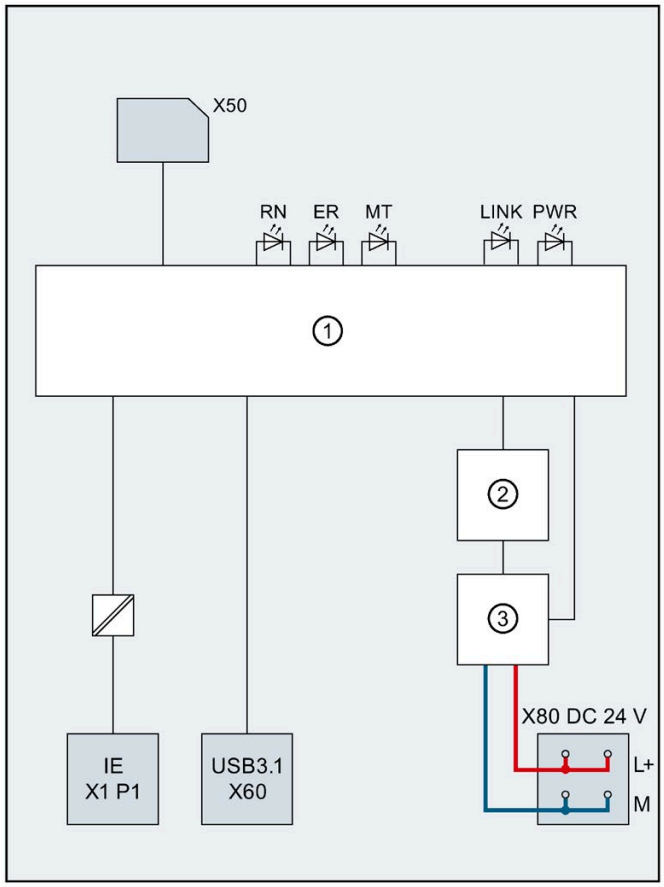

①	Electronics	L+	24 VDC supply voltage
②	Backplane bus interface	M	Ground
③	Internal supply voltage	RN	LED RUN (green)
X50	Slot for memory card	ER	ERROR LED (red)
X80 24 VDC	Supply voltage connection	MT	MAINT LED (yellow)
IE X1 P1	Gigabit Ethernet interface	LINK	LINK LED (green)
USB 3.1 X60	USB interface	PWR	PWR LED (green)

Figure 4-3 Block diagram of the TM NPU technology module

Configuration / address space

5

5.1 Configuration of the TM NPU

The TM NPU can be configured with STEP 7 (TIA Portal) as of V16 with HSP 0333 and GSDML:

- Central deployment
  - S7-1500 CPUs: as of V2.5
- Distributed deployment
  - Interface Module IM 155-5 PN HF (6ES7 155-5AA00-0AC0): V3.0 or higher
  - Interface Module IM 155-5 PN ST (6ES7 155-5AA01-0AB0): as of V4.1

Configuration of the TM NPU

You specify the properties of the module while configuring the module with STEP 7:

- Start address of the inputs
- Start address of the outputs
- Enable/disable load voltage diagnostics
- Enable/disable Gigabit Ethernet interface
- Enable/disable USB interface

Note

When configuring the TM NPU, note that either only the Gigabit Ethernet interface or the USB interface can be enabled. Simultaneous activation of both interfaces is not possible and is rejected by the module with a parameter assignment error.

You can find a configuration example of the TM NPU in the description of the application example. You can obtain the application example from your SIEMENS representative.

5.2 Address space and address assignment

CPU and TM NPU exchange their data via the process image.

The TM NPU works with a process image of 256 bytes for inputs and 256 bytes for outputs.

Address space and address assignment

In the process image of the inputs and outputs, the first two bytes are always reserved for the control and status information. All other addresses are used for communication and data transfer with the running application (app).

The figures below show the address space assignment for the configuration with 256 bytes for inputs and 256 bytes for outputs. You can freely assign the start addresses.

Address assignment in the process image input (PII)

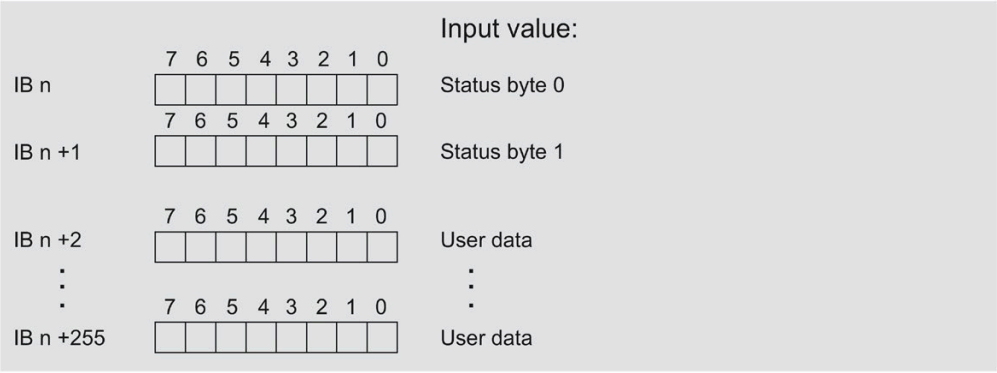

Figure 5-1 Address assignment in PII

Address assignment in the process image output (PIQ)

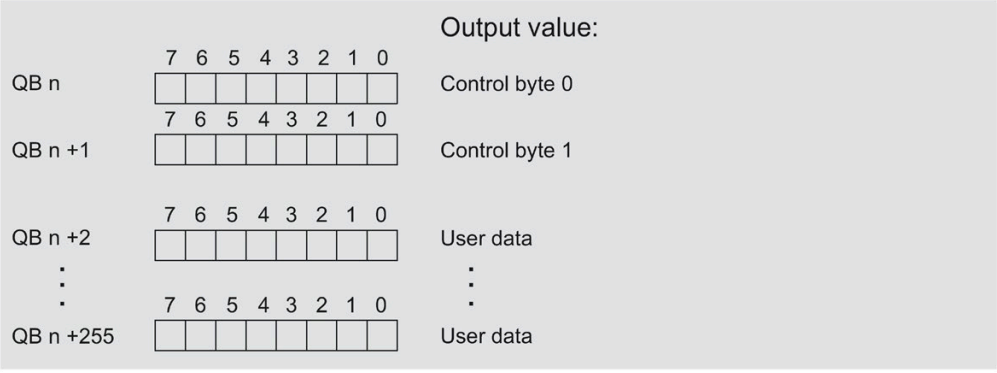

Figure 5-2 Address assignment in PIQ

Status information

The following image shows the assignment and meaning of the status bytes.

Status byte 0 provides information regarding the validity of the processed data. If the processed data is invalid, status byte 1 provides additional information on the cause.

Assignment of the status bytes in the PII

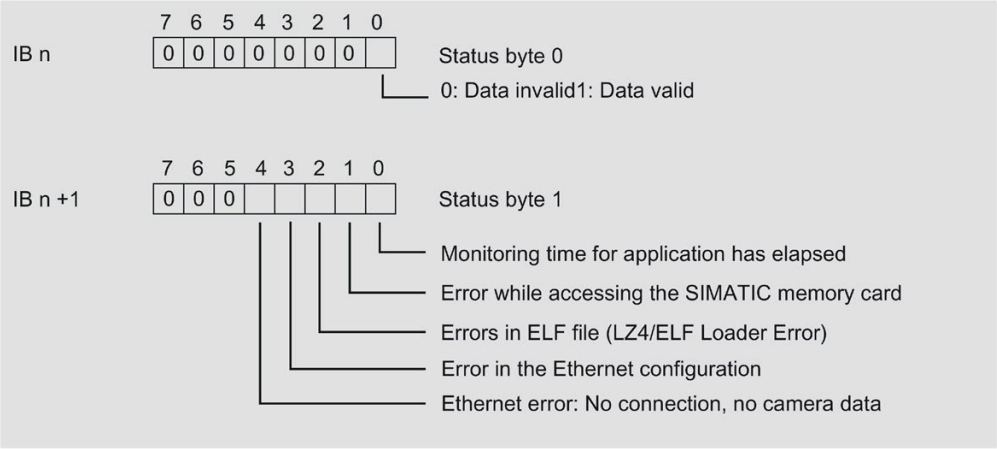

Figure 5-3 Status bytes in the PII

Bit 3 in status byte 1 signals errors in the Ethernet configuration. For more on this, read section Diagnostics alarms (Page 23)

Control information

The control bytes 0 and 1 are reserved for a later version of the module.

Assignment of the control bytes in the PIQ

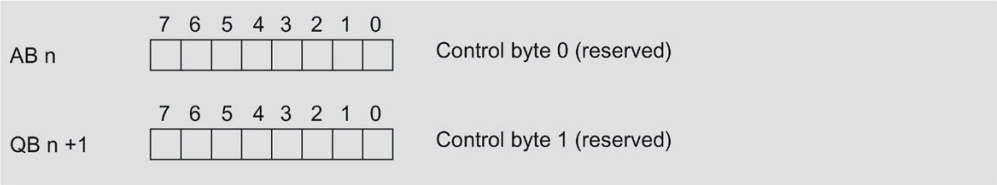

Figure 5-4 Control bytes in the PIQ

Programming 6

The application-specific program for the TM NPU consists of multiple program parts that you download to the module memory from a SIMATIC memory card:

- Application program
- Neural network

Application program

The application program (app) takes over communication with the module firmware and reads the data from the connected sensors. The app also takes over the data exchange with the neural network.

Neural network

The neural network processes the read data based on a learned AI model and transfers the result to the application program.

Application example

The application example contains the files for executable programs for object identification with a detailed description.

The description supplements the TM NPU manual and covers the following topics:

- Configuring the TM NPU with STEP 7 (TIA Portal)
- Downloading the application and the neural networks to the TM NPU
- Displaying the results on the HMI device or in the watch table
- Use of function blocks for control of data exchange between CPU and TM NPU
- Procedure for changing and expanding the programs by customer-specific objects

You can obtain the application example and the associated documentation from your SIEMENS representative.

Diagnostics

7

7.1 Status and error displays

Introduction

Diagnostics by means of LED display is an initial tool for error localization. To further limit the error, you usually evaluate the display of the CPU, the display of the module status in STEP 7 or the diagnostics buffer of the CPU. The buffer contains plain text information on the error that has occurred. For example, you will find the number of the appropriate error OB there.

See also information on the status bytes: Address space and address assignment (Page 18)

LED display

The figure below shows the LED displays of the technology module TM NPU.

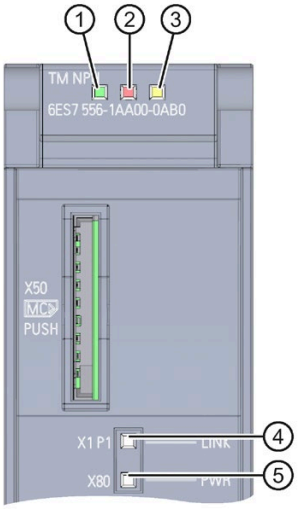

① RUN (green)
② ERROR (red)
③ MAINT (yellow)
④ LINK (green)
⑤ PWR (green)

Figure 7-1 LED display on the technology module

LED displays RUN/ERROR/MAINT

Table 7- 1 Meaning of the LEDs RUN / ERROR / MAINT

LEDs			Meaning	Remedy
RUN	**ERROR**	**MAINT**		
□ Off	□ Off	□ Off	No or too little supply voltage via backplane bus.	• Switch on the CPU or IM and/or the system power supply modules. • Check that the U connectors are inserted. • Check whether too many modules are inserted.
☼ Flashes	□ Off	□ Off	The technology module starts and waits until the valid parameter assignment is set.	---
■ On	□ Off	□ Off	Parameter assignment of the technology module is valid.	---
■ On	☼ Flashes	□ Off	Module error, e.g. no supply voltage	Check the supply voltage.
			Firmware update running.	---
			Communication between AI-capable processor and backplane bus is faulty.	• Switch the supply voltage off and on again. • Switch off the supply voltage, download files for the application and neural network, switch on supply voltage again.
☼ Flashes	☼ Flashes	☼ Flashes	Hardware or firmware defective.	Replace the technology module.

PWR LED display

Table 7- 2 Meaning of the PWR LED display

LED PWR	Meaning	Remedy
□ Off	External supply voltage too low or missing.	Check the external supply voltage.
■ On	External supply voltage available.	---

LINK LED display

Table 7- 3 Meaning of the LINK LED display

LINK LED	Meaning	Remedy
Off	No Ethernet link detected.	Check whether: • The Ethernet configuration is disabled • The configuration file "network.conf" was saved correctly *) For the correct coding of the configuration file, read the last paragraph in the section Diagnostics alarms (Page 23). • No Ethernet cable is inserted
Flashes twice at intervals	Module is downloading the file with the application.	---
Flashes three times at intervals	Firmware update of the module is performed.	---
Lit permanently	Ethernet connection established.	---

*) This file must be available in Linux format to be read by the TM NPU. Editors outside the Linux environment can change the line breaks and thus make the file unreadable for the TM NPU.

7.2 Diagnostics alarms

Diagnostics alarms

A diagnostic interrupt is generated and the ERROR LED flashes on the module for each diagnostics event. You can read out the diagnostics alarms, for example, in the diagnostics buffer of the CPU. You can analyze the error code with the user program.

Table 7- 4 Diagnostics alarms, their meaning and corrective measures

Diagnostics alarm	Error code	Meaning	Corrective measures
Parameter assignment error	10_H	The module cannot evaluate parameters for the channel. Incorrect parameter assignment.	Correct the parameter assignment.
No load voltage	11_H	External supply voltage of the module is missing.	Connect external supply voltage to module/channel.
Communication error (in combination with flashing LINK LED)	13_H	Firmware update running.	Wait for completion of the firmware update: 1. Wait until the LINK LED is permanently off 2. Restart the module

Diagnostics alarm	Error code	Meaning	Corrective measures
Communication error (LINK LED is permanently on or off)	13H	Internal communication error in the module: Interrupted data connection between the AI-capable processor and the backplane bus.	Restart the module If the communication error still exists after the restart, perform the firmware update again.
Communication error (LINK LED is permanently off)	13H	Internal communication error in the module: Configuration file "network.conf" is unreadable.	Check the "network.conf" configuration file. The file must be in Linux format. Read the last paragraph in this section.
Invalid/inconsistent firmware present	11BH	Loaded firmware versions for the backplane bus and the module are not compatible	Perform both firmware updates again and ensure that the version number is the same for both updates.

Diagnostic interrupt

For an incoming or outgoing event, the module triggers a diagnostics interrupt if this is configured accordingly in STEP 7 (TIA Portal). The CPU interrupts user program execution and executes the diagnostic interrupt OB. The event that triggered the interrupt is entered in the start information of the diagnostic interrupt OB.

The module generates a diagnostic interrupt at the following event:

- Parameter assignment error
- Missing supply voltage

You can find detailed information on the event in the organization block with the "RALRM" instruction (read additional interrupt info) and in the STEP 7 online help.

Correct coding of the end of line in the configuration file

If the LINK LED is permanently off and Bit 3 in status byte 1 of the PII is on, this could be due to errors in the configuration file.

Check for correct end of lines in the "network.conf" configuration file.

Linux/Unix, Windows and OS X code the end of line differently:

- <Line Feed> [Bytecode: LF; ASCII: 0x0A, symbolic: \n] under Linux/Unix,
- <Carriage Return> [Bytecode: CR, ASCII: 0x0D, symbolic: \r] under OS X,
- <Carriage Return><Linefeed> [Bytecode: CR/LF] under Windows.

Technical specifications

8

Technical specifications TM NPU

The following table shows the technical specifications as of 08/2020. You can find a data sheet including daily updated technical specifications on the Internet (https://support.industry.siemens.com/cs/ww/en/pv/6ES7556-1AA00-0AB0/td?dl=en).

Article number	6ES7556-1AA00-0AB0
General information	
Product type designation	TM NPU
HW functional status	FS03
Firmware version	V1.2
• FW update possible	Yes
Product function	
• I&M data	Yes; I&M0 to I&M3
• Artificial intelligence/processing of neural networks	Yes
Engineering with	
• STEP 7 TIA Portal configurable/integrated from version	STEP 7 V16 or higher
• STEP 7 configurable/integrated from version	- / -
• PROFIBUS from GSD version/GSD revision	- / -
• PROFINET from GSD version/GSD revision	GSDML V2.35
Installation type/mounting	
Mounting position	horizontal set up
Rail mounting	Yes
Control cabinet installation	Yes
Supply voltage	
Rated value (DC)	24 V
permissible range, lower limit (DC)	19.2 V
permissible range, upper limit (DC)	28.8 V
Reverse polarity protection	Yes
Short-circuit protection	Yes
Mains buffering	
• Mains/voltage failure stored energy time	5 ms
Input current	
Current consumption (rated value)	0.35 A; 24 V input voltage, USB load of 800 mA
Current consumption, max.	0.5 A

Article number	6ES7556-1AA00-0AB0
Power	
Power available from the backplane bus	0.65 W
Power consumption from the backplane bus (balanced)	1.1 W
Power loss	
Power loss, typ.	3.3 W
Processor	
Processor type	2x LEON processor with 700 MHz
Address area	
Address space per module	
• Inputs	254 byte; +2 bytes QI and application-specific status bytes
• Outputs	254 byte; +2 bytes application-specific status bytes
Interfaces	
Number of Ethernet interfaces	1
Number of USB interfaces	1
Ethernet interface	Yes
USB port	Yes
SD card slot	Yes
1. Interface	
Interface type	Ethernet
Interface types	
• Number of ports	1
• integrated switch	No
• RJ 45 (Ethernet)	Yes
2. Interface	
Interface type	USB
Isolated	No
Interface types	
• Number of ports	1
• USB	Yes
• Output current of the interface, max.	900 mA
Interface types	
RJ 45 (Ethernet)	
• 1000 Mbps	Yes
USB port	
• USB specification	USB 3.1
• Design of the USB ports	USB type A socket
Protocols (Ethernet)	
• GigE Vision	Yes; V2.1 (FW V1.2 or higher)
Web server	
• supported	No

Article number	6ES7556-1AA00-0AB0
Interrupts/diagnostics/status information	
Status indicator	Yes
Alarms	No
Diagnostics function	Yes
Diagnostics indication LED	
• RUN LED	Yes
• ERROR LED	Yes
• MAINT LED	Yes
• LINK LED	Yes
• Monitoring of the supply voltage (PWR-LED)	Yes
Isolation	
Isolation tested with	707 V DC between USB load voltage and backplane bus (type test); 1 500 V AC between Ethernet and functional ground (type test)
Ambient conditions	
Ambient temperature during operation	
• horizontal installation, min.	0 °C
• horizontal installation, max.	40 °C
Ambient temperature during storage/transportation	
• min.	-40 °C
• max.	70 °C
Decentralized operation	
to SIMATIC S7-300	Yes
to SIMATIC S7-400	Yes
to SIMATIC S7-1200	Yes
to SIMATIC S7-1500	Yes
to standard PROFIBUS master	No
to standard PROFINET controller	No
Dimensions	
Width	35 mm
Height	147 mm
Depth	129 mm
Weights	
Weight, approx.	290 g

Parameter data record 128

A

Parameter assignment in the user program

You can change the parameters of the module in RUN.

- The parameters are transferred to the technology module with the WRREC instruction via data record 128. The parameters set with STEP 7 are not changed in the CPU by this action.
- The technology module then checks the parameters for plausibility.

After a startup, the parameters set with STEP 7 are valid again.

Output parameters: STATUS

If errors occur when transferring parameters with the WRREC instruction, the module continues operation with the original parameter assignment. In this case, the STATUS output parameter contains a corresponding error code.

You can find the description of the instruction "WRREC: Write data record" and the error codes in the information system of the TIA Portal.

Data record structure

The following table shows the structure of the data record 128.

Table A- 1 Parameter data record 128

Bit → / Byte	7	6	5	4	3	2	1	0
0	Reserved[1)]	1	Major version		Minor version			
1	Number of following parameter structures = 5							
2	**Number of following parameter blocks = 1**							
3	**Length of the following parameter blocks in bytes = 2**							
4	ID = 0 (common)							
5	Reserved[1)]	Reserved[1)]	Reserved[1)]	Reserved[1)]	Reserved[1)]	Reserved[1)]	Reserved[1)]	Diagnostics: No load voltage L+: 0 = Disabled 1 = Enabled
6	**Number of following parameter blocks = 1**							
7	**Length of the following parameter blocks in bytes = 2**							
8	ID = 1 (SD)							
9	Reserved[1)]							
10	**Number of following parameter blocks = 1**							

Bit → / Byte	7	6	5	4	3	2	1	0
11	**Length of the following parameter blocks in bytes = 3**							
12	ID = 2 (USB)							
13	Reserved[1)]	Reserved[1)]	Reserved[1)]	Reserved[1)]	Reserved[1)]	Reserved[1)]	Reserved[1)]	USB interface: 0 = Disabled 1 = Enabled
14	Reserved[1)]							
15	**Number of following parameter blocks = 1**							
16	**Length of the following parameter blocks in bytes = 3**							
17	ID = 3 (Ethernet)							
18	Reserved[1)]	Reserved[1)]	Reserved[1)]	Reserved[1)]	Reserved[1)]	Reserved[1)]	Reserved[1)]	Ethernet interface: 0 = Disabled 1 = Enabled
19	Reserved[1)]							
20	**Number of following parameter blocks = 1**							
21	**Length of the following parameter blocks in bytes = 2**							
22	ID = 4 (App)							
23	Reserved[1)]	Reserved[1)]	Reserved[1)]	Reserved[1)]	Reserved[1)]	Reserved[1)]	Reserved[1)]	Reserved[1)]

[1)] Reserved bits must be set to 0

Dimension drawing

B

The dimensional drawing of the module on the mounting rail, as well as a dimensional drawing with open front panel, are provided in the appendix. Always observe the specified dimensions for installation in cabinets, control rooms, etc.

Dimensional drawings of the TM NPU technology module

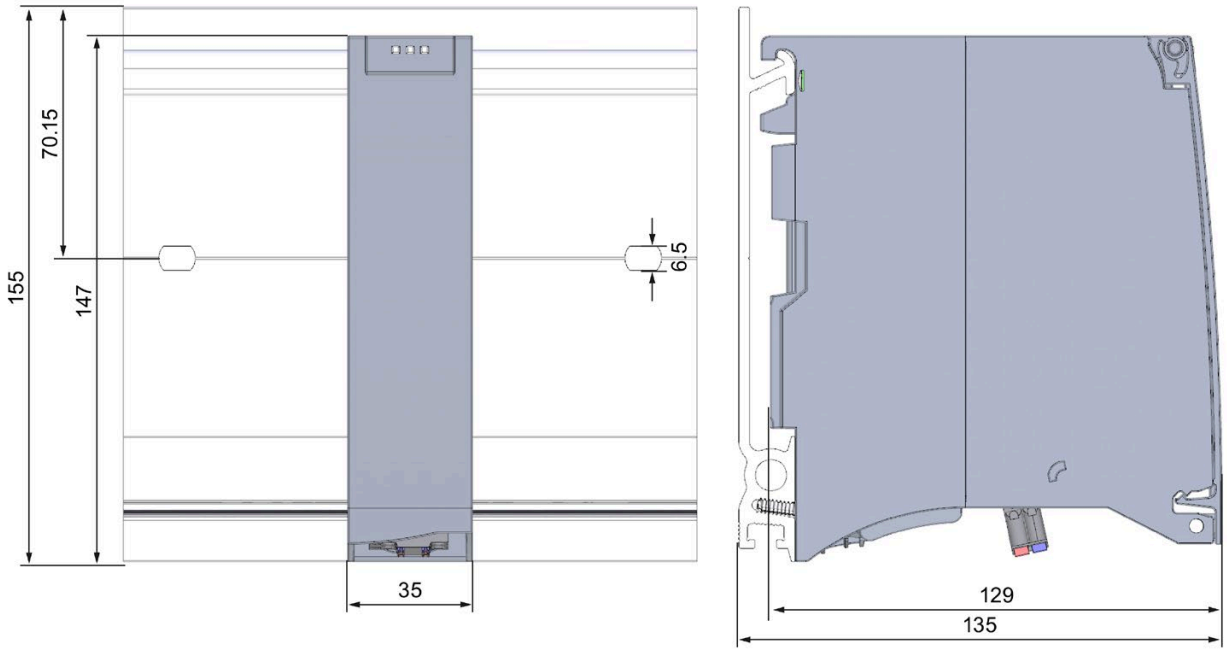

Figure B-1 Dimensional drawing of the TM NPU technology module, front and side views

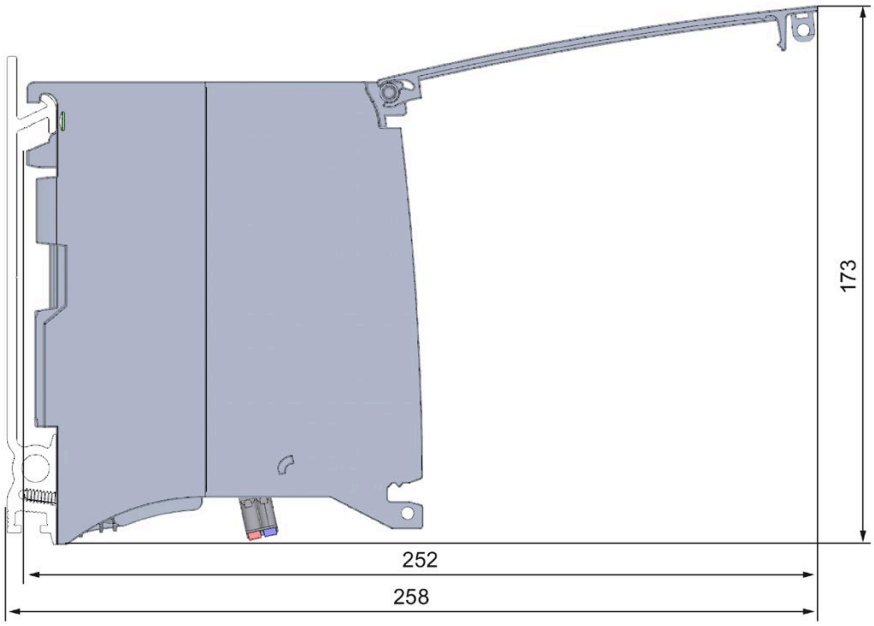

Figure B-2 Dimensional drawing of the TM NPU technology module, side view with open front cover

Interlock of the TM NPU

C

Locking options

Provide additional protection for your TM NPU technology module from unauthorized access (for example to the SIMATIC memory card) by using a secure front cover.

You have e.g. the following options:

- Attach a seal
- Secure the front cover with a lock (shackle diameter: 3 mm)

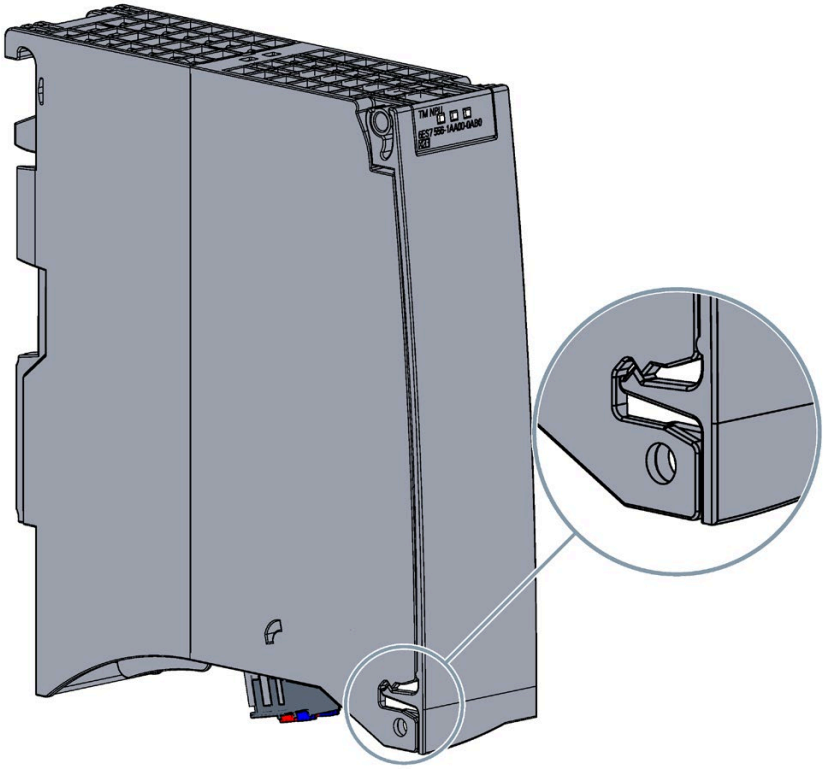

SIEMENS

Weighing systems

Electronic Weighing System SIWAREX WP521/WP522

Manual

Foreword 1

Documentation guide 2

Product overview 3

Installation and connection 4

Commissioning 5

Scale parameters and functions 6

Alarm logging 7

Commands 8

Communication with SIMATIC S7-1500 9

Communication via Modbus 10

Technical specifications 11

Accessories 12

Appendix A

09/2016

A5E36695225-AB

Legal information

Warning notice system

This manual contains notices you have to observe in order to ensure your personal safety, as well as to prevent damage to property. The notices referring to your personal safety are highlighted in the manual by a safety alert symbol, notices referring only to property damage have no safety alert symbol. These notices shown below are graded according to the degree of danger.

⚠ DANGER

indicates that death or severe personal injury **will** result if proper precautions are not taken.

⚠ WARNING

indicates that death or severe personal injury **may** result if proper precautions are not taken.

⚠ CAUTION

indicates that minor personal injury can result if proper precautions are not taken.

NOTICE

indicates that property damage can result if proper precautions are not taken.

If more than one degree of danger is present, the warning notice representing the highest degree of danger will be used. A notice warning of injury to persons with a safety alert symbol may also include a warning relating to property damage.

Qualified Personnel

The product/system described in this documentation may be operated only by **personnel qualified** for the specific task in accordance with the relevant documentation, in particular its warning notices and safety instructions. Qualified personnel are those who, based on their training and experience, are capable of identifying risks and avoiding potential hazards when working with these products/systems.

Proper use of Siemens products

Note the following:

⚠ WARNING

Siemens products may only be used for the applications described in the catalog and in the relevant technical documentation. If products and components from other manufacturers are used, these must be recommended or approved by Siemens. Proper transport, storage, installation, assembly, commissioning, operation and maintenance are required to ensure that the products operate safely and without any problems. The permissible ambient conditions must be complied with. The information in the relevant documentation must be observed.

Trademarks

All names identified by ® are registered trademarks of Siemens AG. The remaining trademarks in this publication may be trademarks whose use by third parties for their own purposes could violate the rights of the owner.

Disclaimer of Liability

We have reviewed the contents of this publication to ensure consistency with the hardware and software described. Since variance cannot be precluded entirely, we cannot guarantee full consistency. However, the information in this publication is reviewed regularly and any necessary corrections are included in subsequent editions.

Siemens AG
Division Process Industries and Drives
Postfach 48 48
90026 NÜRNBERG
GERMANY

Document order number: A5E36695225
Ⓟ 10/2016 Subject to change

Copyright © Siemens AG 2016.
All rights reserved

Table of contents

1 Foreword 9
1.1 Purpose of the manual 9
1.2 Security information 9
1.3 Conventions 9
1.4 Industrial Security 10
2 Documentation guide 11
3 Product overview 13
3.1 Properties 13
3.2 Area of application 16
3.3 System integration in SIMATIC 16
3.4 Customer benefits 17
3.5 Product package 17
3.6 Overview of the functions 18
3.7 Overview of configuration options 18
3.7.1 Parameter assignment using SIMATIC CPU or SIMATIC HMI 18
3.7.2 Configuration with the PC 19
3.7.3 Configuration via the Modbus interface 20
4 Installation and connection 21
4.1 Installation guideline 21
4.2 Pin assignment 21
4.3 Connecting the load cells 24
4.4 Shield connection 28
4.5 Supply voltage L+/M 29
4.6 Digital inputs DI0, DI1 and DI2 29
4.7 Digital outputs DQ0, DQ1, DQ2 and DQ3 30
4.8 Connection of RS485 serial interface 30
4.9 Connection of Siebert display via RS485 31
4.10 Connection of the Ethernet interface 32
5 Commissioning 35
5.1 Basic tasks 35
5.2 Ex-works settings of the operating switch 36
5.3 Factory-set parameters 38

5.4 Commissioning tools ... 38

5.5 Start-up with the operator panel and the Ready-for-use software ... 38
5.5.1 Restriction of access ... 38
5.5.2 Start ... 39
5.5.3 Specification of basic values 1 ... 40
5.5.4 Specification of basic values 2 ... 41
5.5.5 Selecting the calibration method ... 41
5.5.6 Defining the calibration weights ... 42
5.5.7 Setting calibration points ... 43
5.5.8 Calibrating the scale automatically ... 44
5.5.9 Performing the automatic calibration ... 45
5.5.10 Checking the scale following calibration ... 45

5.6 Service with the SIWATOOL program ... 46
5.6.1 General ... 46
5.6.2 Windows and functions of SIWATOOL ... 47
5.6.3 Available help options ... 49
5.6.4 Recording scale traces ... 49
5.6.5 Offline parameter assignment ... 50

5.7 Commissioning with SIWATOOL ... 51
5.7.1 IP address for SIWAREX ... 51
5.7.2 Entering a known SIWAREX IP address ... 51
5.7.3 Determining an unknown IP address ... 52
5.7.4 Setting up a network ... 52
5.7.5 Start ... 52
5.7.6 Calibration method ... 53
5.7.6.1 Selecting the calibration method ... 53
5.7.6.2 Calibration with calibration weight ... 54
5.7.6.3 Automatic calibration (= calibration without calibration weight) ... 58
5.7.6.4 Receive all data ... 63
5.7.7 Firmware update with SIWATOOL ... 63
5.7.8 Firmware update with SIMATIC TIA Portal ... 66

6 Scale parameters and functions ... 67

6.1 Parameters and functions ... 67

6.2 DR 2 command code ... 67

6.3 DR 3 calibration parameters ... 67
6.3.1 Overview ... 67
6.3.2 Scale name ... 71
6.3.3 Unit of weight ... 71
6.3.4 Gross identifier ... 71
6.3.5 Minimum weighing range ... 71
6.3.6 Maximum weighing range ... 71
6.3.7 Calibration weights 0, 1, 2 and calibration digits 0, 1, 2 ... 72
6.3.8 Scale interval ... 72
6.3.9 Automatic zero adjustment ... 72
6.3.10 Filling/emptying mode ... 72
6.3.11 Weight simulation ... 72
6.3.12 Filter sequence ... 72
6.3.13 Maximum tare load ... 72
6.3.14 Maximum negative zero setting limit (semi-automatically) ... 73

6.3.15 Maximum positive zero setting limit (semi-automatically) ... 73
6.3.16 Standstill range ... 73
6.3.17 Standstill time ... 74
6.3.18 Standstill waiting time ... 74
6.3.19 Low-pass filter limit frequency ... 74
6.3.20 Low-pass filter number ... 75
6.3.21 Period the average value filter ... 75

6.4 Performing calibration ... 75
6.4.1 Calibration with calibration weights ... 75
6.4.2 Automatic calibration ... 78

6.5 DR 4 output the calculated adjustment digits ... 79
6.5.1 Overview ... 79
6.5.2 Calibration digits 0, 1, 2 (calculated) ... 80

6.6 DR 5 zeroing memory ... 80
6.6.1 Overview ... 80
6.6.2 Effective tare weight - from specification ... 81
6.6.3 Effective tare weight (semi-automatic) ... 81
6.6.4 Current zero tracking weight ... 81
6.6.5 Dead load ... 81

6.7 DR 6 limit settings ... 82
6.7.1 Overview ... 82
6.7.2 Basis of limits ... 84
6.7.3 Limit value 1 ON, limit value 2 ON, limit value 1 OFF, limit value 2 OFF ... 84
6.7.4 Limit "Empty" ON ... 85
6.7.5 Delay time for limits ... 85

6.8 DR 7 interface parameters ... 86
6.8.1 Overview ... 86
6.8.2 Assignment for digital input 0, 1, 2 ... 88
6.8.3 Input filtering (hardware setting) ... 88
6.8.4 Assignment for digital output 0, 1, 2, 3 ... 89
6.8.5 Reaction of the digital outputs to fault or CPU stop ... 89
6.8.6 Replacement value for DQ 0, 1, 2, 3 ... 89
6.8.7 Trace recording cycle ... 90
6.8.8 Trace storage method ... 90

6.9 DR 8 date and time ... 90

6.10 DR 9 module information ... 91

6.11 DR 10 load cell parameters ... 92
6.11.1 Overview ... 92
6.11.2 50/60 Hz toggling ... 94
6.11.3 Number of support points ... 94
6.11.4 Load cell characteristic value ... 94
6.11.5 Rated load of a load cell ... 94
6.11.6 Overload limit ... 95
6.11.7 Impedance reference value ... 95
6.11.8 Permissible impedance deviation ... 95
6.11.9 Load cell manufacturer ... 95
6.11.10 Load cell order number ... 95

6.12 DR 11 channel status/channel activation ... 95

6.12.1 Overview ... 95
6.12.2 Channel status / channel activation ... 96

6.13 DR 12 Ethernet parameters ... 97
6.13.1 Overview ... 97
6.13.2 Device MAC address ... 99
6.13.3 IP address ... 99
6.13.4 Subnet mask ... 99
6.13.5 Gateway ... 100
6.13.6 Device name ... 100
6.13.7 Unit identifier channel 1 or channel 2 ... 100
6.13.8 Modbus TCP port number channel 1 or channel 2 ... 100
6.13.9 Byte swap ... 100

6.14 DR 13 RS485 parameters ... 101
6.14.1 Overview ... 101
6.14.2 RS485 protocol ... 102
6.14.3 RS485 baud rate ... 103
6.14.4 RS485 character parity ... 103
6.14.5 RS485 termination ... 103
6.14.6 Byte swap ... 103
6.14.7 RS485 Modbus address ... 103
6.14.8 Decimal place for Siebert indicator ... 103
6.14.9 Modbus RTU message frame delay ... 104

6.15 DR 14 SIMATIC interface parameters ... 104
6.15.1 Overview ... 104
6.15.2 Selection of process value 1, 2 ... 105

6.16 DR 15 tare default values ... 106
6.16.1 Overview ... 106
6.16.2 Default tare weight ... 107

6.17 DR 16 simulation value ... 107
6.17.1 Overview ... 107
6.17.2 Weight simulation specification ... 108

6.18 DR 18 digital output control specifications ... 108
6.18.1 Overview ... 108
6.18.2 Specification for digital output 0, 1, 2, 3 ... 110

6.19 DR 30 current process values ... 110
6.19.1 Overview ... 110
6.19.2 Gross process weight ... 113
6.19.3 Net process weight ... 113
6.19.4 Tare process weight ... 113
6.19.5 Gross / net weight ... 114
6.19.6 Gross / net weight with increased resolution (x 10) ... 114
6.19.7 Gross process weight 2 ... 114
6.19.8 Refresh counter for process values ... 114

6.20 DR 31 advanced current process values ... 114
6.20.1 Overview ... 114
6.20.2 Unfiltered digit value ... 116
6.20.3 Filtered digit value after the first filter ... 116
6.20.4 Digits filtered ... 116

6.20.5 Current status of input 0, 1, 2 116
6.20.6 Current status of digital output 0, 1, 2, 3 116
6.20.7 Current status of DIP switch 117
6.20.8 Refresh counter for process values 117
6.20.9 Current load cell signal in mV 117

6.21 DR 32 alarm display 117

6.22 DR 34 ASCII main display value 121
6.22.1 Overview 121
6.22.2 Content of main display as ASCII string 121

6.23 DR 48 date and time 2 (for Modbus) 122

7 Alarm logging 123

7.1 Message types 123

7.2 Message paths 123

7.3 Evaluating messages with the help of SIWATOOL 124

7.4 Detecting messages with the help of FB SIWA 124

7.5 Message list 124
7.5.1 Introduction 124
7.5.2 System status message list 125
7.5.3 Technology error message list 125
7.5.4 Message list data and operating errors with additional information 126
7.5.5 Messages by LEDs on the module 130

8 Commands 133

8.1 Overview 133

8.2 Command lists 133

8.3 Command groups of SIWAREX WP521/WP522 135

9 Communication with SIMATIC S7-1500 137

9.1 General information 137

9.2 System environment 137

9.3 Memory requirements for SIWAREX communication 138

9.4 Creating the hardware configuration 139

9.5 Diagnostic messages 141

9.6 Triggering a hardware interrupt 142

9.7 Ethernet approvals 144

9.8 Calling of function block 144

9.9 Working with the function block 147

9.10 I/O interface of function block 149

9.11 Error codes of function block 150

10 Communication via Modbus 151
10.1 General information 151
10.2 Special feature of Modbus TCP/IP connection to SIWAREX WP522 151
10.3 Principle of data transmission 152
10.4 Data record concept 153
10.5 Command mailboxes 153
10.6 Reading registers 154
10.7 Writing registers 155
11 Technical specifications 157
11.1 Technical specifications 157
11.2 Electrical, EMC and climatic requirements 161
11.3 Approvals 166
12 Accessories 169
12.1 Configuration package 169
A Appendix 171
A.1 Technical support 171
A.2 ESD Guidelines 172
A.3 List of abbreviations 174
Index 175

Foreword 1

1.1 Purpose of the manual

This manual contains module-specific information about the wiring, diagnostic and technical specifications of the technology module.

Information about the design and commissioning of the S7-1500 or the ET 200MP in general can be found in the system manual for S7-1500 or ET 200MP.

1.2 Security information

Siemens provides products and solutions with industrial security functions that support the secure operation of plants, systems, machines and networks.

In order to protect plants, systems, machines and networks against cyber threats, it is necessary to implement – and continuously maintain – a holistic, state-of-the-art industrial security concept. Siemens' products and solutions only form one element of such a concept.

Customer is responsible to prevent unauthorized access to its plants, systems, machines and networks. Systems, machines and components should only be connected to the enterprise network or the internet if and to the extent necessary and with appropriate security measures (e.g. use of firewalls and network segmentation) in place.

Additionally, Siemens' guidance on appropriate security measures should be taken into account. For more information about industrial security, please visit:
http://www.siemens.com/industrialsecurity

Siemens' products and solutions undergo continuous development to make them more secure. Siemens strongly recommends to apply product updates as soon as available and to always use the latest product versions. Use of product versions that are no longer supported, and failure to apply latest updates may increase customer's exposure to cyber threats.

To stay informed about product updates, subscribe to the Siemens Industrial Security RSS Feed under:
http://www.siemens.com/industrialsecurity

1.3 Conventions

Observe the notes labeled as follows:

Note

A note contains important information about the product described in the documentation, about handling the product, or about a part of the documentation to which special attention should be given.

1.4 Industrial Security

SIWAREX WP521/WP522 is intended for use in secure networks (closed) and is not protected against unauthorized data traffic.

Devices connected to a company network or to the Internet must be protected against unauthorized access, e.g. through application of firewalls and network segmenting. For more information about Industrial Security, visit http://www.siemens.com/industrialsecurity (http://www.siemens.com/industrialsecurity)

Documentation guide 2

Introduction

The documentation for the SIMATIC and SIWAREX is modular and includes topics related to your automation system.

The complete documentation for the S7-1500 and ET 200MP systems consists of the respective system manuals, function manuals and device manuals.

You are also supported by the information system from STEP 7 (TIA Portal) during the configuration and programming of your automation system.

Overview of the documentation for the SIWAREX WP 521/WP522 technology module

The following table shows documents that you need to use the SIWAREX WP521/WP522 technology module.

Table 2- 1 Documentation for the SIWAREX WP521/WP522 technology module

Topic	Documentation	Most important contents
System description	S7-1500 Automation System (https://support.industry.siemens.com/cs/document/59191792) System Manual	• Application planning • Assembly • Connecting • Commissioning
	System manual Distributed I/O System ET 200MP (http://support.automation.siemens.com/WW/view/de/45604716)	
Designing interference-free controllers	Designing interference-free controllers (https://support.industry.siemens.com/cs/document/59193566/simatic-s7-1500-et-200mp-et-200sp-et-200al-designing-interference-free-controllers?dti=0&lc=en-WW) Function Manual	• Basics • Electromagnetic compatibility • Lightning protection
Weighing with SIWAREX WP521/WP522	SIWAREX WP521/WP522 Electronic Weighing System Device Manual	• Module design • Assembly • Connecting • Weighing functions • Communication • Technical specifications

SIMATIC manuals

All current manuals for the SIMATIC products are available for download free of charge from the Internet (https://support.industry.siemens.com).

Product overview

3

3.1 Properties

Article number

SIWAREX WP521 - 7MH4 980-1AA01

SIWAREX WP522 - 7MH4 980-2AA01

View of the modules

Figure 3-1 SIWAREX WP521/WP522 module

Properties

The TM SIWAREX WP521/WP522 technology module has the following features:

- Technical properties
- Width: 35 mm
- WP521 one weighing channel, WP522 two weighing channels
- Interfaces:
  - Supply voltage L+
  - Load cell connection for strain gauge load cell in 6 or 4-wire system (per channel), 1 to 4 mV/V
  - Digital input signals DI0, DI1 and DI2 (per channel)
  - Digital output signals DQ0, DQ1, DQ2, DQ3 (per channel)
  - RS485 with Modbus RTU or for connecting the remote display (per channel)
  - Ethernet interface with SIWATOOL protocol and Modbus TCP/IP (once for each channel)
- Channel-by-channel monitoring of load cells for wire breakage
- Hardware interrupts can be configured channel by channel
- Input filter for suppressing interference with programmable digital inputs
- Supported functions:
  - Scale calibration with weights or automatically
  - Signal filtering with average value filter and low-pass filter
  - 3 limits
  - Tare
  - Set to zero
  - Trace (signal recording)
  - Firmware update
  - Identification data I&M
  - Commissioning with SIWATOOL (service tool for PC)

3.2 Area of application

The electronic weighing system described here is the optimal solution everywhere signals from weighing or force sensors are to be acquired and processed. SIWAREX WP521/WP522 offers high accuracy as an electronic weighing system.

The applications for which the SIWAREX WP521/WP522 is equipped include the following:

- Non-automatic weighing to OIML R76 (not legal-for-trade)
- Level monitoring of silos and bunkers
- Platform scale
- Scales in hazardous areas (with SIWAREX IS Ex interface)

3.3 System integration in SIMATIC

The electronic weighing system described here is a technology module for the SIMATIC S7-1500. It can be freely configured within the automation solution, including the weighing application. An optimal solutions can be found for a variety of systems with the right combination of SIMATIC modules. Fast customized and industry specific solutions can be developed using the configuration package and the "Ready for use" application for SIMATIC.

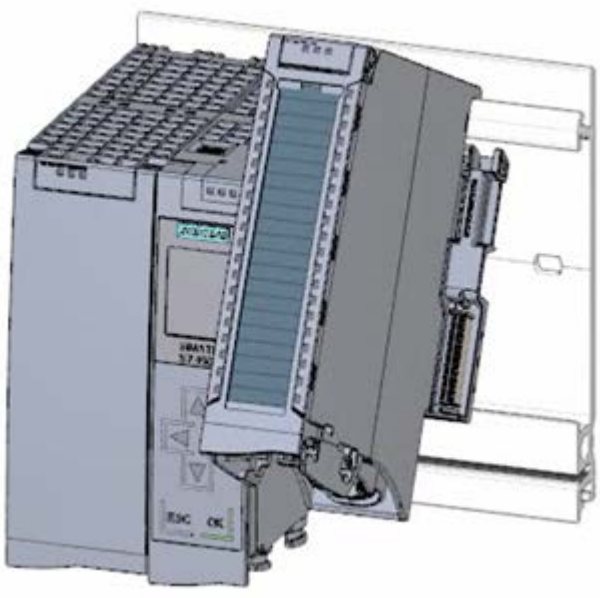

Figure 3-2 Figure SIWAREX WP521/WP522 installed next to SIMATIC 1500-CPU

3.4 Customer benefits

The electronic weighing system described here features significant advantages:

- Uniform design technology and consistent communication in SIMATIC S7-1500
- Configuration via an HMI panel or PC
- Standardized configuration option in the SIMATIC TIA Portal
- Weight measurement with a resolution of 4 million parts
- High accuracy 0.05 %
- High measuring rate of 100/120 Hz (effective interference suppression)
- Monitoring of limits
- Flexible adaptation to different requirements
- Easy adjustment of the scales using the SIWATOOL program
- Automatic adjustment without calibration weights possible
- Replacement of module without renewed scale calibration
- Use in Ex Zone 2 / ATEX approval
- Intrinsically safe load cell for use in hazardous area Zone 1 (SIWAREX IS option)
- Diagnostic functions

3.5 Product package

The product package of the SIWAREX WP521/WP522 includes:

- SIWAREX WP521/WP522 module

The following components are supplied with the technology module and can also be ordered separately as spare parts:

- Shield bracket
- Shield terminal
- Power supply element
- Labeling strip
- U-connector

Other components

The following components must be ordered separately:

- Front connectors, including potential jumpers and cable ties
- Front connector 35 mm with push-in system

Note

We recommend using the SIWAREX WP521/WP522 configuration package to configure the SIWAREX WP521/WP522 electronic weighing system. The configuration package is not included in the product package of the module: → Accessories (Page 169).

3.6 Overview of the functions

The primary task of the electronic weighing system is measuring and recording the current weight value. The integration in SIMATIC provides the possibility to process the weight value directly in the PLC (**P**rogrammable **L**ogic **C**ontroller).

The SIWAREX WP521 / WP522 is calibrated ex factory. This enables both automatic adjustment of the scale without calibration weights and modules to be exchanged without having to re-adjust the scale.

The Ethernet interface enables connection of a PC for configuring the electronic weighing system or the connection of automation systems of any kind (Modbus TCP / IP).

The SIWAREX WP521/WP522 electronic weighing system can also be used in hazardous areas (Zone 2). The load cell is powered intrinsically safe for Zone 1 applications via the optional Ex interface, SIWAREX IS.

The SIWAREX WP521/WP522 can also be used independent of the automation system in stand-alone mode. This scenarios provide numerous configuration options.

The user himself can determine the HMI device. However, the HMI device must support Modbus RTU or TCP/IP. A custom operating style can be implemented.

The SIWAREX WP521/WP522 can be controlled remotely without a separate, local HMI device. An HMI device can be used for multiple scales. The configuration possibilities are almost unlimited.

3.7 Overview of configuration options

3.7.1 Parameter assignment using SIMATIC CPU or SIMATIC HMI

Using the SIMATIC function block, full access is possible to all parameters and functions of the weighing module. The "Ready-for-use" example project, which is available for download free of charge (see section Accessories (Page 169)), contains both the function block and a SIMATIC HMI configuration which can be freely edited.

3.7.2 Configuration with the PC

The scale parameters can be quickly adjusted using the "SIWATOOL" PC configuration software, which offers Windows convenience.

The program enables you to commission the scale without knowledge of automation technology. If service is required, the processes in the scale can be analyzed and tested independent of the automation system or operator panel using the PC. Reading the diagnostic buffer from the SIWAREX module is very helpful when analyzing events.

The following figure shows the layout of the individual program windows.

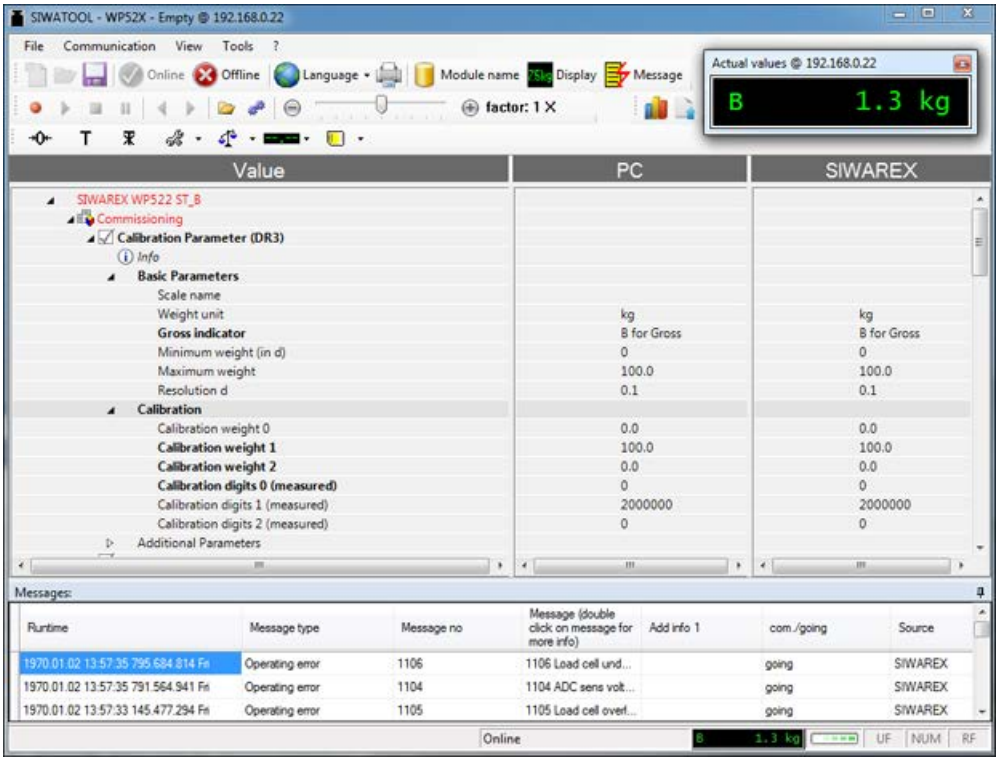

Figure 3-3 Overview of the SIWATOOL WP522 program window

SIWATOOL not only provides support for adjusting the scale, but also in the analysis of the diagnostics buffer, which can be saved together with the parameters after reading the module. The display of the current scale state can be adjusted.

The program can be switched between several languages.

3.7.3 Configuration via the Modbus interface

Alternatively, the configuration can also be performed on a SIMATIC panel, which is connected directly to the SIWAREX module. In this case, the SIWAREX module behaves as a Modbus slave. The configuration software project package includes loadable HMI software for a SIMATIC Panel TP700 Comfort.

In general, all SIMATIC HMI Comfort Panels can be used for direct Modbus communication. The use of SIMATIC HMI Basic Panels is currently not possible. A direct connection between SIMATIC HMI Panels and SIWAREX WP521/WP522 via Modbus RTU is not approved.

The parameters for the SIWAREX module can also be edited on an external system, a PC for example, and transferred to the electronic weighing system via Modbus RTU or TCP/IP. You can find a detailed description of the mapping of the holding register in section → Scale parameters and functions. (Page 67)

Installation and connection 4

4.1 Installation guideline

When assembling the SIMATIC components with the electronic weighing system described herein, you must adhere to the guidelines for setup, assembly and wiring the SIMATIC S7-1500 (see documentation tree).

This manual also describes the specific aspects of assembly and wiring the electronic weighing system.

4.2 Pin assignment

Connect the load cells, the digital input and digital output signals to the 40-pin front connector of the technology module. In addition, connect the 4-pin feed element to the supply voltage to supply the module and digital outputs.

The next two sections detail the pin assignment for the front connector and the power supply element.

You can find information on wiring front connectors, creating a cable shield, etc. in the in section "Connecting" section of the Automation System S7-1500 (https://support.industry.siemens.com) system manual and Distributed I/O System ET 200MP (https://support.industry.siemens.com) system manual.

Pin assignment for the front connector

The following tables show the pin assignment of the front connector.

WP521 ST					
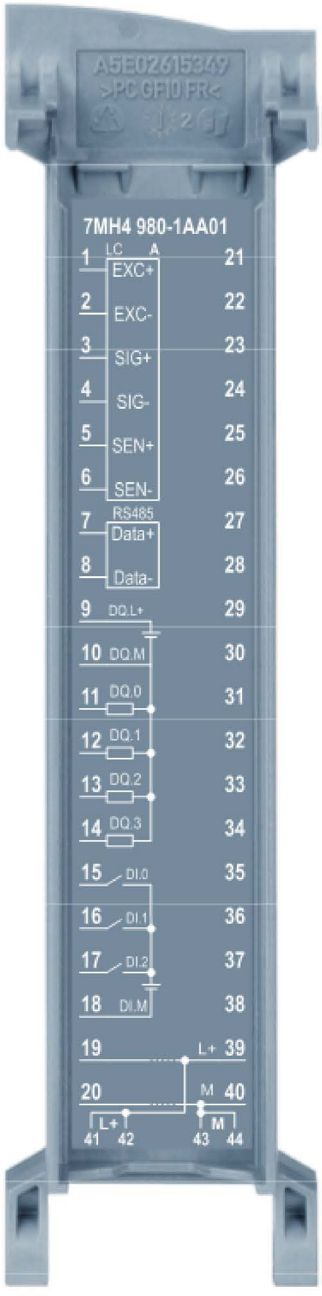	Load cell EXC+	1	21	(Pins 21 ... 38 unusable)	
	Load cell EXC-	2	22		
	Load cell SIG+	3	23		
	Load cell SIG-	4	24		
	Load cell SEN+	5	25		
	Load cell SEN-	6	26		
	RS485, D+	7	27		
	RS485, D-	8	28		
	DQ.L+ (24V DQ)	9	29		
	DQ.M (0V DQ)	10	30		
	DQ.0	11	31		
	DQ.1	12	32		
	DQ.2	13	33		
	DQ.3	14	34		
	DI.0	15	35		
	DI.1	16	36		
	DI.2	17	37		
	DI.M (0V DI)	18	38		
	L+ (if jumpered)	19	39	L+ (of 41, 42)	Pins 19 and 39 jumperable
	M (if jumpered)	20	40	M (of 43, 44)	Pins 20 and 40 jumperable
		41 42	43 44		
		L+	M		

Pin assignment of WP521

WP522 ST					
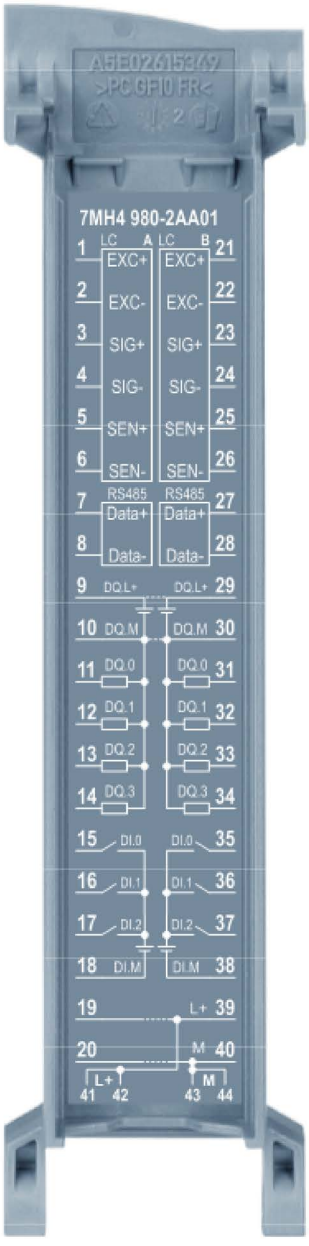	Load cell EXC+	1	21		
	Load cell EXC-	2	22		
	Load cell SIG+	3	23		
	Load cell SIG-	4	24		
	Load cell SEN+	5	25		
	Load cell SEN-	6	26		
	RS485, D+	7	27		
	RS485, D-	8	28		
	DQ.L+ (24V DQ)	9	29		Pins 9 and 29 jumperable
	DQ.M (0V DQ)	10	30		Pins 10 and 30 jumperable
	DQ.0	11	31		
	DQ.1	12	32		
	DQ.2	13	33		
	DQ.3	14	34		
	DI.0	15	35		
	DI.1	16	36		
	DI.2	17	37		
	DI.M (0V DI)	18	38		
	L+ (if jumpered)	19	39	L+ (of 41, 42)	Pins 19 and 39 jumperable
	M (if jumpered)	20	40	M (of 43, 44)	Pins 20 and 40 jumperable
		41 42	43 44		
		L+	M		

Pin assignment of WP522

Pin assignment for the power supply element

The power supply element is plugged onto the front connector and serves to supply the technology module. For this purpose, you need to connect the supply voltage to terminal 41 (L+) and terminal 44 (M). Use terminal 42 (L+) and terminal 43 (M) to loop the supply voltage to the next module.

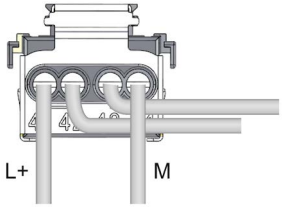

Figure 4-1 Power supply element

L+	DC 24V supply voltage
M	Ground for supply voltage

4.3 Connecting the load cells

Overview

Pickups equipped with strain gauges (EMS full bridge) can be connected to the electronic weighing system SIWAREX WP521/WP522 to meet the following requirements.

- Identifier 1.... 4 mV/V
- A supply voltage of 5 V is permitted

The power supply for the load cells is 4.85 V.

To test the maximum possible number of load cells that can be connected to a WP521/WP522, the following condition must be met:

- Scale operation without Ex interface: (input resistance of load cell) / (number of load cells) > 40 Ohm
- Weighing mode with EX interface: (input resistance of load cell) / (number of load cells) > 50 Ohm

Connection with 4-wire or 6-wire system

The connection options are shown in the following two figures.

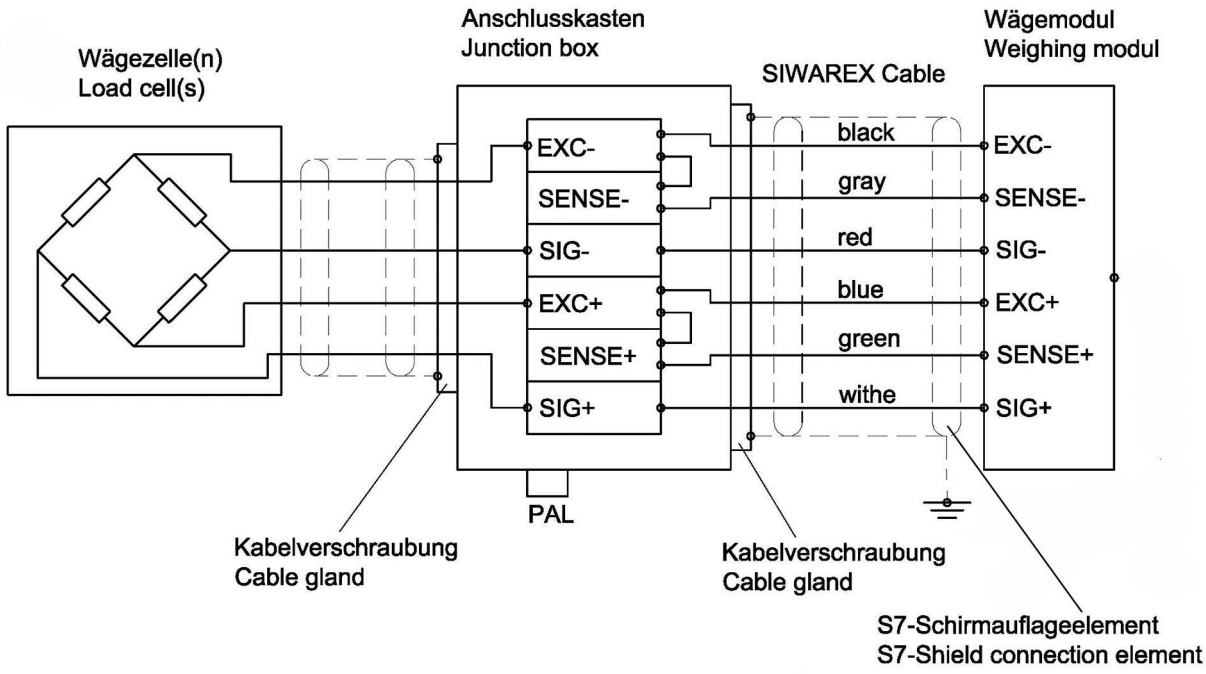

Figure 4-2 Connection of strain gauge load cell with 4-wire system

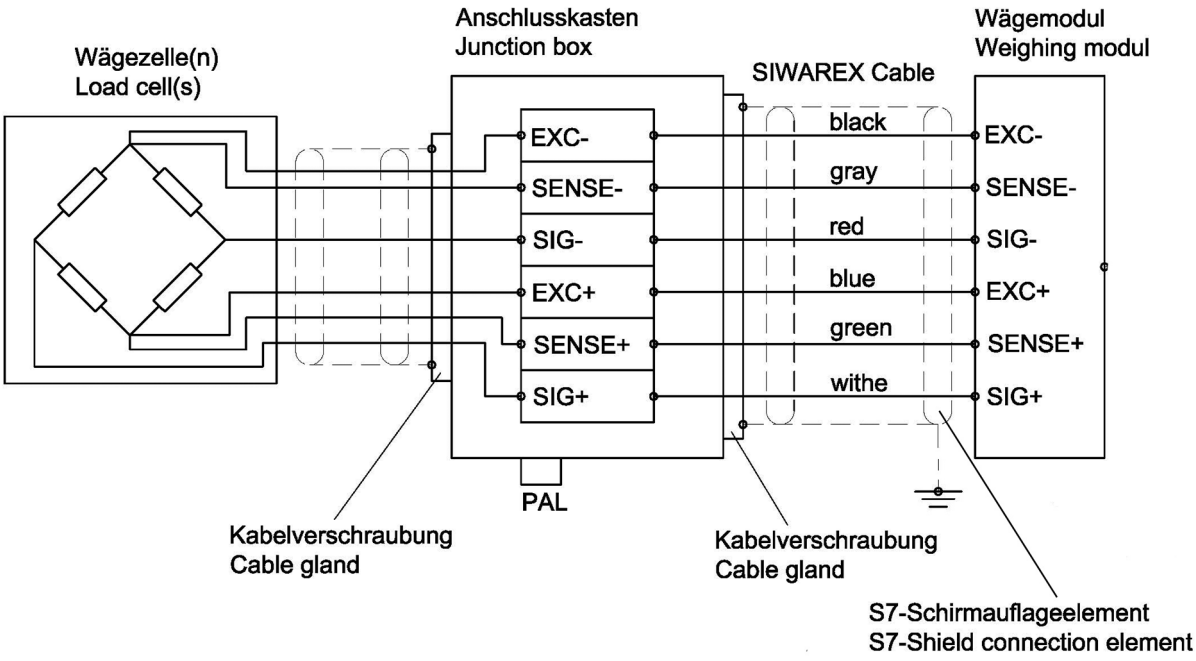

Figure 4-3 Connection of load cell with 6-wire system

Rules

Observe the following rules when connecting analog (strain gauge) load cells:

1. The use of a junction box (SIWAREX JB junction box) is required when more than one load cell is connected (the load cells must be connected in parallel). If the distance of a load cell to the SIWAREX WP521/WP522 or terminal box is greater than the available length of the load cell cable, the SIWAREX EB extension box should be used.
2. The cable shield is always applied at the cable gland of the junction box (SIWAREX JB) or the extension box. If there is a risk of equipotential bonding through the cable shield, connect a equipotential equalization conductor parallel to the load cell cable.
3. Twisted wire pairs that are also shielded are required for the specified cables:
   - Sensor cable (+) and (-)
   - Measuring voltage cable (+) and (-)
   - Supply voltage cable (+) and (-)

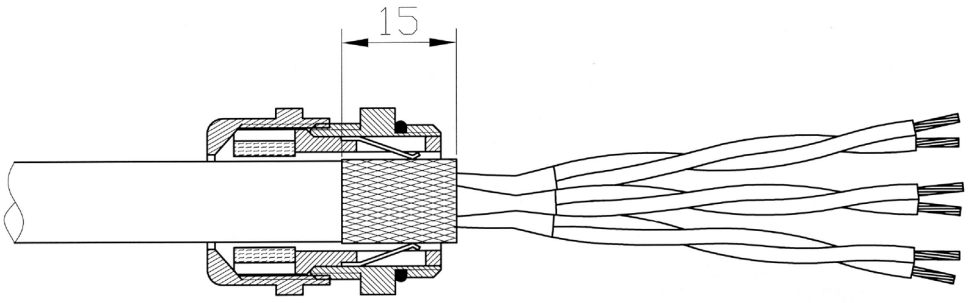

Figure 4-4 Shielding in the screw gland

We recommended that you use the cables listed in chapter → Accessories (Page 169).

4. The shield must be connected to ground in the immediate vicinity of the SIWAREX WP521/WP522. The maximum distance between the SIWAREX WP521/WP522 and the load cell is applicable when the recommended cables are used.

Table 4- 1 Load cell connections on the module

Labeling	Function
Sig-	Measurement cable load cell -
Sig+	Measurement cable load cell -
Sen-	Sensor cable load cell -
Sen+	Sensor cable load cell +
Exc-	Supply load cell -
Exc+	Supply load cell +

4.4 Shield connection

You need to ground the shields of the load cell cables via the shield on the front connector (shield bracket and terminal) ground.

Ensure that the shield support for the shielded cables are correctly assembled. This is the only way to ensure the immunity of the system.

A cable is shielded to attenuate the effects of magnetic, electrical and electromagnetic interference on the cable. Interference on the cable shielding is discharged to the ground through a conductive cable shield bus. To avoid this interference from becoming a source of interference itself, ensure the connection to ground has a low impedance .

Only use cables with a braided shield (see recommended cable in the section Accessories (Page 169)). The coverage of the shield should be at least 80%.

Figure 4-5 Front connector with a shielded cable and 24V connection

4.5 Supply voltage L+/M

Connect the supply voltage (24 V DC) to terminals L+ and M. An internal protection circuit protects the technology module from reverse polarity of the supply voltage. The technology module monitors whether the supply voltage is connected.

4.6 Digital inputs DI0, DI1 and DI2

There are three digital inputs per weighing channel available. The digital inputs can be assigned to scale commands per configuration.

CAUTION

Unknown assignment of digital inputs

If the assignment of the digital inputs is not known at the time of connection, This may damage parts of the system.

Do not create a connection with the digital inputs before you know the assignment.

The digital inputs are not permanently assigned to commands in the delivery state. The assignment of the digital inputs to commands is made during commissioning by setting parameters of the data record DR7.

The digital inputs of the two SIWAREX WP522 scale channels are electrically isolated from each other.

Input filter for digital inputs

The following values can be specified for the input delay:

- None
- 5 ms
- 10 ms (preset)
- 15 ms
- 20 ms
- 25 ms
- 30 ms
- 35 ms
- 40 ms

Note

If you select "No", you must use shielded cables to connect the digital inputs.

4.7 Digital outputs DQ0, DQ1, DQ2 and DQ3

There are four digital outputs available per weighing channel. The digital outputs DQ0, DQ1, DQ2, DQ3 may be assigned to the status or messages by the specified parameters. They can also be controlled directly via a SIMATIC program or via DR18.

CAUTION

Unknown assignment of digital outputs

The assignment of the digital outputs is not known at the time of connection. Digital outputs can be active immediately after turning on the power supply. This may damage parts of the system.

Do not create a connection with the digital outputs before you know the assignment of the digital outputs.

The digital outputs have no fixed assignment to process data ex factory. The assignment of the digital inputs to function and the reaction to failure is made during commissioning by setting parameters of the data record DR7.

The digital outputs of the two SIWAREX WP522 scale channels are electrically isolated from each other.

The digital outputs are 24 V sourcing with respect to M and with a nominal load current of 0.5A. They are protected against overload and short-circuit.

Note

Direct connection of relays and contactors is not possible without external wiring. You can find information about the maximum possible operating frequencies and the inductance of the inductive load on the digital outputs in the section Technical specifications (Page 157).

4.8 Connection of RS485 serial interface

The following devices can be connected to the serial interface:

- Display from the Siebert company, type S102
- Operator Panels or other HMI devices with RS485 and Modbus protocol RTU
- Communication partner with Modbus protocol RTU

Table 4- 2 Connection of RS485 serial interface

Labeling	Function
EIA-485 D+	RS485 data line + for feeding in of bus signal
EIA-485 D-	RS485 data line - for feeding in of bus signal

When a SIWAREX WP521/WP522 module forms the end of an RS485 network, the termination of the bus network can be switched per configuration.

4.9 Connection of Siebert display via RS485

A Siebert display S102 with the order no. S102-W6/14/0R-000/0B-SM can be connected to the RS485 interface of the weighing module. Connect a 24 V DC supply to the Siebert display, and connect the latter to the RS485 interface of the weighing module as shown in the following diagram.

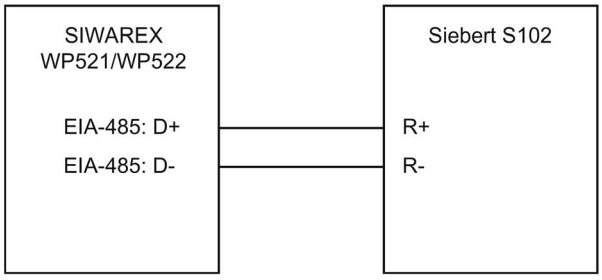

Figure 4-6 Connection of Siebert display S102

The RS485 interface in DR13 is set as follows:

- RS-485 protocol: SIEBERT Display S102
- Baud rate: 9 600 bit/s
- Character parity: Even

The S102 is set as follows:

Table 4- 3 Settings of Siebert display S102

Menu item	Setting	Meaning	
1 Interface	485	RS485 interface	
9 Station address	01	Address meaning:	
		Address	**Weight value**
		01	Verifiable weight
		02	Total
		03	Net
		04	Tare
t Timeout	2	e.g. timeout after 2 seconds	
C	0.0	No decimal point	
F Segment test	----*	No segment test when switching on	
	8.8.8	Segment test when switching on	

4.10 Connection of the Ethernet interface

An RJ45 connector is used for the connection.

The following devices can be connected to the Ethernet interface:

- PC service and commissioning program SIWATOOL or Web browser
- Operator panels or other HMI devices with Ethernet and Modbus protocol TCP/IP
- Communication partner with Modbus protocol TCP/IP

To remove the plug-in connector without a tool (screwdriver), you should ensured that the cable has a plug with sufficiently long release lever, see as an example in the figure below.

Figure 4-7 Connection socket for an Ethernet cable

Figure 4-8 Ethernet cable connected to module

Figure 4-9 Press the Ethernet cable into the socket

Ethernet socket on the bottom of the enclosure, plug with extended release lever

Figure 4-10 Ethernet plug with release lever

Commissioning

5

5.1 Basic tasks

Commissioning consists mainly of checking the mechanical scale structure, setting parameters, calibration, and verification of the envisaged functionality.

5.2 Ex-works settings of the operating switch

The module has two DIP switches located on the left in the upper part of the enclosure (accessible through the vent). Both switches are in the up position ex factory.

Figure 5-1 Switch position in the enclosure

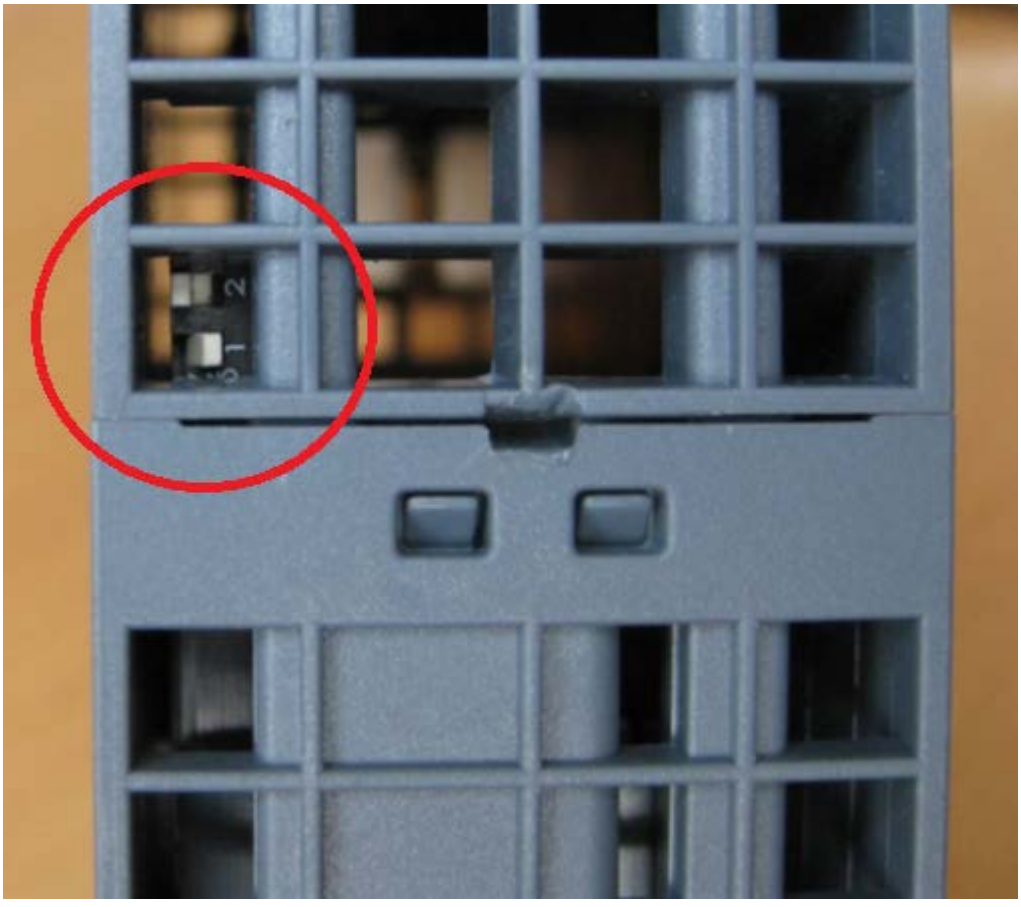

Switch ①	Specifies the operating environment
Switch ②	Currently no function

Figure 5-2 Switch functions

Switch ①

Switch position	Operating environment
Up	Integrated in SIMATIC mode
Down	Stand-alone mode (without SIMATIC controller)

"Integrated in SIMATIC mode" set.

Connected to an S7-1500 CPU, stand-alone mode (DIP 1 in lower position) can be useful, because SIWAREX WP521/WP522 then remains fully functional even in the case of a CPU stop and can be operated (e.g. through an HMI device directly connected via Modbus, through a coupled PC or through the digital inputs)

Note

If the switch ① is set to the lower position while the SIWAREX module is operating with SIMATIC, the SIWAREX module does not perform a reset when there is a loss of power supply for the SIMATIC CPU.

5.3 Factory-set parameters

The electronic weighing system described here is provided with factory-set parameters. The parameters have been provided for a typical 100 kg scale based on three load cells. Parameters which can be entered in % or time are preset in such a way that they provide good results for most applications.

A quick start can be carried out with these default parameters (see chapter Start-up with the operator panel and the Ready-for-use software (Page 38)).

5.4 Commissioning tools

The following options are available for commissioning the electronic weighing system:

- Operator Panel
- SIWATOOL

The SIWATOOL program allows you to commission the scale without an Operator Panel and without an automation system. In the event of a fault, additional SIWATOOL diagnostics functions enable fast analysis of the cause.

5.5 Start-up with the operator panel and the Ready-for-use software

5.5.1 Restriction of access

Note

The example project "Ready-for-use" does not restrict access. If operation of the scale/system is implemented based on this configuration example, restriction of access is recommended, e.g. by using passwords with the support of the engineering tools.

5.5.2 Start

The quick start is performed in this example with a TP700 Comfort Panel connected directly to the WP521/WP522. The panel communicates directly via Modbus TCP/IP or via the SIMATIC S7-1500 CPU.

To carry out the quick start, select the "1.0 Setup" function in the main menu and then "1.2 Quick Start". You will be guided through the individual tasks for setting the most important parameters.

The remaining parameters are factory-set in such a way that they can be used in most cases without any changes.

All parameter inputs must be saved by clicking on the diskette icon.

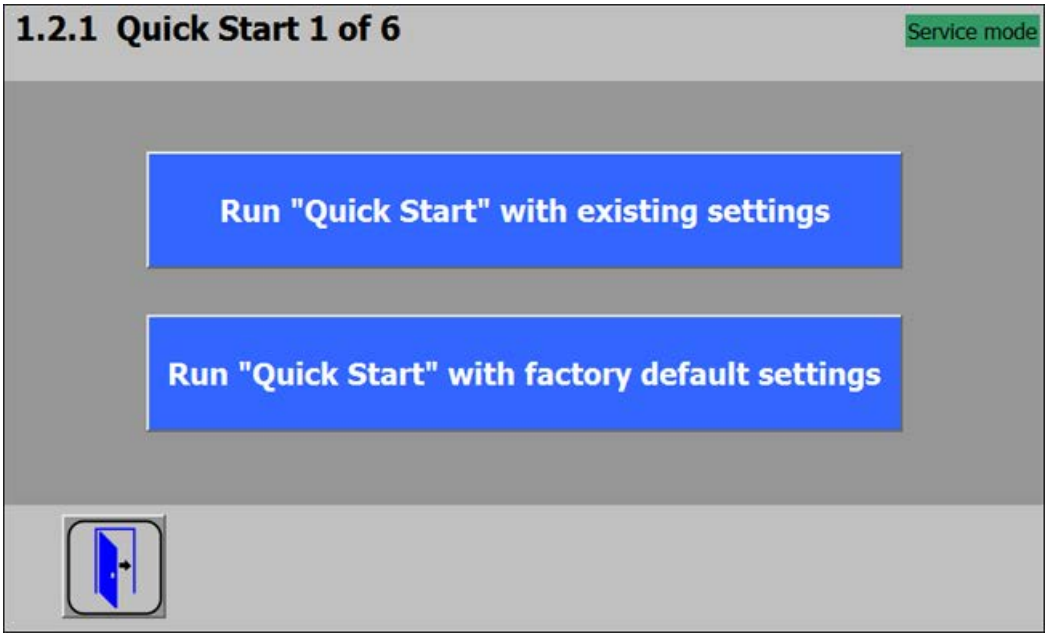

Figure 5-3 Quick Start 1 of 6

5.5.3 Specification of basic values 1

The basic parameters can be entered first, e.g. the scale name, unit of weight or gross weight ID.

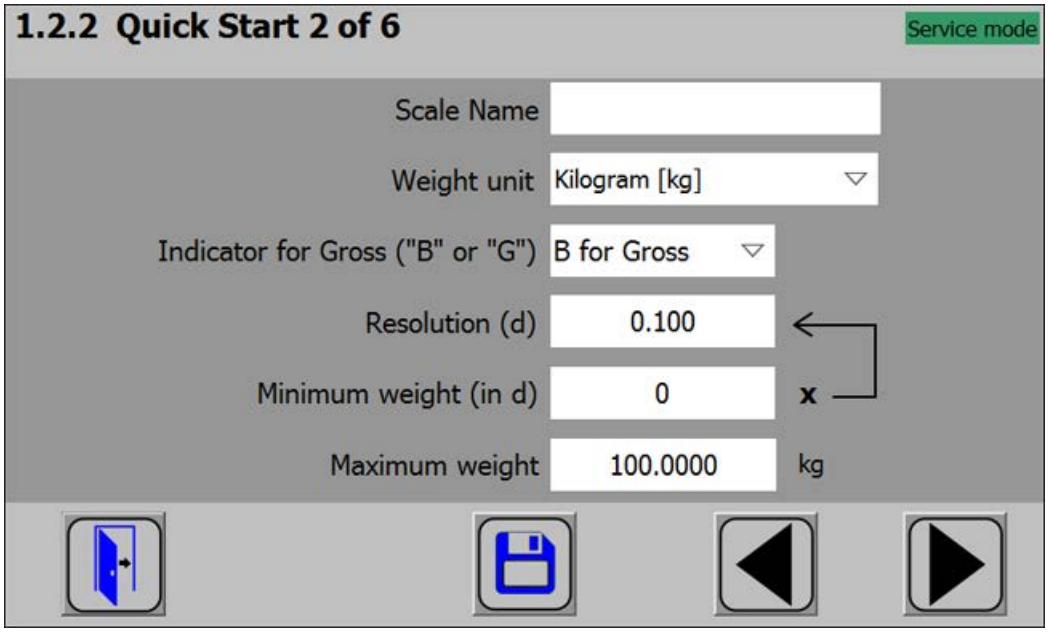

Figure 5-4 Quick Start 2

5.5.4 Specification of basic values 2

The load cell parameters are entered in this step.

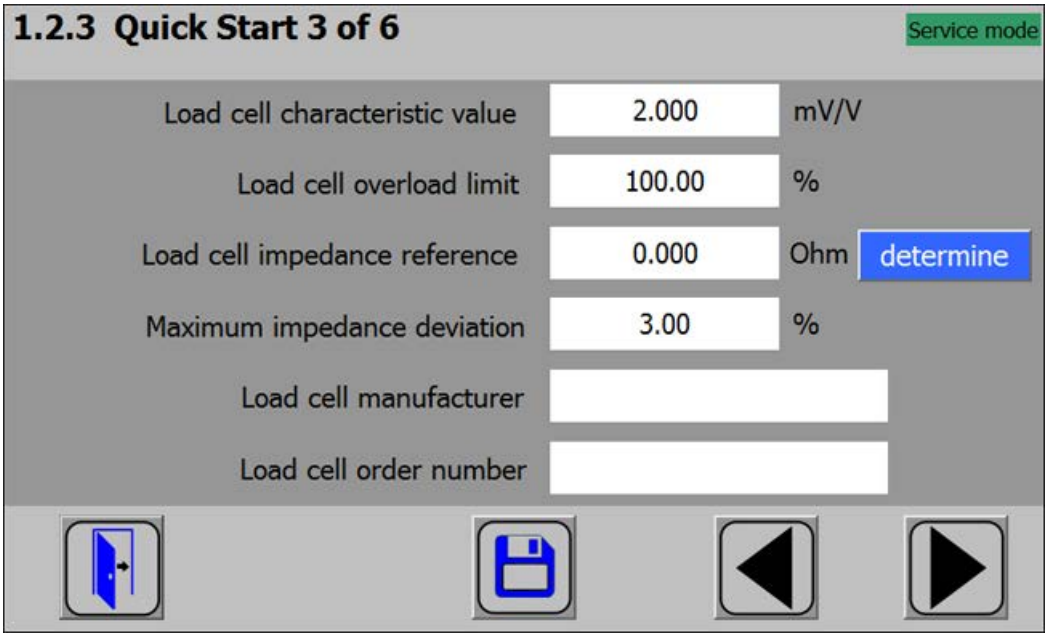

Figure 5-5 Quick Start 3

5.5.5 Selecting the calibration method

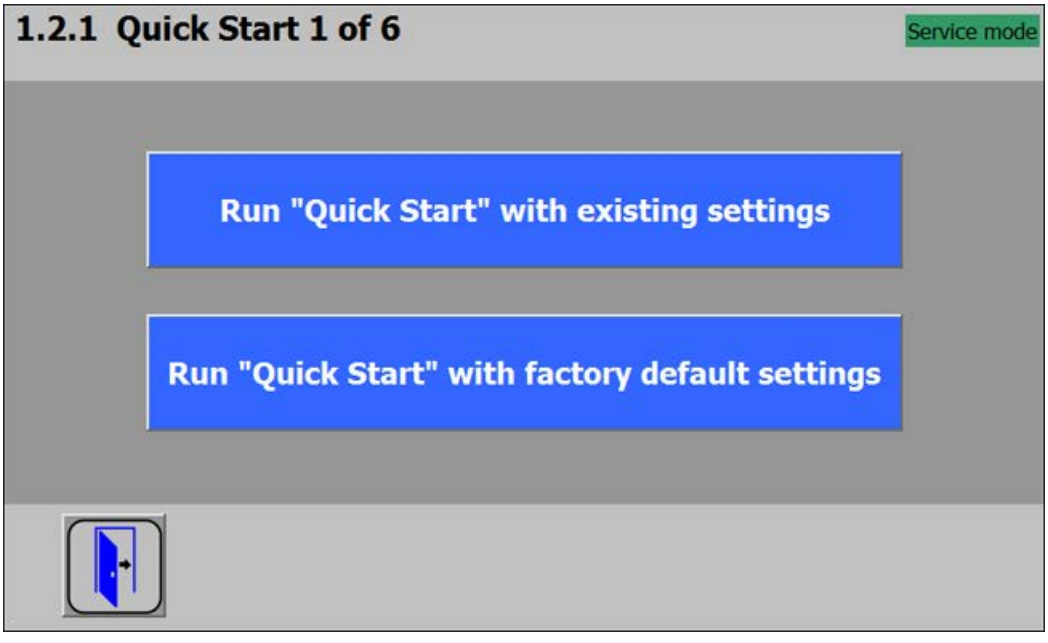

Figure 5-6 Quick Start 4

The module can always be calibrated in two different ways:

- Using reference weights: in the case of a calibration with weights, mechanical influences of the scale construction are also partially taken into account.
- Without weights, using the technical specifications of the connected load cell(s): in the case of automatic calibration, the accuracy of the scale is influenced by the mechanical properties to a greater extent than with calibration using reference weights.

With both methods, make sure that the mechanical properties of the scale are flawless prior to calibration.

5.5.6 Defining the calibration weights

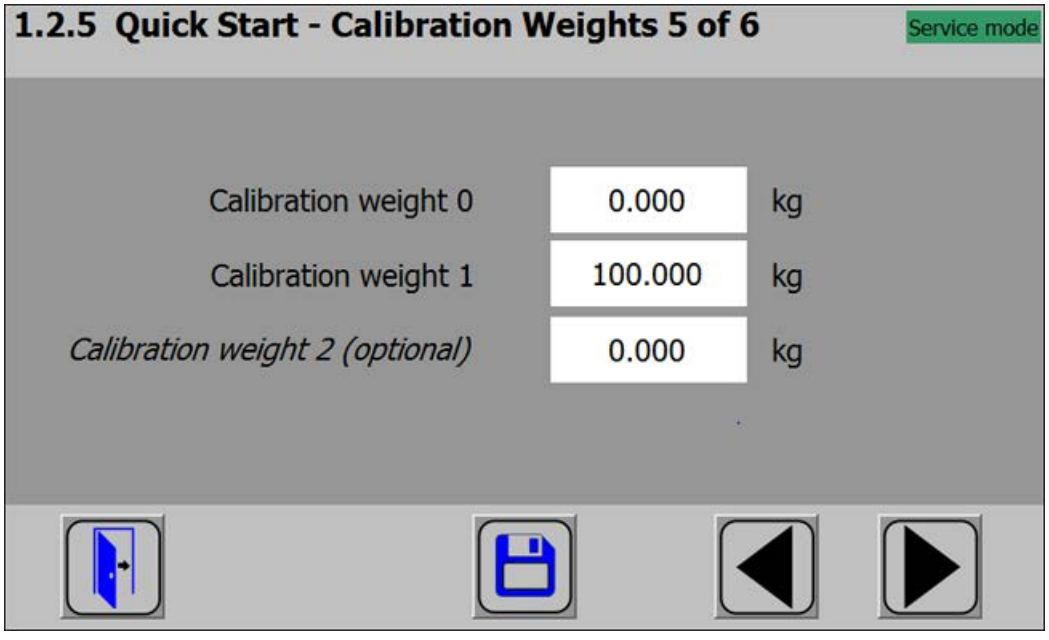

Figure 5-7 Quick Start 5

In step 5 you enter the calibration weights which are to be positioned on the scale during the calibration. If the scale is not empty and the current contents are known, you can define an "Calibration weight 0" with the current contents of the scale. With an empty scale, this parameter remains as 0 kg. "Calibration weight 1" usually defines the first reference point of the scale characteristic. A further reference point ("Calibration weight 2") can also be set in addition. This is optional, and may not be necessary depending on the mechanical properties of the scale.

Note that the interval between the calibration weights must be at least 2% of the nominal load of the scale. With a 1 000 kg scale, a calibration weight of at least 20 kg must therefore be used.

5.5.7 Setting calibration points

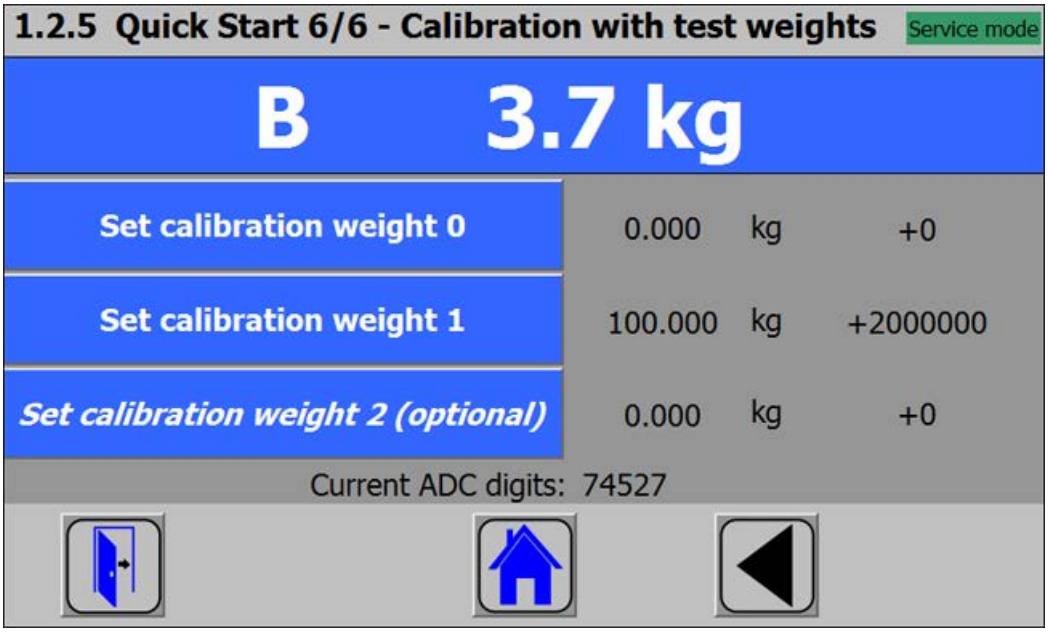

Figure 5-8 Quick Start 6

Carry out the calibration commands at the end of the quick start:

1. Carry out the "Set calibration weight 0" command. The "Calibration weight 0" defined in step 5 is now visible in the display.
2. Place the "Calibration weight 1" defined in step 5 on the scale construction, and execute the "Set calibration weight 1" command.
3. If an "Calibration weight 2" was selected:
   Place the "Calibration weight 2" defined in step 5 on the scale construction, and execute the "Set calibration weight 2" command.
4. Calibration of the scale is now complete. Return to the start screen by clicking on the house icon.

5.5.8 Calibrating the scale automatically

The scale can also be calibrated without weights. To do this, it is essential to enter data specific to the load cells, and the scale must be empty.

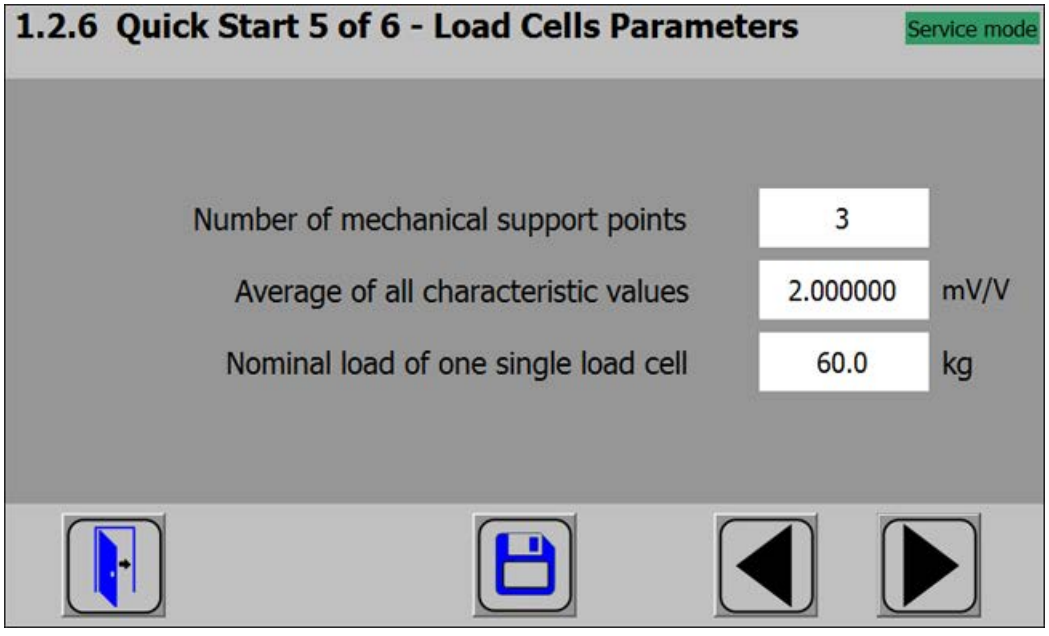

Figure 5-9 Quick Start 5

The number of points of support corresponds with a silo, for example, to the number of clamps or feet of the silo. A quadratic platform scale with a load cell at each corner has 4 support points. The characteristic values of the individual load cells are required to calculate the average characteristic value of the cells.

The formula for the calculation is:
(characteristic value cell 1 + characteristic value cell 2 + ... characteristic value cell n) / n

If the exact characteristic values are unknown, it is permissible to also use rounded-off numbers (e.g. 1.0 mV/V, 2.0 mV/V). The nominal load of one single load cell (not the nominal load of the complete scale!) must subsequently be defined.

5.5.9 Performing the automatic calibration

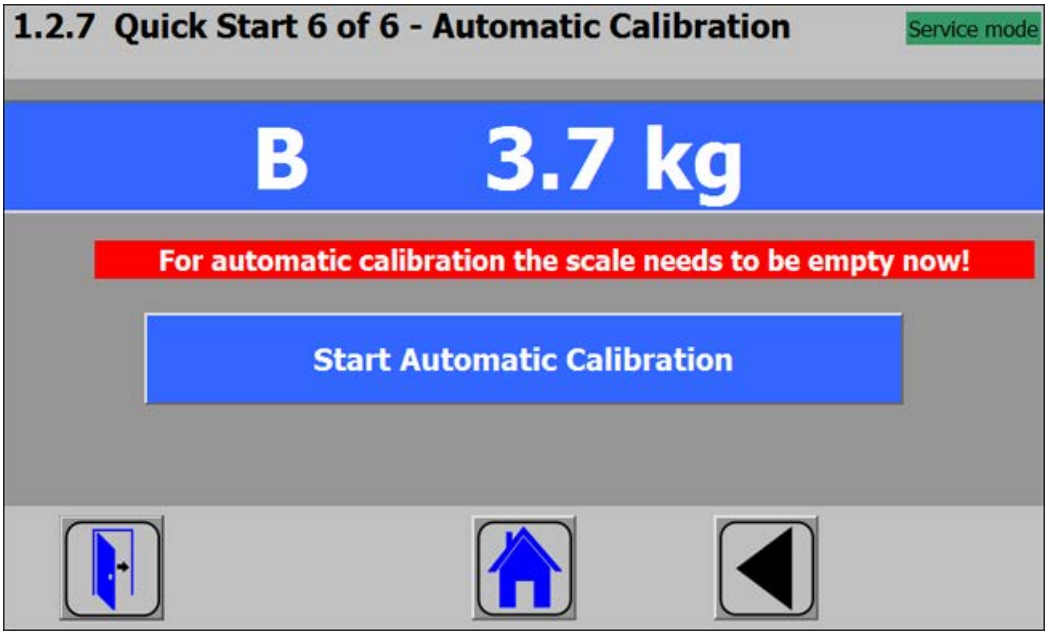

Figure 5-10 Quick Start 6

Subsequently enter the "Perform automatic calibration" command with the scale empty. The scale is calibrated directly, and clicking on the house icon returns you to the start screen.

5.5.10 Checking the scale following calibration

If the scale is only used for company-internal purposes, a simple check is sufficient.

Perform the following steps:

1. The scale is unloaded and shows "0 kg".
2. Place a known reference weight on the scale.
   Check the displayed value.
3. If a second known reference weight is available, place it on the scale in addition.
   Check whether the scale displays the sum of the reference weights.
4. Remove the reference weights from the scale.
   Check that the display is "0 kg" again.

5.6 Service with the SIWATOOL program

5.6.1 General

You can use the SIWATOOL program to commission the scale independently of the SIMATIC automation system.

The program is included in the configuration package.

Install the SIWATOOL program (SIWATOOL folder) on your PC for commissioning. You have 3 options when selecting the SIWAREX module:

- Selection SIWAREX WP521ST
- Selection SIWAREX WP522STA - for channel A
- Selection SIWAREX WP522STB - for channel B

5.6.2 Windows and functions of SIWATOOL

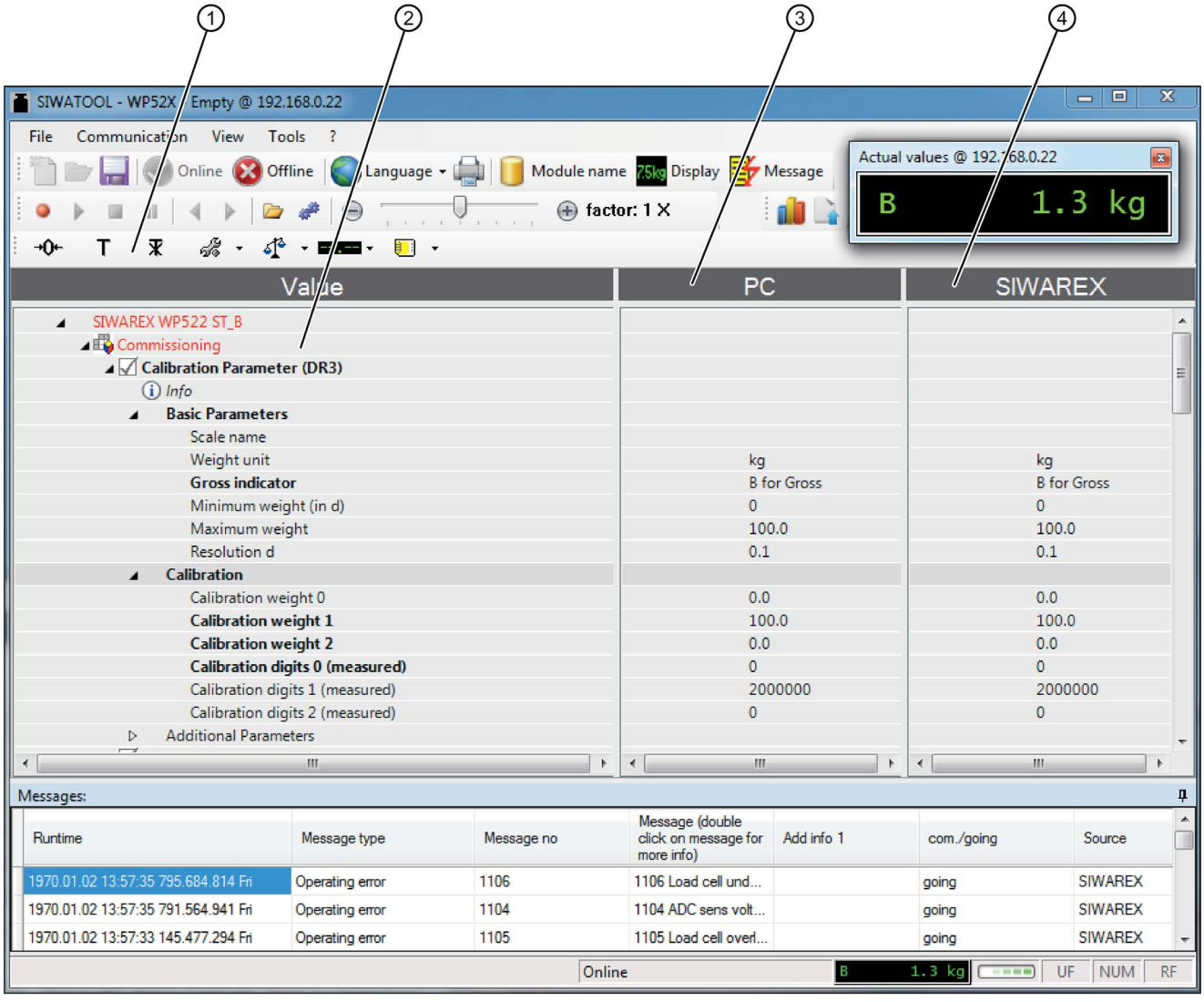

① Control elements for SIWATOOL and operation of the scale

② Parameter list of the SIWATOOL module

③ Offline values of the SIWAREX module

④ Online values of the connected SIWAREX module

Figure 5-11 Layout of the SIWATOOL user interface

The message window shows the current contents of the message buffer of the SIWAREX module. The most recent message is in the top line.

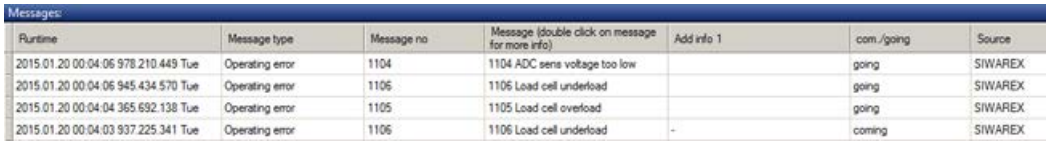

Messages:

Runtime	Message type	Message no	Message (double click on message for more info)	Add info 1	com./going	Source
2015.01.20 00:04:06 978.210.449 Tue	Operating error	1104	1104 ADC sens voltage too low		going	SIWAREX
2015.01.20 00:04:06 945.434.570 Tue	Operating error	1106	1106 Load cell underload		going	SIWAREX
2015.01.20 00:04:04 365.692.138 Tue	Operating error	1105	1105 Load cell overload		going	SIWAREX
2015.01.20 00:04:03 937.225.341 Tue	Operating error	1106	1106 Load cell underload	-	coming	SIWAREX

In order to archive data, all data can be exported from the SIWAREX module and saved as a file or printed.

Note

You can edit all data in the SIWAREX module in online mode. The changes are **not** automatically imported to the corresponding scale data block in the SIMATIC CPU.

Select the appropriate data record in order to send or receive it (e.g.: "Calibration parameter (DR3)") and call the command list with a right mouse click.

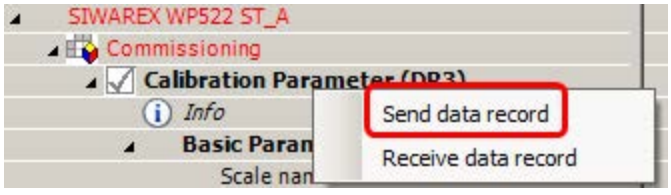

The data record is sent from the PC to the SIWAREX WP521/WP522 using "Send data record".

The data record is sent from the SIWAREX WP521/WP522 to the PC using "Receive data record".

The complete data record (all parameters of the data record) is always transferred, not just individual parameters!

For example, if data record 3 is to be sent, right-click on "Calibration Parameter (DR3)". The command list is then opened with the option for sending the respective data record to the weighing module or for reading it from the module. All data records can only be sent to or read from the SIWAREX as complete packets. It is not possible to read or write individual parameters within a data record.

Different parameter-settings between PC and SIWAREX are marked in red in the SIWATOOL:

Value	PC	SIWAREX
SIWAREX WP522 ST_A		
Commissioning		
Calibration Parameter (DR3)		
Info		
Basic Parameters		
Scale name	Siwarex	Siwarex
Weight unit	g	g
Gross indicator	B for Gross	B for Gross
Minimum weight (in d)	0	0
Maximum weight	15000.0	20000.0
Resolution d	0.1	0.1
Calibration		
Calibration weight 0	0.0	0.0
Calibration weight 1	100.0	2000.0
Calibration weight 2	0.0	0.0
Calibration digits 0 (measured)	21625	21625
Calibration digits 1 (measured)	215641	215641
Calibration digits 2 (measured)	0	0
Additional Parameters		
Autom. CalibrationDigits (DR4)		
Tare-Zero-Memory (DR5)		
Limits (DR6)		
Process Interfaces (DR7)		

Therefore the complete data record must initially be received for every change to parameters within it.

The desired parameter can then be edited, and the data record returned.

Note

If the data record is not received, the danger exists that different PC parameters will be sent to the scale and overwrite previously active and intentionally defined parameters.

Online parameter trends can be recorded and played back using the recorder function located at the top right-hand edge of SIWATOOL. You can use the "Configure recorder" button to select the data records to be recorded and to set the save parameters. The playback speed can be set using a slider.

5.6.3 Available help options

SIWATOOL offers various help options for operation:

- Info card

  You can select the "Info" item directly underneath the individual data records in the navigation tree. This info card explains how the data record influences the scale behavior.

- Tooltip

  If you move the mouse over a button or parameter, a corresponding help text is displayed.

- Help

  Click on the menu option "Help" to call up the SIWATOOL help. The Help can be opened separately.

5.6.4 Recording scale traces

Scale traces can be recorded and exported using SIWATOOL. The recording is started and stopped using commands, and recorded traces can also be deleted. The trace recording cycle is set in data record DR7. A dialog box appears with the "Export trace data" button. The trace is displayed in this window as a table or graphic, and the data can be exported to csv or Excel and then processed further. The commands for starting and stopping are present in the "Trace commands" group (yellow memory card icon) in SIWATOOL.

All important measured values, messages and changes in status are recorded.

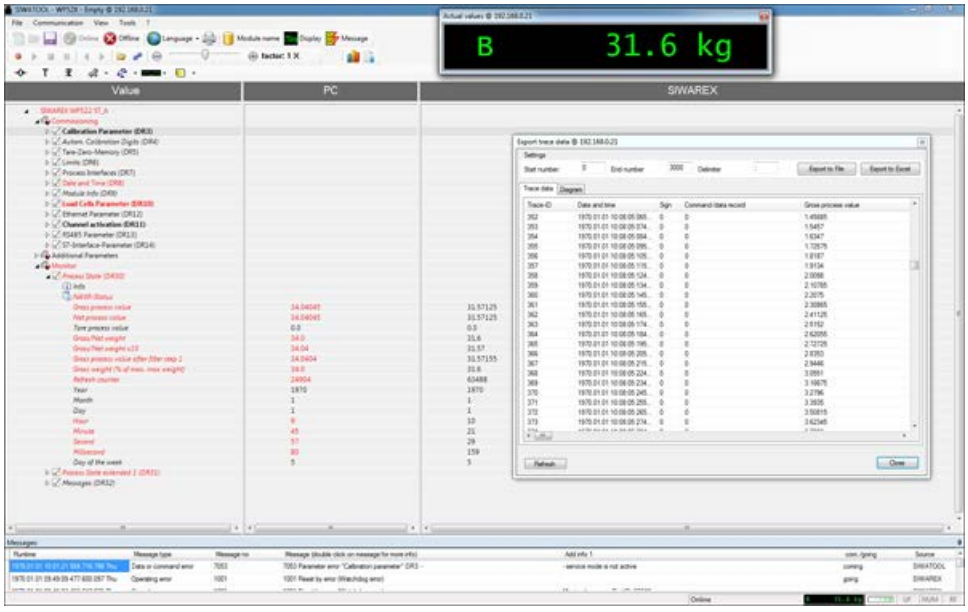

Figure 5-12 Reading trace as a table

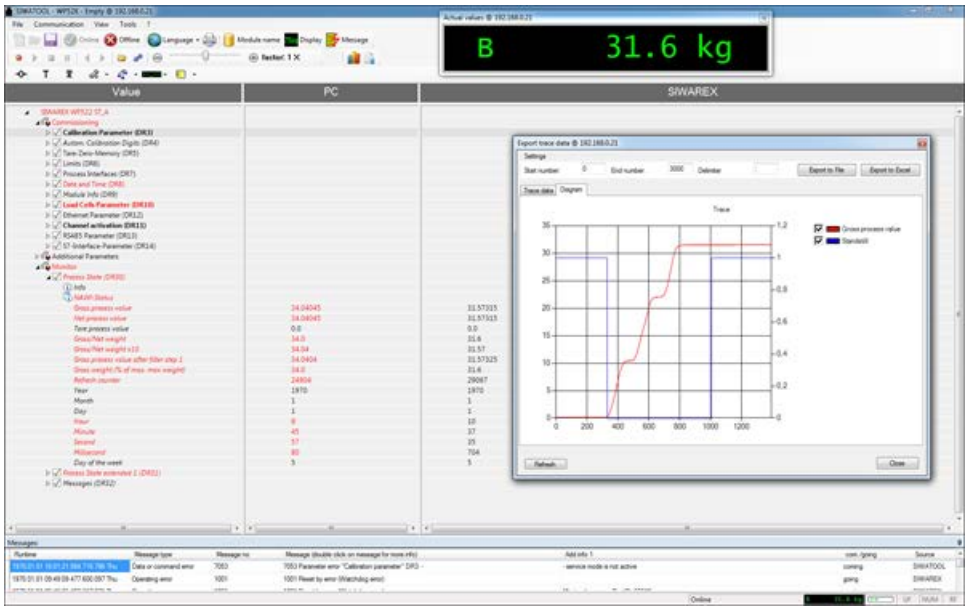

Figure 5-13 Reading trace as a chart

5.6.5 Offline parameter assignment

All scale parameters can be edited and saved without an electronic weighing system.

This reduces the setup time. You can thus prepare the parameters for several scales in your office, and subsequently transfer them to the electronic weighing system during setup.

Data from one scale currently in operation can be exported and used to set up another scale.

5.7 Commissioning with SIWATOOL

5.7.1 IP address for SIWAREX

The factory-set IP address is 192.168.0.21. This address is also preset in SIWATOOL. The connection to a SIWAREX module can be established immediately. The network card used must be configured for this network.

If the connection is to be established to a specific SIWAREX module, its IP address must be set in SIWATOOL. The setting is carried out with the menu item "Communication/Set Ethernet Configuration...".

If the IP address of a SIWAREX module is unknown, it can be determined using the additional program "Primary Setup Tool". The program is included in the SIWAREX configuration package.

During the setup, a new IP address can be assigned to the module using SIWATOOL.

Note

Please also observe the Security information.

The assignment of a new IP address to a SIWAREX module is necessary if several SIWAREX modules are present in one network.

The following ports are used by SIWAREX:

- SIWATOOL for SIWAREX WP521 port: 23006
- SIWATOOL for SIWAREX WP522 channel A: port 23006, channel B: port 23007
- Modbus TCP/IP for SIWAREX WP521: Port: 502
- Modbus TCP/IP for SIWAREX WP521/WP522: Port: 502

  or
- Modbus TCP/IP for SIWAREX WP522 channel A: port configurable, channel B: port configurable
- FTP for firmware download port: 69

5.7.2 Entering a known SIWAREX IP address

To establish a connection to a SIWAREX module, enter the IP address in SIWATOOL. Under the menu item "Communication", select "Set Ethernet Configuration...". Enter the IP address of the SIWAREX module in the following window. To activate the IP address and establish a connection to the SIWAREX module, subsequently click on "Online".

5.7.3 Determining an unknown IP address

If the IP address of a connected SIWAREX module is unknown, it can be determined using the program "Primary Setup Tool". The program is included in the configuration package (Page 169).

Install the program "Primary Setup Tool". When started, the program can determine the Siemens devices present in the network.

The MAC (Media Access Control) address can be read on the front of the SIWAREX module. Every device has an MAC address which is unique worldwide.

The IP address can be determined from the identified MAC address. The Primary Setup Tool also allows the IP address of a SIWAREX module to be set/changed.

Additional information on the Primary Setup Tool can be found in the associated manual.

5.7.4 Setting up a network

Several SIWAREX modules can be connected together in a network via a switch. Via the network, you can use SIWATOOL to assign parameters to and start the various modules or connect a common Operator Panel.

Note

Please also observe the Security information.

5.7.5 Start

When starting the SIWATOOL program, first select the SIWAREX WP521ST or SIWAREX WP522STA (channel A) or SIWAREX 522STB (channel B) using the "Device selection" window.

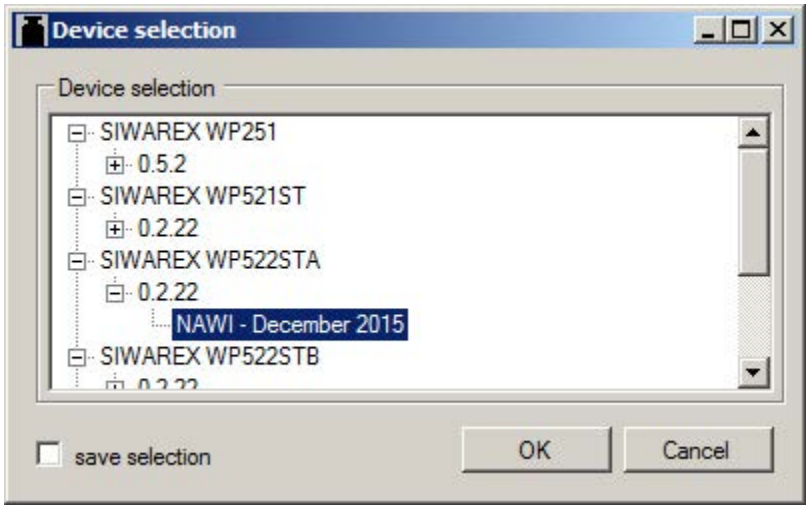

The IP address of the module can be selected in the "Communication" menu.

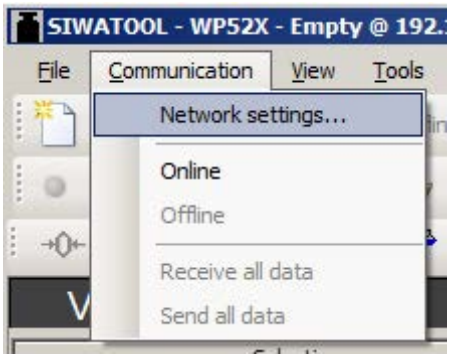

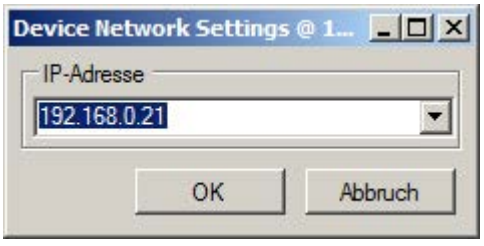

Click "Online" to establish communication to the SIWAREX.

See also

Service with the SIWATOOL program (Page 46)

5.7.6 Calibration method

5.7.6.1 Selecting the calibration method

The SIWAREX module can always be calibrated in two different ways:

- Using reference weights: in the case of a calibration with weights, mechanical influences of the scale construction are also partially taken into account.
- Without weights, using the technical specifications of the connected load cell(s): in the case of automatic calibration, the accuracy of the scale is influenced by the mechanical properties to a greater extent than with calibration using reference weights.

With both methods, make sure that the mechanical properties of the scale are flawless prior to calibration.

5.7.6.2 Calibration with calibration weight

When calibrating using a calibration weight, the identified parameters in DR3 / Basic parameters are checked or entered:

Calibration Parameter (DR3)	
Info	
Basic Parameters	
Scale name	Siwarex
Weight unit	g
Gross indicator	B for Gross
Minimum weight (in d)	0
Maximum weight	20000.0
Resolution d	0.1
Calibration	
Calibration weight 0	0.0
Calibration weight 1	2000.0
Calibration weight 2	0.0
Calibration digits 0 (measured)	21625
Calibration digits 1 (measured)	215641
Calibration digits 2 (measured)	0
Additional Parameters	

Unit of weight:

The unit of weight can be selected from a list.

Maximum weighing range:

Exceeding the maximum weighing range (= the maximum material to be weighed) is indicated in DS30, status 1-2, at parameter "Max 9e".

If the maximum weighing range is exceeded, this bit is set to TRUE.

Resolution d:

The resolution d can be defined in accordance with EN 45501 (0.0001 to 50). This parameter is used for the weight display in the SIWATOOL software.

Calibration weight 1:

The calibration weight 1 and its corresponding calibration digits define the characteristic curve of the scale.

A minimum calibration weight must be used as calibration weight 1; with a load cell characteristic value of:

- 1 mV/V: 8% of the total rated load of all load cells
- 2 mV/V: 4% of the total rated load of all load cells
- 4 mV/V: 2% of the total rated load of all load cells

Example

Number of load cells: 3 units

Nominal load of one single load cell: 100 kg

Load cell characteristic value: 2 mV/V

The minimum calibration weight which can be used for the calibration is: 4% x 3 x 100 kg = 12 kg

Once the above-mentioned parameters have been set in the PC, they must be sent to the SIWAREX. Service mode must be switched on first. The DR3 can only be sent and the calibration commands executed with service mode switched on.

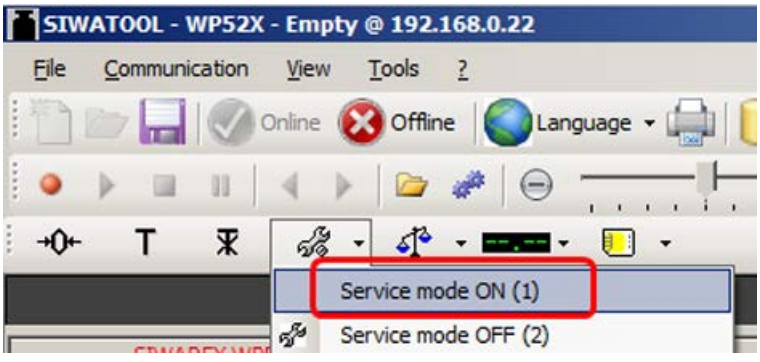

After switching on service mode, a red wrench icon is displayed in the SIWATOOL next to the weight value.

The DR3 is subsequently sent to the SIWAREX by a right-click on "Calibration parameters (DR3)" and execution of "Send data record".

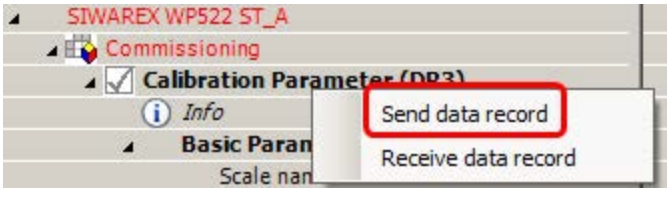

All parameter settings in DR3 are now identical again between PC and SIWAREX, and all parameters of DR3 are displayed again in black.

Following transmission of the parameters to the SIWAREX, and with a empty scale – i.e. only the mechanical dead load (e.g. empty container) bears on the load cells – the "Calibration point 0 valid" command is executed:

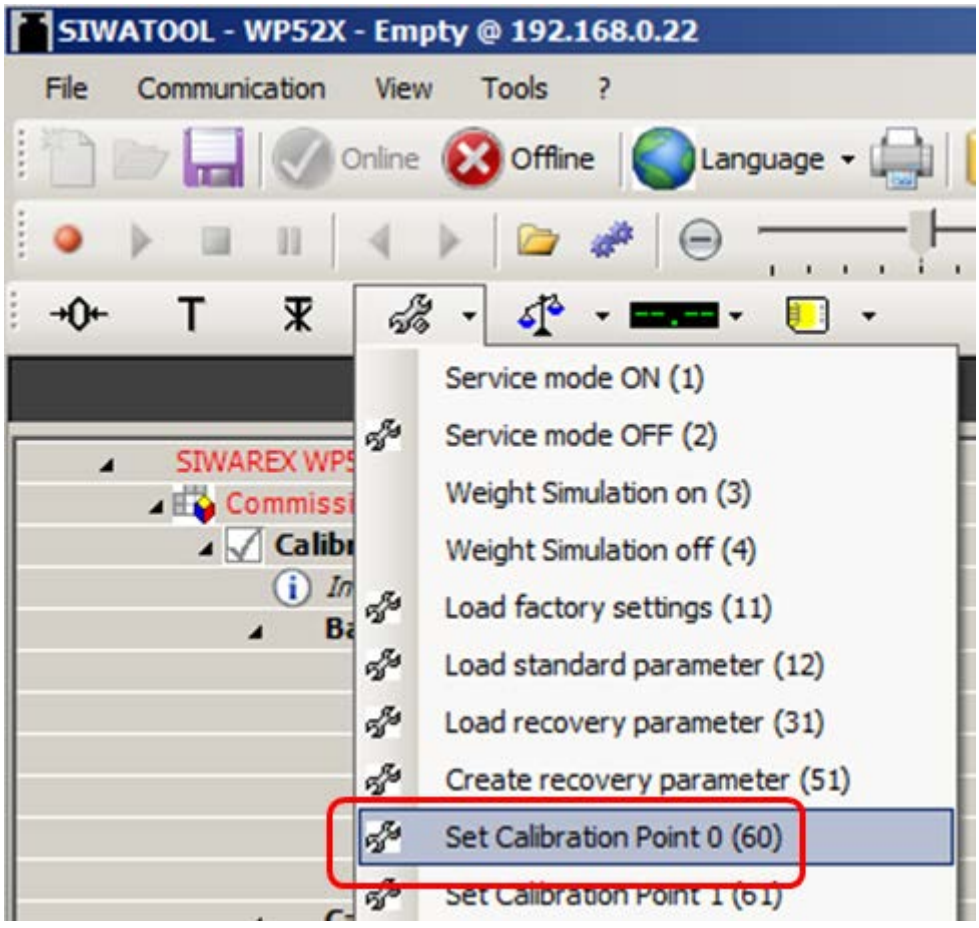

The calibration weight 1 defined in DR3 is subsequently applied to the scale.

The "Calibration point 1 valid" command is then executed:

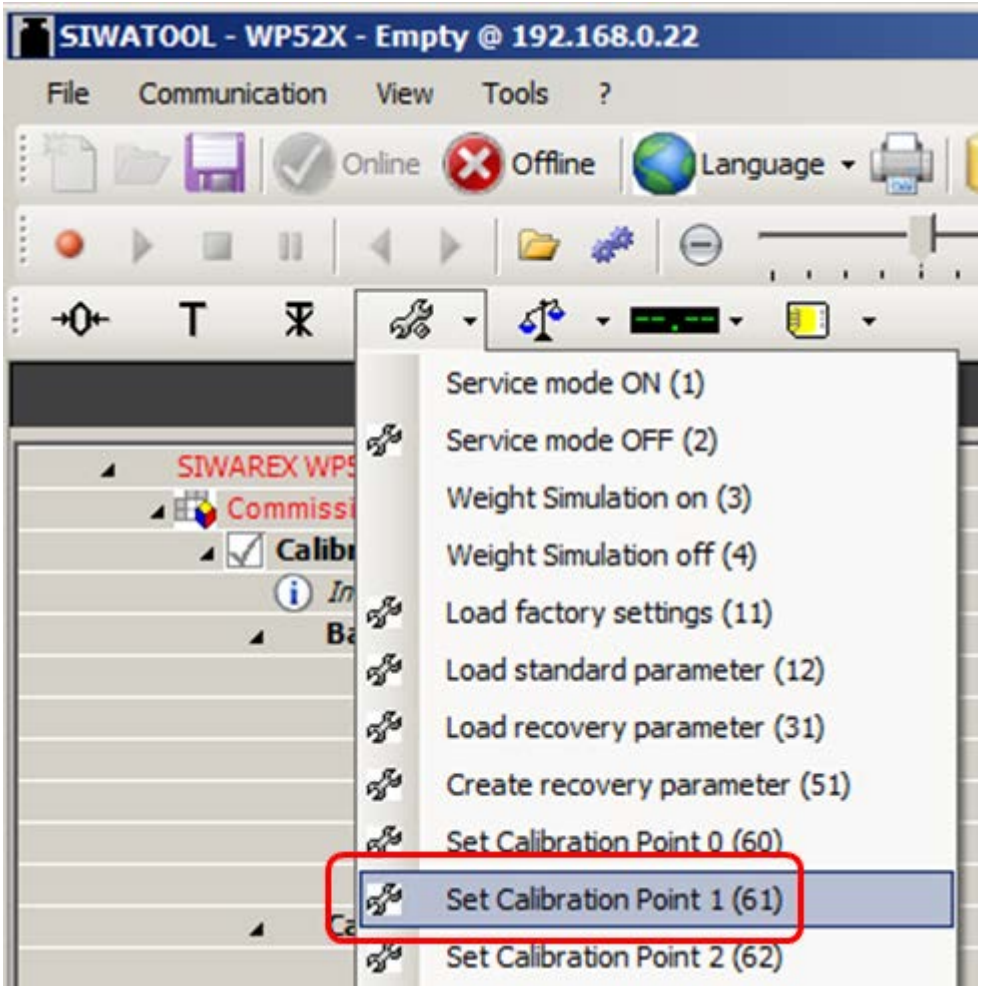

Service mode is switched off again:

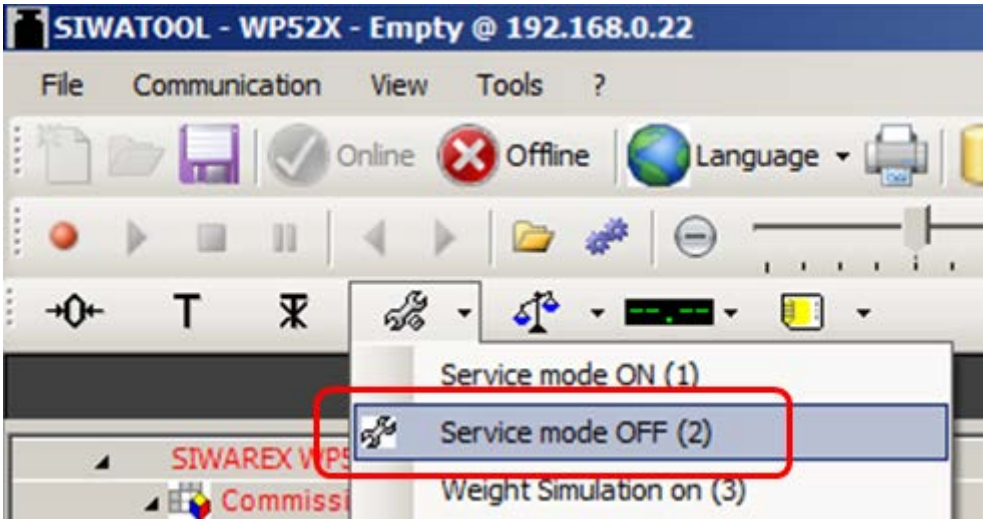

The calibration is then finished, and the correct weight value is now displayed in SIWATOOL.

Read back DR3

During the calibration, the SIWAREX internally changes its calibration digits.

This means that obsolete parameter values are now present in SIWATOOL.

These are displayed in red, e.g.:

The DR3 must be read back in order to again achieve calibration digits in the SIWATOOL which are consistent with the SIWAREX:

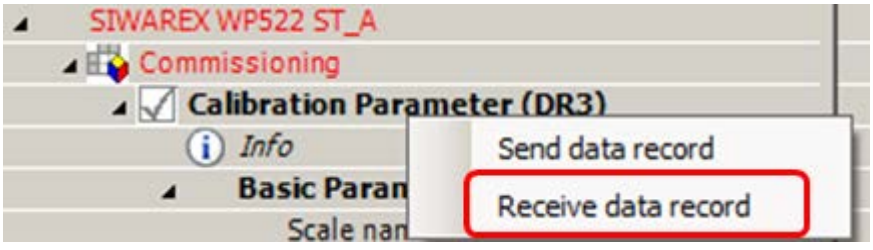

Checking the scale following calibration

If the scale is only used for company-internal purposes, a simple check is sufficient.

Perform the following steps:

1. The scale is unloaded and shows "0 kg".
2. Place one or more known test weights on the scale (but not the calibration weight which was used during the calibration, so as to check other weight points of the scale in addition to the calibration weight). Check the displayed weight value in the SIWATOOL.
3. Remove the test weights from the scale. Check that the display is "0 kg" again.

5.7.6.3 Automatic calibration (= calibration without calibration weight)

The scale can also be calibrated without a weight. To do this, the parameters identified in bold type in DR3 / Basic parameters are checked or entered, and the data specific to the load cells specified in DR10:

In addition, it is essential that the scale is empty.

Checking or entering the parameters identified in bold type in DR3 / Basic parameters:

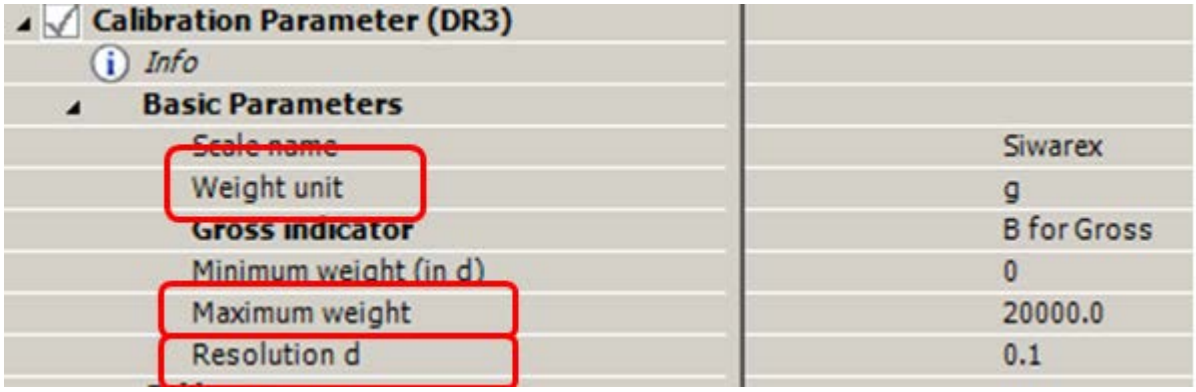

Unit of weight:

The unit of weight can be selected from a list.

Maximum weighing range:

Exceeding the maximum weighing range (= the maximum material to be weighed) is indicated in DR30, status 1-2, at parameter "Max 9e".

If the maximum weighing range is exceeded, this bit is set to TRUE.

Resolution d:

The resolution d can be defined in accordance with EN 45501 (0.0001 to 50).

Once the above-mentioned parameters have been entered, the parameters modified in the PC must be sent to the SIWAREX.

Service mode must be switched on first.

The DR3 and DR10 can only be sent and the calibration commands executed with service mode switched on:

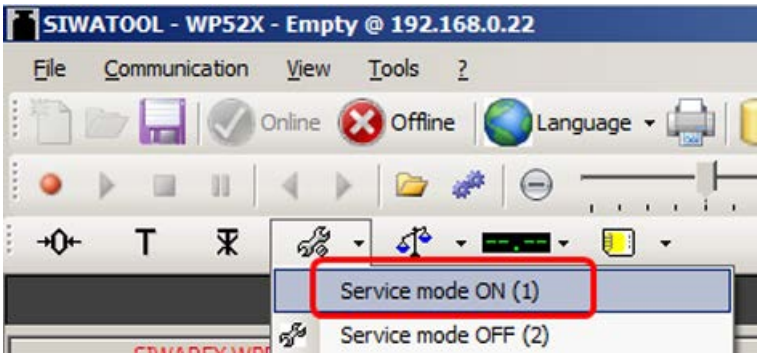

After switching on service mode, a red wrench icon is displayed in the SIWATOOL next to the weight value:

The DR3 is subsequently sent to the SIWAREX by a right-click on "Calibration parameters (DR3)" and execution of "Send data record":

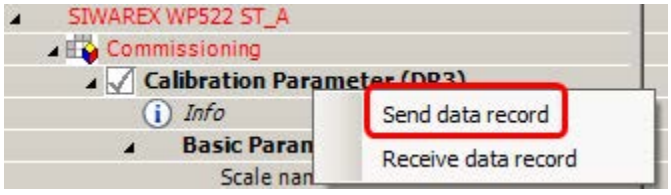

All parameter settings in DR3 are now identical again between PC and SIWAREX, and all parameters of DR3 are displayed again in black.

The data specific to the load cells is subsequently specified in DR10:

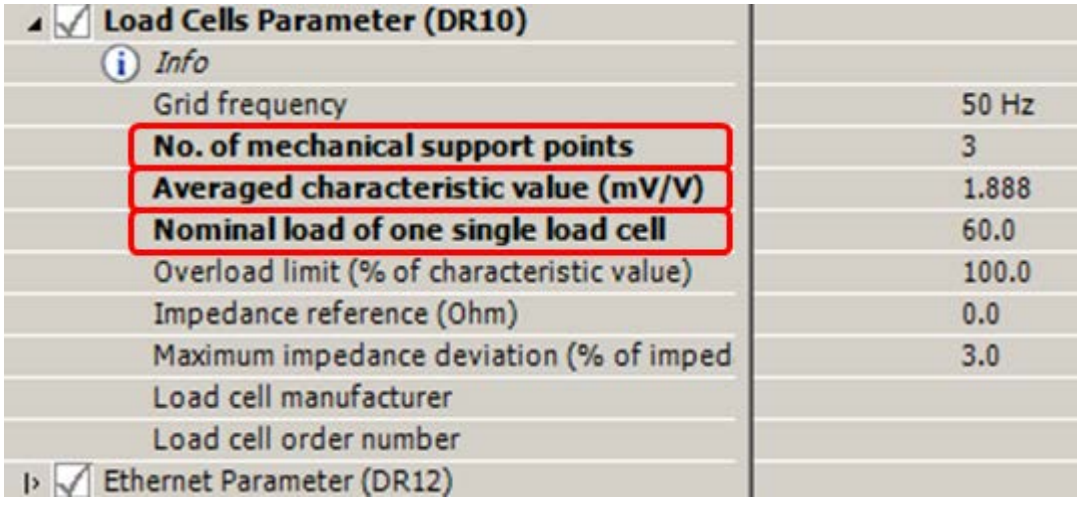

Number of support points:

The number of support points corresponds with a silo, for example, to the number of clamps or feet of the silo. A quadratic platform scale with a load cell at each corner has 4 support points.

Characteristic value (mV/V):

This parameter is the mean value of the characteristic values of all connected

load cells (e.g.: characteristic value = 2.018 mV/V). The exact characteristic value of a load cell can be obtained from its test report or directly read off it.

If the characteristic values of the individual load cells are unknown, the value "1.0" can be assumed for 1mV/V load cells, the value "2.0" for 2mV/V load cells etc.

Nominal load of one single load cell

Specifying the nominal load of one single load cell

The DR10 is subsequently sent to the SIWAREX by a right-click on "Load cell parameters (DR10)" and execution of "Send data record":

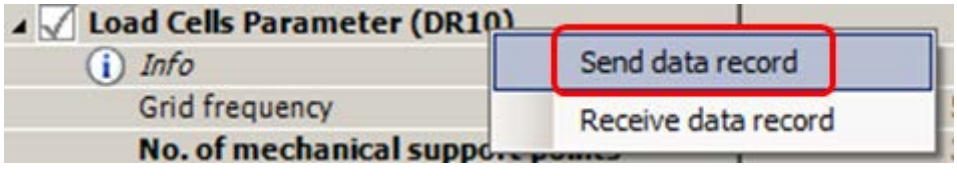

All parameter settings in DR10 are now identical again between PC and SIWAREX, and all parameters of DR10 are displayed again in black.

Following transmission of the parameters to the SIWAREX, and with a empty scale – i.e. only the mechanical dead load (e.g. empty container) bears on the load cells – the "Automatic calibration" command is executed:

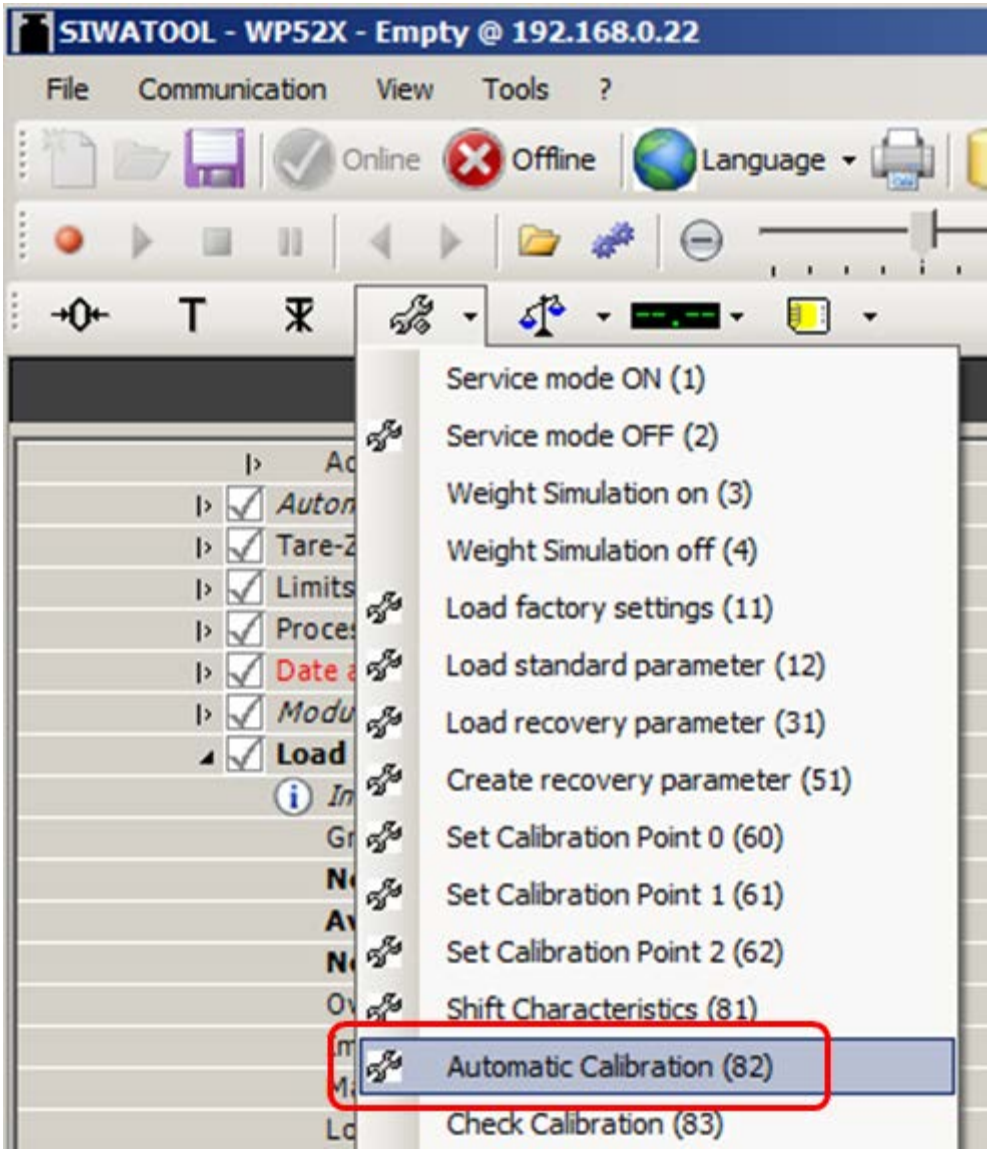

Service mode is switched off again:

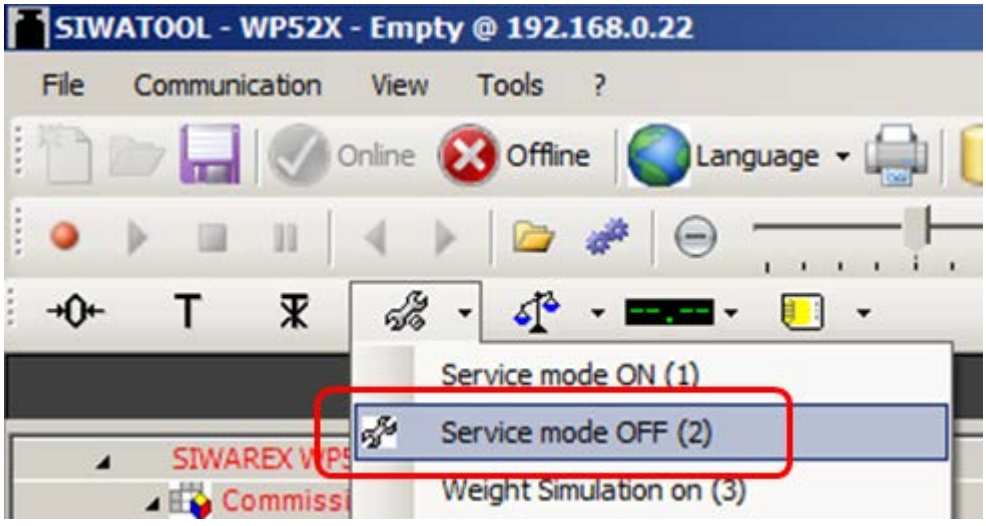

The calibration is then finished, and the correct weight value is now displayed in SIWATOOL.

Read back DR3

During the calibration, the SIWAREX internally changes its calibration digits and the calibration weight.

This means that obsolete parameter values are now present in SIWATOOL.

These are displayed in red, e.g.:

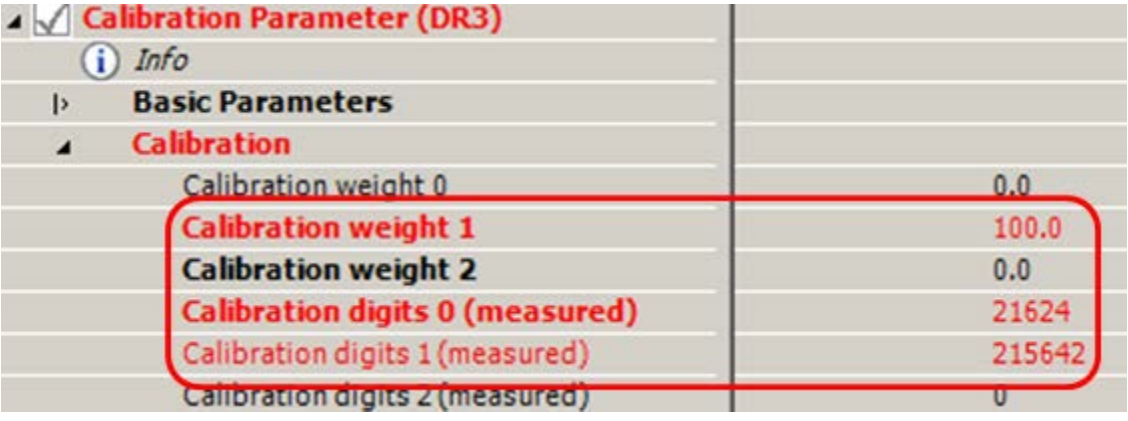

The DR3 must be read back in order to again achieve calibration digits and the calibration weight in the SIWATOOL which are consistent with the SIWAREX:

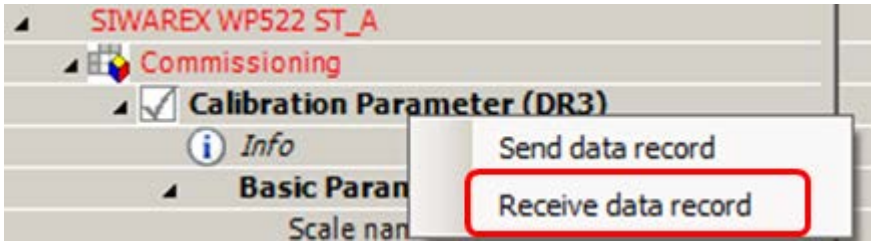

Figure 5-14 Receive data record

Checking the scale following calibration

If the scale is only used for company-internal purposes, a simple check is sufficient.

Perform the following steps:

1. The scale is unloaded and shows "0 kg".
2. Place one or more known test weights on the scale. Check the displayed weight value in the SIWATOOL.
3. Remove the test weights from the scale. Check that the display is "0 kg" again.

5.7.6.4 Receive all data

Activate the "Receive all data" function in the communication menu.

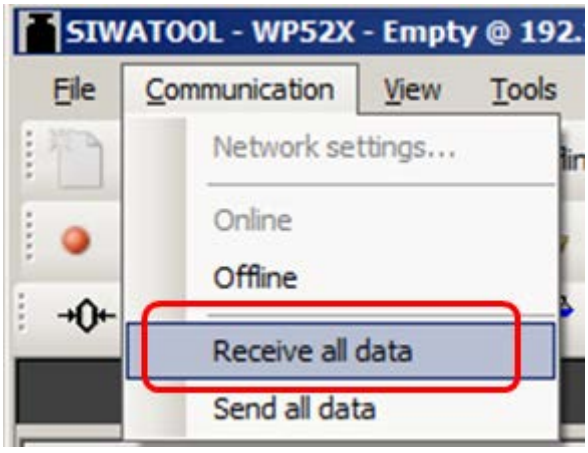

All parameters can now been saved as a backup file on the hard disk. If a module is replaced, the backup file can be downloaded to the new module within a few seconds. At the time of input of the backup file, the scale is directly in the calibrated state again – without a new calibration.

5.7.7 Firmware update with SIWATOOL

New firmware versions can be transferred to the SIWAREX module using SIWATOOL. In order to transfer the firmware, the Windows firewall must be configured in such a way that SIWATOOL is registered as an approved program. The FTP protocol is used for the transfer. Firewalls or other protection software can interfere or prevent the transmission of data via the FTP protocol. In such cases, the respective protective mechanism must be temporarily deactivated for the duration of the update, or an alternative PC used.

The latest firmware version can be found under Industry Online Support (https://support.industry.siemens.com/cs/ww/en/ps/23701/dl).

Note

The SIWAREX module parameters are preassigned with default values after the transfer of the new firmware.

You should therefore export and save the original parameter values prior to the firmware update. Following the firmware update, the saved data can be converted by SIWATOOL to the new firmware version.

Saving existing parameters

- Export the current parameters

  Select the "Receive all data records" function from the menu under "Communication". The current parameter set is then transferred to SIWATOOL.

- Save the current data record in a file.

Transferring the new firmware version to the SIWAREX module

Note

During the firmware transfer, the SIWAREX module works restricted with the old firmware version and the new firmware is loaded in the background. For this reason, you must not switch off the module during the firmware transfer.

1. Set the SIMATIC CPU to "STOP".
2. Register with SIWATOOL on the SIWAREX module.
3. Use the function button to start the firmware download.
4. Select the current firmware file under "Firmware Download"
5. Click the "Start transfer" button.

Following the transfer, the SIWAREX module must be switched off and then on again. This activates the new firmware.

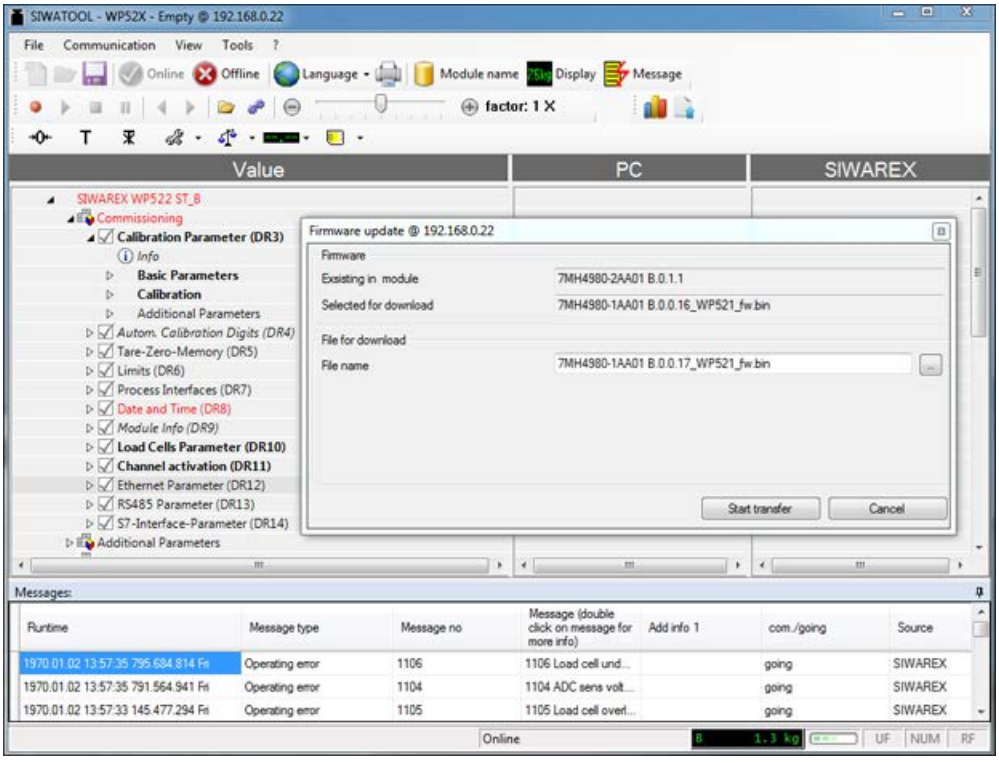

Figure 5-15 Downloading the firmware with SIWATOOL

5.7.8 Firmware update with SIMATIC TIA Portal

If necessary, the SIMATIC TIA Portal can be used to perform the firmware update of the SIWAREX WP521/WP522 module.

You can update the firmware of a module using a firmware file.

To update the firmware, proceed as follows:

1. Make sure the module is not in use.
2. Open the module in the online and diagnostics view.
3. Select the "Firmware Update" group in the "Functions" folder.
4. Click on the "Browse" button in the "Firmware Loader" area to select the path to the firmware update files.
5. Select one of these files. The table then lists all modules for which an update is possible with the selected firmware file.
6. Click "Start Upgrade". If the selected file can be interpreted by the module, it is loaded into the module.
7. If the operating mode of the CPU needs to be changed, you are prompted via dialogs.

⚠ WARNING

Prohibited system states possible

An S7-1500 CPU goes immediately to STOP mode when the firmware update begins, which may affect the operation of an online process or machine. Unexpected operation of a process or machine can lead to death or serious injury and/or property damage.

Note

After performing a firmware update, you must replace the affected module by the same module with the current firmware version in the hardware configuration of your project. The configuration will then comply with the actual existing configuration again.

A station can restart after activating the firmware. This will result in the failure of all modules of the station.

If the corresponding CPU is in RUN mode, activation of the firmware can cause access errors or other impairments of the user program even including sustained CPU STOP.

Scale parameters and functions 6

6.1 Parameters and functions

The electronic weighing system used here can be used for non-automatic weighing, for examples, as a platform scale or hopper scale. They are not legal-for-trade.

All parameters are set to default values in the factory. You can restore the configuration to factory settings using the "Load factory settings" command.

The default parameters are set such that the scale is immediately ready for operation. The weight value indicates changes in weight on the load cell, but only corresponds to the actual weight following a calibration. You do not need to re-enter all parameters. The advantage of this solution is that you can decide which default values are to be retained and which parameters need to be adapted for your application.

All parameters are divided into data records (DR). The data records are organized in steps (tasks) to be implemented during commissioning or during the process.

The scale functions governed by the parameters are also described in the parameter description below.

First, the parameters of a given data record are displayed in a table. The detailed parameter description for the parameters of this data record then follows.

When it receives new parameters, the SIWAREX module runs a validation check. In the event of a parameter assignment error, the data record is not applied (not saved) by the SIWAREX module and a data/operator error is reported.

6.2 DR 2 command code

DR 2 is a special data record used to transfer commands to the SIWAREX module by SIWATOOL.

6.3 DR 3 calibration parameters

6.3.1 Overview

The calibration parameters need to be checked and if necessary modified for all scales.

The scale is basically defined by calibration parameters and calibration operation. Any changes in data record DR 3 require the service operation of the module to be activated. If service mode is not active, all parameter inputs are directly rejected with an error.

Procedure

- Check all parameters and modify them as required
- Transfer the DR 3 data record from SIWATOOL to the scales
- Adjust the scales
- Transfer the DR 3 data record from the scales to SIWATOOL

Table 6- 1 Assignment of data record 3

Variable	Note	Type	Length (bytes)	Read write Protection	Write protection	Default	Min.	Max.	Modbus registers
Data record number	Contains no. of data record	USHORT	2	r	-	3	-	-	1000
Length	Data record length information	USHORT	2	r	-	116	-	-	1001
Application	Information about which application the DR belongs to	USHORT	2	r	-	141	-	-	1002
Version ID	Information about the current data record version	USHORT	2	r	-	1	1	65635	1003
Scale name header	Maximum length and actual length of string for scale name	UBYTE [2]	2	rw	r	12,12	-	-	1004
Scale name (Page 71)	Scale name specified by user	CHAR[12]	12	rw	r	" "	-	-	1005
Unit of weight (Page 71)	Unit of weight	USHORT	2	rw	r	2	0	6	1011
Gross identifier (Page 71)	Abbreviation for brutto/gross (B or G)	USHORT	2	rw	r	0	0	1	1012
Reserve	Reserve	USHORT	2	rw	-	0	-	-	1013
Reserve	Reserve	USHORT	2	rw	r	0	-	-	1014
Minimum weighing range (Page 71)[1)]	Minimum number d	USHORT	2	rw	r	20	0	65535	1015
Maximum weighing range (Page 71) [1)]	Maximum weight	FLOAT	4	rw	r	100	> weighing_range_min	9.999.999	1016
	Calibration weight 0[1)] (usually the zero point)	FLOAT	4	rw	r	0	1	9.999.999	1018
	Calibration weight 1[1)]	FLOAT	4	rw	r	100	1	9.999.999	1020

Variable	Note	Type	Length (bytes)	Read write Protection	Write protection	Default	Min.	Max.	Modbus registers
	Calibration weight 2	FLOAT	4	rw	r	0	1	9.999.999	1022
	Calibration digits 0 determined during calibration with calibration weight 0	LONG	4	rw	r	0	0	3.999.999	1024
	Calibration digits 1 determined during calibration with calibration weight 1	LONG	4	rw	r	2000	0	3.999.999	1026
	Calibration digits 2 determined during calibration with calibration weight 2	LONG	4	rw	r	0	0	3.999.999	1028
Scale interval (Page 72) [1)]	Resolution weighing range 1 (1*10**k, 2*10**k, 5*10**k]; k: -3 … 2)	FLOAT	4	rw	r	0.1	0.0001	50	1030
Automatic zero adjustment (Page 72)	0: auto. zero adjustment off 1: auto. zero adjustment on	BIT	0	rw	r	0	0	1	1036.16
	Reserve	BIT	0	rw	r	0		1	1036.15
Currency	0: Filling 1: Emptying	BIT	0	rw	r	0	0	1	1036.14
Weight simulation (Page 72)	Weight simulation	BIT	0	rw	r	0	0	1	1036.13
		BIT	0	rw	r	0	0	1	1036.12
Bit 5	Bit 5: Reserve	BIT	0	rw	r	0	0	1	1036.11
Bit 6	Bit 6: Reserve	BIT	0	rw	r	0	0	1	1036.10
Filter sequence	0: Low-pass filter before average value filter 1: Average value filter before low-pass filter	BIT	0	rw	r	0	0	1	1036.9
Bit 8	Bit 8: Reserve	BIT	0	rw	r	0	0	1	1036.8
Bit 9	Bit 9: Reserve	BIT	0	rw	r	0	0	1	1036.7
Bit 10	Bit 10: Reserve	BIT	0	rw	r	0	0	1	1036.6
Bit 11	Bit 11: Reserve	BIT	0	rw	r	0	0	1	1036.5
Bit 12	Bit 12: Reserve	BIT	0	rw	r	0	0	1	1036.4
Bit 13	Bit 13: Reserve	BIT	0	rw	r	0	0	1	1036.3
Bit 14	Bit 14: Reserve	BIT	0	rw	r	0	0	1	1036.2
Bit 15	Bit 15: Reserve	BIT	2	rw	r	0	0	1	1036.1
Reserve		USHORT	2	rw	r	0	0	6	1033

Variable	Note	Type	Length (bytes)	Read write Protection	Write protection	Default	Min.	Max.	Modbus registers
Maximum tare load (Page 72)	Tare maximum [in % of WRmax]	FLOAT	4	rw	r	100	0	250	1034
Reserve		FLOAT	4	rw	r	0	0	100.0	1036
Reserve		FLOAT	4	rw	r	0	0	100.0	1038
Maximum negative zero setting limit (semi-automatically) (Page 73)	Negative range of the semi-automatic zero-ing [in % of maximum weighing range WRmax]	FLOAT	4	rw	r	1	0	100.0	1040
Maximum positive zero setting limit (semi-automatically) (Page 73)	Positive range of the semi-automatic zero-ing [in % of maximum weighing range WRmax]	FLOAT	4	rw	r	3.0	0	100.0	1042
Standstill range (Page 73)	Standstill range (in d)	FLOAT	4	rw	r	1	0	9.999.999	1044
Standstill time (Page 74)	Standstill time 1 in ms	TIME	4	rw	r	2000	10	10000	1046
Standstill wait-ing time (Page 74)	Waiting time until standstill. 0: standstill-dependent scale command, if there is no standstill, immedi-ately rejected. > 0: Maximum wait-ing time until com-mand is executed	TIME	4	rw	-	0	0	10000	1048
Low-pass filter limit frequency (Page 74)	Low-pass filter 1 - cutoff frequency: 0: Filter disabled	FLOAT	4	rw	r	2	0	50	1050
Low-pass filter number (Page 75)	Filter order Low-pass filter 1	USHORT	2	rw	r	4	1	4	1052
Reserve	Reserve	USHORT	2	rw	-	0	-	-	1053
Reserve		FLOAT	4	rw	-	0			1054
Period the average value filter (Page 75)	Averaging period of the average value filter in ms	USHORT	2	rw	r	100	0	10000	1056

1) Parameter for calculation of calibration points with theoretical calibration

6.3.2 Scale name

You can select any name, but it may not exceed 12 characters. You can enter any designation.

6.3.3 Unit of weight

A number is specified as the weight unit. The defined unit of weight applies to all weight specifications. Entries are not be converted if the unit of weight has changed.

Codes for weight unit:

- 0: "mg"
- 1: "g"
- 2: "kg"
- 3: "t"
- 4: "oz" (ounce)
- 5: "lb" (pound)
- 6: "T" (= short tons)
- 7: "TL" (= long tons)

6.3.4 Gross identifier

The gross identifier specifies the letter, B (for brutto) or G (for gross), to be used in the display for gross weights. The identifier is specified by a number.

Codes for brutto/gross identifier:

- 0: "B"
- 1: "G"

6.3.5 Minimum weighing range

The minimum weighing range with the unit "d" (resolution) is set during the calibration.

The factory setting is 0 d. Falling below the minimum weighing range is displayed in the status of the scale.

6.3.6 Maximum weighing range

The maximum weight is defined during commissioning.

The maximum weight depends on the number and type of load cells used.

6.3.7 Calibration weights 0, 1, 2 and calibration digits 0, 1, 2

The calibration weights and corresponding calibration digits define the characteristic curve of the scales. A detailed description can be found in section Performing calibration (Page 75).

6.3.8 Scale interval

The scale interval for the weighing range can be defined in accordance with EN 45501 (0.0001 to 50).

6.3.9 Automatic zero adjustment

If necessary, the scales can be set semi-automatically to zero by the user by means of the "Zeroing" command.

The automatic adjustment sets the scale to zero without a further command in the event of slow zero drifting. Slow drift is assumed if the OIML R76 criteria for this are met.

6.3.10 Filling/emptying mode

With filling, the net weight increases when the scale is loaded. At discharge weighing, the net weight increases when the scale is unloaded.

6.3.11 Weight simulation

For test purposes, weight simulation can be enabled instead of actual weighing. The simulated weight is specified using the DR 16 data record. Weight simulation can, in certain situations, facilitate scale testing and commissioning. The simulated weight is indicated on the main display with the word "TEST".

6.3.12 Filter sequence

The weighing signal can pass through the low-pass and average value filter. The parameter is used to determine which filter is first passed through.

6.3.13 Maximum tare load

The weighing module accepts any external tare specification which is less than the maximum tare load (percentage of maximum weighing range). Tare commands are also accepted provided that the current gross weight is less than the configured maximum tare load.

6.3.14 Maximum negative zero setting limit (semi-automatically)

Zeroing defines the current weight of the scales as zero.

You can restrict the effect of the zeroing function by defining limits. The limitation is based not on the current gross weight, but rather on the weight which the scales would display had there been no zeroing (time of scale calibration).

6.3.15 Maximum positive zero setting limit (semi-automatically)

You can restrict the effect of the zeroing function by defining limits. The limitation is based not on the current weight, but rather on the weight which the scales would display had there been no zeroing (time of scale calibration).

6.3.16 Standstill range

Standstill monitoring checks whether the scales are correctly balanced. Scale standstill is registered if the weight changes by less than a specified fluctuation in d (standstill value) over a specified time (standstill time). Standstill monitoring is used in static scale mode (commands: zeroing, taring). The diagram below illustrates how standstill monitoring works.

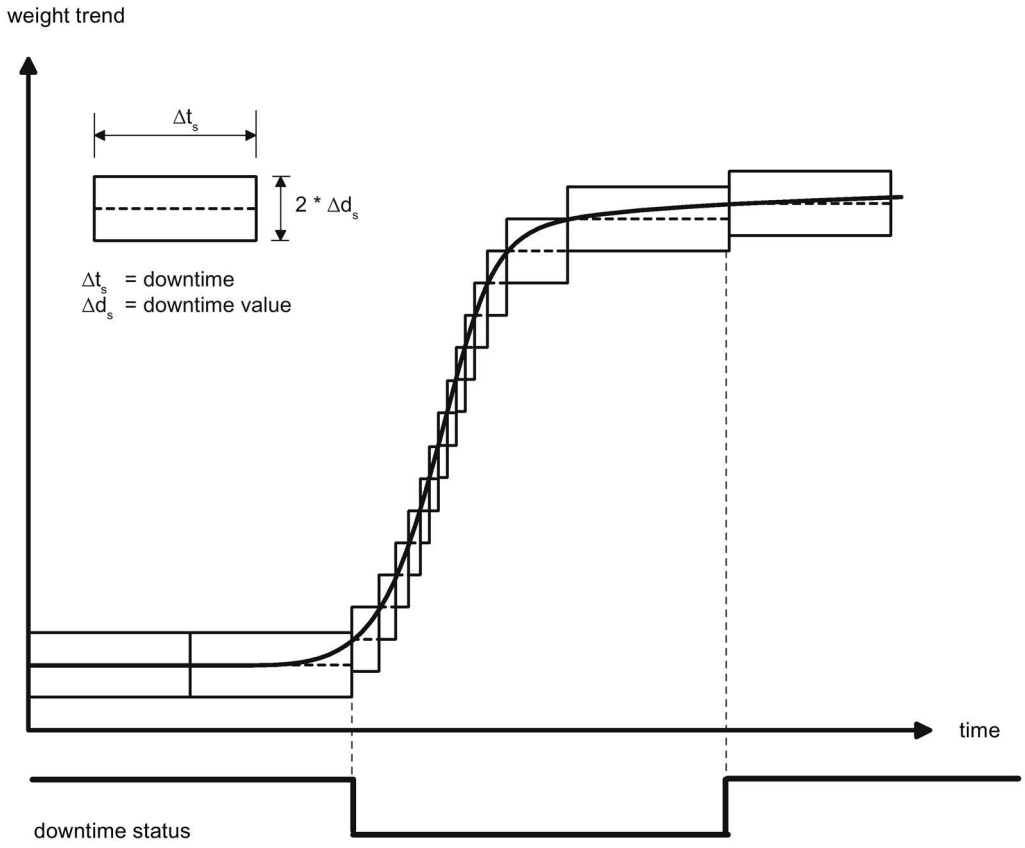

Figure 6-1 Standstill monitoring

6.3.17 Standstill time

Standstill monitoring checks whether the scales are correctly balanced. Scale standstill is registered if the weight changes by less than a specified fluctuation in d (standstill value) over a specified time (standstill time). Standstill monitoring is used in static scale mode (with the following commands: zeroing, taring).

6.3.18 Standstill waiting time

Standstill waiting time is a maximum waiting time for standstill upon the execution of a command which depends on standstill (taring, zeroing, registering). A technology message is generated if the command cannot be executed during the standstill waiting time because there is no standstill.

If the standstill waiting time is equal to zero, a command requiring standstill is rejected immediately if there is no standstill.

6.3.19 Low-pass filter limit frequency

There is a critically damped low-pass filter for suppressing faults. The diagram below shows the step response of the filter (f = 2 Hz). The entry "0" means that the filter is switched off. A limit frequency of between 0.01 and 20.0 Hz can be specified.

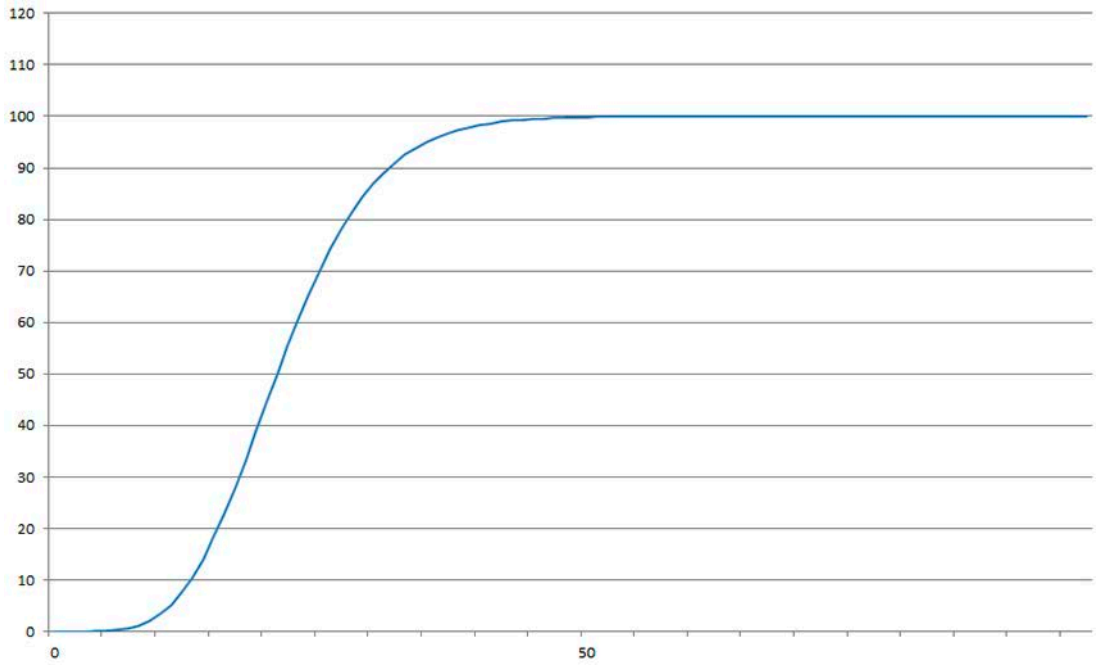

Figure 6-2 Step-forced response of the digital low-pass filter when f = 2 Hz

The definition of the limit frequency is extremely important for the suppression of faults. Defining the limit frequency defines the "speed" of the scales' response to changes in the measured value.

A value of 5 Hz, for example, results in a relatively rapid response to a change in weight; a value of 0.5 Hz makes the scales "slower".

6.3.20 Low-pass filter number

The number of the filter defines the effect of damping. Values 1...4 can be specified. The higher the selected filter number, the higher the effect.

6.3.21 Period the average value filter

The average value filter is used to steady the weight against random interference. The weight value is based on average values that are incurred in the specified period.

6.4 Performing calibration

6.4.1 Calibration with calibration weights

The incoming analog measured value from the load cells is converted into a digital value in an analog-to-digital converter. A weight is calculated using this digital value. This weight is then used by all weighing module functions for messages and for determining the status.

The characteristic curve of the measuring system must be defined before the weight can be calculated from the digital value. In the simplest case, the characteristic curve is defined with points 0 and 1. The first working point (point 0) is defined by the empty scale (no load) at their own weight. The load cells return a voltage measurement to the weighing module as a result of the weight of the scales themselves. Following analog-to-digital conversion of the measured voltage, the zero point is assigned to the digital value (calibration digits for the zero point).

If the scales are loaded with a defined standard weight (e.g. 50% of the measuring range), the new digital value returned by the analog-to-digital converter is assigned the standard weight.

The characteristic curve can also be determined with a third point, which must be higher than point 1.

Make sure that the difference between two calibration weights is at least 40 000 digits, as the calibration command may otherwise be rejected.

The calibration procedure involves the following steps:

- Activation of service mode using the "Service mode on" command.
- Define the calibration weight and other parameters of the DR 3 data record.
- Transfer the DR 3 data record to the scales.
- Trigger "Adjustment weight 0 valid" for empty scales.

- Load the scale with the defined standard weight.
- Trigger "Adjustment weight 1 valid".
- Transfer data record DR 3 from the scale to SIWATOOL and save the data on a data medium.

You must follow the correct calibration sequence with increasing calibration weights.

Load cell characteristic value	Calibration digit 1 (ca.) when rated load is
1 mV/V	1 000 000
2 mV/V	2 000 000
4 mV/V	4 000 000

This defines the characteristic curve and the scale can now calculate weights for the full measuring range.

The diagram below illustrates the relationship between calibration digits and the calibration weight.

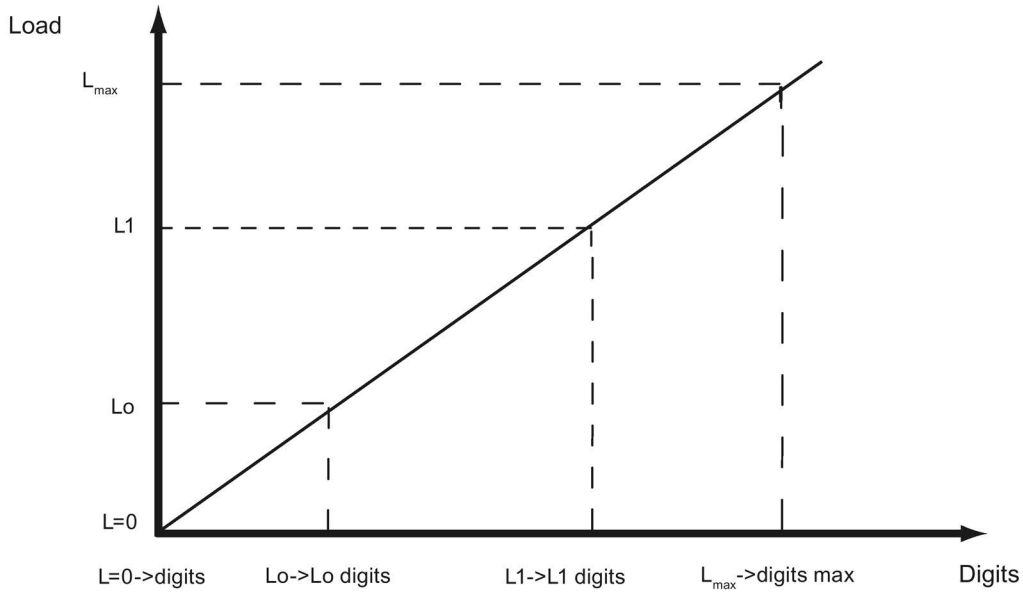

Figure 6-3 Calibration digits and calibration weight

Load	Comment	Load	Digits
L=0	Load cells empty		Approx. 0
Lo	Calibration weight 0 "Zero point"	0 kg	e.g. B. 70 682 for calibration point 0
L1	Calibration weight 1	e.g. 60 kg	e.g. 308 452 for adjustment digits 1
L_{max}	Rated load of the load cell(s)	e.g. 100 kg	1 000 000
L_{max} +10 %	Rated weight + approximately 10%	e.g. approx. 110 kg	1 090 000

You do not need to perform calibration if the calibration digits and the calibration weights are known to the weighing module described here. They are simply sent to SIWAREX by data record DR 3 and the scale is ready for use immediately.

The SIWATOOL program facilitates rapid calibration.

Following commissioning and calibration, all data records must be read from the weighing module and saved as a scale file.

Identical scales can be put into operation immediately. Connect the PC to the new scale and enable the "Send all data records" function in service mode. This transfers the parameters for calibration weights and calibration digits, and the characteristic curve is determined immediately. The same applies when you change a weighing module.

Note

Two working points are usually sufficient for determining the scale's characteristic curve. An additional working point is only required for non-linear systems.

Specification of negative calibration points is not possible. However, the characteristic can also be used in the negative range down to -2 000 000 digits. To achieve this, the characteristic curve generated in the positive range is extended into the negative range.

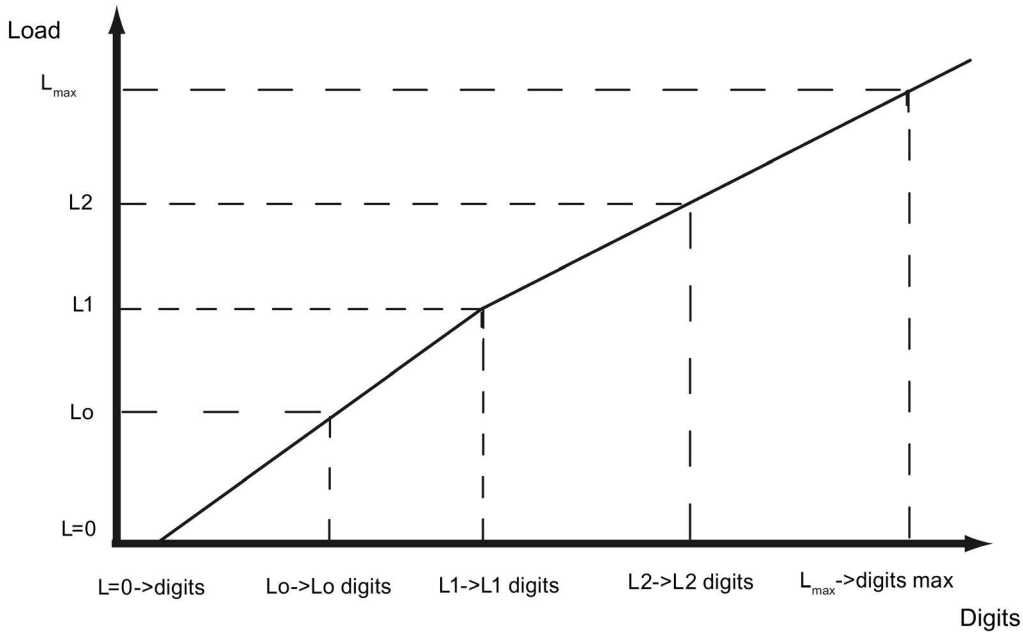

Figure 6-4 Linearizing the scale's characteristic curve

Load	Comment	Load	Digits
L=0	Load cells empty		Approx. 0
Lo	Calibration weight 0 "Zero point"	0 kg	e.g. B. 76 082 for calibration point 0
L1	Calibration weight 1	e.g. 60 kg	e.g. 386 452 for adjustment digits 1

Load	Comment	Load	Digits
L2	Calibration weight 2	e.g. 80 kg	e.g. 451 367 for adjustment digits 2
L_{max}	Rated load of the load cell(s)	e.g. 100 kg	1 000 000
L_{max} +10 %	Rated weight + approximately 10%	e.g. approx. 110 kg	1 090 000

6.4.2 Automatic calibration

Scales can be rapidly commissioned with automatic calibration. The accuracy of the scale greatly depends on the entered parameters and the mechanical properties of the scale. However, you achieve the best level of accuracy for the scales by using calibration weights.

During initial commissioning with automatic calibration, you must reset the module using the "Load factory settings" command.

Subsequently specify the load cell parameters in data record 10. Command 82 "Perform automatic calibration" then uses this data and the currently applied dead load to calculate the characteristic curve of the scale. The characteristic curve is active immediately.

Note

The characteristic curve data in data record 3 active prior to execution of command 82 is directly overwritten.

Automatic calibration requires the following criteria:

- Correct mechanical installation of the scale
- Scale is empty (only mechanical installation (= dead load) present on the cells)
- Load cells are evenly loaded
- There are no shunt circuits

6.5 DR 4 output the calculated adjustment digits

6.5.1 Overview

Data record DR 4 outputs the digits calculated from the automatic scale calibration and the calibration check. This data record cannot be sent to the scales.

Table 6- 2 Assignment of data record 4

Variable	Note	Type	Length (bytes)	Read write	Default	Min.	Max.	Modbus Register
Data record number	Contains no. of data record	USHORT	2	r	4	-	-	1200
Length	Data record length information	USHORT	2	r	28	-	-	1201
Application	Information about which application the DR belongs to	USHORT	2	r	141	-	-	1202
Version ID	Information about the current data record version	USHORT	2	r	1	1	65635	1203
Calibration digits 0, 1, 2 (calculated) (Page 80)	Calibration digits 0 (calculated): calibration digits calculated by 'automatic calibration'	LONG	4	r	0	0	1600000	1204
	Calibration digits 1 (calculated): calibration digits calculated by 'automatic calibration'	LONG	4	r	0	0	1600000	1206
	Calibration digits 2 (calculated): calibration digits calculated by 'automatic calibration'	LONG	4	r	0	0	1600000	1208
Reserve 1	Reserve	SHORT	2	r	0	-	-	1210
Reserve 2	Reserve	USHORT	2	r	0	-	-	1211
Reserve 3	Reserve	FLOAT	4	r	0	-	-	1212

6.5.2 Calibration digits 0, 1, 2 (calculated)

The calculation is based on the parameters from DR 10 and is executed using command no. 82 or 83.

6.6 DR 5 zeroing memory

6.6.1 Overview

Data record DR 5 displays the current values in the tare memory and the zeroing memory.

Procedure

- Check all parameters
- Transfer the data record to the scales

Table 6- 3 Assignment of data record 5

Variable	Note	Type	Length (bytes)	Read write Protection	Default	Min.	Max.	Modbus Register
Data record number	Contains no. of data record	USHORT	2	r	5	-	-	1214
Length	Data record length information	USHORT	2	r	40	-	-	1215
Application	Information about which application the DR belongs to	USHORT	2	r	141	-	-	1216
Version ID	Information about the current data record version	USHORT	2	r	1	1	65635	1217
Effective tare weight - from specification (Page 81)	Current tare weight (tare setting)	FLOAT	4	rw	0	0	-	1218
Effective tare weight (semi-automatic) (Page 81)	Current tare weight (semi-automatic)	FLOAT	4	rw	0	0	-	1220
Current zero tracking weight (Page 81)	Current zero weight (zero adjustment)	FLOAT	4	rw	0	-	-	1226
Dead load (Page 81)	Dead load calculated during automatic calibration	FLOAT	4	r	0	-	-	1228

Variable	Note	Type	Length (bytes)	Read write Protection	Default	Min.	Max.	Modbus Register
Reserve 1	Reserve	SHORT	2	rw	0	-	-	1230
Reserve 2	Reserve	USHORT	2	rw	0	-	-	1231
Reserve 3	Reserve	FLOAT	4	rw	0	-	-	1232

6.6.2 Effective tare weight - from specification

A tare weight can be specified in data record DR 15. You can activate a pre-defined tare weight with a 1013 command. From this point on, the activated tare weight is factored into the weight calculations. The "Delete tare" command deactivates the active tare weight. This does not delete the specification in data record DR 15.

6.6.3 Effective tare weight (semi-automatic)

The corresponding command (see command 1011) applies the current gross weight as the active tare weight. From this point on, the activated tare weight is factored into the weight calculations. The "Delete tare" command deactivates the active tare weight.

6.6.4 Current zero tracking weight

The current zero tracking weight is recorded in this parameter if automatic zero tracking is activated.

6.6.5 Dead load

The characteristic curve of the scales is determined during calibration. When there is no load, the main display returns "0". The dead load is the weight of the empty scales, i.e. the weight of the scales themselves.

6.7 DR 6 limit settings

6.7.1 Overview

The switch-on and switch-off values for the limits are configured in data record DR 6.

Procedure

- Check all parameters and modify them as required
- Transfer the data record to the scales

Table 6- 4 Assignment of data record 6

Variable	Note	Type	Length (bytes)	RW	Default	Min.	Max.	Modbus Register
Data record number	Contains no. of data record	USHORT	2	r	6	-	-	1234
Length	Data record length information	USHORT	2	r	60	-	-	1235
Application	Information about which application the DR belongs to	USHORT	2	r	141	-	-	1236
Version ID	Information about the current data record version	USHORT	2	r	1	1	65635	1237
Basis of limits	"Gross/Net - based on limit 1 and 2 0: GW 1 and GW 2 are based on gross (specified as percentage, min: -200, max: 200%) 1: GW 1 and GW 2 are based on net (specified as percentage, min: -200, max: 200%) 2: GW 1 and GW 2 are absolute values and based on gross 3: GW 1 and GW 2 are absolute values and based on net Note: The blank value then functions either as a percentage or absolute value (weight), but is always based on gross."	USHORT	2	rw	0	0	3	1238

Variable	Note	Type	Length (bytes)	RW	Default	Min.	Max.	Modbus Register
Reserve	Reserve	USHORT	2	rw	0	0	-	1239
Limit 1 ON (Page 84)	Switch-on point for limit value 1 (% of measuring range)	FLOAT	4	rw	99	9.999.999	9.999.999	1240
Reserve		LONG	4	rw	0	-	-	1242
Limit 1 OFF (Page 84)	Switch-off point for limit value 1 (% of measuring range)	FLOAT	4	rw	98	-9.999.999	-9.999.999	1244
Reserve		LONG	4	rw	0	-	-	1246
Limit 2 ON (Page 84)	Switch-on point for limit value 2 (% of measuring range)	FLOAT	4	rw	50	-9.999.999	-9.999.999	1248
Reserve								1250
Limit 2 OFF (Page 84)	Switch-off point for limit value 2 (% of measuring range)	FLOAT	4	rw	49	-9.999.999	-9.999.999	1252
Reserve		LONG	4	rw	0	0	-	1254
Limit "Empty" ON (Page 85)	Limit "Empty" ON (always based on gross) (% if measuring range)	FLOAT	4	rw	1	-9.999.999	-9.999.999	1256
Delay time for limits (Page 85)	Uniform delay time for: • Switch ON / OFF limit 1 • Switch ON / OFF limit 2 • Switch ON blank message (OFF delay empty alarm = 0 fixed) in ms	TIME	4	rw	0	0	9999999	1258
Reserve 2	Reserve	USHORT	2	rw	0	-	-	1260
Reserve 3	Reserve	USHORT	2	rw	0	-	-	1261
Reserve 4	Reserve	FLOAT	4	rw	0	-	-	1262

6.7.2 Basis of limits

The limits can be interpreted differently, depending on the selected reference quantity.

Gross/Net - based on limit (GW) 1 and 2:

Value	Ref.
0	GW 1 and GW 2 are based on gross (specified as percentage, min: -200%, max: 200%)
1	GW 1 and GW 2 are based on net (specified as percentage, min: -200%, max: 200%)
2	GW 1 and GW 2 are absolute weight values and based on gross
3	GW 1 and GW 2 are absolute weight values and based on net

Note

The blank value then functions either as a percentage or absolute weight value, but is always based on gross.

6.7.3 Limit value 1 ON, limit value 2 ON, limit value 1 OFF, limit value 2 OFF

The switch-on and switch-off points can be specified separately for each limit value as a percentage of the measuring range. This allows both minimum and maximum value violation monitoring with hysteresis. A delay time for switch-on and switch-off can also be specified. Either the current net weight or the current gross weight can be selected as the reference value for limits 1 and 2.

Maximum value monitoring is implemented with the following specifications:

- Switch-on value > switch-off value

Minimum value monitoring is implemented with the following specification:

- Switch-on value < switch-off value

The diagram below illustrates the function of limit values 1 and 2.

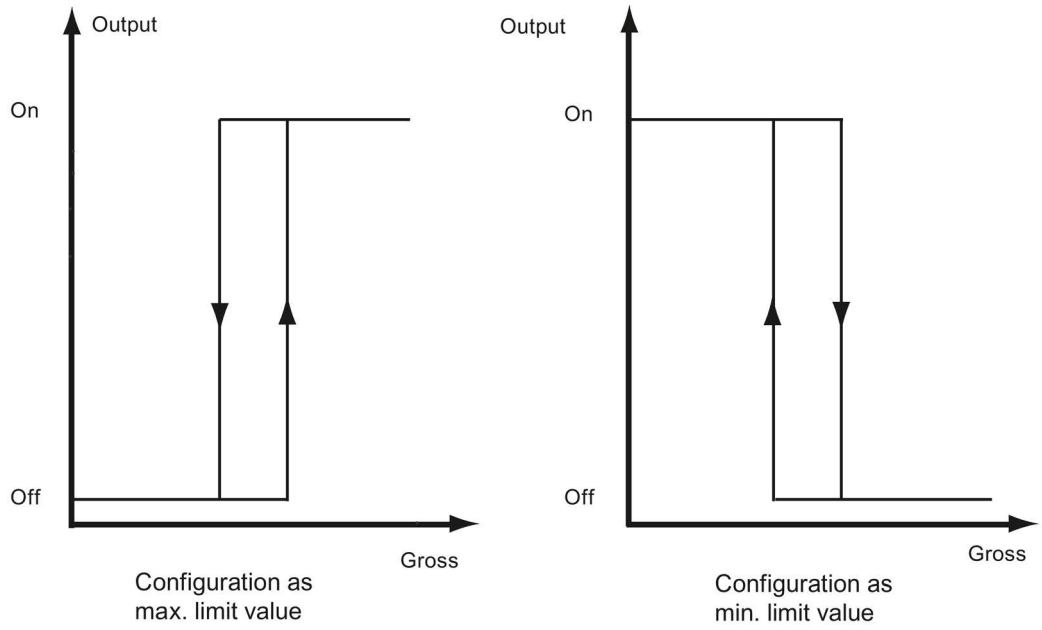

Figure 6-5 Limit value configuration

6.7.4 Limit "Empty" ON

The value for the empty range is a limit value below which the weighing module registers and returns the status "empty". The values are entered as a percentage of the measuring range. The "Empty" limit always refers to the current gross weight in the scale.

6.7.5 Delay time for limits

Uniform delay time for:

- Switch ON / OFF limit 1
- Switch ON / OFF limit 2
- Switch ON blank message
  (OFF delay blank message =0 fixed)

This is specified in ms.

6.8 DR 7 interface parameters

6.8.1 Overview

Data record DR 7 contains the parameters for defining the properties of the available I/O (digital inputs, digital outputs, serial interfaces).

If a port is not used, the default values can be retained.

Procedure

- Change the parameters if necessary
- Transfer the data record to the scales

Table 6- 5 Assignment of data record 7

Variable	Note	Type	Length (bytes)	Read write	Default	Min.	Max.	Modbus Register
Data record number	Contains no. of data record	USHORT	2	r	7	-	-	1300
Length	Data record length information	USHORT	2	r	48	-	-	1301
Application	Information about which application the DR belongs to	USHORT	2	r	141	-	-	1302
Version ID	Information about the current data record version	USHORT	2	r	1	1	65635	1303
Assignment for digital input 0, 1, 2 (Page 88)	Assignment for input 0: Code 0: No command assigned 1 … 32767: Command triggered by a rising edge (0→1 transition) 32769…65535 (command code + 32768): Command triggered by a falling edge (1→0 transition)	USHORT	2	rw	0	0	0x7FFF	1304
	Assignment for input 1: Encoding like input 0	USHORT	2	rw	0	0	0x7FFF	1305
	Assignment for input 2: Encoding like input 0	USHORT	2	rw	0	0	0x7FFF	1306
Reserve		USHORT	2	rw	0	0	1999	1307
Input filtering (hardware setting) (Page 88)	0: No filtering 1: 5 ms 2: 10 ms 3: 15 ms 4: 20 ms 5: 25 ms 6: 30 ms 7: 40 ms	USHORT	2	rw	2	0	8	1308

Variable	Note	Type	Length (bytes)	Read write	Default	Min.	Max.	Modbus Register
Assignment for digital output 0, 1, 2, 3 (Page 89)	Assignment for output 1: 0-31: Status info 33: Specified by S7 interface 34: Reserved special code for defaults 100-131: Inverted status information 255: (Compatibility) output deactivated 1000-1015: Operating error 1100-1115: Inverted operating error 2000-2047: Technological error 2100-2147: Inverted technological error 3000-3047: Data or command error 3100-3147: Inverted data or command error	USHORT	2	rw	0	0	0xFFFF	1309
	Assignment for output 1: (see Output 0)	USHORT	2	rw	0	0	0xFFFF	1310
	Assignment for output 2: (see Output 0)	USHORT	2	rw	0	0	0xFFFF	1311
	Assignment for output 3: (see Output 0)	USHORT	2	rw	0	0	0xFFFF	1312
Monitoring of the digital outputs	Monitoring of the digital outputs and their supply voltage 0: Monitoring of outputs inactive 1: Monitoring of outputs active	USHORT	2	rw	1	0	1	1313
Reaction of the digital outputs to fault or CPU stop (Page 89)	Reaction of the digital outputs to module fault or SIMATIC CPU stop: 0: All outputs are switched off 1: The corresponding predefined state value is applied 2: Outputs are not switched off, work continues 3: All outputs are switched on	USHORT	2	rw	0	0	2	1314
Reserve	Reserve	USHORT	2	rw	0	0	1	1315
Reserved		USHORT	2	rw	0	0	1	1316
Replacement value for DQ 0, 1, 2, 3 (Page 89)	Predefined state of digital output DQ 1 on error or SIMATIC CPU Stop	BIT	0	rw	0	0	1	1317.16
	Predefined state of digital output DQ 2 on error or SIMATIC CPU Stop	BIT	0	rw	0	0	1	1317.15
	Predefined state of digital output DQ 3 on error or SIMATIC CPU Stop	BIT	0	rw	0	0	1	1317.14
	Predefined state of digital output DQ 4 on error or SIMATIC CPU Stop	BIT	0	rw	0	0	1	1317.13

Variable	Note	Type	Length (bytes)	Read write	Default	Min.	Max.	Modbus Register
Trace recording cycle (Page 90)	Trace recording cycle. Every nth measured value is recorded. For example: n=1: 10 ms n=10: 100 ms 1 000: 10 s	USHORT	2	rw	1	1	1000	1318
Trace storage method (Page 90)	0: Trace recording runs as circular buffer 1: Trace is stopped when trace memory is full	BIT	0	rw	0	0	1	1319.16
Reserve 1	Reserve	LONG	4	rw	0	0	-	1320
Reserve 2	Reserve	FLOAT	4	rw	0	0	-	1322

6.8.2 Assignment for digital input 0, 1, 2

A command trigger can be assigned to a digital input. The assignment is made with the command number: → Command lists (Page 133).

Assignment for input 0, 1, 2, 3:

Code	Assignment
0	Not assigned
1…32767	Command triggered by a rising edge (0→1 transition)
32769…65535	(Command code + 32768): Command triggered by a falling edge (1→0 transition)

6.8.3 Input filtering (hardware setting)

To ensure that the inputs do not respond too quickly to the signal change, a minimum signal pending time can be specified. The pending signal is not processed further until this time has elapsed.

The following values can be set:

Value	Duration of signal queuing	Value	Duration of signal queuing
0	No filtering	4	20 ms
1	5 ms	5	25 ms
2	10 ms	6	30 ms
3	15 ms	7	35 ms
8	40 ms		

6.8.4 Assignment for digital output 0, 1, 2, 3

A status display can be assigned to a digital input. This is done on the basis of the bit number.

Assignment for output 0, 1, 2, 3:

Code Hex	Status display
0 … 1F	Bit no. of the status flags from byte 0 .. 3 from data record 30
21	Control of output via data record 18
22	Control of output via SIMATIC S7 I/O
Code FF	Output always disabled

6.8.5 Reaction of the digital outputs to fault or CPU stop

This parameter can be used to determine the reaction of the digital outputs to a fault in the SIWAREX module.

Value	Response
0	All outputs are switched off
1	The corresponding predefined state value is applied
2	Outputs are not switched off (continue)
3	Switch on all outputs

6.8.6 Replacement value for DQ 0, 1, 2, 3

The outputs are usually reset following a module fault (operating error) or SIMATIC CPU STOP. This response is the default setting.

If an output is to be set following a fault, this response is defined using this parameter. The "State of digital outputs on error or SIMATIC CPU Stop" parameter must also be set to "Replacement output upon operating error activated".

The replacement value definition is then valid.

NOTICE
Risk to the plant If an output is set following a fault (operating error), this can pose a risk for the plant. Ensure that the parameters are correctly set.

6.8.7 Trace recording cycle

The trace function is used for the continuous recording of measured values. The n parameter sets the recording rate.

Value	Response
n=1	Recording every 10 ms
n=10	Recording every 100 ms
n=100	Recording every second
N=1 000	Recording every 10 s

6.8.8 Trace storage method

This parameter is used to specify the response of the trace memory.

Value	Response
0	Trace recording runs as circulating memory
1	Trace is stopped when the trace memory is full

6.9 DR 8 date and time

The current date and time is specified or read using data record DR 8. The clock is not buffered and can only continue to function without power for about 30 seconds. If you are using the Modbus protocol, data record DR 48 must be used for the date and time.

Procedure

- Set the date and time
- Transfer the data record to the scales

Table 6- 6 Assignment of data record 8

Variable	Note	Type	Length (bytes)	RW	Default	Min.	Max.	Modbus registers
Data record number	Contains no. of data record	USHORT	2	r	8	-	-	1330
Length	Data record length information	USHORT	2	r	16	-	-	1331
Application	Information about which application the DR belongs to	USHORT	2	r	141	-	-	1332

Variable	Note	Type	Length (bytes)	RW	Default	Min.	Max.	Modbus registers
Version ID	Information about the current data record version	USHORT	2	r	1	1	65635	1333
Date and time	SIMATIC DTL format	DTL	12	rw	DTL#1970-01-01-00:00:00.0	-	-	1334

6.10 DR 9 module information

No entries can be made in data record DR 9. This data record provides information on the inner workings of the SIWAREX module. This information is used to identify the module at the manufacturer plant (e.g. in the event of repairs). The entries in the data record are of no importance to the user for operation.

Table 6- 7 Assignment of data record 9

Variable	Note	Type	Length (bytes)	RW	Default	Min.	Max.	Modus register
Data record number	Contains no. of data record	USHORT	2	r	9	-	-	1340
Length	Data record length information	USHORT	2	r	68	-	-	1341
Application	Information about which application the DR belongs to	USHORT	2	r	201	-	-	1342
Version ID	Information about the current data record version	USHORT	2	r	1	1	65 635	1343
Order number - header	Maximum and actual string length for the order number	UBYTE[2]	2	r	16,16	-	-	1344
Order number	Order number of the module 7MH ..	CHAR[16]	16	r	"7MH4980-*AA01"	-	-	1345
Serial number - header	String header	UBYTE[2]	2	r	12,12	-	-	1353
Serial number	Serial number " XXX00001"	CHAR[12]	12	r	" "	-	-	1354
Firmware type - header	String header	UBYTE[2]	2	r	2.2	-	-	1360
Firmware type	Reference V - Release B - Test etc.	CHAR[2]	2	r	'V '	-	-	1361
FW - Version - 1st digit	Version 1.	USHORT	2	r	1	-	-	1362
FW - Version - 2nd digit	Version 2.	USHORT	2	r	0	-	-	1363

Variable	Note	Type	Length (bytes)	RW	Default	Min.	Max.	Modus register
FW - Version - 3rd digit	Version 3.	USHORT	2	r	0	-	-	1364
Hardware version number	ES hardware version number (e.g. 03)	USHORT	2	r	1	-	-	1365
OS version header	String header	UBYTE[2]	2	r	2.2	-	-	1366
OS version (loader) - designation	Reference V - Release B - Test etc.	CHAR[2]	2	r	'V '	-	-	1367
OS version (loader) - designation	e.g. version n	USHORT	2	r	'V '	-	-	1368
HW device ID and HW revision ID	Read from HW and entered here Byte 0: HW device ID Byte 1: HW revision ID	USHORT	2	r	0	-	-	1369
Reserve	Reserve	USHORT	4	r	0	-	-	1370
Reserve	Reserve	USHORT	4	r	0	-	-	1371
Reserve	0	FLOAT	4	r	0	-	-	1372

6.11 DR 10 load cell parameters

6.11.1 Overview

The parameters of the analog load cells must be checked prior to the automatic calibration and modified if necessary. Only the parameters identified by bold font and asterisk (*) need be entered.

Procedure

- Check the parameters and modify them as required
- Transfer the data record to the scales
- Adjust the scales

Table 6- 8 Assignment of data record 10

Variable	Note	Type	Length (bytes)	RW	Default	Min.	Max.	Modbus registers
Data record number	Contains no. of data record	USHORT	2	r	10	-	-	1400
Length	Data record length information	USHORT	2	r	92	-	-	1401
Application	Information about which application the DR belongs to	USHORT	2	r	141	-	-	1402
Version ID	Information about the current data record version	USHORT	2	r	1	1	65635	1403
50/60 Hz toggling (Page 94)	50/60 Hz toggling	USHORT	2	rw	0	0	1	1404
Number of support points (Page 94) 1)	Number of support points	USHORT	2	rw	0	0	8	1405
Load cell characteristic value (Page 94) 1)	Characteristic value of the load cell (n) [mV/V], the mean value is used if there is more than one cell.	FLOAT	4	rw	2	>0.1	10	1406
Rated load of a load cell (Page 94) 1)	Nominal load of one single load cell	FLOAT	4	rw	60	-	-	1408
Overload limit (Page 95)	Default in % based on configured LC characteristic value as of which overload is reported.	FLOAT	2	rw	100	0	1000	1410
Impedance reference value (Page 95)	Setpoint range specification (rated value) in ohms; 0 = No impedance check	FLOAT	4	rw	0	0	-10000	1412
Permissible impedance deviation (Page 95)	Default as percentage based on impedance value (permissible range: impedance value ±x%)	FLOAT	4	rw	3	0	20	1414
Reserve	Reserve	SHORT	2	rw	0			1416
Header LC manufacturer	Header for load cell manufacturer	UBYTE[2]	2	rw	24,24			1417
Load cell manufacturer (Page 95)	Manufacturer of load cells used	CHAR[24]	24	rw				1418
Reserve	Reserve	USHORT	2	rw	0			1430
Header LC order number	Header for load cell order number	UBYTE[2]	2	rw	24,24			1431

Variable	Note	Type	Length (bytes)	RW	Default	Min.	Max.	Modbus registers
Load cell order number (Page 95)	Order number of load cells used	CHAR[24]	24	rw				1432
Reserve	Reserve	FLOAT	4	rw	0			1444

1) Parameter for calculation of calibration points with theoretical calibration

6.11.2 50/60 Hz toggling

To improve the suppression of faults caused by the supply network, you can specify the network frequency for signal filtering. The measuring rate is 100 Hz for the 50 Hz setting, and 120 Hz for the 60 Hz setting.

6.11.3 Number of support points

If no anchor points are used, the number of support points is equal to the number of load cells.

If anchor points are used in addition to load cells, the number of support points is equal to the total number of load cells and fixed support points.

6.11.4 Load cell characteristic value

The load cell characteristic value is required to correctly interpret the output voltage from the load cell. This specification is also necessary for determining load cell overload. The exact value can be entered if the measurement log for the load cell is available. The mean value can be entered if there is more than one load cell.

Example

Characteristic value = 2.018 mV/V

6.11.5 Rated load of a load cell

The rated load of a load cell is required for checking the maximum weighing range of the scales. The rated load is entered in the specified units of weight.

6.11.6 Overload limit

The parameter causes the weight value to be checked for exceeding the overload. The default is specified as a % value and acts on the specified characteristic value of the load cell. An operating error is reported in case of overload.

6.11.7 Impedance reference value

This parameter is used to activate the total impedance of the connected load cells. The impedance of the load cells can be monitored together with the allowable impedance deviation.

The current impedance can be entered or taken the current measurement (DR31) per command during commissioning.

Parameter specified in ohms;
0 = No impedance check

6.11.8 Permissible impedance deviation

The permissible deviation is given in % of the impedance reference value. Exceeding the value is displayed in the status area of the scale.

6.11.9 Load cell manufacturer

The commissioning engineer can enter the manufacturer of the load cell here.

6.11.10 Load cell order number

The commissioning engineer can enter the order number of the load cell here.

6.12 DR 11 channel status/channel activation

6.12.1 Overview

Data record DR 11 is used to activate and deactivate the weighing channel.

Procedure

- Enter the desired state for the weighing channel
- Transfer the data record to the scales

Table 6- 9 Allocation of data record 11

Variable	Note	Type	Length (bytes)	RW	Default	Min.	Max.	Modbus registers
Data record number	Contains no. of data record	USHORT	2	r	11	-	-	1460
Length	Data record length information	USHORT	2	r	12	-	-	1461
Application	Information about which application the DR belongs to	USHORT	2	r	141	-	-	1462
Version ID	Information about the current data record version	USHORT	2	r	1	1	65635	1463
Channel activation	Channel activation: 0: Channel deactivated 1: Channel activated	USHORT	2	rw	1	0	1	1464
Reserve R	Reserve	USHORT	2	rw	0	0	-	1465

6.12.2 Channel status / channel activation

The factory setting is "Weighing channel activated". The user has the option of deactivating the channel, for example, to prevent operating errors because the load cells are not yet connected for this channel or because the scale should go into operation at later time.

Deactivation suppresses diagnostic errors, process data is output with 0. The module can be pre-configured in this state.

6.13 DR 12 Ethernet parameters

6.13.1 Overview

Before the SIWAREX module can be integrated into an Ethernet network, the Ethernet parameters need to be configured.

Table 6- 10 Assignment of data record 12

Variable	Note	Type	Length (bytes)	RW	Default	Min.	Max.	Modbus registers
Data record number	Contains no. of data record	USHORT	2	r	12	-	-	1500
Length	Data record length information	USHORT	2	r	100	-	-	1501
Application	Information about which application the DR belongs to	USHORT	2	r	141	-	-	1502
Version ID	Information about the current data record version	USHORT	2	r	1	1	65635	1503
Device MAC address (Page 99)	Device MAC address 1	USHORT	2	r	0x0	0	255	1504
	Device MAC address 2	USHORT	2	r	0x30	0	255	1505
	Device MAC address 3	USHORT	2	r	0x05	0	255	1506
	Device MAC address 4	USHORT	2	r	0xD5	0	255	1507
	Device MAC address 5	USHORT	2	r	0xB0	0	255	1508
	Device MAC address 6	USHORT	2	r	0x16	0	255	1509
IP address (Page 99)	IP address x.n.n.n	USHORT	2	rw	192	0	255	1510
	IP address n.x.n.n	USHORT	2	rw	168	0	255	1511
	IP address n.n.x.n	USHORT	2	rw	0	0	255	1512
	IP address n.n.n.x	USHORT	2	rw	21	0	255	1513
Subnet mask (Page 99)	Subnet mask x.n.n.n	USHORT	2	rw	255	0	255	1514
	Subnet mask n.x.n.n	USHORT	2	rw	255	0	255	1515
	Subnet mask n.n.x.n	USHORT	2	rw	255	0	255	1516
	Subnet mask n.n.n.x	USHORT	2	rw	0	0	255	1517
Gateway (Page 100)	Gateway x.n.n.n	USHORT	2	rw	192	0	255	1518
	Gateway n.x.n.n	USHORT	2	rw	168	0	255	1519
	Gateway n.n.x.n	USHORT	2	rw	0	0	255	1520
	Gateway n.n.n.x	USHORT	2	rw	21	0	255	1521
Device name (Page 100)	Current device name header	UBYTE[2]	2	rw				1522
	Current device name	CHAR[32]	32	rw				1523
Unit identifier channel 1	Reserve	SHORT	2	rw	-1	-1	255	1539

Variable	Note	Type	Length (bytes)	RW	Default	Min.	Max.	Modbus registers
TCP port channel 1	"Modbus TCP: TCP port, is addressed with channel 1 as the base channel.	USHORT	4	rw	502	1	49151	1540
TCP port channel 1	"Modbus TCP: TCP port, is addressed with channel 1 as the base channel.	USHORT	4	rw	502	1	49151	1540
Reserve	RESERVE	BIT		rw	0	0	1	1541.16
Reserve	Reserve	BIT		rw	0	0	1	1541.15
Reserve	Reserve	BIT		rw	0	0	1	1541.14
Reserve	Reserve	BIT		rw	0	0	1	1541.13
Reserve	Reserve	BIT		rw	0	0	1	1541.12
Reserve	Reserve	BIT		rw	0	0	1	1541.11
Reserve	Reserve	BIT		rw	0	0	1	1541.10
Reserve	Reserve	BIT		rw	0	0	1	1541.9
Byte swap for text fields	"0: Normal 1: The two characters in a Modbus register are transferred in the wrong order"			rw	1	0	1	1541.8
Byte swap for 16-bit values	"0: big endian (MSB first) 1: little endian (LSB first)"	BIT		rw	0	0	1	1541.7
Byte swap for the two halves of a 32-bit value (INT32/FLOAT)	"0: big endian (MSB first) 1: little endian (LSB first)"	BIT		rw	0	0	1	1541.6
Word swap for 32-bit integers (interchanging the two Modbus registers)	"0: big endian (MSW first) 1: little endian (LSW first)"	BIT		rw	1	0	1	1541.5
Reserve	Reserve	BIT		rw	0	0	1	1541.4
Reserve	Reserve	BIT		rw	0	0	1	1541.3
Reserve	Reserve	BIT		rw	0	0	1	1541.2
Reserve	Reserve	BIT		rw	0	0	1	1541.1
Unit identifier channel 2	Reserve	SHORT	2	rw	-1	-1	255	1542
TCP port channel 2	"Modbus TCP: TCP port, is addressed with channel 1 as the base channel.	USHORT		rw	502		49151	1543
Reserve	Reserve	BIT		rw			1	1544.16
Reserve	Reserve	BIT		rw			1	1544.15
Reserve	Reserve	BIT		rw			1	1544.14
Reserve	Reserve	BIT		rw			1	1544.13
Reserve	Reserve	BIT		rw			1	1544.12
Reserve	Reserve	BIT		rw	0	0	1	1544.11

Variable	Note	Type	Length (bytes)	RW	Default	Min.	Max.	Modbus registers
Reserve	Reserve	BIT		rw	0	0	1	1544.10
Reserve	Reserve	BIT		rw	0	0	1	1544.9
Byte swap for text fields	"0: Normal 1: The two characters in a Modbus register are transferred in the wrong order"	BIT		rw	1	0	1	1544.8
Byte swap for 16-bit values	"0: Normal 1: The two characters in a Modbus register are transferred in the wrong order"	BIT		rw	0	0	1	1544.7
Byte swap for the two halves of a 32-bit value (INT32/FLOAT)	"0: big endian (MSB first) 1: little endian (LSB first)"	BIT		rw	0	0	1	1544.6
Word swap for 32-bit integers (interchanging the two Modbus registers)	"0: big endian (MSW first) 1: little endian (LSW first)"	BIT		rw	1	0	1	1544.5
Reserve	Reserve	BIT		rw	0	0	1	1544.4
Reserve	Reserve	BIT		rw	0	0	1	1544.3
Reserve	Reserve	BIT		rw	0	0	1	1544.2
Reserve	Reserve	BIT		rw	0	0	1	1544.1
Reserve	Reserve	SHORT		rw	0			1545
Reserve	Reserve	FLOAT		rw	0			1546
Reserve	Reserve	FLOAT		rw	0			1548

6.13.2 Device MAC address

Each SIWAREX module has a unique MAC address. This MAC address cannot be changed by the user.

6.13.3 IP address

Assign the IP address using the Primary Setup Tool, SIWATOOL, or via the SIMATIC (see chapter "Ethernet approvals (Page 144)").

6.13.4 Subnet mask

Assign the subnet mask of your network.

6.13.5 Gateway

If a gateway is used between the SIWAREX WP251/WP522 and the communication partner, you enter the address of the gateway here.

If a gateway is not present, enter the IP address of the SIWAREX module.

6.13.6 Device name

This parameter can be used to assign a name to the weighing module in the Ethernet network. The length of the name is limited to 32 characters. Empty spaces must be filled by "x".

6.13.7 Unit identifier channel 1 or channel 2

This parameter is used to create a logical connection via Modbus TCP/IP. The parameter pairs "Unit identifier" and "Port number" determines the logical connection of a channel with the Modbus master if a common IP address is used.

If there is only one IP address available for the module and the same port number is used (e.g. 502), the unit identifier must be different in order for each weighing channel to create a logically separate connection.

6.13.8 Modbus TCP port number channel 1 or channel 2

This parameter is used to create a logical connection via Modbus TCP/IP. The parameter pairs "Unit identifier" and "Port number" determines the logical connection of a channel with the Modbus master if a common IP address is used.

If there is only one IP address available for the module and the same unit identifier is used (e.g. 2), the port number must be different in order for each weighing channel to create a logically separate connection.

6.13.9 Byte swap

With these parameters, the byte order of variables in the communication via Modbus TCP/IP is determined.

6.14 DR 13 RS485 parameters

6.14.1 Overview

The parameters which define the response of the RS485 interface are specified in data record DR 13. If the interface is not used, the default values can be retained.

Procedure

- Check the parameters and modify them as required
- Transfer the data record to the scales

Table 6- 11 Assignment of data record 13

Variable	Note	Type	Length (bytes)	RW	Default	Min.	Max.	Modbus registers
Data record number	Contains no. of data record	USHORT	2	r	13	-	-	1558
Length	Data record length information	USHORT	2	r	24	-	-	1559
Application	Information about which application the data record belongs to	USHORT	2	r	141	-	-	1560
Version ID	Information about the current data record version	USHORT	2	r	1	1	65635	1561
RS485 protocol (Page 102)	0: No protocol 1: MODBUS RTU 2: SIEBERT display	USHORT	2	rw	1	0	2	1562
RS485 baud rate (Page 103)	0: 9 600 bps 1: 19 200 bits/s 2: 38 400 bits/s 3: 57 600 bits/s 4: 115 000 bps	USHORT	2	rw	3	0	6	1563
RS485 character parity (Page 103)	Character parity 0: Even 1: Odd	BIT	0	rw	0	0	1	1564.16
Bit 1	Reserve	BIT	0	rw	0	0	1	1564.15
	Reserve	BIT	0	rw	0	0	1	1564.14
Bit 3	Reserve	BIT	0	rw	0	0	1	1564.13
Bit 4	Reserve	BIT	0	rw	0	0	1	1564.12
Bit 5	Reserve	BIT	0	rw	0	0	1	1564.11
Bit 6	Reserve	BIT	0	rw	0	0	1	1564.10
RS485 termination	Activation of the RS485 termination	BIT	0	rw	0	0	1	1564.9

Variable	Note	Type	Length (bytes)	RW	Default	Min.	Max.	Modbus registers
Byte swap for text fields	"0: Normal 1: The two characters in a Modbus register are transferred in the wrong order"	BIT	0	rw	0	0	1	1564.8
Byte swap for 16-bit values	"0: big endian (MSB first) 1: little endian (LSB first)"	BIT	0	rw	0	0	1	1564.7
Byte swap for the two halves of a 32-bit value (INT32/FLOAT)	"0: big endian (MSB first) 1: little endian (LSB first)"	BIT	0	rw	0	0	1	1564.6
Word swap for 32-bit integers (interchanging the two Modbus registers)	"0: big endian (MSW first) 1: little endian (LSW first)"	BIT	0	rw	0	0	1	1564.5
Bit 12	Reserve	BIT	0	rw	0	0	1	1564.4
Bit 13	Reserve	BIT	0	rw	0	0	1	1564.3
Bit 14	Reserve	BIT	0	rw	0	0	1	1564.2
Bit 15	Reserve	BIT	2	rw	0	0	1	1564.1
RS485 Modbus address (Page 103)	MODBUS address for Vito module	USHORT	2	rw	20	1	255	1565
Decimal place for Siebert indicator (Page 103)	Decimal place for Siebert display	SHORT	2	rw	0	-	-	1566
MODBUS RTU frame delay	Delay time for response with MODBUS RTU in ms (RS485)	USHORT	2	rw	0	-	-	1567
Reserve 3	Reserve	FLOAT	4	rw	0	-	-	1568

6.14.2 RS485 protocol

This parameter defines the protocol for communication via the RS485 interface.

Value	Protocol
0	No communication/protocol
1	Modbus RTU
2	SIEBERT display

6.14.3 RS485 baud rate

This parameter defines the baud rate for the RS485 interface.

Value	Baud rate
0	9 600 bps
1	19 200 bps
2	38 400 bps
3	57 600 bps
4	115 000 bps

6.14.4 RS485 character parity

This parameter defines the character parity for the RS485 interface.

Value	Character parity
0	Even
1	Odd

6.14.5 RS485 termination

A termination resistor is switched internally with these parameters.

6.14.6 Byte swap

The byte order of variables in the communication via Modbus RTU is determined with these parameters.

6.14.7 RS485 Modbus address

This parameter defines the Modbus address (1 to 230) for communication via the RS485 interface with the Modbus protocol.

6.14.8 Decimal place for Siebert indicator

A fixed decimal place must be specified if a Siebert indicator is used. The following values are permitted: 0 ... 4

6.14.9 Modbus RTU message frame delay

These parameters specify the delay time (in ms) expected by the module replying to a master request for data.

6.15 DR 14 SIMATIC interface parameters

6.15.1 Overview

The parameters which define the response of the SIMATIC interface are specified in data record DR 14. It is possible to define the process values to be output on the basis of the I/O area.

Procedure

- Check the parameters and modify them as required
- Transfer the data record to the scales

Table 6- 12 Assignment of data record 14

Variable	Note	Type	Length (bytes)	RW	Default	Min.	Max.	Modbus registers
Data record number	Contains no. of data record	USHORT	2	r	14	-	-	1570
Length	Data record length information	USHORT	2	r	16	-	-	1571
Application	Information about which application the DR belongs to	USHORT	2	r	141	-	-	1572
Version ID	Information about the current data record version	USHORT	2	r	1	1	65635	1573
Selection of process value 1, 2 (Page 105)	Selection of process value 1 (S7 I/O interface): Code for selection of process variable to be updated	USHORT	2	rw	4	0	10	1574

Variable	Note	Type	Length (bytes)	RW	Default	Min.	Max.	Modbus registers
	Selection of process value 2 (S7 I/O interface): Code for selection of process variable to be updated	USHORT	2	rw	10	0	10	1575
Selection of process value 1, 2 (Page 105)	Possible Simatic mode	SHORT	2	rw	1	1	4	1576
Reserve 2	Reserve	USHORT	2	rw	0	0	-	1577

6.15.2 Selection of process value 1, 2

The weighing module can communicate with an S7-1500 CPU in two ways: Just via the I/O or by reading out complete data records. The I/O is faster and exhibits a higher performance. Two free-definable channels are available in the S7 I/O (process value 1 and process value 2). Users can decide which scale values (see table) are to be made available cyclically at these two parameters of the PLC.

Table 6- 13 Selection table for process value 1,2

Process value	Decimal code	From DR	Format
No process selected	0	-	-
Gross process	1	30	FLOAT
Net process	2	30	FLOAT
Tare process	3	30	FLOAT
Legal trade G/N weight	4	30	FLOAT
G/N weight_x10	5	30	FLOAT
Gross-2-process-value	6	30	FLOAT
Reserve	7	30	FLOAT
Filtered digit intermediate value	8	31	LONG
Unfiltered digit value	9	31	LONG
Filtered digit value	10	31	LONG
"Array: Status DI/DQs (PW[0.1]) Refresh counter (PW[2,3])", see Table 6-18 Assignment of data record 31 (Page 115)	11	31	USHORT USHORT
Reserve	12		
Reserve	13		

Process value	Decimal code	From DR	Format
Reserve	14		
Async. error bits (32-bit): bits 0..15: Operating error BTF (word 0) bits 16..31: Technology error TNF (word 2), see Table 6-19 Assignment of data record 32 (Page 118)	15	32	LONG

See also

Overview (Page 114)

DR 32 alarm display (Page 117)

6.16 DR 15 tare default values

6.16.1 Overview

Data record DR 15 is used for external specification of the tare weight.

Procedure

- Enter the tare weight
- Transfer the data record to the scales
- Activate the tare weight with a command

Table 6- 14 Assignment of data record 15

Variable	Note	Type	Length (bytes)	RW	Default	Min.	Max.	Modbus registers
Data record number	Contains no. of data record	USHORT	2	r	15	-	-	1578
Length	Data record length information	USHORT	2	r	16	-	-	1579
Application	Information about which application the DR belongs to	USHORT	2	r	141	-	-	1580
Version ID	Information about the current data record version	USHORT	2	r	1	1	65635	1581

Variable	Note	Type	Length (bytes)	RW	Default	Min.	Max.	Modbus registers
Default tare weight (Page 107)	Tare manual	FLOAT	4	rw	0	0	Depends on specification in DR 3	1582
Reserve R	Reserve	SHORT	2	rw	0	0	-	1584

6.16.2 Default tare weight

If a tare weight is to be used, first it must be entered in DR15 and then activated with the command "Set Tare 1 (1013)" . The tare weight must not exceed the maximum values specified in data record DR 3.

6.17 DR 16 simulation value

6.17.1 Overview

Specifying a weight value using data record DR 16 disables the measuring input of the SIWAREX module and "simulates" a weight with the specified value. The SIWAREX module must first be released for simulation mode in DR 3 and then switched to simulation mode with command no. 3.

Procedure

- Release simulation mode in DR 3
- Enter the weight to be simulated
- Transfer the data record to the SIWAREX module
- Start the simulation using command "Weight simulation on (3)"
- Stop the simulation using command "Weight simulation off (4)"

Table 6- 15 Assignment of data record 16

Variable	Note	Type	Length (bytes)	RW	Default	Min.	Max.	Modbus registers
Data record number	Contains no. of data record	USHORT	2	r	16	-	-	1598
Length	Data record length information	USHORT	2	r	16	-	-	1599
Application	Information about which application the data record belongs to	USHORT	2	r	141	-	-	1600

Variable	Note	Type	Length (bytes)	RW	Default	Min.	Max.	Modbus registers
Version ID	Information about the current data record version	USHORT	2	r	1	1	65635	1601
Weight simulation specification (Page 108)	Weight value specification (only relevant if simulation mode is enabled)	FLOAT	4	rw	0	maximum weighing range	maximum weighing range	1602
Reserve	Reserve	FLOAT	2	rw	0	0	-	1604

6.17.2 Weight simulation specification

Only use weight simulation values which are within the measuring range of the scales. The word "TEST" is displayed on the main display during simulation and a status bit is set. From the start of simulation onward, all parameterized limits, inputs and outputs etc. refer to the simulation weight.

6.18 DR 18 digital output control specifications

6.18.1 Overview

If a digital output is defined in data record DR 7 for control with data record DR 18 (see Assignment for digital output 0, 1, 2, 3 (Page 89)), you can control this output with data record DR 18. Transfer is always for all four digital outputs. Only outputs which have been configured for control via DR 18 (see DR7 interface parameters (Page 86)) are activated or deactivated according to the content of data record DR 18.

Procedure

- Check or adapt the desired parameter settings of the digital outputs in data record 7
- Define the value for digital output 0, 1, 2, 3
- Transfer the data record to the scales

Table 6- 16 Assignment of data record 18

Variable	Note	Type	Length (bytes)	RW	Default	Min.	Max.	Modbus registers
Data record number	Contains no. of data record	USHORT	2	r	18	-	-	1606
Length	Data record length information	USHORT	2	r	12	-	-	1607
Application	Information about which application the DR belongs to	USHORT	2	r	141	-	-	1608
Version ID	Information about the current data record version	USHORT	2	r	1	1	65635	1609
Specification for digital output 0, 1, 2, 3 (Page 110)	Specification of digital output 0=1 -> DA0 output active (only if assignment Code 21 is assigned to the output, see DR 7)	BIT	0	rw	0	0	1	1610.16
	Specification of digital output 1=1 -> DA1 output active (only if assignment Code 21 is assigned to the output, see DR 7)	BIT	0	rw	0	0	1	1610.15
	Specification of digital output 2=1 -> DA2 output active (only if assignment Code 21 is assigned to the output, see DR 7)	BIT	0	rw	0	0	1	1610.14
	Specification of digital output 3=1 -> DA3 output active (only if assignment Code 21 is assigned to the output, see DR 7)	BIT	0	rw	0	0	1	1610.13
Bit 4	Reserve	BIT	0	rw	0	0	1	1610.12
Bit 5	Reserve	BIT	0	rw	0	0	1	1610.11
Bit 6	Reserve	BIT	0	rw	0	0	1	1610.10
Bit 7	Reserve	BIT	0	rw	0	0	1	1610.9
Bit 8	Reserve	BIT	0	rw	0	0	1	1610.8
Bit 9	Reserve	BIT	0	rw	0	0	1	1610.7
Bit 10	Reserve	BIT	0	rw	0	0	1	1610.6
Bit 11	Reserve	BIT	0	rw	0	0	1	1610.5
Bit 12	Reserve	BIT	0	rw	0	0	1	1610.4
Bit 13	Reserve	BIT	0	rw	0	0	1	1610.3
Bit 14	Reserve	BIT	0	rw	0	0	1	1610.2

Variable	Note	Type	Length (bytes)	RW	Default	Min.	Max.	Modbus registers
Bit 15	Reserve	BIT	2	rw	0	0	1	1610.1
Reserve 1	Reserve	USHORT	2	rw	0	-	-	1611

6.18.2 Specification for digital output 0, 1, 2, 3

Digital outputs 0 to 3 can be controlled using data record 18 with this parameter. This function can be used for commissioning purposes, for example.

Note

The reaction of the controlled outputs in the case of SIMATIC CPU stop, failure or module fault can be determined by the user in DR 7.

6.19 DR 30 current process values

6.19.1 Overview

Current states and process values in the scales can be monitored using process values and advanced process values from data record DR 31. Monitoring selected data during commissioning is extremely useful as it helps you to optimize parameters.

Procedure

- Read data record DR 30 via a time-controlled OB
- Display/analyze the required tags

It is not always necessary to cyclically read data record DR 30. If corresponding process tags have already been selected in DR 14 (Page 104), they are sent to the scale data block over the I/O interface using the FB. In this case, you can use these tags and also all status bits without the data communication.

Table 6- 17 Assignment of data record 30

Variable	Note	Type	Length (bytes)	RW	Default	Min.	Max.	Modbus registers
Data record number	Contains no. of data record	USHORT	2	r	30	-	-	3000
Length	Data record length information	USHORT	2	r	68	-	-	3001
Application	Information about which application the data record belongs to	USHORT	2	r	141	-	-	3002
Version ID	Information about the current data record version	USHORT	2	r	1	1	255	3003
1/4d zero	Set if gross less than ± 0.25e	BIT	2	r	0	-	-	3004.16
Max 9e/-20d	Set if the weight has exceeded the gross weighing range by more than 9 display steps (d)	BIT	0	r	0	-	-	3004.15
Tared	Set if tare memory is not equal to zero	BIT	0	r	0	-	-	3004.14
Manual tare set (pT)	Set if the tare memory is assigned an external specified value 1	BIT	0	r	0	-	-	3004.13
Reserve		BIT	0	r	0	-	-	3004.12
Waiting for standstill	Set if module is waiting for standstill to execute command	BIT	0	r	0	-	-	3004.11
Standstill	Set if standstill condition is met	BIT	0	r	0	-	-	3004.10
Reserve		BIT	0	r	0	-	-	3004.9
Empty	Set if "Empty" condition is met	BIT	0	r	0	-	-	3004.8
Limit value 1	Limit value 1 has responded	BIT	0	r	0	-	-	3004.7
Limit value 2	Limit value 2 has responded	BIT	0	r	0	-	-	3004.6
Min violated	Set if min. is violated	BIT	0	r	0	-	-	3004.5
Reserve		BIT						3004.4
Channel active	Channel is set active	BIT	0	r	0	-	-	3004.3

Variable	Note	Type	Length (bytes)	RW	Default	Min.	Max.	Modbus registers
Channel display channel B	1= Status comes from channel B	BIT	0	r	0	-	-	3004.2
Channel display channel A	1= Status comes from channel A	BIT	0	r	0	-	-	3004.1
Reserve		BIT	0	r	0	-	-	3005.16
Reserve		BIT	0	r	0	-	-	3005.15
Reserve		BIT	0	r	0	-	-	3005.14
Reserve		BIT	0	r	0	-	-	3005.13
Impedance error	Set when leaving the setpoint range of impedance	BIT	0	r	0	-	-	3005.12
Wrong time	Wrong time due to empty buffer. Reset clock.	BIT	0	r	0	-	-	3005.11
Trace active	Set when trace is running	BIT	0	r	0	-	-	3005.10
Operator error by digital input	Set with synchronization error by command to digital input	BIT	0	r	0	-	-	3005.9
Calibration characteristic curve implausible	Points of calibration characteristic curve are not plausible or complete	BIT	0	r	0	-	-	3005.8
Service mode	Service mode is active	BIT	0	r	0	-	-	3005.7
Simulation mode	Simulations mode is active	BIT	0	r	0	-	-	3005.6
Reserve		BIT	0	r	0	-	-	3005.5
Reserve		BIT	0	r	0	-	-	3005.4
CPU stop or CPU failure	Set when switch S1 is OFF (operation with SIMATIC) and S7 CPU has failed or ODIS is active	BIT	0	r	0	-	-	3005.3
Startup	Startup has taken place, is deleted again after 5 seconds	BIT	0	r	0	-	-	3005.2
Status fault	Operating error pending	BIT	0	r	0	-	-	3005.1
Gross process weight (Page 113)	Gross weight (process value)	FLOAT	4	r	0	-	-	3006
Net process weight (Page 113)	Net weight (process value)	FLOAT	4	r	0	-	-	3008
Tare process weight (Page 113)	Tare weight (process value)	FLOAT	4	r	0	-	-	3010

Variable	Note	Type	Length (bytes)	RW	Default	Min.	Max.	Modbus registers
Gross / net weight (Page 114)	Gross or net weight	FLOAT	4	r	0	-	-	3012
Gross / net weight with increased resolution (x 10) (Page 114)	Legal trade Gross/Net weight x10	FLOAT	4	r	0	-	-	3014
Gross process weight 2 (Page 114)	Gross weight after first filter	FLOAT	4	r	0	-	-	3016
Percentage gross weight based on maximum capacity (DR3)	Percentage gross weight based on maximum capacity (rounded to one decimal place)	FLOAT	4	r	0	-	-	3018
Refresh counter for process values (Page 114)	Refresh counter incremented by 1 if weight values were changed	USHORT	2	r	0	-	-	3020
Date and time	SIMATIC DTL format	DTL	12	rw	DTL#1970-01-01-00:00:00.0			3021
Reserve		SHORT	2	r	0	-	-	3029
Reserve		FLOAT	4	r	0	-	-	3030
Reserve		FLOAT	4	r	0	-	-	3032

6.19.2 Gross process weight

The current gross weight. The rounding is performed according to the specifications in data record DR 3 with the parameter "Automatic zero adjustment (Page 72)".

6.19.3 Net process weight

The current net weight. The rounding is performed according to the specifications in data record DR 3 with the parameter "Automatic zero adjustment (Page 72)".

6.19.4 Tare process weight

The current tare weight. The rounding is performed according to the specifications in data record DR 3 with the parameter "Automatic zero adjustment (Page 72)".

6.19.5 Gross / net weight

The current weight for the main display. Resolution corresponds setting in data record DR 3 Scale interval (Page 72).

6.19.6 Gross / net weight with increased resolution (x 10)

The current weight for the main display in higher resolution. Resolution corresponds setting in data record DR 3 Scale interval (Page 72) x 10.

6.19.7 Gross process weight 2

The current gross weight after the first filter. Since the value was not even filtered with filter 2, it is usually filtered weaker than the gross process value.

6.19.8 Refresh counter for process values

Measured values are calculated every 10 ms in the SIWAREX module. A counter is incremented by 1 each time. Once the counter reaches the value 65536, it starts again from zero. The counter can be used as a time stamp for data record DR 30.

6.20 DR 31 advanced current process values

6.20.1 Overview

Current states and process values in the scales can be monitored using advanced process values and process values (DR 30). This data is not required for standard operation of the scales.

Monitoring selected data during trial operation is extremely useful as it helps you to optimize parameters.

Procedure

- Read data record DR 31
- Display/analyze the required tags

Table 6- 18 Assignment of data record 31

Variable	Note	Type	Length (bytes)	RW	Default	Min.	Max.	Modbus registers
Data record number	Contains no. of data record	USHORT	2	r	31	-	-	3300
Length	Data record length information	USHORT	2	r	32	-	-	3301
Application	Information about which application the data record belongs to	USHORT	2	r	101	-	-	3302
Version ID	Information about the current data record version	USHORT	2	r	1	1	65635	3303
Unfiltered digit value (Page 116)	Unfiltered digital value from the AD converter	LONG	4	r	0	-	-	3304
Filtered digit value after the first filter (Page 116)	Filtered digit intermediate value of the AD converter after the first filter	LONG	4	r	0	-	-	3306
Digits filtered (Page 116)	Filtered digit value from the AD converter after the second filter	LONG	4	r	0	-	-	3308
Load cell impedance	Currently measured impedance of the load cells in ohms	FLOAT	4	r	0	-	-	3310
Current status of input 0, 1, 2 (Page 116)	Current status of input 0	BIT	0	r	0	0	1	3312.16
	Current status of input 1	BIT	0	r	0	0	1	3312.15
	Current status of input 2	BIT	0	r	0	0	1	3312.14
	Current status of input 3	BIT	0	r	0	0	1	3312.13
Bit 4	Reserve	BIT	0	r	0	0	1	3312.12
Bit 5	Reserve	BIT	0	r	0	0	1	331211
Bit 6	Position of DIP switch 1	BIT	0	r	0	0	1	3312.10
Bit 7	Position of DIP switch 2	BIT	0	r	0	0	1	3312.9
Current status of digital output 0, 1, 2, 3 (Page 116)	Current status of output 0	BIT	0	r	0	0	1	3312.8
	Current status of output 1	BIT	0	r	0	0	1	3312.7
	Current status of output 2	BIT	0	r	0	0	1	3312.6
	Current status of output 3	BIT	0	r	0	0	1	3312.5
Reserve		BIT	0	r	0	0	1	3312.4
Reserve		BIT	0	r	0	0	1	3312.3
Reserve		BIT	0	r	0	0	1	3312.2
Reserve		BIT	2	r	0	0	1	3312.1

Variable	Note	Type	Length (bytes)	RW	Default	Min.	Max.	Modbus registers
Refresh counter for process values (Page 117)	Refresh counter incremented by 1 if weight values were changed	USHORT	2	r	0	-	-	3313
Current load cell signal in mV (Page 117)	Currently measured load cell signal	FLOAT	4	r	0	-	-	3314

6.20.2 Unfiltered digit value

The unfiltered digit value is the internal measured value immediately before filtering.

6.20.3 Filtered digit value after the first filter

Filtered digit value is the internal measured value immediately after the first filtering.

6.20.4 Digits filtered

Filtered digit value is the internal measured value after the filtering with the first and second filters.

6.20.5 Current status of input 0, 1, 2

This parameter allows you to check the current status of the digital inputs.

6.20.6 Current status of digital output 0, 1, 2, 3

This parameter allows you to check the current status of the digital outputs.

6.20.7 Current status of DIP switch

Switch 1:

ON - Operation without SIMATIC (stand-alone mode)

OFF - Operation in SIMATIC

Switch 2:

No meaning

6.20.8 Refresh counter for process values

Measured values are calculated every 10 ms in the SIWAREX module. A counter is incremented by 1 each time. Once the counter reaches the value 65536, it starts again from zero. The counter can used like a time stamp for the data record DR 30/31.

6.20.9 Current load cell signal in mV

Display of currently measured signal voltage of the load cell(s) in mV.

6.21 DR 32 alarm display

Data record DR 32 is used in the Modbus communication with Modbus master.

Operating errors or technology errors are reported spontaneously and the bit display is extended approximately 3 seconds so that there is enough time to register the message. The operating errors are displayed as long as the error is pending.

Data and operating errors are treated as follows.

If a function which is used to write to the holding register is completed with an error, the data or operator error reported can be read from data record DR 32. The messages are displayed for 3 seconds and do not need to be acknowledged from the SIWAREX module.

The exact cause of a parameter or operating error can be determined through additional information. The additional information is provided in the message list (section Message list (Page 124)).

At successful completion of a function for writing to the SIWAREX register, data record DR 32 does not have to be polled.

Table 6- 19 Assignment of data record 32

Variable	Note	Type	Length (bytes)	R W	De-fault	Mi n.	Max .	Mod-bus regis-ters
Data record number	Contains no. of data record	USHO RT	2	r	32	-	-	3500
Length	Data record length information	USHO RT	2	r	28	-	-	3501
Application	Information about which application the DR belongs to	USHO RT	2	r	141	-	-	3502
Version ID	Information about the current data record version	USHO RT	2	r	1	1	655 35	3503
1000 Operating error pending	At least one operating error has occurred (= 1 as long as an operating error is pending)	Bit_0	0	r	0	-	-	3504
1108 Short-circuit	Short-circuit to power supply line to the load cell	Bit_1	0	r	0	-	-	3504
1104 Undervoltage	Undervoltage at SENSE input	Bit_2	0	r	0	-	-	3504
1109 Fault digital outputs	Fault digital outputs (overtemperature, no ext. supply voltage)	Bit_3	0	r	0	-	-	3504
1105 Overload	Overload	Bit_4	0	r	0	-	-	3504
1106 Underload	Load low	Bit_5	0	r	0	-	-	3504
-	Reserve	Bit_6	0	r	0	-	-	3504
1102 ADU error	A/D converter error	Bit_7	0	r	0	-	-	3504
-	Reserve	Bit_8	0	r	0	-	-	3504
1003 Checksum error (parameter)	Checksum error with parameters	Bit_9	0	r	0	-	-	3504
-	Reserve	Bit_10	0	r	0	-	-	3504
1004 Checksum error (program)	Checksum error in program code	Bit_11	0	r	0	-	-	3504
-	Reserve	Bit_12	0	r	0	-	-	3504
1001 Watchdog	Restart after fatal error	Bit_13	0	r	0	-	-	3504
-	Reserve	Bit_14	0	r	0	-	-	3504
Unable to connect to SIMATIC	The firmware must be updated using the new TIA Portal	Bit_15	1	r	0	-	-	3504
2000 Technological error detected	At least one technology is a fault is pending (group error)	Bit_0	0	r	0	-	-	3505
2001 Timeout tare or zero	Taring or zeroing is not possible because no standstill occurred within the waiting period.	Bit_1	0	r	0	-	-	3505

Variable	Note	Type	Length (bytes)	R W	De-fault	Mi n.	Max .	Mod-bus regis-ters
2002 Trace overloaded	The configured cycle for the trace re-cording cannot be processed: Reading in progress or the buffer is full, data recording has stopped	Bit_2	0	r	0	-	-	3505
-	Reserve	Bit_3	0	r	0	-	-	3505
-	Reserve	Bit_4	0	r	0	-	-	3505
Cold restart	Restart after power failure or firmware update	Bit_5	0	r	0	-	-	3505
Download error	FW download aborted or rejected	Bit_6	0	r	0	-	-	3505
-	Reserve	Bit_7	1	r	0	-	-	3505
-	Reserve	Bit_8	0	r	0	-	-	3505
-	Reserve	Bit_9	0	r	0	-	-	3505
-	Reserve	Bit_10	0	r	0	-	-	3505
-	Reserve	Bit_11	0	r	0	-	-	3505
-	Reserve	Bit_12	0	r	0	-	-	3505
-	Reserve	Bit_13	0	r	0	-	-	3505
Default parameters loaded	Note to users about the newly loaded parameters	Bit_14	0	r	0	-	-	3505
Factory settings restored	Note to users about the newly loaded parameters	Bit_15	1	r	0	-	-	3505
-	Reserve	Bit_0-Bit_15	0	r	0	-	-	3506-3507
5000 Data or command error	Group fault	Bit_0	0		0	-	-	3508
6050 Command unknown	Issued command code unknown.	Bit_1	0		0	-	-	3508
6051 Command currently not possible	"Additional information" contains addi-tional information	Bit_2	0	r	0	-	-	3508
6052 Error service com-mand	"Additional information" contains addi-tional information	Bit_3	0	r	0	-	-	3508
6053 Calibration command error	All commands for adjustment, calibration	Bit_4	0	r	0	-	-	3508
6054 Scale command error	"Additional information" contains addi-tional information	Bit_5	0	r	0	-	-	3508
6055 Scale command error	"Additional information" contains addi-tional information	Bit_6	0	r	0	-	-	3508
6056 Memory command error	"Additional information" contains addi-tional information	Bit_7	1	r	0	-	-	3508
7050 Unknown data record	Requested DR unknown	Bit_8	0	r	0	-	-	3508
7051 Parameter input cur-rently not possible	"Additional information" contains addi-tional information	Bit_9	0	r	0	-	-	3508
7052 Parameter change not possible due to write pro-tection	"Additional information" contains addi-tional information	Bit_10	0	r	0	-	-	3508

Variable	Note	Type	Length (bytes)	R W	De-fault	Mi n.	Max .	Mod-bus regis-ters
7053 Error in calibration parameter DR3	"Additional information" contains additional information	Bit_11	0	r	0	-	-	3508
7054 Parameter error DR5	"Additional information" contains additional information	Bit_12	0	r	0	-	-	3508
7055 Parameter error DR6	"Additional information" contains additional information	Bit_13	0	r	0	-	-	3508
7056 Parameter error DR7	"Additional information" contains additional information	Bit_14	0	r	0	-	-	3508
7057 Parameter error DR8/DR48	"Additional information" contains additional information	Bit_15	1	r	0	-	-	3508
7058 Parameter error in DR10 or DR11	"Additional information" contains additional information	Bit_0	0	r	0	-	-	3509
7059 Error in interface parameters DR12-DR14	"Additional information" contains additional information	Bit_1	0	r	0	-	-	3509
7060 Error in extended parameters DR15 DR19	"Additional information" contains additional information	Bit_2	0	r	0	-	-	3509
-	Reserve	Bit_3-Bit_15	0	r	0	-	-	3509-3510
Additional information about data and operating errors	Additional information about data and operating errors (see Additional Information list)	USHORT	1	r	0	-	-	3511
Data and operating error code	Error number (see error list)	USHORT	2	r	0	-	-	3512
Reserve	Reserve	USHORT	2	r	0	-	-	3513

6.22 DR 34 ASCII main display value

6.22.1 Overview

The ASCII weight value corresponds to the value on the main display of the scale and can be used in addition to the main display for an auxiliary display / operating display.

Table 6- 20 Assignment of data record 34

Variable	Note	Type	Length (bytes)	RW	Default	Min.	Max.	Modbus registers
Data record number	Contains no. of data record	USHORT	2	r	34	-	-	4000
Length	Data record length information	USHORT	2	r	26	-	-	4001
Application	Information about which application the DR belongs to	USHORT	2	r	101	-	-	4002
Version ID	Information about the current data record version	USHORT	2	r	1	1	65635	4003
ASCII display string header	Maximum length and actual length of string	UBYTE[2]	2	r	16,2	-	-	4004
Content of main display as ASCII string (Page 121)	For display of legal-for-trade weight value, legal-for-trade resolution, etc. (see below)	CHAR[16]	16	r	" "	-	-	4005

6.22.2 Content of main display as ASCII string

The following values can be displayed in non-automatic weighing instruments (NAWI) applications:

Display content	Activation per command	Identifier
Standard display	710	B/G
Increased resolution (temporarily)	701 (only possible in "Standard display" mode)	x
Net process display	714	n
Gross process display	715	
Tare display (temporary)	705	T
same as during preset tare active	705	p
Weight simulation active	3	

Display overflow	-	B
Operator error	-	-

6.23 DR 48 date and time 2 (for Modbus)

The current date and time can be set or read via data record DR 48. The clock is not buffered and can only continue to function without power for about 30 seconds. Data record DR 8 is used for date and time when the Modbus protocol is not used.

Procedure

- Set the date and time
- Transfer the data record to the SIWAREX module

Table 6- 21 Table 8- 27 Assignment of data record 48

Variable	Note	Type	Length (bytes)	RW	Default	Min.	Max.	Modbus registers
Data record number	Contains no. of data record	USHORT	2	r	48	-	-	4500
Length	Data record length information	USHORT	2	r	24	-	-	4501
Application	Information about which application the data record belongs to	USHORT	2	r	141	-	-	4502
Version ID	Information about the current data record version	USHORT	2	r	1	1	65635	4503
Year	Year number	USHORT	2	rw	2015	2012		4504
Month	Month	USHORT	2	rw	1	1	12	4505
Day	Day in the month	USHORT	2	rw	1	1	31	4506
Hour	Hour	USHORT	2	rw	0	0	23	4507
Minute	Minute	USHORT	2	rw	0	0	59	4508
Second	Second	USHORT	2	rw	0	0	59	4509
Millisecond	Millisecond	USHORT	2	rw	0	0	999	4510
Day of the week	Day of the week	USHORT	2	rw	1	1	7	4511

Alarm logging 7

7.1 Message types

The messages in the electronic weighing system described here are divided into three types.

Operating messages

System status messages can be generated spontaneously at any time by an unexpected event. They include internal and external hardware problems which can occur spontaneously during weighing.

Technological error

Technology errors occur spontaneously due to the weighing process.

The status bits are not messages in contrast. The status indicators describe the status of the scale in normal operation and can always be observed and evaluated.

Data and operating errors

The data and operating errors are always a response to a command due to a plausibility check.

These are data errors if a plausibility error has been detected in a data packet which was sent to the module and receipt of the packet has been rejected by the module.

These are operating errors if the module cannot execute the sent command in its current operating state.

7.2 Message paths

You can read out the messages using different paths. You define the path for forwarding and processing of messages during configuration.

The messages are processed for two basic purposes:

- For display or recording on an operator panel for the operator
- For linking in the control software to control specific reactions in the process.

The following message paths are possible:

- Output of the message buffer to the SIWATOOL program (takes place automatically)
- Output by means of function block as bit field in Scale data block
- Certain operating errors can be transmitted as diagnostic interrupts to the SIMATIC CPU and evaluated by OB82

7.3 Evaluating messages with the help of SIWATOOL

The electronic weighing system has a message buffer for each weighing channel. The buffer can contain up to 60 entries. If the number of alarms in the alarm buffer exceeds 60, the oldest entry is overwritten. The message buffer can be read out at any time with the help of SIWATOOL (menu item "Read out all data records") and saved together with the scale parameters. This facilitates the detection, analysis and correction of errors in the system.

7.4 Detecting messages with the help of FB SIWA

All messages of the SIWAREX module can be fully detected and processed in the controller using the SIWAREX WP521/WP522 function block. The messages can be evaluated directly in a signaling system by means of a bit signaling area in the scale data block. The message texts are stored in the signaling system. The message text is output when a bit becomes "1".

7.5 Message list

7.5.1 Introduction

The message list is an overview of all messages that the SIWAREX module can generate. A message can be quickly identified by the message code (number).

7.5.2 System status message list

Operator error (code 1000 to 1999)	Error code	Description and remedy
1000 Operating error pending	1000	Group message, at least one operating error exists.
1001 Watchdog	1001	Watchdog, error is displayed for at least 10 seconds. A serious error has occurred in the function of SIWAREX, e.g. program error, severe electromagnetic influence on device, etc. Contact the SIWAREX Support if the error occurs multiple times.
1003 Checksum incorrect parameter	1003	Checksum error at parameter. Critical error because the parameters are no longer safe.
1004 Checksum incorrect program	1004	Checksum error program code. Critical error because the program is no longer safe.
1008 Firmware version not compatible	1008	The firmware must be updated via the TIA Portal.
1102 ADU error	1102	AD converter error when reading in the measured value. If the error occurs again, make sure that the EMC recommendations are observed (chapter Electrical, EMC and climatic requirements (Page 161)).
1104 Undervoltage	1104	Undervoltage at sensor cables
1105 Overload	1105	Overload of scale (ca. 110%)
1106 Underload	1106	Underload of scale (ca. -10%)
1108 Short-circuit	1108	Short-circuit to power supply line to the load cell
1109 Fault digital outputs	1109	Fault digital outputs (overtemperature, no ext. supply voltage)

7.5.3 Technology error message list

Technology error (code 2000 to 4999)	Error code	Description and remedy
2000 Technological error detected	2000	Group message, at least one technology error exists
2001 Taring/zeroing timeout	2001	Taring of scale or set to zero is not possible because a standstill was not reached during the standstill time. The command was discarded.
2002 Trace overloaded	2002	The configured recording rate for trace cannot be processed. Set a slower recording rate (section "Trace recording cycle (Page 90)")
2005 Restart after voltage dip	2005	Restart after power failure or firmware download.
2006 Download error	2006	A firmware download was canceled/rejected, e.g. because the transferred file is invalid.

7.5.4 Message list data and operating errors with additional information

Additional information is available for most data or command errors. The cause of the error is described in more detail using this information. If a data or command error bit is set, the additional information is filled accordingly at the same time. In this way, both the error bits as well as the additional information must be analyzed together in order to locate the cause of the error in the program.

Data and operating errors	Error code	Supple-mentary info	Description
5000 Data or command error	5000	-	Group error, at least one data or command error is pending
6050 Command unknown	6050	-	Given command code unknown. Check the command code.
6051 Command currently not possible	6051	-	The desired command could not be executed because, for example, another process is running at this time. Additional information contains more detailed information.
		4500	, because fault is pending
		4501	, because there is no standstill
		4502	, because already waiting for standstill
6052 Error service command	6052		Command from the group service commands could not be executed. Additional information contains more detailed information.
		4510	, because no service mode active
		4516	, because no service activated for other channel
6053 Calibration command error	6053		Command from the group adjustment commands failed. Additional information contains more detailed information.
		4510	, because no service mode active
		4520	, because distance of adjustment digits too low
		4521	, because order of calibration points wrong
		4522	, because calibration is not yet complete
		4523	, because adjustment digits are out of range
		4524	, because calibration weight 0
6054 Scale command error	6054		Command from the group weighing commands (zero, tare, etc.) could not be executed. Additional information contains more detailed information.
		4500	, because fault is pending
		4501	, because there is no standstill
		4502	, because already waiting for standstill
		4530	, because weight outside allowable tare range
		4531	, because weight outside allowable zero range
6056 Memory command error	6056		Trace command was rejected. Additional information contains more detailed information.
		4500	, because fault is pending
		4550	, because trace memory full
7050 Unknown data record	7050	-	Requested data record is unknown.
7051 Parameter input currently not possible	7051		Parameter input is currently not possible. Additional information contains more detailed information.

Data and operating errors	Error code	Supple-mentary info	Description
		4510	, because no service mode active
7053 Error in calibration parameter DR3	7053		Additional Information refers to the non-plausible parameter in DR3
		3323	Unit of weight
		3199	Gross identifier
		3247	Reserve 1a
		3247	Reserve 1b
		3323	Unit of weight
		3199	Gross identifier
		3086	Calibration weight 0
		3087	Calibration weight 1
		3088	Calibration weight 2
		3081	Adjustment digits 0 (measured)
		3083	Adjustment digits 1 (measured)
		3085	Adjustment digits 2 (measured)
		3248	Resolution
		3288	Maximum tare load
		3333	Negative zeroing value
		3335	Positive zeroing value
		3274	Standstill value
		3317	Standstill time
		3316	Waiting period
		3175	Cut-off frequency low-pass filter 1
		3236	Order no. low-pass filter 1
		3906	Period average value filter
		4510	, because no service mode active
		4520	, because distance of adjustment digits too low
		4521	, because order of calibration points wrong
		4524	, because calibration weight 0
		4610	, because of error in Max - Min weighing range
		4611	, because resolution not allowed
		4612	, because the cutoff frequency of the low-pass filter TP1 is too low
7054 Parameter error DR5	7054		Additional Information refers to the non-plausible parameter in DR5
		3105	Effective tare manual
		3115	Effective tare - semiautomatic
		3116	Zero value
		3118	Current zero value auto.
		3124	Dead load
		4510	, because no service mode active
		4530	, because weight outside allowable tare range

Data and operating errors	Error code	Supple-mentary info	Description
		4531	, because weight outside allowable zero range
7055 Parameter error DR6	7055		Additional Information refers to the non-plausible parameter in DR6
		3433	Basis of limits
		3203	Limit 1 on value
		3202	Limit 1 off value
		3206	Limit 2 on value
		3205	Limit 2 off value
		3150	Blank value
		2451	Uniform delay time for - Switch ON / OFF limit 1 - Switch ON / OFF limit 2 - Switch ON blank message
		4640	, because specification in percent outside the permissible range
7056 Parameter error DR7	7056		Additional Information refers to the non-plausible parameter in DR7
		3055	Assignment for digital input 0
		3056	Assignment for digital input 1
		3057	Assignment for digital input 2
		3162	Filter settings for the digital inputs
		3059	Assignment for digital output 0
		3060	Assignment for digital output 1
		3061	Assignment for digital output 2
		3062	Assignment for digital output 3
		3884	Monitoring of the digital outputs and their supply voltage
		3881	Reaction of digital outputs to errors (independent of switch)
		3882	Reaction of digital outputs at CPU stop or failure
		3312	Trace recording cycle
		4650	, because DQ.0 assignment not possible
		4651	, because DQ.1 assignment not possible
		4652	, because DQ.2 assignment not possible
		4653	, because DQ.3 assignment not possible
7057 Parameter error DR8/DR48	7057		Additional Information refers to the non-plausible parameter in DR8 / DR48
		3121	Date and time
7058 Parameter error in DR10 and DR11	7058		Additional Information refers to the non-plausible parameter in DR10
		3283	Switch 50/60Hz
		3227	Number of support points
		3180	LC parameter
		3228	Rated load

Data and operating errors	Error code	Supple-mentary info	Description
		3888	Overload limit
		1107	Impedance reference value
		3889	Permissible impedance deviation
		3324	String header
		3890	Load cell manufacturer
		3891	Load cell order number
		4510	, because no service mode active
		4660	, because input range exceeded (parameter * overload limit)
		1190	Channel status
7059 Error in interface parameters DR12-DR14	7059		Additional Information refers to the non-plausible parameter in DR12 - DR14
		3138	Device MAC address 1
		3103	IP address x.n.n.n
		3102	Gateway x.n.n.n
		4107	Unit identifier channel 1
		3892	TCP port channel 1
		4108	Unit identifier channel 2
		3893	TCP port channel 2
		3253	RS485 protocol
		3250	RS485 baud rate
		3221	Modbus address RTU (RS485)
		3126	Decimal place remote display
		3895	Modbus RTU message frame delay
		3264	Selection process value 1 (S7 I/O interface)
		3265	Selection process value 2 (S7 I/O interface)
		4510	, because no service mode active
		4670	, because selection code is not defined for process values 1
		4671	, because selection code is not defined for process values 2
		4672	, because MAC address is not identical
		4673	, because IP address is invalid
		4674	, because Modbus TCP port invalid
7060 Error in extended parameters DR15 DR19	7060		Additional Information refers to the non-plausible parameter in DR15 - DR19
		3897	Tare default value
		4530	, because weight outside allowable tare range

7.5.5 Messages by LEDs on the module

The LEDs on the front of the SIWAREX module signal the following status and error messages.

LED name	Sym-bol		Sym-bol	LED name
		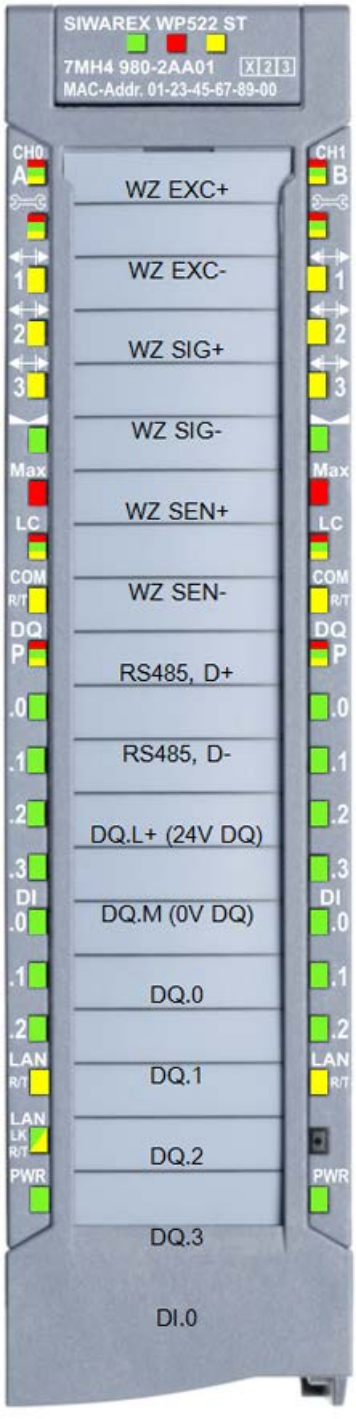		
Status scale A (CH 0)	A		B	Status scale B (CH 1)
Service mode				Service mode
Limit 1 triggered				Limit 1 triggered
Limit 2 triggered				Limit 2 triggered
Limit 3 triggered				Limit 3 triggered
Standstill				Standstill
Maximum weight	Max		Max	Maximum weight
Status load cell	LC		LC	Status load cell
Activate RS485 com.	COM R/T		COM R/T	Activate RS485 com.
Status digital outputs	DQ P		DQ P	Status digital outputs
Dig. Output 0 active	.0		.0	Dig. Output 0 active
Dig. Output 1 active	.1		.1	Dig. Output 1 active
Dig. Output 2 active	.2		.2	Dig. Output 2 active
Dig. Output 3 active	.3		.3	Dig. Output 3 active
Dig. Input 0 active	.0		.0	Dig. Input 0 active
Dig. Input 1 active	.1		.1	Dig. Input 1 active
Dig. Input 2 active	.2		.2	Dig. Input 2 active
LAN Rx/Tx (channel-spec.)	LAN R/T		LAN R/T	LAN Rx/Tx (channel-spec.)
LAN LINK, Rx/Tx (PHY)	LAN LK, R/T		LAN LK, R/T	*(free)*
Voltage channel A OK	PWR		PWR	Voltage channel B OK

As with all S7-1500 technology and signal modules, there are **3 LEDs** in the colors green, red and yellow located at the top of the area. The following table explains the dynamic meaning of the LEDs.

Table 7- 1 Dynamic meaning of the LEDs

LED	Status	Meaning
RUN LED	Green 2 Hz	S7-end module startup
	grün	Ready for operation
SF/ERROR LED	Red 2 Hz	System fault (module/channel diagnostics alarm pending, e.g. operating errors or firmware update) [red LED flashes for at least 3 seconds]
MAINT LED	gelb	Maintenance LED - without function for WP52x
	/ 2 Hz	
D (diagnostics)	Red 2 Hz	Operating error pending (e.g. also: Stand-alone configured, but S7 communication
	gelb	Stand-alone mode active (possible to continue work without operational S7 CPU)
	grün	Ready
	Green 2 Hz	Service mode active
	(off)	Normal operation
	gelb	Limit 1 responded
	gelb	Limit 2 responded
	gelb	Limit 3 triggered
	(off)	No standstill
	grün	Status standstill pending
Max	Red 2 Hz	Weighing range exceeded
LC	Red 2 Hz	Load cell error
	gelb	Measured LC impedance outside the configured setpoint range
	grün	Load cell status OK

LED	Status	Meaning
COM R/T	gelb	RS485 communication active (Receive/Transmit) Pulse 0.5s for transmitting/receiving a message frame; Modbus reception: Activation independent of slave address. Permanent with "Siebert" configuration, since transmitted regularly
LAN R/T	gelb	LAN communication to this channel active (only Siwatool/Modbus TCP – not with FTP, for example) Pulse 0.5s for transmitting/receiving a frame → transforms into continuous light during active Siwatool/Modbus link. WP522: This LED is channel-specific driven for communication via channel-specific TCP ports
DQ P	(off)	There is no output voltage and none of the outputs is assigned a function
	Red ✱ 2 Hz	No output voltage or is at least one of the outputs DQ.x has a fault (overload)
	grün	Digital outputs ready; trigger at Simatic failure or stop, output replacement values if required
	gelb	Digital outputs ready; no monitoring of SIMATIC function (stand-alone operation)
DQ.x	grün	Digital output x active (high level)
DI.x	grün	Digital input x active (high level) (status is detected after filtering)
LAN LK R/T	grün	Link: There is an Ethernet connection to a remote station
	gelb	Receive/Transmit: Pulse when an Ethernet frame is sent or received
PWR	grün	Status of local channel 24V supply available

xxx = LED ON

✱ = LED flashes

Commands 8

8.1 Overview

The commands for the electronic weighing system described here can be transmitted by several interfaces:

- by the Operator Panel via the controller to the SIWAREX module
- by the Operator Panel directly to the SIWAREX module
- by SIWATOOL directly to the SIWAREX module
- by the digital inputs after corresponding assignment in data record DR 7

A data or command error is signaled if a command cannot be executed or if the sent data record is rejected.

Detailed descriptions of the commands can be found in the following command lists:

→ Table 8-1 Command 1 ... 99: Service commands (Page 133)

→ Table 8-2 Commands 450 ... 499: Trace commands (Page 134)

→ Table 8-3 Commands 700 to 899: HMI display switching (Page 135)

→ Table 8-4 Commands 1000 ... : Basic functions for weighing commands (Page 135)

→ Command groups of SIWAREX WP521/WP522 (Page 135)

8.2 Command lists

The commands for the electronic weighing system described here are summarized in the following list:

Table 8- 1 Command 1 ... 99: Service commands

Command code	Command	Description
1	Service mode On	Turn on service mode
2	Service mode Off	Turn off service mode
3	Test mode On (simulation)	Turn on test mode. The simulation value from data record 16 is used instead of the measured value for calculation of the process values.
4	Test mode Off (simulation)	Switch off test mode.
11	Load factory setting	The command resets the SIWAREX to the "ex works" status. Then: - All parameters and stored data are loaded with the default values - All message buffers (diagnostic buffer, trace memory, etc.) are reset

Command code	Command	Description
12	Load standard parameters	Like "Load factory settings" (command code 11), but interface settings for Ethernet and Modbus RTU are not reset to the factory setting.
31	Reserve	
51	Reserve	
60	Calibration point 0 valid	Calibration point 0 valid / save values for calibration point 0.
61	Calibration point 1 valid	Calibration point 1 valid / save values for calibration point 1.
62	Calibration point 2 valid	Calibration point 2 valid / save values for calibration point 2.
81	Characteristic shift	Move calibration characteristic. The command defines the current weight of the scale as the new zero point (0 kg) and shifts the complete characteristic without changing the gradient. The command can be used, for example, in order to compensate parts used for mounting calibration weights on the scale at the end of the calibration.
82	Perform automatic calibration	Calculating the scale characteristic curve with reference to the load cell from data record 10. The calculated characteristic curve is entered directly in data record 3 and 4, and thus activated immediately after executing the command. The scale must be empty when the command is executed.
83	Perform calibration check	The command calculates the theoretical digital values in•relation to the calibration weights using the load cell parameters from data record 10 and the adjustment weights 0, 1 and 2 from data record 3. The output of these theoretical digits is made in data record 4. The function can be used to check the plausibility of adjustment digits in data record 3, which have been determined in a legal-for-trade calibration.
907	Apply load cell impedance	The currently measured impedance value (DS31) is transferred to the DS 10.

Table 8- 2 Commands 450 ... 499: Trace commands

Command code	Command	Description
451	Trace RAM on	Start permanent tracing
452	Trace RAM off	Stop permanent tracing
454	Delete trace RAM	Delete tracing memory.

Table 8- 3 Commands 700 to 899: HMI display switching

Command code	Command	Description
701	Increased resolution	Increased resolution on the main display
705	Display current tare weight	Current tare weight on the main display
710	Activate standard display	Activate standard display gross/net (main display)
714	N Process value	Show net process weight on the main display
715	B Process value	Show gross process weight on the main display
716	B process value after first filter	Gross process weight after the first filter

Table 8- 4 Commands 1000 ... : Basic functions for weighing commands

Command code	Command	Description
1001	Set to zero	Zeroing (semi-automatic)
1011	Tare	Taring (semi-automatic)
1012	Delete tare	Delete current tare weight
1013	Valid tare	Activate default tare
1016	SIMATIC tare specification	Specified tare weight from SIMATIC I/O interface

8.3 Command groups of SIWAREX WP521/WP522

The following commands can be triggered in the scale data block DB_SCALE in the area CMD1 to CMD3:

Table 8- 5 Command groups of SIWAREX WP521/WP522

Command group	Description
1 ... 999	Commands are passed by the function module to the module via data record DR 2 (scale, weighing, display, trace commands). The meanings of the commands correspond to the command list (see → Command lists (Page 133)).
2000 + X	Reading of a data record, X corresponds to the data record number. Example: Data record 3 transmitted by SIWAREX module to SIMATIC CPU → 2000 + 3 = command code 2003
4000 + X	Writing of a data record, X corresponds to the data record number. Example: Data record 3 transmitted by SIMATIC CPU to the SIWAREX module → 4000 + 3 = command code 4003
7001	Read all data - Read all data from the SIWAREX to the CPU
7002	Write all data - Write all data from the CPU to the SIWAREX (service mode has to be turned on)

Additional information on transmission of commands from the control program by means of the SIMATIC interface is available in chapter Communication with SIMATIC S7-1500 (Page 137).

Communication with SIMATIC S7-1500 9

9.1 General information

A SIWAREX WP521 occupies 32 bytes, a SIWAREX WP522 occupies 64 bytes in the I/O area of the CPU.

The effect of the mode switch setting (see section "Ex-works settings of the operating switch (Page 36)") on the reaction to CPU failure or stop must be taken into account. If the switch is set to SIMATIC operation ex factory, the user use the parameters in DR7 to determine how the module reacts to CPU failure or stop.

The function block can be used to read the current process values of the scale (weight, status). It is also possible to set the scale parameters and issue commands (taring, zeroing, etc.). A separate call of the FB is required for each weighing channel.

The function blocks described above including HMI configurations can be downloaded as a completed example project ("ready-for-use") at: Example project "ready-for-use" (https://support.industry.siemens.com/cs/document/94109373/tia-portal-project-%E2%80%9Eready-for-use%E2%80%9C-for-siwarex-wp521/wp522?dti=0&lc=en-WW)

The latest firmware versions for the weighing modules can be downloaded at:Firmware (https://support.industry.siemens.com/cs/ww/en/ps/23701/dl)

9.2 System environment

The technology module can be used in the following system environments:

Possible applications	Required components	Configuration software	In the user program
Central operating in an S7-1500 system	S7-1500 automation system	STEP 7 (TIA Portal): Device configuration with the hardware configuration (HWCN)	Control by a SIWAREX FB and instance DB
Distributed operation with S7-1500 and ET200MP	Distributed I/O System ET 200MP		

9.3 Memory requirements for SIWAREX communication

The memory requirement is summarized in the following table.

Table 9- 1 Properties of the function block

FB properties	FB call per weighing channel
Read weight & status	YES
Drop commands	YES
Transfer parameters	YES
Work memory requirement in CPU	15600 bytes + n x 2 650 bytes
Load memory requirements in CPU	232000 Byte + n x 62000 Byte

n = number of weighing channels

9.4 Creating the hardware configuration

As of TIA Portal V14, SIWAREX WP521/WP522 is integrated as standard in the hardware profile as an S7-1500 technology module.

An HSP is available for integration in TIA Portal V13 at:Hardware Support Package (https://support.industry.siemens.com/cs/document/73514020/hardware-support-package-(hsp)-for-siwarex-wp231-in-tia-portal-v11-sp2-for-products%3A-7mh4960-2aa01?dti=0&lc=en-WW)

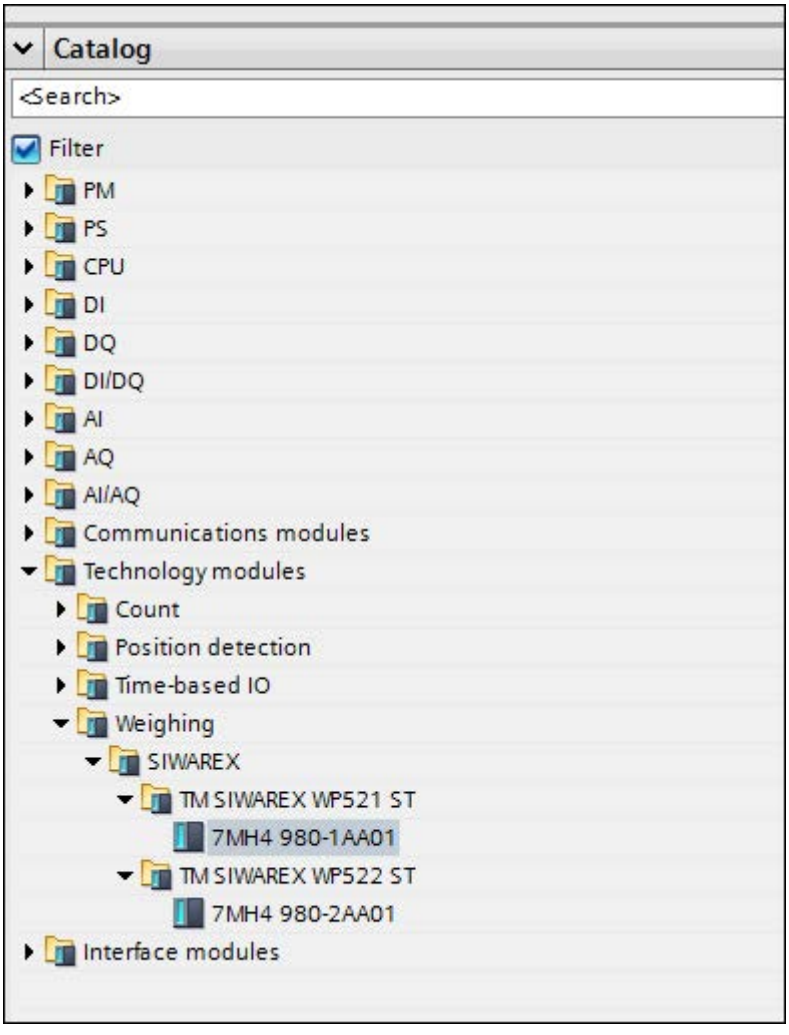

Figure 9-1 Configuration in the TIA Portal

The SIWAREX WP521 or SIWAREX WP522 module can be placed directly next to the S7-1500 CPU via drag-and-drop.

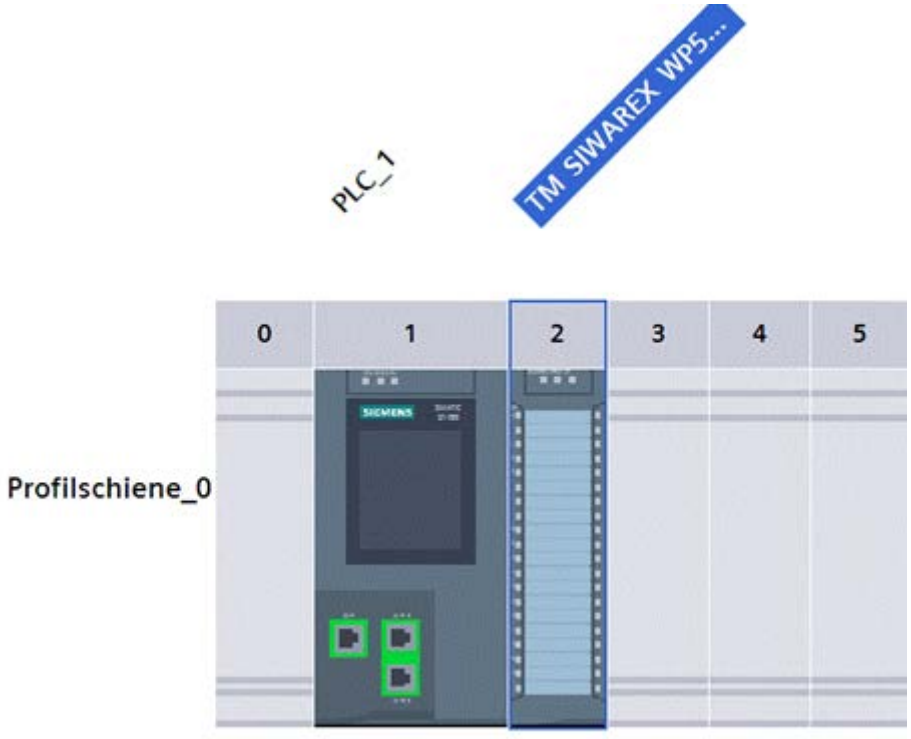

Figure 9-2 Configuration with S7-1500 CPU

TIA Portal automatically assigns a separate I/O start address and a HW ID for every SIWAREX present in the project. These two parameters are relevant for calling the function block, and can be obtained from the properties of the respective module. The address range is always in the region of the I/O image of the automation system.

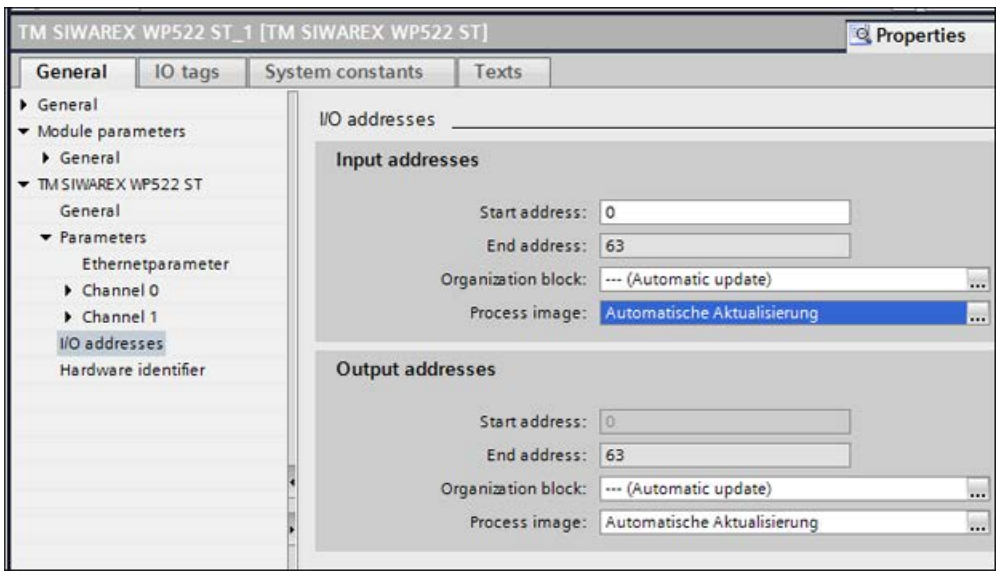

Figure 9-3 Addressing of the SIWAREX WP522 module in TIA Portal

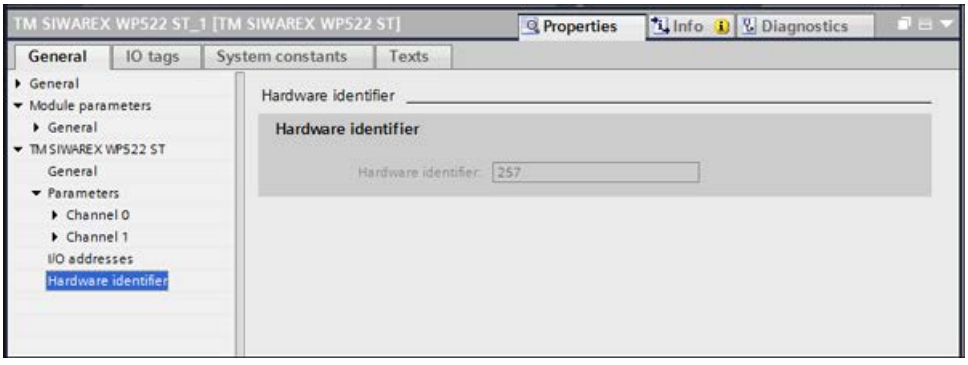

Figure 9-4 HW ID of module in TIA Portal

9.5 Diagnostic messages

The DIAG LED flashes red if a diagnostic message is pending. Diagnostic results are displayed as plain text in STEP 7 (TIA Portal) via the online and diagnostics view. You can evaluate the error code via the OB82 user program.

The following diagnostic messages can be generated:

Table 9- 2 Diagnostic messages

Diagnostic message	Error code	Meaning	Remedy
Short-circuit	01H	Short-circuit in the load cell supply	Check line up to load cell
Under voltage	02H	Undervoltage of sense lines	Voltage drop to the load cell to high. Check cause.
Overload	07H	High limit for sensor voltage exceeded	Overload of the scale eliminated
Load low	08H	Low limit for sensor voltage undershot	Check mechanics of the scale, check the wiring of the sensor.
Error	09H	Internal module error, fault	Replace technology module
ADC error	0BH	Signal conversion by ADC faulty	EMC faults may be responsible for this error
DQ error	0CH	Fault in digital outputs	Check supply voltage for DQs, check for overload
Parameter checksum error	0DH	The checksum for the parameter integrity is incorrect	Load factory setting for parameters.
Checksum error program	0EH	The checksum for the parameter integrity is incorrect	Reload firmware, replace module
No load voltage	11H	No L+ for technology module	Check supply voltage on BaseUnit

Diagnostic message	Error code	Meaning	Remedy
Hardware interrupt lost	16H	Technology module cannot generate an interrupt, because previous alarm has not yet been processed	Change interrupt processing in the CPU, re-configure technology module.
Module temporarily unavailable	1FH	Normal operation of the module is not possible, because a firmware update is being performed, for example.	Wait until module goes into normal operation.

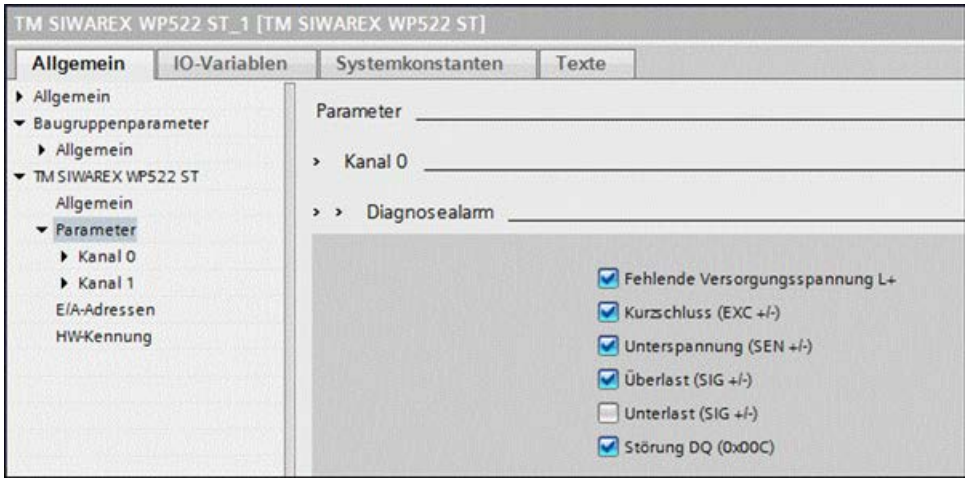

9.6 Triggering a hardware interrupt

You can configure which events are to trigger a hardware interrupt for the SIWAREX module.

Based on the configuration, the SIWAREX module triggers a hardware interrupt for specific events/limits. When a hardware interrupt occurs, the CPU interrupts execution of the user program and processes the associated hardware interrupt OB. The event that triggered the interrupt is entered by the CPU into the start information of the associated hardware interrupt OB.

Activation of the hardware interrupts

For the device configuration of the SIWAREX module, you can activate the hardware interrupts in the TIA Portal under "Basic parameters > Channel 0 or 1> Hardware interrupts".

Lost hardware interrupt

When an event that triggers a hardware interrupt occurs and a previous event of the same kind has not yet been processed, no further hardware interrupt is triggered. The hardware interrupt is lost. Depending on the configuration, this can result in a "Lost hardware interrupt lost" diagnostic alarm.

No hardware interrupts are activated by default.

One result of triggering a hardware interrupt is that the following two variables are entered in the start information of the associated hardware interrupt OB:

- EventType: One byte with a set bit
- IChannel: Number of the channel that triggered the hardware interrupt

Table 9- 3 Table of event bits

Hardware interrupt	EventType bit
Limit 1 OFF → ON	0
Limit 1 ON → OFF	1
Limit 2 OFF → ON	2
Limit 2 ON → OFF	3
Limit 3 OFF → ON	4
Limit 3 ON → OFF	5

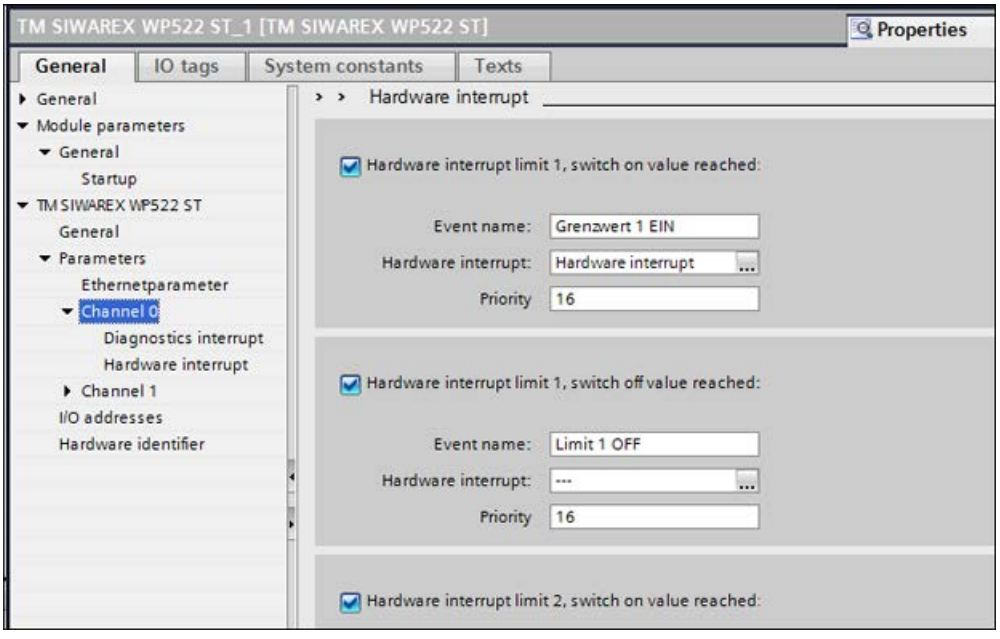

Figure 9-5 Configuration of hardware interrupts

9.7 Ethernet approvals

It may be necessary to restrict the communication options via Ethernet for reasons of data security. It is recommendable to deactivate surplus interfaces.

Note

Please also observe the Security information.

The settings in HW Config only take effect in "SIMATIC mode", see Ex-works settings of the operating switch (Page 36).

The restriction of Ethernet Modbus communication can be performed per configuration of the ports in data record DR12 (port number = 0)

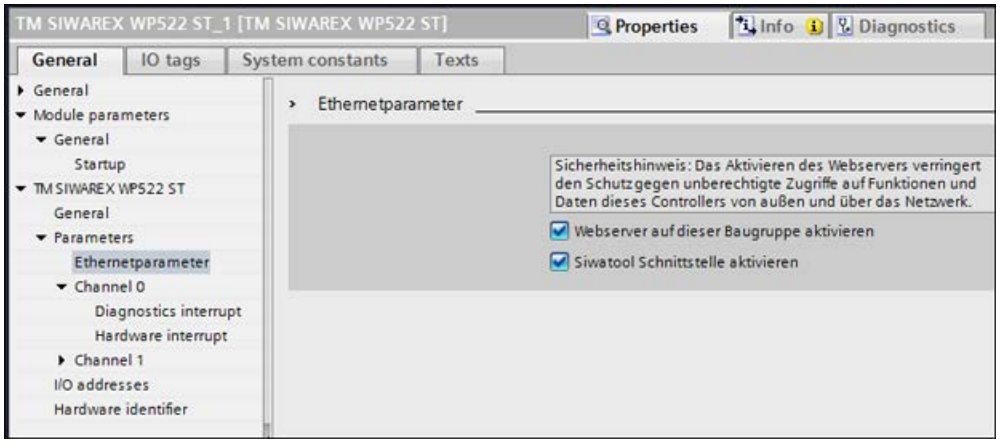

Figure 9-6 Ethernet approvals

9.8 Calling of function block

The function block can be integrated at the desired position in the user program using drag and drop. Calling of the FB must be carried out cyclically in the control program.

FB "SIWAREX WP52X" is called once in OB1 for the SIWAREX WP521 module. For the SIWAREX WP522 module, FB "SIWAREX_52X" is called once for each channel.

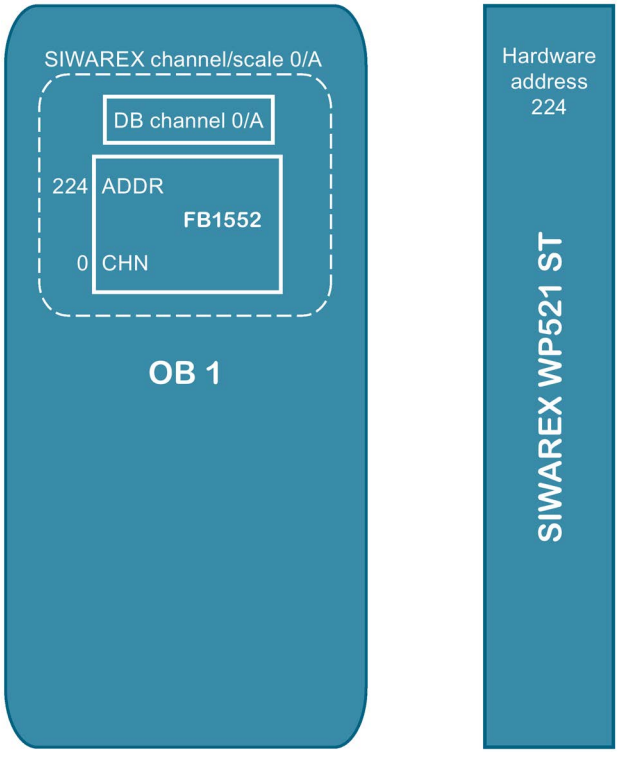

Figure 9-7 Call block for SIWAREX WP521

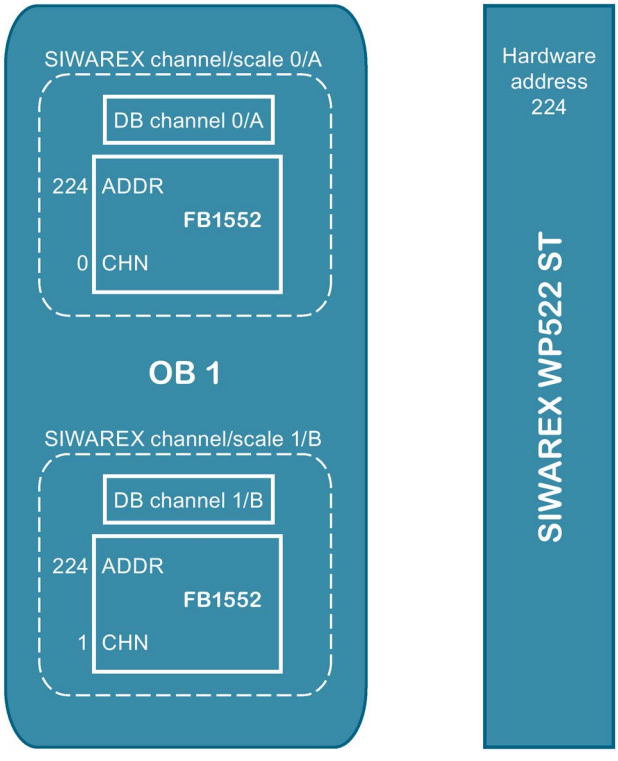

Figure 9-8 Call block for SIWAREX WP522

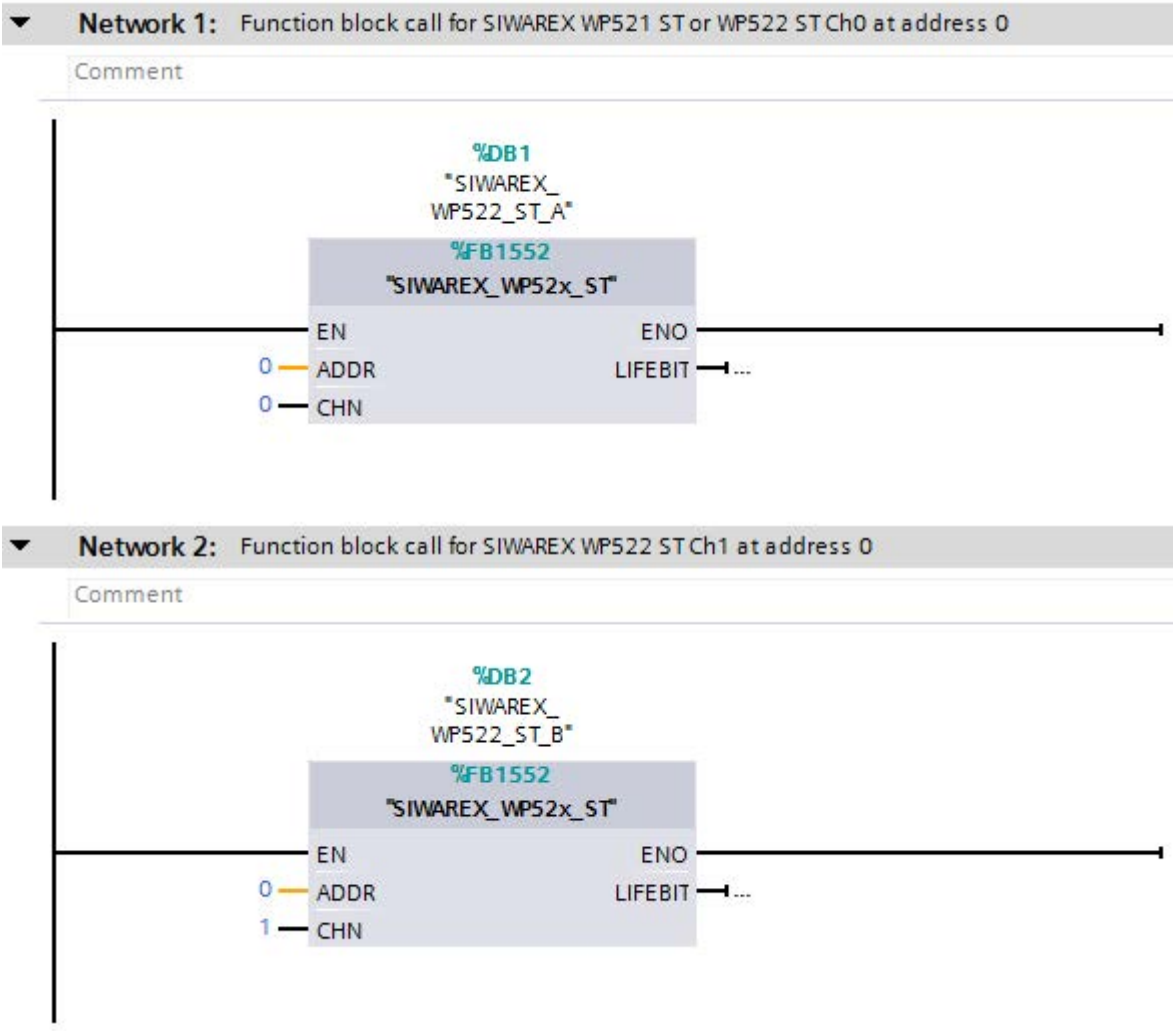

Figure 9-9 Call the block for SIWAREX WP521/WP522 in the user program

Function block parameter	Description
ADDR	Start address WP521/WP522 (see → Creating the hardware configuration (Page 139))
CHN	Always 0 with WP521 ST. 0 for channel 0/A and 1 for channel 1/B with WP522 ST.
LIFEBIT	Optional status bit can be used to monitor communication

The generated instance DB (DB521 in this case) has multi-instance capability and includes all data records of the WP52X, as well as all the necessary parameters for data communication between the CPU and the weighing module.

A separate FB call must be made in the user program for each weighing channel. In this manner, each scale receives its own instance DB (or a section of the multi-instance DB is assigned to each scale) which provides the respective scale parameters. The input and output parameters of the FB must be adapted for each call.

9.9 Working with the function block

Data records in SIWAREX weighing modules

All parameters in SIWAREX weighing modules are structured in data records. These data records must be considered as connected packages and can only be respectively read into the CPU or written to the SIWAREX as complete packages. Reading or writing of a single parameter within a data record is not possible. You can find a description of all data records and their parameters in section → Scale parameters and functions (Page 67).

Reading and writing of data records is carried out using special command codes which can be sent with three command mailboxes handled according to priority within the instance DB:

11	s_CMD1	Struct	462.0	
12	i_CMD_CODE	Int	0.0	0
13	bo_CMD_TRIGGER	Bool	2.0	false
14	bo_CMD_InProgress	Bool	2.1	false
15	bo_CMD_Finished...	Bool	2.2	false
16	bo_CMD_Finished...	Bool	2.3	false
17	s_CMD2	Struct	466.0	
18	i_CMD_CODE	Int	0.0	0
19	bo_CMD_TRIGGER	Bool	2.0	false
20	bo_CMD_InProgress	Bool	2.1	false
21	bo_CMD_Finished...	Bool	2.2	false
22	bo_CMD_Finished...	Bool	2.3	false
23	s_CMD3	Struct	470.0	
24	i_CMD_CODE	Int	0.0	0
25	bo_CMD_TRIGGER	Bool	2.0	false
26	bo_CMD_InProgress	Bool	2.1	false
27	bo_CMD_Finished...	Bool	2.2	false
28	bo_CMD_Finished...	Bool	2.3	false

Figure 9-10 CMD command mailboxes

As shown in the graphics, a command mailbox always consists of a command code (Int) and four bits (Bool). A command is set by entering the desired command code in the "i_CMD_CODE" parameter and setting the respective command trigger "bo_CMD_TRIGGER". The status bits "bo_CMD_InProgress" (command being processed), "bo_CMD_FinishedOk" (command finished without errors) and "bo_CMD_FinishedError" (command rejected or finished with error) can be evaluated in the user program.

In addition, the three command mailboxes are managed and processed according to priority. CMD1 has the highest priority, CMD3 has the lowest priority. If all three command mailboxes are triggered simultaneously by the user program, for example, the function block initially processes CMD1, then CMD2, and finally CMD3. Cyclic triggering of command mailbox 3 is also interrupted by intermediate sending of a command in mailbox 2 or 1 for processing of the respective command.

Note

Cyclic triggering of the CMD1 command mailbox makes it impossible to send commands in mailbox 2 or 3.

A summary of all existing command codes can be found in section →Command lists (Page 133).

The following equation for generation of a corresponding command code applies to the reading of data records from the SIWAREX to the data block:

Command code = 2000 + X (X = desired data record number)

The following equation for generation of a corresponding command code applies to the writing of data records from the data block to the SIWAREX:

Command code = 4000 + X (X = desired data record number)

Example

The following example clarifies the actions with command mailboxes and data records:

"Calibration weight 1" is to be set to a value of 12.5 by the CPU. Since "Calibration weight 1" is a parameter of data record 3 (see section → Scale parameters and functions (Page 67)), service mode must be first activated. This can be done with command code "1" (see section → Command lists (Page 133)).

The variable "i_CMD_CODE" must therefore be assigned the value "1" and the associated "bo_CMD_TRIGGER" set to TRUE. Subsequently, the module is directly in service mode (DIAG LED flashes green):

i_CMD_CODE = 1

bo_CMD_TRIGGER = TRUE

Since only complete data records can be read or written, it is recommendable to now read data record 3 into the CPU. This is carried out using command code 2003 (see section → Command lists (Page 133)):

i_CMD_CODE = 2003

bo_CMD_TRIGGER = TRUE

All current data from data record 3 are now present in the data block. The calibration weight is then set as desired to a value of 12.5:

CALIB_WEIGHT_1 = 12.5

The modified data record 3 must now be written into the SIWAREX again. This is carried out using command code 4003 (see section →Command lists (Page 133)):

i_CMD_CODE = 4003

bo_CMD_TRIGGER = TRUE

The new calibration weight is now present in the SIWAREX and can be used. Service mode for the module should subsequently be switched off again using command "2".

This procedure for reading and writing data records is identical for all data records.

Parameters CMD_A and CMD_B

The example project "Ready-to-use WP52x ST" uses the CMD_A und CMD_B parameters present in the instance data block. These parameters make it possible, in conjunction with the instruction in OB35 (see example project), to alternately send commands via the lower-priority command mailbox 3.

Example

Data from the data records 30 and 31 is to be displayed simultaneously in an HMI screen. Therefore, the commands 2030 (read data record 30) and 2031 (read data record 31) must be read alternately from the module. This is achieved by entering the value 2030 in CMD_A and the value 2031 in CMD_B when calling the HMI screen. The instruction programmed in OB35 then alternately triggers the commands 2030 and 2031 via the command mailbox "CMD_3", which can be interrupted at any time by commands via the command mailbox "CMD_1" or "CMD_2" because of the lower priority. If the value 0 is present in CMD_A or CMD_B, only the other command is triggered, or none at all.

9.10 I/O interface of function block

The following scale parameters are available cyclically in the data block in the controller without special reading of data records or can be sent to the scale without sending of data records:

Table 9- 4 I/O data of function block

Parameter (read)	Meaning
SCALE_STATUS_1 (UINT)	Bytes 0 & 1 of the scale status (see data record 30)
SCALE_STATUS_2 (UINT)	Bytes 2 & 3 of the scale status (see data record 30)
PROCESS_VAL_1 (REAL)	Scale value in accordance with selection in data record 14
PROCESS_VAL_2 (REAL)	Scale value in accordance with selection in data record 14
OPERATION_ERRORS	Operating error according to Message list (Page 124)
TECHNOLOGICAL_ERRORS_1	Technology messages according to Message list (Page 124)
TECHNOLOGICAL_ERRORS_2	Technology messages according to Message list (Page 124)
TECHNOLOGICAL_ERRORS_3	Technology messages according to Message list (Page 124)
DATA_CMD_ERROR_1	Data command error according to Message list (Page 124)
DATA_CMD_ERROR_2	Data command error according to Message list (Page 124)
DATA_CMD_ERROR_3	Data command error according to Message list (Page 124)
ADD_INFO	Additional information data / operator errors
Parameter (write)	

Parameter (read)	Meaning
TARE_VALUE (REAL)	Tare default value of S7 I/Os (activate with command 1016)
DIGIT_OUTPUT (UINT)	Default values for digital outputs, if they have assigned as an "S7 interface" function in data record 7.

9.11 Error codes of function block

States and errors of the FB.

Table 9- 5 Statuses/errors when working with the function block

Error bit	Error description
bo_ApplIDError	Address module does not match the function block
bo_ApplIDDRError	Data record does not match the inserted module
bo_SFBError	Runtime error during transmission of data record
bo_RdPerError	Reading of I/O data failed
bo_LifeBitError	SIWAREX no longer responds
bo_StartUpError	Command was sent although StartUp is still TRUE
bo_WrongFW	Data record version does not match the firmware
bo_InvalidCMD	An invalid command code was sent
bo_DataOperationError	Synchronous data operation error has occurred
bo_StartUp	Startup synchronization of module running
bo_ExtPSError	Check the 24 V voltage supply at the front connector

Note

If execution of the function block is faulty, the variables shown do not correspond to the actual status in the module.

Communication via Modbus 10

10.1 General information

The current process values and parameters can be exchanged via the RS485 interface with Modbus RTU or the Ethernet interface with Modbus TCP/IP. It is possible to use both interfaces for the communication.

Note

Please also observe the Security information.

The following chapters describe the specifications for handling communication. The following functions can be executed:

- Export parameters from the electronic weighing system
- Write parameters
- Export current process values
- Monitor messages

10.2 Special feature of Modbus TCP/IP connection to SIWAREX WP522

There are two ways to communicate with two scale channels via Modbus TCP/IP:

- Communication for both weighing channels vis port 502. The register numbers of the data record tables for weighing channel B can be increased by the offset value 5000.
- Communication for both channels via freely configurable ports. The register numbers indicated in the record tables apply to both weighing channels.

The assignment of a new IP address to a SIWAREX module is necessary if several SIWAREX modules are present in one network.

- Modbus TCP/IP for SIWAREX WP521: Port: 502
- Modbus TCP/IP for SIWAREX WP521/WP522: Port: 502

or

- Modbus TCP/IP for SIWAREX WP522 channel A: port configurable, channel B: port configurable

10.3 Principle of data transmission

This description is valid for communication via Modbus RTU and Modbus TCP/IP.

The standardized MODBUS protocol is used for communication. The master function is always in the connected communication partner, while the SIWAREX module is always the slave.

Data transfer is bidirectional. The master function is always in the connected module which “controls” the communication with corresponding requests to the respective SIWAREX module address. The SIWAREX module is always the slave and responds to the requests of the master, provided that the address matches, with a response frame.

Each Modbus partner has its own address. The SIWAREX module has the default address 1. This address can be changed as a parameter (e.g. in SIWATOOL). This address is without significance if the Ethernet interface is used because the connection is based on the IP address.

If the RS485 interface is used, the following character frame is valid:

Start bit	1
Number of data bits	8
Parity	Even
Stop bit	1

The following baud rates can be set:

- 9 600 bit/s
- 19 200 bit/s (default setting)
- 38 400 bit/s
- 57 600 bit/s
- 115 000 bit/s

Functions which can be used by the master are listed below. The structure and contents of the registers are shown in chapter "Scale parameters and functions (Page 67)".

Service	Function code	Usage
Read Holding Registers	03	Read one or more 16-bit parameter registers
Write Single Register	06	Write a single parameter register
Write Multiple Registers	16	Write multiple registers

If a request of the master is answered by the SIWAREX module (slave), the SIWAREX module sends a response frame with or without errors. In the case of a response without error message, the response frame contains the received function code; in the case of errors, the highest bit of the function code is set. This corresponds to the Modbus standard. Afterwards, the master requests the data record DR 32 to check which process-related data or operator errors exist.

10.4 Data record concept

The register assignment is an image of the data records. The chapter → Scale parameters and functions (Page 67) describes the data records, variables and functions, including the register addresses. The data records are always checked as complete data packets for plausibility. For this reason, you must follow a specific procedure to change individual parameters.

10.5 Command mailboxes

Corresponding command codes must be sent in order to execute commands and to read and write data records in the Modbus buffer memories. These are described in more detail in chapter → Command lists (Page 133). The following tables list the Modbus registers used to process these commands:

Table 10- 1 Command mailbox 1: Highest priority

Variable	Note	Type	Modbus registers
CMD1_CODE	Code of command to be executed	USHORT	910
CMD1_TRIGGER	Trigger for starting the command	USHORT	911
CMD1_STATUS	0=job running; 1=job finished (1 cycle)	USHORT	912
CMD1_QUIT	0=no error; <>0=error code	USHORT	913

Table 10- 2 Command mailbox 2: Average priority

Variable	Note	Type	Modbus registers
CMD2_CODE	Code of command to be executed	USHORT	920
CMD2_TRIGGER	Trigger for starting the command	USHORT	921
CMD2_STATUS	0=job running; 1=job finished (1 cycle)	USHORT	922
CMD2_QUIT	0=no error; <>0=error code	USHORT	923

Table 10- 3 Command mailbox 3: Low priority

Variable	Note	Type	Modbus registers
CMD3_CODE	Code of command to be executed	USHORT	930
CMD3_TRIGGER	Trigger for starting the command	USHORT	931
CMD3_STATUS	0=job running; 1=job finished (1 cycle)	USHORT	932
CMD3_QUIT	0=no error; <>0=error code	USHORT	933

10.6 Reading registers

The method for reading registers depends on whether they belong to the writable data records (DR 3 to DR 29) or can only be read as current values (DR 30 to DR 34).

If you wish to read the registers from the data records DR 3 to DR 29, you must first export these as a complete data record to the internal output buffer.

All Modbus registers of the individual parameters can be found in chapter → Scale parameters and functions (Page 67).

Example

A parameter is to be read from data record 3 (DR 3).

- First, write register CMD3_CODE with 2003 (2000 plus the number of the data record = read data record).
- Then write "1" for CMD3_TRIGGER. DR3 is now updated in the Modbus buffer.
- It is now possible to read one or more registers with the corresponding variable(s). The data consistency of the registers read at this time is guaranteed.

You can find all further command numbers in chapter → Command lists (Page 133).

Example

A current measured value is to be read out from DR 30.

⇒ The register can be directly requested because its contents are automatically refreshed in the SIWAREX module at the specified measuring rate of 100 Hz and are always available up-to-date.

10.7 Writing registers

If you wish to write registers from the data records DR 3 to DR 29, you must first export the corresponding data record to the internal output buffer using an appropriate command. Individual registers can then be written. The complete data record must subsequently be written internally using an appropriate command. A plausibility check of the complete data record is carried out in the process.

Example

A parameter from DR 3 is to be written.

- First, write register CMD3_CODE with 2003 (2000 plus the number of the data record).
- Then write "1" for CMD3_TRIGGER. DR 3 is now updated in the Modbus memory.
- Now you can write or make changes in one or more registers with the corresponding variable. If you want to transfer the written/changed register to the scale, you need to write the entire data record:
- First, write register CMD3_CODE with 4003 (4000 plus the number of the data record = write data record).
- Then write "1" for CMD3_TRIGGER.
- The data record is then transferred to the process memory in the SIWAREX module. All registers of the data record are checked for plausibility in the process.

If the plausibility check fails, the complete data record is not written and a message is output to the user (from the area of data/operator errors).

You can find all further command numbers in chapter → Command lists (Page 133).

A document for working with SIWAREX WP521/WP522 and Modbus is also available online →Modbus communication of the WP521/WP522 (https://support.industry.siemens.com/cs/document/77913998/how-does-the-modbus-communication-of-the-wp231-work?dti=0&lc=en-WW).

Technical specifications 11

11.1 Technical specifications

A scale can be connected to the SIWAREX WP521.

Two separate scales can be connected to the SIWAREX WP522. The weighing functionality is available 2x.

24 V power supply

Note

The 24 V DC nominal power supply, all interfaces and all I/O circuits must be powered from sources with safety extra-low voltage that fulfill the requirements SELV, PELV according to IEC 61140 or NEC Class 2 meet.

Table 11- 1 Technical specifications: Power supply 24 V DC

Rated voltage	24 V DC
Static low / high limits	19.2 / 28.8 V DC
Dynamic low / high limits	18.5 / 30.2 V DC
Non-periodic overvoltages	35 V DC for 500 ms with a recovery time of 50 s
Maximum current consumption (without digital inputs/outputs, see table)	WP521: 120 mA, WP522: 200 mA @ 24 V DC
Module power loss typical (without digital inputs/outputs, see table)	WP521: 2.4 W, WP522: 3.9 W

Power supply from SIMATIC S7 backplane bus

Table 11- 2 Technical specifications: Power supply backplane

Current consumption from SIMATIC S7-1500 backplane bus	Typical 35 mA @15 V

Load cell interface analog (with WP522 1x per weighing channel)

Table 11- 3 Technical specifications: Load cell interface

Error limit according to DIN1319-1 at 20 °C +10 K[1)]		≤ 0.05 % v.E.
Measuring accuracy to OIML R76-1:2006/EN45501:2015 (not certified)	Class	III
	Resolution	3000d
	Error percentage pi	0.4
	Step voltage	0.5 µV/e

Accuracy delivery state[2)]		typ. 0.1 % v.E.
Sampling rate		100 Hz
Input signal resolution		± 4 000 000
Measuring range		± 4 mV/V
Common mode voltage range		0.25 V to +4.75 V
strain gauge feed 3)		4.85 V DC ± 3 %
Short-circuit and overload protection		Yes
Connection		6-wire
Sensor voltage monitoring		≤ 4.0 V
Min. DMS input resistance per channel	without Ex-i interface SIWAREX IS	40 Ω
	with Ex-i interface SIWAREX IS	50 Ω @ type 7MH4710-5BA 100 Ω @ type 7MH4710-5CA
Max. DMS output resistance		4 100 Ω
Temperature coefficient range		≤ ± 5 ppm/K v. E.
Temperature coefficient zero point		≤ ± 0.015 µV/K
Linearity error		≤ 0.005 %
Measured value filtering		Low-pass and average value filter configurable (DR3)
Electrical isolation		Typ. 500 V AC
50 Hz / 60 Hz noise suppression CMRR		> 90 dB
Input resistance	Signal cable	typ. $20*10^6$ Ω
	Sensor cable	typ. $100*10^6$ Ω
Cable length[4)]	Special cable	max. 800 m

1) Relative accuracy! (Absolute accuracy can only be achieved with local calibration with calibration standards)

2) Accuracy for module exchange or theoretical calibration decisive

3) Value applies to the sensor; voltage drops on lines are compensated up to 5 volts

4) When using SIWAREX cable 7MH4702-8AG

Digital outputs DQ (for WP522 4x per weighing channel)

In case of fault or SIMATIC CPU stop, the configured value is always applied to the digital output.

A freewheeling diode is provided on the consumer for inductive loads at the digital output.

Table 11- 4 Technical specifications: Digital outputs

Number per weighing channel	4 (High Side Switch)
Supply voltage range	19.2 ... 28.8 V DC
Max. output current per output	0.5 A (ohmic load)
Max. total current for all outputs	2.0 A
Update rate (FW)	100
Switching delay	typ. 65 µs Turn-On @I_L = 500 mA typ. 110 µs Turn-Off @I_L = 100 mA
RDSON	< 0.2 Ω
Short-circuit proof	Yes
Electrical isolation	500 V AC
Cable length (meters)	Max. 500 m shielded, 150 m unshielded

Digital inputs DI (for WP522 3x per weighing channel)

Table 11- 5 Technical specifications: Digital inputs

Number of inputs	3
Rated voltage	24 V DC
Supply voltage range	max. DC 30 V
Current consumption @ 24 V DC	4 mA
Surge voltage	35 V DC for 0.5 s
Signal level logic 1 (max)	15 V DC, input current typ. 3 mA @24 V DC
Signal level logic 0 (max)	5 V DC, input current ≤ 2.0 mA
Sampling rate (FW)	10 ms
Configurable filtering (DS 7) [1)]	0 to 40 ms in intervals of 5ms
Electrical isolation	500 V AC
Type in accordance with EN 61131-2: 2007	Type 1 to 3

[1)] Signal changes shorter than the programmed time are recorded)

RS485 interface (for WP522 1x per weighing channel)

Table 11- 6 Technical specifications: RS-485

Standard	EIA-485
Baud rate	up to 115 Kbps*
Data bits	7 or 8
Parity	even | odd | none
Stop bits	1 or 2
Terminating resistors (can be activated)	390 Ω / 220 Ω / 390 Ω
Electrical isolation	500 V AC
Transfer protocol	ASCII for remote display, Siebert company and Modbus RTU
Cable length	≤ 115 Kbps max. 1 000 m (Fieldbus 2-core, shielded, e.g. 6XV1830-0EH10)

Ethernet (available only 1x)

Table 11- 7 Technical specifications: Ethernet

Standard		IEEE 802.3
Transmission speed		10/100 Mbps (automatic detection)
Electrical isolation		1 500 V AC
Transfer protocol		TCP/IP, Modbus TCP
Autonegotiation		Yes
Auto MDI-X		Yes
Cable lengths	Cable Cat 5e UTP (unshielded)	max. 50 m
	Cable Cat 5e SF/UTP (shielded)	max. 100 m

Dimensions and weight

Table 11- 8 Technical specifications: Dimensions and weight

Dimensions W x H x D (packaged)	41 x 191 x 164 mm
Dimensions W x H x D (unpackaged)	35 x 147 x 129 mm
Weight (packaged)	WP 521ST: 0.37kg WP 522ST: 0.42 kg

Mechanical requirements and data

Table 11- 9 Rated conditions in accordance with IEC 60721

Mode	IEC 60721-3-3 Class 3M3, stationary use, weather-proofed
Storage/transport	IEC 60721-3-2 Class 2M2 without precipitation

Technical specifications: Mechanical requirements and data

Testing	Standards	Test values
Vibrational load during operation	IEC 61131-2:2007 IEC 60068-2-6:2007 Test Fc	5 ... 8.4 Hz: 3.5 mm deflection 8.4 ... 150 Hz: 9.8 m/s^2 (=1G)
Shock load during operation	IEC 61131-2:2007 IEC 60068-2-27:2008 Test Ea	150 m/s^2 (approx. 15 g), half-sine Duration: 11 ms
Vibration load during transport	IEC 60068-2-6:2007 Test Fc	5 ... 8.4 Hz: 3.5 mm deflection 8.4 ...500 Hz: 9.8 m/s^2
Shock load during transport	IEC 60068-2-27:2008 Test Ea	250 m/s^2 (25G), half sine Duration: 6ms
Free fall	IEC 61131-2:2007 IEC 60068-2-31:2008 Test Ec, procedure 1	In product packaging: 300 mm drop height In shipping package: 1.0 m drop height

11.2 Electrical, EMC and climatic requirements

Electrical protection and safety requirements

Fulfilled requirement	Standards	Comments
Safety regulations	IEC 61010-1:2010 +C1:2011 + C2:2013 IEC 61010-2-201:2014 IEC 61131-2:2007 UL 508:2003 CSA C22.2 No.142:1990	
Protection class	IEC 61140:2001 + A1:2004 IEC 61131-2:2007	To maintain the safety characteristics of extra-low voltage circuits, external connections to communications ports, analog circuits, as well as all 24 V DC nominal power supplies and all I/O circuits must be powered by approved sources that fulfill the requirements according to the various standards for SELV, PELV, NEC Class 2, voltage limited or power limited. The ground connection for the DIN rail serves as a functional ground for dissipating interference currents.

Fulfilled requirement	Standards	Comments
IP degree of protection	IP 20 according to IEC 60529 1991 +A1:2000	IP20: • Protection against contact with standard probe • Protection against solid bodies with diameters in excess of 12.5mm • No special protection against water
Air gaps and creepage distances	IEC 60664:2007 IEC 61131-2:2007 IEC 61010-1:2010 UL 508:2003 CSA C22.2 No. 142:1990	Overvoltage category II Pollution degree 2
Isolation stability	IEC 61131-2:2007 CSA C22.2, No. 142:1990 UL508:2003	Ethernet port: 1 500 V AC (shield and signals) Other electrical circuits: Test voltage: 500 V AC or 707 V DC
Use in hazardous areas	IEC 60079-0:2009 IEC 60079-15:2010	When installing the modules in hazardous areas, the special operating conditions must be taken into consideration in accordance with SIWAREX Product Information – "Use of SIWAREX Modules in a Zone 2 Hazardous Area" A5E02192786A.
Electromagnetic compatibility	IEC 61000-6-2:2004 IEC 61000-6-4:2007+ A1:2011	All shielded cables must be grounded at both ends to comply with the requirements for electromagnetic compatibility. If the shielded cable is routed out of the hazardous area for explosion-proof equipment, both ends of the cable shield must be connected to the potential equalization. To comply with the requirements for lightning strikes, additional measures are required (see footnotes Table 12-11) for installation in Zone A according to IEC 61131-2: 2007.

Electromagnetic compatibility

Table 11- 10 Requirements: Emitted interference in industrial environment according to EN 61000-6-4

Comments	Standard	Limits
Emission of radio interferences (electromagnetic fields)	Class A industrial environment: • IEC/CISPR 16-2-3: 2006 • EN55016-2-3:2006	• 30 – 230MHz, 40dB(mV/m) Q • 230 – 1000MHz, 47dB(mV/m) Q • 1 GHz to 3 GHz / 76 dB(mV/m) peak, 56 dB(mV/m) average • 3 GHz to 6 GHz / 80 dB(mV/m)
Emission on 24 V power supply lines	Class A: Industrial environment: • IEC/CISPR 16-2-1: 2009 • EN 55016-2-1: 2004	Class A: Industrial environment • 0.15 ... 0.5 MHz, 79 dB (µV) Q • 0.15 ... 0.5 MHz, 66 dB (µV) M • 0.5 ... 30 MHz, 73 dB (µV) Q • 0.5 ... 30 MHz, 60 dB (µV) M
Emission on wired Ethernet	EN 61000-6-4:2007+A1:2011 IEC/CISPR 22: 2008 EN55022: 2010	0.15 ... 0.5 MHz: • 53 dB (µA) ... 43 dB (µA) Q • 40 dB (µA) – 30 dB (µA) M 0.5 ... 30 MHz: • 43 dB (µA) Q / 30 dB (µA) M

Table 11- 11 Requirements: Interference immunity in industrial environment according to EN 61000-6-2

Comments	Standard	Severity level
Burst pulses on power supply cables	EN 61000-4-4:2004 EN 45501:2015 OIML R 76:2006 NAMUR NE21:2011 EN 61326-1:2006 EN 61131-2:2007	±2.4 kV 5/50ns/5kHz ±2.4 kV 5/50ns / 100kHz
Burst pulses on data and signal cables		±2.4 kV 5/50ns/5kHz ±2.4 kV 5/50ns / 100kHz
Electrostatic discharge (ESD)	EN 61000-4-2:2009 EN 45501:2015 OIML R 76:2006 NAMUR NE21:2011 EN 61326-1:2006 EN 61131-2:2007	2, 4, 6 kV direct/indirect
Electrostatic air discharge (ESD)		2, 4, 6, 8 kV

Surge on power supply cables	IEC 61131-2 :2007 NAMUR NE21 :2011 EN 61326-1 :2006 OIML R76 -2:2006 EN 61000-4-5 :2006 EN 45501:2015	ZONE A acc. to IEC 61131-2[2]: ±1.0 kV line to line ±2.0 kV line to earth ZONE B to IEC 61131-2: ±0.5 kV line to line ±1.0 kV line to earth
Surge on data and signal cables		ZONE A acc. to IEC 61131-2[3]: ±1.0 kV line to line ±2.0 kV line to earth ZONE B to IEC 61131-2: ±1.0 kV line to earth
Electromagnetic RF fields	IEC 61131-2 :2007 NAMUR NE21 :2011 EN 61326-1 :2006 OIML R76-2 :2006 EN 61000-4-3:2006 +A1:2008+A2:2010 EN 45501:2015	80MHz – 2.7 GHz: 20V/m
Induced conducted interference	IEC 61131-2 :2007 NAMUR NE21 :2011 EN 61326-1 :2006 OIML R76-2 :2006 EN 61000-4-6 :2009	10 kHz – 80MHz: $12V_{eff}$

[1] Not applicable for shielded cables and symmetrical ports

[2] An external fuse must be provided to comply with the requirement (e.g. Lightning conductor BVTAD24, Dehn & Söhne company)

[3] An external fuse must be provided to comply with the requirement (e.g. Lightning conductor BSPM4BE24, Dehn & Söhne company)

NOTICE

Radio interference is possible

This is a device of class A. The device may cause radio interference in residential areas. Implement appropriate measures (e.g.: use in 8MC cabinets) to prevent radio interference.

Ambient conditions

The SIWAREX WP521/WP522 is designed for use under the following conditions in SIMATIC S7-1500. Also observe the operating conditions of the S7-1500 system.

Table 11- 12 Operating conditions to IEC 60721

Mode	IEC 60721-3-3 Class 3K3, stationary use, weather-proofed
Storage/transport	IEC 60721-3-2 Class 2K4 without precipitation

Table 11- 13 Climatic requirements

Comments		Ambient conditions	Application areas
Operating temperature:	Vertical installation in S7-1500	0 to +40 °C	
	Horizontal installation in S7-1500	0 to +60 °C	
Storage and transport temperature		-40 to +70 °C	
Relative humidity		5 to 95 %	No condensation; corresponds to relative humidity (RH) stress level 2 to DIN IEC 61131-2
Pollutant concentration		SO_2: < 0.5 ppm H_2S: < 0.1 ppm;	RH < 60 % no condensation
Atmospheric pressure	Operation	IEC 60068-2-13	1080 to 795 hPa (operation) (-1 000 to + 2 000 m above sea level)
	For transport and storage	IEC 60068-2-13	1 080 to 660 hPa (storage) (-1 000 to +3 500 m above sea level)

Reliability

Mean Time Between Failure (MTBF)

The MTBF calculation results in the following values for the modules:

Table 11- 14 MTBF

Electronic Weighing System	MTBF in years
SIWAREX WP521	50 years @TA = 40°C
SIWAREX WP522	33 years @TA = 40°C

11.3 Approvals

NOTICE
Safety guidelines for applications in hazardous areas For applications in hazardous areas, the safety instructions in the document "Product Information - Use of SIWAREX Modules in a Zone 2 Hazardous Area (https://support.industry.siemens.com/cs/?lc=en-DE)" are to be observed.

Note

The latest valid approvals for SIWAREX WP521/WP522 can be found on the rating plate of the module.

	CE mark (https://support.industry.siemens.com/cs/document/65692972/declaration-of-conformity-ec-eu-declaration-of-conformity-manufacturer?dti=0&lc=en-WW)
	cULus approval (https://support.industry.siemens.com/cs/document/74442065/general-product-approval-ul-ul?dti=0&lc=en-WW) - pending
	FM approval for Zone 2 - pending
	ATEX approval (https://support.industry.siemens.com/cs/document/81803667/for-use-in-hazardous-locations-manufacturer-declartion-manufacturer?dti=0&lc=en-WW) - pending For Category 3 Equipment according to EU Directive 2014/34/EU (ATEX)
	IECEx approval - pending For category 3 equipment
	KC mark For use in S. Korea

	RCM mark For use in Australia and New Zealand
	EAC mark pending For use in the Eurasian Customs Union
	The modules are RoHS-compliant according to EU Directive 2016/65/EU.

Accessories 12

12.1 Configuration package

Ordering data	
Description	**Order number**
Configuration Package SIWAREX WP521/WP522 • SIWATOOL program for adjustment of scales during commissioning • Software "Ready for use" This contains the SIMATIC S7 blocks for operation with SIMATIC S7-1500 and a project for SIMATIC Operator Panel KTP600 • Product manuals in several languages	7MH4980-1AK01
Product Manual SIWAREX WP521/WP522 in various languages	Free download from the Internet WP521/WP522 Manuals (https://support.industry.siemens.com)
SIWAREX WP521/WP522 "Ready for Use"	Free download from the Internet "Ready for Use" (https://support.industry.siemens.com)
Front connector 35 mm with screw-type system	6ES7592-1AM00-0XB0
Front connector 35 mm with push-in system	6ES7592-1BM00-0XB0
Ethernet patch cable CAT5 For connecting the SIWAREX with a PC (SIWATOOL), a SIMATIC CPU, a panel, etc.	
Digital remote display The digital remote displays can be connected directly to the SIWAREX WP521/WP522 via the RS485 interface. Suitable remote display: S102 Siebert Industrieelektronik GmbH Postfach 1180 D-66565 Eppelborn, Germany Tel.: 06806/980-0 Fax: 06806/980-999 Internet: www.siebert.de (www.siebert.de) Detailed information can be obtained from the manufacturer.	
SIWAREX JB junction box for parallel connection of load cells	7MH4 710-1BA

Ordering data	
Description	**Order number**
SIWAREX EB extension box For extending load cell cables	7MH4 710-2AA
Ex interface, type SIWAREX IS With ATEX approval for intrinsically-safe connection of load cells, including manual, suitable for the load cell groups SIWAREX CS, U, M, FTA, and P	
• With short-circuit current < 199 mA DC	7MH4 710-5BA
• With short-circuit current < 137 mA DC	7MH4 710-5CA
Cable (optional)	
Cable Li2Y 1 x 2 x 0.75 ST + 2 x (2 x 0.34 ST) - CY • To connect SIWAREX CS, U, M, P, A, WP521/WP522 to the junction box (JB), extension box (EB) or Ex interface (Ex-I) or between two JBs, for fixed laying • Occasional bending is possible • 10.8 mm outer diameter • For ambient temperature -20 ... +70 °C	7MH4 702-8AG
Cable Li2Y 1 x 2 x 0.75 ST + 2 x (2 x 0.34 ST) - CY, blue sheath • To connect junction box (JB) or extension box (EB) in hazardous area and Ex interface (Ex-I), for fixed laying • Occasional bending is possible, blue PVC insulating sheath, approx. 10.8 mm outer diameter • For ambient temperature -20 ... +70 °C	7MH4 702-8AF

Appendix A

A.1 Technical support

Technical Support

If this documentation does not provide complete answers to any technical questions you may have, contact Technical Support at:

- Support request (http://www.siemens.com/automation/support-request)
- More information about our Technical Support is available at Technical support (http://www.siemens.com/automation/csi/service)

Internet Service & Support

In addition to our documentation, Siemens provides a comprehensive support solution at:

- Service&Support (http://www.siemens.com/automation/service&support)

Personal contact

If you have additional questions about the device, please contact your Siemens personal contact at:

- Partner (http://www.automation.siemens.com/partner)

In order to find the contact for your product, select under 'All Products and Branches' the path 'Automation Technology > Sensor Systems'.

Documentation

You can find documentation on various products and systems at:

- Instructions and manuals Instructions and manuals (https://support.industry.siemens.com/cs/ww/en/ps/17781/man)

See also

Process instrumentation catalog (http://www.siemens.com/processinstrumentation/catalogs)

SIWAREX support

- Email (mailto:hotline.siwarex@siemens.com)
- Phone: +49 (721) 595-2811 CET 8:00 to 17:00

A.2 ESD Guidelines

Definition of ESD

All electronic modules are equipped with large-scale integrated ICs or components. Due to their design, these electronic elements are highly sensitive to overvoltage, and thus to any electrostatic discharge.

The electrostatic sensitive components/modules are commonly referred to as ESD devices. This is also the international abbreviation for such devices.

ESD modules are identified by the following symbol:

NOTICE
Overvoltage on modules ESD devices can be destroyed by voltages well below the threshold of human perception. These static voltages develop when you touch a component or electrical connection of a device without having drained the static charges present on your body. The electrostatic discharge current may lead to latent failure of a module, that is, this damage may not be significant immediately, but in operation may cause malfunction.

Electrostatic charging

Anyone who is not connected to the electrical potential of their surroundings can be electrostatically charged.

The figure below shows the maximum electrostatic voltage which may build up on a person coming into contact with the materials indicated. These values correspond to IEC 801-2 specifications.

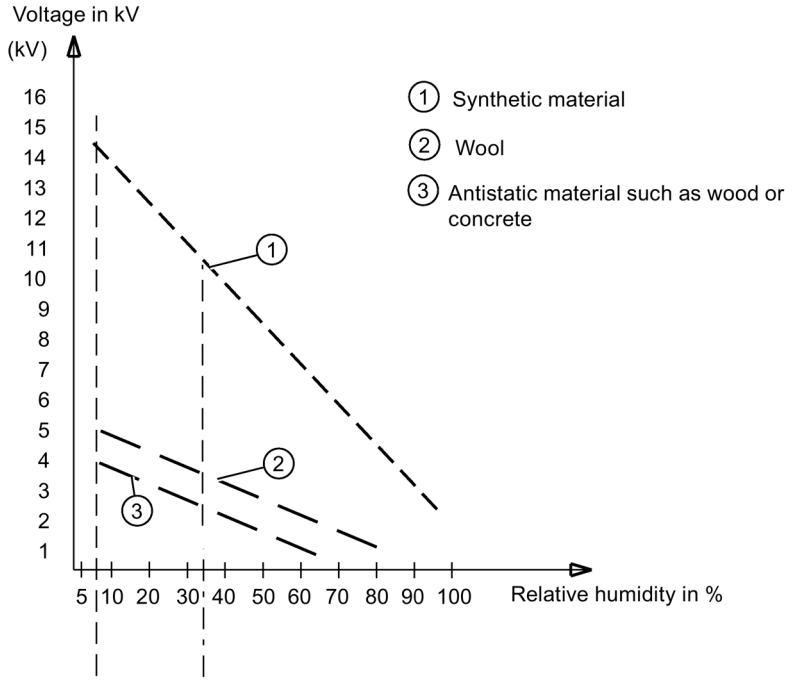

Figure A-1 Electrostatic voltages which an operator can be subjected to

Basic protective measures against electrostatic discharge

- Ensure good equipotential bonding:
  When handling electrostatic sensitive devices, ensure that your body, the workplace and packaging are grounded. This prevents electrostatic charge.
- Avoid direct contact:
  As a general rule, only touch electrostatic sensitive devices when this is unavoidable (e.g. during maintenance work). Handle the modules without touching any chip pins or PCB traces. In this way, the discharged energy can not affect the sensitive devices.

  Discharge your body before you start taking any measurements on a module. Do so by touching grounded metallic parts. Always use grounded measuring instruments.

A.3 List of abbreviations

ASCII	American Standard Code for Information Interchange
B	Gross weight
CPU	Central processor, in this case SIMATIC CPU
DB	Data block
FB	SIMATIC S7 function block
HMI	Human machine interface (e.g. SIMATIC Operator Panel)
HSP	Hardware Support Package
HW	Hardware
IM	Interface module
N	Net weight
NAWI	Non-automatic weighing instrument
NAW	Non-automatic scales
OIML	Organisation Internationale de Metrologie Legale
OP	Operator Panel (SIMATIC)
PC	Personal computer
pT	Preset tare (predefined tare weight with manual taring)
RAM	Random Access Memory (read/write memory)
PLC	Programmable logic controller
STEP 7	Programming device software for SIMATIC S7
T	Tare weight
TM	Technology module
TP	Touch Panel (SIMATIC)
UDT	Universal Data Type (S7)
WRP	Write protection
LC	Load cell(s)
NR	Numerical range

Index

A

Abbreviations, 174
Alarm buffer, 123
Automatic calibration, 58
Average characteristic value, 44

B

Backup file, 63

C

Calibration methods, 53
Calibration with calibration weight, 54
Climatic requirements, 165
Command groups, 135
Communication with SIMATIC S7-1500, 137
Configuration package, 169
Connections, 18
Customer Support Hotline, 171

D

Data and operating messages, 126
Data records, 67
Data security, 144
Date, 90
Default values, 67
Delay time, 104
Diagnostic messages, 141
DIP switch, 36

E

Electromagnetic compatibility, 163
Error code, 126
Error messages, 130
ESD guidelines, 172

F

Filter sequence, 72
Firmware update, 63

G

Guidelines
    ESD guidelines, 172

H

Hardware interrupt, 142
Hotline, 171

I

Immunity, 163
Internet, 171

L

LEDs, 130
Limit base, 84

M

Messages, 123
Modbus, 151
Module replacement, 63
MTBF, 165

O

OB82, 123
Operating messages, 125
Overview of the functions, 18

R

Rated load, 44
Ready for Use, 169
Reliability, 165

S

S7-1500 CPU, 105
Safety requirements, 161

Service, 171
SIWATOOL, 46, 52
Specification of basic values, 40
Status messages, 130
Support, 171

T

Technical specifications, 157
Technology messages, 125
Time, 90

W

Weight unit, 71

SIEMENS

SIMATIC

S7-1500/ET 200MP CM PtP RS422/485 BA communication module (6ES7540-1AB00-0AA0)

Manual

Preface

Documentation guide 1

Product overview 2

Connecting 3

Parameters/address space 4

Programming 5

Error and system messages 6

Technical specifications 7

Dimensional drawing A

01/2013

A5E03777484-01

Legal information

Warning notice system

This manual contains notices you have to observe in order to ensure your personal safety, as well as to prevent damage to property. The notices referring to your personal safety are highlighted in the manual by a safety alert symbol, notices referring only to property damage have no safety alert symbol. These notices shown below are graded according to the degree of danger.

⚠ DANGER
indicates that death or severe personal injury **will** result if proper precautions are not taken.

⚠ WARNING
indicates that death or severe personal injury **may** result if proper precautions are not taken.

⚠ CAUTION
indicates that minor personal injury can result if proper precautions are not taken.

NOTICE
indicates that property damage can result if proper precautions are not taken.

If more than one degree of danger is present, the warning notice representing the highest degree of danger will be used. A notice warning of injury to persons with a safety alert symbol may also include a warning relating to property damage.

Qualified Personnel

The product/system described in this documentation may be operated only by **personnel qualified** for the specific task in accordance with the relevant documentation, in particular its warning notices and safety instructions. Qualified personnel are those who, based on their training and experience, are capable of identifying risks and avoiding potential hazards when working with these products/systems.

Proper use of Siemens products

Note the following:

⚠ WARNING
Siemens products may only be used for the applications described in the catalog and in the relevant technical documentation. If products and components from other manufacturers are used, these must be recommended or approved by Siemens. Proper transport, storage, installation, assembly, commissioning, operation and maintenance are required to ensure that the products operate safely and without any problems. The permissible ambient conditions must be complied with. The information in the relevant documentation must be observed.

Trademarks

All names identified by ® are registered trademarks of Siemens AG. The remaining trademarks in this publication may be trademarks whose use by third parties for their own purposes could violate the rights of the owner.

Disclaimer of Liability

We have reviewed the contents of this publication to ensure consistency with the hardware and software described. Since variance cannot be precluded entirely, we cannot guarantee full consistency. However, the information in this publication is reviewed regularly and any necessary corrections are included in subsequent editions.

Siemens AG
Industry Sector
Postfach 48 48
90026 NÜRNBERG
GERMANY

A5E03777484-01
Ⓟ 12/2012 Technical data subject to change

Copyright © Siemens AG 2013.
All rights reserved

Preface

Purpose of the documentation

This device manual complements the system manual S7 1500 Automation System (http://support.automation.siemens.com/WW/view/en/59191792). General functions of the S7-1500 are described in the S7-1500 Automation System System Manual.

Conventions

This documentation contains figures of the described device. The figures may differ slightly from the devices supplied.

Please also observe notes marked as follows:

Note

A note contain important information on the product described in the documentation, on the handling of the product and on the section of the documentation to which particular attention should be paid.

Note on IT security

Siemens offers IT security mechanisms for its automation and drive product portfolio in order to support the safe operation of the plant/machine. We recommend that you inform yourself regularly on the IT security developments regarding your products. You can find information on this on the Internet (http://support.automation.siemens.com).

You can register for a product-specific newsletter here.

For the safe operation of a plant/machine, however, it is also necessary to integrate the automation components into an overall IT security concept for the entire plant/machine, which corresponds to the state-of-the-art IT technology. You can find information on this on the Internet (http://www.siemens.com/industrialsecurity).

Products used from other manufacturers should also be taken into account here.

Copyright notice for the open-source software used

Open-source software is used in the firmware of the product described. The open-source software is provided free of charge. We are liable for the product described, including the open-source software contained in it, pursuant to the conditions applicable to the product. Siemens accepts no liability for the use of the open source software over and above the intended program sequence, or for any faults caused by modifications to the software.

For legal reasons, we are obliged to publish the original text of the following copyright notices.

© Copyright William E. Kempf 2001
Permission to use, copy, modify, distribute and sell this software and its documentation for any purpose is hereby granted without fee, provided that the above copyright notice appear in all copies and that both that copyright notice and this permission notice appear in supporting documentation. William E. Kempf makes no representations about the suitability of this software for any purpose. It is provided "as is" without express or implied warranty.

Copyright © 1994 Hewlett-Packard Company
Permission to use, copy, modify, distribute and sell this software and its documentation for any purpose is hereby granted without fee, provided that the above copyright notice appear in all copies and that both that copyright notice and this permission notice appear in supporting documentation. Hewlett-Packard Company makes no representations about the suitability of this software for any purpose. It is provided ``as is'' without express or implied warranty.

Table of contents

Preface 3
1 Documentation guide 7
2 Product overview 9
2.1 Properties 9
2.2 Accessories 11
2.3 Functions 12
2.4 Properties of the RS422/485 interface 14
3 Connecting 15
3.1 RS422/485 (X27) interface of the communication module 15
3.2 Installation guidelines 16
4 Parameters/address space 17
4.1 Parameter assignment 17
4.2 Reaction to CPU STOP 17
4.3 Address space 18
5 Programming 19
6 Error and system messages 21
7 Technical specifications 23
A Dimensional drawing 27

Documentation guide

1

Introduction

This modular documentation of the SIMATIC products covers diverse topics concerning your automation system.

The complete documentation for the S7-1500 and ET 200MP automation systems consists of system manuals, function manuals and manuals.

The STEP 7 information system (Online Help) also helps you configure and program your automation system.

Overview of the documentation provided for the CM PtP RS422/485 BA communication module

The following table lists additional references that you will need when using the CM PtP RS422/485 BA communication module.

Table 1- 1 Documentation for the CM PtP RS422/485 BA communication module

Topic	Documentation	Key content
System description	System manual S7 -1500 Automation System (http://support.automation.siemens.com/WW/view/en/59191792) System manual ET 200MP distributed I/O system (http://support.automation.siemens.com/WW/view/en/59193214) System manual ET 200SP distributed I/O system (http://support.automation.siemens.com/WW/view/en/58649293)	• Application planning • Installation • Connecting • Addressing • Commissioning • Maintenance
	Power supply manuals (http://support.automation.siemens.com/WW/view/en/59173914)	• Connecting • Interrupt, error and system messages • Technical specifications • Dimensional drawing
	CPU manuals (http://support.automation.siemens.com/WW/view/en/56926947)	
	Function manual EMC/EMI compatible installation of control systems (http://support.automation.siemens.com/WW/view/en/59193566)	• Basics • Electromagnetic compatibility • Lightning protection

Topic	Documentation	Key content
Point-to-point communication	Function manual CM PtP - Configurations for point-to-point connections (http://support.automation.siemens.com/WW/view/en/59057093)	• Basic information • Data transmission functions • Diagnostics functions

SIMATIC manuals

All current manuals for the SIMATIC products are available for download free of charge on the Internet (http://www.siemens.com/automation/service&support).

Product overview

2

2.1 Properties

Order number

6ES7540-1AB00-0AA0

View of the module

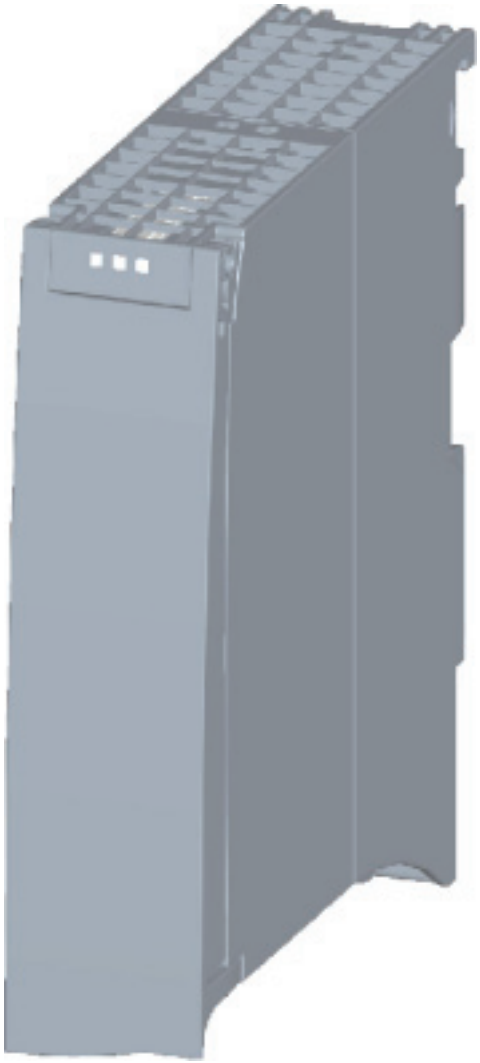

Figure 2-1 CM PtP RS422/485 BA view

Properties

The communication module has the following properties:

- Technical properties
  - RS422/485 interface
  - short-circuit proof
  - electrically disconnected
  - Protocols: 3964(R), Freeport and USS with instructions
- Supported system functions
  - Firmware update
  - Identification data I&M0
  - Parameter re-assignment in CPU RUN mode (using instructions)
  - Diagnostic interrupts

Additional information

Additional information on the properties of the CM PtP RS422/485 BA can be found in the function manual CM PtP - Configurations for point-to-point connections (http://support.automation.siemens.com/WW/view/en/59057093).

Additional information on the properties of the S7-1500 and associated modules can be found in the system manual S7 -1500 Automation System (http://support.automation.siemens.com/WW/view/en/59191792).

2.2 Accessories

Scope of delivery

The scope of delivery of the communication module includes a U connector for connection to the backplane bus.

Connecting cables

Connecting cables are available in the standard lengths: 5 m, 10 m and 50 m (each with a 15-pin sub D connector).

Table 2- 1 Order numbers of connecting cables

Connecting cables for CM PtP RS422/485 BA CM PtP RS422/485 HF	Type	Order number
X27 interface (RS422/485)	X27 (RS 422), 5 m	6ES7902–3AB00–0AA0
	X27 (RS 422), 10 m	6ES7902–3AC00–0AA0
	X27 (RS 422), 50 m	6ES7902–3AG00–0AA0

Online catalog

Additional order numbers for S7-1500 can be found on the Internet (http://www.siemens.com/industrymall) in the online catalog and online ordering system.

2.3 Functions

Introduction

The communication module allows you to exchange data between your own and other programmable controllers or computers by means of a point-to-point connection, and to connect various devices from a variety of manufacturers.

Functionality of the CM PtP RS422/485 BA

The CM PtP RS422/485 BA communication module offers the following functionality:

- RS422/485 interface
- Data transmission rate: 300 to 19200 bps
- Maximum frame length: 1 kbyte
- Transmission protocols: Freeport and 3964(R)

Note

The USS protocol can be implemented with instructions included in STEP 7 (TIA Portal).

Hardware components of a point-to-point connection

You require certain hardware components for a point-to-point connection with the CM PtP RS422/485 BA.

Components	Function
Central processor unit (CPU) Accessories: Memory card	... executes the user program.
CM PtP RS422/485 BA communication module	... communicates with a communication partner (point-to-point) by means of the interface.
Connecting cable	... connects the CM PtP RS422/485 BA communication module with the communication partner.
U connector	... provides the mechanical and electrical connection between the modules.
Optional: Power supply module (PS)	... converts the line voltage (120/230 VAC or 24 VDC) into the operating voltage of 15 VDC required for supply of the S7-1500.

System environment

The communication module can be used in the following system environments:

Applications	Components required	Configuration
Central operation in an S7-1500 system	• CPU 151x • CM PtP RS422/485 BA • Power supply (optional)	STEP 7 (TIA Portal)
Distributed operation in an S7-1500 system	• CPU 151x • IM 155-5 • CM PtP RS422/485 BA • Power supply (optional)	STEP 7 (TIA Portal)
Distributed operation in an S7-300/400 system	• CPU 31x / CPU 41x • IM 155-5 • CM PtP RS422/485 BA	STEP 7 (TIA Portal) STEP 7 with integration of a GSD file
Distributed operation in a third-party system	• Third-party programmable controller • IM 155-5 • CM PtP RS422/485 BA	GSD file imported to/installed in the engineering system [1)]

1) Information on using the communication module in a third-party system is available in the programming and operating manual CM PtP operation with PROFINET controller (http://support.automation.siemens.com/WW/view/en/59062563).

Additional information

Information on configuring and programming the CM PtP RS422/485 BA communication module is available in the function manual CM PtP - Configurations for point-to-point connections (http://support.automation.siemens.com/WW/view/en/59057093).

2.4 Properties of the RS422/485 interface

Definition

The RS422/485 (X27) interface is a differential voltage interface for serial data transmission.

Properties

The RS422/485 (X27) interface has the following properties and meets the following requirements:

Type	Differential voltage interface
Front connector:	15-pin sub-D female connector, with screw lock
RS422 signals:	T (A), R (A), T (B), R (B), GND; isolated
RS485 signals:	R/T (A), R/T (B), GND; all signals isolated against backplane bus and load voltage
Max. data transmission rate:	19.2 kbps
Max. cable length:	1200 m; cable type LIYCY 3 x 2 x 0.14. T(A)/T(B) and R(A)/R(B) twisted in pairs
Standard:	DIN 66259 Parts 1 and 3, EIA-RS422/485, CCITT V.11

Connecting 3

3.1 RS422/485 (X27) interface of the communication module

Terminal assignment

The table below shows the terminal assignment for the 15-pin sub D female connector in the front panel of the communication module.

Table 3- 1 Terminal assignment for the 15-pin sub D female connector of the integrated interface of the communication module

RS422/485* female connector	Pin	Designation	Input/output	Meaning
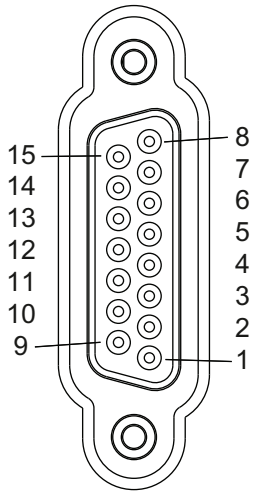	1	-	-	-
	2	T (A) -	Output	Send data (four-wire mode)
	3	-	-	-
	4	R (A)/T (A) -	Input Input/output	Receive data (four-wire mode) Receive/send data (two-wire mode)
	5	-	-	-
	6	-	-	-
	7	-	-	-
	8	GND	-	Functional ground (isolated)
	9	T (B) +	Output	Send data (four-wire mode)
	10	-	-	-
	11	R (B)/T (B) +	Input Input/output	Receive data (four-wire mode) Receive/send data (two-wire mode)
	12	-	-	-
	13	-	-	-
	14	-	-	-
	15	-	-	-
* View from the front				

Connecting cables

Standard connecting cables of various lengths (see chapter Accessories (Page 11)) are available for connection with a communication partner which also has a 15-pin sub-D female connector.

Please note that you must only use shielded connector casings and cables. A large surface area of the cable shield must be in contact with the connector casing on both sides.

⚠ CAUTION
Cable shield - GND Never connect the cable shield to the GND, as this could destroy the modules. GND (pin 8) must always be connected on both sides, as this could otherwise also destroy the modules.

3.2 Installation guidelines

To take into consideration

The general installation guidelines must be taken into consideration (see function manual EMC/EMI compatible installation of control systems (http://support.automation.siemens.com/WW/view/en/59193566)).

The cable shield must be installed on a grounding rail to maintain the EMC values (electromagnetic compatibility).

Parameters/address space 4

4.1 Parameter assignment

Introduction

You configure and assign the parameters of the communication module with STEP 7 (TIA Portal V12 or later) or with STEP 7 with integration of a GSD file.

Additional information

The device manual of the communication module is supplemented by the function manual CM PtP - Configurations for point-to-point connections (http://support.automation.siemens.com/WW/view/en/59057093) and the TIA Portal information system.

There you will find information on the following topics:

- Operating modes
- Receive buffer
- Data flow control
- Transmission integrity
- Data transmission - protocol specific
- Programming/configuring in STEP 7 (TIA Portal)
- Module-specific instructions
- Diagnostics

4.2 Reaction to CPU STOP

Ongoing transmissions are aborted when the higher-level control (CPU) goes to STOP.

Frames in the receive buffer are retained. With a corresponding configuration in the properties dialog of the communication module, you can automatically clear the receive buffer on the communication module during CPU startup.

4.3 Address space

Address space of the communication module

The input addresses of the communications module total 8 bytes. The input addresses are automatically assigned for each communications module when you specify the device configuration in STEP 7 (TIA Portal). Output addresses are not required.

Hardware identification (not freely configurable)

The hardware identification (HW ID) is automatically assigned for each communications module when you specify the device configuration in STEP 7 (TIA Portal).

The hardware ID is issued along with the diagnostic messages to localize the module. In addition, the HW identification is required for S7-1500 at the communication instructions in order to identify the communication module. For S7-300/400, the communication module is identified by the start address of the input data.

Programming 5

Overview of the instructions

Communication between the CPU, the communication module and a communication partner takes place by means of special instructions and protocols that support the corresponding communication modules. The instructions process the exchange of data between the CPU and the communication module. They must be called cyclically from the user program. Data transmission takes place asynchronously across several cycles.

The transmission protocols are implemented on the communication module. The protocol is used to adapt the interface of the communication module to the interface of the communication partner.

Instruction	Meaning
Port_Config	You use the Port_Config instruction to dynamically assign basic interface parameters.
Send_Config	You use the Send_Config (send configuration) instruction to dynamically assign serial send parameters of a protocol.
Receive_Config	You use the Receive_Config (receive configuration) instruction to dynamically assign serial receive parameters of a protocol.
P3964_Config	You use the P3964_Config (protocol configuration) instruction to dynamically assign the parameters of the 3964(R) procedure.
Send_P2P	You use the Send_P2P instruction to send data to a communication partner.
Receive_P2P	You use the Receive_P2P instruction to receive data from a communication partner.
Receive_Reset	You use the Receive_Reset instruction to delete the receive buffer of the communication module.
Get_Features	You use the Get_Features instruction to read expanded functions supported by the communication module.
Set_Features	You use the Set_Features instruction to set expanded functions supported by the communication module.
USS_Port_Scan	You use the USS_Port_Scan instruction to communicate using the USS.
USS_Drive_Control	You use the USS_Drive_Control instruction to exchange data with a drive.
USS_Read_Param	You use the USS_Read_Param instruction to read parameters from the drive.
USS_Write_Param	You use the USS_Write_Param instruction to change parameters in the drive.

The instructions are part of STEP 7 (TIA Portal). The instructions are available in the "Instructions" task card under Communication > Communication processor.

Additional information

Additional information on programming the communication modules can be found in the function manual CM PtP - Configurations for point-to-point connections (http://support.automation.siemens.com/WW/view/en/59057093).

Error and system messages

6

LED displays of the communication module

The figure below shows the LED displays of the CM PtP RS422/485 BA communication module with open front panel.

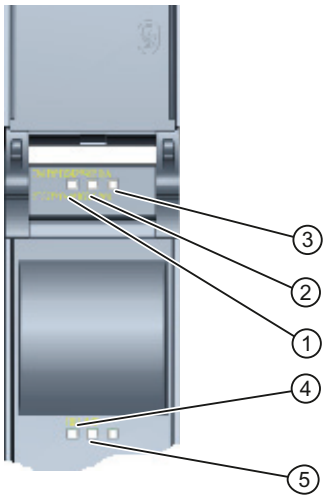

① LED display RUN
② LED display ERROR
③ LED display MAINT
④ LED display TXD
⑤ LED display RXD

Figure 6-1 CM PtP RS422/485 BA view

Meaning of the LED displays for RUN/ERROR/(MAINT)

LED			Meaning	Solution
RUN	ERROR	MAINT		
Off	Off	Off	Supply voltage not present or too low at communication module	Check the power supply of the station.
Flashes	Off	Off	CM in startup, parameters not assigned yet	---
On	Off	Off	CM configured and ready for operation	---
On	Flashes	Off	Group error (at least one error pending)	Evaluate the diagnostics data and eliminate the error. [1)]

1) Information on startup and diagnostics of the communication module is available in the function manual CM PtP - Configurations for point-to-point connections (http://support.automation.siemens.com/WW/view/en/59057093).

Meaning of LED displays for TXD/RXD (under the front panel)

LED		Meaning	Solution
TXD	RXD		
Flashes	Off	Interface is transmitting	---
Off	Flashes	Interface is receiving	---

Technical specifications 7

	6ES7540-1AB00-0AA0
Product type designation	CM PtP RS422/485 BA
General information	
• I&M data	Yes; I&M 0
Engineering with	
STEP 7 TIA Portal can be configured/integrated as of version	V12.0 / V12.0
STEP 7 can be configured/integrated as of version	V5.5 SP2 or higher with a GSD file
PROFIBUS as of GSD version/GSD revision	- / -
PROFINET as of GSD version/GSD revision	V2.3
Installation type/mounting	
• Rail mounting possible	Yes; S7-1500 mounting rail
Supply voltage	
Voltage type of supply voltage	System power supply
Input current	
• Current consumption (rated value)	33 mA; from backplane bus
Power	
• Power from the backplane bus	0.65 W
Power loss	
• Power loss, typ.	0.6 W
Address area	
Occupied address area	
• Inputs	8 bytes
Interfaces	
1. Interface	
Interface hardware	
• RS 422	Yes
• RS 485	Yes

	6ES7540-1AB00-0AA0
Interface hardware	
RS 485	
• Transmission rate, max.	19.2 kbps
• Max. cable length	1200 m
RS 422	
• Transmission rate, max.	19.2 kbps
• Max. cable length	1200 m
• 4-wire full duplex connection	Yes
• 4-wire multipoint connection	No
Protocols	
Integrated protocols	
Freeport	
• Frame length, max.	1 kbyte
• Bits per character	7 or 8
• Number of stop bits	1 or 2 bits
• Parity	None, even, odd, always 1, always 0, any
3964 (R)	
• Frame length, max.	1 kbyte
• Bits per character	7 or 8
• Number of stop bits	1 or 2 bits
• Parity	None, even, odd, always 1, always 0, any
Frame buffer	
• Buffer memory for frames	2 kbyte
• Number of frames which can be buffered	255
Interrupts/diagnostics/status information	
Interrupts	
• Diagnostic interrupt	Yes
• Hardware interrupt	No
Diagnostic messages	
Diagnostics	Yes
• Wire break	Yes
Diagnostics display LED	
• RUN LED	Yes; green LED
• ERROR LED	Yes; red LED
• Receive RxD	Yes; yellow LED
• Send TxD	Yes; yellow LED

	6ES7540-1AB00-0AA0
Electrical isolation	
• between backplane bus and interface	Yes
Insulation	
Insulation tested with	707 V DC
Ambient conditions	
Operating temperature	
• Horizontal installation, min.	0 °C
• Horizontal installation, max.	60 °C
• Vertical installation, min.	0 °C
• Vertical installation, max.	40 °C
Distributed operation	
• At SIMATIC S7-300	Yes
• At SIMATIC S7-400	Yes
• At SIMATIC S7-1500	Yes
• At Standard Profinet Controller	Yes
• Supports Fast Startup	Yes
Dimensions	
• Width	35 mm
• Height	147 mm
• Depth	127 mm
Weights	
• Weight, approx.	0.22 kg

Additional general technical specifications for SIMATIC S7-1500 are available in the system manual S7 -1500 Automation System (http://support.automation.siemens.com/WW/view/en/59191792).

Dimensional drawing

A

This appendix contains the dimensional drawing of the communication module installed on a mounting rail and with a shield bracket. Always observe the specified dimensions for installation in cabinets, control rooms, etc.

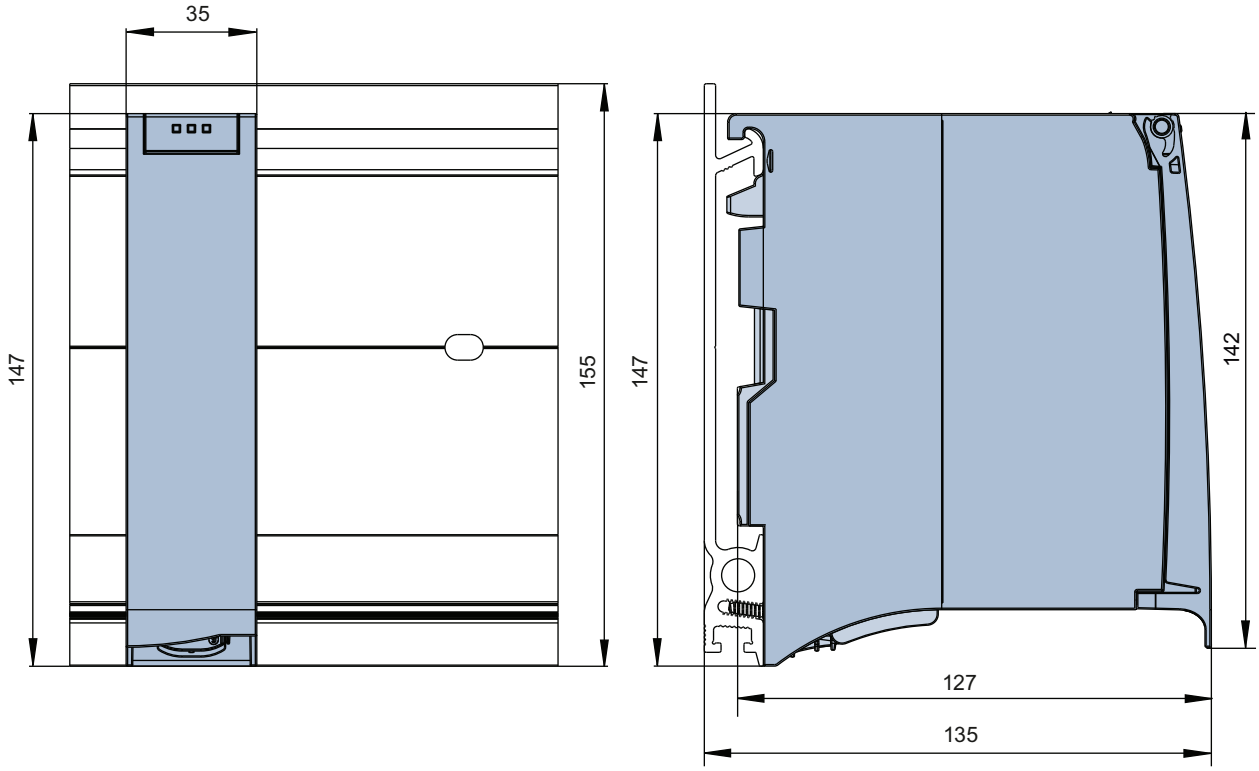

Figure A-1 Dimensional drawing of the CM PtP RS422/485 BA communication module

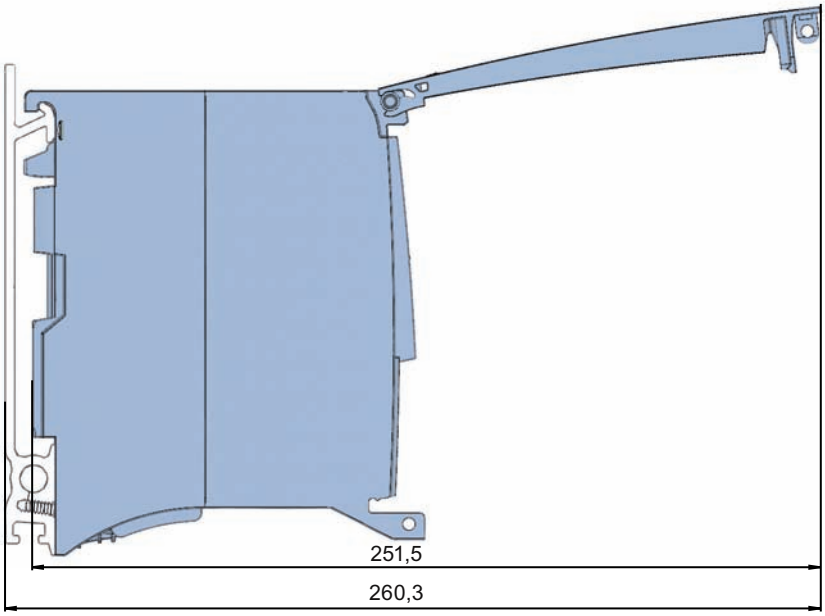

Figure A-2 Dimensional drawing of the CM PtP RS422/485 BA communication module with open front panel

SIEMENS

SIMATIC

S7-1500/ET 200MP CM PtP RS422/485 HF communication module (6ES7541-1AB00-0AB0)

Manual

Preface

Documentation guide 1

Product overview 2

Connecting 3

Parameters/address space 4

Programming 5

Error and system messages 6

Technical specifications 7

Dimensional drawing A

01/2013

A5E03790709-01

Legal information

Warning notice system

This manual contains notices you have to observe in order to ensure your personal safety, as well as to prevent damage to property. The notices referring to your personal safety are highlighted in the manual by a safety alert symbol, notices referring only to property damage have no safety alert symbol. These notices shown below are graded according to the degree of danger.

⚠ DANGER
indicates that death or severe personal injury **will** result if proper precautions are not taken.

⚠ WARNING
indicates that death or severe personal injury **may** result if proper precautions are not taken.

⚠ CAUTION
indicates that minor personal injury can result if proper precautions are not taken.

NOTICE
indicates that property damage can result if proper precautions are not taken.

If more than one degree of danger is present, the warning notice representing the highest degree of danger will be used. A notice warning of injury to persons with a safety alert symbol may also include a warning relating to property damage.

Qualified Personnel

The product/system described in this documentation may be operated only by **personnel qualified** for the specific task in accordance with the relevant documentation, in particular its warning notices and safety instructions. Qualified personnel are those who, based on their training and experience, are capable of identifying risks and avoiding potential hazards when working with these products/systems.

Proper use of Siemens products

Note the following:

⚠ WARNING
Siemens products may only be used for the applications described in the catalog and in the relevant technical documentation. If products and components from other manufacturers are used, these must be recommended or approved by Siemens. Proper transport, storage, installation, assembly, commissioning, operation and maintenance are required to ensure that the products operate safely and without any problems. The permissible ambient conditions must be complied with. The information in the relevant documentation must be observed.

Trademarks

All names identified by ® are registered trademarks of Siemens AG. The remaining trademarks in this publication may be trademarks whose use by third parties for their own purposes could violate the rights of the owner.

Disclaimer of Liability

We have reviewed the contents of this publication to ensure consistency with the hardware and software described. Since variance cannot be precluded entirely, we cannot guarantee full consistency. However, the information in this publication is reviewed regularly and any necessary corrections are included in subsequent editions.

Siemens AG
Industry Sector
Postfach 48 48
90026 NÜRNBERG
GERMANY

A5E03790709-01
Ⓟ 11/2012 Technical data subject to change

Copyright © Siemens AG 2013.
All rights reserved

Preface

Purpose of the documentation

This device manual complements the system manual S7 1500 Automation System (http://support.automation.siemens.com/WW/view/en/59191792). General functions of the S7-1500 are described in the S7-1500 Automation System System Manual.

Conventions

This documentation contains figures of the described device. The figures may differ slightly from the devices supplied.

Please also observe notes marked as follows:

Note

A note contain important information on the product described in the documentation, on the handling of the product and on the section of the documentation to which particular attention should be paid.

Note on IT security

Siemens offers IT security mechanisms for its automation and drive product portfolio in order to support the safe operation of the plant/machine. We recommend that you inform yourself regularly on the IT security developments regarding your products. You can find information on this on the Internet (http://support.automation.siemens.com).

You can register for a product-specific newsletter here.

For the safe operation of a plant/machine, however, it is also necessary to integrate the automation components into an overall IT security concept for the entire plant/machine, which corresponds to the state-of-the-art IT technology. You can find information on this on the Internet (http://www.siemens.com/industrialsecurity).

Products used from other manufacturers should also be taken into account here.

Copyright notice for the open-source software used

Open-source software is used in the firmware of the product described. The open-source software is provided free of charge. We are liable for the product described, including the open-source software contained in it, pursuant to the conditions applicable to the product. Siemens accepts no liability for the use of the open source software over and above the intended program sequence, or for any faults caused by modifications to the software.

For legal reasons, we are obliged to publish the original text of the following copyright notices.

© Copyright William E. Kempf 2001
Permission to use, copy, modify, distribute and sell this software and its documentation for any purpose is hereby granted without fee, provided that the above copyright notice appear in all copies and that both that copyright notice and this permission notice appear in supporting documentation. William E. Kempf makes no representations about the suitability of this software for any purpose. It is provided "as is" without express or implied warranty.

Copyright © 1994 Hewlett-Packard Company
Permission to use, copy, modify, distribute and sell this software and its documentation for any purpose is hereby granted without fee, provided that the above copyright notice appear in all copies and that both that copyright notice and this permission notice appear in supporting documentation. Hewlett-Packard Company makes no representations about the suitability of this software for any purpose. It is provided ``as is'' without express or implied warranty.

Table of contents

Preface 3
1 Documentation guide 7
2 Product overview 9
2.1 Properties 9
2.2 Accessories 11
2.3 Functions 12
2.4 Properties of the RS422/485 interface 14
3 Connecting 15
3.1 RS422/485 (X27) interface of the communication module 15
3.2 Installation guidelines 16
4 Parameters/address space 17
4.1 Parameter assignment 17
4.2 Reaction to CPU STOP 17
4.3 Address space 18
5 Programming 19
6 Error and system messages 21
7 Technical specifications 23
7.1 Technical specifications 23
A Dimensional drawing 27

Documentation guide

1

Introduction

This modular documentation of the SIMATIC products covers diverse topics concerning your automation system.

The complete documentation for the S7-1500 and ET 200MP automation systems consists of system manuals, function manuals and manuals.

The STEP 7 information system (Online Help) also helps you configure and program your automation system.

Overview of the documentation provided for the CM PtP RS422/485 HF communication module

The following table lists additional references that you will need when using the CM PtP RS422/485 HF communication module.

Table 1- 1 Documentation for the CM PtP RS422/485 HF communication module

Topic	Documentation	Key content
System description	System manual S7 -1500 Automation System (http://support.automation.siemens.com/WW/view/en/59191792) System manual ET 200MP distributed I/O system (http://support.automation.siemens.com/WW/view/en/59193214) System manual ET 200SP distributed I/O system (http://support.automation.siemens.com/WW/view/en/58649293)	• Application planning • Installation • Connecting • Addressing • Commissioning • Maintenance
	Power supply manuals (http://support.automation.siemens.com/WW/view/en/59173914)	• Connecting • Interrupt, error and system messages • Technical specifications • Dimensional drawing
	CPU manuals (http://support.automation.siemens.com/WW/view/en/56926947)	
	Function manual EMC/EMI compatible installation of control systems (http://support.automation.siemens.com/WW/view/en/59193566)	• Basics • Electromagnetic compatibility • Lightning protection

Topic	Documentation	Key content
Point-to-point communication	Function manual CM PtP - Configurations for point-to-point connections (http://support.automation.siemens.com/WW/view/en/59057093)	• Basic information • Data transmission functions • Diagnostics functions

SIMATIC manuals

All current manuals for the SIMATIC products are available for download free of charge on the Internet (http://www.siemens.com/automation/service&support).

Product overview

2

2.1 Properties

Order number

6ES7541-1AB00-0AB0

View of the module

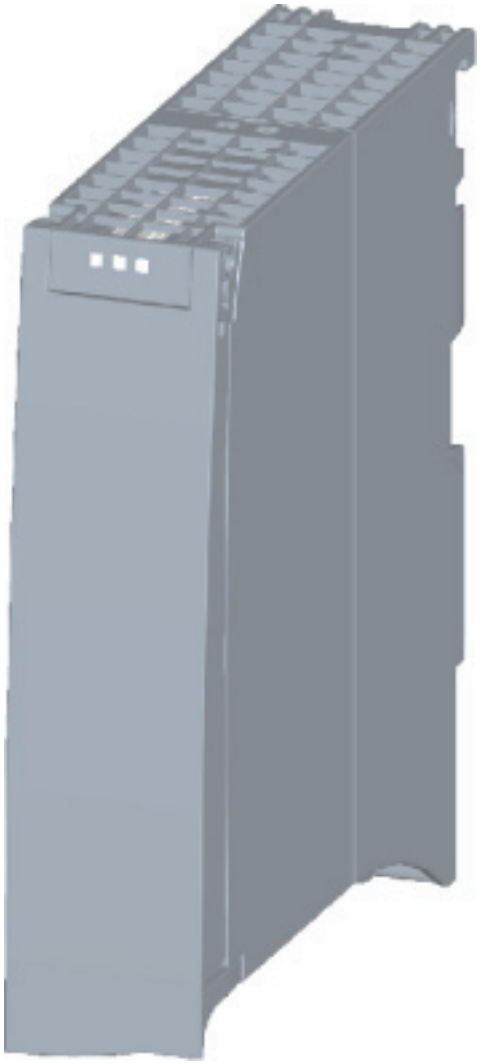

Figure 2-1 CM PtP RS422/485 HF view

Properties

The communication module has the following properties:

- Technical properties
  - RS422/485 interface
  - short-circuit proof
  - electrically disconnected
  - Protocols: 3964(R), Modbus master (RTU), Modbus slave (RTU), Freeport and USS with instructions
- Supported system functions
  - Firmware update
  - Identification data I&M0
  - Diagnostic interrupts
  - Parameter re-assignment in CPU RUN mode (using instructions)

Additional information

Additional information on the properties of the CM PtP RS422/485 HF can be found in the function manual CM PtP - Configurations for point-to-point connections (http://support.automation.siemens.com/WW/view/en/59057093).

You can find additional information on the design of the S7-1500 and the associated modules in the system manual S7 -1500 Automation System (http://support.automation.siemens.com/WW/view/en/59191792).

2.2 Accessories

Scope of delivery

The scope of delivery of the communication module includes a U connector for connection to the backplane bus.

Connecting cables

Connecting cables are available in the standard lengths: 5 m, 10 m and 50 m (each with a 15-pin sub D connector).

Table 2- 1 Order numbers of connecting cables

Connecting cables for CM PtP RS422/485 BA CM PtP RS422/485 HF	Type	Order number
X27 interface (RS422/485)	X27 (RS 422), 5 m	6ES7902–3AB00–0AA0
	X27 (RS 422), 10 m	6ES7902–3AC00–0AA0
	X27 (RS 422), 50 m	6ES7902–3AG00–0AA0

Online catalog

Additional order numbers for S7-1500 can be found on the Internet (http://www.siemens.com/industrymall) in the online catalog and online ordering system.

2.3 Functions

Introduction

The communication module allows you to exchange data between your own and other programmable controllers or computers by means of a point-to-point connection, and to connect various devices from a variety of manufacturers.

Functionality of the CM PtP RS422/485 HF

The CM PtP RS422/485 HF communication module offers the following functionality:

- RS422/485 interface
- Data transmission rate: 300 to 115.2 kbps
- Maximum frame length: 4 kbyte
- Transmission protocols: Freeport, 3964(R) and Modbus

Note

The USS protocol can be implemented with instructions included in STEP 7 (TIA Portal).

Hardware components of a point-to-point connection

You require certain hardware components for a point-to-point connection with the CM PtP RS422/485 HF.

Components	Function
Central processor unit (CPU) Accessories: Memory card	... executes the user program.
CM PtP RS422/485 HF communication module	... communicates with a communication partner (point-to-point) by means of the interface.
Connecting cable	... connects the CM PtP RS422/485 HF communication module with the communication partner.
U connector	... provides the mechanical and electrical connection between the modules.
Optional: Power supply module (PS)	... converts the line voltage (120/230 VAC or 24 VDC) into the operating voltage of 15 VDC required for supply of the S7-1500.

System environment

The communication module can be used in the following system environments:

Applications	Components required	Configuration
Central operation in an S7-1500 system	• CPU 151x • CM PtP RS422/485 HF • Power supply (optional)	STEP 7 (TIA Portal)
Distributed operation in an S7-1500 system	• CPU 151x • IM 155-5 • CM PtP RS422/485 HF • Power supply (optional)	STEP 7 (TIA Portal)
Distributed operation in an S7-300/400 system	• CPU 31x / CPU 41x • IM 155-5 • CM PtP RS422/485 HF	STEP 7 (TIA Portal) STEP 7 with integration of a GSD file
Distributed operation in a third-party system	• Third-party programmable controller • IM 155-5 • CM PtP RS422/485 HF	GSD file imported to/installed in the engineering system [1)]

1) Information on using the communication module in a third-party system is available in the programming and operating manual CM PtP operation with PROFINET controller (http://support.automation.siemens.com/WW/view/en/59062563).

Additional information

Information on configuring and programming the CM PtP RS422/485 HF communication module is available in the function manual CM PtP - Configurations for point-to-point connections (http://support.automation.siemens.com/WW/view/en/59057093).

2.4 Properties of the RS422/485 interface

Definition

The RS422/485 (X27) interface is a differential voltage interface for serial data transmission.

Properties

The RS422/485 (X27) interface has the following properties and meets the following requirements:

Type	Differential voltage interface
Front connector:	15-pin sub-D female connector, with screw lock
RS422 signals:	T (A), R (A), T (B), R (B), GND; isolated
RS485 signals:	R/T (A), R/T (B), GND; all signals isolated against backplane bus and load voltage
Max. data transmission rate:	115.2 kbps
Max. cable length:	• 250 m for 115.2 kbps • 500 m for 38.4 kbps • 1200 m for up to19.2 kbps Cable type LIYCY 3 x 2 x 0.14. T(A)/T(B) and R(A)/R(B) twisted in pairs
Standard:	DIN 66259 Parts 1 and 3, EIA-RS422/485, CCITT V.11

Connecting 3

3.1 RS422/485 (X27) interface of the communication module

Terminal assignment

The table below shows the terminal assignment for the 15-pin sub D female connector in the front panel of the communication module.

Table 3- 1 Terminal assignment for the 15-pin sub D female connector of the integrated interface of the communication module

RS422/485* female connector	Pin	Designation	Input/output	Meaning
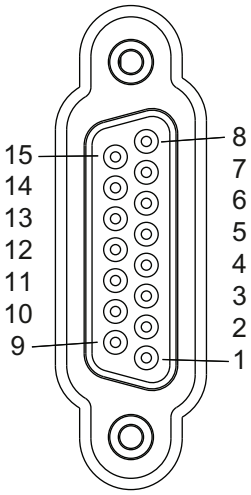	1	-	-	-
	2	T (A) -	Output	Send data (four-wire mode)
	3	-	-	-
	4	R (A)/T (A) -	Input Input/output	Receive data (four-wire mode) Receive/send data (two-wire mode)
	5	-	-	-
	6	-	-	-
	7	-	-	-
	8	GND	-	Functional ground (isolated)
	9	T (B) +	Output	Send data (four-wire mode)
	10	-	-	-
	11	R (B)/T (B) +	Input Input/output	Receive data (four-wire mode) Receive/send data (two-wire mode)
	12	-	-	-
	13	-	-	-
	14	-	-	-
	15	-	-	-
* View from the front				

Connecting cables

Standard connecting cables of various lengths (see chapter Accessories (Page 11)) are available for connection with a communication partner which also has a 15-pin sub-D female connector.

Please note that you must only use shielded connector casings and cables. A large surface area of the cable shield must be in contact with the connector casing on both sides.

⚠ CAUTION
Cable shield - GND Never connect the cable shield to the GND, as this could destroy the modules. GND (pin 8) must always be connected on both sides, as this could otherwise also destroy the modules.

3.2 Installation guidelines

To take into consideration

The general installation guidelines must be taken into consideration (see function manual EMC/EMI compatible installation of control systems (http://support.automation.siemens.com/WW/view/en/59193566)).

The cable shield must be installed on a grounding rail to maintain the EMC values (electromagnetic compatibility).

Parameters/address space 4

4.1 Parameter assignment

Introduction

You configure and assign the parameters of the communication module with STEP 7 (TIA Portal V12 or later) or with STEP 7 with integration of a GSD file.

Additional information

The device manual of the communication module is supplemented by the function manual CM PtP - Configurations for point-to-point connections (http://support.automation.siemens.com/WW/view/en/59057093) and the TIA Portal information system.

There you will find information on the following topics:

- Operating modes
- Receive buffer
- Data flow control
- Transmission integrity
- Data transmission - protocol specific
- Programming/configuring in STEP 7 (TIA Portal)
- Module-specific instructions
- Diagnostics

4.2 Reaction to CPU STOP

Ongoing transmissions are aborted when the higher-level control (CPU) goes to STOP.

Frames in the receive buffer are retained. With a corresponding configuration in the properties dialog of the communication module, you can automatically clear the receive buffer on the communication module during CPU startup.

4.3 Address space

Address space of the communication module

The input addresses of the communications module total 8 bytes. The input addresses are automatically assigned for each communications module when you specify the device configuration in STEP 7 (TIA Portal). Output addresses are not required.

Hardware identification (not freely configurable)

The hardware identification (HW ID) is automatically assigned for each communications module when you specify the device configuration in STEP 7 (TIA Portal).

The hardware ID is issued along with the diagnostic messages to localize the module. In addition, the HW identification is required for S7-1500 at the communication instructions in order to identify the communication module. For S7-300/400, the communication module is identified by the start address of the input data.

Programming 5

Overview of the instructions

Communication between the CPU, the communication module and a communication partner takes place by means of special instructions and protocols that support the corresponding communication modules. The instructions process the exchange of data between the CPU and the communication module. They must be called cyclically from the user program. Data transmission takes place asynchronously across several cycles.

The transmission protocols are implemented on the communication module. The protocol is used to adapt the interface of the communication module to the interface of the communication partner.

Instruction	Meaning
Port_Config	You use the Port_Config instruction to dynamically assign basic interface parameters.
Send_Config	You use the Send_Config (send configuration) instruction to dynamically assign serial send parameters of a protocol.
Receive_Config	You use the Receive_Config (receive configuration) instruction to dynamically assign serial receive parameters of a protocol.
P3964_Config	You use the P3964_Config (protocol configuration) instruction to dynamically assign the parameters of the 3964(R) procedure.
Send_P2P	You use the Send_P2P instruction to send data to a communication partner.
Receive_P2P	You use the Receive_P2P instruction to receive data from a communication partner.
Receive_Reset	You use the Receive_Reset instruction to delete the receive buffer of the communication module.
Signal_Get	You use the Signal_Get instruction to read the RS232 accompanying signals.
Signal_Set	You use the Signal_Set instruction to set the RS232 accompanying signals.
Get_Features	You use the Get_Features instruction to read expanded functions supported by the communication module.
Set_Features	You use the Set_Features instruction to set expanded functions supported by the communication module.
USS_Port_Scan	You use the USS_Port_Scan instruction to communicate using the USS.
USS_Drive_Control	You use the USS_Drive_Control instruction to exchange data with a drive.
USS_Read_Param	You use the USS_Read_Param instruction to read parameters from the drive.
USS_Write_Param	You use the USS_Write_Param instruction to change parameters in the drive.
Modbus_Comm_Load	The instruction Modbus_Comm_Load allows you to configure the port of the communication module for Modbus RTU.

Instruction	Meaning
Modbus_Master	The instruction Modbus_Master allows you to communicate as Modbus master by means of the PtP port.
Modbus_Slave	The instruction Modbus_Slave allows you to communicate as Modbus slave by means of the PtP port.

The instructions are part of STEP 7 (TIA Portal). The instructions are available in the "Instructions" task card under Communication > Communication processor.

Additional information

Additional information on programming the communication modules can be found in the function manual CM PtP - Configurations for point-to-point connections (http://support.automation.siemens.com/WW/view/en/59057093).

Error and system messages

6

LED displays of the communication module

The figure below shows the LED displays of the CM PtP RS422/485 HF communication module with open front panel.

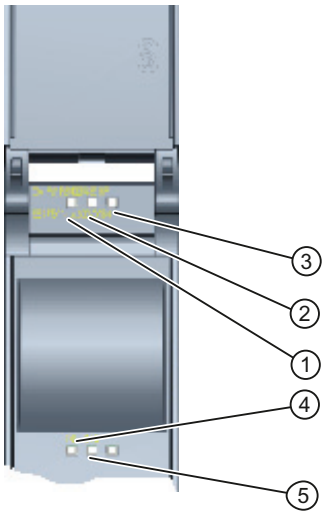

① LED display RUN
② LED display ERROR
③ LED display MAINT
④ LED display TXD
⑤ LED display RXD

Figure 6-1 CM PtP RS422/485 HF view

Meaning of the LED displays for RUN/ERROR/(MAINT)

LED			Meaning	Solution
RUN	ERROR	MAINT		
Off	Off	Off	Supply voltage not present or too low at communication module	Check the power supply of the station.
Flashes	Off	Off	CM in startup, parameters not assigned yet	---
On	Off	Off	CM configured and ready for operation	---
On	Flashes	Off	Group error (at least one error pending)	Evaluate the diagnostics data and eliminate the error. [1]

1) Information on startup and diagnostics of the communication module is available in the function manual CM PtP - Configurations for point-to-point connections (http://support.automation.siemens.com/WW/view/en/59057093).

Meaning of LED displays for TXD/RXD (under the front panel)

LED		Meaning	Solution
TXD	RXD		
Flashes	Off	Interface is transmitting	---
Off	Flashes	Interface is receiving	---

Technical specifications 7

7.1 Technical specifications

	6ES7541-1AB00-0AB0
Product type designation	CM PtP RS422/485 HF
General information	
• I&M data	Yes; I&M 0
Engineering with	
STEP 7 TIA Portal can be configured/integrated as of version	V12.0 / V12.0
STEP 7 can be configured/integrated as of version	V5.5 SP2 or higher with a GSD file
PROFIBUS as of GSD version/GSD revision	- / -
PROFINET as of GSD version/GSD revision	V2.3
Installation type/mounting	
• Rail mounting possible	Yes; S7-1500 mounting rail
Supply voltage	
Voltage type of supply voltage	System power supply
Input current	
• Current consumption (rated value)	33 mA; from backplane bus
Power	
• Power from the backplane bus	0.65 W
Power loss	
• Power loss, typ.	0.6 W
Address area	
Occupied address area	
• Inputs	8 bytes
Interfaces	
1. Interface	
Interface hardware	
• RS 422	Yes
• RS 485	Yes

	6ES7541-1AB00-0AB0
Interface hardware	
RS 485	
• Transmission rate, max.	115.2 kbps
• Max. cable length	1200 m
RS 422	
• Transmission rate, max.	115.2 kbps
• Max. cable length	1200 m
• 4-wire full duplex connection	Yes
• 4-wire multipoint connection	No
Protocols	
Integrated protocols	
Freeport	
• Frame length, max.	4 kbyte
• Bits per character	7 or 8
• Number of stop bits	1 or 2 bits
• Parity	None, even, odd, always 1, always 0, any
3964 (R)	
• Frame length, max.	4 kbyte
• Bits per character	7 or 8
• Number of stop bits	1 or 2 bits
• Parity	None, even, odd, always 1, always 0, any
Modbus RTU master	
Address area	1 to 247, extended 1 to 65,535
• Max. number of slaves	32
Modbus RTU slave	
Address area	1 to 247, extended 1 to 65,535
Frame buffer	
• Buffer memory for frames	8 kbyte
• Number of frames which can be buffered	255

	6ES7541-1AB00-0AB0
Interrupts/diagnostics/status information	
Interrupts	
• Diagnostic interrupt	Yes
• Hardware interrupt	No
Diagnostic messages	
Diagnostics	Yes
• Wire break	Yes
Diagnostics display LED	
• RUN LED	Yes; green LED
• ERROR LED	Yes; red LED
• Receive RxD	Yes; yellow LED
• Send TxD	Yes; yellow LED
Electrical isolation	
• between backplane bus and interface	Yes
Insulation	
Insulation tested with	707 V DC (Type Test)
Ambient conditions	
Operating temperature	
• Horizontal installation, min.	0 °C
• Horizontal installation, max.	60 °C
• Vertical installation, min.	0 °C
• Vertical installation, max.	40 °C
Distributed operation	
• At SIMATIC S7-300	Yes
• At SIMATIC S7-400	Yes
• At SIMATIC S7-1500	Yes
• At Standard Profinet Controller	Yes
• Supports Fast Startup	Yes
Dimensions	
• Width	35 mm
• Height	147 mm
• Depth	127 mm
Weights	
• Weight, approx.	0.22 kg

Additional general technical specifications for SIMATIC S7-1500 are available in the system manual (http://support.automation.siemens.com/WW/view/en/59191792).

Dimensional drawing

A

This appendix contains the dimensional drawing of the communication module installed on a mounting rail and with a shield bracket. Always observe the specified dimensions for installation in cabinets, control rooms, etc.

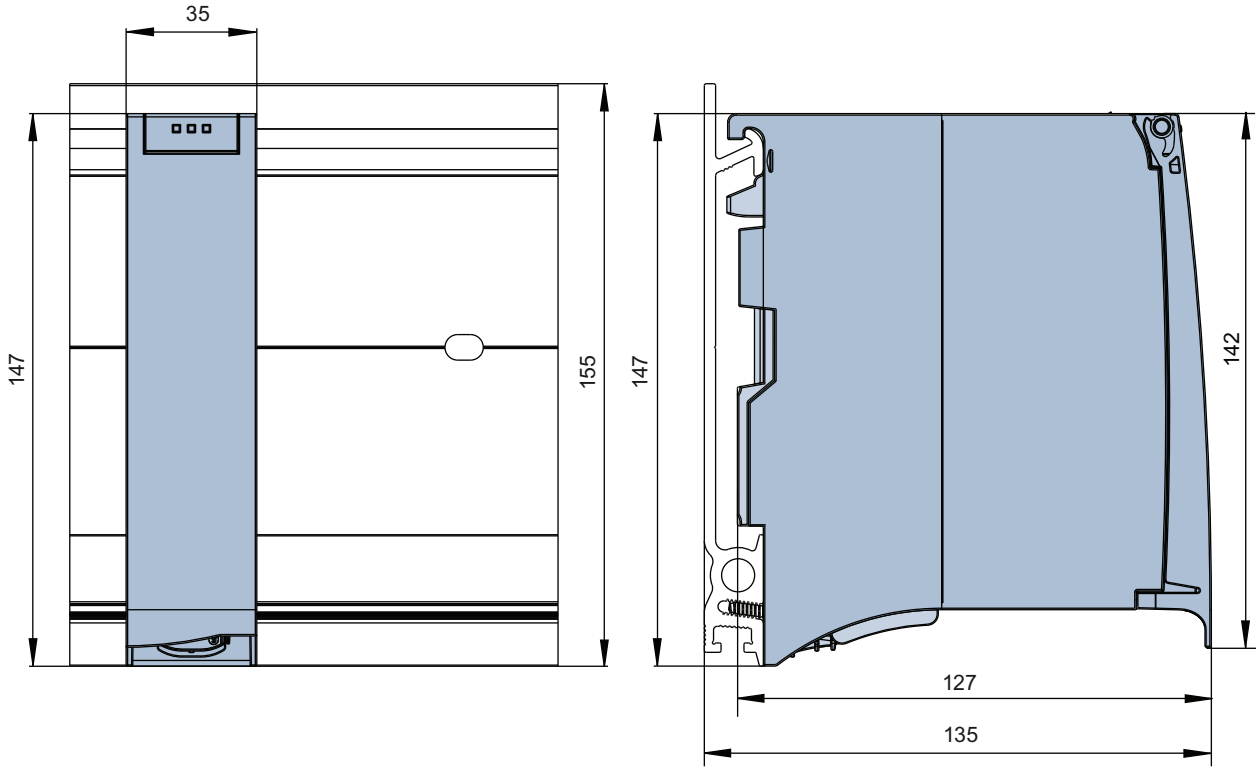

Figure A-1 Dimensional drawing of the CM PtP RS422/485 HF communication module

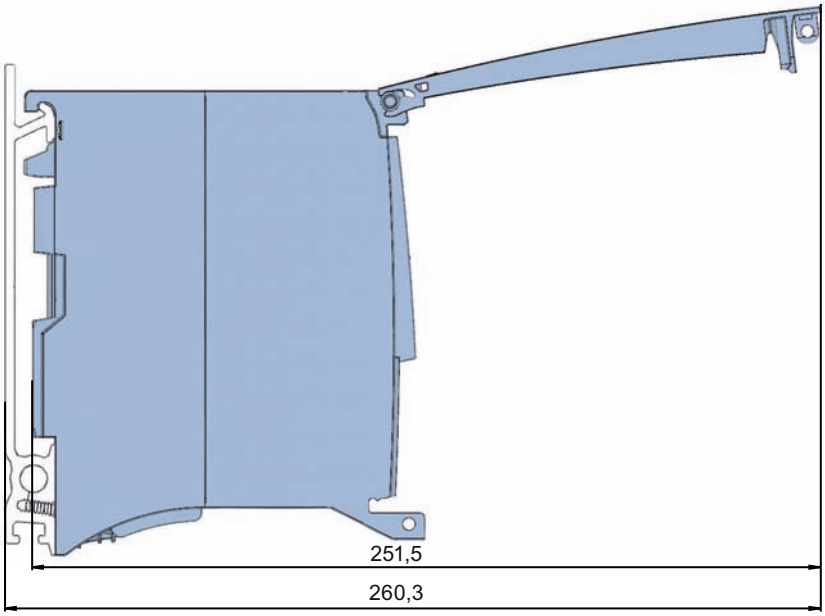

Figure A-2 Dimensional drawing of the CM PtP RS422/485 HF communication module with open front panel

SIEMENS

SIMATIC

S7-1500 / ET 200MP
CM PtP RS232 BA communication module (6ES7540-1AD00-0AA0)

Manual

Preface

Documentation guide 1

Product overview 2

Connecting 3

Parameters/Address space 4

Programming 5

Error and system messages 6

Technical specifications 7

Dimensional drawing A

01/2013

A5E03777472-01

Legal information

Warning notice system

This manual contains notices you have to observe in order to ensure your personal safety, as well as to prevent damage to property. The notices referring to your personal safety are highlighted in the manual by a safety alert symbol, notices referring only to property damage have no safety alert symbol. These notices shown below are graded according to the degree of danger.

⚠ DANGER
indicates that death or severe personal injury **will** result if proper precautions are not taken.

⚠ WARNING
indicates that death or severe personal injury **may** result if proper precautions are not taken.

⚠ CAUTION
indicates that minor personal injury can result if proper precautions are not taken.

NOTICE
indicates that property damage can result if proper precautions are not taken.

If more than one degree of danger is present, the warning notice representing the highest degree of danger will be used. A notice warning of injury to persons with a safety alert symbol may also include a warning relating to property damage.

Qualified Personnel

The product/system described in this documentation may be operated only by **personnel qualified** for the specific task in accordance with the relevant documentation, in particular its warning notices and safety instructions. Qualified personnel are those who, based on their training and experience, are capable of identifying risks and avoiding potential hazards when working with these products/systems.

Proper use of Siemens products

Note the following:

⚠ WARNING
Siemens products may only be used for the applications described in the catalog and in the relevant technical documentation. If products and components from other manufacturers are used, these must be recommended or approved by Siemens. Proper transport, storage, installation, assembly, commissioning, operation and maintenance are required to ensure that the products operate safely and without any problems. The permissible ambient conditions must be complied with. The information in the relevant documentation must be observed.

Trademarks

All names identified by ® are registered trademarks of Siemens AG. The remaining trademarks in this publication may be trademarks whose use by third parties for their own purposes could violate the rights of the owner.

Disclaimer of Liability

We have reviewed the contents of this publication to ensure consistency with the hardware and software described. Since variance cannot be precluded entirely, we cannot guarantee full consistency. However, the information in this publication is reviewed regularly and any necessary corrections are included in subsequent editions.

Siemens AG
Industry Sector
Postfach 48 48
90026 NÜRNBERG
GERMANY

A5E03777472-01
Ⓟ 11/2012 Technical data subject to change

Copyright © Siemens AG 2013.
All rights reserved

Preface

Purpose of the documentation

This device manual complements the system manual S7 1500 Automation System (http://support.automation.siemens.com/WW/view/en/59191792). General functions of the S7-1500 are described in the S7-1500 Automation System System Manual.

Conventions

This documentation contains figures of the described device. The figures may differ slightly from the devices supplied.

Please also observe notes marked as follows:

Note

A note contain important information on the product described in the documentation, on the handling of the product and on the section of the documentation to which particular attention should be paid.

Note on IT security

Siemens offers IT security mechanisms for its automation and drive product portfolio in order to support the safe operation of the plant/machine. We recommend that you inform yourself regularly on the IT security developments regarding your products. You can find information on this on the Internet (http://support.automation.siemens.com).

You can register for a product-specific newsletter here.

For the safe operation of a plant/machine, however, it is also necessary to integrate the automation components into an overall IT security concept for the entire plant/machine, which corresponds to the state-of-the-art IT technology. You can find information on this on the Internet (http://www.siemens.com/industrialsecurity).

Products used from other manufacturers should also be taken into account here.

Copyright notice for the open-source software used

Open-source software is used in the firmware of the product described. The open-source software is provided free of charge. We are liable for the product described, including the open-source software contained in it, pursuant to the conditions applicable to the product. Siemens accepts no liability for the use of the open source software over and above the intended program sequence, or for any faults caused by modifications to the software.

For legal reasons, we are obliged to publish the original text of the following copyright notices.

© Copyright William E. Kempf 2001
Permission to use, copy, modify, distribute and sell this software and its documentation for any purpose is hereby granted without fee, provided that the above copyright notice appear in all copies and that both that copyright notice and this permission notice appear in supporting documentation. William E. Kempf makes no representations about the suitability of this software for any purpose. It is provided "as is" without express or implied warranty.

Copyright © 1994 Hewlett-Packard Company
Permission to use, copy, modify, distribute and sell this software and its documentation for any purpose is hereby granted without fee, provided that the above copyright notice appear in all copies and that both that copyright notice and this permission notice appear in supporting documentation. Hewlett-Packard Company makes no representations about the suitability of this software for any purpose. It is provided ``as is'' without express or implied warranty.

Table of contents

Preface 3
1 Documentation guide 7
2 Product overview 9
2.1 Properties 9
2.2 Accessories 11
2.3 Functions 12
2.4 Properties of the RS232 interface 14
3 Connecting 15
3.1 RS232 interface of the communications module 15
3.2 Installation guidelines 16
4 Parameters/Address space 17
4.1 Parameter assignment 17
4.2 Reaction to CPU STOP 17
4.3 Address space 18
5 Programming 19
6 Error and system messages 21
7 Technical specifications 23
A Dimensional drawing 27

Documentation guide

1

Introduction

This modular documentation of the SIMATIC products covers diverse topics concerning your automation system.

The complete documentation for the S7-1500 and ET 200MP automation systems consists of system manuals, function manuals and manuals.

The STEP 7 information system (Online Help) also helps you configure and program your automation system.

Overview of the documentation provided for the CM PtP RS232 BA communications module

The following table lists further references that you will need when using the CM PtP RS232 BA communications module.

Table 1- 1 Documentation for the CM PtP RS232 BA communications module

Topic	Documentation	Key content
System description	System manual S7 -1500 Automation System (http://support.automation.siemens.com/WW/view/en/59191792) System manual ET 200MP distributed I/O system (http://support.automation.siemens.com/WW/view/en/59193214) System manual ET 200SP distributed I/O system (http://support.automation.siemens.com/WW/view/en/58649293)	• Application planning • Installation • Connecting • Addressing • Commissioning • Maintenance
	Power supply manuals (http://support.automation.siemens.com/WW/view/en/59173914)	• Connecting • Interrupt, error and system messages • Technical specifications • Dimensional drawing
	CPU manuals (http://support.automation.siemens.com/WW/view/en/56926947)	
	Function manual EMC/EMI compatible installation of control systems (http://support.automation.siemens.com/WW/view/en/59193566)	• Basics • Electromagnetic compatibility • Lightning protection

Topic	Documentation	Key content
Point-to-point communication	Function manual CM PtP - Configurations for point-to-point connections (http://support.automation.siemens.com/WW/view/en/59057093)	• Basic information • Data transmission functions • Diagnostics functions

SIMATIC manuals

All current manuals for the SIMATIC products are available for download free of charge on the Internet (http://www.siemens.com/automation/service&support).

Product overview

2

2.1 Properties

Order number

6ES7540-1AD00-0AA0

View of the module

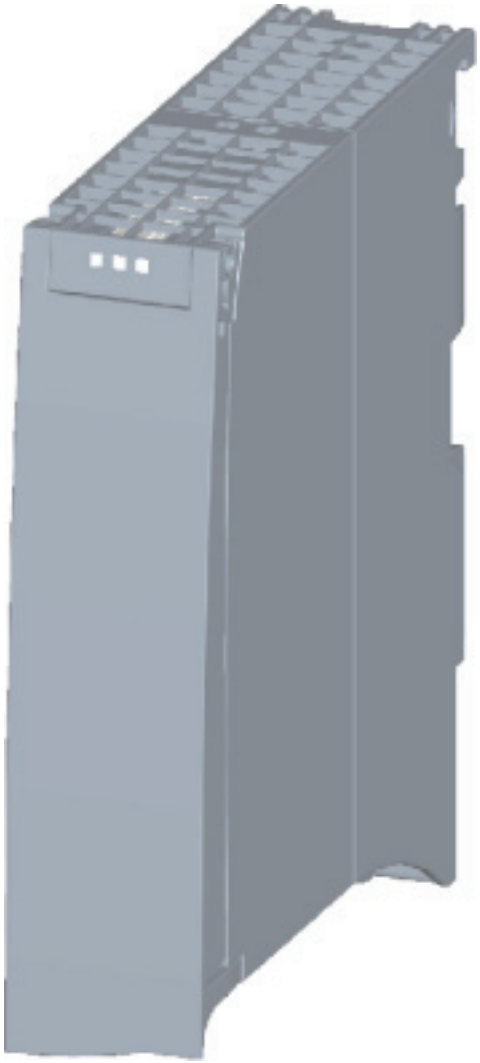

Figure 2-1 CM PtP RS232 BA view

Properties

The communication module has the following properties:

- Technical properties
  - RS232 interface
  - short-circuit proof
  - electrically disconnected
  - Protocols: 3964(R), Freeport and USS with instructions
- Supported system functions
  - Firmware update
  - Identification data I&M0
  - Parameter re-assignment in CPU RUN mode (using instructions)
  - Diagnostic interrupts

Additional information

Additional information on the properties of the CM PtP RS232 BA can be found in the function manual CM PtP - Configurations for point-to-point connections (http://support.automation.siemens.com/WW/view/en/59057093).

Information on the properties of the S7-1500 and associated modules can be found in the system manual S7 -1500 Automation System (http://support.automation.siemens.com/WW/view/en/59191792).

2.2 Accessories

Scope of delivery

The scope of delivery of the communication module includes a U connector for connection to the backplane bus.

Connecting cables

The following connecting cables can be ordered separately in the standard lengths: 5 m, 10 m and 15 m (each with a 9-pin sub D female connector).

Table 2- 1 Order numbers of connecting cables

Connecting cables for CM PtP RS232 BA CM PtP RS232 HF	Type	Order number
RS232 interface	RS232, 5 m	6ES7902–1AB00–0AA0
	RS232, 10 m	6ES7902–1AC00–0AA0
	RS232, 15 m	6ES7902–1AD00–0AA0

Online catalog

Additional order numbers for S7-1500 can be found on the Internet (http://www.siemens.com/industrymall) in the online catalog and online ordering system.

2.3 Functions

Introduction

The communication module allows you to exchange data between your own and other programmable controllers or computers by means of a point-to-point connection, and to connect various devices from a variety of manufacturers.

Functionality of the CM PtP RS232 BA

The CM PtP RS232 BA communications module offers the following functionality:

- RS232 interface
- Data transmission rate: 300 to 19200 bps
- Maximum frame length: 1 kbyte
- Transmission protocols: Freeport and 3964(R)

Note

The USS protocol can be implemented with instructions included in STEP 7 (TIA Portal).

Hardware components of a point-to-point connection

You require certain hardware components for a point-to-point connection with the CM PtP RS232 BA.

Components	Function
CPU module Accessories: Memory card	... executes the user program.
CM PtP RS232 BA communications module	... communicates with a communication partner (point-to-point) by means of the interface.
Connecting cable	... connects the CM PtP RS232 BA communications module with the communication partner.
U connector	... provides the mechanical and electrical connection between the modules.
Optional: Power supply module (PS)	... converts the line voltage (120/230V AC or 24V DC) into the operating voltage required to supply the S7-1500.

System environment

The communication module can be used in the following system environments:

Applications	Components required	Configuration
Central operation in an S7-1500 system	• CPU 151x • CM PtP RS232 BA • Power supply (optional)	STEP 7 (TIA Portal)
Distributed operation in an S7-1500 system	• CPU 151x • IM 155-5 • CM PtP RS232 BA • Power supply (optional)	STEP 7 (TIA Portal)
Distributed operation in an S7-300/400 system	• CPU 31x / CPU 41x • IM 155-5 • CM PtP RS232 BA	STEP 7 (TIA Portal) STEP 7 with integration of a GSD file
Distributed operation in a third-party system	• Third-party programmable controller • IM 155-5 • CM PtP RS232 BA	GSD file imported to/installed in the engineering system [1)]

1) Information on using the communication module in a third-party system is available in the programming and operating manual CM PtP operation with PROFINET controller (http://support.automation.siemens.com/WW/view/en/59062563).

Additional information

Information on configuration and programming of the CM PtP RS232 BA communications module is available in the function manual CM PtP - Configurations for point-to-point connections (http://support.automation.siemens.com/WW/view/en/59057093) and in the information system of the TIA Portal.

2.4 Properties of the RS232 interface

Definition

The RS232 interface is a voltage interface used for serial data transmission.

Properties

Table 2- 2 The RS232 interface has the following properties and meets the following requirements:

Type	Voltage interface
Front connector	9-pin sub-D male connector with screw lock
RS232 signals	TXD, RXD, RTS, CTS, DTR, DSR, RI, DCD, GND; all signals isolated against the backplane bus and load voltage
Max. data transmission rate	19.2 kbps
max. cable length	15 m, cable type LIYCY 9 x 0.14
Standard	DIN 66020, DIN 66259, EIA-RS 232C, CCITT V.24/V.28

RS232 signals

Table 2- 3 The table below shows the meaning of the individual RS232 accompanying signals.

Signal	Designation	Meaning
TXD	Transmit Data	Transmit data; transmit cable logically held to "1" by communication module in idle state.
RXD	Receive Data	Receive data; receive cable logically held to "1" by communication partner in idle state.
RTS	Request To Send	Request to send RTS set to "ON": Communication module ready to send; signals to the communication partner that there is data ready to send RTS set to "OFF": Communication module not ready to send
CTS	Clear To Send	Clear to send CTS set to "ON": Signals "clear to send" to the communication partner CTS set to "OFF": Signals "Not clear to send" to the communication partner
DTR	Data Terminal Ready	DTR set to "ON": Communications module switched on, ready for operation DTR set to "OFF": Communications module not switched on, not ready for operation
DSR	Data Set Ready	DSR set to "ON": Communication partner signals "ready for operation" DSR set to "OFF": Communication partner not switched on, not ready for operation
RI	Ring Indicator	Incoming call when connecting a modem
DCD	Data Carrier Detect	Carrier signal when connecting a modem. The communication partner signals with a high level that it detects incoming data on the cable.

Connecting 3

3.1 RS232 interface of the communications module

Terminal assignment

The table below shows the terminal assignment for the 9-pin sub D male connector in the front panel of the communications module.

Table 3- 1 Terminal assignment for the sub D male connector of the integrated interface of the communications module

Male connector of the communications module	Pin	Designation	Input/output	Meaning
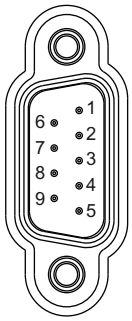	1	DCD Data Carrier Detect	Input	Received signal level
	2	RXD Receive Data	Input	Receive data
	3	TXD Transmit Data	Output	Transmit data
	4	DTR Data Terminal Ready	Output	Data terminal ready
	5	GND Ground	-	Functional ground (isolated)
	6	DSR Data Set Ready	Input	Data set ready
	7	RTS Request To Send	Output	Request to send
	8	CTS Clear To Send	Input	Clear to send
	9	RI Ring Indicator	Input	Incoming call
* View from the front				

Connecting cables

Standard connecting cables of various lengths (see chapter Accessories (Page 11)) are available for connection with a communication partner which also has a 9-pin sub-D male connector.

Please note that you must only use shielded connector casings and cables. A large surface area of the cable shield must be in contact with the connector casing on both sides.

NOTICE
Never connect the cable shield with the GND, as this could destroy the interfaces. GND must always be connected on both sides (pin 5), otherwise the modules could be destroyed.

3.2 Installation guidelines

To take into consideration

The general installation guidelines must be taken into consideration (see function manual EMC/EMI compatible installation of control systems (http://support.automation.siemens.com/WW/view/en/59193566)).

The cable shield must be installed on a grounding rail to maintain the EMC values (electromagnetic compatibility).

Parameters/Address space 4

4.1 Parameter assignment

Introduction

You configure and assign the parameters of the communication module with STEP 7 (TIA Portal V12 or later) or with STEP 7 with integration of a GSD file.

Additional information

The device manual of the communication module is supplemented by the function manual CM PtP - Configurations for point-to-point connections (http://support.automation.siemens.com/WW/view/en/59057093) and the TIA Portal information system.

There you will find information on the following topics:

- Operating modes
- Receive buffer
- Data flow control
- Transmission integrity
- Data transmission - protocol specific
- Programming/configuring in STEP 7 (TIA Portal)
- Module-specific instructions
- Diagnostics

4.2 Reaction to CPU STOP

Ongoing transmissions are aborted when the higher-level control (CPU) goes to STOP.

Frames in the receive buffer are retained. With a corresponding configuration in the properties dialog of the communication module, you can automatically clear the receive buffer on the communication module during CPU startup.

4.3 Address space

Address space of the communication module

The input addresses of the communications module total 8 bytes. The input addresses are automatically assigned for each communications module when you specify the device configuration in STEP 7 (TIA Portal). Output addresses are not required.

Hardware identification (not freely configurable)

The hardware identification (HW ID) is automatically assigned for each communications module when you specify the device configuration in STEP 7 (TIA Portal).

The hardware ID is issued along with the diagnostic messages to localize the module. In addition, the HW identification is required for S7-1500 at the communication instructions in order to identify the communication module. For S7-300/400, the communication module is identified by the start address of the input data.

Programming 5

Overview of the instructions

Communication between the CPU, the communication module and a communication partner takes place by means of special instructions and protocols that support the corresponding communication modules. The instructions process the exchange of data between the CPU and the communication module. They must be called cyclically from the user program. Data transmission takes place asynchronously across several cycles.

The transmission protocols are implemented on the communication module. The protocol is used to adapt the interface of the communication module to the interface of the communication partner.

Instruction	Meaning
Port_Config	You use the Port_Config instruction to dynamically assign basic interface parameters.
Send_Config	You use the Send_Config (send configuration) instruction to dynamically assign serial send parameters of a port.
Receive_Config	You use the Receive_Config (receive configuration) instruction to dynamically assign serial receive parameters of a port.
P3964_Config	You use the P3964_Config (protocol configuration) instruction to dynamically assign the parameters of the 3964(R) procedure.
Send_P2P	You use the Send_P2P instruction to send data to a communication partner.
Receive_P2P	You use the Receive_P2P instruction to receive data from a communication partner.
Receive_Reset	You use the Receive_Reset instruction to delete the receive buffer of the communication module.
Signal_Get	You use the Signal_Get instruction to read the RS232 accompanying signals.
Signal_Set	You use the Signal_Set instruction to set the RS232 accompanying signals.
Get_Features	You use the Get_Features instruction to read expanded functions supported by the communication module.
Set_Features	You use the Set_Features instruction to set expanded functions supported by the communication module.
USS_Port_Scan	You use the USS_Port_Scan instruction to communicate via the USS network.
USS_Drive_Control	You use the USS_Drive_Control instruction to exchange data with a drive.
USS_Read_Param	You use the USS_Read_Param instruction to read parameters from the drive.
USS_Write_Param	You use the USS_Write_Param instruction to change parameters in the drive.

The instructions are part of STEP 7 (TIA Portal). The instructions are available in the "Instructions" task card under Communication > Communication processor.

Additional information

Additional Information on programming the communication modules is available in the function manual CM PtP - Configurations for point-to-point connections (http://support.automation.siemens.com/WW/view/en/59057093) and in the TIA Portal information system.

Error and system messages

6

LED displays of the communication module

The figure below shows the LED displays of the CM PtP RS232 BA communication module with open front panel.

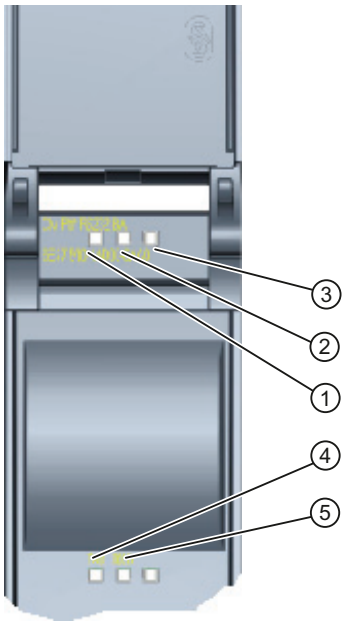

① LED display RUN
② LED display ERROR
③ LED display MAINT
④ LED display TXD
⑤ LED display RXD

Figure 6-1 CM PtP RS232 BA view

Meaning of the LED displays for RUN/ERROR/(MAINT)

LED			Meaning	Solution
RUN	ERROR	MAINT		
Off	Off	Off	Supply voltage not present or too low at communication module	Check the power supply of the station.
Flashes	Off	Off	CM in startup, parameters not assigned yet	---
On	Off	Off	CM configured and ready for operation	---
Off	Flashes	Off	Group error (at least one error pending)	Evaluate the diagnostics data and eliminate the error. [1]

1) Information on startup and diagnostics of the communication module is available in the function manual CM PtP - Configurations for point-to-point connections (http://support.automation.siemens.com/WW/view/en/59057093).

Meaning of LED displays for TXD/RXD (under the front panel)

LED		Meaning	Solution
TXD	RXD		
Flashes	Off	Interface is transmitting	---
Off	Flashes	Interface is receiving	---

Technical specifications 7

	6ES7540-1AD00-0AA0
Product type designation	CM PtP RS232 BA
General information	
• I&M data	Yes; I&M 0
Engineering with	
STEP 7 TIA Portal can be configured/integrated as of version	V12.0 / V12.0
STEP 7 can be configured/integrated as of version	V5.5 SP2 or higher with a GSD file
PROFIBUS as of GSD version/GSD revision	- / -
PROFINET as of GSD version/GSD revision	V2.3
Installation type/mounting	
• Rail mounting possible	Yes; S7-1500 mounting rail
Supply voltage	
Voltage type of supply voltage	System power supply
Input current	
• Current consumption (rated value)	35 mA; from backplane bus
Power	
• Power from the backplane bus	0.65 W
Power loss	
• Power loss, typ.	0.6 W
Address area	
Occupied address area	
• Inputs	8 bytes
Interfaces	
1. Interface	
Interface hardware	
• RS 232	Yes
Interface hardware	
RS 232	
• Transmission rate, max.	19.2 kbps
• Max. cable length	15 m
RS-232 accompanying signals	RTS, CTS, DTR, DSR, RI, DCD

	6ES7540-1AD00-0AA0
Protocols	
Integrated protocols	
Freeport	
• Frame length, max.	1 kbyte
• Bits per character	7 or 8
• Number of stop bits	1 or 2 bits
• Parity	None, even, odd, always 1, always 0, any
3964 (R)	
• Frame length, max.	1 kbyte
• Bits per character	7 or 8
• Number of stop bits	1 or 2 bits
• Parity	None, even, odd, always 1, always 0, any
Frame buffer	
• Buffer memory for frames	2 kbyte
• Number of frames which can be buffered	255
Interrupts/diagnostics/status information	
Interrupts	
• Diagnostic interrupt	Yes
• Hardware interrupt	No
Diagnostic messages	
Diagnostics	Yes
• Wire break	Yes
Diagnostics display LED	
• RUN LED	Yes; green LED
• ERROR LED	Yes; red LED
• Receive RxD	Yes; yellow LED
• Send TxD	Yes; yellow LED
Electrical isolation	
• between backplane bus and interface	Yes
Insulation	
Insulation tested with	707 V DC (Type Test)
Ambient conditions	
Operating temperature	
• Horizontal installation, min.	0 °C
• Horizontal installation, max.	60 °C
• Vertical installation, min.	0 °C
• Vertical installation, max.	40 °C

	6ES7540-1AD00-0AA0
Distributed operation	
• At SIMATIC S7-300	Yes
• At SIMATIC S7-400	Yes
• At SIMATIC S7-1500	Yes
• At Standard Profinet Controller	Yes
• Supports Fast Startup	Yes
Dimensions	
• Width	35 mm
• Height	147 mm
• Depth	127 mm
Weights	
• Weight, approx.	0.22 kg

Additional general technical specifications for SIMATIC S7-1500 are available in the system manual S7 -1500 Automation System (http://support.automation.siemens.com/WW/view/en/59191792).

Dimensional drawing

A

The dimensional drawing of the communications module installed on a mounting rail and a dimensional drawing with open front panel are provided in the appendix. Always observe the specified dimensions for installations in cabinets, control rooms, etc.

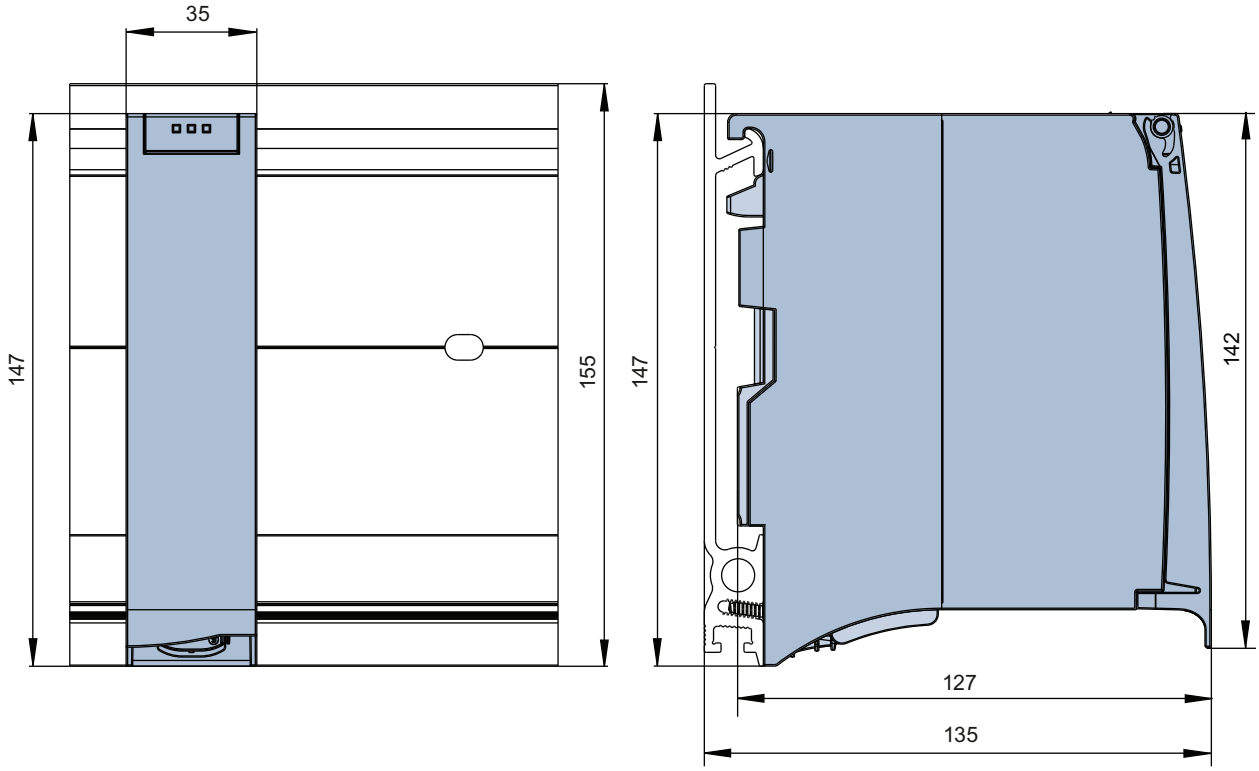

Figure A-1 Dimensional drawing of the CM PtP RS232 BA communications module

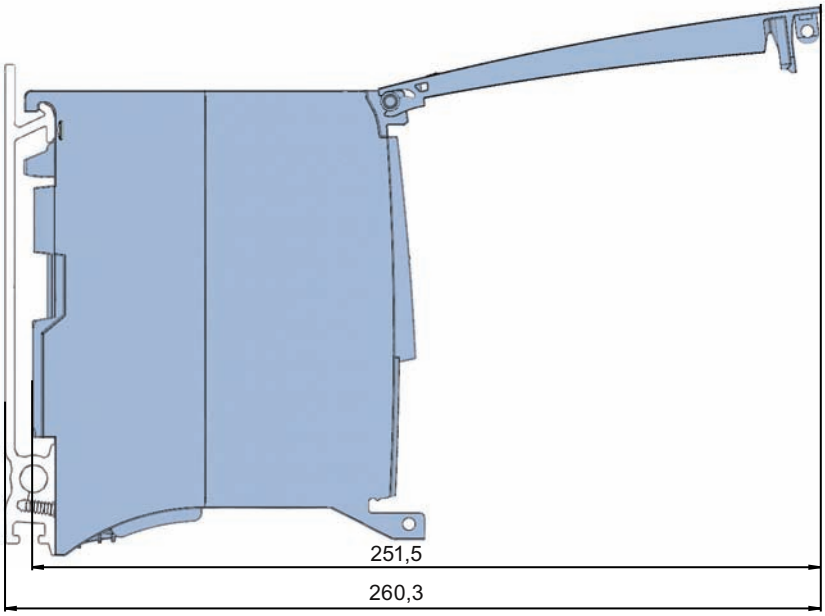

Figure A-2 Dimensional drawing of the CM PtP RS232 BA communications module with open front panel

SIEMENS

SIMATIC

S7-1500/ET 200MP CM PtP RS232 HF (6ES7541-1AD00-0AB0) communication module

Manual

Preface

Documentation guide 1

Product overview 2

Connecting 3

Parameters/address space 4

Programming 5

Error and system messages 6

Technical specifications 7

Dimensional drawing A

01/2013

A5E03790665-01

Legal information

Warning notice system

This manual contains notices you have to observe in order to ensure your personal safety, as well as to prevent damage to property. The notices referring to your personal safety are highlighted in the manual by a safety alert symbol, notices referring only to property damage have no safety alert symbol. These notices shown below are graded according to the degree of danger.

⚠ DANGER
indicates that death or severe personal injury **will** result if proper precautions are not taken.

⚠ WARNING
indicates that death or severe personal injury **may** result if proper precautions are not taken.

⚠ CAUTION
indicates that minor personal injury can result if proper precautions are not taken.

NOTICE
indicates that property damage can result if proper precautions are not taken.

If more than one degree of danger is present, the warning notice representing the highest degree of danger will be used. A notice warning of injury to persons with a safety alert symbol may also include a warning relating to property damage.

Qualified Personnel

The product/system described in this documentation may be operated only by **personnel qualified** for the specific task in accordance with the relevant documentation, in particular its warning notices and safety instructions. Qualified personnel are those who, based on their training and experience, are capable of identifying risks and avoiding potential hazards when working with these products/systems.

Proper use of Siemens products

Note the following:

⚠ WARNING
Siemens products may only be used for the applications described in the catalog and in the relevant technical documentation. If products and components from other manufacturers are used, these must be recommended or approved by Siemens. Proper transport, storage, installation, assembly, commissioning, operation and maintenance are required to ensure that the products operate safely and without any problems. The permissible ambient conditions must be complied with. The information in the relevant documentation must be observed.

Trademarks

All names identified by ® are registered trademarks of Siemens AG. The remaining trademarks in this publication may be trademarks whose use by third parties for their own purposes could violate the rights of the owner.

Disclaimer of Liability

We have reviewed the contents of this publication to ensure consistency with the hardware and software described. Since variance cannot be precluded entirely, we cannot guarantee full consistency. However, the information in this publication is reviewed regularly and any necessary corrections are included in subsequent editions.

Siemens AG
Industry Sector
Postfach 48 48
90026 NÜRNBERG
GERMANY

A5E03790665-01
Ⓟ 11/2012 Technical data subject to change

Copyright © Siemens AG 2013.
All rights reserved

Preface

Purpose of the documentation

This device manual complements the system manual S7 1500 Automation System (http://support.automation.siemens.com/WW/view/en/59191792). General functions of the S7-1500 are described in the S7-1500 Automation System System Manual.

Conventions

This documentation contains figures of the described device. The figures may differ slightly from the devices supplied.

Please also observe notes marked as follows:

Note

A note contain important information on the product described in the documentation, on the handling of the product and on the section of the documentation to which particular attention should be paid.

Note on IT security

Siemens offers IT security mechanisms for its automation and drive product portfolio in order to support the safe operation of the plant/machine. We recommend that you inform yourself regularly on the IT security developments regarding your products. You can find information on this on the Internet (http://support.automation.siemens.com).

You can register for a product-specific newsletter here.

For the safe operation of a plant/machine, however, it is also necessary to integrate the automation components into an overall IT security concept for the entire plant/machine, which corresponds to the state-of-the-art IT technology. You can find information on this on the Internet (http://www.siemens.com/industrialsecurity).

Products used from other manufacturers should also be taken into account here.

Copyright notice for the open-source software used

Open-source software is used in the firmware of the product described. The open-source software is provided free of charge. We are liable for the product described, including the open-source software contained in it, pursuant to the conditions applicable to the product. Siemens accepts no liability for the use of the open source software over and above the intended program sequence, or for any faults caused by modifications to the software.

For legal reasons, we are obliged to publish the original text of the following copyright notices.

© Copyright William E. Kempf 2001
Permission to use, copy, modify, distribute and sell this software and its documentation for any purpose is hereby granted without fee, provided that the above copyright notice appear in all copies and that both that copyright notice and this permission notice appear in supporting documentation. William E. Kempf makes no representations about the suitability of this software for any purpose. It is provided "as is" without express or implied warranty.

Copyright © 1994 Hewlett-Packard Company
Permission to use, copy, modify, distribute and sell this software and its documentation for any purpose is hereby granted without fee, provided that the above copyright notice appear in all copies and that both that copyright notice and this permission notice appear in supporting documentation. Hewlett-Packard Company makes no representations about the suitability of this software for any purpose. It is provided ``as is'' without express or implied warranty.

Table of contents

Preface 3
1 Documentation guide 7
2 Product overview 9
2.1 Properties 9
2.2 Accessories 11
2.3 Functions 12
2.4 Properties of the RS232 interface 14
3 Connecting 15
3.1 RS232 interface of the communications module 15
3.2 Installation guidelines 16
4 Parameters/address space 17
4.1 Parameter assignment 17
4.2 Reaction to CPU STOP 17
4.3 Address space 18
5 Programming 19
6 Error and system messages 21
7 Technical specifications 23
A Dimensional drawing 27

Documentation guide

1

Introduction

This modular documentation of the SIMATIC products covers diverse topics concerning your automation system.

The complete documentation for the S7-1500 and ET 200MP automation systems consists of system manuals, function manuals and manuals.

The STEP 7 information system (Online Help) also helps you configure and program your automation system.

Overview of the documentation provided for the CM PtP RS232 HF communication module

The following table lists additional references that you will need when using the CM PtP RS232 HF communication module.

Table 1- 1 Documentation for the CM PtP RS232 HF communication module

Topic	Documentation	Key content
System description	System manual S7 -1500 Automation System (http://support.automation.siemens.com/WW/view/en/59191792) System manual ET 200MP distributed I/O system (http://support.automation.siemens.com/WW/view/en/59193214) System manual ET 200SP distributed I/O system (http://support.automation.siemens.com/WW/view/en/58649293)	• Application planning • Installation • Connecting • Addressing • Commissioning • Maintenance
	Power supply manuals (http://support.automation.siemens.com/WW/view/en/59173914)	• Connecting • Interrupt, error and system messages • Technical specifications • Dimensional drawing
	CPU manuals (http://support.automation.siemens.com/WW/view/en/56926947)	
	Function manual EMC/EMI compatible installation of control systems (http://support.automation.siemens.com/WW/view/en/59193566)	• Basics • Electromagnetic compatibility • Lightning protection

Topic	Documentation	Key content
Point-to-point communication	Function manual CM PtP - Configurations for point-to-point connections (http://support.automation.siemens.com/WW/view/en/59057093)	• Basic information • Data transmission functions • Diagnostics functions

SIMATIC manuals

All current manuals for the SIMATIC products are available for download free of charge on the Internet (http://www.siemens.com/automation/service&support).

Product overview

2

2.1 Properties

Order number

6ES7541-1AD00-0AB0

View of the module

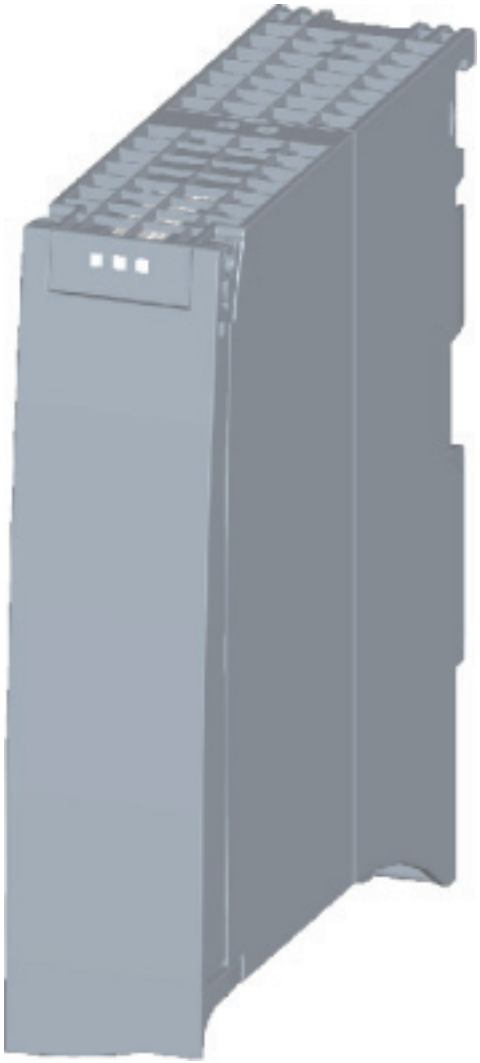

Figure 2-1 CM PtP RS232 HF view

Properties

The communication module has the following properties:

- Technical properties
  - RS232 interface
  - short-circuit proof
  - electrically disconnected
  - Protocols: 3964(R), Modbus master (RTU), Modbus slave (RTU), Freeport and USS with instructions
- Supported system functions
  - Firmware update
  - Identification data I&M0
  - Parameter re-assignment in CPU RUN mode (using instructions)
  - Diagnostic interrupts

Additional information

Additional information on the properties of the CM PtP RS232 HF can be found in the function manual CM PtP - Configurations for point-to-point connections (http://support.automation.siemens.com/WW/view/en/59057093).

Information on the properties of the S7-1500 and associated modules can be found in the system manual S7 -1500 Automation System (http://support.automation.siemens.com/WW/view/en/59191792).

2.2 Accessories

Scope of delivery

The scope of delivery of the communication module includes a U connector for connection to the backplane bus.

Connecting cables

The following connecting cables can be ordered separately in the standard lengths: 5 m, 10 m and 15 m (each with a 9-pin sub D female connector).

Table 2- 1 Order numbers of connecting cables

Connecting cables for CM PtP RS232 BA CM PtP RS232 HF	Type	Order number
RS232 interface	RS232, 5 m	6ES7902–1AB00–0AA0
	RS232, 10 m	6ES7902–1AC00–0AA0
	RS232, 15 m	6ES7902–1AD00–0AA0

Online catalog

Additional order numbers for S7-1500 can be found on the Internet (http://www.siemens.com/industrymall) in the online catalog and online ordering system.

2.3 Functions

Introduction

The communication module allows you to exchange data between your own and other programmable controllers or computers by means of a point-to-point connection, and to connect various devices from a variety of manufacturers.

Functionality of the CM PtP RS232 HF

The CM PtP RS232 HF communication module offers the following functionality:

- RS232 interface
- Data transmission rate: 300 to 115200 bps
- Maximum frame length: 4 kbyte
- Transmission protocols: Freeport, 3964(R) and Modbus

Note

The USS protocol can be implemented with instructions included in STEP 7 (TIA Portal).

Hardware components of a point-to-point connection

You require certain hardware components for a point-to-point connection with the CM PtP RS232 HF.

Components	Function
CPU module Accessories: Memory card	... executes the user program.
CM PtP RS232 HF communication module	... communicates with a communication partner (point-to-point) by means of the interface.
Connecting cable	... connects the CM PtP RS232 HF communication module with the communication partner.
U connector	... provides the mechanical and electrical connection between the modules.
Optional: Power supply module (PS)	... converts the line voltage (120/230V AC or 24V DC) into the operating voltage required to supply the S7-1500.

System environment

The communication module can be used in the following system environments:

Applications	Components required	Configuration
Central operation in an S7-1500 system	• CPU 151x • CM PtP RS232 HF • Power supply (optional)	STEP 7 (TIA Portal)
Distributed operation in an S7-1500 system	• CPU 151x • IM 155-5 • CM PtP RS232 HF • Power supply (optional)	STEP 7 (TIA Portal)
Distributed operation in an S7-300/400 system	• CPU 31x / CPU 41x • IM 155-5 • CM PtP RS232 HF	STEP 7 (TIA Portal) STEP 7 with integration of a GSD file
Distributed operation in a third-party system	• Third-party programmable controller • IM 155-5 • CM PtP RS232 HF	GSD file imported to/installed in the engineering system [1)]

1) Information on using the communication module in a third-party system is available in the programming and operating manual CM PtP operation with PROFINET controller (http://support.automation.siemens.com/WW/view/en/59062563).

Additional information

Information on configuring and programming the CM PtP RS232 HF communication module is available in the function manual CM PtP - Configurations for point-to-point connections (http://support.automation.siemens.com/WW/view/en/59057093).

2.4 Properties of the RS232 interface

Definition

The RS232 interface is a voltage interface used for serial data transmission.

Properties

The RS232 interface has the following properties and meets the following requirements:

Type	Voltage interface
Front connector	9-pin sub-D male connector with screw lock
RS232 signals	TXD, RXD, RTS, CTS, DTR, DSR, RI, DCD, GND; all signals isolated against the backplane bus and load voltage
Max. data transmission rate	115.2 kbps
max. cable length	15 m, cable type LIYCY 9 x 0.14
Standard	DIN 66020, DIN 66259, EIA-RS 232C, CCITT V.24/V.28

RS232 signals

The table below shows the meaning of the individual RS232 accompanying signals.

Table 2- 2 Signals of the RS232 interface

Signal	Designation	Meaning
TXD	Transmit Data	Transmit data; transmit cable logically held to "1" by communication module in idle state.
RXD	Receive Data	Receive data; receive cable logically held to "1" by communication partner in idle state.
RTS	Request To Send	Request to send RTS set to "ON": Communication module ready to send; signals to the communication partner that there is data ready to send RTS set to "OFF": Communication module not ready to send
CTS	Clear To Send	Clear to send CTS set to "ON": Signals "clear to send" to the communication partner CTS set to "OFF": Signals "Not clear to send" to the communication partner
DTR	Data Terminal Ready	DTR set to "ON": Communications module switched on, ready for operation DTR set to "OFF": Communications module not switched on, not ready for operation
DSR	Data Set Ready	DSR set to "ON": Communication partner signals "ready for operation" DSR set to "OFF": Communication partner not switched on, not ready for operation
RI	Ring Indicator	Incoming call when connecting a modem
DCD	Data Carrier Detect	Carrier signal when connecting a modem. The communication partner signals with a high level that it detects incoming data on the cable.

Connecting 3

3.1 RS232 interface of the communications module

Terminal assignment

The table below shows the terminal assignment for the 9-pin sub D male connector in the front panel of the communications module.

Table 3- 1 Terminal assignment for the sub D male connector of the integrated interface of the communications module

Male connector of the communications module	Pin	Designation	Input/output	Meaning
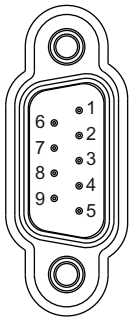	1	DCD Data Carrier Detect	Input	Received signal level
	2	RXD Receive Data	Input	Receive data
	3	TXD Transmit Data	Output	Transmit data
	4	DTR Data Terminal Ready	Output	Data terminal ready
	5	GND Ground	-	Functional ground (isolated)
	6	DSR Data Set Ready	Input	Data set ready
	7	RTS Request To Send	Output	Request to send
	8	CTS Clear To Send	Input	Clear to send
	9	RI Ring Indicator	Input	Incoming call
* View from the front				

Connecting cables

Standard connecting cables of various lengths (see chapter Accessories (Page 11)) are available for connection with a communication partner which also has a 9-pin sub-D male connector.

Please note that you must only use shielded connector casings and cables. A large surface area of the cable shield must be in contact with the connector casing on both sides.

NOTICE
Never connect the cable shield with the GND, as this could destroy the interfaces. GND must always be connected on both sides (pin 5), otherwise the modules could be destroyed.

3.2 Installation guidelines

To take into consideration

The general installation guidelines must be taken into consideration (see function manual EMC/EMI compatible installation of control systems (http://support.automation.siemens.com/WW/view/en/59193566)).

The cable shield must be installed on a grounding rail to maintain the EMC values (electromagnetic compatibility).

Parameters/address space 4

4.1 Parameter assignment

Introduction

You configure and assign the parameters of the communication module with STEP 7 (TIA Portal V12 or later) or with STEP 7 with integration of a GSD file.

Additional information

The device manual of the communication module is supplemented by the function manual CM PtP - Configurations for point-to-point connections (http://support.automation.siemens.com/WW/view/en/59057093) and the TIA Portal information system.

There you will find information on the following topics:

- Operating modes
- Receive buffer
- Data flow control
- Transmission integrity
- Data transmission - protocol specific
- Programming/configuring in STEP 7 (TIA Portal)
- Module-specific instructions
- Diagnostics

4.2 Reaction to CPU STOP

Ongoing transmissions are aborted when the higher-level control (CPU) goes to STOP.

Frames in the receive buffer are retained. With a corresponding configuration in the properties dialog of the communication module, you can automatically clear the receive buffer on the communication module during CPU startup.

4.3 Address space

Address space of the communication module

The input addresses of the communications module total 8 bytes. The input addresses are automatically assigned for each communications module when you specify the device configuration in STEP 7 (TIA Portal). Output addresses are not required.

Hardware identification (not freely configurable)

The hardware identification (HW ID) is automatically assigned for each communications module when you specify the device configuration in STEP 7 (TIA Portal).

The hardware ID is issued along with the diagnostic messages to localize the module. In addition, the HW identification is required for S7-1500 at the communication instructions in order to identify the communication module. For S7-300/400, the communication module is identified by the start address of the input data.

Programming 5

Overview of the instructions

Communication between the CPU, the communication module and a communication partner takes place by means of special instructions and protocols that support the corresponding communication modules. The instructions process the exchange of data between the CPU and the communication module. They must be called cyclically from the user program. Data transmission takes place asynchronously across several cycles.

The transmission protocols are implemented on the communication module. The protocol is used to adapt the interface of the communication module to the interface of the communication partner.

Instruction	Meaning
Port_Config	You use the Port_Config instruction to dynamically assign basic interface parameters.
Send_Config	You use the Send_Config (send configuration) instruction to dynamically assign serial send parameters of a port.
Receive_Config	You use the Receive_Config (receive configuration) instruction to dynamically assign serial receive parameters of a port.
P3964_Config	You use the P3964_Config (protocol configuration) instruction to dynamically assign the parameters of the 3964(R) procedure.
Send_P2P	You use the Send_P2P instruction to send data to a communication partner.
Receive_P2P	You use the Receive_P2P instruction to receive data from a communication partner.
Receive_Reset	You use the Receive_Reset instruction to delete the receive buffer of the communication module.
Signal_Get	You use the Signal_Get instruction to read the RS232 accompanying signals.
Signal_Set	You use the Signal_Set instruction to set the RS232 accompanying signals.
Get_Features	You use the Get_Features instruction to read expanded functions supported by the communication module.
Set_Features	You use the Set_Features instruction to set expanded functions supported by the communication module.
USS_Port_Scan	You use the USS_Port_Scan instruction to communicate via the USS network.
USS_Drive_Control	You use the USS_Drive_Control instruction to exchange data with a drive.
USS_Read_Param	You use the USS_Read_Param instruction to read parameters from the drive.
USS_Write_Param	You use the USS_Write_Param instruction to change parameters in the drive.
Modbus_Comm_Load	The instruction Modbus_Comm_Load allows you to configure the port of the communication module for Modbus RTU.

Instruction	Meaning
Modbus_Master	The instruction Modbus_Master allows you to communicate as Modbus master by means of the PtP port.
Modbus_Slave	The instruction Modbus_Slave allows you to communicate as Modbus slave by means of the PtP port.

The instructions are part of STEP 7 (TIA Portal). The instructions are available in the "Instructions" task card under Communication > Communication processor.

Additional information

Additional information on programming the communication modules is available in the function manual CM PtP - Configurations for point-to-point connections (http://support.automation.siemens.com/WW/view/en/59057093) and in the TIA Portal information system.

Error and system messages

6

LED displays of the communication module

The figure below shows the LED displays of the CM PtP RS232 HF communication module with open front panel.

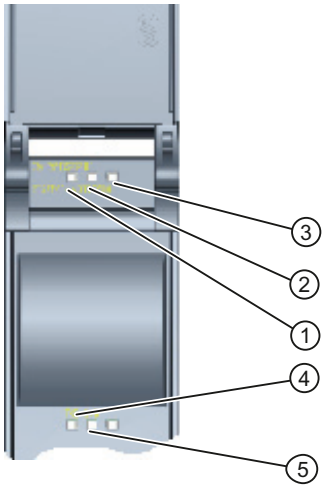

① LED display RUN
② LED display ERROR
③ LED display MAINT
④ LED display TXD
⑤ LED display RXD

Figure 6-1 CM PtP RS232 HF view

Meaning of the LED displays for RUN/ERROR/(MAINT)

LED			Meaning	Solution
RUN	ERROR	MAINT		
Off	Off	Off	Supply voltage not present or too low at communication module	Check the power supply of the station.
Flashes	Off	Off	CM in startup, parameters not assigned yet	---
On	Off	Off	CM configured and ready for operation	---
Off	Flashes	Off	Group error (at least one error pending)	Evaluate the diagnostics data and eliminate the error. [1)]

1) Information on startup and diagnostics of the communication module is available in the function manual CM PtP - Configurations for point-to-point connections (http://support.automation.siemens.com/WW/view/en/59057093).

Meaning of LED displays for TXD/RXD (under the front panel)

LED		Meaning	Solution
TXD	RXD		
Flashes	Off	Interface is transmitting	---
Off	Flashes	Interface is receiving	---

Technical specifications 7

	6ES7541-1AD00-0AB0
Product type designation	CM PtP RS232 HF
General information	
• I&M data	Yes; I&M 0
Engineering with	
STEP 7 TIA Portal can be configured/integrated as of version	V12.0 / V12.0
STEP 7 can be configured/integrated as of version	V5.5 SP2 or higher with a GSD file
PROFIBUS as of GSD version/GSD revision	- / -
PROFINET as of GSD version/GSD revision	V2.3
Installation type/mounting	
• Rail mounting possible	Yes; S7-1500 mounting rail
Supply voltage	
Voltage type of supply voltage	System power supply
Input current	
• Current consumption (rated value)	35 mA; from backplane bus
Power	
• Power from the backplane bus	0.65 W
Power loss	
• Power loss, typ.	0.6 W
Address area	
Occupied address area	
• Inputs	8 bytes
Interfaces	
1. Interface	
Interface hardware	
• RS 232	Yes
Interface hardware	
RS 232	
• Transmission rate, max.	115.2 kbps
• Max. cable length	15 m
RS-232 accompanying signals	RTS, CTS, DTR, DSR, RI, DCD
Protocols	
Integrated protocols	
Freeport	

	6ES7541-1AD00-0AB0
• Frame length, max.	4 kbyte
• Bits per character	7 or 8
• Number of stop bits	1 or 2 bits
• Parity	None, even, odd, always 1, always 0, any
3964 (R)	
• Frame length, max.	4 kbyte
• Bits per character	7 or 8
• Number of stop bits	1 or 2 bits
• Parity	None, even, odd, always 1, always 0, any
Modbus RTU master	
Address area	1 to 247, extended 1 to 65,535
• Max. number of slaves	1
Modbus RTU slave	
Address area	1 to 247, extended 1 to 65,535
Frame buffer	
• Buffer memory for frames	8 kbyte
• Number of frames which can be buffered	255
Interrupts/diagnostics/status information	
Interrupts	
• Diagnostic interrupt	Yes
• Hardware interrupt	No
Diagnostic messages	
Diagnostics	Yes
• Wire break	Yes
Diagnostics display LED	
• RUN LED	Yes; green LED
• ERROR LED	Yes; red LED
• Receive RxD	Yes; yellow LED
• Send TxD	Yes; yellow LED
Electrical isolation	
• between backplane bus and interface	Yes
Insulation	
Insulation tested with	707 V DC (Type Test)
Ambient conditions	
Operating temperature	
• Horizontal installation, min.	0 °C
• Horizontal installation, max.	60 °C

	6ES7541-1AD00-0AB0
• Vertical installation, min.	0 °C
• Vertical installation, max.	40 °C
Distributed operation	
• At SIMATIC S7-300	Yes
• At SIMATIC S7-400	Yes
• At SIMATIC S7-1500	Yes
• At Standard Profinet Controller	Yes
• Supports Fast Startup	Yes
Dimensions	
• Width	35 mm
• Height	147 mm
• Depth	127 mm
Weights	
• Weight, approx.	0.22 kg

Additional general technical specifications for SIMATIC S7-1500 are available in the system manual S7 -1500 Automation System (http://support.automation.siemens.com/WW/view/en/59191792).

Dimensional drawing

A

This appendix contains the dimensional drawing of the communication module installed on a mounting rail and with a shield bracket. Always observe the specified dimensions for installation in cabinets, control rooms, etc.

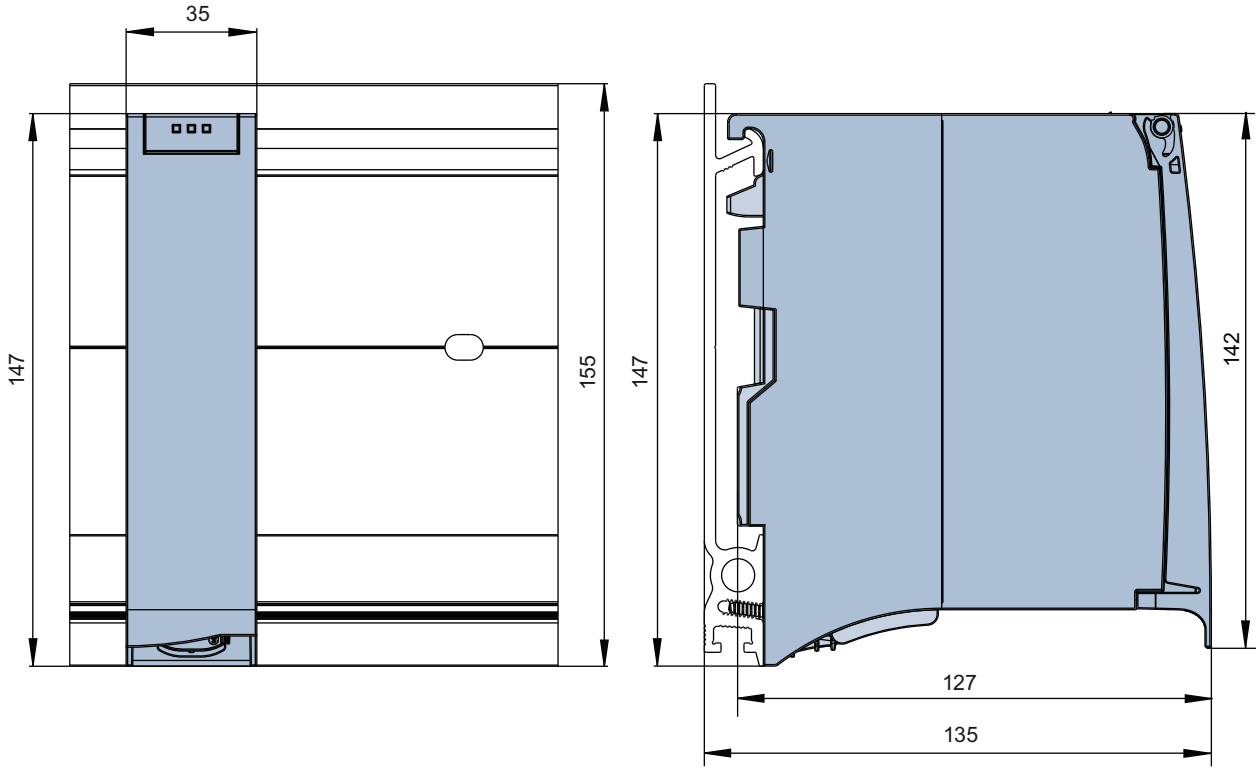

Figure A-1 Dimensional drawing of the CM PtP RS232 HF communication module

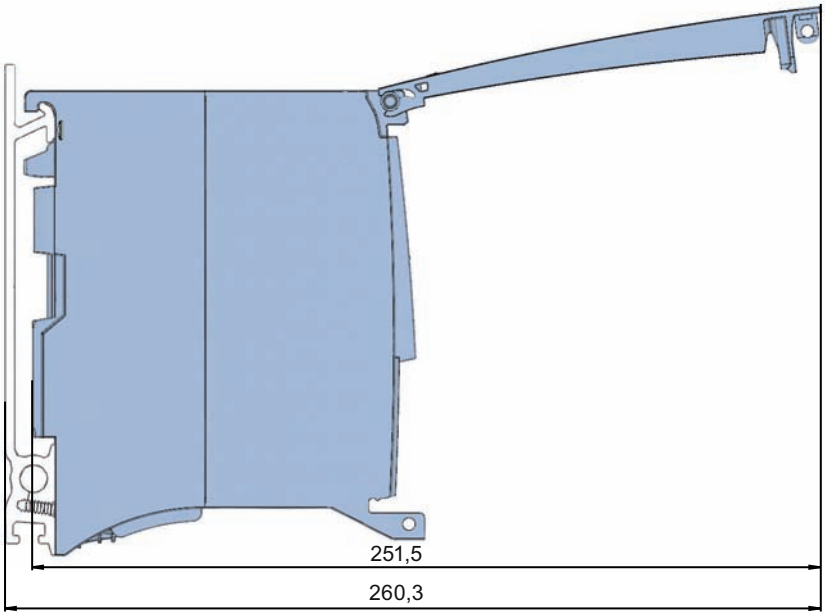

Figure A-2 Dimensional drawing of the CM PtP RS232 HF communication module with open front panel

SIEMENS

Edition 08/2022

MANUAL

SIMATIC

S7-1500 / ET 200MP

Communucation module IO-Link Master CM 8xIO-Link
6ES7547-1JF00-0AB0

support.industry.siemens.com

SIEMENS

SIMATIC

S7-1500/ET 200MP Communication module IO-Link Master CM 8xIO-Link (6ES7547-1JF00-0AB0)

Equipment Manual

S7-1500/ET 200MP Documentation Guide 1

Product overview 2

Connecting 3

Parameters / address space 4

Diagnostic alarms 5

Technical specifications 6

Dimensional drawing 7

Parameter data record A

08/2022

A5E45488510-AB

Legal information

Warning notice system

This manual contains notices you have to observe in order to ensure your personal safety, as well as to prevent damage to property. The notices referring to your personal safety are highlighted in the manual by a safety alert symbol, notices referring only to property damage have no safety alert symbol. These notices shown below are graded according to the degree of danger.

⚠ DANGER
indicates that death or severe personal injury **will** result if proper precautions are not taken.

⚠ WARNING
indicates that death or severe personal injury **may** result if proper precautions are not taken.

⚠ CAUTION
indicates that minor personal injury can result if proper precautions are not taken.

NOTICE
indicates that property damage can result if proper precautions are not taken.

If more than one degree of danger is present, the warning notice representing the highest degree of danger will be used. A notice warning of injury to persons with a safety alert symbol may also include a warning relating to property damage.

Qualified Personnel

The product/system described in this documentation may be operated only by **personnel qualified** for the specific task in accordance with the relevant documentation, in particular its warning notices and safety instructions. Qualified personnel are those who, based on their training and experience, are capable of identifying risks and avoiding potential hazards when working with these products/systems.

Proper use of Siemens products

Note the following:

⚠ WARNING
Siemens products may only be used for the applications described in the catalog and in the relevant technical documentation. If products and components from other manufacturers are used, these must be recommended or approved by Siemens. Proper transport, storage, installation, assembly, commissioning, operation and maintenance are required to ensure that the products operate safely and without any problems. The permissible ambient conditions must be complied with. The information in the relevant documentation must be observed.

Trademarks

All names identified by ® are registered trademarks of Siemens AG. The remaining trademarks in this publication may be trademarks whose use by third parties for their own purposes could violate the rights of the owner.

Disclaimer of Liability

We have reviewed the contents of this publication to ensure consistency with the hardware and software described. Since variance cannot be precluded entirely, we cannot guarantee full consistency. However, the information in this publication is reviewed regularly and any necessary corrections are included in subsequent editions.

Siemens AG
Digital Industries
Postfach 48 48
90026 NÜRNBERG
GERMANY

A5E45488510-AB
Ⓟ 07/2022 Subject to change

Copyright © Siemens AG 2019 - 2022.
All rights reserved

Preface

Purpose of the documentation

This manual supplements the ET 200MP Distributed I/O System (https://support.industry.siemens.com/cs/ww/en/view/59191792) system manual. It describes functions that generally affect the ET 200MP distributed I/O system.

The information provided in the present manual, the system manual and the function manuals enables you to commission the ET 200MP distributed I/O system.

Conventions

Please also observe notes marked as follows:

NOTE

A note contains important information on the product described in the documentation, on the handling of the product or on the section of the documentation to which particular attention should be paid.

Recycling and disposal

For environmentally friendly recycling and disposal of your old equipment, contact a certified electronic waste disposal company and dispose of the equipment according to the applicable regulations in your country.

Siemens provides products and solutions with industrial security functions that support the secure operation of plants, systems, machines and networks.

In order to protect plants, systems, machines and networks against cyber threats, it is necessary to implement – and continuously maintain – a holistic, state-of-the-art industrial security concept. Siemens' products and solutions constitute one element of such a concept.

Customers are responsible for preventing unauthorized access to their plants, systems, machines and networks. Such systems, machines and components should only be connected to an enterprise network or the internet if and to the extent such a connection is necessary and only when appropriate security measures (e.g. firewalls and/or network segmentation) are in place.

For additional information on industrial security measures that may be implemented, please visit (https://www.siemens.com/industrialsecurity).

Siemens' products and solutions undergo continuous development to make them more secure. Siemens strongly recommends that product updates are applied as soon as they are available and that the latest product versions are used. Use of product versions that are no longer supported, and failure to apply the latest updates may increase customers' exposure to cyber threats.

To stay informed about product updates, subscribe to the Siemens Industrial Security RSS Feed visit (https://www.siemens.com/industrialsecurity).

Open Source Software

Open-source software is used in the firmware of the I/O modules. Open Source Software is provided free of charge. We are liable for the product described, including the open-source software contained in it, pursuant to the conditions applicable to the product. Siemens accepts no liability for the use of the open source software over and above the intended program sequence, or for any faults caused by modifications to the software.
For legal reasons, we are obliged to publish the original text of the license conditions and copyright notices. Please read the information relating to this on the Internet (https://support.industry.siemens.com/cs/ww/en/view/109757558).

Table of contents

1 S7-1500/ET 200MP Documentation Guide 7

1.1 S7-1500 / ET 200MP Documentation Guide 7

1.2 SIMATIC Technical Documentation 8

1.3 Tool support 10

2 Product overview 12

2.1 Properties 12

2.2 Functions 13

2.3 Replacing the IO-Link Master CM 8xIO-Link communication module 14

2.4 Reset communication module to factory settings 14

3 Connecting 16

3.1 Wiring and block diagram 16

4 Parameters / address space 19

4.1 Parameters 19

4.2 Declaration of parameters 20

4.3 Address space 22

5 Diagnostic alarms 26

5.1 Status and error displays 26

5.2 Diagnostic alarms 28

6 Technical specifications 30

7 Dimensional drawing 33

7.1 Dimensional drawing 33

A Parameter data record 35

A.1 Parameter assignment and structure of parameter data set 35

S7-1500/ET 200MP Documentation Guide

1

1.1 S7-1500 / ET 200MP Documentation Guide

The documentation for the SIMATIC S7-1500 automation system and the ET 200MP distributed I/O system is arranged into three areas.
This arrangement enables you to access the specific content you require. Changes and supplements to the manuals are documented in a Product Information.
You can download the documentation free of charge from the Internet (https://support.industry.siemens.com/cs/ww/en/view/109742691).

Basic information

The System Manual and Getting Started describe in detail the configuration, installation, wiring and commissioning of the SIMATIC S7-1500 and ET 200MP systems.
The STEP 7 online help supports you in the configuration and programming.
Examples:

- Getting Started S7-1500
- S7-1500/ET 200MP System Manual
- Online help TIA Portal

Device information

Equipment manuals contain a compact description of the module-specific information, such as properties, wiring diagrams, characteristics and technical specifications.
Examples:

- Equipment Manuals CPUs
- Equipment Manuals Interface Modules
- Equipment Manuals Digital Modules
- Equipment Manuals Analog Modules
- Equipment Manuals Communications Modules
- Equipment Manuals Technology Modules
- Equipment Manuals Power Supply Modules

General information

The function manuals contain detailed descriptions on general topics relating to the SIMATIC S7-1500 and ET 200MPsystems.
Examples:

- Function Manual Diagnostics
- Function Manual Communication
- Function Manual Motion Control
- Function Manual Web Server
- Function Manual Cycle and Response Times
- PROFINET Function Manual
- PROFIBUS Function Manual

Product Information

Changes and supplements to the manuals are documented in a Product Information. The Product Information takes precedence over the device and system manuals.
You can find the latest Product Information on the S7-1500 and ET 200MP systems on the Internet (https://support.industry.siemens.com/cs/de/en/view/68052815).

Manual Collection S7-1500/ET 200MP

The Manual Collection contains the complete documentation on the SIMATIC S7-1500 automation system and the ET 200MP distributed I/O system gathered together in one file.
You can find the Manual Collection on the Internet.
(https://support.industry.siemens.com/cs/ww/en/view/86140384)

SIMATIC S7-1500 comparison list for programming languages

The comparison list contains an overview of which instructions and functions you can use for which controller families.
You can find the comparison list on the Internet
(https://support.industry.siemens.com/cs/ww/en/view/86630375).

1.2 SIMATIC Technical Documentation

Additional SIMATIC documents will complete your information. You can find these documents and their use at the following links and QR codes.
The Industry Online Support gives you the option to get information on all topics. Application examples support you in solving your automation tasks.

Overview of the SIMATIC Technical Documentation

Here you will find an overview of the SIMATIC documentation available in SIOS:

Industry Online Support International
(https://support.industry.siemens.com/cs/ww/en/view/109742705)

Watch this short video to find out where you can find the overview directly in SIOS and how to use SIOS on your mobile device:

Quick introduction to the technical documentation of automation products per video (https://support.industry.siemens.com/cs/us/en/view/109780491)

YouTube video: Siemens Automation Products - Technical Documentation at a Glance (https://youtu.be/TwLSxxRQQsA)

mySupport

With "mySupport" you can get the most out of your Industry Online Support.

Registration	You must register once to use the full functionality of "mySupport". After registration, you can create filters, favorites and tabs in your personal workspace.
Support requests	Your data is already filled out in support requests, and you can get an overview of your current requests at any time.
Documentation	In the Documentation area you can build your personal library.
Favorites	You can use the "Add to mySupport favorites" to flag especially interesting or frequently needed content. Under "Favorites", you will find a list of your flagged entries.
Recently viewed articles	The most recently viewed pages in mySupport are available under "Recently viewed articles".
CAx data	The CAx data area gives you access to the latest product data for your CAx or CAe system. You configure your own download package with a few clicks: • Product images, 2D dimension drawings, 3D models, internal circuit diagrams, EPLAN macro files • Manuals, characteristics, operating manuals, certificates • Product master data

You can find "mySupport" on the Internet. (https://support.industry.siemens.com/My/ww/en)

Application examples

The application examples support you with various tools and examples for solving your automation tasks. Solutions are shown in interplay with multiple components in the system - separated from the focus on individual products.
You can find the application examples on the Internet.
(https://support.industry.siemens.com/cs/ww/en/ps/ae)

1.3 Tool support

The tools described below support you in all steps: from planning, over commissioning, all the way to analysis of your system.

TIA Selection Tool

The TIA Selection Tool tool supports you in the selection, configuration, and ordering of devices for Totally Integrated Automation (TIA).

As successor of the SIMATIC Selection Tools , it assembles the configuration editors for automation technology already familiar into a single tool.

With the TIA Selection Tool , you can generate a complete order list from your product selection or product configuration.
You can find the TIA Selection Tool on the Internet.
(https://support.industry.siemens.com/cs/ww/en/view/109767888)

SIMATIC Automation Tool

You can use the SIMATIC Automation Tool to perform commissioning and maintenance activities on various SIMATIC S7 stations as bulk operations independent of TIA Portal.

The SIMATIC Automation Tool offers a wide range of functions:

- Scanning of a PROFINET/Ethernet system network and identification of all connected CPUs
- Assignment of addresses (IP, subnet, Gateway) and device name (PROFINET device) to a CPU
- Transfer of the date and the programming device/PC time converted to UTC time to the module
- Program download to CPU
- RUN/STOP mode switchover
- CPU localization through LED flashing
- Reading out of CPU error information
- Reading the CPU diagnostic buffer
- Reset to factory settings
- Firmware update of the CPU and connected modules

You can find the SIMATIC Automation Tool on the Internet.
(https://support.industry.siemens.com/cs/ww/en/view/98161300)

PRONETA

SIEMENS PRONETA (PROFINET network analysis) is a commissioning and diagnostic tool for PROFINET networks. PRONETA Basic has two core functions:

- The "Network analysis" offers a quick overview of the PROFINET topology. It is possible to make simple parameter changes (for example, to the names and IP addresses of the devices). In addition, a quick and convenient comparison of the real configuration with a reference system is also possible.
- The "IO test" is a simple and rapid test of the wiring and the module configuration of a plant, including documentation of the test results.

You can find SIEMENS PRONETA Basic on the Internet:
(https://support.industry.siemens.com/cs/ww/en/view/67460624)

SIEMENS PRONETA Professional is a licensed product that offers you additional functions. It offers you simple asset management in PROFINET networks and supports operators of automation systems in automatic data collection/acquisition of the components used through various functions:

- The user interface (API) offers an access point to the automation cell to automate the scan functions using MQTT or a command line.
- With PROFIenergy diagnostics, you can quickly detect the current pause mode or the readiness for operation of devices that support PROFIenergy and change these as needed.
- The data record wizard supports PROFINET developers in reading and writing acyclic PROFINET data records quickly and easily without PLC and engineering.

You can find SIEMENS PRONETA Professional on the Internet:
(https://www.siemens.com/proneta-professional)

SINETPLAN

SINETPLAN, the Siemens Network Planner, supports you in planning automation systems and networks based on PROFINET. The tool facilitates professional and predictive dimensioning of your PROFINET installation as early as in the planning stage. In addition, SINETPLAN supports you during network optimization and helps you to exploit network resources optimally and to plan reserves. This helps to prevent problems in commissioning or failures during productive operation even in advance of a planned operation. This increases the availability of the production plant and helps improve operational safety.

The advantages at a glance

- Network optimization thanks to port-specific calculation of the network load
- Increased production availability thanks to online scan and verification of existing systems
- Transparency before commissioning through importing and simulation of existing STEP 7 projects
- Efficiency through securing existing investments in the long term and the optimal use of resources

You can find SINETPLAN on the Internet
(https://new.siemens.com/global/en/products/automation/industrial-communication/profinet/sinetplan.html).

Product overview

2

2.1 Properties

Article number

6ES7547-1JF00-0AB0

View of the module

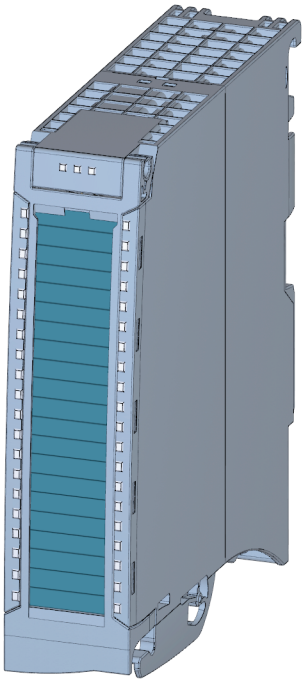

Figure 2-1 View of the IO-Link Master CM 8xIO-Link communication module

Properties

The module has the following technical properties:

- IO-Link master according to IO-Link specification V1.1
- Communication module with 8 ports (channels)
- Data transfer rates COM1 (4.8 kB), COM2 (38.4 kB), COM3 (230.4 kB)
- Standard DI mode
- Suitable for connecting up to eight IO-Link devices (3-wire connection) or eight standard encoders

- Configurable diagnostics can be set for each channel
- Automatic backup of the device parameters during replacement of the IO-Link device (only for V1.1 devices)
- Configuration limits:
  - Max. 32 bytes input and output data per port
  - Max. 240 bytes input and output data per module

The module supports the following functions:

- Firmware update
- Identification and maintenance data (I&M)
- IO-Link port configuration with S7-PCT
- IO-Link port configuration with STEP7 or GSD (without S7-PCT)
- Variable address range of I/O data with up to 240 byte inputs and 240 byte outputs
- Master backup with function block "LIOLink_Master"
- Port Qualifier Information (PQI)
- I&M 0 to 3

The module can be used with the following engineering tools:

Table 2-1 Engineering tools

Firmware version of the module	S7-PCT	STEP 7 (TIA Portal)	GSD file
V1.0 (in CPU/PROFINET/PROFIBUS station)	As of V3.5 SP1	As of V15.1	X

Accessories/spare parts

The following accessories/spare parts are available for the module and can also be ordered separately:

- Labeling strips
- U connector
- Universal front cover

The following component must be ordered separately:

- Front connectors, including potential jumpers and cable ties

Additional information

You can find more information on accessories in the S7-1500/ET 200MP Distributed I/O System (https://support.industry.siemens.com/cs/ww/en/view/59191792) system manual in the Accessories/Spare parts section.

2.2 Functions

IO-Link is a point-to-point connection between a master and a device. Both conventional and intelligent sensors/actuators can be used as devices at the IO-Link via unshielded standard

cables using proven 3-wire technology. IO-Link is backward compatible to conventional sensors. The switching state and data channels are designed with trusted 24 V DC technology.

Reference

Additional information can be found in the IO-Link System (https://support.automation.siemens.com/WW/view/en/65949252) function manual.

2.3 Replacing the IO-Link Master CM 8xIO-Link communication module

Master Backup

You can back up the parameters of your module with the function block "LIOLink_Master".
The "LIOLink_Master" function block is used to read all relevant IO-Link device and IO-Link Master parameters. The parameters can be stored retentively at a central location, such as in a data block in the IO controller.
The status of the IO-Link devices or IO-Link ports stored in the IO-Link Master can be restored with the "LIOLink_Master" function block.
As a result, the IO-Link ports and the IO-Link Master are configured with the values stored in the master backup.
A typical application is the restoration of parameters after replacement of the IO-Link Master.

Firmware version	
Module	**Function block LIOLink_Master**
as of V 1.0	as of V 1.0.0

Compatibility table of the firmware versions

NOTE
Availability
Note that the Master Backup function is available only for IO-Link devices that are specified for the IO-Link Standard as of V1.1.

You can find additional information on the master backup functions in the section 'Integration into the automation system' in the IO-Link System (https://support.industry.siemens.com/cs/ww/en/view/65949252) function manual.

2.4 Reset communication module to factory settings

Effects of resetting to the factory settings

Use the "Reset to factory settings" function to restore the parameter assignments of your IO-Link Master CM 8xIO-Link communication module made with S7-PCT to the factory state.

After a "Reset to factory settings", the parameters of the IO-Link Master CM 8xIO-Link communication module are assigned as follows:

- The ports are in DI mode
- The ports are mapped to the relative addresses 0.0 ... 0.7
- The PortQualifier is disabled
- I&M data 1 to 3 is deleted

NOTE

The master backup of the IO-Link Master is deleted and the delivery condition is restored.

You should reset a removed IO-Link Master CM 8xIO-Link communication module to the factory settings before you place it in storage.

Procedure

To perform a "Reset to factory settings", proceed as described in the S7-PCT online help.

Connecting

3

3.1 Wiring and block diagram

This section includes the block diagram of the communication module IO-Link Master CM 8xIO-Link with the terminal assignments for 3-wire and 5-wire connection of IO-Link devices or 2-wire and 3-wire connection in DI operating mode.

You can use and combine the different wiring options for all channels.

Ensure that all devices are connected to the SELV/PELV power supply (or equivalent).

NOTICE
Internal transducer supply Use only the supply voltage (US_n/M) made available by the IO-Link Master CM 8xIO-Link communication module to supply the IO-Link device (L+/L-).

Wiring: 3-wire and 5-wire connection of IO-Link devices

The example in the following figure shows the terminal assignment of the communication module IO-Link Master CM 8xIO-Link (3- and 5-conductor connection of IO-Link devices).

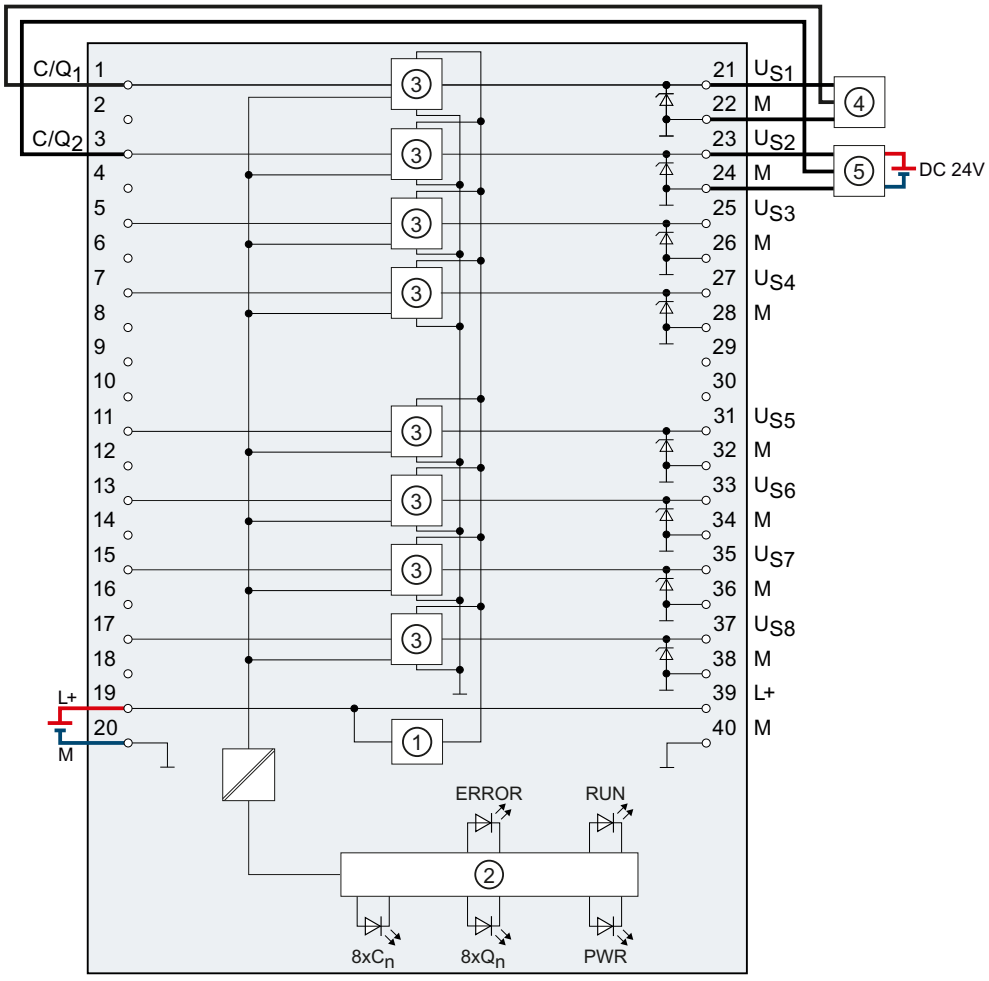

①	Reverse polarity protection	U_{Sn}	Supply voltage (positive)
②	Backplane bus interface	RUN	Status display LED (green)
③	IO-Link circuitry	ERROR	Error display LED (red)
④	Device, 3-wire connection	PWR	Power LED (green)
⑤	Device, 5-wire connection	C/Qn	Port n
M	Ground	C_n	Port status/channel error LED (green/red)
L+	Supply voltage 24 V DC	Q_n	LED channel status in standard DI mode (green)

Figure 3-1 Block diagram and terminal assignment for 3-wire and 5-wire connection of IO-Link devices

Wiring: 2-wire and 3-wire connection in DI operating mode

The example in the following figure shows the terminal assignment of the IO-Link Master CM 8xIO-Link communication module in DI operating mode.

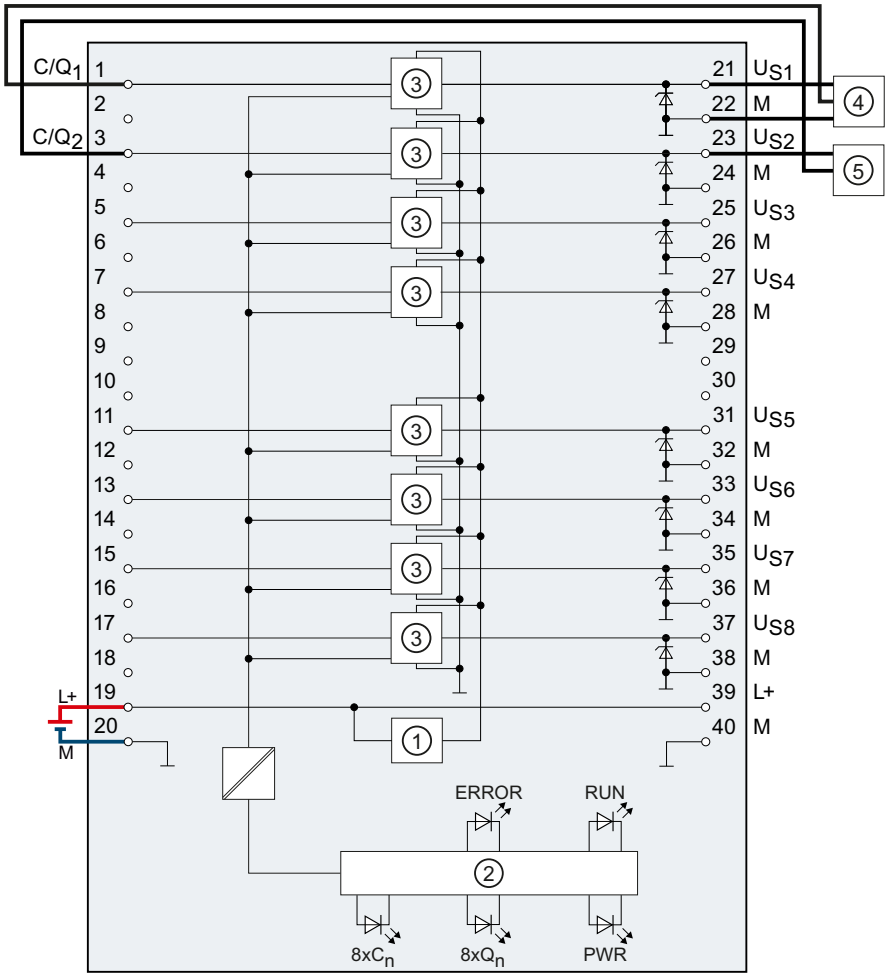

①	Reverse polarity protection	U_{Sn}	Supply voltage (positive)
②	Backplane bus interface	RUN	Status display LED (green)
③	IO-Link circuitry	ERROR	Error display LED (red)
④	Sensor, 3-wire connection	PWR	Power LED (green)
⑤	Sensor, 2-wire connection	C/Qn	Port n
M	Ground	C_n	Port status/channel error LED (green/red)
L+	Supply voltage 24 V DC	Q_n	LED channel status in standard DI mode (green)

Figure 3-2 Terminal assignment for 2-wire and 3-wire connection in DI operating mode

Parameters / address space

4

4.1 Parameters

Parameters (GSD file)

The following table shows the general parameters for the IO-Link Master CM 8xIO-Link communication module.
The default settings of the parameters are marked in bold in the "Value ranges" column.

Table 4-1 General parameters (GSD file)

Parameters	Value range	Effective range
Diagnostics		
Diagnostics: No supply voltage L+	• **Disable** • Enable	Module
Diagnostics: Port	• **Disable** • Enable	Port (channel)
Master parameter		
Port Qualifier Information (PQI)	• Disable • **Enable**	Module
Port configuration without S7-PCT	• **Disable** • Enable	Module

The following table shows the port parameters for the IO-Link Master CM 8xIO-Link communication module.

Parameters	Value range	Default
Port configuration		
Operating mode	• IO-Link Autostart • IO-Link Manual • DI • Deactivated	IO-Link Autostart
Length of the input data*	depending on the selected input/output type**	depending on the selected input/output type**
Length of output data	depending on the selected input/output type**	depending on the selected input/output type**

* If PQI is activated, 1 byte less space remains for input data of the device. For example: GSD setting 16 bytes = 15 bytes + PQI

** Make sure not to exceed the maximum possible length of the input or output data for all ports.

*** Only effective if you use the "IO-Link Manual" port mode.

Parameters	Value range	Default
Vendor ID***	Manufacturer ID of the connected IO-Link device	0
Device ID***	Device ID of the connected IO-Link device	0
Inspection Level/Data Storage***	• Identical type (V1.0) without Backup&Restore • Type-compatible (V1.1) without Backup&Restore • Type-compatible (V1.1) with Backup&Restore • Type-compatible (V1.1) with Restore	Type-compatible (V1.1) with Backup&Restore

* If PQI is activated, 1 byte less space remains for input data of the device. For example: GSD setting 16 bytes = 15 bytes + PQI

** Make sure not to exceed the maximum possible length of the input or output data for all ports.

*** Only effective if you use the "IO-Link Manual" port mode.

Maximum possible length of the input or output data

Example:
You have selected the configuration 64 I / 64 Q.
You have assigned 4 bytes of input data to the first port.
For the remaining ports, you can assign a total of 60 bytes of input data.

Reference

You can find additional information on the Vendor ID and Device ID on the Internet (https://support.industry.siemens.com/cs/ww/en/view/109748852).

4.2 Declaration of parameters

Diagnostics: No supply voltage L+

Enabling the diagnostic alarm for missing or insufficient supply voltage L+.

Diagnostics: Port

This parameter allows the enabling of the diagnostics for the selected port.
The possible diagnostics are dependent on the IO-Link device used. Additional information about the diagnostic interrupts can be found in the description of the utilized IO-Link device.

Port Qualifier Information

This parameter releases the Port Qualifier Information (PQI).
The PQI provides information on the port status and the IO-Link device status.

Port configuration without S7-PCT

This parameter enables the port configuration without S7-PCT for the module.

Operating mode

This parameter determines the mode in which you operate the selected port.
You can select from the following options:

- IO-Link Autostart
- IO-Link Manual
- DI
- Deactivated

The setting of the port is granular and you can combine the operating modes as you like.

IO-Link Autostart

The connected IO-Link device starts automatically (Plug&Play functionality). The IO-Link device is immediately available to you and operational.

IO-Link Manual

If the Vendor ID and Device ID match the connected device, the connected IO-Link device is automatically started. In other words, in contrast to "IO-Link Autostart", the system checks here whether the correct device is connected. You need to configure the Device ID / Vendor ID to enable this.
You need to store the Vendor ID and Device ID of the connected IO-Link device in STEP 7.
In addition, you can select the inspection level for data storage:

- Identical type (V1.0) without Backup&Restore
- Type-compatible (V1.1) without Backup&Restore
- Type-compatible (V1.1) with Backup&Restore
- Type-compatible (V1.1) with Restore

You can find instructions for determining the Vendor ID and Device ID on the Internet (https://support.industry.siemens.com/cs/ww/en/view/109748852).

DI

The port operates as standard digital input.

Deactivated

The port is deactivated.

4.3 Address space

Configuration options of the communication module IO-Link Master CM 8xIO-Link

The size of the input and output addresses of the IO-Link Master CM 8xIO-Link communication module with firmware version V1.0 are 32 bytes per port in each case. The following table provides an overview of the configuration options of the supported address areas for I/O data:

Module configuration	IM 155-5 PN BA	IM 155-5 PN ST	IM 155-5 PN HF	IM 155-5 DP ST	S7-1500 CPU
8 byte inputs 8 byte outputs	X	X	X	X	X
16 byte inputs 0 byte outputs	X	X	X	X	X
16 byte inputs 16 byte outputs	X	X	X	X	X
24 byte inputs 16 byte outputs	X	X	X	X	X
32 byte inputs 32 byte outputs	X	X	X	X	X
40 byte inputs 32 byte outputs	X	X	X	-	X
64 byte inputs 64 byte outputs	X	X	X	-	X
72 byte inputs 64 byte outputs	-	X	X	-	X
128 byte inputs 128 byte outputs	-	X	X	-	X
136 byte inputs 128 byte outputs	-	X	X	-	X
240 byte inputs 240 byte outputs	-	X	X	-	X

The IO area defined for an ET 200MP limits the number of IO modules per station. The interface module supports a maximum of 512 bytes for input and output data for all I/O modules in the station. Exceptions are 2 interface modules: IM 155-5 PN BA, which only supports 64 bytes, and IM 155-5 DP ST with a limit of 244 bytes per station.

The following table provides an overview of the maximum address spaces for the respective interface modules.

IM	Firmware version	Max. address space per station	Max. address space per module
IM 155-5 PN BA	V4.0.2	64 bytes	64 bytes
IM 155-5 PN ST	V4.1.0	512 bytes	256 bytes
IM 155-5 PN HF	V3.0.1	512 bytes	256 bytes
IM 155-5 DP ST	V3.0.0	244 bytes	32 bytes

NOTE

IO-Link Master behind an IM 155-5 DP ST

In connection with an IM 155-5 DP ST, you configure the IO-Link master exclusively using a GSD file. Install the corresponding GSD file. You can find this for download on the Internet (https://support.industry.siemens.com/cs/ww/en/view/80206700).

Port configuration CPU

With an IO-Link Master CM 8xIO-Link, you can commission the IO-Link ports of the IO-Link Master or the connected IO-Link devices in two different ways:

- Port configuration with STEP7 or GSD (without S7-PCT)
- Port configuration with S7-PCT

Port configuration with STEP7 or GSD (without S7-PCT)

Requirements

You have selected the "Port configuration without S7-PCT" check box in the configuration of the IO-Link master in STEP 7.

Procedure

You configure the IO-Link master directly in STEP 7:

- Activate the diagnostics
- Configuration of the I/O data lengths for each port
- Activating the Port Qualifier Information (PQI)
- Port mode:
  - Operation in "IO-Link Autostart" mode (default)
  - Operation in "IO-Link Manual" mode
  - Operated as DI
  - Deactivated

Port configuration with S7-PCT

Requirements

You deselected the "Port configuration without S7-PCT" check box in the configuration of the IO-Link master in STEP 7.

Procedure

You configure the IO-Link Master ports with the Port Configuration Tool S7-PCT, V3.5 SP1 or higher. In doing so, select the IO-Link device from the device catalog of S7-PCT and assign the device to an IO-Link port.

Port Qualifier Information (PQI)

You can activate the Port Qualifier Information (PQI) for your IO-Link Master.

NOTE

Port Qualifier Information (PQI)

If you have activated the Port Qualifier Information (PQI), it is always transferred with the size 1 byte together with the input data of the IO-Link device.

PQI is not available for 8 bytes input / 8 bytes output.

The figure below shows the structure of the PQI byte.

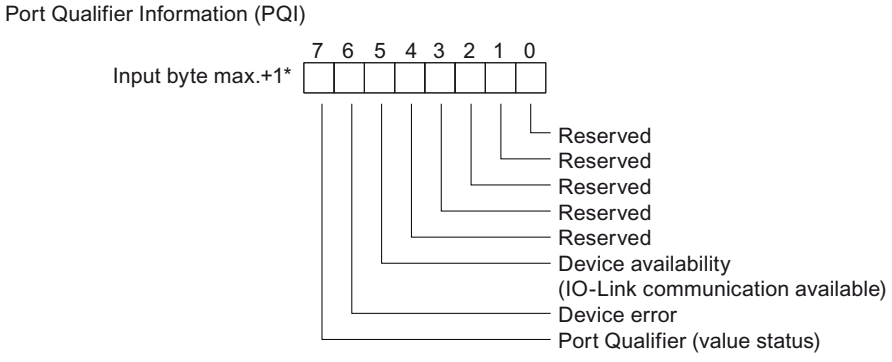

* The PQI byte is always after the last input byte of the port.

Figure 4-1 Structure of the PQI byte

Description of the PQI byte:

Name	Value	Meaning
Device availability	0	IO-Link device is not available
	1	IO-Link device is in the "Preoperate" or "Operate" state
Device error	0	No error
	1	An error or warning has occurred.
Port Qualifier	0	IO data is not valid
	1	IO data is valid

Position of the PQI byte in the process image (example):

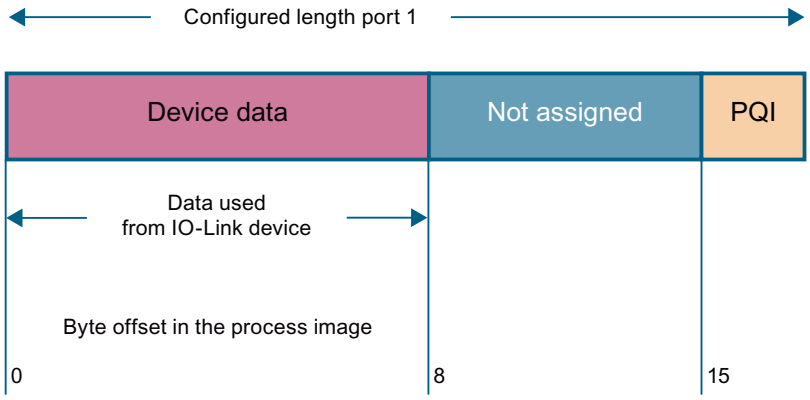

Figure 4-2 Address space IO-Link Master

In the example above, 16 bytes are set for port 1, the IO-Link device transfers the data in bytes 0 to 7 and the PQI byte is set to byte 15.

NOTE
Restriction
The graphic only applies to the input range.

Standard DI mode

The following figure shows the assignment of the address space of a port for the IO-Link Master CM 8xIO-Link, if you have configured the port as a digital input.

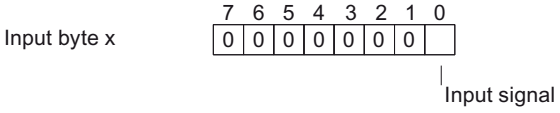

Figure 4-3 Address space of the inputs of the IO-Link Master CM 8xIO-Link in standard DI mode

Reference

You can find additional information in the IO-Link System (https://support.automation.siemens.com/WW/view/en/65949252) function manual.

Diagnostic alarms

5

5.1 Status and error displays

LED display

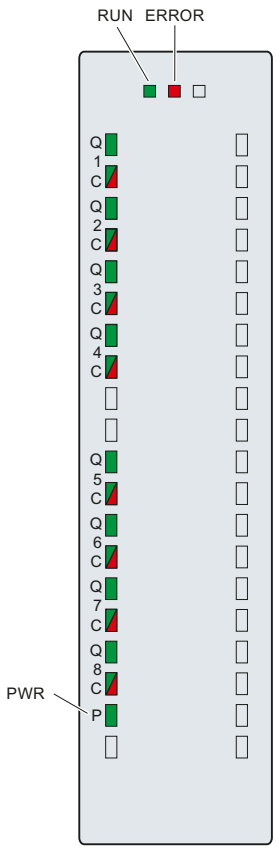

Cn	Port status/channel error
Qn	Channel status in standard DI mode
PWR	Supply voltage L+
n	Channel number

Figure 5-1 LED display

Meaning of the LED displays

The following tables show the meaning of the status and error displays. Remedial measures for diagnostic alarms can be found in the Diagnostic alarms (Page 28) chapter.

RUN and ERROR LED

Table 5-1 Status and error displays RUN and ERROR

LED		Meaning	Solution
RUN	ERROR		
Off	Off	Voltage missing or too low at backplane bus.	• Switch on the CPU and/or the system power supply modules. • Verify that the U connectors are inserted. • Check whether too many modules are inserted.
Flashes	Off	The module starts up and flashes until the valid parameter assignment is set.	-
On	Off	Module parameters are assigned.	
On	Flashes	Indicates module errors (at least one error is present on one channel, e.g. wire break).	Evaluate the diagnostics and eliminate the error (e.g. wire break).
Flashes	Flashes	The hardware is defective.	Replace the module.

LED PWR

Table 5-2 POWER status display

LED P	Meaning	Solution
Off	Supply voltage L+ too low or missing.	Check the supply voltage L+.
On (green)	Supply voltage L+ is present and OK.	-

Cn LEDs

Valid for IO-Link port in port status.

Table 5-3 Status displays of LEDs C1 to C8

C1 to C8	Meaning
Off	The port is disabled or in standard DI mode.
Flashes (green)	The port is in IO-Link mode, the device is not connected or the port is not connected with the configured device.
On (green)	Port in IO-Link mode, device not connected
On (red)	• Wire break or short-circuit to ground • Supply voltage L+ missing or too low • IO-Link device error

Qn LEDs

Valid for the IO-Link port that is in standard DI mode.

Table 5-4 Status displays of LEDs Q1 to Q8

Q1 to Q8	Meaning
□ Off	Process signal = 0 in standard DI mode, deactivated or in IO-Link mode
■ On (green)	Process signal = 1 in standard DI mode

5.2 Diagnostic alarms

For each diagnostics event, a diagnostic alarm is issued and the ERROR LED flashes red on the communication module. You can read out the diagnostics alarms, for example, in the diagnostics buffer of the CPU. You can evaluate the error codes with the user program.

Table 5-5 Error types

Diagnostic alarm	Error code	Meaning (IO-Link error code)	IO-Link Master	IO-Link device
Short-circuit	1_H	• Short-circuit in the process cables on the IO-Link device (1804_H)	X	
		• Short-circuit on IO device (7710_H)		X
Undervoltage	2_H	• Supply voltage too low (5111_H, 5112_H)		X
Overvoltage	3_H	• Supply voltage too high (5110_H)		X
Overheating	5_H	• Temperature exceeded on master (1805_H)	X	
		• Temperature exceeded on device (4000_H, 4210_H)		X
Wire break	6_H	• No IO-Link device connected • There is a break in the signal line to the IO-Link device • IO-Link device cannot communicate due to another error (1800_H)	X	
Overflow	7_H	• Process tag range exceeded ($8C10_H$) • Measuring range exceeded ($8C20_H$)		X
Underflow	8_H	• Process tag range too low ($8C30_H$)		X
Error	9_H	• All IO-Link error codes which are not listed here are mapped to this error		X
Configuration error	10_H	• Incorrect device (1802_H) • Vendor ID and Device ID not defined (1817_H) • Process data length of the IO-Link device exceeded (1818_H) • No cycle time configured (1819_H) • Could not configure IO-Link Master (1882_H, 1883_H) • Storage error (1886_H) • Process data length exceeded (1887_H) • PQI not supported (1889_H)	X	
		• Device was not configured correctly (6320_H, 6321_H, 6350_H)		X
Supply voltage missing	11_H	• L+ supply voltage too low (<20 V) (1890_H) • L+ supply voltage for device missing (1806_H) • L+ supply voltage for device too low (<20 V) (1807_H)	X	

Diagnostic alarm	Error code	Meaning (IO-Link error code)	IO-Link Master	IO-Link device
Defective fuse	12_H	• Fuse on device is defective (5101_H)		X
Safety shutdown	19_H	• Serious error (master has to be replaced) (1880_H)	X	
External fault	1 A_H	• Error in data storage (1809_H, $180A_H$, $180B_H$, $180C_H$, $180D_H$) • More than 6 errors are pending simultaneously on the IO-Link device (1808_H) • Consistency error in electronic coding element (1885_H) • Process data length exceeded (1887_H)	X	

Technical specifications 6

Technical specifications of the IO-Link Master CM 8xIO-Link communication module

The following table shows the technical specifications as of the issue date. You can find a data sheet including daily updated technical specifications on the Internet (https://support.industry.siemens.com/cs/de/en/pv/6ES7547-1JF00-0AB0/td?dl=en).

Article number	6ES7547-1JF00-0AB0
General information	
Product type designation	CM 8xIO-Link
HW functional status	FS04
Firmware version	V1.0.2
• FW update possible	Yes
Product function	
• I&M data	Yes; I&M0 to I&M3
Engineering with	
• STEP 7 TIA Portal configurable/integrated from version	V15.1 with HSP 274
• STEP 7 configurable/integrated from version	Configurable via GSD file
• PROFIBUS from GSD version/GSD revision	GSD as of Revision 5
• PROFINET from GSD version/GSD revision	GSDML V2.34
Supply voltage	
Rated value (DC)	24 V
permissible range, lower limit (DC)	20.4 V
permissible range, upper limit (DC)	28.8 V
Reverse polarity protection	Yes
Input current	
Current consumption, max.	50 mA; without load
Encoder supply	
Number of outputs	8
Output current	
• Rated value	1 A; 4 A total current per module
24 V encoder supply	
• Short-circuit protection	Yes; per channel, electronic
IO-Link	
Number of ports	8
• of which simultaneously controllable	8
IO-Link protocol 1.0	Yes

Article number	6ES7547-1JF00-0AB0
IO-Link protocol 1.1	Yes
Cycle time, min.	2 ms
Size of process data, input per port	33 byte; max.
Size of process data, input per module	240 byte; max.
Size of process data, output per port	32 byte; max.
Size of process data, output per module	240 byte; max.
Memory size for device parameter	2 kbyte; for each port
Master backup	Yes
Configuration without S7-PCT	Yes
Cable length unshielded, max.	20 m
Operating modes	
• IO-Link	Yes
• DI	Yes
• DQ	No
Time Based IO	
– TIO IO-Link IN	No
– TIO IO-Link OUT	No
– TIO IO-Link IN/OUT	No
Connection of IO-Link devices	
• Port type A	Yes
• Port type B	Yes; 24 V DC via external terminal
Interrupts/diagnostics/status information	
Alarms	
• Diagnostic alarm	Yes; The port diagnosis is available in the IO-Link mode only.
Diagnoses	
• Monitoring the supply voltage	Yes
• Wire-break	Yes
• Short-circuit	Yes
• Group error	Yes
Diagnostics indication LED	
• Monitoring of the supply voltage (PWR-LED)	Yes; green LED
• Channel status display	Yes; green LED
• for channel diagnostics	Yes; red LED
• for module diagnostics	Yes; red LED
Potential separation	
Potential separation channels	
• between the channels	No
• between the channels and backplane bus	Yes

Article number	6ES7547-1JF00-0AB0
Isolation	
Isolation tested with	707 V DC (type test)
Ambient conditions	
Ambient temperature during operation	
• horizontal installation, min.	-30 °C
• horizontal installation, max.	60 °C; Observe derating
• vertical installation, min.	-30 °C
• vertical installation, max.	40 °C; Observe derating
Altitude during operation relating to sea level	
• Installation altitude above sea level, max.	5 000 m; Restrictions for installation altitudes > 2 000 m, see manual
Dimensions	
Width	35 mm
Height	147 mm
Depth	129 mm

Power reduction (derating) to total current of outputs, per module

The following derating curves show the load capacity of the transducer supply outputs in relation to the mounting position and the ambient temperature.

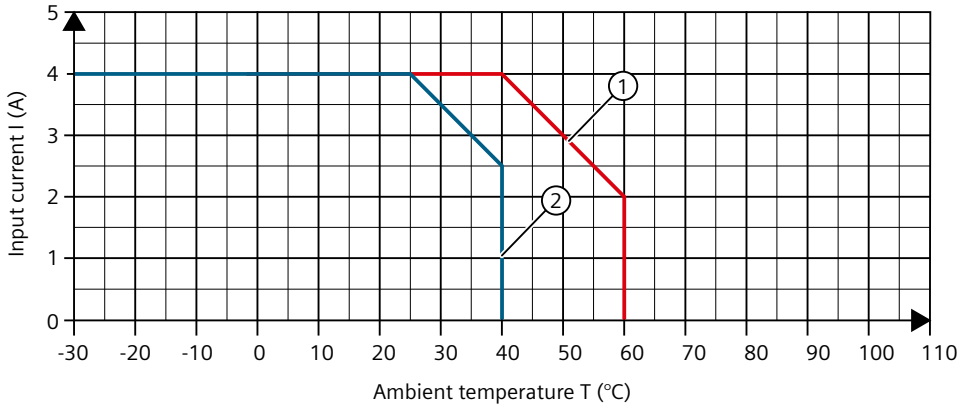

① Horizontal mounting of the system

② Vertical mounting of the system

Figure 6-1 Derating curve, IO-Link master

Dimensional drawing

7

7.1 Dimensional drawing

The dimensional drawing of the module on the mounting rail, as well as a dimensional drawing with open front panel, are provided in the appendix. Always observe the specified dimensions for installation in cabinets, control rooms, etc.

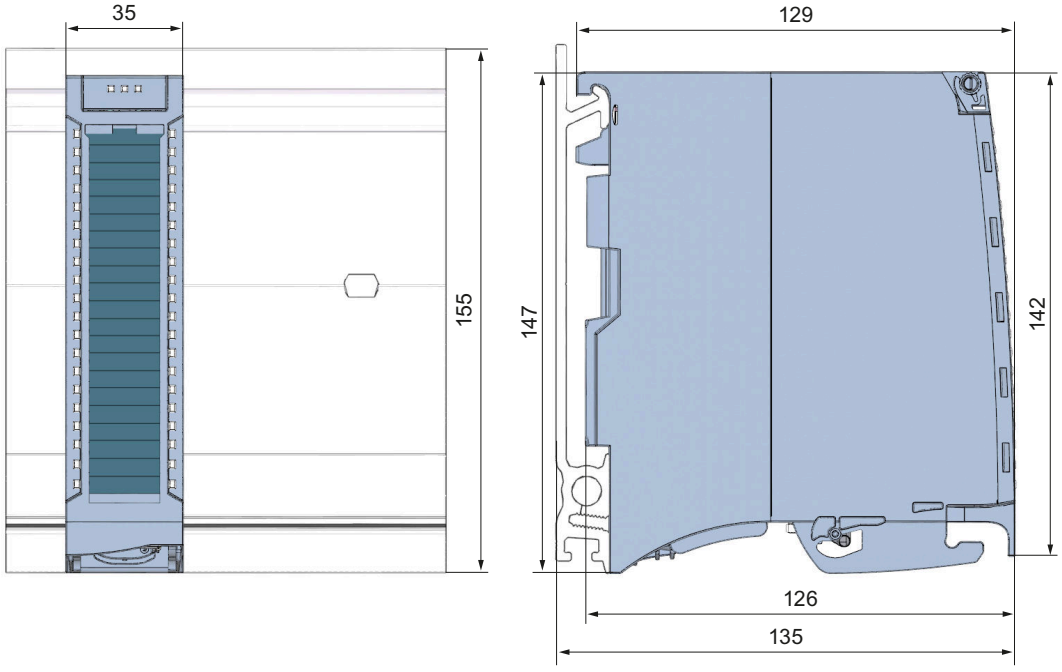

Figure 7-1 Dimensional drawing of the **IO-Link Master CM 8xIO-Link** module

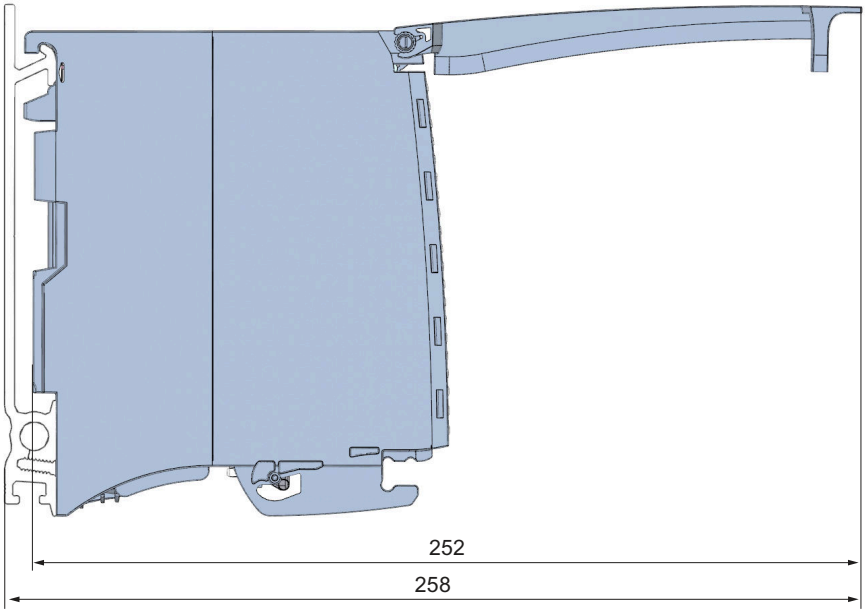

Figure 7-2 Dimensional drawing of the IO-Link Master CM 8xIO-Link module, side view with open front cover

Parameter data record A

A.1 Parameter assignment and structure of parameter data set

The data record of the module has an identical structure, regardless of whether you configure the module with PROFIBUS DP or PROFINET IO. With data record 128, you can reconfigure the module in your user program regardless of your programming.

The following figures describe the structure of data record 128 as of firmware version V1.0.

Configuration in the user program

You can configure the modules in runtime.

Changing parameters in RUN

The "WRREC" instruction is used to transfer the parameters to the module using data record 128. The parameters set with STEP 7 are not changed in the CPU by this action. This means the parameters set in STEP 7 are still valid after a restart.

Output parameter STATUS

If errors occur when transmitting parameters with the "WRREC" instruction, the module continues operation with the previous parameter assignment. The STATUS output parameter contains a corresponding error code.

You will find a description of the "WRREC" instruction and the error codes in the STEP 7 online help.

Error message

The module always checks all the values of the transferred data record. Only if all the values were transferred without errors does the module apply the values from the data record.

The instruction WRREC for writing data records returns corresponding error codes when errors occur in the parameter STATUS.

The following table shows the module-specific error codes and their meaning for the parameter data record 128:

Table A-1 Error message

Error code	Meaning
$80B1_H$	Error in data length
$80E0_H$	Error in header information
$80E1_H$	Parameter error

Structure of data record 128

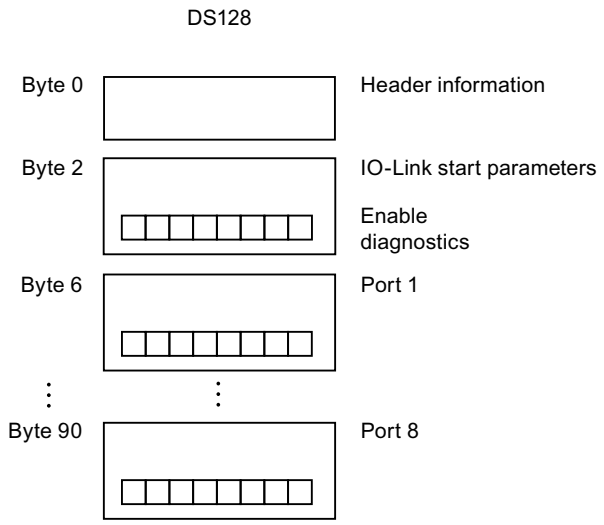

Figure A-1 Structure of data record 128

Header information

The figure below shows the structure of the header information.

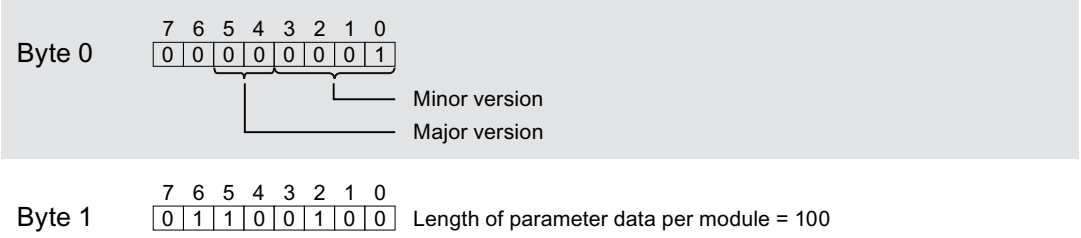

Figure A-2 Header information

IO-Link start parameters

The following figure shows the structure of the IO-Link start parameter.
Activate a parameter by setting the corresponding bit to "1".

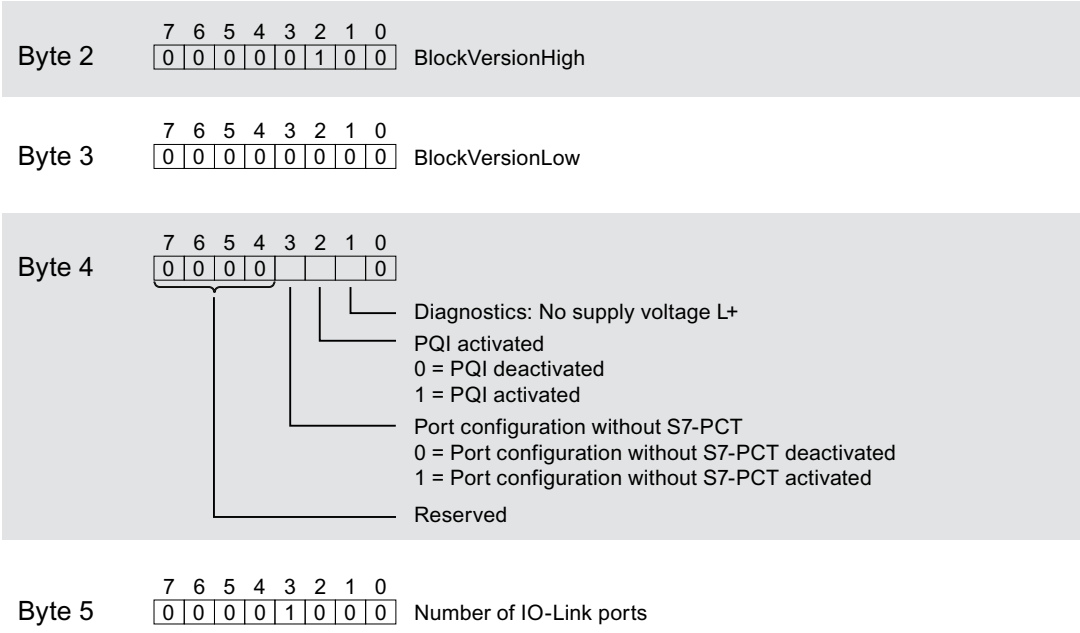

Figure A-3 IO-Link start parameters

Port parameter

The following figure shows an extract from the structure of the port parameter.
Activate a parameter by setting the corresponding bit to "1".

If you have selected IO-Link Manual operating mode, you must enter the Vendor ID (byte x+5 and x+6) and Device ID (byte x+7 to x+10) yourself.
You can find the Vendor ID and Device ID in the IODD of the IO-Link device being used.

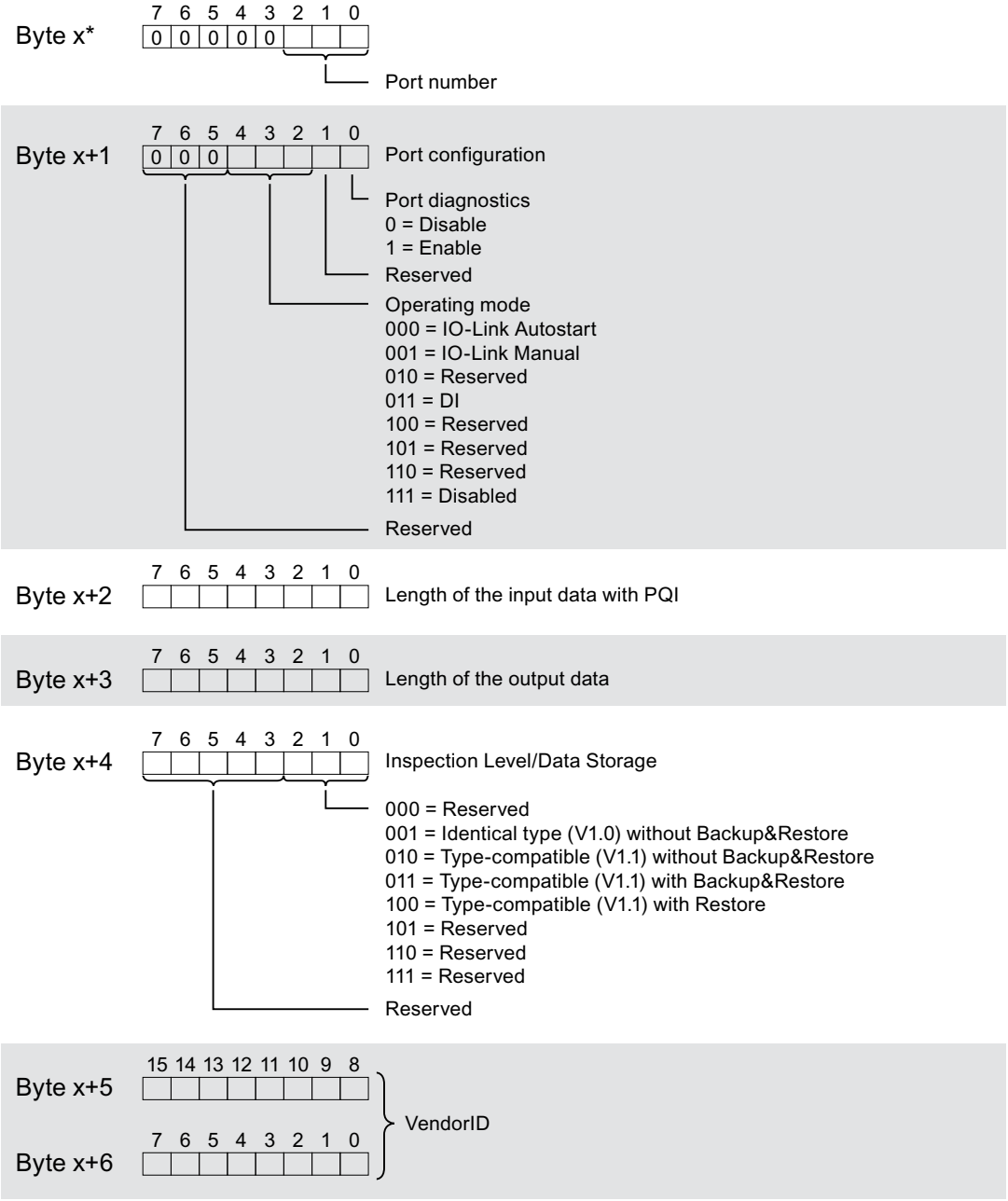

* x = 6 + ((port number-1) x 12); port numbers = 1 to 8.

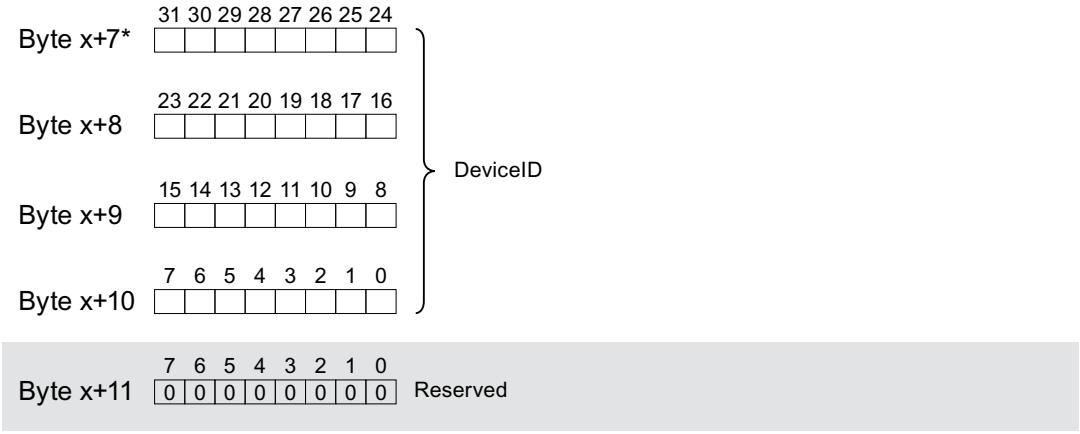

* x = 6 + ((port number-1) x 12); port numbers = 1 to 8.

Figure A-4 Port parameter

SIEMENS

SIMATIC NET

S7-1500 - PROFINET CM 1542-1

Operating Instructions

Preface

Properties and functions 1

LEDs 2

Installation, connecting up, commissioning, operation 3

Configuration, programming 4

Diagnostics and upkeep 5

Technical specifications 6

Approvals 7

Documentation references A

07/2019

C79000-G8976-C355-04

Legal information

Warning notice system

This manual contains notices you have to observe in order to ensure your personal safety, as well as to prevent damage to property. The notices referring to your personal safety are highlighted in the manual by a safety alert symbol, notices referring only to property damage have no safety alert symbol. These notices shown below are graded according to the degree of danger.

⚠ DANGER

indicates that death or severe personal injury **will** result if proper precautions are not taken.

⚠ WARNING

indicates that death or severe personal injury **may** result if proper precautions are not taken.

⚠ CAUTION

indicates that minor personal injury can result if proper precautions are not taken.

NOTICE

indicates that property damage can result if proper precautions are not taken.

If more than one degree of danger is present, the warning notice representing the highest degree of danger will be used. A notice warning of injury to persons with a safety alert symbol may also include a warning relating to property damage.

Qualified Personnel

The product/system described in this documentation may be operated only by **personnel qualified** for the specific task in accordance with the relevant documentation, in particular its warning notices and safety instructions. Qualified personnel are those who, based on their training and experience, are capable of identifying risks and avoiding potential hazards when working with these products/systems.

Proper use of Siemens products

Note the following:

⚠ WARNING

Siemens products may only be used for the applications described in the catalog and in the relevant technical documentation. If products and components from other manufacturers are used, these must be recommended or approved by Siemens. Proper transport, storage, installation, assembly, commissioning, operation and maintenance are required to ensure that the products operate safely and without any problems. The permissible ambient conditions must be complied with. The information in the relevant documentation must be observed.

Trademarks

All names identified by ® are registered trademarks of Siemens AG. The remaining trademarks in this publication may be trademarks whose use by third parties for their own purposes could violate the rights of the owner.

Disclaimer of Liability

We have reviewed the contents of this publication to ensure consistency with the hardware and software described. Since variance cannot be precluded entirely, we cannot guarantee full consistency. However, the information in this publication is reviewed regularly and any necessary corrections are included in subsequent editions.

Siemens AG
Digital Industries
Postfach 48 48
90026 NÜRNBERG
GERMANY

C79000-G8976-C355-04
Ⓟ 08/2019 Subject to change

Copyright © Siemens AG 2014 - 2019.
All rights reserved

Preface

Validity of this manual

This document contains information on the following product:

Communications module CM 1542-1
Article number 6GK7 542-1AX00-0XE0
Hardware product version 1
Firmware version V2.0

Communications module for SIMATIC S7-1500

View of the CM

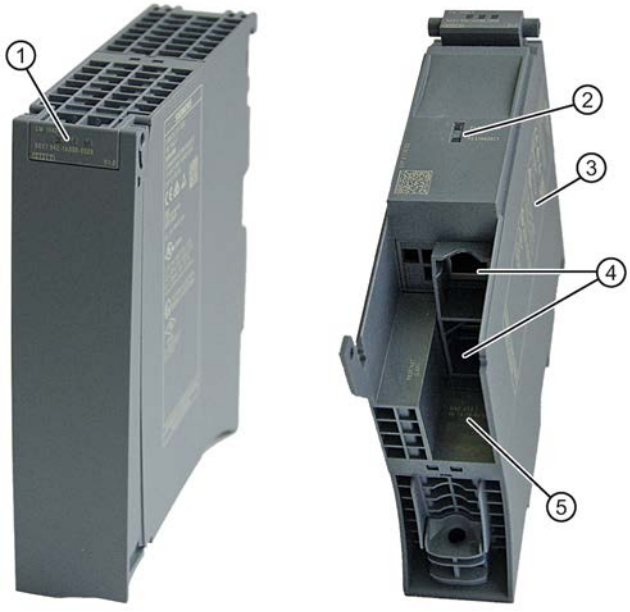

① LEDs for status and error displays
② LED display of the Ethernet ports X1 P1 and X1 P2
③ Type plate
④ PROFINET interface: 2 x 8-pin RJ-45 jack
⑤ Label with MAC address

Figure 1 View of the CM 1542-1 with closed (left) and open (right) front cover

Address label: Unique MAC address preset for the CM

When supplied, the CM has a total of 3 default MAC addresses with the following assignment:

- PROFINET interface

  The MAC address of the PROFINET interface is printed on the housing.

  (visible in STEP 7 if nodes are reachable)

- One MAC address for each of the 2 Ethernet ports of the PROFINET interface

  The MAC addresses of the Ethernet ports are required only for detection and evaluation of neighborhood and topology relations (LLDP).

Abbreviations and names

- CP

  In this document, the term "CP" is also used instead of the full product name.

- STEP 7

  The name STEP 7 is used to mean the STEP 7 Professional configuration tool.

Purpose of the manual

These Operating Instructions supplement the S7-1500 system manual.

With the information in this manual and the system manual, you will be able to commission the CM.

New in this release

New ATEX/IECEx approval

Replaced edition

Edition 01/2017

Current manual release on the Internet

You will also find the current version of these operating instructions on the Internet pages of Siemens Automation Customer Support
Link: (https://support.industry.siemens.com/cs/ww/en/ps/15341/man):

Structure of the documentation

The following documents supplement these operating instructions for the CM 1542-1. You will find links to the documents on the Internet in the appendix Documentation references (Page 49).

Table 1 Documentation for the CM 1542-1

Topic	Documentation	Most important contents
System description	System manual: S7-1500 Automation System	• Application planning • Installation • Connecting up • Commissioning
Module properties	Power supplies manual	• Connecting up • Parameter assignment/addressing • Interrupts, error messages, diagnostics and system alarms • Technical specifications • Dimension drawing
	Signal modules manual	
System diagnostics	System diagnostics function manual	• Overview • Diagnostics evaluation for hardware/software
Communication	Communication function manual	• Overview
	Function manual PROFINET with STEP 7 Professional	• PROFINET basics • PROFINET functions • PROFINET diagnostics
	Web Server function manual	• Function • Operation
Interference-free installation of control systems	Interference-free installation of control systems function manual	• Basics • Electromagnetic compatibility • Lightning protection • Housing selection
Memory concept	Structure and Use of the CPU Memory function manual	• Structure • How it works • Use
Cycle and response times	Cycle and response times	• Basics • Calculations

CM documentation in the SIMATIC NET Manual Collection (article number A5E00069051)

The "SIMATIC NET Manual Collection" DVD contains the device manuals and descriptions of all SIMATIC NET products current at the time it was created. It is updated at regular intervals.

Version History / Current Downloads for the SIMATIC NET S7 CPs

The "Version History/Current Downloads for SIMATIC NET S7 CPs" provides information on all CPs available up to now for SIMATIC S7 (Industrial Ethernet, PROFIBUS) and IE/PB Link.

The current version of these documents can be found on the Internet at the following address:
Link: (https://support.industry.siemens.com/cs/ww/en/view/109474421)

License conditions

Note

Open source software

The product contains open source software. Read the license conditions for open source software carefully before using the product.

You will find license conditions in the following document on the supplied data medium:

- OSS_CM15421_86.pdf

Firmware

The firmware is signed and encrypted. This ensures that only firmware created by Siemens can be downloaded to the device.

Security information

Siemens provides products and solutions with industrial security functions that support the secure operation of plants, systems, machines and networks.

In order to protect plants, systems, machines and networks against cyber threats, it is necessary to implement – and continuously maintain – a holistic, state-of-the-art industrial security concept. Siemens' products and solutions constitute one element of such a concept.

Customers are responsible for preventing unauthorized access to their plants, systems, machines and networks. Such systems, machines and components should only be connected to an enterprise network or the internet if and to the extent such a connection is necessary and only when appropriate security measures (e.g. firewalls and/or network segmentation) are in place.

For additional information on industrial security measures that may be implemented, please visit
Link: (http://www.siemens.com/industrialsecurity)

Siemens' products and solutions undergo continuous development to make them more secure. Siemens strongly recommends that product updates are applied as soon as they are available and that the latest product versions are used. Use of product versions that are no longer supported, and failure to apply the latest updates may increase customers' exposure to cyber threats.

To stay informed about product updates, subscribe to the Siemens Industrial Security RSS Feed under
Link: (http://www.siemens.com/industrialsecurity)

FAQs on the Internet

You will find detailed information (FAQs) on using the CM described here on the Internet at the following address (entry type "FAQ"):

Link: (https://support.industry.siemens.com/cs/ww/en/ps/15341/faq)

SIMATIC NET glossary

Explanations of many of the specialist terms used in this documentation can be found in the SIMATIC NET glossary.

You will find the SIMATIC NET glossary on the Internet at the following address:

Link: (https://support.industry.siemens.com/cs/ww/en/view/50305045)

Recycling and disposal

The product is low in pollutants, can be recycled and meets the requirements of the WEEE directive 2012/19/EU "Waste Electrical and Electronic Equipment".

Do not dispose of the product at public disposal sites. For environmentally friendly recycling and the disposal of your old device contact a certified disposal company for electronic scrap or your Siemens contact.

Keep to the local regulations.

You will find information on returning the product on the Internet pages of Siemens Industry Online Support:
Link: (https://support.industry.siemens.com/cs/ww/en/view/109479891)

Table of contents

Preface 3

1 Properties and functions 11

1.1 Communication services 11

1.2 Further functions 12

1.3 Configuration limits and performance data 13
1.3.1 Transmission and reaction times 13
1.3.2 Connection resources 13
1.3.3 Characteristic data Open User Communication incl. e-mail 14
1.3.4 Characteristics of S7 communication 15
1.3.5 PROFINET IO characteristic data 16
1.3.6 Rack components 16

1.4 Requirements for use 17
1.4.1 Project engineering 17
1.4.2 Programming 18

2 LEDs 19

3 Installation, connecting up, commissioning, operation 21

3.1 Important notes on using the device 21
3.1.1 Notices on use in hazardous areas 21
3.1.2 Notices on use in hazardous areas according to ATEX / IECEx 22
3.1.3 Notices regarding use in hazardous areas according to UL HazLoc 23
3.1.4 Notices on use in hazardous areas according to FM 23

3.2 Installing and commissioning the CM 1542-1 24

3.3 Terminal assignment 25

3.4 Mode of the CPU - effect on the CM 25

4 Configuration, programming 27

4.1 Security recommendations 27

4.2 Network settings 30
4.2.1 Fast Ethernet 30

4.3 IP configuration 30
4.3.1 Points to note about IP configuration 30
4.3.2 Restart after detection of a duplicate IP address in the network 31
4.3.3 Remove retentive storage of the IP address if there are duplicate addresses 31
4.3.4 IP routing 31
4.3.5 CM in multiple use IO systems (standard machines) 32

4.4 Media redundancy 33

4.5 Time-of-day synchronization 33

4.6 Program blocks for OUC 34

5 Diagnostics and upkeep 37
5.1 Diagnostics options 37
5.2 SNMP 37
5.3 Replacing a module without a programming device 39
6 Technical specifications 41
7 Approvals 43
A Documentation references 49
Index 53

Properties and functions 1

1.1 Communication services

The CM supports the following communications services:

- PROFINET IO

  PROFINET IO allows direct access to IO devices over Industrial Ethernet.

  – Real-Time communication (RT)
  – Isochronous Real-Time communication (IRT)
  – Media redundancy MRP
  – Device replacement without exchangeable storage medium
  – IO controller
  – IO device (iDevice, Shared Device, Prioritized startup)
  – Isochronous real time

- Open User Communication

  Open User Communication supports the following communications services via the CM using programmed or configured communications connections:

  – TCP (complying with RFC 793), ISO-on-TCP (complying with RFC 1006) and UDP (complying with RFC 768)

    With the interface via TCP connections, the CM supports the socket interface to TCP/IP available on practically every end system.

  – Multicast with UDP

    The multicast mode is made possible by selecting a suitable IP address when configuring connections. A maximum of six multicast groups are supported via UDP.

- S7 communication

  – PG communication
  – Operator control and monitoring functions (HMI communication)
  – Data exchange over S7 connections

1.2 Further functions

Timeofday synchronization over Industrial Ethernet using the NTP mode (NTP: Network Time Protocol)

The CM sends timeofday queries at regular intervals to an NTP server and synchronizes its local time of day.

The time is also be forwarded automatically to the CPU modules in the S7 station allowing the time to be synchronized in the entire S7 station.

Media redundancy (MRP)

Within an Ethernet network with a ring topology, the CM supports the media redundancy protocol MRP. You can assign the role of "Client" or "Manager (Auto)" to the CM.

Addressable with the factoryset MAC address

To assign the IP address to a new CM (direct from the factory), it can be accessed using the preset MAC address on the interface being used. Online address assignment is made in STEP 7.

SNMP agent

The CM supports data queries using SNMP in version V1 (Simple Network Management Protocol).

For details, see section SNMP (Page 37).

IP configuration - IPv4

The essential features of IP configuration for the CM:

- The CM supports the use of IP addresses according to IPv4.
- You can configure how and with which method the CM is assigned the IP address, the subnet mask and the address of a gateway.
- The IP configuration and the connection configuration (IPv4) can also be assigned to the CM by the user program (for program blocks refer to the section Programming (Page 18)).

  Note: Does not apply to S7 connections.

IP routing

The CM supports static IP routing (IPv4) to other CM 1542-1 V2.0 / CP 1543-1 V2.0 in an S7-1500 system.

For details, see section IP routing (Page 31).

Access to the Web server of the CPU

Via the LAN interface of the CM, you have access to the Web server of the CPU. With the aid of the Web server of the CPU, you can read out module data from a station.

Note the special description of the Web server; refer to the section Documentation references (Page 49)

Note

Web server access using the HTTPS protocol

The Web server of a SIMATIC S7-1500 station is located in the CPU. For this reason, when there is secure access (HTTPS) to the Web server of the station using the IP address of the CM 1542-1, the SSL certificate of the CPU is displayed.

1.3 Configuration limits and performance data

1.3.1 Transmission and reaction times

Measured values on the Internet

Note

Measured values of transmission and reaction times in PROFINET networks for a series of configurations can be found on the Internet at the following address:

Link: (https://support.industry.siemens.com/cs/ww/en/view/25209605)

1.3.2 Connection resources

Characteristic	Explanation / values
Total number of freely usable connections on Industrial Ethernet	64 configurable connections, 1 PG connection The value applies to the total number of connections of the following types: • Connections for open communications services

Note

Connection resources CPU dependent

Depending on the CPU type, different numbers of connection resources are available. The number of connection resources is the decisive factor for the number of configurable connections. This means that the values that can actually be achieved may be lower than specified in this section "Properties and functions" describing the CM.

1.3.3 Characteristic data Open User Communication incl. e-mail

Open User Communication (OUC) provides access to communication over TCP, ISO-on-TCP and UDP connections.

Characteristic	Explanation / values
Number of connections	• Max. number of connections in total (configured and programmed: (ISO-on-TCP + TCP + UDP + e-Mail) ≤ 64 of which: – TCP connections: 0 ... 64 [1)] – ISO-on-TCP connections: 0 ... 64 – Total number of UDP connections (specified and free) that can be configured: 0 ... 64 – Connection for e.mail: 0 ... 64; only one e-mail can be processed at any one time Notes: • [1)] Avoid overload at receiving end The flow control on TCP connections cannot control permanent overload of the recipient. You should therefore make sure that the processing capabilities of a receiving CM are not permanently exceeded by the sender (approximately 150 200 messages per second).
Maximum data length for program blocks	Program blocks allow the transfer of user data in the following lengths: 1. ISO-on-TCP, TCP: 1 - 64 kbytes 2. UDP: 1 - 1452 bytes 3. E-mail (job header + user data): 1 - 256 bytes e-mail attachment: ≤ 64 kbytes
LAN interface max. data field length generated by the CM per protocol data unit(TPDU = transport protocol data unit)	• For sending – ISO-on-TCP, TCP: 1452 bytes / TPDU • For receiving – ISO-on-TCP: 512 bytes / TPDU – TCP: 1452 bytes / TPDU

Note

Connection resources of the CPU

Depending on the CPU type, different numbers of connection resources are available. The number of connection resources is the decisive factor for the number of configurable connections. This means that the values that can actually be achieved may be lower than specified in this section describing the CM.

You will find detailed information on the topic of connection resources in the function manual /4/ (Page 50).

Restrictions for UDP

- Restrictions UDP broadcast / multicast

  To avoid overloading the CP due to high broadcast / multicast frame traffic, the receipt of UDP broadcast / multicast on the CP is limited

- UDP frame buffering

  Length of the frame buffer: At least 7360 bytes

  Following a buffer overflow, newly arriving frames that are not fetched by the user program are discarded.

1.3.4 Characteristics of S7 communication

S7 communication provides data transfer via the ISO-on-TCP protocol.

Characteristic	Explanation / values
Total number of freely usable S7 connections on Industrial Ethernet	Max. 64
LAN interface - data field length generated by CM per protocol data unit (PDU = protocol data unit)	• for sending: 480 bytes / PDU • for receiving: 480 bytes / PDU

Note

Maximum values for an S7-1500 station

Depending on the CPU you are using, there are limit values for the S7-1500 station. Note the information in the relevant documentation.

1.3.5 PROFINET IO characteristic data

Configuration limits of the CM as an IO controller

The CM supports the following maximum configuration as a PROFINET IO controller:

Characteristic	Explanation / values
Number of operable PROFINET IO devices	128, of which: • Max. 64 IRT devices
Size of the input area over all PROFINET IO devices *)	Max. 8192 bytes
Size of the output area over all PROFINET IO devices	Max. 8192 bytes
Size of the IO data area per submodule of a module in an IO device	• Inputs: 256 bytes • Outputs: 256 bytes
Size of the consistency area for a submodule	256 bytes

*) The diagnostics addresses of the PROFINET IO devices cannot be used as an input on the IO controller. The data area of the inputs is reduced by the diagnostics addresses used.

1.3.6 Rack components

When using the CM type described here, the following limits apply:

- The number of CMs that can be operated in a rack depends on the CPU type being used.

  By operating several CMs, you can increase the configuration limits listed in the section Properties and functions (Page 11) for the station as the whole. The CPU does, however, have set limits for the entire configuration.

  Note the information in the documentation of the CPU, refer to the section Documentation references (Page 49)

Note

Power supply via the CPU adequate or additional power supply modules required

You can operate a certain number of modules in the S7-1500 station without an additional power supply. Make sure that you keep to the specified power feed to the backplane bus for the particular CPU type. Depending on the configuration of the S7-1500 station you may need to provide additional power supply modules.

1.4 Requirements for use

1.4.1 Project engineering

Software for configuration and online functions

To configure the CP, the following configuration tool is required:

STEP 7 version	Functions of the CM
STEP 7 Professional V13	Most functions of the CM can be configured.
STEP 7 Professional V14	The full functionality of the CM can be configured with the new functions of the firmware version according to Preface (Page 3).

Downloading the configuration data

When there is a download to the CPU, the CM is supplied with the relevant configuration data. The configuration data can be downloaded to the CPU via a memory card or any Ethernet/PROFINET interface of the S7-1500 station.

1.4.2 Programming

Program blocks

For communications services, there are preprogrammed program blocks (instructions) available as the interface in your STEP 7 user program.

Table 1- 1 Instructions for communications services

Protocol	Program block (instruction)	System data type
TCP	Establish connection and send/receive data via: • TSEND_C / TRCV_C or • TCON, TSEND / TRCV (Termination of the connection possible using TDISCON)	• TCON_IP_v4 • TCON_Configured • TCON_QDN
ISO-on-TCP		• TCON_IP_RFC
UDP	• TCON, TUSEND/TURCV (Termination of the connection possible using TDISCON)	• TCON_IP_v4 • TCON_QDN
E-mail	• TMAIL_C	• TMail_V4 • TMAIL_FQDN

Table 1- 2 Instructions for configuration tasks

Function	Program block (instruction)	System data type
Configuration of the Ethernet interface	• T_CONFIG	• CONF_DATA

For more detailed information, refer to section Program blocks for OUC (Page 34).

Refer to the documentation of the program blocks in the online help of STEP 7.

LEDs

2

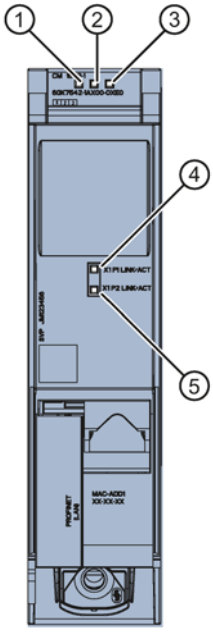

① RUN/STOP
② ERROR
③ MAINT
④ X1 P1 LINK/ACT
⑤ X1 P2 LINK/ACT

Figure 2-1 LED display of the CM 1542-1 (without front cover)

Meaning of the LED displays

The CM 1542-1 has 3 LEDs to display the current operating status and the diagnostics status and these have the following meanings:

- RUN/STOP (single color green)
- ERROR (single color red)
- MAINT (single color yellow)

The following table shows the meaning of the various combinations of colors of the RUN, ERROR and MAINT LEDs.

Table 2- 1 Meaning of the LEDs

RUN/STOP	ERROR	MAINT	Meaning
LED off	LED off	LED off	No supply voltage on the CM or supply voltage too low
LED lit green	LED lit red	LED lit yellow	LED test during startup

RUN/STOP	ERROR	MAINT	Meaning
LED lit green	LED lit red	LED off	CM startup
LED lit green	LED off	LED off	CM is in RUN mode. No disruptions.
LED lit green	LED flashing red	LED off	A diagnostics event has occurred.
LED lit green	LED off	LED lit yellow	Maintenance is demanded.
LED lit green	LED off	LED flashing yellow	• Maintenance is required • Downloading the user program
LED lit green	LED flashing red	-	Duplicate IP address detected. Ethernet interface unreachable.
LED flashing green	LED off	LED off	• No CM configuration exists • Loading firmware
LED flashing green	LED flashing red	LED flashing yellow	Module fault (LEDs flashing synchronized)

Meaning of the LED displays of the PROFINET ports: X1 P1 / X1 P2

To signal whether a connection exists and data is being transferred each port has a two-color LED (green/yellow):

- X1 P1 LINK/ACT
- X1 P2 LINK/ACT

The following table shows the meaning of the various color combinations of the LEDs X1 P1 and X1 P2.

Table 2- 2 Meaning of the LEDs

X1 P1 LINK/ACT / X1 P2 LINK/ACT		Meaning
green off	yellow off	No connection to PROFINET There is no Ethernet connection between the Ethernet interface of the CM and the communications partner. At the current time, there is no data being received/sent via the Ethernet interface.
flashing green	yellow off	The "node flash test" is being performed.
green on	yellow off	Connection to PROFINET exists There is an Ethernet connection between the Ethernet interface of the CM and a communications partner.
green on	yellow flickers	At the current time, data is being received/sent via the Ethernet interface of the Ethernet device of a communications partner on Ethernet.

Installation, connecting up, commissioning, operation 3

3.1 Important notes on using the device

Safety notices on the use of the device

Note the following safety notices when setting up and operating the device and during all associated work such as installation, connecting up or replacing the device.

⚠ WARNING
LAN attachment A LAN or LAN segment with the attachments belonging to it should be within a single low-voltage supply system and within a single building. Make sure that the LAN is in an of type A environment according to IEEE 802.3 or in a type 0 environment according to IEC TR 62101. Never establish a direct electrical connection to TNV networks (telephone network) or WANs (Wide Area Network).

3.1.1 Notices on use in hazardous areas

⚠ WARNING
EXPLOSION HAZARD DO NOT OPEN WHEN ENERGIZED.

⚠ WARNING
The equipment is designed for operation with Safety Extra-Low Voltage (SELV) by a Limited Power Source (LPS). This means that only SELV / LPS complying with IEC 60950-1 / EN 60950-1 / VDE 0805-1 must be connected to the power supply terminals. The power supply unit for the equipment power supply must comply with NEC Class 2, as described by the National Electrical Code (r) (ANSI / NFPA 70). If the equipment is connected to a redundant power supply (two separate power supplies), both must meet these requirements.

⚠ WARNING
EXPLOSION HAZARD Do not connect or disconnect cables to or from the device when a flammable or combustible atmosphere is present.

⚠ WARNING
EXPLOSION HAZARD Replacing components may impair suitability for Class 1, Division 2 or Zone 2.

⚠ WARNING
When used in hazardous environments corresponding to Class I, Division 2 or Class I, Zone 2, the device must be installed in a cabinet or a suitable enclosure.

3.1.2 Notices on use in hazardous areas according to ATEX / IECEx

⚠ WARNING
Requirements for the cabinet/enclosure To comply with EC Directive 2014/34 EU (ATEX 114) or the conditions of IECEx, this enclosure or cabinet must meet the requirements of at least IP54 (in compliance with EN 60529) according to EN 60079-7.

⚠ WARNING
Cable If the cable or conduit entry point exceeds 70 °C or the branching point of conductors exceeds 80 °C, special precautions must be taken. If the equipment is operated in an air ambient in excess of 50 °C, only use cables with admitted maximum operating temperature of at least 80 °C.

⚠ WARNING
Take measures to prevent transient voltage surges of more than 40% of the rated voltage. This is the case if you only operate devices with SELV (safety extra-low voltage).

3.1.3 Notices regarding use in hazardous areas according to UL HazLoc

This equipment is suitable for use in Class I, Division 2, Groups A, B, C and D or non-hazardous locations only.

This equipment is suitable for use in Class I, Zone 2, Group IIC or non-hazardous locations only.

WARNING

EXPLOSION HAZARD

You may only connect or disconnect cables carrying electricity when the power supply is switched off or when the device is in an area without inflammable gas concentrations.

3.1.4 Notices on use in hazardous areas according to FM

WARNING

EXPLOSION HAZARD

You may only connect or disconnect cables carrying electricity when the power supply is switched off or when the device is in an area without inflammable gas concentrations.

This equipment is suitable for use in Class I, Division 2, Groups A, B, C and D or non-hazardous locations only.

This equipment is suitable for use in Class I, Zone 2, Group IIC or non-hazardous locations only.

WARNING

EXPLOSION HAZARD

The equipment is intended to be installed within an ultimate enclosure. The inner service temperature of the enclosure corresponds to the ambient temperature of the module. Use installation wiring connections with admitted maximum operating temperature of at least 30 ºC higher than maximum ambient temperature.

3.2 Installing and commissioning the CM 1542-1

Installation and commissioning

WARNING

Read the system manual "S7-1500 Automation System"

Prior to installation, connecting up and commissioning, read the relevant sections in the system manual "S7-1500 Automation System" (see section Documentation references (Page 49)).

Make sure that the power supply is turned off when installing/uninstalling the devices.

NOTICE

No plugging and pulling during operation

The CM must not be pulled or plugged during operation.

Configuration

One requirement for the commissioning of the CM is the completeness of the STEP 7 project data.

Procedure for installation and commissioning

Step	Execution	Notes and explanations
1	When installing and connecting up, keep to the procedures described for installing I/O modules in the system manual "S7-1500 Automation System".	
2	Connect the CM to Industrial Ethernet via the RJ45 jack. Where necessary, connect another component to the remaining free RJ45 jack.	Underside of the CM
3	Turn on the power supply.	
4	Close the front covers of the module and keep them closed during operation.	
5	The remaining steps in commissioning involve downloading the STEP 7 project data.	The STEP 7 project data of the CM is transferred when you download to the station. To load the station, connect the engineering station on which the project data is located to the Ethernet interface of the CPU. You will find more detailed information on loading in the following sections of the STEP 7 online help: • "Compiling and loading project data" • “Using online and diagnostics functions"

3.3 Terminal assignment

PROFINET interface X1 with 2-port switch

The table below shows the pin assignment of the ports of the PROFINET interface (RJ-45 jack). The assignment corresponds to the Ethernet standard IEEE 802.3.

Table 3- 1 Pin assignment of the PROFINET interface with 2-port switch

View	No.	Terminal	Designation
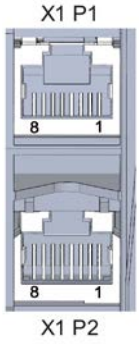	1	TD	Transmit Data +
	2	TD_N	Transmit Data -
	3	RD	Receive Data +
	4	GND	Ground
	5	GND	Ground
	6	RD_N	Receive Data -
	7	GND	Ground
	8	GND	Ground

3.4 Mode of the CPU - effect on the CM

You can change the mode of the CPU between RUN and STOP using the STEP 7 configuration software. Depending on the operating status of the CPU, the CM behaves as described below.

Changing the CPU from RUN to STOP

When the CPU is in STOP mode, the CM remains in RUN mode.

Configuration, programming 4

4.1 Security recommendations

Keep to the following security recommendations to prevent unauthorized access to the system.

General

- You should make regular checks to make sure that the device meets these recommendations and other internal security guidelines if applicable.
- Evaluate your plant as a whole in terms of security. Use a cell protection concept with suitable products.
- Do not connect the device directly to the Internet. Operate the device within a protected network area.
- Keep the firmware up to date. Check regularly for security updates of the firmware and use them.
- Check regularly for new features on the Siemens Internet pages.
  - Here you can find information on Industrial Security:
    Link: (http://www.siemens.com/industrialsecurity)
  - Here you can find information on security industrial communication:
    Link: (http://w3.siemens.com/mcms/industrial-communication/en/ie/industrial-ethernet-security/Seiten/industrial-security.aspx)
  - You can find a publication on the topic of network security (6ZB5530-1AP02-0BA5) here:
    Link:
    (http://w3app.siemens.com/mcms/infocenter/content/en/Pages/order_form.aspx?nodeKey=key_518693&infotype=brochures)
    Enter the following filter: 6ZB5530

Physical access

Restrict physical access to the device to qualified personnel.

Network attachment

Do not connect the CM directly to the Internet. If a connection from the CM to the Internet is required, arrange for suitable protection before the CM, for example a SCALANCE S with firewall.

Security functions of the product

Use the options for security settings in the configuration of the station. These includes among others:

- Protection levels

  Configure access to the CPU under "Protection and Security".

- Security function of the communication
  - Use the secure protocol variant HTTPS when accessing the Web server of the CPU
  - If you doe not require access to the Web server, leave access to the Web server of the CPU (CPU configuration) and to the Web server of the CP disabled.

- Protection of the passwords for access to program blocks

  Protect the passwords stored in data blocks for the program blocks from being viewed. You will find information on the procedure in the STEP 7 information system under the keyword "Know-how protection".

Passwords

- Define rules for the use of devices and assignment of passwords.
- Regularly update the passwords to increase security.
- Only use passwords with a high password strength. Avoid weak passwords for example "password1", "123456789" or similar.
- Make sure that all passwords are protected and inaccessible to unauthorized personnel.

  See also the preceding section for information on this.

- Do not use one password for different users and systems.

Protocols

Secure and non-secure protocols

- Only activate protocols that you require to use the system.
- Use secure protocols when access to the device is not prevented by physical protection measures.

Table: Meaning of the column titles and entries

The following table provides you with an overview of the open ports on this device.

- **Protocol / function**

  Protocols that the device supports.

- **Port number (protocol)**

  Port number assigned to the protocol.

- **Default of the port**
  - Open

    The port is open at the start of the configuration.
  - Closed

    The port is closed at the start of the configuration.
- **Port status**
  - Open

    The port is always open and cannot be closed.
  - Open after configuration

    The port is open if it has been configured.
  - Open (login, when configured)

    As default the port is open. After configuring the port, the communications partner needs to log in.
  - Open with block call

    The port is only opened when a suitable program block is called.
- **Authentication**

  Specifies whether or not the protocol authenticates the communications partner during access.

Protocol / function	Port number (protocol)	Default of the port	Port status	Authentication
DCP	93 (UDP)	Open	Open	No
S7 communication	102 (TCP)	Open	Open	No
HTTP	80 (TCP)	Closed	Open after configuration	No
SNMP	161 (UDP)	Open	Open	No
PROFINET	34964 (UDP)	Open	Open	No

Ports of communication partners and routers

Make sure that you enable the required client ports in the corresponding firewall on the communications partners and in intermediary routers.

These can be:

- DHCP / 67, 68 (UDP)
- DNS / 53 (UDP)
- NTP / 123 (UDP)
- SMTP / 25 (TCP) - Open in CP on block call (outgoing only)

4.2 Network settings

4.2.1 Fast Ethernet

Automatic setting

Only "Automatic" for automatic detection and "TP 100 Mbps full duplex" can be set for the transmission rate of the connection.

The Ethernet interface of the CM is set to autosensing as default.

Note

In normal situations, the basic setting ensures troublefree communication.

Autocrossing mechanism

With the integrated autocrossing mechanism, it is possible to use a standard cable to connect the PC/PG. A crossover cable is not necessary.

Note

Connecting a switch

To connect a switch, that does not support the autocrossing mechanism, use a crossover cable.

4.3 IP configuration

4.3.1 Points to note about IP configuration

Configured S7 and OUC connections cannot be operated if the IP address is assigned using DHCP

Note

If you obtain the IP address using DHCP, any S7 and OUC connections you may have configured will not work. Reason: The configured IP address is replaced by the address obtained via DHCP during operation.

4.3.2 Restart after detection of a duplicate IP address in the network

To save you timeconsuming troubleshooting in the network, during startup the CM detects double addressing in the network.

Behavior when the CM starts up

If double addressing is detected when the CM starts up, the CM changes to RUN and cannot be reached via the Ethernet interface. The ERROR LED flashes.

4.3.3 Remove retentive storage of the IP address if there are duplicate addresses

The IP address and the device name of the CM 1542-1 remain installed retentively:

If, for example during startup, the CM detects a duplicate address in another network, the CM is not connected to the network. The CM changes to RUN and cannot be reached via the Ethernet interface.

To be able to connect the CM to the network, you can remove the retentively stored IP address as follows:

1. Remove the memory card of the CPU.
2. Using DCP with the Primary Setup Tool (PST) and with the CPU in STOP, set the IP address of the CM to 0.0.0.0 without configuration.

   You have removed the retentively stored IP address of the CM. The CM can be connected into the network.
3. Insert the memory card in the CPU again.

4.3.4 IP routing

IP routing via the backplane bus

The CM supports static IP routing (IPv4) to other CM 1542-1 / CP 1543-1 as of firmware version V2.0.

You can use IP routing, for example, for Web server access by lower-level modules.

With IP routing, he data throughput is limited to 1Mbps. Remember this in terms of the number of modules involved and the expected data traffic via the backplane bus.

Configuration

IP routing must be activated in at least 2 modules of a station.

IP routing runs via the configured default router. If you use several CMs/CPs in a station, of the modules in the station only one may be configured as a router.

4.3.5 CM in multiple use IO systems (standard machines)

Multiple use IO system in standard machines

In PROFINET IO controller mode, the CM can be used in standard machines of the same type.

After configuration, the address parameters of the CM are adapted to the required settings. With suitable configuration of the CM, the lower-level IO devices adopt the address parameters from the CM.

Requirements in the configuration

In terms of configuration it is assumed that the standard machine is delivered with a configured PROFINET IO system and the CM is the IO controller to which several IO devices are assigned in the PROFINET IO system.

The following requirements must be met in the configuration:

- PROFINET IO system

  In the configuration of the PROFINET IO system, the option "Multiple use IO system" was activated in the "General" tab. This makes the IO system a standard machine project in the STEP 7 project.

- IO controller (CM) > PROFINET interface
  - In the Ethernet addresses of the CM, the following option is activated under "PROFINET": "PROFINET device name is set directly at the device"
  - In the advanced options the following option is activated in the interface options: "Permit overwriting of device names of all assigned IO devices"

- IO devices > PROFINET interface

  With the lower-level IO devices there are also some settings to be made that are described in the STEP 7 information system.

Help in the STEP 7 information system

You will find the required information in the STEP 7 information system with the following search term:

- Creating a standard machine project

Changing address parameters at runtime

After the standard machine has started up, you can adapt the preset address parameters using the following methods:

- Using the following STEP 7 commissioning tools:
  - Primary Setup Tool (PST)
  - PRONETA
- From the user program using the program block "IP_CONFIG"
- Using the program block "T_CONFIG"

4.4 Media redundancy

You can use the CM in a ring topology with media redundancy.

For more detailed information on configuration, refer to the STEP 7 online help of the "Media redundancy" parameter group.

4.5 Time-of-day synchronization

Note

Recommendation for setting the time

Synchronization with a external clock at intervals of approximately 10 seconds is recommended. This achieves as small a deviation as possible between the internal time and the absolute time.

Procedure

The CM supports the following mode for time-of-day synchronization:

- NTP (NTP: Network Time Protocol)

Configuration

For information on configuration, refer to the STEP 7 online help of the "Time-of-day synchronization" parameter group.

- **Accept time of day from non-synchronized NTP servers**

  The paramter has the following effect:

  – If the option is enabled, the CP also accepts the time-of-day from non-synchronized NTP servers with stratum 16.

  – If the option is disabled, the response is as follows: If the CP receives a time of day frame from an unsynchronized NTP server with stratum 16, the time of day is not set according to the frame. In this case, none of the NTP servers is displayed as "NTP master" in the diagnostics; but rather only as being "reachable".

4.6 Program blocks for OUC

Programming Open User Communication (OUC)

The instructions (program blocks) listed below are required for the following communication services via Ethernet:

- TCP
- ISO-on-TCP
- UDP (Multicast)
- E-mail

For this, create suitable program blocks. The program block can be found in STEP 7 in the "Instructions > Communication > Open user communication" window.

You will find details on the program blocks in the information system of STEP 7.

Note

Different program block versions

Note that in STEP 7 you cannot use different versions of a program block in a station.

Supported program blocks for OUC

The following instructions in the specified minimum version are available for programming Open User Communication:

- **TSEND_C V3.1 / TRCV_C V3.1**

  Compact blocks for connection establishment/termination and for sending and receiving data

  or

- **TCON V4.0 / TDISCON V2.1**

  Connection establishment / connection termination

- **TUSEND V4.0 / TURCV V4.0**

  Sending and receiving data via UDP

- **TSEND V4.0 / TRCV V4.0**

  Sending and receiving data via TCP or ISOonTCP

- **TMAIL_C V4.0**

  Sending e-mails

  Note the description of TMAIL_C as of version V4.0 in the STEP 7 information system.

Connection establishment and termination

Connections are established using the program block TCON. Note that a separate program block TCON must be called for each connection.

A separate connection must be established for each communications partner even if identical blocks of data are being sent.

After a successful transfer of the data, a connection can be terminated. A connection is also terminated by calling "TDISCON".

Note

Connection abort

If an existing connection is aborted by the communications partner or due to disturbances on the network, the connection must also be terminated by calling TDISCON. Make sure that you take this into account in your programming.

Connection descriptions in system data types (SDTs)

For the connection description, the blocks listed above use the parameter CONNECT (or MAIL_ADDR_PARAM with TMAIL_C). The connection description is stored in a data block whose structure is specified by the system data type (SDT).

Creating an SDT for the data blocks

You create the SDT required for every connection description as a data block. You generate the SDT type in STEP 7 by entering the name (e.g. "TCON_IP_V4") in the "Data type" box manually in the declaration table of block instead of selecting an entry from the "Data type" drop-down list. The corresponding SDT is then created with its parameters.

The following SDTs can be used.

- **Configured connections:**
  - **TCON_Configured**

    For transferring frames via TCP
- **Programmed connections:**
  - **TCON_IP_V4**

    For transferring frames via TCP or UDP
  - **TCON_QDN**

    For transferring frames via TCP or UDP
  - **TCON_IP_RFC**

    For transferring frames via ISO-on-TCP
  - **TMail_V4**

    For transferring e-mails addressing the e-mail server using an IPv4 address
  - **TMail_FQDN**

    For transferring e-mails addressing the e-mail server using the host name

You will find the description of the SDTs with their parameters in the STEP 7 information system under the relevant name of the SDT.

Diagnostics and upkeep 5

5.1 Diagnostics options

Diagnostics options

You have the following diagnostics options available for the module:

- The LEDs of the module

  For information on the LED displays, refer to the section LEDs (Page 19).
- STEP 7: The "Diagnostics" tab in the Inspector window

  Here, you can obtain the following information on the selected module:

  – Information on the online status of the module
- STEP 7: Diagnostics functions in the "Online > Online and diagnostics" menu

  Here, you can obtain static information on the selected module:

  – General information on the module

  – Diagnostics status

  – Information on the PROFINET interface

  You will find further information on the diagnostics functions of STEP 7 in the STEP 7 online help.
- Web diagnostics

  With the aid of Web diagnostics of the CPU, you read the diagnostics data from an S7 station via the Web browser on the PG/PC.
- Display of the CPU

  Using the CPU display, read out diagnostics data from an S7 station on the PG/PC. You can only use diagnostics via the CPU display if the S7 station is suitably configured.

5.2 SNMP

SNMP (Simple Network Management Protocol)

SNMP is a protocol for diagnostics and managing networks and nodes in the network. To transmit data, SNMP uses the connectionless UDP protocol.

The information on the properties of SNMP-compliant devices is entered in MIB files (MIB = Management Information Base).

You will find detailed information on SNMP and the Siemens Automation MIB in the manual "Diagnostics and Configuration with SNMP" that you will find on the Internet:
/3/ (Page 50)

Range of performance of the CM

The CM supports the following SNMP versions:

- **SNMPv1**

Traps are not supported by the CP.

The CM supports the following MIBs:

- **MIB II (acc. to RFC1213)**

  The CM supports the following groups of MIB objects:

  – System
  – Interfaces
  – IP
  – ICMP
  – TCP
  – UDP
  – SNMP

- **LLDP MIB**
- **MRP Monitoring**
- **Siemens Automation MIB**

Write permissions

Write access is permitted only for the following MIBs and MIB objects:

- Siemens Automation MIB, group "System"

  The group returns status information about the CM interfaces.

  Write access is permitted only for the following MIB objects:

  – sysContact
  – sysLocation
  – sysName

    A set sysName is sent as the host name using DHCP option 12 to the DHCP server to register with a DNS server.

- MRP Monitoring, object "mrpDomainResetRoundTripDelays"

  A write command "resetDelays(1)" to the object sets the values of "mrpDomainRoundTripDelayMax" and "mrpDomainRoundTripDelayMin" to zero.

For all other MIB groups and objects, only read access is possible for security reasons.

Access permissions using community names

The CM uses the following community strings to control the rights for authentication of the access to its SNMP agent via SNMPv1:

Table 5- 1 Access rights and authentication in the SNMP agent

Type of access	Community string for authentication *)
Read access	public
Read and write access	private

*) Note the use of lowercase letters!

Note

Security of the access

For security reasons, change the generally known strings "public" and "private".

5.3 Replacing a module without a programming device

General procedure

The configuration data of the CM is stored on the CPU. This makes it possible to replace this module with a module of the same type (identical article number) without a PG.

Technical specifications 6

Note the information in the System description of SIMATIC S7-1500 (Page 49).

In addition to the information in the system description, the following technical specifications apply to the module.

Table 6- 1 Technical specifications of the CM 1542-1

Technical specifications	
Article number	6GK7 542-1AX00-0XE0
Attachment to Industrial Ethernet	
Number	1
Design	PROFINET interface with 2port switch, 2 x RJ-45 jack
Properties	100BASE-TX, IEEE 802.3-2005, half duplex/full duplex, auto-crossover, autonegotiation, galvanically isolated
Transmission speed	10 / 100 Mbps
Aging time	5 minutes
Special features of the ports X1 P1 and X1 P2	Integration in ring topology / MRP possible
Electrical data	
Power supply	
via S7-1500 backplane bus	15 V
Current consumption	
From backplane bus	220 mA maximum
Effective power loss	3.3 W
Insulation tested with	707 VDC (type test)
Permitted ambient conditions	
Ambient temperature	
• During operation with the rack installed horizontally	• 0 °C to +60 °C
• During operation with the rack installed vertically	• 0 °C to +40 °C
• During storage	• -40 °C to +70 °C
• During transportation	• -40 °C to +70 °C
Relative humidity	
• During operation	• ≤ 95% at 25 °C, no condensation
Contaminant concentration	Acc. to ISA-S71.04 severity level G1, G2, G3
Design, dimensions and weight	
Module format	Compact module S7-1500, single width

Technical specifications	
Degree of protection	IP20
Weight	400 g
Dimensions (W x H x D)	35 x 142 x 129 mm
Installation options	Mounting in an S7-1500 rack
Permitted cable lengths	**(Alternative combinations per length range) ***
0 ... 55 m	• Max. 55 m IE TP Torsion Cable with IE FC RJ45 Plug 180 • Max. 45 m IE TP Torsion Cable with IE FC RJ45 + 10 m TP Cord via IE FC RJ45 Outlet
0 ... 85 m	• Max. 85 m IE FC TP Marine/Trailing/Flexible/FRNC/Festoon/Food Cable with IE FC RJ45 Plug 180 • Max. 75 m IE FC TP Marine/Trailing/Flexible/FRNC/Festoon/Food Cable + 10 m TP Cord via IE FC RJ45 Outlet
0 ... 100 m	• Max. 100 m IE FC TP Standard Cable with IE FC RJ45 Plug 180 • Max. 90 m IE FC TP Standard Cable + 10 m TP Cord via IE FC RJ45 Outlet
**Product functions ** **	

* For details, refer to the IK PI catalog, cabling technology

** You will find the product functions in the section Properties and functions (Page 11).

Approvals 7

Approvals issued

Note

Issued approvals on the type plate of the device

The specified approvals - with the exception of the certificates for shipbuilding - have only been obtained when there is a corresponding mark on the product. You can check which of the following approvals have been granted for your product by the markings on the type plate. The approvals for shipbuilding are an exception to this.

Certificates for shipbuilding and national approvals

The device certificates for shipbuilding and special national approvals can be found in Siemens Industry Online Support on the Internet:
Link: (https://support.industry.siemens.com/cs/ww/en/ps/15341/cert)

EC declaration of conformity

The product meets the requirements and safety objectives of the following EC directives and it complies with the harmonized European standards (EN) for programmable logic controllers which are published in the official documentation of the European Union.

- **2014/34/EU (ATEX explosion protection directive)**

  Directive of the European Parliament and the Council of 26 February 2014 on the approximation of the laws of the member states concerning equipment and protective systems intended for use in potentially explosive atmospheres, official journal of the EU L96, 29/03/2014, pages. 309-356

- **2014/30/EU (EMC)**

  EMC directive of the European Parliament and of the Council of February 26, 2014 on the approximation of the laws of the member states relating to electromagnetic compatibility; official journal of the EU L96, 29/03/2014, pages. 79-106

- **2011/65/EU (RoHS)**

  Directive of the European Parliament and of the Council of 8 June 2011 on the restriction of the use of certain hazardous substances in electrical and electronic equipment

The EC Declaration of Conformity is available for all responsible authorities at:

Siemens Aktiengesellschaft
Division Process Industries and Drives
Process Automation

76181 Karlsruhe
Germany

You will find the EC Declaration of Conformity on the Internet at the following address:
Link: (https://support.industry.siemens.com/cs/ww/en/ps/15341/cert)

The current versions of the standards can be seen in the EC Declaration of Conformity and in the certificates.

IECEx

The product meet the requirements of explosion protection according to IECEx.

IECEx classification:

- Ex nA IIC T4 Gc

  Certificate: IECEx DEK 14.0089X

  Applied standards:

  – EN 60079-0 - Explosive atmospheres - Part 0: Equipment - General requirements

  – EN 60079-15 - Explosive atmospheres - Part 15: Equipment protection by type of protection 'n'

- Ex ec IIC T4 Gc

  Certificate: IECEx DEK 18.0019X

  Applied standards:

  – EN 60079-0 - Explosive atmospheres - Part 0: Equipment - General requirements

  – EN 60079-7 - Explosive Atmospheres - Part 7: Equipment protection by increased safety 'e'

You can see the current versions of the standards in the IECEx certificate that you can find on the Internet at the following address:
Link: (https://support.industry.siemens.com/cs/ww/en/ps/15341/cert)

The conditions must be met for the safe deployment of the product according to the section Notices on use in hazardous areas according to ATEX / IECEx (Page 22).

You should also note the information in the document "Use of subassemblies/modules in a Zone 2 Hazardous Area" that you can find on the Internet at the following address:
Link: (https://support.industry.siemens.com/cs/ww/en/view/78381013)

ATEX

The product meets the requirements of the EC directive:2014/34/EC "Equipment and Protective Devices for Use in Potentially Explosive Atmospheres".

ATEX approval:

- II 3 G Ex nA IIC T4 Gc

  Type Examination Certificate: DEKRA 12 ATEX 0240X

  Applied standards:

  – EN 60079-0 - Explosive atmospheres - Part 0: Equipment - General requirements
  – EN 60079-15 -Explosive atmospheres - Part 15: Equipment protection by type of protection 'n'

- II 3 G Ex ec IIC T4 Gc

  Type Examination Certificate: DEKRA 18 ATEX 0027X

  Applied standards:

  – EN 60079-0 - Explosive atmospheres - Part 0: Equipment - General requirements
  – EN 60079-7 - Explosive Atmospheres - Part 7: Equipment protection by increased safety 'e'

The current versions of the standards can be seen in the EC Declaration of Conformity, see above.

The conditions must be met for the safe deployment of the product according to the section Notices on use in hazardous areas according to ATEX / IECEx (Page 22).

You should also note the information in the document "Use of subassemblies/modules in a Zone 2 Hazardous Area" that you will find here:

- In the SIMATIC NET Manual Collection under
  "All documents" >"Use of subassemblies/modules in a Zone 2 Hazardous Area"
- On the Internet at the following address:
  Link: (https://support.industry.siemens.com/cs/ww/en/view/78381013)

EMC

Until 19.04.2016 the product meets the requirements of the EC Directive 2014/30/EU "Electromagnetic Compatibility” (EMC directive).

Applied standards:

- EN 61000-6-4

  Electromagnetic compatibility (EMC) - Part 6-4: Generic standards - Emission standard for industrial environments

- EN 61000-6-2

  Electromagnetic compatibility (EMC) - Part 6-2: Generic standards - Immunity for industrial environments

RoHS

The product meets the requirements of the EC directive 2011/65/EU on the restriction of the use of certain hazardous substances in electrical and electronic equipment.

Applied standard:

- EN 50581

c(UL)us

Applied standards:

- Underwriters Laboratories, Inc.: UL 61010-1 (Safety Requirements for Electrical Equipment for Measurement, Control, and Laboratory Use - Part 1: General Requirements)
- IEC/UL 61010-2-201 (Safety requirements for electrical equipment for measurement, control and laboratory use. Particular requirements for control equipment)
- Canadian Standards Association: CSA C22.2 No. 142 (Process Control Equipment)

Report / UL file: E 85972 (NRAG, NRAG7)

cULus Hazardous (Classified) Locations

Underwriters Laboratories, Inc.: cULus IND. CONT. EQ. FOR HAZ. LOC.

Applied standards:

- ANSI ISA 12.12.01
- CSA C22.2 No. 213-M1987

APPROVED for Use in:

- Cl. 1, Div. 2, GP. A, B, C, D T3...T6
- Cl. 1, Zone 2, GP. IIC T3...T6

Ta: Refer to the temperature class on the type plate of the CP

Report / UL file: E223122 (NRAG, NRAG7)

Note the conditions for the safe deployment of the product according to the section Notices regarding use in hazardous areas according to UL HazLoc (Page 23).

Note

For devices with C-PLUG memory: The C-PLUG memory module may only be inserted or removed when the power is off.

CSA

CSA Certification Mark Canadian Standard Association (CSA) nach Standard C 22.2 No. 142:

- Certification Record 063533–C-000

FM

Factory Mutual Approval Standards:

- Class 3600
- Class 3611
- Class 3810
- ANSI/ISA 61010-1

Report Number 3049847

Class I, Division 2, Group A, B, C, D, T4

Class I, Zone 2, Group IIC, T4

You will find the temperature class on the type plate on the module.

Australia - RCM

The product meets the requirements of the AS/NZS 2064 standards (Class A).

Canada

This class A digital device meets the requirements of the Canadian standard ICES-003.

AVIS CANADIEN

Cet appareil numérique de la classe A est conforme à la norme NMB-003 du Canada.

MSIP 요구사항 - For Korea only

A급 기기(업무용 방송통신기자재)

이 기기는 업무용(A급) 전자파 적합기기로서 판매자 또는 사용자는 이 점을 주의하시기 바라며, 가정 외의 지역에서 사용하는것을 목적으로 합니다.

Note that in terms of the emission of interference, this device corresponds to limit class A. This device can be used in all areas except for residential environments.

Current approvals

SIMATIC NET products are regularly submitted to the relevant authorities and approval centers for approvals relating to specific markets and applications.

If you require a list of the current approvals for individual devices, consult your Siemens contact or check the Internet pages of Siemens Industry Online Support:

Link: (https://support.industry.siemens.com/cs/ww/en/ps/15341/cert)

Documentation references A

A.1 Introduction to the documentation

Where to find Siemens documentation

- Article numbers

  You will find the article numbers for the Siemens products of relevance here in the following catalogs:

  – SIMATIC NET - Industrial Communication / Industrial Identification, catalog IK PI

  – SIMATIC - Products for Totally Integrated Automation and Micro Automation, catalog ST 70

  You can request the catalogs and additional information from your Siemens representative. You will also find the product information in the Siemens Industry Mall at the following address:

  Link: (https://mall.industry.siemens.com)

- Manuals on the Internet

  You will find SIMATIC NET manuals on the Internet pages of Siemens Industry Online Support:

  Link: (https://support.industry.siemens.com/cs/ww/en/ps/15247/man)

  Go to the required product in the product tree and make the following settings:

  Entry type “Manuals”

- Manuals on the data medium

  You will find manuals of SIMATIC NET products on the data medium that ships with many of the SIMATIC NET products.

A.2 System manual S7-1500

/1/

SIMATIC
S7-1500 Automation System
System Manual
Siemens AG
Link: (https://support.industry.siemens.com/cs/ww/en/view/59191792)

A.3 Diagnostics

/2/

SIMATIC
SIMATIC S7-1500, ET 200MP, ET 200SP, ET 200AL, ET 200pro
Diagnostics
Function Manual Siemens AG
Link: (https://support.industry.siemens.com/cs/ww/en/view/59192926)

/3/

SIMATIC NET
Diagnostics and configuration with SNMP
Diagnostics manual
Siemens AG
Link: (https://support.industry.siemens.com/cs/ww/en/ps/15392/man)

A.4 Communication

/4/

SIMATIC
SIMATIC S7-1500, ET 200MP, ET 200SP, ET 200AL, ET 200pro
Communication
Function Manual
Siemens AG
Link: (https://support.industry.siemens.com/cs/ww/en/view/59192925)

/5/

SIMATIC
SIMATIC PROFINET with STEP 7 V14
Function Manual
Siemens AG
Link: (https://support.industry.siemens.com/cs/ww/en/view/49948856)

/6/

SIMATIC
SIMATIC S7-1500, ET 200SP, ET 200pro
Web Server
Function Manual
Siemens AG
Link: (https://support.industry.siemens.com/cs/ww/en/view/59193560)

A.5 Interference-free installation of control systems

/7/

SIMATIC
SIMATIC S7-1500, ET 200MP, ET 200SP, ET 200AL
Interference-free Installation of Control Systems
Function Manual
Siemens AG
Interference-free installation of control systems
(https://support.industry.siemens.com/cs/ww/en/view/59193566)

A.6 Memory concept

/8/

SIMATIC S7-1500, ET 200SP, ET 200pro
Structure and Use of the CPU Memory
Function Manual
Siemens AG
Link: (https://support.industry.siemens.com/cs/ww/en/view/59193101)

A.7 Cycle and response times

/9/

SIMATIC
SIMATIC S7-1500, ET 200SP, ET 200pro
Cycle and Response Times
Function Manual
Siemens AG
Link: (https://support.industry.siemens.com/cs/ww/en/view/59193558)

Index

A

Autocrossing mechanism, 30
Autosensing, 30

C

Changing mode (RUN / STOP), 25
CONF_DATA, 18
Configuration of the Ethernet interface, 18
Connecting a switch, 30
Connection resources, 14
Crossover cable, 30

D

Data storage of the configuration data of the CM, 39
Diagnostics options, 37
Disposal, 7
Documentation for CM 1542-1, 5
Double addressing in the network, 31
Downloading project data, 24
Downloads, 6

E

E-mail, 14
E-mail connections, 18
EMC - electromagnetic compatibility, 43
Ethernet interface
    Configuration, 18
Ethernet port, 3

G

Glossary, 7

H

HMI communication, 11

I

iDevice, 11
Installation and commissioning, 24
    Procedure, 24
Instructions, 18
IP address
    Via DHCP, 30
IP configuration IPv4, 12
IP routing, 31
IRT, 11
ISO-on-TCP (RFC 1006), 11
ISO-on-TCP connections, 14, 18

L

LEDs, 19

M

MAC address, 12
MAC Address, 3
Manual Collection, 6
Maximum data length for program blocks, 14
Media redundancy, 11, 12
MIB, 37
Multicast
    via UDP, 11

N

NTP, 33
NTP mode, 12
Number
    of operable CMs, 16
Number of connections, 14

O

Open User Communication, 11
OUC (Open User Communication), 34
Overall configuration limits, 16

P

PG communication, 11
Plugging in, 24
Power supply modules
    Additional, 16

PROFINET interface, 3
Program blocks, 18
Pulling, 24

R

Recycling, 7

S

S7 communication, 11
S7 connections
    Number of freely usable, 15
Safety notices, 21
Shared Device, 11
SIMATIC NET glossary, 7
SIMATIC NET Manual Collection, 6
SNMP, 37
SNMP agent, 12
Special notes
    Connecting a switch, 30
STEP 7, 4
STEP 7 (version), 17
System data types, 18
System data types (SDTs), 35

T

T_CONFIG, 18
TCON, 18
TCON_..., 18
TCP (RFC 793), 11
TCP connections, 14, 18
Time synchronization, 12
Time-of-day synchronization, 33
TMail_..., 18
TMAIL_C, 18
TSEND/TRCV, 18

U

UDP
    Restrictions, 15
UDP (RFC 768), 11
UDP connections, 14
UDP frame buffering, 15

V

Version history, 6

W

Web server, 13

SIEMENS

SIMATIC NET

S7-1500 - PROFIBUS CM 1542-5

Operating Instructions

Preface

Application and functions 1

Installation, connecting up, commissioning, operation 2

Configuration, programming 3

Diagnostics and upkeep 4

Technical specifications 5

Approvals 6

06/2021

C79000-G8976-C290-06

Legal information

Warning notice system

This manual contains notices you have to observe in order to ensure your personal safety, as well as to prevent damage to property. The notices referring to your personal safety are highlighted in the manual by a safety alert symbol, notices referring only to property damage have no safety alert symbol. These notices shown below are graded according to the degree of danger.

⚠ DANGER
indicates that death or severe personal injury **will** result if proper precautions are not taken.

⚠ WARNING
indicates that death or severe personal injury **may** result if proper precautions are not taken.

⚠ CAUTION
indicates that minor personal injury can result if proper precautions are not taken.

NOTICE
indicates that property damage can result if proper precautions are not taken.

If more than one degree of danger is present, the warning notice representing the highest degree of danger will be used. A notice warning of injury to persons with a safety alert symbol may also include a warning relating to property damage.

Qualified Personnel

The product/system described in this documentation may be operated only by **personnel qualified** for the specific task in accordance with the relevant documentation, in particular its warning notices and safety instructions. Qualified personnel are those who, based on their training and experience, are capable of identifying risks and avoiding potential hazards when working with these products/systems.

Proper use of Siemens products

Note the following:

⚠ WARNING
Siemens products may only be used for the applications described in the catalog and in the relevant technical documentation. If products and components from other manufacturers are used, these must be recommended or approved by Siemens. Proper transport, storage, installation, assembly, commissioning, operation and maintenance are required to ensure that the products operate safely and without any problems. The permissible ambient conditions must be complied with. The information in the relevant documentation must be observed.

Trademarks

All names identified by ® are registered trademarks of Siemens AG. The remaining trademarks in this publication may be trademarks whose use by third parties for their own purposes could violate the rights of the owner.

Disclaimer of Liability

We have reviewed the contents of this publication to ensure consistency with the hardware and software described. Since variance cannot be precluded entirely, we cannot guarantee full consistency. However, the information in this publication is reviewed regularly and any necessary corrections are included in subsequent editions.

Siemens AG
Digital Industries
Postfach 48 48
90026 NÜRNBERG
GERMANY

C79000-G8976-C290-06
Ⓟ 07/2021 Subject to change

Copyright © Siemens AG 2013 - 2021.
All rights reserved

Preface

Article number, validity and product names

This description contains information on the following product:

CM 1542-5
Article number 6GK7 542-5DX00-0XE0
Hardware product version 1
Firmware version V2.0.20
Communications module CM 1542-5 for connection of S7-1500 to PROFIBUS DP

View of the module

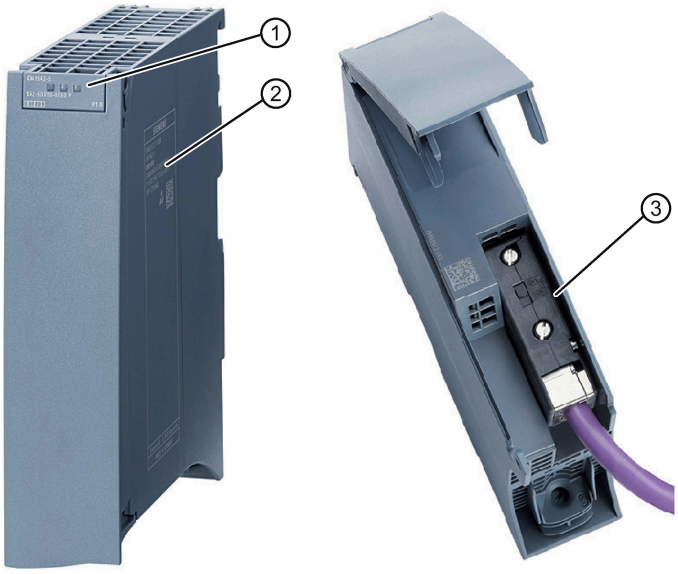

① LEDs
② Type plate
③ PROFIBUS interface: 1 x 9-pin D-sub female connector (RS-485)

Figure 1 CM 1542-5 with closed (left) and open (right) front cover

Purpose of the documentation

This device manual supplements the system manual of the automation system S7-1500 and the function manuals. All functions that go beyond the system are described in the system manual.

With the information in this manual and the system manual, you will be able to commission the CM 1542-5 communications module.

Abbreviations and names

- **CM**

  In this document, the term "CM" (communications module) is used instead of the full product name "CM 1542-5".

- **STEP 7**

  The name STEP 7 is used to mean the STEP 7 Professional configuration tool.

New in this edition

Additions for FDL communication in the extended LSAP range 1...56, see section Configuration of the extended LSAP area (Page 33).

Replaced edition

Edition 06/2019

Current manual edition on the Internet

You will also find the current version of this manual on the Internet pages of Siemens Industry Online Support:

Link: (https://support.industry.siemens.com/cs/ww/en/ps/15671/man)

License conditions

Note

Open source software

The product contains open source software. Read the license conditions for open source software carefully before using the product.

You will find license conditions in the following document on the supplied data medium:

- OSS_CM15425_86.pdf

Firmware

The firmware is signed and encrypted. This ensures that only firmware created by Siemens can be downloaded to the device.

Security information

Siemens provides products and solutions with industrial security functions that support the secure operation of plants, systems, machines and networks.

In order to protect plants, systems, machines and networks against cyber threats, it is necessary to implement – and continuously maintain – a holistic, state-of-the-art industrial security concept. Siemens' products and solutions constitute one element of such a concept.

Customers are responsible for preventing unauthorized access to their plants, systems, machines and networks. Such systems, machines and components should only be connected to an enterprise network or the internet if and to the extent such a connection is necessary and only when appropriate security measures (e.g. firewalls and/or network segmentation) are in place.

For additional information on industrial security measures that may be implemented, please visit
Link: (http://www.siemens.com/industrialsecurity)

Siemens' products and solutions undergo continuous development to make them more secure. Siemens strongly recommends that product updates are applied as soon as they are available and that the latest product versions are used. Use of product versions that are no longer supported, and failure to apply the latest updates may increase customers' exposure to cyber threats.

To stay informed about product updates, subscribe to the Siemens Industrial Security RSS Feed under
Link: (http://www.siemens.com/industrialsecurity)

Observe the following security recommendations to prevent unauthorized access to the system.

- Evaluate your plant as a whole in terms of security. Use a cell protection concept with suitable products.
- Keep the firmware up to date. Check regularly for security updates of the firmware and use them.
- Restrict physical access to the device to qualified personnel.
- Configure a protection level of the CPU.

Documentation guide

The documentation of the SIMATIC products has a modular structure and covers topics relating to your automation system.

The complete documentation for the S7-1500 system consists of a system manual, function manuals and device manuals.

The STEP 7 information system (online help) also supports you in configuring and programming your automation system.

Overview of the documentation on communication with S7-1500

The following table lists additional documents, which supplement this description of CM 1542-5 and are available in the Internet.

Table 1 Documentation for the CM 1542-5

Topic	Documentation	Most important contents
System description	System manual: S7-1500 Automation System (https://support.industry.siemens.com/cs/ww/en/view/59191792)	• Application planning • Installation • Connecting • Commissioning
Module properties	Device manual: Power supplies (https://support.industry.siemens.com/cs/ww/en/ps/13743/man)	• Connecting • Parameter assignment/ addressing • Interrupts, error messages, diagnostics and system alarms • Technical specifications • Dimensional drawing
	Device manual: Signal modules (https://support.industry.siemens.com/cs/ww/en/ps/13721/man)	
System diagnostics	Function manual: System diagnostics (https://support.industry.siemens.com/cs/ww/en/view/59192926)	• Overview • Diagnostics evaluation for hardware/software
Communication	Function manual: Communication (https://support.industry.siemens.com/cs/ww/en/view/59192925)	• Overview
	Function manual PROFINET with STEP 7 (https://support.industry.siemens.com/cs/ww/en/view/49948856)	• PROFINET basics • PROFINET functions • PROFINET diagnostics
	Function manual PROFIBUS with STEP 7 (https://support.industry.siemens.com/cs/ww/en/view/59193579)	• PROFIBUS basics • PROFIBUS functions • PROFIBUS diagnostics
	Function manual: Web Server (https://support.industry.siemens.com/cs/ww/en/view/59193560)	• Function • Operation
Interference-free installation of control systems	Function Manual: Interference-free installation of control systems (https://support.industry.siemens.com/cs/ww/en/view/59193566)	• Basics • Electromagnetic compatibility • Lightning protection • Housing selection
Memory concept	Function manual: Structure and Use of the CPU Memory (https://support.industry.siemens.com/cs/ww/en/view/59193101)	• Design • Principle of operation • Use
Cycle and response times	Function manual: Cycle and Response Times (https://support.industry.siemens.com/cs/ww/en/view/59193558)	• Basics • Calculations
Analog value processing	Function manual: Analog value processing (https://support.industry.siemens.com/cs/ww/en/view/67989094)	• Wiring options • Tables of measured values

SIMATIC manuals

All current manuals for SIMATIC products are available for download free of charge from the Internet:
Link: (http://www.siemens.com/automation/service&support)

CP/CM documentation on DVD

You can find the documentation on the product and the configuration on the "SIMATIC NET Manual Collection" or "SIMATIC Communication Products" DVD. This DVD contains the product manuals valid at the time it is created.

Recycling and disposal

The product is low in pollutants, can be recycled and meets the requirements of the WEEE directive 2012/19/EU "Waste Electrical and Electronic Equipment".

Do not dispose of the product at public disposal sites. For environmentally friendly recycling and the disposal of your old device contact a certified disposal company for electronic scrap or your Siemens contact.

Keep to the local regulations.

You will find information on returning the product on the Internet pages of Siemens Industry Online Support:
Link: (https://support.industry.siemens.com/cs/ww/en/view/109479891)

SIMATIC NET glossary

Explanations of many of the specialist terms used in this documentation can be found in the SIMATIC NET glossary.

You will find the SIMATIC NET glossary on the Internet at the following address:

Link: (https://support.industry.siemens.com/cs/ww/en/view/50305045)

Table of contents

Preface **3**

1 Application and functions **11**

1.1 Application 11

1.2 Further functions 12

1.3 Configuration limits and performance data 13
1.3.1 Configuration limits - number of CMs 13
1.3.2 Transmission speeds supported 14
1.3.3 Characteristic data of the DP interface 14
1.3.4 Characteristic data of FDL communication 15
1.3.5 Characteristics of S7 communication 15
1.3.6 Performance data / operation 16

1.4 Requirements for use 16
1.4.1 Usable CPUs 16
1.4.2 Project engineering 17
1.4.3 Programming 17

1.5 LEDs 18

1.6 PROFIBUS interface 19

2 Installation, connecting up, commissioning, operation **21**

2.1 Important notes on using the device 21
2.1.1 Notes on use in hazardous areas 21
2.1.2 Notes on use in hazardous areas according to ATEX / IECEx 22
2.1.3 Notes on use in hazardous areas according to UL HazLoc 23
2.1.4 Notes on use in hazardous areas according to FM 23

2.2 Installing and commissioning the CM 1542-5 24

2.3 Pin assignment PROFIBUS 25

2.4 Mode of the CPU - effect on the CM 25

3 Configuration, programming **27**

3.1 Configuration in STEP 7 27

3.2 Program blocks for communication and distributed I/O 27

3.3 Program blocks for FDL 28

3.4 Configuration of the extended LSAP area 33

4 Diagnostics and upkeep **39**

4.1 Diagnostics options 39

4.2 DP slave diagnostics 40

4.3 Standard diagnostics 41

4.4 Device-specific diagnostics in DP-V1 43
4.5 DP diagnostics frames when the CPU is in STOP 45
4.6 Update firmware 46
4.7 Replacing a module without a programming device 48
5 Technical specifications 49
6 Approvals 51
Index 57

Application and functions 1

1.1 Application

Application

The communications module CM 1542-5 is intended for operation in an S7-1500 automation system. The CM 1542-5 allows the connection of an S7-1500 station to a PROFIBUS fieldbus system.

As an alternative, the CM can be operated in the following modes:

- Class 1 DP master
- DP slave

Supported communications services

In its current configuration, the CM 1542-5 communications module supports the following communications services:

- **PROFIBUS DP master (class 1)**
  - DP master according to EN 50170, DP-V1
  - DP master mode for DP slaves according to PROFIBUS DP-V0 and DP-V1
  - DP master mode for Siemens DP slaves
  - Direct data exchange (DP slave to DP slave)

    As a DP master, the CM 1542-5 is capable of enabling direct data exchange for its assigned DP slaves.
  - SYNC/FREEZE

    The outputs or inputs can be synchronized by the user program using system function DPSYNC_FR.
- **PROFIBUS DP slave**

  DP slave according to EN 50170, DP-V0 / DP-V1

  Note

  DP master or DP slave

  The CM only supports operation either as DP master or DP slave.

- **FDL**

  The CM handles the FDL communication using program blocks of Open User Communication (OUC) see section Configuration, programming (Page 27).

- **S7 communication**
  - PG communication for uploading / downloading of S7 configuration, diagnostics and routing
  - Operator control and monitoring functions (HMI communication)
  - Data exchange over S7 connections
- **Data record routing / field device parameter assignment**

  You can use the CM as a router for data records intended for field devices (DP slaves). Data records from devices that are not connected directly to PROFIBUS and therefore have no direct access to the DP slaves are forwarded to the DP slaves by the CM.

The services of the CM 1542-5 listed above can be used independently at the same time.

Note

Requirement for FDL, data record routing, loading of configuration/diagnostics data

For the functions FDL, data record routing and loading configuration and diagnostics data the CM must either be operated in the mode DP master mode or as a DP slave with the option "Test, Commissioning and Routing" enabled.

1.2 Further functions

Enabling /disabling DP slave - in the standard system

DP slaves can be activated and deactivated by the user program using system function D_ACT_DP.

Diagnostics requests

As a DP master (class 1), the CM 1542-5 supports diagnostics requests of a DP master (class 2).

Getting the bus topology in a DP master system

The CM 1542-5 operating as DP master supports the measurement of the PROFIBUS bus topology in a DP master system using a diagnostics repeater (DP slave).

System function DP_TOPOL in the user program can instruct diagnostics repeaters to measure the PROFIBUS BUS topology in a DP master system.

Time-of-day synchronization - time master or time slave

The CM 1542-5 can be enabled for time-of-day synchronization. As an alternative, the CM can be configured as time master or time slave on PROFIBUS.

- Time master: The CM is synchronized using the time of day in the S7-1500 station and outputs the time of day on PROFIBUS. The output interval can be set.
- Time slave: The CM receives time-of-day frames on PROFIBUS and outputs the time within the S7-1500 station. The output interval within the S7-1500 station is set permanently to 10 seconds.

Note

Recommendation for setting the time

It is advisable to set the time-of-day master so that time-of-day frames are sent at intervals of approximately 10 seconds. This achieves as small a deviation as possible between the internal time and the absolute time.

Web diagnostics

With the aid of Web diagnostics of the CPU, you read the diagnostics data from an S7 station via the Web browser on the PG/PC.

In terms of the CM, the Web pages provide the following information:

- Module and status information
- Special information on the DP master system (status of the DP slaves)

1.3 Configuration limits and performance data

1.3.1 Configuration limits - number of CMs

When using the CM type described here, the following limits apply:

- The number of CMs that can be operated in a rack depends on the CPU type being used.

  Refer to the information in the system manual (hardware configuration) Preface (Page 3) > Documentation guide.

1.3.2 Transmission speeds supported

The transmission speed is set in STEP 7.

Note

Remember the cable length

For the selected transmission speed, the permitted cable length must be kept to.

For this refer to the information in the PROFIBUS function manual:
Link: (https://support.industry.siemens.com/cs/ww/en/view/59193579)

1.3.3 Characteristic data of the DP interface

Characteristic data of DP mode

No special program blocks are required for DP mode. The interfacing to the distributed I/O is by direct I/O access or using program blocks (SFCs/SFBs) of the CPU.

Table 1- 1 Characteristic data of DP mode

Characteristic	Explanation / values
Max. number of operable DP slaves	125 *
Max. size of the input area of all DP slaves	8 KByte
Max. size of the output area of all DP slaves	8 KByte
Maximum number of inputs per DP slave	244 Byte
Maximum number of outputs per DP slave	244 Byte
Max. size of the consistent area for a module	128 Byte

* When using DP slaves with extensive configuration data e.g. SINAMICS devices, the number of DP slaves that can be operated on the CM sinks.

Diagnostics requests

As a DP master (class 1), the CM 1542-5 supports diagnostics requests of a DP master (class 2).

DP startup behavior

Note

Increasing the default value for startup parameters - configuration of the CPU

In some situations, it is necessary to increase the default value for the startup parameter "Parameter assignment time for the distributed I/O" in the configuration of the CPU:

- A large number of modules (DP slaves) is configured.
- When a high value is configured for the constant bus cycle time in the network properties of the PROFIBUS DP line.

1.3.4 Characteristic data of FDL communication

Characteristic data FDL

The characteristic data is important when operating FDL connections (specified, free layer 2 (SDA and SDN), broadcast, multicast):

Table 1- 2 Characteristic data FDL

Characteristic	Explanation / values
Total number of FDL connections that can be operated	30 max.
Size of the transferable data area for FDL connections	• 1...240 bytes max. per specified FDL connection (for sending and receiving) • Free layer 2, broadcast and multicast: Up to 236 bytes of payload can be transferred per job. The job header occupies an additional 4 bytes.

Note

Connection resources of the CPU

Depending on the CPU type, different numbers of connection resources are available. The number of connection resources is the decisive factor for the number of configurable connections. For this reason, lower values than specified here can result.

You will find detailed information on the topic of connection resources in the "Communication" function manual:
Link: (http://support.automation.siemens.com/WW/view/en/59192925)

1.3.5 Characteristics of S7 communication

Characteristics of S7 communication

The following information is important when operating S7 connections:

Table 1- 3 Characteristics of S7 connections

Characteristic	Explanation / values
Number of S7 connections via PROFIBUS	Operable in total: Max. 48 The value depends on the S7-1500 CPU being used.

Note

PG or HMI functions or data record routing

If PG or HMI functions or data record routing are used, a suitable number of S7 connections must be reserved during configuration!

Help provided by STEP 7

The number of connections on PROFIBUS shown in the table above can vary due to other influencing factors. The STEP 7 configuration tool displays warnings and help messages as soon as limit values are exceeded.

1.3.6 Performance data / operation

Measured values of transfer or reaction times

Measured values of transfer and reaction times in Ethernet, PROFIBUS and PROFINET networks for a series of configurations can be found on the Internet:
Link: (https://support.industry.siemens.com/cs/ww/en/view/25209605)

1.4 Requirements for use

1.4.1 Usable CPUs

The following CPUs can be used as local CPU of the communications module:

- Compatible CPUs

  All CPUs that can be configured in STEP 7 as of firmware version V2.1 from the following series:

  – Standard CPUs (CPU 15xx)

  – Compact CPUs (CPU 15xxC)

Exceptions

- The following CPUs are not compatible:

  – H-CPU (CPU 1517H-x PN)

  – R-CPUs (CPU 151xR-x PN)

Note

Keep the firmware version of the communications modules up to date

To avoid possible problems when using newer CPUs together with older communications modules, you should keep the firmware of your communications modules up to date.

Check regularly for security updates for the firmware and use them.

Information regarding product news and new firmware versions is available at the following address:
Link: (https://support.industry.siemens.com/cs/ww/en/ps/15671/dl)

1.4.2 Project engineering

Configuration

The following version of STEP 7 is required for configuring the CM (6GK7 542-5DX00-0XE0):

STEP 7 version	Functions of the CM
STEP 7 Professional V15.1 + Update 2	Configuration of the CM with full functionality of firmware version V2.0.20 or higher

Downloading configuration data

When the configuration data is loaded on the CPU, the CM is supplied with the relevant configuration data. The configuration data can be downloaded to the CPU via PROFIBUS or any PROFINET interface of the S7-1500 station.

1.4.3 Programming

Programming

The following version of STEP 7 is required for programming the CM (6GK7 542-5DX00-0XE0):

STEP 7 version	Functions of the CM
STEP 7 Professional V15.1 + Update 2	Programming of the CM with full functionality of firmware version V2.0.20 or higher

Use of FDL

The following minimum firmware versions are required for programming and using the full FDL functionality:

- CM: V2.0.20
- CPU: V2.0

1.5 LEDs

The status and error displays of the CM 1542-5 are described below.

You can find additional information on "Interrupts" in the STEP 7 online help.

You can find additional information on "Diagnostics" and "System alarms" in the function manual on the Internet:
Link: (https://support.industry.siemens.com/cs/ww/en/view/59192926)

LED display

The following figure shows the LEDs of the CM 1542-5.

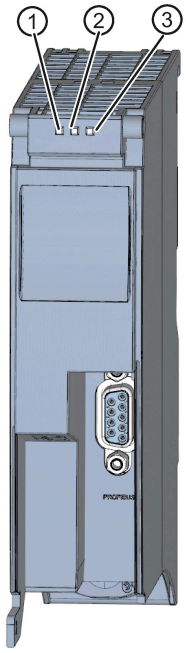

① RUN/STOP LED
② ERROR LED
③ MAINT LED

Figure 1-1 LED display of the CM 1542-5 (without front cover)

Meaning of the LED displays

The CM 1542-5 has 3 LEDs to display the current operating status and the diagnostics status and these have the following meanings:

- RUN/STOP LED (one-color LED: green)
- ERROR LED (one-color LED: red)
- MAINT LED (one-color LED: yellow)

The following table shows the meaning of the various combinations of colors of the RUN/STOP, ERROR and MAINT LEDs.

Table 1- 4 Meaning of the LEDs

RUN/STOP LED	ERROR LED	MAINT LED	Meaning
LED off	LED off	LED off	No supply voltage on the CM or supply voltage too low.
LED lit green	LED lit red	LED lit yellow	LED test during startup
LED lit green	LED lit red	LED off	Startup (booting the CM)
LED lit green	LED off	LED off	CM is in RUN mode. No disruptions
LED flashing green	LED off	LED off	No CM configuration exists Loading firmware
LED lit green	LED flashing red	LED off	A diagnostics event has occurred.
LED lit green	LED off	LED lit yellow	Maintenance is demanded.
LED lit green	LED off	LED flashing yel-low	Maintenance is required.
LED flashing green	LED flashing red	LED flashing yel-low	Module fault

1.6 PROFIBUS interface

9-pin D-sub female connector (PROFIBUS)

The PROFIBUS connector is located behind the cover of the housing. The interface is a 9-pin D-sub female connector operating according to the RS-485 standard.

You also have the option of connecting to optical PROFIBUS networks via an Optical Bus Terminal OBT or an Optical Link Module OLM.

You will find the pin assignment of the D-sub socket in section Pin assignment PROFIBUS (Page 25).

Installation, connecting up, commissioning, operation

2

2.1 Important notes on using the device

Safety notices on the use of the device

Note the following safety notices when setting up and operating the device and during all associated work such as installation, connecting up or replacing the device.

2.1.1 Notes on use in hazardous areas

WARNING

Cleaning the housing

- **In hazardous areas**
  Only clean the outer parts of the housing with a damp, but not wet, cloth.
- **In non-hazardous areas**
  Only clean the outer parts of the housing with a dry cloth.

Do not use any liquids or solvents.

WARNING

The device may only be operated in an environment with pollution degree 1 or 2 (see IEC 60664-1).

WARNING

DIN rail

In the ATEX and IECEx area of application only the Siemens DIN rail 6ES5 710-8MA11 may be used to mount the modules.

WARNING

EXPLOSION HAZARD

Replacing components may impair suitability for Class 1, Division 2 or Zone 2.

WARNING

Power supply

The device is designed for operation with a directly connectable safety extra low voltage (SELV) from a limited power source (LPS).

The power supply therefore needs to meet at least one of the following conditions:

- Only safety extra low voltage (SELV) with limited power source (LPS) complying with IEC 60950-1 / EN 60950-1 / VDE 0805-1 or IEC 62368-1 / EN 62368-1 / VDE 62368-1 may be connected to the power supply terminals.
- The power supply unit for the device must meet NEC Class 2 according to the National Electrical Code (r) (ANSI / NFPA 70).

If the equipment is connected to a redundant power supply (two separate power supplies), both must meet these requirements.

WARNING

EXPLOSION HAZARD

Do not connect or disconnect cables to or from the device when a flammable or combustible atmosphere is present.

WARNING

When used in hazardous environments corresponding to Class I, Division 2 or Class I, Zone 2, the device must be installed in a cabinet or a suitable enclosure.

2.1.2 Notes on use in hazardous areas according to ATEX / IECEx

WARNING

Requirements for the cabinet/enclosure

To comply with EC Directive 2014/34 EU (ATEX 114) or the conditions of IECEx, this enclosure or cabinet must meet the requirements of at least IP54 (in compliance with EN 60529) according to EN 60079-7.

WARNING

Cable

If the cable or conduit entry point exceeds 70 °C or the branching point of conductors exceeds 80 °C, special precautions must be taken. If the equipment is operated in an air ambient in excess of 50 °C, only use cables with admitted maximum operating temperature of at least 80 °C.

WARNING

Transient overvoltages

Take measures to prevent transient overvoltages of more than 40% of the rated voltage (or more than 119 V). This is the case if you only operate devices with SELV (safety extra-low voltage).

2.1.3 Notes on use in hazardous areas according to UL HazLoc

WARNING

EXPLOSION HAZARD

You may only connect or disconnect cables carrying electricity when the power supply is switched off or when the device is in an area without inflammable gas concentrations.

This equipment is suitable for use in Class I, Division 2, Groups A, B, C and D or non-hazardous locations only.

This equipment is suitable for use in Class I, Zone 2, Group IIC or non-hazardous locations only.

2.1.4 Notes on use in hazardous areas according to FM

WARNING

EXPLOSION HAZARD

You may only connect or disconnect cables carrying electricity when the power supply is switched off or when the device is in an area without inflammable gas concentrations.

This equipment is suitable for use in Class I, Division 2, Groups A, B, C and D or non-hazardous locations only.

This equipment is suitable for use in Class I, Zone 2, Group IIC or non-hazardous locations only.

WARNING

EXPLOSION HAZARD

The equipment is intended to be installed within an ultimate enclosure. The inner service temperature of the enclosure corresponds to the ambient temperature of the module. Use installation wiring connections with admitted maximum operating temperature of at least 30 °C higher than maximum ambient temperature.

2.2 Installing and commissioning the CM 1542-5

WARNING

Read the system manual "S7-1500 Automation System"

Prior to installation, connecting up and commissioning, read the relevant sections in the system manual "S7-1500 Automation System", see Preface (Page 3) > Documentation guide.

Make sure that the power supply is turned off when installing/uninstalling the devices.

Configuration

One requirement for the commissioning of the CP is the completeness of the STEP 7 project data.

Procedure for installation and commissioning

Step	Execution	Notes and explanations
1	When installing and connecting up, keep to the procedures described for installing I/O modules in the system manual "S7-1500 Automation System".	
2	Connect the CM to PROFIBUS via the RS-485 socket.	Lower surface of the CM
3	Turn on the power supply.	
4	Close the front covers of the module and keep them closed during operation.	
5	The remaining steps in commissioning involve downloading the STEP 7 project data.	The STEP 7 project data of the CM is transferred when you download to the station. To load the station, connect the engineering station on which the project data is located to the Ethernet/MPI interface of the CPU. You will find more detailed information on loading in the following sections of the STEP 7 online help: • Downloading project data • Using online and diagnostics functions

2.3 Pin assignment PROFIBUS

PROFIBUS interface

The table below shows the terminal assignment of the PROFIBUS interface. The assignment corresponds to the standard assignment of RS485 interface.

Table 2- 1 Terminal assignment PROFIBUS interface

View	Signal name		Designation
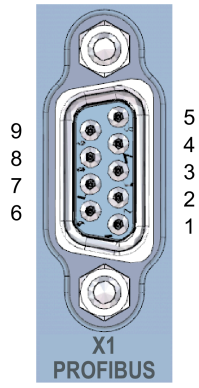	1	-	-
	2	-	-
	3	RxD/TxD-P	Data line A
	4	RTS	Request To Send
	5	M5V2	Data reference potential (from station)
	6	P5V2	Supply plus (from station)
	7	-	-
	8	RxD/TxD-N	Data line B
	9	-	-

Note

PROFIBUS interface

The CM provides no 24 VDC power supply on the PROFIBUS interface. I/O devices (for example, PC adapter 6ES7972-0CB20-0XA0) are therefore not operational on the interface).

2.4 Mode of the CPU - effect on the CM

You can change the mode of the CPU between RUN and STOP using STEP 7 or the switch.

Depending on the operating status of the CPU, the CM behaves as described below.

Changing the CPU from STOP to RUN

- Programmed connections are established.
- In DP master mode:
  - Change from CLEAR to the OPERATE mode
- In DP slave mode:
  - Going diagnostics interrupt to the master
  - Current input data is transferred.

Changing the CPU from RUN to STOP

The reaction is as follows in STOP:

- Programmed connections are terminated.
- In DP master mode:

  Change to the CLEAR mode
- In DP slave mode:
  - Input data is sent to the DP master with the value "0" and a DP diagnostics alarm is sent.
- Regardless of the mode, the following functions remain enabled:
  - The configuration and diagnostics of the CM

    Relevant system connections for configuration, diagnostics and PG channel routing still exist.
  - Data record routing
  - S7 routing function
  - Time-of-day synchronization
  - Configured connections remain established.

Configuration, programming 3

3.1 Configuration in STEP 7

Configuration in STEP 7

You configure the CM in SIMATIC STEP 7. You will find the required version in the section Project engineering (Page 17).

You will find complete information on configuration in the STEP 7 information system.

Loading and saving the configuration data

When you load the station, the project data of the station including the configuration data of the CP is stored on the CPU. You will find information on loading the station in the STEP 7 information system.

3.2 Program blocks for communication and distributed I/O

Program blocks (instructions) for communications services

For communications services, there are preprogrammed program blocks (instructions) available as the interface in your STEP 7 user program.

Table 3- 1 Instructions for PROFIBUS DP

System blocks and system functions	Meaning when used with CM
DPSYC_FR	DP slaves synchronize / freeze inputs (SYNC/FREEZE instruction)
DPNRM_DG	Reading the diagnostics data of a DP slave
DP_TOPOL	Detecting the topology for the DP master system
WRREC	Writing the data record of a DP slave
RDREC	Reading the data record of a DP slave
GETIO	Reading the process image of a DP standard slave
SETIO	Transferring the process image of a DP standard slave
GETIO_PART	Reading the process image partition of a DP standard slave
SETIO_PART	Transferring the process image partition of a DP standard slave
D_ACT_DP	Disable / enable DP slaves
DPRD_DAT	Reading consistent data of a DP standard slave (user data)
DPWR_DAT	Writing consistent data of a DP standard slave
RALRM	Event-driven reading of interrupt information (diagnostics, pull/plug, hardware interrupt) and DPV1-specific interrupts (update, status, vendor-specific interrupt)

Refer to the documentation of the program blocks in the information system of STEP 7.

Calling program blocks (instructions) for distributed I/O

Several calls are necessary for the instructions of the distributed I/O.

The time required to process the job depends on load, round-trip time and transmission speed. If these instructions are called in a loop within one cycle, the cycle time could be exceeded.

Exception: Only one call is required for RALRM "receive alarm".

Program blocks for DPV1 according to the PNO standard (PROFIBUS user organization):

- RDREC

  "Read data record from a DP slave" corresponds to SFC59 in terms of function
- WRREC

  "Write data record to a DP slave" corresponds to SFC58 in terms of function
- RALRM

  "Read interrupt information from a DP slave" - call in an interrupt OB

3.3 Program blocks for FDL

Program blocks of Open User Communication (OUC) for FDL

To use the bus access protocol FDL (Fieldbus Data Link) use the program blocks of Open User Communication (OUC). For this, create a suitable program blocks. You will find details on the program blocks in the information system of STEP 7.

The end point of an FDL connection is an S7-1500 CPU with communications module CM 1542-5. For the required firmware versions of the modules, see section Programming (Page 17).

Supported program blocks for OUC

The following instructions in the specified minimum version are available for programming Open User Communication to use FDL:

- **TSEND_C V3.1 / TRCV_C V3.1**

  Compact blocks for connection establishment and for sending and receiving data via a configured or programmed connection

  or
- **TCON V4.0 / TDISCON V2.1**

  Connection establishment / connection termination

- **TSEND V4.0 / TRCV V4.0**

  Sending or receiving data over a configured connection

- **TUSEND V4.0 / TURCV V4.0**

  Sending or receiving data over a configured connection

  With these blocks the connection parameters can be changed at runtime.

The program block can be found in STEP 7 in the "Instructions > Communication > Open User Communication" window.

Connection description of the type "TCON_FDL"

To reference the connection description, the blocks "TCON" and "TSEND_C / TRCV_C" use the CONNECT patrameter. The connection description is stored in a data block whose structure is specified by the system data type (SDT) "TCON_FDL".

Creating an SDT for the data block

You create the SDT required for every connection description as a data block. You generate the SDT type in STEP 7 by entering the name ("TCON_FDL") in the "Data type" box manually in the declaration table of block instead of selecting an entry from the "Data type" drop-down list. The SDT is then created with its preset parameters.

For FDL the following SDTs are used:

- **TCON_FDL**

  For transferring data via FDL

You will find the description of TCON_FDL in the STEP 7 information system (keyword "TCON_FDL").

Programmed connection establishment or termination with TCON / TDISCON

Connections are established using the program block TCON. Note that a separate program block TCON must be called for each connection.

A separate connection must be established for each communications partner even if identical blocks of data are being sent.

After a successful transfer of the data, a connection can be terminated. A connection is also terminated by calling "TDISCON".

Note

Connection abort

If an existing connection is aborted by the communications partner or due to disturbances on the network, the connection must also be terminated by calling TDISCON. Make sure that you take this into account in your programming.

Configured and programmed FDL connections

The following types of FDL connections can be established:

- **Configured FDL connections**

  These connection types are configured in the STEP 7 program editor, see below. TSEND / TRCV or TUSEND / TURCV are used as the blocks.

  – Specified connection

    Fully configured connection between two partners

  – Unspecified connection

    Configured connection with an unspecified partner

  – Broadcast connection

    Connection with all connected partners

  – Multicast connection

    Connection with several defined partners

- **Programmed FDL connections**

  These connection types cannot be configured in the STEP 7 program editor. Instead for these connection types either calling TCON along with TSEND/TRCV or TUSEND/TURCV is required or TSEND_C / TRCV_C.

  – Specified connection

    Fully configured connection between two partners

  – Unspecified connection

    Configured connection with an unspecified partner

  – Unspecified Layer 2 connection

    Programmed FDL-Verbindung with an unspecified partner with free layer 2 access

  – Broadcast connection

    Connection to all connected partners

  – Multicast connection

    Connection to several defined partners

The specific settings for the individual connection types are explained in the STEP 7 information system in TCON_FDL.

Setting up a configured FDL connection using TSEND_C

Proceed as follows to set up a configured FDL connection in STEP 7:

1. Create a TSEND_C instruction in the program editor.

   You will be prompted to create the relevant data block.

2. Select the TSEND_C instruction and navigate in the Inspector window to "Properties" > "Configuration" > parameter group "Connection parameters".

3. In type of configuration, select "Use configured connection"

4. In connection type, select "FDL".
5. Under End point, select the partner end point. Use one of the two following partner end points.
   - CPU S7-1500 with CM 1542-5
   - Unspecified
6. Select the following interfaces under Interfaces:
   - Local: PROFIBUS interface of CM 1542-5
   - Specified partner: PROFIBUS interface of CM 1542-5
7. Select the setting <new> under Connection data.

   This creates a new connection between the two partners.

   The figure below shows a fully configured FDL connection in STEP 7.

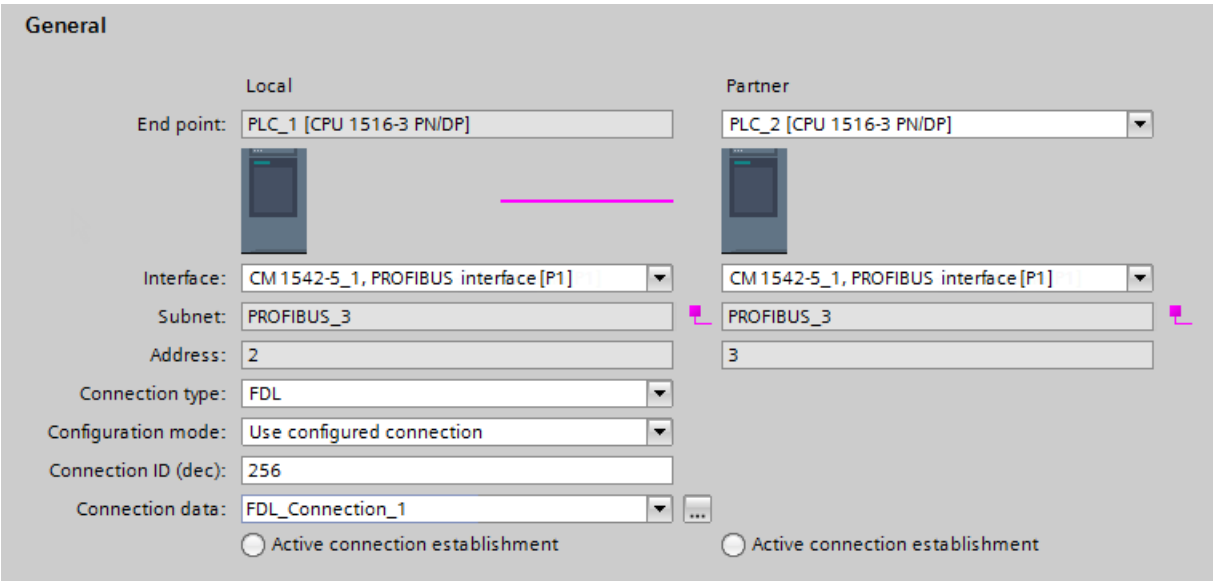

Figure 3-1 Configuring the FDL connection

8. Configure the further block parameters.

Setting up a programmed FDL connection using TSEND_C

To set up a programmed FDL connection in STEP 7, follow the steps below:

1. Create a TSEND_C instruction in the program editor.

   You will be prompted to create the relevant data block.
2. Program the block parameters.

   Interconnect the CONNECT parameter of the TCON instruction with the previously created variable "FDL_Connection" of the data type TCON_FDL.

The FDL connection is established and used for sending and receiving data.

Setting up an FDL connection in the user program

For programmed communication via FDL, you need to create and program the data block of the system data type TCON_FDL yourself and call it directly at the instruction. Follow these steps:

1. Create a global data block in the project tree.
2. In the global data block create a variable of the data type TCON_FDL.

   The following example shows the global data block "FDL_connection" with the variable "FDL_connection" of the data type TCON_FDL.

FDL_connection

	Name	Data type	Start value	R...	A...	W..	V..	Comment
1	Static							
2	FDL_connection	TCON_FDL			✓		✓	
3	InterfaceId	HW_ANY	0		✓		✓	HW identifier of PB interface submodule
4	ID	CONN_OUC	16#0		✓		✓	connection reference / identifier
5	ConnectionType	Byte	16#15		✓		✓	type of connection: 21= FDL connection
6	ActiveEstablished	Bool	false		✓		✓	active/passive connection establishment
7	ServiceId	Byte	16#0		✓		✓	service id: 0 – default, 1 – SDA, 2 – SDN
8	RemotePBAddress	Byte	16#0		✓		✓	remote ProfiBus partner address
9	LocalPBAddress	Byte	16#0		✓		✓	local ProfiBus partner address
10	RemoteLSAP	Byte	16#0		✓		✓	remote PB link-layer service access point
11	LocalLSAP	Byte	16#0		✓		✓	local PB link-layer service access point

Figure 3-2 Programming an FDL connection

3. In the data block program the parameters of the FDL cconnection, e.g. the PROFIBUS addresses.

   The type of connection is specified with the "ServiceId" parameter. You will find details in the STEP 7 information system.
4. Create a TCON instruction in the program editor.
5. Interconnect the CONNECT parameter of the TCON instruction with the previously created variable "FDL_Connection" of the data type TCON_FDL.

In the example below, the CONNECT parameter of the TCON instruction is interconnected with the tag "FDL_Connection" (data type TCON_FDL).

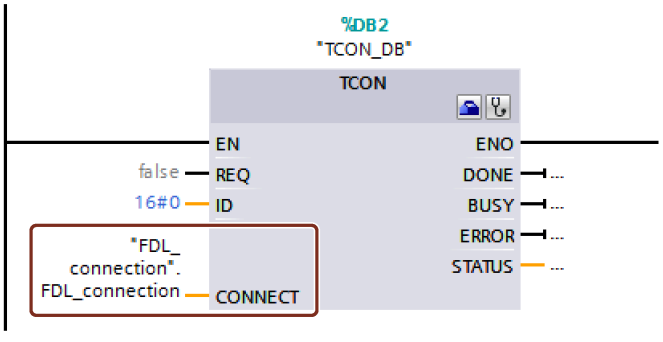

Figure 3-3 Example: TCON instruction for FDL connection

The parameters of TCON_FDL

You will find information on the parameters of TCON_FDL in the STEP 7 information system.

Note the special features of the parameters "RemoteSAP" and "RemotePBAddress":

- **RemoteSAP = 255, RemotePBAddress = 255**

  If you program the value 255 both for RemoteSAP and RemotePBAddress, data transfer from every partner will be accepted regardless of its SAP.

- **RemoteSAP = 255, RemotePBAddress = specified**

  If you program the value 255 for RemoteSAP and assign a specified value for RemotePBAddress, data transfer from the specified partner via each of its programmed SAPs will be accepted via this connection.

- **RemoteSAP = specified, RemotePBAddress = 255**

  If you program a specific value for RemoteSAP and assign the value 255 for RemotePBAddress, data transfer from every partner with the specified address will be accepted via this connection.

3.4 Configuration of the extended LSAP area

Using LSAPs of the CM for FDL

Each FDL connection requires the configuration of an LSAP for the two end points (Link ServiceAccessPoint).

For FDL connections of the CM, you can configure an extended LSAP area if you activate the option "Activate LSAP reservation for FDL". For the procedure, see below.

- Option disabled

  The standard LSAPs 2..32 can be used for all FDL connection types.

- Option enabled

  You can reserve selected LSAPs for FDL connections.

  The reserved LSAPs also apply to programmed connections.

  The following areas apply to the different connection types:

  – Specified/unspecified: 2..33
  – Unspecified free layer 2 connections: 1..56
  – Broadcast/multicast as DP master with master system: 1..53, 55..56
  – Broadcast/multicast as DP master without master system: 1..56
  – Broadcast/multicast as DP slave: 1..48, 54

  LSAP 63 is permanently reserved for broadcast reception.

Requirements for the LSAP reservation

- CM 1542-5 with firmware version V2.0.20 or higher
- STEP 7 Professional V15.1 Update 2

Preparation of existing projects

If you want to use the function in an existing STEP 7 project up to V15.1, do the following:

1. Load the firmware version mentioned above into the respective CMs.
2. Update your version of STEP 7 to the version mentioned above or a higher version.
3. Open your STEP 7 project.
4. Select a CM in which you have loaded the current firmware.
5. Select the "General" parameter group and click on "Update module description".

   If you use several identical CMs in your project, you have the following choice:

   – Update only the selected CM
   – Update all CM of this type in the project

   Update the CM(s) according to one of these two options.

Reservation of the LSAPs

1. Select the parameter group "PROFIBUS interface > FDL-LSAP configuration" in an updated CM.

   The table of LSAPs is disabled by default. Only the standard LSAPs 2..32 can be used for FDL connections.
2. Select the option "Activate LSAP reservation for FDL".

   The individual LSAPs of the table can be activated. You can reserve LSAPs for FDL connections in the above areas.

FDL: Receiving data in CM via programmed layer 2 connection

Programmed connections are not configured on the modules. Connection establishment works dynamically via a block.

Proceed as follows to receive data from multiple PROFIBUS nodes and remoteLSAPs:

1. Open the program editor of the station.

   The "Instructions" task card opens.
2. Create a "TCON" block to establish the FDL connection:

   Instructions > Communication > Open user communication > Others > TCON
3. Create a global data block for the connection description of the FDL connection.

4. In the global data block, create a variable of the data type "TCON_FDL".

   To do this, enter "TCON_FDL" in the data type field.

   The connection description for an FDL connection is created automatically.

CONNECT	TCON_FDL	
InterfaceId	HW_ANY	277
ID	CONN_OUC	16#1BF
ConnectionType	Byte	16#15
ActiveEstablished	Bool	false
ServiceId	Byte	16#0
RemotePBAddress	Byte	255
LocalPBAddress	Byte	4
RemoteLSAP	Byte	255
LocalLSAP	Byte	3

Figure 3-4 Parameters of the TCON_FDL variable in the connection description DB

   The connection type ("ConnectionType" variable) for FDL is "16#15".

   – Use the hardware identifier of the CM for "InterfaceID".
   – Under "ID", assign a connection ID that has not been used yet.
   – Enter the local PROFIBUS address and the local LSAP:

     - LocalPBAddress: Local PROFIBUS address

     - LocalLSAP: Local LSAP
   – Configure "RemotePBAddress" with 255.
   – Configure "RemoteLSAP" with 255.

5. In the program editor, interconnect the parameter "CONNECT" of the block "TCON" with the variable of the FDL connection ("TCON_FDL" data type) of the connection description DB.

FDL: Receiving data via "TRCV / TURCV" blocks

1. Open the program editor of the station.

   The "Instructions" task card opens.

2. To receive the data, create a "TRCV" or "TURCV" block:

   Instructions > Communication > Open user communication > Others > TRCV / TURCV

3. Create a global data block for the connection description of the FDL connection.

4. In the global data block, create a variable of the data type "TCON_FDL".

   To do this, enter "TCON_FDL" in the data type field.

   The connection description for an FDL connection is created automatically.

   The connection type ("ConnectionType" variable) for FDL is "16#15".

   – Use the hardware identifier of the CM for "InterfaceID".
   – Assign the connection ID used in "TCON" under "ID".
   – Configure "RemotePBAddress" with 255.
   – Configure "RemoteLSAP" with 255.

   TRCV

   – Use the same connection ID as previously configured in "TCON".

     Please note:
     The payload received with this block does not contain the "RemotePBAddress" and "RemoteLSAP" parameters. Therefore, these parameters cannot be evaluated.

   TURCV

   – Use the same connection ID as previously configured in "TCON".

     Please note:
     The payload received with this block does not contain the "RemotePBAddress" and "RemoteLSAP" parameters.

     However, this header data of the receive telegram is entered in the following block parameters of the "Parameters" block of the "TURCV" block:

     - Addr.RemotePBAddress

     - Addr.Local PBAddress

     - Addr.RemoteLSAP

     - Addr.LocalLSAP

     This means that the header data of the receive telegram can be processed by the program.

5. In the program editor, interconnect the parameter "ADDR" of the block "TURCV" with the variable of the FDL connection ("TCON_FDL" data type) of the connection description DB.

Note:
The "TRCV_C" block can also be used for connection establishment and sending.

FDL: Sending data via free layer 2 connection

Free layer 2 connections are not configured at the modules. Connection establishment works dynamically via a block.

Proceed as follows to send data to different PROFIBUS nodes and remoteLSAPs:

Connection establishment via TCON

1. Open the program editor of the station.

   The "Instructions" task card opens.

2. Create a "TCON" block to establish a free layer 2 connection:

   Instructions > Communication > Open user communication > Others > TCON
3. Create a global data block for the connection description of the FDL connection.
4. In the global data block, create a variable of the data type "TCON_FDL".

   To do this, enter "TCON_FDL" in the data type field.

   The connection description for an FDL connection is created automatically.

   The connection type ("ConnectionType" variable) for FDL is "16#15".

   – Use the hardware identifier of the CM for "InterfaceID".
   – Under "ID", assign a connection ID that has not been used yet.
   – Enter the local PROFIBUS address and the local LSAP:

     - LocalPBAddress

     - LocalLSAP

   Any RemoteLSAP and RemotePB address can be used; they are immaterial for connection establishment when sending. They are configured in the "TUSEND" block.
5. In the program editor, interconnect the parameter "CONNECT" of the "TCON" with the variable of the FDL connection ("TCON_FDL" data type) of the connection description DB.

Sending data via TUSEND

1. Open the program editor of the station.

   The "Instructions" task card opens.
2. Create a "TUSEND" block for sending data:

   Instructions > Communication > Open user communication > Others > TUSEND
3. Create a global data block for the connection description of the FDL connection.
4. In the global data block, create a variable of the data type "TCON_FDL".

   To do this, enter "TCON_FDL" in the data type field.

   The connection description for an FDL connection is created automatically.

   The connection type ("ConnectionType" variable) for FDL is "16#15".

   – Use the hardware identifier of the CM for "InterfaceID".
   – Assign the connection ID used in "TCON" under "ID".
   – Enter the corresponding values for the following parameters:

     - Addr.RemotePBAddress

     - Addr.Local PBAddress

     - Addr.RemoteLSAP

     - Addr.LocalLSAP

   These parameters are used for sending. The parameters of the "TCON" are not relevant. To send data to a different PROFIBUS address or a different LSAP, change them in "TUSEND".

The "TCON" connection can remain open during this process; this means that changes are possible without having to establish a new connection.

5. In the program editor, interconnect the parameter "ADDR" of the block "TUSEND" with the variable of the FDL connection ("TCON_FDL" data type) of the connection description DB.

Note:
The "TSEND_C" block can also be used for connection establishment and sending.

Configuration in the "Network data" editor

Proceed as follows to assign the reserved LSAPs to a connection:

1. Open the network view of the project.

   On the right you will find the collapsed "Network data" editor.

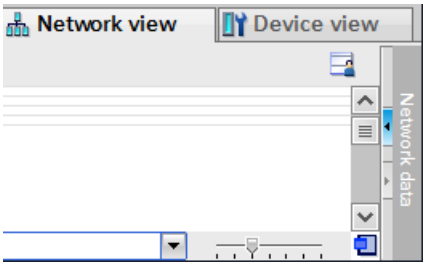

2. Open the "Network data" editor using the arrow symbol.

   The editor is displayed with several tabs, on the left the "Network overview" tab.

3. Select the desired FDL connection in the "Connections" tab.
4. Select the "Address details" parameter group in the connection properties.
5. Select one of the LSAPs reserved by the CMs for each end point from the "LSAP" drop-down list.

Ensure that the respective LSAPs for the CM and for the connection configuration in the "Network data" editor match. If you use a LSAP in the "Network data" editor which is not reserved for the CM, no connection is established.

Diagnostics and upkeep

4

4.1 Diagnostics options

Diagnostics options

You have the following diagnostics options available for the module:

- The LEDs of the module

  Diagnostics using the LEDs is the first means of narrowing down errors/faults. To narrow the error/fault down even further, evaluate the message on the display of the S7-1500 CPU. If errors/faults occur, you can also identify them using the Web server or by evaluating the diagnostics buffer of the CPU. The diagnostics buffer of the CPU contains plain language information about the error/fault that has occurred. The diagnostics buffer is accessible via STEP 7, the display and the Web server.

  For information on the LED displays, refer to the section LEDs (Page 18).

- STEP 7: The "Diagnostics" tab in the Inspector window

  Here, you can obtain the following information on the selected module:

  – Entries in the diagnostics buffer of the CPU

  – Information on the online status of the module

- STEP 7: Diagnostics functions in the "Online > Online and diagnostics" menu

  Here, you can obtain static information on the selected module:

  – General information on the module

  – Diagnostics status

  – Information on the PROFIBUS interface

  You can obtain further information on the diagnostics functions of STEP 7 in the STEP 7 online help.

- DP diagnostics

  The DP diagnostics of the CM is described below.

  The evaluation of diagnostics data records requested by the DP master and the diagnostics interrupts or diagnostics alarms of the DP slaves is handled in the user program of the DP master station.

4.2 DP slave diagnostics

DP-V1 slave: Diagnostics interrupt

The diagnostics data is transferred as a diagnostics interrupt. Diagnostics interrupts must be acknowledged by the DP master.

Supported diagnostics functions

The CM 1542-5 supports the following blocks of DP diagnostics:

- Standard diagnostics (6 bytes)
- Identifier-related diagnostics (2 to 17 bytes), depending on the number of configured transfer areas
- Module status (5 to 35 bytes), depending on the number of configured transfer areas
- If it exists: Diagnostics interrupt (8 bytes)

User program (DP master)

To read out the diagnostics data of the DP slave (DP single diagnostics), use the "DPNRM_DG" instruction on the DP master.

Diagnostics interrupts of DP-V1 slaves are evaluated in the user program of the master using the "RALRM" instruction.

You will find the required parameter assignment for the instructions in the STEP 7 online help.

Below, there is an overview of the structure of the diagnostics data.

Overview of standard diagnostics

Standard diagnostics	
Byte	**Meaning**
0	Station status 1
1	Station status 2
2	Station status 3
3	Master address
4...5	Vendor ID of the slave

Overview of device-specific diagnostics

The device-specific diagnostics data depends on the protocol variant operating on the DP slave:

DP-V1 slave

Table 4- 1 Overview of device-specific diagnostics of the CM with DP-V1 slaves

Device-specific diagnostics		
Byte	**Meaning**	
0	Header	
1	Variant Interrupt type	Variant Status type
2	Slot number	
3	Variant Interrupt specifier	Variant Status specifier
4...62	Module-specific diagnostics data	

4.3 Standard diagnostics

The coding of the standard diagnostics bytes is explained below.

Byte 0: Station status 1

Table 4- 2 Structure of station status byte 1

Bit no.	Name	Explanation
7	Master_Lock	The DP slave was assigned parameters by a different DP master. The DP slave can only be read by the configured productive DP master. This bit is set by the DP master when its bus address differs from the configured address.
6	Parameter_Fault	The last received parameter assignment frame was bad or not permitted. The DP slave sets this bit. Solution: Check the parameter settings for illegal parameters.
5	Invalid_Slave_Response	This bit is set by the DP master when no plausible response has been received from the DP slave.
4	Service_Not_Supported	This bit is set by the DP master when the master has requested a function that is not supported by the DP slave. Solution: Change the parameter setting to disable the function on the master.
3	Ext_Diag	This bit is set by the slave. • Bit =1: There is diagnostics data in the slave-specific diagnostics area. The diagnostics data can be evaluated in the user program of the master. • Bit =0: There may be status information in the slave-specific diagnostics area. The status information can be evaluated in the user program of the master.
2	Slave_Config_Check_Fault	The configuration data sent by the DP master is rejected by the DP slave. Cause: Configuration error. Solution: Change configuration.
1	Station_Not_Ready	The DP slave is not ready for productive data exchange. This is a temporary status that cannot be influenced by the DP master.
0	Station_Non_Existent	The DP slave is not reacting on the bus. This bit is set by the DP master 1 (the slave sets this bit permanently to 0). If the bit is set, the diagnostic bits have the state of the last diagnostics alarm or the initial value.

Byte 1: Station status 2

Table 4- 3 Structure of station status byte 2

Bit no.	Name	Explanation
7	Deactivated	The DP slave was identified as being not active in the local parameter record and it is not polled cyclically.
6	Reserved	- reserved -
5	Sync_Mode	The DP slave is in SYNC mode. The bit is set by the slave.
4	Freeze_Mode	The DP slave is in FREEZE mode. The bit is set by the slave.
3	Watchdog_On	Watchdog monitoring is active on the DP slave. The bit is set by the slave.
2	Status_From_Slave	Bit =1: The diagnostics information comes from the DP slave. The bit is set permanently to 1 by the slave.
1	Static_Diag	Static diagnostics If the DP slave sets this bit, the DP master must fetch diagnostics data from the DP slave until the DP slave resets the bit. The DP slave sets this bit, for example when it is not capable of data transfer.
0	Parameter_Request	The DP slave sets this bit when it needs to have new parameters assigned and be reconfigured. If bit 0 and bit 1 are both set, bit 0 has the higher priority.

Byte 2: Station status 3

Table 4- 4 Structure of station status byte 3

Bit no.	Name	Explanation
7	Ext_Data_Overflow	If this bit is set, there is more diagnostics information available than indicated in the diagnostics data. This data cannot be displayed.
6...0	Reserved	- reserved -

Byte 3: Master address

The address of the DP master that assigned parameters to this DP slave is entered in the "Master_Add" byte.

If the DP slave did not have parameters assigned to it by any DP master, the DP slave sets the address 255 in this byte.

Bytes 4 and 5: Vendor ID of the slave ("Ident_Number")

The vendor ID ("Ident_Number") for the DP slave type is entered in bytes 4 and 5. This identifier can be used to identify the slave.

The more significant part of the value is in byte 5.

4.4 Device-specific diagnostics in DP-V1

There are two variants of device-specific diagnostics with DP-V1 slaves:

- Interrupt type
- Status type

The two variants differ from each other in the coding of byte 1, bit 7 of the device-specific diagnostics data. The difference is component-specific.

Byte 0: Header

The two most significant bits have the value 00. This identifies the "module-specific diagnostics data" field (see bytes 4... 62) as a whole.

The remaining six bits indicate the length of the data field including byte 0.

Byte 1: Variant "Interrupt type"

Table 4- 5 Structure of byte 1 of the device-specific diagnostics (variant "interrupt type")

Bit no.	Meaning	
7	Value	Meaning
	0	**Interrupt**
6...0	**Alarm_Type**	
	0	- reserved -
	1	Diagnostics interrupt
	2	Hardware interrupt
	3	Pull interrupt
	4	Plug interrupt
	5	Status interrupt
	6	Update interrupt
	7...31	- reserved -
	32...126	Vendor-specific
	127	- reserved -

If status interrupts are received in quick succession, older status interrupts may be overwritten by newer interrupts.

Byte 1: Variant "Status type"

Table 4- 6 Structure of byte 1 of the device-specific diagnostics (variant "status type")

Bit no.	Meaning	
7	Value	Meaning
	1	**Status information**
6...0	**Status_Type**	
	0	- reserved -

Bit no.	Meaning	
	1	Status information
	2	Modul_Status (see also bytes 4...62)
	3...31	- reserved -
	32...126	Vendor-specific
	127	- reserved -

Byte 2: Slot number

Slot number (1...n) of the slave module

0 is the placeholder for the entire device.

Byte 3: Variant "Interrupt specifier"

Table 4- 7 Structure of byte 3 of the device-specific diagnostics (variant "interrupt specifier")

Bit no.	Meaning	
7...3	Seq_No	Unique identifier of an interrupt alarm
2	Add_Ack	If this bit is set, the DP-V1 master is indicating that this interrupt expects an acknowledgement in the form of a WRITE job.
1...0	Alarm_Specifier	
	0	No further distinction
	1	Interrupt appears, slot disrupted The slot generates an interrupt due to an error.
	2	Interrupt disappears, slot OK The slot generates the interrupt and indicates that it has no further errors.
	3	Interrupt disappears, slot still disrupted The slot generates an interrupt and indicates that it has further errors.

Byte 3: Variant "Status specifier"

Table 4- 8 Structure of byte 3 of the device-specific diagnostics (variant "status specifier")

Bit no.	Meaning	
7...2	- reserved -	
1...0	Status_Specifier	
	0	No further distinction
	1	Status appears
	2	Status disappears
	3	- reserved -

Bytes 4...62: Module-specific diagnostics: General coding

This byte contains data with module-specific information that is described in the relevant module documentation. The relevant module is identified by the slot (byte 2).

Bytes 4...62: Module-specific diagnostics with "status type" and "module status"

With the variant "status type" of the device-specific diagnostics of DP-V1 slaves (see byte 1, bit 7) and the setting "Modul_Status" (see byte 1, bits 0...6), there are two status bits here for each slot (= module). Bits not required are set to 0.

Table 4- 9 Structure of the bytes for module-specific diagnostics data

Byte	Bit assignment							
Bit	7	6	5	4	3	2	1	0
4	Module status 4		Module status 3		Module status 2		Module status 1	
5	Module status 8		Module status 7		Module status 6		Module status 5	
...	...		...		...		...	
62	Module status 236		Module status 235		Module status 234		Module status 233	

The status bits are coded as follows:

Table 4- 10 Meaning of the values of the status bits

Value	Meaning
00	Data valid
01	Data invalid - error (for example short-circuit)
10	Data invalid - wrong module
11	Data invalid - no module plugged in

4.5 DP diagnostics frames when the CPU is in STOP

DP diagnostics frames when the CPU is in STOP

All diagnostics frames from DPV0 standard slaves and all DP interrupt frames from DP-S7/DPV1 standard slaves arriving when the CPU is in STOP are forwarded to the CPU. During module startup, the diagnostics frames must then be evaluated by a suitable user program.

4.6 Update firmware

New firmware versions of the module

If a new firmware version is available for the communications module, you will find this on the Internet pages of Siemens Industry Online Support:
Link: (https://support.industry.siemens.com/cs/ww/en/ps/15671/dl)

Firmware files have the file format *.upd. Save the file on your PC.

There are different ways of loading a new firmware file into the module:

- Online functions of STEP 7 via Ethernet
- Loading the firmware file into the CPU from an SD card

Note

SD card only for firmware file

For the firmware file, you need a SIMATIC SD memory card, for example (article numbers):

- 6AV6671-8XB10-0AX1
- 6AV2181-8XP00-0AX0
- 6AV2181-8AQ10-0AX0

The firmware update card may not contain any other files. An SD card with configuration data cannot be used.

Scenarios

The update procedure differs depending on the installed and the desired firmware version:

- **V2.x → V2.y**

  It is possible to upgrade from a version V2.x to a higher version V2.y in a single step.

- **V1.x → V2.x**

  If you are using a CM with firmware version V1.x and wish to upgrade to a version > V2.0.15, you need to do this in two steps:

  – In the first step, you need to upgrade the firmware to version V2.0.15.

    You can find this at the following address:
    Link: (https://support.industry.siemens.com/cs/ww/en/view/109742135)

  – You can then upgrade the CM to the desired firmware version > V2.0.15.

- **V2.x → V1.x**

  If you purchase a module with pre-installed firmware version V2.x but wish to operate it with an older firmware V1.x, this is not directly possible.

  In this case, contact Siemens Customer Support.

Loading the firmware with the online functions of STEP 7 via Ethernet

Note

Duration of the firmware update

Downloading a new firmware file can take several minutes.

Always wait until the completion of the firmware update can be recognized from the LEDs (see below).

Requirements:

- The CPU of the station is accessible via Ethernet.
- The engineering station and the CPU are located in the same subnet.
- The new firmware file is stored on your engineering station.
- The engineering station is connected to the network.
- The relevant STEP 7 project is open on the engineering station.

Procedure:

1. Select the station that you want to update with a new firmware.
2. Enable the online functions using the "Connect online" icon.
3. In the "Connect online" dialog, select the Ethernet interface in the "Type of PG/PC interface" list box.
4. Select the CPU of the station.
5. Click on "Start search" to search for the module in the network and to specify the connection path.

   When the module is found it is displayed in the table.
6. Connect using the "Connect" button.

   The "Connect online" wizard guides you through the remaining steps in installation.
7. Select the CPU in the network view and select the "Online & Diagnostics" shortcut menu (right-click).
8. In the navigation panel of the Online & Diagnostics view, select the entry "Functions > Firmware update".
9. Using the "Browse" button (parameter group "Firmware loader") search for the new firmware file in the file system of the engineering station.
10. Start to download the firmware with the "Start update" button when the correct version of the signed firmware is displayed in the "Status" output box.

You will find further information on the online functions in the STEP 7 information system.

Loading the firmware via the SD card

You can find detailed information on using an SD card in the S7-1500 System Manual, see Preface (Page 3), Documentation guide.

Requirements:

- You have copied the new firmware file from your PC to the SD card using a suitable card reader.
- Optional: You have saved a backup file of the currently used firmware file.

Procedure:

1. Set the operating mode switch of the CPU to STOP.

   Ensure that no write functions (e.g. online or test functions) are active in the STOP state.
2. Remove the SIMATIC Memory Card with the configuration data from the slot of the CPU.
3. Insert the SD card with the firmware file in the card slot of the CPU.

   The firmware update starts shortly after the card has been inserted. The display shows the following: "STOP - FW UPDATE"

   If errors occur, appropriate messages are displayed.

   After completing the firmware update, the display shows a result page.

   A successful firmware update can be recognized by the following LED pattern from the CPU:

   – RUN lights up yellow.

   – MAINT flashing yellow.

   For the LED pattern of the module during startup, refer to section LEDs (Page 18).
4. Remove the SD card and insert the SIMATIC Memory Card again.
5. Set the operating mode switch of the CPU to RUN.

   The module uses the new firmware during startup.

4.7 Replacing a module without a programming device

General procedure

The configuration data of the CM is stored on the CPU. This means that this module can be replaced by a module of the same type (identical article number) without using a PG.

Technical specifications

5

Note the information in the System description of SIMATIC S7-1500 (Page 3).

In addition to the information in the system description, the following technical specifications apply to the module.

Technical specifications - CM 1542-5	
Product name	CM 1542-5
Article number	6GK7 542-5DX00-0XE0
Connection to PROFIBUS	
• Number	1 x PROFIBUS interface
• Design	D-sub socket (RS-485)
• Transmission speed	9.6 kbps, 19.2 kbps, 45.45 kbps, 93.75 kbps, 187.5 kbps, 500 kbps, 1.5 Mbps, 3 Mbps, 6 Mbps, 12 Mbps
Electrical data	
Power supply	
• Via S7-1500 backplane bus	15 V
Current consumption	
• From backplane bus	200 mA
Power dissipation	3 W
Insulation	
Insulation tested with	707 VDC (type test)
Design, dimensions and weight	
Module format	Compact module S7-1500, single width
Degree of protection	IP20
Weight	Approx. 400 g
Dimensions (W x H x D)	35 x 142 x 129 mm
Installation options	Mounting in an S7-1500 rack
Product functions *	

* You will find the product functions in the section Configuration limits and performance data (Page 13).

Approvals

6

Approvals issued

Note

Issued approvals on the type plate of the device

The specified approvals - with the exception of the certificates for shipbuilding - have only been obtained when there is a corresponding mark on the product. You can check which of the following approvals have been granted for your product by the markings on the type plate. The approvals for shipbuilding are an exception to this.

Certificates for shipbuilding and national approvals

The device certificates for shipbuilding and special national approvals can be found in Siemens Industry Online Support on the Internet:
Link: (https://support.industry.siemens.com/cs/ww/en/ps/15671/cert)

Documents on the Internet

You will find the declarations of conformity listed below and certificates of the product on the Internet at the following address:

Link: (https://support.industry.siemens.com/cs/ww/en/ps/15671/cert)

You can see the current versions of the standards in the relevant certificate, which you will find on the Internet at the address specified above.

Address for declarations of conformity

The EU and the UK declarations of conformity are available to all responsible authorities at:

Siemens Aktiengesellschaft
Digital Industries
P.O. Box 48 48
90026 Nuremberg
Germany

EC declaration of conformity

The CP meets the requirements and safety objectives of the following EU directives and it complies with the harmonized European standards (EN) for programmable logic controllers which are published in the official documentation of the European Union.

- **2014/34/EU (ATEX explosion protection directive)**

  Directive of the European Parliament and the Council of 26 February 2014 on the approximation of the laws of the member states concerning equipment and protective systems intended for use in potentially explosive atmospheres, official journal of the EU L96, 29/03/2014, pages. 309-356

- **2014/30/EU (EMC)**

  EMC directive of the European Parliament and of the Council of February 26, 2014 on the approximation of the laws of the member states relating to electromagnetic compatibility; official journal of the EU L96, 29/03/2014, pages. 79-106

- **2011/65/EU (RoHS)**

  Directive of the European Parliament and of the Council of 8 June 2011 on the restriction of the use of certain hazardous substances in electrical and electronic equipment

UK Declaration of Conformity

Importer UK:

Siemens plc
Sir William Siemens House
Princess Road
Manchester
M20 2UR

The product meets the requirements of the following directives:

- UKEX Regulations

  SI 2016/1107 The Equipment and Protective Systems Intended for Use in Potentially Explosive Atmospheres Regulations 2016, and related amendments

- EMC Regulations

  SI 2016/1091 The Electromagnetic Compatibility Regulations 2016

- RoHS Regulations

  SI 2012/3032 The Restriction of the Use of Certain Hazardous Substances in Electrical and Electronic Equipment Regulations 2012

ATEX / IECEx / UKEX / CCC-Ex

Observe the information in the "Use of subassemblies/modules in a Zone 2 Hazardous Area" document, which you will find here:

- On the documentation DVD supplied with the product, under:
  "All documents" >"Use of subassemblies/modules in a Zone 2 Hazardous Area"

- On the Internet at the following address:
  Link: (https://support.industry.siemens.com/cs/ww/en/view/78381013)

The conditions must be met for safe usage of the product according to the section Notes on use in hazardous areas according to ATEX / IECEx (Page 22).

The product meets the explosion protection requirements outlined below.

IECEx

Classification:Ex ec IIC T4 Gc, Certificate no.:DEK 18.0019X

The product meets the requirements of the standards:

- EN IEC 60079-0 - Explosive atmospheres - Part 0: Equipment - General requirements
- EN 60079-7 - Explosive Atmospheres - Part 7: Equipment protection by increased safety 'e'

ATEX

Classification:II 3G Ex ec IIC T4 Gc, Certificate no.:DEKRA 18ATEX0027 X

The product meets the requirements of the standards:

- EN IEC 60079-0 - Explosive atmospheres - Part 0: Equipment - General requirements
- EN 60079-7 - Explosive Atmospheres - Part 7: Equipment protection by increased safety 'e'

UKEX

Classification:Ex ec IIC T4 Gc, Certificate no.:DEKRA 21UKEX0003 X

The product meets the requirements of the standards:

- EN IEC 60079-0 - Explosive atmospheres - Part 0: Equipment - General requirements
- EN 60079-7 - Explosive Atmospheres - Part 7: Equipment protection by increased safety 'e'
- EN IEC 60079-0 - Explosive atmospheres - Part 0: Equipment - General requirements
- EN 60079-7 - Explosive Atmospheres - Part 7: Equipment protection by increased safety 'e'

Importer UK: Siemens plc (see above)

CCC

Classification:Ex na IIC T4 Gc, Certificate no.:2020322310002625

The product meets the requirements of the following standards:

- GB 3836.1

  Hazardous areas - Part 0: Equipment - General requirements
- GB 3836.8

  Explosive atmospheres - Part 15: Equipment protection by type of protection 'n'

EMC

The CP meets the requirements of the following directives:

- EU directive 2014/30/EU "Electromagnetic Compatibility" (EMC directive)
- EMC Regulations SI 2016/1091 The Electromagnetic Compatibility Regulations 2016

Applied standards:

- EN 61000-6-2

  Electromagnetic compatibility (EMC) - Part 6-2: Generic standards - Immunity for industrial environments

- EN 61000-6-4

  Electromagnetic compatibility (EMC) - Part 6-4: Generic standards - Emission standard for industrial environments

RoHS

The CP meets the requirements of the following directives:

- EU directive 2011/65/EU on the restriction of the use of certain hazardous substances in electrical and electronic equipment.
- SI 2012/3032 The Restriction of the Use of Certain Hazardous Substances in Electrical and Electronic Equipment Regulations 2012

Applied standard: EN IEC 63000

c(UL)us

Applied standards:

- Underwriters Laboratories, Inc.: UL 61010-1 (Safety Requirements for Electrical Equipment for Measurement, Control, and Laboratory Use - Part 1: General Requirements)
- IEC/UL 61010-2-201 (Safety requirements for electrical equipment for measurement, control and laboratory use. Particular requirements for control equipment)
- Canadian Standards Association: CSA C22.2 No. 142 (Process Control Equipment)

Report / UL file: E 85972 (NRAG, NRAG7)

cULus Hazardous (Classified) Locations

HAZ. LOC.

Underwriters Laboratories, Inc.: cULus IND. CONT. EQ. FOR HAZ. LOC.

Applied standards:

- ANSI ISA 12.12.01
- CSA C22.2 No. 213-M1987

APPROVED for Use in:

- Cl. 1, Div. 2, GP. A, B, C, D T3...T6
- Cl. 1, Zone 2, GP. IIC T3...T6

Ta: Refer to the temperature class on the type plate of the CP

Report / UL file: E223122 (NRAG, NRAG7)

Note the conditions for the safe deployment of the product according to the section Notes on use in hazardous areas according to UL HazLoc (Page 23).

Note

For devices with C-PLUG memory: The C-PLUG memory module may only be inserted or removed when the power is off.

CSA

CSA Certification Mark Canadian Standard Association (CSA) nach Standard C 22.2 No. 142:

- Certification Record 063533–C-000

FM

Factory Mutual Approval Standards:

- Class 3600
- Class 3611
- Class 3810
- ANSI/ISA 61010-1

Report Number 3049847

Class I, Division 2, Group A, B, C, D, T4

Class I, Zone 2, Group IIC, T4

You will find the temperature class on the type plate on the module.

Australia - RCM

The product meets the requirements of the AS/NZS 2064 standards (Class A).

Canada

This class A digital device meets the requirements of the Canadian standard ICES-003.

AVIS CANADIEN

Cet appareil numérique de la classe A est conforme à la norme NMB-003 du Canada.

MSIP 요구사항 - For Korea only

A급 기기(업무용 방송통신기자재)

이 기기는 업무용(A급) 전자파 적합기기로서 판매자 또는 사용자는 이 점을 주의하시기 바라며, 가정 외의 지역에서 사용하는것을 목적으로 합니다.

Note that in terms of the emission of interference, this device corresponds to limit class A. This device can be used in all areas except for residential environments.

Current approvals

SIMATIC NET products are regularly submitted to the relevant authorities and approval centers for approvals relating to specific markets and applications.

If you require a list of the current approvals for individual devices, consult your Siemens contact or check the Internet pages of Siemens Industry Online Support:

Link: (https://support.industry.siemens.com/cs/ww/en/ps/15671/cert)

Index

B

Bus topology, 12

C

Cable length, 14
Characteristic data (DP), 14
Characteristic data (FDL), 15
Characteristics (S7 communication), 15
CM, 4
Configuration data
    Downloading, 17
Connection resources of the CPU, 15

D

Data record routing, 11, 15
Diagnostics options, 39
Diagnostics repeater (DP slave), 12
Diagnostics requests, 12
Diagnostics requirements, 14
Direct data exchange, 11
Disposal, 7
Downloading project data, 24
DP diagnostics, 39
DP diagnostics frames when the CPU is in STOP, 45
DP master
    Master mode, 26
DP master (class 1), 11, 12
DP masters (class 2), 12
DP mode
    General characteristic data, 14
DP slave, 11, 12
    Slave mode, 26
DP slaves
    Quantity, 14

F

FDL connections, 11
Field device parameter assignment, 11
Firmware
    CM, 17
    CPU, 17
    Updating, 46

G

Glossary, 7

H

HMI functions, 15

I

Installation and commissioning, 24
Instruction
    DE_ACT, 12

M

Measured values
    Transfer/reaction times, 16
Module replacement, 48

O

Operating mode of the CPU, 26
OUC (Open User Communication), 28

P

PG functions, 15
PG/OP communication, 11
PROFIBUS
    DP-V0 and DPV1 standard, 11
PROFIBUS DP
    EN 50170 DPV1, 11
PROFIBUS interface, 25

R

Recycling, 7
RS-485 interface, 25
RS485 socket, 24

S

S7 communication, 11
S7 connections, 11, 15
S7 routing function, 26
Safety notices, 21
Siemens DP slave, 11
SIMATIC NET glossary, 7
Startup parameters DP, 14
STEP 7, 4
STEP 7 (version), 17
SYNC/FREEZE, 11

T

TCON_FDL, 28, 32
Time master, 13
Time slave, 13
Time synchronization, 26
Time-of-day synchronization, 13
Transmission speed, 14

W

Web diagnostics, 13
    S7 connections, 13

SIEMENS

SIMATIC NET

S7-1500 - PROFIBUS CP 1542-5

Manual

Preface

Guide to the documentation 1

Product overview, functions 2

Installation, wiring, commissioning, operation 3

Configuration, programming 4

Diagnostics and maintenance 5

Technical specifications 6

Approvals 7

11/2018

C79000-G8976-C326-04

Legal information

Warning notice system

This manual contains notices you have to observe in order to ensure your personal safety, as well as to prevent damage to property. The notices referring to your personal safety are highlighted in the manual by a safety alert symbol, notices referring only to property damage have no safety alert symbol. These notices shown below are graded according to the degree of danger.

⚠ DANGER

indicates that death or severe personal injury **will** result if proper precautions are not taken.

⚠ WARNING

indicates that death or severe personal injury **may** result if proper precautions are not taken.

⚠ CAUTION

indicates that minor personal injury can result if proper precautions are not taken.

NOTICE

indicates that property damage can result if proper precautions are not taken.

If more than one degree of danger is present, the warning notice representing the highest degree of danger will be used. A notice warning of injury to persons with a safety alert symbol may also include a warning relating to property damage.

Qualified Personnel

The product/system described in this documentation may be operated only by **personnel qualified** for the specific task in accordance with the relevant documentation, in particular its warning notices and safety instructions. Qualified personnel are those who, based on their training and experience, are capable of identifying risks and avoiding potential hazards when working with these products/systems.

Proper use of Siemens products

Note the following:

⚠ WARNING

Siemens products may only be used for the applications described in the catalog and in the relevant technical documentation. If products and components from other manufacturers are used, these must be recommended or approved by Siemens. Proper transport, storage, installation, assembly, commissioning, operation and maintenance are required to ensure that the products operate safely and without any problems. The permissible ambient conditions must be complied with. The information in the relevant documentation must be observed.

Trademarks

All names identified by ® are registered trademarks of Siemens AG. The remaining trademarks in this publication may be trademarks whose use by third parties for their own purposes could violate the rights of the owner.

Disclaimer of Liability

We have reviewed the contents of this publication to ensure consistency with the hardware and software described. Since variance cannot be precluded entirely, we cannot guarantee full consistency. However, the information in this publication is reviewed regularly and any necessary corrections are included in subsequent editions.

Siemens AG
Division Process Industries and Drives
Postfach 48 48
90026 NÜRNBERG
GERMANY

C79000-G8976-C326-04
Ⓟ 11/2018 Subject to change

Copyright © Siemens AG 2013 - 2018.
All rights reserved

Preface

Purpose of the documentation

This manual supplements the system manual of the S7-1500 automation system and the function manuals. All functions that go beyond the system are described in the system manual.

With the information in this manual and the system manual, you will be able to commission the CP 1542-5.

Abbreviations and names

- CP

  In this document, the term "CP" is used instead of the full product name "CP 1542-5".

- STEP 7

  The name STEP 7 is used to mean the STEP 7 Professional configuration tool.

New in this edition

- New firmware version with the following functions:
  - Reading out service data of the CP using STEP 7
- New ATEX/IECEx approval
- Editorial revision

Replaced edition

Edition 11/2014

Current manual edition on the Internet

You will also find the current version of this manual on the Internet pages of Siemens Industry Online Support:

Link: (https://support.industry.siemens.com/cs/ww/en/ps/15672/man)

Sources of information and other documentation

See section Guide to the documentation (Page 9).

License conditions

Note

Open source software

Read the license conditions for open source software carefully before using the product.

You will find license conditions in the following documents on the supplied data medium:

- OSS_CP15425_86.pdf

Firmware

The firmware is signed and encrypted. This ensures that only firmware created by Siemens can be downloaded to the device.

Security information

Siemens provides products and solutions with industrial security functions that support the secure operation of plants, systems, machines and networks.

In order to protect plants, systems, machines and networks against cyber threats, it is necessary to implement – and continuously maintain – a holistic, state-of-the-art industrial security concept. Siemens' products and solutions constitute one element of such a concept.

Customers are responsible for preventing unauthorized access to their plants, systems, machines and networks. Such systems, machines and components should only be connected to an enterprise network or the internet if and to the extent such a connection is necessary and only when appropriate security measures (e.g. firewalls and/or network segmentation) are in place.

For additional information on industrial security measures that may be implemented, please visit
Link: (https://www.siemens.com/industrialsecurity)

Siemens' products and solutions undergo continuous development to make them more secure. Siemens strongly recommends that product updates are applied as soon as they are available and that the latest product versions are used. Use of product versions that are no longer supported, and failure to apply the latest updates may increase customers' exposure to cyber threats.

To stay informed about product updates, subscribe to the Siemens Industrial Security RSS Feed under
Link: (https://www.siemens.com/industrialsecurity)

Observe the following security recommendations to prevent unauthorized access to the system.

- Evaluate your plant as a whole in terms of security. Use a cell protection concept with suitable products.
- Keep the firmware up to date. Check regularly for security updates of the firmware and use them.

- Restrict physical access to the device to qualified personnel.
- Configure a protection level of the CPU.

Recycling and disposal

The product is low in pollutants, can be recycled and meets the requirements of the WEEE directive 2012/19/EU "Waste Electrical and Electronic Equipment".

Do not dispose of the product at public disposal sites. For environmentally friendly recycling and the disposal of your old device contact a certified disposal company for electronic scrap or your Siemens contact.

Keep to the local regulations.

You will find information on returning the product on the Internet pages of Siemens Industry Online Support:
Link: (https://support.industry.siemens.com/cs/ww/en/view/109479891)

SIMATIC NET glossary

Explanations of many of the specialist terms used in this documentation can be found in the SIMATIC NET glossary.

You will find the SIMATIC NET glossary on the Internet at the following address:

Link: (https://support.industry.siemens.com/cs/ww/en/view/50305045)

Table of contents

Preface 3

1 Guide to the documentation 9

2 Product overview, functions 11

2.1 Product data 11

2.2 Application 12

2.3 Further functions 13

2.4 Configuration limits and performance data 14
2.4.1 Configuration limits 14
2.4.2 Transmission speeds supported 14
2.4.3 Characteristic data of the DP interface 14
2.4.4 Characteristics of S7 communication 15

2.5 Requirements for use 16
2.5.1 Project engineering 16
2.5.2 Programming 16

2.6 LEDs 17

3 Installation, wiring, commissioning, operation 19

3.1 Important notes on using the device 19
3.1.1 Notes on use in hazardous areas 19
3.1.2 Notes on use in hazardous areas according to ATEX / IECEx 20
3.1.3 Notes on use in hazardous areas according to UL HazLoc 20
3.1.4 Notes on use in hazardous areas according to FM 21

3.2 Installing and commissioning the CP 1542-5 21

3.3 Mode of the CPU - effect on the CP 23

4 Configuration, programming 25

4.1 Configuration in STEP 7 25

4.2 Program blocks for communication and distributed I/O 25

5 Diagnostics and maintenance 27

5.1 Diagnostics options 27

5.2 DP slave diagnostics 28

5.3 Standard diagnostics 29

5.4 Device-specific diagnostics in DP-V1 31

5.5 DP diagnostics frames when the CPU is in STOP 34

5.6 Replacing a module without a programming device 34

6 Technical specifications 35

7 Approvals 37
Index 43

Guide to the documentation 1

Introduction

The documentation of the SIMATIC products has a modular structure and covers topics relating to your automation system.

The complete documentation for the S7-1500 system consists of a system manual, function manuals and device manuals.

The STEP 7 information system (online help) also supports you when configuring and programming your automation system.

Overview of the documentation on communication with S7-1500

The following table lists additional documents that supplement this description of the CP 1542-5 and are available in the Internet.

Table 1- 1 Documentation for the CP 1542-5

Topic	Documentation	Most important contents
System description	System manual: S7-1500 Automation System (https://support.industry.siemens.com/cs/ww/en/view/59191792)	• Application planning • Installation • Connecting • Commissioning
Module properties	Device manual: Power supplies (https://support.industry.siemens.com/cs/ww/en/ps/13721/man)	• Connecting • Parameter assignment/ addressing • Interrupts, error messages, diagnostics and system alarms • Technical specifications • Dimensional drawing
	Device manual: Signal modules (https://support.industry.siemens.com/cs/ww/en/ps/13743/man)	
System diagnostics	Function manual: System diagnostics (https://support.industry.siemens.com/cs/ww/en/view/59192926)	• Overview • Diagnostics evaluation for hardware/software
Communication	Function manual: Communication (https://support.industry.siemens.com/cs/ww/en/view/59192925)	• Overview
	Function manual PROFINET with STEP 7 (https://support.industry.siemens.com/cs/ww/en/view/49948856)	• PROFINET basics • PROFINET functions • PROFINET diagnostics

Topic	Documentation	Most important contents
	Function manual PROFIBUS with STEP 7 (https://support.industry.siemens.com/cs/ww/en/view/59193579)	• PROFIBUS basics • PROFIBUS functions • PROFIBUS diagnostics
	Function manual: Web Server (https://support.industry.siemens.com/cs/ww/en/view/59193560)	• Function • Operation
Interference-free installation of control systems	Function Manual: Interference-free installation of control systems (https://support.industry.siemens.com/cs/ww/en/view/59193566)	• Basics • Electromagnetic compatibility • Lightning protection • Housing selection
Memory concept	Function manual: Structure and Use of the CPU Memory (https://support.industry.siemens.com/cs/ww/en/view/59193101)	• Design • Principle of operation • Use
Cycle and response times	Function manual: Cycle and Response Times (https://support.industry.siemens.com/cs/ww/en/view/59193566)	• Basics • Calculations
Analog value processing	Function manual: Analog value processing (https://support.industry.siemens.com/cs/ww/en/view/67989094)	• Wiring options • Tables of measured values

SIMATIC manuals

All current manuals for SIMATIC products are available for download free of charge from the Internet:

Link: (https://support.industry.siemens.com/cs/ww/en)

CP/CM documentation in the Manual Collection (article number A5E00069051)

The "SIMATIC NET Manual Collection" DVD contains the device manuals and descriptions of all SIMATIC NET products current at the time it was created. It is updated at regular intervals.

Product overview, functions

2

2.1 Product data

Article number, validity and product names

This description contains information on the following product:

CP 1542-5
Article number 6GK7 542-5FX00-0XE0
Hardware product version 1
Firmware version V2.0.4

Communications processor for connecting SIMATIC S7-1500 to PROFIBUS DP

View of the CP

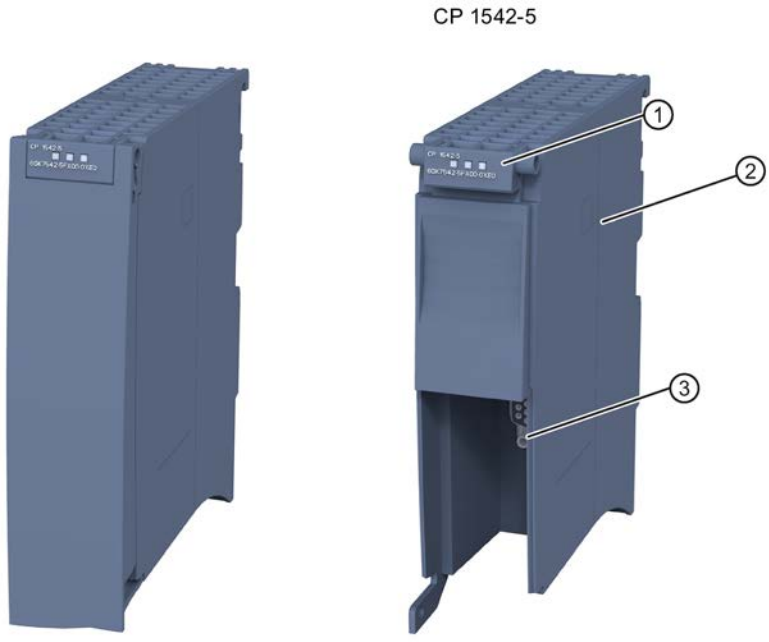

① LEDs
② Type plate
③ PROFIBUS interface: 1 x 9-pin D-sub female connector (RS-485)

Figure 2-1 View of the CP 1542-5 with closed (left) and open (right) front cover

2.2 Application

Application

The communications processor CP 1542-5 is intended for operation in an S7-1500 automation system. The CP 1542-5 allows the connection of an S7-1500 station to a PROFIBUS fieldbus system.

Supported communications services

In its current configuration, the CP 1542-5 supports the following communications services:

- **PROFIBUS DP master (class 1)**
  - DP master according to EN 50170, DP-V1
  - DP master mode for DP slaves according to PROFIBUS DP-V0 and DP-V1
  - DP master mode for Siemens DP slaves
  - Direct data exchange (DP slave to DP slave)

    As a DP master, the CP 1542-5 is capable of enabling direct data exchange for its assigned DP slaves.
  - SYNC/FREEZE

    The outputs or inputs can be synchronized by the user program using system function DPSYNC_FR.
- **PROFIBUS DP slave**

  DP slave according to EN 50170, DP-V0 / DP-V1

  Note

  DP master or DP slave

  The CP only supports operation either as DP master or DP slave.

- **S7 communication**
  - PG communication for uploading / downloading of S7 configuration, diagnostics and routing
  - Operator control and monitoring functions (HMI communication)
  - Data exchange over S7 connections

The services of the CP 1542-5 listed above can be used independently at the same time.

2.3 Further functions

Enabling /disabling DP slave - in the standard system

DP slaves can be activated and deactivated by the user program using system function D_ACT_DP.

Diagnostics requests

As a DP master (class 1), the CP 1542-5 supports diagnostics requests of a DP master (class 2).

Getting the bus topology in a DP master system

The CP 1542-5 operating as DP master supports the measurement of the PROFIBUS bus topology in a DP master system using a diagnostics repeater (DP slave).

System function DP_TOPOL in the user program can instruct diagnostics repeaters to measure the PROFIBUS BUS topology in a DP master system.

Time-of-day synchronization - time master or time slave

The CP 1542-5 can be enabled for time-of-day synchronization. As an alternative, the CP can be configured as time master or time slave on PROFIBUS.

- Time master: The CP is synchronized using the time of day in the S7-1500 station and outputs the time of day on PROFIBUS. The output interval can be set.
- Time slave: The CP receives time-of-day frames on PROFIBUS and outputs the time within the S7-1500 station. The output interval within the S7-1500 station is set permanently to 10 seconds.

Note

Recommendation for setting the time

It is advisable to set the time-of-day master so that time-of-day frames are sent at intervals of approximately 10 seconds. This achieves as small a deviation as possible between the internal time and the absolute time.

Web diagnostics

With the aid of Web diagnostics of the CPU, you read the diagnostics data from an S7 station via the Web browser on the PG/PC.

In terms of the CP, the Web pages provide the following information:

- Module and status information
- Special information on the DP master system (status of the DP slaves)

2.4 Configuration limits and performance data

2.4.1 Configuration limits

When using the CP type described here, the following limits apply:

- The number of CPs that can be operated in a rack depends on the CPU type being used.

  Note the information in the documentation of the CPU, see Guide to the documentation (Page 9)

Note

Measured values of transfer or reaction times

Measurements of transfer and reaction times in Ethernet, PROFIBUS and PROFINET networks for a series of configurations can be found on the Internet (https://support.industry.siemens.com/cs/ww/en/view/25209605)

2.4.2 Transmission speeds supported

The transmission speed is set with the SIMATIC STEP 7 configuration software.

Note

Remember the cable length

The permitted cable length must be kept to depending on the transmission speed.

Refer to the information in the section Technical specifications (Page 35)

2.4.3 Characteristic data of the DP interface

General characteristic data

No special program blocks are required for DP mode. The interfacing to the distributed I/O is by direct I/O access or using program blocks (SFCs/SFBs) of the CPU.

Table 2- 1 General characteristic data of DP mode

Characteristic	Explanation / values
Number of operable DP slaves	32
Max. size of the input area of all DP slaves	2 Kbytes
Max. size of the output area of all DP slaves	2 Kbytes

Characteristic	Explanation / values
Maximum size of the input area per DP slave	244 bytes
Maximum size of the output area per DP slave	244 bytes
Max. size of the consistent area for a module	128 bytes

Diagnostics requests

As a DP master (class 1), the CP 1542-5 supports diagnostics requests of a DP master (class 2).

DP startup behavior

Note

Increasing the default value for startup parameters - configuration of the CPU

In some situations, it is necessary to increase the default value for the startup parameter "Parameter assignment time for the distributed I/O" in the configuration of the CPU:

- When there is a large number of modules (DP slaves) configured that can be assigned parameters.
- When a high value is configured for the constant bus cycle time in the network properties of the PROFIBUS DP line.

2.4.4 Characteristics of S7 communication

General characteristic data

The following information is important when operating S7 connections:

Table 2- 2 General characteristics of S7 connections

Characteristic	Explanation / values
Number of S7 connections that can be operated via PROFIBUS	Operable in total: Max. 16 The value depends on the S71500 CPU being used.

2.5 Requirements for use

2.5.1 Project engineering

Configuration

The following version of STEP 7 is required to configure the CP:

STEP 7 version	Functions of the CP
STEP 7 Professional V12 SP1	The functionality of the CP V1.0 can be configured.
STEP 7 Professional V15	The functionality of the CP V2.0 can be configured.

Downloading the configuration data

When the configuration data is downloaded to the CPU, the CP is supplied with the relevant configuration data. The configuration data can be downloaded to the CPU via PROFIBUS or any PROFINET interface of the S7-1500 station.

2.5.2 Programming

Programming

The following version of STEP 7 is required to program the CP:

STEP 7 version	Functions of the CM
STEP 7 Professional V15	The full functionality of the CP 1542-5 (6GK7 542 5FX00 0XE0) can be programmed.

2.6 LEDs

The status and error displays of the CP 1542-5 are described below.

You can find additional information on "Interrupts" in the STEP 7 online help.

You can find additional information on "Diagnostics" and "System alarms" in the System diagnostics (https://support.industry.siemens.com/cs/ww/en/view/59192926) function manual.

LED display

The following figure shows the LEDs of the CP 1542-5 .

① RUN/STOP LED
② ERROR LED
③ MAINT LED

Figure 2-2 LED display of the CP 1542-5 (without front cover)

Meaning of the LED displays

The CP 1542-5 has 3 LEDs to display the current operating status and the diagnostics status and these have the following meanings:

- RUN/STOP LED (one-color LED: green)
- ERROR LED (one-color LED: red)
- MAINT LED (one-color LED: yellow)

The following table shows the meaning of the various combinations of colors of the RUN/STOP, ERROR and MAINT LEDs.

Table 2- 3 Meaning of the LEDs

RUN/STOP LED	ERROR LED	MAINT LED	Meaning
LED off	LED off	LED off	No supply voltage on the CP or supply voltage too low.
LED lit green	LED lit red	LED lit yellow	LED test during startup
LED lit green	LED lit red	LED off	Startup (booting the CP)
LED lit green	LED off	LED off	CP is in RUN mode. No disruptions
LED flashing green	LED off	LED off	No CP configuration exists Loading firmware
LED lit green	LED flashing red	LED off	A diagnostics event has occurred.
LED lit green	LED off	LED lit yellow	Maintenance, maintenance is demand-ed.
LED lit green	LED off	LED flashing yellow	Maintenance is required. Downloading the user program
LED flashing green	LED flashing red	LED flashing yellow	Module fault

Diagnostics with LEDs

Diagnostics using the LEDs is the first means of narrowing down errors/faults. To narrow the error/fault down even further, evaluate the message on the display of the S7-1500 CPU. If errors/faults occur, you can also identify them using the Web server or by evaluating the diagnostics buffer of the CPU. The diagnostics buffer of the CPU contains plain language information about the error/fault that has occurred. The diagnostics buffer is accessible via STEP 7, the display and the Web server.

Installation, wiring, commissioning, operation 3

3.1 Important notes on using the device

Safety notices on the use of the device

Note the following safety notices when setting up and operating the device and during all associated work such as installation, connecting up or replacing the device.

3.1.1 Notes on use in hazardous areas

⚠ WARNING
The device may only be operated in an environment with pollution degree 1 or 2 (see IEC 60664-1).

⚠ WARNING
EXPLOSION HAZARD Do not connect or disconnect cables to or from the device when a flammable or combustible atmosphere is present.

⚠ WARNING
EXPLOSION HAZARD Replacing components may impair suitability for Class 1, Division 2 or Zone 2.

⚠ WARNING
When used in hazardous environments corresponding to Class I, Division 2 or Class I, Zone 2, the device must be installed in a cabinet or a suitable enclosure.

WARNING

DIN rail

In the ATEX and IECEx area of application only the Siemens DIN rail 6ES5 710-8MA11 may be used to mount the modules.

3.1.2 Notes on use in hazardous areas according to ATEX / IECEx

WARNING

Requirements for the cabinet/enclosure

To comply with EU Directive 94/9 (ATEX95), the enclosure or cabinet must meet the requirements of at least IP54 in compliance with EN 60529.

WARNING

Cable

If the cable or conduit entry point exceeds 70 °C or the branching point of conductors exceeds 80 °C, special precautions must be taken. If the equipment is operated in an air ambient in excess of 50 °C, only use cables with admitted maximum operating temperature of at least 80 °C.

WARNING

Take measures to prevent transient voltage surges of more than 40% of the rated voltage. This is the case if you only operate devices with SELV (safety extra-low voltage).

3.1.3 Notes on use in hazardous areas according to UL HazLoc

WARNING

EXPLOSION HAZARD

You may only connect or disconnect cables carrying electricity when the power supply is switched off or when the device is in an area without inflammable gas concentrations.

This equipment is suitable for use in Class I, Division 2, Groups A, B, C and D or non-hazardous locations only.

This equipment is suitable for use in Class I, Zone 2, Group IIC or non-hazardous locations only.

3.1.4 Notes on use in hazardous areas according to FM

WARNING

EXPLOSION HAZARD

You may only connect or disconnect cables carrying electricity when the power supply is switched off or when the device is in an area without inflammable gas concentrations.

This equipment is suitable for use in Class I, Division 2, Groups A, B, C and D or non-hazardous locations only.

This equipment is suitable for use in Class I, Zone 2, Group IIC or non-hazardous locations only.

WARNING

EXPLOSION HAZARD

The equipment is intended to be installed within an ultimate enclosure. The inner service temperature of the enclosure corresponds to the ambient temperature of the module. Use installation wiring connections with admitted maximum operating temperature of at least 30 ºC higher than maximum ambient temperature.

3.2 Installing and commissioning the CP 1542-5

WARNING

Read the system manual "S7-1500 Automation System"

Prior to installation, connecting up and commissioning, read the relevant sections in the system manual "S7-1500 Automation System" (references to documentation, refer to the section Guide to the documentation (Page 9)).

Make sure that the power supply is turned off when installing/uninstalling the devices.

Configuration

Commissioning the CP fully is only possible if the STEP 7 project data is complete.

Procedure for installation and commissioning

Step	Execution	Notes and explanations
1	When installing and connecting up, keep to the procedures described for installing I/O modules in the system manual "S7-1500 Automation System".	
3	Connect the CP to PROFIBUS via the RS-485 socket.	Underside of the CP
4	Turn on the power supply.	
5	Close the front covers of the module and keep them closed during operation.	
6	The remaining steps in commissioning involve downloading the STEP 7 project data.	The STEP 7 project data of the CP is transferred when you download to the station. To load the station, connect the engineering station on which the project data is located to the Ethernet/MPI interface of the CPU. You will find more detailed information on loading in the following sections of the STEP 7 online help: • Downloading project data • Using online and diagnostics functions

PROFIBUS interface

The table below shows the terminal assignment of the PROFIBUS interface. The assignment corresponds to the standard assignment of RS485 interface.

Table 3- 1 Terminal assignment PROFIBUS interface

View	Signal name		Designation
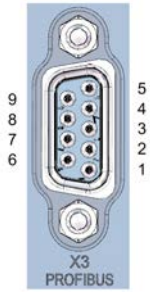	1	-	-
	2	-	-
	3	RxD/TxD-P	Data line B
	4	RTS	Request To Send
	5	M5V2	Data reference potential (from station)
	6	P5V2	Supply plus (from station)
	7	-	-
	8	RxD/TxD-N	Data line A
	9	-	-

Note

PROFIBUS interface

The CP provides no 24 VDC power supply on the PROFIBUS interface. I/O devices (for example, PC adapter 6ES7972-0CB20-0XA0) are therefore not operational on the interface).

3.3 Mode of the CPU - effect on the CP

You can change the mode of the CPU between RUN and STOP using the STEP 7 configuration software.

Depending on the operating status of the CPU, the CP behaves as described below.

Changing the CPU from STOP to RUN:

The CP loads configured and/or downloaded data into the work memory and then changes to RUN mode.

Changing the CPU from RUN to STOP:

The reaction is as follows in STOP:

- DP master mode: Change to the CLEAR mode.
- DP slave mode: Input data is sent to the DP master with the value "0" and a DP diagnostics alarm is sent.
- The following functions remain enabled:
  - Configuration and diagnostics of the CP (relevant system connections for configuration, diagnostics, and PG channel routing are retained);
  - S7 routing function
  - Time-of-day synchronization

Configuration, programming 4

4.1 Configuration in STEP 7

Configuration in STEP 7

You configure the CP in SIMATIC STEP 7. You will find the required version in the section Project engineering (Page 16).

You will find complete information on configuration in the STEP 7 information system.

Loading and saving the configuration data

When you load the station, the project data of the station including the configuration data of the CP is stored on the CPU. You will find information on loading the station in the STEP 7 information system.

4.2 Program blocks for communication and distributed I/O

Program blocks (instructions) for communications services

For communications services, there are preprogrammed program blocks (instructions) available as the interface in your STEP 7 user program.

Table 4- 1 Instructions for PROFIBUS DP

System blocks and system functions	Meaning when used with CM
DPSYC_FR	DP slaves synchronize / freeze inputs (SYNC/FREEZE instruction)
DPNRM_DG	Reading the diagnostics data of a DP slave
DP_TOPOL	Detecting the topology for the DP master system
WRREC	Writing the data record of a DP slave
RDREC	Reading the data record of a DP slave
GETIO	Reading the process image of a DP standard slave
SETIO	Transferring the process image of a DP standard slave
GETIO_PART	Reading the process image partition of a DP standard slave
SETIO_PART	Transferring the process image partition of a DP standard slave
D_ACT_DP	Disable / enable DP slaves
DPRD_DAT	Reading consistent data of a DP standard slave (user data)

System blocks and system functions	Meaning when used with CM
DPWR_DAT	Writing consistent data of a DP standard slave
RALRM	Event-driven reading of interrupt information (diagnostics, pull/plug, hardware interrupt) and DPV1-specific interrupts (update, status, vendor-specific interrupt)

Refer to the documentation of the program blocks in the information system of STEP 7.

Calling program blocks (instructions) for distributed I/O

Several calls are necessary for the instructions of the distributed I/O.

The time required to process the job depends on load, round-trip time and transmission speed. If these instructions are called in a loop within one cycle, the cycle time could be exceeded.

Exception: Only one call is required for RALRM "receive alarm".

Program blocks for DPV1 according to the PNO standard (PROFIBUS user organization):

- RDREC

  "Read data record from a DP slave" corresponds to SFC59 in terms of function
- WRREC

  "Write data record to a DP slave" corresponds to SFC58 in terms of function
- RALRM

  "Read interrupt information from a DP slave" - call in an interrupt OB

Diagnostics and maintenance 5

5.1 Diagnostics options

Diagnostics options

You have the following diagnostics options available for the module:

- The LEDs of the module

  For information on the LED displays, refer to the section LEDs (Page 17).

- STEP 7: The "Diagnostics" tab in the Inspector window

  Here, you can obtain the following information on the selected module:

  – Entries in the diagnostics buffer of the CPU

  – Information on the online status of the module

- STEP 7: Diagnostics functions in the "Online > Online and diagnostics" menu

  Here, you can obtain static information on the selected module:

  – General information on the module

  – Diagnostics status

  – Information on the PROFIBUS interface

  You can obtain further information on the diagnostics functions of STEP 7 in the STEP 7 online help.

- DP diagnostics

  The DP diagnostics of the CP is described below.

  The evaluation of diagnostics data records requested by the DP master and the diagnostics interrupts or diagnostics alarms of the DP slaves is handled in the user program of the DP master station.

5.2 DP slave diagnostics

DP-V1 slave: Diagnostics interrupt

The diagnostics data is transferred as a diagnostics interrupt. Diagnostics interrupts must be acknowledged by the DP master.

Supported diagnostics functions

The CP 1542-5 supports the following blocks of DP diagnostics:

- Standard diagnostics (6 bytes)
- Identifier-related diagnostics (2 to 17 bytes), depending on the number of configured transfer areas
- Module status (5 to 35 bytes), depending on the number of configured transfer areas
- If it exists: Diagnostics interrupt (8 bytes)

User program (DP master)

To read out the diagnostics data of the DP slave (DP single diagnostics), use the "DPNRM_DG" instruction on the DP master.

Diagnostics interrupts of DP-V1 slaves are evaluated in the user program of the master using the "RALRM" instruction.

You will find the required parameter assignment for the instructions in the STEP 7 online help.

Below, there is an overview of the structure of the diagnostics data.

Overview of standard diagnostics

Standard diagnostics	
Byte	Meaning
0	Station status 1
1	Station status 2
2	Station status 3
3	Master address
4...5	Vendor ID of the slave

Overview of device-specific diagnostics

The device-specific diagnostics data depends on the protocol variant operating on the DP slave:

- DP-V1 slave

Table 5- 1 Overview of device-specific diagnostics of the CP with DP-V1 slaves

Device-specific diagnostics		
Byte	Meaning	
0	Header	
1	Variant Interrupt type	Variant Status type
2	Slot number	
3	Variant Interrupt specifier	Variant Status specifier
4...62	Module-specific diagnostics data	

5.3 Standard diagnostics

The coding of the standard diagnostics bytes is explained below.

Byte 0: Station status 1

Table 5- 2 Structure of station status byte 1

Bit no.	Name	Explanation
7	Master_Lock	The DP slave was assigned parameters by a different DP master. The DP slave can only be read by the configured productive DP master. This bit is set by the DP master when its bus address differs from the configured address.
6	Parameter_Fault	The last received parameter assignment frame was bad or not permitted. The DP slave sets this bit. Solution: Check the parameter settings for illegal parameters.
5	Invalid_Slave_Response	This bit is set by the DP master when no plausible response has been received from the DP slave.
4	Service_Not_Supported	This bit is set by the DP master when the master has requested a function that is not supported by the DP slave. Solution: Change the parameter setting to disable the function on the master.
3	Ext_Diag	This bit is set by the slave. • Bit =1: There is diagnostics data in the slave-specific diagnostics area. The diagnostics data can be evaluated in the user program of the master. • Bit =0: There may be status information in the slave-specific diagnostics area. The status information can be evaluated in the user program of the master.
2	Slave_Config_Check_Fault	The configuration data sent by the DP master is rejected by the DP slave. Cause: Configuration error. Solution: Change configuration.

Bit no.	Name	Explanation
1	Station_Not_Ready	The DP slave is not ready for productive data exchange. This is a temporary status that cannot be influenced by the DP master.
0	Station_Non_Existent	The DP slave is not reacting on the bus. This bit is set by the DP master 1 (the slave sets this bit permanently to 0). If the bit is set, the diagnostic bits have the state of the last diagnostics alarm or the initial value.

Byte 1: Station status 2

Table 5- 3 Structure of station status byte 2

Bit no.	Name	Explanation
7	Deactivated	The DP slave was identified as being not active in the local parameter record and it is not polled cyclically.
6	Reserved	- reserved -
5	Sync_Mode	The DP slave is in SYNC mode. The bit is set by the slave.
4	Freeze_Mode	The DP slave is in FREEZE mode. The bit is set by the slave.
3	Watchdog_On	Watchdog monitoring is active on the DP slave. The bit is set by the slave.
2	Status_From_Slave	Bit =1: The diagnostics information comes from the DP slave. The bit is set permanently to 1 by the slave.
1	Static_Diag	Static diagnostics If the DP slave sets this bit, the DP master must fetch diagnostics data from the DP slave until the DP slave resets the bit. The DP slave sets this bit, for example when it is not capable of data transfer.
0	Parameter_Request	The DP slave sets this bit when it needs to have new parameters assigned and be reconfigured. If bit 0 and bit 1 are both set, bit 0 has the higher priority.

Byte 2: Station status 3

Table 5- 4 Structure of station status byte 3

Bit no.	Name	Explanation
7	Ext_Data_Overflow	If this bit is set, there is more diagnostics information available than indicated in the diagnostics data. This data cannot be displayed.
6...0	Reserved	- reserved -

Byte 3: Master address

The address of the DP master that assigned parameters to this DP slave is entered in the "Master_Add" byte.

If the DP slave did not have parameters assigned to it by any DP master, the DP slave sets the address 255 in this byte.

Bytes 4 and 5: Vendor ID of the slave ("Ident_Number")

The vendor ID ("Ident_Number") for the DP slave type is entered in bytes 4 and 5. This identifier can be used to identify the slave.

The more significant part of the value is in byte 5.

5.4 Device-specific diagnostics in DP-V1

There are two variants of device-specific diagnostics with DP-V1 slaves:

- Interrupt type
- Status type

The two variants differ from each other in the coding of byte 1, bit 7 of the device-specific diagnostics data. The difference is component-specific.

Byte 0: Header

The two most significant bits have the value 00. This identifies the "module-specific diagnostics data" block (see bytes 4...62) as a whole.

The remaining six bits indicate the length of the data field including byte 0.

Byte 1: Variant "Interrupt type"

Table 5- 5 Structure of byte 1 of the device-specific diagnostics (variant "interrupt type")

Bit no.	Meaning	
7	Value	Meaning
	0	**Interrupt**
6...0	**Alarm_Type**	
	0	- reserved -
	1	Diagnostics interrupt
	2	Hardware interrupt
	3	Pull interrupt
	4	Plug interrupt
	5	Status interrupt
	6	Update interrupt
	7...31	- reserved -
	32...126	Vendor-specific
	127	- reserved -

If status interrupts are received in quick succession, older status interrupts may be overwritten by newer interrupts.

Byte 1: Variant "Status type"

Table 5- 6 Structure of byte 1 of the device-specific diagnostics (variant "status type")

Bit no.	Meaning	
7	Value	Meaning
	1	Status information
6...0	Status_Type	
	0	- reserved -
	1	Status information
	2	Modul_Status (see also bytes 4...62)
	3...31	- reserved -
	32...126	Vendor-specific
	127	- reserved -

Byte 2: Slot number

Slot number (1...n) of the slave module

0 is the placeholder for the entire device.

Byte 3: Variant "Interrupt specifier"

Table 5- 7 Structure of byte 3 of the device-specific diagnostics (variant "interrupt specifier")

Bit no.	Meaning	
7...3	Seq_No	Unique identifier of an interrupt alarm
2	Add_Ack	If this bit is set, the DP-V1 master indicates that this interrupt requires user acknowledgment in the form of a WRITE job.
1...0	Alarm_Specifier	
	0	No further distinction
	1	Interrupt appears, slot disrupted The slot generates an interrupt due to an error.
	2	Interrupt disappears, slot OK The slot generates the interrupt and indicates that it has no further errors.
	3	Interrupt disappears, slot still disrupted The slot generates an interrupt and indicates that it has further errors.

Byte 3: Variant "Status specifier"

Table 5- 8 Structure of byte 3 of the device-specific diagnostics (variant "status specifier")

Bit no.	Meaning	
7...2	- reserved -	
1...0	Status_Specifier	
	0	No further distinction
	1	Status appears
	2	Status disappears
	3	- reserved -

Bytes 4...62: Module-specific diagnostics: General coding

This byte contains data with module-specific information that is described in the relevant module documentation. The relevant module is identified by the slot (byte 2).

Bytes 4...62: Module-specific diagnostics with "status type" and "module status"

With the variant "status type" of the device-specific diagnostics of DP-V1 slaves (see byte 1, bit 7) and the setting "Modul_Status" (see byte 1, bits 0...6), there are two status bits here for each slot (= module). Bits not required are set to 0.

Table 5- 9 Structure of the bytes for module-specific diagnostics data

Byte	Bit assignment							
Bit	7	6	5	4	3	2	1	0
4	Module status 4		Module status 3		Module status 2		Module status 1	
5	Module status 8		Module status 7		Module status 6		Module status 5	
...	...		...		...		...	
62	Module status 236		Module status 235		Module status 234		Module status 233	

The status bits are coded as follows:

Table 5- 10 Meaning of the values of the status bits

Value	Meaning
00	Data valid
01	Data invalid - error (for example short-circuit)
10	Data invalid - wrong module
11	Data invalid - no module plugged in

5.5 DP diagnostics frames when the CPU is in STOP

DP diagnostics frames when the CPU is in STOP

All diagnostics frames from DPV0 standard slaves and all DP interrupt frames from DP-S7/DPV1 standard slaves arriving when the CPU is in STOP are forwarded to the CPU. During module startup, the diagnostics frames must then be evaluated by a suitable user program.

5.6 Replacing a module without a programming device

General procedure

The configuration data of the CP is stored on the CPU. This means that this module can be replaced by a module of the same type (identical article number) without using a PG.

Technical specifications

6

Note the information in the System description of SIMATIC S7-1500 (Page 9).

In addition to the information in the system description, the following technical specifications apply to the module.

	6GK7 542-5FX00-0XE0
Product type name	CP 1542-5
Connection to PROFIBUS	
• Number	1 x PROFIBUS interface
Design of the PROFIBUS interface	
• Connector	1 x D-sub female connector (RS-485)
• Transmission speed	9.6 Kbps, 19.2 Kbps, 45.45 Kbps 93.75 Kbps, 187.5 Kbps, 500 Kbps 1.5 Mbps, 3 Mbps, 6 Mbps, 12 Mbps
Electrical data	
Power supply	
• via S7-1500 backplane bus	15 V
Current consumption	
• From backplane bus	100 mA
• Power dissipation	1.5 W
Insulation	
Insulation tested with	707 VDC (type test)
Design, dimensions and weight	
Module format	Compact module S7-1500, single width
Degree of protection	IP20
Weight	Approx. 270 g
Dimensions (W x H x D)	35 x 142 x 129 mm
Installation options	Mounting in an S7-1500 rack
Product functions *	

* You will find the product functions in the section Configuration limits and performance data (Page 14).

Approvals 7

Approvals issued

Note

Issued approvals on the type plate of the device

The specified approvals - with the exception of the certificates for shipbuilding - have only been obtained when there is a corresponding mark on the product. You can check which of the following approvals have been granted for your product by the markings on the type plate. The approvals for shipbuilding are an exception to this.

Certificates for shipbuilding and national approvals

The device certificates for shipbuilding and special national approvals can be found in Siemens Industry Online Support on the Internet:
Link: (https://support.industry.siemens.com/cs/ww/en/ps/15247/cert)

EC declaration of conformity

The product meets the requirements and safety objectives of the following EC directives and it complies with the harmonized European standards (EN) for programmable logic controllers which are published in the official documentation of the European Union.

- **2014/34/EU (ATEX explosion protection directive)**

  Directive of the European Parliament and the Council of 26 February 2014 on the approximation of the laws of the member states concerning equipment and protective systems intended for use in potentially explosive atmospheres, official journal of the EU L96, 29/03/2014, pages. 309-356

- **2014/30/EU (EMC)**

  EMC directive of the European Parliament and of the Council of February 26, 2014 on the approximation of the laws of the member states relating to electromagnetic compatibility; official journal of the EU L96, 29/03/2014, pages. 79-106

- **2011/65/EU (RoHS)**

  Directive of the European Parliament and of the Council of 8 June 2011 on the restriction of the use of certain hazardous substances in electrical and electronic equipment

The EC Declaration of Conformity is available for all responsible authorities at:

Siemens Aktiengesellschaft
Division Process Industries and Drives
Process Automation

76181 Karlsruhe
Germany

You will find the EC Declaration of Conformity on the Internet at the following address:
Link: (https://support.industry.siemens.com/cs/ww/en/ps/15671/cert)

The current versions of the standards can be seen in the EC Declaration of Conformity and in the certificates.

IECEx

The product meet the requirements of explosion protection according to IECEx.

IECEx classification:

- Ex nA IIC T4 Gc

  Certificate: IECEx DEK 14.0089X

  Applied standards:

  – EN 60079-0 - Explosive atmospheres - Part 0: Equipment - General requirements

  – EN 60079-15 - Explosive atmospheres - Part 15: Equipment protection by type of protection 'n'

- Ex ec IIC T4 Gc

  Certificate: IECEx DEK 18.0019X

  Applied standards:

  – EN 60079-0 - Explosive atmospheres - Part 0: Equipment - General requirements

  – EN 60079-7 - Explosive Atmospheres - Part 7: Equipment protection by increased safety 'e'

You can see the current versions of the standards in the IECEx certificate that you will find on the Internet at the following address:
Link: (https://support.industry.siemens.com/cs/ww/en/ps/15671/cert)

The conditions must be met for the safe deployment of the product according to the section Notes on use in hazardous areas according to ATEX / IECEx (Page 20).

You should also note the information in the document "Use of subassemblies/modules in a Zone 2 Hazardous Area" that you will find on the Internet at the following address:
Link: (https://support.industry.siemens.com/cs/ww/en/view/78381013)

ATEX

The product meets the requirements of the EC directive:2014/34/EC "Equipment and Protective Devices for Use in Potentially Explosive Atmospheres".

ATEX approval:

- II 3 G Ex nA IIC T4 Gc

  Type Examination Certificate: DEKRA 12ATEX0240 X

  Applied standards:

  – EN 60079-0 - Explosive atmospheres - Part 0: Equipment - General requirements

  – EN 60079-15 - Explosive atmospheres - Part 15: Equipment protection by type of protection 'n'

- II 3 G Ex ec IIC T4 Gc

  Type Examination Certificate: DEKRA 18ATEX0027 X

  Applied standards:

  – EN 60079-0 - Explosive atmospheres - Part 0: Equipment - General requirements

  – EN 60079-7 - Explosive Atmospheres - Part 7: Equipment protection by increased safety 'e'

The current versions of the standards can be seen in the EC Declaration of Conformity, see above.

The conditions must be met for the safe deployment of the product according to the section Notes on use in hazardous areas according to ATEX / IECEx (Page 20).

You should also note the information in the document "Use of subassemblies/modules in a Zone 2 Hazardous Area" that you will find here:

- In the SIMATIC NET Manual Collection in
  "All documents" > "Use of subassemblies/modules in a Zone 2 Hazardous Area"
- On the Internet at the following address:
  Link: (https://support.industry.siemens.com/cs/ww/en/view/78381013)

EMC

Until 19.04.2016 the product meets the requirements of the EC Directive 2014/30/EU "Electromagnetic Compatibility" (EMC directive).

Applied standards:

- EN 61000-6-4

  Electromagnetic compatibility (EMC) - Part 6-4: Generic standards - Emission standard for industrial environments

- EN 61000-6-2

  Electromagnetic compatibility (EMC) - Part 6-2: Generic standards - Immunity for industrial environments

RoHS

The product meets the requirements of the EC directive 2011/65/EU on the restriction of the use of certain hazardous substances in electrical and electronic equipment.

Applied standard:

- EN 50581

c(UL)us

Applied standards:

- Underwriters Laboratories, Inc.: UL 61010-1 (Safety Requirements for Electrical Equipment for Measurement, Control, and Laboratory Use - Part 1: General Requirements)
- IEC/UL 61010-2-201 (Safety requirements for electrical equipment for measurement, control and laboratory use. Particular requirements for control equipment)
- Canadian Standards Association: CSA C22.2 No. 142 (Process Control Equipment)

Report / UL file: E 85972 (NRAG, NRAG7)

cULus Hazardous (Classified) Locations

Underwriters Laboratories, Inc.: cULus IND. CONT. EQ. FOR HAZ. LOC.

Applied standards:

- ANSI ISA 12.12.01
- CSA C22.2 No. 213-M1987

APPROVED for Use in:

- Cl. 1, Div. 2, GP. A, B, C, D T3...T6
- Cl. 1, Zone 2, GP. IIC T3...T6

Ta: Refer to the temperature class on the type plate of the CP

Report / UL file: E223122 (NRAG, NRAG7)

Note the conditions for the safe deployment of the product according to the section Notes on use in hazardous areas according to UL HazLoc (Page 20).

Note

For devices with C-PLUG memory: The C-PLUG memory module may only be inserted or removed when the power is off.

CSA

CSA Certification Mark Canadian Standard Association (CSA) nach Standard C 22.2 No. 142:

- Certification Record 063533–C-000

FM

Factory Mutual Approval Standards:

- Class 3600
- Class 3611
- Class 3810
- ANSI/ISA 61010-1

Report Number 3049847

Class I, Division 2, Group A, B, C, D, T4

Class I, Zone 2, Group IIC, T4

You will find the temperature class on the type plate on the module.

Australia - RCM

The product meets the requirements of the AS/NZS 2064 standards (Class A).

Canada

This class A digital device meets the requirements of the Canadian standard ICES-003.

AVIS CANADIEN

Cet appareil numérique de la classe A est conforme à la norme NMB-003 du Canada.

MSIP 요구사항 - For Korea only

A급 기기(업무용 방송통신기자재)

이 기기는 업무용(A급) 전자파 적합기기로서 판매자 또는 사용자는 이 점을 주의하시기 바라며, 가정 외의 지역에서 사용하는것을 목적으로 합니다.

Note that in terms of the emission of interference, this device corresponds to limit class A. This device can be used in all areas except for residential environments.

Current approvals

SIMATIC NET products are regularly submitted to the relevant authorities and approval centers for approvals relating to specific markets and applications.

If you require a list of the current approvals for individual devices, consult your Siemens contact or check the Internet pages of Siemens Industry Online Support:

Link: (https://support.industry.siemens.com/cs/ww/en/ps/15671/cert)

Index

B

Bus topology, 13

C

Cable length, 14
Changeover
    CPU from RUN to STOP, 23
    CPU from STOP to RUN, 23
Characteristic data, 14, 15
Configuration data
    Configuration and downloading, 16
CP, 3

D

Diagnostics, 17
Diagnostics options, 27
Diagnostics repeater (DP slave), 13
Diagnostics requests, 13, 15, 15
Direct data exchange, 12
Disposal, 5
Downloading project data, 22
DP diagnostics, 27
DP diagnostics frames when the CPU is in STOP, 34
DP master (class 1), 12, 13
DP master mode, 23
DP masters (class 2), 13
DP mode
    General characteristic data, 14
DP slave, 12, 13
DP slave mode, 23
DP slaves
    General characteristic data, 14

E

EMC - electromagnetic compatibility, 37
Error status codes, 17

G

Glossary, 5

I

Installation and commissioning, 22
Instruction
    DE_ACT, 13
Interrupts, 17

L

Limitations
    Number of operable CPs, 14

M

Manual Collection, 10
Measured values
    of values of transfer or reaction times, 14
Module replacement, 34

N

Number of operable CPs, 14

O

Operating mode of the CPU, 23

P

PG/OP communication, 12
PROFIBUS
    DP-V0 and DPV1 standard, 12
PROFIBUS DP
    EN 50170 DPV1, 12
PROFIBUS interface, 22

R

Recycling, 5
RS-485 interface, 22
RS-485 socket, 22

S

S7 communication, 12
S7 connections, 15
    General characteristic data, 15
S7 routing function, 23
Safety notices, 19
Siemens DP slave, 12
SIMATIC NET glossary, 5
SIMATIC NET Manual Collection, 10
Startup parameters, 15
Status and error displays, 17
STEP 7, 3, 16
SYNC/FREEZE, 12
System alarms, 17

T

Time master, 13
Time slave, 13
Time-of-day synchronization, 13, 23
Transmission speed, 14

W

Web diagnostics, 13
    S7 connections, 13

SIEMENS

SIMATIC NET

S7-1500 - Industrial Ethernet CP 1543-1

Operating Instructions

Preface

Application and functions 1

Installation, connecting up, commissioning, operation 2

Configuration, program blocks 3

Diagnostics and upkeep 4

Technical specifications 5

Approvals 6

Additional information A

07/2021

C79000-G8976-C289-08

Legal information

Warning notice system

This manual contains notices you have to observe in order to ensure your personal safety, as well as to prevent damage to property. The notices referring to your personal safety are highlighted in the manual by a safety alert symbol, notices referring only to property damage have no safety alert symbol. These notices shown below are graded according to the degree of danger.

⚠ DANGER
indicates that death or severe personal injury **will** result if proper precautions are not taken.

⚠ WARNING
indicates that death or severe personal injury **may** result if proper precautions are not taken.

⚠ CAUTION
indicates that minor personal injury can result if proper precautions are not taken.

NOTICE
indicates that property damage can result if proper precautions are not taken.

If more than one degree of danger is present, the warning notice representing the highest degree of danger will be used. A notice warning of injury to persons with a safety alert symbol may also include a warning relating to property damage.

Qualified Personnel

The product/system described in this documentation may be operated only by **personnel qualified** for the specific task in accordance with the relevant documentation, in particular its warning notices and safety instructions. Qualified personnel are those who, based on their training and experience, are capable of identifying risks and avoiding potential hazards when working with these products/systems.

Proper use of Siemens products

Note the following:

⚠ WARNING
Siemens products may only be used for the applications described in the catalog and in the relevant technical documentation. If products and components from other manufacturers are used, these must be recommended or approved by Siemens. Proper transport, storage, installation, assembly, commissioning, operation and maintenance are required to ensure that the products operate safely and without any problems. The permissible ambient conditions must be complied with. The information in the relevant documentation must be observed.

Trademarks

All names identified by ® are registered trademarks of Siemens AG. The remaining trademarks in this publication may be trademarks whose use by third parties for their own purposes could violate the rights of the owner.

Disclaimer of Liability

We have reviewed the contents of this publication to ensure consistency with the hardware and software described. Since variance cannot be precluded entirely, we cannot guarantee full consistency. However, the information in this publication is reviewed regularly and any necessary corrections are included in subsequent editions.

Siemens AG
Digital Industries
Postfach 48 48
90026 NÜRNBERG
GERMANY

C79000-G8976-C289-08
Ⓟ 07/2021 Subject to change

Copyright © Siemens AG 2013 - 2021.
All rights reserved

Preface

Validity

This description contains information on the following product:

CP 1543-1
Article number 6GK7 543-1AX00-0XE0
Hardware product version 2
Firmware version V3.0
Communications processor for SIMATIC S7-1500

View of the CP 1543-1

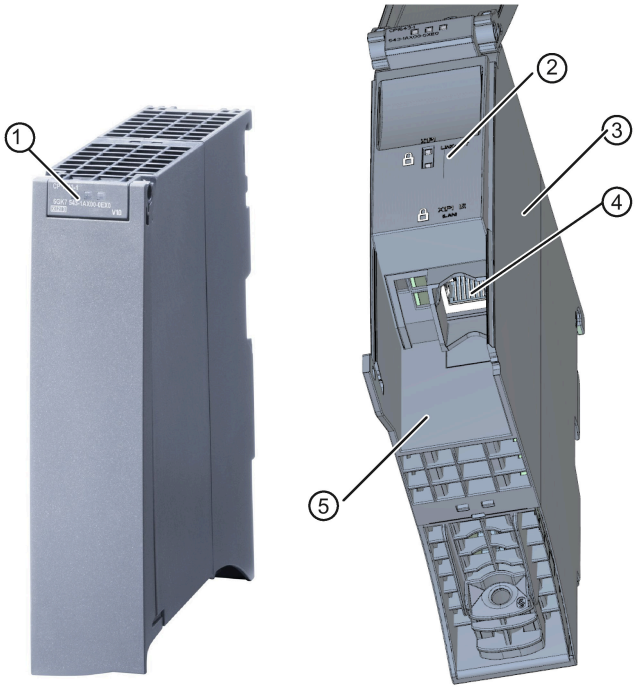

① LEDs for status and error displays
② LED displays of the Ethernet interface for connection status and activity
③ Type plate
④ Ethernet port: 1 x 8-pin RJ-45 jack
The padlock icon symbolizes the interface to the external, non-secure subnet.
⑤ Label with MAC address

Figure 1 View of the CP 1543-1 with closed (left) and open (right) front cover

Address label: Unique MAC address preset for the CP

The CP ships with a default MAC address. The MAC address is printed on the housing.

If you configure a MAC address (ISO transport connections), we recommend that you use the printed MAC address for the configuration! This ensures that you assign a unique MAC address in the subnet!

Purpose of the documentation

This manual supplements the S7-1500 system manual.

With the information in this manual and the system manual, you will be able to commission the communications processor.

New in this issue

Firmware version V3.0 with the following new functions:

- Network authentication according to IEEE 802.1X, refer to section Network authentication (Page 75).
- Connection to SINEMA Remote Connect, refer to section Communication via SINEMA RC (Page 14).
- Improvements in the use of the virtual interface of the CPU, refer to section Virtual interface of the CPU (Page 41).
- Configurable CP diagnostics during runtime, refer to section CP diagnostics (Page 46).
- Configurable UDP buffering, refer to section Settings (Page 37).

Replaced edition

Edition 12/2019

Version history

- Firmware version V2.2 with the following new functions:
  - Support of the virtual interface of the CPU, see section Virtual interface of the CPU (Page 41).
- Firmware version V2.1 with the following new functions:
  - Extended security settings using IP routing via the backplane bus, see section IP routing (Page 40).
- Firmware version V2.0 with the following new functions:
  - Secure OUC (Open User Communication) via TCP/IP
  - Secure Mail: New system data types (SDTs) for transferring e-mails

    Alternative: Non secure transfer via port 25 or secure transfer via port 587
  - Operation as FTP server: Access to the SIMATIC memory card of the CPU
  - IP routing via the backplane bus

Current manual release on the Internet

You will find the current version of this manual on the Internet pages of Siemens Industry Online Support:

Link: (https://support.industry.siemens.com/cs/ww/en/ps/15340/man)

Sources of information and other documentation

See below, Documentation guide.

Notes on this document

Abbreviations and names

- CP / Module

  Used instead of the full product name CP 1543-1

- STEP 7

  Used for the configuration tool STEP 7 Professional

Cross-references

In this manual, there are often cross-references to other sections. To be able to return to the initial page after jumping to a cross-reference, some PDF readers support the command <Alt>+<left arrow>.

Search

To show all places where a term was found in a list, some PDF readers support the command <Ctrl>+<Shift>+<F>.

License conditions

Note

Open source software

The product contains open source software. Read the license conditions for open source software carefully before using the product.

You will find license conditions in the following document on the supplied data medium:

- OSS_CP15431_99.pdf

Security information

Siemens provides products and solutions with industrial security functions that support the secure operation of plants, systems, machines and networks.

In order to protect plants, systems, machines and networks against cyber threats, it is necessary to implement – and continuously maintain – a holistic, state-of-the-art industrial security concept. Siemens' products and solutions constitute one element of such a concept.

Customers are responsible for preventing unauthorized access to their plants, systems, machines and networks. Such systems, machines and components should only be connected to an enterprise network or the internet if and to the extent such a connection is necessary and only when appropriate security measures (e.g. firewalls and/or network segmentation) are in place.

For additional information on industrial security measures that may be implemented, please visit
Link: (http://www.siemens.com/industrialsecurity)

Siemens' products and solutions undergo continuous development to make them more secure. Siemens strongly recommends that product updates are applied as soon as they are available and that the latest product versions are used. Use of product versions that are no longer supported, and failure to apply the latest updates may increase customers' exposure to cyber threats.

To stay informed about product updates, subscribe to the Siemens Industrial Security RSS Feed under
Link: (http://www.siemens.com/industrialsecurity)

Firmware

The firmware is signed and encrypted. This ensures that only firmware created by Siemens can be downloaded to the device.

Documentation for the S7-1500

The documentation of the SIMATIC products has a modular structure and covers topics relating to your automation system.

The complete documentation for the S7-1500 system consists of a system manual, function manuals, device manuals or operating instructions.

The STEP 7 information system (online help) also supports you in configuring and programming your automation system.

The following table shows additional documents that supplement this CP manual and are available on the Internet.

Table 1 Overview of the documentation for S7-1500

Topic	Documentation	Most important contents
System description	System manual: S7-1500 Automation System (https://support.industry.siemens.com/cs/ww/en/view/59191792)	• Application planning • Installation • Connecting • Commissioning
System diagnostics	Function manual: System diagnostics (https://support.industry.siemens.com/cs/ww/en/view/59192926)	• Overview • Diagnostics evaluation for hardware/software

Topic	Documentation	Most important contents
Communication	Function manual: Communication (https://support.industry.siemens.com/cs/ww/en/view/59192925)	• Overview
	Function manual: Web Server (https://support.industry.siemens.com/cs/ww/en/view/59193560)	• Function • Operation
	SIMATIC NET - Industrial Ethernet / PROFINET - system manual • Industrial Ethernet Link: (https://support.industry.siemens.com/cs/ww/de/view/27069465) • Passive network components Link: (https://support.industry.siemens.com/cs/ww/en/view/84922825)	• Ethernet networks • Network configuration • Network components
Interference-free installation of control systems	Function Manual: Interference-free installation of control systems (https://support.industry.siemens.com/cs/ww/en/view/59193566)	• Basics • Electromagnetic compatibility • Lightning protection • Housing selection
Cycle and response times	Function manual: Cycle and Response Times (https://support.industry.siemens.com/cs/ww/en/view/59193558)	• Basics • Calculations

CP documentation on DVD

You can find the documentation on the product and the configuration on the "SIMATIC NET Manual Collection" or "SIMATIC Communication Products" DVD. This DVD contains the product manuals valid at the time it is created.

SIMATIC NET glossary

Explanations of many of the specialist terms used in this documentation can be found in the SIMATIC NET glossary.

You will find the SIMATIC NET glossary on the Internet at the following address:

Link: (https://support.industry.siemens.com/cs/ww/en/view/50305045)

Device defective

If a fault develops, please send the device to your Siemens representative for repair. Repairs on-site are not possible.

Decommissioning

Shut down the device properly to prevent unauthorized persons from accessing confidential data in the device memory.

To do this, restore the factory settings on the device.

Recycling and disposal

The product is low in pollutants, can be recycled and meets the requirements of the WEEE directive 2012/19/EU "Waste Electrical and Electronic Equipment".

Do not dispose of the product at public disposal sites. For environmentally friendly recycling and the disposal of your old device contact a certified disposal company for electronic scrap or your Siemens contact.

Keep to the local regulations.

You will find information on returning the product on the Internet pages of Siemens Industry Online Support:
Link: (https://support.industry.siemens.com/cs/ww/en/view/109479891)

Table of contents

Preface ... **3**

1 Application and functions ... **13**

1.1 Communication services ... 13

1.2 Communication via SINEMA RC ... 14

1.3 Further functions ... 15

1.4 Industrial Ethernet Security ... 16

1.5 Configuration limits and performance data ... 17
1.5.1 Configuration limits of communications modules ... 17
1.5.2 General characteristic data ... 18
1.5.3 Characteristics of S7 communication ... 20
1.5.4 Characteristic data for FTP / FTPS mode ... 20
1.5.5 Characteristics security ... 21

1.6 Requirements for use ... 21
1.6.1 Usable CPUs ... 21
1.6.2 Project engineering ... 22
1.6.3 Program blocks - overview ... 22

1.7 LEDs ... 23

1.8 Gigabit interface ... 25

2 Installation, connecting up, commissioning, operation ... **27**

2.1 Important notes on using the device ... 27
2.1.1 Notes on use in hazardous areas ... 27
2.1.2 Notes on use in hazardous areas according to ATEX / IECEx ... 29
2.1.3 Notes on use in hazardous areas according to UL HazLoc ... 29
2.1.4 General notices on use in hazardous areas according to FM ... 30

2.2 Installing and commissioning the CP 1543-1 ... 30

2.3 Operating mode of the CPU: Reaction of the CP ... 32

3 Configuration, program blocks ... **33**

3.1 Security recommendations ... 33

3.2 Settings ... 37

3.3 Restricting communications services in the CPU ... 38

3.4 Network settings ... 39

3.5 IP configuration ... 40
3.5.1 Points to note about IP configuration ... 40
3.5.2 Restart after detection of a duplicate IP address in the network ... 40
3.5.3 IP routing ... 40
3.5.4 Virtual interface of the CPU ... 41
3.5.5 Programmed connections: Restriction of firewall rules ... 44

3.6 Time-of-day synchronization ... 45
3.7 DNS configuration ... 46
3.8 Communication with the CPU ... 46
3.8.1 CP diagnostics ... 46
3.9 FTP communication ... 47
3.9.1 FTP server ... 47
3.9.1.1 Configuring the FTP server function ... 47
3.9.2 FTP client ... 50
3.9.2.1 The program block FTP_CMD (FTP client function) ... 50
3.9.2.2 Input parameter - FTP_CMD ... 52
3.9.2.3 Job blocks for FTP_CMD ... 54
3.9.2.4 Output parameters and status information FTP_CMD ... 59
3.9.2.5 Structure of the data block (file DB) for FTP client operation ... 62
3.10 Security ... 64
3.10.1 Security user ... 65
3.10.2 VPN ... 65
3.10.2.1 Creating VPN tunnel communication between S7-1500 stations ... 66
3.10.2.2 Establishment of VPN tunnel communication between the CP and SCALANCE M ... 68
3.10.2.3 VPN tunnel communication with SOFTNET Security Client ... 68
3.10.2.4 SINEMA Remote Connect ... 69
3.10.2.5 CP as passive subscriber of VPN connections ... 72
3.10.3 Firewall ... 73
3.10.3.1 Firewall sequence when checking incoming and outgoing frames ... 73
3.10.3.2 Notation for the source IP address (advanced firewall mode) ... 73
3.10.3.3 HTTP and HTTPS not possible with IPv6 ... 73
3.10.3.4 Firewall settings for connections via a VPN tunnel ... 73
3.10.4 Online functions ... 74
3.10.4.1 Settings for online security diagnostics and downloading to station with the firewall activated ... 74
3.10.4.2 Online security diagnostics via port 8448 ... 74
3.10.5 Log settings - Filtering of the system events ... 75
3.10.6 Network authentication ... 75
3.11 Program blocks for OUC ... 77
4 Diagnostics and upkeep ... 81
4.1 Diagnostics options ... 81
4.2 Connect online ... 82
4.3 Diagnostics with SNMP ... 83
4.4 Update firmware ... 85
4.5 Replacing a module without a programming device ... 88
5 Technical specifications ... 89
5.1 Technical specifications of the CP ... 89
5.2 Pinout of the Ethernet interface ... 90
5.3 Permitted cable lengths - Ethernet ... 90
5.4 Permitted cable lengths - Gigabit Ethernet ... 90

6 Approvals 91

A Additional information 97

A.1 Linking to other systems with FETCH/WRITE 97

Index 101

Application and functions

1

Application

The CP is intended for operation in an S7-1500 automation system. It allows the S7-1500 to be connected to Industrial Ethernet.

With a combination of different security measures such as firewall and protocols for data encryption, the CP protects the S7-1500 or even entire automation cells from unauthorized access. It also protects the communication between the S7 station and communications partners from spying and manipulation.

1.1 Communication services

The CP supports the following communication services:

- **Open User Communication (OUC)**

  Open User Communication supports the following communications services via the CP using programmed or configured communications connections:

  – ISO transport (complying with ISO/IEC 8073)

  – TCP (IPv4/IPv6) (acc. to RFC 793 and 8200)

    With the interface via TCPv4/v6 connections, the CP supports the socket interface to TCP/IP available on practically every end system.

  – ISO-on-TCP (acc. to RFC 1006)

  – UDP (acc. to RFC 768)

  – Multicast over UDP connection

    The multicast mode is made possible by selecting a suitable IP address when configuring connections.

  – Sending e-mail via SMTP (port 25) or SMTPS (port 587) with authentication on an e-mail server.

- **S7 communication**

  – PG communication

  – Operator control and monitoring functions (HMI communication)

  – Data exchange over S7 connections

- **FTP/FTPS**

  FTP functions (File Transfer Protocol) for file management and access to data blocks in the CPU

  – FTP server

    Can be activated via the configuration

  – FTP client

    Configurable via program blocks.

- **FETCH/WRITE**

  – FETCH/WRITE services as server (corresponding to S5 protocol) via ISO transport, ISO-on-TCP and TCP connections

    The S7-1500 with the CP is always the server (passive connection establishment).

    The fetch or write access (client function with active connection establishment) is performed by a SIMATIC S5 or a third-party device / PC.

1.2 Communication via SINEMA RC

Communication via SINEMA Remote Connect (SINEMA RC)

The "SINEMA RC Server" application provides end-to-end connection management of distributed networks via the Internet. This also includes secure remote access to lower-level stations. Communication between SINEMA RC Server and the remote devices takes place via a VPN tunnel with consideration of the stored access rights.

SINEMA RC uses OpenVPN for encryption of the data. The center of the communication is SINEMA RC Server via which communication runs between the subscribers and that manages the configuration of the communications system.

SCALANCE M routers, which you can use for the connection, also support OpenVPN and connection to SINEMA Remote Connect.

Parameter groups

You configure communication via SINEMA RC in the following parameter group:

> "Security > VPN"

For information on the configuration, refer to section SINEMA Remote Connect (Page 69).

Application

If the function is enabled, you use the CP for remote maintenance via SINEMA RC.

1.3 Further functions

Time-of-day synchronization with NTP (Network Time Protocol)

The CP sends timeofday queries at regular intervals to an NTP server and synchronizes its local time of day.

The time is also be forwarded automatically to the CPU modules in the S7 station allowing the time to be synchronized in the entire S7 station.

Security function: The CP supports the NTP (secure) protocol for secure time-of-day synchronization and transfer of the time of day.

Addressable with the factoryset MAC address

To assign the IP address to a new CP (direct from the factory), it can be accessed using the preset MAC address on the interface being used. Online address assignment is made in STEP 7.

SNMP agent

The CP supports data queries over SNMP in version V1 (Simple Network Management Protocol). It delivers the content of certain MIB objects according to the MIB II standard and Automation System MIB.

If security is enabled, the CP supports SNMPv3 for transfer of network analytical information protected from eavesdropping.

IP configuration - IPv4 and IPv6

The essential features of IP configuration for the CP:

- The CP supports the use of IP addresses according to IPv4 and IPv6.
- You can configure how and with which method the CP is assigned the IP address, the subnet mask and the address of a gateway.
- The IP configuration and the connection configuration (IPv4) can also be assigned to the CP by the user program (for program blocks refer to the section Program blocks - overview (Page 22)).

  Note: Does not apply to S7 connections.

IP routing

The CP supports static IP routing (IPv4) to other CM / CP 1500.

For details, see section IP routing (Page 40).

IPv6 addresses - area of use on the CP

An IP address according to IPv6 can be used for the following communications services:

- FETCH/WRITE access (CP is server)
- FTP server mode
- FTP client mode with addressing via program block
- E-mail transfer with addressing via program block
- TCP via OUC blocks with the following SDTs: TCON_QDN, TCON_QDN_SEC
- SNMP

When using IPv6 addresses, make sure to configure the DNS server accordingly.

Access to the Web server of the CPU

Via the LAN interface of the CP, you have access to the Web server of the CPU. With the aid of the Web server of the CPU, you can read out module data from a station.

Note the special description of the Web server; see Preface (Page 3), Documentation guide.

Note

Web server access using the HTTPS protocol

The Web server of a SIMATIC S7-1500 station is located in the CPU. For this reason, when there is secure access (HTTPS) to the Web server of the station using the IP address of the CP 1543-1, the SSL certificate of the CPU is displayed.

S5/S7 addressing mode for FETCH/WRITE

The addressing mode can be configured for FETCH/WRITE access as S7 or S5 addressing mode. The addressing mode specifies how the position of the start address is identified during data access (S7 addressing mode applies only to data blocks / DBs).

Read the additional information in the online help of STEP 7.

1.4 Industrial Ethernet Security

All-round protection - the task of Industrial Ethernet Security

With Industrial Ethernet Security, individual devices, automation cells or network segments of an Ethernet network can be protected. The data transfer from the external network connected to the CP can be protected by various security measures:

- Data espionage (FTPS, HTTPS)
- Data manipulation
- Unauthorized access

Secure underlying networks can be operated via additional Ethernet/PROFINET interfaces implemented by the CPU or additional CPs.

Security functions of the CP for the S7-1500 station

As result of using the CP, the following security functions are accessible to the S7-1500 station on the interface to the external network:

- Firewall
  - IP firewall with stateful packet inspection (Layer 3 and 4)
  - Firewall also for non-IP frames according to IEEE 802.3 (Layer 2)
  - Limitation of the transmission speed
  - Global and user-specific firewall rules

  The protective function of the firewall can be applied to the operation of single devices or several devices, as well as entire network segments.
- Logging

  To allow monitoring, events can be stored in log files that can be read out using STEP 7 or can be sent automatically to a Syslog server.
- FTPS (explicit mode)

  For encrypted transfer of files.
- NTP (secure)

  For secure time-of-day synchronization
- SMTPS

  Foe secure transfer of e-mails via port 587
- SNMPv3

  For secure transmission of network analysis information safe from eavesdropping

Observe the information in section Security recommendations (Page 33).

1.5 Configuration limits and performance data

1.5.1 Configuration limits of communications modules

When using the CP type described here, the following limits apply:

- The number of communications modules that can be operated in a rack depends on the CPU type being used.

  By operating several CMs/CPs, you can increase the configuration limits listed below for the station as a whole. The CPU does, however, have set limits for the entire configuration. The size of the configuration made available by a CP can be increased by using more than one CP within the framework of the system limits.

  Note the information in the documentation of the CPU, see Preface (Page 3), Documentation guide.

Note

Power supply via the CPU adequate or additional power supply modules required

You can operate a certain number of modules in the S7-1500 station without an additional power supply. Make sure that you keep to the specified power feed to the backplane bus for the particular CPU type. Depending on the configuration of the S7-1500 station you may need to provide additional power supply modules.

1.5.2 General characteristic data

Characteristic	Explanation / values
Total number of freely usable connections on Industrial Ethernet	118 The value applies to the total number of connections of the following types: • S7 connections • Connections for open communications services • FTP (FTP client)

Note

Connection resources of the CPU

Depending on the CPU type, different numbers of connection resources are available. The number of connection resources is the decisive factor for the number of configurable connections. This means that the values that can actually be achieved may be lower than specified in this section describing the CP.

Open User Communication (OUC) provides access to communication over TCP, ISO-on-TCP, ISO transport and UDP connections.

The following characteristics are important (OUC + FETCH/WRITE):

Characteristic	Explanation / values
Number of connections	Number of configured and programmed connections (ISO transport + ISO-on-TCP + TCP + UDP + FETCH/WRITE + email): • Max. 118 in total Of which maximum: – TCP connections: 0...118 – ISO-on-TCP connections: 0...118 – ISO transport connections: 0...118 – UDP connections (specified and free) in total: 0...118 – Connection for e-mail: 0...1 – Connections for FETCH/WRITE: 0...16

Characteristic	Explanation / values
Maximum data length for program blocks	Program blocks allow the transfer of user data in the following lengths: • ISO-on-TCP, TCP, ISO transport: 1 to 64 kB • UDP: 1 byte to 2 KB • E-mail – Job header + user data: 1 to 256 bytes – E-mail attachment: up to 64 kB
LAN interface max. data field length generated by CP per protocol data unit (TPDU = transport protocol data unit)	• sending ISO transport, ISOonTCP, TCP: 1452 bytes / TPDU • receiving – ISO transport: 512 bytes / TPDU – ISO-on-TCP: 1452 bytes / TPDU – TCP: 1452 bytes / TPDU

Note

Connection resources of the CPU

Depending on the CPU type, different numbers of connection resources are available. The number of connection resources is the decisive factor for the number of configurable connections. This means that the values that can actually be achieved may be lower than specified in this section describing the CP.

You will find detailed information on the topic of connection resources in the "Communication" function manual, see Preface (Page 3), Documentation guide.

Restrictions for UDP

- UDP broadcast / multicast

  To avoid overloading the CP due to high broadcast/multicast frame traffic, the receipt of UDP broadcast/multicast on the CP can be limited; refer to section Settings (Page 37).

- UDP frame buffering

  Length of the frame buffer: At least 7360 bytes

  Following a buffer overflow, newly arriving frames that are not fetched by the user program are discarded.

1.5.3 Characteristics of S7 communication

S7 communication provides data transfer via the ISO Transport or ISO-on-TCP protocols.

Characteristic	Explanation / values
Total number of freely usable S7 connections on Industrial Ethernet	Max. 118
LAN interface - data field length generated by CP per protocol data unit (PDU = protocol data unit)	• For sending: 480 bytes / PDU • For receiving: 480 bytes / PDU
Number of reservable OP connections *	Max. 4
Number of reservable PG connections *	Max. 4
Number of HTTP connections for Web	Max. 4

* The CPU reserves connection resources. Take the specified values into account for programmed connections also.

Note

Maximum values for an S7-1500 station

Depending on the CPU you are using, there are limit values for the S7-1500 station. Note the information in the relevant documentation.

1.5.4 Characteristic data for FTP / FTPS mode

TCP connections for FTP

FTP actions are transferred from the CP over TCP connections. The following characteristics apply:

- FTP client mode

  You can use a maximum of 32 FTP sessions.

  Up to 2 TCP connections are occupied per activated FTP session (1 control connection and 1 data connection).

- FTP server mode

  You can operate a maximum of 16 FTP sessions at the same time.

  Up to 2 TCP connections are occupied per activated FTP session (1 control connection and 1 data connection).

Program block FTP_CMD for FTP client mode

For communication, use the program block FTP_CMD.

The block execution time in FTP depends on the reaction times of the partner and the length of the user data. A generally valid statement is therefore not possible.

1.5.5 Characteristics security

IPsec tunnel (VPN)

VPN tunnel communication allows the establishment of secure IPsec tunnel communication with one or more security modules.

Configuration limits	Value
Number of IPsec tunnels	16 maximum

Firewall rules (advanced firewall mode)

The maximum number of firewall rules in advanced firewall mode is limited to 256.

The firewall rules are divided up as follows:

- Maximum 226 rules with individual addresses
- Maximum 30 rules with address ranges or network addresses (e.g. 140.90.120.1-140.90.120.20 or 14.90.120.0/16)
- Maximum 128 rules with limitation of the transmission speed

1.6 Requirements for use

1.6.1 Usable CPUs

The following CPUs can be used as local CPU of the communications module:

- Compatible CPUs

  All CPUs that can be configured in STEP 7 as of firmware version V2.1 from the following series:

  – Standard CPUs (CPU 15xx)

  – Compact CPUs (CPU 15xxC)

Exceptions

- The following CPUs are not compatible:

  – H-CPU (CPU 1517H-x PN)

  – R-CPUs (CPU 151xR-x PN)

Note

Keep the firmware version of the communications modules up to date

To avoid possible problems when using newer CPUs together with older communications modules, you should keep the firmware of your communications modules up to date.

Check regularly for security updates for the firmware and use them.

Information regarding product news and new firmware versions is available at the following address:
Link: (https://support.industry.siemens.com/cs/ww/en/ps/15340/dl)

1.6.2 Project engineering

Configuration and downloading the configuration data

When the configuration data is downloaded to the CPU, the CP is supplied with the relevant configuration. The configuration data can be downloaded to the CPU via a memory card or any Ethernet/PROFINET interface of the S7-1500 station.

The following version of STEP 7 is required:

STEP 7 version	Functions of the CP
STEP 7 Professional V12 SP1 or higher	The full functionality of the CP 1543-1 (6GK7 543-1AX00-0XE0) can be configured.

1.6.3 Program blocks - overview

Program blocks - overview

The following program blocks (instructions) are available for the CP.

Table 1- 1 Blocks of the Open User Communication

Protocol	Program block (instruction)	System data type
TCP	• TSEND_C/TRCV_C or • TCON/TDISCON + TSEND/TRCV	• TCON_IP_v4 • TCON_QDN • TCON_QDN_SEC • TCON_Configured
ISO-on-TCP		• TCON_IP_RFC
ISO		• TCON_ISOnative
UDP	• TCON/TDISCON + TUSEND/TURCV	• TCON_IP_v4
E-mail	• TMAIL_C	• TMAIL_V4 • TMAIL_QDN • TMAIL_QDN_SEC • TMAIL_V6 • TMAIL_V6_SEC

Table 1- 2 Block for communication services of the CP

Protocol	Program block (instruction)	System data type
FTP	• FTP_CMD	• FTP_CONNECT_IPV4 • FTP_CONNECT_IPV6 • FTP_CONNECT_NAME • FTP_FILENAME • FTP_FILENAME_PART

Table 1- 3 Block for configuration of the Ethernet interface or an NTP/DNS server

Function	Program block (instruction)	System data type
Configuration of the Ethernet interface	• T_CONFIG	• IF_CONF_V4 • IF_CONF_V6 • IF_CONF_NTP • IF_CONF_DNS • IF_CONF_MAC

1.7 LEDs

LEDs

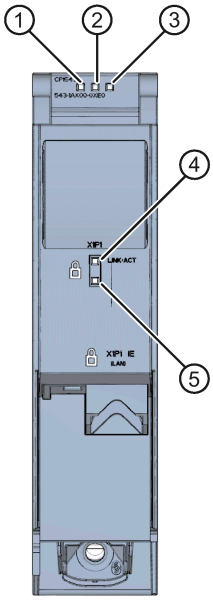

① RUN LED
② ERROR LED
③ MAINT LED
④ LINK/ACT LED
⑤ Reserve LED

Figure 1-1 LED display of the CP 1543-1 (without front cover)

Meaning of the LED displays of the CP

The CP has the following 3 LEDs to display the current operating status and the diagnostics status:

- RUN (one-color LED: green)
- ERROR (one-color LED: red)
- MAINT (one-color LED: yellow)

The following table shows the meaning of the various combinations of colors of the RUN, ERROR and MAINT LEDs.

Table 1- 4 Meaning of the LEDs "RUN", "ERROR", "MAINT"

RUN	ERROR	MAINT	Meaning
LED off	LED off	LED off	No supply voltage on the CP or supply voltage too low.
LED lit green	LED lit red	LED lit yellow	LED test during startup
LED lit green	LED lit red	LED off	Startup (booting the CP)
LED lit green	LED off	LED off	CP is in RUN mode. No disruptions
LED lit green	LED flashing red	LED off	A diagnostics event has occurred.
LED lit green	LED off	LED lit yellow	Maintenance, maintenance is demanded.
LED lit green	LED off	LED flashing yel-low	Maintenance is required. Downloading the user program
LED flashing green	LED off	LED off	No CP configuration exists Loading firmware
LED flashing green	LED flashing red	LED flashing yel-low	Module fault (LEDs flashing synchronized)

Meaning of the LED displays of the Ethernet interface: X1 P1

The LED LINK/ACT (two color green/yellow) is assigned to the port of the Ethernet interface. The table below shows the LED patterns.

Table 1- 5 Meaning of the "LINK/ACT" LED

LINK/ACT		Meaning
green off	yellow off	No connection to Ethernet There is no Ethernet connection between the Ethernet interface of the CP and the communications partner. At the current time, there is no data being received/sent via the Ethernet interface.
flashing green	yellow off	The "node flash test" is being performed.
green on	yellow off	Connection to Ethernet exists. There is an Ethernet connection between the Ethernet interface of your CP and a communications partner.
green on	yellow flickers	At the current time, data is being received/sent via the Ethernet interface of the Ethernet device of a communi-cations partner on Ethernet.

1.8 Gigabit interface

Ethernet interface with gigabit specification and security access

The CP has an Ethernet interface according to the gigabit standards IEEE 802.3. The Ethernet interface supports autocrossing, autonegotiation and autosensing.

The Ethernet interface allows a secure connection to external networks via a firewall. The CP provides the following protective function:

- Protection of the S7-1500 station in which the CP is operated;
- Protection of the underlying company networks connected to the other interfaces of the S7-1500 station.

You will find the pin assignment of the sub RJ-45 jack in section Installing and commissioning the CP 1543-1 (Page 30).

Installation, connecting up, commissioning, operation

2

2.1 Important notes on using the device

Safety notices on the use of the device

Note the following safety notices when setting up and operating the device and during all associated work such as installation, connecting up or replacing the device.

NOTICE
LAN attachment A LAN or LAN segment with the attachments belonging to it should be within a single low-voltage supply system and within a single building. Ensure that the LAN is in an of type A environment according to IEEE 802.3 or in a type 0 environment according to IEC TR 62101. Never establish a direct electrical connection to TNV networks (telephone network) or WANs (Wide Area Network).

2.1.1 Notes on use in hazardous areas

⚠ WARNING
Cleaning the housing • **In hazardous areas** Only clean the outer parts of the housing with a damp, but not wet, cloth. • **In non-hazardous areas** Only clean the outer parts of the housing with a dry cloth. Do not use any liquids or solvents.

⚠ WARNING
The device may only be operated in an environment with pollution degree 1 or 2 (see IEC 60664-1).

WARNING

EXPLOSION HAZARD

Replacing components may impair suitability for Class 1, Division 2 or Zone 2.

WARNING

DIN rail

In the ATEX and IECEx area of application only the Siemens DIN rail 6ES5 710-8MA11 may be used to mount the modules.

WARNING

Power supply

The device is designed for operation with a directly connectable safety extra low voltage (SELV) from a limited power source (LPS).

The power supply therefore needs to meet at least one of the following conditions:

- Only safety extra low voltage (SELV) with limited power source (LPS) complying with IEC 60950-1 / EN 60950-1 / VDE 0805-1 or IEC 62368-1 / EN 62368-1 / VDE 62368-1 may be connected to the power supply terminals.
- The power supply unit for the device must meet NEC Class 2 according to the National Electrical Code (r) (ANSI / NFPA 70).

If the equipment is connected to a redundant power supply (two separate power supplies), both must meet these requirements.

WARNING

EXPLOSION HAZARD

Do not connect or disconnect cables to or from the device when a flammable or combustible atmosphere is present.

WARNING

When used in hazardous environments corresponding to Class I, Division 2 or Class I, Zone 2, the device must be installed in a cabinet or a suitable enclosure.

2.1.2 Notes on use in hazardous areas according to ATEX / IECEx

WARNING

Requirements for the cabinet/enclosure

To comply with EC Directive 2014/34 EU (ATEX 114) or the conditions of IECEx, this enclosure or cabinet must meet the requirements of at least IP54 (in compliance with EN 60529) according to EN 60079-7.

WARNING

Cable

If the cable or conduit entry point exceeds 70 °C or the branching point of conductors exceeds 80 °C, special precautions must be taken. If the equipment is operated in an air ambient in excess of 50 °C, only use cables with admitted maximum operating temperature of at least 80 °C.

WARNING

Transient overvoltages

Take measures to prevent transient overvoltages of more than 40% of the rated voltage (or more than 119 V). This is the case if you only operate devices with SELV (safety extra-low voltage).

2.1.3 Notes on use in hazardous areas according to UL HazLoc

WARNING

EXPLOSION HAZARD

You may only connect or disconnect cables carrying electricity when the power supply is switched off or when the device is in an area without inflammable gas concentrations.

This equipment is suitable for use in Class I, Division 2, Groups A, B, C and D or non-hazardous locations only.

This equipment is suitable for use in Class I, Zone 2, Group IIC or non-hazardous locations only.

2.1.4 General notices on use in hazardous areas according to FM

WARNING

EXPLOSION HAZARD

You may only connect or disconnect cables carrying electricity when the power supply is switched off or when the device is in an area without inflammable gas concentrations.

This equipment is suitable for use in Class I, Division 2, Groups A, B, C and D or non-hazardous locations only.

This equipment is suitable for use in Class I, Zone 2, Group IIC or non-hazardous locations only.

WARNING

EXPLOSION HAZARD

The equipment is intended to be installed within an ultimate enclosure. The inner service temperature of the enclosure corresponds to the ambient temperature of the module. Use installation wiring connections with admitted maximum operating temperature of at least 30 °C higher than maximum ambient temperature.

2.2 Installing and commissioning the CP 1543-1

Installation and commissioning

WARNING

Read the system manual "S7-1500 Automation System"

Prior to installation, connecting up and commissioning, read the relevant sections in the system manual "S7-1500 Automation System" (for references to documentation, refer to Preface (Page 3), Documentation guide.

Make sure that the power supply is turned off when installing/uninstalling the devices.

Configuration

Commissioning the CP fully is only possible if the STEP 7 project data is complete.

Procedure for installation and commissioning

Step	Execution	Notes and explanations
1	When installing and connecting up, keep to the procedures described for installing I/O modules in the system manual "S7-1500 Automation System".	
2	Connect the CP to Industrial Ethernet via the RJ45 jack.	Underside of the CP
3	Turn on the power supply.	
4	Close the front covers of the module and keep them closed during operation.	
5	The remaining steps in commissioning involve downloading the STEP 7 project data.	The STEP 7 project data of the CP is transferred when you download to the station. To load the station, connect the engineering station on which the project data is located to the Ethernet interface of the CPU. You will find more detailed information on loading in the following sections of the STEP 7 online help: • "Compiling and loading project data" • "Using online and diagnostics functions"

Ethernet interface

The table below shows the pin assignment of the Ethernet interface (RJ-45 jack). The assignment corresponds to the Ethernet standard IEEE 802.3.

Table 2- 1 Pin assignment of the Ethernet interface

View	Pin	10/100 Mbps operation		10/100 Mbps or gigabit operation	
		Signal name	Pin assignment	Signal name	Pin assignment
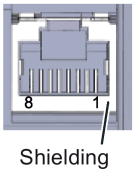	1	TD	Transmit Data +	D1+	D1 bidirectional +
	2	TD_N	Transmit Data -	D1-	D1 bidirectional -
	3	RD	Receive Data +	D2+	D2 bidirectional +
	4	GND	Ground	D3+	D3 bidirectional +
	5	GND	Ground	D3-	D3 bidirectional -
	6	RD_N	Receive Data -	D2-	D2 bidirectional -
	7	GND	Ground	D4+	D4 bidirectional +
	8	GND	Ground	D4-	D4 bidirectional -

You will find additional information on the topics of "Connecting up" and "Accessories (RJ-45 plug)" in the system manual:
Link: (https://support.industry.siemens.com/cs/ww/en/view/59191792)

2.3 Operating mode of the CPU: Reaction of the CP

Switching the CPU: RUN → STOP

You can switch the operating mode of the CPU between RUN and STOP via STEP 7.

Note

RUN/STOP LED of the CP

The green RUN/STOP LED of the CP continues to be lit green regardless of the STOP mode of the CPU.

In the STOP state of the CPU, the CP remains in the RUN state. The following behavior applies to the CP:

- This applies to established connections (ISO Transport, ISO-on-TCP, TCP, UDP):
  - Programmed connections are retained.
  - Configured connections are terminated.
- The following functions remain enabled:
  - Configuration and diagnostics of the CP

    System connections for configuration, diagnostics and PG channel routing still exist.
  - Web diagnostics
  - S7 routing function
  - Time-of-day synchronization

Configuration, program blocks 3

3.1 Security recommendations

Keep to the following security recommendations to prevent unauthorized access to the system.

General

- You should make regular checks to make sure that the device meets these recommendations and other internal security guidelines if applicable.
- Evaluate your plant as a whole in terms of security. Use a cell protection concept with suitable products.
- Do not connect the device directly to the Internet. Operate the device within a protected network area.
- Check regularly for new features on the Siemens Internet pages.
  - Here you can find information on Industrial Security:
    Link: (http://www.siemens.com/industrialsecurity)
  - Here you can find information on security in industrial communication:
    Link: (https://support.industry.siemens.com/cs/ww/en/view/92651441)
- Keep the firmware up to date. Check regularly for security updates for the firmware and use them.

  Information regarding product news and new firmware versions is available at the following address:
  Link: (https://support.industry.siemens.com/cs/ww/en/ps/15340/dl)

Physical access

Restrict physical access to the device to qualified personnel.

Network attachment

Do not connect the PC directly to the Internet. If a connection from the CP to the Internet is required, enable the security functions or arrange for suitable protection before the CP, for example a SCALANCE S / SC with firewall.

Security functions of the product

Use the options for security settings in the configuration of the product. These includes among others:

- Protection levels

  Configure access to the CPU under "Protection & Security".

- Security function of the communication
  - Enable the security functions of the CP and set up the firewall.

    If you connect to public networks, you should use the firewall. Think about the services you want to allow access to the station via public networks. By limiting the transmission speed in the firewall rules, you can restrict the possibility of flooding and DoS attacks.

    The FETCH/WRITE functionality allows you to access any data of the CPU. The FETCH/WRITE functionality should not be used in conjunction with public networks.
  - Use the secure protocol variants HTTPS, FTPS, NTP (secure) and SNMPv3.
  - Use the program blocks for secure OUC communication (Secure OUC).
  - Leave access to the Web server of the CPU (CPU configuration) and to the Web server of the CP disabled.

- Protection of the passwords for access to program blocks

  Protect the passwords stored in data blocks for the program blocks from being viewed. You will find information on the procedure in the STEP 7 information system under the keyword "Know-how protection".

- Logging function

  Enable the function in the security configuration and check the logged events regularly for unauthorized access.

Passwords

- Define rules for the use of devices and assignment of passwords.
- Regularly update the passwords to increase security.
- Only use passwords with a high password strength. Avoid weak passwords for example "password1", "123456789" or similar.
- Make sure that all passwords are protected and inaccessible to unauthorized personnel.

  See also the preceding section for information on this.

- Do not use one password for different users and systems.

Protocols

Secure and non-secure protocols

- Only activate protocols that you require to use the system.
- Use secure protocols when access to the device is not prevented by physical protection measures.
- Deactivate DHCP at interfaces to public networks such as the Internet, for example, to prevent IP spoofing.

Table: Meaning of the column titles and entries

The following table provides you with an overview of the open ports on this device.

- **Protocol / function**

  Protocols that the device supports.
- **Port number (protocol)**

  Port number assigned to the protocol.
- **Default of the port**
  - Open

    The port is open at the start of the configuration.
  - Closed

    The port is closed at the start of the configuration.
- **Port status**
  - Open

    The port is always open and cannot be closed.
  - Open after configuration

    The port is open if it has been configured.
  - Open (login, when configured)

    As default the port is open. After configuring the port, the communications partner needs to log in.
  - Open with block call

    The port is only opened when a suitable program block is called.
- **Authentication**

  Specifies whether or not the protocol authenticates the communications partner during access.

Table 3- 1 Server ports

Protocol / function	Port number (protocol)	Default of the port	Port status	Authentication
DCP	93 (UDP)	Open	Open	No
S7 and online connections	102 (TCP)	Open	Open *	No
Online security diagnostics	8448 (TCP)	Closed	Open after configuration	No
HTTP	80 (TCP)	Closed	Open after configuration	No
HTTPS	443 (TCP)	Closed	Open after configuration	Yes
FTP	20 (TCP) 21 (TCP)	Closed	Open after configuration	No
FTPS	989 (TCP) 990 (TCP)	Closed	Open after configuration	Yes
SNMP	161 (UDP)	Open	Open after configuration	Yes (with SNMPv3)
IPsec	500 (TCP) 4500 (UDP)	Closed	Open after configuration	Yes
Communication via SINEMA RC	443 (TCP)	Closed	Open after configuration	Yes
Modbus	502 (TCP)	Closed	Open after configuration	No

***** For information on avoiding opening port 102 during diagnostics, see section Online security diagnostics via port 8448 (Page 74).

Ports of communication partners and routers

Make sure that you enable the required client ports in the corresponding firewall on the communications partners and in intermediary routers.

These can be:

- DHCP / 67, 68 (UDP)
- DNS / 53 (UDP)
- NTP / 123 (UDP)
- FTPS / 20, 21 (TCP)
- SMTP / 25 (TCP) - Open in CP on block call (outgoing only)
- SMTPS / 587 (TCP) - Open in CP on block call (outgoing only)
- SNMP / 161, 162 (UDP)
- IPSec / 500 (TCP) / 4500 (UDP)
- SINEMA RC Autoconfiguration / 443 (TCP) - can be set
- SINEMA RC and OpenVPN / 1194 (UDP) - can be set in SINEMA RC
- Syslog / 514 (UDP)

3.2 Settings

FETCH/WRITE

You can use the FETCH/WRITE services to access system memory areas of the S7-CPU.

- FETCH: Read data directly
- WRITE: Write data directly

Access is possible from the following devices:

- SIMATIC S5
- SIMATIC PC stations
- Non-SIMATIC devices

The S7-1500 CP is the server for FETCH/WRITE services.

The FETCH/WRITE services are supported by the following protocols:

- TCP
- ISO-on-TCP
- ISO transport

A configured connection is not required for using the FETCH/WRITE services.

Requirements in the CPU configuration

You need to enable the FETCH/WRITE communication service in the CPU configuration, refer to section Restricting communications services in the CPU (Page 38).

System memory

You can access the following operand areas in the system memory of the S7-1500 CPU using FETCH or WRITE:

- Data blocks (DB)

  Note the following:

  – With access to DBs, the highest DB no. is 255.

  – Activate the "S7 addressing" parameter in the TSAP table of the CP for access of S5 or S7 partners.
- Bit memory (M)
- Process image input (PII)
- Process image output (PIQ)
- I/O area inputs (PIW, PID, PIB)
- I/O area outputs (PQW, PQD, PQB)
- Counters (C)
- Timers (T)

Link to non-SIMATIC systems

The FETCH/WRITE services can be used from non-Siemens devices to access S7 system memory areas.

To be able to use this type of access also for PC applications, for example, you need to know the PDU structure of the jobs. Refer to the appendix Linking to other systems with FETCH/WRITE (Page 97).

UDP frame buffering

Disables the buffering of UDP datagrams in order to protect the module from possible overload.

When buffering is disabled, all received UDP datagrams that are not fetched by the user program within one cycle are discarded.

3.3 Restricting communications services in the CPU

Communications services without connections

The CPU can be a server for a series of communications services without connections being configured for the CPU. Other communications partners can access CPU data. This means that it is no longer possible for the local CPU to control communication with the clients.

You need to grant permission for these communications services at the following location in the CPU configuration:

- Parameter group "Protection & Security > Connection mechanisms"

  Enable the option "Permit access with PUT/GET communication from remote partner".

"Permit access with PUT/GET communication from remote partner"

- Option enabled

  Access to CPU data from the client side is permitted.

  A prerequisite for enabling this option is enabling an access option in the "Access level" parameter group. When the "No access (complete protection)" option is enabled, PUT/GET communication also cannot be enabled.

- Option disabled

  Read and write access to CPU data is only possible with communication connections that require configuration or programming both for the local CPU and for the communications partner.

  Connections for which the local CPU is only a server (no configuration/programming of communication with the partner) are not possible.

  The following communications services of the CP relate to a CPU ≥ V2.

  When the option is disabled, the following is not possible:

  – PUT/GET access via the CP

  – FETCH/WRITE access via the CP

  When the option is disabled, the following is possible:

  – FTP access via the CP

3.4 Network settings

Automatic setting

The Ethernet interface of the CPU is set permanently to autosensing.

Note

In normal situations, the basic setting ensures troublefree communication.

Autocrossing mechanism

With the integrated autocrossing mechanism, it is possible to use a standard cable to connect the PC/PG. A crossover cable is not necessary.

Note

Connecting a switch

To connect a switch, that does not support the autocrossing mechanism, use a crossover cable.

3.5 IP configuration

3.5.1 Points to note about IP configuration

Configured S7 and OUC connections cannot be operated if the IP address is assigned using DHCP

Note

If you obtain the IP address using DHCP, any S7 and OUC connections you may have configured will not work. Reason: The configured IP address is replaced by the address obtained via DHCP during operation.

DHCP: Aborting ISO transport connections

Note

When the IP address is obtained via DHCP, the CP aborts all ISO transport connections if the IP address of the CP is not renewed by the DHCP server, for example in the event of a temporary server failure.

3.5.2 Restart after detection of a duplicate IP address in the network

To save you timeconsuming troubleshooting in the network, during startup the CP detects double addressing in the network.

Behavior when the CP starts up

If double addressing is detected when the CP starts up, the CP changes to RUN and cannot be reached via the Ethernet interface. The ERROR LED flashes.

3.5.3 IP routing

IP routing via the backplane bus

The function enables static IPv4 routing between communications modules in a rack via the backplane bus. This means that routing between two subnets that are connected via two communications modules of the station is operated via the backplane bus of the station.

The function is supported by the following modules:

- CP 1545-1
- CM 1542-1

  As of firmware version V2.0
- CP 1543-1
  - As of firmware version V2.0 with disabled security functions
  - As of firmware version V2.1 with enabled security functions

You can use IP routing, for example, for Web server access by lower-level modules.

With IP routing, the data throughput is limited to 1Mbps. Remember this in terms of the number of modules involved and the expected data traffic via the backplane bus.

Restrictions

IPv4 routing via the communications module into the CPU of the station is not possible.

Configuration

You reach the function in STEP 7 via:
"Ethernet interface > Ethernet addresses > IP routing between communication modules"

IP routing must be activated in at least 2 modules of a station.

Please note:
If you wish to use IP routing, you can only configure a router for one communications module in the station.

When the security function is activated, additional IP firewall rules are created, which you can modify in advanced firewall mode of the Global Security settings.

3.5.4 Virtual interface of the CPU

The CP 1543-1 supports the virtual interface of the CPU.

Requirement

The following requirements must be met to use the virtual interface of the CPU:

- S7-1500 CPU firmware V2.8 or higher

  R/H CPUs do not support the function.
- CP 1543-1
  - As of CP firmware version V2.2 with disabled security functions of the CP
  - As of CP firmware version V3.0 also with enabled security functions of the CP
- Configurability
  - As of STEP 7 V16 with CP firmware V2.2
  - As of STEP 7 V17 with CP firmware V3.0

Virtual interface of the CPU

As of firmware version V2.8, the S7-1500 CPU offers the option of reaching its IP-based applications, such as OPC UA, not only via its local PROFINET interfaces, but also via the interface of a CP 1543-1 in the same station.

The virtual interface is called W1.

Features of the virtual interface

The virtual interface is not a fully diagnosable interface with the familiar properties of conventional interfaces. The virtual interface is not displayed in the graphical views, because the internal connection via the backplane bus does not represent an S7 subnet and does not have any ports. A physical connection by means of a network cable therefore cannot be established.

The following IP-based services can also be reached via the virtual interface:

- OPC UA (client and server)
- Programmed OUC connections
- S7 communication: ES/HMI access and instructions for S7 communication such as PUT/GET

The IP address of the virtual interface is displayed in STEP 7 and in the display of the CPU.

The activated interface can be used in the configuration of the communications partners.

For information on the restrictions of the virtual interface as compared to physical interfaces, see the STEP 7 information system.

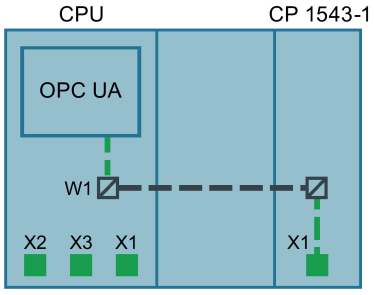

Figure 3-1 Principle of the virtual interface

Configuration of the virtual interface W1

The virtual interface of the CPU is configured in STEP 7 in the parameter group "Advanced configuration > Access to PLC via communication module".

Here, the virtual interface is assigned to a CP of the station, via which external access to the CPU can take place. The configured CPs of the station can be selected in the drop-down list.

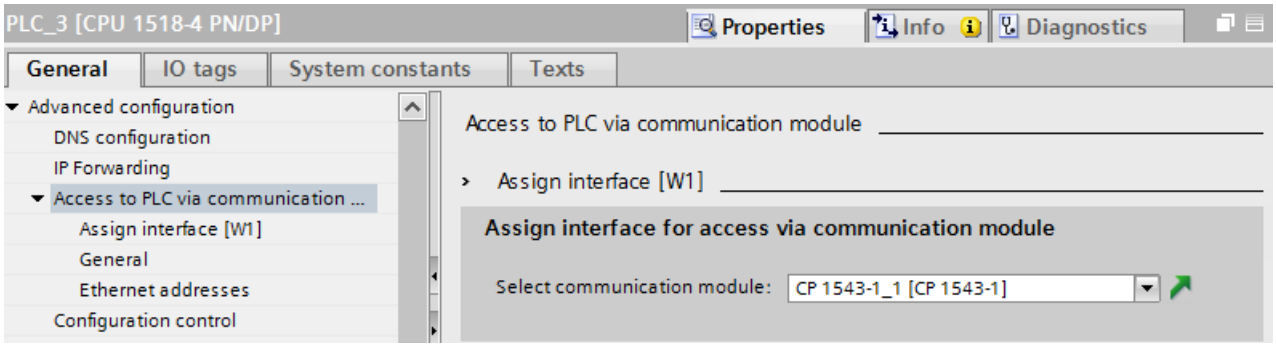

Figure 3-2 Selecting the CP in the CPU properties

After selecting the CP, configure the IP and PROFINET parameters of the virtual interface.

Observe the following rules:

- The IP address of the virtual interface and the IP addresses of the PROFINET interfaces of the CPU must be in different, disjointed address bands.
- The IP address of the virtual interface must be in the subnet of the Ethernet interface so that the services of the CP can be reached from the CPU and vice versa.

After loading the configuration data, the CPU services such as the OPC UA server can be reached via the CP and the virtual interface.

The IP address of the virtual interface is shown in the list of server addresses in the properties dialog of the OPC UA server of the CPU. Created connections and S7 communication (e.g. HMI and BSEND, BRCV) run over this interface.

The IP address of the virtual interface W1 is not listed under the currently displayed local interfaces (Xn) in the device display, but under "Addresses" in the "Settings" section. The virtual interface is also visible when no CP is plugged or when the virtual interface is deactivated. If there is no IP configuration, the IP address and subnet mask are shown with 0.0.0.0.

The virtual interface W1 is displayed in the diagnostics view under "Online & Diagnostics".

The hardware ID of the virtual interface is displayed in the system constants in the CPU properties.

Note

Address change during runtime and restart

When the IP parameters of the virtual interface are loaded, you can then change them via the display of the CPU, via T_CONFIG or online.

However, note that the originally loaded configuration will be active again after a restart of the CPU.

Configuration changes

A change of the assigned CP may have an effect on the configuration of the virtual interface:

- Changes in the configuration
  - Assign a different CP

    The configuration is used for the new CP.
  - Deselect the assigned CP

    The virtual interface W1 is deactivated and the configuration is lost.

    When a CP is assigned again, you need to configure the virtual interface again.
- Changes to the station configuration
  - Move the CP

    If the CP is only moved to another slot of the device, the configuration remains valid.
  - Removing the CP

    If the CP is removed from the station, the configuration is retained in the CPU.

    In the drop-down list of the parameter group of the CPU, the CP is displayed as missing and compiling the configuration indicates an error. The missing CP can be deselected or assigned to another CP.

Security settings of the CP

Via the CP-internal firewall, you can protect data traffic via the virtual interface of the CPU for the following services:

- HTTPS
- OPC UA

You will find the options in the parameter group "Security > Firewall".

3.5.5 Programmed connections: Restriction of firewall rules

Restrictions with programmed connections and configured security functions

In principle, it is possible to set up communications connections program-controlled using the program block TCON and at the same time by configuring the firewall.

Note

Partner IP addresses not in firewall rules

When configuring specified connections (active endpoints) in STEP 7, the IP addresses of the partners are not entered automatically in the firewall configuration.

3.6 Time-of-day synchronization

General rules

The CP supports the following mode for timeofday synchronization:

- NTP mode (NTP: Network Time Protocol)

Note

Recommendation for setting the time

Synchronization with a external clock at intervals of approximately 10 seconds is recommended. This achieves as small a deviation as possible between the internal time and the absolute time.

Note

Special feature of time-of-day synchronization using NTP

If the option "Accept time from non-synchronized NTP servers" is not selected, the response is as follows:

If the CP receives a time-of-day frame from an unsynchronized NTP server with stratum 16, the time of day is not set according to the frame. In this case, none of the NTP servers is displayed as "NTP master" in the diagnostics; but rather only as being "reachable".

Security

In the extended NTP configuration, you can create and manage additional NTP servers.

Note

Ensuring a valid time of day

If you use security functions, a valid time of day is extremely important. If you do not obtain the time-of-day from the station (CPU), we therefore recommend that you use the NTP (secure) method.

Configuration

For more detailed information on configuration, refer to the STEP 7 online help of the "Time-of-day synchronization" parameter group.

3.7 DNS configuration

DNS server

A DNS server may be required when the module itself, a communications partner, or for example an FTP server should be reachable via the host name (FQDN). If you specify the address of a device as FQDN, you need to configure a DNS server. In this case, the IP address of the device is determined via the configured DNS server.

Max. 3 DNS servers can be configured for the CP. The 4th configured DNS server is not evaluated.

3.8 Communication with the CPU

3.8.1 CP diagnostics

CP diagnostics

Using the CP diagnostics, you can save the states of some functions of the CPU and the CP in variables for the CPU and use them for other evaluations and diagnostic purposes.

The smallest cycle for updating the diagnostics data is 1 second.

- Enable advanced CP diagnostics

  Enabling the option allows use of the following diagnostic functions.

  If the option is enabled, the "Diagnostics trigger tag" must be configured.

- Diagnostics trigger tag

  If the user program of the CPU sets the "Diagnostics trigger tag" (BOOL) to 1, the CP updates the values of the configured variables for advanced diagnostics.

  After writing the current values to the variables for advanced diagnostics, the CP sets the "Diagnostics trigger tag" to 0, signaling to the CPU that the updated values can be read from the variables.

General

- CPU load

  The variable (Byte) specifies the CPU processor load as a percentage.

- Memory Resources

  The variable (Byte) specifies the utilization of the CPU work memory (RAM) as a percentage.

- Current IP address

  Variable (data type String) for the current IP address of the CP.

Security

The meaningful use of the options depends on the utilized security functions of the CP.

- VPN IPsec status

  The variable (data type Bool) is set to 1 when a VPN tunnel is established.

  Value = 0 if no VPN tunnel is established.

- Connection to SINEMA Remote Connect

  The variable (data type Bool) is set to 1 when a connection to SINEMA Remote Connect Server is established.

  Value = 0 if no connection is established.

3.9 FTP communication

FTPS access only with security functions enabled

FTPS access to the S7-1500 station as an FTP server is only possible if a user with suitable rights has been created in the STEP 7 project. This means that the security functions must be enabled on the CP. For this, security settings are available in the global user administration.

3.9.1 FTP server

3.9.1.1 Configuring the FTP server function

CP configuration

Configure the FTP server function of the CP in the following parameter group.

- With security functions disabled: "FTP server configuration"
- With security functions enabled: "Security > FTP server configuration"

Requirements in the CPU configuration and programming

Use the following settings to allow FTP access:

- In the CPU configuration in "Protection & Security > Connection mechanisms":

  Disable the option "Access via PUT/GET communication...".

- As file DBs create data blocks of the type "Array of byte".

Only for CP 1543-1 with firmware version ≤ V2.0:

- For all data blocks being used as file DBs, disable the "Optimized block access" attribute.

S7-1500 CP as FTP server

The functionality described here allows you to transfer data in the form of files to or from an S7-1500 station using FTP commands. At the same time, the conventional FTP commands for reading, writing and managing files can also be used.

Access to the following data of the S7-1500 is possible:

- **RAM of the CP**

  Name of the directory:

  /ram

- **Data blocks of the CPU**

  Name of the directory:

  /cpu1 / DBx

  "DBx" is the name of the relevant data block e.g. DB10.

- **SIMATIC memory card of the CPU**

  The function is supported as of the following firmware versions:

  – CPU: V2.0
  – CP 1543-1: V2.0
  – CP 1545-1: V1.0

  Name of the directory:

  /mmc_cpu1

  Access to the following folders of the SIMATIC memory card is possible:

  – /DATALOGS

    Directory for log files

  – /RECIPES

    Directory for recipe files

Note

FTP access to the SIMATIC memory card of the CPU: CPU STOP possible

Note that the cards have a limited capacity. If the memory space of the SIMATIC memory card is completely occupied due to storage of large amounts of data, the CPU changes to STOP.

- Use a card with adequate storage capacity.
- Avoid writing large amounts of data often to the SIMATIC memory card using FTP.

Reading/writing via DBs of the CPU

To transfer data with FTP via data blocks, create the required DBs in the CPU. Due to their special structure, these are known as file DBs.

When it receives an FTP command, the CP acting as FTP server queries its assignment table to find out how the data blocks used for file transfer in the CPU will be mapped to files. You make the data block assignment in the STEP 7 configuration of the CP (FTP configuration).

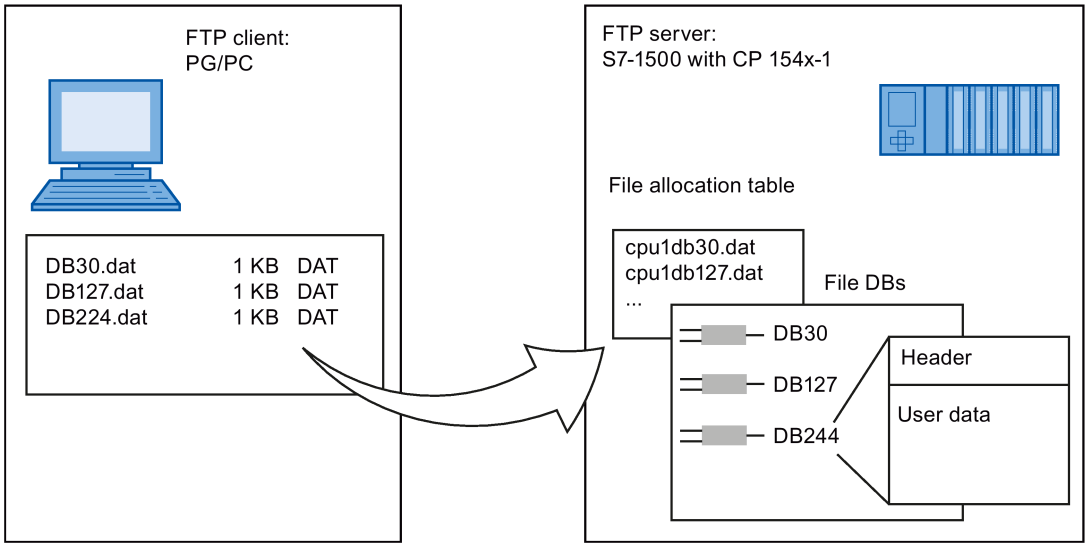

Figure 3-3 S7-CPU with CP 154x-1 as FTP server for the S7 CPU data

DB assignment in STEP 7

The fields of the table in the data block assignment in STEP 7 have the following meaning and syntax:

Column title	CPU	DB	File name	Comment
Meaning	Assignment of the CPU Selectable from drop-down list	No. of the data block (file DB) Selectable from drop-down list	The file name assigned to the file DB Automatic name proposal; entry can editable.	Informal comment
Example	cpu1 [PLC_1]	20	cpu1_db20.dat	Measured values plant 1

Notes on the syntax

The following applies to the file name of a file DB:

- The file name begins with "cpuX" (where X=1 for S7-1500).

  Note

  Keep to the notation (lower case for "cpu" and no leading spaces at the start of the row). Otherwise, the files will not be recognized.

- Length: maximum 64 characters (including "cpuX")

3.9.2 FTP client

3.9.2.1 The program block FTP_CMD (FTP client function)

FTP_CMD

Using the FTP_CMD instruction, you can establish FTP connections and transfer files from and to an FTP server.

Data transfer is possible using FTP or FTPS (secure SSL connections).

You will find the block in STEP 7 in the "Instructions" task card under "Communication > Communications processor > SIMATIC NET CP" when the Main [OB1] is open.

Note

Block versions

You can use the version V2.x of FTP_CMD in a station only in conjunction with a CPU and a CP V2.x V2.x.

As soon as the station obtains a CPU V1.x or CP V1.x, you must use FTP_CMD in the older version V1.x (e.g. V1.4). To do this, change the version of the "SIMATIC NET CP" library to V3.4. You can then select an older version of the block.

The table below shows the compatibility.

Table 3- 2 Compatibility of the block FTP_CMD with versions of the CPU and CP

FTP_CMD	CPU	CP 1543-1
V1.5	V1.x	Any
V1.5	Any	V1.x
V2.0	V2.x	V2.x

Data transfer is possible using FTP or FTPS (secure SSL connections).

Note

FTPS: Comparing certificates

FTPS requires a comparison of the certificates between FTP server and FTP client. If the FTP server is configured outside the STEP 7 project of the FTP client, the certificate needs to be imported from the FTP server. Import the certificate of the FTP server as a trusted certificate in the certificate manager.

How it works

The FTP_CMD instruction references a job block (ARG) in which the FTP command is specified. Depending on the type of FTP command (CMD), this job block uses different data structures for parameter assignment. Suitable data types (UDTs) are available for these various structures.

The following diagram shows the call structure:

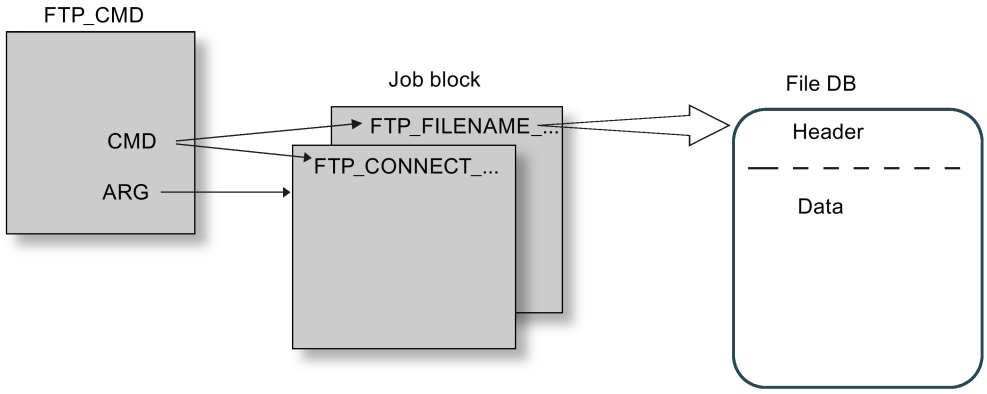

Job blocks (UDTs)

The following data structures are used for the job blocks:

- Connection establishment

  Various data structures are available for the connection establishment using the following types of access:

  – FTP_CONNECT_IPV4: Connection establishment with IP addresses according to IPv4

  – FTP_CONNECT_IPV6: Connection establishment with IP addresses according to IPv6

  – FTP_CONNECT_NAME: Connection establishment with server name (DNS)

- Data transfer

  For the data transfer, two different data structures are available:

  – FTP_FILENAME: Data structure for access to a complete file

  – FTP_FILENAME_PART: Data structure for read access to a data area

Data transfer in the File_DB

The data transfer is achieved using data blocks containing a header for job data and the area for the user data. The data block is specified in the job buffer.

You will find the description of an example file DB in the STEP 7 information system.

Requirements in the CPU configuration

Use the following settings to allow FTP access:

- For all data blocks being used as file DBs, disable the "Optimized block access" attribute.
- Only when using a CPU V1.x and a CP V1.1.x:
  Enable the "Access via PUT/GET communication..." option in the configuration data of the CPU under "Protection & Security" (PUT/GET must be released).

3.9.2.2 Input parameter - FTP_CMD

Explanation of the input parameters

You supply the FTP_CMD instruction with the following input parameters:

Table 3- 3 Formal parameters of the FTP_CMD instruction - input parameters

Parameter	Declaration	Data type	Memory area	Meaning / remarks
REQ	Input	BOOL	E, A, M, DB, L	Starts the send job on a rising edge.
ID *	INPUT	INT	1, 2 ... 64	The FTP jobs are handled on FTP connections. The parameter identifies the connection being used.
CMD *	INPUT	BYTE	See following table "Commands".	FTP command to be executed when the instruction is called. You will find value ranges for the FTP command types after the table. The FTP command specified here must be specified identically in the job block (ARG parameter). If a command is not supported by the CP firmware, an error message with STATUS = 8F6B$_H$ is output.
ARG *	INPUT	VARIANT	See following table "Commands".	Job block References the data area with the execution parameters suitable for the FTP command. Specific data types (UDT) are used depending on the FTP command. The UDTs are shown below. The ANY data type is not permitted for the pointer to be specified here!

* The values of the input parameters "ID" and "CMD" overwrite the value of the input parameter "ARG".

FTP commands in the "CMD" parameter

The following table shows you the significance of the commands of the "CMD" parameter and which UDTs you use to supply the job blocks.

Table 3- 4 Command types

CMD (command type)	Relevant job blocks / UDT	Meaning / handling
0 (NOOP)	*	The called FB does not execute any actions. The status codes are set as follows when these parameters are supplied: DONE=1; ERROR=0; STATUS=0
1 (CONNECT)	FTP_CONNECT_IPV4 FTP_CONNECT_IPV6 FTP_CONNECT_NAME	FTP connection establishment With this command, the FTP client establishes an FTP connection to an FTP server (port 21). The connection is available under the connection ID specified here for all further FTP commands. Data is then exchanged with the FTP server specified for this user.
2 (STORE)	FTP_FILENAME	This function call transfers a data block (file DB) from the FTP client (S7-CPU) to the FTP server. Caution: If the file (file DB) already exists on the FTP server, it will be overwritten.
3 (RETRIEVE)	FTP_FILENAME	This function call transfers a file from the FTP server to the FTP client (S7-CPU). Caution: If the data block (file DB) on the FTP client already contains a file, it will be overwritten.
4 (DELETE)	FTP_FILENAME	With this function call, you delete a file on the FTP server.
5 (QUIT)	*	With this function call, you close the FTP connection specified in "ID".
6 (APPEND)	FTP_FILENAME	Similar to "STORE", the "APPEND" command saves a file on the FTP server. With "APPEND", the file on the FTP server is, however, not overwritten. The new content is appended to the existing file. If the file (file DB) does not exist on the FTP server, it will be created.
7 (RETR_PART)	FTP_FILENAME_PART	Using the "RETR_PART" command (retrieve part) , you can request a section of a file from the FTP server. If very large files are involved, this allows you to restrict the read to the part you currently require. To do this, you need to know the structure of the file. Enter the required part of the file using the two parameters "OFFSET" and "LEN" in FB40.

* With the command types 0 (NOOP) and 5 (QUIT) a freely selectable job block (UDT) must be specified. This is not evaluated.

3.9.2.3 Job blocks for FTP_CMD

Meaning

You supply the FTP_CMD instruction with a job block using the ARG parameter. The structure depends on the FTP command type. By using the default data types (UDT), the instruction recognizes the type of the job block. Below, you will find the relevant data types (UDTs) for the following job blocks:

- FTP connection establishment with IP address according to IPv4
- FTP connection establishment with IP address according to IPv6
- FTP connection establishment with server name
- Write and read access and other FTP commands
- FTP command RETR_PART

Job block for FTP connection establishment with IP address according to IPv4

For FTP connection establishment with IP address according to IPv4, the following data structure is used.

Table 3- 5 FTP_CONNECT_IPV4

Parameter	Type	Range of values	Meaning / remarks
InterfaceID	HW_ANY		Module start address When you call an instruction, you transfer the module start address of the CP in the LADDR parameter. You will find the module start address of the CP in the configuration of the CP under: "Properties>Addresses>Inputs"
ID	CONN_OUC	1, 2...64	The FTP jobs are handled on FTP connections. The parameter identifies the connection being used.
ConnectionType	BYTE	0	Connection type "FTP"
ActiveEstablishment	BOOL	TRUE	TRUE = active connection establishment
FTPCmd	BYTE	1	FTP command "CONNECT" FTP command that executes when the instruction is called. You can find the value ranges for the command types in the section Input parameter - FTP_CMD (Page 52). Note: The FTP command specified here must be specified identically in the CMD input parameter.
CertIndex	BYTE	0 = FTP 1 = FTPS	Here, choose between the protocol types FTP or FTPS. Note on FTPS: If the FTP server is configured outside the STEP 7 project of the FTP client, the certificate must be imported from the FTP server.
UserName	STRING[32]	'benutzer'	User name for the login on the FTP server
Password	STRING[32]	'passwort'	Password for the login on the FTP server
FTPserverIPaddr	IP_V4	ADDR(1) ... ADDR(4)	IP address of the FTP server as Array[1..4] of Byte, where 1 byte specifies one block of the address. Example: ADDR(1) specifies the first address block (the first byte of the address).

Job block for FTP connection establishment with IP address according to IPv6

For FTP connection establishment with IP address according to IPv6, the following data structure is used.

Table 3- 6 FTP_CONNECT_IPV6

Parameter	Type	Range of values	Meaning / remarks
InterfaceID	HW_ANY		Module start address When you call an instruction, you transfer the module start address of the CP in the LADDR parameter. You will find the module start address of the CP in the configuration of the CP under: "Properties>Addresses>Inputs"
ID	CONN_OUC	1, 2...64	The FTP jobs are handled on FTP connections. The parameter identifies the connection being used.
ConnectionType	BYTE	0	Connection type "FTP"
ActiveEstablishment	BOOL	TRUE	TRUE = active connection establishment
FTPCmd	BYTE	1	FTP command "CONNECT" FTP command that executes when the instruction is called. You can find the value ranges for the command types in the section Input parameter - FTP_CMD (Page 52). Note: The FTP command specified here must be specified identically in the CMD input parameter.
CertIndex	BYTE	0 = FTP 1 = FTPS	Here, choose between the protocol types FTP or FTPS. Note on FTPS: If the FTP server is configured outside the STEP 7 project of the FTP client, the certificate must be imported from the FTP server.
UserName	STRING[32]	'user'	User name for the login on the FTP server
Password	STRING[32]	'password'	Password for the login on the FTP server
FTPserverIPaddr	IP_V6	ADDR(1) ... ADDR(16)	IP address of the FTP server as Array[1..16] of Byte, where 2 bytes specify one block of the address. Example: ADDR(1) + ADDR(2) specify the first address block.

Job block for FTP connection establishment with server name

For FTP connection establishment specifying the server name, the following data structure is used. The server name is assigned to an IP address using DNS.

Table 3- 7 FTP_CONNECT_NAME

Parameter	Type	Range of values	Meaning / remarks
InterfaceID	HW_ANY		Module start address When you call an instruction, you transfer the module start address of the CP in the LADDR parameter. You will find the module start address of the CP in the configuration of the CP under: "Properties>Addresses>Inputs"
ID	CONN_OUC	1, 2...64	The FTP jobs are handled on FTP connections. The parameter identifies the connection being used.
ConnectionType	BYTE	0	Connection type "FTP"
ActiveEstablishment	BOOL	TRUE	TRUE = active connection establishment

Parameter	Type	Range of values	Meaning / remarks
FTPcmd	BYTE	1	FTP command "CONNECT" FTP command that executes when the instruction is called. You can find the value ranges for the command types in the section Input parameter - FTP_CMD (Page 52). Note: The FTP command specified here must be specified identically in the CMD input parameter.
CertIndex	BYTE	0 = FTP 1 = FTPS	Here, choose between the protocol types FTP or FTPS. Note on FTPS: If the FTP server is configured outside the STEP 7 project of the FTP client, the certificate must be imported from the FTP server.
UserName	STRING[32]	'benutzer'	User name for the login on the FTP server
Password	STRING[32]	'passwort'	Password for the login on the FTP server
FTPserverName	STRING[254]		IP address of the FTP server

Job block for write and read access and other FTP commands

The following data structure is used for the FTP commands store, retrieve, delete and append.

Table 3- 8 FTP_FILENAME

Parameter	Type	Range of values	Meaning / remarks
InterfaceID	HW_ANY		Module start address When you call an instruction, you transfer the module start address of the CP in the LADDR parameter. You will find the module start address of the CP in the configuration of the CP under: "Properties>Addresses>Inputs"
ID	CONN_OUC	1, 2...64	The FTP jobs are handled on FTP connections. The parameter identifies the connection being used.
ConnectionType	BYTE	0	Connection type "FTP"
ActiveEstablishment	BOOL	TRUE	TRUE = active connection establishment
FTPcmd	BYTE	2, 3, 4, 6	FTP command "STORE / RETRIEVE / DELETE / APPEND" FTP command that executes when the instruction is called. You can find the value ranges for the command types in the section Input parameter - FTP_CMD (Page 52). Note: The FTP command specified here must be specified identically in the CMD input parameter.
CertIndex	BYTE	0 = FTP 1 = FTPS	Here, choose between the protocol types FTP or FTPS. Note on FTPS: If the FTP server is configured outside the STEP 7 project of the FTP client, the certificate must be imported from the FTP server.
DataBlockNumber	UINT		The data block specified here contains the file DB to be read / written.
LenFilename	UINT	0...1000	The "LenFilename" parameter for specifying the total length of the file name is not evaluated. Instead, the length information in the string of the "Filename" parameter is evaluated.

Parameter	Type	Range of values	Meaning / remarks
Filename	ARRAY[0..3] OF STRING[254]		File name of the destination or source file. The four strings for the file name are concatenated and transferred to the server as a complete string.

Job block for the RETR_PART FTP command

The following data structure is used for the RETR_PART FTP command.

Table 3- 9 FTP_FILENAME_PART

Parameter	Type	Range of values	Meaning / remarks
InterfaceID	HW_ANY		Module start address When you call an instruction, you transfer the module start address of the CP in the LADDR parameter. You will find the module start address of the CP in the configuration of the CP under: "Properties>Addresses>Inputs"
ID	CONN_OUC	1, 2...64	The FTP jobs are handled on FTP connections. The parameter identifies the connection being used.
ConnectionType	BYTE	0	Connection type "FTP"
ActiveEstablishment	BOOL	TRUE	TRUE = active connection establishment
FTPcmd	BYTE	7	FTP command "RETR_PART" FTP command that executes when the instruction is called. You can find the value ranges for the command types in the section Input parameter - FTP_CMD (Page 52). The FTP command specified here must be specified identically in the CMD input parameter.
CertIndex	BYTE	0 = FTP 1 = FTPS	Here, choose between the protocol types FTP or FTPS. Note on FTPS: If the FTP server is configured outside the STEP 7 project of the FTP client, the certificate must be imported from the FTP server.
Offset	DWORD		Offset in bytes starting at which the file will be read.

Parameter	Type	Range of values	Meaning / remarks
Length	DWORD		Sublength in bytes that is read starting at the value specified in "OFFSET". Special features: • If "DW#16#FFFFFFFF" is specified, the available rest of the file will be read. Result OK (DONE = 1, STATUS = 0) if no other error occurred. • When OFFSET > length of the original file: Length of the destination file (ACT_LENGTH in file DB): 0 bytes on the CPU. Result OK (DONE = 1, STATUS = 0) if no other error occurred. • When OFFSET + LEN > length of the original file (and LEN ≠ 0xFFFFFFFF): Length of the destination file (ACT_LENGTH in file DB): Available bytes starting at "OFFSET". Result OK (DONE = 1, STATUS = 0) if no other error occurred.
DataBlockNumber	UINT		The data block specified here contains the file DB to be read / written.
LenFilename	UINT	0...1000	The "LenFilename" parameter for specifying the total length of the file name is not evaluated. Instead, the length information in the string of the "Filename" parameter is evaluated.
Filename	ARRAY[0..3] OF STRING[254]		File name of the destination or source file. The four strings for the file name are concatenated and transferred to the server as a complete string.

Parameter supply for command types NOOP and QUIT

Supply the FTP_CMD with a reference to a job block with the following command types as well:

CMD = 0 (NOOP)

CMD = 5 (QUIT)

The content of the job block is not evaluated when these command types execute, the type (UDT) of the specified job block is therefore unimportant.

Note

Response if the reference to the FTP job block is missing

If this reference is not supplied, the command is not executed. The instruction remains blocked in an apparent execution status without any feedback to the user program on the interface.

3.9.2.4 Output parameters and status information FTP_CMD

Parameters BUSY, DONE and ERROR

You control the execution status with the parameters BUSY, DONE, ERROR and STATUS. The BUSY parameter indicates the processing status. With the DONE parameter, you check whether or not a job was correctly executed. The ERROR parameter is set if errors occur during execution of "FTP_CMD". Error information is output in the STATUS parameter.

The following table shows the relationship between the parameters BUSY, DONE and ERROR:

BUSY	DONE	ERROR	Description
1	-	-	The job is being processed.
0	1	0	The job was completed successfully.
0	0	1	The job was terminated with an error. The cause of the error is specified in the STATUS parameter.
0	0	0	No new job was assigned.

Evaluating status codes

Note

Evaluation

- Evaluation for BUSY = 0

  Do not evaluate the status displays until BUSY = 0.
- Status 8Fxx$_H$

  For entries coded with status 8Fxx$_H$, refer to the information in the STEP 7 Standard and System Functions reference manual. The chapter describing error evaluation with the RET_VAL output parameter contains detailed information.

Table 3- 10 FTP_CMD: Meaning of the STATUS parameter in conjunction with DONE and ERROR

DONE	ERROR	STATUS	Meaning
0	0	0000$_H$	No job is being executed.
1	0	0000$_H$	the job was completed without error.
0	0	7001$_H$	The job was initiated for the first time.
0	0	7002$_H$	Job still running.
0	1	80C4$_H$	Communication error (occurs temporarily, it is usually best to repeat the job in the user program).
0	1	8183$_H$	The configuration does not match the job parameters.
0	1	8401$_H$	Unknown error Possible causes: • A timeout was detected on the connection. • The FTP server has aborted the connection. Remedy: Send the QUIT and CONNECT commands again to re-establish the connection.

DONE	ERROR	STATUS	Meaning
0	1	8402H	The connection has an error status. The timeout of the connection may have been exceeded or the FTP server may have terminated the connection. Remedy: Send the QUIT and CONNECT commands to re-establish the connection.
0	1	8403H	Login has failed.
0	1	8404H	FTP server is not obtainable.
0	1	8405H	Transfer has failed.
0	1	8406H	Timeout for current action
0	1	8407H	File was not found on the FTP server.
0	1	8408H	Transfer not possible.
0	1	8409H	File could not be fetched.
0	1	8410H	Setting the TCP port for the data connection has failed.
0	1	8411H	Offset information does not match.
0	1	8412H	Error changing the specified directory
0	1	8413H	Error receiving data
0	1	8414H	Error sending data
0	1	8415H	Specified CMD (command type) was rejected by the client.
0	1	8416H	Connection was closed by the FTP server.
0	1	8418H	Error in the user data. Possible causes: • File name is empty. • Data length is "0". • etc.
0	1	8419H	There is no socket resource available to open a data connection.
0	1	8420H	There is no socket resource available to open a control connection.
0	1	8421H	Error opening the file DB to be read
0	1	8422H	Error opening the file DB to be written
0	1	8423H	Connection establishment to the FTP server has failed.
0	1	8424H	Internal error
0	1	8425H	Format error in the domain name
0	1	8426H	There are too many DNS queries pending.
0	1	8427H	The specified DNS server could not assign the specified domain name.
0	1	8428H	There is no connection resource available.
0	1	8429H	Unknown channel ID
0	1	8430H	The file DB is too short.
0	1	8431H	Error when writing to the file DB.
0	1	8432H	Error when reading from the file DB.
0	1	8433H	Error when accessing the file DB.
0	1	8434H	Action was aborted.
0	1	8435H	Channel will be reset.
0	1	8436H	Unexpected server reply
0	1	8437H	Certificate could not be verified.
0	1	8438H	Unknown error occurred.
0	1	8439H	The FTP command causes an error. The cause must be looked for on the FTP server (REST command).
0	1	8440H	The FTP server does not support the requested SSL protocol.

DONE	ERROR	STATUS	Meaning
0	1	8446H	After the FTP password was sent to the FTP server, an unexpected code was returned by the FTP server.
0	1	8451H	An error was signaled when attempting to change the transmission mode from binary to ASCII.
0	1	8455H	A memory request has failed on the CM/CP.
0	1	8460H	A problem has occurred handling SSL/TLS.
0	1	8469H	Interface error The specified output interface could not be used. Remedy: Set the interface to be used for outgoing connections.
0	1	8475H	The SSL certificate or the SSH md5 fingerprint was not considered trusted.
0	1	8476H	Nothing was received from the FTP server. In the current status, an incorrect response must be assumed.
0	1	8477H	The specified "Crypto engine" (cryptographic module) was not found.
0	1	8478H	The attempt to set the selected SSL "Crypto engine" as the default failed.
0	1	8480H	A problem has occurred with the certificate of the FTP client.
0	1	8481H	The specified number could not be used.
0	1	8482H	The FTP server uses encoding that is not supported.
0	1	8484H	The maximum file size was exceeded.
0	1	8485H	The file DB was modified while being processed to be sent or the file DB is incorrectly structured.
0	1	8489H	Data could not be sent. There is not enough memory available for the action on the FTP server.
0	1	8492H	The file already exists. The file will not be overwritten.
0	1	8496H	A problem occurred reading the SSL CA certificate.
0	1	8497H	An unexpected error occurred in the SSH session.
0	1	8498H	It was not possible to terminate the SSL connection.
0	1	8499H	The socket is not ready for sending/receiving. Wait until it is ready and try again.
0	1	8501H	The SSL certificate check of the FTP server failed.
0	1	8507H	A timeout has occurred establishing the connection during the active FTP session while waiting for the FTP server.
0	1	8F54H	The "EXIST" bit in the file DB header is not set.
0	1	8F55H	Header status bit: Locked
0	1	8F56H	The NEW bit in the file DB header was not reset
0	1	8F6BH	Possible causes: • Bad value for the CMD parameter Values from 0 to 15 are permitted. • An FB40 command is not supported. Possible cause: Incorrect firmware of the CP Remedy: Firmware update (with older CPs, use the functions FC 40...FC 44 instead of FB 40.)
0	1	8F7FH	Internal error, for example, illegal ANY reference.

3.9.2.5 Structure of the data block (file DB) for FTP client operation

How it works

To transfer data with FTP, create data blocks (file DBs) on the CPU of your S7 station. These data blocks must have certain structure to allow them to be handled as transferable files by the FTP services. They consist of the following sections:

- Section 1: File DB header (has a fixed length of 20 bytes)
- Section 2: User data as "Array [..] of Byte" or "Array [..] of Char" (has a variable length and structure)

Data consistency

Make sure that you do not access the same file DB more than once at the same time.

Creating a file DB

1. Create a new data block in STEP 7.
2. Open the block editor.
3. In the block editor of the DB, select the line you want to use as the start line for the file DB.
4. In the "Data type" column, enter the type "FILE_DB_HEADER" using the keyboard.

   A data structure with the header structure required for the file DB is created.
5. Set the "WRITEACCESS" parameter to "true" to enable access.
6. Enter a value for the length of the user data at the "MAX_LENGTH" parameter.
7. Below this, create a data field of the type "Array [..] of Byte" or "Array [..] of Char" for the user data to be sent.

   The size of the field must match the specification of "MAX_LENGTH" in the header.

File DB header for FTP client mode

The file DB header described here is identical to the file DB header described for server mode.

Parameter	Type	Value / meaning	Supply
EXIST	BOOL	The EXIST bit indicates whether the user data area contains valid data. The retrieve FTP command executes the job only when EXIST=1. • 0: The file DB does not contain valid user data (file does not exist). • 1: The file DB contains valid user data (file exists).	The DELETE FTP command sets EXIST=0. The STORE FTP command sets EXIST=1.
LOCKED	BOOL	The LOCKED bit is used to restrict access to the file DB. • 0: The file DB can be accessed. • 1: The file DB is locked.	The "STORE" and "RETRIEVE" FTP commands set LOCKED=1 when they are executed if the bit was previously at 0. The user program on the S7 CPU can also set or reset LOCKED during write access to achieve data consistency. This results in mutual locking between the user program and FTP handling to ensure consistency. Recommended sequence in the user program: 1. Check LOCKED bit (if = 0) 2. Set WRITEACCESS bit = 0 3. Check LOCKED bit (if = 0) 4. Set LOCKED bit = 1 5. Write data 6. Set LOCKED bit = 0
NEW	BOOL	The NEW bit indicates whether data has been modified since the last read access. • 0: The content of the file DB is unchanged since the last write access. The user program of the S7 CPU has registered the last modification. • 1: The user program of the S7 CPU has not yet registered the last write access.	After execution, the "RETRIEVE" FTP command sets NEW=1. After reading the data, the user program in the S7 CPU must set NEW=0 to allow a new "RETRIEVE" command.
WRITEACCESS	BOOL	• 0: The user program has write access rights for the file DBs on the S7 CPU. • 1: The user program has no write access rights for the file DBs on the S7 CPU.	During the configuration of the DB, the bit is set to an initialization value. Recommendation: Whenever possible, the bit should remain unchanged! In special situations, adaptation during operation is possible.

Parameter	Type	Value / meaning	Supply
ACT_LENGTH	DINT	Current length of the user data area. The content of this field is only valid when EXIST = 1.	The current length is updated following write access.
MAX_LENGTH	DINT	Maximum length of the user data area (length of the entire DB less 20 bytes header).	The maximum length should be specified during configuration of the DB. The value can also be modified by the user program during operation.
FTP_REPLY_CODE	INT	Unsigned integer (16-bit) containing the last reply code from FTP as a binary value. The content of this field is only valid when EXIST = 1.	Updated by the FTP protocol handler with the FTP command processing of the server.
DATE_TIME	DATE_AND_TIME	Date and time of the last modification to the file. The content of this field is only valid when EXIST = 1.	The current date is updated following a write access. If the function for forwarding the time of day is used, the entry corresponds to the time that was passed on. If the function for forwarding the time of day is not used, a relative time is entered. The reference is the startup time of the CP (initialization value: 01.01.1994 00:00h).

Evaluating the "LOCKED" and "NEW" status bits from the FTP_CMD program block

- In version 1.2 of the "FTP_CMD" program block, the status bits "LOCKED" and "NEW" of the FILE_DB_HEADER are not evaluated.

  With the functions of the FTP server or when using the same file DB, the possibility of multiple simultaneous access to the same data area cannot be excluded. This can lead to data inconsistency.

- As of version 1.5 of the "FTP_CMD" program block, the status bits "LOCKED" and "NEW" of the FILE_DB_HEADER are set correctly. The two status bits are evaluated. Version 1.5 is available as of STEP 7 Professional V12 SP1.

Note

Avoiding data inconsistency

Make sure that you do not access the same file DB more than once at the same time.

3.10 Security

You will find an overview of the range and use of the security functions in section Industrial Ethernet Security (Page 16).

For the configuration limits of the security functions refer to the section Characteristics security (Page 21).

To be able to configure the security functions, you need to create a security user; see section Security user (Page 65).

3.10.1 Security user

Creating a security user

You need the relevant configuration rights to be able to configure security functions. For this purpose, you need to create at least one security user with the corresponding rights.

Navigate to the global security settings > "User and roles" > "Users" tab.

1. Create a user and configure the parameters.
2. Assign this user the role "NET Standard" or "NET Administrator" in the area below "Assigned roles".

After logging on, this user can make the necessary settings in the STEP 7 project.

In the future, continue to log on as this user when working on security parameters.

3.10.2 VPN

The "VPN" parameter group of the module is only displayed when you assign the module to a VPN group in the global security functions.

What is VPN?

Virtual Private Network (VPN) is a technology for secure transportation of confidential data in public IP networks, for example the Internet. With VPN, a secure connection (= tunnel) is set up and operated between two secure IT systems or networks via a non-secure network.

One of the main characteristics of the VPN tunnel is that it forwards all network packets regardless of higher protocols (HTTP, FTP).

The data traffic between two network components is transported practically unrestricted through another network. This allows entire networks to be connected together via a neighboring network.

Properties

- VPN forms a logical subnet that is embedded in a neighboring (assigned) network. VPN uses the usual addressing mechanisms of the assigned network, however in terms of the data, it transports its own network packets and therefore operates independent of the rest of this network.
- VPN allows communication of the VPN partners with the assigned network.
- VPN is based on tunnel technology, can be individually configured, is customer-specific and is self-contained.
- Communication between the VPN partners is protected from eavesdropping or manipulation by using passwords, public keys or a digital certificate (= authentication).

Areas of application

- Local area networks can be connected together securely via the Internet ("site-to-site" connection).
- Secure access to a company network ("end-to-site" connection).
- Secure access to a server ("end-to-end" connection).
- Communication between two servers is possible without being accessible to third parties ("end-to-end" or "host-to-host" connection).
- Ensuring information security in networked automation systems.
- Securing the computer systems including the associated data communication within an automation network or secure remote access via the Internet.
- Secure remote access from a PC/programming device to automation devices or networks protected by security modules is possible via public networks.

Cell protection concept

With Industrial Ethernet Security, individual devices, automation cells or network segments of an Ethernet network can be protected:

- The access to individual devices or even to entire automation cells protected by security modules is allowed.
- Secure connections via non-secure network structures becomes possible.

Due to the combination of different security measures such as firewall, NAT/NAPT routers and VPN via IPsec tunnels, security modules protect against the following:

- Data espionage
- Data manipulation
- Unwanted access

3.10.2.1 Creating VPN tunnel communication between S7-1500 stations

Requirements

To create a VPN tunnel between two S7-1500 stations, the following requirements must be met:

- Two S7-1500 stations have been configured.
- Participating CP 1543-1 are configured with a firmware version ≥ V1.1.
- The Ethernet interfaces of the two stations are located in the same subnet.

Note

Communication also possible via an IP router

Communication between the two S7-1500 stations is also possible via an IP router. To use this communications path, however, you need to make further settings.

Procedure

To create a VPN tunnel, you need to work through the following steps:

1. Create a security user.

   If the security user has already been created: Log on as a user.
2. Select the "Activate security features" check box.
3. Create the VPN group and assign security modules.
4. Configure properties of the VPN group.

   Configure local VPN properties of the two CPs.

You will find a detailed description of the individual steps in the following paragraphs of this section.

Creating a security user

To create a VPN tunnel, you require appropriate configuration rights. To activate the security functions, you need to create at least one security user.

1. In the local security settings of the CP, click the "User logon" button.
   Result: A new window opens.
2. Enter the user name, password and confirmation of the password.
3. Click the "User login" button.
   You have created a new security user. The security functions are now available to you.

With all further logons, log on as user.

"Activate security features" option enabled

- After logging on, you must enable the "Activate security features" option for both CPs.
  The security functions are now available to you for both CPs.

Creating the VPN group and assigning security modules

Note

Current date and current time of day on the security modules

When using secure communication (for example HTTPS, VPN...), make sure that the security modules involved have the current time of day and the current date. Otherwise the certificates used will not be evaluated as valid and the secure communication will not work.

---

1. In the global security settings, select the entry "Firewall" > "VPN groups" > "Add new VPN group".
2. Double-click on the entry "Add new VPN group", to create a VPN group.
   Result: A new VPN group is displayed below the selected entry.

3. In the global security settings, double-click on the entry "VPN groups" > "Assign module to a VPN group".
4. Assign the security modules between which VPN tunnels will be established to the VPN group.

Configuring properties of the VPN group

1. Double-click on the newly created VPN group.
   Result: The properties of the VPN group are displayed under "Authentication".
2. Enter a name for the VPN group. Configure the settings of the VPN group in the properties. In this way, you define the basic properties of the VPN group.

Note

Specifying the VPN properties of the CP

You specify the VPN properties of the required CP in the local properties of the module ("Security" > "Firewall" > "VPN")

Result

You have created a VPN tunnel. The firewalls of the CPs are activated automatically: The "Activate firewall" option is enabled by default when you create a VPN group. You cannot disable the option.

- Download the configuration to all modules that belong to the VPN group.

3.10.2.2 Establishment of VPN tunnel communication between the CP and SCALANCE M

Setting up VPN tunnel communication between the CP and SCALANCE M is essentially the same as described in Procedure for S7-1500 stations (Page 66).

VPN tunnel communication will only be established if you have enabled the "Perfect Forward Secrecy" option in the global security settings of the created VPN group ("VPN group > Authentication").

If the option is disabled, the CP rejects establishment of the connection.

3.10.2.3 VPN tunnel communication with SOFTNET Security Client

Setting up VPN tunnel communication between the SOFTNET Security Client and the CP is essentially the same as described in Procedure for S7-1500 stations (Page 66).

VPN tunnel communication works only if the internal node is disabled

Under certain circumstances, the establishment of VPN tunnel communication between SOFTNET Security Client and the CP fails.

SOFTNET Security Client also attempts to establish VPN tunnel communication to a lower-level internal node. This communication establishment to a non-existing node prevents the required communication being established to the CP.

To establish successful VPN tunnel communication to the CP, you need to disable the internal node.

Use the procedure for disabling the node as explained below only if the described problem occurs.

Disable the node in the SOFTNET Security Client tunnel overview:

1. Remove the checkmark in the "Enable active learning" check box.

   The lower-level node initially disappears from the tunnel list.
2. In the tunnel list, select the required connection to the CP.
3. With the right mouse button, select "Enable all members" in the shortcut menu.

   The lower-level node appears again temporarily in the tunnel list.
4. Select the lower-level node in the tunnel list.
5. With the right mouse button, select "Delete entry" in the shortcut menu.

Result: The lower-level node is now fully disabled. VPN tunnel communication to the CP is established successfully.

3.10.2.4 SINEMA Remote Connect

Remote maintenance with SINEMA Remote Connect (SINEMA RC)

The application "SINEMA Remote Connect" (SINEMA RC) is available for remote maintenance purposes.

SINEMA RC uses OpenVPN for encryption of the data. The center of the communication is SINEMA RC Server via which communication runs between the subscribers and that manages the configuration of the communications system.

Preparatory steps

Execute the following steps before start configuring the SINEMA RC connection of the module in STEP 7. They are the prerequisite for a consistent STEP 7 project.

- Configuration of SINEMA Remote Connect Server

  Configure SINEMA RC Server as necessary (not in STEP 7). The communications module and its communications partners must be configured in the SINEMA RC Server.

- Exporting the CA certificate (optional)

  If you want to use the server certificate as authentication method of the communications module during connection establishment, export the CA certificate from SINEMA RC Server.

  Then import the CA certificate from SINEMA RC Server to the engineering station.

  Alternatively, you can use the fingerprint of the server certificate as authentication method of the communications module. The fingerprint's duration of validity may be shorter than that of the certificate.

  Please note that you need to repeat the import of a certificate in the event of a module replacement.

Configuration of SINEMA Remote Connect

Importing your own certificate

1. On the CP, navigate to the parameter group "Security > Certificate manager > Certificates of the partner devices".
2. Open the certificate selection dialog with a double-click on the first free table row.
3. Select the CA certificate of SINEMA RC Server.

Then navigate to the parameter group "Security > VPN".

VPN > General

1. Activate VPN
2. As "VPN connection type", select the option "Automatic OpenVPN configuration via SINEMA Remote Connect Server" if you wish to use communication via SINEMA Remote Connect.

SINEMA Remote Connect Server

Enter the address and port number of the server.

Server Verification

Here you select the authentication method of the communications module during connection establishment.

- CA Certificate

  Under "CA certificate", select the CA certificate from SINEMA RC Server that was previously imported and assigned in the local certificate manager.

  The module generally checks the CA certificate of the server and its validity period. The two options cannot be changed.

- Fingerprint

  When you select this authentication method, you enter the fingerprint of the server certificate of SINEMA RC Server.

Authentication

- Device ID

  Enter the device ID generated for the module in SINEMA RC.

- Device password

  Enter the device password of the module configured in SINEMA RC.

  Max. number of characters: 127

Optional settings

The connection establishment is configured in the "Security > VPN > Optional settings" parameter group with the parameter "Connection type".

- **Update interval**

  With this parameter you set the interval at which the CP queries the configuration on the SINEMA RC Server.

  Note that with the setting 0 (zero) changes to the configuration of the SINEMA RC Server may result in the CP no longer being capable of establishing a connection to the SINEMA RC Server.

- **"Connection type"**

  The two options of the parameter have the following effect on the connection establishment:

  – Auto

    The module establishes a connection to the SINEMA RCServer. The OpenVPN connection is retained until the connection parameters are changed by the SINEMA Remote Connect Server. If the connection is interrupted, the CP automatically re-establishes the connection.

    If the connection parameters are changed by the SINEMA Remote Connect Server, the CP requests the new connection data after the update interval configured above has elapsed.

  – PLC trigger

    The option is intended for sporadic communication of the module via the SINEMA RC Server.

    You can use this option when you want to establish temporary connections between the module and a PC. The temporary connections are established via a PLC tag and can be used in servicing situations, for example.

Note

Connection abort

With a STOP of the CPU, for example due to a firmware update or "Download to device", the OpenVPN connection is aborted.

These functions can only be used when the "Auto" option is enabled.

- **PLC tag for connection establishment**

  If the option "PLC trigger" is selected, the module establishes a connection when the PLC tag (Bool) changes to the value 1. During operation the PLC tag can be set when necessary, for example using an HMI panel.

  When the PLC tag is reset to 0, the connection is terminated again.

Manual setting the time of day during commissioning

Note

Time-of-day synchronization when using Security / SINEMA RC

When using security functions, such as SINEMA Remote Connect, the CP needs the current time for authentication on the partner or on the SINEMA RC Server.

The CP receives the time from an NTP server before the connection is established for the first time.

3.10.2.5 CP as passive subscriber of VPN connections

Setting permission for VPN connection establishment with passive subscribers

If the CP is connected to another VPN subscriber via a gateway, you need to set the permission for VPN connection establishment to "Responder".

This is the case in the following typical configuration:

VPN subscriber (active) ⇔ gateway (dyn. IP address) ⇔ Internet ⇔ gateway (fixed IP address) ⇔ CP (passive)

Configure the permission for VPN connection establishment for the CP as a passive subscriber as follows:

1. In STEP 7, go to the devices and network view.
2. Select the CP.
3. Open the parameter group "VPN" in the local security settings.
4. For each VPN connection with the CP as a passive VPN subscriber, change the default setting "Initiator/Responder" to the setting "Responder".

3.10.3 Firewall

3.10.3.1 Firewall sequence when checking incoming and outgoing frames

Each incoming or outgoing frame initially runs through the MAC firewall (layer 2). If the frame is discarded at this level, it is not checked by the IP firewall (layer 3). This means that with suitable MAC firewall rules, IP communication can be restricted or blocked.

See also

Programmed connections: Restriction of firewall rules (Page 44)

Virtual interface of the CPU (Page 41)

3.10.3.2 Notation for the source IP address (advanced firewall mode)

If you specify an address range for the source IP address in the advanced firewall settings of the CP, make sure that the notation is correct:

- Separate the two IP addresses only using a hyphen.

  Correct: 192.168.10.0-192.168.10.255

- Do not enter any other characters between the two IP addresses.

  Incorrect: 192.168.10.0 - 192.168.10.255

If you enter the range incorrectly, the firewall rule will not be used.

3.10.3.3 HTTP and HTTPS not possible with IPv6

It is not possible to use HTTP and HTTPS communication on the Web server of the station using the IPv6 protocol.

If the firewall is enabled in the local security settings in the entry "Firewall > Predefined IPv6 rules": The selected check boxes "Allow HTTP" and "Allow HTTPS" have no function.

3.10.3.4 Firewall settings for connections via a VPN tunnel

IP rules in advanced firewall mode

If you have configured connections between CPs, note the following setting if you operate the CPs in advanced firewall mode.

In the parameter group "Security > Firewall > IP rules" select the setting "Accept" for tunnel connections for both CPs.

If you do not enable the option, the VPN connection is terminated and re-established.

This applies to connections between a CP 154x-1 and, for example, a CP 343-1 Advanced, CP 443-1 Advanced, CP 1628 or CP 1243-1.

See also

Settings for online security diagnostics and downloading to station with the firewall activated (Page 74)

3.10.4 Online functions

3.10.4.1 Settings for online security diagnostics and downloading to station with the firewall activated

Setting the firewall for online functions

With the security functions enabled, follow the steps outlined below.

Global security functions:

1. Select the entry "Firewall > Services > Define services for IP rules".
2. Select the "ICMP" tab.
3. Insert a new entry of the type "Echo Reply" and another of the type "Echo Request".

Local security functions of the CP:

Now select the CP in the S7 station.

1. Enable the advanced firewall mode in the local security settings of the CP in the "Security > Firewall" parameter group.
2. Open the "IP rules" parameter group.
3. In the table, insert a new IP rule for the previously created global services as follows:
   – Action: Accept; From:: External; To: Station; Service > ICMPv4/6 service > Echo Request (the previously globally created service)
   – Action: Accept; From:: Station; To: External; Service > ICMPv4/6 service > Echo Reply (the previously globally created service)
4. For the IP rule for the "Echo Request" service, enter the IP address of the engineering station under "Source IP address".

With these rules, the CP can only be reached from the engineering station with ICMP packets (ping) via the firewall.

Note

Additional services for online security diagnostics and download

If you wish to use the "Online security diagnostics" or "Download to device" functions, you need to create additional rules or disable the "Echo Request" / "Echo Reply" services.

3.10.4.2 Online security diagnostics via port 8448

Security diagnostics via port 8448

Requirements:

- With an activated firewall, access must be enabled.

If you want to perform security diagnostics in STEP 7 Professional, follow the steps below:

1. Select the CP in STEP 7.
2. Open the "Online & Diagnostics" shortcut menu.
3. In the "Security" parameter group, click the "Connect online" button.

In this way, you perform the security diagnostics via port 8448.

3.10.5 Log settings - Filtering of the system events

Communications problems if the value for system events is set too high

If the value for filtering the system events is set too high, you may not be able to achieve the maximum performance for the communication. The high number of output error messages can delay or prevent the processing of the communications connections.

In "Security > Log settings > Configure system events", set the "Level:" parameter to the value "3 (Error)" to ensure the reliable establishment of the communications connections.

3.10.6 Network authentication

Network authentication and EAP methods

The CP supports network authentication according to IEEE 802.1X.

Network authentication is used for configurations in which the CP can access a network via a switch that also supports IEEE 802.1X. The CP must first authenticate itself before access to the network is enabled.

Authentication of the CP is handled either by a switch, which checks the identity of the CP itself, or an authentication server or configured RADIUS server.

The communication for authentication runs via the Extensible Authentication Protocol (EAP). It is used to authenticate the CP to the network and for key exchange to protect communication.

Configuration

1. Select the CP.
2. Select the "Network authentication" entry in the local security settings and enable the option.
3. Select an EAP method:
4. Make the respective settings for the selected EAP method.

The following authentication methods are supported.

EAP methods

- **MD5**

  MD5 is not secure against man-in-the-middle attacks and dictionary attacks.

  Use of a method with higher security is recommended.

- **TLS**

  TLS establishes an encrypted TLS connection and provides certificate-based mutual authentication of client and network.

- **PEAP**

  PEAP is a two-stage procedure. A secure tunnel is established in the first stage, in which another authentication procedure takes place subsequently.

  Unlike the TLS method, PEAP does not necessarily have to verify the identity of the client in the first stage. This is why the configuration of the client certificate is options.

- **TTLS**

  TTLS is an extension of TLS and is also a two-stage procedure. Provides certificate-based mutual authentication of the client and the network through an encrypted channel or tunnel.

  In contrast to TLS, it only requires server-side certificates.

- **MSCHAPv2**

  The method was originally used for logging into Microsoft networks, but is now also used by some other applications. It is used only within a secured tunnel.

- **PWD**

  PWD works without encryption. It can be used in a tunnel (e.g. TTLS) or alone.

  Use of a method with higher security is recommended.

Settings for the authentication method

Make the following settings for the EAP method used:

EAP methods	Identity	Internal EAP method *	Authentication settings	Verification settings	Server list
MD5	User name (1 to 256 characters)	-	Password (1 to 256 characters)	-	-
TLS	User name (1 to 256 characters) Can also be left blank depending on the configuration of the RADIUS server.	-	-	The CA certificate must be assigned to the CP. Client certificate with private key must be assigned to the CP.	Optional input of one or more servers Placeholders are possible. ** If no entry is made, any certificate signed by the certificate authority is allowed.

EAP methods	Identity	Internal EAP method *	Authentication settings	Verification settings	Server list
PEAPv0	User name (1 to 256 characters)	MD5 MSCHAPv2 PWD	Password (1 to 256 characters)	The CA certificate must be assigned to the CP. Client certificate (optional), depending on the configuration of the RADIUS server. Client certificates with private key	Optional input of one or more servers Placeholders are possible. ** If no entry is made, any certificate signed by the certificate authority is allowed.
TTLS	User name (1 to 256 characters)	MD5 MSCHAPv2 PWD	-	The CA certificate must be assigned to the CP. Client certificate (optional), depending on the configuration of the RADIUS server. Client certificates with private key	Optional input of one or more servers Placeholders are possible. ** If no entry is made, any certificate signed by the certificate authority is allowed.
MSCHAPv2	User name (1 to 256 characters)	-	Password (1 to 256 characters) or Hash value (MD4 hash of the password; 1 to 32 characters).	-	-
PWD	User name (1 to 256 characters)	-	Password (1 to 256 characters)	-	-

* The internal method is used in the two-stage procedure within the established tunnel.

** When placeholders are used (server domain masks), the distinguished name or SAN of the server certificate must match at least one mask.

3.11 Program blocks for OUC

Programming Open User Communication (OUC)

The instructions (program blocks) listed below are required for the following communication services via Ethernet:

- ISO transport
- TCP (IPv4 / IPv6)
- ISO-on-TCP
- UDP (Multicast)
- E-mail

For this, create suitable program blocks. The program block can be found in STEP 7 in the "Instructions > Communication > Open user communication" window.

You will find details on the program blocks in the information system of STEP 7.

Note

Different program block versions

Note that in STEP 7 you cannot use different versions of a program block in a station.

Supported program blocks for OUC

The following instructions in the specified minimum version are available for programming Open User Communication:

- **TSEND_C V3.1 / TRCV_C V3.1**

  Compact blocks for connection establishment/termination and for sending and receiving data

  or

- **TCON V4.0 / TDISCON V2.1**

  Connection establishment / connection termination

- **TUSEND V4.0 / TURCV V4.0**

  Sending and receiving data via UDP

- **TSEND V4.0 / TRCV V4.0**

  Sending and receiving data via TCP or ISOonTCP

- **TMAIL_C V4.0**

  Sending e-mails

  Note the description of TMAIL_C as of version V4.0 in the STEP 7 information system.

Connection establishment and termination

Connections are established using the program block TCON. Note that a separate program block TCON must be called for each connection.

A separate connection must be established for each communications partner even if identical blocks of data are being sent.

After a successful transfer of the data, a connection can be terminated. A connection is also terminated by calling TDISCON.

Note

Connection abort

If an existing connection is aborted by the communications partner or due to disturbances on the network, the connection must also be terminated by calling TDISCON. Make sure that you take this into account in your programming.

Connection descriptions in system data types (SDTs)

For the connection description, the blocks listed above use the parameter CONNECT (or MAIL_ADDR_PARAM with TMAIL_C). The connection description is stored in a data block whose structure is specified by the system data type (SDT).

Creating an SDT for the data blocks

You create the SDT required for every connection description as a data block. You generate the SDT type in STEP 7 by entering the name (e.g. "TCON_IP_V4") in the "Data type" box manually in the declaration table of block instead of selecting an entry from the "Data type" drop-down list. The corresponding SDT is then created with its parameters.

The following SDTs can be used.

- **TCON_Configured**

  For transferring frames via TCP
- **TCON_IP_V4**

  For transferring frames via TCP or UDP
- **TCON_IP_V4_SEC**

  For the secure transfer of frames via TCP
- **TCON_QDN**

  As of SDT version V2.2

  For transferring frames via TCP or UDP (IPv4 / IPv6)
- **TCON_QDN_SEC**

  As of SDT version V2.2

  For the secure transfer of frames via TCP (IPv4 / IPv6)
- **TCON_IP_RFC**

  For transferring frames via ISO-on-TCP
- **TCON_ISOnative**

  For transferring frames via ISO transport
- **TMail_V4**

  For transferring e-mails addressing the e-mail server using an IPv4 address
- **TMail_V6**

  For transferring e-mails addressing the e-mail server using an IPv6 address
- **TMail_FQDN**

  For transferring e-mails addressing the e-mail server using the host name
- **TMail_V4_SEC**

  For secure transfer of e-mails addressing the e-mail server using an IPv4 address

- **TMail_V6_SEC**

  For secure transfer of e-mails addressing the e-mail server using an IPv6 address

- **TMail_QDN_SEC**

  For secure transfer of e-mails addressing the e-mail server using the host name

You will find the description of the SDTs with their parameters in the STEP 7 information system under the relevant name of the SDT.

You can find a description of the parameters of SDTs TMail_V4_SEC, TMail_V6_SEC and TMail_QDN_SEC in the online help section on TCON_IP_V4_SEC.

Diagnostics and upkeep

4

4.1 Diagnostics options

You have the following diagnostics options available for the module:

LEDs of the module

For information on the LED displays, refer to the section LEDs (Page 23).

CP diagnostics during runtime

Via the configuration, you can enable writing of diagnostics information into variables of the CPU; refer to section CP diagnostics (Page 46).

STEP 7: The "Diagnostics" tab in the Inspector window

If your engineering station is connected to the module via Ethernet, information on the connection status of the ES with the module can be found here.

STEP 7: Diagnostic functions via the "Online & Diagnostics" shortcut menu

Using the online functions, you can read various diagnostics information of the module from an engineering station on which the STEP 7 project is stored and perform maintenance functions.

You will find additional information on the diagnostics functions of STEP 7 in the STEP 7 information system.

Diagnostics

Here, you can obtain the following static information on the selected module:

- General

  General information on the module
- Diagnostics status

  Information on the diagnostics status
- Ethernet interface

  Address and statistical information
- Time

  Specification of the current time in the module and the time source
- Security

  Status information and log entries

Functions

You can run the following functions here:

- Firmware update

  For a description, see section Update firmware (Page 85).
- Assign IP address
- Assign PROFINET device name
- Save service data

STEP 7: Online connection

Establish the online connection to the module via the "Connect online" shortcut menu.

For the procedure, refer to the section Connect online (Page 82).

Web server

On a PC, you can access the Web pages of the CPU via HTTP/HTTPS. These pages provide various information.

For access to the content, see Preface (Page 3), Documentation guide.

SNMP

You will find detailed information about the supported functions in the section Diagnostics with SNMP (Page 83).

4.2 Connect online

Online functions

Together with STEP 7, the CP offers various diagnostic and maintenance functions at the engineering station (ES). The ES and the CP must be in the same subnet for this.

Establishing an online connection via Ethernet

Procedure:

1. Connect the ES to the network.
2. Open the relevant STEP 7 project on the ES.
3. Select the CP.
4. Enable the online functions using the "Connect online" icon.
5. In the "Connect online" dialog, select the entry "PN/IE" from the "Type of PG/PC interface" drop-down list.

6. In the "PG/PC interface" drop-down list, select the interface of the ES.

   You can use the icon to the right of the drop-down list to check the settings of the interface.
7. In the "Connect with interface/subnet" drop-down list, select the interface of the station
8. Click "Start search".

   If a connection is possible, the station is displayed.
9. Select the station in the table of target devices.

   The path is possible both via the CP or the CPU.
10. Click "Connect".

Terminate online connection

On completion of the online session, terminate the online connection again using the "Disconnect" button.

4.3 Diagnostics with SNMP

Requirement

The requirement for using SNMP is the enabling of the function in the configuration.

SNMP (Simple Network Management Protocol)

SNMP is a protocol for diagnostics and managing networks and nodes in the network. To transmit data, SNMP uses the connectionless UDP protocol.

The information on the properties of SNMP-compliant devices is entered in MIB files (MIB = Management Information Base).

You will find detailed information on SNMP and the Siemens Automation MIB in the manual "Diagnostics and Configuration with SNMP" that you will find on the Internet:
Link: (https://support.industry.siemens.com/cs/ww/en/ps/15392/man)

Performance range of the CP

The CP supports the following SNMP versions:

- SNMPv1
- SNMPv3 (with activated Security functions)

Traps are not supported by the CP.

Supported MIBs in SNMPv1

The CP supports the following MIBs:

- **MIB II (acc. to RFC1213)**

  The CP supports the following groups of MIB objects:

  – System
  – Interfaces
  – IP
  – ICMP
  – TCP
  – UDP
  – SNMP

- **LLDP MIB**
- **Siemens Automation MIB**

  Note the rights for writing to the MIB objects, see the next section (SNMPv3).

Supported MIB objects in SNMPv3

If SNMPv3 is enabled, the CP returns the contents of the following MIB objects:

- **MIB II (acc. to RFC1213)**

  The CP supports the following groups of MIB objects:

  – System
  – Interfaces

    The "Interfaces" MIB object provides status information about the CP interfaces.

  – IP (IPv4/IPv6)
  – ICMP
  – TCP
  – UDP
  – SNMP

  The following groups of the standard MIB II are not supported:

  – Adress Translation (AT)
  – EGP
  – Transmission

- **LLDP MIB**

- **Siemens Automation MIB**

  Note that write access is permitted only for the following MIB objects of the "System" group:

  – sysContact

  – sysLocation

  – sysName

    A set sysName is sent as the host name using DHCP option 12 to the DHCP server to register with a DNS server.

  For all other MIB objects and groups, only read access is possible for security reasons.

Access rights using community names (SNMPv1)

TCP uses the following community strings to control the permissions for access to the SNMP agent:

Table 4- 1 Access rights in the SNMP agent

Type of access	Community string *)
Read access	public
Read and write access	private

*) Note the use of lowercase letters!

Note

Security of the access

For security reasons, change the generally known strings "public" and "private".

4.4 Update firmware

New firmware versions of the CP

If a new firmware version is available for the CP, you will find this on the Internet pages of Siemens Industry Online Support:
Link: (https://support.industry.siemens.com/cs/ww/en/ps/15340/dl)

Firmware files have the file format *.upd.

Save the firmware file on your PC.

There are different ways of loading a new firmware file on the CP:

- Online functions of STEP 7 via Ethernet
- Loading the firmware file into the CPU from an SD card

Note

SD card only for firmware file

For the firmware file, you need a SIMATIC SD memory card, for example (article numbers):

- 6AV6671-8XB10-0AX1
- 6AV2181-8XP00-0AX0
- 6AV2181-8AQ10-0AX0

The firmware update card may not contain any other files. An SD card with configuration data cannot be used.

Note

Duration of the firmware update

Downloading a new firmware file can take several minutes.

Always wait until the completion of the firmware update can be recognized from the LEDs (see below).

Loading the firmware with the online functions of STEP 7 via Ethernet

Requirements:

- The CPU of the station is accessible via Ethernet.
- The engineering station and the CPU are located in the same subnet.
- The new firmware file is stored on your engineering station.
- The engineering station is connected to the network.
- The relevant STEP 7 project is open on the engineering station.

Procedure:

1. Select the station that you want to update with a new firmware.
2. Enable the online functions using the "Connect online" icon.
3. In the "Connect online" dialog, select the Ethernet interface in the "Type of PG/PC interface" list box.
4. Select the CPU of the station.
5. Click on "Start search" to search for the module in the network and to specify the connection path.

   When the module is found it is displayed in the table.

6. Connect using the "Connect" button.

   The "Connect online" wizard guides you through the remaining steps in installation.
7. Select the CPU in the network view and select the "Online & Diagnostics" shortcut menu (right-click).
8. In the navigation panel of the Online & Diagnostics view, select the entry "Functions > Firmware update".
9. Using the "Browse" button (parameter group "Firmware loader") search for the new firmware file in the file system of the engineering station.
10. Start to download the firmware with the "Start update" button when the correct version of the signed firmware is displayed in the "Status" output box.

You will find further information on the online functions in the STEP 7 information system.

Loading the firmware via the SD card

You can find detailed information on using an SD card in the S7-1500 System Manual, see Preface (Page 3), Documentation guide.

Requirements:

- You have copied the new firmware file from your PC to the SD card using a suitable card reader.
- Optional: You have saved a backup file of the currently used firmware file.

Procedure:

1. Set the operating mode switch of the CPU to STOP.

   Ensure that no write functions (e.g. online or test functions) are active in the STOP state.
2. Remove the SIMATIC Memory Card with the configuration data from the slot of the CPU.
3. Insert the SD card with the firmware file in the card slot of the CPU.

   The firmware update starts shortly after the card has been inserted. The display shows the following: "STOP - FW UPDATE"

   If errors occur, appropriate messages are displayed.

   After completing the firmware update, the display shows a result page.

   A successful firmware update can be recognized by the following LED pattern from the CPU:

   – RUN lights up yellow.

   – MAINT flashing yellow.
4. Remove the SD card and insert the SIMATIC Memory Card again.
5. Set the operating mode switch of the CPU to RUN.

   The CP uses the new firmware during startup.

For the LED pattern of the CP during the startup, see section LEDs (Page 23).

4.5 Replacing a module without a programming device

Configuration data when swapping modules

The configuration data of the CP is stored on the CPU. This makes it possible to replace this module with a module of the same type (identical article number) without a PG.

Note

Configured MAC address is adopted

When setting the ISO protocol, remember that MAC address set previously during configuration is transferred by the CPU to the new CP module.

Swapping modules for address reference via DHCP (IPv4)

One option in the IP configuration of the CP is to obtain the IP address from a DHCP server.

Note

Recommendation: Configuring a client ID

When replacing modules, remember that the factoryset MAC address of the new module is different from the previous module.

When the factory default MAC address of the new module is sent to the DHCP server, the DHCP server returns a different or no IP address.

Ideally, you should therefore configure IP as follows:

- Always configure a client ID and configure your DHCP server accordingly. This ensures that the CP always receives the same IP address from the DHCP server after swapping a module.

If you have configured a new MAC address instead of the MAC address set in the factory, the configured MAC address will always be transferred to the DHCP server. In this case, the new CP also has the same IP address as the previous module.

Technical specifications 5

5.1 Technical specifications of the CP

Note the information in the System description of SIMATIC S7-1500, see Preface (Page 3).

In addition to the information in the system description, the following technical specifications apply to the module.

Technical specifications - CP 1543-1	
Product name	CP 1543-1
Article number	6GK7 543-1AX00-0XE0
Attachment to Industrial Ethernet	
• Quantity	1 x Ethernet (gigabit) interface
• Design	RJ-45 jack
• Transmission speed	10 / 100/ 1000 Mbps
Electrical data	
Power supply	
• via S7-1500 backplane bus	15 V
Current consumption	
• From backplane bus	350 mA
• Power dissipation	5.3 W
Insulation	
Insulation tested with	707 VDC (type test)
Design, dimensions and weight	
Module format	Compact module S7-1500, single width
Degree of protection	IP20
Weight	Approx. 350 g
Dimensions (W x H x D)	35 x 142 x 129 mm
Installation options	Mounting in an S7-1500 rack
Product functions *	

** You will find the product functions in the section Application and functions (Page 13).

5.2 Pinout of the Ethernet interface

Pinout of the gigabit Ethernet interfaces

The table below shows the pin assignment of the Ethernet interface X1.

View of the RJ-45 jack	Pin	Signal name	Assignment
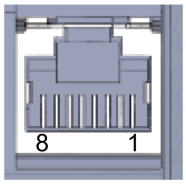	1	D1+	D1+ bidirectional
	2	D1-	D1- bidirectional
	3	D2+	D2+ bidirectional
	4	D3+	D3+ bidirectional
	5	D3-	D3- bidirectional
	6	D2-	D2- bidirectional
	7	D4+	D4+ bidirectional
	8	D4-	D4- bidirectional

5.3 Permitted cable lengths - Ethernet

Permitted cable lengths - Ethernet	Alternative combinations per length range
0 ... 55 m	• Max. 55 m IE TP Torsion Cable with IE FC RJ45 Plug 180 • Max. 45 m IE TP Torsion Cable with IE FC RJ45 + 10 m TP Cord via IE FC RJ45 Outlet
0 ... 85 m	• Max. 85 m IE FC TP Marine/Trailing/Flexible/FRNC/Festoon/Food Cable with IE FC RJ45 Plug 180 • Max. 75 m IE FC TP Marine/Trailing/Flexible/FRNC/Festoon/Food Cable + 10 m TP Cord via IE FC RJ45 Outlet
0 ... 100 m	• Max. 100 m IE FC TP Standard Cable with IE FC RJ45 Plug 180 • Max. 90 m IE FC TP Standard Cable + 10 m TP Cord via IE FC RJ45 Outlet

See also Siemens Mall: (https://mall.industry.siemens.com)

5.4 Permitted cable lengths - Gigabit Ethernet

Permitted cable lengths - Gigabit Ethernet	Alternative combinations
0 ... 60 m	• Max. 60 m IE FC TP Flexible Cable GP 4x2 + 10 m TP Cord RJ45/RJ45 4x2 via IE FC RJ45 Modular Outlet Insert 1GE
0 ... 100 m	• Max. 90 m IE FC TP Standard Cable GP 4x2 + 10 m TP Cord RJ45/RJ45 4x2 via IE FC RJ45 Modular Outlet Insert 1GE

See also Siemens Mall: (https://mall.industry.siemens.com)

Approvals

6

Approvals issued

Note

Issued approvals on the type plate of the device

The specified approvals - with the exception of the certificates for shipbuilding - have only been obtained when there is a corresponding mark on the product. You can check which of the following approvals have been granted for your product by the markings on the type plate. The approvals for shipbuilding are an exception to this.

Certificates for shipbuilding and national approvals

The device certificates for shipbuilding and special national approvals can be found in Siemens Industry Online Support on the Internet:
Link: (https://support.industry.siemens.com/cs/ww/en/ps/15340/cert)

Documents on the Internet

You will find the declarations of conformity listed below and certificates of the product on the Internet at the following address:

Link: (https://support.industry.siemens.com/cs/ww/en/ps/15340/cert)

You can see the current versions of the standards in the relevant certificate, which you will find on the Internet at the address specified above.

Address for declarations of conformity

The EU and the UK declarations of conformity are available to all responsible authorities at:

Siemens Aktiengesellschaft
Digital Industries
P.O. Box 48 48
90026 Nuremberg
Germany

EC declaration of conformity

The CP meets the requirements and safety objectives of the following EU directives and it complies with the harmonized European standards (EN) for programmable logic controllers which are published in the official documentation of the European Union.

- **2014/34/EU (ATEX explosion protection directive)**

  Directive of the European Parliament and the Council of 26 February 2014 on the approximation of the laws of the member states concerning equipment and protective systems intended for use in potentially explosive atmospheres, official journal of the EU L96, 29/03/2014, pages. 309-356

- **2014/30/EU (EMC)**

  EMC directive of the European Parliament and of the Council of February 26, 2014 on the approximation of the laws of the member states relating to electromagnetic compatibility; official journal of the EU L96, 29/03/2014, pages. 79-106

- **2011/65/EU (RoHS)**

  Directive of the European Parliament and of the Council of 8 June 2011 on the restriction of the use of certain hazardous substances in electrical and electronic equipment

UK Declaration of Conformity

Importer UK:

Siemens plc
Sir William Siemens House
Princess Road
Manchester
M20 2UR

The product meets the requirements of the following directives:

- UKEX Regulations

  SI 2016/1107 The Equipment and Protective Systems Intended for Use in Potentially Explosive Atmospheres Regulations 2016, and related amendments

- EMC Regulations

  SI 2016/1091 The Electromagnetic Compatibility Regulations 2016

- RoHS Regulations

  SI 2012/3032 The Restriction of the Use of Certain Hazardous Substances in Electrical and Electronic Equipment Regulations 2012

ATEX / IECEx / UKEX / CCC-Ex

Observe the information in the "Use of subassemblies/modules in a Zone 2 Hazardous Area" document, which you will find here:

- On the documentation DVD supplied with the product, under:
  "All documents" >"Use of subassemblies/modules in a Zone 2 Hazardous Area"

- On the Internet at the following address:
  Link: (https://support.industry.siemens.com/cs/ww/en/view/78381013)

The conditions must be met for safe usage of the product according to the section Notes on use in hazardous areas according to ATEX / IECEx (Page 29).

The product meets the explosion protection requirements outlined below.

IECEx

Classification:Ex ec IIC T4 Gc, Certificate no.:DEK 18.0019X

The product meets the requirements of the standards:

- EN IEC 60079-0 - Explosive atmospheres - Part 0: Equipment - General requirements
- EN 60079-7 - Explosive Atmospheres - Part 7: Equipment protection by increased safety 'e'

ATEX

Classification:II 3G Ex ec IIC T4 Gc, Certificate no.:DEKRA 18ATEX0027 X

The product meets the requirements of the standards:

- EN IEC 60079-0 - Explosive atmospheres - Part 0: Equipment - General requirements
- EN 60079-7 - Explosive Atmospheres - Part 7: Equipment protection by increased safety 'e'

UKEX

Classification:Ex ec IIC T4 Gc, Certificate no.:DEKRA 21UKEX0003 X

The product meets the requirements of the standards:

- EN IEC 60079-0 - Explosive atmospheres - Part 0: Equipment - General requirements
- EN 60079-7 - Explosive Atmospheres - Part 7: Equipment protection by increased safety 'e'
- EN IEC 60079-0 - Explosive atmospheres - Part 0: Equipment - General requirements
- EN 60079-7 - Explosive Atmospheres - Part 7: Equipment protection by increased safety 'e'

Importer UK: Siemens plc (see above)

CCC

Classification:Ex na IIC T4 Gc, Certificate no.:2020322310002625

The product meets the requirements of the following standards:

- GB 3836.1

  Hazardous areas - Part 0: Equipment - General requirements
- GB 3836.8

  Explosive atmospheres - Part 15: Equipment protection by type of protection 'n'

EMC

The CP meets the requirements of the following directives:

- EU directive 2014/30/EU "Electromagnetic Compatibility" (EMC directive)
- EMC Regulations SI 2016/1091 The Electromagnetic Compatibility Regulations 2016

Applied standards:

- EN 61000-6-2

  Electromagnetic compatibility (EMC) - Part 6-2: Generic standards - Immunity for industrial environments

- EN 61000-6-4

  Electromagnetic compatibility (EMC) - Part 6-4: Generic standards - Emission standard for industrial environments

RoHS

The CP meets the requirements of the following directives:

- EU directive 2011/65/EU on the restriction of the use of certain hazardous substances in electrical and electronic equipment.
- SI 2012/3032 The Restriction of the Use of Certain Hazardous Substances in Electrical and Electronic Equipment Regulations 2012

Applied standard: EN IEC 63000

c(UL)us

Applied standards:

- Underwriters Laboratories, Inc.: UL 61010-1 (Safety Requirements for Electrical Equipment for Measurement, Control, and Laboratory Use - Part 1: General Requirements)
- IEC/UL 61010-2-201 (Safety requirements for electrical equipment for measurement, control and laboratory use. Particular requirements for control equipment)
- Canadian Standards Association: CSA C22.2 No. 142 (Process Control Equipment)

Report / UL file: E 85972 (NRAG, NRAG7)

cULus Hazardous (Classified) Locations

HAZ. LOC.

Underwriters Laboratories, Inc.: cULus IND. CONT. EQ. FOR HAZ. LOC.

Applied standards:

- ANSI ISA 12.12.01
- CSA C22.2 No. 213-M1987

APPROVED for Use in:

- Cl. 1, Div. 2, GP. A, B, C, D T3...T6
- Cl. 1, Zone 2, GP. IIC T3...T6

Ta: Refer to the temperature class on the type plate of the CP

Report / UL file: E223122 (NRAG, NRAG7)

Note the conditions for the safe deployment of the product according to the section Notes on use in hazardous areas according to UL HazLoc (Page 29).

Note

For devices with C-PLUG memory: The C-PLUG memory module may only be inserted or removed when the power is off.

CSA

CSA Certification Mark Canadian Standard Association (CSA) nach Standard C 22.2 No. 142:

- Certification Record 063533–C-000

FM

Factory Mutual Approval Standards:

- Class 3600
- Class 3611
- Class 3810
- ANSI/ISA 61010-1

Report Number 3049847

Class I, Division 2, Group A, B, C, D, T4

Class I, Zone 2, Group IIC, T4

You will find the temperature class on the type plate on the module.

Australia - RCM

The product meets the requirements of the AS/NZS 2064 standards (Class A).

Canada

This class A digital device meets the requirements of the Canadian standard ICES-003.

AVIS CANADIEN

Cet appareil numérique de la classe A est conforme à la norme NMB-003 du Canada.

MSIP 요구사항 - For Korea only

A급 기기(업무용 방송통신기자재)

이 기기는 업무용(A급) 전자파 적합기기로서 판매자 또는 사용자는 이 점을 주의하시기 바라며, 가정 외의 지역에서 사용하는것을 목적으로 합니다.

Note that in terms of the emission of interference, this device corresponds to limit class A. This device can be used in all areas except for residential environments.

Current approvals

SIMATIC NET products are regularly submitted to the relevant authorities and approval centers for approvals relating to specific markets and applications.

If you require a list of the current approvals for individual devices, consult your Siemens contact or check the Internet pages of Siemens Industry Online Support:

Link: (https://support.industry.siemens.com/cs/ww/en/ps/15340/cert)

Additional information

A

A.1 Linking to other systems with FETCH/WRITE

The FETCH/WRITE mode supported with ISO transport connections, TCP, and ISOonTCP connections can be used from non-Siemens devices to access the S7 system memory areas.

To be able to use this type of access, for example for PC applications, you need to know the PDU structure of the jobs. The required S7-specific or S5-specific headers for request and response frames are 16 bytes long. You will find your structure below.

Structure of WRITE frame

The meaning and values of parameters shown without fixed values in the following table can be found in the section "Parameter values".

WRITE request frame			**WRITE acknowledgment frame**		
0	System ID	="S"	0	System ID	="S"
1		="5"	1		="5"
2	Length of header in bytes	=16d.	2	Length of header	=16d.
3	ID OP code	=01	3	ID OP code	=01
4	Length OP code	=03	4	Length OP code	=03
5	OP code	=03	5	OP code	=04
6	ORG field	=03	6	Ack field	=0Fh
7	Length ORG field	=08	7	Length ack field	=03
8	**ORG ID**		**8**	**Error field**	**=No**
9	**DBNR**		**9**	**Empty field**	**=FFh**
A	**Start address**	**High byte**	**A**	**Length empty field**	**=07**
B		**Low byte**	**B**		
C	**Length**	**High byte**	**C**		
D		**Low byte**	**D**	**free**	
I	**Empty field**	**=FFh.**	**I**		
F	**Length empty field**	**=02**	**F**		
	Data field up to 64 K				

Structure of FETCH frame

The meaning and values of parameters shown without fixed values in the following table can be found in the section "Parameter values".

FETCH request frame			**FETCH response frame**		
0	System ID	="S"	0	System ID	="S"
1		="5"	1		="5"
2	Length of header	=0x10	2	Length of header	=0x10
3	ID OP code	=0x01	3	ID OP code	=0x01

4	Length OP code	=0x03	4	Length OP code	=0x03
5	OP code	=0x05	5	OP code	=0x06
6	ORG field	=0x03	6	Ack field	=0x0F
7	Length ORG field	=0x08	7	Length ack field	=0x03
8	ORG ID		8	Error field	=No
9	DBNR		9	Empty field	=0xFF
A	Start address	High byte	A	Length empty field	=0x07
B		Low byte	B	free	
C	Length	High byte	C		
D		Low byte	D		
I	Empty field	=0xFF	I		
F	Length empty field	=0x02	F		
				Data up to 64 K, but only if Error no. = 0	

Parameter values

S7 address area	DB	M	I	A
ORG ID	01H	02H	03H	04H
	Source/dest. data from/to data block in main memory	Source/dest. data from/to bit memory area	Source/dest. data from/to process image of the inputs (PII)	Source/dest. data from/to process image of the outputs (PIQ)
DBNR	DB, from which the source data is taken or to which the dest data is trans-ferred	irrelevant	irrelevant	irrelevant
Permitted range	1...255			
Start address	DW number from which the data is read or written.	Memory byte no. from which the data is read or written.	Input byte no. from which the data is read or written.	Output byte no. from which the data is read or written.
Permitted range	0...2047	All memory bytes made available by a CPU.	0...127	0...127
Length	Length of the source/destinati on data block in words	Length of the source/destinati on data block in bytes	Length of the source/destinati on data block in bytes	Length of the source/destinati on data block in bytes
Permitted range	Up to 8192 bytes	Up to 8192 bytes	1...128	1...128

S7 address area	**PI/PQ**	**C**	**T**
ORG ID	05_H	06_H	07_H
	Source/destination data from/to I/O modules With source data input modules, with destination data output modules	Source/dest data from/to counter cells	Source/dest data from/to timer cells
DBNR	irrelevant	irrelevant	irrelevant
Start address	I/O byte no. from which the data is read or written.	Number of the counter cell from which the data is read or written.	Number of the timer cell from which the data is read or written.
Permitted range	0...127 digital I/O 128...255 anal. I/O	0...255	0...255
Quantity	Length of the source/destination data block in bytes	Length of the source/destination data block in words (counter cell = 1 word)	Length of the source/destination data block in words (counter cell = 1 word)
Permitted range	1...256	1	1

Index

A

Autocrossing mechanism, 39
Autosensing, 39

C

Cell protection concept
    VPN, 66
Commissioning
    Completeness of the STEP 7 project data, 30
Configuration, 30
Configuration and downloading the configuration data, 22
Configuration limits
    Communications modules, 17
Connecting a switch, 39
Connection resources of the CPU, 18
Connections for Web
    Quantity, 20
Crossover cable, 39

D

Data management - Configuration data, 88
DHCP, 88
Disposal, 8
Double addressing in the network, 40
Downloading project data, 31

E

E-mail, 13
E-mail connection, 18
Ethernet interface, 3, 25
    Configuration via T_CONFIG, 23
    Pin assignment, 31

F

FETCH/WRITE
    Communication service, 14
    Enable in CPU, 38
    Functions, 37
    S5/S7 addressing mode, 16
FETCH/WRITE connections, 18
Firewall, 17
Firmware version, 3
FTP
    Enable in CPU, 38
    Response if the reference to the FTP job block is missing, 58
FTP (FTP client), 18
FTP client
    Configuration limits, 20
FTP server
    Configuration limits, 20
FTP_CMD, 50
    Block execution time, 20
FTPS, 17
FTPS - Security, 47

G

Gateway (VPN), 72
Gigabit specification, 25
Glossary, 7

H

Hardware product version, 3
HMI communication, 13

I

Installation and commissioning, 30
    Procedure, 31
Instruction
    FTP_CMD, 22
    T_CONFIG, 23
    TCON, TSEND/TRCV, 22
    TDISCON, 22
    TMAIL_C, 22
    TSEND_C/TRCV_C, 22
    TUSEND/TURCV, 22
IP address
    IPv6, 16
    Via DHCP, 40
IP configuration
    IPv4 / IPv6, 15
IP routing, 40

IPsec tunnel
    Number, 21
ISO transport (complying with RFC 8073), 13
ISO transport connections, 18
ISO-on-TCP (acc. to RFC 1006), 13
ISO-on-TCP connections, 18

L

LED display, 23
Logging, 17

M

MAC address, 3, 15
MIB, 83
Multicast
    via UDP, 13

N

NTP, 15
NTP (secure), 17, 45
NTP server, 45

O

Online diagnostics, 81
Online functions, 82
Online help of STEP 7, 31
OP connections
    Quantity, 20
Open User Communication (OUC), 13
Operating mode of the CPU, 32
OUC (Open User Communication), 77

P

Passive VPN connection establishment, 72
PG communication, 13
PG connections
    Quantity, 20
Port 8448, 74
Power supply modules
    Additional, 18
Program blocks - max. Data length, 19
Programmed communications connections, 44
Programmed connections
    Quantity, 20
PUT/GET
    Enable in CPU, 38

Q

Quantity
    Communications modules, 17

R

Recycling, 8
RUN → STOP, 32

S

S5/S7 addressing mode, 16
S7 communication, 13
S7 connections, 13, 18
    Number of freely usable, 20
Safety notices, 27
Security diagnostics, 74
SIMATIC NET glossary, 7
SMTPS, 17
SNMP, 83
SNMP agent, 15
SNMPv3, 17
Special notes
    Connecting a switch, 39
    Ensuring a valid time of day, 45
    Recommendation for setting the time, 45
STEP 7, 22
System data type
    FTP_..., 22
    TCON_..., 22
    TMail_..., 22
System data types (SDTs), 79

T

TCP (acc. to RFC 793), 13
TCP connections, 18
TCP connections for FTP, 20
Time-of-day synchronization, 15

U

UDP, 19
UDP (acc. to RFC 768), 13
UDP connections, 18

V

Virtual interface, 41
Virtual Private Network
    Definition, 65
VPN, (Virtual Private Network)
    Areas of application, 66
    Cell protection concept, 66

W

Web server, 16

SIEMENS

SIMATIC

S7-1500/ET 200MP Power supply module PS 25W 24VDC (6ES7505-0KA00-0AB0)

Equipment Manual

Preface

Documentation guide 1

Product overview 2

Wiring 3

Parameters 4

Interrupts, diagnostic alarms, error and status messages 5

Technical specifications 6

Dimensional drawing A

Parameter data record B

11/2020

A5E31825931-AB

Legal information

Warning notice system

This manual contains notices you have to observe in order to ensure your personal safety, as well as to prevent damage to property. The notices referring to your personal safety are highlighted in the manual by a safety alert symbol, notices referring only to property damage have no safety alert symbol. These notices shown below are graded according to the degree of danger.

⚠ DANGER
indicates that death or severe personal injury **will** result if proper precautions are not taken.

⚠ WARNING
indicates that death or severe personal injury **may** result if proper precautions are not taken.

⚠ CAUTION
indicates that minor personal injury can result if proper precautions are not taken.

NOTICE
indicates that property damage can result if proper precautions are not taken.

If more than one degree of danger is present, the warning notice representing the highest degree of danger will be used. A notice warning of injury to persons with a safety alert symbol may also include a warning relating to property damage.

Qualified Personnel

The product/system described in this documentation may be operated only by **personnel qualified** for the specific task in accordance with the relevant documentation, in particular its warning notices and safety instructions. Qualified personnel are those who, based on their training and experience, are capable of identifying risks and avoiding potential hazards when working with these products/systems.

Proper use of Siemens products

Note the following:

⚠ WARNING
Siemens products may only be used for the applications described in the catalog and in the relevant technical documentation. If products and components from other manufacturers are used, these must be recommended or approved by Siemens. Proper transport, storage, installation, assembly, commissioning, operation and maintenance are required to ensure that the products operate safely and without any problems. The permissible ambient conditions must be complied with. The information in the relevant documentation must be observed.

Trademarks

All names identified by ® are registered trademarks of Siemens AG. The remaining trademarks in this publication may be trademarks whose use by third parties for their own purposes could violate the rights of the owner.

Disclaimer of Liability

We have reviewed the contents of this publication to ensure consistency with the hardware and software described. Since variance cannot be precluded entirely, we cannot guarantee full consistency. However, the information in this publication is reviewed regularly and any necessary corrections are included in subsequent editions.

Siemens AG
Division Digital Factory
Postfach 48 48
90026 NÜRNBERG
GERMANY

A5E31825931-AB
Ⓟ 11/2020 Subject to change

Copyright © Siemens AG 2014 - 2020.
All rights reserved

Preface

Preface

Purpose of this documentation

This manual supplements the system manuals:

- S7-1500 automation system (http://support.automation.siemens.com/WW/view/en/59191792)
- ET 200MP distributed I/O system (http://support.automation.siemens.com/WW/view/en/59193214)

Functions that concern the systems in general are described in these manuals.

The information in this manual along with the system manuals/function manuals will enable you to commission the systems.

Conventions

The term "CPU" as used in this manual refers to both the central modules of the S7-1500 automation system and to the interface modules of the ET 200MP distributed I/O system.

Please observe notes labeled as follows:

Note

A note contains important information about the product described in the documentation and its use, or about a specific section of the documentation to which you should pay particular attention.

Note on IT security

Siemens offers IT security mechanisms for its automation and drive product portfolio in order to support the safe operation of the plant/machine. We recommend that you inform yourself regularly on the IT security developments regarding your products. You can find information on this on the Internet (http://support.automation.siemens.com).

You can register for a product-specific newsletter here.

For the safe operation of a plant/machine, however, it is also necessary to integrate the automation components into an overall IT security concept for the entire plant/machine, which corresponds to the state-of-the-art IT technology. You can find information on this on the Internet (http://www.siemens.com/industrialsecurity).

Products used from other manufacturers should also be taken into account here.

Copyright notice for the open-source software used

Open-source software is used in the firmware of the product described. The open-source software is provided free of charge. We are liable for the product described, including the open-source software contained in it, pursuant to the conditions applicable to the product. Siemens accepts no liability for the use of the open source software over and above the intended program sequence, or for any faults caused by modifications to the software.

For legal reasons, we are obliged to publish the original text of the following copyright notices.

© Copyright William E. Kempf 2001
Permission to use, copy, modify, distribute and sell this software and its documentation for any purpose is hereby granted without fee, provided that the above copyright notice appear in all copies and that both that copyright notice and this permission notice appear in supporting documentation. William E. Kempf makes no representations about the suitability of this software for any purpose. It is provided "as is" without express or implied warranty.

Copyright © 1994 Hewlett-Packard Company
Permission to use, copy, modify, distribute and sell this software and its documentation for any purpose is hereby granted without fee, provided that the above copyright notice appear in all copies and that both that copyright notice and this permission notice appear in supporting documentation. Hewlett-Packard Company makes no representations about the suitability of this software for any purpose. It is provided ``as is" without express or implied warranty.

Table of contents

Preface **3**

1 Documentation guide **6**

2 Product overview **7**

2.1 Properties 7

2.2 Control and display elements 9

3 Wiring **10**

3.1 Connecting the power supply module 10

3.1.1 Connecting the supply voltage (PS 25W 24VDC) 10

4 Parameters **12**

4.1 Parameters 12

5 Interrupts, diagnostic alarms, error and status messages **13**

5.1 Status and error displays 13

5.2 Diagnostic alarms 15

5.3 Interrupts 17

6 Technical specifications **18**

A Dimensional drawing **20**

A.1 Dimensional drawing 20

B Parameter data record **22**

Documentation guide 1

Introduction

The modular documentation of the S7-1500 and ET 200MP system families covers all aspects of your automation system.

The documentation consists of different modules that are divided into system manuals, function manuals and manuals.

The following table provides an overview of the documents that complement this manual. Information in the manual overrides specifications in the system manual.

Overview of the documentation for the power supply module PS 25W 24VDC

The table below lists additional documentation for using the PS 25W 24VDC benötigen. power supply module.

Table 1- 1 Documentation for the power supply module PS 25W 24VDC

Topic	Documentation	Most important contents
System description	System manual S7-1500 automation system (http://support.automation.siemens.com/WW/view/en/59191792) System manual ET 200MP distributed I/O system (http://support.automation.siemens.com/WW/view/en/59193214)	• Application planning • Installation • Wiring • Commissioning • Standards and approvals • Electromagnetic compatibility • Mechanical and climatic ambient conditions
Designing interference-free controllers	Function manual Designing interference-free controllers (http://support.automation.siemens.com/WW/view/en/59193566)	• Basics • Electromagnetic compatibility • Lightning protection
System diagnostics	Function manual System diagnostics (http://support.automation.siemens.com/WW/view/en/59192926)	• Overview • Hardware/software diagnostics evaluation

SIMATIC manuals

All current manuals for SIMATIC products are available for download free of charge from the Internet (http://www.siemens.com/automation/service&support).

Product overview

2

2.1 Properties

Order number

6ES7505-5KA00-0AB0

View of the module

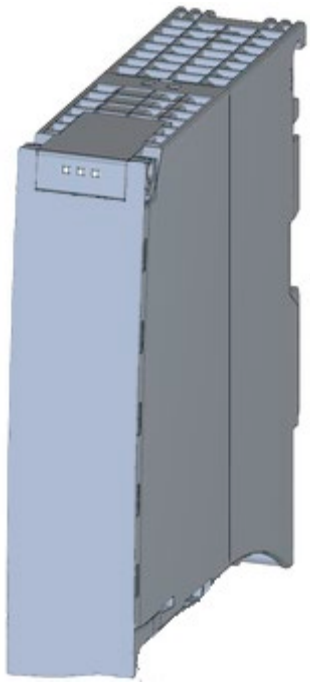

Figure 2-1 View of the PS 25W 24VDC module

Properties

The PS 25W 24VDC power supply module permits the use of additional modules.

The power supply module has the following properties:

- Technical properties
  - Rated input voltage 24 V DC (SELV)
  - Output power 25 W
  - Mains buffering
  - Functional electrical isolation from the bus
- Supported functions
  - Firmware update
  - Identification data I&M0 to I&M4
  - Configuring in RUN
  - Diagnostic alarms
  - Diagnostic interrupts

Accessories

The following components are supplied with the power supply module:

- Power connector
- U connector

These components are also available as spare parts.

2.2 Control and display elements

The following figure shows the control and connection elements of the PS 25W 24VDC behind the front cover as well as the power connector.

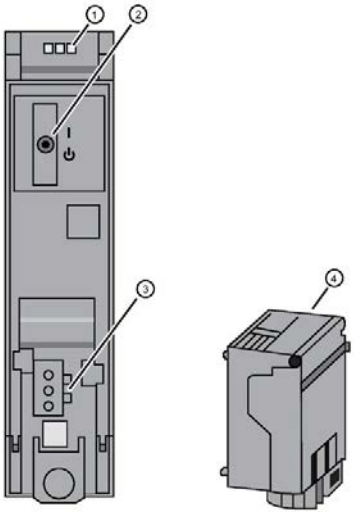

① LED displays indicating the current operating state and diagnostic status of the PS
② On/off switch
③ Connection for the power supply by means of the power connector
④ Power connector, inserted in delivery state

Figure 2-2 View of the PS 25W 24VDC (without front cover) and of the power connector

Wiring 3

3.1 Connecting the power supply module

3.1.1 Connecting the supply voltage (PS 25W 24VDC)

This section contains information on connecting the power supply module to the mains voltage.

Mains connection

WARNING

Installation instructions

Risk of death or serious injury.

Observe the general installation instructions applicable in your country when wiring the power supply module.

Fuse the power cables according to their conductor cross-section.

The following applies to mains connection of the power supply module using the power connector:

- The power connector enables connection of the input voltage to the power supply module with touch protection.
- The power connector enables permanent wiring.
- The power connector features internal strain relief.
- The power connector ensures reverse polarity protection. A coding element assigns each power connector to a specific type of power supply module on delivery. A connector coded for 230 V AC does not fit in the connection to a 24 V DC power supply module.

DANGER

Do not manipulate or omit the coding element

Changes to the coding element can result in dangerous states in your plant and/or damage to the outputs of the I/O modules. In order to avoid damage, do not manipulate the coding. The coding element may not be omitted.

Connection plug

The connection plug for the power supply is plugged in when the power supply module ships from the factory.

The following figure shows the assignment of the connection plug:

Connector	PS connection	Name
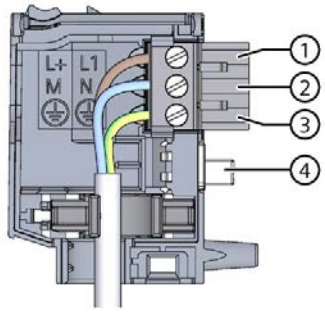	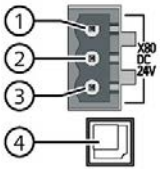	① L ② N ③ Protective conductor ④ Coding element

Cables

You need flexible cables to wire power to the power supply module. The conductor cross-section must be 1.5 mm^2 (AWG: 16). The diameter of a 3 x 1.5 mm^2 sheathed cable can be no more than 8.5 mm. The ground conductor of flexible cables must be longer than the two other conductors. The fusing must meet the requirements of the corresponding control cabinet.

⚠ DANGER

Input voltage

Risk of death or serious injury.

The input voltage of the PS 25W 24VDC must be supplied as safety extra low voltage (SELV).

Reference

You can find additional information about wiring the mains connector in the system manual S7-1500 automation system (https://support.industry.siemens.com/cs/de/de/view/59191792/en).

Siemens recommends the use of devices from the SITOP family of products for applications with load power supplies. Wiring information is available in the documentation for the load power supply.

Parameters

4

4.1 Parameters

Parameters of the PS 25W 24VDC

For parameter assignment of the module with STEP 7, you specify the properties of the module using various parameters. The table below shows the configurable parameters.

When the parameters are assigned in the user program, they are transferred to the module with the WRREC instruction (configuring in RUN), see section Parameter data record (Page 22).

Table 4- 1 Configurable parameters and their defaults

Parameters	Value range	Default	Configuring in RUN
Diagnostic/maintenance			
• Supply voltage missing	Yes/No	No	Yes
• Switch position Off	Yes/No	No	Yes

Note

Diagnostic alarms without supply voltage

Even when there is no supply voltage or when the On/Off switch is set to "Off", the power supply module of the CPU or the IM is supplied with enough voltage by the backplane bus that it can generate a diagnostic alarm. The entire diagnostic functionality is still available.

Interrupts, diagnostic alarms, error and status messages

5

5.1 Status and error displays

Introduction

Diagnostics by means of LEDs is a basic tool for troubleshooting. Usually, you can pinpoint the source of error more precisely by analyzing the module status information in STEP 7, or in the diagnostic buffer of the CPU. These locations contain the corresponding error information in plain text.

LED displays

The following figure shows the LED displays (status and error displays) of the PS 25W 24VDC.

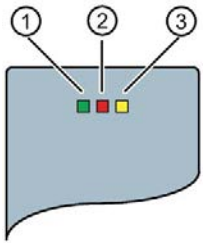

① RUN-LED
② ERROR-LED
③ MAINT-LED

Figure 5-1 LED displays of the PS 25W 24VDC

Meaning of the LED displays

The following table explains the meaning of the status and error displays. You can find remedial measures for diagnostic alarms in the section Diagnostic alarms (Page 15).

Table 5- 1 Status and error displays RUN/ERROR/MAINT

LED			Meaning	Remedy
RUN	**ERROR**	**MAINT**		
Off	Off	Off	OFF, PS supplies no bus voltage • External error and diagnostics is not enabled • PS not supplied in the system, no supply voltage connected to the PS and no supply voltage connected to CPU/IM.	Supply PS with voltage Check supply voltage Switch on PS
On	On	On	Startup, all LED displays illuminate briefly after system startup or module startup after firmware update.	-
Flashing	Not relevant	Not relevant	Startup, PS supplies bus voltage, PS waiting for parameter assignment	-
Off	Flashing	Not relevant	Error, PS supplies no bus voltage • No supply voltage and diagnostics not enabled • Internal error	Evaluate diagnostic alarms and carry out appropriate remedial measures, see section Diagnostic alarms (Page 15)
Off	Not relevant	On	Maintenance demanded, PS supplies no bus voltage • Switch is off; supply is present and diagnostics is enabled	Switch on PS
Flashing	Flashing	Flashing	Malfunction LED displays flash permanently	Replace PS

5.2 Diagnostic alarms

Diagnostic alarms

The following table shows the meaning of the diagnostic alarms and possible remedial measures for the respective cause.

One of the following "LED images" indicates directly on the PS that a diagnostic alarm was triggered.

- The red ERROR-LED is flashing.

  Indicates external or internal errors.
- The yellow MAINT-LED is lit.

  Maintenance; a maintenance request is active.
- All three LEDs are flashing permanently

  The PS is in "Defective" state.

In STEP 7, the diagnostic results are displayed in plain text by means of the online and diagnostic view. You can read the diagnostic data records by means of the "RDREC" instruction.

Table 5- 2 Diagnostic alarms, their meaning and remedies

Diagnostic alarm	Error code		Meaning	Reaction	Remedial measures
	Dec.	Hex.			
External error					
Supply voltage missing	266D	010AH	No supply voltage, or incorrect insertion of the power connector into the PS.	1	Check the supply voltage.
Internal error					
Overtemperature	5D	0005H	Overtemperature on the printed circuit board.	3	Check PS load. Isolate PS from mains. Wait one minute before you power on the PS again.
Overvoltage backplane bus	267D	010BH	High EMC interference or a defective PS, CPU or IM inserted.	3	Eliminate electromagnetic interference. Check inserted modules and bus connectors. Isolate PS from mains. Wait one minute before you power on the PS again.
Low voltage/overload in the power segment	281D	0119H	A voltage dip below the valid limit has been detected in the power segment to the right of the PS.	2	Check the modules in the affected segment; replace if necessary. Switch off the PS at the switch, then switch on again.
Error in the power segment	282D	011AH	PS or module to the right of the PS is defective.	2	Replace the defective module. Switch off the PS at the switch, then switch on again.
Safety shutdown	285D	011DH	Reliable operation of the module is no longer guaranteed.	3	Check ambient conditions. Isolate PS from mains. Wait one minute before you power on the PS again.
Maintenance					
Switch turned off	268D	010CH	The PS is switched off.	1	Switch on PS.

Diagnostic alarm	Error code		Meaning	Reac-tion	Remedial measures
	Dec.	Hex.			
Malfunction					
Module failure	256D	0100H	PS failure.	3	Replace PS.

External errors, internal errors and malfunctions

- External errors occur outside the PS. In the parameterization, specify whether or not an external error can trigger a diagnostic alarm. By default, external errors do not trigger diagnostic alarms.
- Internal errors occur inside the PS. If still possible, an internal error always triggers a diagnostic alarm.
- A malfunction is a static state; the PS must be sent in for repair. If still possible, a defect always triggers a diagnostic alarm.

Explanation of the reactions

1. No power at the power segment to the right of the PS. Alarm is only generated if the PS is still powered by the CPU or IM via the backplane bus.
2. The modules to the right of the PS are switched off.
3. The PS is switched off retentively. Alarm is only generated if the PS is still powered by the CPU or IM via the backplane bus. You cannot switch on the module unless you have eliminated the error and disconnected power to the PS for approximately one minute.

5.3 Interrupts

What is a diagnostic interrupt?

You can determine reactions to internal or external errors in the user program, by programming a diagnostic interrupt which interrupts cyclic program execution on the CPU and triggers the diagnostic interrupt OB (OB82). The event which led to the interrupt is entered in the start information of the OB82.

Trigger of a diagnostic interrupt

Events that can trigger a diagnostic alarm can also trigger a diagnostic interrupt:

- Supply voltage missing
- Overtemperature
- Overvoltage on the backplane bus
- Low voltage/overload in the power segment
- Error in the power segment
- Safety shutdown
- Switch position Off
- Malfunction

Reactions to a diagnostic interrupt

You can find the CPU reaction to a diagnostic interrupt in the function manual System diagnostics (http://support.automation.siemens.com/WW/view/en/59192926).

Detailed information on the error event is available in the diagnostic interrupt OB by executing the "RALRM" instruction (read additional interrupt information) and in the STEP 7 Online Help.

Technical specifications 6

Technical specifications of the PS 25W 24VDC

	6ES7505-0KA00-0AB0
Product type designation	PS 25W 24VDC
General information	
Hardware version	FS02
Firmware version	V1.0.1
Engineering with	
STEP 7 TIA Portal can be configured/integrated as of version	V12 / V12
STEP 7 can be configured/integrated as of version	V5.5 SP3 or higher
FH technology	
Redundancy	
Redundancy capability	yes
• For increasing performance	yes
Power supply	
Rated value (DC)	24 V; SELV
Valid range low limit (DC)	static 19.2 V, dynamic 18.5 V
Valid range high limit (DC)	static 28.8 V, dynamic 30.2 V
Reverse polarity protection	yes
Short-circuit protection	yes
Power failure backup	
Power failure backup time	20 ms
Input current	
Current consumption (rated value)	1.3 A
Output current	
Short-circuit protection	yes
Power	
Power feed to the backplane bus	25 W
Power loss	
Typical power losses	6.2 W
Interrupts/diagnostics/status information	
Status display	yes
Electrical isolation	
Primary/secondary	Yes; electrical isolation for max. 60 V AC/75 V DC (basic insulation)
Insulation	
Insulation tested with	707 V DC (type test)

	6ES7505-0KA00-0AB0
EMC	
Immunity to surge voltages	
on the supply lines in accordance with IEC 61000-4-5	Yes; +/- 1 kV (according to IEC 61000-4-5; 1995; symm. surge), +/- 2 kV (according to IEC 61000-4-5; 1995; unsymm. surge), no external protective circuit required
Degree of protection and protection class	
Degree of protection according to EN 60529	IP20
Protection class	3; with ground conductor
Dimensions	
Width	35 mm
Height	147 mm
Depth	129 mm
Weights	
Weight, approx.	350 g

Dimensional drawing

A

A.1 Dimensional drawing

Dimensional drawing of the PS 25W 24VDC

This appendix includes the dimensional drawing of the power supply module mounted on a mounting rail and with shielding clamp. You must take into consideration the dimensions when mounting in cabinets, in switch rooms, etc.

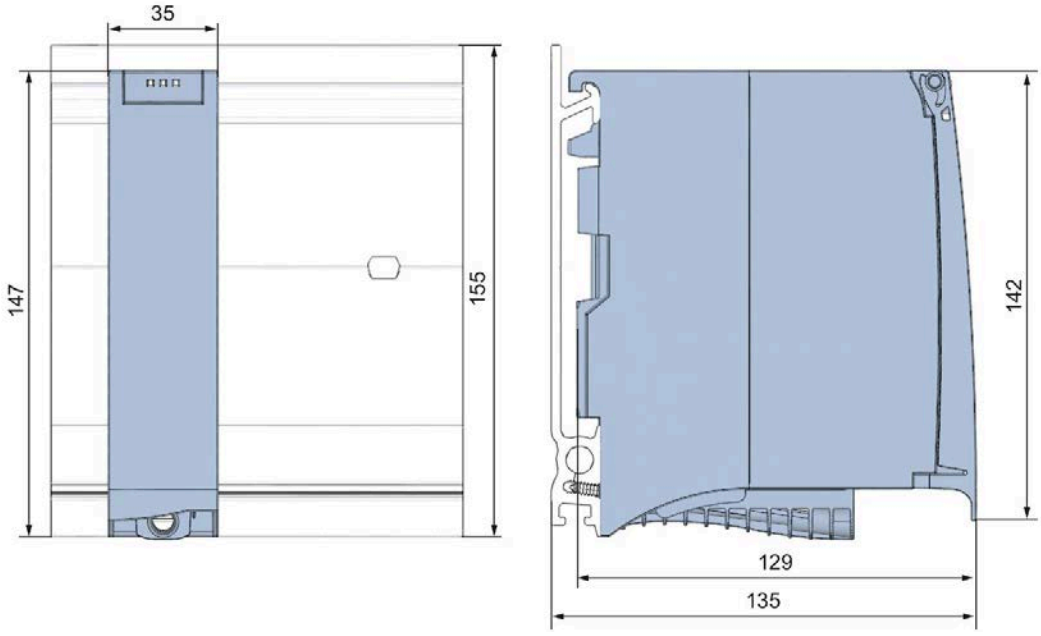

Figure A-1 Dimensional drawing of the PS 25W 24VDC module

This drawing shows the dimensions of the module with open front cover.

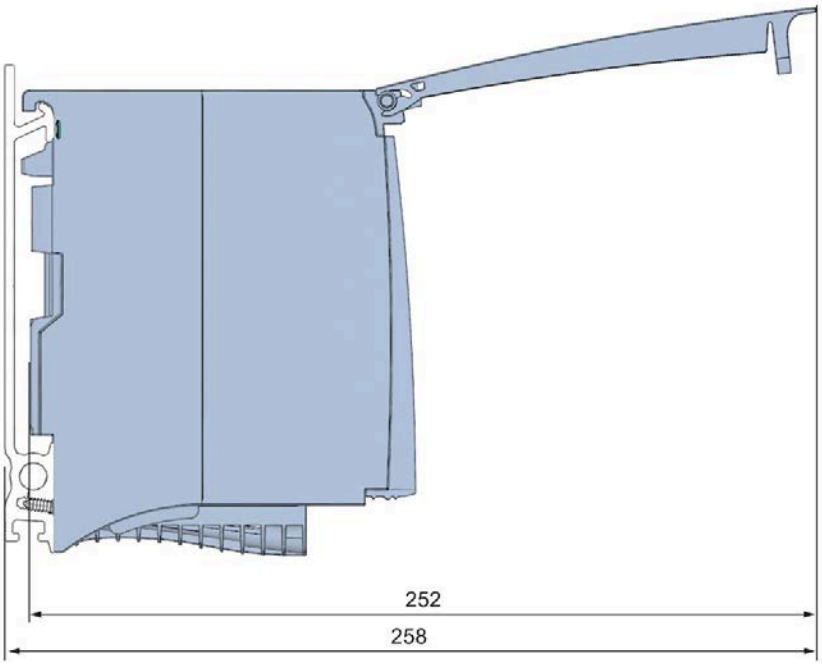

Figure A-2 Dimensional drawing of the PS 25W 24VDC module from side with open front cover

Parameter data record

B

Parameter assignment in the user program

You have the option to re-parameterize the power supply module in RUN mode of CPU.

Changing parameters in RUN mode

The parameters for the power supply module are contained in data record 0. You can use the WRREC instruction to transfer the configurable parameters to the power supply module. The parameters assigned in STEP 7 are not changed permanently in the CPU, which means the parameters assigned in STEP 7 are valid again after a restart.

Output parameter RET_VAL

The power supply module ignores errors that occur during transfer of parameters with the WRREC instruction and continues operation with the previous parameter assignment. However, a corresponding error code is written to the RET_VAL output parameter. If no error occurs, the length of the data actually transferred is entered in RET_VAL.

RET_VAL is 4 bytes long and structured as follows:

- Byte1: Function_Num, general error code
- Byte2: Error_Decode, location of the error detection
- Byte3: Error_Code_1, error detection
- Byte4: Error_Code_2, manufacturer-specific expansion of the error detection

The description of the WRREC instruction and the general error codes are available in the STEP 7 online help.

Module-specific errors are displayed by means of Error_Code_1 = 224_D or Error_Code_1 = 225_D.

Manufacturer-specific expansions of the error detection of the WRREC instruction have the following meaning:

Table B- 1 Manufacturer-specific expansions of the error detection of the WRREC instruction

Error_Code 1	Error_Code 2	Meaning
224_D Error in the data record header	1_D	The version entered in the data record header is not supported by the module or reserved bits of the version are set.
	2_D	The net length entered in the data record header is incorrect.

Error_Code 1	Error_Code 2	Meaning
225 D Error in the net data (parameters) entered in the data record	1 D	Diagnostic interrupt enable is incorrect
	16 D	Reserved parameters are not 0

Data record structure

The following figure shows the structure of the data record 0.

- A fixed bit pattern is entered in byte 0. It indicates the version of the data record structure. Each time a data record is written, the module checks the written data and accepts only data records with major version 1.
- Byte 1 specifies the maximum data length that can be used for parameter data.
- Byte 2 contains the parameter data.
- Bytes 3 to 11 are reserved.

To enable a parameter in byte 2, set the corresponding bit to "1". The corresponding diagnostics is then activated, for example, for supply voltage monitoring. If you set the corresponding bit to "0", the diagnostics is deactivated.

You are not permitted to change byte 0, byte 1 or bytes 3 to 11.

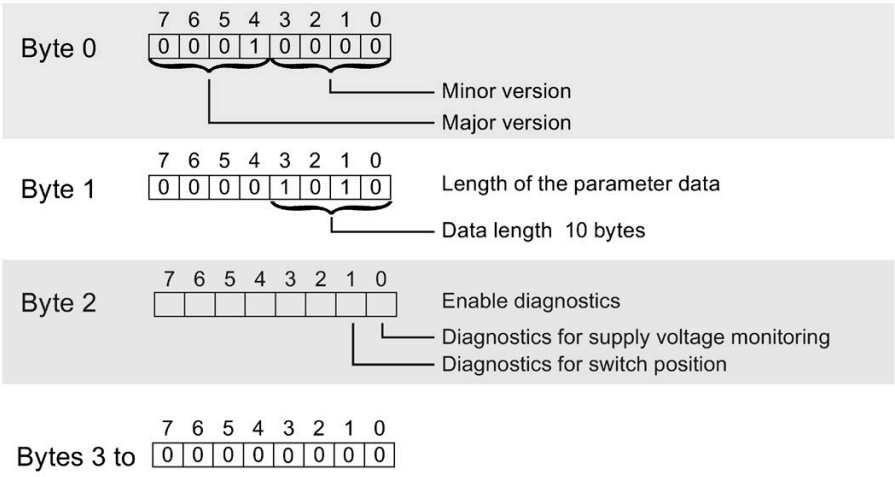

Figure B-1 Structure of data record 0

SIEMENS

SIMATIC

S7-1500/ET 200MP Power supply module PS 60W 24/48/60VDC (6ES7505-0RA00-0AB0)

Equipment Manual

Preface

Documentation guide 1

Product overview 2

Wiring 3

Parameters 4

Interrupts, diagnostic alarms, error and status alarms 5

Technical specifications 6

Dimensional drawing A

Parameter data record B

11/2020

A5E31826009-AB

Legal information

Warning notice system

This manual contains notices you have to observe in order to ensure your personal safety, as well as to prevent damage to property. The notices referring to your personal safety are highlighted in the manual by a safety alert symbol, notices referring only to property damage have no safety alert symbol. These notices shown below are graded according to the degree of danger.

⚠ DANGER
indicates that death or severe personal injury **will** result if proper precautions are not taken.

⚠ WARNING
indicates that death or severe personal injury **may** result if proper precautions are not taken.

⚠ CAUTION
indicates that minor personal injury can result if proper precautions are not taken.

NOTICE
indicates that property damage can result if proper precautions are not taken.

If more than one degree of danger is present, the warning notice representing the highest degree of danger will be used. A notice warning of injury to persons with a safety alert symbol may also include a warning relating to property damage.

Qualified Personnel

The product/system described in this documentation may be operated only by **personnel qualified** for the specific task in accordance with the relevant documentation, in particular its warning notices and safety instructions. Qualified personnel are those who, based on their training and experience, are capable of identifying risks and avoiding potential hazards when working with these products/systems.

Proper use of Siemens products

Note the following:

⚠ WARNING
Siemens products may only be used for the applications described in the catalog and in the relevant technical documentation. If products and components from other manufacturers are used, these must be recommended or approved by Siemens. Proper transport, storage, installation, assembly, commissioning, operation and maintenance are required to ensure that the products operate safely and without any problems. The permissible ambient conditions must be complied with. The information in the relevant documentation must be observed.

Trademarks

All names identified by ® are registered trademarks of Siemens AG. The remaining trademarks in this publication may be trademarks whose use by third parties for their own purposes could violate the rights of the owner.

Disclaimer of Liability

We have reviewed the contents of this publication to ensure consistency with the hardware and software described. Since variance cannot be precluded entirely, we cannot guarantee full consistency. However, the information in this publication is reviewed regularly and any necessary corrections are included in subsequent editions.

Siemens AG
Division Digital Factory
Postfach 48 48
90026 NÜRNBERG
GERMANY

A5E31826009-AB
Ⓟ 11/2020 Subject to change

Copyright © Siemens AG 2013 - 2020.
All rights reserved

Preface

Preface

Purpose of the documentation

This manual complements the system manuals:

- S7-1500 automation system (http://support.automation.siemens.com/WW/view/en/59191792)
- ET 200MP distributed I/O system (http://support.automation.siemens.com/WW/view/en/59193214)

Functions that generally concern the systems are described in these manuals.

The information provided in this manual and in the system/function manuals support you in commissioning the systems.

Conventions

The term "CPU" is used in this manual both for the CPUs of the S7-1500 automation system and for interface modules of the ET 200MP distributed I/O system.

Also observe notes marked as follows:

Note

A note contains important information on the product described in the documentation, on the handling of the product, or on the section of the documentation to which particular attention should be paid.

Note on IT security

Siemens offers IT security mechanisms for its automation and drive product portfolio in order to support the safe operation of the plant/machine. We recommend that you inform yourself regularly on the IT security developments regarding your products. You can find information on this on the Internet (http://support.automation.siemens.com).

You can register for a product-specific newsletter here.

For the safe operation of a plant/machine, however, it is also necessary to integrate the automation components into an overall IT security concept for the entire plant/machine, which corresponds to the state-of-the-art IT technology. You can find information on this on the Internet (http://www.siemens.com/industrialsecurity).

Products used from other manufacturers should also be taken into account here.

Copyright notice for the open-source software used

Open-source software is used in the firmware of the product described. The open-source software is provided free of charge. We are liable for the product described, including the open-source software contained in it, pursuant to the conditions applicable to the product. Siemens accepts no liability for the use of the open source software over and above the intended program sequence, or for any faults caused by modifications to the software.

For legal reasons, we are obliged to publish the original text of the following copyright notices.

© Copyright William E. Kempf 2001
Permission to use, copy, modify, distribute and sell this software and its documentation for any purpose is hereby granted without fee, provided that the above copyright notice appear in all copies and that both that copyright notice and this permission notice appear in supporting documentation. William E. Kempf makes no representations about the suitability of this software for any purpose. It is provided "as is" without express or implied warranty.

Copyright © 1994 Hewlett-Packard Company
Permission to use, copy, modify, distribute and sell this software and its documentation for any purpose is hereby granted without fee, provided that the above copyright notice appear in all copies and that both that copyright notice and this permission notice appear in supporting documentation. Hewlett-Packard Company makes no representations about the suitability of this software for any purpose. It is provided ``as is" without express or implied warranty.

Table of contents

Preface **3**

1 Documentation guide **6**

2 Product overview **7**

2.1 Properties 7

2.2 Operating and display elements 9

3 Wiring **10**

3.1 Connecting the supply voltage (PS 60W 24-48-60VDC) 10

4 Parameters **12**

4.1 Parameters 12

5 Interrupts, diagnostic alarms, error and status alarms **13**

5.1 Status and error displays 13

5.2 Diagnostic alarms 15

5.3 Interrupts 17

6 Technical specifications **18**

A Dimensional drawing **20**

A.1 Dimensional drawing 20

B Parameter data record **22**

Documentation guide 1

Introduction

The modular documentation of the S7-1500 and ET 200MP system families covers all aspects of your automation system.

The documentation consists of different modules that are divided into system manuals, function manuals and manuals.

The following table provides an overview of the documents that complement this manual. Information in the manual overrides specifications in the system manual.

Overview of the documentation for the power supply module PS 60W 24/48/60VDC

The table below lists additional documentation for using the PS 60W 24/48/60VDC benötigen. power supply module.

Table 1- 1 Documentation for the power supply module PS 60W 24/48/60VDC

Topic	Documentation	Most important contents
System description	System manual S7-1500 automation system (http://support.automation.siemens.com/WW/view/en/59191792) System manual ET 200MP distributed I/O system (http://support.automation.siemens.com/WW/view/en/59193214)	• Application planning • Installation • Wiring • Commissioning • Standards and approvals • Electromagnetic compatibility • Mechanical and climatic ambient conditions
Designing interference-free controllers	Function manual Designing interference-free controllers (http://support.automation.siemens.com/WW/view/en/59193566)	• Basics • Electromagnetic compatibility • Lightning protection
System diagnostics	Function manual System diagnostics (http://support.automation.siemens.com/WW/view/en/59192926)	• Overview • Hardware/software diagnostics evaluation

SIMATIC manuals

All current manuals for SIMATIC products are available for download free of charge from the Internet (http://www.siemens.com/automation/service&support).

Product overview

2

2.1 Properties

Order number

6ES7505-0RA00-0AB0

View of the module

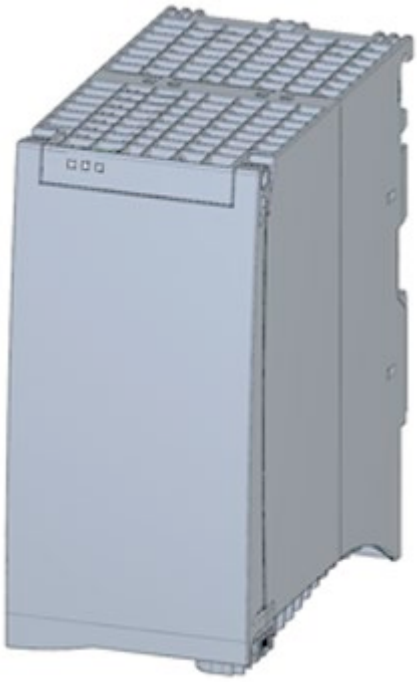

Figure 2-1 View of the PS 60W 24/48/60VDC module

Properties

The PS 60W 24/48/60VDC power supply module supports the use of additional modules.

The power supply module has the following properties:

- Technical properties
  - Rated input voltages 24/48/60 VDC
  - Output power 60 W
  - Power failure backup
  - Electrical isolation to the bus, safe electrical separation to EN 61131-2
- Supported functions
  - Firmware update
  - Identification data I&M0 to I&M4
  - Configuration in RUN
  - Diagnostic alarms
  - Diagnostic interrupts

Accessories

The following components are supplied with the power supply module:

- Power connector
- U connector

These components are also available as spare parts.

2.2 Operating and display elements

The following figure shows the control and connection elements of the PS 60W 24/48/60VDC behind the front panel as well as the power connector.

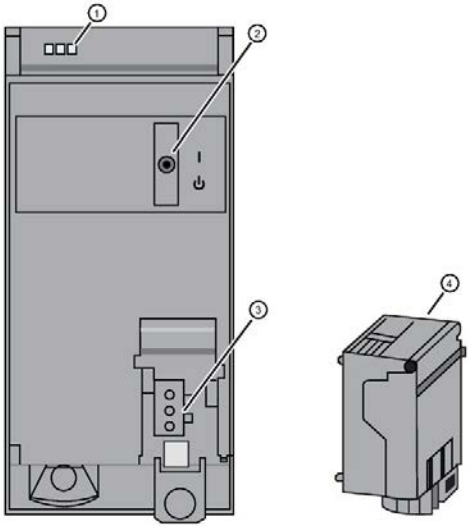

① LED displays indicating the current operating state and diagnostic status of the PS
② On/off switch
③ Power inlet for the power connector
④ Power connector; inserted in delivery state

Figure 2-2 View of the PS 60W 24/48/60VDC (without front panel) and of the power connector

Wiring 3

3.1 Connecting the supply voltage (PS 60W 24-48-60VDC)

This section contains information on connecting the power supply module to the mains voltage.

Mains connection

WARNING

Installation instructions

Risk of death or serious injury.

Observe the general installation instructions applicable in your country when wiring the power supply module.

Fuse the power cables according to their conductor cross-section.

The following applies to mains connection of the power supply module using the power connector:

- The power connector enables connection of the input voltage to the power supply module with touch protection.
- The power connector enables permanent wiring.
- The power connector features internal strain relief.
- The power connector ensures reverse polarity protection. A coding element assigns each power connector to a specific type of power supply module on delivery. A connector coded for 230 V AC does not fit in the connection to a 24 V DC power supply module.

DANGER

Do not manipulate or omit the coding element

Changes to the coding element can result in dangerous states in your plant and/or damage to the outputs of the I/O modules. In order to avoid damage, do not manipulate the coding. The coding element may not be omitted.

Connection plug

The connection plug for the power supply is plugged in when the power supply module ships from the factory.

The following figure shows the assignment of the connection plug:

Connector	PS connection	Name
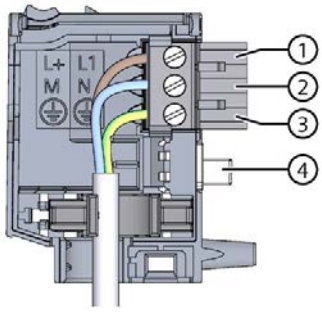	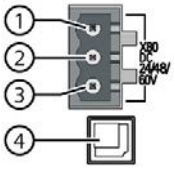	① L ② N ③ Protective conductor ④ Coding element

Cables

You need flexible cables to wire power to the power supply module. The conductor cross-section must be 1.5 mm^2 (AWG: 16). The diameter of a 3 x 1.5 mm^2 sheathed cable can be no more than 8.5 mm. The ground conductor of flexible cables must be longer than the two other conductors. The fusing must meet the requirements of the corresponding control cabinet.

Reference

You can find additional information about wiring the mains connector in the system manual S7-1500 automation system.

Siemens recommends the use of devices from the SITOP family of products for applications with load power supplies. Wiring information is available in the documentation for the load power supply.

Parameters

4

4.1 Parameters

Parameters of the PS 60W 24/48/60VDC

Specify the module properties at the various parameters in the course of your STEP 7 parameterization. The following table lists the configurable parameters.

The parameters you define in the user program are transferred to the module by means of WRREC instruction (Configuration in RUN); see chapter Parameter data record (Page 22).

Table 4- 1 Configurable parameters and their defaults

Parameters	Range of values	Defaults	Configuration in RUN
Diagnostic/maintenance			
• Supply voltage missing	Yes/No	No	Yes
• Switch position Off	Yes/No	No	Yes

Note

Diagnostic alarms without supply voltage

Regardless of whether the supply voltage is missing or the On/Off switch is set to "Off", the power supply module of the CPU or the IM is still capable of generating diagnostic alarms because it is provided sufficient power from the backplane bus. The entire diagnostic functionality is still available.

Interrupts, diagnostic alarms, error and status alarms

5

5.1 Status and error displays

Introduction

Diagnostics by means of LEDs is a basic tool for troubleshooting. Usually, you can pinpoint the source of error more precisely by analyzing the module status information in STEP 7, or in the diagnostic buffer of the CPU. These locations contain the corresponding error information in plain text.

LED displays

The following figure shows the LED displays (status and error displays) of PS 60W 24/48/60VDC.

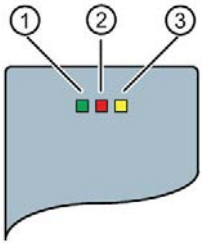

① RUN LED

② ERROR LED

③ MAINT LED

Figure 5-1 LED displays of PS 60W 24/48/60VDC

Meaning of the LED displays

The following table explains the meaning of the status and error displays. You can find remedial measures for diagnostic alarms in chapter Diagnostic alarms (Page 15).

Table 5- 1 Status and error displays RUN/ERROR/MAINT

LED			Meaning	Remedy
RUN	ERROR	MAINT		
Off	Off	Off	OFF; PS returns no bus voltage • External error; diagnostics is disabled • PS not powered in the system, no supply voltage at the PS and CPU/IM.	Switch on power to the PS Check the supply voltage Switch on PS
On	On	On	Startup; all LED displays are lit briefly after system startup, or during module restart after firmware update.	-
Flashing	Not relevant	Not relevant	Startup, PS returns bus voltage, PS waiting for parameterization	-
Off	Flashing	Not relevant	Error, PS supplies no bus voltage • Supply voltage missing and diagnostics is enabled • Internal error	Evaluate diagnostic alarms and take appropriate remedial measures; see chapter Diagnostic alarms (Page 15)
Off	Not relevant	On	Maintenance request, PS returns no bus voltage • Switch is off; power is present and diagnostics is enabled	Switch on PS
Flashing	Flashing	Flashing	Malfunction LEDs flash persistently	Replace PS

5.2 Diagnostic alarms

Diagnostic alarms

The following table shows the meaning of the diagnostic alarms and possible remedial measures for the respective cause.

One of the following "LED images" indicates directly on the PS that a diagnostic alarm was triggered.

- The red ERROR-LED is flashing.

  Indicates external or internal errors.
- The yellow MAINT-LED is lit.

  Maintenance; a maintenance request is active.
- All three LEDs are flashing permanently

  The PS is in "Defective" state.

In STEP 7, the diagnostic results are displayed in plain text by means of the online and diagnostic view. You can read the diagnostic data records by means of the "RDREC" instruction.

Table 5- 2 Diagnostic alarms, their meaning and remedies

Diagnostic alarm	Error code		Meaning	Reaction	Remedial measures
	Dec.	Hex.			
External error					
Supply voltage missing	266D	010AH	No supply voltage, or incorrect insertion of the power connector into the PS.	1	Check the supply voltage.
Internal error					
Overtemperature	5D	0005H	Overtemperature on the printed circuit board.	3	Check PS load. Isolate PS from mains. Wait one minute before you power on the PS again.
Overvoltage backplane bus	267D	010BH	High EMC interference or a defective PS, CPU or IM inserted.	3	Eliminate electromagnetic interference. Check inserted modules and bus connectors. Isolate PS from mains. Wait one minute before you power on the PS again.
Low voltage/overload in the power segment	281D	0119H	A voltage dip below the valid limit has been detected in the power segment to the right of the PS.	2	Check the modules in the affected segment; replace if necessary. Switch off the PS at the switch, then switch on again.
Error in the power segment	282D	011AH	PS or module to the right of the PS is defective.	2	Replace the defective module. Switch off the PS at the switch, then switch on again.
Safety shutdown	285D	011DH	Reliable operation of the module is no longer guaranteed.	3	Check ambient conditions. Isolate PS from mains. Wait one minute before you power on the PS again.
Maintenance					
Switch turned off	268D	010CH	The PS is switched off.	1	Switch on PS.

Diagnostic alarm	Error code		Meaning	Reac-tion	Remedial measures
	Dec.	Hex.			
Malfunction					
Module failure	256D	0100H	PS failure.	3	Replace PS.

External errors, internal errors and malfunctions

- External errors occur outside the PS. In the parameterization, specify whether or not an external error can trigger a diagnostic alarm. By default, external errors do not trigger diagnostic alarms.
- Internal errors occur inside the PS. If still possible, an internal error always triggers a diagnostic alarm.
- A malfunction is a static state; the PS must be sent in for repair. If still possible, a defect always triggers a diagnostic alarm.

Explanation of the reactions

1. No power at the power segment to the right of the PS. Alarm is only generated if the PS is still powered by the CPU or IM via the backplane bus.
2. The modules to the right of the PS are switched off.
3. The PS is switched off retentively. Alarm is only generated if the PS is still powered by the CPU or IM via the backplane bus. You cannot switch on the module unless you have eliminated the error and disconnected power to the PS for approximately one minute.

See also

S7-1500 automation system
(http://support.automation.siemens.com/WW/view/en/59191792)

5.3 Interrupts

What is a diagnostic interrupt?

You can determine reactions to internal or external errors in the user program, by programming a diagnostic interrupt which interrupts cyclic program execution on the CPU and triggers the diagnostic interrupt OB (OB82). The event which led to the interrupt is entered in the start information of the OB82.

Trigger of a diagnostic interrupt

Events that can trigger a diagnostic alarm can also trigger a diagnostic interrupt:

- Supply voltage missing
- Overtemperature
- Overvoltage on the backplane bus
- Low voltage/overload in the power segment
- Error in the power segment
- Safety shutdown
- Switch position Off
- Malfunction

Reactions to a diagnostic interrupt

You can find the CPU reaction to a diagnostic interrupt in the function manual System diagnostics (http://support.automation.siemens.com/WW/view/en/59192926).

Detailed information on the error event is available in the diagnostic interrupt OB by executing the "RALRM" instruction (read additional interrupt information) and in the STEP 7 Online Help.

Technical specifications 6

Technical specifications of the PS 60W 24/48/60VDC

	6ES7505-0RA00-0AB0
Product type designation	PS 60W 24/48/60V DC
General information	
Hardware version	FS02
Firmware version	V1.0.1
Engineering with	
STEP 7 TIA Portal can be configured/integrated as of version	V12 / V12
STEP 7 can be configured/integrated as of version	V5.5 SP3 or higher
FH technology	
Redundancy	
Redundancy capability	yes
• For increasing performance	yes
Power supply	
Rated value (DC)	24 V / 48 V / 60 V
Valid range low limit (DC)	static 19.2 V, dynamic 18.5 V
Valid range high limit (DC)	static 72 V, dynamic 75.5 V
Reverse polarity protection	yes
Short-circuit protection	yes
Power failure backup	
Power failure backup time	20 ms
Input current	
Current consumption (rated value)	3 A
Rated value at 48 V DC	1.5 A
Rated value at 60 V DC	1.2 A
Output current	
Short-circuit protection	yes
Power	
Power feed to the backplane bus	60 W
Power loss	
Power loss at rated conditions	12 W
Interrupts/diagnostics/status information	
Status display	yes
Electrical isolation	
Primary/secondary	Yes; electrical isolation for 230 V AC (reinforced insulation)
Insulation	
Insulation tested with	2500 V DC 2s (routine test)

	6ES7505-0RA00-0AB0
EMC	
Immunity to surge voltages	
on the supply lines in accordance with IEC 61000-4-5	Yes; +/- 1 kV (according to IEC 61000-4-5; 1995; symm. surge), +/- 2 kV (according to IEC 61000-4-5; 1995; unsymm. surge), no external protective circuit required
Degree of protection and protection class	
Degree of protection according to EN 60529	IP20
Protection class	1; with ground conductor
Dimensions	
Width	70 mm
Height	147 mm
Depth	129 mm
Weights	
Weight, approx.	600 g

Dimensional drawing

A

A.1 Dimensional drawing

Dimensional drawing of PS 60W 24/48/60VDC

This appendix includes the dimensional drawing of the power supply module that is installed on a mounting rail with shielding bracket. Take the dimensions into account for installation in cabinets, control rooms, etc.

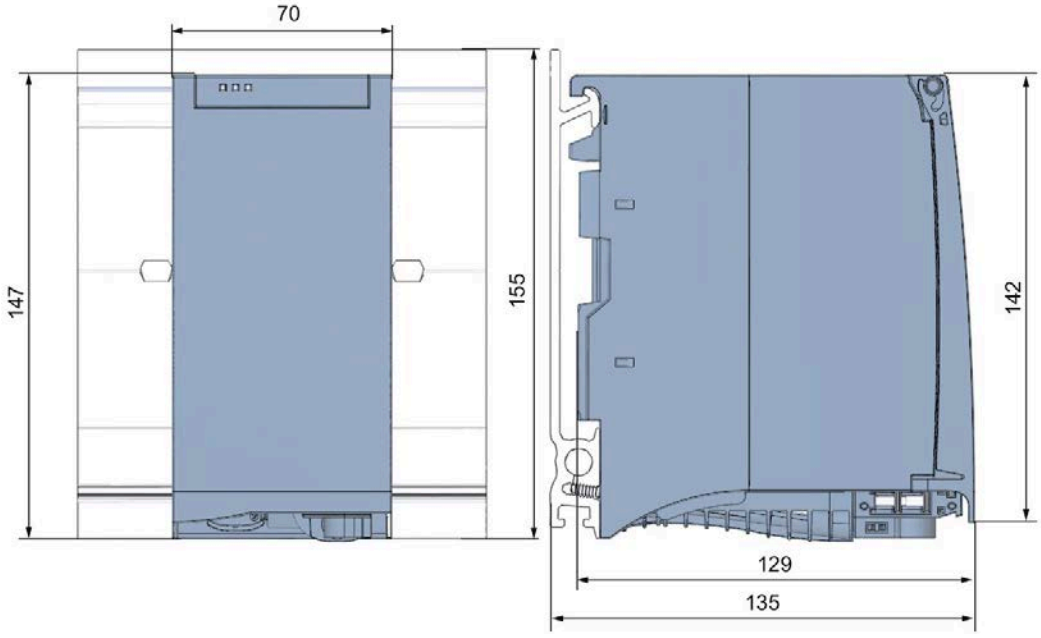

Figure A-1 Dimensional drawing of PS 60W 24/48/60VDC module

This figure shows the dimensions of the module with open front panel.

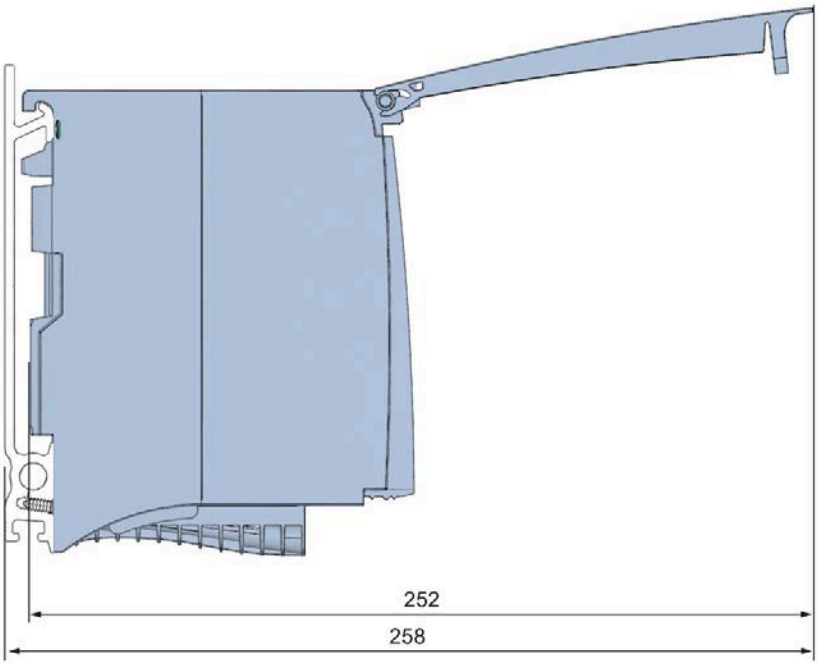

Figure A-2 Dimensional drawing of PS 60W 24/48/60VDC module, side view with open front panel

Parameter data record

B

Parameter assignment in the user program

You have the option to re-parameterize the power supply module in RUN mode of CPU.

Changing parameters in RUN mode

The parameters for the power supply module are contained in data record 0. You can use the WRREC instruction to transfer the configurable parameters to the power supply module. The parameters assigned in STEP 7 are not changed permanently in the CPU, which means the parameters assigned in STEP 7 are valid again after a restart.

Output parameter RET_VAL

The power supply module ignores errors that occur during transfer of parameters with the WRREC instruction and continues operation with the previous parameter assignment. However, a corresponding error code is written to the RET_VAL output parameter. If no error occurs, the length of the data actually transferred is entered in RET_VAL.

RET_VAL is 4 bytes long and structured as follows:

- Byte1: Function_Num, general error code
- Byte2: Error_Decode, location of the error detection
- Byte3: Error_Code_1, error detection
- Byte4: Error_Code_2, manufacturer-specific expansion of the error detection

The description of the WRREC instruction and the general error codes are available in the STEP 7 online help.

Module-specific errors are displayed by means of Error_Code_1 = 224_D or Error_Code_1 = 225_D.

Manufacturer-specific expansions of the error detection of the WRREC instruction have the following meaning:

Table B- 1 Manufacturer-specific expansions of the error detection of the WRREC instruction

Error_Code 1	Error_Code 2	Meaning
224D Error in the data record header	1 D	The version entered in the data record header is not supported by the module or reserved bits of the version are set.
	2 D	The net length entered in the data record header is incorrect.
225 D Error in the net data (parameters) entered in the data record	1 D	Diagnostic interrupt enable is incorrect
	16 D	Reserved parameters are not 0

Data record structure

The following figure shows the structure of the data record 0.

- A fixed bit pattern is entered in byte 0. It indicates the version of the data record structure. Each time a data record is written, the module checks the written data and accepts only data records with major version 1.
- Byte 1 specifies the maximum data length that can be used for parameter data.
- Byte 2 contains the parameter data.
- Bytes 3 to 11 are reserved.

To enable a parameter in byte 2, set the corresponding bit to "1". The corresponding diagnostics is then activated, for example, for supply voltage monitoring. If you set the corresponding bit to "0", the diagnostics is deactivated.

You are not permitted to change byte 0, byte 1 or bytes 3 to 11.

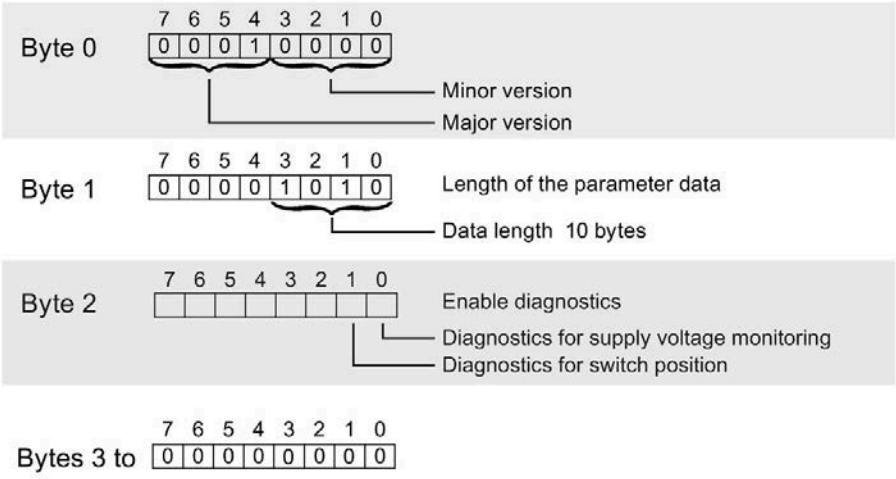

Figure B-1 Structure of data record 0

SIEMENS

SIMATIC

S7-1500/ET 200MP Power supply module PS 60W 24/48/60VDC HF (6ES7505-0RB00-0AB0)

Equipment Manual

Preface

Documentation guide 1

Product overview 2

Wiring 3

Parameters 4

Interrupts, diagnostic alarms, error and status alarms 5

Technical specifications 6

Dimensional drawing A

Parameter data record B

11/2020

A5E39450002-AC

Legal information

Warning notice system

This manual contains notices you have to observe in order to ensure your personal safety, as well as to prevent damage to property. The notices referring to your personal safety are highlighted in the manual by a safety alert symbol, notices referring only to property damage have no safety alert symbol. These notices shown below are graded according to the degree of danger.

⚠ DANGER
indicates that death or severe personal injury **will** result if proper precautions are not taken.

⚠ WARNING
indicates that death or severe personal injury **may** result if proper precautions are not taken.

⚠ CAUTION
indicates that minor personal injury can result if proper precautions are not taken.

NOTICE
indicates that property damage can result if proper precautions are not taken.

If more than one degree of danger is present, the warning notice representing the highest degree of danger will be used. A notice warning of injury to persons with a safety alert symbol may also include a warning relating to property damage.

Qualified Personnel

The product/system described in this documentation may be operated only by **personnel qualified** for the specific task in accordance with the relevant documentation, in particular its warning notices and safety instructions. Qualified personnel are those who, based on their training and experience, are capable of identifying risks and avoiding potential hazards when working with these products/systems.

Proper use of Siemens products

Note the following:

⚠ WARNING
Siemens products may only be used for the applications described in the catalog and in the relevant technical documentation. If products and components from other manufacturers are used, these must be recommended or approved by Siemens. Proper transport, storage, installation, assembly, commissioning, operation and maintenance are required to ensure that the products operate safely and without any problems. The permissible ambient conditions must be complied with. The information in the relevant documentation must be observed.

Trademarks

All names identified by ® are registered trademarks of Siemens AG. The remaining trademarks in this publication may be trademarks whose use by third parties for their own purposes could violate the rights of the owner.

Disclaimer of Liability

We have reviewed the contents of this publication to ensure consistency with the hardware and software described. Since variance cannot be precluded entirely, we cannot guarantee full consistency. However, the information in this publication is reviewed regularly and any necessary corrections are included in subsequent editions.

Siemens AG
Division Digital Factory
Postfach 48 48
90026 NÜRNBERG
GERMANY

A5E39450002-AC
Ⓟ 11/2020 Subject to change

Copyright © Siemens AG 2017 - 2020.
All rights reserved

Preface

Preface

Purpose of the documentation

This manual supplements the system manual S7-1500/ET 200MP Automation System (https://support.industry.siemens.com/cs/ww/en/view/59191792).

Functions that generally relate to the system are described in this manual.

The information provided in this manual and in the system/function manuals support you in commissioning the systems.

Changes compared to previous version

Compared to the previous version, this manual contains the following change:

Correction of technical specifications

Conventions

The term "CPU" is used in this manual both for the CPUs of the S7-1500 automation system and for interface modules of the ET 200MP distributed I/O system.

Also observe notes marked as follows:

Note

A note contains important information on the product described in the documentation, on the handling of the product, or on the section of the documentation to which particular attention should be paid.

Security information

Siemens provides products and solutions with industrial security functions that support the secure operation of plants, systems, machines and networks.

In order to protect plants, systems, machines and networks against cyber threats, it is necessary to implement – and continuously maintain – a holistic, state-of-the-art industrial security concept. Siemens' products and solutions only form one element of such a concept.

Customer is responsible to prevent unauthorized access to its plants, systems, machines and networks. Systems, machines and components should only be connected to the enterprise network or the internet if and to the extent necessary and with appropriate security measures (e.g. use of firewalls and network segmentation) in place.

Additionally, Siemens' guidance on appropriate security measures should be taken into account. For more information about industrial security, please visit (http://www.siemens.com/industrialsecurity).

Siemens' products and solutions undergo continuous development to make them more secure. Siemens strongly recommends to apply product updates as soon as available and to always use the latest product versions. Use of product versions that are no longer supported, and failure to apply latest updates may increase customer's exposure to cyber threats.

To stay informed about product updates, subscribe to the Siemens Industrial Security RSS Feed under (http://www.siemens.com/industrialsecurity).

Open Source Software

Open-source software is used in the firmware of the I/O modules. Open Source Software is provided free of charge. We are liable for the product described, including the open-source software contained in it, pursuant to the conditions applicable to the product. Siemens accepts no liability for the use of the open source software over and above the intended program sequence, or for any faults caused by modifications to the software.

For legal reasons, we are obliged to publish the original text of the license conditions and copyright notices. Please read the information relating to this on the Internet (https://support.industry.siemens.com/cs/ww/en/view/109741045).

Table of contents

Preface **3**

1 Documentation guide **6**

2 Product overview **10**

2.1 Properties 10

2.2 Operating and display elements 12

3 Wiring **13**

3.1 Connecting the supply voltage (PS 60W 24-48-60VDC HF) 13

4 Parameters **15**

4.1 Parameters 15

5 Interrupts, diagnostic alarms, error and status alarms **16**

5.1 Status and error displays 16

5.2 Diagnostic alarms 18

5.3 Interrupts 19

6 Technical specifications **20**

A Dimensional drawing **22**

B Parameter data record **24**

Documentation guide

1

The documentation for the SIMATIC S7-1500 automation system, the CPU 1516pro-2 PN based on SIMATIC S7-1500 and the SIMATIC ET 200MP distributed I/O system is arranged into three areas.
This arrangement enables you to access the specific content you require.

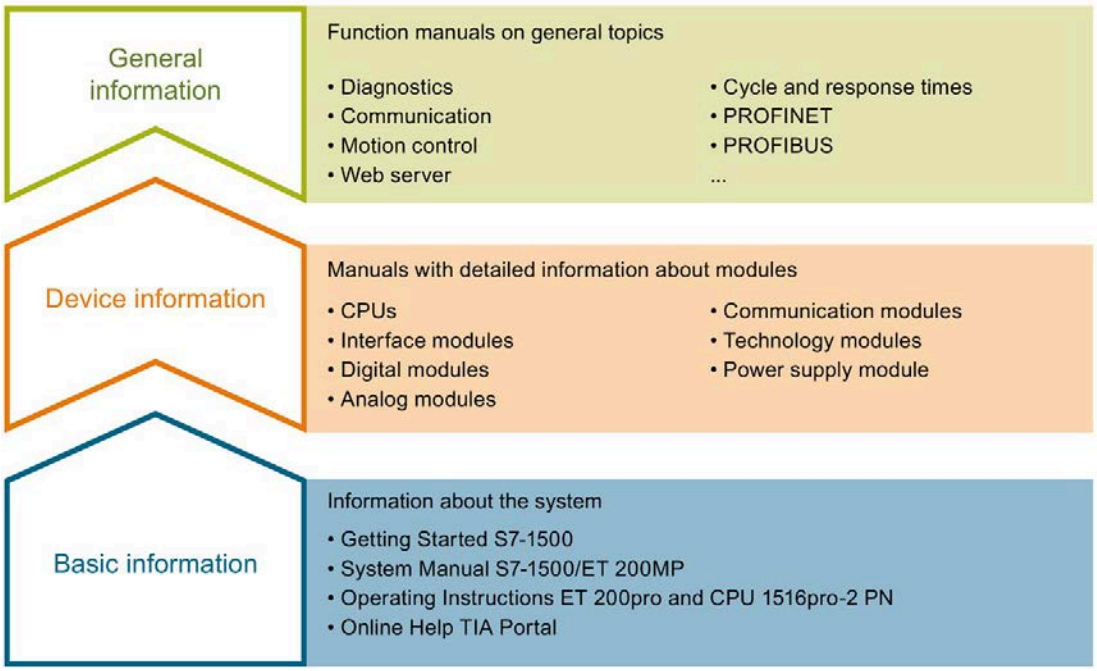

Basic information

The System Manual and Getting Started describe in detail the configuration, installation, wiring and commissioning of the SIMATIC S7-1500 and ET 200MP systems. For CPU 1516pro-2 PN you use the corresponding operating instructions. The STEP 7 online help supports you in the configuration and programming.

Device information

Product manuals contain a compact description of the module-specific information, such as properties, wiring diagrams, characteristics and technical specifications.

General information

The function manuals contain detailed descriptions on general topics regarding the SIMATIC S7-1500 and ET 200MP systems, e.g. diagnostics, communication, motion control, Web server, OPC UA.

You can download the documentation free of charge from the Internet (http://w3.siemens.com/mcms/industrial-automation-systems-simatic/en/manual-overview/Pages/Default.aspx).

Changes and supplements to the manuals are documented in a Product Information.

You can download the product information free of charge from the Internet (https://support.industry.siemens.com/cs/us/en/view/68052815).

Manual Collection S7-1500/ET 200MP

The Manual Collection contains the complete documentation on the SIMATIC S7-1500 automation system and the ET 200MP distributed I/O system gathered together in one file.

You can find the Manual Collection on the Internet (https://support.industry.siemens.com/cs/ww/en/view/86140384).

SIMATIC S7-1500 comparison list for programming languages

The comparison list contains an overview of which instructions and functions you can use for which controller families.

You can find the comparison list on the Internet (https://support.industry.siemens.com/cs/ww/en/view/86630375).

"mySupport"

With "mySupport", your personal workspace, you make the best out of your Industry Online Support.

In "mySupport", you can save filters, favorites and tags, request CAx data and compile your personal library in the Documentation area. In addition, your data is already filled out in support requests and you can get an overview of your current requests at any time.

You must register once to use the full functionality of "mySupport".

You can find "mySupport" on the Internet (https://support.industry.siemens.com/My/ww/en).

"mySupport" - Documentation

In the Documentation area in "mySupport" you can combine entire manuals or only parts of these to your own manual.
You can export the manual as PDF file or in a format that can be edited later.

You can find "mySupport" - Documentation on the Internet (http://support.industry.siemens.com/My/ww/en/documentation).

"mySupport" - CAx data

In the CAx data area in "mySupport", you can access the current product data for your CAx or CAe system.

You configure your own download package with a few clicks.

In doing so you can select:

- Product images, 2D dimension drawings, 3D models, internal circuit diagrams, EPLAN macro files
- Manuals, characteristics, operating manuals, certificates
- Product master data

You can find "mySupport" - CAx data on the Internet (http://support.industry.siemens.com/my/ww/en/CAxOnline).

Application examples

The application examples support you with various tools and examples for solving your automation tasks. Solutions are shown in interplay with multiple components in the system - separated from the focus on individual products.

You will find the application examples on the Internet (https://support.industry.siemens.com/sc/ww/en/sc/2054).

TIA Selection Tool

With the TIA Selection Tool, you can select, configure and order devices for Totally Integrated Automation (TIA).
This tool is the successor of the SIMATIC Selection Tool and combines the known configurators for automation technology into one tool.
With the TIA Selection Tool, you can generate a complete order list from your product selection or product configuration.

You can find the TIA Selection Tool on the Internet (http://w3.siemens.com/mcms/topics/en/simatic/tia-selection-tool).

SIMATIC Automation Tool

You can use the SIMATIC Automation Tool to run commissioning and maintenance activities simultaneously on various SIMATIC S7 stations as a bulk operation independently of the TIA Portal.

The SIMATIC Automation Tool provides a multitude of functions:

- Scanning of a PROFINET/Ethernet network and identification of all connected CPUs
- Address assignment (IP, subnet, gateway) and station name (PROFINET device) to a CPU
- Transfer of the date and the programming device/PC time converted to UTC time to the module
- Program download to CPU
- Operating mode switchover RUN/STOP
- Localization of the CPU by means of LED flashing
- Reading out CPU error information
- Reading the CPU diagnostic buffer
- Reset to factory settings
- Updating the firmware of the CPU and connected modules

You can find the SIMATIC Automation Tool on the Internet (https://support.industry.siemens.com/cs/ww/en/view/98161300).

PRONETA

With SIEMENS PRONETA (PROFINET network analysis), you analyze the PROFINET network during commissioning. PRONETA features two core functions:

- The topology overview independently scans PROFINET and all connected components.
- The IO check is a fast test of the wiring and the module configuration of a system.

You can find SIEMENS PRONETA on the Internet (https://support.industry.siemens.com/cs/ww/en/view/67460624).

Product overview

2

2.1 Properties

Article number

6ES7505-0RB00-0AB0

View of the module

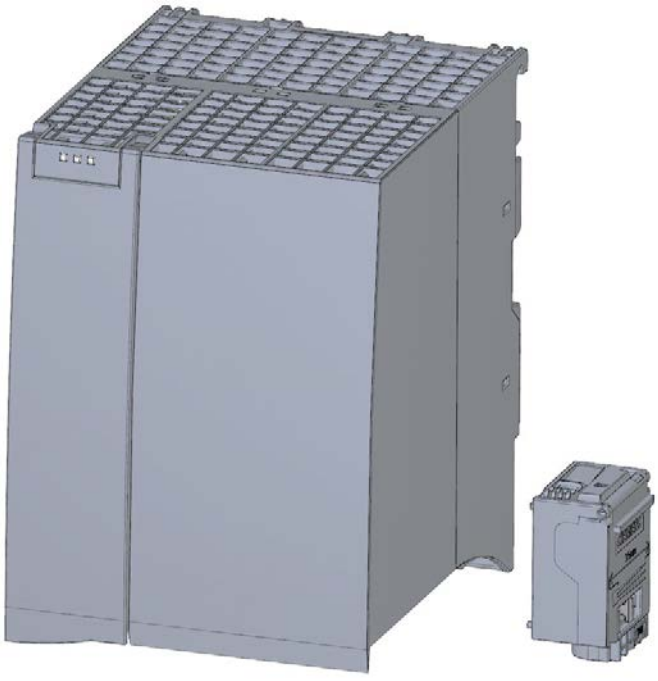

Figure 2-1 View of the PS 60W 24/48/60VDC HF module

Properties

The PS 60W 24/48/60VDC HF power supply module supports the use of additional modules.

Advantage over the "standard" power supply module:

To save a higher volume of data retentively in case of power failure, the PS 60W 24/48/60VDC HF supplies power to the CPU.

The PS 60W 24/48/60VDC HF has the following properties:

- Technical properties
  - Rated input voltages 24/48/60 VDC
  - Output power 60 W
  - Power failure backup
  - Electrical isolation to the bus, safe electrical separation according to EN 61131-2

The module supports the following functions:

Table 2- 1 Version dependencies of the module functions

Function	Firmware version of the module	Configuration software	
		STEP 7 (TIA Portal) as of V14 SP1	GSD file in STEP 7 (TIA Portal) V12 or higher, or STEP 7 V5.5 SP3 or higher
Firmware update	V1.0.0 or higher	X	X (PROFINET IO only)
Identification data I&M0 to I&M4	V1.0.0 or higher	X	
Configuration in RUN	V1.0.0 or higher	X	
Diagnostic alarms	V1.0.0 or higher	X	
Diagnostic interrupts	V1.0.0 or higher	X	
Only configurable on LH side next to interface module / CPU	V1.0.0 or higher	X	
Extended retentivity of the CPU data area in the event of a power failure	V1.0.0 or higher	X (only with CPU S7-1500 firmware version V2.1 or higher)	---

Accessories

The following components are supplied with the power supply module:

- Power connector
- U connector

These components are also available as spare parts.

2.2 Operating and display elements

The following figure shows the control and connection elements of the PS 60W 24/48/60VDC HF behind the front panel as well as the power connector.

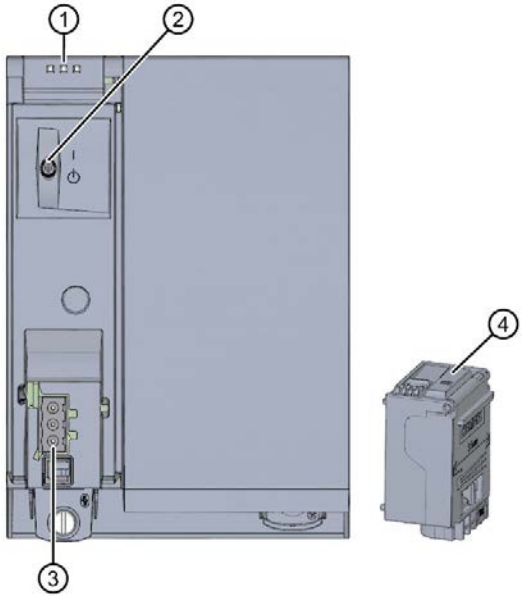

① LED displays indicating the current operating state and diagnostic status of the PS
② On/off switch
③ Power inlet for the power connector
④ Power connector; inserted in delivery state

Figure 2-2 View of the PS 60W 24/48/60VDC HF (without front panel) and of the power connector

Wiring 3

3.1 Connecting the supply voltage (PS 60W 24-48-60VDC HF)

This section contains information on connecting the power supply module to the mains voltage.

Mains connection

WARNING

Installation instructions

Risk of death or serious injury.

Observe the general installation instructions applicable in your country when wiring the power supply module.

Fuse the power cables according to their conductor cross-section.

The following applies to mains connection of the power supply module using the power connector:

- The power connector enables connection of the input voltage to the power supply module with touch protection.
- The power connector enables permanent wiring.
- The power connector features internal strain relief.
- The power connector ensures reverse polarity protection. A coding element assigns each power connector to a specific type of power supply module on delivery. A connector coded for 230 V AC does not fit in the connection to a 24 V DC power supply module.

DANGER

Do not manipulate or omit the coding element

Changes to the coding element can result in dangerous states in your plant and/or damage to the outputs of the I/O modules. In order to avoid damage, do not manipulate the coding. The coding element may not be omitted.

Connection plug

The connection plug for the power supply is plugged in when the power supply module ships from the factory.

The following figure shows the assignment of the connection plug:

Connector	PS connection	Name
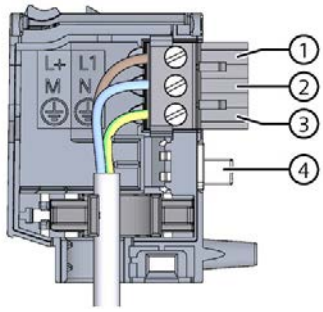	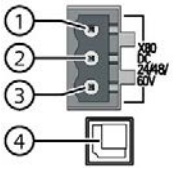	① L ② N ③ Protective conductor ④ Coding element

Cables

You need flexible cables to wire power to the power supply module. The conductor cross-section must be 1.5 mm^2 (AWG: 16). The diameter of a 3 x 1.5 mm^2 sheathed cable can be no more than 8.5 mm. The ground conductor of flexible cables must be longer than the two other conductors. The fusing must meet the requirements of the corresponding control cabinet.

Reference

You can find additional information about wiring the mains connector in the system manual S7-1500 automation system.

Siemens recommends the use of devices from the SITOP family of products for applications with load power supplies. Wiring information is available in the documentation for the load power supply.

Parameters

4

4.1 Parameters

Parameters of the PS 60W 24/48/60VDC HF

The PS 60W 24/48/60VDC HF is usually already integrated in the hardware catalog of STEP 7 (TIA Portal). In this case, STEP 7 (TIA Portal) checks the configured properties for plausibility during configuration.

However, you can also assign parameters to the module by means of a GSD file and the configuration software of any provider. The module does not check the validity of the configured properties until after the configuration has been loaded.

When you assign the module parameters in STEP 7, you use various parameters to specify the module properties. The following table lists the configurable parameters. The effective range of the parameters that can be set depends on the type of configuration. The following configurations are possible:

- Central operation with an S7-1500 CPU (with STEP 7 TIA Portal V14 SP1 or higher)
- Distributed operation on PROFINET IO in an ET 200MP system (with GSD file PROFINET IO in STEP 7 (TIA Portal) V12 or higher or STEP 7 V5.5 SP3 or higher

For parameter assignment in the user program, the parameters are transferred to the module using the WRREC instruction (reparameterization in RUN) and data records; see section Parameter data record (Page 24).

Table 4- 1 Configurable parameters and their defaults

Parameters	Range of values	Default setting	Parameter assignment in RUN	Scope with configuration software, e.g., STEP 7 (TIA Portal)	
				Integrated in the hardware catalog STEP 7 (TIA Portal) V14 SP1 or higher or GSD file PROFINET IO	GSD file PROFIBUS DP
Diagnostics / maintenance					
• Supply voltage monitoring *	Yes/No	No	Yes	Module	---
• Switch position Off *	Yes/No	No	Yes	Module	---

* In case of central operation of a S7-1500 CPU with firmware V2.1.0 or higher the diagnostics are **not** displayed in the diagnostics buffer to ensure reliable backup of the extended retentive data.

Interrupts, diagnostic alarms, error and status alarms

5

5.1 Status and error displays

Introduction

Diagnostics by means of LEDs is a basic tool for troubleshooting. Usually, you can pinpoint the source of error more precisely by analyzing the module status information in STEP 7, or in the diagnostic buffer of the CPU. These locations contain the corresponding error information in plain text.

LED displays

The following figure shows the LED displays (status and error displays) of the PS 60W 24/48/60VDC HF.

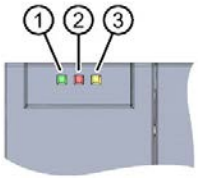

① RUN LED

② ERROR LED

③ MAINT LED

Figure 5-1 LED displays of PS 60W 24/48/60VDC HF

Meaning of the LED displays

The following table explains the meaning of the status and error displays. You can find remedial measures for diagnostic alarms in chapter Diagnostic alarms (Page 18).

Table 5- 1 Status and error displays RUN/ERROR/MAINT

LED			Meaning	Remedy
RUN	**ERROR**	**MAINT**		
Off	Off	Off	OFF; PS returns no bus voltage • External error; diagnostics is disabled • PS not powered in the system, no supply voltage at the PS and CPU/IM.	Switch on power to the PS Check the supply voltage Switch on PS
On	On	On	Startup; all LED displays are lit briefly after system startup, or during module restart after firmware update.	-
Flashing	Not relevant	Not relevant	Startup, PS returns bus voltage, PS waiting for parameterization	-
Off	Flashing	Not relevant	Error, PS supplies no bus voltage • Supply voltage missing and diagnostics is enabled • Internal error	Evaluate diagnostic alarms and take appropriate remedial measures; see chapter Diagnostic alarms (Page 18)
Off	Not relevant	On	Maintenance request, PS returns no bus voltage • Switch is off; power is present and diagnostics is enabled	Switch on PS
Flashing	Flashing	Flashing	Malfunction LEDs flash persistently	Replace PS

5.2 Diagnostic alarms

Diagnostic alarms

The following table shows the meaning of the diagnostic alarms and possible remedial measures for the respective cause.

One of the following "LED images" indicates directly on the PS that a diagnostic alarm was triggered.

- The red ERROR-LED is flashing.

  Indicates external or internal errors.
- The yellow MAINT-LED is lit.

  Maintenance; a maintenance request is active.
- All three LEDs are flashing permanently

  The PS is in "Defective" state.

In STEP 7, the diagnostic results are displayed in plain text by means of the online and diagnostic view. You can read the diagnostic data records by means of the "RDREC" instruction.

Table 5- 2 Diagnostic alarms, their meaning and remedies

Diagnostic alarm	Error code		Meaning	Reac-tion	Remedial measures
	Dec.	Hex.			
External error					
Supply voltage missing	266D	010AH	No supply voltage, or incorrect insertion of the power connector into the PS.	1	Check the supply voltage.
Internal error					
Overtemperature	5D	0005H	Overtemperature on the printed circuit board.	2	Check PS load. Isolate PS from mains. Wait one minute before you power on the PS again.
Overvoltage back-plane bus	267D	010BH	High EMC interference or a defec-tive PS, CPU or IM inserted.	2	Eliminate electromagnetic interfer-ence. Check inserted modules and bus connectors. Isolate PS from mains. Wait one minute before you power on the PS again.
Safety shutdown	285D	011DH	Reliable operation of the module is no longer guaranteed.	2	Check ambient conditions. Isolate PS from mains. Wait one minute before you power on the PS again.
Maintenance					
Switch turned off	268D	010CH	The PS is switched off.	1	Switch on PS.
Malfunction					
Module failure	256D	0100H	PS failure.	3	Replace PS.

External errors, internal errors and malfunctions

- External errors occur outside the PS. In the parameterization, specify whether or not an external error can trigger a diagnostic alarm. By default, external errors do not trigger diagnostic alarms.
- Internal errors occur inside the PS. If still possible, an internal error always triggers a diagnostic alarm.
- A malfunction is a static state; the PS must be sent in for repair. If still possible, a defect always triggers a diagnostic alarm.

Explanation of the reactions

The PS is switched off retentively. Alarm is only generated if the PS is still powered by the CPU or IM via the backplane bus. You cannot switch on the module unless you have eliminated the error and disconnected power to the PS for approximately one minute.

5.3 Interrupts

What is a diagnostic interrupt?

You can determine reactions to internal or external errors in the user program, by programming a diagnostic interrupt which interrupts cyclic program execution on the CPU and triggers the diagnostic interrupt OB (OB82). The event which led to the interrupt is entered in the start information of the OB82.

Trigger of a diagnostic interrupt

Events that can trigger a diagnostic alarm can also trigger a diagnostic interrupt:

- Supply voltage missing
- Overtemperature
- Overvoltage on the backplane bus
- Safety shutdown
- Switch position Off
- Malfunction

Reactions to a diagnostic interrupt

You can find the CPU reaction to a diagnostic interrupt in the function manual System diagnostics (http://support.automation.siemens.com/WW/view/en/59192926).

Detailed information on the error event is available in the diagnostic interrupt OB by executing the "RALRM" instruction (read additional interrupt information) and in the STEP 7 Online Help.

Technical specifications

6

Technical specifications of the PS 60W 24/48/60VDC HF

Article number	6ES7505-0RB00-0AB0
General information	
Product type designation	PS 60 W 24/48/60 V DC HF
HW functional status	E01
Firmware version	V1.0.0
Engineering with	
• STEP 7 TIA Portal configurable/integrated as of version	V14 SP1
Supply voltage	
Rated value (DC)	24 V / 48 V / 60 V
permissible range, lower limit (DC)	Static 19.2 V, dynamic 18.5 V
permissible range, upper limit (DC)	Static 72 V, dynamic 75.5 V
Reverse polarity protection	Yes
Short-circuit protection	Yes
Mains buffering	
• Mains/voltage failure stored energy time	20 ms
Input current	
Rated value at 24 V DC	3 A
Rated value at 48 V DC	1.5 A
Rated value at 60 V DC	1.2 A
Inrush current, max.	≤ 8 A for t ≤ 1 s
Output current	
Short-circuit protection	Yes
Power	
Infeed power to the backplane bus	60 W
Power loss	
Power loss at nominal rating conditions	12 W
Interrupts/diagnostics/status information	
Status indicator	Yes
Isolation	
Isolation tested with	2 500 V DC (type test)
EMC	
Interference immunity against voltage surge	
• on the supply lines acc. to IEC 61000-4-5	Yes; ±1 kV (acc. to IEC 61000-4-5; 1995; surge symm.), ±2 kV (acc. to IEC 61000-4-5; 1995; surge asymm.), no external protective circuit required

Article number	6ES7505-0RB00-0AB0
Degree and class of protection	
Degree of protection acc. to EN 60529	IP20
Equipment protection class	I, with protective conductor
Dimensions	
Width	105 mm
Height	147 mm
Depth	129 mm
Weights	
Weight, approx.	865 g

Dimensional drawing

A

Dimensional drawing of PS 60W 24/48/60VDC HF

This appendix includes the dimensional drawing of the power supply module that is installed on a mounting rail with shielding bracket. Take the dimensions into account for installation in cabinets, control rooms, etc.

The following figure shows the front view and the side view of the module

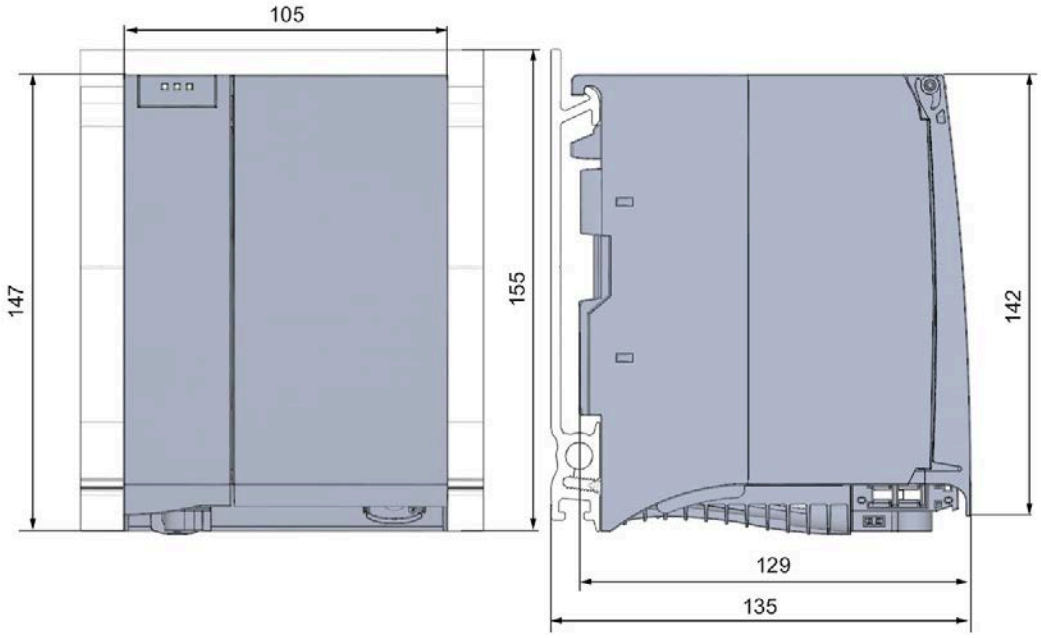

Figure A-1 Dimensional drawing of the PS 60W 24/48/60VDC HF module

The following figure shows the side view of the module with open front panel.

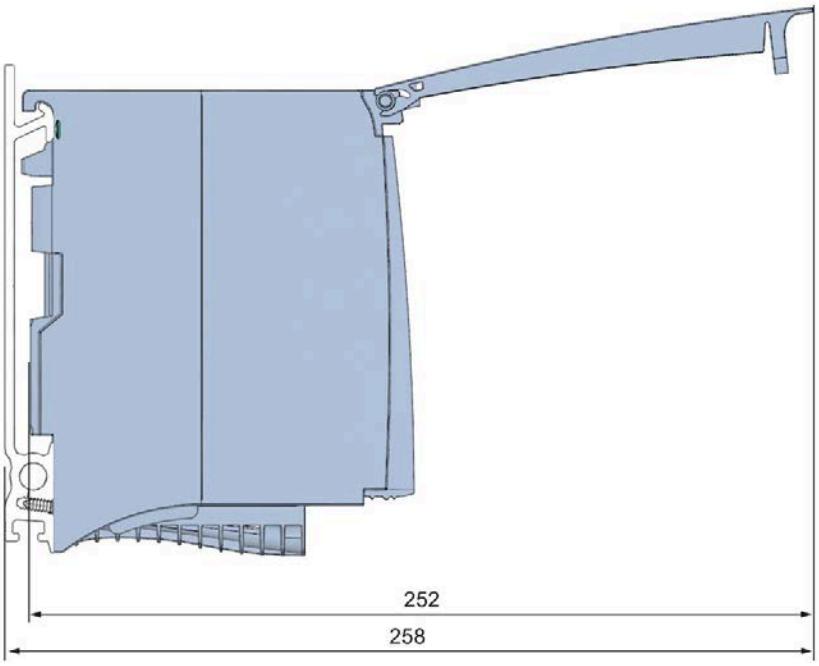

Figure A-2 Dimensional drawing of the PS 60W 24/48/60VDC HF module

Parameter data record

B

Parameter assignment in the user program

You have the option to re-parameterize the power supply module in RUN mode of CPU.

Changing parameters in RUN mode

The parameters of the power supply module are in data record 0. Using the instruction WRREC the adjustable parameters can be transferred to the power supply module. The parameters assigned in STEP 7 are not changed permanently in the CPU, which means the parameters assigned in STEP 7 are valid again after a restart.

Output parameter RET_VAL

The power supply module ignores errors that occur during transfer of parameters with the WRREC instruction and continues operation with the previous parameter assignment. However, a corresponding error code is written to the RET_VAL output parameter. If no error occurs, the length of the data actually transferred is entered in RET_VAL.

RET_VAL is 4 bytes long and structured as follows:

- Byte1: Function_Num, general error code
- Byte2: Error_Decode, location of the error detection
- Byte3: Error_Code_1, error detection
- Byte4: Error_Code_2, manufacturer-specific expansion of the error detection

The description of the WRREC instruction and the general error codes are available in the STEP 7 online help.

Module-specific errors are displayed by means of Error_Code_1 = 224_D or Error_Code_1 = 225_D.

Manufacturer-specific expansions of the error detection of the WRREC instruction have the following meaning:

Table B- 1 Manufacturer-specific expansions of the error detection of the WRREC instruction

Error_Code 1	Error_Code 2	Meaning
224D Error in the data record header	1 D	The version entered in the data record header is not supported by the module or reserved bits of the version are set.
	2 D	The net length entered in the data record header is incorrect.
225 D Errors in the net data entered in the data record (parameter)	1 D	Diagnostic interrupt enable is incorrect
	16 D	Reserved parameters are not 0

Data record structure

The following figure shows the structure of the data record 0.

- A fixed bit pattern is entered in byte 0. It indicates the version of the data record structure. Each time a data record is written, the module checks the written data and accepts only data records with major version 1.
- Byte 1 specifies the maximum data length that can be used for parameter data.
- Byte 2 contains the parameter data.
- Bytes 3 to 11 are reserved.

To enable a parameter in byte 2, set the corresponding bit to "1". The corresponding diagnostics is then activated, for example, for supply voltage monitoring. If you set the corresponding bit to "0", the diagnostics is deactivated.

You are not permitted to change byte 0, byte 1 or bytes 3 to 11.

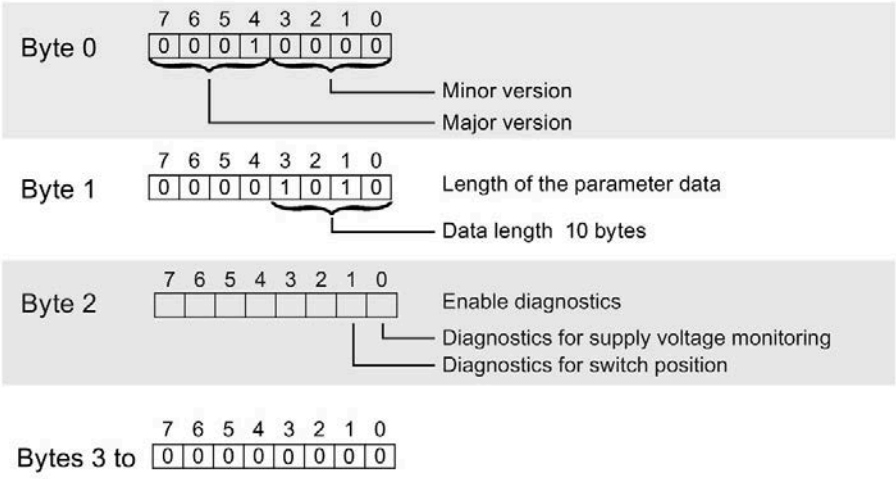

Figure B-1 Structure of data record 0

SIEMENS

SIMATIC

S7-1500/ET 200MP Power supply module PS 60W 120/230V AC/DC (6ES7507-0RA00-0AB0)

Equipment Manual

Preface

Documentation guide 1

Product overview 2

Wiring 3

Parameters 4

Interrupts, diagnostic alarms, error and status alarms 5

Technical specifications 6

Dimensional drawing A

Parameter data record B

11/2020

A5E31826073-AB

Legal information

Warning notice system

This manual contains notices you have to observe in order to ensure your personal safety, as well as to prevent damage to property. The notices referring to your personal safety are highlighted in the manual by a safety alert symbol, notices referring only to property damage have no safety alert symbol. These notices shown below are graded according to the degree of danger.

⚠ DANGER
indicates that death or severe personal injury **will** result if proper precautions are not taken.

⚠ WARNING
indicates that death or severe personal injury **may** result if proper precautions are not taken.

⚠ CAUTION
indicates that minor personal injury can result if proper precautions are not taken.

NOTICE
indicates that property damage can result if proper precautions are not taken.

If more than one degree of danger is present, the warning notice representing the highest degree of danger will be used. A notice warning of injury to persons with a safety alert symbol may also include a warning relating to property damage.

Qualified Personnel

The product/system described in this documentation may be operated only by **personnel qualified** for the specific task in accordance with the relevant documentation, in particular its warning notices and safety instructions. Qualified personnel are those who, based on their training and experience, are capable of identifying risks and avoiding potential hazards when working with these products/systems.

Proper use of Siemens products

Note the following:

⚠ WARNING
Siemens products may only be used for the applications described in the catalog and in the relevant technical documentation. If products and components from other manufacturers are used, these must be recommended or approved by Siemens. Proper transport, storage, installation, assembly, commissioning, operation and maintenance are required to ensure that the products operate safely and without any problems. The permissible ambient conditions must be complied with. The information in the relevant documentation must be observed.

Trademarks

All names identified by ® are registered trademarks of Siemens AG. The remaining trademarks in this publication may be trademarks whose use by third parties for their own purposes could violate the rights of the owner.

Disclaimer of Liability

We have reviewed the contents of this publication to ensure consistency with the hardware and software described. Since variance cannot be precluded entirely, we cannot guarantee full consistency. However, the information in this publication is reviewed regularly and any necessary corrections are included in subsequent editions.

Siemens AG
Division Digital Factory
Postfach 48 48
90026 NÜRNBERG
GERMANY

A5E31826073-AB
Ⓟ 11/2020 Subject to change

Copyright © Siemens AG 2013 - 2020.
All rights reserved

Preface

Preface

Purpose of the documentation

This manual complements the system manuals:

- S7-1500 automation system (http://support.automation.siemens.com/WW/view/en/59191792)
- ET 200MP distributed I/O system (http://support.automation.siemens.com/WW/view/en/59193214)

Functions that generally concern the systems are described in these manuals.

The information provided in this manual and in the system/function manuals support you in commissioning the systems.

Conventions

The term "CPU" is used in this manual both for the CPUs of the S7-1500 automation system and for interface modules of the ET 200MP distributed I/O system.

Also observe notes marked as follows:

Note

A note contains important information on the product described in the documentation, on the handling of the product, or on the section of the documentation to which particular attention should be paid.

Note on IT security

Siemens offers IT security mechanisms for its automation and drive product portfolio in order to support the safe operation of the plant/machine. We recommend that you inform yourself regularly on the IT security developments regarding your products. You can find information on this on the Internet (http://support.automation.siemens.com).

You can register for a product-specific newsletter here.

For the safe operation of a plant/machine, however, it is also necessary to integrate the automation components into an overall IT security concept for the entire plant/machine, which corresponds to the state-of-the-art IT technology. You can find information on this on the Internet (http://www.siemens.com/industrialsecurity).

Products used from other manufacturers should also be taken into account here.

Copyright notice for the open-source software used

Open-source software is used in the firmware of the product described. The open-source software is provided free of charge. We are liable for the product described, including the open-source software contained in it, pursuant to the conditions applicable to the product. Siemens accepts no liability for the use of the open source software over and above the intended program sequence, or for any faults caused by modifications to the software.

For legal reasons, we are obliged to publish the original text of the following copyright notices.

© Copyright William E. Kempf 2001
Permission to use, copy, modify, distribute and sell this software and its documentation for any purpose is hereby granted without fee, provided that the above copyright notice appear in all copies and that both that copyright notice and this permission notice appear in supporting documentation. William E. Kempf makes no representations about the suitability of this software for any purpose. It is provided "as is" without express or implied warranty.

Copyright © 1994 Hewlett-Packard Company
Permission to use, copy, modify, distribute and sell this software and its documentation for any purpose is hereby granted without fee, provided that the above copyright notice appear in all copies and that both that copyright notice and this permission notice appear in supporting documentation. Hewlett-Packard Company makes no representations about the suitability of this software for any purpose. It is provided ``as is" without express or implied warranty.

Table of contents

Preface **3**

1 Documentation guide **6**

2 Product overview **7**

2.1 Properties 7

2.2 Operating and display elements 9

3 Wiring **10**

3.1 Connecting the supply voltage (PS 60W 230VAC) 10

4 Parameters **12**

4.1 Parameters 12

5 Interrupts, diagnostic alarms, error and status alarms **13**

5.1 Status and error displays 13

5.2 Diagnostic alarms 15

5.3 Interrupts 17

6 Technical specifications **18**

A Dimensional drawing **20**

A.1 Dimensional drawing 20

B Parameter data record **22**

Documentation guide 1

Introduction

The modular documentation of the S7-1500 and ET 200MP system families covers all aspects of your automation system.

The documentation consists of different modules that are divided into system manuals, function manuals and manuals.

The following table provides an overview of the documents that complement this manual. Information in the manual overrides specifications in the system manual.

Overview of the documentation for the power supply module PS 60W 120/230VAC

The table below lists additional documentation for using the PS 60W 120/230VAC benötigen. power supply module.

Table 1- 1 Documentation for the power supply module PS 60W 120/230VAC

Topic	Documentation	Most important contents
System description	System manual S7-1500 automation system (http://support.automation.siemens.com/WW/view/en/59191792) System manual ET 200MP distributed I/O system (http://support.automation.siemens.com/WW/view/en/59193214)	• Application planning • Installation • Wiring • Commissioning • Standards and approvals • Electromagnetic compatibility • Mechanical and climatic ambient conditions
Designing interference-free controllers	Function manual Designing interference-free controllers (http://support.automation.siemens.com/WW/view/en/59193566)	• Basics • Electromagnetic compatibility • Lightning protection
System diagnostics	Function manual System diagnostics (http://support.automation.siemens.com/WW/view/en/59192926)	• Overview • Hardware/software diagnostics evaluation

SIMATIC manuals

All current manuals for SIMATIC products are available for download free of charge from the Internet (http://www.siemens.com/automation/service&support).

Product overview

2

2.1 Properties

Order number

6ES7507-0RA00-0AB0

View of the module

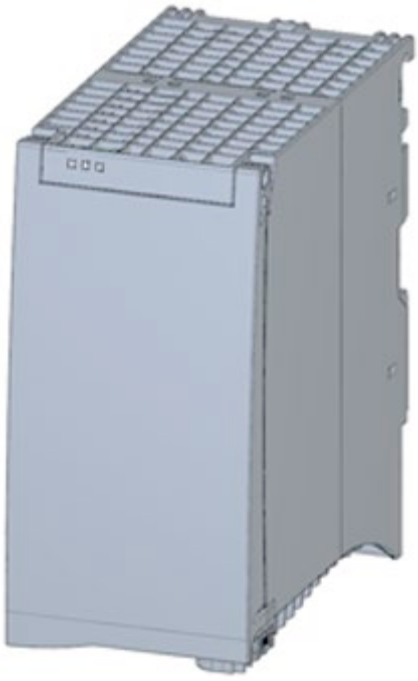

Figure 2-1 View of the PS 60W 120/230V AC/DC module

Properties

The PS 60W 120/230V AC/DC power supply module supports the use of additional modules.

The power supply module has the following properties:

- Technical properties
  - Rated input voltages 120 V AC/DC and 230 V AC/DC
  - Output power 60 W
  - Power failure backup
  - Electrical isolation to the bus, safe electrical separation to EN 61131-2
- Supported functions
  - Firmware update
  - Identification data I&M0 to I&M4
  - Configuration in RUN
  - Diagnostic alarms
  - Diagnostic interrupts

Accessories

The following components are supplied with the power supply module:

- Power connector
- U connector

These components are also available as spare parts.

2.2 Operating and display elements

The following figure shows the control and connection elements of the PS 60W 120/230 V UC behind the front panel as well as the power connector.

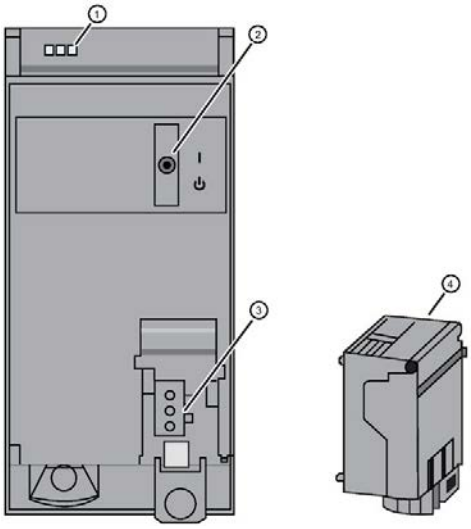

① LED displays indicating the current operating state and diagnostic status of the PS
② On/off switch
③ Power inlet for the power connector
④ Power connector; inserted in delivery state

Figure 2-2 View of the PS 60W 120/230V AC/DC (without front panel) and of the power connector

Wiring 3

3.1 Connecting the supply voltage (PS 60W 230VAC)

This section contains information on connecting the power supply module to the mains voltage.

Mains connection

WARNING

Installation instructions

Risk of death or serious injury.

Observe the general installation instructions applicable in your country when wiring the power supply module.

Fuse the power cables according to their conductor cross-section.

The following applies to mains connection of the power supply module using the power connector:

- The power connector enables connection of the input voltage to the power supply module with touch protection.
- The power connector enables permanent wiring.
- The power connector features internal strain relief.
- The power connector ensures reverse polarity protection. A coding element assigns each power connector to a specific type of power supply module on delivery. A connector coded for 230 V AC does not fit in the connection to a 24 V DC power supply module.

DANGER

Do not manipulate or omit the coding element

Changes to the coding element can result in dangerous states in your plant and/or damage to the outputs of the I/O modules. In order to avoid damage, do not manipulate the coding. The coding element may not be omitted.

Connection plug

The connection plug for the power supply is plugged in when the power supply module ships from the factory.

The following figure shows the assignment of the connection plug:

Connector	PS connection	Name
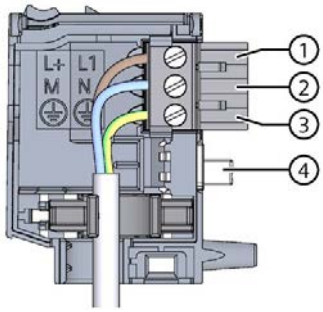	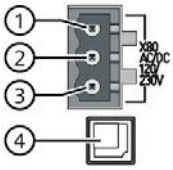	① L ② N ③ Protective conductor ④ Coding element

Cables

You need flexible cables to wire power to the power supply module. The conductor cross-section must be 1.5 mm^2 (AWG: 16). You must fuse conductors with a cross-section of 1.5 mm^2 externally with a 16 A circuit breaker (B or C characteristic). The diameter of a 3 x 1.5 mm^2 sheathed cable can be no more than 8.5 mm. The ground conductor of flexible cables must be longer than the two other conductors. The fusing must meet the requirements of the corresponding control cabinet.

Reference

You can find additional information about wiring the mains connector in the system manual S7-1500 automation system.

Siemens recommends the use of devices from the SITOP family of products for applications with load power supplies. Wiring information is available in the documentation for the load power supply.

Parameters

4

4.1 Parameters

Parameters of the PS 60W 120/230V AC/DC

Specify the module properties at the various parameters in the course of your STEP 7 parameterization. The following table lists the configurable parameters.

The parameters you define in the user program are transferred to the module by means of WRREC instruction (Configuration in RUN); see chapter Parameter data record (Page 22).

Table 4- 1 Configurable parameters and their defaults

Parameters	Range of values	Defaults	Configuration in RUN
Diagnostic/maintenance			
• Supply voltage missing	Yes/No	No	Yes
• Switch position Off	Yes/No	No	Yes

Note

Diagnostic alarms without supply voltage

Regardless of whether the supply voltage is missing or the On/Off switch is set to "Off", the power supply module of the CPU or the IM is still capable of generating diagnostic alarms because it is provided sufficient power from the backplane bus. The entire diagnostic functionality is still available.

Interrupts, diagnostic alarms, error and status alarms

5

5.1 Status and error displays

Introduction

Diagnostics by means of LEDs is a basic tool for troubleshooting. Usually, you can pinpoint the source of error more precisely by analyzing the module status information in STEP 7, or in the diagnostic buffer of the CPU. These locations contain the corresponding error information in plain text.

LED displays

The following figure shows the LED displays (status and error displays) of the PS 60W 120/230V AC/DC.

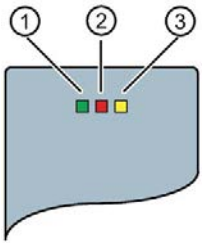

① RUN LED

② ERROR LED

③ MAINT LED

Figure 5-1 LED displays of the PS 60W 120/230V AC/DC

Meaning of the LED displays

The following table explains the meaning of the status and error displays. You can find remedial measures for diagnostic alarms in chapter Diagnostic alarms (Page 15).

Table 5- 1 Status and error displays RUN/ERROR/MAINT

LED			Meaning	Remedy
RUN	**ERROR**	**MAINT**		
Off	Off	Off	OFF; PS returns no bus voltage • External error; diagnostics is disabled • PS not powered in the system, no supply voltage at the PS and CPU/IM.	Switch on power to the PS Check the supply voltage Switch on PS
On	On	On	Startup; all LED displays are lit briefly after system startup, or during module restart after firmware update.	-
Flashing	Not relevant	Not relevant	Startup, PS returns bus voltage, PS waiting for parameterization	-
Off	Flashing	Not relevant	Error, PS supplies no bus voltage • Supply voltage missing and diagnostics is enabled • Internal error	Evaluate diagnostic alarms and take appropriate remedial measures; see chapter Diagnostic alarms (Page 15)
Off	Not relevant	On	Maintenance request, PS returns no bus voltage • Switch is off; power is present and diagnostics is enabled	Switch on PS
Flashing	Flashing	Flashing	Malfunction LEDs flash persistently	Replace PS

5.2 Diagnostic alarms

Diagnostic alarms

The following table shows the meaning of the diagnostic alarms and possible remedial measures for the respective cause.

One of the following "LED images" indicates directly on the PS that a diagnostic alarm was triggered.

- The red ERROR-LED is flashing.

  Indicates external or internal errors.
- The yellow MAINT-LED is lit.

  Maintenance; a maintenance request is active.
- All three LEDs are flashing permanently

  The PS is in "Defective" state.

In STEP 7, the diagnostic results are displayed in plain text by means of the online and diagnostic view. You can read the diagnostic data records by means of the "RDREC" instruction.

Table 5- 2 Diagnostic alarms, their meaning and remedies

Diagnostic alarm	Error code		Meaning	Reaction	Remedial measures
	Dec.	Hex.			
External error					
Supply voltage missing	266D	010AH	No supply voltage, or incorrect insertion of the power connector into the PS.	1	Check the supply voltage.
Internal error					
Overtemperature	5D	0005H	Overtemperature on the printed circuit board.	3	Check PS load. Isolate PS from mains. Wait one minute before you power on the PS again.
Overvoltage backplane bus	267D	010BH	High EMC interference or a defective PS, CPU or IM inserted.	3	Eliminate electromagnetic interference. Check inserted modules and bus connectors. Isolate PS from mains. Wait one minute before you power on the PS again.
Low voltage/overload in the power segment	281D	0119H	A voltage dip below the valid limit has been detected in the power segment to the right of the PS.	2	Check the modules in the affected segment; replace if necessary. Switch off the PS at the switch, then switch on again.
Error in the power segment	282D	011AH	PS or module to the right of the PS is defective.	2	Replace the defective module. Switch off the PS at the switch, then switch on again.
Safety shutdown	285D	011DH	Reliable operation of the module is no longer guaranteed.	3	Check ambient conditions. Isolate PS from mains. Wait one minute before you power on the PS again.
Maintenance					
Switch turned off	268D	010CH	The PS is switched off.	1	Switch on PS.

Diagnostic alarm	Error code		Meaning	Reac-tion	Remedial measures
	Dec.	Hex.			
Malfunction					
Module failure	256D	0100H	PS failure.	3	Replace PS.

External errors, internal errors and malfunctions

- External errors occur outside the PS. In the parameterization, specify whether or not an external error can trigger a diagnostic alarm. By default, external errors do not trigger diagnostic alarms.
- Internal errors occur inside the PS. If still possible, an internal error always triggers a diagnostic alarm.
- A malfunction is a static state; the PS must be sent in for repair. If still possible, a defect always triggers a diagnostic alarm.

Explanation of the reactions

1. No power at the power segment to the right of the PS. Alarm is only generated if the PS is still powered by the CPU or IM via the backplane bus.
2. The modules to the right of the PS are switched off.
3. The PS is switched off retentively. Alarm is only generated if the PS is still powered by the CPU or IM via the backplane bus. You cannot switch on the module unless you have eliminated the error and disconnected power to the PS for approximately one minute.

5.3 Interrupts

What is a diagnostic interrupt?

You can determine reactions to internal or external errors in the user program, by programming a diagnostic interrupt which interrupts cyclic program execution on the CPU and triggers the diagnostic interrupt OB (OB82). The event which led to the interrupt is entered in the start information of the OB82.

Trigger of a diagnostic interrupt

Events that can trigger a diagnostic alarm can also trigger a diagnostic interrupt:

- Supply voltage missing
- Overtemperature
- Overvoltage on the backplane bus
- Low voltage/overload in the power segment
- Error in the power segment
- Safety shutdown
- Switch position Off
- Malfunction

Reactions to a diagnostic interrupt

You can find the CPU reaction to a diagnostic interrupt in the function manual System diagnostics (http://support.automation.siemens.com/WW/view/en/59192926).

Detailed information on the error event is available in the diagnostic interrupt OB by executing the "RALRM" instruction (read additional interrupt information) and in the STEP 7 Online Help.

Technical specifications

6

Technical specifications of the PS 60W 120/230V AC/DC

	6ES7507-0RA00-0AB0
Product type designation	PS 60W 120/230V AC/DC
General information	
Hardware version	FS02
Firmware version	V1.0.1
Engineering with	
STEP 7 TIA Portal can be configured/integrated as of version	V12 / V12
STEP 7 can be configured/integrated as of version	V5.5 SP3 or higher
FH technology	
Redundancy	
Redundancy capability	yes
• For increasing performance	yes
Power supply	
Rated value (DC)	120 V / 230 V
Valid range low limit (DC)	88 V
Valid range high limit (DC)	300 V
Rated value (AC)	120 V / 230 V
Valid range low limit (AC)	85 V
Valid range high limit (AC)	264 V
Short-circuit protection	Yes
Mains frequency	
Rated value 50 Hz	yes
Lower limit of permissible frequency range	47 Hz
Upper limit of permissible frequency range	63 Hz
Power failure backup	
Power failure backup time	20 ms
Input current	
Rated value at 120 V DC	0.6 A
Rated value at 230 V DC	0.3 A
Rated value at 120 V AC	0.6 A
Rated value at 230 V AC	0.34 A
Output current	
Short-circuit protection	yes
Power	
Power feed to the backplane bus	60 W
Power loss	
Power loss at rated conditions	12 W

	6ES7507-0RA00-0AB0
Interrupts/diagnostics/status information	
Status display	yes
Electrical isolation	
Primary/secondary	Yes
Insulation	
Insulation tested with	2500 V DC 2s (routine test)
EMC	
Immunity to surge voltages	
on the supply lines in accordance with IEC 61000-4-5	Yes; +/- 1 kV (according to IEC 61000-4-5; 1995; symm. surge), +/- 2 kV (according to IEC 61000-4-5; 1995; unsymm. surge), no external protective circuit required
Degree of protection and protection class	
Degree of protection according to EN 60529	IP20
Protection class	1; with ground conductor
Dimensions	
Width	70 mm
Height	147 mm
Depth	129 mm
Weights	
Weight, approx.	600 g

Dimensional drawing

A

A.1 Dimensional drawing

Dimensional drawing of the PS 60W 120/230V AC/DC

This appendix includes the dimensional drawing of the power supply module that is installed on a mounting rail with shielding bracket. Take the dimensions into account for installation in cabinets, control rooms, etc.

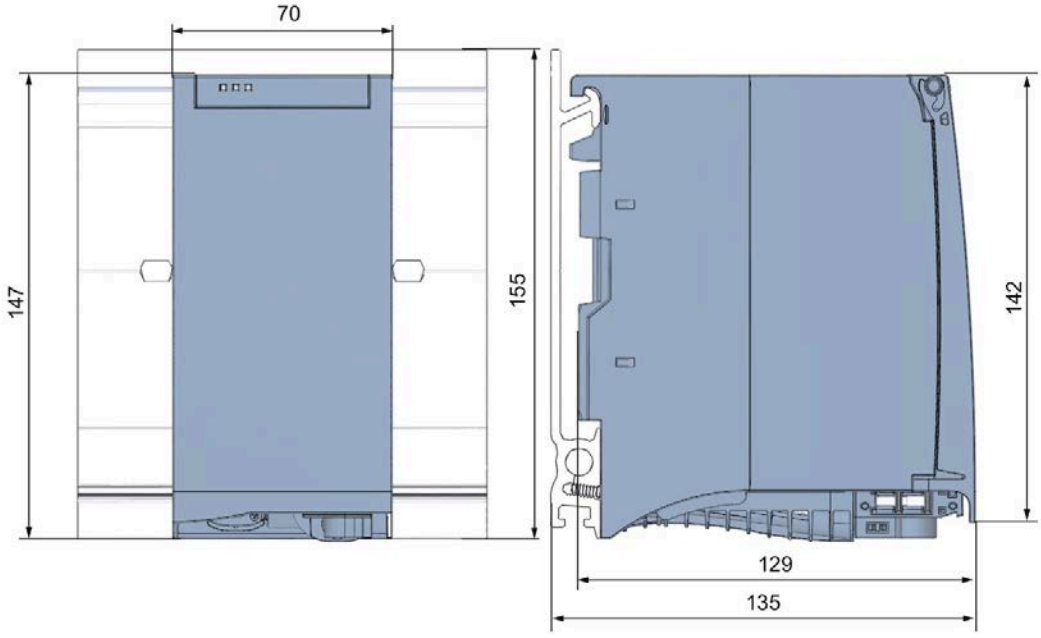

Figure A-1 Dimensional drawing of the PS 60W 120/230V AC/DC module

This figure shows the dimensions of the module with open front panel.

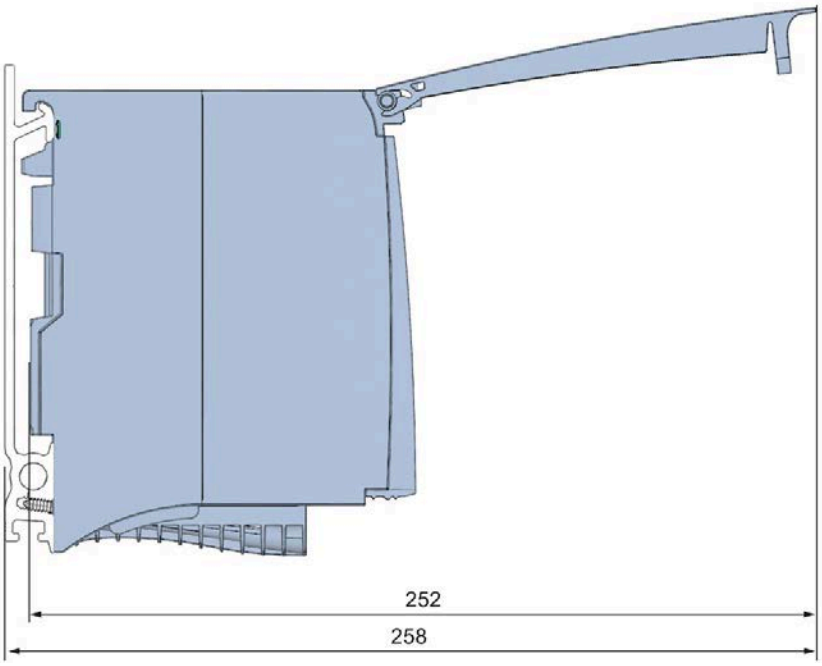

Figure A-2 Dimensional drawing of the PS 60W 120/230V AC/DC module, side view with open front panel

Parameter data record

B

Parameter assignment in the user program

You have the option to re-parameterize the power supply module in RUN mode of CPU.

Changing parameters in RUN mode

The parameters for the power supply module are contained in data record 0. You can use the WRREC instruction to transfer the configurable parameters to the power supply module. The parameters assigned in STEP 7 are not changed permanently in the CPU, which means the parameters assigned in STEP 7 are valid again after a restart.

Output parameter RET_VAL

The power supply module ignores errors that occur during transfer of parameters with the WRREC instruction and continues operation with the previous parameter assignment. However, a corresponding error code is written to the RET_VAL output parameter. If no error occurs, the length of the data actually transferred is entered in RET_VAL.

RET_VAL is 4 bytes long and structured as follows:

- Byte1: Function_Num, general error code
- Byte2: Error_Decode, location of the error detection
- Byte3: Error_Code_1, error detection
- Byte4: Error_Code_2, manufacturer-specific expansion of the error detection

The description of the WRREC instruction and the general error codes are available in the STEP 7 online help.

Module-specific errors are displayed by means of Error_Code_1 = 224_D or Error_Code_1 = 225_D.

Manufacturer-specific expansions of the error detection of the WRREC instruction have the following meaning:

Table B- 1 Manufacturer-specific expansions of the error detection of the WRREC instruction

Error_Code 1	Error_Code 2	Meaning
224D Error in the data record header	1 D	The version entered in the data record header is not supported by the module or reserved bits of the version are set.
	2 D	The net length entered in the data record header is incorrect.
225 D Error in the net data (parameters) entered in the data record	1 D	Diagnostic interrupt enable is incorrect
	16 D	Reserved parameters are not 0

Data record structure

The following figure shows the structure of the data record 0.

- A fixed bit pattern is entered in byte 0. It indicates the version of the data record structure. Each time a data record is written, the module checks the written data and accepts only data records with major version 1.
- Byte 1 specifies the maximum data length that can be used for parameter data.
- Byte 2 contains the parameter data.
- Bytes 3 to 11 are reserved.

To enable a parameter in byte 2, set the corresponding bit to "1". The corresponding diagnostics is then activated, for example, for supply voltage monitoring. If you set the corresponding bit to "0", the diagnostics is deactivated.

You are not permitted to change byte 0, byte 1 or bytes 3 to 11.

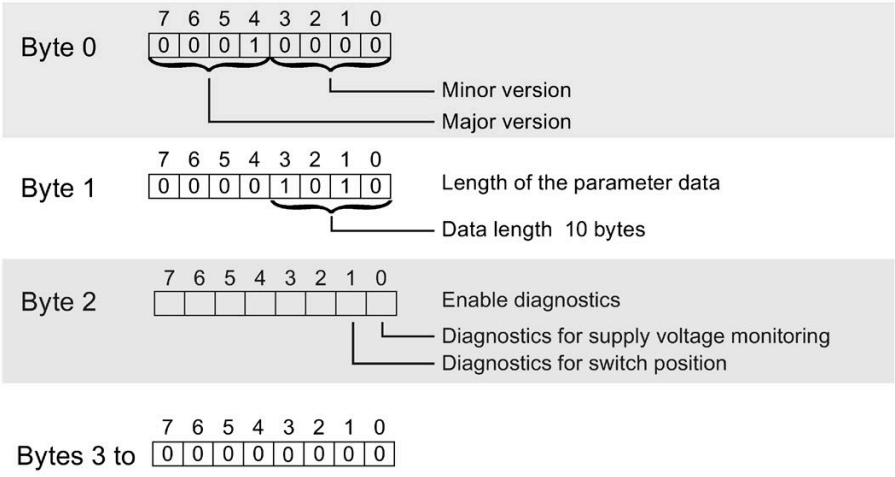

Figure B-1 Structure of data record 0

SIEMENS

SIMATIC

S7-1500/ET 200MP Load power supply module PM 70 W 120/230VAC (6EP1332-4BA00)

Manual

Preface

Documentation guide 1

Product overview 2

Connection 3

Parameter 4

Alarms, diagnostic, error and status messages 5

Technical specifications 6

Dimension drawing A

Parameter data set B

01/2013

A5E31691456-AA

Legal information

Warning notice system

This manual contains notices you have to observe in order to ensure your personal safety, as well as to prevent damage to property. The notices referring to your personal safety are highlighted in the manual by a safety alert symbol, notices referring only to property damage have no safety alert symbol. These notices shown below are graded according to the degree of danger.

⚠ DANGER
indicates that death or severe personal injury **will** result if proper precautions are not taken.

⚠ WARNING
indicates that death or severe personal injury **may** result if proper precautions are not taken.

⚠ CAUTION
indicates that minor personal injury can result if proper precautions are not taken.

NOTICE
indicates that property damage can result if proper precautions are not taken.

If more than one degree of danger is present, the warning notice representing the highest degree of danger will be used. A notice warning of injury to persons with a safety alert symbol may also include a warning relating to property damage.

Qualified Personnel

The product/system described in this documentation may be operated only by **personnel qualified** for the specific task in accordance with the relevant documentation, in particular its warning notices and safety instructions. Qualified personnel are those who, based on their training and experience, are capable of identifying risks and avoiding potential hazards when working with these products/systems.

Proper use of Siemens products

Note the following:

⚠ WARNING
Siemens products may only be used for the applications described in the catalog and in the relevant technical documentation. If products and components from other manufacturers are used, these must be recommended or approved by Siemens. Proper transport, storage, installation, assembly, commissioning, operation and maintenance are required to ensure that the products operate safely and without any problems. The permissible ambient conditions must be complied with. The information in the relevant documentation must be observed.

Trademarks

All names identified by ® are registered trademarks of Siemens AG. The remaining trademarks in this publication may be trademarks whose use by third parties for their own purposes could violate the rights of the owner.

Disclaimer of Liability

We have reviewed the contents of this publication to ensure consistency with the hardware and software described. Since variance cannot be precluded entirely, we cannot guarantee full consistency. However, the information in this publication is reviewed regularly and any necessary corrections are included in subsequent editions.

Siemens AG
Industry Sector
Postfach 48 48
90026 NÜRNBERG
GERMANY

A5E31691456-AA
Ⓟ 02/2013 Technical data subject to change

Copyright © Siemens AG 2013.
All rights reserved

Preface

Purpose of this documentation

This manual supplements the system manuals:

- S7-1500 automation system (http://support.automation.siemens.com/WW/view/en/59191792)
- ET 200MP distributed I/O system (http://support.automation.siemens.com/WW/view/en/59193214)

General system functions are described there.

The information in this manual along with the System/Function manuals enables you to commission the systems.

Conventions

In the following, if "CPU" is mentioned, then this refers to the central modules of the S7-1500 automation system, as well as the interface modules of the ET 200MP distributed I/O.

Also observe the notes marked as follows:

Note

A note refers to important information about the product described in the documentation, for handling the product or to the part of the documentation to which special attention should be given.

Note on IT security

Siemens offers IT security mechanisms for its automation and drive product portfolio in order to support the safe operation of the plant/machine. We recommend that you inform yourself regularly on the IT security developments regarding your products. You can find information on this on the Internet (http://support.automation.siemens.com).

You can register for a product-specific newsletter here.

For the safe operation of a plant/machine, however, it is also necessary to integrate the automation components into an overall IT security concept for the entire plant/machine, which corresponds to the state-of-the-art IT technology. You can find information on this on the Internet (http://www.siemens.com/industrialsecurity).

Products used from other manufacturers should also be taken into account here.

Table of contents

Preface 3
1 Documentation guide 7
2 Product overview 9
2.1 Properties 9
2.2 Operator controls and display elements 11
3 Connection 13
3.1 Connecting up the power supply module 13
4 Parameter 15
5 Alarms, diagnostic, error and status messages 17
5.1 Status and error displays 17
5.2 Diagnostic messages 19
5.3 Alarms 19
6 Technical specifications 21
A Dimension drawing 23
B Parameter data set 25

Documentation guide 1

Introduction

The documentation of the S7-1500 and ET 200MP system families has a modular structure, and includes topics associated with your automation system.

The complete documentation comprises various modules, which are subdivided into System Manuals, Function Manuals and Equipment Manuals.

An overview of the documents, which supplement this Manual, is provided in the following table.

Overview of the documentation for the power supply module PM 70 W 120/230 VAC

The following table lists additional documentation, which you require when using the load power supply module PM 70 W 120/230 VAC .

Table 1- 1 Documentation for the PM 70 W 120/230 VAC load power supply module

Subject	Documentation	Most important content
Description of the system	System Manual S7-1500 automation system (http://support.automation.siemens.com/WW/view/en/59191792) System Manual ET 200MP distributed I/O system (http://support.automation.siemens.com/WW/view/en/59193214)	• Planning its use • Installation • Connection • Commissioning • Standards and approvals • Electromagnetic compatibility • Mechanical and climatic environmental conditions
Configuring control systems so that they are interference-proof	Function Manual Configuring control systems so that they are interference-proof (http://support.automation.siemens.com/WW/view/en/59193566)	• Basic principles • Electromagnetic compatibility • Lightning protection
System diagnostics	Function Manual System diagnostics (http://support.automation.siemens.com/WW/view/en/59192926)	• Overview • Diagnostics evaluation, hardware/software

SIMATIC Manuals

In the Internet (http://www.siemens.com/automation/service&support) you will find all of the current manuals for SIMATIC products, that you can download at no charge.

Product overview

2

2.1 Properties

Order number

6EP1332-4BA00

View of the module

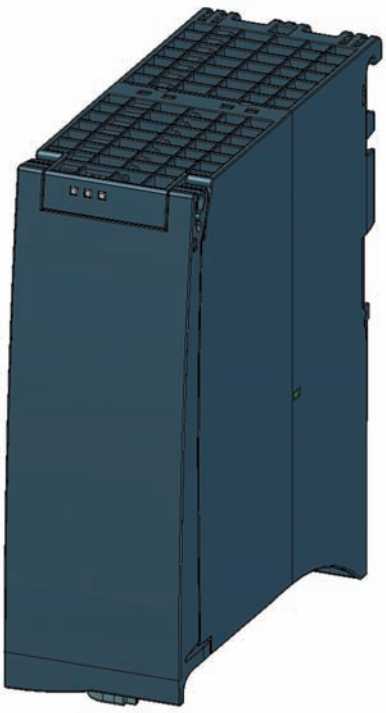

Figure 2-1 View of the PM 70 W 120/230 VAC load power supply module

Properties

The load power supply module PM 70 W 120/230 VAC feeds input and output circuits (load circuits) as well as sensors and actuators

The load power supply module has the following properties:

- Technical properties
  - Rated input voltage 120/230 V AC, 50/60 Hz
  - Automatic voltage range switchover
  - 24 V DC rated output voltage
  - 3 A rated output current
  - 70 W output power
  - Power failure buffering

Accessories

The following components can be supplied with the power module:

- Line connector
- Pluggable 24 V DC output terminal

2.2 Operator controls and display elements

The following diagram shows the operating and connection elements of the PM 70 W 120/230 VAC load power supply module behind the front cover, the line connector and the pluggable 24 V DC output terminal

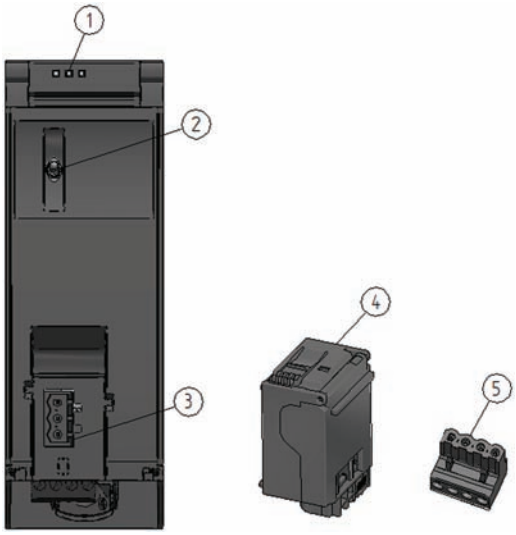

① LED displays showing the actual operating state and diagnostics state of the PM
② On / off switch
③ Power supply connection via the line connector
④ Line connector, inserted when delivered
⑤ Pluggable 24 V DC output terminal, inserted when delivered

Figure 2-2 View of the PM 70 W 120/230 VAC power supply module (without front cover), the line connector and the pluggable 24 V DC output terminal

Connection 3

3.1 Connecting up the power supply module

Line connection

⚠ WARNING
Installation instructions Death or severe injury can occur. When connecting up the power supply module, carefully observe the general installation instructions that are valid in your particular country. Protect the line connection cables corresponding to the cable cross-section.

The following applies to the line connection of the load power supply module with the line connector:

- The line connector allows the supply voltage to be connected to the load power supply with touch protection.
- The line connector facilitates permanent wiring to be established.
- The line connector has a strain relief mechanism.
- When supplied, every line connector is assigned to a power supply module type using a coding element. A connector, coded for 230 V AC, cannot be inserted in a 24 V DC power supply module.

24 V DC output

The following applies to the 24 V DC output of the load power supply module with pluggable 24 V DC output terminal:

- The 24 V DC output terminal allows loads to be connected with a 24 V DC input.
- The 24 V DC output terminal facilitates permanent wiring to be established.
- The 24 V DC output terminal guarantees protection against reverse polarity.

Cables

You must use flexible cables to connect the load power supply module. The wire cross-section can be 0.5 mm² up to 2.5 mm² (AWG: 24 to 12). A miniature circuit breaker or motor circuit breaker must be provided at the input side.

Clearance to adjacent modules

For a horizontal system configuration (cable outlet towards the bottom), no installation clearances are required to the right-hand adjacent module; on the other hand, if there is a module to the left, then a minimum clearance of 10 mm must be provided.

For vertical system configurations (cable outlet to the right), a minimum clearance of 25 mm must be maintained to the upper adjacent module. If there is a lower adjacent module, then a minimum clearance of 20 mm must be maintained

Reference

Information on installing the load power supply module and wiring the line connector and the pluggable 24 V DC output terminal is provided in the System Manual S7-1500 automation system (http://support.automation.siemens.com/WW/view/de/59191792) and in the operating instructions for the load power supply module.

Parameter

4

PM 70 W 120/230 VAC parameters

The PM 70 W 120/230 VAC power supply module cannot be parameterized via STEP 7.

Alarms, diagnostic, error and status messages 5

5.1 Status and error displays

Introduction

The diagnostics provided by the LEDs provides the first resource to locate faults.

LED displays

The LED displays (status and error displays) of the PM 70 W 120/230 VAC load power supply module can be seen in the following diagram.

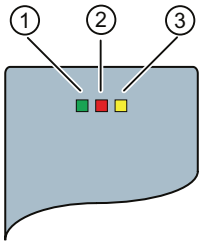

① RUN LED
② ERROR LED
③ MAINT LED

Figure 5-1 LED displays of the PM 70 W 120/230 VAC load power supply module

Meaning of the LED displays

The significance of the status and error displays of the PM 70 W 120/230 VAC power supply module are explained in the following table.

Table 5- 1 RUN/ERROR/MAINT status and error displays

LED			Meaning	Remedy
RUN	ERROR	MAINT		
□ off	□ off	□ off	POWER OFF PM deactivated • No power at the PM • Standby switch in the "lower" position • Device inactive • No 24 V DC output voltage	Check the line supply Supply the PM with power Switch on the PM
■ on	□ off	□ off	POWER ON The PM supplies a 24 V DC output voltage • Line supply voltage is available at the PM • Standby switch in the "upper" position • Device active and in the regular operating mode • 24 V DC output voltage is available	-
□ off	■ on	□ off	ERROR PM is operating in the overload mode • Line supply voltage is available at the PM • Standby switch in the "upper" position • Device is active, however, in the "Overload" operating mode • The connected load draws more current than the PM can supply • 24 V DC output voltage drops	Reduce the load current drawn by the connected load Install a load power supply with a higher rating
□ off	□ off	■ on	MAINTENANCE PM is in the standby mode • Line supply voltage is available at the PM • Standby switch in the "lower" position • Device is active, however, in the standby mode • No 24 V DC output voltage	Switch on the PM by bringing the standby switch into the "upper" position

5.2 Diagnostic messages

The PM 70 W 120/230 VAC load power supply module does not initiate diagnostic messages in the CPU or STEP 7. You can identify the device status directly at the PM based on the "LED statuses", as explained in Chapter Status and error displays (Page 17).

5.3 Alarms

The PM 70 W 120/230 VAC load power supply module does not initiate any alarms in the CPU or STEP 7. You can identify the device status directly at the PM based on the "LED statuses", as explained in Chapter Status and error displays (Page 17).

Technical specifications

6

Technical data of the PM 70 W 120/230 VAC load power supply module

	6EP1332-4BA00
Product type designation	PM 70 W 120/230 VAC
General Information	
Hardware product version	1
Firmware version	Not applicable
Engineering mit	
can be configured in the STEP 7 TIA-Portal / integrated from version	Not applicable
can be configured in STEP 7 / integrated from version	Not applicable
PROFIBUS from GSD version / GSD revision	Not applicable
Power supply	
• Rated value (AC)	120 V or 230 V (automatic switchover)
• Permissible range, lower limit (AC)	85 V or 170 V
• Permissible range, upper limit (AC)	132 V or 264 V
Input current	
• Rated value at 120 VAC	1.40 A
• Rated value at 230 VAC	0.80 A
Mains frequency	
• Rated value 50 Hz	Yes
• Rated value 60 Hz	Yes
• Permissible range, lower limit	45 Hz
• Permissible range, upper limit e	65 Hz
Line and power failure bypass	
• Line/power failure bypass time	20 ms
Output current	
• Rated value	3 A
• Short-circuit protection	Yes
Power	
• 24 V DC output power	194 W

	6EP1332-4BA00
Power loss	
• Power loss, typical.	10.6 W
Alarms / diagnostics / status information	
• Status display	Yes (using the device LEDs)
Electrical isolation	
• Primary/secondary	Yes
Degree of protection and protection class	
• Degree of protection to EN 60529	IP20
• Protection class	I with protective conductor
Dimensions	
• Width	50 mm
• Height	147 mm
• Depth	129 mm
Weights	
• Weight, approx.	452 g

Dimension drawing

A

Dimension drawing of the PM 70 W 120/230 VAC load power supply module

The dimension drawing of the load power supply module, mounted on a rail with shield bar, is provided in this attachment. These dimensions must be taken into account when mounting in cabinets, switchgear rooms etc.

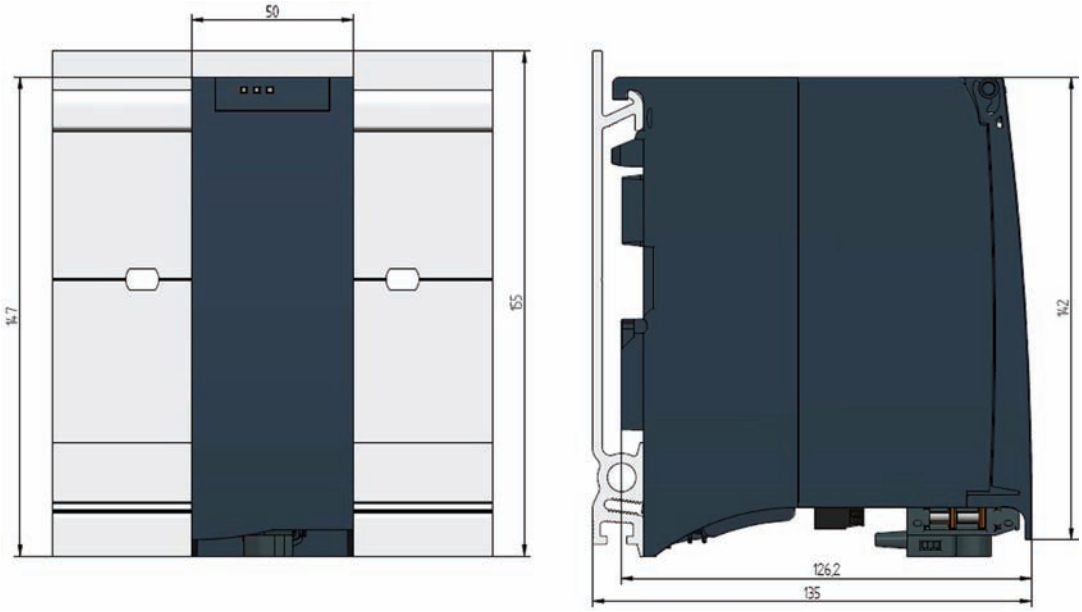

Figure A-1 Dimension drawing of the PM 70 W 120/230 VAC load power supply module

This drawing shows the module dimensions with the front cover open.

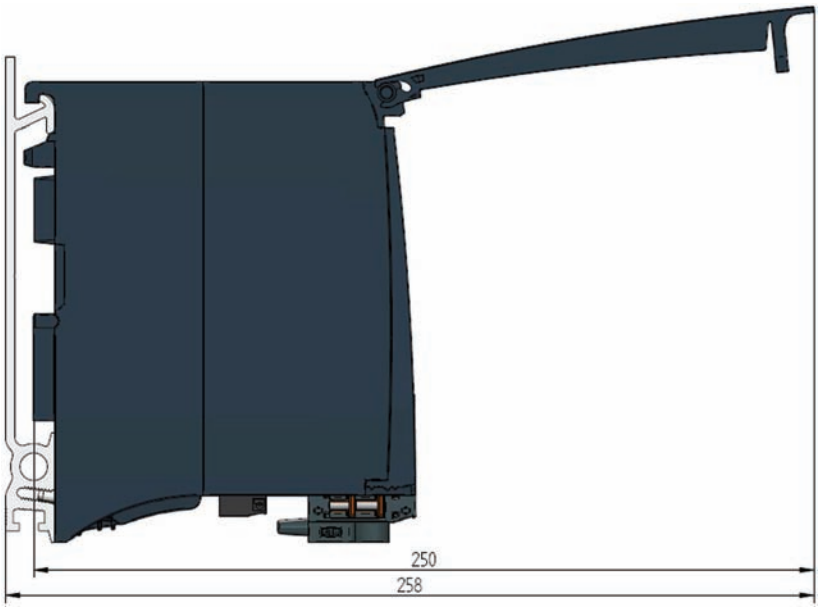

Figure A-2 Dimension drawing of the PM 70 W 120/230VAC load power supply module, side view with the front cover open

Parameter data set

B

The PM 70 W 120/230 VAC load power supply module does not provide any way of assigning parameters.

SIEMENS

SIMATIC

S7-1500/ET 200MP Load power supply module PM 190 W 120/230 VAC (6EP1333-4BA00)

Manual

Preface

Documentation guide 1

Product overview 2

Connection 3

Parameter 4

Alarms, diagnostic, error and status messages 5

Technical specifications 6

Dimension drawing A

Parameter data set B

01/2013

A5E31691095-AA

Legal information

Warning notice system

This manual contains notices you have to observe in order to ensure your personal safety, as well as to prevent damage to property. The notices referring to your personal safety are highlighted in the manual by a safety alert symbol, notices referring only to property damage have no safety alert symbol. These notices shown below are graded according to the degree of danger.

⚠ DANGER
indicates that death or severe personal injury **will** result if proper precautions are not taken.

⚠ WARNING
indicates that death or severe personal injury **may** result if proper precautions are not taken.

⚠ CAUTION
indicates that minor personal injury can result if proper precautions are not taken.

NOTICE
indicates that property damage can result if proper precautions are not taken.

If more than one degree of danger is present, the warning notice representing the highest degree of danger will be used. A notice warning of injury to persons with a safety alert symbol may also include a warning relating to property damage.

Qualified Personnel

The product/system described in this documentation may be operated only by **personnel qualified** for the specific task in accordance with the relevant documentation, in particular its warning notices and safety instructions. Qualified personnel are those who, based on their training and experience, are capable of identifying risks and avoiding potential hazards when working with these products/systems.

Proper use of Siemens products

Note the following:

⚠ WARNING
Siemens products may only be used for the applications described in the catalog and in the relevant technical documentation. If products and components from other manufacturers are used, these must be recommended or approved by Siemens. Proper transport, storage, installation, assembly, commissioning, operation and maintenance are required to ensure that the products operate safely and without any problems. The permissible ambient conditions must be complied with. The information in the relevant documentation must be observed.

Trademarks

All names identified by ® are registered trademarks of Siemens AG. The remaining trademarks in this publication may be trademarks whose use by third parties for their own purposes could violate the rights of the owner.

Disclaimer of Liability

We have reviewed the contents of this publication to ensure consistency with the hardware and software described. Since variance cannot be precluded entirely, we cannot guarantee full consistency. However, the information in this publication is reviewed regularly and any necessary corrections are included in subsequent editions.

Siemens AG
Industry Sector
Postfach 48 48
90026 NÜRNBERG
GERMANY

A5E31691095-AA
Ⓟ 01/2013 Technical data subject to change

Copyright © Siemens AG 2013.
All rights reserved

Preface

Purpose of this documentation

This manual supplements the system manuals:

- S7-1500 automation system (http://support.automation.siemens.com/WW/view/en/59191792)
- ET 200MP distributed I/O system (http://support.automation.siemens.com/WW/view/en/59193214)

General system functions are described there.

The information in this manual along with the System/Function manuals enables you to commission the systems.

Conventions

In the following, if "CPU" is mentioned, then this refers to the central modules of the S7-1500 automation system, as well as the interface modules of the ET 200MP distributed I/O.

Also observe the notes marked as follows:

Note

A note refers to important information about the product described in the documentation, for handling the product or to the part of the documentation to which special attention should be given.

Note on IT security

Siemens offers IT security mechanisms for its automation and drive product portfolio in order to support the safe operation of the plant/machine. We recommend that you inform yourself regularly on the IT security developments regarding your products. You can find information on this on the Internet (http://support.automation.siemens.com).

You can register for a product-specific newsletter here.

For the safe operation of a plant/machine, however, it is also necessary to integrate the automation components into an overall IT security concept for the entire plant/machine, which corresponds to the state-of-the-art IT technology. You can find information on this on the Internet (http://www.siemens.com/industrialsecurity).

Products used from other manufacturers should also be taken into account here.

Table of contents

Preface 3
1 Documentation guide 7
2 Product overview 9
2.1 Properties 9
2.2 Operating and display elements 11
3 Connection 13
3.1 Connecting up the power supply module 13
4 Parameter 15
5 Alarms, diagnostic, error and status messages 17
5.1 Status and error displays 17
5.2 Diagnostic messages 19
5.3 Alarms 19
6 Technical specifications 21
A Dimension drawing 23
B Parameter data set 25

Documentation guide 1

Introduction

The documentation of the S7-1500 and ET 200MP system families has a modular structure, and includes topics associated with your automation system.

The complete documentation comprises various modules, which are subdivided into System Manuals, Function Manuals and Equipment Manuals.

An overview of the documents, which supplement this Manual, is provided in the following table.

Overview of the documentation for the power supply module PM 190 W 120/230 VAC

The following table lists additional documentation that you require when using the load power supply module PM 190 W 120/230 VAC .

Table 1- 1 Documentation for the PM 190 W 120/230 VAC load power supply module

Subject	Documentation	Most important content
Description of the system	System Manual S7-1500 automation system (http://support.automation.siemens.com/WW/view/en/59191792) System Manual ET 200MP distributed I/O system (http://support.automation.siemens.com/WW/view/en/59193214)	• Planning its use • Installation • Connection • Commissioning • Standards and approvals • Electromagnetic compatibility • Mechanical and climatic environmental conditions
Configuring control systems so that they are interference-proof	Function Manual Configuring control systems so that they are interference-proof (http://support.automation.siemens.com/WW/view/en/59193566)	• Basic principles • Electromagnetic compatibility • Lightning protection
System diagnostics	Function Manual System diagnostics (http://support.automation.siemens.com/WW/view/en/59192926)	• Overview • Diagnostics evaluation, hardware/software

SIMATIC Manuals

In the Internet (http://www.siemens.com/automation/service&support) you will find all of the current manuals for SIMATIC products, which you can download at no charge.

Product overview

2

2.1 Properties

Order number

6EP1333-4BA00

View of the module

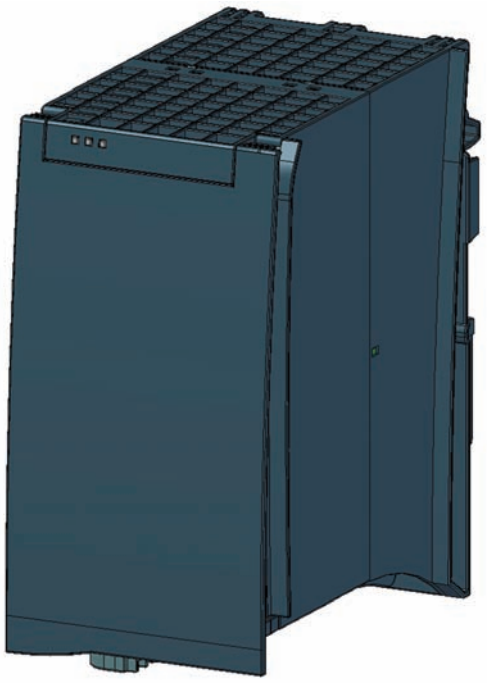

Figure 2-1 View of the PM 190 W 120/230 VAC load power supply module

Properties

The load power supply module PM 190 W 120/230 VAC feeds input and output circuits (load circuits) as well as sensors and actuators

The load power supply module has the following properties:

- Technical properties
  - Rated input voltage 120/230 V AC, 50/60 Hz
  - Automatic voltage range switchover
  - 24 V DC rated output voltage
  - 8 A rated output current
  - 190 W output power
  - Power failure buffering

Accessories

The following components can be supplied with the power module:

- Line connector
- Pluggable 24 V DC output terminal

2.2 Operating and display elements

The following diagram shows the operating and connection elements of the PM 190 W 120/230 VAC load power supply module behind the front cover, the line connector and the pluggable 24 V DC output terminal

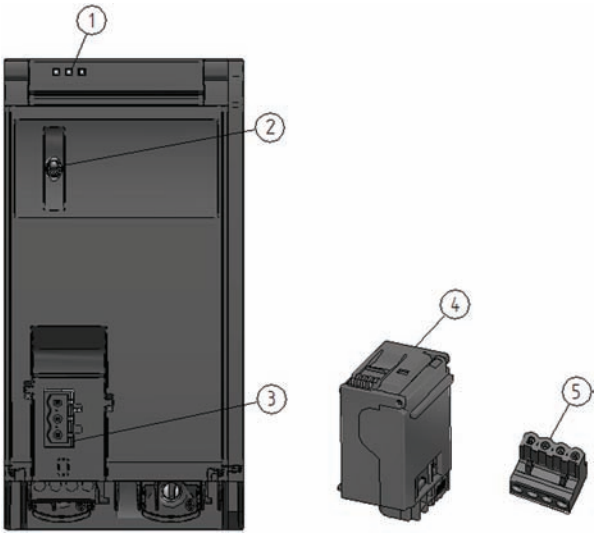

① LED displays showing the actual operating state and diagnostics state of the PM
② On / off switch
③ Power supply connection via the line connector
④ Line connector, inserted when delivered
⑥ Pluggable 24 V DC output terminal, inserted when delivered

Figure 2-2 View of the PM 190 W 120/230 VAC power supply module (without front cover), the line connector and the pluggable 24 V DC output terminal

Connection 3

3.1 Connecting up the power supply module

Line connection

⚠ WARNING
Installation instructions Death or severe injury can occur. When connecting up the power supply module, carefully observe the general installation instructions that are valid in your particular country. Protect the line connection cables corresponding to the cable cross-section.

The following applies to the line connection of the load power supply module with the line connector:

- The line connector allows the supply voltage to be connected to the load power supply with touch protection.
- The line connector facilitates permanent wiring to be established.
- The line connector has a strain relief mechanism.
- When supplied, every line connector is assigned to a power supply module type using a coding element. A connector, coded for 230 V AC, cannot be inserted in a 24 V DC power supply module.

24 V DC output

The following applies to the 24 V DC output of the load power supply module with pluggable 24 V DC output terminal:

- The 24 V DC output terminal allows loads to be connected with a 24 V DC input.
- The 24 V DC output terminal facilitates permanent wiring to be established.
- The 24 V DC output terminal guarantees protection against reverse polarity.

Cables

You must use flexible cables to connect the load power supply module. The wire cross-section can be 0.5 mm² up to 2.5 mm² (AWG: 24 to 12). A miniature circuit breaker or motor circuit breaker must be provided at the input side.

Clearance to adjacent modules

For a horizontal system configuration (cable outlet towards the bottom), no installation clearances are required to the right-hand adjacent module; on the other hand, if there is a module to the left, then a minimum clearance of 10 mm must be provided.

For vertical system configurations (cable outlet to the right), a minimum clearance of 25 mm must be maintained to the upper adjacent module. If there is a lower adjacent module, then a minimum clearance of 20 mm must be maintained

Reference

Information on installing the load power supply module and wiring the line connector and the pluggable 24 V DC output terminal is provided in the System Manual S7-1500 automation system (http://support.automation.siemens.com/WW/view/de/59191792) and in the operating instructions for the load power supply module.

Parameter

4

PM 190 W 120/230 VAC parameters

The PM 190 W 120/230 VAC power supply module cannot be parameterized via STEP 7.

Alarms, diagnostic, error and status messages 5

5.1 Status and error displays

Introduction

The diagnostics provided by the LEDs provides the first resource to locate faults.

LED displays

The LED displays (status and error displays) of the PM 190 W 120/230 VAC load power supply module can be seen in the following diagram.

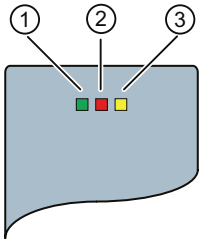

① RUN LED
② ERROR LED
③ MAINT LED

Figure 5-1 LED displays of the PM 190 W 120/230 VAC load power supply module

Meaning of the LED displays

The significance of the status and error displays of the PM 190 W 120/230 VAC power supply module are explained in the following table.

Table 5- 1 RUN/ERROR/MAINT status and error displays

LED			Meaning	Remedy
RUN	ERROR	MAINT		
□ off	□ off	□ off	POWER OFF PM deactivated • No power at the PM • Standby switch in the "lower" position • Device inactive • No 24 V DC output voltage	Check the line supply Supply the PM with power Switch on the PM
■ on	□ off	□ off	POWER ON The PM supplies a 24 V DC output voltage • Line supply voltage is available at the PM • Standby switch in the "upper" position • Device active and in the regular operating mode • 24 V DC output voltage is available	-
□ off	■ on	□ off	ERROR PM is operating in the overload mode • Line supply voltage is available at the PM • Standby switch in the "upper" position • Device is active, however, in the "Overload" operating mode • The connected load draws more current than the PM can supply • 24 V DC output voltage drops	Reduce the load current drawn by the connected load Install a load power supply with a higher rating
□ off	□ off	■ on	MAINTENANCE PM is in the standby mode • Line supply voltage is available at the PM • Standby switch in the "lower" position • Device is active, however, in the standby mode • No 24 V DC output voltage	Switch on the PM by bringing the standby switch into the "upper" position

5.2 Diagnostic messages

The PM 190 W 120/230 VAC load power supply module does not initiate diagnostic messages in the CPU or STEP 7. You can identify the device status directly at the PM based on the "LED statuses", as explained in Chapter Status and error displays (Page 17).

5.3 Alarms

The PM 190 W 120/230 VAC load power supply module does not initiate any alarms in the CPU or STEP 7. You can identify the device status directly at the PM based on the "LED statuses", as explained in Chapter Status and error displays (Page 17).

Technical specifications

6

Technical data of the PM 190 W 120/230 VAC load power supply module

	6EP1333-4BA00
Product type designation	PM 190 W 120/230 VAC
General Information	
Hardware product version	1
Firmware version	Not applicable
Engineering mit	
can be configured in the STEP 7 TIA-Portal / integrated from version	Not applicable
can be configured in STEP 7 / integrated from version	Not applicable
PROFIBUS from GSD version / GSD revision	Not applicable
Power supply	
• Rated value (AC)	120 V or 230 V (automatic switchover)
• Permissible range, lower limit (AC)	85 V or 170 V
• Permissible range, upper limit (AC)	132 V or 264 V
Input current	
• Rated value at 120 VAC	3.70 A
• Rated value at 230 VAC	1.70 A
Mains frequency	
• Rated value 50 Hz	Yes
• Rated value 60 Hz	Yes
• Permissible range, lower limit	45 Hz
• Permissible range, upper limit e	65 Hz
Line and power failure bypass	
• Line/power failure bypass time	20 ms
Output current	
• Rated value	8 A
• Short-circuit protection	Yes
Power	
• 24 V DC output power	194 W

	6EP1333-4BA00
Power loss	
• Power loss, typical.	19.6 W
Alarms / diagnostics / status information	
• Status display	Yes (using the device LEDs)
Electrical isolation	
• Primary/secondary	Yes
Degree of protection and protection class	
• Degree of protection to EN 60529	IP20
• Protection class	I with protective conductor
Dimensions	
• Width	75 mm
• Height	147 mm
• Depth	129 mm
Weights	
• Weight, approx.	736 g

Dimension drawing

A

Dimension drawing of the PM 190 W 120/230 VAC load power supply module

The dimension drawing of the load power supply module, mounted on a rail with shield bar, is provided in this attachment. These dimensions must be taken into account when mounting in cabinets, switchgear rooms etc.

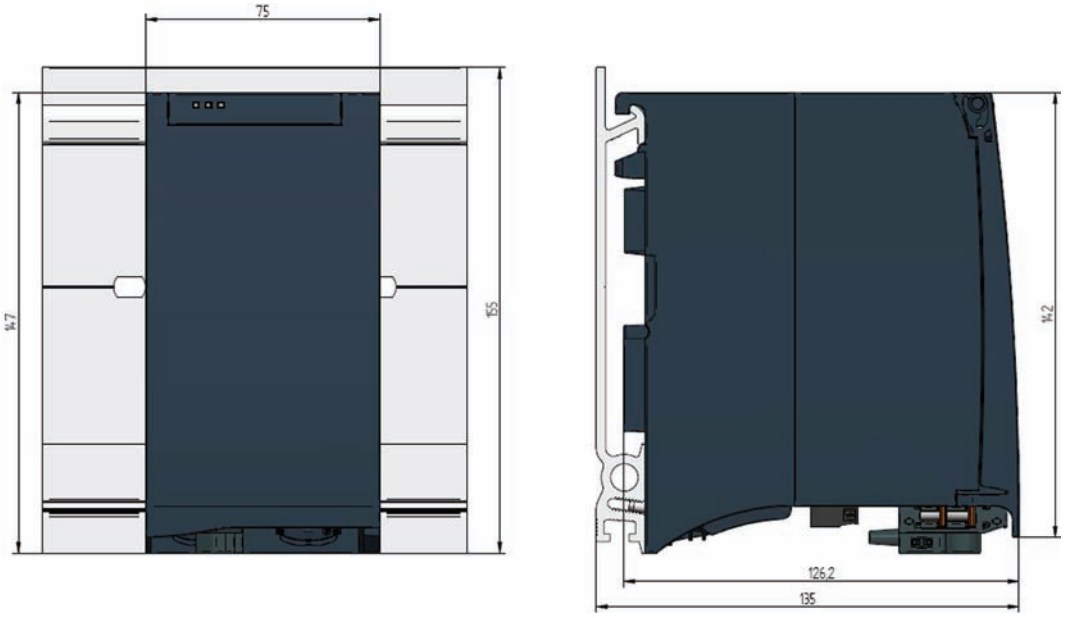

Figure A-1 Dimension drawing of the PM 190 W 120/230 VAC load power supply module

This drawing shows the module dimensions with the front cover open.

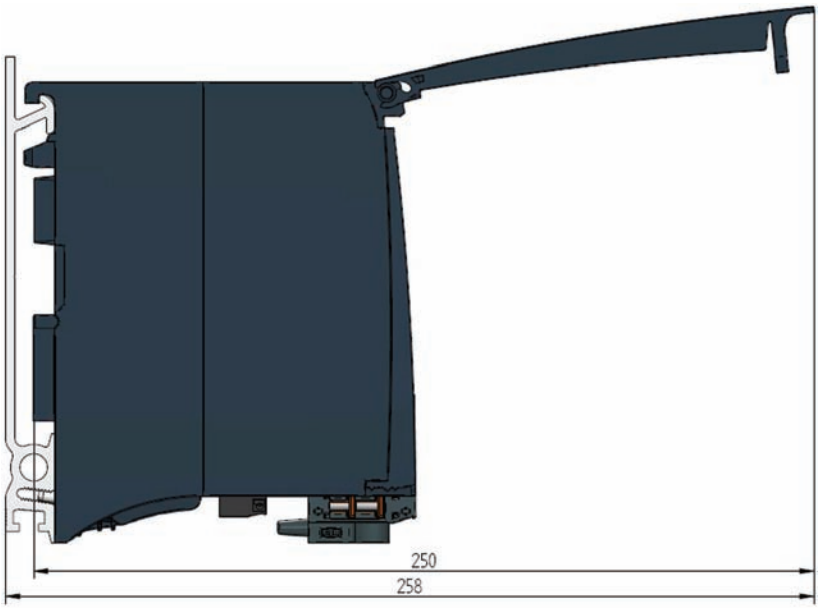

Figure A-2 Dimension drawing of the PM 190 W 120/230VAC load power supply module, side view with the front cover open

Parameter data set

B

The PM 190 W 120/230 VAC load power supply module does not provide any way of assigning parameters.

SIEMENS

SIMATIC TOP connect for S7-1500 and ET200MP

Manual

Preface

Safety notes 1

Documentation guide 2

Product overview 3

Connecting 4

Wiring SIMATIC TOP connect to the I/O modules 5

Technical specifications 6

Environment 7

Dimension drawings A

Circuit diagrams B

Spare parts / Accessories C

Service and Support D

Legal information

Warning notice system

This manual contains notices you have to observe in order to ensure your personal safety, as well as to prevent damage to property. The notices referring to your personal safety are highlighted in the manual by a safety alert symbol, notices referring only to property damage have no safety alert symbol. These notices shown below are graded according to the degree of danger.

⚠ DANGER
indicates that death or severe personal injury **will** result if proper precautions are not taken.

⚠ WARNING
indicates that death or severe personal injury **may** result if proper precautions are not taken.

⚠ CAUTION
indicates that minor personal injury can result if proper precautions are not taken.

NOTICE
indicates that property damage can result if proper precautions are not taken.

If more than one degree of danger is present, the warning notice representing the highest degree of danger will be used. A notice warning of injury to persons with a safety alert symbol may also include a warning relating to property damage.

Qualified Personnel

The product/system described in this documentation may be operated only by **personnel qualified** for the specific task in accordance with the relevant documentation, in particular its warning notices and safety instructions. Qualified personnel are those who, based on their training and experience, are capable of identifying risks and avoiding potential hazards when working with these products/systems.

Proper use of Siemens products

Note the following:

⚠ WARNING
Siemens products may only be used for the applications described in the catalog and in the relevant technical documentation. If products and components from other manufacturers are used, these must be recommended or approved by Siemens. Proper transport, storage, installation, assembly, commissioning, operation and maintenance are required to ensure that the products operate safely and without any problems. The permissible ambient conditions must be complied with. The information in the relevant documentation must be observed.

Trademarks

All names identified by ® are registered trademarks of Siemens AG. The remaining trademarks in this publication may be trademarks whose use by third parties for their own purposes could violate the rights of the owner.

Disclaimer of Liability

We have reviewed the contents of this publication to ensure consistency with the hardware and software described. Since variance cannot be precluded entirely, we cannot guarantee full consistency. However, the information in this publication is reviewed regularly and any necessary corrections are included in subsequent editions.

Siemens AG
Industry Sector
Postfach 48 48
90026 NÜRNBERG
GERMANY

℗ 04/2014 Subject to change

Copyright © Siemens AG .
All rights reserved

Preface

Purpose of this documentation

This documentation provides important information on wiring the I/O modules (input and output modules) of the S7-1500 SIMATIC controller and the ET 200MP modular I/O system with SIMATIC TOP connect system cabling.

Basic knowledge required

General knowledge about automation is needed to understand this documentation.

Scope of this documentation

This documentation applies to all SIMATIC products in the S7-1500 product family with ET 200MP.

Conventions

Please also observe the notes marked as follows:

Note

A note contains important information about the product described, about handling the product or about a specific section of the documentation that requires particular attention.

Recycling and disposal

The products can be recycled as their components are low in pollutants. For the environmentally friendly recycling and disposal of your old device, please contact a certificated disposal service for electronic scrap.

Additional support

- You will find information on the technical support service in the appendix to this documentation.
- The technical documentation for the various SIMATIC products and systems is available on the Internet (http://www.siemens.com/simatic-tech-doku-portal).
- You will find the online catalog and online ordering system on the Internet (http://mall.automation.siemens.com).

Table of contents

Preface 3

1 Safety notes 7

2 Documentation guide 9

3 Product overview 11

3.1 What is SIMATIC TOP connect system cabling? 11

3.2 Components 14

3.3 Connectable I/O modules 17

4 Connecting 19

4.1 Safety regulations 19

4.2 Wiring rules 21

4.3 Connecting components 22

4.3.1 Assembling the round-sheath ribbon cable 24

4.3.2 Wiring the front connector module 26

4.3.3 Connecting the connecting cable and supply voltage to the front connector module 27

4.3.4 Connecting the connecting cable to the terminal module 31

4.3.5 Connecting the actuators/sensors to the terminal module 32

4.4 Labeling terminal modules 32

5 Wiring SIMATIC TOP connect to the I/O modules 33

5.1 SIMATIC TOP connect components and selection guide 33

5.2 Note on connecting digital I/O modules 39

5.3 Note on connecting the 2 A output module 41

5.4 Note on connecting analog I/O modules 43

5.5 Shield connection of the signal cables 45

6 Technical specifications 49

6.1 Standards and approvals 49

6.2 Electromagnetic compatibility 51

6.3 Shipping and storage conditions 52

6.4 Mechanical and climatic ambient conditions 52

6.5 Technical specifications for front connector modules 54

6.6 Technical specifications for connecting cables 56

6.7 Technical specifications for terminal modules 57

7 Environment 69

A Dimension drawings 71

A.1 Front connector modules 71
A.2 Terminal modules for 16-pin connecting cable 80
A.3 Terminal modules for 50-pin connecting cable 86
B Circuit diagrams 89
B.1 Circuit diagrams for front connector modules 89
B.2 Circuit diagrams, terminal modules for 16-pin connecting cable 94
B.3 Circuit diagrams, terminal modules for 50-pin connecting cable 105
C Spare parts / Accessories 111
C.1 Accessories 111
D Service and Support 113
Index 115

Safety notes

1

Warning

When electrical devices are operated, parts of these devices will necessarily carry dangerous voltages.

If these devices are not correctly handled/operated, this can result in death or severe injury as well as significant material damage.

Only appropriately qualified personnel may work on or in the vicinity of this device.

This device can only function correctly and safely if it is transported, stored, set up and installed correctly.

Before installation or maintenance work can begin, the system's main switch must be switched off and measures taken to prevent it being switched on again.

If this instruction is not followed, touching live parts can result in death or serious injury.

Documentation guide

2

Introduction

The documentation for the SIMATIC products is modular in structure and covers a wide range of subjects relating to your automation system.

The complete documentation for SIMATIC products in the S7-1500 product family with ET 200MP comprises the system manual, the function manuals and the product manuals.

The TIA Selection Tool will also help you to select and order the right system cabling for your SIMATIC S7-1500.

Overview of documentation for SIMATIC S71500 / ET200MP

The tables below set out the documentation for SIMATIC S7-1500 / ET 200MP with the relevant content for system cabling.

Table 2- 1 Documentation for SIMATIC S7-1500 / ET 200MP system cabling

Subject	Documentation	Key content
System description	S7-1500 Automation System system manual (http://support.automation.siemens.com/WW/view/en/59191792) ET 200MP distributed I/O device system manual (http://support.automation.siemens.com/WW/view/en/59193214)	• Connecting
Digital modules	DQ 16 x 24 V DC/0.5A ST digital output module (http://support.automation.siemens.com/WW/view/en/59193401)	• Block diagram • Connecting • Technical specifications • Dimension drawings
	DQ 32 x 24 V DC/0.5A ST digital output module (http://support.automation.siemens.com/WW/view/en/59193400)	
	DQ 8 x 24 V DC/2A HF digital output module (http://support.automation.siemens.com/WW/view/en/59193089)	
	DI 16 x 24 V DC HF digital input module (http://support.automation.siemens.com/WW/view/en/59193001)	
	DI 16 x 24 V DC SRC BA digital input module (http://support.automation.siemens.com/WW/view/en/59191844)	
	DI 32 x 24 V DC HF digital input module (http://support.automation.siemens.com/WW/view/en/59192896)	
Analog modules	AQ 4 x U/I ST analog output module (http://support.automation.siemens.com/WW/view/en/59191850)	• Block diagram • Connecting • Technical specifications • Dimension drawings
	AQ 8 x U/I HS analog output module (http://support.automation.siemens.com/WW/view/en/59193551)	
	AI 8 x U/I/RTD/TC ST analog input module (http://support.automation.siemens.com/WW/view/en/59193205)	
	AI 8 x U/I HS analog input module (http://support.automation.siemens.com/WW/view/en/59193206)	

SIMATIC manuals

The latest versions of all SIMATIC manuals are available on the Internet (http://www.siemens.com/automation/service&support) for download.

Product overview

3

3.1 What is SIMATIC TOP connect system cabling?

Introduction

SIMATIC TOP connect system cabling is an efficient way to connect the I/O modules (input and output modules) of the SIMATIC controller S7-1500 I/O and ET 200MP.
SIMATIC TOP connect uses standardized connectors and reduces the wiring work required.

There are two types of connection:

- Fully modular connection:
  for connecting sensors and actuators in the field.
- Flexible connection:
  for simple wiring inside the control cabinet.

Area of application

SIMATIC TOP connect allows you to wire actuators and sensors "locally" to one or more terminal modules. Connection to the I/O modules takes place via connecting cable.

Figure 3-1 SIMATIC TOP connect with an S7-1500

Installation

System cabling with SIMATIC TOP connect always consists of the following components:

- The front connector module with either
  - One or more 16-pin male connectors for connecting the connecting cables or
  - One 50-pin male connector for connecting the connecting cable
- One or more terminal modules
- One or more connecting cables with plug connectors at the ends

Fully modular connection

The fully modular connection for the system cabling comprises the following components:

- A front connector module ① for connection to the SIMATIC S7-1500 or ET200MP I/O modules
- Connecting cables ②, pre-assembled or by the meter
- Terminal modules ③, for connection to sensors and actuators in the field ④

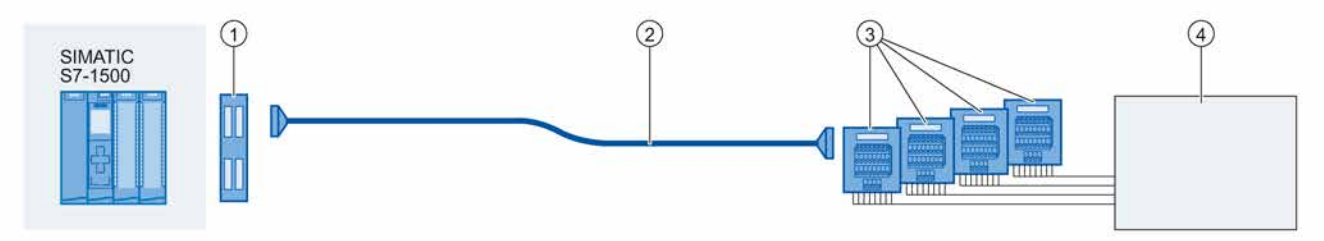

Figure 3-2 Fully modular connection

The components can be combined to suit the application and connected with simple plug-in connections. The terminal modules are used instead of conventional terminal blocks and act as the interface to the sensors and actuators.

In addition to the terminal module versions with screw-type terminals or push-in systems, there are also versions with LED signaling and signal conditioning, for example, from 230 V AC to 24 V DC.

Flexible connection

The flexible connection for the system cabling comprises a front connector module ① for connection to the SIMATIC S7-1500 or ET200MP digital I/O modules. The front connector is already wired with 20 or 40 single wires ② which connect the SIMATIC S7-1500 or ET200MP digital I/O modules directly to the sensors and actuators in the control cabinet.

Figure 3-3 Flexible connection

The single wires (cross-section: 0.5 mm²) are available in different lengths and in the following designs:

- H05V-K cable (PVC insulation)
- H05Z-K (halogen-free insulation)
- UL/CSA approval

3.2 Components

This section gives you an overview of the components of the SIMATIC TOP connect system cabling.

Components for fully modular connection

The table below lists the components for fully modular connection of the SIMATIC TOP connect system cabling.

Table 3- 1 Components for fully modular connection of SIMATIC TOP connect

Component	Function	Figure
Front connector module	Front connector modules are modified front connectors and are plugged into the I/O module to be wired. The front connector module has IDC female connectors for connecting the connecting cables. Front connector modules are available in the following designs: • For DI/DO digital modules (power supply with push-in or screw-type terminals) • For 2A digital output 1 x 8 DO (power supply with push-in or screw-type terminals) • For analog modules	

Component	Function	Figure
Connecting cable	Connecting cables connect the front connector module with the terminal modules. Connecting cables are available in the following versions: • 16-pin and 50-pin round cable (shielded or unshielded), pre-assembled¹ Max. length 10 m • 16-pin round-sheath ribbon cable (shielded or unshielded), for assembly by the user² Max. length 30 m • 2 x 16-pin round-sheath ribbon cable (unshielded), for assembly by the user² Max. length 30 m ¹Pre-assembled: One IDC connector (insulation displacement connector) (flat socket) at each end. ²For assembly by the user. See "Assembling round-sheath ribbon cables".	
Terminal module	Digital and analog terminal modules in S7-1500 design are available for connecting the I/O signals. These are attached to the standard mounting rail. The terminal modules are available in the following connecting systems: • Push-in system • Screw-type terminals All digital terminal modules also have LED for channel display.	

Accessories for fully modular connection

The following components can be ordered separately or as spare part:

Table 3- 2 Accessories for fully modular connection of SIMATIC TOP connect

Accessories	Function
Labels	Labels (20 x 7 mm, pale turquoise) in the S7-1500 design are available for labeling the terminal modules.
Shield plate	The shield plate can be fitted onto the terminal module for analog signals. The terminal module with the fitted shield plate is fastened to the standard mounting rail.
Shield connection clamps for the shield plate	The shield connection clamps provide contact plating for cable shields on the shield plate.
IDC connector (insulation displacement connector), 16-pin	**Round-sheath ribbon cables only:** The IDC connector (insulation displacement connector) is crimped onto the pre-assembled round-sheath ribbon cable.
Crimping pliers for IDC connectors (insulation displacement connectors)	The IDC connectors (insulation displacement connectors) are crimped onto the pre-assembled round-sheath ribbon cable using the crimping pliers.

Components for flexible connection

The table below lists the components for flexible connection of the SIMATIC TOP connect system cabling.

Table 3- 3 Components for flexible connection of SIMATIC TOP connect

Component	Function	Figure
Front connector with single wires	Up to 16 or 32 digital input and output channels can be connected directly to the I/O with a front connector with single wires. The single wires are fitted with screw-type contacts in the front connector and are cut off straight at the other end. The wires can be easily identified as they are marked at regular intervals in accordance with the pin designations on the front connector. The front connectors are available in the following designs: • For 16 DI/DO modules • For 32 DI/DO modules	

3.3 Connectable I/O modules

The tables below list all input and output modules of the SIMATIC controller S7-1500 and ET 200MP that can be connected with the SIMATIC TOP connect fully modular connection.

Table 3- 4 Connectable I/O modules, for terminal modules with 16-pin connecting cables

I/O module (digital, analog)	Article number
DI 16x24 VDC, 0.05 ms … 20 ms, type 3	6ES7 521-1BH00-0AB0
DI 16x24 VDC, 3 ms type 1; sourcing	6ES7 521-1BH50-0AB0
DI 32x24 VDC, 0.05 ms … 20 ms, type 3	6ES7 521-1BL00-0AB0
DO 16x24 VDC, 0.5 A, substitute values	6ES7 522-1BH00-0AB0
DQ 8x24 VDC, 2 amperes	6ES7 522-1BF00-0AB0
DO 32x24 VDC, 0.5 A, substitute values	6ES7 522-1BL00-0AB0
AO 4xU, I, 16-bit, 0.3 %	6ES7 532-5HD00-0AB0
AQ 8xU, I, HS correct	6ES7 532-5HF00-0AB0
AI 8xU, I, 14-bit, 0.3 %	6ES7 531-7NF10-0AB0
AI 8xU, I, R, RTD, TC, 16-bit, 0.3 %	6ES7 531-7KF00-0AB0

Table 3- 5 Connectable I/O modules, for terminal modules with 50-pin connecting cables

I/O module (digital, analog)	Article number
DI 16x24 VDC, 0.05 ms … 20 ms, type 3	6ES7 521-1BH00-0AB0
DI 16x24 VDC, 3 ms type 1; sourcing	6ES7 521-1BH50-0AB0
DI 32x24 VDC, 0.05 ms … 20 ms, type 3	6ES7 521-1BL00-0AB0
DO 16x24 VDC, 0.5 A, substitute values	6ES7 522-1BH00-0AB0
DO 32x24 VDC, 0.5 A, substitute values	6ES7 522-1BL00-0AB0
AO 4xU, I, 16-bit, 0.3 %	6ES7 532-5HD00-0AB0
AQ 8xU, I, HS correct	6ES7 532-5HF00-0AB0
AI 8xU, I, 14-bit, 0.3 %	6ES7 531-7NF10-0AB0
AI 8xU, I, R, RTD, TC, 16-bit, 0.3 %	6ES7 531-7KF00-0AB0

Connecting 4

4.1 Safety regulations

Introduction

When used in plants or systems, SIMATIC TOP connect system cabling is subject to special rules and regulations in line with the area of application.

This section provides an overview of the most important rules for connecting SIMATIC TOP connect.

Rules and regulations governing the integration of the S7-1500 into a plant or system can also be found under "Rules and regulations" in the S7-1500 system manual (http://support.automation.siemens.com/WW/view/en/59191792).

Specific application

Please observe the safety and accident prevention regulations that apply to specific applications, for example, the machinery directives.

Supply voltage

Please note the following points about line voltage:

- For stationary plants and systems without an all-pole line disconnector, there must be a disconnector unit (all-pole) fitted in the building installation.
- Any fluctuation/deviation in the line voltage from the rated value must be within the permitted tolerance for all S7-1500 electric circuits.

24 V DC supply

Please note the following points for 24 V DC supply:

- Power supplies for 24 V DC must have secure electrical isolation in accordance with IEC 60364-4-41.
- Surge arrestors must be fitted to protect against lighting and overvoltage.

You will find components for lightning and overvoltage protection in the "Designing interference-free controllers" function manual (http://support.automation.siemens.com/WW/view/en/59193566).

Protection from electric shock

The S7-1500 automation system mounting rail must be connected (conductive connection) to the protective conductor to prevent electric shock.

Protection from external electrical interference

The following section details the points to note to prevent electrical interference and faults:

- You must make sure that each plant or system fitted with an S7-1500 is connected to a protective conductor with a sufficient cross-section to deal with electromagnetic interference.
- For supply, signal and bus cables, you must make sure that the cables are correctly routed and installed.
- For signal and bus cables, you must make sure that an open circuit or crossover will not result in undefined plant or system states.

Reference

Further information is available in the "Designing interference-free controllers" function manual.

4.2 Wiring rules

The table below sets out the wiring rules for connecting the I/O module supply voltage to the terminal module or front connector module.

For information on push-in connections, please see Connecting the connecting cable and supply voltage to the front connector module (Page 27).

Table 4- 1 Wiring rules

Wiring rules for ...	Terminal module		Front connector module	
	Push-in system	Screw-type terminal	Push-in system	Screw-type terminal
Connectable cable cross-sections				
Solid cables	No			
Flexible cables				
... Without end sleeve	0.2 to 2.5 mm²		0.5 to 1.5 mm²	0.5 to 2.5 mm²
... With end sleeve In accordance with DIN 46228/1	0.2 to 2.5 mm²	0.5 to 2.5 mm² (2.5 mm² with crimp in accordance with EN 60947-1)	0.25 to 1.5 mm²	0.25 to 1.5 mm²
... With end sleeve In accordance with DIN 46228/4 with plastic collar	0.2 to 2.5 mm²		0.25 to 0.75 mm²	0.25 to 1.5 mm²
Number of cables per connection	Combination of 1 or 2 conductors to make up the cross-sections specified above (in total) in one end sleeve.			
Max. diameter of insulation			3.1 mm	3.1 mm
Stripped length of the cables				
... Without insulating collar			8 + 1 mm	10 mm
... With insulating collar			8 + 1 mm	10 mm
Blade of the screwdriver	0.6 x 3.5	0.6 x 3.5	SD 0.6 x 3.5 DIN 5264	SD 0.6 x 3.5 DIN 5264
Tightening torque for connecting the cables		0.4 Nm		0.4 Nm

See also

Connecting the connecting cable and supply voltage to the front connector module (Page 27)

4.3 Connecting components

Introduction

⚠ WARNING
Risk of electrocution
Touching live parts can result in death or serious injury.
Before you connect a module, make sure that it is disconnected from the power supply.

The procedure for connecting the front connector modules is basically the same as for the standard front connectors. The connection of standard front connectors is described in detail in the S7-1500 system manual under "Connecting" (http://support.automation.siemens.com/WW/view/en/59191792).

Before connecting the front connector modules, read the following sections of the S7-1500 system manual:

- Wiring front connectors for I/O modules without shield connection element
- Preparing and wiring front connectors for I/O modules without shield connection element
- Wiring front connectors for I/O modules with shield connection element
- Preparing front connectors for I/O modules with shield connection element
- Bringing the front connector into final position

Abbreviations used

The meanings of the abbreviations in the figures below are as follows:

AI	Analog input module
BR	Potential bridges
M	Connection for ground
L+	Connection for supply voltage
Mn	Measuring input, channel n
ICn+/ICn-	Current output power supply, thermal resistance (RTD), channel n
Un+/Un-	Voltage input, channel n
In+/In-	Current input, channel n
COMP+/COMP-	Compensation input
IComp+/IComp-	Current output power supply, compensation
UV	Feed voltage at channel for 2-wire transducer
UCM	Potential difference between reference points of the measuring inputs / the analog ground MANA
UISO	Potential difference between reference points of the measuring inputs and the central grounding point
MANA	Reference point of the analog ground

Wiring sequence

Step	Action		See section
1	Prepare the connecting cable	Assembling the round-sheath ribbon cable	Assembling the round-sheath ribbon cable (Page 24)
		Round-sheath ribbon cable already assembled	–
2	Wiring the front connector module		Wiring the front connector module (Page 26)
3	Connecting the connecting cable to the terminal module		Connecting the connecting cable and supply voltage to the front connector module (Page 27)
4	Wire the terminal module inputs and outputs		Connecting the connecting cable to the terminal module (Page 31)

See also

Assembling the round-sheath ribbon cable (Page 24)

Wiring the front connector module (Page 26)

Connecting the connecting cable and supply voltage to the front connector module (Page 27)

Connecting the connecting cable to the terminal module (Page 31)

4.3.1 Assembling the round-sheath ribbon cable

Note

Connecting cable assembly is only required for round-sheath ribbon cables (16-pin and 2 x 16-pin).

Round cables are already assembled.

Maximum cable length

The length of the connecting cable (round-sheath ribbon cable) between the SIMATIC controller and the terminal modules must not exceed 30 m.

Connecting the round-sheath ribbon cable to connectors

Note

Each connecting end of the round-sheath ribbon cable needs to be fitted with connectors for connecting to the front connector module and the terminal module.

Follow the steps below for each of the ends.

1. Cut the round-sheath ribbon cable to the required length.

   The maximum length is 30 m.

2. Remove part of the cable sheath at each end of the round-sheath ribbon cable.

   The table below sets out the length of sheathing to be removed.

Connection end	1 x 16 wires shielded/unshielded	2 x 16 wires, unshielded	
		Outer flat ribbon cable	Inner flat ribbon cable
Top connector, front connector module	Approx. 130 mm	Approx. 130 mm	
Bottom connector, front connector module	Approx. 80 mm		Approx. 80 mm
Terminal module connector	Approx. 40 mm	100 mm	100 mm

3. Thread the round-sheath ribbon cable into the 16-pin connector at the "terminal module connector" connection side.

NOTICE
Incorrectly connecting the round-sheath ribbon cable will cause malfunctions. There is a mark on the connector to prevent incorrect connection. When you insert the cable, make sure that the triangular mark ① is pointing to the wire marked ②, as shown in the figure below.

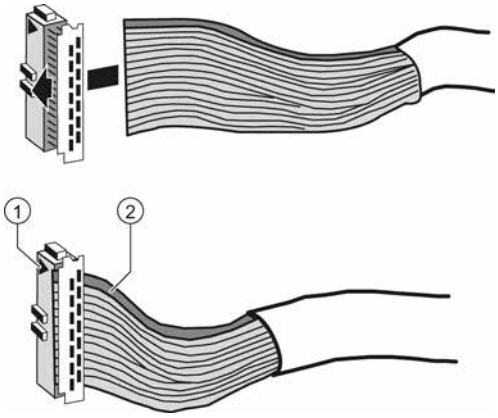

Figure 4-1 Wire marked to prevent incorrect connection

4. Use the crimping pliers to crimp the end of the cable into the connector.
5. Run the round-sheath ribbon cable back over the top of the connector.

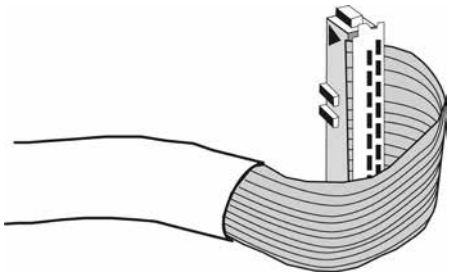

Figure 4-2 Running round-sheath ribbon cable back over top of connector

6. Lay the round-sheath ribbon cable up against the connector.

7. Latch the cable grip ③ on the connector into place.

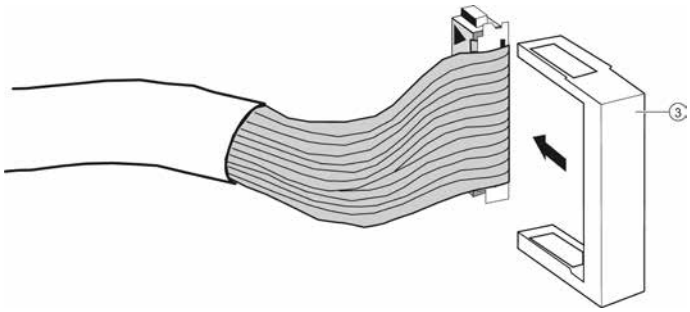

Figure 4-3 Fitting the strain relief

8. Repeat steps 3 – 5 to connect the round-sheath cable connector to the "lower connector, front connector module" and the "upper connector, front connector module" connection ends.

4.3.2 Wiring the front connector module

Introduction

This section explains how to wire the front connector modules.

Note

Please also read Wiring SIMATIC TOP connect to the I/O modules (Page 33) for special connection examples and the criteria for selecting front connector modules.

Functions of the front connector module

The front connector module is used to connect the connecting cable to the I/O module. The supply voltage cables for the modules can also be connected to the front connector module.

See also

Wiring SIMATIC TOP connect to the I/O modules (Page 33)

4.3.3 Connecting the connecting cable and supply voltage to the front connector module

Requirements

- Supply voltages are switched off
- Cables have been prepared in line with the terminal system used; see the wiring rules under Wiring rules (Page 21).

Connecting the connecting cable to the front connector module

WARNING

Risk of electrocution

Touching live parts can result in death or serious injury.

Before you connect a module, make sure that it is disconnected from the power supply.

Note

The example here shows the connection of a 16-pin connecting cable to the front connector module.

Follow the same procedure as applicable for 50-pin connecting cables.

1. Switch off the load current supply.
2. Lift up the front flap of the I/O module until it snaps into place.

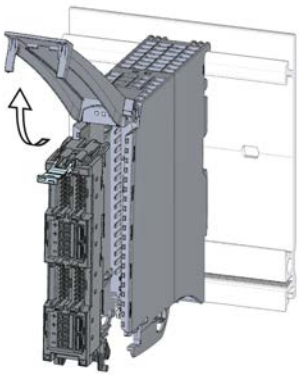

Figure 4-4 Front flap of the I/O module open (example)

3. Place the front connector in the pre-wiring position. This is done by fitting the bottom of the front connector into the I/O module and swiveling up the front connector until it latches into place.

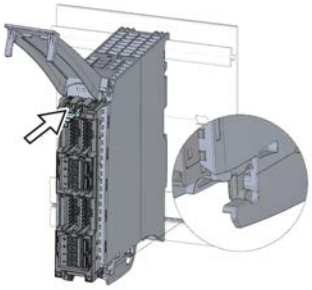

Figure 4-5 Front connector module in the pre-wiring position (example)

Note

In this position, the front connector module is still protruding from the I/O module (see figure above). The front connector module and I/O module are not yet electrically connected.
The pre-wiring position makes it easy to wire the front connector module.

4. If required, connect the cables for the I/O module supply voltage to the front connector module.
5. Connect the connecting cables to the front connector module.

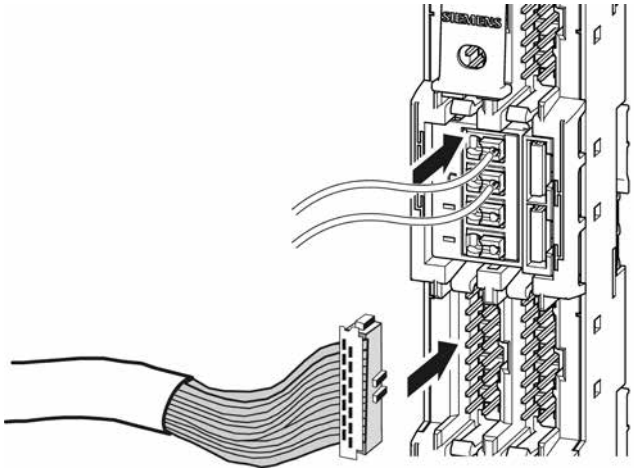

Figure 4-6 Connecting the supply voltage cables and connecting cables to the front connector module (example)

Note

Make sure that you follow the correct assignment when connecting the supply voltage cables for the I/O module and connecting cables to the front connector module:

-The assignment of supply voltage cables to connecting cable connections

-The assignment of connecting cable connections to the address bytes of the module

The correct assignment is set out in the diagram and key below.

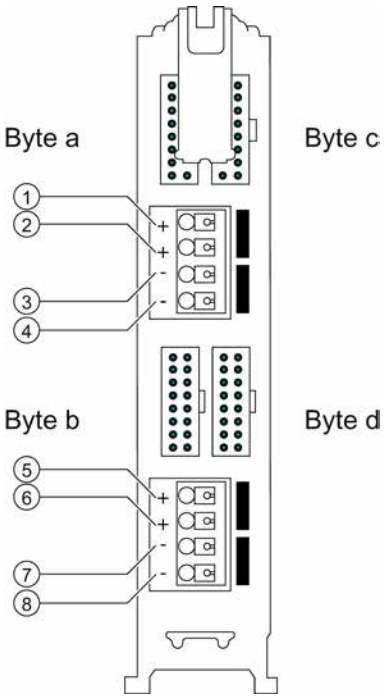

Number	Connection to	Assigned byte
①	Supply voltage +	a
②	Supply voltage +	c
③	Supply voltage -	a
④	Supply voltage -	c
⑤	Supply voltage +	b
⑥	Supply voltage +	d
⑦	Supply voltage -	b
⑧	Supply voltage -	d

6. With push-in terminal: Insert the wire fitted with end sleeve into the duct.
7. When using a round-sheath ribbon cable:
   Twist down each connecting cable by 90° and give it one turn.
8. Insert the strain relief (cable tie) provided for the cabling into the front connector module. The strain relief holds the cabling (supply voltage cables and connecting cables) in the cable storage space of the I/O module.

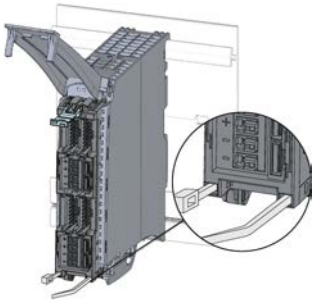

Figure 4-7 Fitted strain relief (example)

9. Run the connecting cables and the cables for the I/O module supply voltage down and out of the I/O module.

See also

Wiring rules (Page 21)

4.3.4 Connecting the connecting cable to the terminal module

Introduction

This section details how to wire the terminal modules.

Note

Please also follow the instructions in the section Wiring SIMATIC TOP connect to the I/O modules (Page 33). These include the selection criteria for the terminal modules and information on wiring.

Terminal module function

The terminal module is the interface between the connection cables from the field and the SIMATIC S7-1500 or ET200MP. The supply voltage cables for the I/O modules can also be connected to the terminal module.

Fitting the terminal module and connecting cable

1. Fasten the terminal module to a 35 mm standard mounting rail (DIN EN 60715).
2. Connect the connecting cable to the terminal module as shown in the figure below.

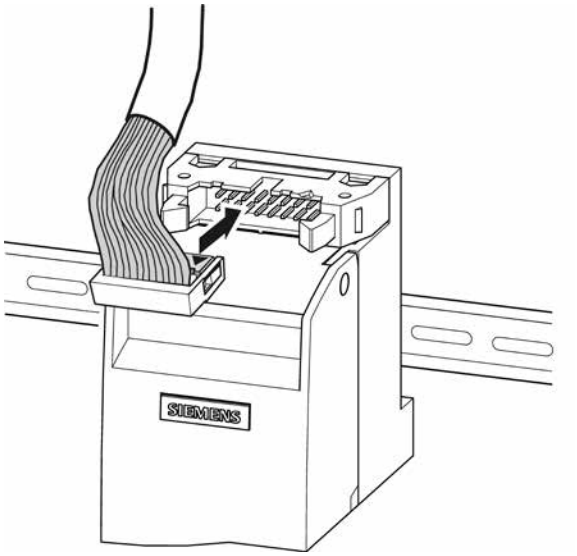

Figure 4-8 Connecting the connecting cable to the terminal module

See also

Wiring SIMATIC TOP connect to the I/O modules (Page 33)

4.3.5 Connecting the actuators/sensors to the terminal module

The connecting cables of the actuators/sensors are connected to the terminals of the terminal module. Terminal modules are available with the following types of terminal:

- Screw-type terminal
- Push-in system

4.4 Labeling terminal modules

Introduction

The terminal modules are identified using labels. The labels are perforated and are attached to the front flap of the terminal module.

The following types of labels are available:

- For terminal modules in S7-1500 design

Preparing and attaching labels

1. Tear out the completed label.
2. Insert the label into the holder ① on the outside of the front flap.

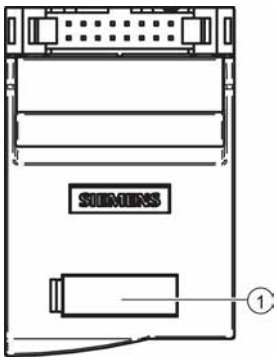

Figure 4-9 Label holder with labels (example)

Wiring SIMATIC TOP connect to the I/O modules 5

Introduction

You can use SIMATIC TOP connect system cabling to wire I/O modules with actuators/sensors. The SIMATIC TOP connect components used depend on the following factors:

- The I/O module to be wired and
- The connection system (screw-type terminal / push-in system, 1-wire, 3-wire, 2 A connection, relay or optocoupler).

5.1 SIMATIC TOP connect components and selection guide

Components for 16-pin connecting cable

The table below lists the SIMATIC TOP connect system cabling components for a 16-pin connecting cable.

Components of SIMATIC TOP connect system cabling				
Front connector modules	...for digital I/O modules		Voltage supply with - Screw-type terminals - Push-in system	 6ES7921-5AB20-0AA0 6ES7921-5AH20-0AA0
	…for 2 A output module		Voltage supply with - Screw-type terminals - Push-in system	 6ES7921-5AD00-0AA0 6ES7921-5AJ00-0AA0
	...for analog modules			6ES7921-5AK20-0AA0
Terminal modules	TP1	…digital, for 1-wire connection, without LED	- Screw-type terminals - Push-in system	6ES7924-0AA20-0AA0 6ES7924-0AA20-0AC0
		…digital, for 1-wire connection, with LED	- Screw-type terminals - Push-in system	6ES7924-0AA20-0BA0 6ES7924-0AA20-0BC0
	TP2	…digital, for 2-ampere modules, without LED, digital	- Screw-type terminals - Push-in system	6ES7924-0BB20-0AA0 6ES7924-0BB20-0AC0
	TP3	…digital, for 3-wire connection, without LED	- Screw-type terminals - Push-in system	6ES7924-0CA20-0AA0 6ES7924-0CA20-0AC0
		…digital, for 3-wire connection, with LED	- Screw-type terminals - Push-in system	6ES7924-0CA20-0BA0 6ES7924-0CA20-0BC0
	TPF	…for 3-wire connection, with LED, digital and fuse in the signal path	- Screw-type terminals - Push-in terminals	6ES7924-0CL20-0BA0 6ES7924-0CL20-0BC0

Components of SIMATIC TOP connect system cabling				
	TPS	…for 3-wire connection with LED, digital and switch in the signal path	- Screw-type terminal - Push-in system	6ES7924-0CH20-0BA0 6ES7924-0CH20-0BC0
	TPA	...for analog modules, without LED	- Screw-type terminals - Push-in system	6ES7924-0CC20-0AA0 6ES7924-0CC20-0AC0
	TPRi 230 V	Digital, with LED	- Screw-type terminals - Push-in system	6ES7924-0BE20-0BA0 6ES7924-0BE20-0BC0
	TPRi 110 V	Digital, without LED	- Screw-type terminals - Push-in system	6ES7924-0BG20-0BA0 6ES7924-0BG20-0BC0
	TPRo	Digital, with LED	- Screw-type terminals - Push-in system	6ES7924-0BD20-0BA0 6ES7924-0BD20-0BC0
	TPOo	Digital, with LED	- Screw-type terminals - Push-in system	6ES7924-0BF20-0BA0 6ES7924-0BF20-0BC0

Pre-assembled round cable	Length	Unshielded	Shielded
	0.5 m	6ES7923-0BA50-0CB0	...not available
	1.0 m	6ES7923-0BB00-0CB0	6ES7923-0BB00-0DB0
	1.5 m	6ES7923-0BB50-0CB0	...not available
	2.0 m	6ES7923-0BC00-0CB0	6ES7923-0BC00-0DB0
	2.5 m	6ES7923-0BC50-0CB0	6ES7923-0BC50-0DB0
	3.0 m	6ES7923-0BD00-0CB0	6ES7923-0BD00-0DB0
	4.0 m	6ES7923-0BE00-0CB0	6ES7923-0BE00-0DB0
	5.0 m	6ES7923-0BF00-0CB0	6ES7923-0BF00-0DB0
	6.5 m	6ES7923-0BG50-0CB0	6ES7923-0BG50-0DB0
	8.0 m	6ES7923-0BJ00-0CB0	6ES7923-0BJ00-0DB0
	10.0 m	6ES7923-0CB00-0CB0	6ES7923-0CB00-0DB0
Round-sheath ribbon cable 1 x 16-pin, 0.14 mm²	Length	Unshielded	Shielded
	30 m	6ES7923-0CD00-0AA0	6ES7923-0CD00-0BA0
	60 m	6ES7923-0CG00-0AA0	6ES7923-0CG00-0BA0
Round-sheath ribbon cable 2 x 16-pin, 0.14 mm²	30 m	6ES7923-2CD00-0AA0	...not available
	60 m	6ES7923-2CG00-0AA0	...not available

Accessories	16-pin IDC connectors for the round-sheath ribbon cable (x 8)	6ES7921-3BE10-0AA0
	Crimping pliers for fitting the 16-pin IDC connectors	6ES7928-0AA00-0AA0
	20 x 7 mm label, pale turquoise, for fitting to terminal modules (x 340)	3RT1900-1SB20

Selection guide for 16-pin connecting cable

The tables below list the SIMATIC TOP connect system cabling components which you can use to wire the I/O modules of the automation system.

Front connector module for ...	...I/O modules, connectable with...	TP1		TP2	TP3		TPF	TPS	TPA	TPRi 230 V	TPRi 110 V	TPRo	TPOo
		With out LED	With LED	Withou t LED	With out LED	With LED	LED fuse	LED switch	With out LED	With LED	With LED	With LED	With LED
Front connector module 6ES7921-5AB20-0AA0 6ES7921-5AH20-0AA0	DI 16 x 24 VDC HF 6ES7521-1BH00-0AB0	X	X		X	X	X	X		X	X		
	DI 16 x 24 VDC SRC BA 6ES7521-1BH50-0AB0	X			X								
	DI 32 x 24 VDC HF 6ES7521-1BL00-0AB0	X	X		X	X	X	X		X	X		
	DQ 16 x 24 VDC/0.5A ST 6ES7522-1BH00-0AB0	X	X		X	X	X	X				X	X
	DQ 32 x 24 VDC/0.5A ST 6ES7522-1BL00-0AB0	X	X		X	X	X	X				X	X

Front connector module for ...	...I/O modules, connectable with...	TP1		TP2	TP3		TPF	TPS	TPA	TPRi 230 V	TPRi 110 V	TPRo	TPOo
		With out LED	With LED	Withou t LED	With out LED	With LED	LED fuse	LED switch	With out LED	With LED	With LED	With LED	With LED
Front connector module 6ES7921-5AD00-0AA0 6ES7921-5AJ00-0AA0	DQ 8 x 24 VDC/2A HF 6ES7522-1BF00-0AB0			X									
Front connector module 6ES7921-5AK20-0AA0	AI 8 x U/I/RTD/TC ST 6ES7531-7KF00-0AB0								X				
	AI 8 x U/I HS 6ES7531-7NF10-0AB0								X				
	AQ 4 x U/I ST 6ES7532-5HD00-0AB0								X				
	AQ 8 x U/I ST 6ES7532-5HF00-0AB0								X				

Components for 50-pin connecting cable

The table below lists the SIMATIC TOP connect system cabling components for a 50-pin connecting cable.

Components of SIMATIC TOP connect system cabling				
Front connector modules	...for digital I/O modules		Voltage supply with - Screw-type terminals - Push-in system	6ES7921-5CB20-0AA0 6ES7921-5CH20-0AA0
	...for analog modules			6ES7921-5CK20-0AA0
Terminal modules	TP1	…digital, for 1-wire connection, without LED	- Screw-type terminals - Push-in system	6ES7924-2AA20-0AA0 6ES7924-2AA20-0AC0
		…digital, for 1-wire connection, with LED	- Screw-type terminals - Push-in system	6ES7924-2AA20-0BA0 6ES7924-2AA20-0BC0
	TP3	…digital, for 3-wire connection, without LED	- Screw-type terminals - Push-in system	6ES7924-2CA20-0AA0 6ES7924-2CA20-0AC0
		…digital, for 3-wire connection, with LED	- Screw-type terminals - Push-in system	6ES7924-2CA20-0BA0 6ES7924-2CA20-0BC0
	TPA	...for analog modules, without LED	- Screw-type terminals - Push-in system	6ES7924-2CC20-0AA0 6ES7924-2CC20-0AC0

Pre-assembled round cable with IDC connectors	Length	Unshielded	Shielded
	0.5 m	6ES7923-5BA50-0CB0	...not available
	1.0 m	6ES7923-5BB00-0CB0	6ES7923-5BB00-0DB0
	1.5 m	6ES7923-5BB50-0CB0	...not available
	2.0 m	6ES7923-5BC00-0CB0	6ES7923-5BC00-0DB0
	2.5 m	6ES7923-5BC50-0CB0	6ES7923-5BC50-0DB0
	3.0 m	6ES7923-5BD00-0CB0	6ES7923-5BD00-0DB0
	4.0 m	6ES7923-5BE00-0CB0	6ES7923-5BE00-0DB0
	5.0 m	6ES7923-5BF00-0CB0	6ES7923-5BF00-0DB0
	6.5 m	6ES7923-5BG50-0CB0	6ES7923-5BG50-0DB0
	8.0 m	6ES7923-5BJ00-0CB0	6ES7923-5BJ00-0DB0
	10.0 m	6ES7923-5CB00-0CB0	6ES7923-5CB00-0DB0

Accessories	20 x 7 mm label, pale turquoise, for fitting to terminal modules (x 340)	3RT1900-1SB20

Selection guide for 50-pin connecting cable

The tables below list the SIMATIC TOP connect system cabling components which you can use to wire the I/O modules of the automation system.

Front connector module for ...	…I/O modules, connectable with…	TP1		TP3		TPA
		Without LED	With LED	Without LED	With LED	Without LED
Front connector module 6ES7921-5CB20-0AA0 6ES7921-5CH20-0AA0	DI 16 x 24 VDC HF 6ES7521-1BH00-0AB0	X	X	X	X	
	DI 16 x 24 VDC SRC BA 6ES7521-1BH50-0AB0	X		X		
	DI 32 x 24 VDC HF 6ES7521-1BL00-0AB0	X	X	X	X	
	DQ 16 x 24 VDC/0.5A ST 6ES7522-1BH00-0AB0	X	X	X	X	
	DQ 32 x 24 VDC/0.5A ST 6ES7522-1BL00-0AB0	X	X	X	X	
Front connector module 6ES7921-5CK20-0AA0	AI 8 x U/I/RTD/TC ST 6ES7531-7KF00-0AB0					X
	AI 8 x U/I HS 6ES7531-7NF10-0AB0					X
	AQ 4 x U/I ST 6ES7532-5HD00-0AB0					X
	AQ 8 x U/I ST 6ES7532-5HF00-0AB0					X

1-wire or 3-wire connection

With a 1-wire or 3-wire connection, you can connect the supply voltage for the I/O modules either at the front connector module or at the terminal module.

5.2 Note on connecting digital I/O modules

Introduction

This section contains information on connecting digital I/O modules with SIMATIC TOP connect.

Note

The information provided here does not apply to the 2 A output module.

For connecting the 2 A output module, please see Note on connecting the 2 A output module (Page 41).

Using potential bridges

If you want to supply load groups with the same potential (non-isolated), use the potential bridges provided with the front connector module. This saves you having to wire a terminal point with two wires.

The detailed application can be found in the manual for the I/O module to be wired, described for the front connector. You can find an overview of this documentation under "Documentation guide (Page 9)". The procedure described in the front connector documentation can also be followed for the front connector modules.

The potential bridges can be wired either to the front connector module or to the terminal module.

NOTICE

High continuous current damages components.

The current must not exceed the maximum current carrying capacity of 8 A per potential bridge.

Make sure when you wire the potential bridges that no continuous current of over 8 A per potential bridge can occur.

Note

The potential bridges are usually inserted in the front connector module.

Terminal module assignment for 1-wire connection

Front view of terminal module, 1-wire connection	Terminal assignment
	Top row, terminals for: • 2 x M for ground potential ④ • Bit 0; 2; 4; 6 ① Bottom row, terminals for: • 2 x L+ for positive potential ③ • Bit 1; 3; 5; 7 ②

Terminal module assignment for 3-wire connection

Front view of terminal module, 3-wire connection	Terminal assignment
	Top row, terminals for: • Bits 0 to 7 ① Middle row, terminals for: • M potential (all bridged internally) ② Bottom row, terminals for: • L+ potential (all bridged internally) ③

See also

Note on connecting the 2 A output module (Page 41)
Documentation guide (Page 9)

5.3 Note on connecting the 2 A output module

Introduction

This section contains information on connecting the 2 A output module (2 amperes) with SIMATIC TOP connect.

Connecting the supply voltage

Note

Before starting work, make sure you have read the wiring rules in Wiring rules (Page 21).

The potential supply must be at the front connector module, and a supplementary ground connection to the terminal module is required for this purpose. To create this ground connection, follow these steps.

1. Connect the supply voltage to each of the two potential clamps on the front connector module using separate cables.
2. In addition to the connecting cable, connect one cable for M1 or M2 to each terminal module.
3. Connect M1 / M2 with a separate cable to the front connector module and terminal module.
   The potential of M1 and M2 can be bridged.

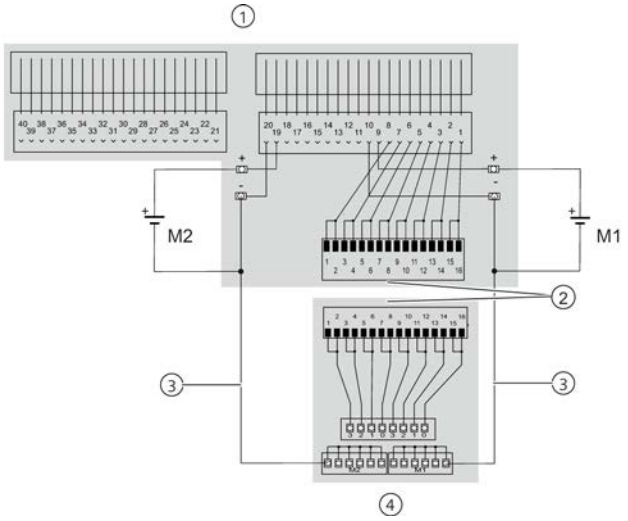

① 2-ampere front connector module
② Standard connecting cable between front connector module and terminal module
③ Additional connecting cable for M1 and M2
④ 2 A output module

Terminal module assignment for 2 A connection

Front view of 2 A terminal module	Terminal assignment, left	Terminal assignment, right
	Top row Terminals 0 to 3 ⑥: CH0 to CH3 **Middle row** M1 potential ⑤ (all "M1" terminal points bridged internally) **Bottom row** M1 potential ④ (all "M1" terminal points bridged internally)	**Top row** Terminals 0 to 3 ①: CH4 to CH7 **Middle row** M2 potential ② (all "M2" terminal points bridged internally) **Bottom row** M2 potential ③ (all "M2" terminal points bridged internally)

See also

Wiring rules (Page 21)

5.4 Note on connecting analog I/O modules

Up to four analog terminal modules can be connected to the 40 clamping points of an analog I/O module. Two terminal modules can be connected to each side of the I/O module.

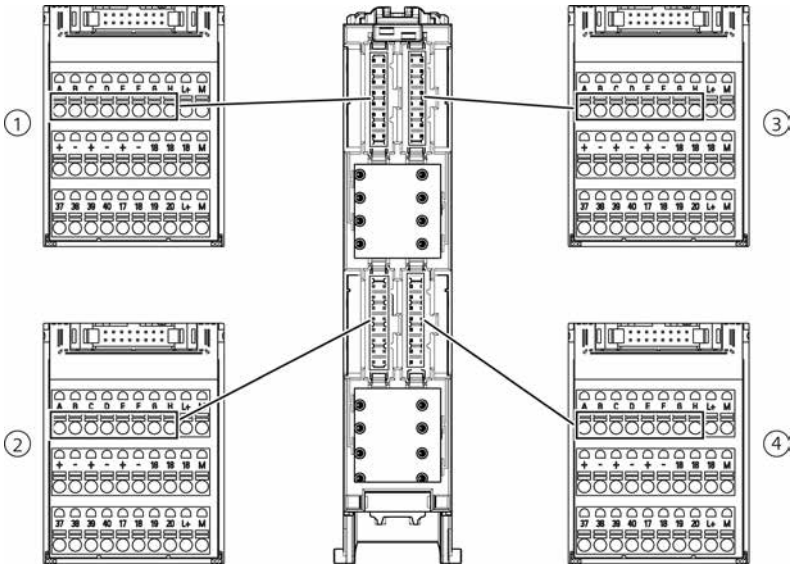

The alphabetically labeled clamping points of the analog terminal module are connected to the numbered clamping points of the I/O module as shown in the table below.

Clamping points					
Terminal module ①	Terminal module ②	I/O module, left	I/O module, right	Terminal module ③	Terminal module ④
A		1	21	A	
B		2	22	B	
C		3	23	C	
D		4	24	D	
E		5	25	E	
F		6	26	F	
G		7	27	G	
H		8	28	H	
	A	9	29		A
	B	10	30		B
	C	11	31		C
	D	12	32		D
	E	13	33		E
	F	14	34		F
	G	15	35		G
	H	16	36		H
		17	37		
		18	38		
		19	39		
		20	40		

Notes

Clamping points 17 to 20 and 37 to 40 of the I/O module are also labeled 17 to 20 and 37 to 40 on the analog terminal module.

Clamping points L+; M; +; -; of the analog terminal module are auxiliary terminals and are not connected to the I/O module.

There is an electrical connection between all clamping points with the same designation (labeling) on the analog terminal module (multiplication terminal).

5.5 Shield connection of the signal cables

Shield connection options

There are two options for grounding the signal cable shield:

- At the I/O module with the shield connection element of the front connector/front connector module; see S7-1500 function manual, Connections, Front connectors (http://support.automation.siemens.com/WW/view/en/59191792) for the I/O modules.
- At the terminal module directly with a shield plate; see the description below.

Attaching the shield plate to the terminal module

The shield plate is used to connect the shield.

1. Position the shield plate on the back of the terminal module with the gaps in the shield plate fitted over the corresponding parts on the terminal module.

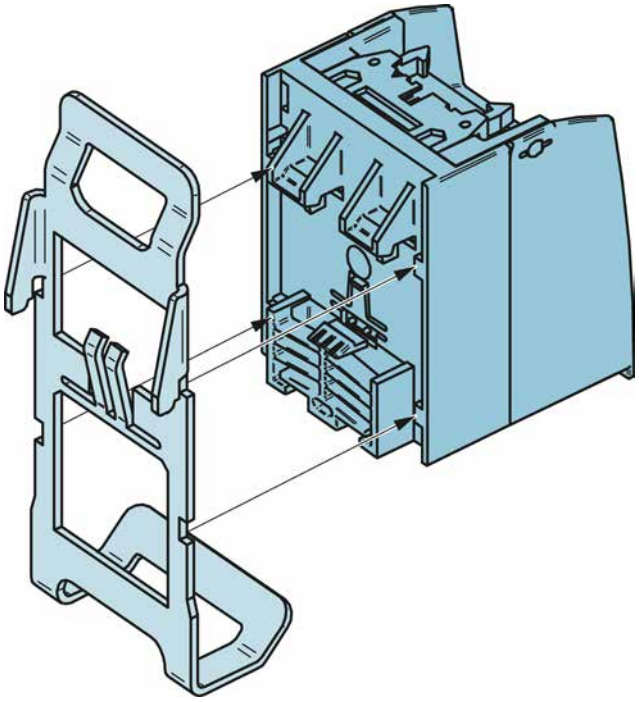

Figure 5-1 Fit the shield plate over the back of the terminal module (example)

2. Push the shield plate up against the terminal module and up.

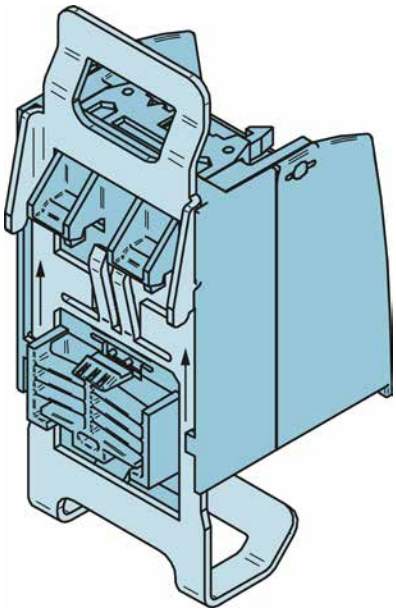

Figure 5-2 Position shield plate and push up

3. Check that the latch ① has fully engaged.
   The latch holds the shield plate in the correct position.

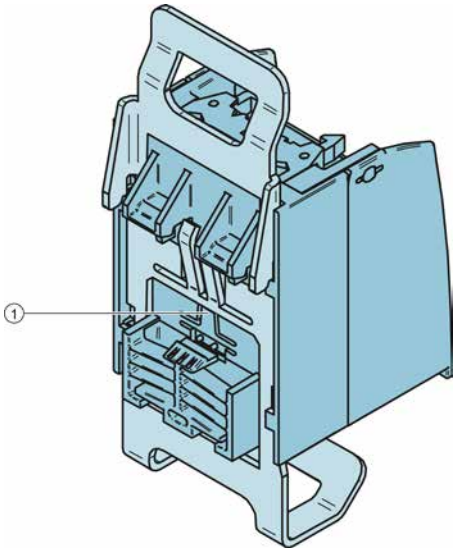

Figure 5-3 Shield plate with latch engaged

4. Mount the terminal module with attached shield plate on the standard mounting rail.
   The shield plate connects the terminal module to the grounded mounting rail.
5. Position the shield of the signal cables with the shield connection terminals on the shield plate.

Connecting the connecting cable to the shield at the front connector module

The connecting cables have two pre-prepared points for shield connection. These points are protected by a protective sheath (shrink-on sheath) on delivery, which will need to be removed at the required place.

Which shield connection point you need depends on the location of the connection in the front connector module. For connection in the upper position, use the shield connection point shown in ①. For connection in the upper position, use the shield connection point shown in ②.

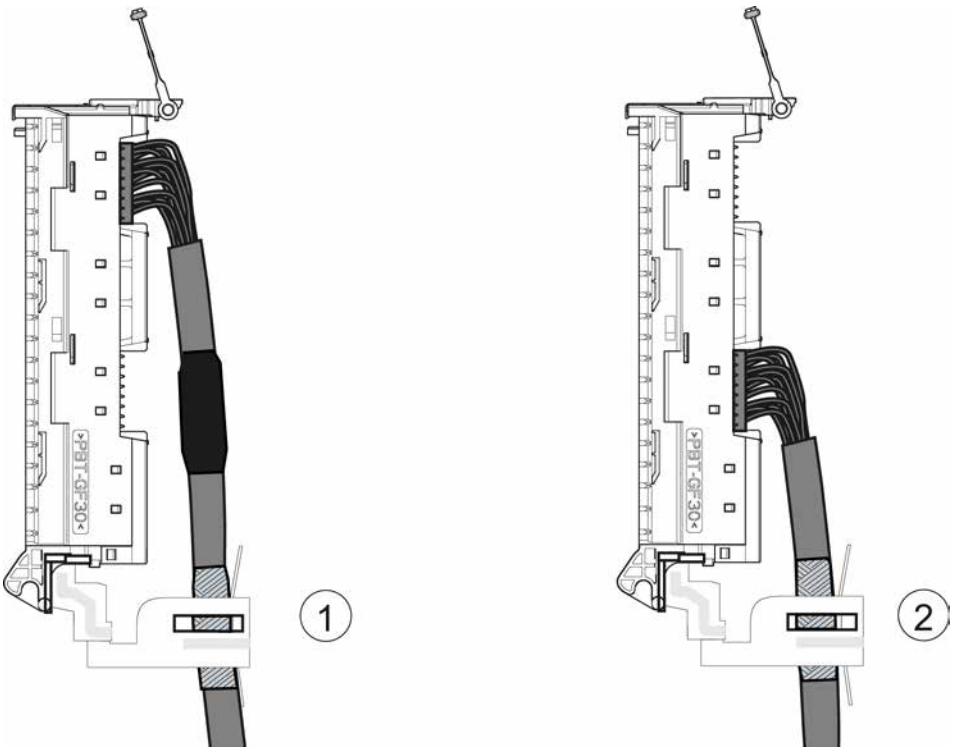

Figure 5-4 Shield connection in different connection positions

Procedure

1. Uncover the cable sheath by removing the protective sheath (shrink-on sheath) at the required place.
2. Push the shield clamp over the connecting cable shield.
3. Connect the connecting cable to the front connector module.
4. Push the shield clamp up over the shield clip to connect the cable shield

.

Technical specifications 6

Introduction

The technical specifications contain:

- The standards and test values satisfied by the terminal modules of the SIMATIC TOP connect system cabling.
- The technical specifications for the components of the SIMATIC TOP connect system cabling.

Technical specifications of the I/O modules

The technical specifications of the I/O modules are also available in the product manuals for the relevant modules. Please see the overview of documentation on SIMATIC TOP connect system cabling under Documentation guide (Page 9).

If the information in this document differs from that in the product manuals, the product manuals take priority.

See also

Documentation guide (Page 9)

6.1 Standards and approvals

Introduction

This section sets out the standards and test values satisfied by the terminal modules of the SIMATIC TOP connect system cabling.

Note

Components of the SIMATIC TOP connect system cabling

The valid marks and approvals are printed on the components of the SIMATIC TOP connect system cabling.

Reference

The corresponding certificates for the marks and approvals can be found on the Internet under Service & Support (http://www.siemens.com/automation/service&support).

CE marking

The SIMATIC TOP connect cabling system satisfies the requirements and objectives of the following EC directives and satisfies the Harmonized European Standards (EN) for Programmable Logic Controllers which were published in the official journals of the European Community:

- 2006/95/EC "Electrical Equipment Designed for Use within Certain Voltage Limits" (Low-Voltage Directive)
- 2004/108/EC "Electromagnetic Compatibility" (EMC Directive)

The EC declarations of conformity are held for the competent authorities by:
Siemens Aktiengesellschaft
Industry Sector
I IA AS FA WF AMB
Postfach 1963
D-92209 Amberg

These files are also available for download from the Customer Support pages, under "Declaration of Conformity".

cULus approval

Underwriters Laboratories Inc., to

- UL 508 (Industrial Control Equipment)
- C22.2 No. 142 (Process Control Equipment)

IEC 61131

The SIMATIC TOP connect system cabling meets the requirements and criteria of the IEC 61131-2 standard (Programmable Logic Controllers, Part 2: Equipment Requirements and Tests).

Industrial applications

SIMATIC products are designed for industrial applications.

Field of application	Noise emission requirements	Noise immunity requirements
Industry	EN 61000-6-4: 2007	EN 61000-6-2: 2005

Use in residential areas

Note

SIMATIC TOP connect system cabling and the S7-1500 automation system are designed for use in industrial areas; their use in residential areas could interfere with radio and TV reception.

To operate SIMATIC TOP connect system cabling and S7-1500 automation systems in a residential area, the RF emission must comply with Limit Value Class B to EN 55011. Suitable measures for achieving RF interference Limit Class B include, for example:

- Fitting the cabling system and automation system in grounded control cabinets/control boxes
- Use of noise filters in the supply lines

6.2 Electromagnetic compatibility

Definition

Electromagnetic compatibility (EMC) is the capacity of an electrical installation to function satisfactorily in its electromagnetic environment without affecting that environment. SIMATIC TOP connect system cabling also satisfies, among others, the requirements of EMC legislation for the European internal market. A prerequisite is S7-1500 system compliance with specifications and directives for electrical design.

6.3 Shipping and storage conditions

Introduction

SIMATIC TOP connect system cabling meets IEC 61131-2 requirements for shipping and storage conditions. The specifications below apply to modules that are shipped or stored in their original packaging.

Shipping and storage conditions for modules

Type of condition	Permissible range
Drop test (in transport package)	≤1 m
Temperature	From -40 °C to +70 °C
Air pressure	From 1080 to 660 hPa (corresponds to an altitude of -1000 to 3500 m)
Relative humidity	5% to 95%, without condensation
Sinusoidal vibrations in accordance with IEC 60068-2-6	5 to 9 Hz: 3.5 mm 9 to 500 Hz: 9.8 m/s²
Shock conforming to IEC 60068-2-27	250 m/s², 6 ms, 1000 shocks

6.4 Mechanical and climatic ambient conditions

Operating conditions

SIMATIC TOP connect system cabling is designed for stationary use in weather-proof locations. The conditions of use meet the requirements of DIN IEC 60721-3-3:

- Class 3M3 (mechanical requirements)
- Class 3K3 (climatic requirements)

Testing mechanical ambient conditions

Testing for...	Test standard	Remarks
Vibration	Vibration test complying with IEC 60068-2-6 (sine)	Vibration type: Frequency cycles with a rate of change of 1 octave/minute. 5 Hz ≤ f ≤ 8.4 Hz, constant amplitude 7 mm 8.4 Hz ≤ f ≤ 150 Hz, constant acceleration 2 g Vibration duration: 10 frequency cycles per axis in each of the 3 axes which are perpendicular to each other
Shock	Shock, tested to IEC 60068-2-27	Type of shock: Half-sine Shock intensity: 15 g peak value, 11 ms duration Direction of shock: 3 shocks each in +/– direction in each of the three perpendicular axes
Continuous shock	Shock, tested to IEC 60068-2-27	Type of shock: Half-sine shock intensity: 250 m/s2 peak value, 6 ms duration Direction of shock: 1000 shocks each in +/– direction in each of the three perpendicular axes

Reduction of vibrations

If your SIMATIC TOP connect system cabling is exposed to severe shocks or vibration, take appropriate measures to reduce the acceleration or amplitude. We recommend fitting the SIMATIC TOP connect cabling system to shock-absorbent material (for example, metal shock absorbers).

Ambient climatic conditions

SIMATIC TOP connect system cabling components may only be used in the ambient climatic conditions specified in the technical specifications.

Please see the following sections.

6.5 Technical specifications for front connector modules

Table 6- 1 Technical specifications front connector module for digital input and output modules

For digital input and output modules, for 16-pin connecting cable: 6ES7921-5AB20-0AA0 and 6ES7921-5AH20-0AA0	
Type of supply voltage	DC
Rated value	24 V
Lower limit of admissible range (DC)	20.4 V
Upper limit of admissible range (DC)	28.8 V
Max. permissible continuous current	
Per connector pin	1 A
Max. permissible total current per group	
At 40 °C (mounted horizontally)	3 A
At 60 °C (mounted horizontally)	2 A
At 40 °C (mounted vertically)	2 A
Permissible ambient temperature	0 to 60 °C

Table 6- 2 Technical specifications front connector module for digital output modules (2-ampere)

For digital output modules, for 16-pin connecting cable: 6ES7921-5AD00-0AA0 and 6ES7921-5AJ00-0AA0	
Type of supply voltage	DC
Rated value	24 V
Lower limit of admissible range (DC)	20.4 V
Upper limit of admissible range (DC)	28.8 V
Max. permissible continuous current	
Per connector pin	1 A
Max. permissible total current per group	
At 40 °C (mounted horizontally)	6 A
At 60 °C (mounted horizontally)	3 A
At 25 °C (mounted vertically)	6 A
At 40 °C (mounted vertically)	2.5 A
Permissible ambient temperature	0 to 60 °C

Table 6- 3 Technical specifications front connector module for analog input and output modules

For analog input and output modules, for 16-pin connecting cable: 6ES7921-5AK20-0AA0	
Type of supply voltage	DC
Rated value	24 V
Lower limit of admissible range (DC)	20.4 V
Upper limit of admissible range (DC)	28.8 V
Max. permissible continuous current	
Per connector pin	0.5 A
Permissible ambient temperature	0 to 60 °C

Table 6- 4 Technical specifications front connector module for digital input and output modules

For digital input and output modules, for 50-pin connecting cable: 6ES7921-5CB20-0AA0 and 6ES7921-5CH20-0AA0	
Type of supply voltage	DC
Rated value	24 V
Lower limit of admissible range (DC)	20.4 V
Upper limit of admissible range (DC)	28.8 V
Max. permissible continuous current	
Per connector pin	1 A
Max. permissible total current per group	
At 40 °C (mounted horizontally)	2 A
At 60 °C (mounted horizontally)	2 A
At 40 °C (mounted vertically)	2 A
Permissible ambient temperature	0 to 60 °C

Table 6- 5 Technical specifications front connector module for analog input and output modules

For analog input and output modules, for 50-pin connecting cable: 6ES7921-5CK20-0AA0	
Type of supply voltage	DC
Rated value	24 V
Lower limit of admissible range (DC)	20.4 V
Upper limit of admissible range (DC)	28.8 V
Max. permissible continuous current	
Per connector pin	0.5 A
Permissible ambient temperature	0 to 60 °C

6.6 Technical specifications for connecting cables

Table 6- 6 Connecting cables

For 6ES7923 - * connecting cables	
Type of supply voltage	DC
Operating voltage	max. 60 V
Max. permissible continuous current	
Per signal line	1 A
Permissible total current per group	
16-pin	4 A / byte
50-pin	2 A / byte
External diameter of pre-fabricated round cable	
Unshielded	16-pin: Approx. 6.5 mm
	50-pin: Approx. 10.5 mm
Shielded	16-pin: Approx. 7 mm
	50-pin: Approx. 11 mm
External diameter of round-sheath ribbon cable to be assembled	
1 x 16-pin, unshielded	Approx. 9.5 mm
1 x 16-pin, shielded	Approx. 10.5 mm
2 x 16-pin, unshielded	Approx. 11.5 mm
Permissible ambient temperature	0 to 60 °C

6.7 Technical specifications for terminal modules

Note

The "x" in the article numbers is a placeholder for the terminal module version with push-in or screw-type terminals.

In place of the "x", there is either an "A" for the version with screw-type terminals or a "C" for the version with a push-in system.

Terminal modules for 16-pin connecting cable

Table 6- 7 Technical specifications for terminal modules TP1 and TP3 without LED

Terminal modules TP1 and TP3, 16-pin **1-wire connection without LED 6ES7924-0AA20-0Ax0** **3-wire initiators without LED 6ES7924-0CA20-0Ax0**	
Type of supply voltage	DC
Operating voltage	max. 50 V
Max. permissible continuous current per signal	1 A
Max. permissible total current (power supply)	4 A / byte
Connection to SIMATIC fitted for	16-pin IDC connector with fitted strain relief
Operating temperature	0 to + 60° C
Mounting position	Any
Clearances and creepage distances	IEC 60664-1, IEC61131-2, CSA C22.2 No 142 UL 508, VDE 0160, Overvoltage category II, pollution degree 2
Dimensions (W x H x D) in mm	
1-wire connection 6ES7924-0AA20-0Ax0	Approx. 40 x 58 x 50
For 3-wire initiators 6ES7924-0CA20-0Ax0	Approx. 57 x 76 x 60

Table 6- 8 Technical specifications for terminal modules TP1 and TP3 with LED

Terminal modules TP1 and TP3, 16-pin 1-wire connection with LED 6ES7924-0AA20-0Bx0 3-wire initiators with LED 6ES7924-0CA20-0Bx0	
Type of supply voltage	DC
Operating voltage	max. 24 V
Max. permissible continuous current per signal	1 A
Max. permissible total current (power supply)	4 A / byte
Connection to SIMATIC fitted for	16-pin IDC connector with fitted strain relief
Operating temperature	0 to + 60° C
Mounting position	Any
Clearances and creepage distances	IEC 60664-1, IEC61131-2, CSA C22.2 No 142 UL 508, VDE 0160, overvoltage category II, pollution degree 2
Dimensions (W x H x D) in mm	
1-wire connection 6ES7924-0AA20-0Bx0	Approx. 40 x 58 x 50
For 3-wire initiators 6ES7924-0CA20-0Bx0	Approx. 57 x 76 x 60

Table 6- 9 Technical specifications for terminal module TPA

Terminal modules TPA, 16-pin, for analog modules in S7-1500 or ET200MP 6ES7924-0CC20-0Ax0 series	
Type of supply voltage	DC
Operating voltage	max. 50 V
Max. permissible continuous current per signal line	1 A
Connection to SIMATIC fitted for	16-pin IDC connector with fitted strain relief
Operating temperature	0 to + 60° C
Mounting position	Any
Clearances and creepage distances	IEC 60664-1, IEC61131-2, CSA C22.2 No 142 UL 508, VDE 0160, overvoltage category II, pollution degree 2
Dimensions (W x H x D) in mm	
6ES7924-0CC20-0Ax0	Approx. 57 x 76 x 60

Table 6- 10 Technical specifications for terminal module TPF with LED

Terminal modules TPF (use), 3-wire initiators with LED, incl. fuse in the signal path 6ES7924-0CL20-0Bx0	
Type of supply voltage	DC
Operating voltage	max. 24 V
Max. permissible continuous current per signal	1 A (limited with 0.6 A microfuse)
Max. permissible total current (power supply)	4 A / byte
Fuse	
Factory fittings	5 mm x 20 mm microfuse 0.6 A / 250 V quick-response
General data	
Connection to SIMATIC fitted for	16-pin IDC connector with fitted strain relief
Operating temperature	0 to + 60° C
Mounting position	Any
Clearances and creepage distances	IEC 60664-1, IEC61131-2, CSA C22.2 No 142 UL 508, VDE 0160,0 overvoltage category II, pollution degree 2
Dimensions (W x H x D) in mm	
For 3-wire initiators with fuse 6ES7924-0CL20-0Bx0	Approx. 57 x 76 x 60

Table 6- 11 Technical specifications for terminal module TPS with LED

Terminal modules TPS (witch), 3-wire initiators with LED, incl. switch in the signal path 6ES7924-0CH20-0Bx0	
Type of supply voltage	DC
Operating voltage	max. 24 V
Max. permissible continuous current per signal	1 A
Max. permissible total current (power supply)	4 A / byte
Switch	
Type	DIP slide switch
Activation during operation	Activation during operation permitted, Max. switching capacity 10VA, ON = "top" position, set to "ON"
General data	
Connection to SIMATIC fitted for	16-pin IDC connector with fitted strain relief
Operating temperature	0 to + 60° C
Mounting position	Any
Clearances and creepage distances	IEC 60664-1, IEC61131-2, CSA C22.2 No 142 UL 508, VDE 0160, Overvoltage category II, pollution degree 2
Dimensions (W x H x D) in mm	
For 3-wire initiators with disconnector 6ES7924-0CH20-0Bx0	Approx. 57 x 76 x 60

Table 6- 12 Technical specifications for terminal module TP2 without LED

Terminal modules TP2, 2 A modules without LED 6ES7924-0BB20-0Ax0	
Type of supply voltage	DC
Operating voltage	max. 50 V
Max. permissible continuous current per signal	2 A
Connection to SIMATIC fitted for	16-pin IDC connector with fitted strain relief
Operating temperature	0 to + 60° C
Mounting position	Any
Clearances and creepage distances	IEC 60664-1, IEC61131-2, CSA C22.2 No 142 UL 508, VDE 0160, Overvoltage category II, pollution degree 2
Dimensions (W x H x D) in mm	
For 2 A modules 6ES7924-0BB20-0Ax0	Approx. 57 x 76 x 60

Table 6- 13 Technical specifications for terminal module TPRi 230 V

Terminal module TPRi 230 V with relay for inputs 6ES7924-0BE20-0Bx0	
Energizing side	
Operating voltage for coil	230 V AC / from 207 – 264 V AC
Input circuit	Suppressor diode
Contact side	
Number of relay outputs	8 NO contacts
Contact design	Single contact, 1 NO contact
Switching capacity (resistive load)	max. 50 mA / 24 V DC
	max. 50 mA / 48 V DC
	max. 50 mA / 60 V DC
	Recommended minimum load ≥ 5mA
Switching frequency	500 cycles/minute
Service life	
Mechanical	10 x 10^6 switching cycles
Electrical	3 x 10^6 switching cycles at 230 V AC/50 mA/ cos φ = 1
Connection to SIMATIC fitted for	16-pin IDC connector with fitted strain relief
Operating temperature	0 … +60° C
Mounting position	Any
Clearances and creepage distances	IEC 60664-1, IEC61131-2, CSA C22.2 No 142 UL 508, VDE 0160, overvoltage category II, pollution degree 2
Dimensions (W x H x D) in mm	
6ES7924-0BE20-0Bx0	Approx. 130 x 76 x 60

Table 6- 14 Technical specifications for terminal module TPRi 110 V

Terminal module TPRi 110 V with relay for inputs 6ES7924-0BG20-0Bx0	
Energizing side	
Operating voltage for coil	115 V AC / from 103 – 132 V AC
Input circuit	Suppressor diode
Contact side	
Number of relay outputs	8 NO contacts
Contact design	Single contact, 1 NO contact
Switching capacity (resistive load)	max. 50 mA / 24 V DC
	max. 50 mA / 48 V DC
	max. 50 mA / 60 V DC
	Recommended minimum load ≥ 5mA
Switching frequency	500 cycles/minute
Service life	
Mechanical	10 x 10^6 switching cycles
Electrical	3 x 10^6 switching cycles at 230 V AC/50 mA/ cos φ = 1
Connection to SIMATIC fitted for	16-pin IDC connector with fitted strain relief
Operating temperate	0 … +60° C
Mounting position	Any
Clearances and creepage distances	IEC 60664-1, IEC61131-2, CSA C22.2 No 142 UL 508, VDE 0160, overvoltage category II, pollution degree 2
Dimensions (W x H x D) in mm	
6ES7924-0BG20-0Bx0	Approx. 130 x 76 x 60

Table 6- 15 Technical specifications for terminal module TPRo

Terminal module TPRo with relays for outputs 6ES7924-0BD20-0Bx0	
Energizing side	
Operating voltage for coil	24 V DC 19 - 28.8 V
Input circuit	Reverse polarity protection and freewheeling diodes
Contact side	
Number of relay outputs	8 NO contacts
Contact design	Single contact, 1 NO contact
Switching capacity (resistive load)	max. 4 A / 250 V AC
	max. 3 A / 30 V DC
	max. 0.6 A / 48 V DC
	max. 0.4 A / 60 V DC
	Recommended minimum load ≥ 1 mA
Switching frequency	6 cycles/minute
Service life	
Mechanical	3 x 10^6 switching cycles
Electrical	5 x 10^4 switching cycles at 230 V AC/4 A/ cos φ = 1, 6 x per minute
Inductive loads	To protect the relay contacts, inductive loads must be dampened externally with an effective protective circuit. No measures are provided for this in the TPR.
Connection to SIMATIC fitted for	16-pin IDC connector with fitted strain relief
Operating temperate	0 … +60° C
Mounting position	Any
Clearances and creepage distances	IEC 60664-1, IEC61131-2, CSA C22.2 No 142 UL 508, VDE 0160, overvoltage category II, pollution degree 2
Dimensions (W x H x D) in mm	
6ES7924-0BG20-0Bx0	Approx. 100 x 76 x 60

Table 6- 16 Technical specifications for terminal module TPOo

Terminal module TPOo optocoupler for outputs 6ES7924-0BF20-0Bx0	
Input data for supply voltage	
Potential connection (L1/M1)	24 V DC (20.4 ... 28.8 V DC)
Status display "L1"	Green LED
Input data for switching inputs	
Number of switching inputs	8 channels (channel 0 ... 7) With reverse polarity protection
Input voltage "off"	0 V DC (0 ... 5 V DC)
Input voltage "on"	24 V DC (15 ... 28.8 V DC)
Input current	min. 5 mA with 20 V DC, per channel
Status display "on"	Green LED per channel
Output data for supply voltage	
Operating voltage V_{op} (L2/M2, L3/M3)	24 V DC (20 ... 30 V DC), one per group of 4
V_{op} with conditional reverse polarity protection	Up to 30 V DC (Protected against reverse polarity if the ground potential of the output load is directly connected to the 0 V supply of the power supply unit.)
Current consumption	Approx. 10 mA at 24 V DC + output currents
Total current	max. 16 A per group of 4
Switching outputs	
Number	8 channels (channel 0 ... 7)
Short-circuit protection	When Vop < 24 V DC or 20 … 30 V DC/max. 20 A No continuous short-circuit protection, max. duration approx. 60 min.
Output voltage	Typ. V_{op} – 0.5 V (for input "on")
Output current	Max. 4 A per channel
Lamp load	max. 40 W at 24 V per channel
Short-circuit response	Clocked output signal (approx. 2 ... 20 ms)
On/Off-delay	Typ. 100 µs / 250 µs with resistive load
Switching frequency	max. 500 Hz with 4 A resistive load (square wave voltage, pulse/pause 1:1)
"Overload" fault display	Red LED per channel, in the event of wire break or short-circuit
Wire break display active	When output "off" and R_{load} > 2 MOhm
Recommended conductor cross-section for cable	1.5 mm ^{2}
Group fault messages SF1, SF2	
Monitored channels	SF1: Channels 0 … 3,
	SF2: Channels 4 … 7

Terminal module TPOo optocoupler for outputs 6ES7924-0BF20-0Bx0	
Voltage V_{SF1}, V_{SF2}	
No error at the switching output	Typ. Vop – 2 V
Wire break at the switching output	Approx. 0 V
Short-circuit at the switching output	0 V to V_{op}, clocked
Current I_{SF1}, I_{SF2}	min. 4 mA/max. 200 mA
General data	
Connection to SIMATIC fitted for	16-pin IDC connector with fitted strain relief
Degree of protection	IP20
Operating temperature	0 … 60 °C
Mounting position	Any, except overhead
Connecting terminals	Screw-type terminal or push-in system
Stripped length	9 mm
Conductor cross-section	
Finely stranded without end sleeve	0.5 … 2.5 mm^2
With end sleeve for screw-type terminals	0.5 ... 2.5 mm^2 in accordance with DIN 46222-1
With end sleeve, push-in system	0.2 … 2.5 mm^2
Screwdriver	According to DIN 5264 B 0.6 x 3.5 mm
Tightening torque of screw-type terminals	0.4 … 0.7 Nm
Weight	
Screw model	0.29 kg
Push-in model	0.25 kg
Clearances and creepage distances	IEC 60664-1, IEC61131-2, CSA C22.2 No 142 UL 508, VDE 0160, overvoltage category II, pollution degree 2
Dimensions (W x H x D) in mm	
6ES7924-0BF20-0Bx0	Approx. 130 x 76 x 60

Terminal modules for 50-pin connecting cable

Table 6- 17 Technical specifications for terminal modules TP1 and TP3 without LED

Terminal modules TP1 and TP3, 50-pin 1-wire connection without LED 6ES7924-2AA20-0Ax0 3-wire initiators without LED 6ES7924-2CA20-0Ax0	
Type of supply voltage	DC
Operating voltage	max. 50 V
Max. permissible continuous current per signal	1 A
Max. permissible total current (power supply)	2 A / byte
Connection to SIMATIC fitted for	50-pin IDC connector with fitted strain relief
Operating temperature	0 to + 60° C
Mounting position	Any
Clearances and creepage distances	IEC 60664-1, IEC61131-2, CSA C22.2 No 142 UL 508, VDE 0160, Overvoltage category II, pollution degree 2
Dimensions (W x H x D) in mm	
1-wire connection 6ES7924-2AA20-0Ax0	Approx. 100 x 76 x 60
For 3-wire initiators 6ES7924-2CA20-0Ax0	Approx. 175 x 76 x 60

Table 6- 18 Technical specifications for terminal modules TP1 and TP3 with LED

Terminal modules TP1 and TP3, 50-pin 1-wire connection with LED 6ES7924-2AA20-0Bx0 3-wire initiators with LED 6ES7924-2CA20-0Bx0	
Type of supply voltage	DC
Operating voltage	max. 24 V
Max. permissible continuous current per signal	1 A
Max. permissible total current (power supply)	2 A / byte
Connection to SIMATIC fitted for	50-pin IDC connector with fitted strain relief
Operating temperature	0 to + 60° C
Mounting position	Any
Clearances and creepage distances	IEC 60664-1, IEC61131-2, CSA C22.2 No 142 UL 508, VDE 0160, overvoltage category II, pollution degree 2
Dimensions (W x H x D) in mm	
1-wire connection 6ES7924-2AA20-0Bx0	Approx. 100 x 76 x 60
For 3-wire initiators 6ES7924-2CA20-0Bx0	Approx. 175 x 76 x 60

Table 6- 19 Technical specifications for terminal module TPA

Terminal modules TPA, 50-pin, for analog modules in S7-1500 or ET200MP 6ES7924-2CC20-0Ax0 series	
Type of supply voltage	DC
Operating voltage	max. 50 V
Max. permissible continuous current per signal line	1 A
Connection to SIMATIC fitted for	50-pin IDC connector with fitted strain relief
Operating temperature	0 to + 60° C
Mounting position	Any
Clearances and creepage distances	IEC 60664-1, IEC61131-2, CSA C22.2 No 142 UL 508, VDE 0160, overvoltage category II, pollution degree 2
Dimensions (W x H x D) in mm	
For analog modules 6ES7924-2CC20-0Ax0	Approx. 130 x 76 x 60

Environment

7

The device conforms to the RoHS Directive.

No materials used release silicone.

Disposal provisions

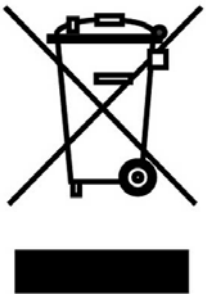

The packaging and packing products are recyclable and should be recycled. The product itself must not be disposed of in the household waste.

Dimension drawings

A

A.1 Front connector modules

Views

All views in the dimension drawings below are numbered.

The following applies:

Number	View
①	Front view
②	View from left

Note

All dimensions in millimeters (mm).

Front connector module 6ES7921-5AB20-0AA0

8-bit, for digital modules

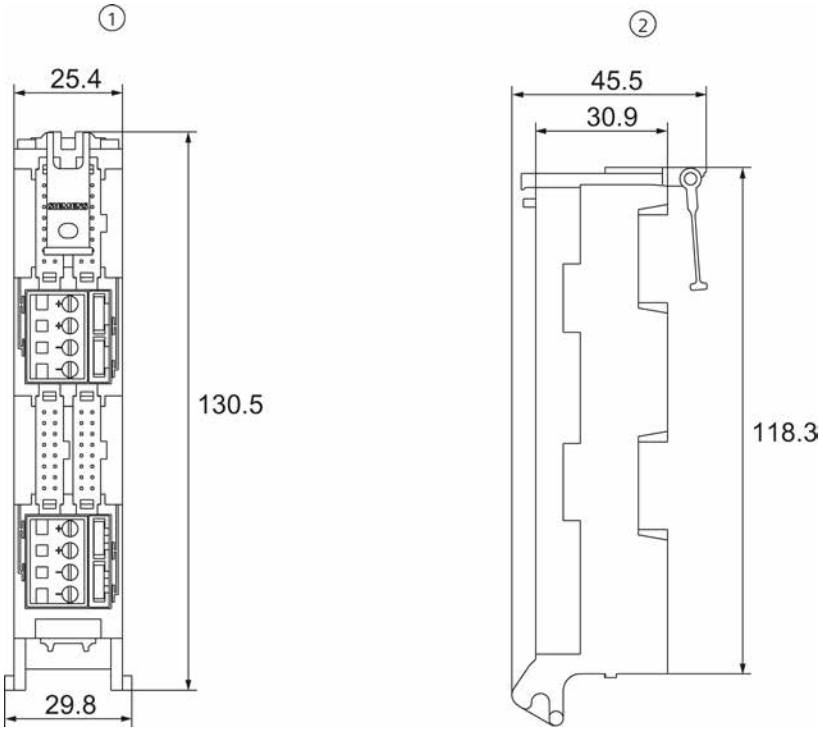

Figure A-1 6ES79215AB20-0AA0

Front connector module 6ES7921-5AH20-0AA0

8-bit, for digital modules

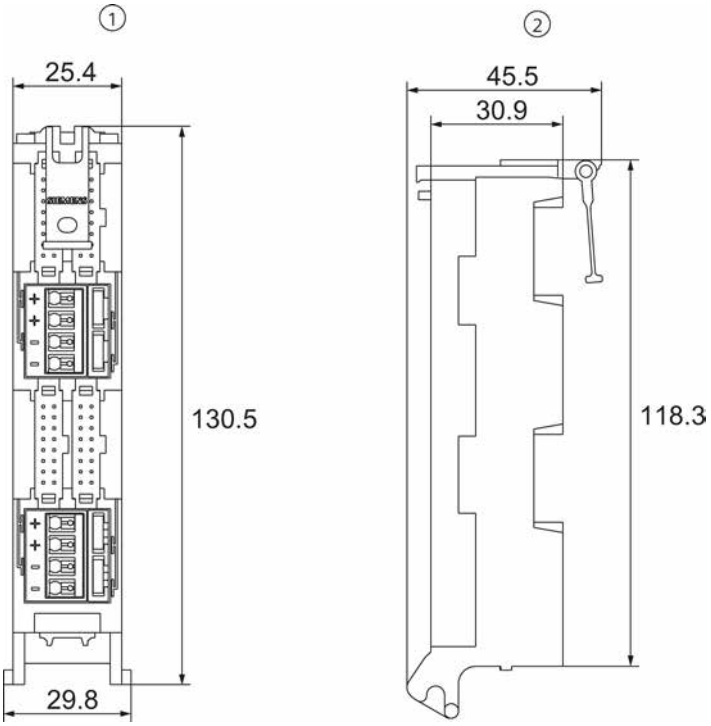

Figure A-2 6ES7921-5AH20-0AA0

Front connector module 6ES7921-5AK20-0AA0

8-bit, for analog modules

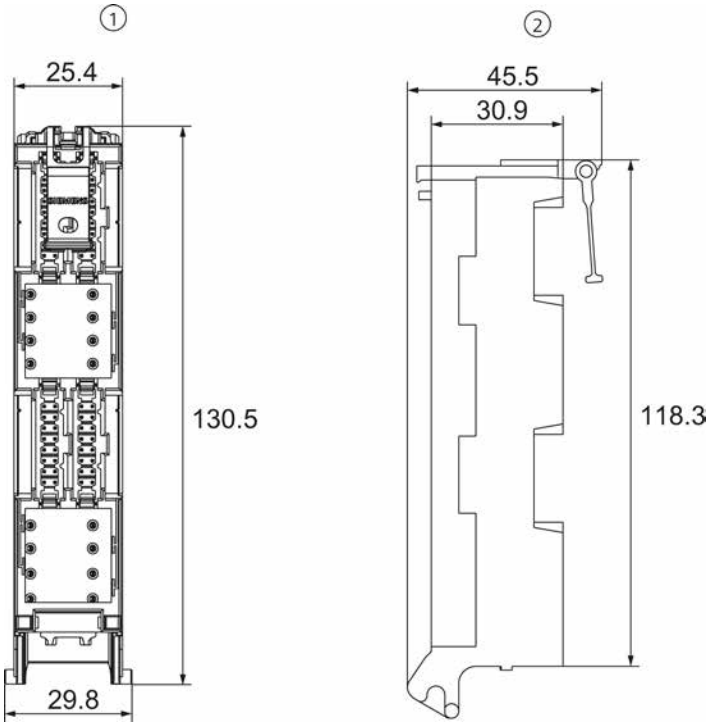

Figure A-3 6ES7921-5AK20-0AA0

Front connector module 6ES7921-5AD00-0AA0

8-bit, for 2 A modules

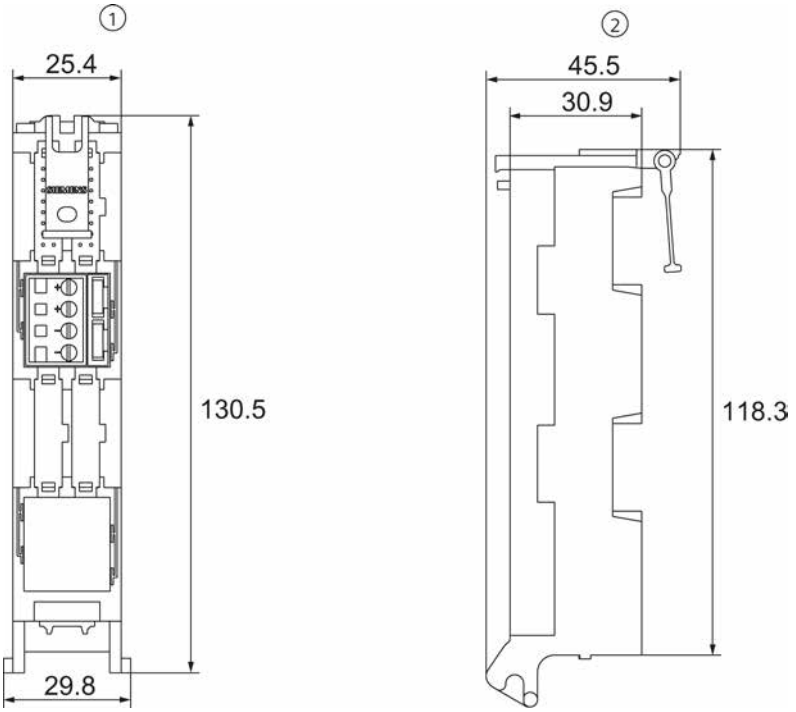

Figure A-4 6ES7921-5AD00-0AA0

Front connector module 6ES7921-5AJ00-0AA0

8-bit, for 2 A modules

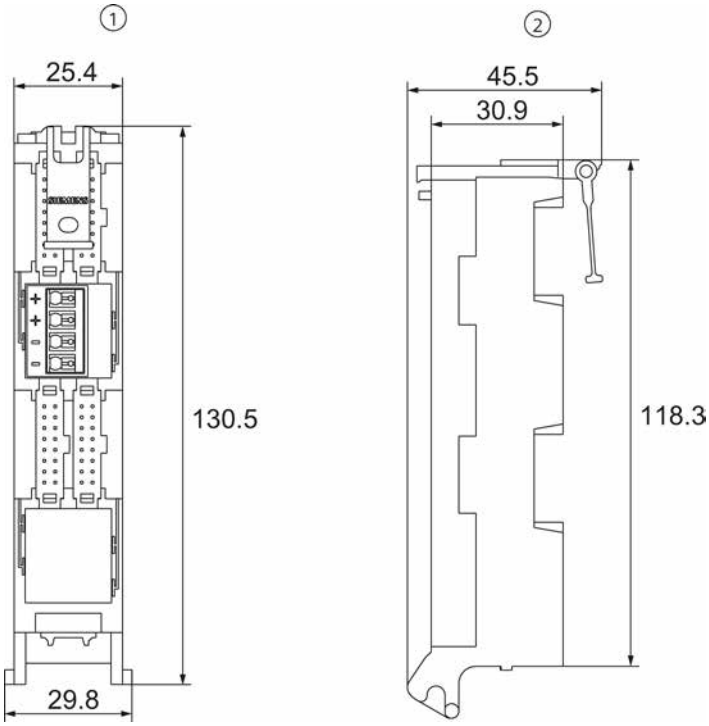

Figure A-5 6ES7921-5AJ00-0AA0

Front connector module 6ES7921-5CB20-0AA0

32-bit, for digital modules

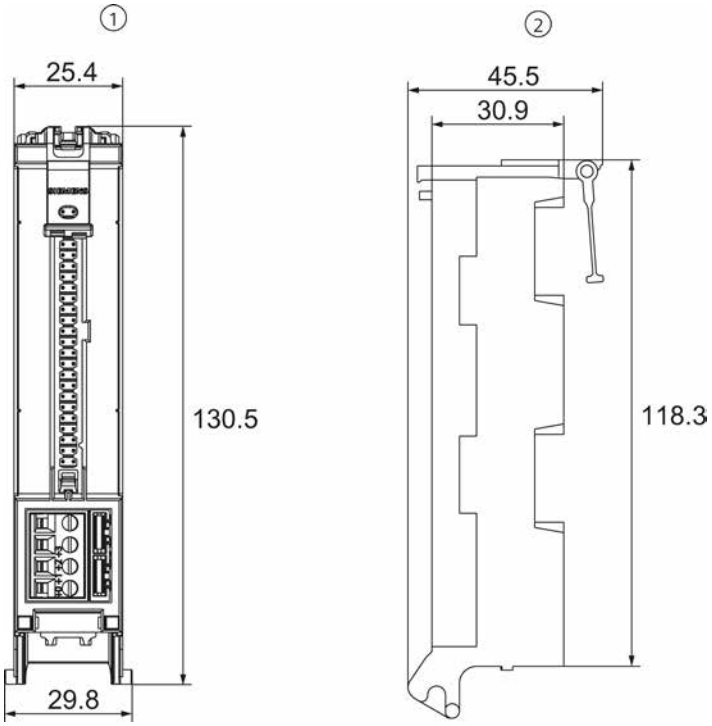

Figure A-6 6ES7921-5CB20-0AA0

Front connector module 6ES7921-5CH20-0AA0

32-bit, for digital modules

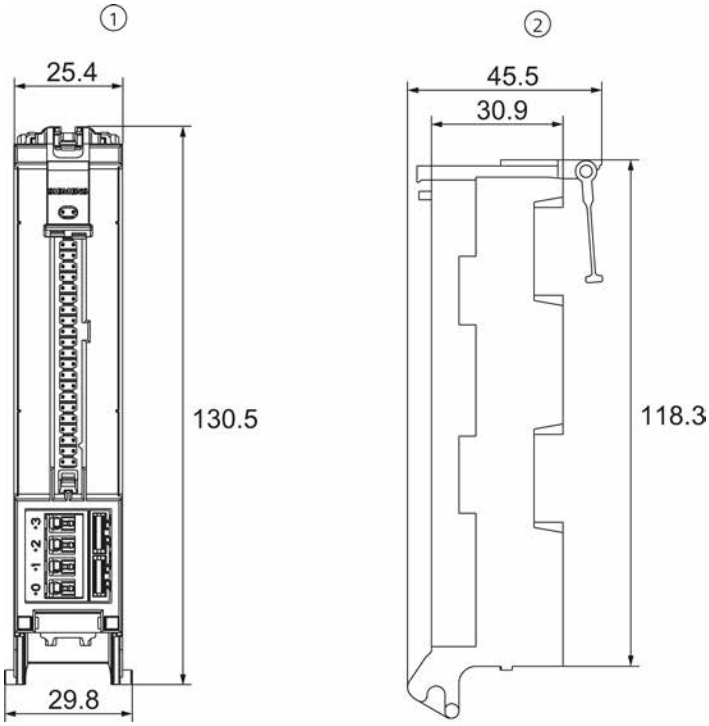

Figure A-7 6ES7921-5CH20-0AA0

Front connector module 6ES7921-5CK20-0AA0

32-bit, for analog modules

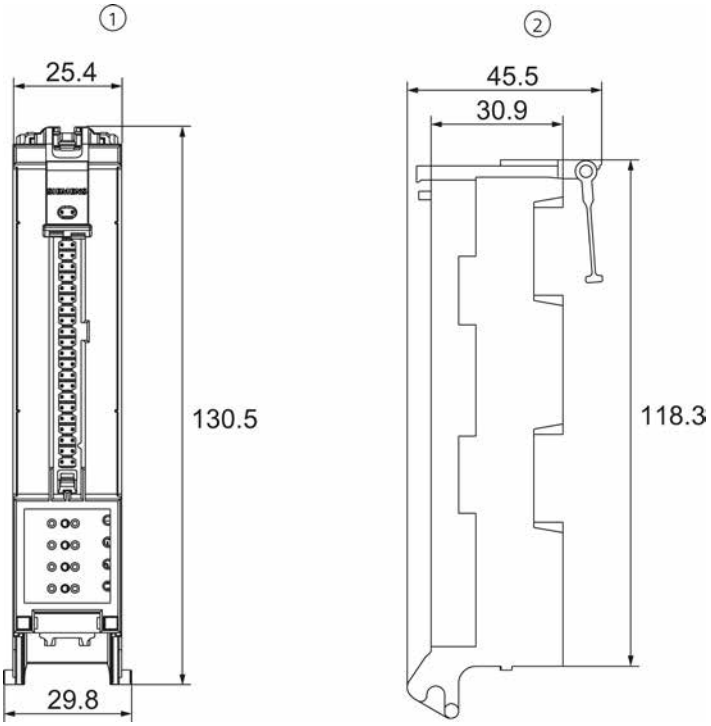

Figure A-8 6ES7921-5CK20-0AA0

A.2 Terminal modules for 16-pin connecting cable

Views

All views in the dimension drawings below are numbered.

The following applies:

Number	View
①	Front view
②	Front view with front flap closed
③	Left view with front flap closed

Note

All dimensions in millimeters (mm).

Note

The dimensions for terminal modules with screw-type terminals are the same as for those with the push-in system.

Terminal module 6ES7924-0AA20-0AA0

TP1 without LED

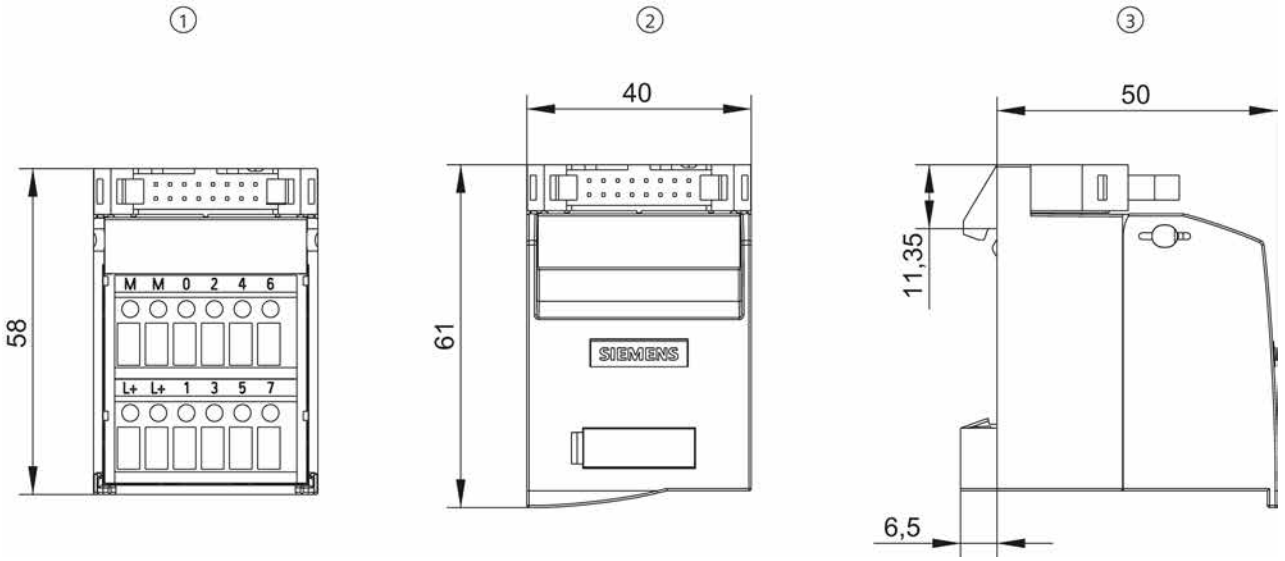

Figure A-9 6ES7924-0AA20-0AA0

Terminal module 6ES7924-0AA20-0BA0

TP1 with LED

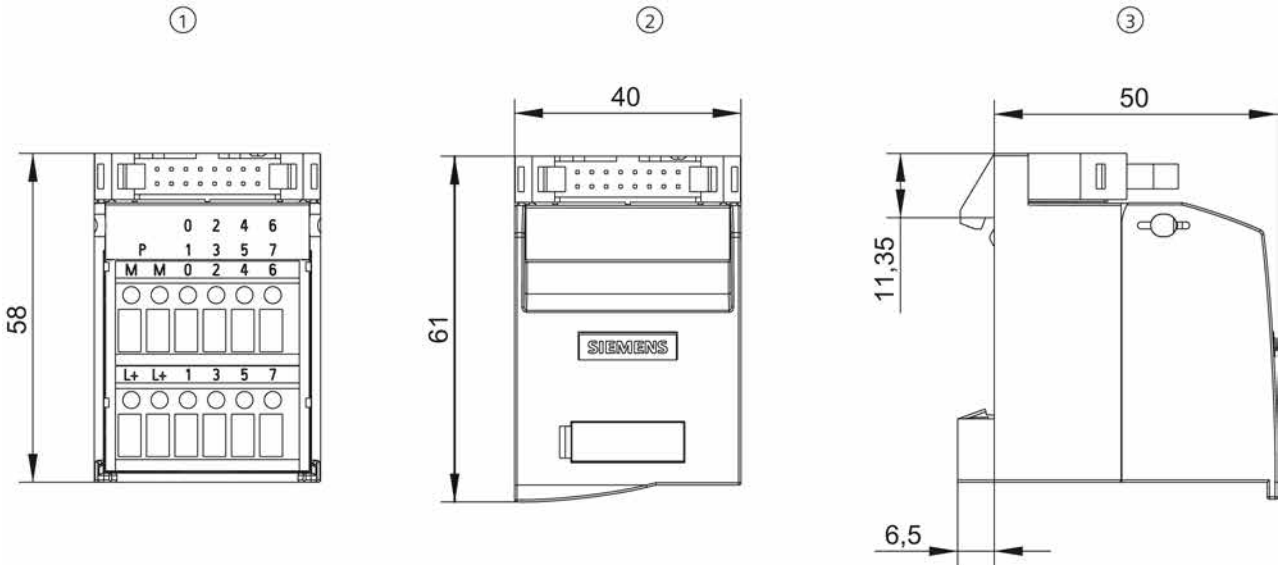

Figure A-10 6ES7924-0AA20-0BA0

Terminal module 6ES7924-0BB20-0AA0

TP2 without LED

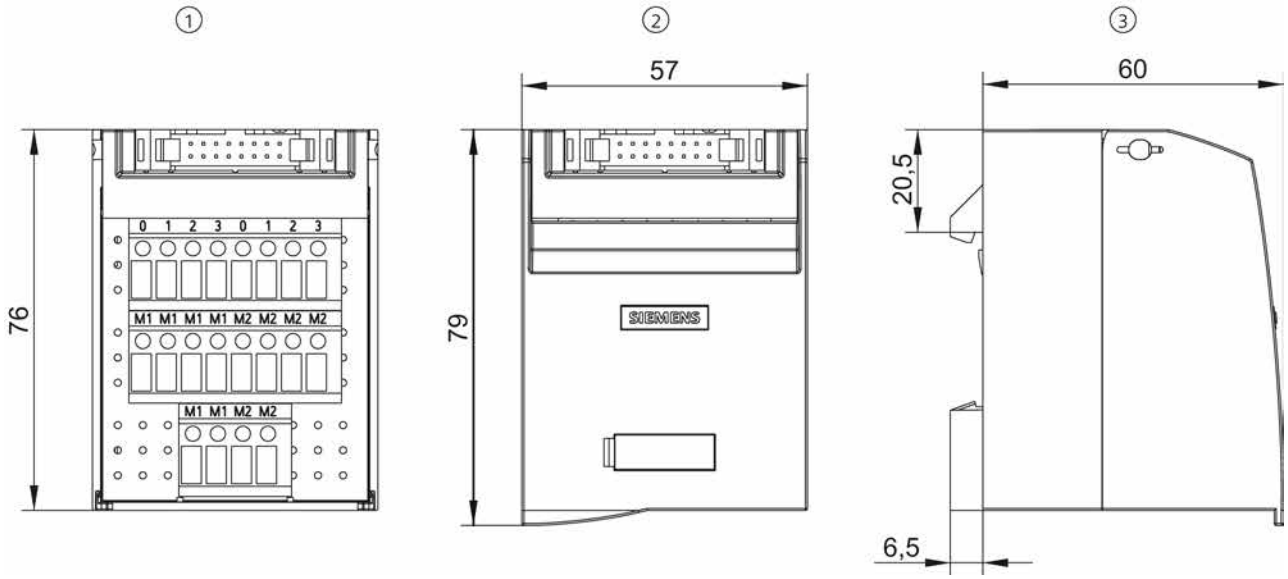

Figure A-11 6ES7924-0BB20-0AA0

Terminal module 6ES7924-0CA20-0AA0

TP3 without LED

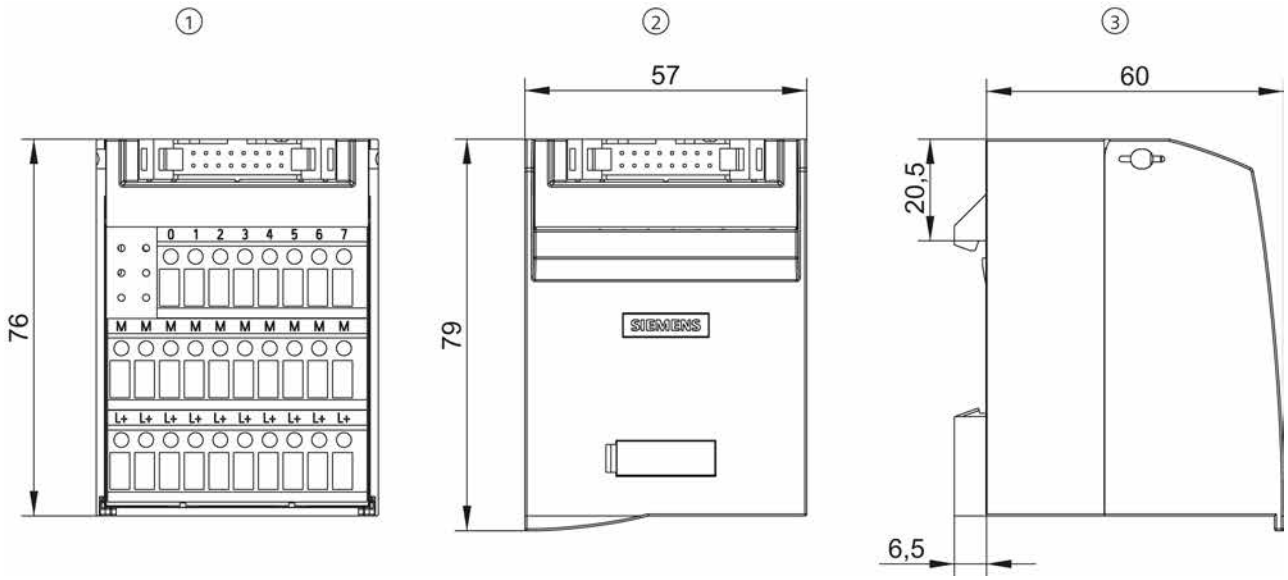

Figure A-12 6ES7924-0CA20-0AA0

Terminal module 6ES7924-0CA20-0BA0

TP3 with LED

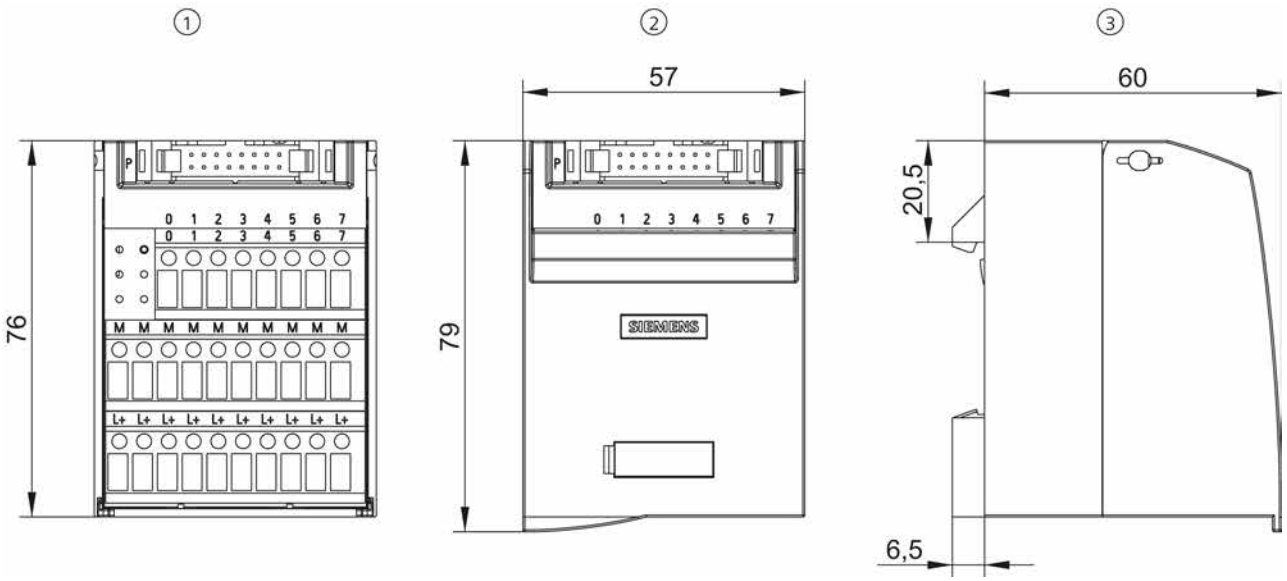

Figure A-13 6ES7924-0CA20-0BA0

Terminal module 6ES7924-0CC20-0AA0

TPA without LED

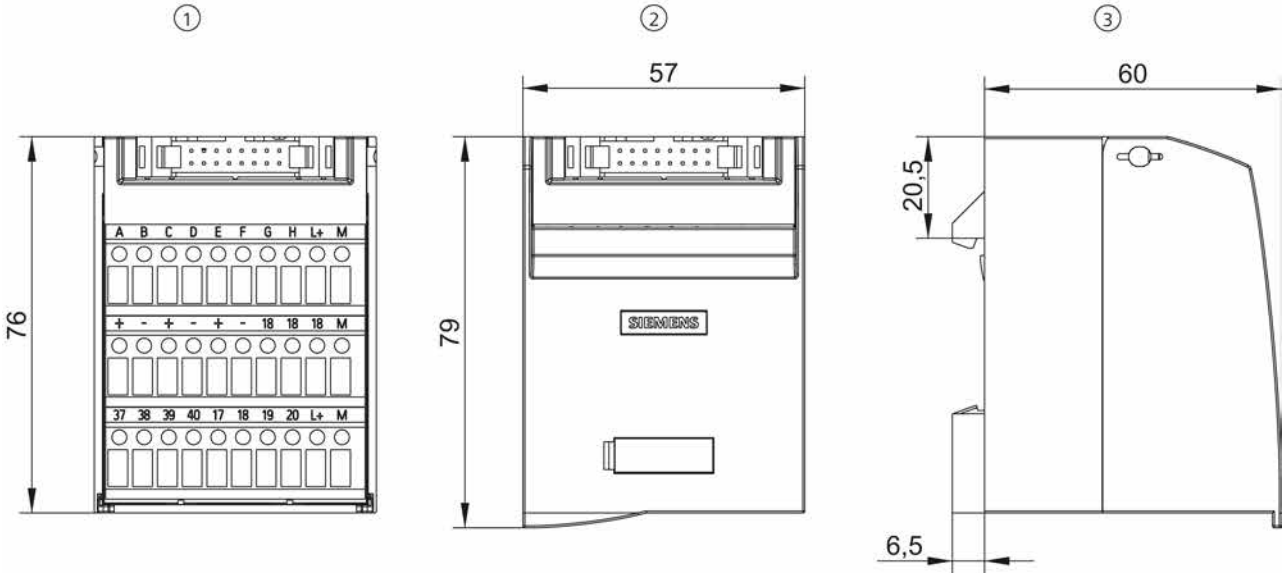

Figure A-14 6ES7924-0CC20-0AA0

Terminal module 6ES7924-0BE20-0BA0

TPRi 230 V with LED

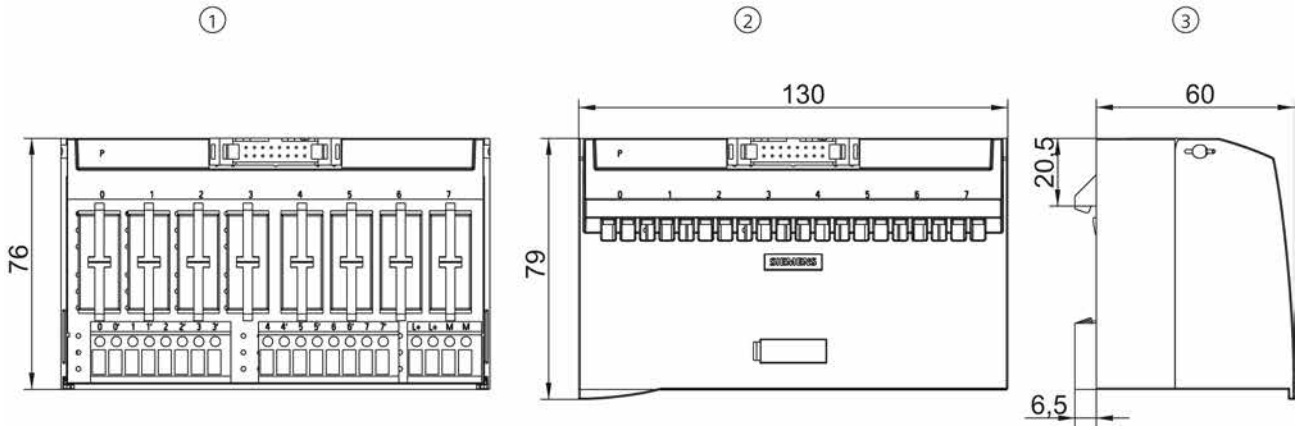

Figure A-15 6ES7924-0BE20-0BA0

Terminal module 6ES7924-0BG20-0BA0

TPRi 110 V with LED

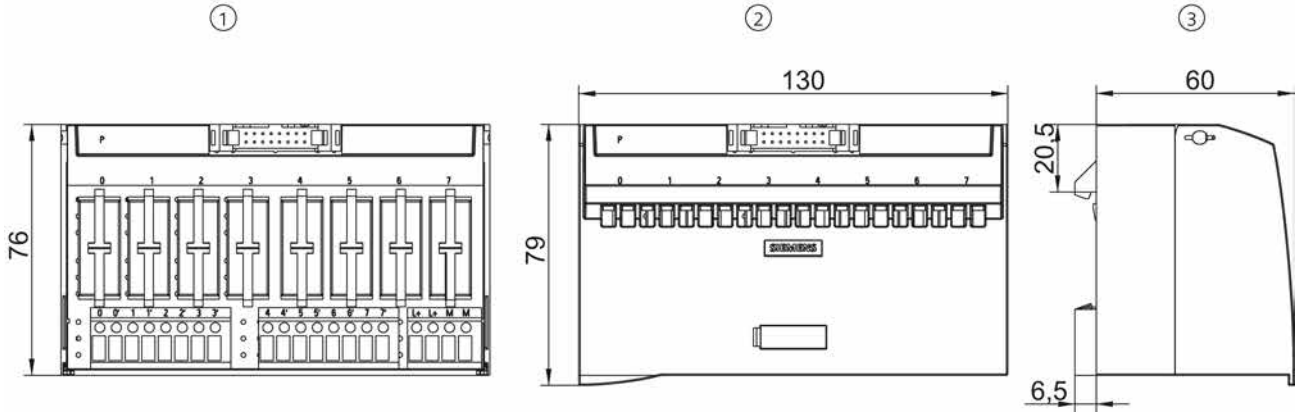

Figure A-16 6ES7924-0BG20-0BA0

Terminal module 6ES7924-0BD20-0BA0

TPRo with LED

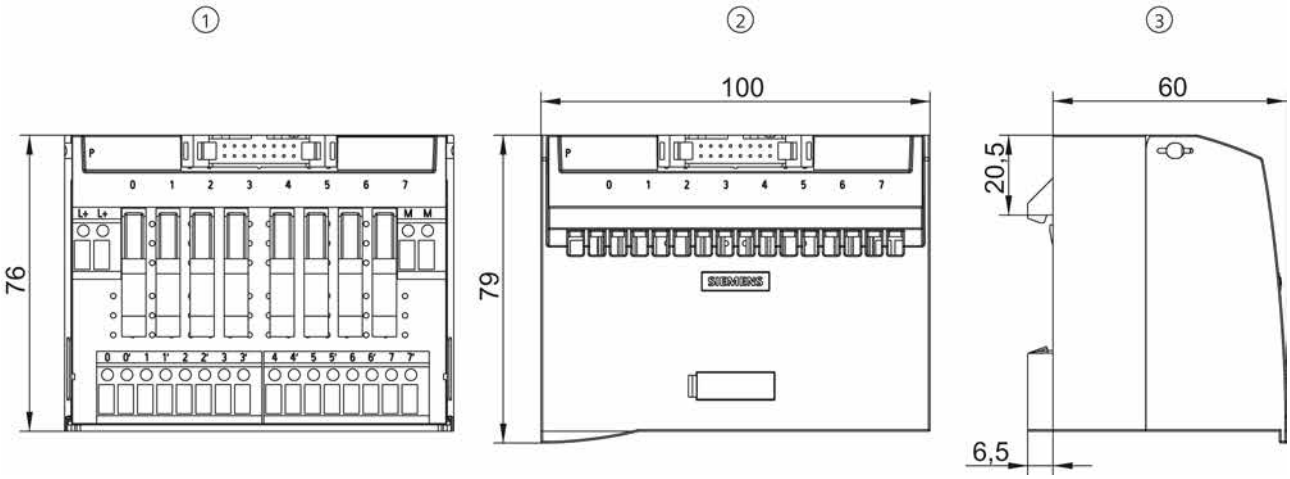

Figure A-17 6ES7924-0BD20-0BA0

Terminal module 6ES7924-0BF20-0BA0

TPOo with LED

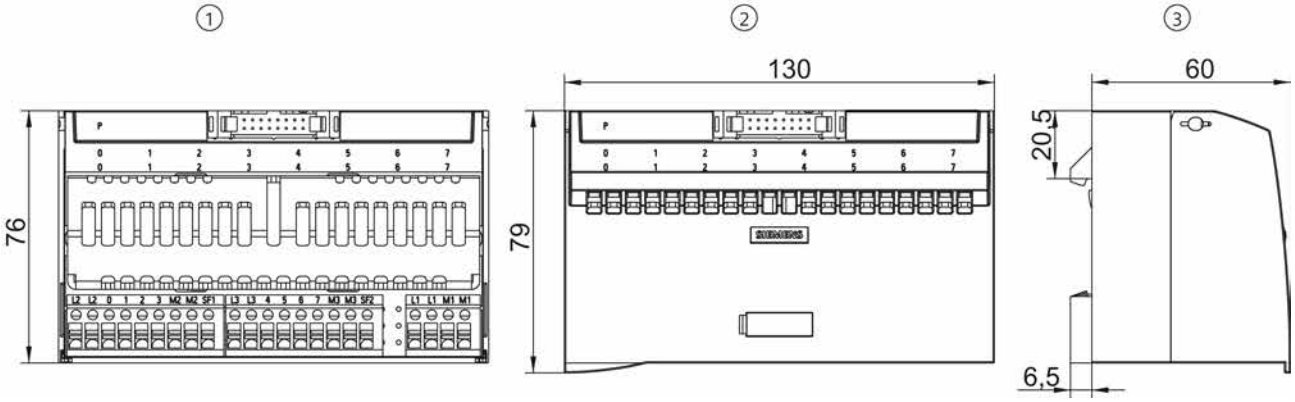

Figure A-18 6ES7924-0BF20-0BA0

A.3 Terminal modules for 50-pin connecting cable

All views in the dimension drawings below are numbered.

The following applies:

Number	View
①	Front view
②	Front view with front flap closed
③	Left view with front flap closed

Note

All dimensions in millimeters (mm).

Note

The dimensions for terminal modules with screw-type terminals are the same as for those with the push-in system.

Terminal module 6ES7924-2AA20-0AA0

TP1 without LED

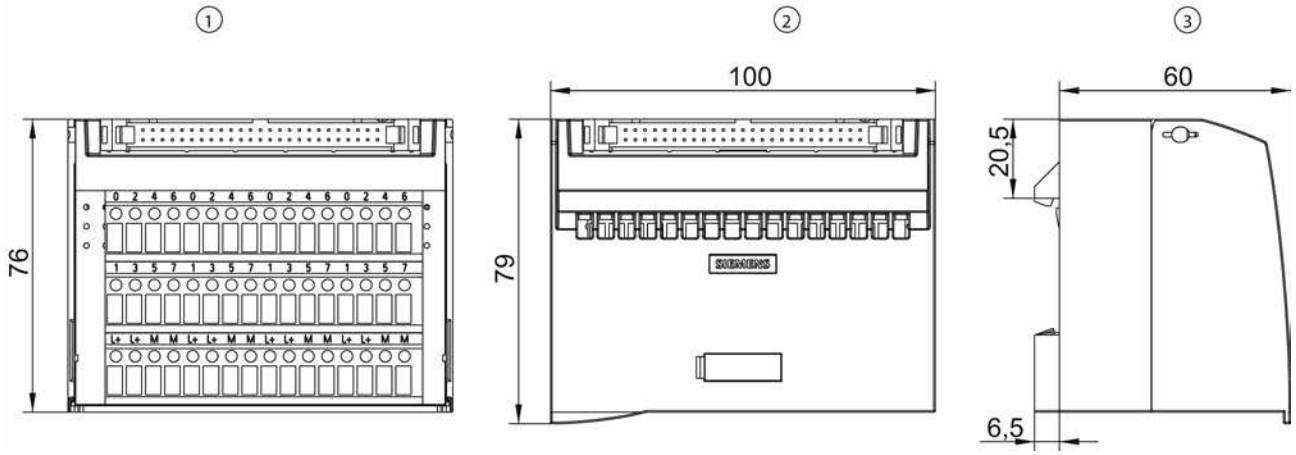

Figure A-19 6ES7924-2AA20-0AA0

Terminal module 6ES7924-2AA20-0BA0

TP1 with LED

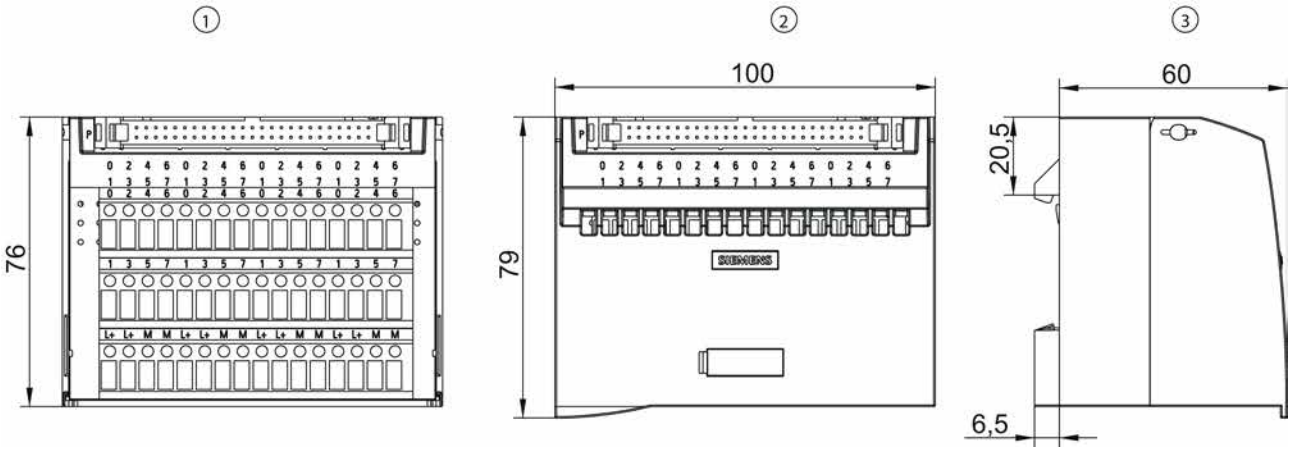

Figure A-20 6ES7924-2AA20-0BA0

Terminal module 6ES7924-2CA20-0AA0

TP3 without LED

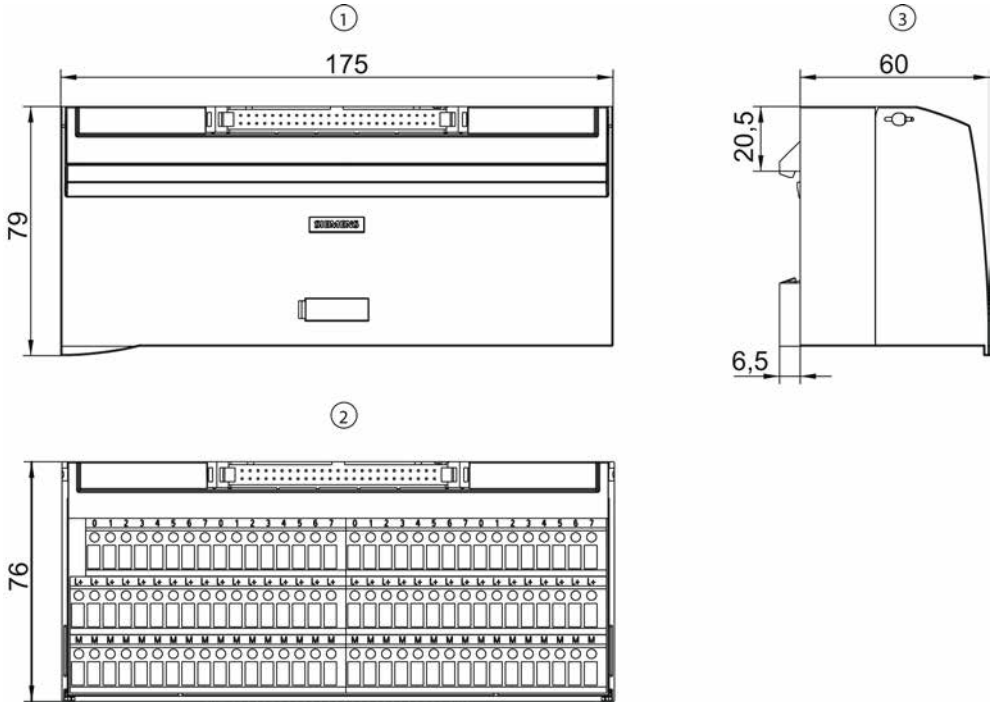

Figure A-21 6ES7924-2CA20-0AA0

Terminal module 6ES7924-2CA20-0BA0

TP3 with LED

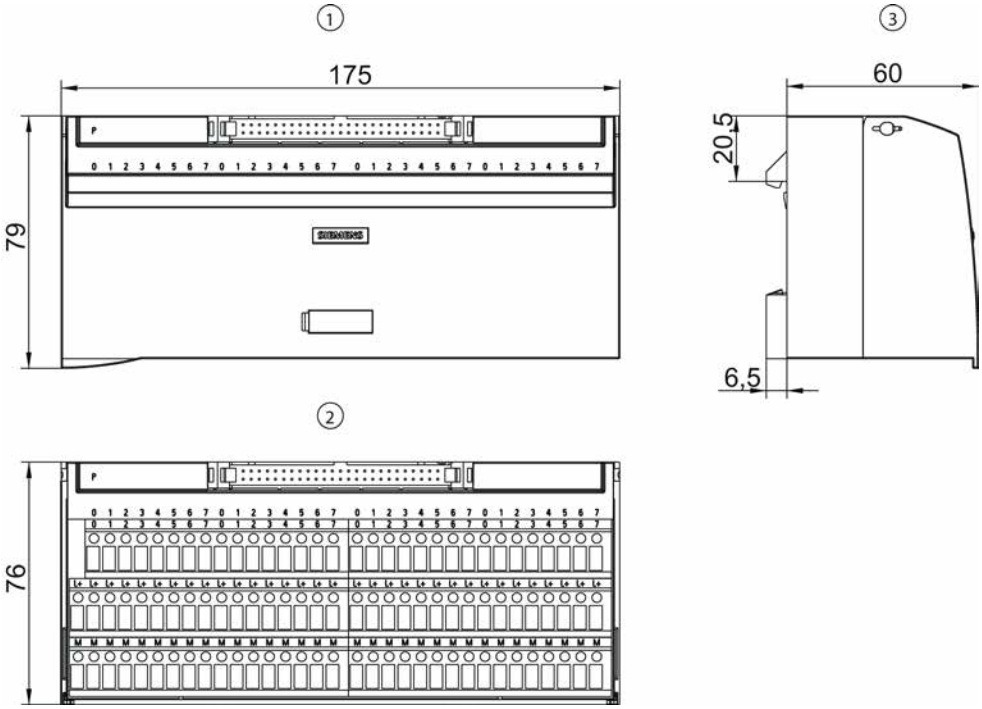

Figure A-22 6ES7924-2CA20-0BA0

Terminal module 6ES7924-2CC20-0AA0

TPA without LED

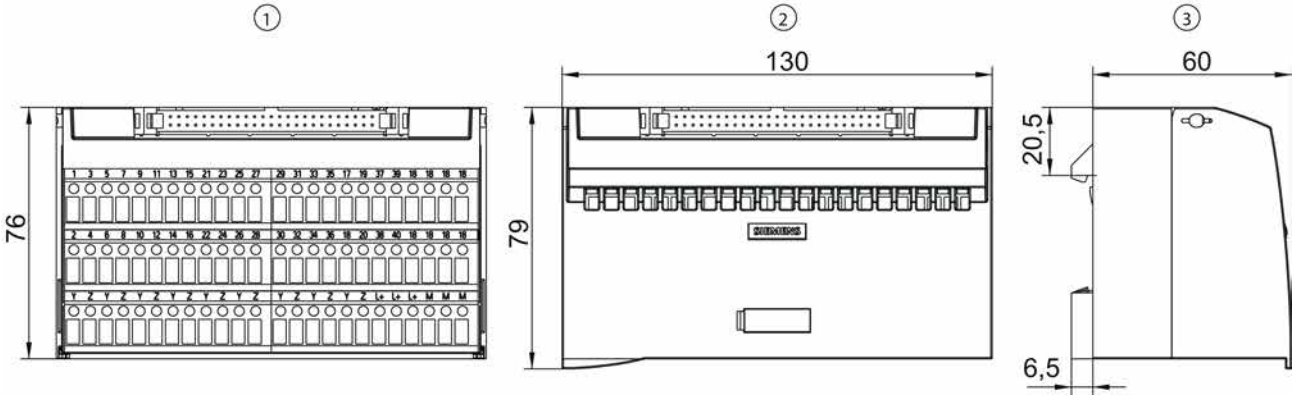

Figure A-23 6ES7924-2CC20-0AA0

Circuit diagrams

B

B.1 Circuit diagrams for front connector modules

Front connector modules 6ES7921-5AB20-0AA0 and 6ES7921-5AH20-0AA0

For digital I/O modules

Front connector module with potential supply

Connecting terminals in

Screw-type system: 6ES7921-5AB20-0AA0

Push-in system: 6ES7921-5AH20-0AA0

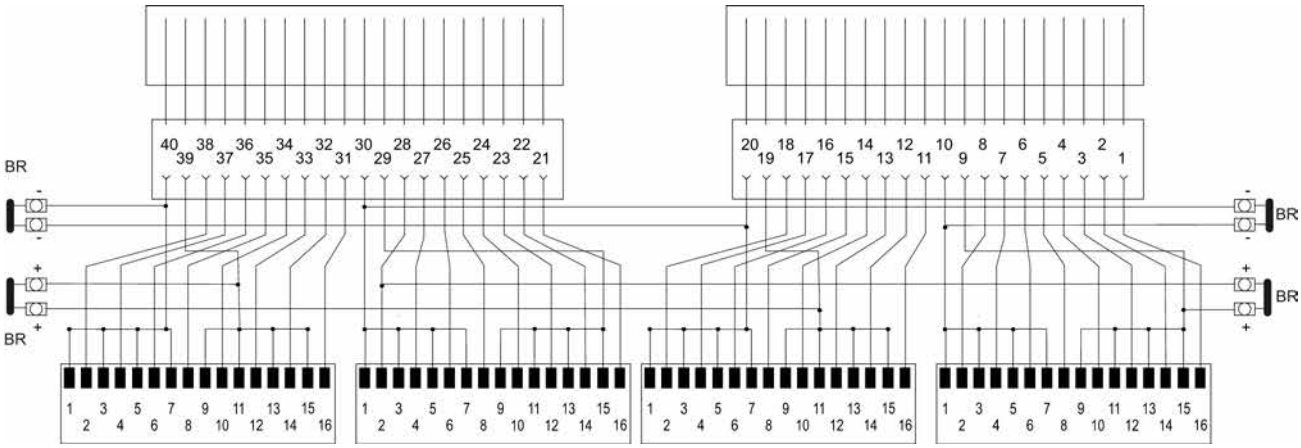

Figure B-1 6ES7921-5AB20-0AA0 and 6ES7921-5AH20-0AA0

Front connector module 6ES7921-5AD00-0AA0 and 6ES7921-5AJ00-0AA0

For 2-ampere digital output modules

Front connector module with potential supply

Connecting terminals in

Screw-type system: 6ES7921-5AD00-0AA0

Push-in system: 6ES7921-5AJ00-0AA0

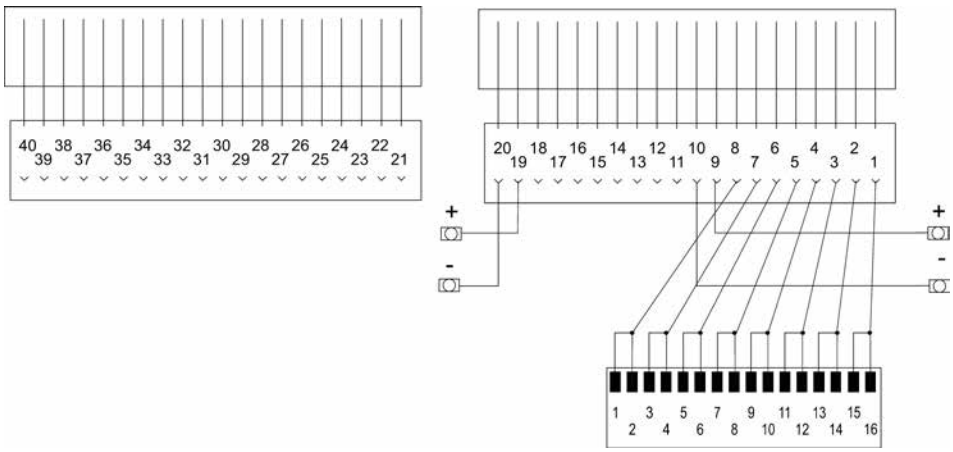

Figure B-2 6ES7921-5AD00-0AA0 and 6ES7921-5AJ00-0AA0

Front connector module 6ES7921-5AK20-0AA0

For analog I/O modules

Front connector module for connecting 4 x 16-pin connecting cables

Article number

6ES7921-5AK20-0AA0

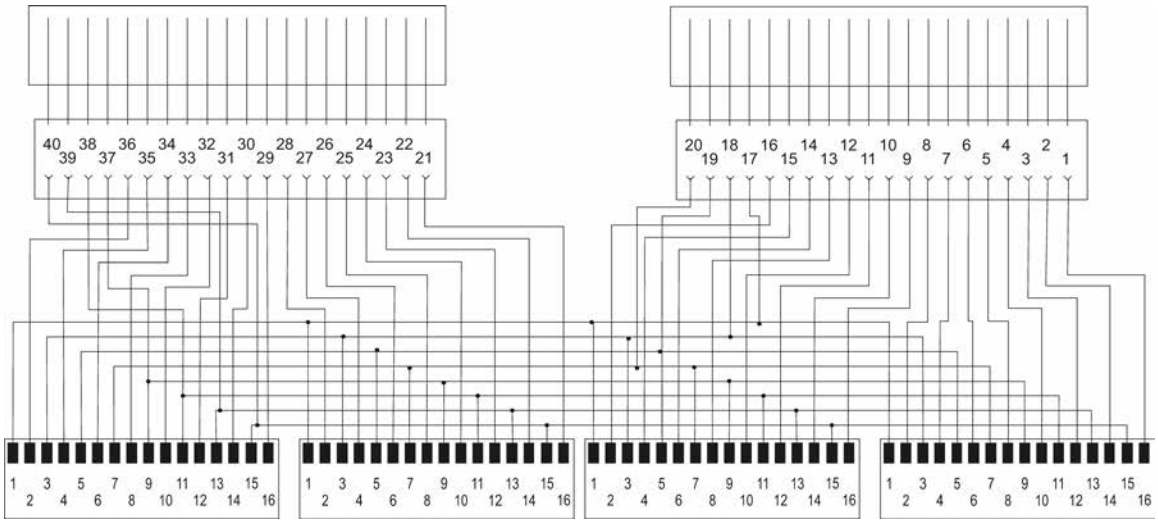

Figure B-3 6ES7921-5AK20-0AA0

Front connector modules 6ES7921-5CB20-0AA0 and 6ES7921-5CH20-0AA0

For digital I/O modules

Front connector module with potential supply

Connecting terminals in

Screw-type system: 6ES7921-5CB20-0AA0

Push-in system: 6ES7921-5CH20-0AA0

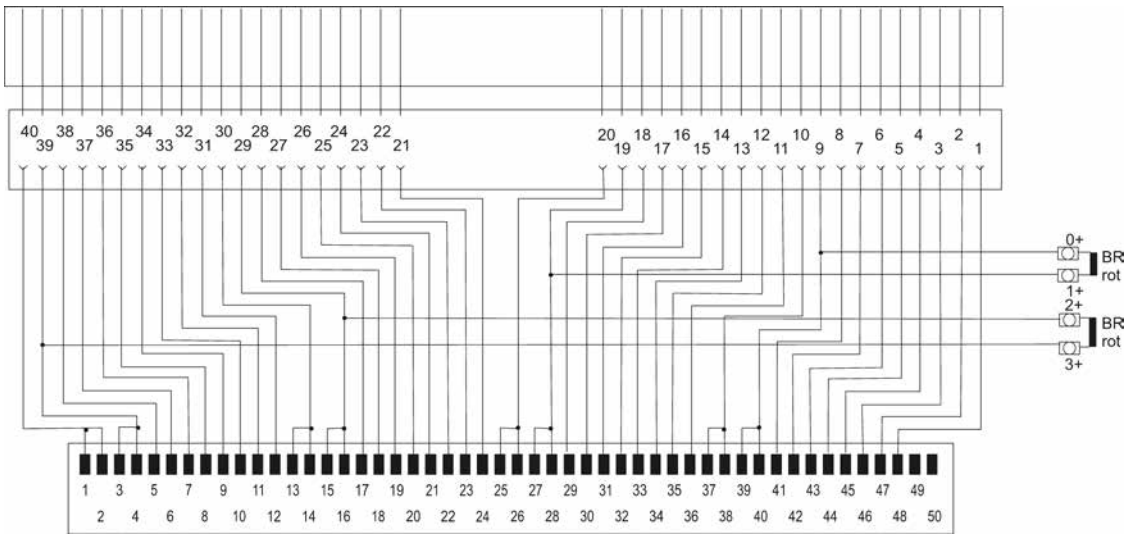

Figure B-4 6ES7921-5CB20-0AA0 and 6ES7921-5CH20-0AA0

Front connector module 6ES7921-5CK20-0AA0

For analog I/O modules

Front connector module for connecting 50-pin connecting cable

Article number

6ES7921-5CK20-0AA0

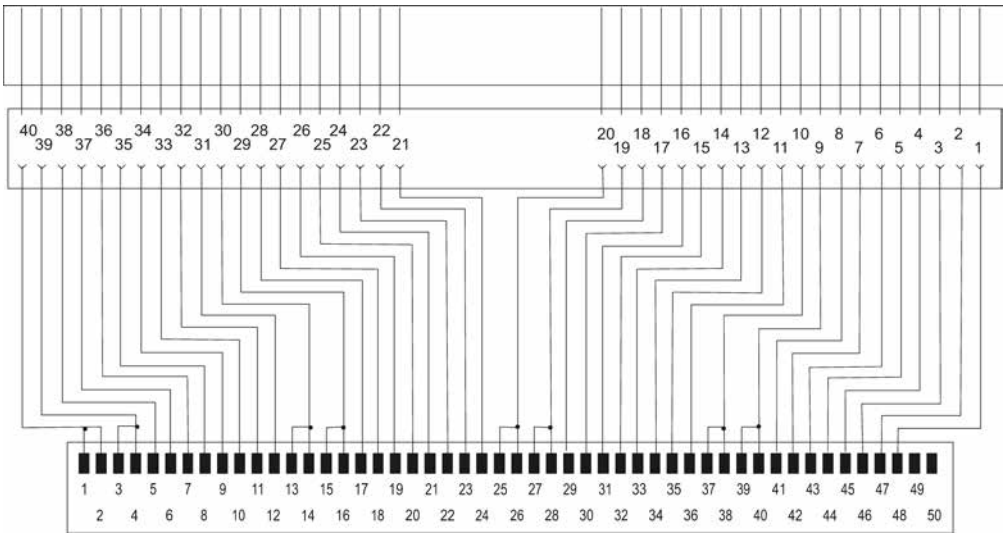

Figure B-5 6ES7921-5CK20-0AA0

B.2 Circuit diagrams, terminal modules for 16-pin connecting cable

Terminal module 6ES7924-0AA20-0Ax0

Terminal module TP1

For S7-300 / ET200M / S7-1500 / ET200MP, for 8 I/O (16-pin connecting cables)

Connecting terminals in

Screw-type system: 6ES7924-0AA20-0AA0

Push-in system: 6ES7924-0AA20-0AC0

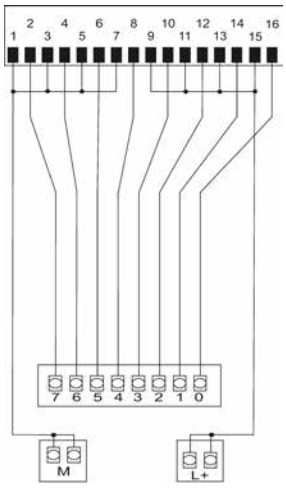

Figure B-6 6ES7924-0AA20-0Ax0

Terminal module 6ES7924-0AA20-0Bx0

Terminal module Tp1 with LED

For S7-300 / ET200M / S7-1500 / ET200MP, for 8 I/O (16-pin connecting cables)

Connecting terminals in

Screw-type system: 6ES7924-0AA20-0BA0

Push-in system: 6ES7924-0AA20-0BC0

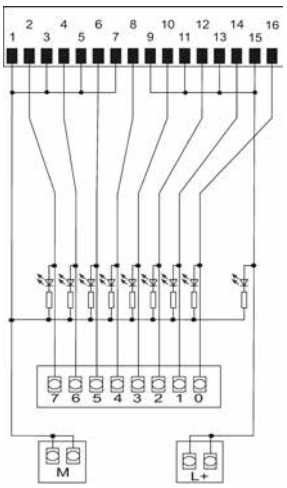

Figure B-7 6ES7924-0AA20-0Bx0

Terminal module 6ES7924-0BB20-0Ax0

Terminal module TP2

For S7-300 / ET200M / S7-1500 / ET200MP, for 8-ampere output module

Connecting terminals in

Screw-type system 6ES7924-0BB20-0AA0

Push-in system 6ES7924-0BB20-0AC0

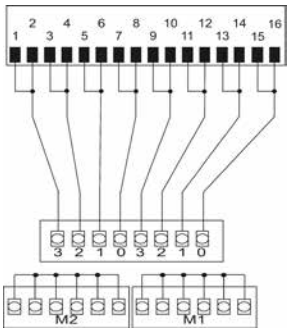

Figure B-8 6ES7924-0BB20-0Ax0

Terminal module 6ES7924-0BD20-0Ax0

Terminal module TPRo

For S7-300 / ET200M / S7-1500 / ET200MP

Connecting terminals in

Screw-type system: 6ES7924-0BD20-0AA0

Push-in system: 6ES7924-0BD20-0AC0

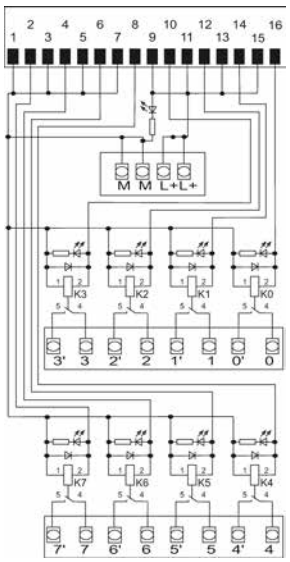

Figure B-9 6ES7924-0BD20-0Ax0

Terminal module 6ES7924-0BE20-0Ax0

Terminal module TPRi 230 V

For S7-300 / ET200M / S7-1500 / ET200MP

Connecting terminals in

Screw-type system: 6ES7924-0BE20-0AA0

Push-in system: 6ES7924-0BE20-0AC0

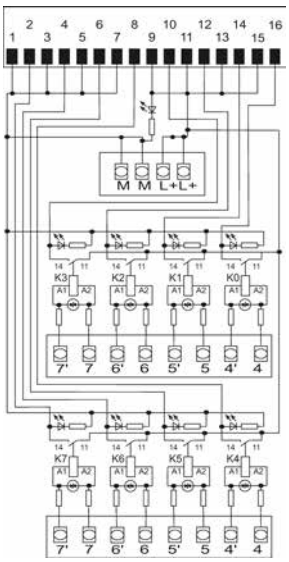

Figure B-10 6ES7924-0BE20-0Ax0

Terminal module 6ES7924-0BF20-0Ax0

Terminal module TPOo

For S7-300 / ET200M / S7-1500 / ET200MP

Connecting terminals in

Screw-type system: 6ES7924-0BF20-0AA0

Push-in system: 6ES7924-0BF20-0AC0

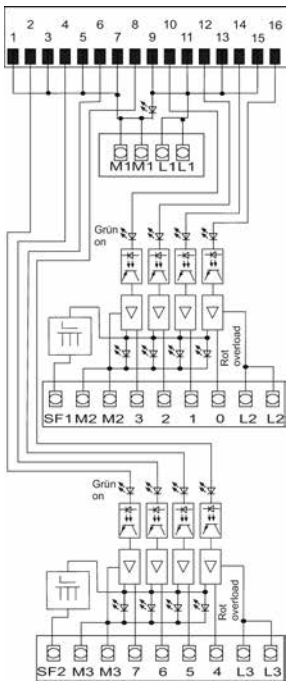

Figure B-11 6ES7924-0BF20-0Ax0

Terminal module 6ES7924-0BG20-0Ax0

Terminal module TPRi 110 V

For S7-300 / ET200M / S7-1500 / ET200MP

Connecting terminals in

Screw-type system: 6ES7924-0BG20-0AA0

Push-in system:6ES7924-0BG20-0AC0

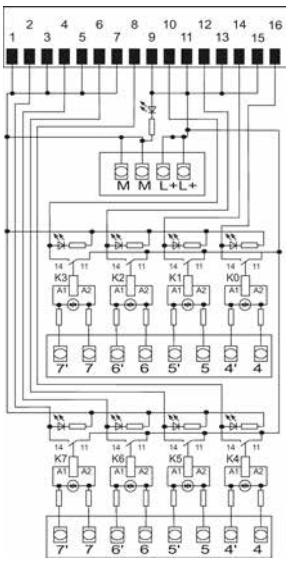

Figure B-12 6ES7924-0BG20-0Ax0

Terminal module 6ES7924-0CA20-0Ax0

Terminal module TP3 without LED

For S7-300 / ET200M / S7-1500 / ET200MP, for 8 I/O (16-pin connecting cables)

Connecting terminals in

Screw-type system: 6ES7924-0CA20-0AA0

Push-in system: 6ES7924-0CA20-0AC0

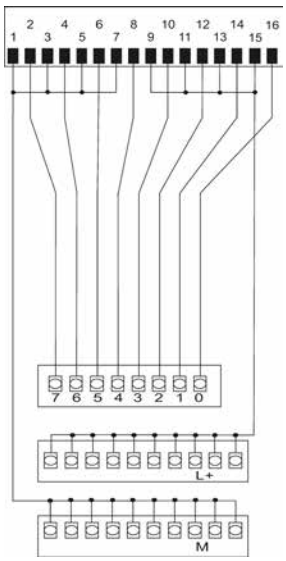

Figure B-13 6ES7924-0CA20-0Ax0

Terminal module 6ES7924-0CA20-0Bx0

Terminal module TP3 with LED

For S7-300 / ET200M / S7-1500 / ET200MP, for 8 I/O (16-pin connecting cables)

Connecting terminals in

Screw-type system:6ES7924-0CA20-0BA0

Push-in system: 6ES7924-0CA20-0BC0

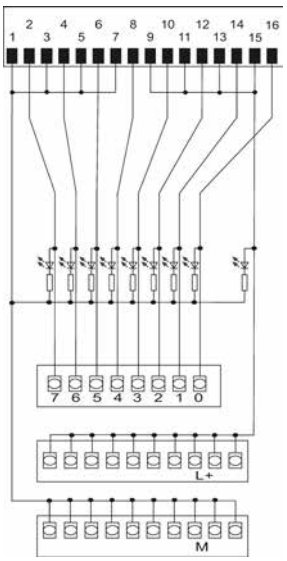

Figure B-14 6ES7924-0CA20-0Bx0

Terminal module 6ES7924-0CC20-0Ax0

Terminal module TPA (S7-1500)

For S7-1500 / ET200MP

Connecting terminals in

Screw-type system: 6ES7924-0CC20-0AA0

Push-in system: 6ES7924-0CC20-0AC0

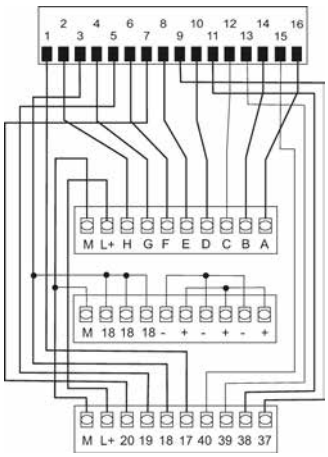

Figure B-15 6ES7924-0CC20-0Ax0

Terminal module 6ES7924-0CH20-0Bx0

Terminal module TPS, with LED switch

For S7-300 / ET200M / S7-1500 / ET200MP, for 8 I/O (16-pin connecting cables)

Connecting terminals in

Screw-type system: 6ES7924-0CH20-0BA0

Push-in system: 6ES7924-0CH20-0BC0

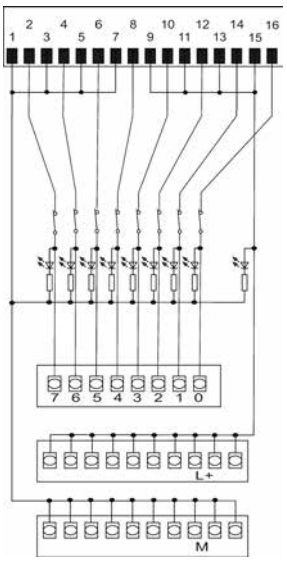

Figure B-16 6ES7924-0CH20-0Bx0

Terminal module 6ES7924-0CL20-0Bx0

Terminal module TPF with LED fuse

For S7-300 / ET200M / S7-1500 / ET200MP, for 8 I/O (16-pin connecting cables)

Connecting terminals in

Screw-type system: 6ES7924-0CL20-0BA0

Push-in system: 6ES7924-0CL20-0BC0

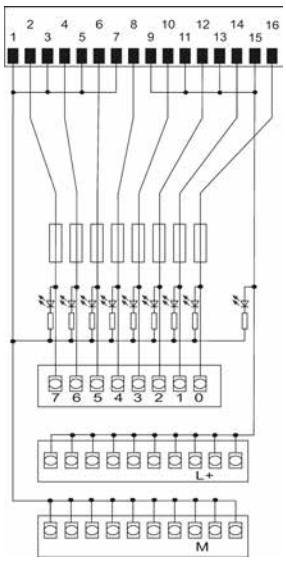

Figure B-17 6ES7924-0CL20-0Bx0

B.3 Circuit diagrams, terminal modules for 50-pin connecting cable

Note

All terminal modules for 50-pin connecting cables are for use with S7-1500 and ET200MP only.

Terminal module 6ES7924-2AA20-0Ax0

Terminal module TP1 without LED

For S7-1500 / ET200MP 32 I/O (50-pin connecting cables)

Connecting terminals in

Screw-type system: 6ES7924-2AA20-0AA0

Push-in system: 6ES7924-2AA20-0AC0

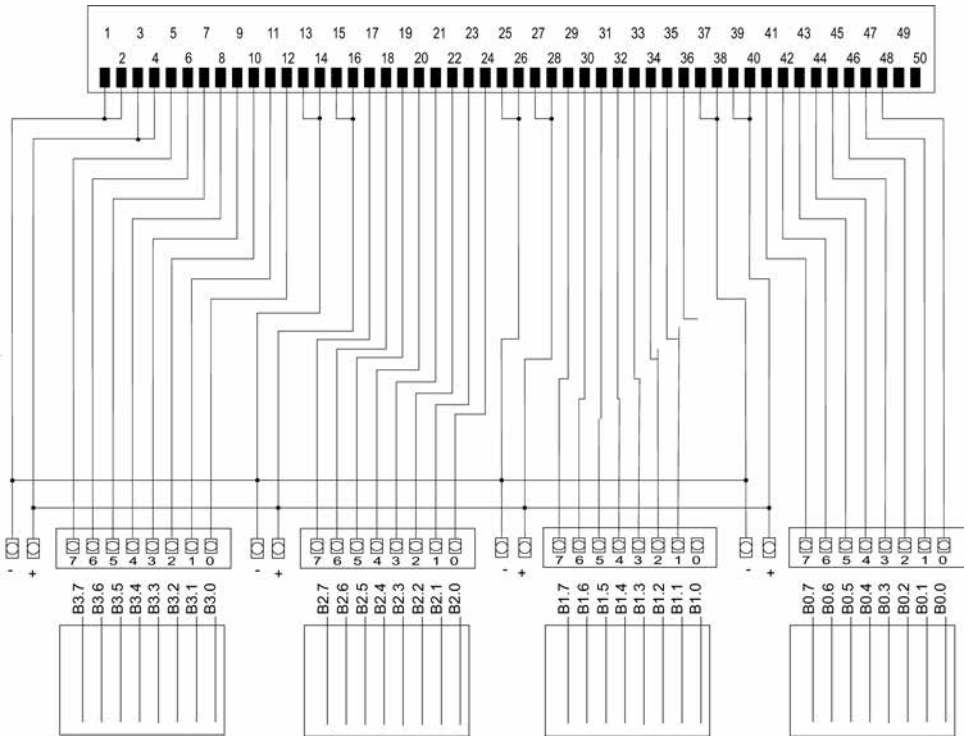

Figure B-18 6ES7924-2AA20-0Ax0

Terminal module 6ES7924-2AA20-0Bx0

Terminal module TP1 with LED

For S7-1500 / ET200MP 32 I/O (50-pin connecting cables)

Connecting terminals in

Screw-type system: 6ES7924-2AA20-0BA0

Push-in system: 6ES7924-2AA20-0BC0

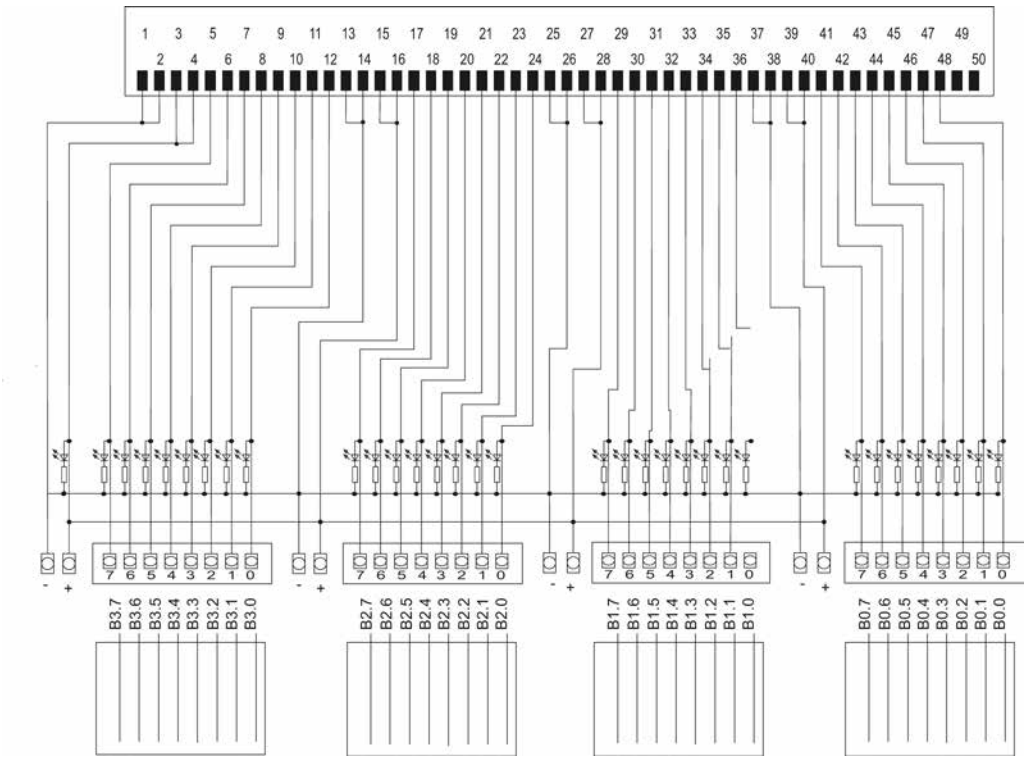

Figure B-19 6ES7924-2AA20-0Bx0

Terminal module 6ES7924-2CA20-0Ax0

Terminal module TP3

For S7-1500 / ET200MP 32 I/O (50-pin connecting cables)

Connecting terminals in

Screw-type system: 6ES7924-2CA20-0AA0

Push-in system: 6ES7924-2CA20-0AC0

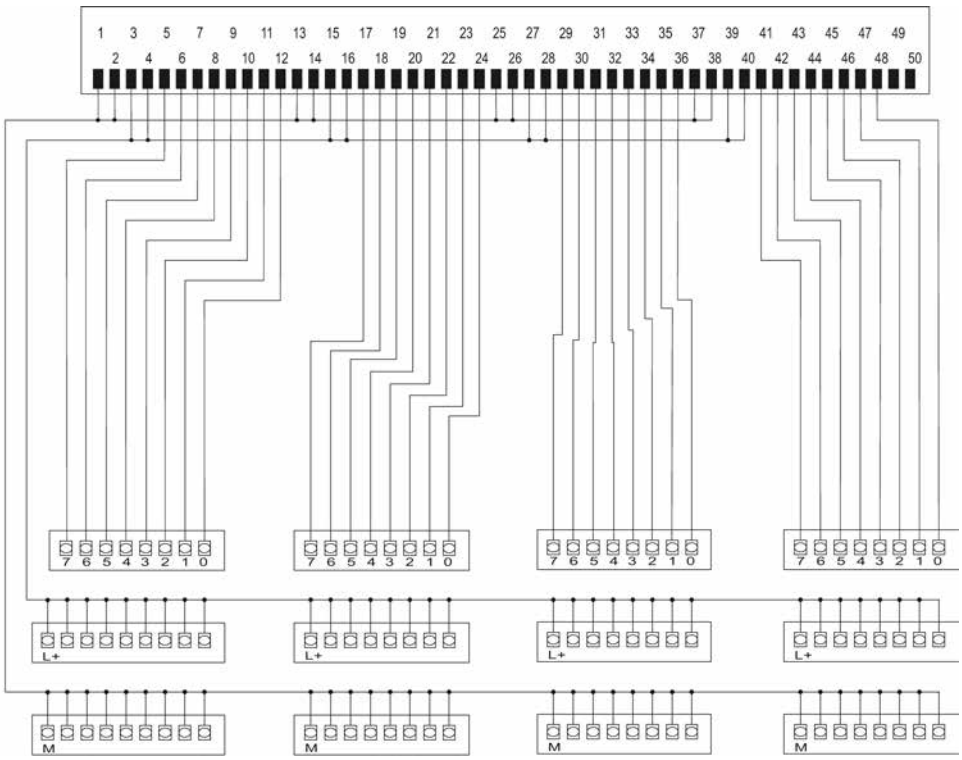

Figure B-20 6ES7924-2CA20-0Ax0

Terminal module 6ES7924-2CA20-0Bx0

Terminal module TP3 with LED

For S7-1500 / ET200MP 32 I/O (50-pin connecting cables)

Connecting terminals in

Screw-type system: 6ES7924-2CA20-0BA0

Push-in system: 6ES7924-2CA20-0BC0

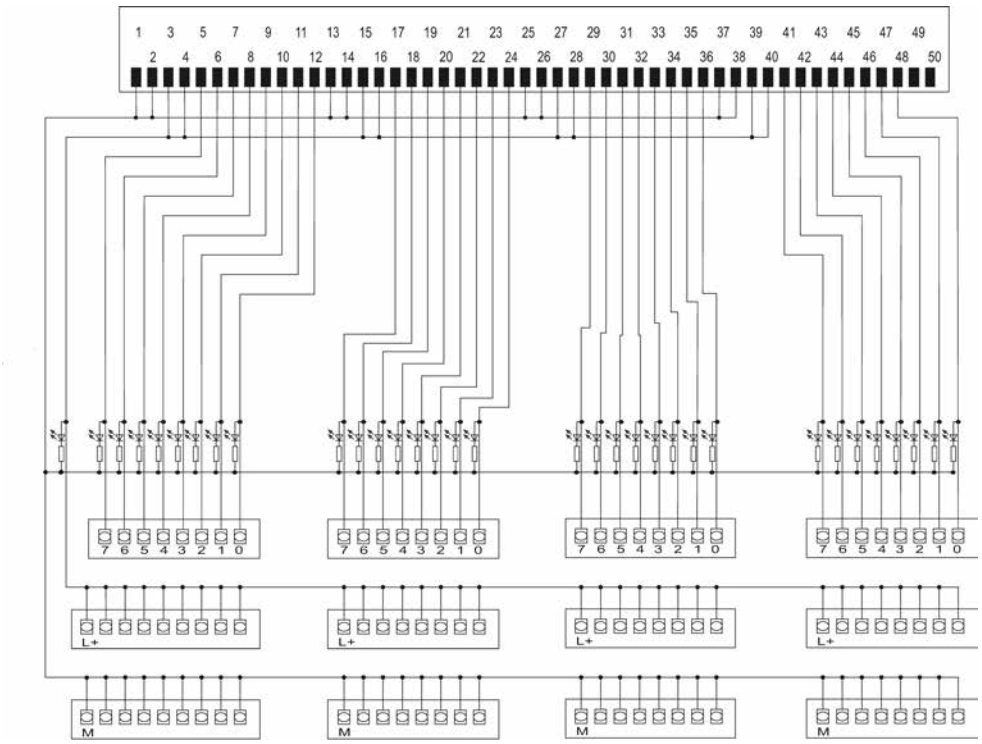

Figure B-21 6ES7924-2CA20-0Bx0

Terminal module 6ES7924-2CC20-0Ax0

Terminal module TPA for S7-1500 / ET200MP analog modules

Connecting terminals in

Screw-type system: 6ES7924-2CC20-0AA0

Push-in system: 6ES7924-2CC20-0AC0

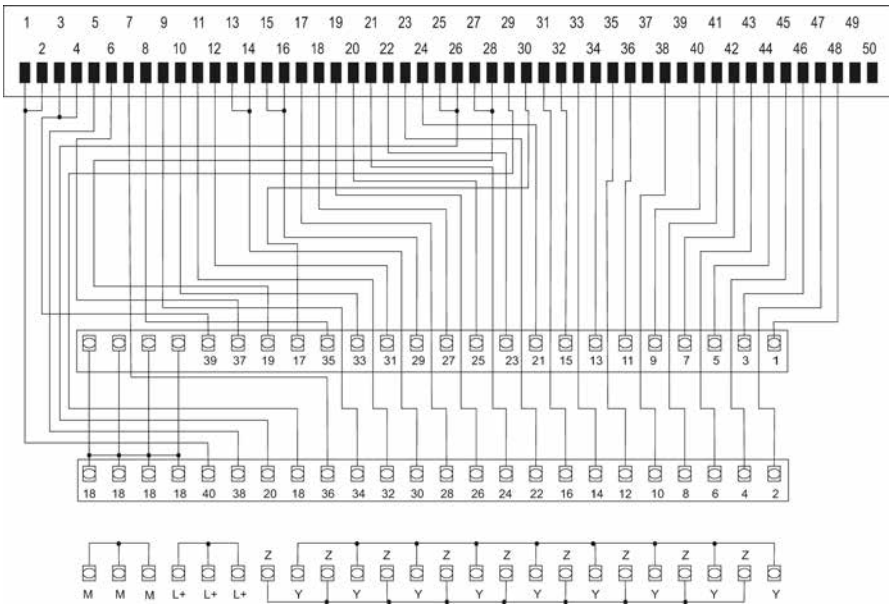

Figure B-22 6ES7924-2CC20-0Ax0

Spare parts / Accessories

C

C.1 Accessories

Accessories for SIMATIC TOP connect system cabling

Designation	Order number
Labels for fitting to terminal modules in the S7-1500 design, pack of 340, plug-in	3RT1900-1SB20
IDC connector (insulation displacement connector), set of 8 with 8 strain reliefs	6ES7921-3BE10-0AA0
Pliers for IDC connectors (insulation displacement connectors) for assembling the round-sheath ribbon cable	6ES7928-0AA00-0AA0
Shield plate TPA for 8 bits, set of 4	6ES7928-1AA20-4AA0
Shield plate TPA for 32 bits, set of 4	6ES7928-1BA20-4AA0
Shield connection clamps for shield plate SIMATIC end, set of 10	6ES7590-5BA00-0AA0
Shield connection clamps for shield plate field end φ 2x 2…6 mm, set of 2	6ES7390-5AB00-0AA0
Shield connection clamps for shield plate field end φ 3…8 mm, set of 2	6ES7390-5BA00-0AA0
Shield connection clamps for shield plate field end φ 4…13 mm, set of 2	6ES7390-5CA00-0AA0
Relay for TPRo 24 V DC, set of 4	6ES7928-3AA20-4AA0
Relay for TPRi 230 V AC, set of 4	6ES7928-3BA20-4AA0
Relay for TPRo 230 V AC, set of 4	6ES7928-3CA20-4AA0
Relay for TPRo 60 V DC, set of 4	6ES7928-3DA20-4AA0
Relay for TPRi 110 V AC, set of 4	6ES7928-3EA20-4AA0
0.6 A fuses, set of 10	6ES7928-6AA20-0AA0
Enclosure cover for terminal module TP1 8-bit, set of 4	6ES7928-5AA20-4AA0
Enclosure cover for terminal module TP2 / TP3 / TPA 8-bit, set of 4	6ES7928-5BA20-4AA0
Enclosure cover for terminal module TP3 32-bit, set of 4	6ES7928-5CA20-4AA0
Enclosure cover for terminal module TPS / TPRo 8-bit and TP1 32-bit, set of 4	6ES7928-5DA20-4AA0
Enclosure cover for terminal module TPF / TPRi / TPOo 8-bit and TPA 32-bit, set of 4	6ES7928-5EA20-4AA0
Round-sheath ribbon cable with 16 wires, 30 m long, unshielded	6ES7923-0CD00-0AA0
Round-sheath ribbon cable with 16 wires, 30 m long, shielded	6ES7923-0CD00-0BA0
Round-sheath ribbon cable with 16 wires, 60 m long, unshielded	6ES7923-0CG00-0AA0
Round-sheath ribbon cable with 16 wires, 60 m long, shielded	6ES7923-0CG00-0BA0
Round-sheath ribbon cable with 2 x 16 wires, 30 m long, unshielded	6ES7923-2CD00-0AA0
Round-sheath ribbon cable with 2 x 16 wires, 60 m long, unshielded	6ES7923-2CG00-0AA0

Online catalog and ordering system

The online catalog and the online ordering system can be found on the Industry Mall homepage:

Industry Mall (http://www.siemens.com/industrymall).

Service and Support

D

Online support

The comprehensive online information platform on all aspects of our Service & Support is available at any time and from any location in the world.

You will find the online support on the Internet at:

Service & Support (http://www.siemens.com/automation/service&support).

Technical support

You can access technical support for all IA/DT products as follows:

- Phone: + 49 (0) 911 895 7222
- E-mail (mailto:support.automation@siemens.com)
- Internet: Web form for support request (http://www.siemens.com/automation/support-request)

Technical documentation on the Internet

The technical documentation for the various SIMATIC products and systems is available on the Internet (http://www.siemens.com/simatic-tech-doku-portal).

Homepage

You can find news about the SIMATIC TOP connect on the Internet (http://www.automation.siemens.com/mcms/automation/de/automatisierungssysteme/systemverkabelung/simatic-top-connect).

Contacts

At your service locally, around the globe: for consulting, sales, training, service, support, spare parts ... for every product supplied by Industry Automation and Drive Technologies.

To find your contact person, please go to our Contacts Database on the Internet (http://www.siemens.com/automation/partner).

Index

A

Accessories for fully modular connection, 16
Area of application, 11
Attaching the shield plate to the terminal module, 45

C

Components
    Connecting cable, 15
    Flexible connection, 16
    For 16-pin connecting cable, 33
    For 50-pin connecting cable, 37
    Front connector module, 14
    Terminal module, 15
Components for 16-pin connecting cable
    Selection guide for 16-pin connecting cable, 33
Components for 50-pin connecting cable
    Selection guide for 50-pin connecting cable, 37
Components for flexible connection, 16
Components for fully modular connection, 14
Connectable I/O modules
    16-pin connecting cable, 17
    50-pin connecting cable, 17
Connecting digital I/O modules, 39
Connecting terminal modules, 32
Connecting the 2 A output module., 41
Connecting the connecting cable to the front connector module, 27
Crimping pliers for IDC connectors, 16
cULus approval, 50

E

EC directives, 50
Electromagnetic compatibility, 50
Electromagnetic compatibility, 50
EMC Directive, 50

F

Flexible connection, 13
Fully modular connection, 12
Functions of the front connector module, 26

I

IDC connector, 16
    Crimping pliers for IDC connectors, 16
IEC 61131, 50
Industrial applications, 50

L

Labeling
    Terminal modules, 32
Labeling terminal modules, 32
Labels, 32
Low-Voltage Directive, 50

M

Marks and approvals, 49

O

Overview of documentation, 10

P

Pre-wiring position, 28
Protection from electric shock, 20
Protection from external electrical interference, 20

S

Selection guide
    16-pin connecting cable, 35
    50-pin connecting cable, 38
Shield connection, 45
    Front connector module, 47
    Shield plate, 45
Shield plate, 45
Standards, 49

T

Terminal module function, 31
Test values, 49

U

Use in residential areas, 51

W

Wiring rules
    Front connector modules, 21
    Terminal modules, 21
Wiring sequence, 23

SIEMENS

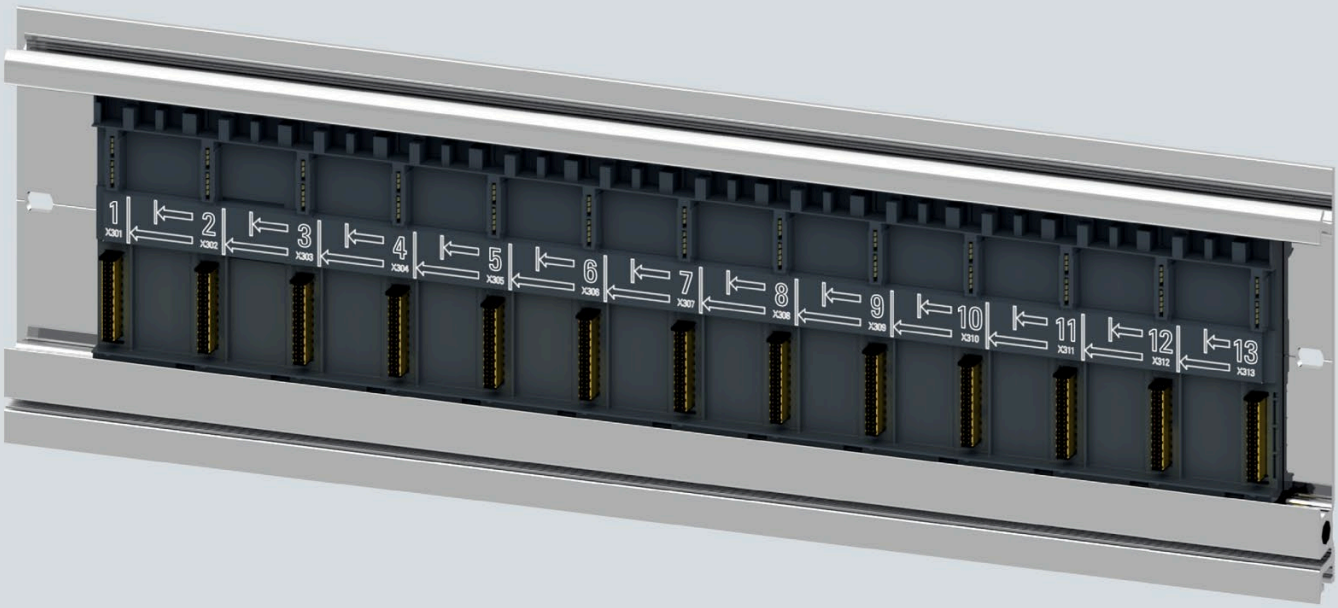

Manual

SIMATIC

S7-1500 / ET 200MP

Active backplane bus ST 1+12 Slot
Active backplane bus ST 1+8 Slot
Active backplane bus ST 1+4 Slot

Edition 07/2020

support.industry.siemens.com

SIEMENS

SIMATIC

S7-1500, ET 200MP
Active backplane bus ST 1+12 slot, active backplane bus ST 1+8 slot, active backplane bus ST 1+4 slot

Equipment Manual

Preface

Documentation guide 1

Description 2

Mounting 3

Operation 4

Configure 5

Maintenance and service 6

Alarm and system messages 7

Technical specifications 8

Dimension drawings 9

Spare parts/accessories 10

List of I/O modules A

07/2020

A5E46240468-AB

Legal information

Warning notice system

This manual contains notices you have to observe in order to ensure your personal safety, as well as to prevent damage to property. The notices referring to your personal safety are highlighted in the manual by a safety alert symbol, notices referring only to property damage have no safety alert symbol. These notices shown below are graded according to the degree of danger.

⚠ DANGER
indicates that death or severe personal injury **will** result if proper precautions are not taken.

⚠ WARNING
indicates that death or severe personal injury **may** result if proper precautions are not taken.

⚠ CAUTION
indicates that minor personal injury can result if proper precautions are not taken.

NOTICE
indicates that property damage can result if proper precautions are not taken.

If more than one degree of danger is present, the warning notice representing the highest degree of danger will be used. A notice warning of injury to persons with a safety alert symbol may also include a warning relating to property damage.

Qualified Personnel

The product/system described in this documentation may be operated only by **personnel qualified** for the specific task in accordance with the relevant documentation, in particular its warning notices and safety instructions. Qualified personnel are those who, based on their training and experience, are capable of identifying risks and avoiding potential hazards when working with these products/systems.

Proper use of Siemens products

Note the following:

⚠ WARNING
Siemens products may only be used for the applications described in the catalog and in the relevant technical documentation. If products and components from other manufacturers are used, these must be recommended or approved by Siemens. Proper transport, storage, installation, assembly, commissioning, operation and maintenance are required to ensure that the products operate safely and without any problems. The permissible ambient conditions must be complied with. The information in the relevant documentation must be observed.

Trademarks

All names identified by ® are registered trademarks of Siemens AG. The remaining trademarks in this publication may be trademarks whose use by third parties for their own purposes could violate the rights of the owner.

Disclaimer of Liability

We have reviewed the contents of this publication to ensure consistency with the hardware and software described. Since variance cannot be precluded entirely, we cannot guarantee full consistency. However, the information in this publication is reviewed regularly and any necessary corrections are included in subsequent editions.

Siemens AG
Digital Industries
Postfach 48 48
90026 NÜRNBERG
GERMANY

A5E46240468-AB
Ⓟ 07/2020 Subject to change

Copyright © Siemens AG 2020.
All rights reserved

Preface

Purpose of the documentation

This documentation provides important information on the active backplane bus for the ET 200MP distributed I/O system.

Basic knowledge required

A basic knowledge of automation engineering is required to understand the documentation.

Scope of the documentation

This documentation applies to all products from the SIMATIC ET 200MP product family.

Conventions

STEP 7: In this documentation, "STEP 7" is used as a synonym for all versions of the configuration and programming software "STEP 7 (TIA Portal)".

The figures in this manual show the active backplane bus ST 1+12 slot. The figures also apply accordingly for the active backplane bus ST 1+8 slot and the active backplane bus ST 1+4 slot.

Recycling and disposal

The products are low in pollutants and can be recycled. For ecologically compatible recycling and disposal of your old device, contact a certificated waste disposal service for electronic scrap.

Security information

Siemens provides products and solutions with industrial security functions that support the secure operation of plants, systems, machines and networks.

In order to protect plants, systems, machines and networks against cyber threats, it is necessary to implement – and continuously maintain – a holistic, state-of-the-art industrial security concept. Siemens' products and solutions constitute one element of such a concept.

Customers are responsible for preventing unauthorized access to their plants, systems, machines and networks. Such systems, machines and components should only be connected to an enterprise network or the internet if and to the extent such a connection is necessary and only when appropriate security measures (e.g. firewalls and/or network segmentation) are in place.

For additional information on industrial security measures that may be implemented, please visit (https://www.siemens.com/industrialsecurity).

Siemens' products and solutions undergo continuous development to make them more secure. Siemens strongly recommends that product updates are applied as soon as they are

available and that the latest product versions are used. Use of product versions that are no longer supported, and failure to apply the latest updates may increase customers' exposure to cyber threats.

To stay informed about product updates, subscribe to the Siemens Industrial Security RSS Feed visit (https://www.siemens.com/industrialsecurity).

Open Source Software

Open-source software is used in the firmware of the I/O modules. Open Source Software is provided free of charge. We are liable for the product described, including the open-source software contained in it, pursuant to the conditions applicable to the product. Siemens accepts no liability for the use of the open source software over and above the intended program sequence, or for any faults caused by modifications to the software.

For legal reasons, we are obliged to publish the original text of the license conditions and copyright notices. Please read the information relating to this on the Internet (https://support.industry.siemens.com/cs/ww/en/view/109739516).

Table of contents

Preface **3**

1 Documentation guide **6**

2 Description **8**

2.1 Application area and function 8

2.2 Properties 9

3 Mounting **11**

4 Operation **15**

5 Configure **17**

5.1 Configure 17

5.2 Configuration of the active backplane bus in the TIA Portal 18

6 Maintenance and service **20**

7 Alarm and system messages **21**

8 Technical specifications **22**

9 Dimension drawings **24**

10 Spare parts/accessories **25**

A List of I/O modules **26**

Index **28**

Documentation guide

1

The documentation for the SIMATIC S7-1500 automation system and the SIMATIC ET 200MP distributed I/O system is arranged into three areas.
This arrangement enables you to access the specific content you require.

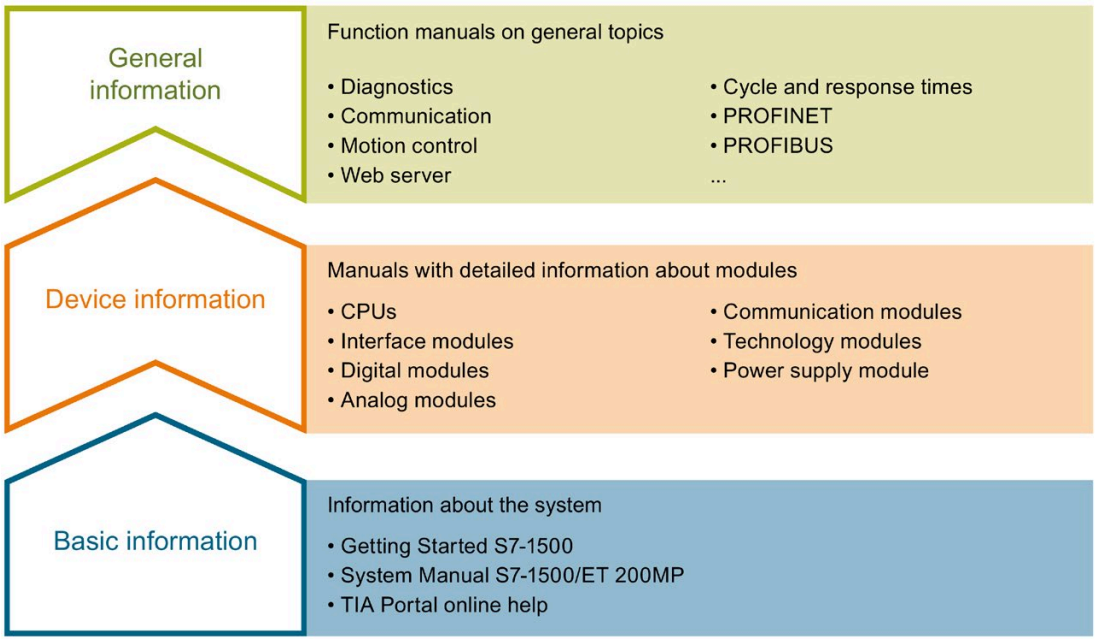

Basic information

The System Manual and Getting Started describe in detail the configuration, installation, wiring and commissioning of the SIMATIC S7-1500 and ET 200MP systems. The STEP 7 online help supports you in the configuration and programming.

Device information

Product manuals contain a compact description of the module-specific information, such as properties, wiring diagrams, characteristics and technical specifications.

General information

The function manuals contain detailed descriptions on general topics regarding the SIMATIC S7-1500 and ET 200MP systems, e.g. diagnostics, communication, motion control, Web server, OPC UA.

You can download the documentation free of charge from the Internet (https://support.industry.siemens.com/cs/ww/en/view/109742691).

Changes and supplements to the manuals are documented in a Product Information.

You can download the product information free of charge from the Internet (https://support.industry.siemens.com/cs/us/en/view/68052815).

Manual Collection S7-1500/ET 200MP

The Manual Collection contains the complete documentation on the SIMATIC S7-1500 automation system and the ET 200MP distributed I/O system gathered together in one file.

You can find the Manual Collection on the Internet (https://support.industry.siemens.com/cs/ww/en/view/86140384).

SIMATIC S7-1500 comparison list for programming languages

The comparison list contains an overview of which instructions and functions you can use for which controller families.

You can find the comparison list on the Internet (https://support.industry.siemens.com/cs/ww/en/view/86630375).

"mySupport"

With "mySupport", your personal workspace, you make the best out of your Industry Online Support.

In "mySupport", you can save filters, favorites and tags, request CAx data and compile your personal library in the Documentation area. In addition, your data is already filled out in support requests and you can get an overview of your current requests at any time.

You must register once to use the full functionality of "mySupport".

You can find "mySupport" on the Internet (https://support.industry.siemens.com/My/ww/en).

Application examples

The application examples support you with various tools and examples for solving your automation tasks. Solutions are shown in interplay with multiple components in the system - separated from the focus on individual products.

You will find the application examples on the Internet (https://support.industry.siemens.com/sc/ww/en/sc/2054).

Description 2

2.1 Application area and function

Benefits

The benefits of the active backplane bus are:

- Reaction-free replacement of a defective module:
  - Without the CPU reporting a station failure
  - Without disturbing modules in the station
- Startup with one or more module gaps. You have the option of plugging in additional modules later.
- Startup with configuration control is possible. You have the possibility to re-configure your plant.

Application

The area of application is everywhere where plant downtimes are not desired. The availability of the plant has the highest priority.

The areas of application are, for example:

- Logistics
  - High-bay storage facilities
  - Baggage conveyors at airports
  - Letter and paper sorting systems in postal logistics
- Infrastructure
  - Water/waste water
  - Tunnels
- Continuous processes that must not be interrupted due to the technical process management
  - Semiconductor industry
  - Chemical
  - Pharmaceutical
  - Battery manufacturing

- Applications in which plant operation must be maintained as long as possible, for example, when a service technician is not immediately available.
  - Offshore installations (oil platforms)
  - Compressors along gas pipelines that maintain the working pressure
- Other applications
  - Signal boxes in railway engineering
  - Shipbuilding

2.2 Properties

Article numbers

- 6ES7590-0BL00-0AA0 (Active backplane bus ST 1+12)
- 6ES7590-0BH00-0AA0 (Active backplane bus ST 1+8)
- 6ES7590-0BD00-0AA0 (Active backplane bus ST 1+4)

View of the active backplane bus

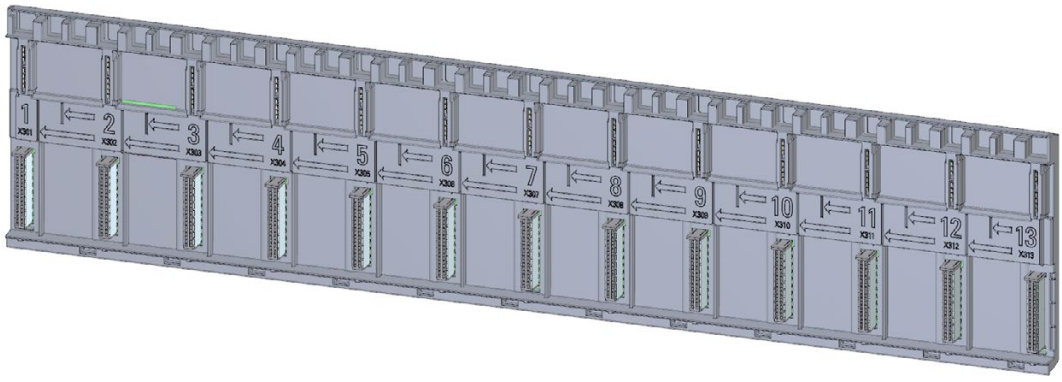

Figure 2-1 Active backplane bus ST 1+12

The active backplane bus is placed in an S7-1500 mounting rail. The mounting rail must be longer than the active backplane bus. There must be enough space for the fixing screws of the mounting rail. Information on the length of the active backplane bus can be found in the section "Mounting (Page 11)".

Properties

The active backplane bus can be used with:

Designation	Article number	As of hardware functional status	as of firmware version
IM 155-5 PN HF	6ES7155-5AA00-0AC0	FS01	V4.4
Digital input modules DI and F-DI	See List of I/O modules (Page 26)		
Digital output modules DQ and F-DQ			
Analog input modules AI			
Analog output modules AQ			
System power supply			
Technology modules			
Communications modules			

The active backplane bus supports:

- Identification data I&M0 to 3
- Firmware update
- Prioritized startup

The following restriction applies for operating with the active backplane bus

Pulling and plugging during operation (hotswap) cannot be performed in isochronous mode.

If any I/O module is plugged or unplugged in a station configured for isochronous mode, the connection to the controller is re-established and the I/O modules are temporarily inaccessible.

Maximum configuration

In addition to the interface module, the active backplane bus can be equipped with a maximum of:

- 12 modules for the active backplane bus ST 1+12
- 8 modules for the active backplane bus ST 1+8
- 4 modules for the active backplane bus ST 1+4

Accessories

You order the following accessories separately:

- Slot protection
- Mounting rail

See also Spare parts/accessories (Page 25)

Mounting

3

Required mounting rail

The following table and diagram help you to select the matching mounting rails for the active backplane bus used.

Active backplane bus	Length of station l_s	Minimum length of mounting rail l_{tot} (2 m rail for cutting to length)	Pre-assembled mounting rail
Active backplane bus ST 1+4 slot	175 mm	210 mm for pre-mounted modules 192.5 mm with left-alignment	245 mm 6ES7590-1AC40-0AA0
Active backplane bus ST 1+8 slot	315 mm	350 mm for pre-mounted modules 332.5 mm with left-alignment	482 mm (19") 6ES7590-1AE80-0AA0
Active backplane bus ST 1+12 slot	455 mm	490 mm for pre-mounted modules 472.5 mm with left-alignment	

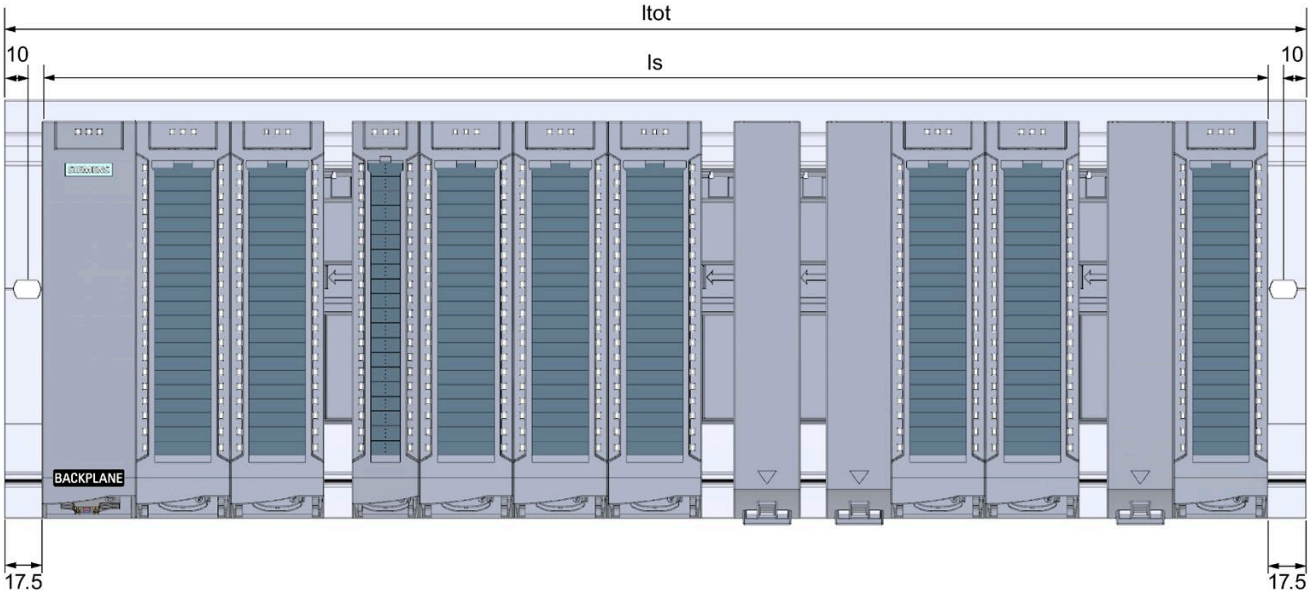

Mounting the mounting rail

Note

No screws behind the active backplane bus

Note that behind the active backplane bus, no screws are available for mounting the mounting rail. Otherwise, the active backplane bus cannot be mounted.

System power supply

With active backplane bus, a system power supply supplies power to the entire station. Which means also to the I/O modules plugged in to the left of the bus. You can plug the system power supply into any slot to the right of the interface module.

Note

System power supply

You must not plug any system power supply to the left of the interface module.

Place the active backplane bus in the mounting rail and mount the modules

Below we will show you how to mount the active backplane bus.

1. Tilt the active backplane bus forward and insert it diagonally into the mounting rail.
2. Push the active backplane bus backwards.

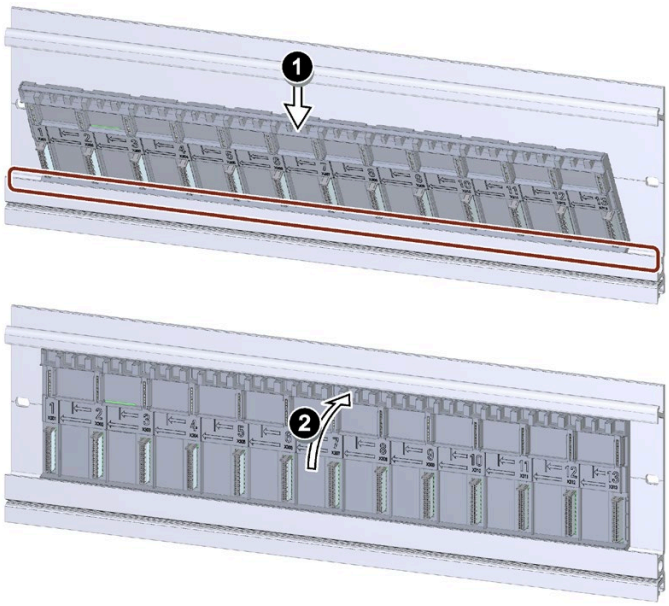

Figure 3-1 Insert the active backplane bus into the mounting rail

3. Hook the interface module on the rail.

   You may only plug in one interface module. The interface module must be plugged into the first slot.

4. Swivel the interface module downwards so that the contacts are connected to the active backplane bus.
5. Align the active backplane bus with the interface module.
6. Tighten the screws for the interface module (tightening torque 1.5 Nm).

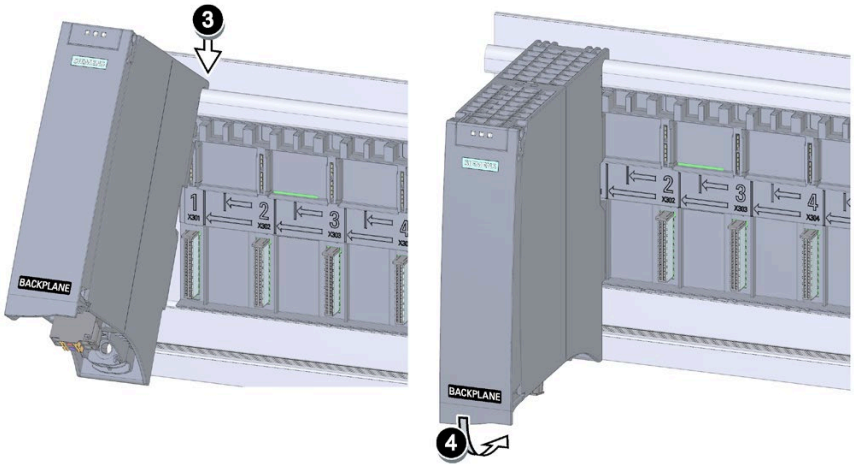

Figure 3-2 Mounting the interface module on the active backplane bus

7. Install the I/O module on the mounting rail. Align a 25 mm or 35 mm wide I/O module with the arrows. A 70 mm wide I/O module covers 2 slots.
8. Swing the I/O module downwards so that the contacts are connected to the active backplane bus.
9. Tighten the screw for the I/O module (tightening torque 1.5 Nm).
10. Repeat the process for all I/O modules that you want to mount.

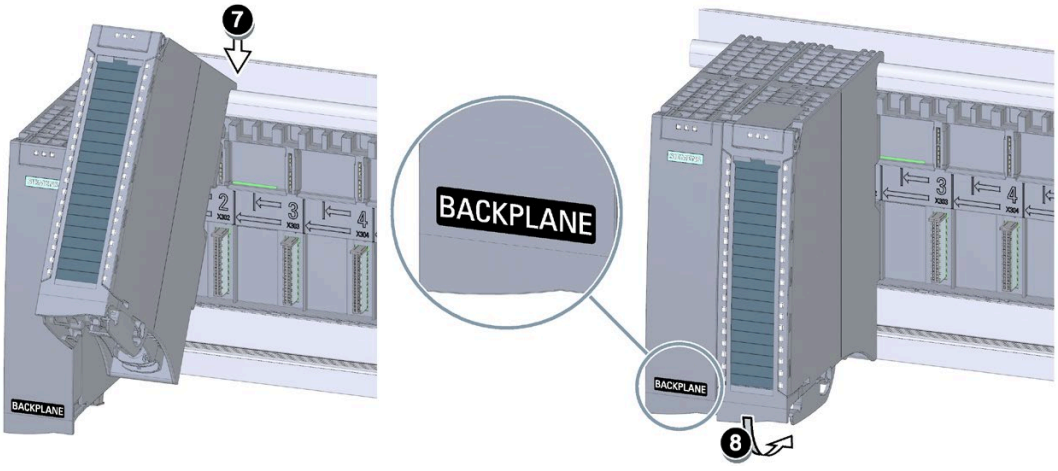

Figure 3-3 Mounting the I/O module on the active backplane bus

11. If you have empty slots on the active backplane bus, then you must provide these slots with a slot protection (see Operation (Page 15)).
12. A "BACKPLANE" sticker is enclosed for the active backplane bus. Use this sticker to identify the interface module. So you can see even with a fully equipped active backplane bus that the I/O modules can be pulled without any reaction.

Slots of I/O modules

Note

Slots

The empty slots need to be provided with a slot protection. The slot protection is used to secure mechanically and to protect the contacts.

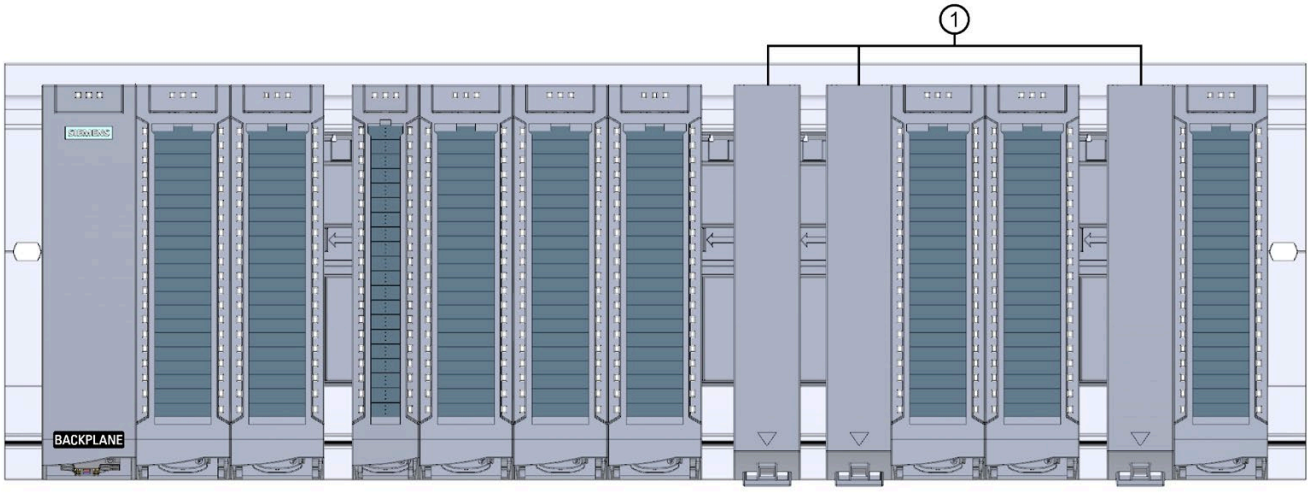

① Slot protection

Figure 3-4 Active backplane bus equipped with modules and slot protection

Operation

4

With the active backplane bus, you can remove and insert

- Plugging and unplugging I/O modules without reaction on the station or the CPU goes into STOP,
- Plugging I/O modules into slots previously left free without the CPU going into STOP.

Pulling and plugging interface modules

The interface module cannot be pulled and plugged reaction-free.

The interface module must not be pulled or plugged under load.

Removing and inserting I/O modules

I/O modules can be pulled and inserted reaction-free.

1. The front connector of the I/O modules may only be disconnected and plugged when de-energized.
2. For the I/O modules, pull the front connector out of the I/O module using the unlocking strap. Swivel the front connector downward and remove it from the groves.
3. Then you may pull the I/O module.
4. When plugging in, proceed in reverse order (see also S7-1500 Automation System system manual (https://support.industry.siemens.com/cs/ww/en/view/59191792)).

Pulling and plugging power supply module

A power supply module cannot be pulled and plugged without reaction.

A power supply module can only be pulled and plugged when de-energized.

Use in explosive area Zone 2

WARNING

Pulling or plugging a module is prohibited in a potentially explosive atmosphere.

If you pull or plug a module or connector during operation, there is a risk of sparking. Sparks can cause an explosion in the hazardous area. Death or serious bodily injury as well as damage to property can be the result.

Do not pull or plug the module or the connectors until one of the following two conditions is met: The area is no longer hazardous or the device and its plug connectors are de-energized.

See product information Deployment of the modules in zone 2 hazardous atmospheres (https://support.industry.siemens.com/cs/ww/de/view/19692172).

Slots of I/O modules

They have an installation with empty slots.

You can plug in additional I/O modules during operation.

Configure

5

5.1 Configure

Configure

You configure the IM 155-5 PN HF interface module with STEP 7 or the configuration software of another manufacturer.

Configuration software	
STEP 7 (TIA Portal)	**GSD file**
• TIA Portal V16 with HSP0318 for the active backplane bus ST 1+12 • TIA Portal V16 with HSP0334 for the active backplane bus ST 1+8 and the active backplane bus ST 1+4	• GSDML V2.34 for the active backplane bus ST 1+12 • GSDML V2.35 for the active backplane bus ST 1+8 and the active backplane bus ST 1+4
-	"Insert" the active backplane bus on slot 0.
Insert the interface module IM 155-5 PN HF in slot 1.	
Insert the I/O modules on slots 2 to 13.	

Note

GSD file

When configuring using a GSD file, more I/O modules can be configured than can be physically inserted. If you configure more I/O modules than can be inserted, the IM 155-5 PN HF sends the message "Module cannot be reached".

Note

GSD file and 70 mm wide system power supply

When you are plugging a 70 mm wide system power supply, note that this system power supply physically occupies two slots. When configuring using the GSD file, you must then leave an empty slot after the system power supply in the configuration. Otherwise, the IM 155-5 PN HF interface module reports the setpoint/actual difference as a "Configuration error".

5.2 Configuration of the active backplane bus in the TIA Portal

The representation of a station in the graphics area of the device view consists of 2 main areas:

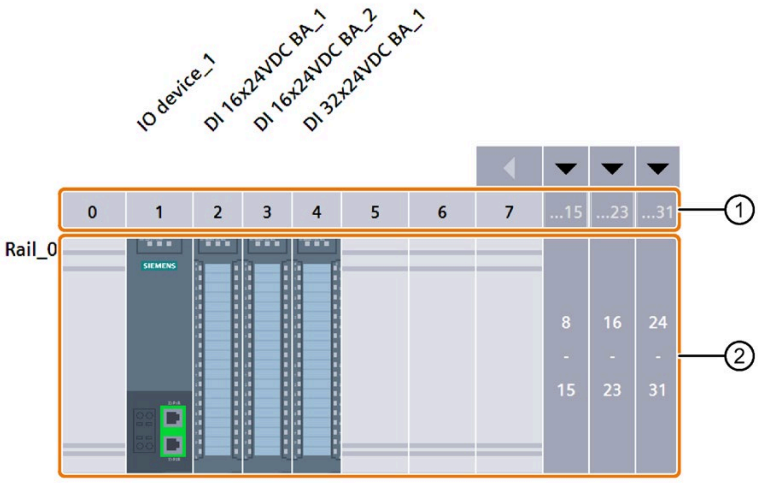

① Rack area

② Module area (slots)

Replacing a rack

To replace the U-connector rack for an active backplane bus, you can use the "Change device" function.

Switch to the device view.

Then there are 2 options for starting the "Change device" function:

- Via the shortcut menu
  - Right-click in the rack area (1) or on the name of the rack (in the figure above e.g. "Rail_0").
  - Select "Change device" from the shortcut menu. A dialog window opens.
  - Select another rack and click "OK". The replacement of the rack starts.
- Via drag-and-drop
  - The hardware catalog is open. Select the "Rack" folder and navigate through the subfolders to the desired rack.
  - Select the desired rack.
  - Drag the rack into the rack area (1) and place it there.

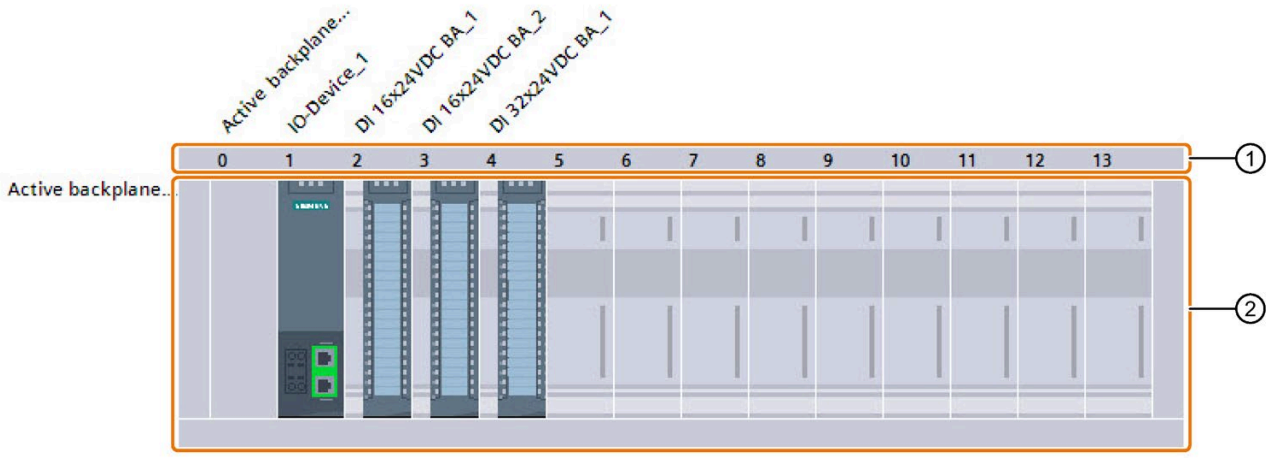

① Rack area

② Module area (slots)

Note

Contrary to plugging modules, the replacement of a rack cannot be started by double-clicking on the catalog entry. The reason for this is that a double-click only works if there is slot free and permitted available. However, only one permissible area is available for a rack, which is always automatically occupied by the standard rack type when a device is plugged in the network view.

With ET 200MP, a representative module is automatically created in slot 0 when replacing into the active backplane rack. This module reflects the diagnostics and parameters of the active backplane bus according to the characteristics of the selected rack.

Additional information

You can find more information in the STEP 7.

Maintenance and service

6

Cycle for pulling and plugging

The active backplane bus serves to increase the system availability. It is designed for occasional pulling and plugging of I/O modules for expansion or in case of faults.

Alarm and system messages

7

Pull/plug interrupt

Each pulling and plugging action of a configured module results in a pull/plug interrupt.

OB 83 is started when a configured module is pulled in RUN mode. If OB 83 is not programmed, the CPU switches to STOP.

When plugging a module into a configured slot in the RUN state, OB 83 is started and the parameter assignment is made if the module matches.

You can find additional information in the STEP 7 online help.

Firmware update

The firmware update is possible:

- Firmware update of the IM 155-5 PN HF or the active backplane bus leads to a restart of the station.

  Pull/plug interrupts of the plugged modules can be reported during a firmware update of the active backplane bus.
- Firmware update of a I/O module leads to a restart of this I/O module only. Other I/O modules are not affected.
- Firmware update of a I/O module in isochronous mode results in a restart of the station.

Technical specifications 8

Technical specifications of the active backplane bus

The following table shows the technical specifications as of 07/2020. On the Internet, you will find a data sheet with technical specifications that are updated daily for the active backplane bus ST 1+12 (https://support.industry.siemens.com/cs/de/en/pv/6ES7590-0BL00-0AA0/td?dl=en), active backplane bus ST 1+8 (https://support.industry.siemens.com/cs/de/en/pv/6ES7590-0BH00-0AA0/td?dl=en) and active backplane bus ST 1+4 (https://support.industry.siemens.com/cs/de/en/pv/6ES7590-0BD00-0AA0/td?dl=en).

Article number	6ES7590-0BL00-0AA0	6ES7590-0BH00-0AA0	6ES7590-0BD00-0AA0
General information			
Product type designation	Active backplane ST 1+12 slot	Active Backplane ST 1+8 Slot	Active Backplane ST 1+4 Slot
HW functional status	FS01	From FS01	
Firmware version	V1.0.0		
• FW update possible	Yes		
Product function			
• I&M data	Yes; I&M0 to I&M3		
• Isochronous mode	Yes		
• Prioritized startup	Yes		
Engineering with			
• STEP 7 TIA Portal configurable/integrated from version	V16		
• STEP 7 configurable/integrated from version	V5.6 and higher		
• PROFINET from GSD version/GSD revision	V2.34 / -		
Power			
Power available from the backplane bus	2 W		
Power loss			
Power loss, typ.	2 W		
Hardware configuration			
Slots			
• Grid size	35 mm; Utilization of 25 mm-wide modules possible		
• Number of slots	13	9	5

Article number	6ES7590-0BL00-0AA0	6ES7590-0BH00-0AA0	6ES7590-0BD00-0AA0
– of which for CPU, max.	0		
– of which for IM, max.	1		
– of which for PS, max.	12; Max. 2 PS per station	2; Max. 2 PS per station	
– of which for IO/CM/CP/TM, max.	12	8	4
– of which for F-IO, max.	12	8	4
• Number of single-width slots, max.	12	8	4
Ambient conditions			
Ambient temperature during operation			
• horizontal installation, min.	-30 °C		
• horizontal installation, max.	60 °C		
• vertical installation, min.	-30 °C		
• vertical installation, max.	40 °C		
Ambient temperature during storage/transportation			
• min.	-40 °C		
• max.	70 °C		
Altitude during operation relating to sea level			
• Installation altitude above sea level, max.	5 000 m; Restrictions for installation altitudes > 2 000 m, see manual		
Dimensions			
Width	434 mm	294 mm	154 mm
Height	99 mm		
Depth	14 mm		
Weights			
Weight, approx.	352 g	245 g	127 g

Use up to 5000 m

When using the active backplane bus up to 5000 m, see S7-1500/ET 200MP Automation System system manual (https://support.industry.siemens.com/cs/ww/en/view/59191792).

A current list of S7-1500 I/O modules that can be operated at elevations above 2,000 m can be found in the product information SIMATIC S7-1500/ET200 MP product information "Using the S7-1500 automation system / ET 200MP distributed I/O system over 2000 m above sea level" (https://support.industry.siemens.com/cs/ww/en/view/109763260).

Dimension drawings

9

Dimension drawing of active backplane bus

This section contains a dimension drawing of the active backplane bus mounted on a mounting rail.

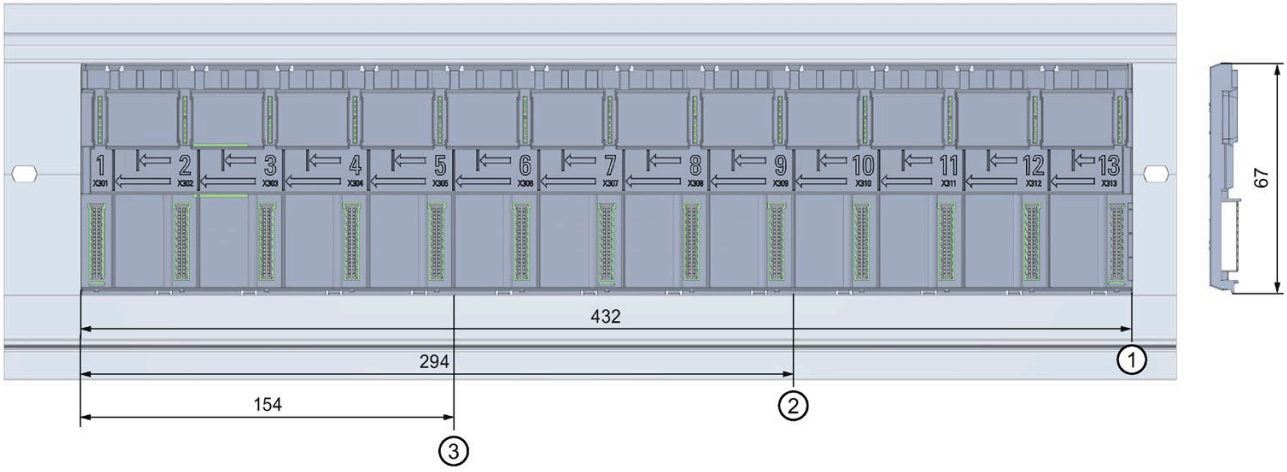

① Length of active backplane bus ST 1+12

② Length of active backplane bus ST 1+8

③ Length of active backplane bus ST 1+4

Figure 9-1 Dimension drawing of active backplane bus front and side view

Spare parts/accessories 10

Spare part compatibility

If spare parts are required, you can replace the active backplane bus ST 1+8 slot with:

- Active backplane bus ST 1+12 slot

If spare parts are required, you can replace the active backplane bus ST 1+4 slot with:

- Active backplane bus ST 1+8 slot
- Active backplane bus ST 1+12 slot

Accessories for the active backplane bus

Table 10- 1 Accessories

Designation	Article number
Slot protection, 5 units	6ES7590-0CA00-0AA0
Mounting rail	
• Mounting rail, 245 mm (with drill holes)	6ES7590-1AC40-0AA0
• Mounting rail, 482 mm (with drill holes)	6ES7590-1AE80-0AA0
• Mounting rail, 530 mm (with drill holes)	6ES7590-1AF30-0AA0
• Mounting rail, 830 mm (with drill holes)	6ES7590-1AJ30-0AA0
• Mounting rail, 2000 mm (without drill holes) for cutting to length	6ES7590-1BC00-0AA0

The active backplane bus is placed in an S7-1500 mounting rail. The mounting rail must be longer than the active backplane bus to provide enough space for the IM 155-5 PN HF and the fixing screws.

List of I/O modules

A

List of interface modules

The following table contains the IM 155-5 PN and the HW and FW versions starting at which it can be used.

Designation	Article number	as of hardware functional status	as of firmware version
IM 155-5 PN HF	6ES7155-5AA00-0AC0	FS01	V4.4

List of the modules

The following table contains the modules of the S7-1500 for the active backplane bus and as of which HW and FW version they can be used.

The I/O modules as of delivery date 03/2020 can be used without restrictions.

Designation	Article number	as of hardware functional status	as of firmware version
DI 16x24VDC HF	6ES7521-1BH00-0AB0	FS02	V2.0.1
DI 16x24VDC BA	6ES7521-1BH10-0AA0	FS01	V1.0.0
DI 32x24VDC HF	6ES7521-1BL00-0AB0	FS02	V2.0.1
DI 32x24VDC BA	6ES7521-1BL10-0AA0	FS01	V1.0.0
DI 16x24...125VUC HF	6ES7521-7EH00-0AB0	FS01	V1.0.0
DI 16x24VDC SRC BA	6ES7521-1BH50-0AA0	FS02	V2.0.0
DI 16x230VAC BA	6ES7521-1FH00-0AA0	FS02	V2.0.0
DQ 16x24VDC/0.5A ST	6ES7522-1BH00-0AB0	FS02	V2.0.2
DQ 16x24VDC/0.5A HF	6ES7522-1BH01-0AB0	FS01	V1.0.0
DQ 16x24VDC/0.5A BA	6ES7522-1BH10-0AA0	FS01	V1.0.0
DQ 32x24VDC/0.5A ST	6ES7522-1BL00-0AB0	FS02	V2.0.2
DQ 32x24VDC/0.5A HF	6ES7522-1BL01-0AB0	FS01	V1.0.0
DQ 32x24VDC/0.5A BA	6ES7522-1BL10-0AA0	FS01	V1.0.0
DQ 8x24VDC/2A HF	6ES7522-1BF00-0AB0	FS02	V2.0.0
DQ 16x24...48VUC/125VDV/0.5A ST	6ES7522-5EH00-0AB0	FS01	V1.0.0
DQ 8x230V/5A ST Relay	6ES7522-5HF00-0AB0	FS02	V2.0.0
DQ 8x230VAC/2A ST Triac	6ES7522-5FF00-0AB0	FS02	V2.0.0
DQ 16x230VAC/2A ST relay	6ES7522-5HH00-0AB0	FS01	V1.0.0
DQ 16Vx230VAC/1A ST Triac	6ES7522-5FH00-0AB0	FS01	V1.0.0
DI 16x24VDC/ DQ 16xDC24VDC/0.5A BA	6ES7523-1BL00-0AA0	FS01	V1.0.0
F-DI 16x24VDC	6ES7526-1BH00-0AB0	FS01	V1.0.2
F-DQ 8x24VDC/2A PPM	6ES7526-2BF00-0AB0	FS03	V1.0.2
AI 8xU/I/RTD/TC ST	6ES7531-7KF00-0AB0	FS02	V2.0.1

Designation	Article number	as of hardware functional status	as of firmware version
AI 8xU/I/R/RTD BA	6ES7531-7QF00-0AB0	FS01	V1.0.0
AI 8xU/I/R/RTD/TC HF	6ES7531-7PF00-0AB0	FS01	V1.0.0
AI 4xU/I/RTD/TC ST	6ES7531-7QD00-0AB0	FS01	V1.0.0
AI 8xU/I HS	6ES7531-7NF10-0AB0	FS01	V1.0.1
AI 8xU/I HF	6ES7531-7NF00-0AB0	FS01	V1.0.0
AQ 2xU/I ST	6ES7532-5NB00-0AB0	FS01	V1.0.0
AQ 4xU/I ST	6ES7532-5HD00-0AB0	FS02	V2.0.0
AQ 4xU/I HF	6ES7532-5ND00-0AB0	FS01	V1.0.0
AQ 8xU/I HS	6ES7532-5HF00-0AB0	FS01	V1.0.0
AI 4xU/I/RTD/TC/AQ 2xU/I ST	6ES7534-7QE00-0AB0	FS01	V1.0.0
PS 25W 24VDC	6ES7505-0KA00-0AB0	FS02	V1.0.1
PS 60W 24/48/60VDC	6ES7505-0RA00-0AB0	FS03	V1.0.1
PS 60 W 120/230V AC/DC	6ES7507-0RA00-0AB0	FS03	V1.0.1
TM Count 2x24V	6ES7550-1AA00-0AB0	FS01	V1.0.0
TM PosInput 2	6ES7551-1AB00-0AB0	FS01	V1.0.0
TM Timer DIDQ 16x24V	6ES7552-1AA00-0AB0	FS01	V1.0.0
TM PTO 4	6ES7553-1AA00-0AB0	FS01	V1.0.0
TM SIWAREX WP521 ST	7MH4980-1AA01	FS01	V1.1.0
TM SIWAREX WP522 ST	7MH4980-2AA01	FS01	V1.1.0
TM NPU	6ES7556-1AA00-0AB0	FS01	V1.0.0
CM PtP RS232 BA	6ES7540-1AD00-0AA0	FS01	V1.0.3
CM PtP RS232 HF	6ES7541-1AD00-0AB0	FS01	V1.0.3
CM PtP RS422/485 BA	6ES7540-1AB00-0AA0	FS01	V1.0.3
CM PtP RS422/485 HF	6ES7541-1AB00-0AB0	FS01	V1.0.3
CM 8xIO-Link	6ES7547-1JF00-0AB0	FS01	V1.0.0

Index

A

Accessories, 10, 25
Active backplane bus
    Installing, 12
Application, 8
Article number, 9

B

Benefits, 8

C

Configure, 1
Cycle for pulling and plugging, 20

D

Dimensional drawing, 24

F

Firmware update, 21

I

Installation, 12

M

Maximum configuration, 10
Modules for the active backplane bus, 26
Mounting rail, 25

O

OB 83, 21

P

Properties, 10
Pull/plug interrupt, 21
Pulling and plugging
    I/O modules, 15
    Interface module, 1
    Power supply module, 15

R

Replacing racks, 2

S

Slot protection, 1
Slots, 12, 16

T

Technical specifications, 22

V

View, 9

SIEMENS

SIMATIC

S7-1500 / ET 200MP

Digital input module F-DI 16x24VDC (6ES7526-1BH00-0AB0)

Manual

Edition 01/2016

Answers for industry.

SIEMENS

SIMATIC

ET 200MP
Digital input module
F-DI 16x24VDC
(6ES7526-1BH00-0AB0)

Manual

Preface

Documentation guide 1

Product overview 2

Connecting 3

Parameters/address space 4

Applications of the F-I/O module 5

Interrupts/diagnostic messages 6

Technical specifications 7

Response times A

Open Source Software B

01/2016

A5E03858068-AA

Legal information

Warning notice system

This manual contains notices you have to observe in order to ensure your personal safety, as well as to prevent damage to property. The notices referring to your personal safety are highlighted in the manual by a safety alert symbol, notices referring only to property damage have no safety alert symbol. These notices shown below are graded according to the degree of danger.

⚠ DANGER

indicates that death or severe personal injury **will** result if proper precautions are not taken.

⚠ WARNING

indicates that death or severe personal injury **may** result if proper precautions are not taken.

⚠ CAUTION

indicates that minor personal injury can result if proper precautions are not taken.

NOTICE

indicates that property damage can result if proper precautions are not taken.

If more than one degree of danger is present, the warning notice representing the highest degree of danger will be used. A notice warning of injury to persons with a safety alert symbol may also include a warning relating to property damage.

Qualified Personnel

The product/system described in this documentation may be operated only by **personnel qualified** for the specific task in accordance with the relevant documentation, in particular its warning notices and safety instructions. Qualified personnel are those who, based on their training and experience, are capable of identifying risks and avoiding potential hazards when working with these products/systems.

Proper use of Siemens products

Note the following:

⚠ WARNING

Siemens products may only be used for the applications described in the catalog and in the relevant technical documentation. If products and components from other manufacturers are used, these must be recommended or approved by Siemens. Proper transport, storage, installation, assembly, commissioning, operation and maintenance are required to ensure that the products operate safely and without any problems. The permissible ambient conditions must be complied with. The information in the relevant documentation must be observed.

Trademarks

All names identified by ® are registered trademarks of Siemens AG. The remaining trademarks in this publication may be trademarks whose use by third parties for their own purposes could violate the rights of the owner.

Disclaimer of Liability

We have reviewed the contents of this publication to ensure consistency with the hardware and software described. Since variance cannot be precluded entirely, we cannot guarantee full consistency. However, the information in this publication is reviewed regularly and any necessary corrections are included in subsequent editions.

Siemens AG
Division Digital Factory
Postfach 48 48
90026 NÜRNBERG
GERMANY

A5E03858068-AA
℗ 01/2016 Subject to change

Copyright © Siemens AG 2016.
All rights reserved

Preface

Purpose of the documentation

This manual supplements the system manual S7-1500 Automation System. You can find information on the functions that apply generally to the S7-1500 automation system and the ET 200MP distributed I/O system in the system manual S7-1500 Automation System (http://support.automation.siemens.com/WW/view/en/59191792).

The information provided in this manual and the system manual enables you to commission the S7-1500 automation system and ET 200MP distributed I/O system.

Conventions

STEP 7: In this documentation, "STEP 7" is used as a synonym for all versions of the configuration and programming software "STEP 7 (TIA Portal)".

Please also observe the notes identified as follows:

Note

A note includes important information on the product described in the documentation, on handling the product or on the part of the documentation to which particular attention should be paid.

Important note for maintaining the operational safety of your system

Note

The operators of systems with safety-related characteristics must adhere to specific operational safety requirements. The supplier is also obliged to comply with special product monitoring measures. Siemens informs system operators by means of personal notifications about product developments and properties which may be or become important issues in terms of operational safety.

You should subscribe to the corresponding notifications in order to obtain the latest information and to allow you to make any necessary modifications to your system.

Log in to Industry Online Support. Follow the links below and click on "Email on update" on the right-hand side in each case:

- SIMATIC S7-300/S7-300F (https://support.industry.siemens.com/cs/products?pnid=13751&lc=en-WW)
- SIMATIC S7-400/S7-400H/S7-400F/FH (https://support.industry.siemens.com/cs/products?pnid=13828&lc=en-WW)
- SIMATIC S7-1500/SIMATIC S7-1500F (https://support.industry.siemens.com/cs/products?pnid=13716&lc=en-WW)
- SIMATIC S7-1200/SIMATIC S7-1200F (https://support.industry.siemens.com/cs/products?pnid=13683&lc=en-WW)
- Distributed I/O (https://support.industry.siemens.com/cs/products?pnid=14029&lc=en-WW)
- STEP 7 (TIA Portal) (https://support.industry.siemens.com/cs/products?pnid=14340&lc=en-WW)

Security information

Siemens provides products and solutions with industrial security functions that support the secure operation of plants, solutions, machines, equipment and/or networks. They are important components in a holistic industrial security concept. With this in mind, Siemens' products and solutions undergo continuous development. Siemens recommends strongly that you regularly check for product updates.

For the secure operation of Siemens products and solutions, it is necessary to take suitable preventive action (e.g. cell protection concept) and integrate each component into a holistic, state-of-the-art industrial security concept. Third-party products that may be in use should also be considered. You can find more information about industrial security on the Internet (http://www.siemens.com/industrialsecurity).

To stay informed about product updates as they occur, sign up for a product-specific newsletter. You can find more information on the Internet (http://support.automation.siemens.com).

Open Source Software

Open-source software is used in the firmware of the product described. Open Source Software is provided free of charge. We are liable for the product described, including the open-source software contained in it, pursuant to the conditions applicable to the product. Siemens accepts no liability for the use of the open source software over and above the intended program sequence, or for any faults caused by modifications to the software.

For legal reasons, we are obliged to publish the original text of the license conditions and copyright notices. Please read the information relating to this in the appendix.

Table of contents

Preface 4

1 Documentation guide 9

1.1 Guide to documentation S7-1500 / ET 200MP 9

2 Product overview 12

2.1 Properties 12

3 Connecting 15

3.1 Block diagram 15

4 Parameters/address space 17

4.1 Parameters 17

4.2 Explanation of parameters 20
4.2.1 F-parameters 20
4.2.1.1 Behavior after channel fault 20
4.2.1.2 Reintegration after channel fault 20
4.2.2 Parameters of the sensor supply 21
4.2.2.1 Supplied channels 21
4.2.2.2 Short-circuit test activated 21
4.2.2.3 Time for short-circuit test 22
4.2.2.4 Startup time of sensors after short-circuit test 23
4.2.3 Parameters of the channel pairs 23
4.2.3.1 Sensor evaluation 23
4.2.3.2 Discrepancy behavior 24
4.2.3.3 Discrepancy time 25
4.2.3.4 Reintegration after discrepancy error 26
4.2.4 Parameters of the channels 26
4.2.4.1 Channel activated 26
4.2.4.2 Input delay 27
4.2.4.3 Channel failure acknowledge 28
4.2.4.4 Pulse extension 28
4.2.4.5 Chatter monitoring 28
4.2.4.6 Number of signal changes 29
4.2.4.7 Monitoring window 29

4.3 Address space 30

5 Applications of the F-I/O module 32

5.1 Applications of the F-DI 16x24VDC 32

5.2 Application 1: Safety mode SIL3/Cat.3/PLd 34

5.3 Application 2: Safety mode SIL3/Cat.3/PLe 37

5.4 Application 3: Safety mode SIL3/Cat.4/PLe 41
5.4.1 Application 3.1 (SIL3/Cat.4/PLe) 42
5.4.2 Use case 3.2 (SIL3/Cat.4/PLe) 44

6 Interrupts/diagnostic messages 47
6.1 Status and error displays 47
6.2 Interrupts 50
6.3 Diagnostic alarms 51
7 Technical specifications 57
A Response times 60
B Open Source Software 62

Documentation guide

1

1.1 Guide to documentation S7-1500 / ET 200MP

The documentation for the SIMATIC S7-1500 automation system and the SIMATIC ET 200MP distributed I/O system is arranged into three areas.
This arrangement enables you to access the specific content you require.

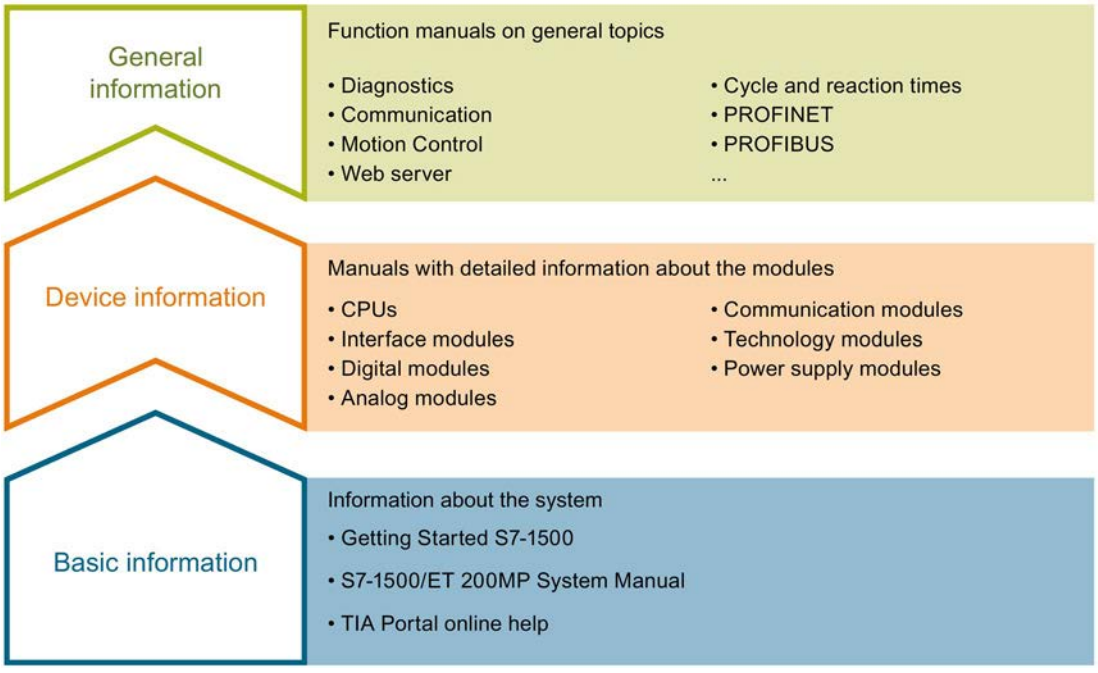

Basic information

The System Manual and Getting Started describe in detail the configuration, installation, wiring and commissioning of the SIMATIC S7-1500 and ET 200MP systems. The STEP 7 online help supports you in the configuration and programming.

Device information

Product manuals contain a compact description of the module-specific information, such as properties, wiring diagrams, characteristics and technical specifications.

General information

The function manuals contain detailed descriptions on general topics regarding the SIMATIC S7-1500 and ET 200MP systems, e.g. diagnostics, communication, Motion Control, Web server.

You can download the documentation free of charge from the Internet (http://www.automation.siemens.com/mcms/industrial-automation-systems-simatic/en/manual-overview/tech-doc-controllers/Pages/Default.aspx).

Changes and supplements to the manuals are documented in a Product Information.

You can download the product information free of charge from the Internet.

Manual Collection S7-1500/ET 200MP

The Manual Collection contains the complete documentation on the SIMATIC S7-1500 automation system and the ET 200MP distributed I/O system gathered together in one file.

You can find the Manual Collection on the Internet (http://support.automation.siemens.com/WW/view/en/86140384).

"mySupport"

With "mySupport", your personal workspace, you make the best out of your Industry Online Support.

In "mySupport", you can save filters, favorites and tags, request CAx data and compile your personal library in the Documentation area. In addition, your data is already filled out in support requests and you can get an overview of your current requests at any time.

You must register once to use the full functionality of "mySupport".

You can find "mySupport" on the Internet.

"mySupport" - Documentation

In the Documentation area in "mySupport" you can combine entire manuals or only parts of these to your own manual.
You can export the manual as PDF file or in a format that can be edited later.

You can find "mySupport" - Documentation on the Internet (http://support.industry.siemens.com/My/ww/en/documentation).

"mySupport" - CAx data

In the CAx data area in "mySupport", you can access the current product data for your CAx or CAe system.

You configure your own download package with a few clicks.

In doing so you can select:

- Product images, 2D dimension drawings, 3D models, internal circuit diagrams, EPLAN macro files
- Manuals, characteristics, operating manuals, certificates
- Product master data

You can find "mySupport" - CAx data on the Internet (http://support.industry.siemens.com/my/ww/en/CAxOnline).

Application examples

The application examples support you with various tools and examples for solving your automation tasks. Solutions are shown in interplay with multiple components in the system - separated from the focus on individual products.

You will find the application examples on the Internet (https://support.industry.siemens.com/sc/ww/en/sc/2054).

TIA Selection Tool

With the TIA Selection Tool, you can select, configure and order devices for Totally Integrated Automation (TIA).
This tool is the successor of the SIMATIC Selection Tool and combines the known configurators for automation technology into one tool.
With the TIA Selection Tool, you can generate a complete order list from your product selection or product configuration.

You can find the TIA Selection Tool on the Internet (http://w3.siemens.com/mcms/topics/en/simatic/tia-selection-tool).

Product overview

2

2.1 Properties

Order number

6ES7526-1BH00-0AB0

View of the module

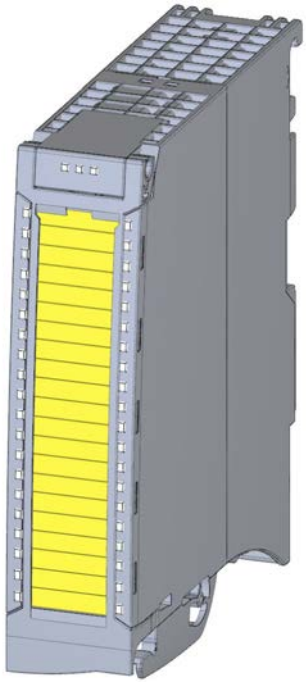

Image 2-1 View of the F-DI 16x24VDC module

Properties

- Technical properties
  - Fail-safe digital module for use in the S7-1500 automation system and in the ET 200MP distributed I/O system.
  - PROFIsafe
  - PROFIsafe address type 2
  - Supports the RIOforFA-Safety profile (on S7-1500 F-CPUs)
  - 16 inputs (SIL3/Category 3/PLd) or 8 inputs (SIL3/Category 4/PLe)
  - 4 outputs for sensor supply
  - Use of various interconnection types are possible (1oo1 & 1oo2)
  - Supply voltage L+
  - Sink input (P-reading)
  - Suitable for connection of 3/4-wire sensors according to IEC 61131:2007, type 1
  - Channel-specific assignable input delay 0.4 ms to 20 ms
  - Internal short-circuit-proof sensor supplies for each channel group
  - External sensor supply possible
  - Status display RUN (green LED)
  - Status display module diagnostics (red LED)
  - Status display channel status/channel diagnostics per input (green/red LED)
  - Status display supply voltage (green LED)
  - Diagnostics, e.g., short-circuit, channel-specific
  - Diagnostics, e.g., load voltage missing, module-specific
  - Channel-specific or module-wide passivation
- Supported functions
  - Firmware update
  - I&M identification data

WARNING

The fail-safe performance characteristics in the technical specifications apply for a mission time of 20 years and a repair time of 100 hours. If a repair within 100 hours is not possible, switch off the supply voltage of the affected module before 100 hours expires.

Follow the repair procedure described in section Diagnostic alarms (Page 51).

Accessories

The following accessories are supplied with the module and can also be ordered as spare part:

- Labeling strips
- U-connector
- Universal front cover
- Electronic coding element

Additional components

The following component is to be ordered separately:

- Front connector incl. potential bridges and cable ties

You can find additional information on accessories in the S7-1500/ET 200MP (http://support.automation.siemens.com/WW/view/en/59191792) system manual.

Connecting 3

3.1 Block diagram

This section includes the block diagram with the general pin assignment of the F-module.

For information on parameter assignment of the F-module, refer to "Parameters/address space (Page 17)".

Information on different connection options is available in the section Applications of the F-I/O module (Page 32).

You can find information on wiring the front connectors and creating the cable shielding, etc., in the Wiring section of the system manual Automation System S7-1500 (http://support.automation.siemens.com/WW/view/en/59191792).

Block diagram

The following figure shows the assignment of channels to addresses (input byte a and input byte b).

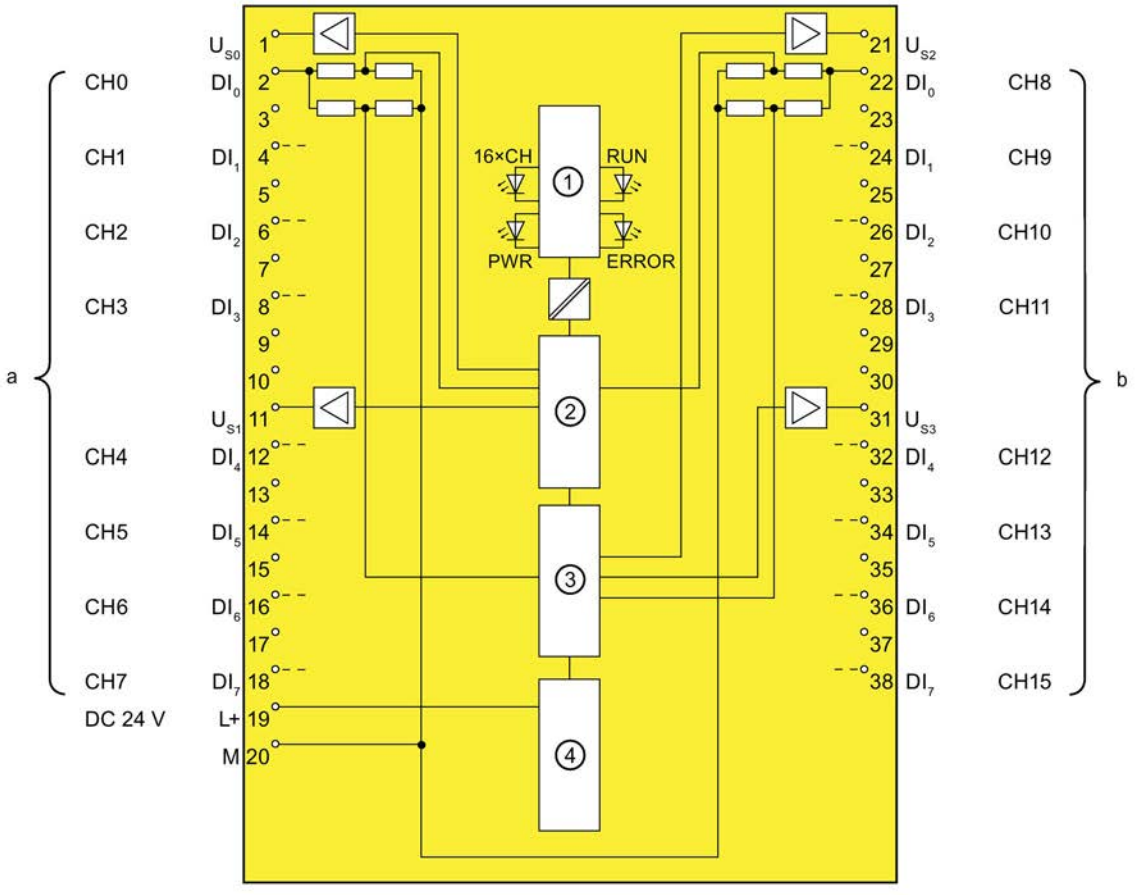

①	Backplane bus interface	L+	Supply voltage 24 V DC
②	Microcontroller 1	M	Chassis ground
③	Microcontroller 2	CH	Channel or LED channel status, channel diagnostics (green, red)
④	Reverse polarity protection	PWR	LED supply voltage (green)
U_{Sn}	Internal sensor supply n	RUN	RUN LED (green)
DI_n	Input bit n	ERROR	LED module diagnostics (red)

Image 3-1 Block diagram of the F-DI 16x24VDC

Parameters/address space 4

4.1 Parameters

Parameters

⚠ WARNING
Diagnostic functions must be activated or deactivated in accordance with the application, see section Applications of the F-I/O module (Page 32).

Table 4- 1 Parameters for F-DI 16x24VDC

Parameter	Value range	Parameter reassignment in RUN	Scope
F-parameters:			
Manual assignment of F-monitoring time	• Disable • Enable	No	Module
F-monitoring time	1 to 65535 ms	No	Module
F-source address	1 to 65534	No	Module
F-destination address	1 to 65534	No	Module
F-parameter signature (without address)	0 to 65535	No	Module
Behavior after channel fault	• Passivate channel • Passivate the entire module	No	Module
Reintegration after channel fault	• Adjustable • All channels automatically • All channels manually	No	Module
F-I/O DB manual number assignment	• Disable • Enable	No	Module
F-I/O DB-number	—	No	Module
F-I/O DB name	—	No	Module
DI parameters:			
Sensor supply			

Parameter	Value range	Parameter reassignment in RUN	Scope
Supplied channels	Sensor supply 0: • No channels • Channels [0..3] • Channels [0..7] • Channels [0..15] Sensor supply 1: • No channels • Channels [4..7] Sensor supply 2: • No channels • Channels [8..11] • Channels [8..15] Sensor supply 3: • No channels • Channels [12..15]	No	Channel group
Short-circuit test activated	• Disable • Enable	No	Channel
Time for short-circuit test	0.9 ms to 2 s	No	Channel
Startup time of sensors after short-circuit test	0.9 ms to 2 s	No	Channel
Channel parameters			
Channel n, n+8			
Sensor evaluation	• 1oo1 evaluation • 1oo2 evaluation, equivalent • 1oo2 evaluation, non-equivalent	No	Channel pair
Discrepancy behavior	• Supply value 0 • Supply last valid value	No	Channel pair
Discrepancy time	5 ms to 30 s	No	Channel pair
Reintegration after discrepancy error	• Test 0-signal not necessary • Test 0-signal necessary	No	Channel pair
Channel n			
Channel activated	• Enable • Disable	No	Channel

Parameter	Value range	Parameter reassignment in RUN	Scope
Input delay	• 0.4 ms • 0.8 ms • 1.6 ms • 3.2 ms • 6.4 ms • 10.0 ms • 12.8 ms • 20.0 ms The provided value range depends on the parameter assignment of the employed sensor supply.	No	Channel
Channel failure acknowledge	• Manual • Automatic The value range offered depends on the F-CPU in use and on the configuration of the F-parameter "Reintegration after channel fault".	No	Channel
Pulse extension	• — • 0.5 s • 1 s • 2 s	No	Channel
Chatter monitoring	• Disable • Enable	No	Channel
Number of signal changes	2 to 31	No	Channel
Monitoring window	0 to 100 s (If 0 s is configured, the monitoring window is 0.5 s long.)	No	Channel

4.2 Explanation of parameters

4.2.1 F-parameters

You must assign the PROFIsafe address (F-destination address together with F-source address) to the F-module before you put it into operation.

- You define the F-source address using the "Basis for PROFIsafe addresses" parameter in the F-CPU.
- An F-destination address unique throughout the CPU is automatically assigned for each F-module. You can manually change the F-destination addresses set in the hardware configuration.

You can find information on F-parameters for the F-monitoring time, the PROFIsafe address assignment (F-source address, F-destination address) and the F I/O DB in the manual SIMATIC Safety - Configuring and Programming (http://support.automation.siemens.com/WW/view/en/54110126).

4.2.1.1 Behavior after channel fault

This parameter is used to specify whether the entire F-module is passivated or just the faulty channel(s) in the event of channel faults:

- "Passivate the entire module"
- "Passivate channel"

4.2.1.2 Reintegration after channel fault

Use this parameter to select how the channels of the fail-safe module are reintegrated after a fault.

Use in S7-300/400 F-CPUs

This parameter is always set to "Adjustable" when you use the fail-safe module in S7-300/400 F-CPUs.

You make the required setting in the F-I/O DB of the fail-safe module.

Use in S7-1500 F-CPUs

When using the fail-safe module in S7-1500 F-CPUs, you set this parameter in the STEP 7 dialog of the fail-safe module:

- "Adjustable"
- "All channels automatically"
- "All channels manually"

If you have set the "Behavior after channel fault" parameter to "Passivate channel", you enable individual setting of the reintegration type per channel with the parameter assignment "Adjustable". The reintegration type of the respective channel is specified with the "Channel failure acknowledge" channel parameter.

If you have set the "Behavior after channel fault" parameter to "Passivate the entire module", you can only select the same reintegration type for all channels.

4.2.2 Parameters of the sensor supply

4.2.2.1 Supplied channels

With this parameter, you specify whether and which internal sensor supply supplies which channel groups. The choice taken applies to the entire channel group (CH0-3, 4-7, 8-11, 12-15).

The following options are available, for example:

Parameter assignment:		Meaning	Parameter assignment:	
Left-hand module side			Right-hand module side	
Sensor supply 0 supplies channels ...	Sensor supply 1 supplies channels ...		Sensor supply 2 supplies channels ...	Sensor supply 3 supplies channels ...
0 to 3	4 to 7	Each channel group is supplied by its own internal sensor supply.	8 to 11	12 to 15
0 to 7	-	The channel groups of the left-hand module side are supplied by the internal sensor supply V_{S0}.	8 to 11	12 to 15
0 to 3	4 to 7	The channel groups of the right-hand module side are supplied by the internal sensor supply V_{S2}.	8 to 15	-
0 to 7	-	The channel groups of the left-hand module side are supplied by the internal sensor supply V_{S0}; the channel groups of the right-hand module side are supplied by the internal sensor supply V_{S2}.	8 to 15	-
0 to 15	-	All the channels of the module are supplied by the internal sensor supply V_{S0}.	-	-

You can also supply the sensors by means of an external sensor supply (parameter "None").

The selection of an internal sensor supply is required for using the short-circuit test.

See also

Short-circuit test activated (Page 21)

Connecting (Page 15)

4.2.2.2 Short-circuit test activated

Here you enable the short-circuit detection for the channels of the F-module for which one of the internal sensor supplies is set ("Supplied channels").

The short-circuit test is always possible when you are using simple switches that do not have their own power supply. For switches with their own power supply, for example, 3/4-wire proximity switches or optical sensors with OSSD (Output Signal Switching Device) outputs, you must adapt the "Startup time of sensors after short-circuit test" parameter to match the sensor in use.

The short-circuit detection switches off the internal sensor supply briefly. The length of the deactivation period is equivalent to the configured "Time for sensor test".

If a short-circuit is detected, the F-module triggers a diagnostic interrupt and the input is passivated.

The following short-circuits are detected:

- Short-circuit of input to L+
- Short-circuit of the input of another channel when it has a 1 signal
- Short-circuit between the input and sensor supply of another channel
- Short-circuit between the sensor supply and the sensor supply of another channel

If the short-circuit test is disabled, you must make your wiring short-circuit and cross-circuit proof or select a connection type (discrepancy, non-equivalent) which also detect the cross-circuits using discrepancy.

Note

During the execution time of the short-circuit test (Time for short-circuit test + Startup time of sensors after short-circuit test), the last valid value of the input before the start of the short-circuit test is passed to the F-CPU. The activation of the short-circuit test thus affects the response time of the respective channel or channel pair.

4.2.2.3 Time for short-circuit test

Function

When the short-circuit test is enabled, the corresponding internal sensor supply is switched off for the configured time. If the module does not detect a "0" signal at the input within the configured time, a diagnostics alarm is generated.

Note the following during parameter assignment:

- If the channel is passivated, this may be due to excessively high capacitance between sensor supply and input. This consists of the capacitance per unit length of the cable and the capacitance of the employed sensor. If the connected capacitance is not discharged within the configured time, you need to adjust the "Time for short-circuit test" parameter.

  Note

  During the execution time of the short-circuit test (Time for short-circuit test + Startup time of sensors after short-circuit test), the last valid value of the input before the start of the short-circuit test is passed to the F-CPU. The activation of the short-circuit test thus affects the response time of the respective channel or channel pair.

- The "Time for short-circuit test" has to be 0.5 ms greater than the set input delay.

4.2.2.4 Startup time of sensors after short-circuit test

Function

In addition to the switch-off time ("Time for short-circuit test"), a startup time must be specified for performing the short-circuit test. You use this parameter to notify the module how long the utilized sensor needs to start up after turning on the internal sensor supply. This prevents an undefined input state due to transient reactions in the sensor.

Note the following during parameter assignment:

- This parameter must be greater than the transient recovery time of the employed sensor.
- Because the assigned time affects the response time of the module, we recommend that you set the time as short as possible but long enough so that your sensor can settle safely.
- The "Startup time of sensors after short-circuit test" must
  - be set to a value greater than the set input delay
  - be at least 1% of the "time for short-circuit test"
  - be 0.5 ms greater than the set input delay.

Requirement

The short-circuit test is enabled.

4.2.3 Parameters of the channel pairs

4.2.3.1 Sensor evaluation

Overview

Select the type of sensor evaluation with the "Evaluation of the sensors" parameter:

- 1oo1 evaluation
- 1oo2 evaluation, equivalent
- 1oo2 evaluation, non-equivalent

1oo1 evaluation

With a 1oo1 evaluation, the sensor occupies only one input channel.

1oo2 evaluation, equivalent/non-equivalent

With a 1oo2 evaluation equivalent/non-equivalent, two input channels are occupied by:

- a two-channel equivalent/non-equivalent sensor
- Two single-channel sensors

The input signals are compared internally for equivalence or non equivalence.

Note that in 1oo2 evaluation, two channels are combined into a channel pair. The number of available process signals of the F-module is reduced accordingly. The evaluation result is provided in the bit of the lower-order channel of the channel pair (channel n).

Discrepancy analysis

When using a two-channel sensor or two single-channel sensors which measure the same process variable, the sensors interact with a slight time delay due to the limited precision of their arrangement.

Discrepancy analysis for equivalence or non-equivalence is used for fail-safe inputs to detect errors caused by the time characteristic of two signals with the same functionality. The discrepancy analysis is initiated when different levels are detected in two associated input signals (when testing for non-equivalence: the same level). A check is made to determine whether the difference in levels (when testing for non equivalence: the same level) has disappeared after an assignable time period, the so-called discrepancy time. If not, there is a discrepancy error.

4.2.3.2 Discrepancy behavior

Function

For the "Discrepancy behavior", you assign the value that is supplied to the safety program in the F-CPU during a discrepancy between two relevant input channels, which means while discrepancy time is running. You assign the discrepancy behavior as follows:

- Supply last valid value"
- "Supply value 0"

Requirements

You have assigned the following:

- "Sensor evaluation": "1oo2 evaluation, equivalent" or "1oo2 evaluation, non-equivalent"

Supply last valid value"

The most recent valid value (old value) before the discrepancy occurred is made available to the safety program in the F-CPU as soon as a discrepancy is detected between the signals of the two affected input channels. This value is supplied until the discrepancy disappears or the discrepancy time expires and a discrepancy error is detected. The sensor-actuator response time is correspondingly increased by this time.

This means the discrepancy time of connected sensors with 1oo2 evaluation must be adjusted to fast response times. It makes no sense, for example, if connected sensors with a discrepancy time of 500 ms trigger a time-critical shutdown. In the worst-case scenario, the sensor-actuator response time is extended by an amount approximately equal to the discrepancy time:

- For this reason, position the sensors in the process in such a way as to **minimize discrepancy**.
- Then select the **shortest possible** discrepancy time which is also sufficient to compensate for faulty triggering of discrepancy errors.

"Supply value 0"

As soon as a discrepancy between the signals of the two relevant input channels is detected, the value "0" is made available to the safety program in the F-CPU.

If you have set "Supply value 0", the sensor-actuator response time is not affected by the discrepancy time.

4.2.3.3 Discrepancy time

Function

You can set the discrepancy time for each channel pair.

Requirements

You have assigned the following:

- "Sensor evaluation": "1oo2 evaluation, equivalent" or "1oo2 evaluation, non-equivalent"

In most cases, a discrepancy time is started, but does not fully expire because the signal differences are cleared within a short time.

- Set the discrepancy time high enough that in the error-free case the difference between the two signals (when testing for non equivalence: the same levels) has always disappeared before the discrepancy time has expired.

Behavior while discrepancy time is running

While the programmed discrepancy time is running internally on the module, either the **last valid value** or **"0"** is returned to the safety program on the F-CPU by the input channels involved, depending on the parameter settings for the behavior at discrepancy.

Behavior after expiration of the discrepancy time

If no agreement (when checking for non equivalence: inequality) of the input signals exists once the assigned discrepancy time expires, for example, due to a break in a sensor wire, a discrepancy error is detected and the "Discrepancy error" diagnostic message containing information on which channels are faulty is generated.

4.2.3.4 Reintegration after discrepancy error

Function

This parameter specifies the criteria for when a discrepancy error is regarded as corrected, thus enabling reintegration of the relevant input channels. The following parameter assignment options are available:

- "Test 0-Signal necessary"
- "Test 0-Signal not necessary"

Requirements

You have assigned the following:

- "Sensor evaluation": "1oo2 evaluation, equivalent" or "1oo2 evaluation, non-equivalent"

"Test 0-Signal necessary"

If you have assigned "Test 0-signal necessary", a discrepancy error is not regarded as corrected until a 0-signal is present at both of the relevant input channels.

If you are using non equivalent sensors, which means you have set "Sensor evaluation" to "1oo2 evaluation, non-equivalent", the result of the channel pair must provide a 0-Signal again.

"Test 0-Signal not necessary"

If you have assigned "Test 0-Signal not necessary", a discrepancy error is regarded as corrected when a discrepancy no longer exists at both of the relevant input channels.

4.2.4 Parameters of the channels

4.2.4.1 Channel activated

You hereby enable the corresponding channel for signal processing in the safety program.

4.2.4.2 Input delay

Function

To suppress injected interference, you can set an input delay for a channel or a channel pair.

Interference pulses whose pulse time is less than the set input delay (in ms) are suppressed. Suppressed interference pulses are not visible in the process image input (PII).

A high input delay suppresses longer interference pulses, but results in a longer response time.

The set value for the input delay has to be smaller than the configured "Startup time of sensors after short-circuit test" and smaller than the configured "Time for short-circuit test".

With 1oo2 evaluation, the input delay of the lower-order channel (channel n) automatically applies to the higher-order channel (channel n+8).

Note

If there is an input delay < 3.2 ms, you have to use shielded cables.

Note

Due to the physical properties, there is a possibility of crosstalk between signals in the case of long, unshielded signal lines (see section "Electromagnetic compatibility" in the system manual S7-1500 Automation System (http://support.automation.siemens.com/WW/view/en/59191792)).

If the interference pulses occur with a short-circuit test, the fail-safe digital inputs are passivated. Increase the input delay or use shielded signal lines in order to prevent possible passivation of the fail-safe digital inputs and switch-off of the internal sensor supply.

See also

Technical specifications (Page 57)

Response times (Page 60)

4.2.4.3 Channel failure acknowledge

Use in S7-1500 F-CPUs

This parameter is only relevant if the fail-safe module is operated on an S7-1500 F-CPU, and can only be set if the F-parameter "Behavior after channel fault" is set to "Passivate channel" and the F-parameter "Reintegration after channel fault" is set to "Adjustable".

The value of this parameter specifies how the channel should react to a channel fault:

- Manual: A channel failure is reintegrated after manual acknowledgment.
- Automatically: The channel is reintegrated automatically after a channel fault. Manual acknowledgment is not necessary.

Use in S7-300/400 F-CPUs

The value of this parameter is not relevant in the case of operation on S7-300/400 F-CPUs. There you set the corresponding property at the F-I/O DB by means of the ACK_NEC tag.

For detailed information about the F-I/O DB, refer to the SIMATIC Safety – Configuring and Programming (http://support.automation.siemens.com/WW/view/en/54110126) manual.

4.2.4.4 Pulse extension

Function

Pulse extension is a function to extend a digital input signal. A pulse on a digital input is extended to at least the assigned length. If the input pulse is already longer than the assigned length, the pulse is not changed.

The fail-safe electronic module only lengthens pulses with the value "0" because the basis of the safety concept is that there is a safe state for all process variables. For digital F-I/O, this is the value "0", which applies to sensors as well as to actuators.

The pulse extension can only be configured with 1oo1 evaluation.

4.2.4.5 Chatter monitoring

Function

Chatter monitoring is a process control function for digital input signals. It detects and reports unusual signal sequences in the process with 1oo1 evaluation, for example, an input signal fluctuating between "0" and "1" too frequently. The occurrence of such signal characteristics is an indication of faulty sensors or process control instability.

Recognizing unusual signal patterns

An assigned monitoring window is available for each input channel. The monitoring window starts with the first signal change of the input signal. If the input signal changes within the monitoring window at least as often as the assigned "Number of signal changes", a chatter error is detected. If no chatter error is detected within the monitoring window, the next signal change restarts the monitoring window.

If a chatter error is detected, a diagnostic is signaled. If the chatter error does not occur for the monitoring window for three times the configured period, the diagnostic is reset.

Principle

The figure below shows the principle of chatter monitoring as a graphic.

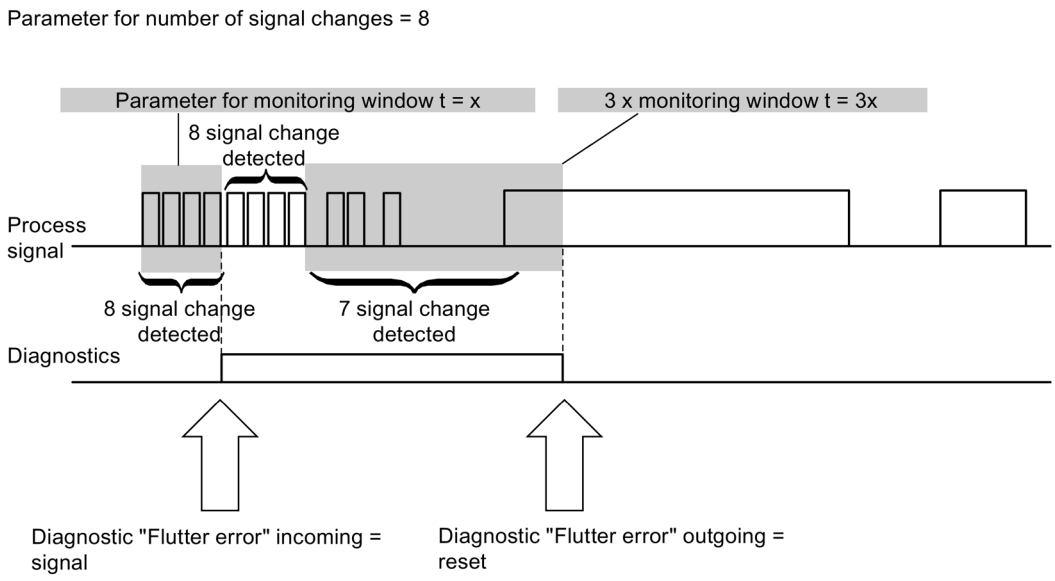

Image 4-1 Figure chatter monitoring

4.2.4.6 Number of signal changes

Sets the number of signal changes after which a chatter error should be reported (value range: 2 to 31).

4.2.4.7 Monitoring window

Sets the time for the monitoring window of flutter monitoring.

You can set times of 1 s to 100 s in whole seconds for the monitoring window.

Enter 0 to configure a monitoring window of 0.5 s.

4.3 Address space

Address assignment of the digital input module F-DI 16x24VDC

The digital input module F-DI 16x24VDC occupies the following address areas in the F-CPU:

Table 4- 2 Address assignment in the F-CPU

Occupied bytes in the F-CPU:		
F-CPU	In input range	In output range
S7-300/400 F-CPUs	IB x + 0 to x + 7	QB x + 0 to x + 3
S7-1500 F-CPUs	IB x + 0 to x + 8	QB x + 0 to x + 4

x = Module start address

Address assignment of the user data and the value status of digital input module F-DI 16x24VDC

The user data occupies the following addresses in the F-CPU out of all the assigned addresses of the digital input module F-DI 16x24VDC:

Table 4- 3 Address assignment through user data

Byte in the F-CPU	Assigned bits in F-CPU per F-module:							
	7	6	5	4	3	2	1	0
IB x + 0 Channel group a	DI_7 (CH7)	DI_6 (CH6)	DI_5 (CH5)	DI_4 (CH4)	DI_3 (CH3)	DI_2 (CH2)	DI_1 (CH1)	DI_0 (CH0)
IB x + 1 Channel group b	DI_7 (CH15)	DI_6 (CH14)	DI_5 (CH13)	DI_4 (CH12)	DI_3 (CH11)	DI_2 (CH10)	DI_1 (CH9)	DI_0 (CH8)
IB x + 2 Channel group a	Value status for DI_7 (CH7)	Value status for DI_6 (CH6)	Value status for DI_5 (CH5)	Value status for DI_4 (CH4)	Value status for DI_3 (CH3)	Value status for DI_2 (CH2)	Value status for DI_1 (CH1)	Value status for DI_0 (CH0)
IB x + 3 Channel group b	Value status for DI_7 (CH15)	Value status for DI_6 (CH14)	Value status for DI_5 (CH13)	Value status for DI_4 (CH12)	Value status for DI_3 (CH11)	Value status for DI_2 (CH10)	Value status for DI_1 (CH9)	Value status for DI_0 (CH8)

x = Module start address

Note

You may only access the addresses occupied by user data and value status.

The other address areas occupied by the F-modules are assigned for functions including safety-related communication between the F-modules and F-CPU in accordance with PROFIsafe.

1oo2 evaluation of the sensors combines the two channels, e.g. CH0 (input bit DI_0 in channel group a) with CH8 (input bit DI_0 in channel group b). With 1oo2 evaluation of the sensors, you may only access the input bit from channel group a in the safety program, in this example CH0.

Additional information

For detailed information about F-I/O access and for evaluation and processing of the value status, refer to the SIMATIC Safety – Configuring and Programming (http://support.automation.siemens.com/WW/view/en/54110126) manual.

Applications of the F-I/O module 5

5.1 Applications of the F-DI 16x24VDC

Selecting the application

The diagram below supports you in selecting the application that suits your fail-safe requirements. In the following sections, you will learn how to wire the F-module, the specific parameters you must assign in STEP 7 Safety and the errors that are detected.

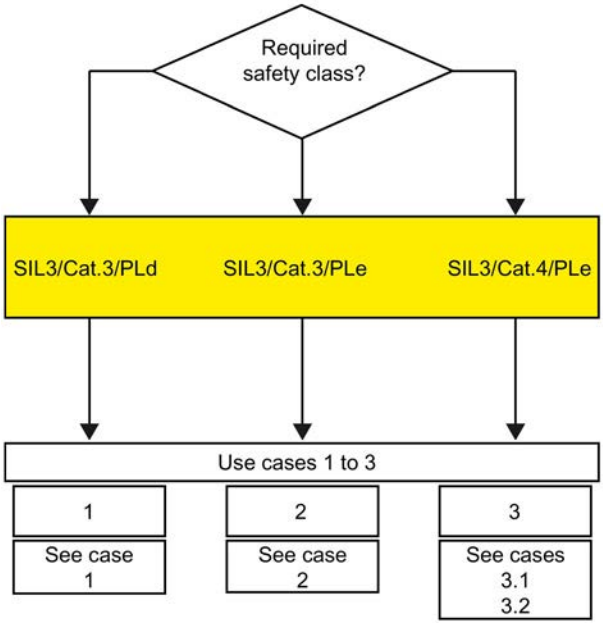

Image 5-1 Selecting the application – digital input module F-DI 16x24VDC

⚠ WARNING
The achievable safety class depends on the quality of the sensor and the duration of the mission time in accordance with IEC 61508:2010. If the quality of the sensor is lower than the quality required by the safety class, redundant sensors connected via two channels must be used and evaluated.

Conditions for achieving SIL/Cat./PL

The table below lists the conditions which have to be met for achieving at least the corresponding safety requirements.

Table 5- 1 Conditions for achieving SIL/Cat./PL

Application	Sensor evaluation	Sensor supply	Achievable SIL/Cat./PL
1	1oo1	Any	3 / 3 / d
2	1oo2 equivalent	Internal, without short-circuit test	3 / 3 / e
		External	
3.1	1oo2 equivalent	Internal, with short-circuit test	3 / 4 / e
3.2	1oo2 non-equivalent	External or internal, with short-circuit test	

Note

You can operate the various inputs of an F-DI module simultaneously in SIL3/Cat.3/PLd **and** in SIL3/Cat.3 or Cat.4/PLe. You only have to interconnect the inputs and assign parameters as described in the following sections.

Sensor requirements

Information on the safety-related use of sensors is available in the section Requirements for sensors and actuators for fail-safe modules of the system manual S7-1500 Automation System (http://support.automation.siemens.com/WW/view/en/59191792).

5.2 Application 1: Safety mode SIL3/Cat.3/PLd

Wiring

The wiring is carried out on the front connector of the module. Refer to the "Wiring" section in the S7-1500 Automation System (http://support.automation.siemens.com/WW/view/en/59191792) system manual.

Sensor supply

The sensor supply can be powered internally or externally.

Wiring diagram – connecting one sensor via one channel

One sensor is connected via one channel (1oo1 evaluation) for each process signal.

The assignment of the input to an internal sensor supply of the module must take place according to the parameter assignment "Supplied channels" (see section Supplied channels (Page 21)).

You can also supply the sensor by means of an external sensor supply.

The figure below shows an example of the pin assignment of the fail-safe digital input module F-DI 16x24VDC with one-channel connection of a sensor.

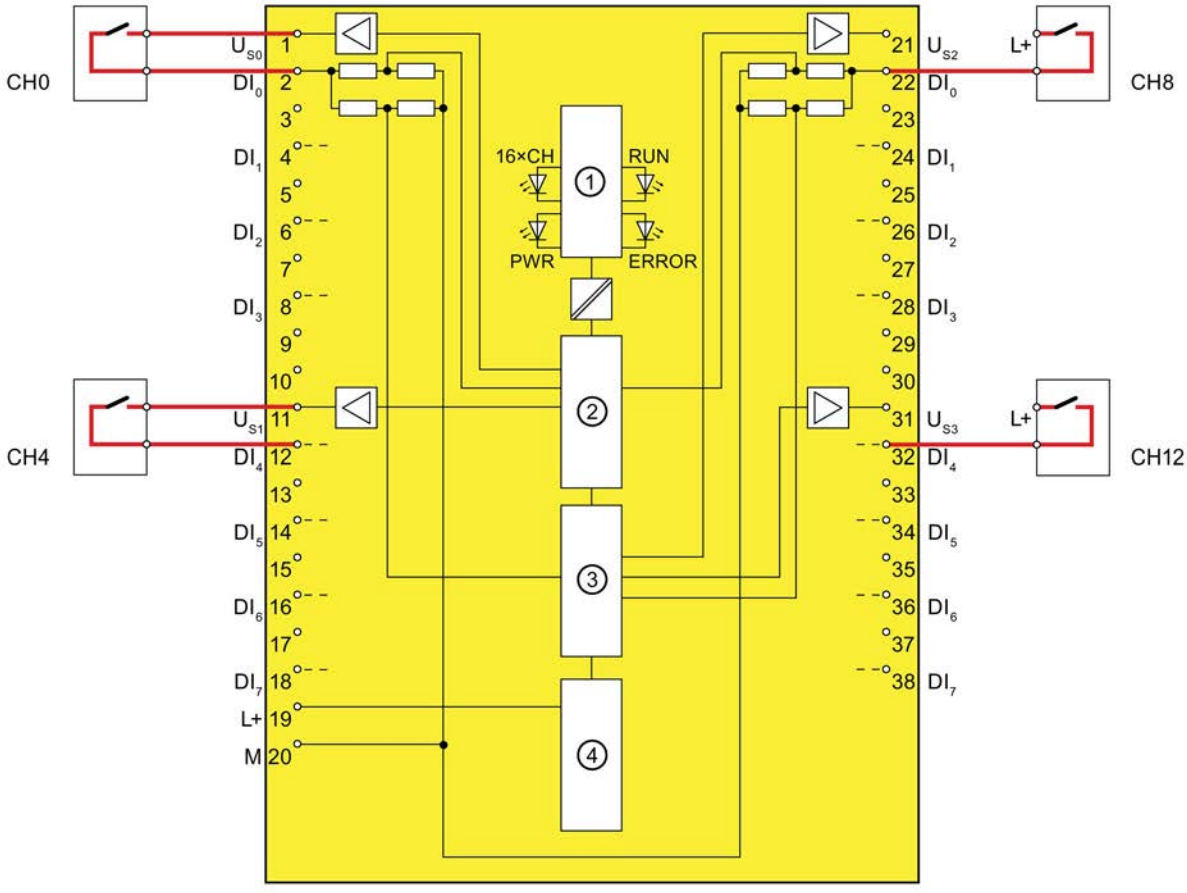

Image 5-2 One sensor connected via one channel, internal sensor supply (left) or external sensor supply (right)

⚠ WARNING
To achieve SIL3/Cat.3/PLd using this wiring, you must use a qualified sensor.

Parameter assignment

Assign the following parameters for the corresponding channel:

Table 5- 2 Parameter assignment

Parameter	Channel with internal sensor supply	Channel with external sensor supply
Sensor evaluation	1oo1 evaluation	
Supplied channels	Channels [x...y]	None
Short-circuit test activated	• Disable • Enable*	Disable

*) optional. The selection of an internal sensor supply, however, is required for using the short-circuit test.

Fault detection

The following table presents fault detection according to the sensor supply and the parameter assignment for the short-circuit test:

Table 5- 3 Fault detection

Fault	Fault detection		
	Internal sensor supply and short-circuit test activated	Internal sensor supply and short-circuit test deactivated	External sensor supply
Short-circuit of the input with other channels or other sensor supplies (short-circuit with other channels is detected only if they use a different sensor supply)	Yes*	No	No
Short-circuit between the input and associated sensor supply	No	No	No
Short-circuit with L+ to DI_n	Yes	No	No
Short-circuit with M to DI_n	No	No	No
Discrepancy error	—	—	—
Short-circuit with L+ to U_{Sn}	Yes	No	—
Short-circuit with M to U_{Sn} or defective	Yes	Yes	—

*) Fault detection only if signals are corrupted. That is, the read signal differs from the sensor signal. If there is no signal corruption with respect to the sensor signal, fault detection is not possible and is not required from a safety standpoint.

⚠ WARNING

If the short-circuit test is not activated or the sensor supply to digital inputs is set to "External sensor supply", the cable must be routed short-circuit proof.

See also

Connecting (Page 15)

5.3 Application 2: Safety mode SIL3/Cat.3/PLe

Assigning inputs to each other

The digital input module F-DI 16x24VDC has 16 fail-safe inputs, DI_0 to DI_{15} (SIL3). You can combine two of these inputs each to one input.

You can combine the following inputs:

- DI_0 and DI_8
- DI_1 and DI_9
- DI_2 and DI_{10}
- DI_3 and DI_{11}
- DI_4 and DI_{12}
- DI_5 and DI_{13}
- DI_6 and DI_{14}
- DI_7 and DI_{15}

The process signals are provided by channels DI_0, DI_1, DI_2, DI_3, DI_4, DI_5, DI_6 and DI_7.

Note

You can mix 1oo1 evaluation and 1oo2 evaluation in an F-DI module. You must interconnect and parameterize the inputs according to the fail-safe requirements (SIL3/Cat.3/PLd and SIL3/Cat.3 or Cat.4/PLe).

Wiring

The wiring is carried out on the front connector of the module. Refer to the "Wiring" section in the S7-1500 Automation System (http://support.automation.siemens.com/WW/view/en/59191792) system manual.

Sensor supply

The sensor supply can be powered internally or externally.

Wiring diagram – connecting a two-channel sensor equivalent

A two-channel sensor is connected equivalent to two inputs of the F-module for each process signal (1oo2 evaluation).

You can also supply one or both sensor switches by means of an external sensor supply.

The figure below shows an example of the pin assignment of the fail-safe digital input module F-DI 16x24VDC with equivalent connection of a two-channel sensor.

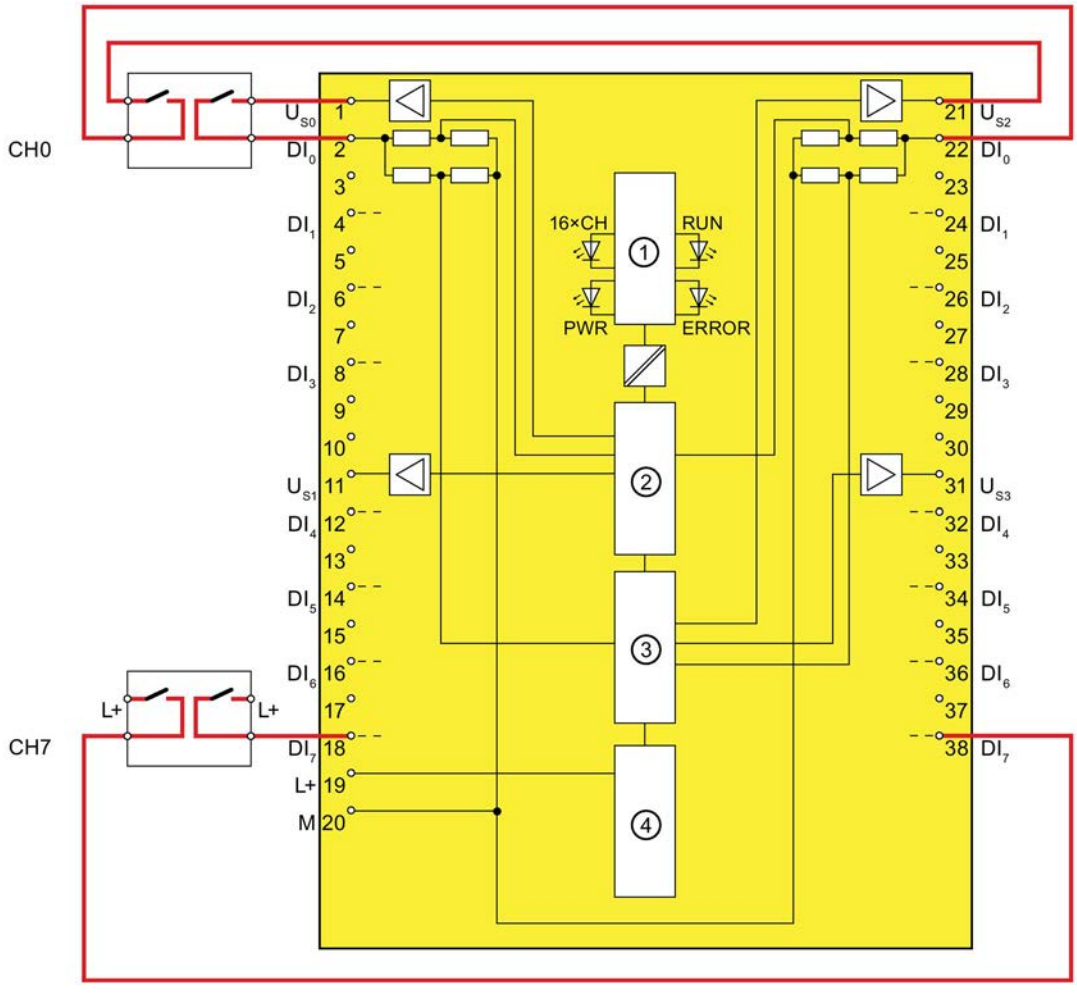

① Backplane bus interface
② Microcontroller 1
③ Microcontroller 2
④ Reverse polarity protection

Image 5-3 One two-channel sensor connected equivalently, internal sensor supply (top) or external sensor supply (bottom)

Wiring diagram – connecting two single-channel sensors via two channels

Two single-channel sensors that capture the same process value are connected to two inputs of the F-module for each process signal (1oo2 evaluation).

You can also supply the sensors by means of an external sensor supply.

The figure below shows an example of the pin assignment of the fail-safe digital input module F-DI 16x24VDC with two-channel connection of two single-channel sensors.

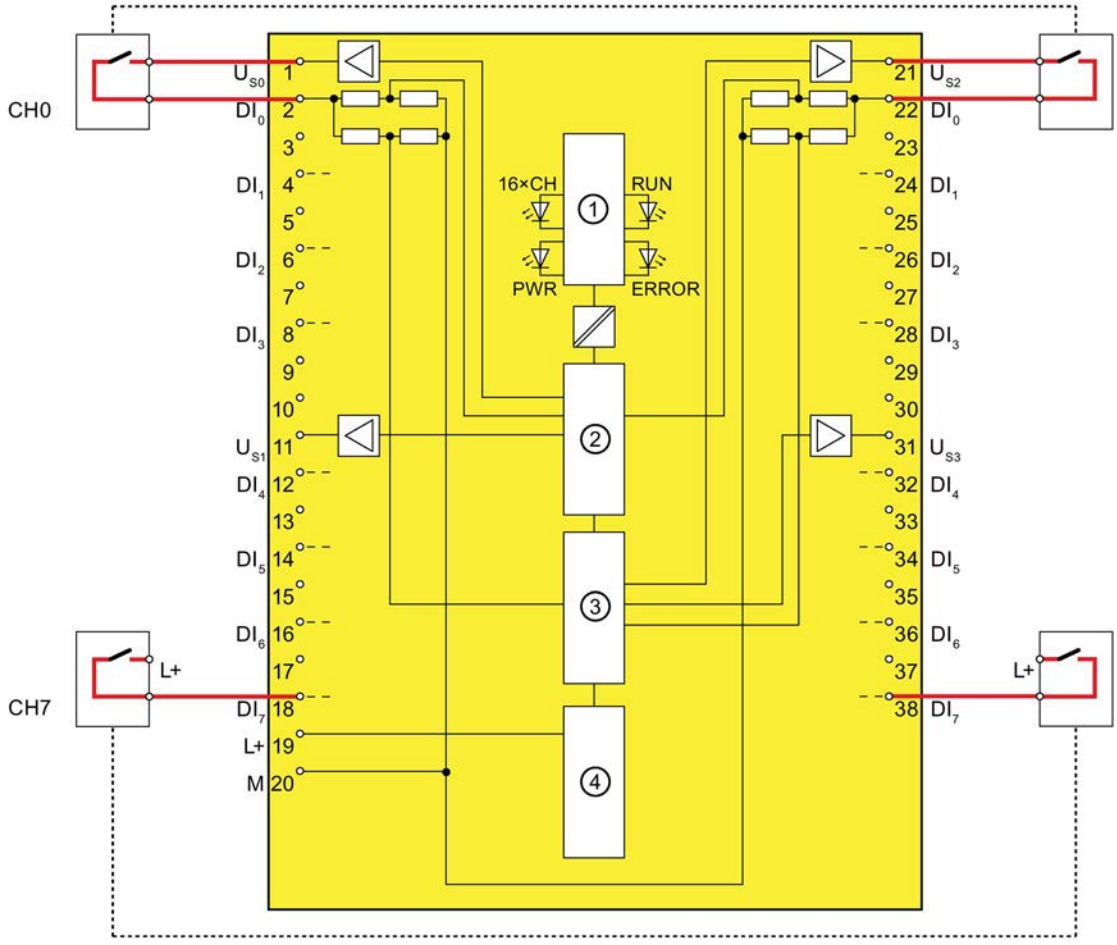

① Backplane bus interface
② Microcontroller 1
③ Microcontroller 2
④ Reverse polarity protection

Image 5-4 Two single-channel sensors connected via two channels, internal sensor supply (top) or external sensor supply (bottom)

⚠ WARNING
To achieve SIL3/Cat.3/PLe using this wiring, you must use a qualified sensor.

Parameter assignment

Assign the following parameters for the corresponding channel:

Table 5- 4 Parameter assignment

Parameter	Channel with internal sensor supply	Channel with external sensor supply
Sensor evaluation	1oo2 evaluation, equivalent	
Supplied channels	Channels [x...y]	None
Short-circuit test activated	Disable	

Fault detection

The following table presents fault detection according to the sensor supply and the parameter assignment for the short-circuit test:

Table 5- 5 Fault detection

Fault	Fault detection	
	Internal sensor supply and short-circuit test deactivated	External sensor supply
Short-circuit within the channel pair	No	No
Short-circuit with other channels or other sensor supplies	Yes*	Yes
Short-circuit with L+ to DI_n	Yes*	Yes*
Short-circuit with M to DI_n	Yes*	Yes*
Discrepancy error	Yes	Yes
Short-circuit with L+ to U_{Sn}	No	No
Short-circuit with M to U_{Sn} or defective	Yes	—

*) Fault detection only if signals are corrupted. That is, the read signal differs from the sensor signal (discrepancy error). If there is no signal corruption with respect to the sensor signal, fault detection is not possible and is not required from a safety standpoint.

See also

Connecting (Page 15)

5.4 Application 3: Safety mode SIL3/Cat.4/PLe

Assigning inputs to each other

The digital input module F-DI 16x24VDC has 16 fail-safe inputs, DI_0 to DI_{15} (SIL3). You can combine two of these inputs each to one input.

You can combine the following inputs:

- DI_0 and DI_8
- DI_1 and DI_9
- DI_2 and DI_{10}
- DI_3 and DI_{11}
- DI_4 and DI_{12}
- DI_5 and DI_{13}
- DI_6 and DI_{14}
- DI_7 and DI_{15}

The process signals are provided by channels DI_0, DI_1, DI_2, DI_3, DI_4, DI_5, DI_6 and DI_7.

Wiring

The wiring is carried out on the front connector of the module. Refer to the "Wiring" section in the S7-1500 Automation System (http://support.automation.siemens.com/WW/view/en/59191792) system manual.

Sensor supply

The sensor must be supplied internally by at least one channel group for application 3.1.

The sensor can be supplied internally or externally for application 3.2.

Requirements for applications in machine protection with Cat.4

Both conditions must be met for applications in machine protection with Cat.4:

- The wiring between sensors and automation system and between automation system and actuators must be designed with state-of-the-art engineering and standards to prevent short-circuits.
- The sensors must be wired as shown in sections Application 3.1 (SIL3/Cat.4/PLe) (Page 42) or Use case 3.2 (SIL3/Cat.4/PLe) (Page 44). You only need to detect **one** short-circuit because 2 faults are required to generate it. This means both signal cables in short-circuit have an isolation fault. A multiple short-circuit analysis is not required.

Procedures for locating all short-circuits are also permitted if single short-circuits are not located. One of the two conditions must be met for this purpose:

- Short-circuits may not corrupt the read signals compared to the sensor signals.
- Short-circuits cause a corruption of the read signals compared to sensor signals in the direction that ensures safety.

See also

Connecting (Page 15)

5.4.1 Application 3.1 (SIL3/Cat.4/PLe)

Wiring diagram – connecting a two-channel sensor via two channels

A two-channel sensor is connected to two inputs of the F-module for each process signal (1oo2 evaluation).

Supply the sensors from two different internal sensor supplies.

Alternatively, two single-channel sensors can be connected via two channels. In this case, the same process variable is acquired with two mechanically separate sensors.

The figure below shows an example of the pin assignment of the fail-safe digital input module F-DI 16x24VDC with two-channel connection of one two-channel sensor or two single-channel sensors.

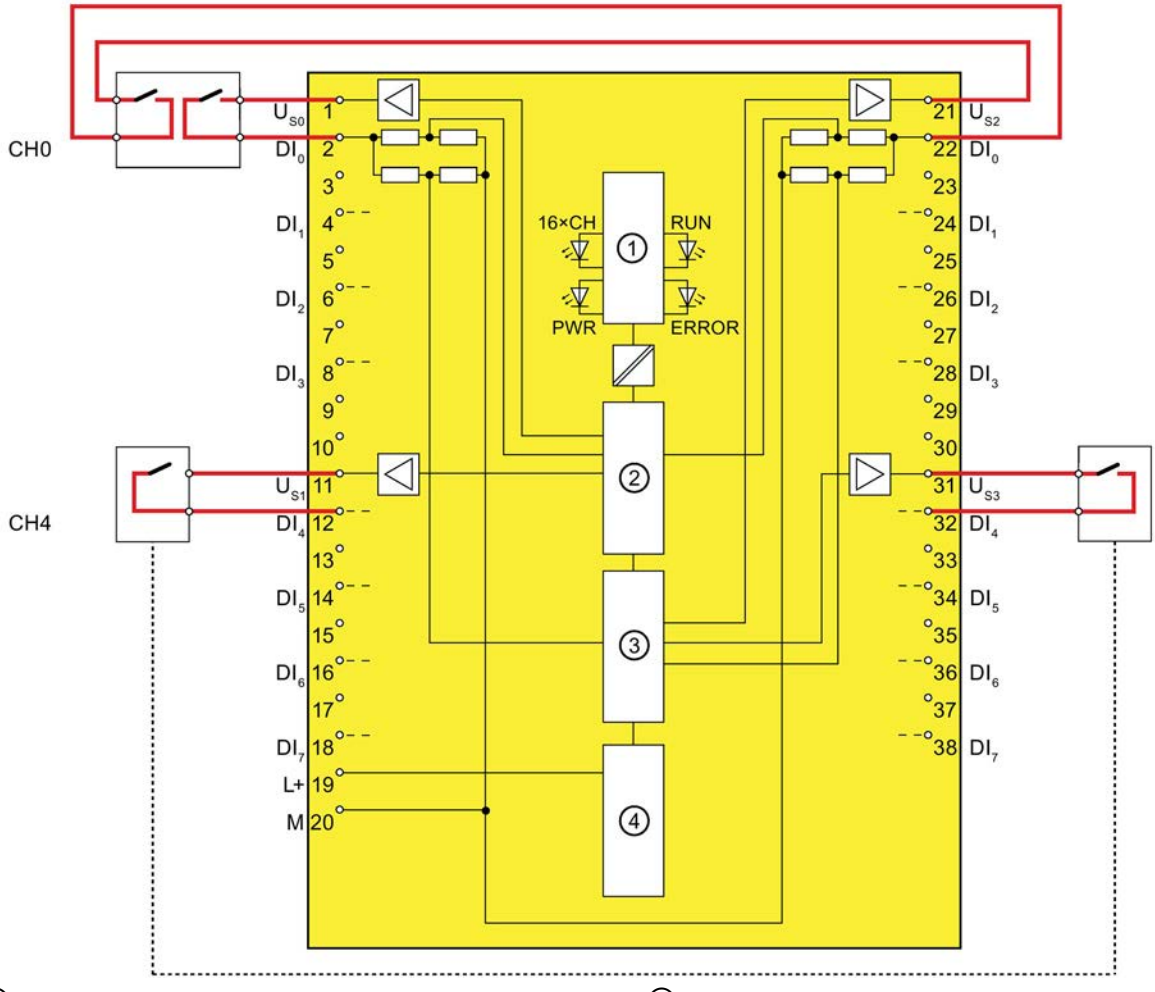

① Backplane bus interface
② Microcontroller 1
③ Microcontroller 2
④ Reverse polarity protection

Image 5-5 One two-channel sensor connected via two channels (top) or two single-channel sensors connected via two channels (bottom); internal sensor supply

⚠ WARNING
To achieve SIL3/Cat.4/PLe using this wiring, you must use a suitably qualified sensor.

Parameter assignment

Assign the following parameters for the corresponding channel:

Table 5- 6 Parameter assignment

Parameter	Channel with internal sensor supply
Sensor evaluation	1oo2 evaluation, equivalent
Supplied channels	Channels [x...y]
Short-circuit test activated	Enable

Fault detection

The following table presents fault detection according to the sensor supply and the parameter assignment for the short-circuit test:

Table 5- 7 Fault detection

Fault	Fault detection
	Internal sensor supply and short-circuit test activated
Short-circuit within the channel pair	No
Short-circuit with other channels or other sensor supplies	Yes*
Short-circuit with L+ to DI_n	Yes* / Yes (for channel whose short-circuit test is activated)
Short-circuit with M to DI_n	Yes*
Discrepancy error	Yes
Short-circuit with L+ to U_{Sn}	Yes
Short-circuit with M to U_{Sn} or defective	Yes

*) Fault detection only if signals are corrupted. That is, the read signal differs from the sensor signal (discrepancy error). If there is no signal corruption with respect to the sensor signal, fault detection is not possible and is not required from a safety standpoint.

5.4.2 Use case 3.2 (SIL3/Cat.4/PLe)

Wiring diagram – connecting a non-equivalent sensor

A non-equivalent sensor is connected to two inputs of the F-module for each process signal (1oo2 evaluation, non-equivalent).

You can also supply the sensor by means of an external sensor supply.

The figure below shows an example of the pin assignment of the fail-safe digital input module F-DI 16x24VDC with connection of a non-equivalent sensor.

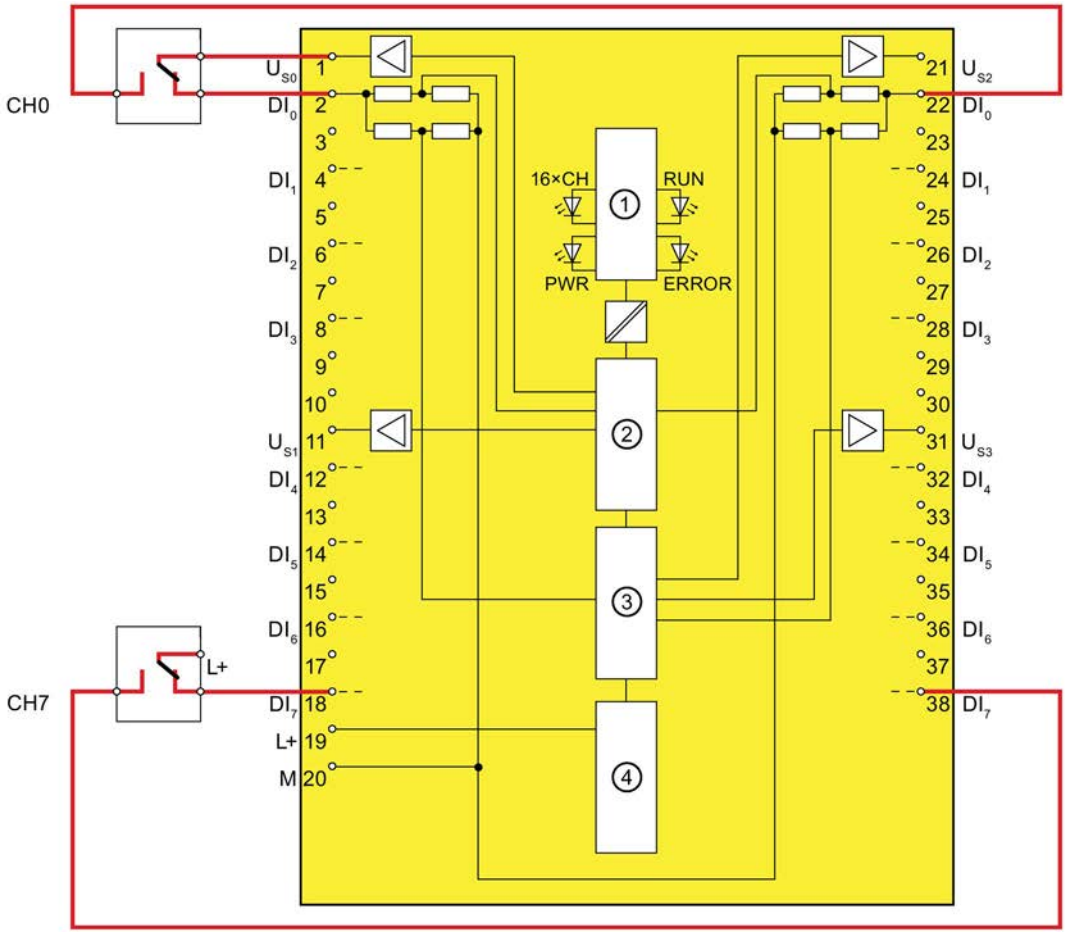

① Backplane bus interface
② Microcontroller 1
③ Microcontroller 2
④ Reverse polarity protection

Image 5-6 One non-equivalent sensor connected, internal sensor supply (top) or external sensor supply (bottom)

⚠ WARNING
To achieve SIL3/Cat.4/PLe using this wiring, you must use a suitably qualified sensor.

Wiring diagram – connecting two single-channel sensors non-equivalent

Two single-channel sensors are connected non-equivalent to two inputs of the F-module for each process signal (1oo2 evaluation).

You can also supply one or both sensors by means of an external sensor supply.

The figure below shows an example of the pin assignment of the fail-safe digital input module F-DI 16x24VDC with non-equivalent connection of two single-channel sensors.

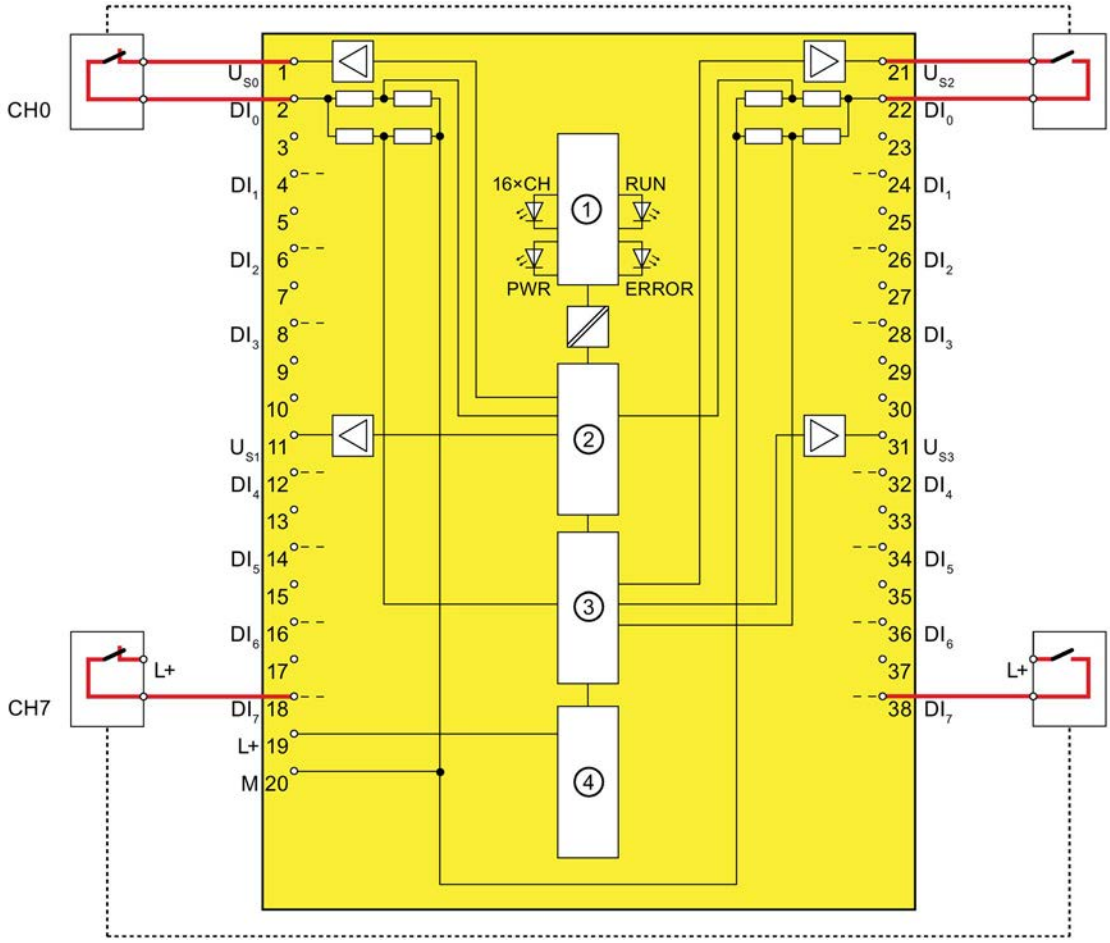

① Backplane bus interface
② Microcontroller 1
③ Microcontroller 2
④ Reverse polarity protection

Image 5-7 Two single-channel sensors connected non-equivalently, internal sensor supply (top) or external sensor supply (bottom)

⚠ WARNING
To achieve SIL3/Cat.4/PLe using this wiring, you must use a suitably qualified sensor.

Parameter assignment

Assign the following parameters for the corresponding channel:

Table 5- 8 Parameter assignment

Parameter	Channel with internal sensor supply	Channel with external sensor supply
Sensor evaluation	1oo2 evaluation, non-equivalent	
Supplied channels	Channels [x...y]	None
Short-circuit test activated	• Disable • Enable*	Disable

*) optional. The selection of an internal sensor supply, however, is required for using the short-circuit test.

Fault detection

The following table presents fault detection according to the sensor supply and the parameter assignment for the short-circuit test:

Table 5- 9 Fault detection

Fault	Fault detection
Short-circuit within the channel pair, with other channels or other sensor supplies	Yes
Short-circuit with L+ to DI_n	yes* / yes (for channel whose short-circuit test is activated)
Short-circuit with M to DI_n	Yes*
Discrepancy error	Yes
Short-circuit with L+ to U_{Sn}	Yes, if internal sensor supply is used and short-circuit test activated
Short-circuit with M to U_{Sn} or defective	Yes, if internal sensor supply is activated

*) Fault detection only if signals are corrupted. That is, the read signal differs from the sensor signal (discrepancy error). If there is no signal corruption with respect to the sensor signal, fault detection is not possible and is not required from a safety standpoint.

Interrupts/diagnostic messages 6

6.1 Status and error displays

LED displays

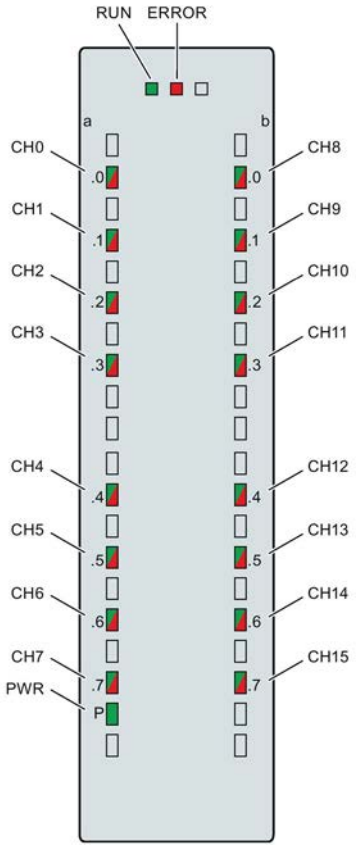

Image 6-1 LED displays of the F-DI 16x24VDC module

Meaning of the LED displays

The following tables explain the meaning of the status and error displays. Remedies for diagnostic alarms can be found in section Diagnostic alarms (Page 51).

⚠ WARNING
The RUN, ERROR LEDs and channel status/channel diagnostics LEDs of the inputs are not designed as safety-related LEDs and therefore may not be evaluated for safety-related activities.

RUN and ERROR LEDs

Table 6- 1 RUN and ERROR status and error displays

LED		Meaning	Remedy
RUN	ERROR		
□ Off	□ Off	Missing or insufficient voltage on the backplane bus	• Switch on the CPU and/or the system power supply modules. • Check whether the module is correctly plugged into the U-connector. • Check whether too many modules are plugged in.
☼ Flashing	□ Off	Module starts up and flashes up to the valid parameter assignment.	---
■ On	□ Off	Module parameters are assigned and module addressed.	
□ Off	☼ Flashing	Firmware is being updated.	
■ On	☼ Flashing	Indicates diagnostic interrupts: • Module fault (for example, supply voltage too high) • Channel fault (for example, frequency too high). • PROFIsafe communication error Operation in S7-1500 F-CPUs: At least one channel is waiting for user acknowledgment.	Evaluate the diagnostics and eliminate or acknowledge the error. It may be necessary to remove and re-insert the module.
☼ Flashing	☼ Flashing	Hardware defective.	Replace the module.
☼ / ☼ Alternately flashing		• Operation in S7-1500 F-CPUs: The F-module expects user acknowledgment after a module error. • Operation in S7-300/400 F-CPUs: At least one channel is waiting for user acknowledgment.	Acknowledge the error (see manual SIMATIC Safety - Configuring and Programming (http://support.automation.siemens.com/WW/view/en/54110126)).

PWR LED

Table 6- 2 PWR status display

PWR LED	Meaning
□ Off	Supply voltage L+ missing
■ On	Supply voltage L+ available

CHx LED

Table 6- 3 Display channel status/channel diagnostics

Status CHx	Diagnostics CHx	Meaning
□ Off	□ Off	Process signal = 0 and no channel diagnostics*
■ On	□ Off	Process signal = 1 and no channel diagnostics
□ Off	■ On	Process signal = 0 and channel diagnostics
☼/☼ Alternately flashing		Channel waiting for user acknowledgment

* Operation in S7-300/400 F-CPUs only: If necessary, wait for user acknowledgment, if an additional channel is also waiting for user acknowledgment due to an error that occurred later.

CHx/Error LED with PROFIsafe address assignment

Table 6- 4 Channel status/channel diagnostics/Error display with PROFIsafe address assignment

Status CHx	Diagnos-tics CHx	ERROR	Meaning
□ Off	■ All on	☼ Flashing	The PROFIsafe address does not match the configured PROFIsafe address
☼ All are flashing	□ Off	☼ Flashing	Identification of the F-module when assigning the PROFIsafe address

CHx/RUN/ERROR LED if supply voltage error occurs

Table 6- 5 Channel status/channel diagnostics/RUN/ERROR display if supply voltage error occurs

CHx status	Diagnos-tics CHx	RUN	ERROR	Meaning
□ Off	■ On	■ On	☼ Flashing	Supply voltage too high or too low. • Operation in S7-1500 F-CPUs: Module is waiting for user acknowledgment. • Operation in S7-300/400 F-CPUs: Module is automatically reintegrated after the correction of the error.

6.2 Interrupts

Introduction

The F-DI 16x24VDC fail-safe digital input module supports diagnostic interrupts.

Diagnostic interrupt

The F-module generates a diagnostic interrupt for each diagnostic alarm described in section Diagnostic alarms (Page 51).

The table below provides an overview of the diagnostic interrupts of the F-module . The diagnostic interrupts are assigned either to one channel or the entire F-module.

Table 6- 6 Diagnostic interrupts of the F-DI 16x24VDC

Diagnostic interrupt	Fault code	Signaled in application	Scope of diagnostic interrupt	Configurable
Overtemperature	5_D	1, 2, 3	F-module	No
Parameter error	16_D			
Supply voltage missing	17_D			
Mismatch of safety destination address (F_Dest_Add)	64_D			
Safety destination address not valid (F_Dest_Add)	65_D			
Safety source address not valid (F_Source_Add)	66_D			
Safety watchdog time value is 0 ms (F_WD_Time)	67_D			
Parameter F_SIL exceeds SIL from specific device application	68_D			
Parameter F_CRC_Length does not match the generated values	69_D			
Version of F-parameter set incorrectly	70_D			
CRC1 fault	71_D			
Save iParameter watchdog time exceeded	73_D			
Restore iParameter watchdog time exceeded	74_D			
Inconsistent iParameters (iParCRC error)	75_D			
F_Block_ID not supported	76_D			
Transmission error: Inconsistent data (CRC error)	77_D			
Transmission error: Timeout (watchdog time 1 or 2 expired)	78_D			
Module is defective	256_D			
Watchdog tripped	259_D			
Invalid/inconsistent firmware present	283_D			
Discrepancy failure, channel state 0/0	768_D	2, 3	Channel	
Discrepancy failure, channel state 0/1	769_D			
Discrepancy failure, channel state 1/0	770_D			
Discrepancy failure, channel state 1/1	771_D			
Input signal not recorded unique	773_D	1, 2, 3		

Diagnostic interrupt	Fault code	Signaled in application	Scope of diagnostic interrupt	Configurable
Internal sensor supply short-circuit to P	774_D			Yes
Overload or internal sensor supply short-circuit to ground	775_D			
Channel failure acknowledgment	779_D			
F-address memory not accessible	781_D		F-module	No
Sensor signal flutters	784_D	1	Channel	Yes
Frequency too high	785_D			No
Undertemperature	786_D		F-module	
Input shorted to P	796_D		Channel	Yes
Supply voltage too high	801_D		F-module	No
Supply voltage too low	802_D			

6.3 Diagnostic alarms

Diagnostic alarms

Module faults are indicated as diagnostics (module status).

Once the fault is eliminated, the F-module must be reintegrated in the safety program. For additional information on passivation and reintegration of F-I/O, refer to the SIMATIC Safety – Configuring and Programming (http://support.automation.siemens.com/WW/view/en/54110126) manual.

Table 6- 7 Diagnostic alarms of the F-DI 16x24VDC

Diagnostic alarm	Fault code	Meaning	Remedy
Overtemperature	5_D	An excessively high temperature was measured in the F-module.	Operate the F-module within the specified temperature range (see Technical specifications (Page 57)) Once the temperature has been reduced and returns to the specified range, the F-module must be removed and inserted or the power switched OFF and ON.
Parameter error	16_D	Parameter errors include: • The F-module cannot use the parameters (unknown, invalid combination, etc.). • The F-module parameters have not been configured.	Correct the parameter assignment.

Diagnostic alarm	Fault code	Meaning	Remedy
Supply voltage missing	17_D	Missing or insufficient supply voltage L+	• Check supply voltage L+ at the front connector • Check the front connector
Mismatch of safety destination address (F_Dest_Add)	64_D	The firmware of the F-module has detected a different F-destination address.	• Check the parameter assignment of the PROFIsafe driver and the PROFIsafe address assigned to the F-module. • Assign the PROFIsafe address to the F-module (again).
Safety destination address not valid (F_Dest_Add)	65_D	The firmware of the F-module has detected an illegal different F-destination address.	
Safety source address not valid (F_Source_Add)	66_D	The firmware of the F-module has detected a different F-source address.	
Safety watchdog time value is 0 ms (F_WD_Time)	67_D	The firmware of the F-module has detected an invalid watchdog time.	
Parameter F_SIL exceeds SIL from specific device application	68_D	The firmware of the F-module has detected a discrepancy between the SIL setting of the communication and the application.	
Parameter F_CRC_Length does not match the generated values	69_D	The firmware of the F-module has detected a discrepancy in the CRC length.	
Version of F-parameter set incorrectly	70_D	The firmware of the F-module has detected an incorrect F_Par_Version or an invalid F_Block_ID.	
CRC1 fault	71_D	The firmware of the F-module has detected inconsistent F-parameters.	
Save iParameter watchdog time exceeded	73_D	iPar server does not respond to "save IPar" within 4.4 minutes.	Check the parameter assignment of the iPar server.
Restore iParameter watchdog time exceeded	74_D	iPar server does not respond to "restore IPar" within 4.4 minutes.	Check the parameter assignment of the iPar server.
Inconsistent iParameters (iParCRC error)	75_D	The firmware of the F-module has detected inconsistent iParameters.	Check the parameter assignment.
F_Block_ID not supported	76_D	The firmware of the F-module has detected an incorrect F_block_ID.	Check the parameter assignment of the PROFIsafe driver.
Transmission error: Inconsistent data (CRC error)	77_D	The firmware of the F-module has detected a CRC error. Possible causes: • The communication between the F-CPU and F-module is disturbed. • Impermissibly high electromagnetic interference is present. • An error occurred in the sign-of-life monitoring.	• Check the communication connection between the F-module and F-CPU. • Eliminate the electromagnetic interference.
Transmission error: Timeout (watchdog time 1 or 2 expired)	78_D	The firmware of the F-module has detected a timeout. Possible causes: • The F-monitoring time is set incorrectly. • A bus fault is present.	• Check the parameter assignment. • Ensure that communication is functioning correctly.

Diagnostic alarm	Fault code	Meaning	Remedy
Module is defective	256_D	Possible causes: • Impermissibly high electromagnetic interference is present. • The F-module has detected an internal error and has reacted in a safety-related manner.	• Eliminate the interference. The module must then be pulled and plugged, or the power switched OFF and ON. • If the F-module cannot be put back into operation, consider replacing it.
Watchdog tripped	259_D	Possible causes: • Impermissibly high electromagnetic interference is present. • The F-module has detected an internal error and has reacted in a safety-related manner.	• Eliminate the interference. The module must then be pulled and plugged, or the power switched OFF and ON. • If the F-module cannot be put back into operation, consider replacing it.
Invalid/inconsistent firmware present	283_D	The firmware is incomplete and/or firmware added to the F-module is incompatible. This leads to errors or functional limitations when operating the F-module.	• Perform a firmware update for all parts of the F-module and note any error messages. • Use only firmware versions released for this F-module.
Discrepancy failure, channel state 0/0	768_D	Possible causes: • The process signal is faulty. • The sensor is defective. • The configured discrepancy time is too low. • There is a short-circuit between an unconnected sensor cable and the sensor supply cable. • Wire break in connected sensor cable or the sensor supply cable • An error occurred during the discrepancy check.	• Check the process signal. • Replace the sensor. • Check the parameter assignment of the discrepancy time. • Check the process wiring.
Discrepancy failure, channel state 0/1	769_D		
Discrepancy failure, channel state 1/0	770_D		
Discrepancy failure, channel state 1/1	771_D		

Diagnostic alarm	Fault code	Meaning	Remedy
Input signal not recorded unique	773_D	An error occurred during the plausibility check of the input signal between the processors. Possible causes: • The input signal is faulty, e.g., as a result of impermissibly high electromagnetic interference. • A high-frequency input signal is present, e.g., due to mutual interference of sensors or the signal being above the sampling frequency of the input signal. • A momentary interruption/short-circuit of the sensor cable (loose contact) is present. • The sensor/switch is bouncing.	• Use shielded cables to reduce the EMC effects. • Reduce the input frequency. • Check the wiring of the sensor.
Internal sensor supply short-circuit to P	774_D	Possible causes: • There is a short-circuit of the internal sensor supply with L+. • There is a short-circuit of two sensor supplies. • The capacitance of the connected sensor for the configured test time is too high. • The sensor is defective.	• Eliminate the short-circuit in the process wiring. • Check the configured test time and the process wiring. • Replace the sensor.
Overload or internal sensor supply short-circuit to ground	775_D	Possible causes: • The internal sensor supply is short-circuited to ground. • Impermissibly high electromagnetic interference is present.	• Eliminate the overload. • Eliminate the short-circuit in the process wiring. • Check the "Sensor supply" parameter. • Eliminate/reduce the electromagnetic interference.
Channel failure acknowledgment	779_D	A channel fault was detected. Confirmation is required to enable the channel.	Confirm the channel fault.
F-address memory not accessible	781_D	The F-source address and F-destination address stored in the coding element cannot be accessed.	Verify that the coding element is present or replace the coding element.

Diagnostic alarm	Fault code	Meaning	Remedy
Sensor signal flutters	784_D	Too many signal changes have occurred within the time configured with the "Monitoring window" parameter. • The "Monitoring window" parameter setting is too high. • The "Number of signal changes" parameter setting is too low. • A momentary interruption/short-circuit of the sensor cable (loose contact) is present. • Impermissibly high electromagnetic interference is present. • The sensor/switch is bouncing. • The sensor is defective.	• Check the "Monitoring window" parameter. • Check the "Number of signal changes" parameter. • Check the process wiring. • Eliminate/reduce the electromagnetic interference. • Replace the sensor.
Frequency too high	785_D	The switching frequency of the encoder is too high.	Reduce the switching frequency of the sensor.
Undertemperature	786_D	The minimum permissible temperature limit has been violated.	Operate the F-module within the specified temperature range (see Technical specifications (Page 57))
Input shorted to P	796_D	The input signal is short-circuited to L+.	Eliminate the short-circuit.
Supply voltage too high	801_D	The supply voltage is too high.	Check the supply voltage.
Supply voltage too low	802_D	The supply voltage is too low.	Check the supply voltage.

Supply voltage outside the nominal range

If the supply voltage L+ is outside the specified value range, the ERROR LED flashes and the module is passivated.

When the voltage is then recovered (level must remain within the specified value for at least 1 minute, see Technical specifications (Page 57)), the ERROR LED stops flashing. The module remains passivated and waits for user acknowledgment.

Behavior in case of cross circuit/short-circuit to the sensor supply

When internal sensor supply is configured and short-circuit test is deactivated, short-circuits to ground at the sensor supplies are detected. Channels for which the relevant sensor supply is configured will be passivated.

When internal sensor supply is configured and short-circuit test is enabled, short-circuits to ground and potential at the sensor supply are detected. Channels for which the relevant sensor supply is configured will be passivated.

Special features for fault detection

The detection of certain faults (short-circuits or discrepancy errors, for example) depends on the application, the wiring, and the parameter assignment of the short-circuit test and the sensor power supply. For this reason, tables on fault detection for the applications are presented under Applications of the F-I/O module (Page 32).

Generally applicable information on diagnostics

Information on diagnostics that pertains to all F-modules (for example, readout of diagnostics functions or passivation of channels) is available in the SIMATIC Safety – Configuring and Programming (http://support.automation.siemens.com/WW/view/en/54110126) manual.

Technical specifications 7

Technical specifications of F-DI 16x24VDC

	6ES7526-1BH00-0AB0
General information	
Product type designation	F-DI 16x24VDC
Firmware version	
• FW update possible	Yes
Product function	
I&M data	Yes; I&M0 to I&M3
Engineering with	
STEP 7 TIA Portal can be configured/integrated as of version	V13 SP1 with HSP0086
Operating mode	
DI	Yes
Supply voltage	
Rated value (DC)	24 V
Low limit of permitted range (DC)	19.2 V
High limit of permitted range (DC)	28.8 V
Reverse polarity protection	Yes
Input current	
Current consumption (rated value)	50 mA
Sensor supply	
Number of outputs	4
Short-circuit protection	Yes; electronic (response threshold 0.7 A to 1.8 A)
24 V sensor supply	
24 V	Yes; min. L+ (-1.5 V)
Short-circuit protection	Yes
Output current, max.	300 mA; max. 100 mA with vertical mounting position
Power	
Power consumption from the backplane bus	0.9 W
Power loss	
Power loss, typ.	4.6 W
Address range	
Address space per module	
Address space per module, max.	9 bytes

	6ES7526-1BH00-0AB0
Digital inputs	
Number of inputs	16
m/p-reading	Yes; p-reading
Input characteristic curve according to IEC 61131, Type 1	Yes
Input voltage	
Rated value (DC)	24 V
For "0" signal	-30 ... +5 V
For "1" signal	+15 ... +30 V
Input current	
For "1" signal, typ.	3.7 mA
Input delay (for rated value of input voltage)	
For standard inputs	
• Configurable	Yes
• For "0" to "1", min.	0.4 ms
• For "0" to "1", max.	20 ms
• For "1" to "0", min.	0.4 ms
• For "1" to "0", max.	20 ms
Cable length	
shielded, max.	1000 m
unshielded, max.	500 m
Interrupts/diagnostics/status information	
Interrupts	
Diagnostic interrupt	Yes
Hardware interrupt	No
Diagnostic alarms	
Diagnostics	Yes
Monitoring of supply voltage	Yes
Wire break	No
Short-circuit	Yes
Group error	Yes
Diagnostics display LED	
RUN LED	Yes; green LED
ERROR LED	Yes; red LED
Channel status display	Yes; green LED
For channel diagnostics	Yes; red LED
For module diagnostics	Yes; red LED
Electrical isolation	
Electrical isolation, channels	
Between channels and backplane bus	Yes
Permitted potential difference	
Between different circuits	75 V DC/60 V AC (basic insulation)

	6ES7526-1BH00-0AB0
Insulation	
Insulation test voltage	707 VDC (type test)
Standards, approvals, certificates	
Maximum achievable safety class in safety mode	
Performance level according to EN ISO 13849-1:2008	PLe
SIL according to IEC 61508	SIL 3
Low demand mode: PFDavg according to SIL3	< 5.00E-05
High demand/continuous mode: PFH according to SIL3	< 1.00E-09 1/h
Environmental conditions	
Ambient temperature in operation	
Horizontal installation, min.	0 °C
Horizontal installation, max.	60 °C
Vertical installation, min.	0 °C
Vertical installation, max.	40 °C
Dimensions	
Width	35 mm
Height	147 mm
Depth	129 mm
Weights	
Weight, approx.	280 g

Dimension drawing

See system manual S7-1500 Automation System (http://support.automation.siemens.com/WW/view/en/59191792).

Response times

A

Introduction

The next section shows the response times of the digital input module F-DI 16x24VDC. The response times of the digital input module F-DI 16x24VDC are included in the calculation of the F-system response time.

Definition of cycle time for fail-safe digital inputs

The cycle time indicates the time between the occurrence of an event and the transfer to the backplane bus.

Times required for the calculation

- Max. cycle time: T_{cycle} = 5 ms
- Max. acknowledgment time (Device Acknowledgment Time): T_{DAT} = 10 ms

The maximum response time in the case of fault (One Fault Delay Time, OFDT) is equivalent to the maximum response time with no faults (Worst Case Delay Time, WCDT).

Maximum response time with no faults (Worst Case Delay Time, WCDT) during 1oo1 evaluation

The following formula applies to a sensor supply without short-circuit test:

t <= 2 * cycle time + input delay

The following formula applies to a sensor supply with short-circuit test:

t <= 2 * cycle time + input delay + T1 + T2

T1 Time for short-circuit test

T2 Startup time of sensors after the short-circuit test

Maximum response time with no faults (Worst Case Delay Time, WCDT) during 1oo2 evaluation

The following formula applies to a sensor supply without short-circuit test:

t <= 2 * cycle time + input delay+ discrepancy time*

* Obsolete with discrepancy behavior "Supply value 0"

The following formula applies to a sensor supply with short-circuit test:

t <= 2 * cycle time + input delay+ max (T1p + T2p, T1s + T2s) + discrepancy time*

* Obsolete with discrepancy behavior "Supply value 0"

T1p Test time for the sensor supply of sensor 1

T2p Startup time of sensor after the short-circuit test (sensor 1)

T1s Test time for the sensor supply of sensor 2

T2s Startup time of sensor after the short-circuit test (sensor 2)

Maximum response time to external short-circuits

t <= max (120 ms, 2 * (n × cycle time) + sum [x=0...3](T1x + T2x)) + cycle time

T1x	Time for the sensor test
T2x	Startup time of sensors after the short-circuit test
n	Number of sensor supplies with activated short-circuit test
x	Sensor supply

Maximum response time to discrepancy errors during 1oo2 evaluation

t <= 2 * cycle time + input delay + discrepancy time + 2 * max (T1p + T2p, T1s + T2s)

n	Number of sensor supplies with activated short-circuit test
T1x	Time for the sensor test
T2x	Startup time of sensors after the short-circuit test
T1p	Test time for the sensor supply of sensor 1
T2p	Startup time of sensor after the short-circuit test (sensor 1)
T1s	Test time for the sensor supply of sensor 2
T2s	Startup time of sensor after the short-circuit test (sensor 2)
x	Sensor supply

Open Source Software

B

For Resellers: In order to avoid infringements of the license conditions by the reseller or the buyer these instructions and license conditions and accompanying CD – if applicable - have to be forwarded to the buyers.

1) Siemens License Conditions

General License Conditions for Software Products for Automation and Drives

(2011-08-01)

1. Supply of Software to Licensee and Granting of Rights to use the Software

1.1 These General License Conditions shall exclusively apply to the delivery of Software for Automation and Drives to the Licensee. General terms and conditions of the Licensee shall apply only where expressly accepted in writing by us. The scope of delivery of the Software shall be determined by the congruent mutual written declarations of both parties. We shall grant the Licensee rights to use the software specified in the Confirmation of Order or, if the Licensee does not receive a Confirmation of Order, the software specified in the Certificate of License or that specified in the Software Product Sheet, if the Licensee is instead submitted a Software Product Sheet (hereinafter referred to as "SW"). The Certificate of License and the Software Product Sheet shall be collectively referred to as "CoL" hereinafter. The Licensee shall be submitted the CoL when the SW is supplied or in conjunction with the delivery bill. The way in which the SW is supplied is also derived directly from the Confirmation of Order or from the SW purchase order number contained in the Confirmation of Order, in conjunction with the associated order data of our catalog valid at the time of the Confirmation of Order (hereinafter collectively referred to as "Order Data"), or from the CoL. If the Licensee does not receive a data medium, it shall be authorized to copy the SW already available to it to the extent necessary to exercise the rights to use the SW granted to it. The aforesaid shall apply, mutatis mutandis, to electronic supply of the software (downloading). Where reference is made to the Order Data or the CoL in these General License Conditions, the reference to the CoL is of significance if the Licensee has not received a Confirmation of Order. In any case, the data contained in the Order Data is also contained in the CoL.

1.2 The Documentation relating to the SW (hereinafter referred to as "Documentation") shall be purchased separately, unless either the Order Data or CoL contains a stipulation stating that it belongs to the scope of delivery. If the Licensee is authorized to copy the SW in accordance with Clause 1.1, this shall also apply to the Documentation provided that it is included in the scope of delivery.

1.3 In the event that we submit a License Key to the Licensee, which unlocks the SW (hereinafter referred to as "License Key"), this License Key must also be installed.

1.4 The rights granted to the Licensee with respect to the SW are based on the License Type (see Section 2) and the Software Type (see Section 3). The license and Software Types are detailed in the Order Data or CoL. If the SW is supplied electronically or if copying rights are granted for it, the rights and duties specified in these General License Conditions shall apply to the legitimately generated copies.

1.5 If the Licensee is legitimately in possession of a previous SW version/release (hereinafter referred to as "Previous Version"), the Licensee shall be authorized to exercise the rights to use the SW granted to it either with respect to the SW or - if this is intended from a technical point of view - to the Previous Version, at its own discretion (downgrading). If the SW is an Upgrade or PowerPack in accordance with Section 4, Section 4 shall apply additionally.

1.6 If Previous Versions are listed in the Readme file of the SW under the category " parallel use", the Licensee has the right to exercise, alternatively to the user rights granted to him for the SW, the user rights for the listed Previous Versions in one (1) Instance. If the "Type of use" named in the Order Data or the CoL is: "Installation" or "User", the Licensee is entitled to the previously described right additionally to and at the same time as the Previous Versions listed in one Instance. An "Instance" in the context of these General License Conditions is either an instance in a physical operating system environment or an instance in a virtual operating system environment. The transferability of the user rights onto Previous Versions is only permissible in conjunction with the user rights for the SW in accordance with Clause 5.3.

1.7 In case the Licensee obtains only the data media but no license as per the Order Data or the CoL, any use of the SW by the Licensee is subject to the acquisition of a license according to Section 2. Up to the acquisition of the license, the Licensee is not entitled to supply the SW to third parties.

1.8 In case the SW contains Open Source Software or any similar software of a third party (hereinafter referred to as "OSS") the OSS is listed in the Readme_OSS-file of the SW. The Licensee is entitled to use the OSS in accordance with the respective license conditions of the OSS. The license conditions are provided on the same data carrier as the SW. The license conditions of the respective OSS shall prevail over these General License Conditions with respect to the OSS. If the license conditions of the OSS require the distribution of the source code of such OSS we shall provide such source code on request against payment of the shipping and handling charges.

1.9 The SW may be or contain licensed software other than OSS, i.e. software which has not been developed by us itself but which has been licensed to us by a third party (hereinafter referred to as the "Licensor"), e.g. Microsoft Licensing Inc. If the Licensee receives the terms and conditions stipulated by the relevant Licensor together with the SW in the Readme_OSS file in this case, such terms and conditions shall apply with respect to the Licensor's liability vis-à-vis the Licensee. Our own liability vis-à-vis the Licensee shall be governed in any case by these General License Conditions.

2. License Type

Depending on the License Type, the Licensee shall be granted the following rights to the SW:

2.1 Single License (One Off License, Copy License)
The term "One Off License" or "Copy License" which may be used in the Software Product Sheet corresponds to the term "Single License". The following regulation shall apply to the full scope of the One Off License / Copy License. The Licensee shall be granted the non-exclusive right, transferable in accordance with Clause 5.3 and valid for an unlimited period of time, to install the SW in one (1) Instance and to utilize the SW thus installed in the manner specified in the Order Data or CoL (see "Type of Use").

2.2 Floating License
The Licensee shall be granted the non-exclusive right, transferable in accordance with Clause 5.3 and valid for an unlimited period of time, to install the SW on any desired number of the Licensee's hardware devices. The number of objects (for example, users or devices) permitted to utilize the SW at the same time can be derived from the Order Data or CoL (see "Type of Use).

2.3 Rental License
The Licensee shall be granted the non-exclusive right, transferable in accordance with Clause 5.3 and limited in time as stipulated in the Order Data or CoL (see "Type of Use"), to install and use the SW in one (1) Instance. If the period of use is specified in hours, the usage decisive for the calculation of the time limit commences with the software start-up and finishes with its shut-down. If the period of usage is specified in days, weeks or months, the specified period, which commences in conjunction with the first SW start-up, shall apply independently of the actual time of usage. If the period of use is specified with a date, the right of use ends on this date – regardless of the actual period of use.

2.4 Rental Floating License
The Licensee shall be granted the non-exclusive right, transferable in accordance with Clause 5.3 and limited in time as stipulated in the Order Data or the CoL (s. " Type of use"), to install the SW on any desired number of the Licensee's hardware devices. The number of objects (for example, users or devices) permitted to utilize the SW at the same time can be derived from the Order Data or CoL (see "Type of Use) as well. If the period of use is specified in hours, the usage decisive for the calculation of the time limit commences with the software start-up and finishes with its shut-down. If the period of usage is specified in days, weeks or months, the specified period, which commences in conjunction with the first SW start-up, shall apply independently of the actual time of usage. If the period of use is specified with a date, the right of use ends on this date – regardless of the actual period of use.

2.5 Demo License
The Licensee shall be granted the non-exclusive right, transferable in accordance with Clause 5.3 and limited in time as stipulated in the Order Data or the CoL (s. " Type of use"), to install the SW in one (1) Instance and to use it for validation purposes. If the period of usage is specified in days, weeks or months, the specified period, which commences in conjunction with the first SW start-up, shall apply independently of the actual time of usage. If the period of use is specified with a date, the right of use ends on this date – regardless of the actual period of use.

2.6 Demo Floating License
The Licensee shall be granted the non-exclusive right, transferable in accordance with Clause 5.3 and limited in time as stipulated in the Order Data or the CoL (s. " Type of use"), to install the SW on any desired number of the Licensee's hardware devices. The number of objects (for example, users or devices) permitted to utilize the SW at the same time can be derived from the Order Data or CoL (see "Type of Use) as well. If the period of usage is specified in days, weeks or months, the specified period, which commences in conjunction with the first SW start-up, shall apply independently of the actual time of usage. If the period of use is specified with a date, the right of use ends on this date – regardless of the actual period of use.

2.7 Trial License
The Licensee shall be granted the non-exclusive and non-transferable right to install the SW in one (1) Instance and to use it for validation purposes in the manner specified in the Order Data or CoL (see "Type of Use"). The period of usage is limited to 14 days and commences with the SW start-up, unless a different period of usage is specified in the Order Data or CoL.

3. Software Type
If the Software Type is not specified in the Order Data or CoL, the rights specified in Clause 3.2 (Runtime Software) shall apply to the SW.

3.1 Engineering Software (hereinafter referred to as "E-SW")
In the event that the Licensee uses E-SW to generate its own programs or data containing parts of the E-SW, the Licensee shall have the right, without having to pay any license fee, to copy and to use these parts of the E-SW as a part of its own programs or data, or to supply them to third parties for use. In the event that such parts are supplied to third parties for use, these parties shall be bound in writing to comply with stipulations corresponding to those in Clauses 5.1 and 5.2 with respect to the above parts of the E-SW.

3.2 Runtime Software (hereinafter referred to as "R-SW")
If the Licensee incorporates R-SW or any parts thereof into its own programs or data, it shall purchase a license with respect to the R-SW each time it installs or copies - depending on what is done first - its own programs or data containing R-SW or parts thereof, in accordance with the relevant intended Type of Use and on the basis of the Siemens catalog valid at that time. In the event that the Licensee supplies the specified programs or data to third parties for their use, these parties shall be bound in writing to adhere to stipulations corresponding to those in Section 5, with respect to the R-SW parts contained therein. The aforesaid shall not affect the Licensee's obligation to purchase a license for the R-SW if the R-SW original is copied. If the R-SW contains tools for parameterization/configuration and extended rights have been granted in this regard, this will be detailed in the readme file of the R-SW.

4. Upgrade and PowerPack
If it is apparent from the Order Data or CoL, e.g. by the addition "Upgrade" or " PowerPack" after the SW product name, that the SW is an upgrade for another software item (hereinafter referred to as "Source License"), the rights originally granted to the Licensee to use the Source License end in conjunction with the upgrade measure. The rights of use in accordance with Clause 1.6 remain unaffected by this. However, the Licensee is entitled to undo the upgrading (downgrading) - if this is intended from a technical point of view - and to exercise the rights to use the SW granted to it with respect to the Source Version in accordance with Clause 1.5.

5. Further Rights and Duties of the Licensee
5.1 Unless a stipulation to the contrary relating to a specific number of copies is contained on the data medium or in the readme file of the SW, the Licensee may generate an appropriate number of copies of every item of SW which it is authorized to use in accordance with these General License Conditions, where such copies shall be used exclusively for data backup purposes. Furthermore the Licensee may only copy the SW if and insofar as it has been granted copying rights by us in writing.

5.2 The Licensee shall not be entitled to modify, decompile or reverse engineer the SW. Nor may it extract any individual parts unless this is permitted by mandatory copyright law. Furthermore, the Licensee shall not be entitled to remove any alphanumeric identifiers, trademarks or copyright notices from the SW or the data medium and, insofar as it is entitled to make copies of the SW, shall copy them without alteration. The aforementioned regulation shall apply accordingly to the Documentation supplied in accordance with Section 1.

5.3 The Licensee shall be entitled to completely transfer the right to use the SW granted to it to a third party, provided that it concludes a written agreement with the third party in conformance with all of the conditions contained in this Section 5 and on the proviso that it does not retain any copies of the SW. If the Licensee has received a License Key for the SW, this key shall be supplied to the third party together with the SW. Furthermore, the third party shall be submitted the CoL together with these General License Conditions. The Licensee shall submit the CoL received for the SW to us at any time, if requested.

5.4 If the SW is a PowerPack or an Upgrade, the Licensee shall keep the CoL of the Source License and submit it to us at any time, if requested, together with the CoL for the SW. In the event that the Licensee transfers its right to use the PowerPack SW or Upgrade SW in accordance with Clause 5.3, it shall also submit the CoL of the Source License to the third party.

5.5 If the Licensee receives a data medium which, in addition to the SW, contains further software products which are released for use, then it shall have the right to use these released software products exclusively for validation purposes, for a limited period of time and free of charge. The period of use shall be limited to 14 days, commencing with the first start-up of the relevant software program unless a different period is specified e.g. in the readme file of the relevant software product. These software products supplied exclusively for validation purposes shall be governed, mutatis mutandis, by the stipulations contained in these General License Conditions. The Licensee shall not be authorized to pass on these software products separately, i.e. without the SW, to a third party.

The conditions of the purchase contract apply if not otherwise stipulated hereafter for the Open Source Software.

2) License Conditions and Disclaimers for Open Source Software and other Licensed Software

In the product "S7-1500 F-SM - V1.0", Copyright Siemens AG, 2015 (hereinafter "Product"), the following Open Source Software is used either unchanged or in a form that we have modified, and additionally the other License Software noted below:

Liability for Open Source Software

Open Source Software is provided free of charge. We are liable for the Product including Open Source Software contained in accordance with the license conditions applicable to the Product. Any liability for use of Open Source Software beyond the program flow intended for the Product is explicitly excluded. Furthermore, any liability for defects resulting from modifications to the Open Source Software by you or third parties is excluded.

We do not provide any technical support for the Product if it has been modified.

Please note the following license conditions and copyright notices applicable to Open Source Software and other License Software:

Component	Open Source Software [Yes/No]	Acknow-ledgements	Copyright Information / File
Dinkumware C/C++ Library - 5.01	NO		LICENSE AND COPYRIGHT INFORMATION FOR COMPONENT DINKUMWARE C/C++ LIBRARY - 5.01
GNU GCC libgcc - 4.3.2	YES		LICENSE AND COPYRIGHT INFORMATION FOR COMPONENT GNU GCC LIBGCC - 4.3.2
GNU GCC libstdc++ / libsupc++ - 4.3.2	YES		LICENSE AND COPYRIGHT INFORMATION FOR COMPONENT GNU GCC LIBSTDC++ / LIBSUPC++ - 4.3.2

LICENSE CONDITIONS AND COPYRIGHT NOTICES

Commercial Software: Dinkumware C/C++ Library - 5.01
Enclosed you'll find the license conditions and copyright notices applicable for Commercial Software Dinkumware C/C++ Library - 5.01

License conditions:

© Copyright William E. Kempf 2001
Permission to use, copy, modify, distribute and sell this software and its documentation for any purpose is hereby granted without fee, provided that the above copyright notice appear in all copies and that both that copyright notice and this permission notice appear in supporting documentation. William E. Kempf makes no representations about the suitability of this software for any purpose. It is provided "as is" without express or implied warranty.

Copyright © 1994
Hewlett-Packard Company
Permission to use, copy, modify, distribute and sell this software and its documentation for any purpose is hereby granted without fee, provided that the above copyright notice appear in all copies and that both that copyright notice and this permission notice appear in supporting documentation. Hewlett-Packard Company makes no representations about the suitability of this software for any purpose. It is provided ``as is'' without express or implied warranty.

Copyrights:

Copyright 1992 - 2006 by p.j. plauger and jim brodie. all rights reserved.

Copyright 1992-2006 by p.j. plauger. all rights reserved.ip

Copyright 1992-2006 by p.j. plauger. portions derived from work copyright 1994 by hewlettpackard company. all rights reserved

Copyright 1992-2006 by dinkumware, ltd. all rights reserved

Copyright 1992-2006 by dinkumware, ltd. portions derived from work copyright 2001 by william e. kempf. all rights reserved

Copyright 1994 hewlettpackard company

Copyright 1994 by hewlettpackard company

Copyright william e. kempf 2001

Copyright 1989-2006 by p.j. plauger. all rights reserved

Copyright (c) by p.j. plauger. all rights reserved.

Copyright (c) by dinkumware, ltd. all rights reserved.

Copyright (c) unicode, inc. all rights reserved.

(c) Copyright william e. kempf 2001

Copyright (c) hewlettpackard company

Copyright (c) by p.j. plauger. all rights reserved.

Copyright 2006 by dinkumware, ltd.

Copyright (c) by p.j. plauger, licensed by dinkumware, ltd. all rights reserved.

the dinkum cec++ library reference is copyright (c) by p.j. plauger. this code is protected by copyright. all rights reserved.

the dinkum cc++ library reference is copyright (c) by p.j. plauger. this code is protected by copyright. all rights reserved.

dinkum compleat library, vc++ package (vc++ compilers only) the dinkum compleat library and the dinkum compleat library reference are copyright (c) by p.j. plauger. all rights reserved.

LICENSE CONDITIONS AND COPYRIGHT NOTICES

Open Source Software: GNU GCC libgcc 4.3.2
Enclosed you'll find the license conditions and copyright notices applicable for Open Source Software GNU GCC libgcc 4.3.2

License conditions:

This configure script is free software; the Free Software Foundation gives unlimited permission to copy, distribute and modify it.

This config.status script is free software; the Free Software Foundation gives unlimited permission to copy, distribute and modify it.

Copyrights:

Copyright (C) 2003 Free Software Foundation, Inc.

Copyright (C) 2005, 2006 Free Software Foundation

Copyright (C) 2007 Free Software Foundation, Inc.

Copyright 1997, 1998, 1999, 2000, 2001, 2002, 2003, 2004, 2005, 2006, 2007, # 2008 Free Software Foundation, Inc.

LICENSE CONDITIONS AND COPYRIGHT NOTICES

Open Source Software: GNU GCC libstdc++ / libsupc++ 4.3.2
Enclosed you'll find the license conditions and copyright notices applicable for Open Source Software GNU GCC libstdc++ / libsupc++ 4.3.2

License conditions:

Distributed under the Boost
Software License, Version 1.0. (See accompanying file
LICENSE_1_0.txt or copy at http:www.boost.org/LICENSE_1_0.txt)

Boost Software License - Version 1.0 - August 17th, 2003

Permission is hereby granted, free of charge, to any person or organization obtaining a copy of the software and accompanying documentation covered by this license (the "Software") to use, reproduce, display, distribute, execute, and transmit the Software, and to prepare derivative works of the Software, and to permit third-parties to whom the Software is furnished to do so, all subject to the following:

The copyright notices in the Software and this entire statement, including the above license grant, this restriction and the following disclaimer, must be included in all copies of the Software, in whole or in part, and all derivative works of the Software, unless such copies or derivative works are solely in the form of machine-executable object code generated by a source language processor.

THE SOFTWARE IS PROVIDED "AS IS", WITHOUT WARRANTY OF ANY KIND, EXPRESS OR
IMPLIED, INCLUDING BUT NOT LIMITED TO THE WARRANTIES OF MERCHANTABILITY,
FITNESS FOR A PARTICULAR PURPOSE, TITLE AND NON-INFRINGEMENT. IN NO EVENT
SHALL THE COPYRIGHT HOLDERS OR ANYONE DISTRIBUTING THE SOFTWARE BE LIABLE
FOR ANY DAMAGES OR OTHER LIABILITY, WHETHER IN CONTRACT, TORT OR OTHERWISE,
ARISING FROM, OUT OF OR IN CONNECTION WITH THE SOFTWARE OR THE USE OR OTHER
DEALINGS IN THE SOFTWARE.

This is free software; see the source for copying conditions. There is NO warranty; not even for MERCHANTABILITY or FITNESS FOR A PARTICULAR PURPOSE.

This file is free software; the Free Software Foundation
gives unlimited permission to copy and/or distribute it,
with or without modifications, as long as this notice is preserved.

Free Software Foundation, Inc.
This file is free software; the Free Software Foundation
gives unlimited permission to copy and/or distribute it,
with or without modifications, as long as this notice is preserved.
This program is distributed in the hope that it will be useful,
but WITHOUT ANY WARRANTY, to the extent permitted by law; without
even the implied warranty of MERCHANTABILITY or FITNESS FOR A
PARTICULAR PURPOSE.

Permission to copy, use, modify, sell and distribute this software
is granted provided this copyright notice appears in all copies.
This software is provided "as is" without express or implied
warranty, and with no claim as to its suitability for any purpose.

This Makefile.in is free software; the Free Software Foundation
gives unlimited permission to copy and/or distribute it,
with or without modifications, as long as this notice is preserved.
This program is distributed in the hope that it will be useful,
but WITHOUT ANY WARRANTY, to the extent permitted by law; without
even the implied warranty of MERCHANTABILITY or FITNESS FOR A
PARTICULAR PURPOSE.

This configure script is free software; the Free Software Foundation
gives unlimited permission to copy, distribute and modify it.

Permission to use, copy, modify, distribute and sell this software
and its documentation for any purpose is hereby granted without fee,
provided that the above copyright notice appear in all copies and
that both that copyright notice and this permission notice appear
in supporting documentation. Silicon Graphics makes no
representations about the suitability of this software for any
purpose. It is provided "as is" without express or implied warranty.

Permission to use, copy, modify, sell, and distribute this
software is hereby granted without fee, provided that the above
copyright notice appears in all copies, and that both that
copyright notice and this permission notice appear in
supporting documentation.
None of the above authors, nor IBM Haifa Research
Laboratories, Red Hat, or both, make any representation about
the suitability of this software for any purpose. It is
provided "as is" without express or implied warranty.

Permission to use, copy, modify, sell, and distribute this software
is hereby granted without fee, provided that the above copyright
notice appears in all copies, and that both that copyright notice and
this permission notice appear in supporting documentation. None of
the above authors, nor IBM Haifa Research Laboratories, make any
representation about the suitability of this software for any
purpose. It is provided "as is" without express or implied warranty.

Permission to use, copy, modify, distribute and sell this software
and its documentation for any purpose is hereby granted without fee,
provided that the above copyright notice appear in all copies and
that both that copyright notice and this permission notice appear
in supporting documentation. Hewlett-Packard Company makes no
representations about the suitability of this software for any
purpose. It is provided "as is" without express or implied warranty.

Verbatim copying and distribution of this entire article are
permitted worldwide, without royalty, in any medium, provided this
notice is preserved.</para>
<para>Report any problems or suggestions to
<email>webmaster@fsf.org</email>.</para>
</appendix>

Copyrights:

(C) Copyright Jeremy Siek 2000.

Copyright © 1994 Hewlett-Packard Company

Copyright © 1998 by Information Technology Industry Council.

Copyright © 2007 Free Software Foundation, Inc.

Copyright (C) Microsoft Corporation 1984-2002. All rights reserved.

Copyright (C) 1994, 1995, 1996, 1997, 1998, 1999, 2000, 2001 // Free Software Foundation

Copyright (C) 1994, 1995, 1996, 1997, 1998, 1999, 2000, 2001, 2002 // Free Software Foundation

Copyright (C) 1994, 1995, 1996, 1997, 1998, 1999, 2000, 2001, 2002, # 2003, 2004, 2005 Free Software Foundation, Inc.

Copyright (C) 1994, 1995, 1996, 1997, 1998, 1999, 2000, 2001, 2002, // 2003, 2004, 2005, 2006, 2007 // Free Software Foundation

Copyright (C) 1994, 1995, 1996, 1997, 1998, 1999, 2000, 2001, 2002, // 2003, 2004, 2005, 2006, 2007 Free Software Foundation, Inc.

Copyright (C) 1994, 1995, 1996, 1998, 1999, 2000, 2001, 2004 // Free Software Foundation

Copyright (C) 1994, 1996, 1997, 1998, 1999, 2000, 2001, 2002 // Free Software Foundation

Copyright (C) 1994, 1996, 1997, 1998, 1999, 2000, 2001, 2002, 2007 // Free Software Foundation

Copyright (C) 1994, 1999, 2000, 2003 Free Software Foundation, Inc.

Copyright (C) 1994, 1999, 2000, 2003, 2005 Free Software Foundation, Inc.

Copyright (C) 1994, 1999, 2001, 2002, 2003 Free Software Foundation, Inc.

Copyright (C) 1994, 1999, 2001, 2003 Free Software Foundation, Inc.

Copyright (C) 1995, 1996, 1997, 1998, 1999, 2000, 2001, 2002, 2003, // 2004, 2005, 2006, 2007 // Free Software Foundation

Copyright (C) 1996, 1997, 1998, 1999, 2000, 2001, 2002, 2003, 2004, # 2005 Free Software Foundation, Inc.

Copyright (C) 1996, 1997, 1998, 1999, 2000, 2001, 2002, 2003, 2004, // 2005, 2006, 2007 // Free Software Foundation

Copyright (C) 1996, 1997, 1998, 1999, 2000, 2001, 2002, 2003, 2004, 2005 # Free Software Foundation, Inc.

Copyright (C) 1996, 1997, 2000, 2001, 2003, 2005 # Free Software Foundation, Inc.

Copyright (C) 1996, 1998, 2000, 2001, 2002, 2003, 2004, 2005 # Free Software Foundation, Inc.

Copyright (C) 1997, 1998, 1999 Free Software Foundation, Inc.

Copyright (C) 1997, 1998, 1999, 2000, 2001, 2002 // Free Software Foundation, Inc.

Copyright (C) 1997, 1998, 1999, 2000, 2001, 2002 // Free Software Foundation, Inc.

Copyright (C) 1997, 1998, 1999, 2000, 2001, 2002 // Free Software Foundation, Inc.

Copyright (C) 1997, 1998, 1999, 2000, 2001, 2002, 2003 ## Free Software Foundation, Inc.

Copyright (C) 1997, 1998, 1999, 2000, 2001, 2002, 2003 // Free Software Foundation, Inc.

Copyright (C) 1997, 1998, 1999, 2000, 2001, 2002, 2003, 2004 // Free Software Foundation, Inc.
Copyright (C) 1997, 1998, 1999, 2000, 2001, 2002, 2003, 2004, // 2005, 2006, 2007 // Free Software Foundation, Inc.

Copyright (C) 1997, 1998, 1999, 2000, 2001, 2002, 2003, 2004, // 2005, 2006, 2007 Free Software Foundation, Inc.

Copyright (C) 1997, 1998, 1999, 2000, 2001, 2002, 2003, 2004, 2005 // 2006, 2007 // Free Software Foundation, Inc.

Copyright (C) 1997, 1998, 1999, 2000, 2001, 2002, 2003, 2004, 2005 // Free Software Foundation, Inc.

Copyright (C) 1997, 1998, 1999, 2000, 2001, 2002, 2003, 2004, 2005, // 2006, 2007 // Free Software Foundation, Inc.

Copyright (C) 1997, 1998, 1999, 2000, 2001, 2002, 2003, 2004, 2005, // 2006, 2007 Free Software Foundation, Inc.

Copyright (C) 1997, 1998, 1999, 2000, 2001, 2002, 2003, 2004, 2005, // 2006, 2007, 2008 // Free Software Foundation, Inc.

Copyright (C) 1997, 1998, 1999, 2000, 2001, 2002, 2003, 2004, 2005, // 2006, 2007, 2008 Free Software Foundation, Inc.

Copyright (C) 1997, 1998, 1999, 2000, 2001, 2002, 2003, 2004, 2005, // 2006, 2008 Free Software Foundation, Inc.

Copyright (C) 1997, 1998, 1999, 2000, 2001, 2002, 2003, 2004, 2005, 2006 // Free Software Foundation, Inc.

Copyright (C) 1997, 1998, 1999, 2000, 2001, 2002, 2003, 2004, 2005, 2006, // 2007 // Free Software Foundation, Inc.

Copyright (C) 1997, 1998, 1999, 2000, 2001, 2002, 2003, 2004, 2005, 2007 // Free Software Foundation, Inc.

Copyright (C) 1997, 1998, 1999, 2000, 2001, 2002, 2003, 2005 ## Free Software Foundation, Inc.

Copyright (C) 1997, 1998, 1999, 2000, 2001, 2002, 2003, 2005 // Free Software Foundation, Inc.

Copyright (C) 1997, 1998, 1999, 2000, 2001, 2002, 2003, 2008 ## Free Software Foundation, Inc.

Copyright (C) 1997, 1998, 1999, 2000, 2001, 2002, 2004 // Free Software Foundation

Copyright (C) 1997, 1998, 1999, 2000, 2001, 2002, 2004, 2005 // Free Software Foundation, Inc.

Copyright (C) 1997, 1998, 1999, 2000, 2001, 2002, 2004, 2005, // 2006, 2007 // Free Software Foundation, Inc.

Copyright (C) 1997, 1998, 1999, 2000, 2001, 2002, 2004, 2005, 2006 // Free Software Foundation, Inc.

Copyright (C) 1997, 1998, 1999, 2000, 2001, 2002, 2004, 2006 // Free Software Foundation, Inc.

Copyright (C) 1997, 1998, 1999, 2000, 2001, 2002, 2005 // Free Software Foundation, Inc.

Copyright (C) 1997, 1998, 1999, 2000, 2001, 2002, 2005, 2006 // Free Software Foundation, Inc.

Copyright (C) 1997, 1998, 1999, 2000, 2001, 2004 Free Software Foundation

Copyright (C) 1997, 1998, 1999, 2000, 2001, 2004, 2005 // Free Software Foundation, Inc.

Copyright (C) 1997, 1998, 1999, 2000, 2001, 2004, 2005, 2006 // Free Software Foundation, Inc.

Copyright (C) 1997, 1998, 1999, 2000, 2002, 2003, 2004 // Free Software Foundation, Inc.

Copyright (C) 1997, 1998, 1999, 2000, 2002, 2003, 2004, 2006 // Free Software Foundation, Inc.

Copyright (C) 1997, 1998, 1999, 2000, 2002, 2007 // Free Software Foundation, Inc.

Copyright (C) 1997, 1998, 1999, 2000, 2003 Free Software Foundation, Inc.

Copyright (C) 1997, 1998, 1999, 2000, 2004 Free Software Foundation

Copyright (C) 1997, 1998, 1999, 2000, 2004, 2007 Free Software Foundation

Copyright (C) 1997, 1998, 1999, 2001, 2002 // Free Software Foundation, Inc.

Copyright (C) 1997, 1998, 1999, 2001, 2002 Free Software Foundation, Inc.

Copyright (C) 1997, 1998, 1999, 2001, 2002, 2005 // Free Software Foundation, Inc.

Copyright (C) 1997, 1998, 1999, 2002 Free Software Foundation, Inc.

Copyright (C) 1997, 1998, 1999, 2002, 2004 // Free Software Foundation, Inc.

Copyright (C) 1997, 1998, 1999, 2003 Free Software Foundation, Inc.

Copyright (C) 1997, 1998, 1999, 2003, 2005 Free Software Foundation, Inc.

Copyright (C) 1997, 1998, 1999, 2007 Free Software Foundation, Inc.

Copyright (C) 1997, 1999, 2000, 2001, 2003, 2005 # Free Software Foundation, Inc.

Copyright (C) 1997, 1999, 2000, 2001, 2004 Free Software Foundation, Inc.

Copyright (C) 1997, 1999, 2001, 2002, 2005 Free Software Foundation, Inc.

Copyright (C) 1997, 2000, 2001, 2003, 2004, 2005 # Free Software Foundation, Inc.

Copyright (C) 1997-1999 Free Software Foundation, Inc.

Copyright (C) 1997-1999, 2000, 2001 Free Software Foundation, Inc.

Copyright (C) 1997-1999, 2000, 2002 Free Software Foundation, Inc.

Copyright (C) 1997-1999, 2001 Free Software Foundation, Inc.

Copyright (C) 1998, 1999 Greg Colvin and Beman Dawes.

Copyright (C) 1998, 1999, 2000, 2001, 2002, 2003, 2004, 2005, // 2006, 2007 // Free Software Foundation, Inc.

Copyright (C) 1998, 1999, 2003 Free Software Foundation, Inc.

Copyright (C) 1998, 1999, 2003, 2004 Free Software Foundation, Inc.

Copyright (C) 1999 Free Software Foundation, Inc.

Copyright (C) 1999, 2000 Free Software Foundation, Inc.

Copyright (C) 1999, 2000, 2001, 2002, 2003 Free Software Foundation

Copyright (C) 1999, 2000, 2001, 2002, 2003 Free Software Foundation, Inc.

Copyright (C) 1999, 2000, 2001, 2002, 2003, 2004 // Free Software Foundation, Inc.

Copyright (C) 1999, 2000, 2001, 2002, 2003, 2004 Free Software Foundation

Copyright (C) 1999, 2000, 2001, 2002, 2003, 2004, 2005 // Free Software Foundation, Inc.

Copyright (C) 1999, 2000, 2001, 2002, 2003, 2004, 2005, 2006 // Free Software Foundation

Copyright (C) 1999, 2000, 2001, 2002, 2003, 2004, 2005, 2006 // Free Software Foundation, Inc.

Copyright (C) 1999, 2000, 2001, 2002, 2003, 2004, 2005, 2006, 2007 // Free Software Foundation, Inc.

Copyright (C) 1999, 2000, 2001, 2002, 2003, 2004, 2005, 2006, 2007, 2008 // Free Software Foundation, Inc.

Copyright (C) 1999, 2000, 2001, 2002, 2003, 2005 // Free Software Foundation, Inc.

Copyright (C) 1999, 2000, 2001, 2002, 2003, 2005 Free Software Foundation

Copyright (C) 1999, 2000, 2001, 2002, 2003, 2006 // Free Software Foundation, Inc.

Copyright (C) 1999, 2000, 2001, 2002, 2004, 2005 // Free Software Foundation, Inc.

Copyright (C) 1999, 2000, 2001, 2003 Free Software Foundation

Copyright (C) 1999, 2000, 2001, 2003, 2004, 2005 // Free Software Foundation, Inc.

Copyright (C) 1999, 2000, 2001, 2004, 2005 Free Software Foundation, Inc.

Copyright (C) 1999, 2000, 2002, 2003 Free Software Foundation

Copyright (C) 1999, 2000, 2002, 2003 Free Software Foundation, Inc.

Copyright (C) 1999, 2000, 2002, 2003, 2004, 2005 // Free Software Foundation, Inc.

Copyright (C) 1999, 2000, 2002, 2003, 2005 Free Software Foundation

Copyright (C) 1999, 2000, 2003 Free Software Foundation

Copyright (C) 1999, 2000, 2003 Free Software Foundation, Inc.

Copyright (C) 1999, 2001, 2002, 2003, 2004 Free Software Foundation

Copyright (C) 1999, 2001, 2002, 2003, 2004, 2005 // Free Software Foundation, Inc.

Copyright (C) 1999, 2001, 2002, 2003, 2004, 2005 Free Software Foundation

Copyright (C) 1999, 2001, 2002, 2003, 2004, 2005, 2006 // Free Software Foundation, Inc.

Copyright (C) 1999, 2001, 2002, 2005, 2006 Free Software Foundation, Inc.

Copyright (C) 1999, 2001, 2003 Free Software Foundation

Copyright (C) 1999, 2001, 2003 Free Software Foundation, Inc.

Copyright (C) 1999, 2001, 2003, 2004 Free Software Foundation

Copyright (C) 1999, 2001, 2003, 2007 Free Software Foundation, Inc.

Copyright (C) 1999, 2001, 2004, 2005 Free Software Foundation, Inc.

Copyright (C) 1999, 2002 Free Software Foundation, Inc.

Copyright (C) 1999, 2002, 2003 Free Software Foundation, Inc.

Copyright (C) 1999, 2002, 2003, 2004 Free Software Foundation, Inc.

Copyright (C) 1999, 2002, 2003, 2004, 2005 // Free Software Foundation, Inc.

Copyright (C) 1999, 2002, 2003, 2004, 2005 Free Software Foundation, Inc.

Copyright (C) 1999, 2002, 2003, 2005 Free Software Foundation, Inc.

Copyright (C) 1999, 2002, 2004, 2005 Free Software Foundation, Inc.

Copyright (C) 1999, 2003 Free Software Foundation

Copyright (C) 1999, 2003 Free Software Foundation, Inc.

Copyright (C) 1999, 2003, 2004, 2005 Free Software Foundation, Inc.

Copyright (C) 1999, 2003, 2005 Free Software Foundation

Copyright (C) 1999, 2003, 2005 Free Software Foundation, Inc.

Copyright (C) 1999, 2004, 2005 Free Software Foundation, Inc.

Copyright (C) 1999, 2007 Free Software Foundation, Inc.

Copyright (C) 1999-2001, 2002, 2003 Free Software Foundation, Inc.

Copyright (C) 1999-2001, 2002, 2003, 2004, 2005 // Free Software Foundation, Inc.

Copyright (C) 2000 Free Software Foundation, Inc.

Copyright (C) 2000, 1999 Free Software Foundation, Inc.

Copyright (C) 2000, 2001 Free Software Foundation

Copyright (C) 2000, 2001, 2002 Free Software Foundation,

Copyright (C) 2000, 2001, 2002 Free Software Foundation, <abbrev>Inc.</abbrev> 51 Franklin <abbrev>St</abbrev>, Fifth Floor, Boston, <abbrev>MA</abbrev> 02110-1301

Copyright (C) 2000, 2001, 2002 Free Software Foundation, Inc.

Copyright (C) 2000, 2001, 2002, 2003 Free Software Foundation

Copyright (C) 2000, 2001, 2002, 2003 Free Software Foundation, Inc.

Copyright (C) 2000, 2001, 2002, 2003, 2004 Free Software Foundation

Copyright (C) 2000, 2001, 2002, 2003, 2004, 2005 // Free Software Foundation, Inc.

Copyright (C) 2000, 2001, 2002, 2003, 2004, 2005, 2006 // Free Software Foundation

Copyright (C) 2000, 2001, 2002, 2003, 2004, 2005, 2006 // Free Software Foundation, Inc.

Copyright (C) 2000, 2001, 2002, 2003, 2004, 2005, 2006, 2007 // Free Software Foundation, Inc.

Copyright (C) 2000, 2001, 2002, 2003, 2004, 2005, 2006, 2007 // Free Software Foundation

Copyright (C) 2000, 2001, 2002, 2003, 2004, 2005, 2006, 2007 // Free Software Foundation, Inc.

Copyright (C) 2000, 2001, 2002, 2003, 2004, 2005, 2006, 2007, 2008 // Free Software Foundation, Inc.

Copyright (C) 2000, 2001, 2002, 2003, 2004, 2005, 2007 ## Free Software Foundation, Inc.

Copyright (C) 2000, 2001, 2002, 2003, 2004, 2006, 2007 // Free Software Foundation, Inc.

Copyright (C) 2000, 2001, 2002, 2003, 2005 Free Software Foundation

Copyright (C) 2000, 2001, 2002, 2003, 2005 Free Software Foundation, Inc.

Copyright (C) 2000, 2001, 2002, 2003, 2006 Free Software Foundation, Inc.

Copyright (C) 2000, 2001, 2002, 2003, 2007 Free Software Foundation

Copyright (C) 2000, 2001, 2003 Free Software Foundation, Inc.

Copyright (C) 2000, 2001, 2003, 2004 Free Software Foundation, Inc.

Copyright (C) 2000, 2001, 2003, 2004, 2005 Free Software Foundation, Inc.

Copyright (C) 2000, 2001, 2003, 2004, 2005, 2006 // Free Software Foundation, Inc.

Copyright (C) 2000, 2001, 2003, 2005 Free Software Foundation, Inc.

Copyright (C) 2000, 2001, 2004, 2005 Free Software Foundation, Inc.

Copyright (C) 2000, 2001, 2005, 2006 Free Software Foundation, Inc.

Copyright (C) 2000, 2002 Free Software Foundation, Inc.

Copyright (C) 2000, 2002, 2003 Free Software Foundation

Copyright (C) 2000, 2002, 2003 Free Software Foundation, Inc.

Copyright (C) 2000, 2002, 2003, 2004 Free Software Foundation

Copyright (C) 2000, 2002, 2003, 2004, 2006, 2007 Free Software Foundation, Inc.

Copyright (C) 2000, 2002, 2003, 2005 Free Software Foundation

Copyright (C) 2000, 2002, 2004, 2005 Free Software Foundation, Inc.

Copyright (C) 2000, 2002, 2005 Free Software Foundation, Inc.

Copyright (C) 2000, 2002, 2005, 2008 Free Software Foundation, Inc.

Copyright (C) 2000, 2002, 2006 Free Software Foundation, Inc.

Copyright (C) 2000, 2003 Free Software Foundation

Copyright (C) 2000, 2003 Free Software Foundation, Inc.

Copyright (C) 2000, 2003, 2004 Free Software Foundation

Copyright (C) 2000, 2003, 2004 Free Software Foundation, Inc.

Copyright (C) 2000, 2003, 2004, 2005 Free Software Foundation, Inc.

Copyright (C) 2000, 2005 Free Software Foundation, Inc.

Copyright (C) 2001 Free Software Foundation

Copyright (C) 2001 Free Software Foundation, Inc.

Copyright (C) 2001 Free Software Foundation, Inc. # Benjamin Kosnik <bkoz@redhat.com>, 2001.

Copyright (C) 2001, 2002 Free Software Foundation, Inc.

Copyright (C) 2001, 2002, 2003 Free Software Foundation

Copyright (C) 2001, 2002, 2003 Free Software Foundation, Inc.

Copyright (C) 2001, 2002, 2003 Peter Dimov

Copyright (C) 2001, 2002, 2003, 2004 Free Software Foundation

Copyright (C) 2001, 2002, 2003, 2004 Free Software Foundation, Inc.

Copyright (C) 2001, 2002, 2003, 2004, 2005 Free Software Foundation

Copyright (C) 2001, 2002, 2003, 2004, 2005 Free Software Foundation, Inc.

Copyright (C) 2001, 2002, 2003, 2004, 2005, 2006 // Free Software Foundation, Inc.

Copyright (C) 2001, 2002, 2003, 2004, 2005, 2006 Free Software Foundation

Copyright (C) 2001, 2002, 2003, 2004, 2005, 2006, 2007 # Free Software Foundation, Inc.

Copyright (C) 2001, 2002, 2003, 2004, 2005, 2006, 2007 // Free Software Foundation

Copyright (C) 2001, 2002, 2003, 2004, 2005, 2006, 2007 // Free Software Foundation, Inc.

Copyright (C) 2001, 2002, 2003, 2004, 2005, 2006, 2007 // Free Software Foundation

Copyright (C) 2001, 2002, 2003, 2004, 2005, 2006, 2007 // Free Software Foundation, Inc.

Copyright (C) 2001, 2002, 2003, 2004, 2005, 2006, 2007, 2008 ## Free Software Foundation, Inc.

Copyright (C) 2001, 2002, 2003, 2004, 2005, 2006, 2007, 2008 // Free Software Foundation

Copyright (C) 2001, 2002, 2003, 2004, 2005, 2006, 2007, 2008 // Free Software Foundation, Inc.

Copyright (C) 2001, 2002, 2003, 2004, 2008 Free Software Foundation, Inc.

Copyright (C) 2001, 2002, 2003, 2005 Free Software Foundation, Inc.

Copyright (C) 2001, 2002, 2003, 2005 Free Software Foundation

Copyright (C) 2001, 2002, 2003, 2005 Free Software Foundation, Inc.

Copyright (C) 2001, 2002, 2003, 2005, 2006 Free Software Foundation

Copyright (C) 2001, 2002, 2003, 2005, 2007 Free Software Foundation, Inc.

Copyright (C) 2001, 2002, 2003, 2006 Free Software Foundation, Inc.

Copyright (C) 2001, 2002, 2003, 2006, 2008 Free Software Foundation, Inc.

Copyright (C) 2001, 2002, 2004 Free Software Foundation, Inc.

Copyright (C) 2001, 2002, 2004, 2005 Free Software Foundation

Copyright (C) 2001, 2002, 2004, 2005 Free Software Foundation, Inc.

Copyright (C) 2001, 2002, 2004, 2005, 2006 Free Software Foundation, Inc.

Copyright (C) 2001, 2002, 2004, 2005, 2007 Free Software Foundation, Inc.

Copyright (C) 2001, 2002, 2004, 2005, 2008 Free Software Foundation, Inc.

Copyright (C) 2001, 2002, 2004, 2006 Free Software Foundation, Inc.

Copyright (C) 2001, 2002, 2005 Free Software Foundation, Inc.

Copyright (C) 2001, 2002, 2005, 2007 Free Software Foundation, Inc.

Copyright (C) 2001, 2002, 2005, 2008 Free Software Foundation, Inc. See license.html for license.

Copyright (C) 2001, 2003 Free Software Foundation

Copyright (C) 2001, 2003 Free Software Foundation

Copyright (C) 2001, 2003 Free Software Foundation, Inc.

Copyright (C) 2001, 2003, 2004 Free Software Foundation, Inc.

Copyright (C) 2001, 2003, 2004, 2005 Free Software Foundation, Inc.

Copyright (C) 2001, 2003, 2005 Free Software Foundation, Inc.

Copyright (C) 2001, 2003, 2005 Free Software Foundation

Copyright (C) 2001, 2003, 2007 Free Software Foundation, Inc.

Copyright (C) 2001, 2004 Free Software Foundation, Inc.

Copyright (C) 2001, 2004, 2005 Free Software Foundation, Inc.

Copyright (C) 2001, 2005 Free Software Foundation, Inc.

Copyright (C) 2001, 2007 Free Software Foundation, Inc.

Copyright (C) 2002 // Free Software Foundation, Inc.

Copyright (C) 2002 Free Software Foundation

Copyright (C) 2002 Free Software Foundation, Inc.

Copyright (C) 2002 Peter Dimov

Copyright (C) 2002, 2003 Free Software Foundation

Copyright (C) 2002, 2003 Free Software Foundation, Inc.

Copyright (C) 2002, 2003, 2004, 2005 Free Software Foundation

Copyright (C) 2002, 2003, 2004, 2005 Free Software Foundation, Inc.

Copyright (C) 2002, 2003, 2004, 2005, 2006, 2007 // Free Software Foundation, Inc.

Copyright (C) 2002, 2003, 2004, 2005, 2006, 2007, 2008 ## Free Software Foundation, Inc.

Copyright (C) 2002, 2003, 2004, 2005, 2006, 2007, 2008 Free // Software Foundation

Copyright (C) 2002, 2003, 2004, 2005, 2007 Free Software Foundation, Inc.

Copyright (C) 2002, 2003, 2004, 2007 Free Software Foundation, Inc.

Copyright (C) 2002, 2003, 2005 Free Software Foundation, Inc.

Copyright (C) 2002, 2003, 2005 Free Software Foundation, Inc.

Copyright (C) 2002, 2003, 2007 Free Software Foundation, Inc.

Copyright (C) 2002, 2004 Free Software Foundation

Copyright (C) 2002, 2004 Free Software Foundation, Inc.

Copyright (C) 2002, 2004, 2005 Free Software Foundation, Inc.

Copyright (C) 2002, 2004, 2005, 2007 Free Software Foundation, Inc.

Copyright (C) 2002, 2004, 2006 Free Software Foundation, Inc.

Copyright (C) 2002, 2005, 2007 Free Software Foundation, Inc.

Copyright (C) 2002, 2007 Free Software Foundation, Inc.

Copyright (C) 2003 // Free Software Foundation, Inc.

Copyright (C) 2003 Free Software Foundation

Copyright (C) 2003 Free Software Foundation, Inc.

Copyright (C) 2003, 2004 // Free Software Foundation, Inc.

Copyright (C) 2003, 2004 Free Software Foundation

Copyright (C) 2003, 2004 Free Software Foundation, Inc.

Copyright (C) 2003, 2004, 2005 // Free Software Foundation, Inc.

Copyright (C) 2003, 2004, 2005 Free Software Foundation, Inc.

Copyright (C) 2003, 2004, 2005 Free Software Foundation

Copyright (C) 2003, 2004, 2005 Free Software Foundation, Inc.

Copyright (C) 2003, 2004, 2005, 2006 // Free Software Foundation, Inc.

Copyright (C) 2003, 2004, 2005, 2006 Free Software Foundation

Copyright (C) 2003, 2004, 2005, 2006 Free Software Foundation, Inc.

Copyright (C) 2003, 2004, 2005, 2006, 2007 // Free Software Foundation, Inc.

Copyright (C) 2003, 2004, 2005, 2006, 2007 Free Software Foundation

Copyright (C) 2003, 2004, 2005, 2006, 2007 Free Software Foundation, Inc.

Copyright (C) 2003, 2004, 2005, 2006, 2007, 2008 // Free Software Foundation, Inc.

Copyright (C) 2003, 2004, 2005, 2006, 2007, 2008 Free Software // Foundation, Inc.

Copyright (C) 2003, 2004, 2005, 2007 Free Software Foundation

Copyright (C) 2003, 2004, 2005, 2007 Free Software Foundation, Inc.

Copyright (C) 2003, 2004, 2006 Free Software Foundation, Inc.

Copyright (C) 2003, 2005 Free Software Foundation

Copyright (C) 2003, 2005 Free Software Foundation, Inc.

Copyright (C) 2003, 2005, 2006 // Free Software Foundation, Inc.

Copyright (C) 2003, 2005, 2006 Free Software Foundation, Inc.

Copyright (C) 2003, 2006 // Free Software Foundation, Inc.

Copyright (C) 2003, 2007 Free Software Foundation, Inc.

Copyright (C) 2004 Ami Tavory and Vladimir Dreizin, IBM-HRL.

Copyright (C) 2004 Free Software Foundation

Copyright (C) 2004 Free Software Foundation, Inc.

Copyright (C) 2004, 2005 Free Software Foundation, Inc.

Copyright (C) 2004, 2005 Free Software Foundation

Copyright (C) 2004, 2005 Free Software Foundation, Inc.

Copyright (C) 2004, 2005, 2006 Free Software Foundation

Copyright (C) 2004, 2005, 2006 Free Software Foundation, Inc.

Copyright (C) 2004, 2005, 2006, 2007 Free Software Foundation

Copyright (C) 2004, 2005, 2006, 2007 Free Software Foundation, Inc.

Copyright (C) 2004, 2005, 2006, 2007, 2008 // Free Software Foundation, Inc.

Copyright (C) 2004, 2005, 2006, 2007, 2008 Free Software Foundation, Inc.

Copyright (C) 2004, 2005, 2007 Free Software Foundation

Copyright (C) 2004, 2005, 2007 Free Software Foundation, Inc.

Copyright (C) 2004, 2006 Free Software Foundation, Inc.

Copyright (C) 2004, 2006, 2008 Free Software Foundation, Inc.

Copyright (C) 2004, 2007 Free Software Foundation, Inc.

Copyright (C) 2005 Free Software Foundation, Inc.

Copyright (C) 2005 Free Software Foundation

Copyright (C) 2005 Free Software Foundation, Inc.

Copyright (C) 2005, 2006 // Free Software Foundation, Inc.

Copyright (C) 2005, 2006 Free Software Foundation, Inc.

Copyright (C) 2005, 2006, 2007 Free Software Foundation

Copyright (C) 2005, 2006, 2007 Free Software Foundation, Inc.

Copyright (C) 2005, 2006, 2007, 2008 Free Software Foundation, Inc.

Copyright (C) 2005, 2006, 2008 Free Software Foundation, Inc.

Copyright (C) 2005, 2007 Free Software Foundation, Inc.

Copyright (C) 2006 // Free Software Foundation, Inc.

Copyright (C) 2006 Free Software Foundation

Copyright (C) 2006 Free Software Foundation

Copyright (C) 2006 Free Software Foundation, Inc.

Copyright (C) 2006, 2006 Free Software Foundation

Copyright (C) 2006, 2007 Free Software Foundation

Copyright (C) 2006, 2007 Free Software Foundation, Inc.

Copyright (C) 2006, 2007, 2008 // Free Software Foundation, Inc.

Copyright (C) 2006, 2007, 2008 Free Software Foundation

Copyright (C) 2006, 2007, 2008 Free Software Foundation, Inc.

Copyright (C) 2006, 2008 // Free Software Foundation, Inc.

Copyright (C) 2006-2007 Free Software Foundation, Inc.

Copyright (C) 2007 // Free Software Foundation, Inc.

Copyright (C) 2007 Free Software Foundation

Copyright (C) 2007 Free Software Foundation, Inc.

Copyright (C) 2007, 2008 Free Software Foundation

Copyright (C) 2007, 2008 Free Software Foundation, Inc.

Copyright (C) 2007,2008 Free Software Foundation, Inc.

Copyright (C) 2008 Free Software Foundation

Copyright (C) 2008 Free Software Foundation, Inc.

Copyright (c) 1994 * Hewlett-Packard Company

Copyright (c) 1996 * Silicon Graphics Computer Systems, Inc.

Copyright (c) 1996,1997 * Silicon Graphics

Copyright (c) 1996,1997 * Silicon Graphics Computer Systems, Inc.

Copyright (c) 1996-1997 * Silicon Graphics Computer Systems, Inc.

Copyright (c) 1996-1998 * Silicon Graphics Computer Systems, Inc.

Copyright (c) 1996-1999 * Silicon Graphics Computer Systems, Inc.

Copyright (c) 1997 * Silicon Graphics Computer Systems, Inc.

Copyright (c) 1997-1999 * Silicon Graphics Computer Systems, Inc.

Copyright (c) 1998 * Silicon Graphics Computer Systems, Inc.

Copyright (c) 2001, 2002, 2003 Peter Dimov and Multi Media Ltd.

Copyright 2008 FSF

Copyright Ami Tavory and Vladimir Dreizin, IBM-HRL, 2004, and Benjamin Kosnik, Red Hat, 2004.

Copyright Â© 1989, 1991 Free Software Foundation, Inc.

Copyright Â© 1998 ISO.

Copyright Â© 1999 The Open Group/The Institute of Electrical and Electronics Engineers, Inc..

Copyright Â© 1999 ISO.

Copyright Â© 2000 Addison Wesley Longman, Inc..

Copyright Â© 2000 Addison Wesley, Inc..

Copyright Â© 2000, 2001, 2002, 2003, 2004, 2005, 2006, 2007, 2008

Copyright Â© 2002 OOPSLA.

Copyright Â© 2004, 2005, 2006, 2007 Free Software Foundation, Inc., 51 Franklin Street, Fifth Floor, Boston, MA 02110-1301, USA

Copyright Â© 2004, 2005, 2006, 2007 Free Software Foundation, Inc., 51 Franklin Street, Fifth Floor, Boston, MA 02110-1301, USA</para>

Copyright Â© 2007 FSF.

copyrighted by the Free Software Foundation

copyrighted by the Free Software Foundation

SIEMENS

SIMATIC

S7-1500 / ET 200MP

Digital output module F-DQ 8x24VDC/2A PPM (6ES7526-2BF00-0AB0)

Manual

Edition 01/2016

Answers for industry.

SIEMENS

SIMATIC

ET 200MP
Digital output module
F-DQ 8x24VDC/2A PPM
(6ES7526-2BF00-0AB0)

Manual

Preface

Documentation guide 1

Product overview 2

Connecting 3

Parameters/address space 4

Applications of the F-I/O module 5

Interrupts/diagnostic messages 6

Technical specifications 7

Response times A

Switching of loads B

Open Source Software C

01/2016

A5E03858037-AA

Legal information

Warning notice system

This manual contains notices you have to observe in order to ensure your personal safety, as well as to prevent damage to property. The notices referring to your personal safety are highlighted in the manual by a safety alert symbol, notices referring only to property damage have no safety alert symbol. These notices shown below are graded according to the degree of danger.

⚠ DANGER

indicates that death or severe personal injury **will** result if proper precautions are not taken.

⚠ WARNING

indicates that death or severe personal injury **may** result if proper precautions are not taken.

⚠ CAUTION

indicates that minor personal injury can result if proper precautions are not taken.

NOTICE

indicates that property damage can result if proper precautions are not taken.

If more than one degree of danger is present, the warning notice representing the highest degree of danger will be used. A notice warning of injury to persons with a safety alert symbol may also include a warning relating to property damage.

Qualified Personnel

The product/system described in this documentation may be operated only by **personnel qualified** for the specific task in accordance with the relevant documentation, in particular its warning notices and safety instructions. Qualified personnel are those who, based on their training and experience, are capable of identifying risks and avoiding potential hazards when working with these products/systems.

Proper use of Siemens products

Note the following:

⚠ WARNING

Siemens products may only be used for the applications described in the catalog and in the relevant technical documentation. If products and components from other manufacturers are used, these must be recommended or approved by Siemens. Proper transport, storage, installation, assembly, commissioning, operation and maintenance are required to ensure that the products operate safely and without any problems. The permissible ambient conditions must be complied with. The information in the relevant documentation must be observed.

Trademarks

All names identified by ® are registered trademarks of Siemens AG. The remaining trademarks in this publication may be trademarks whose use by third parties for their own purposes could violate the rights of the owner.

Disclaimer of Liability

We have reviewed the contents of this publication to ensure consistency with the hardware and software described. Since variance cannot be precluded entirely, we cannot guarantee full consistency. However, the information in this publication is reviewed regularly and any necessary corrections are included in subsequent editions.

Siemens AG
Division Digital Factory
Postfach 48 48
90026 NÜRNBERG
GERMANY

A5E03858037-AA
℗ 01/2016 Subject to change

Copyright © Siemens AG 2016.
All rights reserved

Preface

Purpose of the documentation

This manual supplements the system manual S7-1500 Automation System. You can find information on the functions that apply generally to the S7-1500 automation system and the ET 200MP distributed I/O system in the system manual S7-1500 Automation System (http://support.automation.siemens.com/WW/view/en/59191792).

The information provided in this manual and the system manual enables you to commission the S7-1500 automation system and ET 200MP distributed I/O system.

Conventions

STEP 7: In this documentation, "STEP 7" is used as a synonym for all versions of the configuration and programming software "STEP 7 (TIA Portal)".

Please also observe the notes identified as follows:

Note

A note includes important information on the product described in the documentation, on handling the product or on the part of the documentation to which particular attention should be paid.

Important note for maintaining the operational safety of your system

Note

The operators of systems with safety-related characteristics must adhere to specific operational safety requirements. The supplier is also obliged to comply with special product monitoring measures. Siemens informs system operators by means of personal notifications about product developments and properties which may be or become important issues in terms of operational safety.

You should subscribe to the corresponding notifications in order to obtain the latest information and to allow you to make any necessary modifications to your system.

Log in to Industry Online Support. Follow the links below and click on "Email on update" on the right-hand side in each case:

- SIMATIC S7-300/S7-300F (https://support.industry.siemens.com/cs/products?pnid=13751&lc=en-WW)
- SIMATIC S7-400/S7-400H/S7-400F/FH (https://support.industry.siemens.com/cs/products?pnid=13828&lc=en-WW)
- SIMATIC S7-1500/SIMATIC S7-1500F (https://support.industry.siemens.com/cs/products?pnid=13716&lc=en-WW)
- SIMATIC S7-1200/SIMATIC S7-1200F (https://support.industry.siemens.com/cs/products?pnid=13683&lc=en-WW)
- Distributed I/O (https://support.industry.siemens.com/cs/products?pnid=14029&lc=en-WW)
- STEP 7 (TIA Portal) (https://support.industry.siemens.com/cs/products?pnid=14340&lc=en-WW)

Security information

Siemens provides products and solutions with industrial security functions that support the secure operation of plants, solutions, machines, equipment and/or networks. They are important components in a holistic industrial security concept. With this in mind, Siemens' products and solutions undergo continuous development. Siemens recommends strongly that you regularly check for product updates.

For the secure operation of Siemens products and solutions, it is necessary to take suitable preventive action (e.g. cell protection concept) and integrate each component into a holistic, state-of-the-art industrial security concept. Third-party products that may be in use should also be considered. You can find more information about industrial security on the Internet (http://www.siemens.com/industrialsecurity).

To stay informed about product updates as they occur, sign up for a product-specific newsletter. You can find more information on the Internet (http://support.automation.siemens.com).

Open Source Software

Open-source software is used in the firmware of the product described. Open Source Software is provided free of charge. We are liable for the product described, including the open-source software contained in it, pursuant to the conditions applicable to the product. Siemens accepts no liability for the use of the open source software over and above the intended program sequence, or for any faults caused by modifications to the software.

For legal reasons, we are obliged to publish the original text of the license conditions and copyright notices. Please read the information relating to this in the appendix.

Table of contents

Preface 4

1 Documentation guide 9

1.1 Guide to documentation S7-1500 / ET 200MP 9

2 Product overview 12

2.1 Properties 12

3 Connecting 15

3.1 Block diagram 15

4 Parameters/address space 18

4.1 Parameters 18

4.2 Explanation of parameters 20
4.2.1 F-parameters 20
4.2.1.1 Behavior after channel fault 20
4.2.1.2 Reintegration after channel fault 20
4.2.2 DQ parameters 21
4.2.2.1 Maximum test period 21
4.2.2.2 Operating mode of the output 21
4.2.3 Parameters of the channels 21
4.2.3.1 Diagnostics: Wire break 21
4.2.3.2 Channel activated 21
4.2.3.3 Channel failure acknowledge 22
4.2.3.4 Max. readback time dark test 22
4.2.3.5 Disable dark test for 48 hours 25
4.2.3.6 Max. readback time switch-on test 26
4.2.3.7 Activated light test 28

4.3 Address space 30

5 Applications of the F-I/O module 32

5.1 Applications for the F-DQ 8x24VDC/2A PPM 32

5.2 Application: Connecting a load per digital output, PM switching 33

5.3 Application: Connection of loads per digital output to L+ and M, PM-switching mode 34

5.4 Application: Connecting 2 loads in parallel per digital output, PM-switching mode 37

5.5 Application: Connecting a load per digital output, PP switching 39

6 Interrupts/diagnostic messages 41

6.1 Status and error displays 41

6.2 Interrupts 44

6.3 Diagnostic alarms 46

7 Technical specifications 51
A Response times 54
B Switching of loads 55
B.1 Connecting capacitive loads 55
B.2 Switching of inductive loads 57
C Open Source Software 58

Documentation guide 1

1.1 Guide to documentation S7-1500 / ET 200MP

The documentation for the SIMATIC S7-1500 automation system and the SIMATIC ET 200MP distributed I/O system is arranged into three areas.
This arrangement enables you to access the specific content you require.

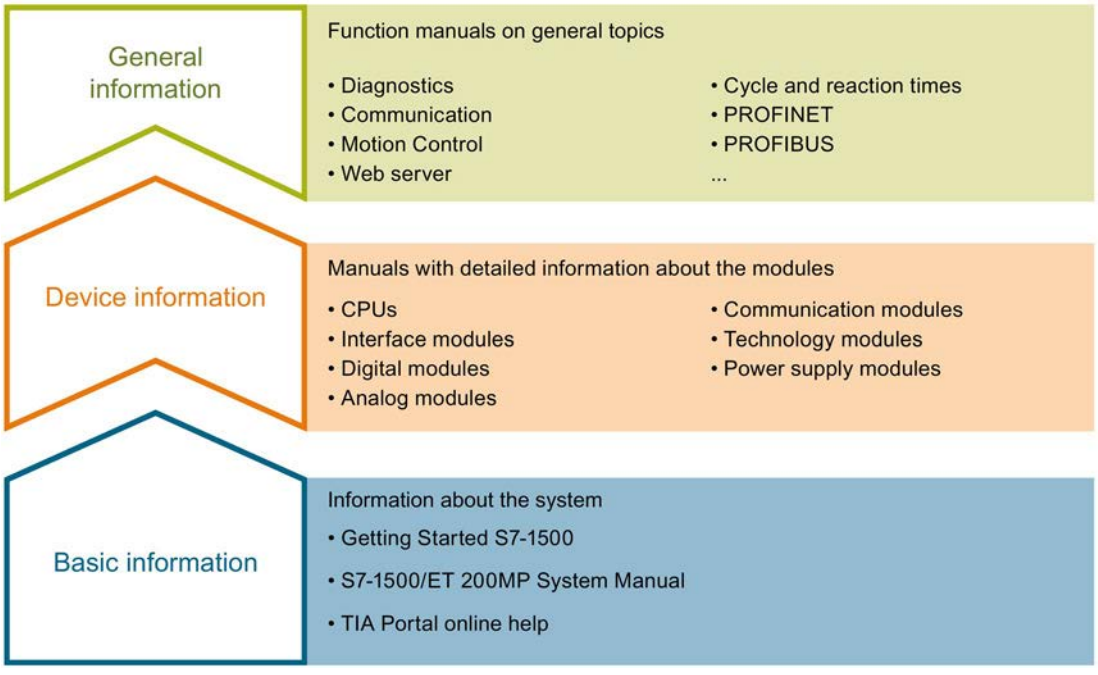

Basic information

The System Manual and Getting Started describe in detail the configuration, installation, wiring and commissioning of the SIMATIC S7-1500 and ET 200MP systems. The STEP 7 online help supports you in the configuration and programming.

Device information

Product manuals contain a compact description of the module-specific information, such as properties, wiring diagrams, characteristics and technical specifications.

General information

The function manuals contain detailed descriptions on general topics regarding the SIMATIC S7-1500 and ET 200MP systems, e.g. diagnostics, communication, Motion Control, Web server.

You can download the documentation free of charge from the Internet (http://www.automation.siemens.com/mcms/industrial-automation-systems-simatic/en/manual-overview/tech-doc-controllers/Pages/Default.aspx).

Changes and supplements to the manuals are documented in a Product Information.

You can download the product information free of charge from the Internet.

Manual Collection S7-1500/ET 200MP

The Manual Collection contains the complete documentation on the SIMATIC S7-1500 automation system and the ET 200MP distributed I/O system gathered together in one file.

You can find the Manual Collection on the Internet (http://support.automation.siemens.com/WW/view/en/86140384).

"mySupport"

With "mySupport", your personal workspace, you make the best out of your Industry Online Support.

In "mySupport", you can save filters, favorites and tags, request CAx data and compile your personal library in the Documentation area. In addition, your data is already filled out in support requests and you can get an overview of your current requests at any time.

You must register once to use the full functionality of "mySupport".

You can find "mySupport" on the Internet.

"mySupport" - Documentation

In the Documentation area in "mySupport" you can combine entire manuals or only parts of these to your own manual.
You can export the manual as PDF file or in a format that can be edited later.

You can find "mySupport" - Documentation on the Internet (http://support.industry.siemens.com/My/ww/en/documentation).

"mySupport" - CAx data

In the CAx data area in "mySupport", you can access the current product data for your CAx or CAe system.

You configure your own download package with a few clicks.

In doing so you can select:

- Product images, 2D dimension drawings, 3D models, internal circuit diagrams, EPLAN macro files
- Manuals, characteristics, operating manuals, certificates
- Product master data

You can find "mySupport" - CAx data on the Internet (http://support.industry.siemens.com/my/ww/en/CAxOnline).

Application examples

The application examples support you with various tools and examples for solving your automation tasks. Solutions are shown in interplay with multiple components in the system - separated from the focus on individual products.

You will find the application examples on the Internet (https://support.industry.siemens.com/sc/ww/en/sc/2054).

TIA Selection Tool

With the TIA Selection Tool, you can select, configure and order devices for Totally Integrated Automation (TIA).
This tool is the successor of the SIMATIC Selection Tool and combines the known configurators for automation technology into one tool.
With the TIA Selection Tool, you can generate a complete order list from your product selection or product configuration.

You can find the TIA Selection Tool on the Internet (http://w3.siemens.com/mcms/topics/en/simatic/tia-selection-tool).

Product overview

2

2.1 Properties

Order number

6ES7526-2BF00-0AB0

View of the module

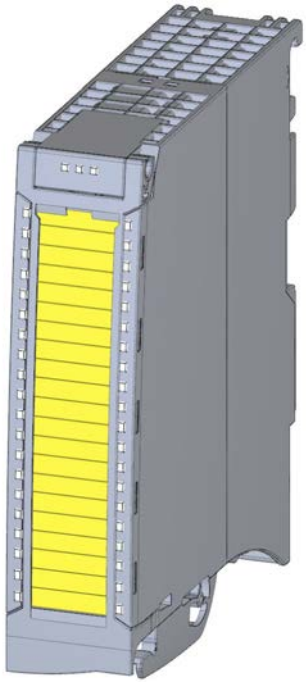

Image 2-1 View of the F-DQ 8x24VDC/2A PPM module

Properties

- Technical properties
  - Fail-safe digital module for use in the S7-1500 automation system and in the ET 200MP distributed I/O system.
  - PROFIsafe
  - PROFIsafe address type 2
  - Supports the RIOforFA-Safety profile (on S7-1500 F-CPUs)
  - 8 output PM-switching or PP-switching in 2 channel groups (SIL3/Cat.4/PLe)
  - Supply voltage L+
  - Output current per output 2 A
  - Source output (PM/PP-switching)
  - Suitable for solenoid valves, DC contactors and signal lamps
  - Status display RUN (green LED)
  - Status display module diagnostics (red LED)
  - Status display channel status/channel diagnostics per output (green/red LED)
  - Status display supply voltage (green LED)
  - Diagnostics, e.g., short-circuit/wire break/load voltage missing, channel-specific
  - Channel-specific or module-wide passivation
- Supported functions
  - Firmware update
  - I&M identification data

WARNING

The fail-safe performance characteristics in the technical specifications apply for a mission time of 20 years and a repair time of 100 hours. If a repair within 100 hours is not possible, switch off the supply voltage of the affected module before 100 hours expires. The module switches off independently after the 100 hours have expired.

Follow the repair procedure described in section Diagnostic alarms (Page 46).

Accessories

The following accessories are supplied with the module and can also be ordered as spare part:

- Labeling strips
- U-connector
- Universal front cover
- Electronic coding element

Additional components

The following component is to be ordered separately:

- Front connector incl. potential bridges and cable ties

You can find additional information on accessories in the S7-1500/ET 200MP (http://support.automation.siemens.com/WW/view/en/59191792) system manual.

Passivation of fail-safe outputs over a long period of time

WARNING

Unintentional activation of F-I/O with fail-safe outputs

If an F-I/O with fail-safe outputs is passivated for a period longer than that specified in the safety parameters (> 100 hours) and the fault remains uncorrected, you need to exclude the possibility that the F-I/O can be activated unintentionally by a second fault, and thus place the F-system in a dangerous state.

Even though it is highly unlikely that such hardware faults occur, you must prevent the unintentional activation of F-I/O with fail-safe outputs by using circuit measures or organizational measures.

One possibility is the shutdown of the power supply of the passivated F-I/O within a time period of 100 hours, for example.

The required measures are standardized for plants with product standards.

For all other plants, the plant operator must create a concept for the required measures and have it approved by the inspector.

Property of the individual shutdown of F-modules with fail-safe outputs:

A channel-specific shutdown occurs when a fault is detected. It is also possible to react to critical process states staggered over time or to perform safety-related shutdown of individual outputs.

Connecting 3

3.1 Block diagram

This section includes:

- The block diagram with the general pin assignment of the F-module.
- An example for switching of loads with ground.

For information on parameter assignment of the F-module, refer to "Parameters/address space (Page 18)".

Information on different connection options is available in the section Applications of the F-I/O module (Page 32).

You can find information on wiring the front connectors and creating the cable shielding, etc., in the Wiring section of the system manual Automation System S7-1500 (http://support.automation.siemens.com/WW/view/en/59191792).

⚠ WARNING
To protect the F-module, always install an external fuse with the following properties for the load circuit: Circuit-breaker 24 V DC/16 A, tripping characteristic type B.

Block diagram

The following figure shows the assignment of channels to addresses.

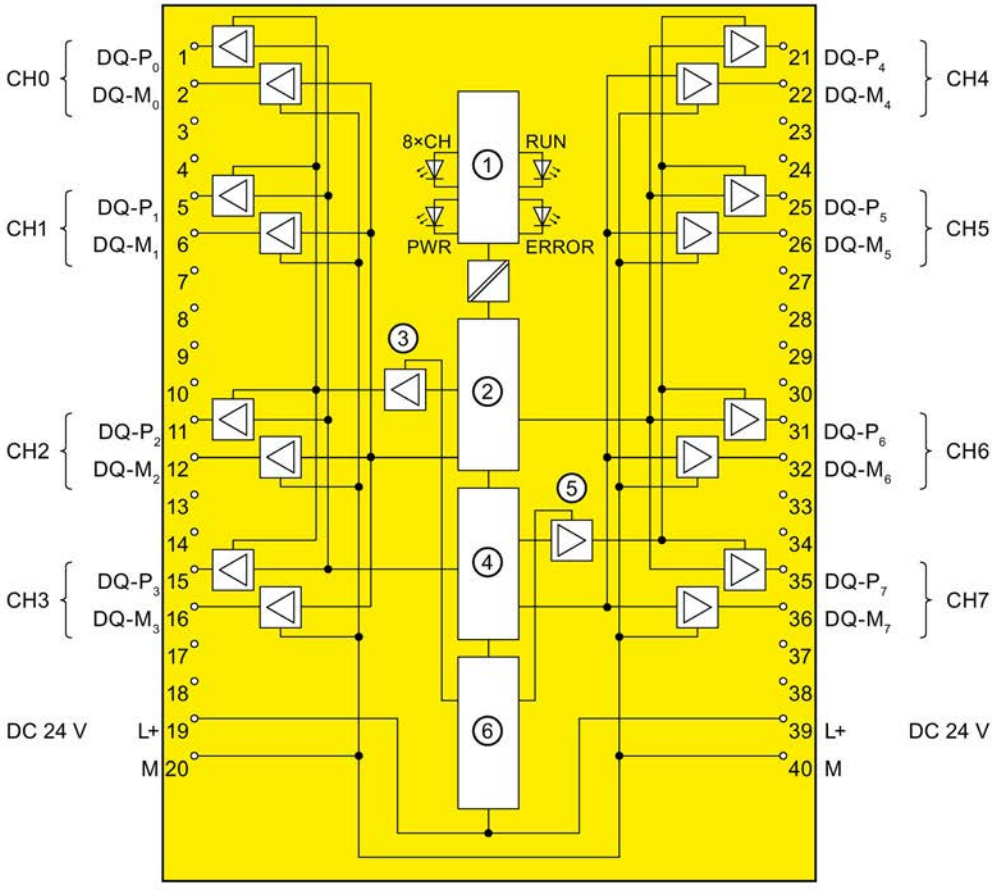

①	Backplane bus interface	$DQ\text{-}M_n$	Ground for output bit n, channel n, M-switching
②	Microcontroller 1	L+	Supply voltage 24 V DC
③	P1 switch for channel groups 0 to 3	M	Chassis ground
④	Microcontroller 2	CH	Channel or LED channel status, channel diagnostics (green, red)
⑤	P1 switch for channel groups 4 to 7	PWR	LED supply voltage (green)
⑥	Reverse polarity protection	RUN	RUN LED (green)
$DQ\text{-}P_n$	Output bit n, channel n, P-switching	ERROR	LED module diagnostics (red)

Note:

- In PP operation, the DQ M channels are not used.
- Terminal 19 and 39 (L+) bridged internally
- Terminal 20 and 40 (M) bridged internally

  Note the maximum permissible cable cross-sections and use both terminals, if necessary.

Image 3-1 Block diagram of the F-DQ 8x24VDC/2A PPM

Switching of loads with ground if the F-module is configured PM-switching

If the following two conditions are met, F-DQ 8x24VDC/2A PPM detects a short-circuit:

- If loads that have a connection between chassis and ground are switched by the F-DQ 8x24VDC/2A PPM (for example, to improve the EMC properties).
- If chassis and ground are connected at the power supply unit.

From the perspective of the F-module, the M-switch is bridged by the chassis-ground connection (refer to the diagram below for an example).

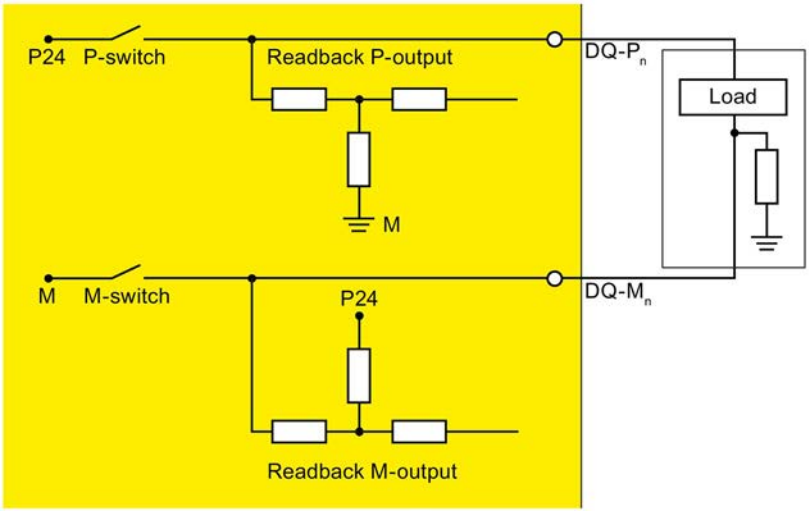

Image 3-2 Switching of grounded loads (resistance between chassis and ground)

Remedy:

- Increase the parameters "Max. readback time dark test" and "Max. readback time switch-on test".
- Increase the value of the resistance between chassis and ground at the load end to more than 100 kΩ.

Or:

- Use the F-DQ 8x24VDC/2A PPM configured as a PP-switching module.

Parameters/address space 4

4.1 Parameters

Parameters

⚠ WARNING
Diagnostic functions must be activated or deactivated in accordance with the application, see section Applications of the F-I/O module (Page 32).

Table 4- 1 Parameters for F-DQ 8x24VDC/2A PPM

Parameter	Value range	Parameter reassignment in RUN	Scope
F-parameters:			
Manual assignment of F-monitoring time	• Disable • Enable	No	Module
F-monitoring time	1 to 65535 ms	No	Module
F-source address	1 to 65534	No	Module
F-destination address	1 to 65534	No	Module
F-parameter signature (without address)	0 to 65535	No	Module
Behavior after channel fault	• Passivate channel • Passivate the entire module	No	Module
Reintegration after channel fault	• Adjustable • All channels automatically • All channels manually	No	Module
F-I/O DB manual number assignment	• Disable • Enable	No	Module
F-I/O DB-number	—	No	Module
F-I/O DB name	—	No	Module
DQ parameters:			
Maximum test period	• 100 s • 1000 s	No	Module
Operating mode of the output	• PM-switching mode • PP switching	No	Module

Parameter	Value range	Parameter reassignment in RUN	Scope
Channel parameters in operating mode PM-switching:			
Channel n			
Diagnostics: Wire break	• Disable • Enable	No	Channel
Channel activated	• Disable • Enable	No	Channel
Channel failure acknowledge	• Manual • Automatic The value range offered depends on the F-CPU in use and on the configuration of the F-parameter "Reintegration after channel fault".	No	Channel
Max. readback time dark test	0.8 to 400.0 ms	No	Channel
Disable dark test for 48 hours	• Disable • Enable	No	Channel
Max. readback time switch on test	0.8 to 5.0 ms	No	Channel
Activated light test	• Disable • Enable	No	Channel
Channel parameters in operating mode PP-switching:			
Channel n			
Diagnostics: Wire break	• Disable • Enable	No	Channel
Channel activated	• Disable • Enable	No	Channel 1...7 (Channel 0 always enabled)
Channel failure acknowledge	• Manual • Automatic The value range offered depends on the F-CPU in use and on the configuration of the F-parameter "Reintegration after channel fault".	No	Channel
Max. readback time dark test	0.8 to 400.0 ms	No	Module (Channel 0)
Disable dark test for 48 hours	Disable	No	Module
Max. readback time switch on test	0.8 to 5.0 ms	No	Module (Channel 0)
Activated light test	Enable	No	Module

4.2 Explanation of parameters

4.2.1 F-parameters

You must assign the PROFIsafe address (F-destination address together with F-source address) to the F-module before you put it into operation.

- You define the F-source address using the "Basis for PROFIsafe addresses" parameter in the F-CPU.
- An F-destination address unique throughout the CPU is automatically assigned for each F-module. You can manually change the F-destination addresses set in the hardware configuration.

You can find information on F-parameters for the F-monitoring time, the PROFIsafe address assignment (F-source address, F-destination address) and the F I/O DB in the manual SIMATIC Safety - Configuring and Programming (http://support.automation.siemens.com/WW/view/en/54110126).

4.2.1.1 Behavior after channel fault

This parameter is used to specify whether the entire F-module is passivated or just the faulty channel(s) in the event of channel faults:

- "Passivate the entire module"
- "Passivate channel"

4.2.1.2 Reintegration after channel fault

Use this parameter to select how the channels of the fail-safe module are reintegrated after a fault.

Use in S7-300/400 F-CPUs

This parameter is always set to "Adjustable" when you use the fail-safe module in S7-300/400 F-CPUs.

You make the required setting in the F-I/O DB of the fail-safe module.

Use in S7-1500 F-CPUs

When using the fail-safe module in S7-1500 F-CPUs, you set this parameter in the STEP 7 dialog of the fail-safe module:

- "Adjustable"
- "All channels automatically"
- "All channels manually"

If you have set the "Behavior after channel fault" parameter to "Passivate channel", you enable individual setting of the reintegration type per channel with the parameter assignment "Adjustable". The reintegration type of the respective channel is specified with the "Channel failure acknowledge" channel parameter.

If you have set the "Behavior after channel fault" parameter to "Passivate the entire module", you can only select the same reintegration type for all channels.

4.2.2 DQ parameters

4.2.2.1 Maximum test period

With this parameter, you specify the time within which the light, dark and switch on tests should be performed throughout the module. When this time expires, the tests are repeated. In case of a fault, the test time is reduced to 60 seconds.

- Use "1000 s", for example, to conserve your actuators.
- Use "100 s" to detect faults more quickly.

The "Maximum test period" parameter is a module parameter, which means the test cycle for the entire fail-safe output module is performed within the configured maximum test time. If the bit pattern test is not performed within the configured time (or the shortened test time of 60 seconds in case of an error), the module goes into the error state.

4.2.2.2 Operating mode of the output

Chooses between PM and PP switching mode for the outputs.

After re-parameterization of the operating mode, the power supply of the F-module must be switched OFF and ON.

4.2.3 Parameters of the channels

4.2.3.1 Diagnostics: Wire break

You can use a wire break test to monitor the connection from the output channel to the actuator.

Selecting this check box enables the wire break monitoring for the relevant channel.

You also have to activate the light test to detect a wire break with an output signal "0".

⚠ WARNING
The diagnostics for wire break of the outputs is not designed for safety-related functions and can therefore not be evaluated for safety-related activities.

4.2.3.2 Channel activated

If you select this check box, the corresponding channel is enabled for signal processing in the safety program.

You can deactivate an unused channel with this parameter.

4.2.3.3 Channel failure acknowledge

Use in S7-1500 F-CPUs

This parameter is only relevant if the fail-safe module is operated on an S7-1500 F-CPU, and can only be set if the F-parameter "Behavior after channel fault" is set to "Passivate channel" and the F-parameter "Reintegration after channel fault" is set to "Adjustable".

The value of this parameter specifies how the channel should react to a channel fault:

- Manual: A channel is not reintegrated until after manual acknowledgment.
- Automatically: The channel is reintegrated automatically after a channel fault. Manual acknowledgment is not necessary.

Use in S7-300/400 F-CPUs

The value of this parameter is not relevant in the case of operation on S7-300/400 F-CPUs. There you set the corresponding property at the F-I/O DB by means of the ACK_NEC tag.

For detailed information about the F-I/O DB, refer to the SIMATIC Safety – Configuring and Programming (http://support.automation.siemens.com/WW/view/en/54110126) manual.

4.2.3.4 Max. readback time dark test

Function

Dark tests are shutdown tests with bit pattern test.

For a dark test, a test signal is switched to the output channel while the output channel is active (output signal "1"). The output channel is then switched off briefly (= "dark period") and read back (for **PM operation**, P- and M-readback, for **PP operation** only PP-readback). A sufficiently slow actuator does not respond to this and remains switched on.

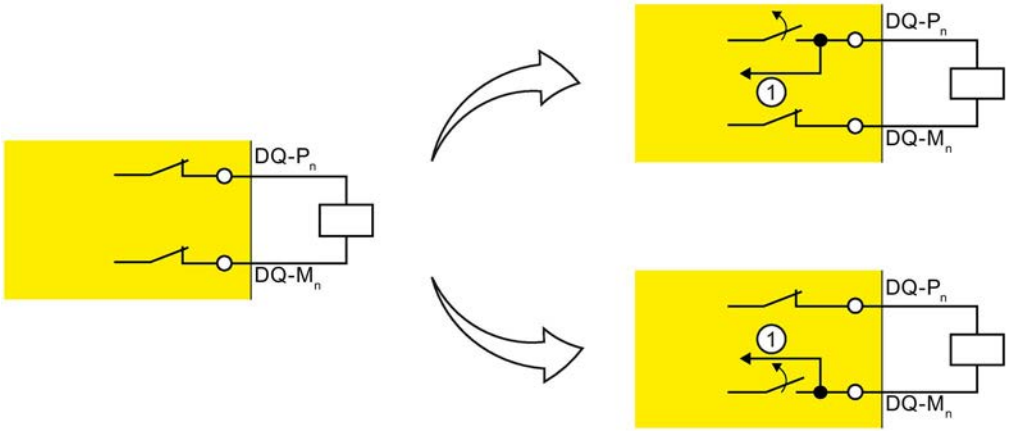

① Readback (P-switch and M-switch do not switch simultaneously.)

Image 4-1 Functional principle of the dark test (PM switching)

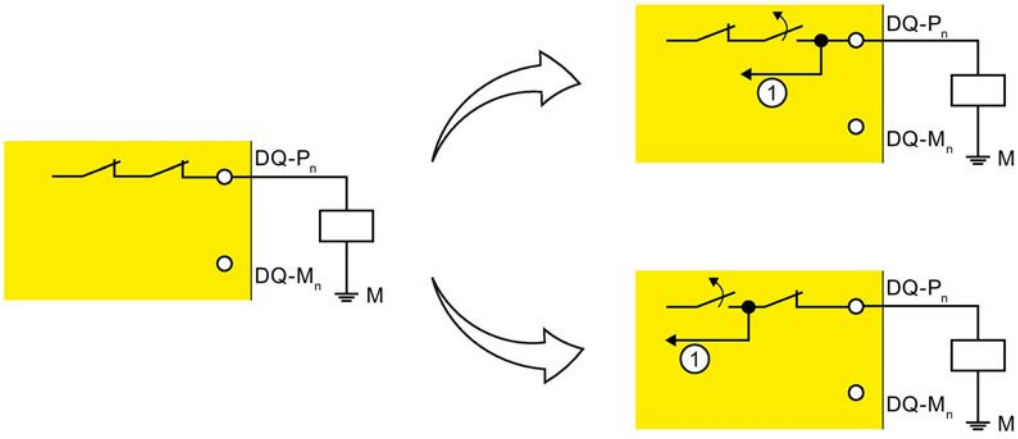

① Readback (The two P-switches do not switch simultaneously.)

Image 4-2 Functional principle of the dark test (PP switching)

This parameter allows you to set the time for the readback.

If the expected signals could not be read back correctly after expiration of the readback time, the output channel is passivated.

No new process values are switched to the output channels while a bit pattern is still active (switch test is carried out). This means that a higher maximum readback time for the dark test increases the response time of the F-module.

⚠ WARNING
Through the configured readback time dark test, short-circuits (cross-circuits) to a signal with a frequency greater than 1/(2 x configured readback time dark test) Hz cannot be recognized (50:50 sampling ratio). Short-circuits (cross-circuits) to an output of the same module are recognized.

The parameter also has an effect on the short-circuit detection (cross-circuit) with "1" signal when the output signal is changed from "1" to "0" with the safety program.

Setting readback time dark test

Because the fault reaction time is extended by the length of the readback time dark test, we recommend that you set the readback time dark test as low as possible, but high enough that the output channel is not passivated.

In case of the "Connecting a load per digital output, PP switching" (Page 39) application, see the warnings and notes in the section describing the application.

To determine the readback time required for your actuator, refer to the diagram in the section Switching capacitive loads (Page 55).

Setting readback time dark test with unknown actuator capacity

If the capacity of the actuator is not known, it may be necessary for you to determine the value for the readback time dark test by trial and error. This may also be necessary due to the part variances in the actuator or external influences.

Proceed as follows:

- Set the readback time dark test so that the output channel can be read back correctly but your actuator does not respond yet.
- For verification use the process value "1" with a minimum duration that corresponds to the "maximum test time" parameter.
- If the output channel is passivated sporadically, set a higher value for the maximum readback time dark test.
- If the output channel is passivated, the readback time dark test is too small for a connected capacitive load. The discharge cannot take place during the configured readback time dark test. Increase the readback time dark test.

If you have set the readback time dark test to the maximum value of 400 ms and there is still a passivation of the output channel, there is either an external fault or the connected capacity is outside the permitted range.

To increase availability, we recommend that you maintain an interval to the determined limit for the times.

Test pulses of the dark test

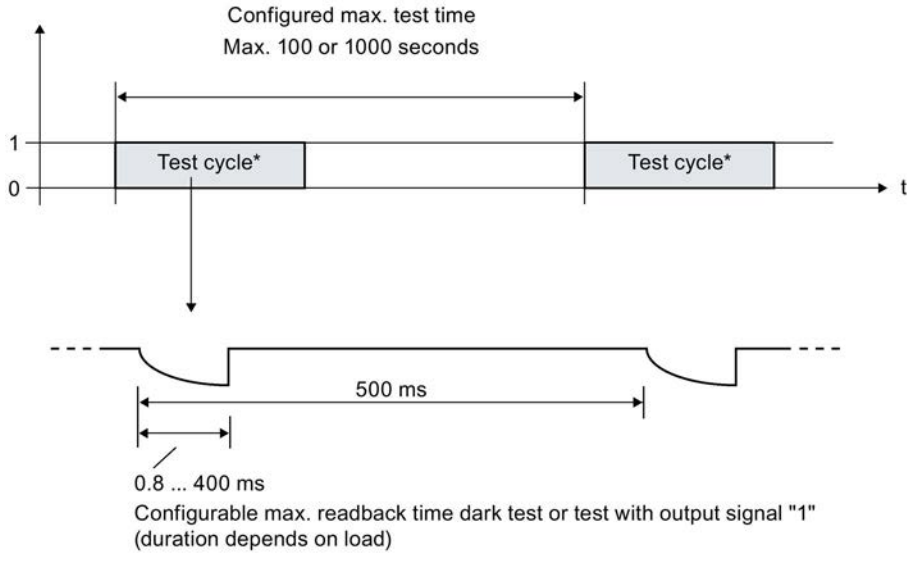

* Output of test pulses only during test cycle.

Image 4-3 Test pulses of the dark test

The interval between two test pulses is 500 ms.

4.2.3.5 Disable dark test for 48 hours

Note

Can only be configured for **PM operation**.

This option allows you to suppress the dark test.

If the channel is permanently active (1) for 48 hours, one dark test pulse is applied at the channel once this time has expired.

You must ensure the signal change from 1 to 0 at the channel yourself within 48 hours to prevent the dark test pulse. This also applies to the operating time if the operating time is < 48 hours. The dark test is suspended for another 48 hours after the signal change from 0 to 1.

The dark test is permanently suppressed if the following condition is met:

- A signal change from 1 to 0 takes place before the 48 hours have expired.

WARNING

When you use the function "Disable dark test for 48 hours", cross-circuits and other errors are not detected.

Also take into consideration the respective requirements of your product standards regarding error detection time.

4.2.3.6 Max. readback time switch-on test

Function

The switch on test is part of the bit pattern test.

PM operation

During the switch-on test in PM operation, the P-switch and M-switch of the output channel are alternately closed and read back when the output channel is inactive (output signal "0"). Contrary to the light test, no power flows through the connected load during the switch on test.

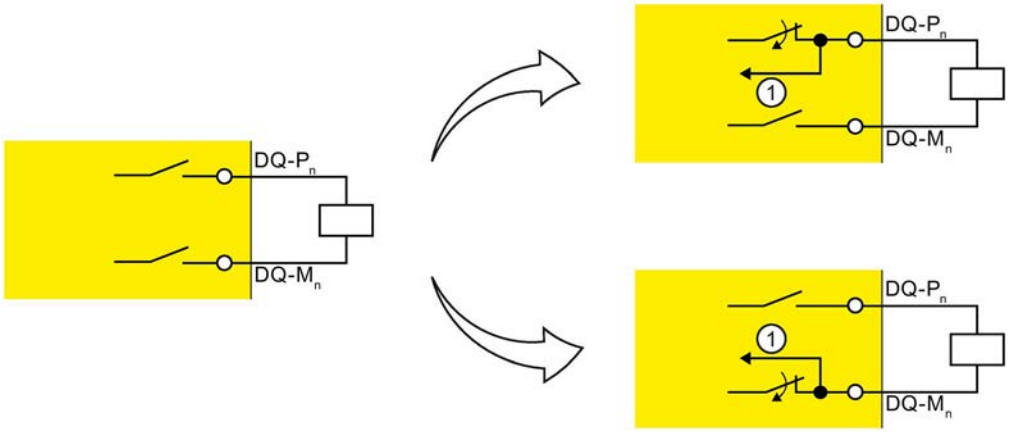

① Readback

Image 4-4 Functional principle of the switch on test (PM switching)

⚠ WARNING

In case of an error, the bit pattern test can apply voltage to the load up to a duration that was configured with the "Maximum readback time switch on test" parameter.

For capacitive loads, it can happen that these are not actively discharged in the event of an error.

Therefore, always configure a maximum readback time that cannot activate the load under any circumstances.

PP operation

The M-switch is meaningless during the switch-on test in PP operation. The switch-on test corresponds to the light test and current flows through the load. The light test is always activated in PP operation.

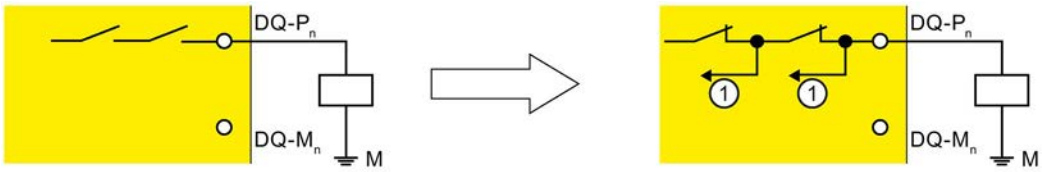

① Readback

Image 4-5 Functional principle of the switch on test (PP switching)

This parameter allows you to set the time for the readback.

If the signal was not read back correctly once the time has expired, the output channel is passivated.

The switch on test detects the following faults:

- Short-circuit to L+ with output signal "0"
- Short-circuit to ground with output signal "0"

⚠ WARNING

Through the configured readback time, short-circuits (cross-circuits) to an interfering signal with a frequency > 1 / (2 x configured readback time) Hz can be suppressed (50:50 sampling ratio).

Short-circuits (cross-circuits) to an output of the same module are recognized.

Setting readback time switch on test

Because the fault reaction time is extended by the length of the set readback time, we recommend that you set the readback time as low as possible, but high enough that the output channel is not passivated.

To determine the readback time required for your actuator, refer to the diagram in the section Switching capacitive loads (Page 55).

Setting readback time switch on test with unknown actuator capacity

If the capacitance of the actuator is not known, you may have to determine the required value for the readback time switch-on test by trial and error. This may also be necessary due to the part variances in the actuator or external influences.

Proceed as follows:

- Set the readback time switch on test in such a way that the output channel can be read back correctly but your actuator does not respond yet.
- For verification use the process value "0" with a minimum duration that corresponds to the "maximum test time" parameter. If you have not configured a light test, continue by changing the process value to "1" after the verification.
- If the output channel is passivated sporadically, set a higher value for the maximum readback time switch on test.
- If the output channel is passivated, the readback time is too small for a connected capacitive load. The charge of the capacitive load cannot take place during the configured readback time. Increase the readback time.

If you have set the readback time to the maximum value of 5 ms and there is still a passivation of the output channel, there is either an external fault or the connected capacity is outside the permitted range.

To increase availability, we recommend that you maintain an interval to the determined limit for the times.

4.2.3.7 Activated light test

Function

Overload and wire break are detected with a 0 signal at the output.

For a light test, a test signal is switched to the output channel while the output channel is inactive (output signal "0"). The output channel is switched on briefly during the light test (= "light period") and read back. A sufficiently slow actuator does not respond to this and remains switched off.

PM operation

In contrast to the switch on test, the P-switch and the M-switch switch at the same time during the light test and power flows through the connected load.

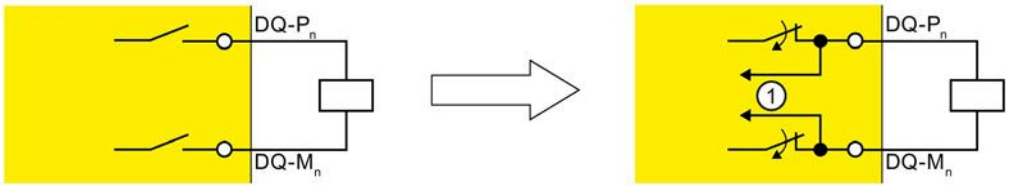

① Readback

Image 4-6 Functional principle of the light test (PM switching)

PP operation

The M-switch is meaningless during the light test in PP operation. The light test corresponds to the switch-on test and current flows through the load. The light test is always activated in PP operation.

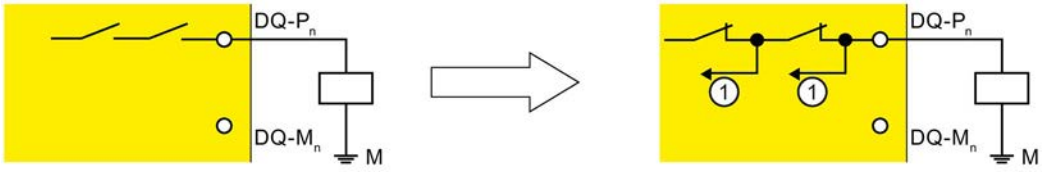

① Readback

Image 4-7 Functional principle of the light test (PP switching)

If the readback signals are incorrect, the signal is present for the configured readback time at the output channel before the fault causes passivation of the output channel.

If the signal was not read back correctly once the maximum readback time switch on test has expired, the output channel is passivated.

No new process values are switched to the output channels while a bit pattern is still active (switch test is carried out). This means that a higher maximum readback time switch on test for the light test increases the response time of the F-module.

Test pulses of the light test

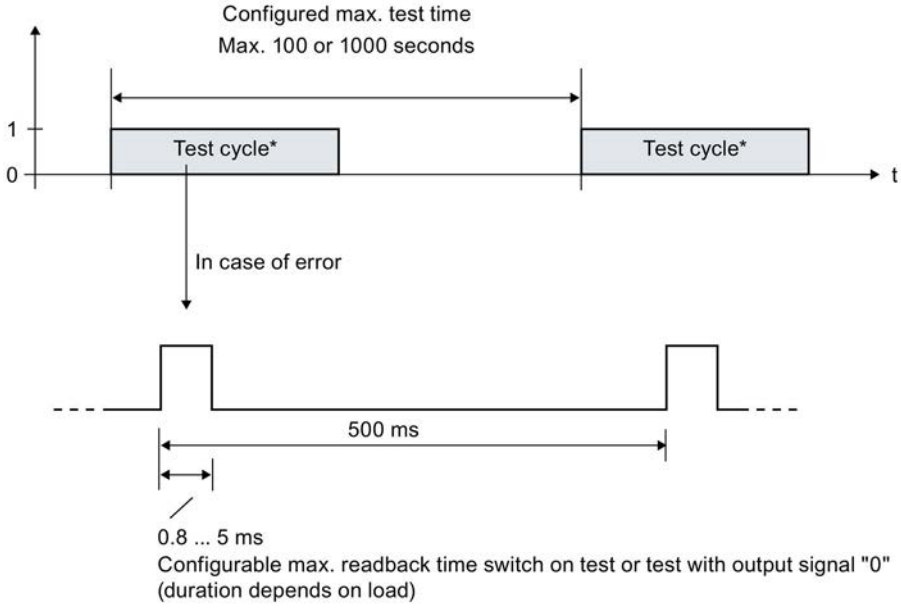

* Output of test pulses only during test cycle. The module cycle is 5 ms.

Image 4-8 Test pulses of the light test

A light pulse with the configured duration takes place within the configured maximum test time per output channel.

If a light pulse returns a fault, the same light pulse (which means the same bit pattern) is repeated once after 500 ms. If the fault is still present, the maximum test time is automatically reduced to 60 seconds and a diagnostic message is generated. If the fault is no longer present, the output channel is reintegrated after the next fault-free test cycle.

4.3 Address space

Address assignment of the digital output module F-DQ 8x24VDC/2A PPM

The digital output module F-DQ 8x24VDC/2A PPM occupies the following address areas in the F-CPU:

Table 4- 2 Address assignment in the F-CPU

Occupied bytes in the F-CPU:		
F-CPU	In input range	In output range
S7-300/400 F-CPUs	x + 0 to x + 4	x + 0 to x + 4
S7-1500 F-CPUs	x + 0 to x + 5	x + 0 to x + 5

x = Module start address

Address assignment of the user data and the value status of digital output module F-DQ 8x24VDC/2A PPM

The user data occupy the following addresses in the F-CPU out of all the assigned addresses of the digital output module F-DQ 8x24VDC/2A PPM:

Table 4- 3 Address assignment of user data **in the input range**

Byte in the F-CPU	Assigned bits in F-CPU per F-module:							
	7	6	5	4	3	2	1	0
IB x + 0	Value status DQ_7 (CH7)	Value status DQ_6 (CH6)	Value status DQ_5 (CH5)	Value status DQ_4 (CH4)	Value status DQ_3 (CH3)	Value status DQ_2 (CH2)	Value status DQ_1 (CH1)	Value status DQ_0 (CH0)

x = Module start address

Table 4- 4 Address assignment of user data **in the output range**

Byte in the F-CPU	Assigned bits in F-CPU per F-module:							
	7	6	5	4	3	2	1	0
QB x + 0	DQ_7 (CH7)	DQ_6 (CH6)	DQ_5 (CH5)	DQ_4 (CH4)	DQ_3 (CH3)	DQ_2 (CH2)	DQ_1 (CH1)	DQ_0 (CH0)

x = Module start address

Note

You may only access the addresses occupied by user data and value status.

The other address areas occupied by the F-modules are assigned for functions including safety-related communication between the F-modules and F-CPU in accordance with PROFIsafe.

Additional information

For detailed information about F-I/O access and for evaluation and processing of the value status, refer to the SIMATIC Safety – Configuring and Programming (http://support.automation.siemens.com/WW/view/en/54110126) manual.

Applications of the F-I/O module 5

5.1 Applications for the F-DQ 8x24VDC/2A PPM

You achieve SIL3/Cat.4/PLe with the following applications.

The wiring is carried out on the front connector of the module. Refer to the "Wiring" section in the S7-1500 Automation System (http://support.automation.siemens.com/WW/view/en/59191792) system manual.

See also

Connecting (Page 15)

5.2 Application: Connecting a load per digital output, PM switching

Each of the 8 fail-safe digital outputs consists of a P-switch DQ-P_n and an M-switch DQ-M_n. You connect the load between the P-switch and the M-switch. The two switches are always activated so that voltage is applied to the load. This circuit achieves SIL3/Cat.4/PLe.

The figure below shows an example of the pin assignment of the fail-safe digital output module F-DQ 8x24VDC/2A PPM with connection of one load per digital output, PM switching.

> **⚠ WARNING**
>
> To protect the F-module, always install an external fuse with the following properties for the load circuit: Circuit-breaker 24 V DC/16 A, tripping characteristic type B.

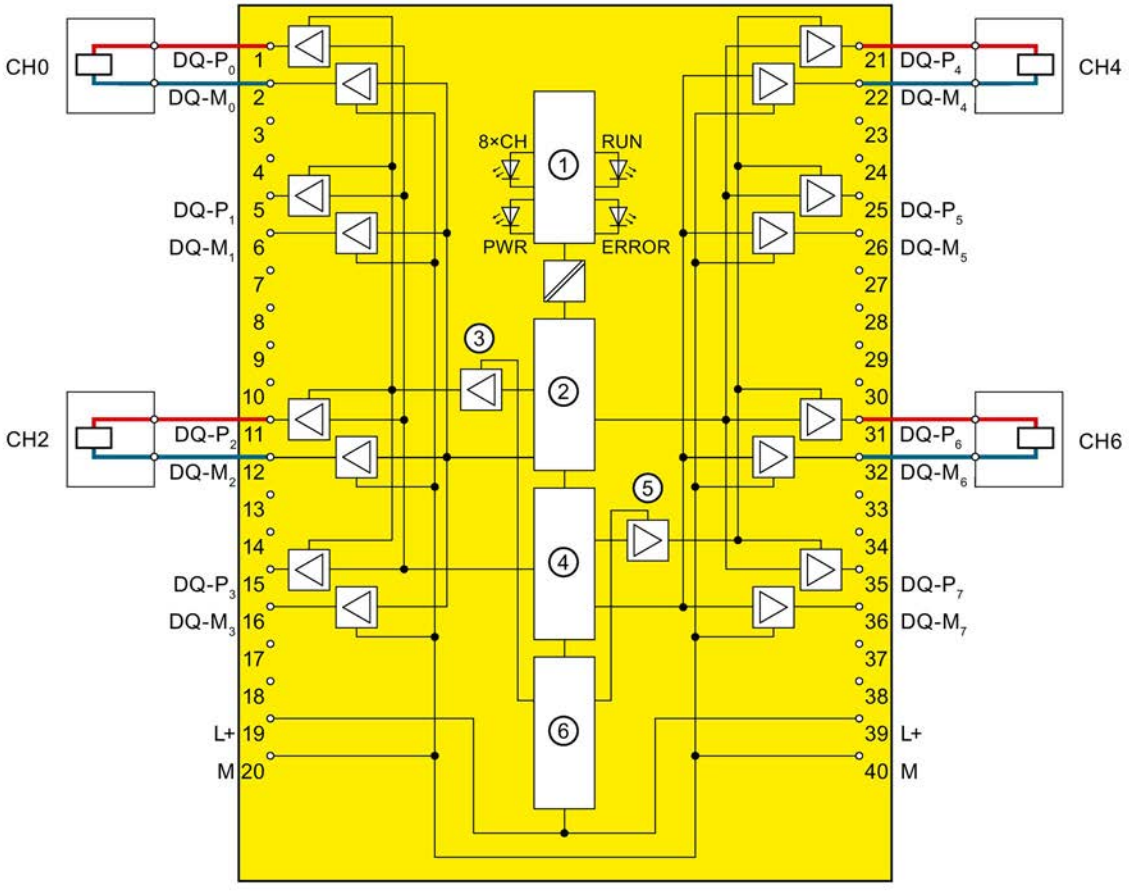

① Backplane bus interface
② Microcontroller 1
③ P1 switch for channel groups 0 to 3
④ Microcontroller 2
⑤ P1 switch for channel groups 4 to 7
⑥ Reverse polarity protection

Image 5-1 Wiring diagram for 1 relay to 1 F-DQ of the digital output module F-DQ 8x24VDC/2A PPM, PM-switching mode

⚠ WARNING
In order to achieve SIL3/Cat.4/PLe with this wiring, you must install a qualified actuator, for example, in accordance with IEC 60947.

Parameter assignment

Assign the following parameter for the corresponding channel group:

Table 5- 1 Parameter

Parameter	
Operating mode of the output	PM-switching mode

5.3 Application: Connection of loads per digital output to L+ and M, PM-switching mode

You can connect two relays using one fail-safe digital output. The following conditions should be kept in mind:

- Same reference potential
- The normally open contacts of the two relays must be connected in series.

This configuration achieves SIL3/Cat.4/PLe (process status readback required).

The figure below shows an example of the pin assignment of the fail-safe digital output module F-DQ 8x24VDC/2A PPM with connection of loads per digital output to L+ and M, PM-switching mode.

WARNING

To protect the F-module, always install an external fuse with the following properties for the load circuit: Circuit-breaker 24 V DC/16 A, tripping characteristic type B.

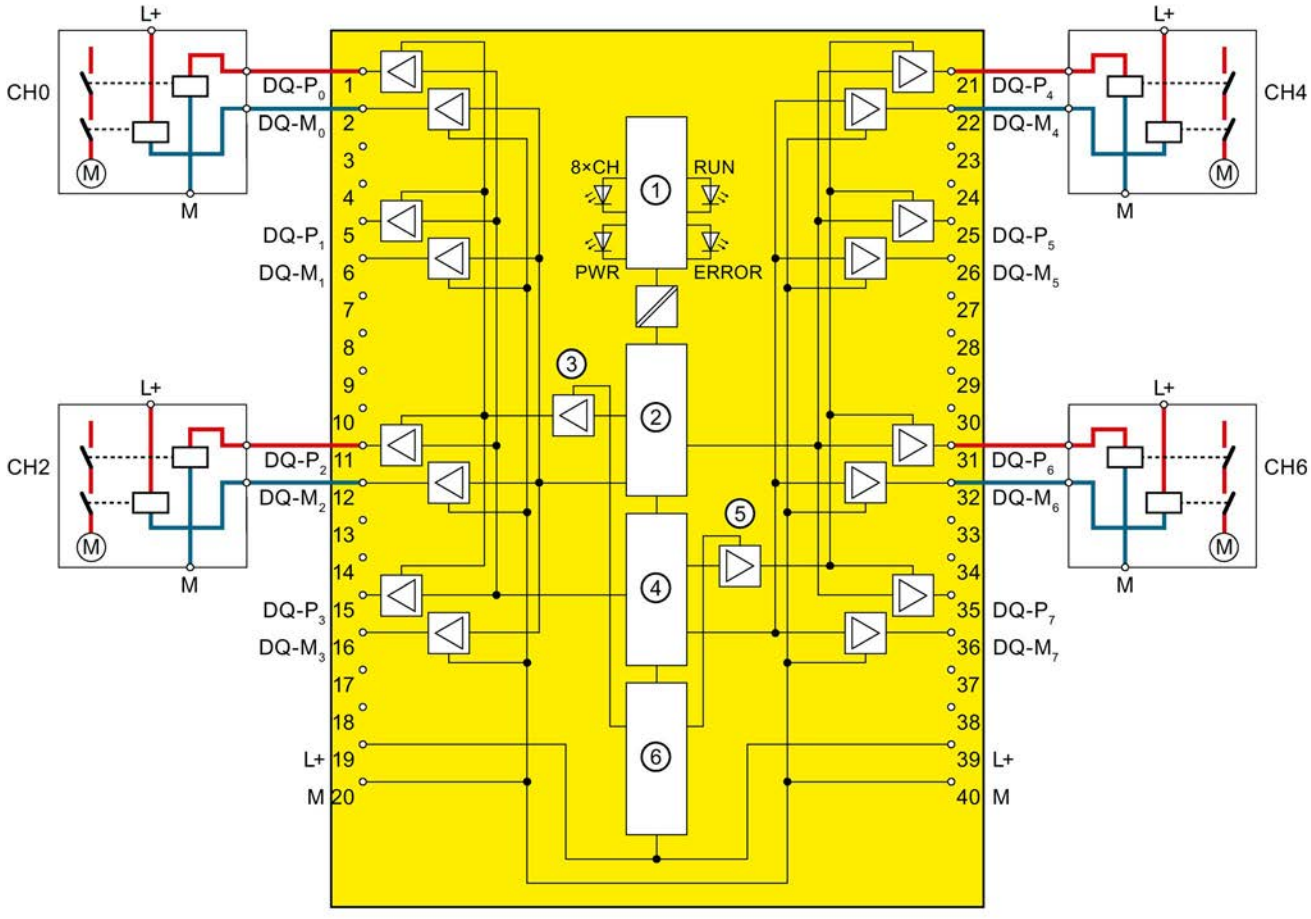

① Backplane bus interface
② Microcontroller 1
③ P1 switch for channel groups 0 to 3
④ Microcontroller 2
⑤ P1 switch for channel groups 4 to 7
⑥ Reverse polarity protection

Image 5-2 Wiring diagram for 2 relay to 1 F-DQ of the digital output module F-DQ 8x24VDC/2A PPM, PM-switching mode

WARNING

When two relays are connected to one digital output, as shown in the figure above, the "wire break" and "overload" faults are detected only at the P-switch of the output (not at the M-switch).

WARNING

With a cross circuit between P-switch and M-switch of the output, the module detects the fault and switches off the output. But the actuator is still supplied with power due to the external fault.

To avoid cross circuits between the P and M-switches of a fail-safe digital output, you should always wire the relay connection to the P and M-switches separately, in order to prevent any cross circuits. For example, as separately sheathed cables or in separate cable ducts.

Note

The digital output module F-DQ 8x24VDC/2A PPM performs a bit pattern test depending on the parameter assignment. For this, the module outputs up to 5 ms pulses depending on the parameter assignment. This test (switch-on test) is run with a time offset between the P-switch and M-switch to prevent the actuator from being activated. This pulse may cause the corresponding relay to operated, which may reduce its mission time.

We therefore recommend adhering to the wiring scheme described below. See section Application: Connecting 2 loads in parallel per digital output, PM-switching mode (Page 37).

Parameter assignment

Assign the following parameter for the corresponding channel group:

Table 5- 2 Parameter

Parameter	
Operating mode of the output	PM-switching mode

5.4 Application: Connecting 2 loads in parallel per digital output, PM-switching mode

To protect against cross-circuits between P-switch and M-switch in fail-safe digital outputs, we recommend the following wiring scheme. This circuit achieves SIL3/Cat.4/PLe.

The figure below shows an example of the pin assignment of the fail-safe digital output module F-DQ 8x24VDC/2A PPM with connection of two parallel loads per digital output, PM-switching mode.

⚠ WARNING

To protect the F-module, always install an external fuse with the following properties for the load circuit: Circuit-breaker 24 V DC/16 A, tripping characteristic type B.

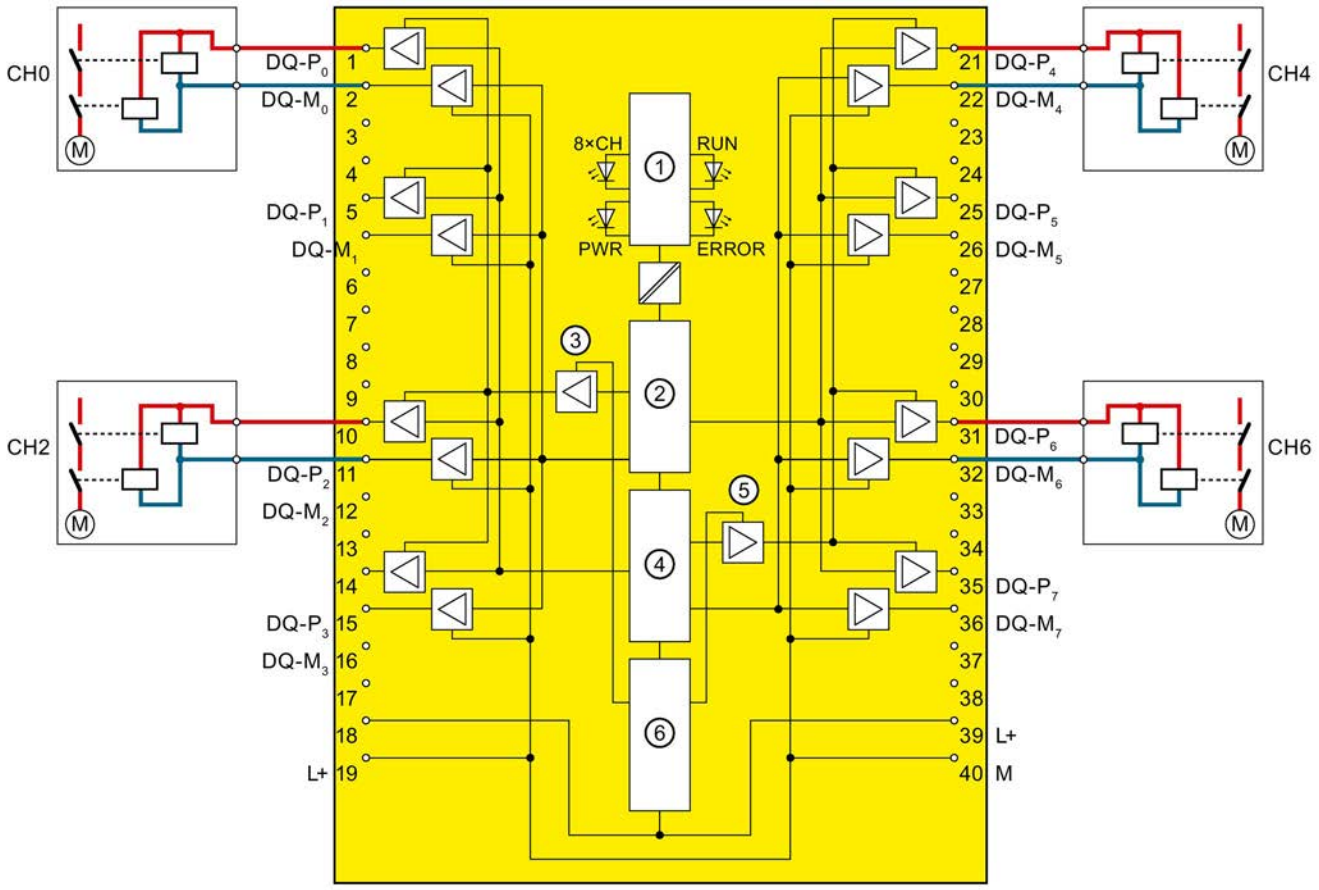

① Backplane bus interface
② Microcontroller 1
③ P1 switch for channel groups 0 to 3
④ Microcontroller 2
⑤ P1 switch for channel groups 4 to 7
⑥ Reverse polarity protection

Image 5-3 Wiring diagram for 2 relays in parallel to 1 F-DQ of the digital output module F-DQ 8x24VDC/2A PPM, PM-switching mode

Note

With a parallel connection of two relays on one digital output (as shown above) the "wire break" fault is only detected if the wire break disconnects both relays from P or M. This diagnostics is not safety-related.

Note

You can connect several actuators per output.

If several actuators are connected to an output, the diagnostics of each actuator affects the other ones.

This means:

- A wire break is only signaled when several actuators are affected.
- A single short-circuit affects multiple actuators.

Parameter assignment

Assign the following parameter for the corresponding channel group:

Table 5- 3 Parameter

Parameter	
Operating mode of the output	PM-switching mode

5.5 Application: Connecting a load per digital output, PP switching

You connect the load between the P-switch DQ-P_n and chassis ground in this application. This circuit achieves SIL3/Cat.4/PLe.

The figure below shows an example of the pin assignment of the fail-safe digital output module F-DQ 8x24VDC/2A PPM with connection of one load per digital output, PP switching.

WARNING

To protect the F-module, always install an external fuse with the following properties for the load circuit: Circuit-breaker 24 V DC/16 A, tripping characteristic type B.

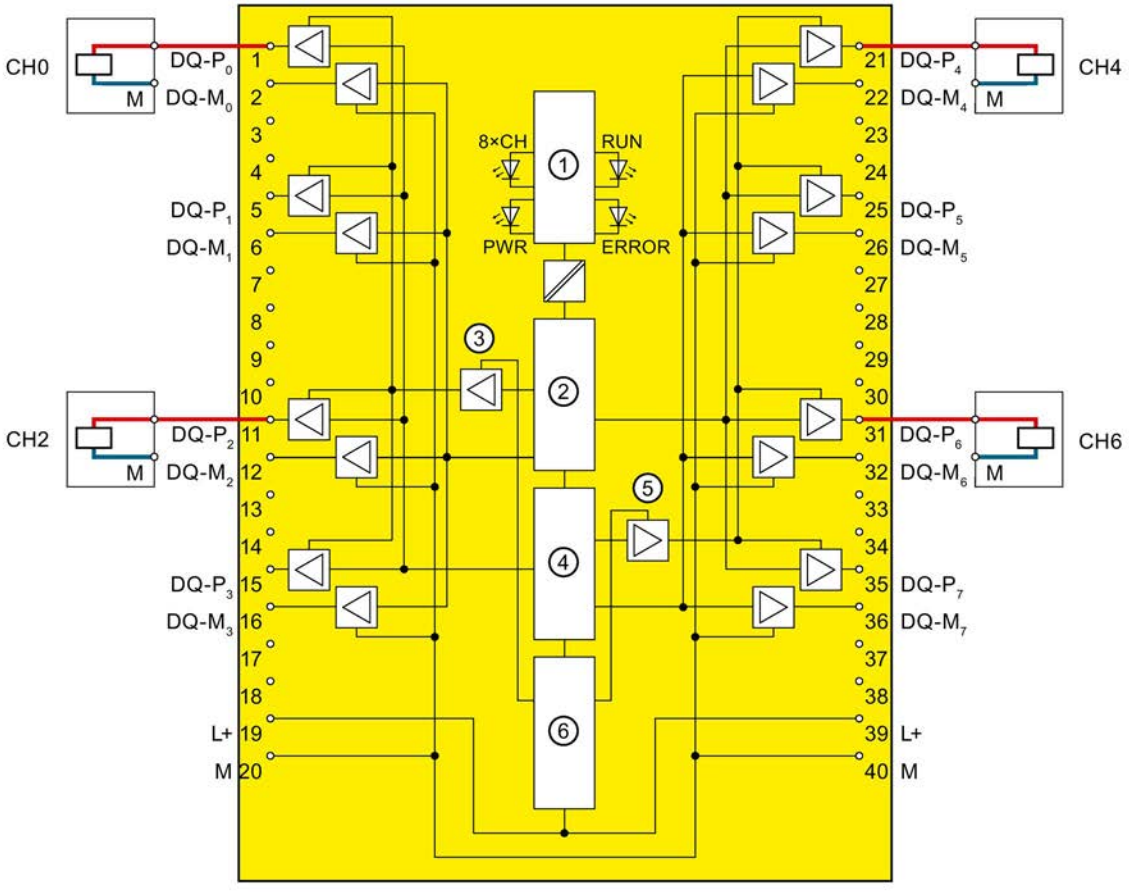

① Backplane bus interface
② Microcontroller 1
③ P1 switch for channel groups 0 to 3
④ Microcontroller 2
⑤ P1 switch for channel groups 4 to 7
⑥ Reverse polarity protection

Image 5-4 Wiring diagram for 1 relay to 1 F-DQ of the digital output module F-DQ 8x24VDC/2A PPM, PP switching

WARNING

In order to achieve SIL3/Cat.4/PLe with this wiring, you must install a qualified actuator, for example, in accordance with IEC 60947.

WARNING

In PP operation, the actuator can no longer be shut down if a cross circuit has developed between a positive potential (e.g. L+) and DQ. To prevent cross circuits between a positive potential (e.g. L+) and DQ, you must route the cables used to connect the actuators in a cross-circuit-proof manner (for example, as separate, sheathed cables or in separate cable ducts).

WARNING

In this application, you have to connect two ground terminals for safety reasons. Otherwise, the maximum residual current at signal "0" (specified in the technical specifications) cannot be maintained if a single ground line is interrupted.

WARNING

PP operation

In the event of an error at a non-passivated, non-activated output, a brief 1-signal can occur with a duration of 2x max. cycle time (T_{cycle}) + max. readback time dark test (Trb).

Parameter assignment

Assign the following parameter for the corresponding channel group:

Table 5- 4 Parameter

Parameter	
Operating mode of the output	PP switching

Interrupts/diagnostic messages 6

6.1 Status and error displays

LED displays

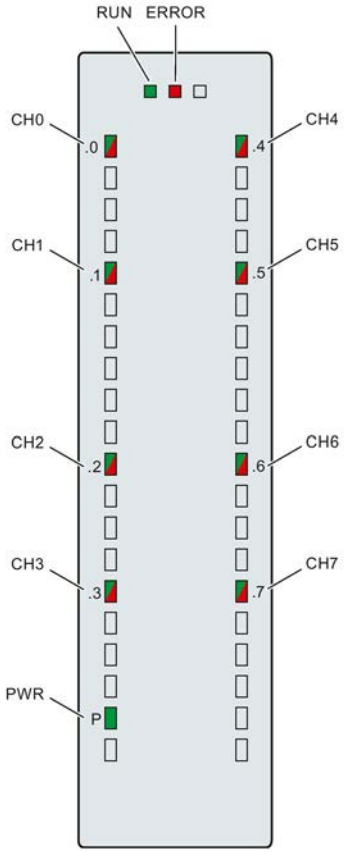

Image 6-1 LED displays of the F-DQ 8x24VDC/2A PPM

Meaning of the LED displays

The following tables explain the meaning of the status and error displays. Remedies for diagnostic alarms can be found in section Diagnostic alarms (Page 46).

⚠ WARNING
The RUN, ERROR LEDs and channel status/channel diagnostics LEDs of the outputs are not designed as safety-related LEDs and therefore may not be evaluated for safety-related activities.

RUN and ERROR LEDs

Table 6- 1 RUN/ERROR status and error displays

LED		Meaning	Remedy
RUN	ERROR		
□ Off	□ Off	Missing or insufficient voltage on the backplane bus	• Switch on the CPU and/or the system power supply modules. • Check whether the module is correctly plugged into the U-connector. • Check whether too many modules are plugged in.
☼ Flashing	□ Off	Module starts up and flashes up to the valid parameter assignment.	---
■ On	□ Off	Module parameters are assigned and module addressed.	
□ Off	☼ Flashing	Firmware is being updated.	
■ On	☼ Flashing	Indicates diagnostic interrupts: • Module fault (for example, supply voltage too high) • Channel fault (for example, frequency too high). • PROFIsafe communication error Operation in S7-1500 F-CPUs: At least one channel is waiting for user acknowledgment.	Evaluate the diagnostics and eliminate or acknowledge the error. It may be necessary to remove and re-insert the module.
☼ Flashing	☼ Flashing	Hardware defective.	Replace the module.
☼/☼ Alternately flashing		• Operation in S7-1500 F-CPUs: The F-module expects user acknowledgment after a module error. • Operation in S7-300/400 F-CPUs: At least one channel is waiting for user acknowledgment.	Acknowledge the error (see manual SIMATIC Safety - Configuring and Programming (http://support.automation.siemens.com/WW/view/en/54110126)).

PWR LED

Table 6- 2 PWR status display

PWR	Meaning
□ Off	Supply voltage L+ missing
■ On	Supply voltage L+ available

CHx LED

Table 6- 3 Display channel status/channel diagnostics

Status CHx	Diagnostics CHx	Meaning
□ Off	□ Off	Process signal = 0 and no channel diagnostics*
■ On	□ Off	Process signal = 1 and no channel diagnostics
□ Off	■ On	Process signal = 0 and channel diagnostics
☼/☼ Alternately flashing		Channel waiting for user acknowledgment

* Operation in S7-300/400 F-CPUs only: If necessary, wait for user acknowledgment, if an additional channel is also waiting for user acknowledgment due to an error that occurred later.

CHx/ERROR LED with PROFIsafe address assignment

Table 6- 4 Channel status/channel diagnostics/ERROR display with PROFIsafe address assignment

Status CHx	Diagnostics CHx	ERROR	Meaning
□ Off	■ All on	☼ Flashing	The PROFIsafe address does not match the configured PROFIsafe address
☼ All are flashing	□ Off	☼ Flashing	Identification of the F-module when assigning the PROFIsafe address

LED CHx/RUN/ERROR if supply voltage error occurs

Table 6- 5 Channel status/channel diagnostics/RUN/ERROR display if supply voltage error occurs

CHx status	Diagnostics CHx	RUN	ERROR	Meaning
□ Off	■ On	■ On	☼ Flashing	Supply voltage too high or too low. • Operation in S7-1500 F-CPUs: Module is waiting for user acknowledgment. • Operation in S7-300/400 F-CPUs: Module is automatically reintegrated after the correction of the error.

6.2 Interrupts

Introduction

The F-DQ 8x24VDC/2A PPM fail-safe digital output module supports diagnostic interrupts.

Diagnostic interrupt

The F-module generates a diagnostic interrupt for each diagnostic alarm described in section Diagnostic alarms (Page 46).

The table below provides an overview of the diagnostic interrupts of the F-module . The diagnostic interrupts are assigned either to one channel or the entire F-module.

⚠ WARNING
Before acknowledging the short-circuit diagnostic alarm, remedy the respective fault and validate your safety function. Follow the fault remedying procedure described in section Diagnostic alarms (Page 46).

Table 6- 6 Diagnostic interrupts of the F-DQ 8x24VDC/2A PPM

Diagnostic interrupt	Fault code	Scope of diagnostic interrupt	Configurable
Overtemperature	5_D	F-module	No
Wire break	6_D		
Parameter error	16_D		
Supply voltage missing	17_D		
Safety event	25_D		
Mismatch of safety destination address (F_Dest_Add)	64_D		
Safety destination address not valid (F_Dest_Add)	65_D		
Safety source address not valid (F_Source_Add)	66_D		
Safety watchdog time value is 0 ms (F_WD_Time)	67_D		
Parameter F_SIL exceeds SIL from specific device application	68_D		
Parameter F_CRC_Length does not match the generated values	69_D		
Version of F-parameter set incorrectly	70_D		
CRC1 fault	71_D		
Save iParameter watchdog time exceeded	73_D		
Restore iParameter watchdog time exceeded	74_D		
Inconsistent iParameters (iParCRC error)	75_D		
F_Block_ID not supported	76_D		
Transmission error: Inconsistent data (CRC error)	77_D		
Transmission error: Timeout (watchdog time 1 or 2 expired)	78_D		
Module is defective	256_D		
Watchdog tripped	259_D		
Short-circuit to L+	261_D	Channel	Yes
Short-circuit to ground	262_D		
Invalid/inconsistent firmware present	283_D	F-module	No
Channel failure acknowledgment	779_D	Channel	
F-address memory not accessible	781_D	F-module	
Frequency too high	785_D	Channel	
Undertemperature	786_D	F-module	
Output defective	797_D	Channel	No
Read back failure	798_D	Channel	
Overload	800_D	Channel	
Supply voltage too high	801_D	F-module	
Supply voltage too low	802_D	F-module	

6.3 Diagnostic alarms

Diagnostic alarms

Module faults are indicated as diagnostics (module status).

Note

You can connect several actuators per output.

If several actuators are connected to an output, the diagnostics of each actuator affects the other ones.

This means:

- A wire break is only signaled when several actuators are affected.
- A single short-circuit affects multiple actuators.

Once the fault is eliminated, the F-module must be reintegrated in the safety program. For additional information on passivation and reintegration of F-I/O, refer to the SIMATIC Safety – Configuring and Programming (http://support.automation.siemens.com/WW/view/en/54110126) manual.

Table 6- 7 Diagnostic alarms of the F-DQ 8x24VDC/2A PPM

Diagnostic alarm	Fault code	Meaning	Remedy
Overtemperature	5_D	An excessively high temperature was measured in the F-module.	Operate the F-module within the specified temperature range (see Technical specifications (Page 51)) Once the temperature has been reduced and returns to the specified range, the F-module must be removed and inserted or the power switched OFF and ON.
Wire break	6_D	Possible causes: • There is an interrupted cable between the module and actuator. • The channel is not connected (open). • A short-circuit exists.	• Establish a cable connection. • Disable the wire break detection for the channel in the parameter assignment. • Eliminate the short-circuit.
Parameter error	16_D	Parameter errors include: • The F-module cannot use the parameters (unknown, invalid combination, etc.). • The F-module parameters have not been configured.	Correct the parameter assignment.

Diagnostic alarm	Fault code	Meaning	Remedy
Supply voltage missing	17_D	Missing or insufficient supply voltage L+	• Check supply voltage L+ at the front connector • Check the front connector
Safety event	25_D	For safety purposes, channel was switched off due to an error on another channel. Possible causes: • A short-circuit exists. • The capacitive load is too high (PP-switching operation).	• Correct the process wiring. • Increase the test times (dark, light, switch-on tests).
Mismatch of safety destination address (F_Dest_Add)	64_D	The firmware of the F-module has detected a different F-destination address.	• Check the parameter assignment of the PROFIsafe driver and the PROFIsafe address assigned to the F-module. • Assign the PROFIsafe address to the F-module (again).
Safety destination address not valid (F_Dest_Add)	65_D	The firmware of the F-module has detected an illegal different F-destination address.	
Safety source address not valid (F_Source_Add)	66_D	The firmware of the F-module has detected a different F-source address.	
Safety watchdog time value is 0 ms (F_WD_Time)	67_D	The firmware of the F-module has detected an invalid watchdog time.	
Parameter F_SIL exceeds SIL from specific device application	68_D	The firmware of the F-module has detected a discrepancy between the SIL setting of the communication and the application.	
Parameter F_CRC_Length does not match the generated values	69_D	The firmware of the F-module has detected a discrepancy in the CRC length.	
Version of F-parameter set incorrectly	70_D	The firmware of the F-module has detected an incorrect F_Par_Version or an invalid F_Block_ID.	
CRC1 fault	71_D	The firmware of the F-module has detected inconsistent F-parameters.	
Save iParameter watchdog time exceeded	73_D	iPar server does not respond to "save IPar" within 4.4 minutes.	Check the configuration/parameter assignment of the iPar server.
Restore iParameter watchdog time exceeded	74_D	iPar server does not respond to "restore IPar" within 4.4 minutes.	Check the configuration/parameter assignment of the iPar server.
Inconsistent iParameters (iParCRC error)	75_D	The firmware of the F-module has detected inconsistent iParameters.	Check the parameter assignment.
F_Block_ID not supported	76_D	The firmware of the F-module has detected an incorrect block ID.	Check the parameter assignment of the PROFIsafe driver.

Diagnostic alarm	Fault code	Meaning	Remedy
Transmission error: Inconsistent data (CRC error)	77_D	The firmware of the F-module has detected a CRC error. Possible causes: • The communication between the F-CPU and F-module is disturbed. • Impermissibly high electromagnetic interference is present. • An error occurred in the sign-of-life monitoring.	• Check the communication connection between the F-module and F-CPU. • Eliminate the electromagnetic interference.
Transmission error: Timeout (watchdog time 1 or 2 expired)	78_D	The firmware of the F-module has detected a timeout. Possible causes: • The F-monitoring time is set incorrectly. • A bus fault is present.	• Check the parameter assignment. • Ensure that communication is functioning correctly.
Module is defective	256_D	Possible causes: • Impermissibly high electromagnetic interference is present. • The F-module has detected an internal error and has reacted in a safety-related manner.	• Eliminate the interference. The module must then be pulled and plugged, or the power switched OFF and ON. • If the F-module cannot be put back into operation, consider replacing it.
Watchdog tripped	259_D	Possible causes: • Impermissibly high electromagnetic interference is present. • The F-module has detected an internal error and has reacted in a safety-related manner.	• Eliminate the interference. The module must then be pulled and plugged, or the power switched OFF and ON. • If the F-module cannot be put back into operation, consider replacing it.
Short-circuit to L+	261_D	Short-circuit to L+ can mean: • The output cable is short-circuited to L+. • The capacitive load between the channels is too high (for example, due to cable length) You must eliminate the error within 100 hours; otherwise, the F-module is permanently passivated and an acknowledgment is no longer possible.	• Correct the process wiring. • Increase the test times (dark, light, switch-on tests).

Diagnostic alarm	Fault code	Meaning	Remedy
Short-circuit to ground	262_D	Short-circuit to ground can mean: • The output cable is short-circuited to ground. • The output signal is short-circuited to ground. • There is a short-circuit between two output channels. • The capacitive load is too high. You must eliminate the error within 100 hours; otherwise, the F-module is permanently passivated and an acknowledgment is no longer possible.	• Correct the process wiring. • Increase the test times (dark, light, switch-on tests).
Invalid/inconsistent firmware present	283_D	The firmware is incomplete and/or firmware added to the F-module is incompatible. This leads to errors or functional limitations when operating the F-module.	• Perform a firmware update for all parts of the F-module and note any error messages. • Use only firmware versions released for this F-module.
Channel failure acknowledgment	779_D	A channel fault was detected. Confirmation is required to enable the channel.	Confirm the channel fault.
F-address memory not accessible	781_D	The F-source address and F-destination address stored in the coding element cannot be accessed.	Verify that the coding element is present or replace the coding element.
Frequency too high	785_D	The maximum switching frequency of the F-module has been exceeded.	Reduce the switching frequency (see Technical specifications (Page 51))
Undertemperature	786_D	The minimum permissible temperature limit has been violated.	Operate the F-module within the specified temperature range (see Technical specifications (Page 51))
Output defective	797_D	The F-module has detected an internal error. You must eliminate the error within 100 hours; otherwise, the F-module is permanently passivated and an acknowledgment is no longer possible. Possible causes: • The capacitive load is too high. • Short-circuit to L+ or M • The F-module has detected an internal error and has reacted in a safety-related manner.	• Increase the test times (dark, light, switch-on tests). • Check the wiring. • Consider replacing the F-module.

Diagnostic alarm	Fault code	Meaning	Remedy
Read back failure	798_D	The F-module has detected an internal error. You must eliminate the error within 100 hours; otherwise, the F-module is permanently passivated and an acknowledgment is no longer possible. Possible causes: • Impermissibly high electromagnetic interference is present. • The capacitive load is too high. • The F-module has detected an internal error and has reacted in a safety-related manner.	• Increase the test times (dark, light, switch-on tests). • If the error continues, consider replacing the F-module.
Overload	800_D	The maximum permissible output current has been exceeded. The output stage has been switched off. You must eliminate the error within 100 hours; otherwise, the F-module is permanently passivated and an acknowledgment is no longer possible. Possible causes: • A short-circuit exists. • The connected load is too high.	• Check the process wiring. • Reduce the load or the load current.
Supply voltage too high	801_D	The supply voltage is too high.	Check the supply voltage.
Supply voltage too low	802_D	The supply voltage is too low.	Check the supply voltage.

Supply voltage outside the nominal range

If the supply voltage L+ is outside the specified value range, the ERROR LED flashes and the module is passivated.

When the voltage is then recovered (level must remain within the specified value for at least 1 minute, see Technical specifications (Page 51)), the ERROR LED stops flashing. The module remains passivated and waits for user acknowledgment.

Generally applicable information on diagnostics

Information on diagnostics that pertains to all fail-safe modules (for example, readout of diagnostics functions or passivation of channels) is available in the SIMATIC Safety – Configuring and Programming (http://support.automation.siemens.com/WW/view/en/54110126) manual.

Technical specifications 7

Technical specifications of F-DQ 8x24VDC/2A PPM

	6ES7526-2BF00-0AB0
General information	
Product type designation	F-DQ 8x24VDC/2A PPM
Firmware version	
• FW update possible	Yes
Product function	
I&M data	Yes; I&M0 to I&M3
Engineering with	
STEP 7 TIA Portal can be configured/integrated as of version	V13 SP1 with HSP0086
Operating mode	
DQ	Yes
Supply voltage	
Rated value (DC)	24 V
Low limit of permitted range (DC)	19.2 V
High limit of permitted range (DC)	28.8 V
Reverse polarity protection	Yes
Input current	
Current consumption (rated value)	110 mA; without load
Output voltage	
Rated value (DC)	24 V
Power	
Power consumption from the backplane bus	0.8 W
Power loss	
Power loss, typ.	11 W
Address range	
Address space per module	
Address space per module, max.	6 byte
Digital outputs	
Number of outputs	8
M switching	Yes
P switching	Yes
Short-circuit protection	Yes
Wire break detection	Yes
• Response threshold, typ.	8 mA
Overload protection	Yes
• Response threshold, typ.	2.9 A
Voltage induced on current interruption limited to	PM switching: -24 V + (-47 V), PP switching: -24 V

	6ES7526-2BF00-0AB0
Switching capacity of outputs	
With resistive load, max.	2 A
With lamp load, max.	10 W
Load resistance range	
Low limit	12 Ω
High limit	2000 Ω
Output voltage	
For "1" signal, min.	24 V; L+ (-0.5 V)
Output current	
For "1" signal, rated value	2 A
For "0" signal, residual current, max.	0.5 mA; PP switching or separate P and M-switch, PM-switching: max. 1 mA
Switching frequency	
With resistive load, max.	30 Hz
With inductive load, max.	0.1 Hz
With lamp load, max.	10 Hz
Total current of outputs	
Max. current per channel	2 A
Total current of the outputs (per module)	
Horizontal mounting position	
• Up to 40 °C, max.	16 A
• Up to 60 °C, max.	8 A
Vertical mounting position	
• Up to 40 °C, max.	8 A
Cable length	
shielded, max.	1000 m
unshielded, max.	500 m
Interrupts/diagnostics/status information	
Fail-safe values can be switched to	No
Interrupts	
Diagnostic interrupt	Yes
Diagnostic alarms	
Diagnostics	Yes
Monitoring of supply voltage	Yes
Wire break	Yes
Short-circuit	Yes
Group error	Yes
Diagnostics display LED	
RUN LED	Yes; green LED
ERROR LED	Yes; red LED
Monitoring of the supply voltage (PWR-LED)	Yes
Channel status display	Yes; green LED
For channel diagnostics	Yes; red LED
For module diagnostics	Yes; red LED

	6ES7526-2BF00-0AB0
Electrical isolation	
Electrical isolation, channels	
Between channels	No
Between channels and backplane bus	Yes
Insulation	
Insulation test voltage	707 VDC (type test)
Standards, approvals, certificates	
Maximum achievable safety class in safety mode	
Performance level according to EN ISO 13849-1:2008	PLe
SIL according to IEC 61508	SIL 3
Low demand mode: PFDavg according to SIL3	< 6.00E-05
High demand/continuous mode: PFH according to SIL3	< 2.00E-09 1/h
Environmental conditions	
Ambient temperature in operation	
Horizontal installation, min.	0 °C
Horizontal installation, max.	60 °C
Vertical installation, min.	0 °C
Vertical installation, max.	40 °C
Dimensions	
Width	35 mm
Height	147 mm
Depth	129 mm
Weights	
Weight, approx.	300 g

Note

To reach the maximum cable length, it may be necessary to increase the settings for maximum readback time switch on test or maximum read-back time dark test.

We also recommend a more detailed consideration of the boundary conditions, such as EMC, cables used, cable guide, etc.

Dimension drawing

See system manual S7-1500 Automation System (http://support.automation.siemens.com/WW/view/en/59191792).

Response times

A

Introduction

The next section shows the response times of the digital output module F-DQ 8×24VDC/2A PPM. The response times of digital output module F-DQ 8×24VDC/2A PPM are included in the calculation of the F-system response time.

Definition of response time for fail-safe digital outputs

The response time represents the interval between an incoming safety message frame from the backplane bus and the signal change at the digital output.

Times required for the calculation

- Max. cycle time: T_{cycle} = 5 ms
- Max. acknowledgment time (Device Acknowledgment Time): T_{DAT} = 10 ms

The maximum response time in the case of fault (One Fault Delay Time, OFDT) is equivalent to the maximum response time with no faults (Worst Case Delay Time, WCDT).

Assign the parameters for maximum readback time dark test (Maximum Readback Time, T_{rb}) and a maximum readback time switch-on test (Maximum Readback Time Switch-On Test, T_{rb_swon}) in STEP 7.

Maximum response time with no faults (Worst Case Delay Time, WCDT)

t <= 3 * cycle time + max (T_{rb}, T_{rb_swon})

Maximum response time with detection of a channel fault by readback

t <= 4 * cycle time + 2 * max (T_{rb}, T_{rb_swon})

Maximum response time with detection of a channel fault by bit pattern test

t <= 2 * cycle time + maximum test time

Maximum response time with detection of a wire break at "1" signal

t <= 3 * cycle time + 1000 ms (wire break detection) + max (T_{rb}, T_{rb_swon})

Maximum response time with detection of an overload at "1" signal

t <= 4 * cycle time + max (T_{rb}, T_{rb_swon})

Maximum response time with detection of an overload or wire break at "0" signal and light test activated.

t <= 2 * cycle time + maximum test time

Switching of loads

B

B.1 Connecting capacitive loads

If an F-DQ 8x24VDC/2A PPM digital output module is interconnected with loads that require little current and have capacitance, this can lead to detection of a short-circuit or overload. Reason: The capacitance cannot be sufficiently discharged or charged during the configured readback time of the bit pattern test.

The typical trends shown in the two figures below represent the correlation between load impedance and maximum switched load capacitance at a supply voltage of 24 V DC.

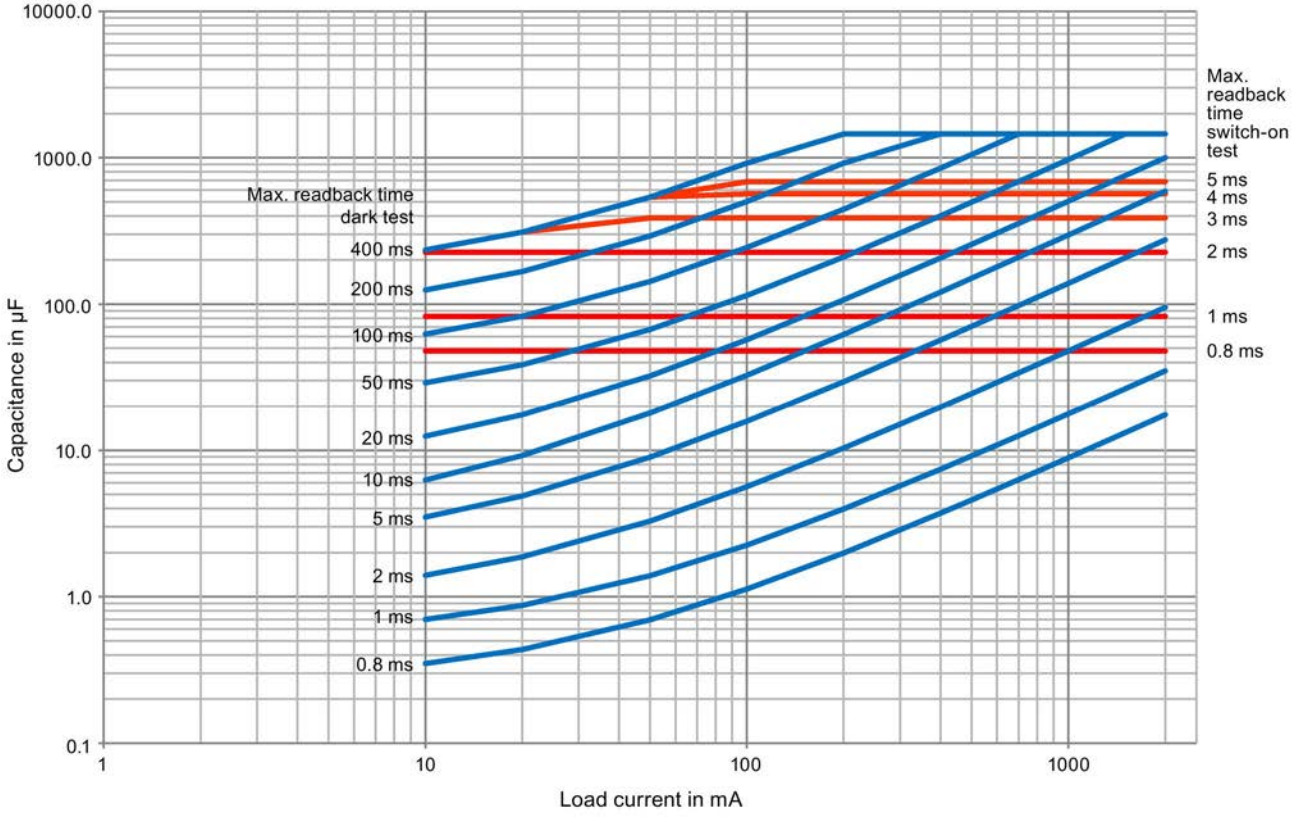

Image B-1 Switching of capacitive loads for the F-DQ 8x24VDC/2A PPM digital output module in PM-switching mode depending on the configured dark and light test times

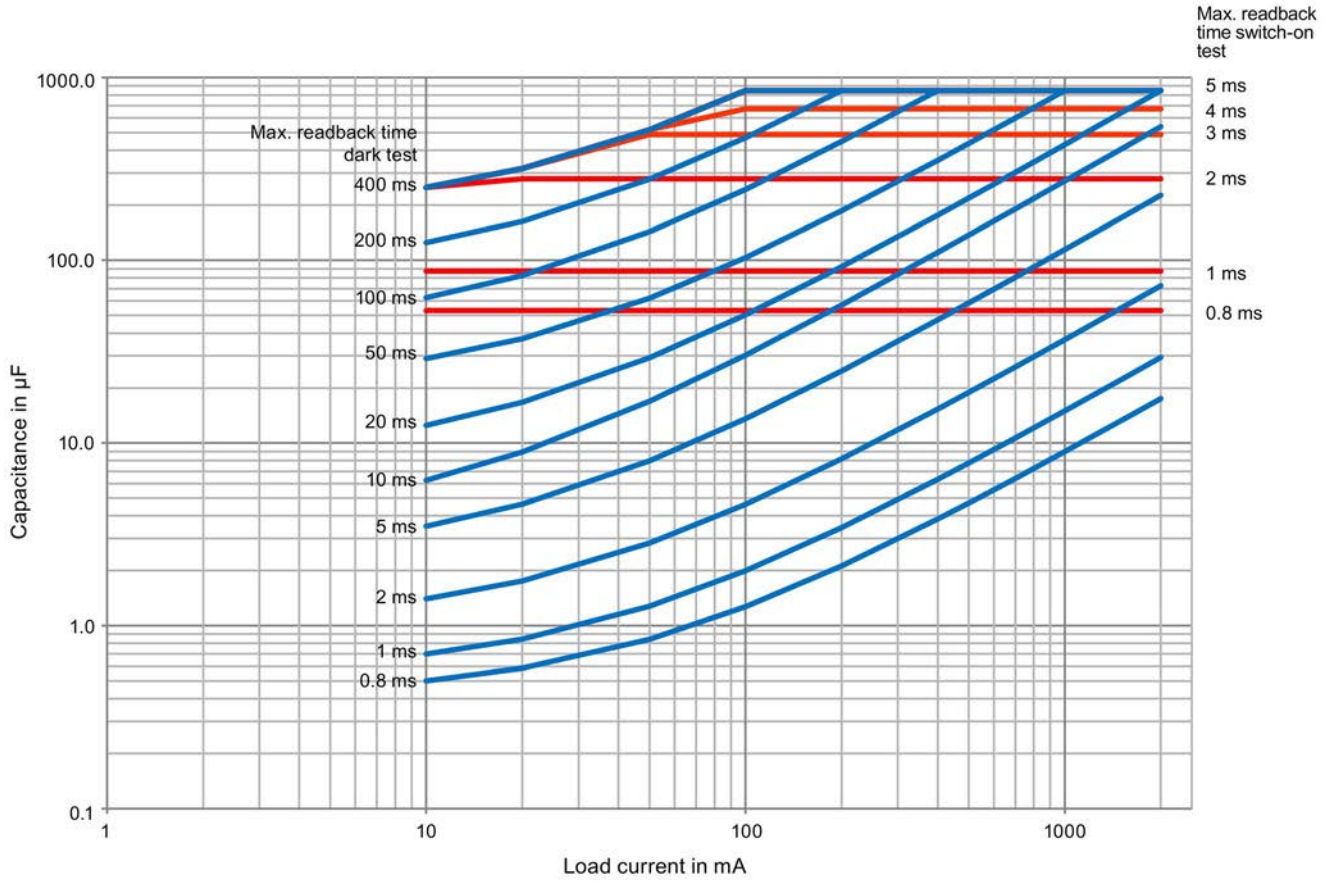

Image B-2 Switching of capacitive loads for the F-DQ 8x24VDC/2A PPM digital output module in PP-switching mode depending on the configured dark and light test times

The trends shown were plotted using a SIMATIC PS 307 10A power supply unit with a cable length of 25 m (cable cross-section of 1.5 mm^2) between the output of the F-DQ 8x24VDC/2A PPM output module and the load.

Note

The maximum readback time switch on test is only relevant if the light test is activated.

Remedy for detecting a short-circuit

1. Determine the load current and capacitance of the load.
2. Locate the operating point in the diagram above.
3. If the operating point is above the trend, select an actuator with higher current consumption so that the new operating point is below the curve.

Example

You have set a dark test time of 100 ms, a light test time of 2 ms and the PM-switching mode. You have set the load current to 20 mA and the capacity to 100 µF. The operating point is thus outside the range defined by the two trends (gray background).

Solution: Select an actuator with higher current consumption. In this example, 40 mA. Alternatively, you can configure the parameter "Max. readback time dark test" with 200 ms.

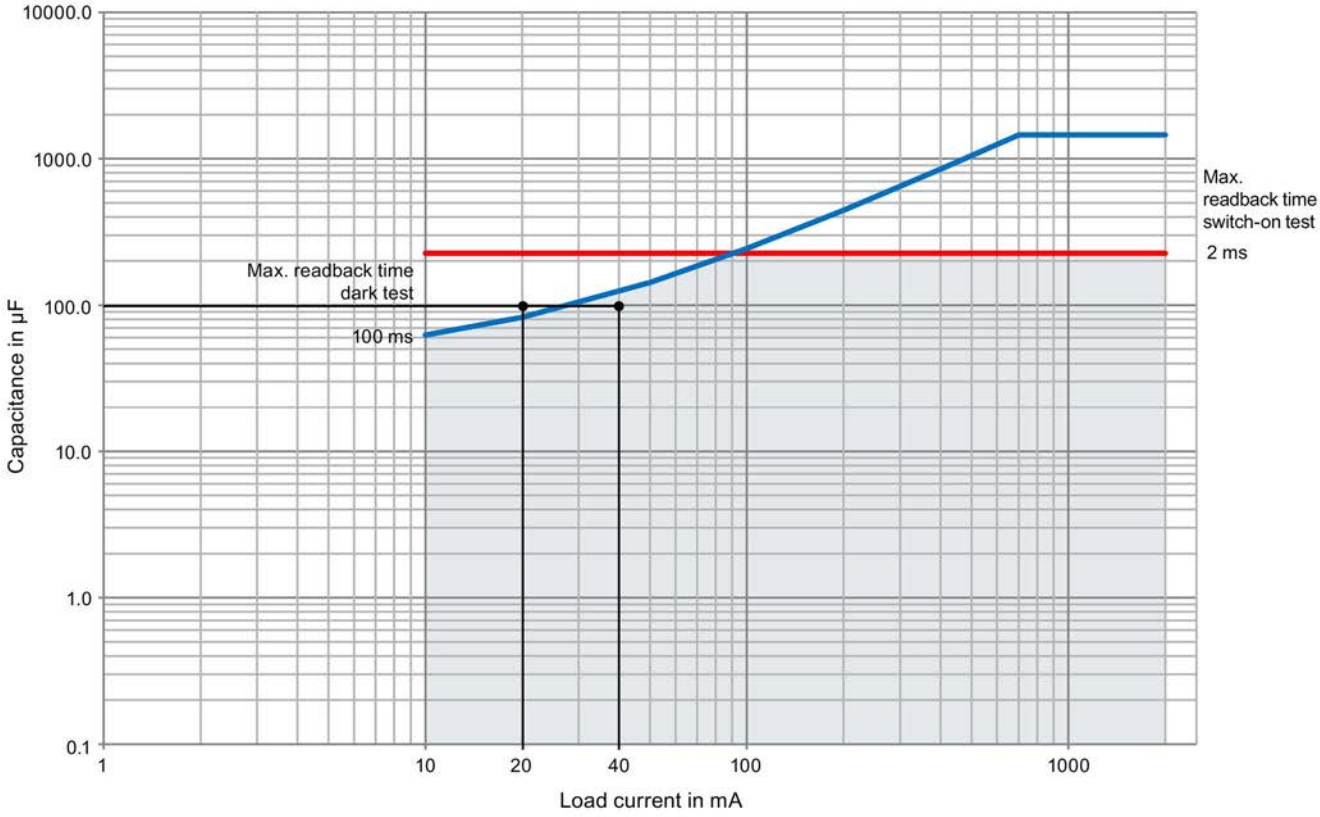

B.2 Switching of inductive loads

Switching of inductive loads

Use the switchgear for control and auxiliary circuits according to the utilization category DC-13 in accordance with IEC 60947-5-1:2014.

Open Source Software

C

For Resellers: In order to avoid infringements of the license conditions by the reseller or the buyer these instructions and license conditions and accompanying CD – if applicable - have to be forwarded to the buyers.

1) Siemens License Conditions

General License Conditions for Software Products for Automation and Drives

(2011-08-01)

1. Supply of Software to Licensee and Granting of Rights to use the Software

1.1 These General License Conditions shall exclusively apply to the delivery of Software for Automation and Drives to the Licensee. General terms and conditions of the Licensee shall apply only where expressly accepted in writing by us. The scope of delivery of the Software shall be determined by the congruent mutual written declarations of both parties. We shall grant the Licensee rights to use the software specified in the Confirmation of Order or, if the Licensee does not receive a Confirmation of Order, the software specified in the Certificate of License or that specified in the Software Product Sheet, if the Licensee is instead submitted a Software Product Sheet (hereinafter referred to as "SW"). The Certificate of License and the Software Product Sheet shall be collectively referred to as "CoL" hereinafter. The Licensee shall be submitted the CoL when the SW is supplied or in conjunction with the delivery bill. The way in which the SW is supplied is also derived directly from the Confirmation of Order or from the SW purchase order number contained in the Confirmation of Order, in conjunction with the associated order data of our catalog valid at the time of the Confirmation of Order (hereinafter collectively referred to as "Order Data"), or from the CoL. If the Licensee does not receive a data medium, it shall be authorized to copy the SW already available to it to the extent necessary to exercise the rights to use the SW granted to it. The aforesaid shall apply, mutatis mutandis, to electronic supply of the software (downloading). Where reference is made to the Order Data or the CoL in these General License Conditions, the reference to the CoL is of significance if the Licensee has not received a Confirmation of Order. In any case, the data contained in the Order Data is also contained in the CoL.

1.2 The Documentation relating to the SW (hereinafter referred to as "Documentation") shall be purchased separately, unless either the Order Data or CoL contains a stipulation stating that it belongs to the scope of delivery. If the Licensee is authorized to copy the SW in accordance with Clause 1.1, this shall also apply to the Documentation provided that it is included in the scope of delivery.

1.3 In the event that we submit a License Key to the Licensee, which unlocks the SW (hereinafter referred to as "License Key"), this License Key must also be installed.

1.4 The rights granted to the Licensee with respect to the SW are based on the License Type (see Section 2) and the Software Type (see Section 3). The license and Software Types are detailed in the Order Data or CoL. If the SW is supplied electronically or if copying rights are granted for it, the rights and duties specified in these General License Conditions shall apply to the legitimately generated copies.

1.5 If the Licensee is legitimately in possession of a previous SW version/release (hereinafter referred to as "Previous Version"), the Licensee shall be authorized to exercise the rights to use the SW granted to it either with respect to the SW or - if this is intended from a technical point of view - to the Previous Version, at its own discretion (downgrading). If the SW is an Upgrade or PowerPack in accordance with Section 4, Section 4 shall apply additionally.

1.6 If Previous Versions are listed in the Readme file of the SW under the category " parallel use", the Licensee has the right to exercise, alternatively to the user rights granted to him for the SW, the user rights for the listed Previous Versions in one (1) Instance. If the "Type of use" named in the Order Data or the CoL is: "Installation" or "User", the Licensee is entitled to the previously described right additionally to and at the same time as the Previous Versions listed in one Instance. An "Instance" in the context of these General License Conditions is either an instance in a physical operating system environment or an instance in a virtual operating system environment. The transferability of the user rights onto Previous Versions is only permissible in conjunction with the user rights for the SW in accordance with Clause 5.3.

1.7 In case the Licensee obtains only the data media but no license as per the Order Data or the CoL, any use of the SW by the Licensee is subject to the acquisition of a license according to Section 2. Up to the acquisition of the license, the Licensee is not entitled to supply the SW to third parties.

1.8 In case the SW contains Open Source Software or any similar software of a third party (hereinafter referred to as "OSS") the OSS is listed in the Readme_OSS-file of the SW. The Licensee is entitled to use the OSS in accordance with the respective license conditions of the OSS. The license conditions are provided on the same data carrier as the SW. The license conditions of the respective OSS shall prevail over these General License Conditions with respect to the OSS. If the license conditions of the OSS require the distribution of the source code of such OSS we shall provide such source code on request against payment of the shipping and handling charges.

1.9 The SW may be or contain licensed software other than OSS, i.e. software which has not been developed by us itself but which has been licensed to us by a third party (hereinafter referred to as the "Licensor"), e.g. Microsoft Licensing Inc. If the Licensee receives the terms and conditions stipulated by the relevant Licensor together with the SW in the Readme_OSS file in this case, such terms and conditions shall apply with respect to the Licensor's liability vis-à-vis the Licensee. Our own liability vis-à-vis the Licensee shall be governed in any case by these General License Conditions.

2. License Type

Depending on the License Type, the Licensee shall be granted the following rights to the SW:

2.1 Single License (One Off License, Copy License)
The term "One Off License" or "Copy License" which may be used in the Software Product Sheet corresponds to the term "Single License". The following regulation shall apply to the full scope of the One Off License / Copy License. The Licensee shall be granted the non-exclusive right, transferable in accordance with Clause 5.3 and valid for an unlimited period of time, to install the SW in one (1) Instance and to utilize the SW thus installed in the manner specified in the Order Data or CoL (see "Type of Use").

2.2 Floating License
The Licensee shall be granted the non-exclusive right, transferable in accordance with Clause 5.3 and valid for an unlimited period of time, to install the SW on any desired number of the Licensee's hardware devices. The number of objects (for example, users or devices) permitted to utilize the SW at the same time can be derived from the Order Data or CoL (see "Type of Use).

2.3 Rental License
The Licensee shall be granted the non-exclusive right, transferable in accordance with Clause 5.3 and limited in time as stipulated in the Order Data or CoL (see "Type of Use"), to install and use the SW in one (1) Instance. If the period of use is specified in hours, the usage decisive for the calculation of the time limit commences with the software start-up and finishes with its shut-down. If the period of usage is specified in days, weeks or months, the specified period, which commences in conjunction with the first SW start-up, shall apply independently of the actual time of usage. If the period of use is specified with a date, the right of use ends on this date – regardless of the actual period of use.

2.4 Rental Floating License
The Licensee shall be granted the non-exclusive right, transferable in accordance with Clause 5.3 and limited in time as stipulated in the Order Data or the CoL (s. " Type of use"), to install the SW on any desired number of the Licensee's hardware devices. The number of objects (for example, users or devices) permitted to utilize the SW at the same time can be derived from the Order Data or CoL (see "Type of Use) as well. If the period of use is specified in hours, the usage decisive for the calculation of the time limit commences with the software start-up and finishes with its shut-down. If the period of usage is specified in days, weeks or months, the specified period, which commences in conjunction with the first SW start-up, shall apply independently of the actual time of usage. If the period of use is specified with a date, the right of use ends on this date – regardless of the actual period of use.

2.5 Demo License
The Licensee shall be granted the non-exclusive right, transferable in accordance with Clause 5.3 and limited in time as stipulated in the Order Data or the CoL (s. " Type of use"), to install the SW in one (1) Instance and to use it for validation purposes. If the period of usage is specified in days, weeks or months, the specified period, which commences in conjunction with the first SW start-up, shall apply independently of the actual time of usage. If the period of use is specified with a date, the right of use ends on this date – regardless of the actual period of use.

2.6 Demo Floating License
The Licensee shall be granted the non-exclusive right, transferable in accordance with Clause 5.3 and limited in time as stipulated in the Order Data or the CoL (s. " Type of use"), to install the SW on any desired number of the Licensee's hardware devices. The number of objects (for example, users or devices) permitted to utilize the SW at the same time can be derived from the Order Data or CoL (see "Type of Use) as well. If the period of usage is specified in days, weeks or months, the specified period, which commences in conjunction with the first SW start-up, shall apply independently of the actual time of usage. If the period of use is specified with a date, the right of use ends on this date – regardless of the actual period of use.

2.7 Trial License
The Licensee shall be granted the non-exclusive and non-transferable right to install the SW in one (1) Instance and to use it for validation purposes in the manner specified in the Order Data or CoL (see "Type of Use"). The period of usage is limited to 14 days and commences with the SW start-up, unless a different period of usage is specified in the Order Data or CoL.

3. Software Type
If the Software Type is not specified in the Order Data or CoL, the rights specified in Clause 3.2 (Runtime Software) shall apply to the SW.

3.1 Engineering Software (hereinafter referred to as "E-SW")
In the event that the Licensee uses E-SW to generate its own programs or data containing parts of the E-SW, the Licensee shall have the right, without having to pay any license fee, to copy and to use these parts of the E-SW as a part of its own programs or data, or to supply them to third parties for use. In the event that such parts are supplied to third parties for use, these parties shall be bound in writing to comply with stipulations corresponding to those in Clauses 5.1 and 5.2 with respect to the above parts of the E-SW.

3.2 Runtime Software (hereinafter referred to as "R-SW")
If the Licensee incorporates R-SW or any parts thereof into its own programs or data, it shall purchase a license with respect to the R-SW each time it installs or copies - depending on what is done first - its own programs or data containing R-SW or parts thereof, in accordance with the relevant intended Type of Use and on the basis of the Siemens catalog valid at that time. In the event that the Licensee supplies the specified programs or data to third parties for their use, these parties shall be bound in writing to adhere to stipulations corresponding to those in Section 5, with respect to the R-SW parts contained therein. The aforesaid shall not affect the Licensee's obligation to purchase a license for the R-SW if the R-SW original is copied. If the R-SW contains tools for parameterization/configuration and extended rights have been granted in this regard, this will be detailed in the readme file of the R-SW.

4. Upgrade and PowerPack
If it is apparent from the Order Data or CoL, e.g. by the addition "Upgrade" or " PowerPack" after the SW product name, that the SW is an upgrade for another software item (hereinafter referred to as "Source License"), the rights originally granted to the Licensee to use the Source License end in conjunction with the upgrade measure. The rights of use in accordance with Clause 1.6 remain unaffected by this. However, the Licensee is entitled to undo the upgrading (downgrading) - if this is intended from a technical point of view - and to exercise the rights to use the SW granted to it with respect to the Source Version in accordance with Clause 1.5.

5. Further Rights and Duties of the Licensee
5.1 Unless a stipulation to the contrary relating to a specific number of copies is contained on the data medium or in the readme file of the SW, the Licensee may generate an appropriate number of copies of every item of SW which it is authorized to use in accordance with these General License Conditions, where such copies shall be used exclusively for data backup purposes. Furthermore the Licensee may only copy the SW if and insofar as it has been granted copying rights by us in writing.

5.2 The Licensee shall not be entitled to modify, decompile or reverse engineer the SW. Nor may it extract any individual parts unless this is permitted by mandatory copyright law. Furthermore, the Licensee shall not be entitled to remove any alphanumeric identifiers, trademarks or copyright notices from the SW or the data medium and, insofar as it is entitled to make copies of the SW, shall copy them without alteration. The aforementioned regulation shall apply accordingly to the Documentation supplied in accordance with Section 1.

5.3 The Licensee shall be entitled to completely transfer the right to use the SW granted to it to a third party, provided that it concludes a written agreement with the third party in conformance with all of the conditions contained in this Section 5 and on the proviso that it does not retain any copies of the SW. If the Licensee has received a License Key for the SW, this key shall be supplied to the third party together with the SW. Furthermore, the third party shall be submitted the CoL together with these General License Conditions. The Licensee shall submit the CoL received for the SW to us at any time, if requested.

5.4 If the SW is a PowerPack or an Upgrade, the Licensee shall keep the CoL of the Source License and submit it to us at any time, if requested, together with the CoL for the SW. In the event that the Licensee transfers its right to use the PowerPack SW or Upgrade SW in accordance with Clause 5.3, it shall also submit the CoL of the Source License to the third party.

5.5 If the Licensee receives a data medium which, in addition to the SW, contains further software products which are released for use, then it shall have the right to use these released software products exclusively for validation purposes, for a limited period of time and free of charge. The period of use shall be limited to 14 days, commencing with the first start-up of the relevant software program unless a different period is specified e.g. in the readme file of the relevant software product. These software products supplied exclusively for validation purposes shall be governed, mutatis mutandis, by the stipulations contained in these General License Conditions. The Licensee shall not be authorized to pass on these software products separately, i.e. without the SW, to a third party.

The conditions of the purchase contract apply if not otherwise stipulated hereafter for the Open Source Software.

2) License Conditions and Disclaimers for Open Source Software and other Licensed Software

In the product "S7-1500 F-SM - V1.0", Copyright Siemens AG, 2015 (hereinafter "Product"), the following Open Source Software is used either unchanged or in a form that we have modified, and additionally the other License Software noted below:

Liability for Open Source Software

Open Source Software is provided free of charge. We are liable for the Product including Open Source Software contained in accordance with the license conditions applicable to the Product. Any liability for use of Open Source Software beyond the program flow intended for the Product is explicitly excluded. Furthermore, any liability for defects resulting from modifications to the Open Source Software by you or third parties is excluded.

We do not provide any technical support for the Product if it has been modified.

Please note the following license conditions and copyright notices applicable to Open Source Software and other License Software:

Component	Open Source Software [Yes/No]	Acknow-ledgements	Copyright Information / File
Dinkumware C/C++ Library - 5.01	NO		LICENSE AND COPYRIGHT INFORMATION FOR COMPONENT DINKUMWARE C/C++ LIBRARY - 5.01
GNU GCC libgcc - 4.3.2	YES		LICENSE AND COPYRIGHT INFORMATION FOR COMPONENT GNU GCC LIBGCC - 4.3.2
GNU GCC libstdc++ / libsupc++ - 4.3.2	YES		LICENSE AND COPYRIGHT INFORMATION FOR COMPONENT GNU GCC LIBSTDC++ / LIBSUPC++ - 4.3.2

LICENSE CONDITIONS AND COPYRIGHT NOTICES

Commercial Software: Dinkumware C/C++ Library - 5.01
Enclosed you'll find the license conditions and copyright notices applicable for Commercial Software Dinkumware C/C++ Library - 5.01

License conditions:

© Copyright William E. Kempf 2001
Permission to use, copy, modify, distribute and sell this software and its documentation for any purpose is hereby granted without fee, provided that the above copyright notice appear in all copies and that both that copyright notice and this permission notice appear in supporting documentation. William E. Kempf makes no representations about the suitability of this software for any purpose. It is provided "as is" without express or implied warranty.

Copyright © 1994
Hewlett-Packard Company
Permission to use, copy, modify, distribute and sell this software and its documentation for any purpose is hereby granted without fee, provided that the above copyright notice appear in all copies and that both that copyright notice and this permission notice appear in supporting documentation. Hewlett-Packard Company makes no representations about the suitability of this software for any purpose. It is provided ``as is'' without express or implied warranty.

Copyrights:

Copyright 1992 - 2006 by p.j. plauger and jim brodie. all rights reserved.

Copyright 1992-2006 by p.j. plauger. all rights reserved.ip

Copyright 1992-2006 by p.j. plauger. portions derived from work copyright 1994 by hewlettpackard company. all rights reserved

Copyright 1992-2006 by dinkumware, ltd. all rights reserved

Copyright 1992-2006 by dinkumware, ltd. portions derived from work copyright 2001 by william e. kempf. all rights reserved

Copyright 1994 hewlettpackard company

Copyright 1994 by hewlettpackard company

Copyright william e. kempf 2001

Copyright 1989-2006 by p.j. plauger. all rights reserved

Copyright (c) by p.j. plauger. all rights reserved.

Copyright (c) by dinkumware, ltd. all rights reserved.

Copyright (c) unicode, inc. all rights reserved.

(c) Copyright william e. kempf 2001

Copyright (c) hewlettpackard company

Copyright (c) by p.j. plauger. all rights reserved.

Copyright 2006 by dinkumware, ltd.

Copyright (c) by p.j. plauger, licensed by dinkumware, ltd. all rights reserved.

the dinkum cec++ library reference is copyright (c) by p.j. plauger. this code is protected by copyright. all rights reserved.

the dinkum cc++ library reference is copyright (c) by p.j. plauger. this code is protected by copyright. all rights reserved.

dinkum compleat library, vc++ package (vc++ compilers only) the dinkum compleat library and the dinkum compleat library reference are copyright (c) by p.j. plauger. all rights reserved.

LICENSE CONDITIONS AND COPYRIGHT NOTICES

Open Source Software: GNU GCC libgcc 4.3.2
Enclosed you'll find the license conditions and copyright notices applicable for Open Source Software GNU GCC libgcc 4.3.2

License conditions:

This configure script is free software; the Free Software Foundation gives unlimited permission to copy, distribute and modify it.

This config.status script is free software; the Free Software Foundation gives unlimited permission to copy, distribute and modify it.

Copyrights:

Copyright (C) 2003 Free Software Foundation, Inc.

Copyright (C) 2005, 2006 Free Software Foundation

Copyright (C) 2007 Free Software Foundation, Inc.

Copyright 1997, 1998, 1999, 2000, 2001, 2002, 2003, 2004, 2005, 2006, 2007, # 2008 Free Software Foundation, Inc.

LICENSE CONDITIONS AND COPYRIGHT NOTICES

Open Source Software: GNU GCC libstdc++ / libsupc++ 4.3.2
Enclosed you'll find the license conditions and copyright notices applicable for Open Source Software GNU GCC libstdc++ / libsupc++ 4.3.2

License conditions:

Distributed under the Boost
Software License, Version 1.0. (See accompanying file
LICENSE_1_0.txt or copy at http:www.boost.org/LICENSE_1_0.txt)

Boost Software License - Version 1.0 - August 17th, 2003

Permission is hereby granted, free of charge, to any person or organization obtaining a copy of the software and accompanying documentation covered by this license (the "Software") to use, reproduce, display, distribute, execute, and transmit the Software, and to prepare derivative works of the Software, and to permit third-parties to whom the Software is furnished to do so, all subject to the following:

The copyright notices in the Software and this entire statement, including the above license grant, this restriction and the following disclaimer, must be included in all copies of the Software, in whole or in part, and all derivative works of the Software, unless such copies or derivative works are solely in the form of machine-executable object code generated by a source language processor.

THE SOFTWARE IS PROVIDED "AS IS", WITHOUT WARRANTY OF ANY KIND, EXPRESS OR
IMPLIED, INCLUDING BUT NOT LIMITED TO THE WARRANTIES OF MERCHANTABILITY,
FITNESS FOR A PARTICULAR PURPOSE, TITLE AND NON-INFRINGEMENT. IN NO EVENT
SHALL THE COPYRIGHT HOLDERS OR ANYONE DISTRIBUTING THE SOFTWARE BE LIABLE
FOR ANY DAMAGES OR OTHER LIABILITY, WHETHER IN CONTRACT, TORT OR OTHERWISE,
ARISING FROM, OUT OF OR IN CONNECTION WITH THE SOFTWARE OR THE USE OR OTHER
DEALINGS IN THE SOFTWARE.

This is free software; see the source for copying conditions. There is NO warranty; not even for MERCHANTABILITY or FITNESS FOR A PARTICULAR PURPOSE.

This file is free software; the Free Software Foundation
gives unlimited permission to copy and/or distribute it,
with or without modifications, as long as this notice is preserved.

Free Software Foundation, Inc.
This file is free software; the Free Software Foundation
gives unlimited permission to copy and/or distribute it,
with or without modifications, as long as this notice is preserved.
This program is distributed in the hope that it will be useful,
but WITHOUT ANY WARRANTY, to the extent permitted by law; without
even the implied warranty of MERCHANTABILITY or FITNESS FOR A
PARTICULAR PURPOSE.

Permission to copy, use, modify, sell and distribute this software
is granted provided this copyright notice appears in all copies.
This software is provided "as is" without express or implied
warranty, and with no claim as to its suitability for any purpose.

This Makefile.in is free software; the Free Software Foundation
gives unlimited permission to copy and/or distribute it,
with or without modifications, as long as this notice is preserved.
This program is distributed in the hope that it will be useful,
but WITHOUT ANY WARRANTY, to the extent permitted by law; without
even the implied warranty of MERCHANTABILITY or FITNESS FOR A
PARTICULAR PURPOSE.

This configure script is free software; the Free Software Foundation
gives unlimited permission to copy, distribute and modify it.

Permission to use, copy, modify, distribute and sell this software
and its documentation for any purpose is hereby granted without fee,
provided that the above copyright notice appear in all copies and
that both that copyright notice and this permission notice appear
in supporting documentation. Silicon Graphics makes no
representations about the suitability of this software for any
purpose. It is provided "as is" without express or implied warranty.

Permission to use, copy, modify, sell, and distribute this
software is hereby granted without fee, provided that the above
copyright notice appears in all copies, and that both that
copyright notice and this permission notice appear in
supporting documentation.
None of the above authors, nor IBM Haifa Research
Laboratories, Red Hat, or both, make any representation about
the suitability of this software for any purpose. It is
provided "as is" without express or implied warranty.

Permission to use, copy, modify, sell, and distribute this software
is hereby granted without fee, provided that the above copyright
notice appears in all copies, and that both that copyright notice and
this permission notice appear in supporting documentation. None of
the above authors, nor IBM Haifa Research Laboratories, make any
representation about the suitability of this software for any
purpose. It is provided "as is" without express or implied warranty.

Permission to use, copy, modify, distribute and sell this software
and its documentation for any purpose is hereby granted without fee,
provided that the above copyright notice appear in all copies and
that both that copyright notice and this permission notice appear
in supporting documentation. Hewlett-Packard Company makes no
representations about the suitability of this software for any
purpose. It is provided "as is" without express or implied warranty.

Verbatim copying and distribution of this entire article are
permitted worldwide, without royalty, in any medium, provided this
notice is preserved.</para>
<para>Report any problems or suggestions to
<email>webmaster@fsf.org</email>.</para>
</appendix>

Copyrights:

(C) Copyright Jeremy Siek 2000.

Copyright © 1994 Hewlett-Packard Company

Copyright © 1998 by Information Technology Industry Council.

Copyright © 2007 Free Software Foundation, Inc.

Copyright (C) Microsoft Corporation 1984-2002. All rights reserved.

Copyright (C) 1994, 1995, 1996, 1997, 1998, 1999, 2000, 2001 // Free Software Foundation

Copyright (C) 1994, 1995, 1996, 1997, 1998, 1999, 2000, 2001, 2002 // Free Software Foundation

Copyright (C) 1994, 1995, 1996, 1997, 1998, 1999, 2000, 2001, 2002, # 2003, 2004, 2005 Free Software Foundation, Inc.

Copyright (C) 1994, 1995, 1996, 1997, 1998, 1999, 2000, 2001, 2002, // 2003, 2004, 2005, 2006, 2007 // Free Software Foundation

Copyright (C) 1994, 1995, 1996, 1997, 1998, 1999, 2000, 2001, 2002, // 2003, 2004, 2005, 2006, 2007 Free Software Foundation, Inc.

Copyright (C) 1994, 1995, 1996, 1998, 1999, 2000, 2001, 2004 // Free Software Foundation

Copyright (C) 1994, 1996, 1997, 1998, 1999, 2000, 2001, 2002 // Free Software Foundation

Copyright (C) 1994, 1996, 1997, 1998, 1999, 2000, 2001, 2002, 2007 // Free Software Foundation

Copyright (C) 1994, 1999, 2000, 2003 Free Software Foundation, Inc.

Copyright (C) 1994, 1999, 2000, 2003, 2005 Free Software Foundation, Inc.

Copyright (C) 1994, 1999, 2001, 2002, 2003 Free Software Foundation, Inc.

Copyright (C) 1994, 1999, 2001, 2003 Free Software Foundation, Inc.

Copyright (C) 1995, 1996, 1997, 1998, 1999, 2000, 2001, 2002, 2003, // 2004, 2005, 2006, 2007 // Free Software Foundation

Copyright (C) 1996, 1997, 1998, 1999, 2000, 2001, 2002, 2003, 2004, # 2005 Free Software Foundation, Inc.

Copyright (C) 1996, 1997, 1998, 1999, 2000, 2001, 2002, 2003, 2004, // 2005, 2006, 2007 // Free Software Foundation

Copyright (C) 1996, 1997, 1998, 1999, 2000, 2001, 2002, 2003, 2004, 2005 # Free Software Foundation, Inc.

Copyright (C) 1996, 1997, 2000, 2001, 2003, 2005 # Free Software Foundation, Inc.

Copyright (C) 1996, 1998, 2000, 2001, 2002, 2003, 2004, 2005 # Free Software Foundation, Inc.

Copyright (C) 1997, 1998, 1999 Free Software Foundation, Inc.

Copyright (C) 1997, 1998, 1999, 2000, 2001, 2002 // Free Software Foundation, Inc.

Copyright (C) 1997, 1998, 1999, 2000, 2001, 2002 // Free Software Foundation, Inc.

Copyright (C) 1997, 1998, 1999, 2000, 2001, 2002 // Free Software Foundation, Inc.

Copyright (C) 1997, 1998, 1999, 2000, 2001, 2002, 2003 ## Free Software Foundation, Inc.

Copyright (C) 1997, 1998, 1999, 2000, 2001, 2002, 2003 // Free Software Foundation, Inc.

Copyright (C) 1997, 1998, 1999, 2000, 2001, 2002, 2003, 2004 // Free Software Foundation, Inc.
Copyright (C) 1997, 1998, 1999, 2000, 2001, 2002, 2003, 2004, // 2005, 2006, 2007 // Free Software Foundation, Inc.

Copyright (C) 1997, 1998, 1999, 2000, 2001, 2002, 2003, 2004, // 2005, 2006, 2007 Free Software Foundation, Inc.

Copyright (C) 1997, 1998, 1999, 2000, 2001, 2002, 2003, 2004, 2005 // 2006, 2007 // Free Software Foundation, Inc.

Copyright (C) 1997, 1998, 1999, 2000, 2001, 2002, 2003, 2004, 2005 // Free Software Foundation, Inc.

Copyright (C) 1997, 1998, 1999, 2000, 2001, 2002, 2003, 2004, 2005, // 2006, 2007 // Free Software Foundation, Inc.

Copyright (C) 1997, 1998, 1999, 2000, 2001, 2002, 2003, 2004, 2005, // 2006, 2007 Free Software Foundation, Inc.

Copyright (C) 1997, 1998, 1999, 2000, 2001, 2002, 2003, 2004, 2005, // 2006, 2007, 2008 // Free Software Foundation, Inc.

Copyright (C) 1997, 1998, 1999, 2000, 2001, 2002, 2003, 2004, 2005, // 2006, 2007, 2008 Free Software Foundation, Inc.

Copyright (C) 1997, 1998, 1999, 2000, 2001, 2002, 2003, 2004, 2005, // 2006, 2008 Free Software Foundation, Inc.

Copyright (C) 1997, 1998, 1999, 2000, 2001, 2002, 2003, 2004, 2005, 2006 // Free Software Foundation, Inc.

Copyright (C) 1997, 1998, 1999, 2000, 2001, 2002, 2003, 2004, 2005, 2006, // 2007 // Free Software Foundation, Inc.

Copyright (C) 1997, 1998, 1999, 2000, 2001, 2002, 2003, 2004, 2005, 2007 // Free Software Foundation, Inc.

Copyright (C) 1997, 1998, 1999, 2000, 2001, 2002, 2003, 2005 ## Free Software Foundation, Inc.

Copyright (C) 1997, 1998, 1999, 2000, 2001, 2002, 2003, 2005 // Free Software Foundation, Inc.

Copyright (C) 1997, 1998, 1999, 2000, 2001, 2002, 2003, 2008 ## Free Software Foundation, Inc.

Copyright (C) 1997, 1998, 1999, 2000, 2001, 2002, 2004 // Free Software Foundation

Copyright (C) 1997, 1998, 1999, 2000, 2001, 2002, 2004, 2005 // Free Software Foundation, Inc.

Copyright (C) 1997, 1998, 1999, 2000, 2001, 2002, 2004, 2005, // 2006, 2007 // Free Software Foundation, Inc.

Copyright (C) 1997, 1998, 1999, 2000, 2001, 2002, 2004, 2005, 2006 // Free Software Foundation, Inc.

Copyright (C) 1997, 1998, 1999, 2000, 2001, 2002, 2004, 2006 // Free Software Foundation, Inc.

Copyright (C) 1997, 1998, 1999, 2000, 2001, 2002, 2005 // Free Software Foundation, Inc.

Copyright (C) 1997, 1998, 1999, 2000, 2001, 2002, 2005, 2006 // Free Software Foundation, Inc.

Copyright (C) 1997, 1998, 1999, 2000, 2001, 2004 Free Software Foundation

Copyright (C) 1997, 1998, 1999, 2000, 2001, 2004, 2005 // Free Software Foundation, Inc.

Copyright (C) 1997, 1998, 1999, 2000, 2001, 2004, 2005, 2006 // Free Software Foundation, Inc.

Copyright (C) 1997, 1998, 1999, 2000, 2002, 2003, 2004 // Free Software Foundation, Inc.

Copyright (C) 1997, 1998, 1999, 2000, 2002, 2003, 2004, 2006 // Free Software Foundation, Inc.

Copyright (C) 1997, 1998, 1999, 2000, 2002, 2007 // Free Software Foundation, Inc.

Copyright (C) 1997, 1998, 1999, 2000, 2003 Free Software Foundation, Inc.

Copyright (C) 1997, 1998, 1999, 2000, 2004 Free Software Foundation

Copyright (C) 1997, 1998, 1999, 2000, 2004, 2007 Free Software Foundation

Copyright (C) 1997, 1998, 1999, 2001, 2002 // Free Software Foundation, Inc.

Copyright (C) 1997, 1998, 1999, 2001, 2002 Free Software Foundation, Inc.

Copyright (C) 1997, 1998, 1999, 2001, 2002, 2005 // Free Software Foundation, Inc.

Copyright (C) 1997, 1998, 1999, 2002 Free Software Foundation, Inc.

Copyright (C) 1997, 1998, 1999, 2002, 2004 // Free Software Foundation, Inc.

Copyright (C) 1997, 1998, 1999, 2003 Free Software Foundation, Inc.

Copyright (C) 1997, 1998, 1999, 2003, 2005 Free Software Foundation, Inc.

Copyright (C) 1997, 1998, 1999, 2007 Free Software Foundation, Inc.

Copyright (C) 1997, 1999, 2000, 2001, 2003, 2005 # Free Software Foundation, Inc.

Copyright (C) 1997, 1999, 2000, 2001, 2004 Free Software Foundation, Inc.

Copyright (C) 1997, 1999, 2001, 2002, 2005 Free Software Foundation, Inc.

Copyright (C) 1997, 2000, 2001, 2003, 2004, 2005 # Free Software Foundation, Inc.

Copyright (C) 1997-1999 Free Software Foundation, Inc.

Copyright (C) 1997-1999, 2000, 2001 Free Software Foundation, Inc.

Copyright (C) 1997-1999, 2000, 2002 Free Software Foundation, Inc.

Copyright (C) 1997-1999, 2001 Free Software Foundation, Inc.

Copyright (C) 1998, 1999 Greg Colvin and Beman Dawes.

Copyright (C) 1998, 1999, 2000, 2001, 2002, 2003, 2004, 2005, // 2006, 2007 // Free Software Foundation, Inc.

Copyright (C) 1998, 1999, 2003 Free Software Foundation, Inc.

Copyright (C) 1998, 1999, 2003, 2004 Free Software Foundation, Inc.

Copyright (C) 1999 Free Software Foundation, Inc.

Copyright (C) 1999, 2000 Free Software Foundation, Inc.

Copyright (C) 1999, 2000, 2001, 2002, 2003 Free Software Foundation

Copyright (C) 1999, 2000, 2001, 2002, 2003 Free Software Foundation, Inc.

Copyright (C) 1999, 2000, 2001, 2002, 2003, 2004 // Free Software Foundation, Inc.

Copyright (C) 1999, 2000, 2001, 2002, 2003, 2004 Free Software Foundation

Copyright (C) 1999, 2000, 2001, 2002, 2003, 2004, 2005 // Free Software Foundation, Inc.

Copyright (C) 1999, 2000, 2001, 2002, 2003, 2004, 2005, 2006 // Free Software Foundation

Copyright (C) 1999, 2000, 2001, 2002, 2003, 2004, 2005, 2006 // Free Software Foundation, Inc.

Copyright (C) 1999, 2000, 2001, 2002, 2003, 2004, 2005, 2006, 2007 // Free Software Foundation, Inc.

Copyright (C) 1999, 2000, 2001, 2002, 2003, 2004, 2005, 2006, 2007, 2008 // Free Software Foundation, Inc.

Copyright (C) 1999, 2000, 2001, 2002, 2003, 2005 // Free Software Foundation, Inc.

Copyright (C) 1999, 2000, 2001, 2002, 2003, 2005 Free Software Foundation

Copyright (C) 1999, 2000, 2001, 2002, 2003, 2006 // Free Software Foundation, Inc.

Copyright (C) 1999, 2000, 2001, 2002, 2004, 2005 // Free Software Foundation, Inc.

Copyright (C) 1999, 2000, 2001, 2003 Free Software Foundation

Copyright (C) 1999, 2000, 2001, 2003, 2004, 2005 // Free Software Foundation, Inc.

Copyright (C) 1999, 2000, 2001, 2004, 2005 Free Software Foundation, Inc.

Copyright (C) 1999, 2000, 2002, 2003 Free Software Foundation

Copyright (C) 1999, 2000, 2002, 2003 Free Software Foundation, Inc.

Copyright (C) 1999, 2000, 2002, 2003, 2004, 2005 // Free Software Foundation, Inc.

Copyright (C) 1999, 2000, 2002, 2003, 2005 Free Software Foundation

Copyright (C) 1999, 2000, 2003 Free Software Foundation

Copyright (C) 1999, 2000, 2003 Free Software Foundation, Inc.

Copyright (C) 1999, 2001, 2002, 2003, 2004 Free Software Foundation

Copyright (C) 1999, 2001, 2002, 2003, 2004, 2005 // Free Software Foundation, Inc.

Copyright (C) 1999, 2001, 2002, 2003, 2004, 2005 Free Software Foundation

Copyright (C) 1999, 2001, 2002, 2003, 2004, 2005, 2006 // Free Software Foundation, Inc.

Copyright (C) 1999, 2001, 2002, 2005, 2006 Free Software Foundation, Inc.

Copyright (C) 1999, 2001, 2003 Free Software Foundation

Copyright (C) 1999, 2001, 2003 Free Software Foundation, Inc.

Copyright (C) 1999, 2001, 2003, 2004 Free Software Foundation

Copyright (C) 1999, 2001, 2003, 2007 Free Software Foundation, Inc.

Copyright (C) 1999, 2001, 2004, 2005 Free Software Foundation, Inc.

Copyright (C) 1999, 2002 Free Software Foundation, Inc.

Copyright (C) 1999, 2002, 2003 Free Software Foundation, Inc.

Copyright (C) 1999, 2002, 2003, 2004 Free Software Foundation, Inc.

Copyright (C) 1999, 2002, 2003, 2004, 2005 // Free Software Foundation, Inc.

Copyright (C) 1999, 2002, 2003, 2004, 2005 Free Software Foundation, Inc.

Copyright (C) 1999, 2002, 2003, 2005 Free Software Foundation, Inc.

Copyright (C) 1999, 2002, 2004, 2005 Free Software Foundation, Inc.

Copyright (C) 1999, 2003 Free Software Foundation

Copyright (C) 1999, 2003 Free Software Foundation, Inc.

Copyright (C) 1999, 2003, 2004, 2005 Free Software Foundation, Inc.

Copyright (C) 1999, 2003, 2005 Free Software Foundation

Copyright (C) 1999, 2003, 2005 Free Software Foundation, Inc.

Copyright (C) 1999, 2004, 2005 Free Software Foundation, Inc.

Copyright (C) 1999, 2007 Free Software Foundation, Inc.

Copyright (C) 1999-2001, 2002, 2003 Free Software Foundation, Inc.

Copyright (C) 1999-2001, 2002, 2003, 2004, 2005 // Free Software Foundation, Inc.

Copyright (C) 2000 Free Software Foundation, Inc.

Copyright (C) 2000, 1999 Free Software Foundation, Inc.

Copyright (C) 2000, 2001 Free Software Foundation

Copyright (C) 2000, 2001, 2002 Free Software Foundation,

Copyright (C) 2000, 2001, 2002 Free Software Foundation, <abbrev>Inc.</abbrev> 51 Franklin <abbrev>St</abbrev>, Fifth Floor, Boston, <abbrev>MA</abbrev> 02110-1301

Copyright (C) 2000, 2001, 2002 Free Software Foundation, Inc.

Copyright (C) 2000, 2001, 2002, 2003 Free Software Foundation

Copyright (C) 2000, 2001, 2002, 2003 Free Software Foundation, Inc.

Copyright (C) 2000, 2001, 2002, 2003, 2004 Free Software Foundation

Copyright (C) 2000, 2001, 2002, 2003, 2004, 2005 // Free Software Foundation, Inc.

Copyright (C) 2000, 2001, 2002, 2003, 2004, 2005, 2006 // Free Software Foundation

Copyright (C) 2000, 2001, 2002, 2003, 2004, 2005, 2006 // Free Software Foundation, Inc.

Copyright (C) 2000, 2001, 2002, 2003, 2004, 2005, 2006, 2007 // Free Software Foundation, Inc.

Copyright (C) 2000, 2001, 2002, 2003, 2004, 2005, 2006, 2007 // Free Software Foundation

Copyright (C) 2000, 2001, 2002, 2003, 2004, 2005, 2006, 2007 // Free Software Foundation, Inc.

Copyright (C) 2000, 2001, 2002, 2003, 2004, 2005, 2006, 2007, 2008 // Free Software Foundation, Inc.

Copyright (C) 2000, 2001, 2002, 2003, 2004, 2005, 2007 ## Free Software Foundation, Inc.

Copyright (C) 2000, 2001, 2002, 2003, 2004, 2006, 2007 // Free Software Foundation, Inc.

Copyright (C) 2000, 2001, 2002, 2003, 2005 Free Software Foundation

Copyright (C) 2000, 2001, 2002, 2003, 2005 Free Software Foundation, Inc.

Copyright (C) 2000, 2001, 2002, 2003, 2006 Free Software Foundation, Inc.

Copyright (C) 2000, 2001, 2002, 2003, 2007 Free Software Foundation

Copyright (C) 2000, 2001, 2003 Free Software Foundation, Inc.

Copyright (C) 2000, 2001, 2003, 2004 Free Software Foundation, Inc.

Copyright (C) 2000, 2001, 2003, 2004, 2005 Free Software Foundation, Inc.

Copyright (C) 2000, 2001, 2003, 2004, 2005, 2006 // Free Software Foundation, Inc.

Copyright (C) 2000, 2001, 2003, 2005 Free Software Foundation, Inc.

Copyright (C) 2000, 2001, 2004, 2005 Free Software Foundation, Inc.

Copyright (C) 2000, 2001, 2005, 2006 Free Software Foundation, Inc.

Copyright (C) 2000, 2002 Free Software Foundation, Inc.

Copyright (C) 2000, 2002, 2003 Free Software Foundation

Copyright (C) 2000, 2002, 2003 Free Software Foundation, Inc.

Copyright (C) 2000, 2002, 2003, 2004 Free Software Foundation

Copyright (C) 2000, 2002, 2003, 2004, 2006, 2007 Free Software Foundation, Inc.

Copyright (C) 2000, 2002, 2003, 2005 Free Software Foundation

Copyright (C) 2000, 2002, 2004, 2005 Free Software Foundation, Inc.

Copyright (C) 2000, 2002, 2005 Free Software Foundation, Inc.

Copyright (C) 2000, 2002, 2005, 2008 Free Software Foundation, Inc.

Copyright (C) 2000, 2002, 2006 Free Software Foundation, Inc.

Copyright (C) 2000, 2003 Free Software Foundation

Copyright (C) 2000, 2003 Free Software Foundation, Inc.

Copyright (C) 2000, 2003, 2004 Free Software Foundation

Copyright (C) 2000, 2003, 2004 Free Software Foundation, Inc.

Copyright (C) 2000, 2003, 2004, 2005 Free Software Foundation, Inc.

Copyright (C) 2000, 2005 Free Software Foundation, Inc.

Copyright (C) 2001 Free Software Foundation

Copyright (C) 2001 Free Software Foundation, Inc.

Copyright (C) 2001 Free Software Foundation, Inc. # Benjamin Kosnik <bkoz@redhat.com>, 2001.

Copyright (C) 2001, 2002 Free Software Foundation, Inc.

Copyright (C) 2001, 2002, 2003 Free Software Foundation

Copyright (C) 2001, 2002, 2003 Free Software Foundation, Inc.

Copyright (C) 2001, 2002, 2003 Peter Dimov

Copyright (C) 2001, 2002, 2003, 2004 Free Software Foundation

Copyright (C) 2001, 2002, 2003, 2004 Free Software Foundation, Inc.

Copyright (C) 2001, 2002, 2003, 2004, 2005 Free Software Foundation

Copyright (C) 2001, 2002, 2003, 2004, 2005 Free Software Foundation, Inc.

Copyright (C) 2001, 2002, 2003, 2004, 2005, 2006 // Free Software Foundation, Inc.

Copyright (C) 2001, 2002, 2003, 2004, 2005, 2006 Free Software Foundation

Copyright (C) 2001, 2002, 2003, 2004, 2005, 2006, 2007 # Free Software Foundation, Inc.

Copyright (C) 2001, 2002, 2003, 2004, 2005, 2006, 2007 // Free Software Foundation

Copyright (C) 2001, 2002, 2003, 2004, 2005, 2006, 2007 // Free Software Foundation, Inc.

Copyright (C) 2001, 2002, 2003, 2004, 2005, 2006, 2007 // Free Software Foundation

Copyright (C) 2001, 2002, 2003, 2004, 2005, 2006, 2007 // Free Software Foundation, Inc.

Copyright (C) 2001, 2002, 2003, 2004, 2005, 2006, 2007, 2008 ## Free Software Foundation, Inc.

Copyright (C) 2001, 2002, 2003, 2004, 2005, 2006, 2007, 2008 // Free Software Foundation

Copyright (C) 2001, 2002, 2003, 2004, 2005, 2006, 2007, 2008 // Free Software Foundation, Inc.

Copyright (C) 2001, 2002, 2003, 2004, 2008 Free Software Foundation, Inc.

Copyright (C) 2001, 2002, 2003, 2005 Free Software Foundation, Inc.

Copyright (C) 2001, 2002, 2003, 2005 Free Software Foundation

Copyright (C) 2001, 2002, 2003, 2005 Free Software Foundation, Inc.

Copyright (C) 2001, 2002, 2003, 2005, 2006 Free Software Foundation

Copyright (C) 2001, 2002, 2003, 2005, 2007 Free Software Foundation, Inc.

Copyright (C) 2001, 2002, 2003, 2006 Free Software Foundation, Inc.

Copyright (C) 2001, 2002, 2003, 2006, 2008 Free Software Foundation, Inc.

Copyright (C) 2001, 2002, 2004 Free Software Foundation, Inc.

Copyright (C) 2001, 2002, 2004, 2005 Free Software Foundation

Copyright (C) 2001, 2002, 2004, 2005 Free Software Foundation, Inc.

Copyright (C) 2001, 2002, 2004, 2005, 2006 Free Software Foundation, Inc.

Copyright (C) 2001, 2002, 2004, 2005, 2007 Free Software Foundation, Inc.

Copyright (C) 2001, 2002, 2004, 2005, 2008 Free Software Foundation, Inc.

Copyright (C) 2001, 2002, 2004, 2006 Free Software Foundation, Inc.

Copyright (C) 2001, 2002, 2005 Free Software Foundation, Inc.

Copyright (C) 2001, 2002, 2005, 2007 Free Software Foundation, Inc.

Copyright (C) 2001, 2002, 2005, 2008 Free Software Foundation, Inc. See license.html for license.

Copyright (C) 2001, 2003 Free Software Foundation

Copyright (C) 2001, 2003 Free Software Foundation

Copyright (C) 2001, 2003 Free Software Foundation, Inc.

Copyright (C) 2001, 2003, 2004 Free Software Foundation, Inc.

Copyright (C) 2001, 2003, 2004, 2005 Free Software Foundation, Inc.

Copyright (C) 2001, 2003, 2005 Free Software Foundation, Inc.

Copyright (C) 2001, 2003, 2005 Free Software Foundation

Copyright (C) 2001, 2003, 2007 Free Software Foundation, Inc.

Copyright (C) 2001, 2004 Free Software Foundation, Inc.

Copyright (C) 2001, 2004, 2005 Free Software Foundation, Inc.

Copyright (C) 2001, 2005 Free Software Foundation, Inc.

Copyright (C) 2001, 2007 Free Software Foundation, Inc.

Copyright (C) 2002 // Free Software Foundation, Inc.

Copyright (C) 2002 Free Software Foundation

Copyright (C) 2002 Free Software Foundation, Inc.

Copyright (C) 2002 Peter Dimov

Copyright (C) 2002, 2003 Free Software Foundation

Copyright (C) 2002, 2003 Free Software Foundation, Inc.

Copyright (C) 2002, 2003, 2004, 2005 Free Software Foundation

Copyright (C) 2002, 2003, 2004, 2005 Free Software Foundation, Inc.

Copyright (C) 2002, 2003, 2004, 2005, 2006, 2007 // Free Software Foundation, Inc.

Copyright (C) 2002, 2003, 2004, 2005, 2006, 2007, 2008 ## Free Software Foundation, Inc.

Copyright (C) 2002, 2003, 2004, 2005, 2006, 2007, 2008 Free // Software Foundation

Copyright (C) 2002, 2003, 2004, 2005, 2007 Free Software Foundation, Inc.

Copyright (C) 2002, 2003, 2004, 2007 Free Software Foundation, Inc.

Copyright (C) 2002, 2003, 2005 Free Software Foundation, Inc.

Copyright (C) 2002, 2003, 2005 Free Software Foundation, Inc.

Copyright (C) 2002, 2003, 2007 Free Software Foundation, Inc.

Copyright (C) 2002, 2004 Free Software Foundation

Copyright (C) 2002, 2004 Free Software Foundation, Inc.

Copyright (C) 2002, 2004, 2005 Free Software Foundation, Inc.

Copyright (C) 2002, 2004, 2005, 2007 Free Software Foundation, Inc.

Copyright (C) 2002, 2004, 2006 Free Software Foundation, Inc.

Copyright (C) 2002, 2005, 2007 Free Software Foundation, Inc.

Copyright (C) 2002, 2007 Free Software Foundation, Inc.

Copyright (C) 2003 // Free Software Foundation, Inc.

Copyright (C) 2003 Free Software Foundation

Copyright (C) 2003 Free Software Foundation, Inc.

Copyright (C) 2003, 2004 // Free Software Foundation, Inc.

Copyright (C) 2003, 2004 Free Software Foundation

Copyright (C) 2003, 2004 Free Software Foundation, Inc.

Copyright (C) 2003, 2004, 2005 // Free Software Foundation, Inc.

Copyright (C) 2003, 2004, 2005 Free Software Foundation, Inc.

Copyright (C) 2003, 2004, 2005 Free Software Foundation

Copyright (C) 2003, 2004, 2005 Free Software Foundation, Inc.

Copyright (C) 2003, 2004, 2005, 2006 // Free Software Foundation, Inc.

Copyright (C) 2003, 2004, 2005, 2006 Free Software Foundation

Copyright (C) 2003, 2004, 2005, 2006 Free Software Foundation, Inc.

Copyright (C) 2003, 2004, 2005, 2006, 2007 // Free Software Foundation, Inc.

Copyright (C) 2003, 2004, 2005, 2006, 2007 Free Software Foundation

Copyright (C) 2003, 2004, 2005, 2006, 2007 Free Software Foundation, Inc.

Copyright (C) 2003, 2004, 2005, 2006, 2007, 2008 // Free Software Foundation, Inc.

Copyright (C) 2003, 2004, 2005, 2006, 2007, 2008 Free Software // Foundation, Inc.

Copyright (C) 2003, 2004, 2005, 2007 Free Software Foundation

Copyright (C) 2003, 2004, 2005, 2007 Free Software Foundation, Inc.

Copyright (C) 2003, 2004, 2006 Free Software Foundation, Inc.

Copyright (C) 2003, 2005 Free Software Foundation

Copyright (C) 2003, 2005 Free Software Foundation, Inc.

Copyright (C) 2003, 2005, 2006 // Free Software Foundation, Inc.

Copyright (C) 2003, 2005, 2006 Free Software Foundation, Inc.

Copyright (C) 2003, 2006 // Free Software Foundation, Inc.

Copyright (C) 2003, 2007 Free Software Foundation, Inc.

Copyright (C) 2004 Ami Tavory and Vladimir Dreizin, IBM-HRL.

Copyright (C) 2004 Free Software Foundation

Copyright (C) 2004 Free Software Foundation, Inc.

Copyright (C) 2004, 2005 Free Software Foundation, Inc.

Copyright (C) 2004, 2005 Free Software Foundation

Copyright (C) 2004, 2005 Free Software Foundation, Inc.

Copyright (C) 2004, 2005, 2006 Free Software Foundation

Copyright (C) 2004, 2005, 2006 Free Software Foundation, Inc.

Copyright (C) 2004, 2005, 2006, 2007 Free Software Foundation

Copyright (C) 2004, 2005, 2006, 2007 Free Software Foundation, Inc.

Copyright (C) 2004, 2005, 2006, 2007, 2008 // Free Software Foundation, Inc.

Copyright (C) 2004, 2005, 2006, 2007, 2008 Free Software Foundation, Inc.

Copyright (C) 2004, 2005, 2007 Free Software Foundation

Copyright (C) 2004, 2005, 2007 Free Software Foundation, Inc.

Copyright (C) 2004, 2006 Free Software Foundation, Inc.

Copyright (C) 2004, 2006, 2008 Free Software Foundation, Inc.

Copyright (C) 2004, 2007 Free Software Foundation, Inc.

Copyright (C) 2005 Free Software Foundation, Inc.

Copyright (C) 2005 Free Software Foundation

Copyright (C) 2005 Free Software Foundation, Inc.

Copyright (C) 2005, 2006 // Free Software Foundation, Inc.

Copyright (C) 2005, 2006 Free Software Foundation, Inc.

Copyright (C) 2005, 2006, 2007 Free Software Foundation

Copyright (C) 2005, 2006, 2007 Free Software Foundation, Inc.

Copyright (C) 2005, 2006, 2007, 2008 Free Software Foundation, Inc.

Copyright (C) 2005, 2006, 2008 Free Software Foundation, Inc.

Copyright (C) 2005, 2007 Free Software Foundation, Inc.

Copyright (C) 2006 // Free Software Foundation, Inc.

Copyright (C) 2006 Free Software Foundation

Copyright (C) 2006 Free Software Foundation

Copyright (C) 2006 Free Software Foundation, Inc.

Copyright (C) 2006, 2006 Free Software Foundation

Copyright (C) 2006, 2007 Free Software Foundation

Copyright (C) 2006, 2007 Free Software Foundation, Inc.

Copyright (C) 2006, 2007, 2008 // Free Software Foundation, Inc.

Copyright (C) 2006, 2007, 2008 Free Software Foundation

Copyright (C) 2006, 2007, 2008 Free Software Foundation, Inc.

Copyright (C) 2006, 2008 // Free Software Foundation, Inc.

Copyright (C) 2006-2007 Free Software Foundation, Inc.

Copyright (C) 2007 // Free Software Foundation, Inc.

Copyright (C) 2007 Free Software Foundation

Copyright (C) 2007 Free Software Foundation, Inc.

Copyright (C) 2007, 2008 Free Software Foundation

Copyright (C) 2007, 2008 Free Software Foundation, Inc.

Copyright (C) 2007,2008 Free Software Foundation, Inc.

Copyright (C) 2008 Free Software Foundation

Copyright (C) 2008 Free Software Foundation, Inc.

Copyright (c) 1994 * Hewlett-Packard Company

Copyright (c) 1996 * Silicon Graphics Computer Systems, Inc.

Copyright (c) 1996,1997 * Silicon Graphics

Copyright (c) 1996,1997 * Silicon Graphics Computer Systems, Inc.

Copyright (c) 1996-1997 * Silicon Graphics Computer Systems, Inc.

Copyright (c) 1996-1998 * Silicon Graphics Computer Systems, Inc.

Copyright (c) 1996-1999 * Silicon Graphics Computer Systems, Inc.

Copyright (c) 1997 * Silicon Graphics Computer Systems, Inc.

Copyright (c) 1997-1999 * Silicon Graphics Computer Systems, Inc.

Copyright (c) 1998 * Silicon Graphics Computer Systems, Inc.

Copyright (c) 2001, 2002, 2003 Peter Dimov and Multi Media Ltd.

Copyright 2008 FSF

Copyright Ami Tavory and Vladimir Dreizin, IBM-HRL, 2004, and Benjamin Kosnik, Red Hat, 2004.

Copyright Â© 1989, 1991 Free Software Foundation, Inc.

Copyright Â© 1998 ISO.

Copyright Â© 1999 The Open Group/The Institute of Electrical and Electronics Engineers, Inc..

Copyright Â© 1999 ISO.

Copyright Â© 2000 Addison Wesley Longman, Inc..

Copyright Â© 2000 Addison Wesley, Inc..

Copyright Â© 2000, 2001, 2002, 2003, 2004, 2005, 2006, 2007, 2008

Copyright Â© 2002 OOPSLA.

Copyright Â© 2004, 2005, 2006, 2007 Free Software Foundation, Inc., 51 Franklin Street, Fifth Floor, Boston, MA 02110-1301, USA

Copyright Â© 2004, 2005, 2006, 2007 Free Software Foundation, Inc., 51 Franklin Street, Fifth Floor, Boston, MA 02110-1301, USA</para>

Copyright Â© 2007 FSF.

copyrighted by the Free Software Foundation

copyrighted by the Free Software Foundation

SIEMENS

SIMATIC

S7-1500/ET 200MP

Product information for the digital output module F-DQ 8x24VDC/2A PPM (6ES7526-2BF00-0AB0)

Product Information

Security information

Siemens provides products and solutions with industrial security functions that support the secure operation of plants, systems, machines and networks.

In order to protect plants, systems, machines and networks against cyber threats, it is necessary to implement – and continuously maintain – a holistic, state-of-the-art industrial security concept. Siemens' products and solutions only form one element of such a concept.

Customer is responsible to prevent unauthorized access to its plants, systems, machines and networks. Systems, machines and components should only be connected to the enterprise network or the internet if and to the extent necessary and with appropriate security measures (e.g. use of firewalls and network segmentation) in place.

Additionally, Siemens' guidance on appropriate security measures should be taken into account. For more information about industrial security, please visit (https://www.siemens.com/industrialsecurity).

Siemens' products and solutions undergo continuous development to make them more secure. Siemens strongly recommends to apply product updates as soon as available and to always use the latest product versions. Use of product versions that are no longer supported, and failure to apply latest updates may increase customer's exposure to cyber threats.

To stay informed about product updates, subscribe to the Siemens Industrial Security RSS Feed under (https://www.siemens.com/industrialsecurity).

Content

This product information contains **important information on the digital output module F-DQ 8x24VDC/2A PPM (6ES7526-2BF00-0AB0)**. The product information is part of the product supplied. The information in this Product Information should be considered more up-to-date than other documentation if uncertainties arise.

Addition to the section "Max. readback time dark test"

⚠ WARNING
You can configure the parameter "Max. readback time dark test" with a maximum of 100 ms for F-modules with firmware version 1.0.0.

Addition to the section "Operating mode of the output"

⚠ WARNING
If the F-module with firmware version 1.0.0 has been configured with PP-switching mode, you need to change the "Behavior after channel fault" parameter from "Passivate channel" to "Passivate the entire module".

© Siemens AG 2016. All rights reserved

Correction in the section "Application: Connection of one load per digital output, PP-switching"

⚠ WARNING
In PP operation, a cross-circuit between a positive potential (e.g. L+ or other signal lines) and DQ is detected by the module and it switches the output off. However, the connected actuator is still supplied with power due to the external fault. To prevent cross-circuits between a positive potential (e.g. L+ or other signal lines) and DQ, you must route the lines used to connect the actuators in a cross-circuit-proof manner (for example, as separate, sheathed cables or in separate cable ducts).

Correction in the section "Connecting capacitive loads"

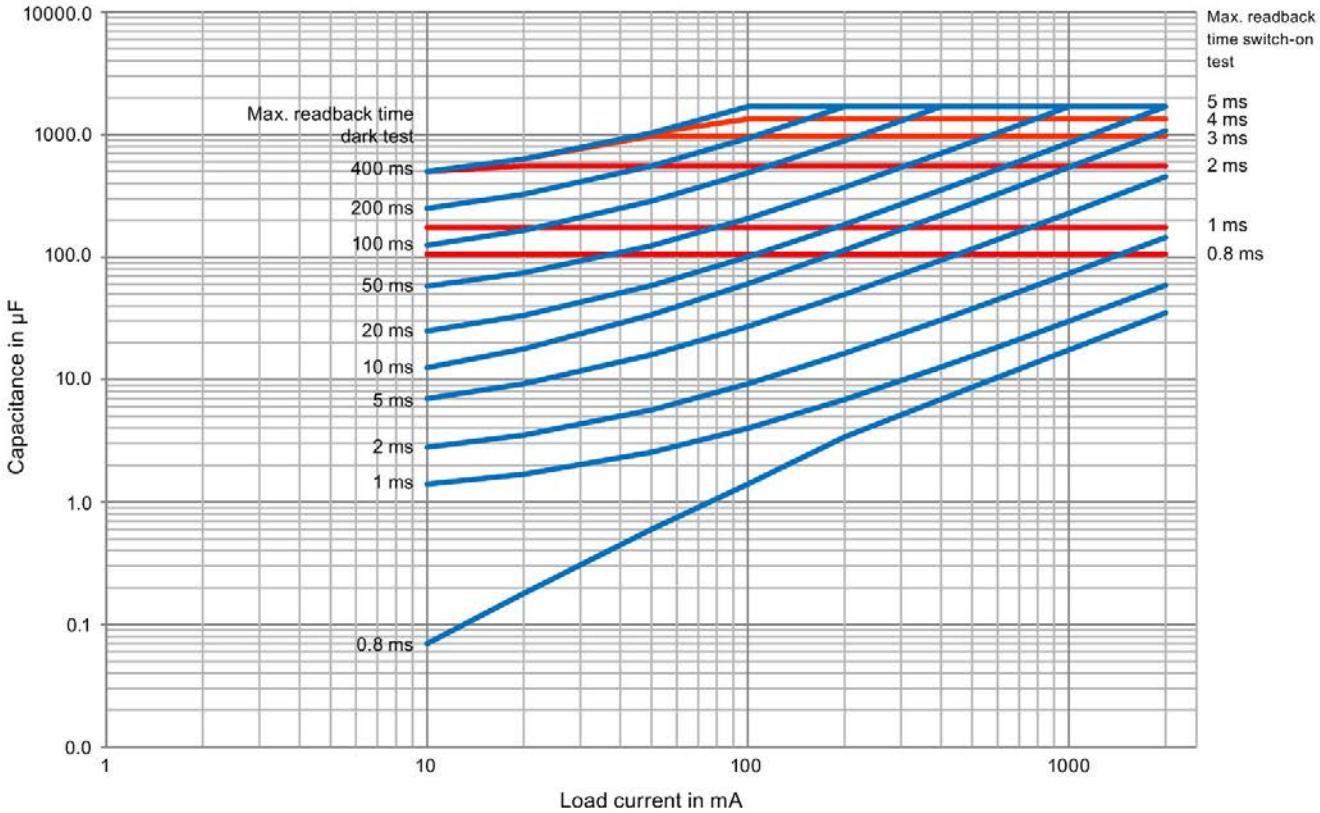

Figure 1 Switching of capacitive loads for the F-DQ 8x24VDC/2A PPM digital output module in PP-switching mode depending on the configured dark and light test times

Siemens AG
Division Digital Factory
Postfach 48 48
90026 NÜRNBERG
GERMANY

Product information for the digital output module F-DQ 8x24VDC/2A PPM (6ES7526-2BF00-0AB0)
A5E37428391-AC, 09/2016

SIEMENS

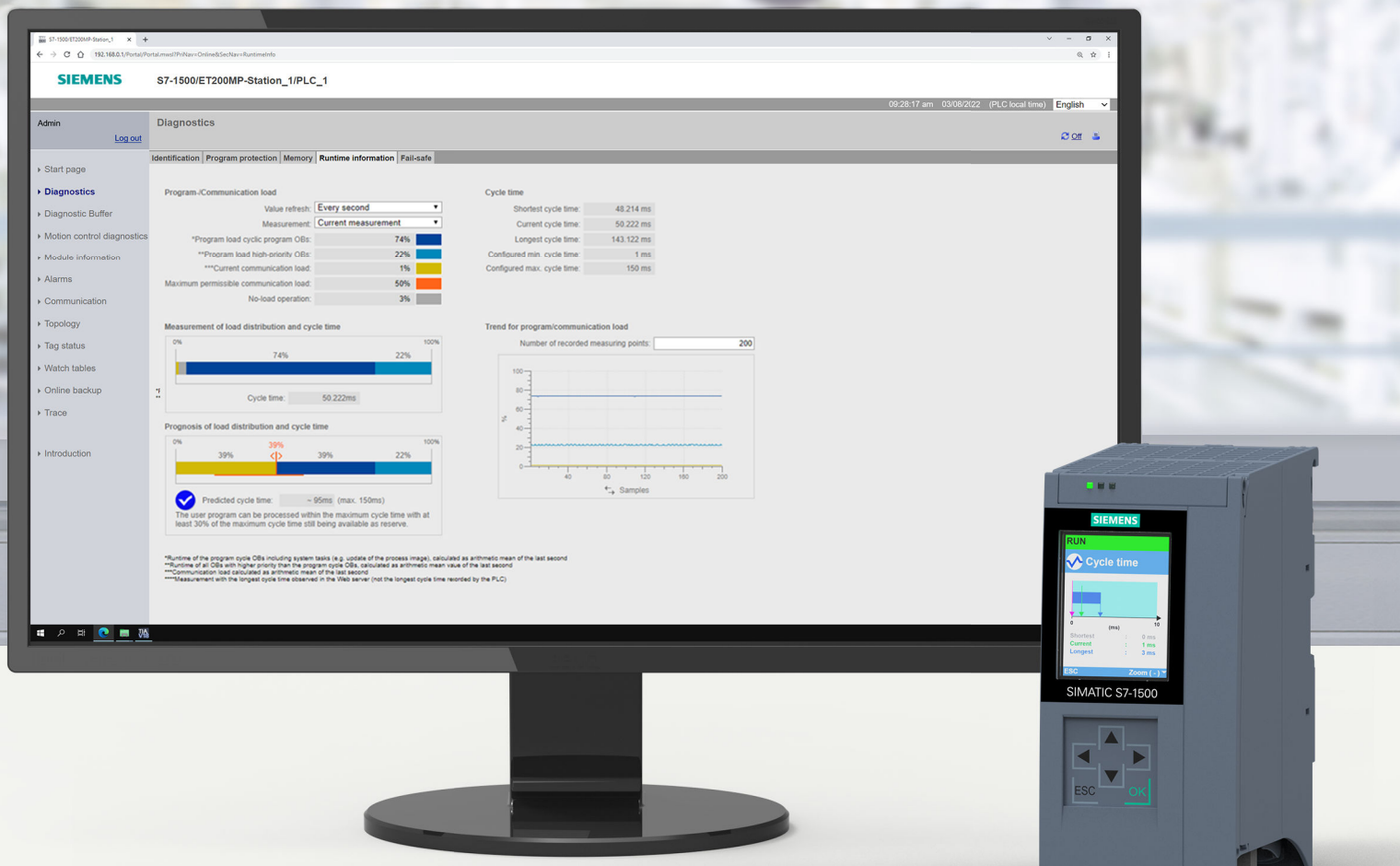

Edition 11/2022

FUNCTION MANUAL

SIMATIC

S7-1500, S7-1500R/H, ET 200SP, ET 200pro

Cycle and response times

support.industry.siemens.com

SIEMENS

SIMATIC

S7-1500, S7-1500R/H, ET 200SP, ET 200pro
Cycle and response times

Function Manual

Introduction 1

Safety instructions 2

Program execution 3

Cyclic program execution 4

Event-driven program execution 5

Cycle and response times of the S7-1500R/H redundant system 6

11/2022
A5E03461504-AG

Legal information

Warning notice system

This manual contains notices you have to observe in order to ensure your personal safety, as well as to prevent damage to property. The notices referring to your personal safety are highlighted in the manual by a safety alert symbol, notices referring only to property damage have no safety alert symbol. These notices shown below are graded according to the degree of danger.

⚠ DANGER
indicates that death or severe personal injury **will** result if proper precautions are not taken.

⚠ WARNING
indicates that death or severe personal injury **may** result if proper precautions are not taken.

⚠ CAUTION
indicates that minor personal injury can result if proper precautions are not taken.

NOTICE
indicates that property damage can result if proper precautions are not taken.

If more than one degree of danger is present, the warning notice representing the highest degree of danger will be used. A notice warning of injury to persons with a safety alert symbol may also include a warning relating to property damage.

Qualified Personnel

The product/system described in this documentation may be operated only by **personnel qualified** for the specific task in accordance with the relevant documentation, in particular its warning notices and safety instructions. Qualified personnel are those who, based on their training and experience, are capable of identifying risks and avoiding potential hazards when working with these products/systems.

Proper use of Siemens products

Note the following:

⚠ WARNING
Siemens products may only be used for the applications described in the catalog and in the relevant technical documentation. If products and components from other manufacturers are used, these must be recommended or approved by Siemens. Proper transport, storage, installation, assembly, commissioning, operation and maintenance are required to ensure that the products operate safely and without any problems. The permissible ambient conditions must be complied with. The information in the relevant documentation must be observed.

Trademarks

All names identified by ® are registered trademarks of Siemens AG. The remaining trademarks in this publication may be trademarks whose use by third parties for their own purposes could violate the rights of the owner.

Disclaimer of Liability

We have reviewed the contents of this publication to ensure consistency with the hardware and software described. Since variance cannot be precluded entirely, we cannot guarantee full consistency. However, the information in this publication is reviewed regularly and any necessary corrections are included in subsequent editions.

Siemens AG
Digital Industries
Postfach 48 48
90026 NÜRNBERG
GERMANY

A5E03461504-AG
Ⓟ 10/2022 Subject to change

Copyright © Siemens AG 2013 - 2022.
All rights reserved

Table of contents

1 Introduction ... 6

1.1 Function Manuals documentation guide ... 10
1.1.1 Information classes Function Manuals ... 10
1.1.2 Basic tools ... 11
1.1.3 SIMATIC Technical Documentation ... 13

2 Safety instructions ... 15

2.1 Security information ... 15

3 Program execution ... 16

3.1 Principle of operation ... 16

3.2 Overload behavior ... 18

4 Cyclic program execution ... 23

4.1 Cycle ... 23

4.2 Cycle time ... 25
4.2.1 Different cycle times ... 25
4.2.2 Influences on the cycle time ... 28
4.2.2.1 Update time for process image partitions ... 28
4.2.2.2 User program execution time ... 31
4.2.2.3 Extension of cycle time due to communication load ... 38
4.2.2.4 Special consideration when PROFINET IO communication is configured on the 2nd PROFINET interface (X2) ... 49

4.3 Time-driven program execution in cyclic interrupts ... 50

4.4 Response time for cyclic and time-driven program execution ... 54

4.5 Summary of response time with cyclic and time-controlled program execution ... 57

5 Event-driven program execution ... 59

5.1 Response time of the CPUs when program execution is event-controlled ... 59

5.2 Process response time when program execution is event-driven ... 62

6 Cycle and response times of the S7-1500R/H redundant system ... 64

6.1 Introduction ... 64

6.2 Maximum cycle time and time errors ... 64

6.3 Influences on the cycle time of the S7-1500R/H redundant system ... 66
6.3.1 Influences on the cycle time in RUN-Solo system state ... 66
6.3.2 Influences on the cycle time in SYNCUP system state ... 67
6.3.3 Influences on the cycle time in RUN-Redundant system state ... 70

6.3.4 Influences on the cycle time when a CPU fails..... 74
6.4 Response time of R/H CPUs..... 77
6.5 Timetables for the RUN-Redundant system state..... 80

Glossary..... 85

Index..... 90

Introduction 1

Purpose of the documentation

The controller offers various options for program execution with different run priorities. Cyclic-driven and time-driven program execution have the largest share. The response times of a controller are therefore significantly determined by the processing cycles.

There is also the possibility of event-driven program execution. The event-driven program execution is normally limited to a few selected events.

This manual provides information on the following topics:

- Types of program execution
- Run priorities
- Cycle and response times, and the influences to which they are subject
- Configuration options for the optimization of your user program

Basic knowledge required

The following knowledge is required in order to understand the documentation:

- General knowledge of automation technology
- Knowledge of the SIMATIC industrial automation system
- Knowledge of the use of Windows-based computers
- Knowledge of working with STEP 7

Conventions

STEP 7: In this documentation, "STEP 7" is used as a synonym for all versions of the configuration and programming software "STEP 7 (TIA Portal)".

Please also observe notes marked as follows:

NOTE

A note contains important information on the product described in the documentation, on the handling of the product or on the section of the documentation to which particular attention should be paid.

Scope of the documentation

This documentation mainly covers the description of the CPU components of the cycle and response times of the following systems:

- SIMATIC S7-1500 automation system
- SIMATIC S7-1500R/H redundant system
- The CPUs of the ET 200SP distributed I/O system
- The CPUs of the ET 200pro distributed I/O system based on SIMATIC S7-1500

You can find links to more information on the ET 200MP, ET 200SP and ET 200pro distributed I/O systems at the corresponding points in this manual.

NOTE

F-specific monitoring and response times are not covered by the Cycle and Response Times function manual.

For F-specific monitoring and response times, refer to the programming and operating manual SIMATIC Safety - Configuration and Programming (https://support.industry.siemens.com/cs/ww/en/view/54110126).

What's new in edition 11/2022 compared to edition 02/2021?

What's new?		What are the customer benefits?	Where can I find information?
Changed contents	Cycle and response times	Updating of the specified cycle and response times in the Function Manual.	Starting from section Program execution (Page 16)
	Extension of the scope of the Function Manual to include the CPU 1514SP(F)-2 PN of the ET 200SP distributed I/O system	The CPU 1514SP-2 PN extends the ET 200SP portfolio. The CPU provides the following advantages, among others: • Suitable for applications with medium requirements with regard to the program scope and the processing speed. • Integrated Motion Control functionalities for activation of speed and positioning axes, support of external encoders, cams/cam tracks and measuring probes • 2 interfaces PROFINET IO X1 and X2 The CPU 1514SP F-2 PN can additionally be used for safety functions according to IEC 61508 up to SIL 3, and ISO 13849 up to PLe for safety applications.	Starting from section Program execution (Page 16)
	Extension of the scope of validity of the Function Manual to include the CPU 1514SP T(F)-2 PN of the ET 200SP distributed I/O system	The CPU 1514SP T-2 PN extends the ET 200SP portfolio. In contrast to the CPU 1514SP-2 PN, the CPU 1514SP T-2 PN features high-performance, extended Motion Control functions, for example: • Synchronous operation • Cyclic cams	Starting from section Program execution (Page 16)

What's new?		What are the customer benefits?	Where can I find information?
		Important technical specifications: • Code work memory: 900 KB • Data work memory: 3.5 MB • Motion Control resources: 2400 • Extended Motion Control resources: 120 The CPU 1514SP TF-2 PN can additionally be used for safety functions according to IEC 61508 up to SIL 3, and ISO 13849 up to PLe for safety applications.	

What's new in edition 02/2021 compared to edition 11/2019?

What's new?		What are the customer benefits?	Where can I find information?
Changed contents	Scope of the function manual expanded to include CPU 1518HF-4 PN of the S7-1500R/H redundant system	The CPU 1518HF-4 PN extends the R/H CPU portfolio by an HF CPU. The CPU offers the following advantages: • High-performance H-CPU with integrated F-functionality • The CPU can also be used for safety functions according to IEC 61508 up to SIL 3 and ISO 13849 up to PLe for safety applications. • 3 PROFINET interfaces	Starting from section Program execution (Page 16)
	Scope of the function manual expanded to include CPU 1518T-4 PN/DP of the S7-1500 automation system	CPU 1518T-4 PN/DP offers a very large program and data memory for demanding applications in applications that contain distributed I/O in addition to central automation structures. CPU 1518T-4 PN/DP features high-performance, extended Motion Control functions, for example: • Synchronous operation • Cyclic cams Important technical specifications: • Code work memory: 9 MB • Data work memory: 60 MB • Motion Control resources: 15360 • Extended Motion Control resources: 512	Starting from section Program execution (Page 16)
	Scope of the function manual expanded to include CPU 1518TF-4 PN/DP of the S7-1500 automation system	CPU 1518TF-4 PN/DP offers a very large program and data memory for demanding applications in applications that contain distributed I/O in addition to central automation structures. The CPU can also be used for safety functions according to IEC 61508 up to SIL 3 and ISO 13849 up to PLe for safety applications. CPU 1518TF-4 PN/DP features high-performance, extended Motion Control functions, for example: • Synchronous operation • Cyclic cams	Starting from section Program execution (Page 16)

What's new?		What are the customer benefits?	Where can I find information?
		Important technical specifications: • Code work memory: 9 MB • Data work memory: 60 MB • Motion Control resources: 15360 • Extended Motion Control resources: 512	

What's new in edition 11/2019 as compared to edition 10/2018?

What's new?		What are the customer benefits?	Where can I find information?
Changed contents	Improved visualization of the communication load in the web server	The visualization of the current communication load and its effects on the cycle time helps you to find suitable values for the parameterization of the communication load.	• In section Extension of cycle time due to communication load (Page 38) • In the Web Server (https://support.industry.siemens.com/cs/ww/en/view/591935-60) function manual

What's new in edition 10/2018 as compared to edition 09/2016?

What's new?		What are the customer benefits?	Where can I find information?
Changed contents	Scope of the function manual expanded to include CPUs of the S7-1500R/H redundant system	The determination of the cycle and response times of the S7-1500R/H redundant system follows the same principle as for the CPUs of the S7-1500 automation system.	Section Cycle and response times of the S7-1500R/H redundant system (Page 64)

What's new in the 09/2016 edition compared to the 02/2014 edition?

What's new?		What are the customer benefits?	Where can I find information?
Changed contents	Scope of the function manual expanded to include the CPUs of the ET 200SP distributed I/O system and CPU 1516pro-2 PN of the ET 200pro distributed I/O system	Functions that you will be familiar with from the SIMATIC S7-1500 CPUs are implemented in CPUs in other designs (ET 200SP) and in the CPU 1516pro-2 PN (degree of protection IP 65, IP 66 and IP 67).	Starting from section Program execution (Page 16)

Recycling and disposal

For environmentally friendly recycling and disposal of your old equipment, contact a certified electronic waste disposal company and dispose of the equipment according to the applicable regulations in your country.

Industry Mall

The Industry Mall is the catalog and order system of Siemens AG for automation and drive solutions on the basis of Totally Integrated Automation (TIA) and Totally Integrated Power (TIP).
You can find catalogs for all automation and drive products on the Internet (https://mall.industry.siemens.com).

1.1 Function Manuals documentation guide

1.1.1 Information classes Function Manuals

The documentation for the SIMATIC S7-1500 automation system, for the 1513/1516pro-2 PN, SIMATIC Drive Controller CPUs based on SIMATIC S7-1500 and the SIMATIC ET 200MP, ET 200SP, ET 200AL and ET 200eco PN distributed I/O systems is arranged into three areas.
This arrangement enables you to access the specific content you require.
You can download the documentation free of charge from the Internet (https://support.industry.siemens.com/cs/ww/en/view/109742705).

Basic information

The system manuals and Getting Started describe in detail the configuration, installation, wiring and commissioning of the SIMATIC S7-1500, SIMATIC Drive Controller, ET 200MP, ET 200SP, ET 200AL and ET 200eco PN systems. Use the corresponding operating instructions for 1513/1516pro-2 PN CPUs.
The STEP 7 online help supports you in the configuration and programming.
Examples:

- Getting Started S7-1500
- System manuals
- Operating instructions ET 200pro and 1516pro-2 PN CPU
- Online help TIA Portal

Device information

Equipment manuals contain a compact description of the module-specific information, such as properties, wiring diagrams, characteristics and technical specifications.
Examples:

- Equipment manuals for CPUs
- Equipment manuals for interface modules
- Equipment manuals for digital modules
- Equipment manuals for analog modules
- Equipment manuals for communication modules
- Equipment manuals for technology modules
- Equipment manuals for power supply modules
- Equipment manuals for BaseUnits

General information

The function manuals contain detailed descriptions on general topics relating to the SIMATIC Drive Controller and the S7-1500 automation system.
Examples:

- Function Manual Diagnostics
- Function Manual Communication
- Function Manuals Motion Control
- Function Manual Web Server
- Function Manual Cycle and Response Times
- PROFINET Function Manual
- PROFIBUS Function Manual

Product Information

Changes and supplements to the manuals are documented in a Product Information. The Product Information takes precedence over the device and system manuals.
You will find the latest Product Information on the Internet:

- S7-1500/ET 200MP (https://support.industry.siemens.com/cs/de/en/view/68052815)
- SIMATIC Drive Controller (https://support.industry.siemens.com/cs/de/en/view/109772684/en)
- Motion Control (https://support.industry.siemens.com/cs/de/en/view/109794046/en)
- ET 200SP (https://support.industry.siemens.com/cs/de/en/view/73021864)
- ET 200eco PN (https://support.industry.siemens.com/cs/ww/en/view/109765611)

Manual Collections

The Manual Collections contain the complete documentation of the systems put together in one file.
You will find the Manual Collections on the Internet:

- S7-1500/ET 200MP/SIMATIC Drive Controller (https://support.industry.siemens.com/cs/ww/en/view/86140384)
- ET 200SP (https://support.industry.siemens.com/cs/ww/en/view/84133942)
- ET 200AL (https://support.industry.siemens.com/cs/ww/en/view/95242965)
- ET 200eco PN (https://support.industry.siemens.com/cs/ww/en/view/109781058)

1.1.2 Basic tools

The tools described below support you in all steps: from planning, over commissioning, all the way to analysis of your system.

TIA Selection Tool

The TIA Selection Tool tool supports you in the selection, configuration, and ordering of devices for Totally Integrated Automation (TIA).
As successor of the SIMATIC Selection Tools , it assembles the configuration editors for automation technology already familiar into a single tool.

With the TIA Selection Tool , you can generate a complete order list from your product selection or product configuration.
You can find the TIA Selection Tool on the Internet.
(https://support.industry.siemens.com/cs/ww/en/view/109767888)

SIMATIC Automation Tool

You can use the SIMATIC Automation Tool to perform commissioning and maintenance activities on various SIMATIC S7 stations as bulk operations independent of TIA Portal.
The SIMATIC Automation Tool offers a wide range of functions:

- Scanning of a PROFINET/Ethernet system network and identification of all connected CPUs
- Assignment of addresses (IP, subnet, Gateway) and device name (PROFINET device) to a CPU
- Transfer of the date and the programming device/PC time converted to UTC time to the module
- Program download to CPU
- RUN/STOP mode switchover
- CPU localization through LED flashing
- Reading out of CPU error information
- Reading the CPU diagnostic buffer
- Reset to factory settings
- Firmware update of the CPU and connected modules

You can find the SIMATIC Automation Tool on the Internet.
(https://support.industry.siemens.com/cs/ww/en/view/98161300)

PRONETA

SIEMENS PRONETA (PROFINET network analysis) is a commissioning and diagnostic tool for PROFINET networks. PRONETA Basic has two core functions:

- The "Network analysis" offers a quick overview of the PROFINET topology. It is possible to make simple parameter changes (for example, to the names and IP addresses of the devices). In addition, a quick and convenient comparison of the real configuration with a reference system is also possible.
- The "IO test" is a simple and rapid test of the wiring and the module configuration of a plant, including documentation of the test results.

You can find SIEMENS PRONETA Basic on the Internet:
(https://support.industry.siemens.com/cs/ww/en/view/67460624)
SIEMENS PRONETA Professional is a licensed product that offers you additional functions. It offers you simple asset management in PROFINET networks and supports operators of automation systems in automatic data collection/acquisition of the components used through various functions:

- The user interface (API) offers an access point to the automation cell to automate the scan functions using MQTT or a command line.
- With PROFIenergy diagnostics, you can quickly detect the current pause mode or the readiness for operation of devices that support PROFIenergy and change these as needed.
- The data record wizard supports PROFINET developers in reading and writing acyclic PROFINET data records quickly and easily without PLC and engineering.

You can find SIEMENS PRONETA Professional on the Internet.
(https://www.siemens.com/proneta-professional)

SINETPLAN

SINETPLAN, the Siemens Network Planner, supports you in planning automation systems and networks based on PROFINET. The tool facilitates professional and predictive dimensioning of your PROFINET installation as early as in the planning stage. In addition, SINETPLAN supports you during network optimization and helps you to exploit network resources optimally and to plan reserves. This helps to prevent problems in commissioning or failures during productive operation even in advance of a planned operation. This increases the availability of the production plant and helps improve operational safety.

The advantages at a glance

- Network optimization thanks to port-specific calculation of the network load
- Increased production availability thanks to online scan and verification of existing systems
- Transparency before commissioning through importing and simulation of existing STEP 7 projects
- Efficiency through securing existing investments in the long term and the optimal use of resources

You can find SINETPLAN on the Internet
(https://new.siemens.com/global/en/products/automation/industrial-communication/profinet/sinetplan.html).

1.1.3 SIMATIC Technical Documentation

Additional SIMATIC documents will complete your information. You can find these documents and their use at the following links and QR codes.

The Industry Online Support gives you the option to get information on all topics. Application examples support you in solving your automation tasks.

Overview of the SIMATIC Technical Documentation

Here you will find an overview of the SIMATIC documentation available in Siemens Industry Online Support:

Industry Online Support International
(https://support.industry.siemens.com/cs/ww/en/view/109742705)

Watch this short video to find out where you can find the overview directly in Siemens Industry Online Support and how to use Siemens Industry Online Support on your mobile device:

Quick introduction to the technical documentation of automation products per video (https://support.industry.siemens.com/cs/us/en/view/109780491)

YouTube video: Siemens Automation Products - Technical Documentation at a Glance (https://youtu.be/TwLSxxRQQsA)

mySupport

With "mySupport" you can get the most out of your Industry Online Support.

Registration	You must register once to use the full functionality of "mySupport". After registration, you can create filters, favorites and tabs in your personal workspace.
Support requests	Your data is already filled out in support requests, and you can get an overview of your current requests at any time.
Documentation	In the Documentation area you can build your personal library.
Favorites	You can use the "Add to mySupport favorites" to flag especially interesting or frequently needed content. Under "Favorites", you will find a list of your flagged entries.
Recently viewed articles	The most recently viewed pages in mySupport are available under "Recently viewed articles".
CAx data	The CAx data area gives you access to the latest product data for your CAx or CAe system. You configure your own download package with a few clicks: • Product images, 2D dimension drawings, 3D models, internal circuit diagrams, EPLAN macro files • Manuals, characteristics, operating manuals, certificates • Product master data

You can find "mySupport" on the Internet. (https://support.industry.siemens.com/My/ww/en)

Application examples

The application examples support you with various tools and examples for solving your automation tasks. Solutions are shown in interplay with multiple components in the system - separated from the focus on individual products.
You can find the application examples on the Internet.
(https://support.industry.siemens.com/cs/ww/en/ps/ae)

Safety instructions 2

2.1 Security information

Siemens provides products and solutions with industrial security functions that support the secure operation of plants, systems, machines and networks.

In order to protect plants, systems, machines and networks against cyber threats, it is necessary to implement – and continuously maintain – a holistic, state-of-the-art industrial security concept. Siemens' products and solutions constitute one element of such a concept.

Customers are responsible for preventing unauthorized access to their plants, systems, machines and networks. Such systems, machines and components should only be connected to an enterprise network or the internet if and to the extent such a connection is necessary and only when appropriate security measures (e.g. firewalls and/or network segmentation) are in place.

For additional information on industrial security measures that may be implemented, please visit (https://www.siemens.com/industrialsecurity).

Siemens' products and solutions undergo continuous development to make them more secure. Siemens strongly recommends that product updates are applied as soon as they are available and that the latest product versions are used. Use of product versions that are no longer supported, and failure to apply the latest updates may increase customers' exposure to cyber threats.

To stay informed about product updates, subscribe to the Siemens Industrial Security RSS Feed visit (https://www.siemens.com/cert).

Program execution 3

3.1 Principle of operation

Introduction

You often program your user program with a program cycle organization block (OB), usually in OB 1. With complex applications, it is often necessary to comply with short response times required by the application. You can often meet the response time requirements by splitting the user program up into several parts with different response time requirements. The CPU offers a number of different OB types for this purpose, the properties (priority, frequency, etc.) of which can be adapted to meet your requirements.

Program organization

You can choose from the following types of program execution for running your user program:

Program execution in the cyclic program of the CPU:

The CPU executes the user program cyclically. When the execution has reached the end of a cycle, the program execution starts again in the next cycle. In the simplest case, you execute the entire user program in the cyclic program of the CPU. All tasks in the user program are then processed with equal rank. This also results in the same response times for all tasks.

In addition to program execution in the cyclic program, there is time-driven and event-driven program execution.

Time-driven execution:

In a complex user program, there are frequently portions with different response time requirements. You can optimize the response times by taking advantage of these differences in the requirements. To do so, you can break down the program parts with higher response time requirements into higher-priority OBs with shorter cycles, for example cyclic interrupt OBs.

The execution of these parts can thus occur at different frequencies and with different priorities.

Event-driven execution:

Depending on the I/O modules used, you can configure hardware interrupts for specific process events (such as an edge change of a digital input) that result in the call of the assigned hardware interrupt OB. The hardware interrupts have a higher priority and interrupt the cyclic program of the CPU. You can achieve very short response times in the CPU with hardware interrupts by directly triggering program execution.

Keep in mind that the time characteristics of your application becomes less predictable with intense use of hardware interrupts. The reason for this is that the time at which the triggering events occur can result in drastically different response times.

Tip: Use hardware interrupts only for a few selected events.

Special consideration for hardware interrupts: If you have assigned an OB to an event (hardware interrupt), the OB then has the priority of the event.

Using process image partitions

If you have distributed a program over various OBs, for example, due to different response time requirements, it is advisable and often necessary to assign the update of the used I/O data directly to these OBs. You can use process image partitions for this purpose.

You group the input and output data in a process image partition according to their use in the program and assign the data to the OB.

A process image partition of the inputs (PIPI) permits the associated input data for an OB program to be updated immediately before the OB program starts.

A process image partition of the outputs (PIPQ) permits the output data associated with an OB program to become effective on the outputs immediately after the OB program runs.

You have 32 (0 ... 31) process image partitions at your disposal. The I/O is assigned to the process image partition 0 by default (setting: "Automatic update"). Process image partition 0 is permanently assigned to cyclic execution.

You have to configure the "system-side update of process image partitions". You can find additional information on configuration of process image partitions in the online help for STEP 7 under the keyword "Assign process image/process image partition".

Interruptibility of program execution

Each organization block is processed according to the priority it has been assigned. You can adapt the priority according to the response time requirements for most organization blocks.

All program cycle OBs always have the lowest priority of 1. The highest priority is 26.

Communication tasks always have priority 15. If necessary, you can change the priority of your blocks and select a higher priority than the communication.

Organization blocks or system activities with higher priority interrupt organization blocks or system activities with lower priority. Organization blocks or system activities with higher priority interrupt thus extend the runtime of the interrupted organization blocks or system activities. If two pending tasks have the same priority, these tasks are processed in the order in which the relevant start events occurred.

NOTE

Higher priority OBs

Communication functionality is strongly influenced by too many and/or runtime-intensive OBs with a priority > 15.

When using OBs with a priority ≥ 15, you should therefore consider the runtime load that they cause.

Reference

You can find additional information on the subject of "priorities" in the "Events and OBs" section of the following manuals:

- S7-1500 automation system (https://support.industry.siemens.com/cs/ww/en/view/59191792) system manual
- S7-1500R/H redundant system (https://support.industry.siemens.com/cs/ww/en/view/109754833) system manual
- ET 200SP distributed I/O system (https://support.industry.siemens.com/cs/ww/en/view/58649293) system manual
- Operating instructions CPU 1513pro-2 PN (https://support.industry.siemens.com/cs/ww/en/view/109769507) and CPU 1516pro-2 PN (https://support.industry.siemens.com/cs/ww/en/view/109482416)

You can find additional information on organization blocks and their priorities for Motion Control on the Internet (https://support.industry.siemens.com/cs/ww/en/view/109751049).

3.2 Overload behavior

CPU overload behavior

An occurring event triggers the execution of the associated OB. Depending on the OB priority and the current processor load, a time delay may occur before the OB is executed when there is an overload. The same event can therefore occur once or several times before the user program processes the OB belonging to the preceding event. The CPU handles such a situation as follows: The operating system queues the events in the queue associated with their priority in the order of their occurrence. The CPU then takes the oldest event for the highest priority and processes the associated OB. After the OB has been processed, the CPU processes the OB for the next event.

To control temporary overload situations, you can limit the number of queued events that originate from the same source. The next event is discarded as soon as the maximum number of pending triggers of a specific cyclic interrupt OB, for example, is reached.

Overload occurs when similar events occur faster than the CPU can process these events. Similar events are events from a single source, such as start events for a specific cyclic interrupt OB.

Configuration of the overload response

In the properties of an organization block in which an overload can occur, you can select the response to overload under "Attributes" and "Event queuing".

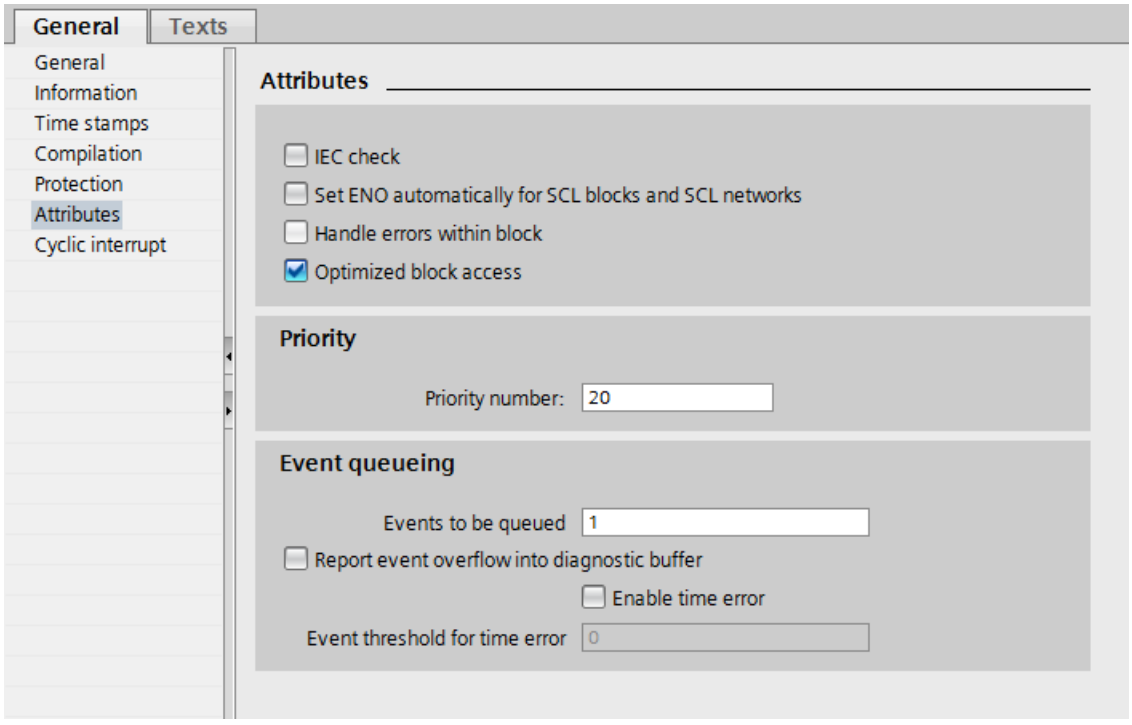

Figure 3-1 Configuration of the overload response in the block properties

Events to be queued

The OB parameter "Events to be queued" is used to specify how many similar events the operating system places in the associated queue and therefore post-processes. If this parameter has the value 1, for example, exactly one event is stored temporarily.

If the maximum number of similar start events is reached in the queue, each additional start event is only counted and subsequently discarded. During the next scheduled processing of the event, the CPU provides the number of discarded start events in the "Event_Count" input parameter (in the start information). You can then react appropriately to the overload situation. The CPU then resets the counter for lost events to zero.

NOTE

Post-processing of cyclic events is often not desirable, as this can lead to an overload with OBs of the same or lower priority. Therefore, it is generally advantageous to discard similar events and to react to the overload situation during the next scheduled OB processing. A low value of the "Events to be queued" parameter mitigates an overload situation.

To ensure that the CPU processes the OB of at least one queued event, the minimum number of events to be queued is "1". The maximum number of events that can be queued is "12".

Report event overflow into diagnostic buffer

If the CPU first discards a start event of a cyclic interrupt OB, for example, its further behavior depends on the OB parameter "Report event overflow into diagnostic buffer". If you have selected the check box, the CPU enters the event in the diagnostic buffer for the overload

situation at this event source. If an overload situation occurs again (overflow counter changes from 0 to 1), another diagnostic buffer entry is made at the next OB end.

Enable time error

The cyclic interrupt OB parameter "Enable time error" is used to specify whether the CPU is to call a time error OB when a specific overload level is reached for similar events. You use the OB parameter "Enable time error" to program a reaction to an overload before the limit for similar events is reached. The reaction occurs before the CPU discards similar events.

By default, the "Enable time error" parameter is not set.

Event threshold for time error

Select the "Enable time error" check box to enable the "Event threshold for time error" OB parameter. You use the "Event threshold for time error" OB parameter to specify how many similar events in the queue are permitted before the CPU calls a time error OB.

The following value range applies to the "Event threshold for time error" parameter:

1 ≤ "Event threshold for time error" ≤ "Events to be queued".

Example 1

The following example shows the response of the CPU when multiple similar events occur faster than the CPU can process the associated OBs. In example 1, the user selected the following parameter assignment:

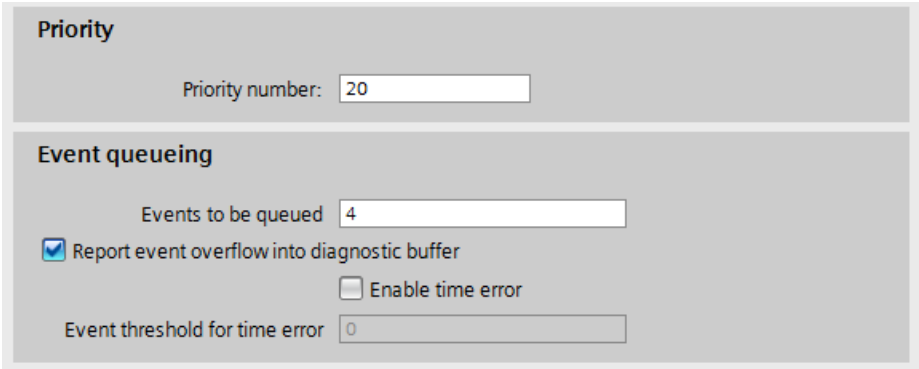

Figure 3-2 Example of parameter assignment for the overload behavior

The figure below shows the processing sequence as soon as an event calls an associated OB.

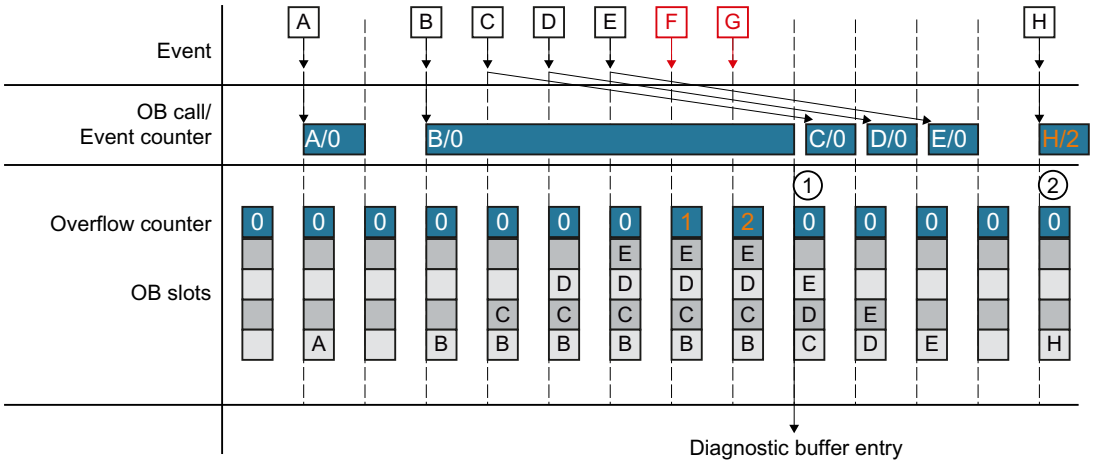

Figure 3-3 Example 1

As soon as an occurring event calls an OB, the event occupies a slot of the OB. The occupied slot is free again as soon as the CPU has processed the event. If the CPU has not completed processing the OB of an occurring event, additional occurring events each occupy an additional slot of the OB during this time. As soon as this number exceeds the configured number of events to be queued, these events are discarded and counted by the overflow counter. When an OB which takes a long time to run is completed, the CPU creates an entry in the diagnostic buffer and sets the overflow counter to zero (①). After the CPU has processed this long-running OB, the CPU then processes the OBs of the events that are queued one after the other. At the next new occurring event, the CPU writes the previous value of the reset overflow counter to the start information of the OB. The CPU then processes the OB (②).

Example 2

In example 2, the user has selected the following parameter assignment:

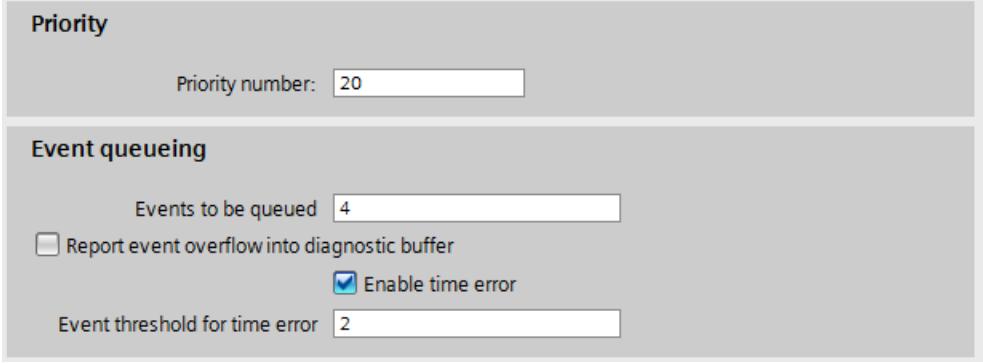

Figure 3-4 Example of parameter assignment for the overload behavior

Contrary to example 1, the CPU in example 2 requests a time error as soon as the configured event threshold has been exceeded. An additional time error can then only occur if all slots of the OB have been free once in the meantime.

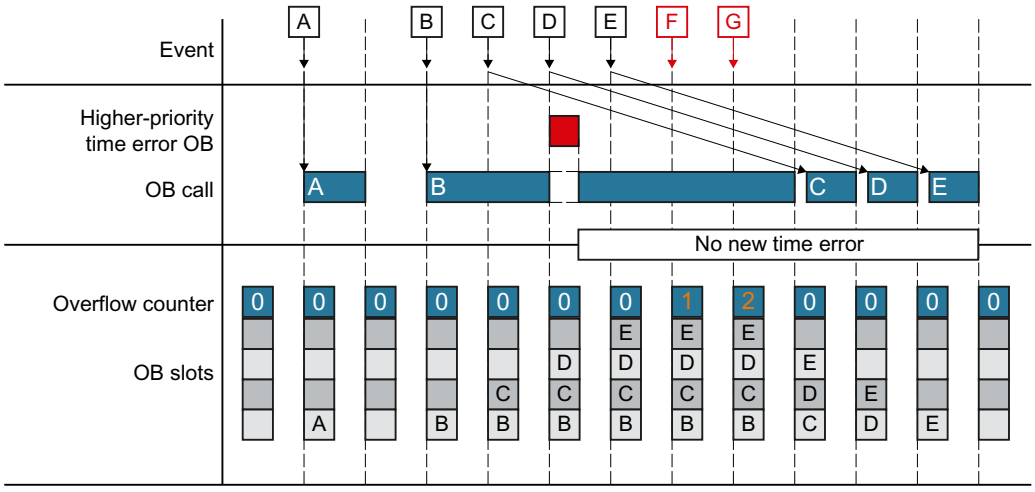

Figure 3-5 Example 2

Cyclic program execution

4

Validity

The statements of the section "Cyclic program execution" apply to the CPU components of the following systems:

- S7-1500 automation system
- ET 200MP and ET 200SP distributed I/O systems
- The CPUs of the ET 200pro distributed I/O system based on SIMATIC S7-1500
- S7-1500R/H redundant system (in RUN-Solo system state)
  In RUN-Redundant system state, the statements of section "Cycle and response times of the S7-1500R/H redundant system (Page 64)" apply.

Restrictions

With the S7-1500R/H redundant system, there are restrictions compared to the S7-1500 automation system. The S7-1500R/H redundant system does not support all hardware properties and firmware functions of the S7-1500 automation system (for example, it does not support PROFIBUS DP, central I/O, web server, etc.).
The restrictions are described in the S7-1500R/H redundant system (https://support.industry.siemens.com/cs/ww/en/view/109754833) system manual.

4.1 Cycle

Definition of cycle

A cycle includes the following sections:

- Automatic update of process image partition 0 of the outputs (PIPQ 0)
- Automatic update of process image partition 0 of the inputs (PIPI 0)
- Execution of the cyclic program

The process image partition 0 is automatically updated in the cycle. You assign the I/O addresses to these process image partitions (PIPI 0/PIPQ 0) when you configure the I/O modules via the "Automatic update" setting (default).

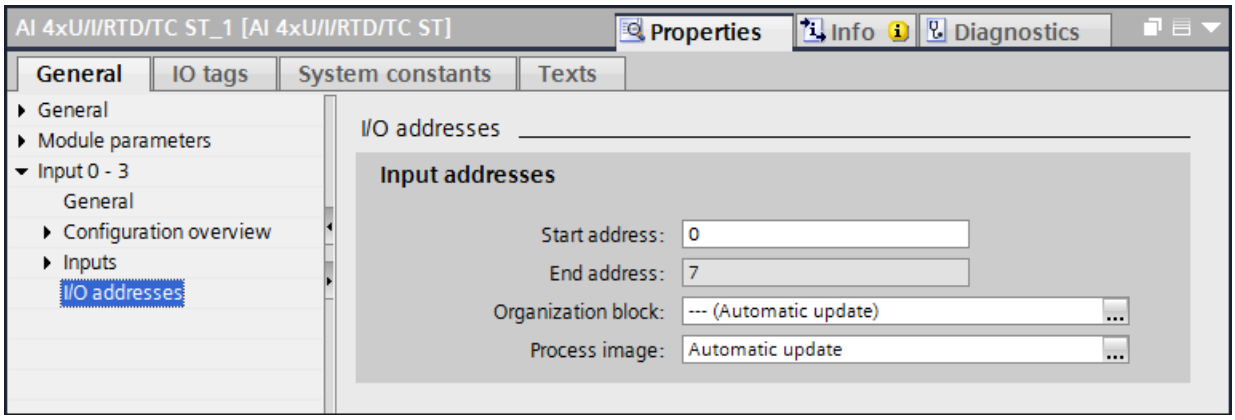

Figure 4-1 Assigning I/O addresses to process image partitions

The figure below illustrates the phases that are passed through during a cycle. In the example below the user has configured a minimum cycle time. Updating of the process image partitions and processing of the cyclic program is completed before the end of the configured minimum cycle time. Therefore, the CPU waits until the configured minimum cycle time has expired before the next program cycle starts.

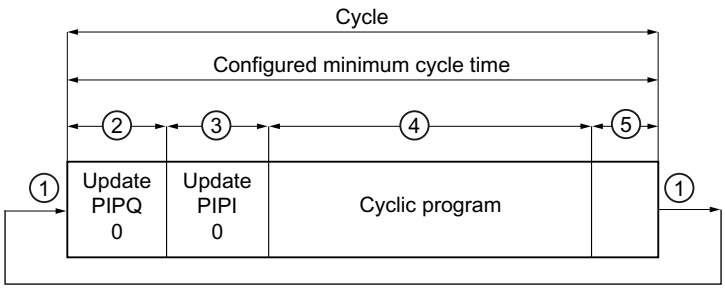

① Cycle control point at which the operating system starts measurement of the cycle time.

② The CPU writes the states from the process image output to the output modules.

③ The CPU reads the status of the inputs at the input modules and writes the input data to the process image input.

④ The CPU processes the user program and executes the instructions specified in the program.

⑤ Wait phase until end of configured minimum cycle time

Figure 4-2 Cycle

Cycle control point

When the cycle control point is reached, the CPU has completed the cycle program and is no longer executing OBs. All user data are consistent at this time. The requirement is that no communication that modifies user data (such as HMI communication or PUT/GET communication) is active.

The cycle control point marks:

- The end of a cycle and its cycle time statistics
- The start of the next cycle and its cycle time statistics
- The restart of the monitoring of the configured maximum cycle time (time-out counter is reset)

The cycle control point is reached depending on which of the following events occurred last:

- End of the last program cycle OB
- Expiry of the minimum cycle time (if configured)

After the cycle control point has been reached, the CPU executes the following steps:

1. Writes the process image outputs to the output modules
2. Reads in the status of the inputs from the input modules into the process image input
3. Executes the first program cycle OB

4.2 Cycle time

Definition of cycle time

The cycle time is the time the CPU needs for:

- Updating the process image inputs/outputs
- Executing the cyclic program
- All program parts and system activities interrupting this cycle
- Waiting for the minimum cycle time (if it is parameterized and is longer than the program execution time)

4.2.1 Different cycle times

Introduction

The cycle time (T_{cyc}) is not the same in each cycle because the processing times may vary. Causes of this include:

- For example, different program runtimes:
  - Program loops
  - Conditional commands
  - Conditional block calls
  - Different program paths
- Lengthening due to interruptions, for example:
  - Time-driven interrupt processing
  - Event-driven interrupt processing
  - Communication

Causes of different cycle times

The figure below shows the different cycle times T_{cyc1} and T_{cyc2} using an example. Because the cyclic program is interrupted by a cyclic interrupt OB in this example (for example: OB 30), the cycle time T_{cyc2} is greater than T_{cyc1}. The cyclic interrupt OB in turn is interrupted by Motion Control functions and communication.

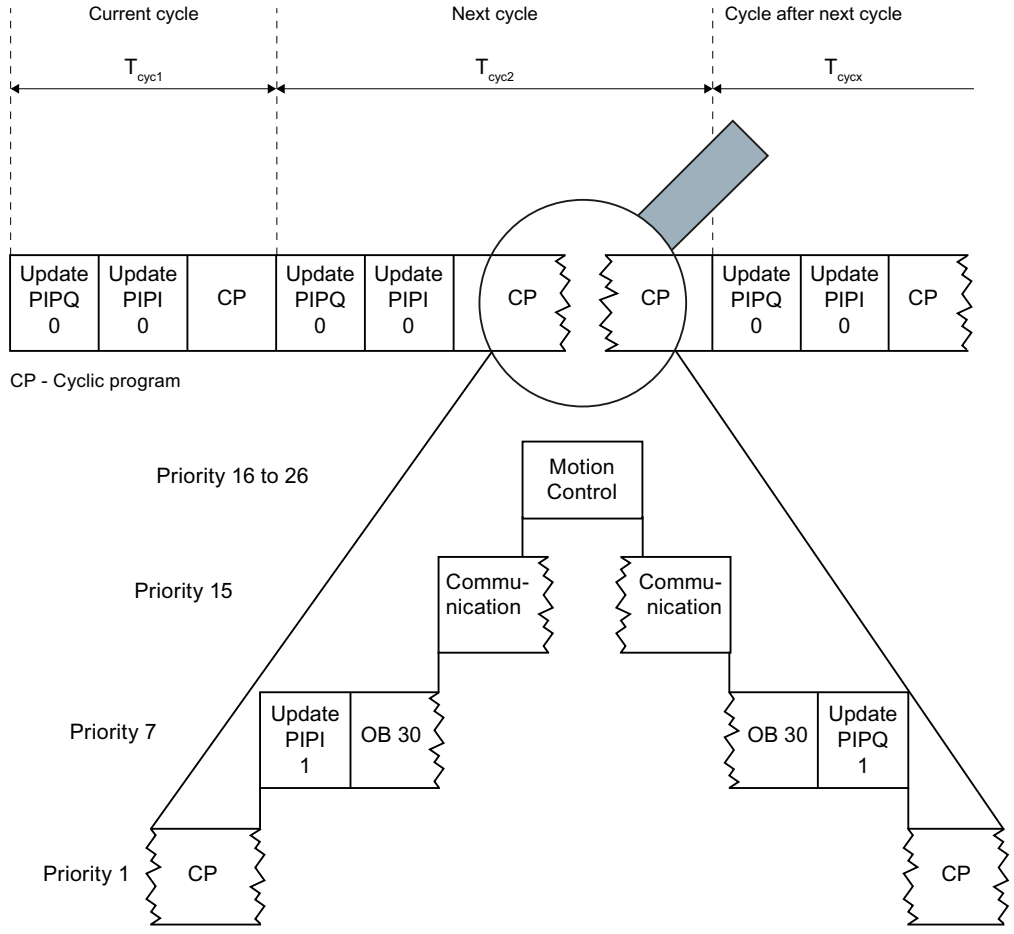

Figure 4-3 Possible causes of differing cycle times

Minimum cycle time

In STEP 7, you can set a minimum cycle time for a CPU. The default setting for the minimum cycle time of the non-redundant CPUs is one millisecond. It is advisable to increase this setting in the following cases:

- To reduce the cycle time's fluctuation range.
- To make remaining computing time available for communication tasks. The CPU then processes these communication tasks until the minimum cycle time has expired. Making the remaining computing time available to communication tasks offers the following advantages:
  - Longer minimum cycle times prevent that process images are updated unnecessarily often and thus lead to less load on the backplane bus.
  - Longer minimum cycle times result in an increase in communication performance.

Maximum cycle time

The maximum cycle time is a configurable upper limit of the cyclic program runtime. The task of the maximum cycle time is to monitor the response time required for the respective process.
The maximum cycle time of non-redundant CPUs is set to 150 ms by default. You can set this value from 1 ms to 6000 ms when assigning parameters to the CPU. When the time of the cycle currently being processed is longer than the maximum cycle time, the time error OB (OB 80) is called. You specify how the CPU responds to the time error with the user program in OB 80.
The following table shows the response of the CPU to the cycle time being exceeded with and without a configured OB 80:

Table 4-1 Response of the CPU to cycle time being exceeded

Number of times cycle time is exceeded ⇒	**Operating mode**
First time cycle time is exceeded[1] without OB 80 ⇒	STOP
First time cycle time is exceeded with OB 80 ⇒	RUN
Second time cycle time is exceeded with OB 80 ⇒	STOP

[1] Within the current cycle

For the behavior of the R/H CPUs in the event of cycle time overruns, refer to the section Maximum cycle time and time errors (Page 64).

Cycle time statistics

You can read the cycle time statistics either directly from STEP 7 ("Online tools" task card) or with the "RT_INFO" instruction.
You can use the "RT_INFO" instruction to generate statistics in STEP 7 on the runtime of specific organization blocks for communication or for the user program. For example, this includes

- The shortest and longest cycle time
- The portions of runtime used for communication and the user program

---

NOTE
Showing the cycle time statistics on the display and Web server
With the S7-1500 CPUs, you also have the option of calling the cycle time statistics via the display of the CPU. As of firmware version 2.0 of the CPUs, the cycle time statistics are also displayed in the Web server.

To view the cycle time statistics directly in STEP 7, follow these steps:

1. Establish an online connection to the CPU with STEP 7.
2. Select the "Online tools" task card.

Result: The diagram of the cycle time statistics is displayed in the cycle time section.

The following figure shows an extract from STEP 7 with the cycle time statistics. In this example, the cycle time fluctuates between 7 ms and 12 ms. The current cycle time is 10 ms. The maximum cycle time in this example is set to 40 ms.

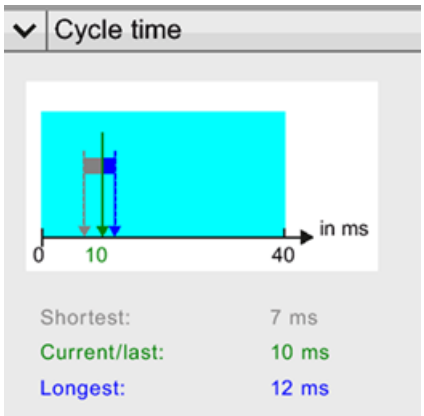

Figure 4-4 Cycle time statistics

You can find additional information on the runtime characteristics of the CPU with the "RT_INFO" instruction in the user program. The instruction includes information about:

- The utilization of the CPU by the user program and communication in percentage
- The runtimes of the individual OBs

Reference

Additional information on the "RT_INFO" instruction is available in the STEP 7 online help.

4.2.2 Influences on the cycle time

4.2.2.1 Update time for process image partitions

Estimating update time for process image partitions

The update time of the process image partitions depends on the volume of assigned central and distributed I/O module data.
You can estimate the update time using the following formula:

Base load for process image update
\+ Number of words in the process image x copy time for central I/O
\+ Number of words in the process image via DP x copy time for PROFIBUS I/O
\+ Number of words in the process image via PROFINET x copy time for PROFINET I/O

= **Update time of the process image partition**

Update times of the process image partitions

The following table contains the times for estimating the typical update times of the process image partitions.

Update time of the process image partitions for the S7-1500 CPUs

Table 4-2 Data for estimating the typical update time of the process image partitions for the S7-1500 CPUs

Components	**Update times of the S7-1500 CPUs**	
	Article numbers xxxxxxx-xxx00-xxxx, xxxxxxx-xxx01-xxxx, xxxxxxx-xxx02-xxxx	
	1511(T)(F)-1 PN 1511C-1 PN 1512C-1 PN 1513(F)-1 PN	**1515(T)(F)-2 PN 1516(T)(F)-3 PN/DP**
Basic load for updating process image partitions	35 µs	30 µs
Copy time for central I/O	9 µs/word	8 µs/word
Copy time for distributed I/O via PROFIBUS	0.5 µs/word	0.5 µs/word
Copy time for distributed I/O via PROFINET	0.5 µs/word	0.5 µs/word

Components	**Update times of the S7-1500 CPUs**		
	Article number xxxxxxx-xxx03-xxxx	**All article numbers**	
	1511(T)(F)-1 PN 1513(F)-1 PN 1515(T)(F)-2 PN 1516(F)-3 PN/DP	**1517(T)(F)-3 PN/DP**	**1518(T)(F)-4 PN/DP 1518(F)-4 PN/DP MFP**
Basic load for updating process image partitions	30 µs	7 µs	5 µs
Copy time for central I/O	8 µs/word	5 µs/word	4 µs/word
Copy time for distributed I/O via PROFIBUS	0.5 µs/word	0.4 µs/word	0.3 µs/word
Copy time for distributed I/O via PROFINET	0.5 µs/word	0.4 µs/word	0.3 µs/word

Update time of the process image partitions for the ET 200SP CPUs

Table 4-3 Data for estimating the typical update time of the process image partitions for the ET200SP CPUs

Components	Update time of the ET 200SP CPUs
	Article numbers xxxxxxx-xxx00-xxxx, xxxxxxx-xxx01-xxxx
	1510SP(F)-1 PN **1512SP(F)-1 PN**
Basic load for updating process image partitions	60 µs
Copy time for central I/O	0.5 µs/word
Copy time for distributed I/O via PROFIBUS	0.5 µs/word
Copy time for distributed I/O via PROFINET	0.5 µs/word

Components	Update time of the ET 200SP CPUs	
	Article number xxxxxxx-xxx03-xxxx	**All article numbers**
	1510SP(F)-1 PN **1512SP(F)-1 PN** **1514SP(T)(F)-2 PN**	**1515SP(F)-PC**
Basic load for updating process image partitions	60 µs	30 µs
Copy time for central I/O	0.5 µs/word	0.5 µs/word
Copy time for distributed I/O via PROFIBUS	0.5 µs/word	0.5 µs/word
Copy time for distributed I/O via PROFINET	0.5 µs/word	0.5 µs/word

NOTE

Update time of the backplane bus for ET 200SP CPUs

For the update time of the ET 200SP CPUs, observe also the information in table "Update time of the ET 200SP CPUs" of the section Response time for cyclic and time-driven program execution (Page 53).

Update time of the process image partitions for the ET 200pro CPUs

Table 4-4 Data for estimating the typical update time of the process image partitions for the ET200pro CPUs

Components	Update time of the ET 200pro CPUs	
	All article numbers	
	1513pro(F)-2 PN	1516pro(F)-2 PN
Basic load for updating process image partitions	35 µs	30 µs
Copy time for central I/O	140 µs/word	120 µs/word
Copy time for distributed I/O via PROFIBUS	0.5 µs/word	0.5 µs/word
Copy time for distributed I/O via PROFINET	0.5 µs/word	0.5 µs/word

4.2.2.2 User program execution time

Introduction

Organization blocks or system activities with higher priority interrupt organization blocks or system activities with lower priority, and thus extend their runtime.

Program execution time without interruptions

The user program has a certain runtime without interruptions. The runtime depends on the number of operations that are executed in the user program.
The following table contains the typical durations of operations.

Duration of an operation for the S7-1500 CPUs

Table 4-5 Duration of an operation for the S7-1500 CPUs

	S7-1500				
	Article numbers xxxxxxx-xxx00-xxxx, xxxxxxx-xxx01-xxxx, xxxxxxx-xxx02-xxxx				
	1511(T)(F)-1 PN 1511C-1 PN	1512C-1 PN	1513(F)-1 PN	1515(T)(F)-2 PN	1516(T)(F)-3 PN/DP
Bit operations, typ.	60 ns	48 ns	40 ns	30 ns	10 ns
Word operations, typ.	72 ns	58 ns	48 ns	36 ns	12 ns
Fixed-point arithmetic, typ.	96 ns	77 ns	64 ns	48 ns	16 ns
Floating-point arithmetic, typ.	384 ns	307 ns	256 ns	192 ns	64 ns

	S7-1500			
	Article number xxxxxxx-xxx03-xxxx		All article numbers	
	1511(T)(F)-1 PN 1513(F)-1 PN	1515(T)(F)-2 PN 1516(F)-3 PN/DP	1517(T)(F)-3 PN/DP	1518(T)(F)-4 PN/DP 1518(F)-4 PN/DP MFP
Bit operations, typ.	25 ns	6 ns	2 ns	1 ns
Word operations, typ.	32 ns	7 ns	3 ns	2 ns
Fixed-point arithmetic, typ.	42 ns	9 ns	3 ns	2 ns
Floating-point arithmetic, typ.	170 ns	37 ns	12 ns	6 ns

Duration of an operation for the S7-1500R/H CPUs

Table 4-6 Duration of an operation for the S7-1500R/H CPUs

	S7-1500R* in RUN-Solo system state	
	Article number xxxxxxx-xxx00-xxxx	
	1513R-1 PN	1515R-2 PN
Bit operations, typ.	40 ns	30 ns
Word operations, typ.	48 ns	36 ns
Fixed-point arithmetic, typ.	64 ns	48 ns
Floating-point arithmetic, typ.	256 ns	192 ns

	S7-1500R/H* in RUN-Solo system state		
	Article number xxxxxxx-xxx03-xxxx		All article numbers
	1513R-1 PN	1515R-2 PN	1517H-3 PN 1518HF-4 PN
Bit operations, typ.	31 ns	12 ns	2 ns
Word operations, typ.	40 ns	15 ns	3 ns
Fixed-point arithmetic, typ.	53 ns	20 ns	3 ns
Floating-point arithmetic, typ.	213 ns	78 ns	12 ns

* Additional information about cycle and response times of R/H CPUs is available in the section "Cycle and response times of the S7-1500R/H redundant system"

Duration of an operation for the ET 200SP CPUs

Table 4-7 Duration of an operation for the ET 200SP CPUs

	ET 200SP	
	Article numbers xxxxxxx-xxx00-xxxx, xxxxxxx-xxx01-xxxx	
	1510SP(F)-1 PN	1512SP(F)-1 PN
Bit operations, typ.	72 ns	48 ns
Word operations, typ.	86 ns	58 ns
Fixed-point arithmetic, typ.	115 ns	77 ns
Floating-point arithmetic, typ.	461 ns	307 ns

	ET 200SP		
	Article number xxxxxxx-xxx03-xxxx		All article numbers
	1510SP(F)-1 PN 1512SP(F)-1 PN	1514SP(T)(F)-2 PN	1515SP(F)-PC
Bit operations, typ.	25 ns	6 ns	30 ns
Word operations, typ.	32 ns	7 ns	36 ns
Fixed-point arithmetic, typ.	42 ns	9 ns	48 ns
Floating-point arithmetic, typ.	170 ns	37 ns	192 ns

Duration of an operation for the ET 200pro CPUs

Table 4-8 Duration of an operation for the ET 200pro CPUs

	ET 200pro	
	All article numbers	
	1513pro(F)-2 PN	1516pro(F)-2 PN
Bit operations, typ.	40 ns	10 ns
Word operations, typ.	48 ns	12 ns
Fixed-point arithmetic, typ.	64 ns	16 ns
Floating-point arithmetic, typ.	256 ns	64 ns

NOTE

Instruction "RUNTIME"

Please note that the times specified in the tables are typical values. There can therefore be user programs that deviate from the specified typical values.

Make sure to check the runtime of critical program sequences beforehand with the "RUNTIME" instruction.

Extension due to nesting of higher-priority OBs and/or interrupts

The interruption of a user program by a higher-priority OB causes a certain basic time expenditure. Take account of this basic time expenditure in addition to the update time of the assigned process image partitions and the execution time of the contained user program. The following tables contain the typical times for the various interrupts and error events.

Basic time expenditure for an interrupt for the S7-1500 CPUs

Table 4-9 Basic time expenditure for an interrupt for the S7-1500 CPUs

	S7-1500	
	Article numbers xxxxxxx-xxx00-xxxx, xxxxxxx-xxx01-xxxx, xxxxxxx-xxx02-xxxx	
	1511(T)(F)-1 PN 1511C-1 PN 1512C-1 PN 1513(F)-1 PN	**1515(T)(F)-2 PN 1516(T)(F)-3 PN/DP**
Hardware interrupt	90 µs	80 µs
Time-of-day interrupt	90 µs	80 µs
Time-delay interrupt	90 µs	80 µs
Cyclic interrupt	90 µs	80 µs

	S7-1500		
	Article number xxxxxxx-xxx03-xxxx	**All article numbers**	
	1511(T)(F)-1 PN 1513(F)-1 PN 1515(T)(F)-2 PN 1516(F)-3 PN/DP	**1517(T)(F)-3 PN/DP**	**1518(T)(F)-4 PN/DP 1518(F)-4 PN/DP MFP**
Hardware interrupt	80 µs	20 µs	12 µs
Time-of-day interrupt	80 µs	20 µs	12 µs
Time-delay interrupt	80 µs	20 µs	12 µs
Cyclic interrupt	80 µs	20 µs	12 µs

Basic time expenditure for an interrupt for the S7-1500R/H CPUs

Table 4-10 Basic time expenditure for an interrupt for the S7-1500R/H CPUs

	S7-1500R* in RUN-Solo system state	
	Article number xxxxxxx-xxx00-xxxx	
	1513R-1 PN	**1515R-2 PN**
Hardware interrupt	170 µs	140 µs
Time-of-day interrupt	170 µs	140 µs
Time-delay interrupt	170 µs	140 µs
Cyclic interrupt	170 µs	140 µs

	S7-1500R/H* in RUN-Solo system state	
	Article number xxxxxxx-xxx03-xxxx	**All article numbers**
	1513R-1 PN 1515R-2 PN	**1517H-3 PN 1518HF-4 PN**
Hardware interrupt	90 µs	20 µs
Time-of-day interrupt	90 µs	20 µs
Time-delay interrupt	90 µs	20 µs
Cyclic interrupt	90 µs	20 µs

* Additional information about cycle and response times of R/H CPUs is available in the section "Cycle and response times of the S7-1500R/H redundant system"

Basic time expenditure for an interrupt for the ET 200SP CPUs

Table 4-11 Basic time expenditure for an interrupt for the ET 200SP CPUs

	ET 200SP
	Article numbers xxxxxxx-xxx00-xxxx, xxxxxxx-xxx01-xxxx
	1510SP(F)-1 PN 1512SP(F)-1 PN
Hardware interrupt	90 µs
Time-of-day interrupt	90 µs
Time-delay interrupt	90 µs
Cyclic interrupt	90 µs

	ET 200SP	
	Article number xxxxxxx-xxx03-xxxx	**All article numbers**
	1510SP(F)-1 PN 1512SP(F)-1 PN 1514SP(T)(F)-2 PN	**1515SP(F)-PC**
Hardware interrupt	80 µs	80 µs
Time-of-day interrupt	80 µs	80 µs
Time-delay interrupt	80 µs	80 µs
Cyclic interrupt	80 µs	80 µs

Basic time expenditure for an interrupt for the ET 200pro CPUs

Table 4-12 Basic time expenditure for an interrupt for the ET 200pro CPUs

	ET 200pro	
	All article numbers	
	1513pro(F)-2 PN	**1516pro(F)-2 PN**
Hardware interrupt	90 µs	80 µs
Time-of-day interrupt	90 µs	80 µs
Time-delay interrupt	90 µs	80 µs
Cyclic interrupt	90 µs	80 µs

Basic time expenditure for an error OB for the S7-1500 CPUs

Table 4-13 Basic time expenditure for an error OB for the S7-1500 CPUs

	S7-1500	
	Article numbers xxxxxxx-xxx00-xxxx, xxxxxxx-xxx01-xxxx, xxxxxxx-xxx02-xxxx	
	1511(T)(F)-1 PN 1511C-1 PN 1512C-1 PN 1513(F)-1 PN	**1515(T)(F)-2 PN 1516(T)(F)-3 PN/DP**
Programming error	90 µs	80 µs
I/O access error	90 µs	80 µs
Time error	90 µs	80 µs
Diagnostic interrupt	90 µs	80 µs
Module failure/recovery	90 µs	80 µs
Station failure/recovery	90 µs	80 µs

	S7-1500		
	Article number xxxxxxx-xxx03-xxxx	**All article numbers**	
	1511(T)(F)-1 PN 1513(F)-1 PN 1515(T)(F)-2 PN 1516(F)-3 PN/DP	**1517(T)(F)-3 PN/DP**	**1518((T)F)-4 PN/DP 1518(F)-4 PN/DP MFP**
Programming error	80 µs	20 µs	12 µs
I/O access error	80 µs	20 µs	12 µs
Time error	80 µs	20 µs	12 µs
Diagnostic interrupt	80 µs	20 µs	12 µs
Module failure/recovery	80 µs	20 µs	12 µs
Station failure/recovery	80 µs	20 µs	12 µs

Basic time expenditure for an error OB for the S7-1500R/H CPUs

Table 4-14 Basic time expenditure for an error OB for the S7-1500R/H CPUs

	S7-1500R* in RUN-Solo system state	
	Article number xxxxxxx-xxx00-xxxx	
	1513R-1 PN	**1515R-2 PN**
Programming error	170 µs	140 µs
I/O access error	170 µs	140 µs
Time error	170 µs	140 µs
Diagnostic interrupt	170 µs	140 µs
Module failure/recovery	170 µs	140 µs
Station failure/recovery	170 µs	140 µs

	S7-1500R/H* in RUN-Solo system state	
	Article number xxxxxxx-xxx03-xxxx	**All article numbers**
	1513R-1 PN 1515R-2 PN	**1517H-3 PN 1518HF-4 PN**
Programming error	90 µs	20 µs
I/O access error	90 µs	20 µs
Time error	90 µs	20 µs
Diagnostic interrupt	90 µs	20 µs
Module failure/recovery	90 µs	20 µs
Station failure/recovery	90 µs	20 µs

* Additional information about cycle and response times of R/H CPUs is available in the section "Cycle and response times of the S7-1500R/H redundant system"

Basic time expenditure for an error OB for the ET 200SP CPUs

Table 4-15 Basic time expenditure for an error OB for the ET 200SP CPUs

	ET 200SP
	Article numbers xxxxxxx-xxx00-xxxx, xxxxxxx-xxx01-xxxx
	1510SP(F)-1 PN 1512SP(F)-1 PN
Programming error	90 µs
I/O access error	90 µs
Time error	90 µs
Diagnostic interrupt	90 µs
Module failure/recovery	90 µs
Station failure/recovery	90 µs

	ET 200SP	
	Article number xxxxxxx-xxx03-xxxx	**All article numbers**
	1510SP(F)-1 PN 1512SP(F)-1 PN 1514SP(T)(F)-2 PN	**1515SP(F)-PC**
Programming error	80 µs	80 µs
I/O access error	80 µs	80 µs
Time error	80 µs	80 µs
Diagnostic interrupt	80 µs	80 µs
Module failure/recovery	80 µs	80 µs
Station failure/recovery	80 µs	80 µs

Basic time expenditure for an error OB for the ET 200pro CPUs

Table 4-16 Basic time expenditure for an error OB for the ET 200pro CPUs

CPU	ET 200pro	
	All article numbers	
	1513pro(F)-2 PN	1516pro(F)-2 PN
Programming error	90 µs	80 µs
I/O access error	90 µs	80 µs
Time error	90 µs	80 µs
Diagnostic interrupt	90 µs	80 µs
Module failure/recovery	90 µs	80 µs
Station failure/recovery	90 µs	80 µs

Reference

You can find additional information on the topic of error handling in the Events and OBs section of the

- S7-1500 automation system (http://support.automation.siemens.com/WW/view/en/59191792) system manual
- S7-1500R/H redundant system (https://support.industry.siemens.com/cs/ww/en/view/109754833) system manual
- ET 200SP distributed I/O system (http://support.automation.siemens.com/WW/view/en/58649293) system manual
- In the CPU 1513pro-2 PN (https://support.industry.siemens.com/cs/ww/en/view/109769507) and CPU 1516pro-2 PN (https://support.industry.siemens.com/cs/ww/en/view/109482416) operating instructions, each in the Events and OBs chapter

You can find additional information on the topic of the complete cycle time of a program in an FAQ on the Internet (https://support.industry.siemens.com/cs/ww/en/view/87668055).

4.2.2.3 Extension of cycle time due to communication load

Impact of communication on the cycle time

In the sequence model of the CPU, communication tasks are processed with priority 15. All program parts with priority > 15 (e.g. for Motion Control functions) are unaffected by communication.

Configured communication load

The CPU operating system provides the maximum specified percentage of total CPU processing power for communication tasks. The communication load can be set in STEP 7 for the CPUs of the S7 series. The default value when creating a CPU depends on the type and version of CPU used. If the processing power is not needed for communication, then the processing power is available to the operating system and the user program.

Communication is allocated the requisite computing time in 1 ms increments, with priority 15. At 50% communication load, 500 µs of each 1 millisecond are used for communication.

The following formula may be used to estimate the extension of the cycle time by communication.

$$\text{Actual cycle time} = \text{Cycle time without communication} \times \frac{100}{100 - \text{"configured communication load in \%"}}$$

Figure 4-5 Formula: Impact of communication load

With a complete use of the communication load of 50% (default), the following value results:

$$\text{Actual cycle time} = \text{Cycle time without communication} \times 2$$

Figure 4-6 Extension of cycle time due to communication load

The actual cycle time is up to twice as long as the cycle time without communication when you use the default communication load.

Dependency of maximum cycle time on the configured communication load

The chart shows the nonlinear relationship between maximum cycle time and configured communication load with a cycle time without communication of 10 ms. In the example, there are no OBs with a priority > 1.

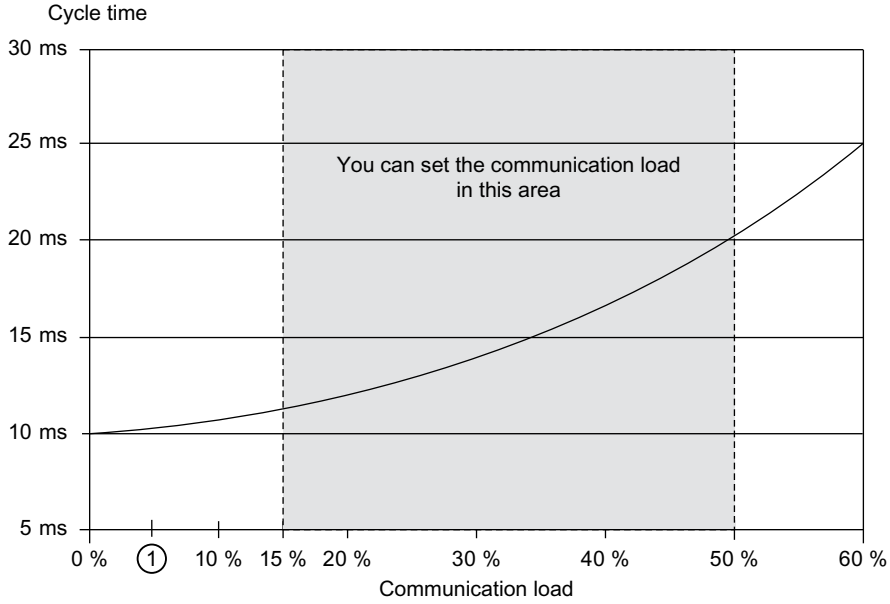

① CPUs 1516T(F)-3 PN/DP, 1517(F)-3 PN/DP, CPU 1517T(F)-3 PN/DP, CPU 1518(F)-4 PN/DP, 1518(F)-4 PN/DP MFP: The (minimum) communication load that can be set is 5%.

Figure 4-7 Maximum cycle time depending on the configured communication load

Reducing the cycle time with a lower communication load

You can reduce the setting for the communication load in the hardware configuration. If you set a communication load of 20% instead of 50%, for example, the cycle time extension due to the communication is reduced from a factor of 2 to 1.25.

Effect on the actual cycle time

Communication is only one cause of extension of the cycle time. All configured events that extend the cycle time (e.g. hardware interrupts) mean that more asynchronous events can occur within a cycle. These asynchronous events further extend the cyclic program. The extension depends on the number of events that occur and are processed in the cycle.

NOTE

Checking parameter changes

- Check the effects of a value change on the "Cycle load due to communication" parameter during system operation. You can use the "RT_INFO" instruction to determine which portions of runtime are used for communication and the user program.
- Take the communication load into consideration when setting the maximum cycle time to prevent time errors (for example, exceeding the cycle time within a cycle) from occurring.

Effect of load on the actual cycle time

The following examples show how the cycle time increases depending on the load.

Example 1

Example 1 shows an OB 1 with a runtime of 100 ms. The runtime of OB 1 is neither interrupted by communication load nor by higher-priority OBs.

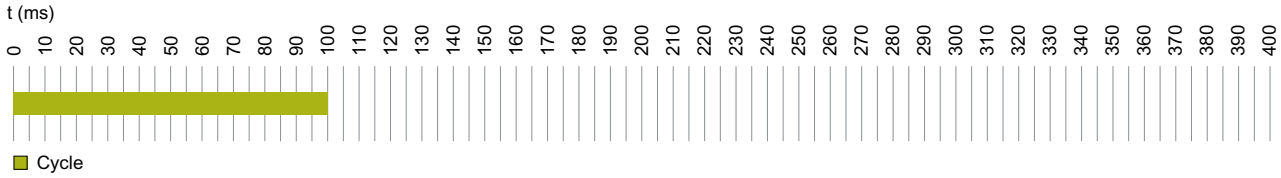

Figure 4-8 Cycle time without interruptions

Example 2

Example 2 shows that the runtime of OB 1 increases by a factor of 2 to 200 ms with a communication load of 50%.

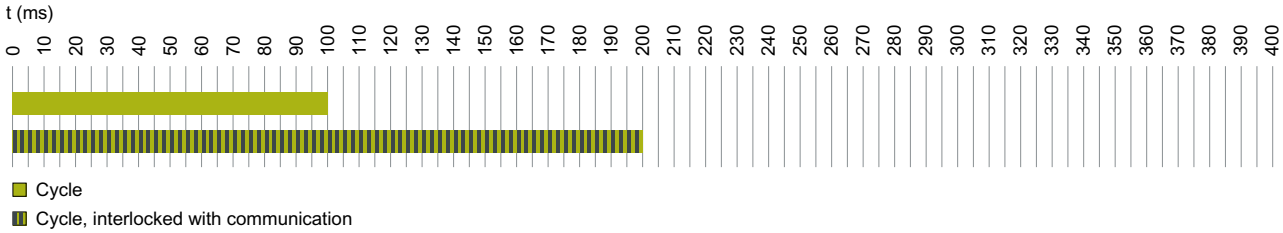

Figure 4-9 Cycle time with communication

Example 3

In example 3, OB 1 is interrupted every 20 ms by a cyclic higher-priority OB 30 (orange) with a runtime of 5 ms. The cycle time is extended to 135 ms by the higher-priority OB.

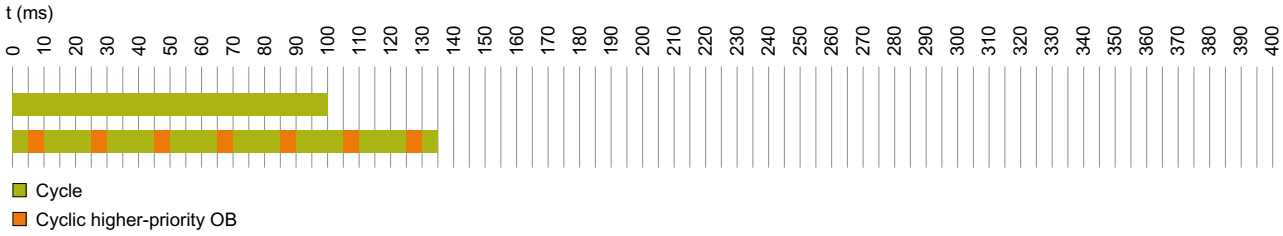

Figure 4-10 Cycle time with higher-priority OB

Example 4

In example 4, OB 1 is also interrupted by an OB 30 with priority 13. In addition, OB 1 and OB 30 are interrupted by communication tasks (priority 15). The cycle time increases to 400 ms.

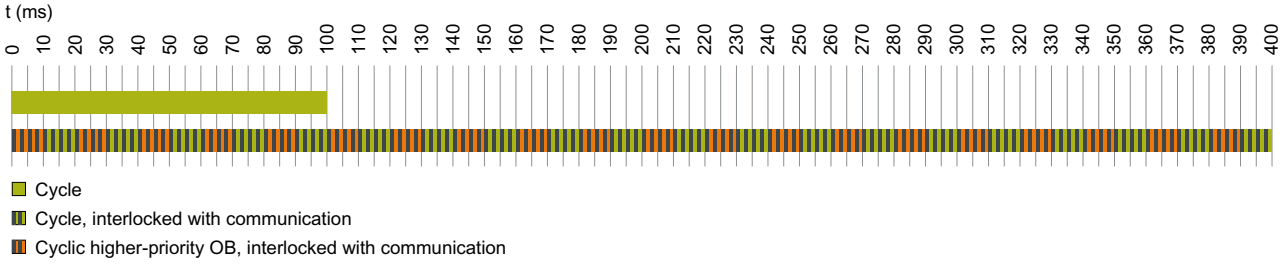

Figure 4-11 Cycle time with higher-priority OB and communication load

Example 5

In example 5, OB 1 is also interrupted by an OB 30 with priority 17. In addition, OB 1 is interrupted by communication tasks. Because the priority of OB 30 (priority 17) is higher than the priority of the communication tasks (priority 15), the interrupt points differ from example 4. The communication tasks suppressed by OB 30 are made up for within specific limits. Communication therefore completely suppresses the cyclic program within this time, 5 ms in the example. The cycle time increases to 400 ms, just like in example 4.

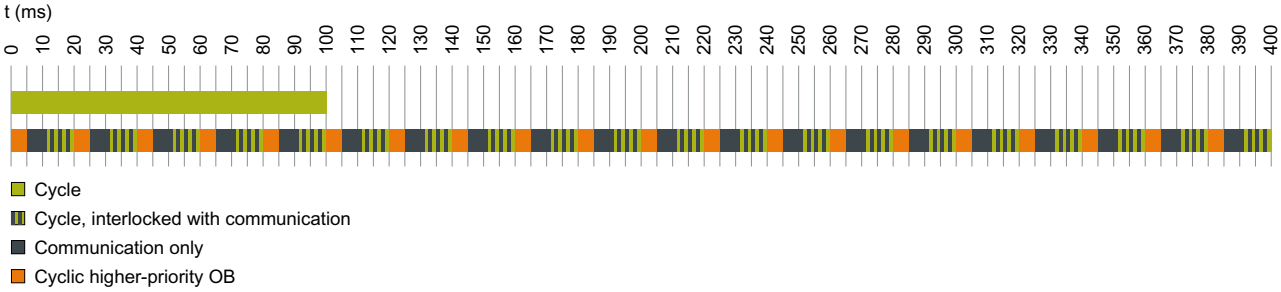

Figure 4-12 Cycle time with higher-priority OB and communication load

Cycle time curve for low and high loads

The y-axis of the following diagram indicates the cycle time in %. The value 100% stands for a cycle time of the CPU without higher-priority OBs and without communication. The x-axis indicates the load in % which is caused by higher priority OBs.

The blue curve ① of the diagram shows the course of the cycle time without communication load. The red curve ② shows the course of the cycle time with maximum communication and a parameterized communication load of 50%.

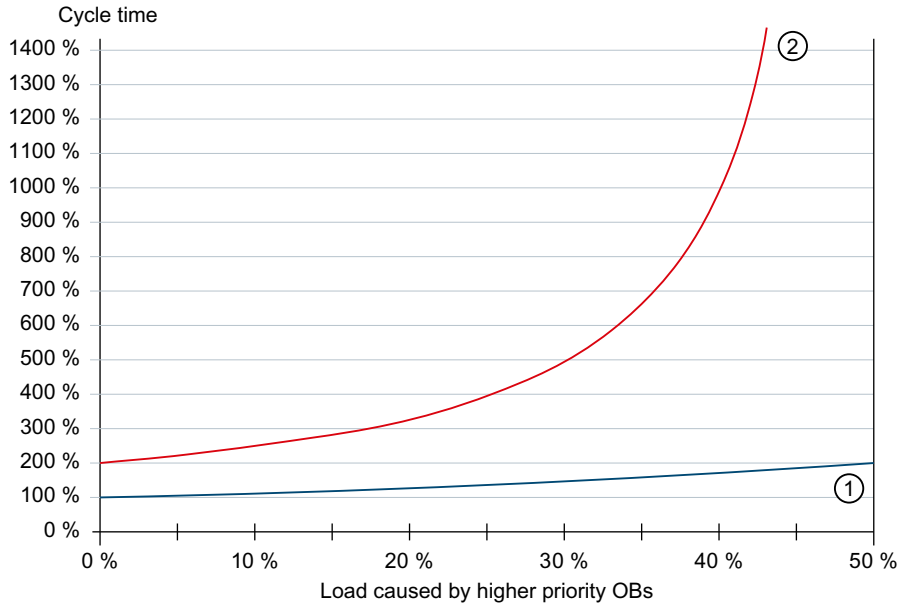

① Cycle time without communication load

② Cycle time with maximum communication

Figure 4-13 Cycle time for low and high loads

The course of the two curves shows the extent to which the communication load and the load from the higher-priority OBs influence the cycle time.

The longer the cycle time, the more the interruptions of OB 1 caused by higher-priority OBs and communication increase.

If both the base load and the communication load are at 50%, no computing capacity remains for the cyclic program and a time error occurs.

NOTE

Parameter assignment of the communication load

When the load in higher-priority OBs is high, reduce the configurable communication load.

NOTE

Parameter assignment of the communication load for the S7-1500R/H redundant system

Due to the synchronization of data between primary CPU and backup CPU, the S7-1500R/H redundant system is subject to an additional synchronization load. Therefore, choose a lower value for the communication load than for a non-redundant system.

Additional information on the particular features of the CPUs of the S7-1500R/H redundant system is available in the section Cycle and response times of the S7-1500R/H redundant system (Page 64).

Display of program and communication load

In the web server, you can find information on the current program/communication load and cycle time of your user program on the "Diagnostics > Runtime Information" web page.

Figure 4-14 Graphical display of program and communication load

Program/communication load

With the "Value refresh" function, you update the data displayed in the bar charts:

- At intervals of 1 second
- Automatic (as configured in STEP 7)

With the "Measurement" function, you can decide which measurement the bar charts display. You can choose between:

- The current measurement
- The measurement of the longest cycle time

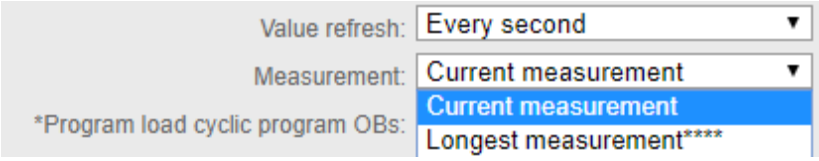

Figure 4-15 Program/communication load

The legend of the program/communication load shows information on the following values, highlighted in color:

- "Program load cyclic program OBs"
  Required calculation time in percent within a cycle for program cycle OBs
- "Program load high-priority OBs"
  Required calculation time in percent within a cycle for higher-priority OBs
- "Current communication load"
  Required calculation time in percent for current communication tasks within a cycle
- "Maximum permissible communication load"
  The configured maximum communication load as a percentage
- "No-load operation"
  There is no program/communication load

NOTE

When you have configured a minimum cycle time, it can happen that no-load operation displays a high percentage value, although the value of the cycle time is also high.

The reason for this is that the loads are recorded as mathematical average of the last second, but the cycle time relates to the last cycle.

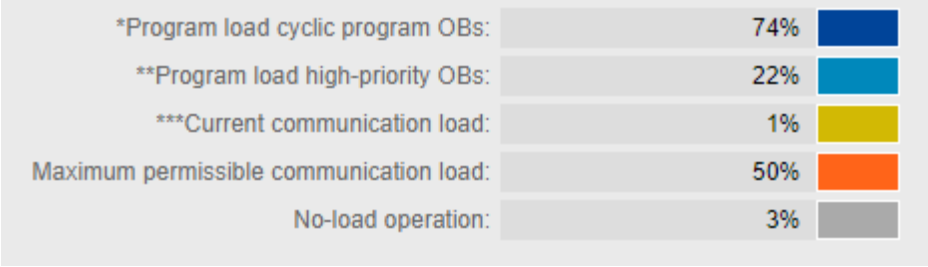

Figure 4-16 Color legend

If you click on a specific color, the selected color is highlighted in the chart. If you click on a highlighted color, you remove the highlighting.

Measurement of load distribution and cycle time

The "Measurement of load distribution and cycle time" bar chart shows the percentage of the calculation time within a cycle for the following values:

- "Program load cyclic program OBs"
- "Program load high-priority OBs"
- "Current communication load"
- "No-load operation"

Prognosis of load distribution and cycle time

The "Prognosis of load distribution and cycle time" bar chart predicts whether the CPU can process the user program with maximum communication load within the maximum cycle time.

Example 1:

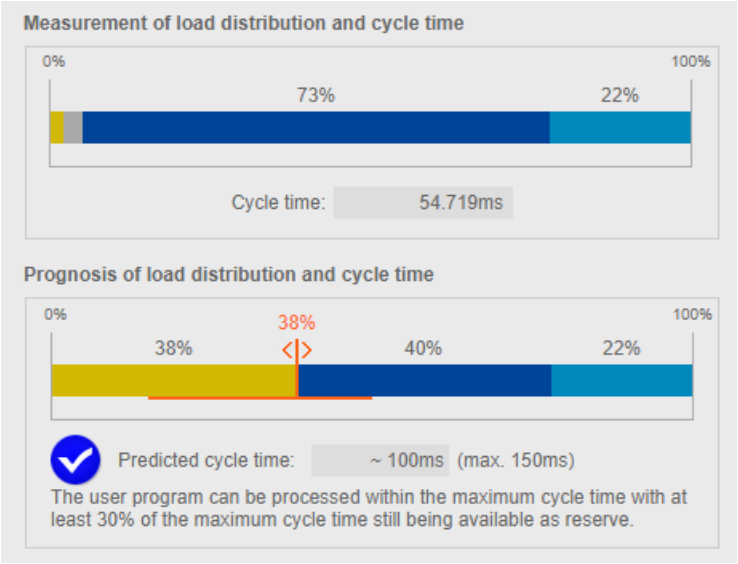

Figure 4-17 Cycle time < 70% of the maximum cycle time

Example 1 shows that the CPU can process the user program within the maximum cycle time of 150 ms when the maximum communication load of 38% is reached. The predicted cycle time is < 70% of the configured maximum cycle time.

Example 2:

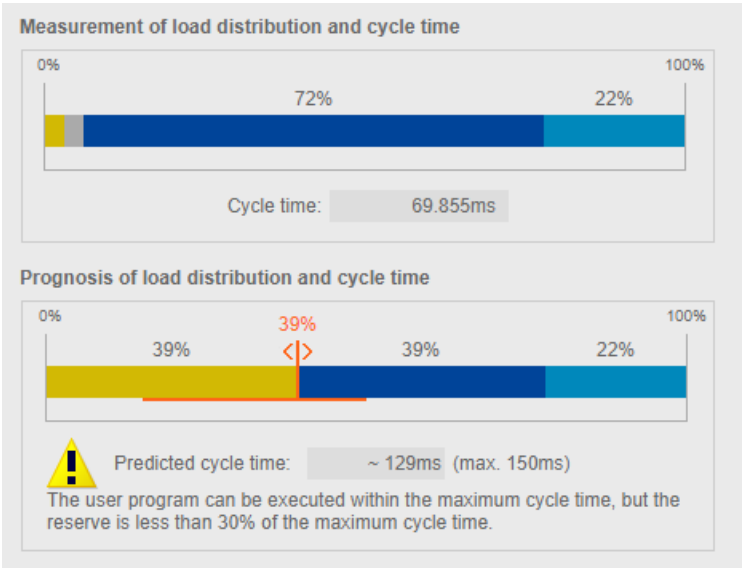

Figure 4-18 Cycle time ≥ 70% of the maximum cycle time

In example 2, the CPU can also process the user program with maximum communication load within the maximum cycle time. However, the predicted cycle time is already at 129 ms. If the predicted cycle time is ≥ 70% of the maximum cycle time, the chart outputs a warning.

Example 3:

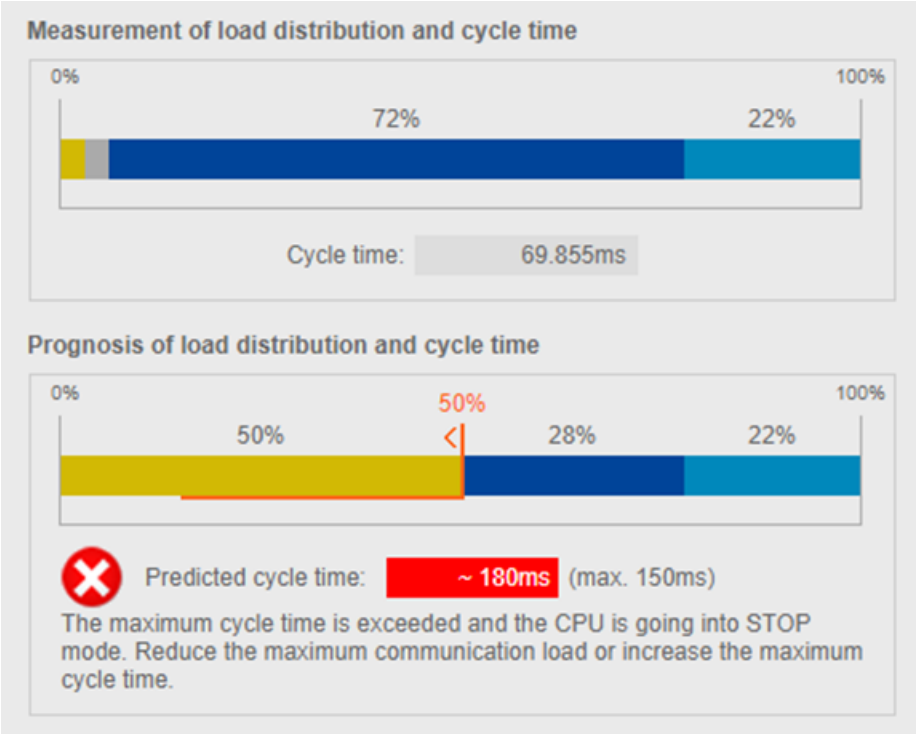

Figure 4-19 Cycle time longer than maximum cycle time

Example 3 shows that the CPU can no longer process the user program within the maximum cycle time when the maximum communication load is reached. If the predicted cycle time is longer than the maximum cycle time, the chart outputs an error message.

If it is predicted that the maximum cycle time will be exceeded, use the following controller in order to reduce the maximum communication load.

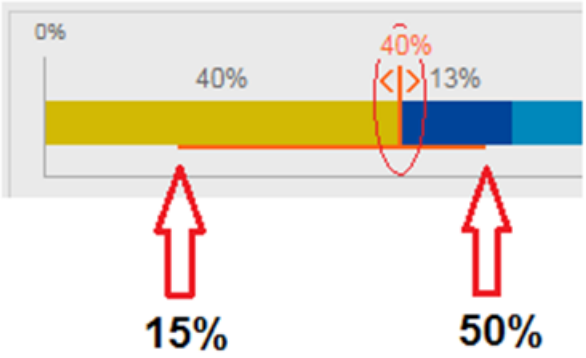

Figure 4-20 Controller for setting the maximum communication load

NOTE

Setting the communication load

The controller predicts the effects of the changed communication load on the cycle time. You configure the maximum communication load in STEP 7.

NOTE

For non-measurable fluctuations in the user program, e.g. for future changes in the user program, plan a sufficiently low value for the maximum communication load.

NOTE

Due to the different acquisition base of cycle time and load, a settled system state is required to display reliable measured values.

Progression of program/communication load

If your browser supports the display of SVG (Scalable Vector Graphics), the display in the "Runtime information" tab is expanded to show the progression of the program/communication load.

With the line charts in the "Trend for program/communication load" area, you can track the progression of the following values:

- "Program load cyclic program OBs"
- "Program load high-priority OBs"
- "Current communication load"

With the "Number of recorded measuring points" option, you can choose between the last 20 to 1 000 measured values for the display of the measured values.

For the trend on the x-axis, you can choose between "Time" (CPU time) and "Measuring points" by clicking on the desired unit.

NOTE

If you have selected the "Time" unit on the x-axis, all measured values that are more than 24 hours old are deleted automatically.

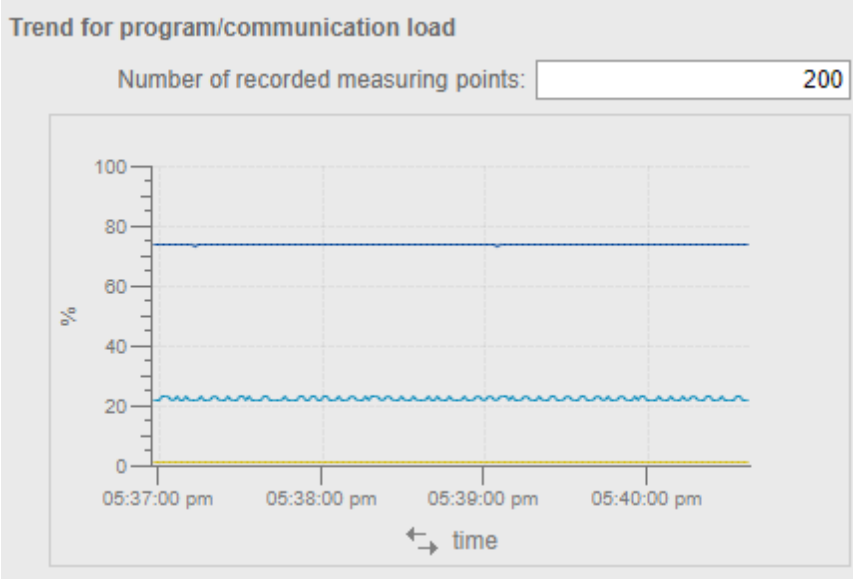

Figure 4-21 Line chart

4.2.2.4 Special consideration when PROFINET IO communication is configured on the 2nd PROFINET interface (X2)

The following special feature does not apply to CPUs as of article number 6ES751x-xxx03-0AB0.

If you configure the PROFINET IO communication at the 2nd PROFINET interface (X2) on the following CPUs as of firmware version 2.0, an additional system load occurs:

- CPU 1515(F)-2 PN
- CPU 1515T(F)-2 PN
- CPU 1516(F)-3 PN/DP
- CPU 1516T(F)-3 PN/DP
- CPU 1513(F)pro-2 PN (as of firmware version V2.8)
- CPU 1516(F)pro-2 PN

This additional system load has a higher priority than the user program (>26) and extends its run time. The execution of synchronous cycle interrupts or hardware interrupts, for example, can be delayed as a result.

The additional system load depends on:

- Communication traffic at the 2nd PROFINET interface (X2)
  The communication traffic at the interface in frames per second causes communication load as well as system load. You cannot limit the communication traffic using the "Communication load" parameter.
- Number of IO devices which the CPU at the 2nd PROFINET interface (X2) updates within a millisecond

You determine the additional system load with the "RT_INFO" (read RUNTIME statistics) instruction at the Mode parameter with mode 10 or mode 20.

Reducing additional system load

You reduce the communication load at the 2nd PROFINET interface, e.g. with:

- Fewer connected HMI devices or slower update cycles on the HMI devices
- Less or slower communication with other CPUs

Increase the update times in STEP 7 for all IO devices that are assigned to the 2nd PROFINET interface (X2):

1. Select the "IO Communication" in the "Network view" of STEP 7.
2. Set the "Update mode" parameter to "Adjustable".
3. Select a higher value for the "Update time [ms]" parameter in the drop-down list.
4. Repeat this setting for the other IO devices.

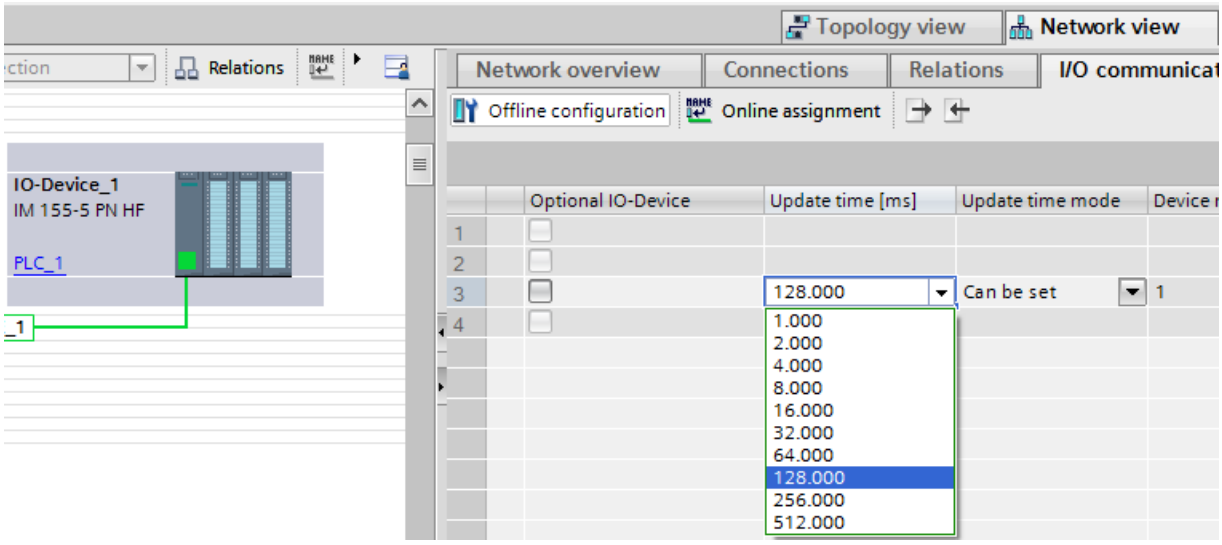

Figure 4-22 Increasing update times

4.3 Time-driven program execution in cyclic interrupts

With a cyclic interrupt you have the option of having a specific OB processed in a time interval. The time interval is independent of the execution time of the cyclic program. A priority from 2 to 24 can be selected for the cyclic interrupt. This makes the priority of cyclic interrupts higher than the priority of the cyclic program. A cyclic interrupt increases the execution time of the cyclic program.

In STEP 7 the organization blocks OB 30 to OB 38 are intended for processing cyclic interrupts. You can create additional cyclic interrupts starting with organization block OB 123. The number of available organization blocks depends on the CPU used.

Cyclic interrupt

A cyclic interrupt is an interrupt initiated according to a defined cycle that causes a cyclic interrupt OB to be processed. A cyclic interrupt OB is assigned to the "Cyclic interrupt" event class.

Cycle of a cyclic interrupt

The cycle of a cyclic interrupt is defined as the time between the occurrence of two consecutive events that each call the associated cyclic interrupt OB.
The following figure shows an example of the cycle of a cyclic interrupt.

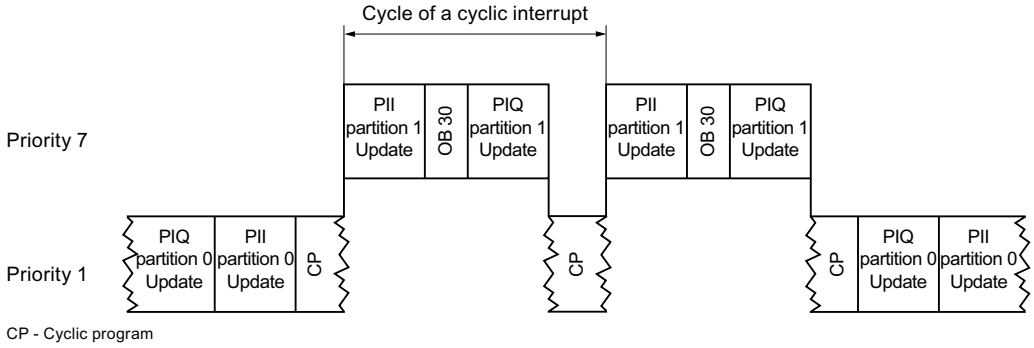

Figure 4-23 Call interval of a cyclic interrupt

Accuracy of a cyclic interrupt

Even if a cyclic interrupt is not delayed by a higher-priority OB or communication activities, the accuracy with which it is started is nevertheless subject to system-dependent fluctuations.
The following tables show the accuracy with which a cyclic interrupt is triggered:

Accuracy of cyclic interrupts for the S7-1500 CPUs

Table 4-17 Accuracy of cyclic interrupts for the S7-1500 CPUs

	S7-1500	
	Article numbers xxxxxxx-xxx00-xxxx, xxxxxxx-xxx01-xxxx, xxxxxxx-xxx02-xxxx	
	1511(T)(F)-1 PN **1511C-1 PN** **1512C-1 PN** **1513(F)-1 PN**	**1515(T)(F)-2 PN** **1516(T)(F)-3 PN/DP**
Cyclic interrupt	±90 µs	±80 µs

	S7-1500		
	Article number xxxxxxx-xxx03-xxxx	**All article numbers**	
	1511(T)(F)-1 PN 1513(F)-1 PN 1515(T)(F)-2 PN 1516(F)-3 PN/DP	**1517(T)(F)-3 PN/DP**	**1518(T)(F)-4 PN/DP 1518(F)-4 PN/DP MFP**
Cyclic interrupt	±80 µs	±30 µs	±25 µs

Accuracy of cyclic interrupts for the S7-1500R/H CPUs

Table 4-18 Accuracy of cyclic interrupts for the S7-1500R/H CPUs

	S7-1500R* in RUN-Solo system state	
	Article number xxxxxxx-xxx00-xxxx	
	1513R-1 PN	**1515R-2 PN**
Cyclic interrupt	±390 µs	±300 µs

	S7-1500R/H* in RUN-Solo system state	
	Article number xxxxxxx-xxx03-xxxx	**All article numbers**
	1513R-1 PN 1515R-2 PN	**1517H-3 PN 1518HF-4 PN**
Cyclic interrupt	±200 µs	±90 µs

* Additional information about cycle and response times of R/H CPUs is available in the section "Cycle and response times of the S7-1500R/H redundant system"

Accuracy of cyclic interrupts for the ET 200SP CPUs

Table 4-19 Accuracy of cyclic interrupts for the ET 200SP CPUs

	ET 200SP
	Article numbers xxxxxxx-xxx00-xxxx, xxxxxxx-xxx01-xxxx
	1510SP(F)-1 PN 1512SP(F)-1 PN
Cyclic interrupt	±90 µs

	ET 200SP	
	Article number xxxxxxx-xxx03-xxxx	**All article numbers**
	1510SP(F)-1 PN 1512SP(F)-1 PN 1514SP(T)(F)-2 PN	**1515SP(F)-PC**
Cyclic interrupt	±80 µs	±80 µs

Accuracy of cyclic interrupts for the ET 200pro CPUs

Table 4-20 Accuracy of cyclic interrupts for the ET 200pro CPUs

	ET 200pro	
	All article numbers	
	1513pro(F)-2 PN	1516pro(F)-2 PN
Cyclic interrupt	±90 µs	±80 µs

NOTE

Scope of validity

Please note that the accuracy data for the cyclic interrupt also applies to all other higher-priority execution levels/OBs.

Processing sequence of cyclic interrupts

NOTE

With several cyclic interrupt OBs with identical parameterization, the processing sequence of the cyclic interrupt OBs cannot be predicted.

If you want to ensure a defined execution sequence of cyclic interrupt OBs with the same cycle time and priority, configure a different phase offset in each case.

Effects of parameter changes of a cyclic interrupt in RUN operating state

You can also change the values for the time interval or the phase offset in RUN mode, for example, by loading in RUN mode or by calling the "SET_CINT" instruction.

Please note that the operating system of the CPU always calculates the start events of a cyclic interrupt OB relative to the time when the CPU is switched on (POWER ON). Depending on the point in time at which the parameter change takes place, the new time interval can therefore once have a different value than the newly specified value:

- Two successive start events of the cyclic interrupt OB can have a shorter interval than the old time interval, and a shorter interval than the new time interval (in extreme cases, a significantly shorter interval).
- Two successive start events of the cyclic interrupt OB can be further apart than the old and the new time interval (the distance can be as large as the sum of the old and the new time interval).

For more information on the parameters and on how to assign parameters for cyclic interrupt OBs, refer to the STEP 7 online help.

4.4 Response time for cyclic and time-driven program execution

Introduction

In this section you learn:

- How the response time is composed
- How to calculate the response time

Definition

The response time in the case of cyclic or time-controlled program execution is the time between the detection of an input signal and the change of a connected output signal.

Fluctuation in the response time of the CPU

The actual response time of the CPU fluctuates between one and two cycles for cyclic program execution and between one and two cyclic interrupt cycles for time-controlled program execution.

You should always assume the longest response time when configuring your system.

The following figure shows the shortest and longest response times of the CPU to an event.

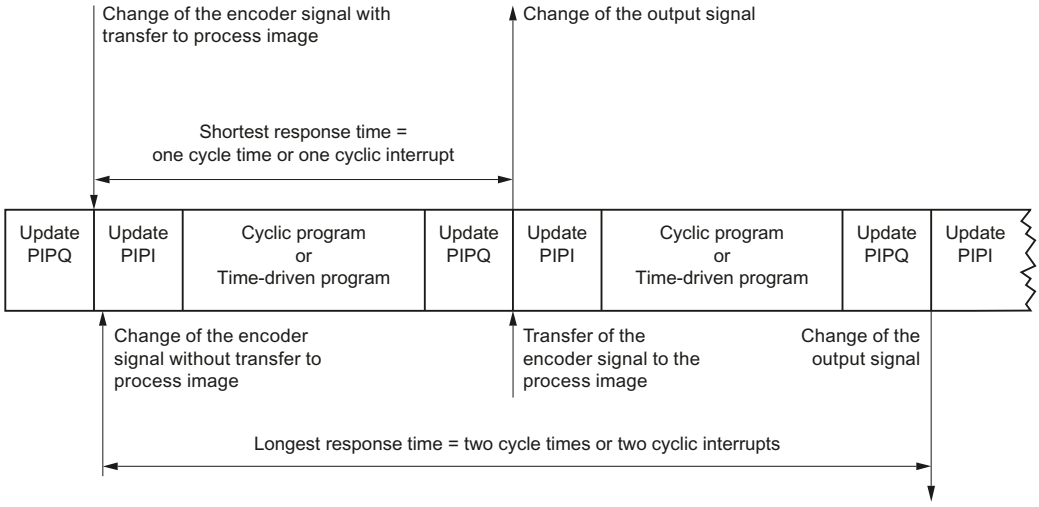

Figure 4-24 Shortest and longest response times of the CPU

Factors

To determine the process response time, you must take account of the following factors in addition to the CPU response time described above:

- Delay of the inputs and outputs at the I/O module
- Switching times of the sensors and actuators used
- Update times for PROFINET IO or DP cycle times on PROFIBUS DP; update time of the backplane bus for ET 200SP CPUs

NOTE
Backplane bus of the S7-1500 CPUs
The update time of the backplane bus of the S7-1500 CPUs can be ignored here.

Delay at the inputs and outputs of the modules

The delay and cycle times can be found in the technical specifications of the I/O modules.

Update times for PROFINET IO and DP cycle times on PROFIBUS DP

When distributed I/O is used, the maximum response time is additionally extended by the bus transmission times of PROFIBUS or PROFINET. These bus transmission times occur during both the reading and output of the process image partitions. The bus transmission times correspond to the bus update cycle of the distributed device.

PROFINET IO

If you use STEP 7 to configure your PROFINET IO system, STEP 7 calculates the update time. To display the update time, follow these steps:

- Select the PROFINET interface of the I/O module.
- In the General tab, select "Advanced options > Real time settings > IO cycle".

The update time is displayed in the "Update time" field and can be set for each IO device.

PROFIBUS DP

If you use STEP 7 to configure your PROFIBUS DP master system, STEP 7 calculates the DP cycle time. To display the DP cycle time, follow these steps:

- Select the PROFIBUS subnet in the network view.
- In the General tab of the Inspector window, navigate to the Bus parameters.

The DP cycle time is displayed in the "Parameters" field at "Typical Ttr".

The following figure illustrates the additional bus runtimes using distributed I/O.

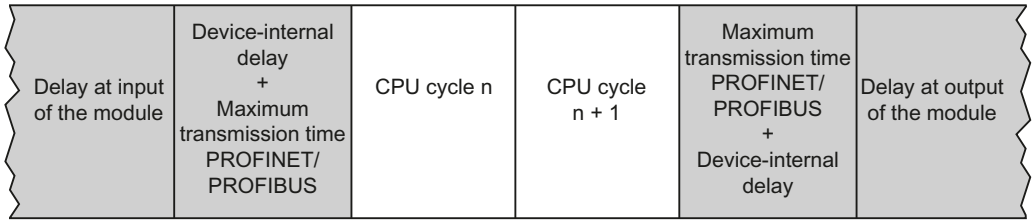

Figure 4-25 Additional bus runtimes with distributed I/O

A further optimization of the response times is achieved by using isochronous mode.

Update time of the backplane bus for ET 200SP CPUs

The following table shows the central (typical) update times of the backplane bus for the ET 200SP CPUs.

Table 4-21 Update time of the ET 200SP CPUs

	Update time of the CPU
	ET 200SP
	1510SP(F)-1 PN **1512SP(F)-1 PN** **1514SP(T)(F)-2 PN** **1515SP(F)-PC**
Update time for central I/O	250 µs to 1 ms, depending on number and type of central I/O modules[1]

[1] The duration of the update time depends on the number of the I/O modules and their type (ST, HF, HS). The update time is set at 1 ms for a max. central I/O configuration with standard I/O modules. You can reduce the update time down to 250 µs, for example, by using HF I/O modules and by reducing the number of modules.

The table below is an orientation guide. It shows the approximate relationship between the number of ET 200SP I/O modules and the bus cycle that is used. As an example, 8 bytes of I/O data per I/O module are assumed in the table.

Number of ET 200SP I/O modules	Input data (bytes)	Output data (bytes)	Used bus cycle (µs)
8	64	64	250
16	128	128	250
24	192	192	281.25
32	256	256	312.5
40	320	320	343.75
48	384	384	375
56	448	448	406.25
64	512	512	437.5

For I/O modules with more than 32 bytes of I/O data, the bus cycle is calculated with an I/O module of 32 bytes. In this case the I/O module requires multiple bus cycles to update its I/O data.

Reference

The following links provide additional information:

- Application example for determining the response time for PROFINET (https://support.industry.siemens.com/cs/ww/en/view/21869080)
- Transmission times and isochronous mode in the Function Manual PROFINET with STEP 7 (https://support.industry.siemens.com/cs/ww/en/view/49948856); see also the section "Tips on assembly"
- Transmission times and isochronous mode in the Function Manual PROFIBUS with STEP 7 (https://support.industry.siemens.com/cs/ww/en/view/59193579); see also the section "Network settings"
- Delays at the input or output of the modules can be found in the manual for the respective device.
- Information on device-internal delays can be found in the manuals for the ET 200MP and ET 200SP distributed I/O systems.

4.5 Summary of response time with cyclic and time-controlled program execution

Estimation of the shortest and longest response time

The following formulas may be used to estimate the shortest and longest response time:

Estimation of the shortest response time

The shortest response time is the sum of:

1 x delay of the input/output module for inputs
+ 1 x (update PROFINET IO or PROFIBUS DP)*; (update time of the backplane bus for the ET 200SP CPUs)
+ 1 x transfer time of the process image input
+ 1 x execution of the user program
+ 1 x transfer time of the process image output
+ 1 x (update PROFINET IO or PROFIBUS DP)*; (update time of the backplane bus for the ET 200SP CPUs)
+ 1 x delay of the input/output module for outputs

= **Shortest response time**

* Time is dependent on the configuration and the extent of the network.

The shortest response time is equivalent to the sum of the cycle time plus the input and output delay times.

Estimation of the longest response time

The longest response time is the sum of:

	1 x delay of the input/output module for inputs
+	2 x (update PROFINET IO or PROFIBUS DP)*; (update time of the backplane bus for the ET 200SP CPUs)
+	2 x transfer time of the process image input
+	2 x execution of the user program
+	2 x transfer time of the process image output
+	2 x (update PROFINET IO or PROFIBUS DP)*; (update time of the backplane bus for the ET 200SP CPUs)
+	1 x delay of the input/output module for outputs
=	**Longest response time**

* Time is dependent on the configuration and the extent of the network.

The longest response time is equivalent to the sum of twice the cycle time plus the delay times of the inputs and outputs. Twice the update time for PROFINET IO or twice the DP cycle time on PROFIBUS DP is added to the longest response time.

Event-driven program execution 5

5.1 Response time of the CPUs when program execution is event-controlled

Introduction

Hardware interrupts are used to detect events in the process in the user program and to react to them with an appropriate program. In STEP 7, the organization blocks OB 40 to OB 47 are intended for processing hardware alarms. You can create additional hardware interrupts starting with organization block OB 123. The number of available organization blocks depends on the CPU used.

Hardware interrupt

A hardware interrupt is an interrupt that occurs during the running program execution, due to an interrupt-triggering process event. The operating system calls the assigned interrupt OB; as a result, the execution of the program cycle or of lower priority program parts is interrupted. A hardware interrupt OB is assigned to the "Hardware interrupt" event class.

Interrupt response times of the CPUs for hardware interrupts

The interrupt response time starts with the occurrence of a hardware interrupt event in the CPU. The interrupt response time ends with the start of processing of the assigned hardware interrupt OB.

This time is subject to system-inherent fluctuations, and this is expressed using a minimum and maximum interrupt response time.

The following tables contain the length of the typical response times of the CPUs for hardware interrupts.

Response times of the CPUs for hardware interrupts for the S7-1500 CPUs

Table 5-1 Response times of the CPUs for hardware interrupts for the S7-1500 CPUs

		S7-1500	
		Article numbers xxxxxxx-xxx00-xxxx, xxxxxxx-xxx01-xxxx, xxxxxxx-xxx02-xxxx	
		1511(T)(F)-1 PN 1511C-1 PN 1512C-1 PN 1513(F)-1 PN	**1515(T)(F)-2 PN 1516(T)(F)-3 PN/DP**
Interrupt response times	Min.	100 µs	90 µs
	Max.	400 µs	360 µs

		S7-1500		
		Article number xxxxxxx-xxx03-xxxx	**All article numbers**	
		1511(T)(F)-1 PN 1513(F)-1 PN 1515(T)(F)-2 PN 1516(F)-3 PN/DP	**1517(T)(F)-3 PN/DP**	**1518(T)(F)-4 PN/DP 1518(F)-4 PN/DP MFP**
Interrupt response times	Min.	90 µs	30 µs	20 µs
	Max.	360 µs	120 µs	90 µs

Response times of the CPUs for hardware interrupts for the S7-1500R/H-CPUs

Table 5-2 Response times of the CPUs for hardware interrupts for the S7-1500R/H-CPUs

		S7-1500R* in RUN-Solo system state	
		Article number xxxxxxx-xxx00-xxxx	
		1513R-1 PN	**1515R-2 PN**
Interrupt response times	Min.	100 µs	90 µs
	Max.	400 µs	360 µs

		S7-1500R/H* in RUN-Solo system state	
		Article number xxxxxxx-xxx03-xxxx	**All article numbers**
		1513R-1 PN 1515R-2 PN	**1517H-3 PN 1518HF-4 PN**
Interrupt response times	Min.	90 µs	30 µs
	Max.	360 µs	120 µs

* Additional information about cycle and response times of R/H CPUs is available in the section "Cycle and response times of the S7-1500R/H redundant system"

Response times of the CPUs for hardware interrupts for the ET 200SP CPUs

Table 5-3 Response times of the CPUs for hardware interrupts for the ET 200SP CPUs

		ET 200SP
		Article numbers xxxxxxx-xxx00-xxxx, xxxxxxx-xxx01-xxxx
		1510SP(F)-1 PN 1512SP(F)-1 PN
Interrupt response times	Min.	100 µs
	Max.	400 µs

		ET 200SP	
		Article number xxxxxxx-xxx03-xxxx	**All article numbers**
		1510SP(F)-1 PN 1512SP(F)-1 PN 1514SP(T)(F)-2 PN	**1515SP(F)-PC**
Interrupt	Min.	90 µs	90 µs

		ET 200SP	
		Article number xxxxxxx-xxx03-xxxx	**All article numbers**
		1510SP(F)-1 PN 1512SP(F)-1 PN 1514SP(T)(F)-2 PN	**1515SP(F)-PC**
response times	Max.	360 µs	360 µs

Response times of the CPUs for hardware interrupts for the ET 200pro CPUs

Table 5-4 Response times of the CPUs for hardware interrupts for the ET 200pro CPUs

		ET 200pro	
		All article numbers	
		1513pro(F)-2 PN	**1516pro(F)-2 PN**
Interrupt response times	Min.	100 µs	90 µs
	Max.	400 µs	360 µs

The specified times are extended:

- If higher-priority interrupts are queued for execution
- If the hardware interrupt OB is assigned to a process image partition

You can find these times in the tables in the section "Extension due to nesting of higher-priority OBs and/or interrupts" in the chapter User program execution time (Page 31).

If you need fast interrupt response times, do not assign a process image partition to the hardware interrupt OB and use direct access in the hardware interrupt OB instead.

You can find additional information on determining response times for PROFINET in the application example with the entry ID 21869080 on the Service&Support (https://support.industry.siemens.com/cs/ww/en/view/21869080) Internet page.

Influence of input modules on the interrupt response times of hardware interrupts

Digital input modules:

Interrupt response time of hardware interrupts = internal interrupt processing time + input delay (see section Technical specifications in the relevant manual)

Analog input modules:

Interrupt response time of hardware interrupts = internal interrupt processing time + conversion time (see section Technical specifications in the relevant manual)

Impact of communication on interrupts

Communication tasks are always processed by the CPU with priority 15. If you do not want the interrupt execution to be delayed or interrupted by communication, configure the interrupt execution with priority > 15. The default setting for interrupt execution is priority 16.

Special consideration when PROFINET IO communication is configured on the 2nd PROFINET interface (X2)

Additional information on this is available in section Special consideration when PROFINET IO communication is configured on the 2nd PROFINET interface (X2) (Page 49).

5.2 Process response time when program execution is event-driven

When program execution is event-driven, the process response time is determined by the following:

- Delay times of the input and output modules used
- Update times for PROFIBUS/PROFINET for distributed modules; update time of the backplane bus for ET 200SP CPUs
- Interrupt response time of CPU
- Runtimes of the interrupt OB including update of the process image partition

The following figure shows the individual execution steps for event-driven program execution.

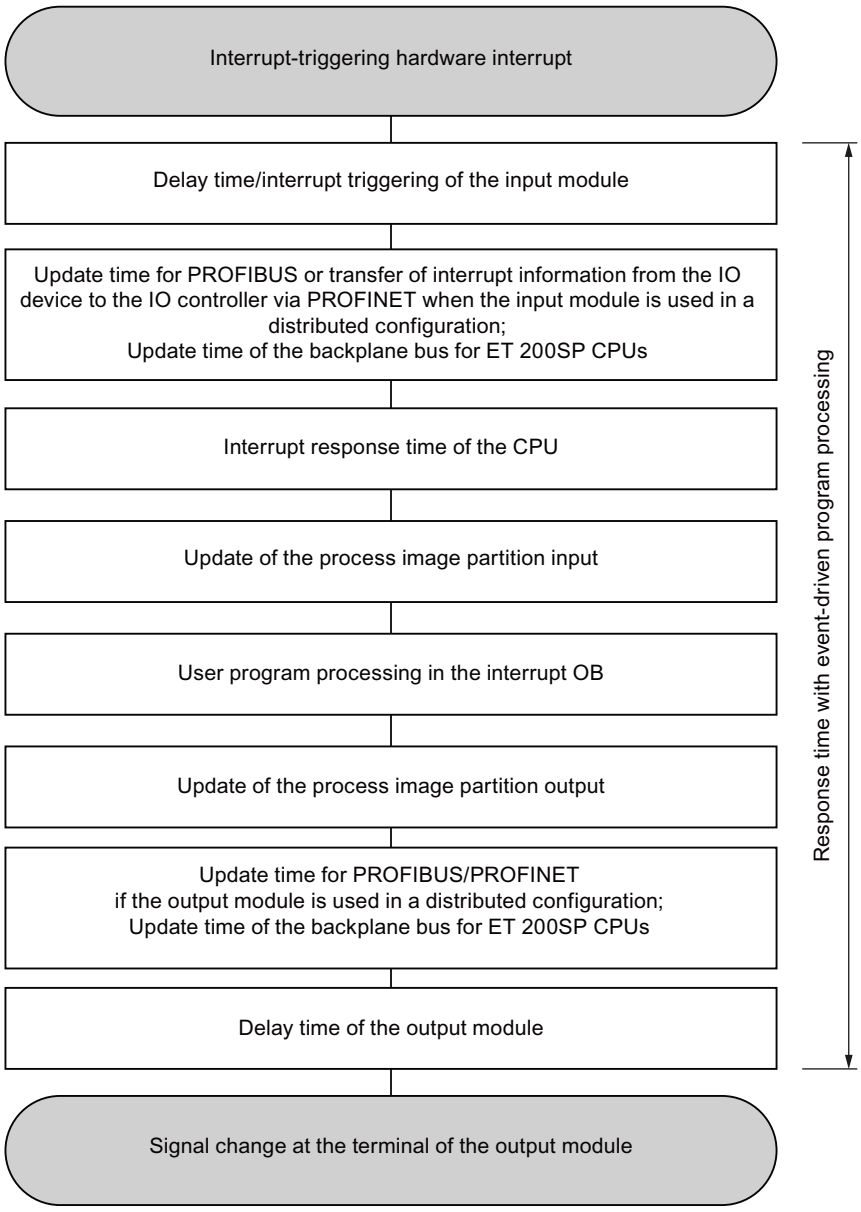

Figure 5-1 Schematic representation of event-driven program execution

Cycle and response times of the S7-1500R/H redundant system

6

6.1 Introduction

CPUs of the S7-1500R/H redundant system are designed as being redundant. The goal of the redundant configuration is to avoid production downtimes. When a CPU fails, the other CPU maintains control over the process.

Compared to non-redundant CPUs, the CPUs of the S7-1500R/H redundant system have the following special features:

- Longer cycle and response times
- Specific operating and system states
- Additional load and delays through synchronization

Contents of this section

This section describes the effects of the mode of operation of the S7-1500R/H redundant system on the cycle and response times.

It also describes how to estimate and control the cycle and response times of the CPUs. This prevents excessive cycle times.

NOTE

Classification of this chapter

The statements in the previous chapters describe the response of an individual CPU.

The section "Cycle and response times of the S7-1500R/H redundant system" supplements the information of the previous sections with information on the S7-1500R/H redundant system.

6.2 Maximum cycle time and time errors

Maximum cycle time

As with non-redundant CPUs, you can parameterize an upper limit of the cyclic program by setting the maximum cycle time.

The cycle time of redundant CPUs is usually longer compared to non-redundant CPUs (especially in the RUN-Redundant and SYNCUP system states).

The factor by which the cycle time for redundant CPUs is higher than that for non-redundant CPUs depends very strongly on your specific automation task.

NOTE

Maximum cycle time in SYNCUP system state

The length of the parameterized maximum cycle time also affects the SYNCUP system state.

If the following condition is fulfilled during the SYNCUP, the system initiates a transition to RUN-Redundant:
The actual cycle time is ≤ 80% of the maximum cycle time over several cycles.

More information on this is available in section Influences on the cycle time in SYNCUP system state (Page 67).

Maximum cycle time in RUN-Redundant system state

On the failure of one of the two CPUs, the cycle time also contains a dead time of up to 300 ms for R-CPUs and up to 50 ms for the H-CPU. You must schedule this time as cycle time reserve in case of failure of one of the two CPUs. Therefore, ensure that the longest cycle time plus this dead time is < 60% of the configured maximum cycle time in RUN-Redundant system state. By doing so, you prevent the parameterized maximum cycle time from being exceeded in case of load fluctuations and delays due to synchronization.

Time error

As with non-redundant CPUs, you can specify the response to a time error for the CPUs of the S7-1500R/H redundant system. In RUN-Solo system state, the redundant CPUs behave like non-redundant CPUs when the maximum cycle time is exceeded (see section Cycle time (Page 25)).
In the SYNCUP and RUN-Redundant system states the redundant CPUs behave as follows:

Table 6-1 Response of the S7-1500R/H redundant system when cycle time is exceeded, without OB 80

Initial situation			1st time cycle time is exceeded			2nd time cycle time is exceeded		
System	**Primary CPU**	**Backup CPU**	**System**	**Primary CPU**	**Backup CPU**	**System**	**Primary CPU**	**Backup CPU**
RUN-Solo	RUN	STOP	**STOP**	STOP	STOP	---	---	---
SYNCUP[1)]	RUN-Syncup	SYNCUP	**STOP**	STOP	STOP	---	---	---
SYNCUP[2)]	RUN-Syncup	SYNCUP	**RUN-Solo**	RUN	STOP	**STOP**	STOP	STOP
RUN-Redundant	RUN-Redundant	RUN-Redundant	**RUN-Solo**	RUN	STOP	**STOP**	STOP	STOP

1) SYNCUP up to snapshot of the work memory contents

2) SYNCUP after snapshot of the work memory contents

Table 6-2 Response of S7-1500R/H redundant system when cycle time is exceeded with OB 80

Initial situation			1st time cycle time is exceeded			2nd time cycle time is exceeded			3rd time cycle time is exceeded		
System	**Primary CPU**	**Backup CPU**	**System**	**Primary CPU**	**Backup CPU**	**System**	**Primary CPU**	**Backup CPU**	**System**	**Primary CPU**	**Backup CPU**
RUN-Solo	RUN	STOP	**RUN-Solo**	RUN + OB 80	STOP	**STOP**	STOP	STOP	**---**	---	---
SYNCUP [1]	RUN-Syn-cup	SYNCUP	**SYNCUP**	RUN-Syn-cup + OB 80	SYNCUP	**STOP**	STOP	STOP	---	---	---
SYNCUP [2]	RUN-Syn-cup	SYNCUP	**SYNCUP**	RUN-Syn-cup + OB 80	SYNCUP + OB 80	**RUN-Solo**	RUN + OB 80	STOP	**STOP**	STOP	STOP
RUN-Redund-ant	RUN-Redund-ant	RUN-Redund-ant	**RUN-Redund-ant**	RUN-Redund-ant + OB 80	RUN-Redund-ant + OB 80	**RUN-Solo**	RUN + OB 80	STOP	**STOP**	STOP	STOP

[1] SYNCUP up to snapshot of the work memory contents

[2] SYNCUP after snapshot of the work memory contents

NOTE

System state change after STOP with OB 80

The primary CPU also switches to STOP after the maximum cycle time has been exceeded three times in the same cycle.

Switchover of the backup CPU to STOP operating state when the maximum cycle time is exceeded

A switchover of the backup CPU to STOP operating state reduces the synchronization load and relieves the load on the primary CPU.

6.3 Influences on the cycle time of the S7-1500R/H redundant system

6.3.1 Influences on the cycle time in RUN-Solo system state

RUN-Solo system state

In RUN-Solo system state, the primary CPU is in RUN operating state. The primary CPU executes the cyclic, time- and interrupt-controlled program execution on its own. The backup CPU is in STOP operating state, is switched off or defective.

Influence on the cycle time

In RUN-Solo system state, the primary CPU behaves exactly the same as a standard CPU (non-redundant CPU) with regard to cycle time monitoring. Additional information on this is available in section "Cycle time (Page 25)".

6.3.2 Influences on the cycle time in SYNCUP system state

SYNCUP system state

In SYNCUP system state, the primary CPU is in RUN-Syncup operating state. The backup CPU is in SYNCUP operating state. The task of the SYNCUP system state is to synchronize the data of both CPUs so that the CPUs can subsequently work redundantly.

Influence on the cycle time

The figure below shows the chronological behavior of primary CPU and backup CPU during the SYNCUP system state.

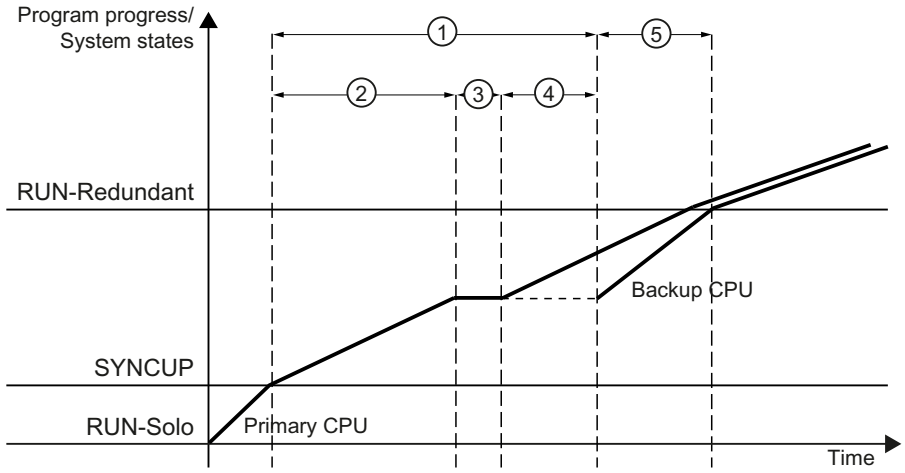

① Synchronization of data from the primary CPU to the backup CPU

② Copying the load memory and terminating the asynchronous instructions

③ Snapshot of the work memory contents

④ Transfer of the work memory contents to the backup CPU

⑤ Backup CPU makes up the time lag to the primary CPU caused by the synchronization of data

Figure 6-1 Effects of the SYNCUP on the cycle times of the CPUs

In SYNCUP system state, all relevant data is synchronized from the primary CPU to the backup CPU. At the end of SYNCUP, the backup CPU makes up the time lag to the primary CPU caused by the synchronization.

⚠ CAUTION

SYNCUP system state

- The synchronization of data, in particular the snapshot of the work memory contents, extends the cycle time. In addition, most test and commissioning functions cannot be executed during SYNCUP.
- During SYNCUP, diagnostic interrupts are processed with a significant delay.
- The cycle time increases greatly during the transition from SYNCUP system state to RUN-Redundant.

Therefore, only execute the SYNCUP during uncritical process states.

① Synchronization of data from the primary CPU to the backup CPU

During this phase all relevant contents of the load memory, work memory, and system memory of the primary CPU are synchronized to the backup CPU.

② Copying the load memory and terminating the asynchronous instructions

The primary CPU copies parts of its load memory from its SIMATIC memory card to the SIMATIC memory card of the backup CPU. The backup CPU restarts and automatically switches to SYNCUP operating state. The backup CPU copies the transferred load memory contents to its work memory. Data blocks, the process image, etc. are immediately overwritten with current data from the primary CPU.
Subsequently, asynchronous instructions that are already running are overwritten and newly started asynchronous instructions are delayed until synchronous operation has been realized.

③ Snapshot of the work memory contents

The primary CPU saves a consistent snapshot of its work memory contents at the next cycle control point.
When creating the snapshot of the work memory contents, the execution of the user program (on the primary CPU) is delayed during the SYNCUP by the following times:

Table 6-3 Delay times when creating the snapshot of memory contents during SYNCUP

R/H CPUs Article number xxxxxxx-xxx00-xxxx	Duration of the snapshot of work memory contents in the SYNCUP [ms] (typical values)		Max. data work memory [MB]
	With allocation of data work memory: 0%	With allocation of data work memory: 100%	
CPU 1513R-1 PN	105	145	1.5
CPU 1515R-2 PN	225	290	3
CPU 1517H-3 PN	18	23	8
CPU 1518HF-4 PN	25	47	60

R-CPUs Article number xxxxxxx-xxx03-xxxx	Duration of the snapshot of work memory contents in the SYNCUP [ms] (typical values)		Max. data work memory [MB]
	With allocation of data work memory: 0%	With allocation of data work memory: 100%	
CPU 1513R-1 PN	25	30	2.5
CPU 1515R-2 PN	34	42	4.5

④ Transfer of work memory contents to the backup CPU

During this phase the consistent snapshot is transferred from the primary CPU to the backup CPU. The transfer of the work memory contents extends the cycle time. The time required for the transfer of the work memory contents depends on the performance capability of the CPU and the amount of work memory data.

⑤ Backup CPU makes up the time lag to the primary CPU

During this phase the backup CPU makes up the time lag in program execution to the primary CPU. As in redundant mode, events are already synchronized during this phase as needed.

NOTE

No switchover possible during SYNCUP

If a fault occurs in the primary CPU during SYNCUP, no switchover to the backup CPU is possible. The SYNCUP is canceled and the backup CPU returns to STOP operating state.

Switchover from SYNCUP to RUN-Redundant

The system checks continuously which cycle time would result from a change to the RUN-Redundant system state. If this cycle time would be ≤ 80% of the maximum cycle time over multiple cycles, the transition is initiated. You can find more information in the system manual S7-1500R/H Redundant System (https://support.industry.siemens.com/cs/ww/en/view/109754833).

NOTE

Determination of the cycle time during the SYNCUP

You can track the progress of the SYNCUP on the display of the primary CPU and backup CPU. At each cycle control point the backup CPU sends a status message on its program progress to the primary CPU. The display of the primary CPU indicates the duration of the time lag of the backup CPU.

In addition to viewing the progress in the displays, the progress of the SYNCUP can also be read out using the "RT_INFO" instruction.

Reasons for cancellation of the SYNCUP

Possible causes for the cancellation of the SYNCUP are:

- The load of the user program or the load on the redundancy connections between primary and backup CPU is too high
- The maximum cycle time of the primary CPU was exceeded

An overview of all reasons for the cancellation of the SYNCUP and remedial measures is available in the system manual S7-1500R/H redundant system (https://support.industry.siemens.com/cs/ww/en/view/109754833).

Disable SYNCUP

To avoid the described effects of the SYNCUP on the cycle times during critical process states, use the instruction "RH_CTRL".

The "RH_CTRL" instruction can be used to disable the SYNCUP system state for the S7-1500R/H redundant system. If the disable is no longer required, the "RH_CTRL" instruction can be used to enable the SYNCUP system state once again.

More information on the "RH_CTRL" instruction is available in the system manual S7-1500R/H redundant system (https://support.industry.siemens.com/cs/ww/en/view/109754833).

Minimum cycle time

It is often necessary to set a longer minimum cycle time for the CPUs of the S7-1500R/H redundant system than for those of the non-redundant CPUs.

Recommendation: Select the minimum cycle time so that the cyclic program does not have to be executed more frequently than your process requires. A longer minimum cycle time that has been adapted to your process optimizes the entire system. The computing power that is available per cycle by extending the minimum cycle time is then available for system tasks such as communication.

The selected minimum cycle time should at least correspond to the measured cycle time in redundant mode of the user program (where the minimum cycle time is has yet to have an effect). A minimum cycle time that is significantly lower is only effective in solo mode of the system. It burdens and prolongs the SYNCUP system state and increases the probability of sporadic aborts of the SYNCUP.

NOTE

Too low cycle times

Cycle times that are too low can result in an excessive synchronization load and thus terminate the SYNCUP.

Parameter assignment of the communication load

NOTE

An increased synchronization load occurs in the SYNCUP system state. Because this synchronization load places a load on the cycle in addition to the communication, it is recommended to reduce the communication load to ≤ 30%.

6.3.3 Influences on the cycle time in RUN-Redundant system state

RUN-Redundant system state

In RUN-Redundant system state, the primary CPU controls the process. The primary CPU continuously synchronizes itself with the backup CPU. In the event of a failure of the primary CPU, the backup CPU adopts its role and thus control over the process.

Cycle time without interruption of the cyclic program

In RUN-Redundant system state, the backup CPU has a time lag compared to the primary CPU. This time lag results from the time required for event-controlled synchronization of data from the primary CPU to the backup CPU.

The following figure shows the phases which the CPUs run through without an interruption of the cyclic program.

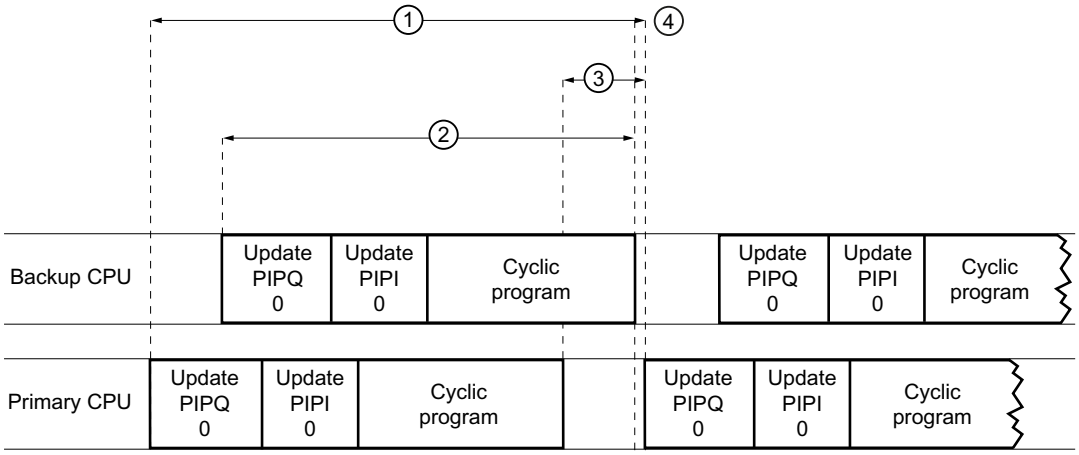

① Cycle time

② Cycle of the backup CPU

③ Time lag

④ Cycle end and start of the next cycle (cycle control point)

Figure 6-2 Cycle time without interruption of the cyclic program

The cycle time ① includes the cycle of the backup CPU ② and the time lag ③ of the backup CPU compared to the primary CPU. The time lag results from the time required for the synchronization of the data between primary CPU and backup CPU. The synchronization between primary CPU and backup CPU occurs automatically if required. The more data has to be synchronized between the CPUs during a cycle, the greater the time lag. The program cycle ends as soon as the backup CPU has reached the end of its cyclic program. The primary CPU starts the next cycle as soon as the backup CPU reports the cycle end to the primary CPU ④.

Extension of the cycle

As with non-redundant CPUs, an occurring event and the associated OB can extend the cycle. Events can occur both during the execution of the cyclic program and during the time lag.

In the following example the CPU must process a higher-priority OB (OB 30 with priority 7), while the primary CPU waits for the end of the cycle of the backup CPU. The figure below shows the phases which the CPUs run through in such a case.

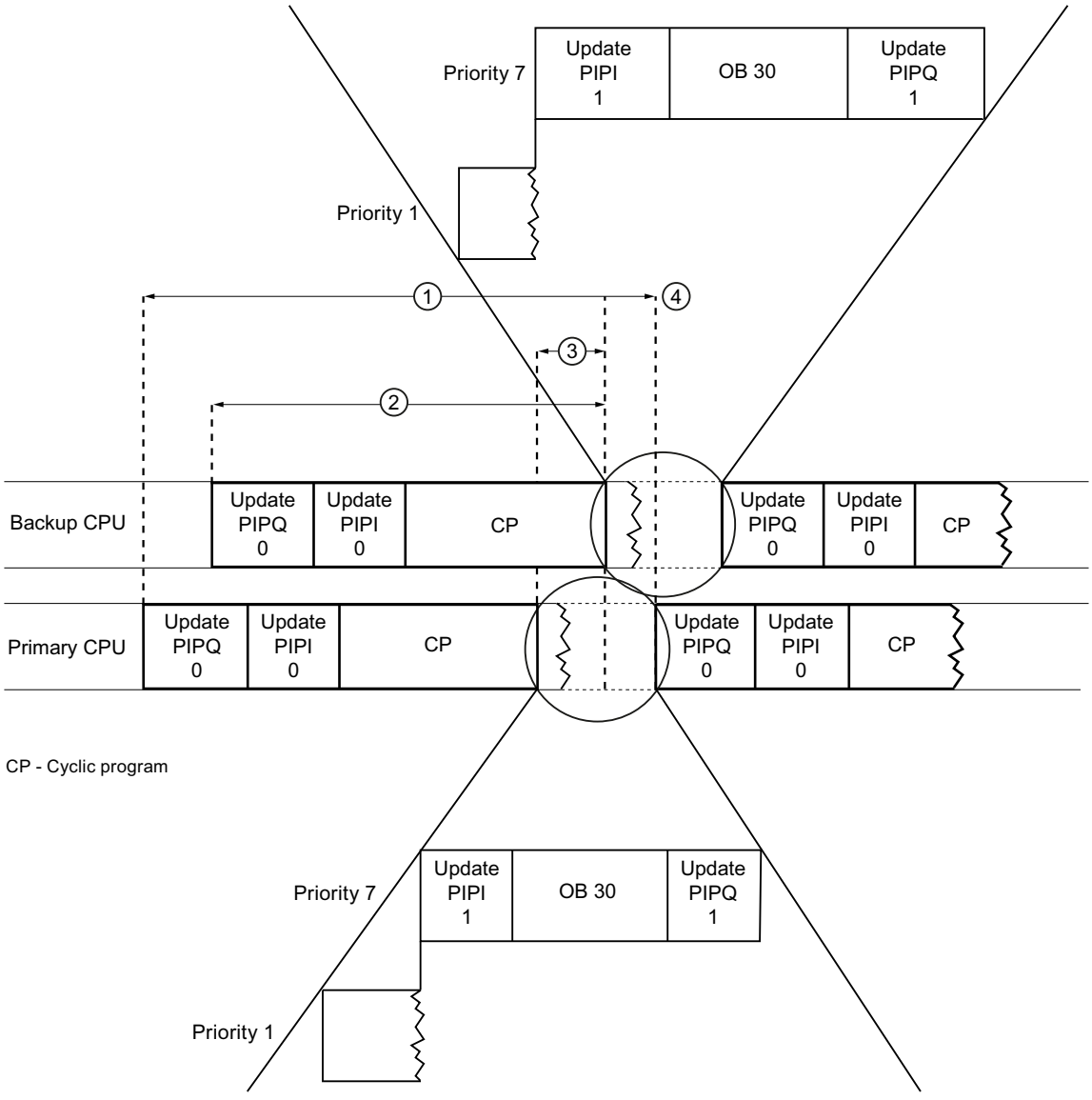

① Cycle time

② Cycle of the backup CPU

③ Time lag

④ Cycle end and start of the next cycle (cycle control point)

Figure 6-3 Processing of a higher-priority OB

Execution of the cyclic program (CP with priority 1) is complete. While the primary CPU waits for the end of the cycle of the backup CPU, a higher priority OB (OB 30 with priority 7) starts. The primary CPU starts the next cycle as soon as the following conditions have been fulfilled:

- The primary CPU has received the message from the backup CPU that the backup CPU has finished processing the cyclic program.
- The primary CPU has processed OB 30 and updated PIPQ1.

NOTE

Due to the change of the run level and the synchronization, interruptions of the program cycle by higher-priority OBs result in a higher load. Interruptions of the program cycle extend the cycle time.

Differences between the synchronization times

The available bandwidth has a significant impact on the synchronization time.

With the R-CPUs both the synchronization of data and the synchronization of communication tasks operate over the PROFINET ring. 25% of the bandwidth is reserved for the synchronization.

With the H-CPU, synchronization works independently of the PROFINET ring/PROFINET network over fiber optic cables.

The table below provides an overview of performance features of R-CPUs and H-CPU.

Table 6-4 Performance features of S7-1500R and S7-1500H

	S7-1500R		S7-1500H	
	CPU 1513R-1 PN (6ES7513-1RM03-0AB0)	**CPU 1515R-2 PN (6ES7515-2RN03-0AB0)**	**CPU 1517H-3 PN (6ES7517-3HP00-0AB0)**	**CPU 1518HF-4 PN (6ES7518-4JP00-0AB0)**
Performance	• Data transfer rate of 100 Mbps (for synchronization and communication)		• Significantly greater performance than S7-1500R due to – Separate redundancy connections over fiber-optic cables – Greater computing power • Transmission rate of 1 Gbps (for the synchronization)	
	• Data work memory: max. 2.5 MB • Code work memory: max. 600 KB	• Data work memory: max. 4.5 MB • Code work memory: max. 1 MB	• Data work memory: max. 8 MB • Code work memory: max. 2 MB	• Data work memory: max. 60 MB • Code work memory: max. 9 MB
Hardware	• The CPUs are identical in design with the respective S7-1500 standard versions. • The synchronization of the CPUs takes place over the PROFINET ring. • The H-Sync-Forwarding function is recommended for all devices in the PROFINET ring. • Part of the bandwidth on the PROFINET cable is used to synchronize the CPUs. Less bandwidth is therefore available for PROFINET IO communication.		• The CPUs each have two optical interfaces. • The synchronization of the CPUs works independently from the PROFINET network via optical fiber. • The bandwidth for PROFINET IO communication is not affected by the synchronization of the H-system.	

Technical specifications

More information about the technical specifications is available in the manuals of the specific CPUs.

6.3.4 Influences on the cycle time when a CPU fails

If one of the two CPUs fails during redundant operation, the other CPU controls the process alone. The system state then changes from RUN-Redundant to RUN-Solo. The CPU continues executing the user program in RUN operating state.

NOTE

Dead time in case of a CPU failure

On the failure of a CPU, the cycle time also contains a dead time of up to 300 ms for R-CPUs and up to 50 ms for the H-CPU. You must schedule this time as cycle time reserve for a CPU failure.

To avoid exceeding the maximum cycle time after a CPU failure, further increase the maximum cycle time by this value.

NOTE

Change of the system state from RUN-Redundant to Run-Solo by the user

If you deliberately trigger a change of the system state by switching the backup CPU to STOP via the display or with the "RH_CTRL" instruction (mode 9), for example, this will also extend the cycle time. However, the cycle time will not increase to the same extent as with switchover of the CPUs in the event of an error (failure of one of the CPUs).

Information on the causes for the failure of a CPU is available in the S7-1500R/H redundant system (https://support.industry.siemens.com/cs/ww/en/view/109754833) system manual.

Failure of the primary CPU

The figure below shows the impact of the failure of the primary CPU on the cycle time.

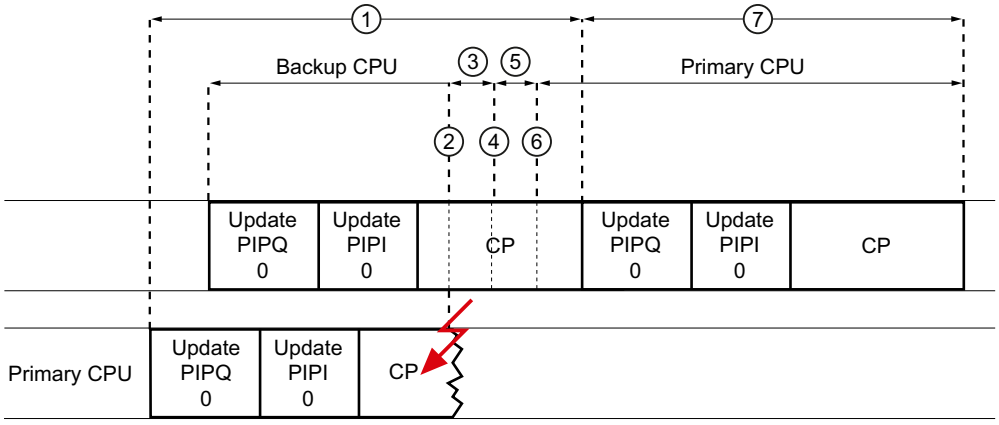

CP - Cyclic program

① Cycle time
② Failure of the primary CPU
③ Backup CPU continues processing the program
④ Backup CPU no longer receives synchronization telegrams
⑤ Backup CPU waits for the monitoring time to expire
⑥ End of the monitoring time, switchover time and system state transition
⑦ Cycle time of the new primary CPU in RUN operating state

Figure 6-4 Impact of the failure of the primary CPU on the cycle time

The example shows the failure of the primary CPU ② while it is processing the cyclic program. The primary CPU no longer sends any synchronization telegrams to the backup CPU. During the period ③, the backup CPU continues operating only on the basis of the synchronization data transferred before the failure of the primary CPU. At ④, the backup CPU has reached the point in the program where the primary CPU stopped sending synchronization telegrams. During the phase ⑤, the backup CPU waits to see whether data will again be sent from the primary CPU after all. Because no synchronization data is transferred until the monitoring time has expired, the backup CPU becomes the new primary CPU at point ⑥. The redundant system switches from RUN-Redundant system state to RUN-Solo system state.

The cycle time ① extends from the time processing of the cyclic program is started in RUN-Redundant to the time when processing of the cyclic program ends in RUN-Solo.

Because no more data is synchronized in the RUN-Solo system state, the cycle time ⑦ is shorter than the cycle time ①.

NOTE

Monitoring time

The monitoring time is an internal time with fixed duration. You cannot assign parameters for the internal time. The monitoring time starts as soon as synchronization data arrives on the respective CPU. If no synchronization data is received from the primary CPU, the system automatically performs a system state change (from RUN-Redundant to RUN-Solo) after the monitoring time has expired.

Failure of the backup CPU

The figure below shows the impact of the failure of the backup CPU on the cycle time.

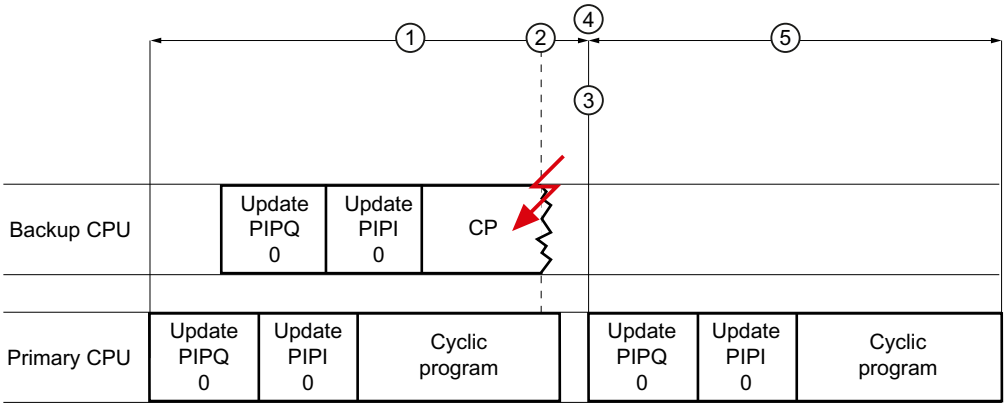

CP = Cyclic program

① Cycle time
② Failure of the backup CPU
③ Expiration of the monitoring time
④ System status transition
⑤ Cycle time of the primary CPU in RUN-Solo operating state

Figure 6-5 Impact of the failure of the backup CPU on the cycle time

The backup CPU fails before processing of the cyclic program has ended ②. The primary CPU detects the failure of the backup CPU because no synchronization data has been received until the monitoring time ③ has expired. The primary CPU terminates the synchronization with the backup CPU. The redundant system switches from RUN-Redundant system state to RUN-Solo system state ④.

Because no more data is synchronized in RUN operating state, the cycle time ⑤ is shorter than the cycle time ①.

6.4 Response time of R/H CPUs

Relationship between the cycle time and response time

The cycle time of the system also forms the basis for its response time. The response time depends, among other things, on the cycle time of the individual program cycles.

Fluctuation of the response time

The actual response time fluctuates between one and two cycles during cyclic program execution. The actual response time fluctuates between one and two cyclic interrupt cycles for time-controlled program execution.

You should always assume the longest response time when configuring your system.

In the figure below the process image is updated immediately after the change of the encoder signal. The output can therefore respond to the signal change after a cycle has ended.

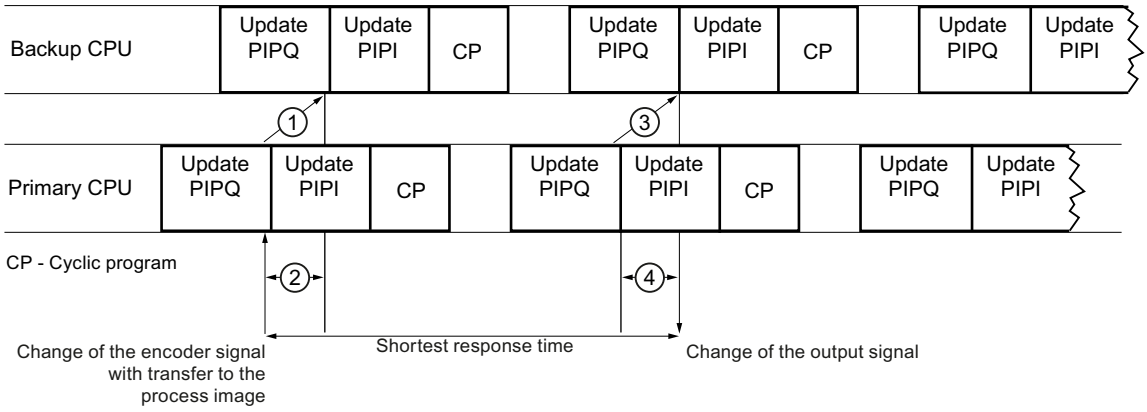

① Synchronization of the encoder signal change in the backup CPU

② Time lag of the backup CPU to the primary CPU

③ Synchronization of the output signal change in the backup CPU

④ Time lag of the backup CPU to the primary CPU until actual output of the signal change to the IO devices in the PROFINET ring/PROFINET network

Figure 6-6 Shortest response time

In the figure below, the process image has already been updated by the time of the signal change. It therefore takes one cycle until the system detects the change and sets the input in the process image. The output signal is changed after an additional cycle.

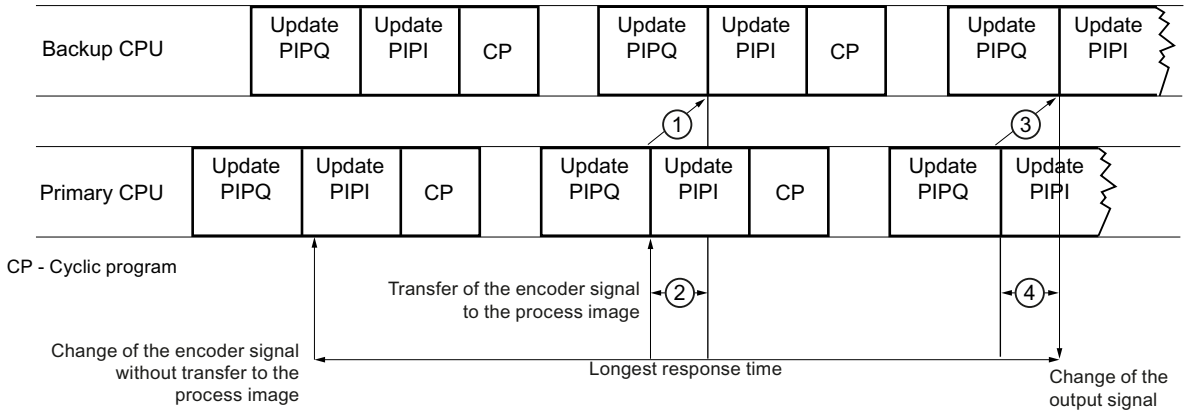

① Synchronization of the encoder signal change in the backup CPU

② Time lag of the backup CPU to the primary CPU

③ Synchronization of the output signal change in the backup CPU

④ Time lag of the backup CPU to the primary CPU until actual output of the signal change to the IO devices in the PROFINET ring/PROFINET network

Figure 6-7 Longest response time

The cycle times include the time lag. The time lag of the backup CPU to the primary CPU depends on the synchronization load. The synchronization load results from the data to be synchronized in the user program and in the communication.

NOTE

Effect of the time lag

The synchronization and transfer of the changes requires computing time. The time lag therefore affects both CPUs (from the primary CPU to the backup CPU and from the backup CPU to the primary CPU). The slower the CPU and the slower and longer the synchronization connection, the greater the time lag.

NOTE

Response time when downloading a modified user program into the R/H CPUs in the RUN-Redundant system state

During the download process in the RUN-Redundant system state, the response time of the system is restricted compared with the normal redundant mode. The more changes the user program contains, the higher the impact on the response time.

NOTE

Improving the response time of the R/H system

- Reduce the load on the redundancy connections between primary and backup CPU:
  - Avoid excessive usage of instructions which increase the synchronization load: Direct accesses, time accesses (for example, instructions RD_SYS_T, WR_SYS_T, RD_LOC_T).
  - Reduce the open user communication with many connections, high communication load with large packages.
- If possible, distribute the comprehensively planned program changes in smaller units with multiple loading processes.
  Multiple loading processes of small units can result in total in a lower load of the response time.

NOTE

Response time of the R/H system for an AR switchover

The smaller you set the PROFINET update times of an IO device, the faster current input data of this IO device is available again after an AR switchover (backup AR becomes primary AR), which can occur in the case of redundancy scenarios.
Result: The smaller you set the PROFINET update times of an IO device, the smaller - generally speaking - the response time of the R/H system.

Also observe the notes in the System Manuals of the I/O systems (e. g. ET 200SP).

Determination of cycle and response times

At the end of the cyclic program, the primary CPU waits until the backup CPU too has acknowledged the end of the cyclic program. The cycle time of the primary CPU therefore also includes the time lag of the backup CPU. The cycle is extended by the time lag.

Advantages

The fact that the cycle time includes the time lag of the backup CPU to the primary CPU offers the following advantages:

- By monitoring the cycle time in STEP 7, in the HMI or in the user program after SYNCUP, it is possible to determine the cycle time in the event of a failure of the primary CPU.
- During commissioning it is not necessary to perform complicated tests to determine whether the required response time can still be complied with if a CPU fails.
- During commissioning and ongoing operation you can estimate whether your automation task can meet the response times required for the process.

The same functions as those for the non-redundant CPUs are available for determining the cycle and response times:

Table 6-5 Functions for determining the cycle and response times

Function	Additional information
Defining the minimum cycle time and the maximum cycle time in STEP 7	Section Cycle time (Page 25)
Defining the desired response of the user program if the maximum cycle time has been exceeded	
Reading out the cycle time statistics via STEP 7 and the display of the CPU	

Function	Additional information
Reading out the cycle time and reading out the progress in the SYNCUP system state with the instruction "RT_INFO"	• Section Different cycle times (Page 25) • STEP 7 online help
Display of measurements (traces) which record special time-critical signal characteristics	Function manual Using the trace and logic analyzer functions (https://support.industry.siemens.com/cs/ww/en/view/64897128)
Reading out the progress of the SYNCUP system state using the display of the CPU	S7-1500R/H redundant system (https://support.industry.siemens.com/cs/ww/en/view/109754833) system manual

6.5 Timetables for the RUN-Redundant system state

The following section describes the typical times of the CPUs of the S7-1500R/H redundant system in the RUN-Redundant system state.

Update times of the process image partitions

The following table contains the times for estimating the typical update times of the process image partitions.

Table 6-6 Data for estimating the typical update time of the process image partitions

	Update times of the CPUs in the RUN-Redundant system state	
	Article number xxxxxxx-xxx00-xxxx	
	CPU 1513R-1 PN	CPU 1515R-2 PN
Basic load for updating process image partitions	63 µs	57 µs
Copy time for distributed I/O via PROFINET	6.5 µs/word	6.5 µs/word

	Update times of the CPUs in the RUN-Redundant system state	
	Article number xxxxxxx-xxx03-xxxx	All article numbers
	CPU 1513R-1 PN CPU 1515R-2 PN	CPU 1517H-3 PN CPU 1518HF-4 PN
Basic load for updating process image partitions	57 µs	13 µs
Copy time for distributed I/O via PROFINET	6.5 µs/word	2.6 µs/word

Program execution time without interruptions

The user program has a certain runtime without interruptions. The runtime depends on the number of operations that are executed in the user program.

The following table contains the typical durations of operations.

Table 6-7 Duration of an operation

	Program execution times of the CPUs in RUN-Redundant system state	
	Article number xxxxxxx-xxx00-xxxx	
	CPU 1513R-1 PN	CPU 1515R-2 PN
Bit operations, typ.	80 ns	60 ns
Word operations, typ.	96 ns	72 ns
Fixed-point arithmetic, typ.	128 ns	96 ns
Floating-point arithmetic, typ.	512 ns	384 ns

	Program execution times of the CPUs in RUN-Redundant system state		
	Article number xxxxxxx-xxx03-xxxx		All article numbers
	CPU 1513R-1 PN	CPU 1515R-2 PN	CPU 1517H-3 PN CPU 1518HF-4 PN
Bit operations, typ.	50 ns	20 ns	4 ns
Word operations, typ.	64 ns	24 ns	6 ns
Fixed-point arithmetic, typ.	85 ns	32 ns	6 ns
Floating-point arithmetic, typ.	340 ns	128 ns	24 ns

A table of the program execution times of the CPUs in the RUN-Solo system state is available in section User program execution time (Page 31).

Extension due to nesting of higher-priority OBs and/or interrupts

The interruption of a user program at the end of an instruction by a higher-priority OB causes a certain basic time expenditure. Take account of this basic time expenditure in addition to the update time of the assigned process image partitions and the execution time of the contained user program. The following tables contain the typical times for the various interrupts and error events.

Table 6-8 Basic time expenditure for an interrupt

	Basic time expenditure of the CPUs for an interrupt in the RUN-Redundant system state	
	Article number xxxxxxx-xxx00-xxxx	
	CPU 1513R-1 PN	CPU 1515R-2 PN
Hardware interrupt	560 µs	430 µs
Time-of-day interrupt	560 µs	430 µs
Time-delay interrupt	560 µs	430 µs
Cyclic interrupt	560 µs	430 µs

	Basic time expenditure of the CPUs for an interrupt in the RUN-Redundant system state	
	Article number xxxxxxx-xxx03-xxxx	**All article numbers**
	CPU 1513R-1 PN CPU 1515R-2 PN	**CPU 1517H-3 PN CPU 1518HF-4 PN**
Hardware interrupt	240 µs	70 µs
Time-of-day interrupt	240 µs	70 µs
Time-delay interrupt	240 µs	70 µs
Cyclic interrupt	240 µs	70 µs

A table of the time expenditure of the CPUs for an interrupt in the RUN-Solo system state is available in section User program execution time (Page 31).

Table 6-9 Basic time expenditure for an error OB

	Basic time expenditure of the CPUs for an error OB in the RUN-Redundant system state	
	Article number xxxxxxx-xxx00-xxxx	
	CPU 1513R-1 PN	**CPU 1515R-2 PN**
Programming error	560 µs	430 µs
I/O access error	560 µs	430 µs
Time error	560 µs	430 µs
Diagnostic interrupt	560 µs	430 µs
Module failure/recovery	560 µs	430 µs
Station failure/recovery	560 µs	430 µs

	Basic time expenditure of the CPUs for an error OB in the RUN-Redundant system state	
	Article number xxxxxxx-xxx03-xxxx	**All article numbers**
	CPU 1513R-1 PN CPU 1515R-2 PN	**CPU 1517H-3 PN CPU 1518HF-4 PN**
Programming error	240 µs	70 µs
I/O access error	240 µs	70 µs
Time error	240 µs	70 µs
Diagnostic interrupt	240 µs	70 µs
Module failure/recovery	240 µs	70 µs
Station failure/recovery	240 µs	70 µs

A table with the basic time expenditure of the CPUs for an error OB in the RUN-Solo system state is available in section User program execution time (Page 31).

Accuracy of a cyclic interrupt

Even if a cyclic interrupt is not delayed by a higher-priority OB or communication activities, the accuracy with which it is started is nevertheless subject to system-dependent fluctuations.

The following table shows the accuracy with which a cyclic interrupt is triggered:

Table 6-10 Accuracy of cyclic interrupts

	Accuracy of cyclic interrupts of the CPUs in the RUN-Redundant system state	
	Article number xxxxxxx-xxx00-xxxx	
	CPU 1513R-1 PN	**CPU 1515R-2 PN**
Cyclic interrupt	±5.8 ms	±3.2 ms

	Accuracy of cyclic interrupts of the CPUs in the RUN-Redundant system state	
	Article number xxxxxxx-xxx03-xxxx	**All article numbers**
	CPU 1513R-1 PN **CPU 1515R-2 PN**	**CPU 1517H-3 PN** **CPU 1518HF-4 PN**
Cyclic interrupt	±2.4 ms	±1.6 ms

A table with the accuracy of cyclic interrupts of the CPUs in the RUN-Solo system state is available in section Time-driven program execution in cyclic interrupts (Page 50).

NOTE

Scope of validity

Please note that the accuracy data for the cyclic interrupt also applies to all other higher-priority execution levels/OBs.

Interrupt response times for hardware interrupts

The interrupt response times of the CPUs start with the occurrence of a hardware interrupt event in the CPU and end with the start of the assigned hardware interrupt OB.

This time is subject to system-inherent fluctuations, and this is expressed using a minimum and maximum interrupt response time.

The following table contains the length of the typical response times of the CPUs for hardware interrupts.

Table 6-11 Interrupt response times for hardware interrupts

		Interrupt response times of the CPUs for hardware interrupts in the RUN-Redundant system state	
		Article number xxxxxxx-xxx00-xxxx	
		CPU 1513R-1 PN	**CPU 1515R-2 PN**
Interrupt response times	Min.	180 µs	150 µs
	Max.	1420 µs	1360 µs

		Interrupt response times of the CPUs for hardware interrupts in the RUN-Redundant system state	
		Article number xxxxxxx-xxx03-xxxx	**All article numbers**
		CPU 1513R-1 PN CPU 1515R-2 PN	**CPU 1517H-3 PN CPU 1518HF-4 PN**
Interrupt response times	Min.	150 µs	40 µs
	Max.	1360 µs	470 µs

A table of the interrupt response times of the CPUs in the RUN-Solo system state is available in section Response time of the CPUs when program execution is event-controlled (Page 59).

Glossary

Backup CPU

Role of a CPU in the S7-1500R/H redundant system. If the R/H system is in RUN-Redundant system state, the primary CPU guides the process. The backup CPU processes the user program synchronously and can take over the process management if the primary CPU fails.

Cycle time

The cycle time represents the time a CPU requires to process the user program once.

Data block

Data blocks (DBs) are data areas in the user program that contain user data. The following data blocks exist:

- Global data blocks which you can access from all code blocks.
- Instance data blocks that are assigned to a specific FB call.

Diagnostic interrupt

See "Interrupt, diagnostic"

Diagnostics

Monitoring functions include:

- The detection, localization and classification of errors, faults and alarms.
- Displaying and further evaluation of errors, faults and alarms.

They run automatically during plant operation. This increases the availability of systems by reducing commissioning times and downtimes.

Diagnostics buffer

The diagnostics buffer represents a backup memory in the CPU, used to store diagnostics events in their order of occurrence.

Distributed I/O system

System with I/O modules that are configured on a distributed basis, at a large distance from the CPU controlling them.

Firmware of the CPU

In SIMATIC, a distinction is made between the firmware of the CPU and user programs.

The firmware is a software embedded in electronic devices, which means it is permanently connected with the hardware functionally. It is usually saved in a flash memory, such as EPROM, EEPROM or ROM, and cannot be replaced by the user or only with special means or functions.

User program: see glossary entry "User program"

H-Sync Forwarding

H-Sync forwarding enables a PROFINET device with MRP to forward synchronization data (synchronization frames) only within the PROFINET ring.

In addition, H-Sync forwarding forwards the synchronization data even during re-configuration of the PROFINET ring. H-Sync forwarding avoids a cycle time increase if the PROFINET ring is interrupted.

S7-1500R: H-Sync forwarding is recommended for all PROFINET devices with only 2 ports in the PROFINET ring. All PROFINET devices with more than 2 ports (e.g. switch) in the PROFINET ring must support H-Sync forwarding.

S7-1500H: H-Sync Forwarding is not relevant for redundant S7-1500H systems.

I/O module

Device of the distributed I/O that is used as interface between the controller and the process.

Interrupt

The CPU's operating system distinguishes between various priority classes that control the execution of the user program. These priority classes include interrupts, such as hardware interrupts. When an interrupt occurs, the operating system automatically calls an assigned organization block. The required response is programmed in the organization block (for example, in an FB).

Interrupt, cyclic

The CPU generates a cyclic interrupt periodically within a parameterizable time grid and then processes the corresponding organization block.

Interrupt, diagnostics

Diagnostics-capable modules signal detected system errors to the CPU using diagnostic interrupts.

Interrupt, hardware

A hardware interrupt is triggered by interrupt-triggering modules due to a certain event in the process. The hardware interrupt is reported to the CPU. The CPU then processes the assigned organization block according to the priority of this interrupt.

Interrupt, time-delay

The time-delay interrupt is one of the program execution priority classes of SIMATIC S7. The time-delay interrupt is generated after the expiration of a timer started in the user program. The CPU then processes the corresponding organization block.

Interrupt, time-of-day

The time-of-day interrupt is one of the program execution priority classes of SIMATIC S7. The time-of-day interrupt is generated depending on a specific date and time. The CPU then processes the corresponding organization block.

IO controller

See "PROFINET IO controller"

IO device

See "PROFINET IO device"

MRP

The **M**edia **R**edundancy **P**rotocol (MRP) makes it possible to configure redundant networks. Redundant transmission links (ring topology) ensure that an alternative communication path is made available if a transmission link fails. The PROFINET devices that are a part of this redundant network form an MRP domain.

Operating states

Operating states describe the behavior of a single CPU at a specific time.
The CPUs of the SIMATIC standard systems have the STOP, STARTUP and RUN operating states.
The primary CPU of the redundant system S7-1500R/H has the operating states STOP, STARTUP, RUN, RUN-Syncup and RUN-Redundant. The backup CPU has the operating states STOP, SYNCUP and RUN-Redundant.

Organization block

Organization blocks (OBs) form the interface between the CPU operating system and the user program. The organization blocks determine the order in which the user program is executed.

Parameter

- Tag of a STEP 7 code block:
- Tag for setting the behavior of a module (one or more per module). In as-delivered state, every module has an appropriate basic setting, which you can change by configuring in STEP 7. There are static and dynamic parameters.

Parameters, dynamic

Dynamic parameters of modules can be changed during operation by calling an SFC in the user program, for example, limit values of an analog input module.

Parameters, static

Static parameters of modules cannot be changed by the user program but only by the configuration in STEP 7, e.g. input delay of a digital input module.

Primary CPU

If the R/H system is in RUN-Redundant system state, the primary CPU guides the process. The backup CPU processes the user program synchronously and can take over the process management if the primary CPU fails.

Process image (I/O)

The CPU transfers the values from the input and output modules to this memory area. At the start of the cyclic program, the CPU transfers the process image output as a signal state to the output modules. The CPU then transfers the signal states of the input modules into the process image input. The CPU then executes the user program.

PROFINET

PROcess **FI**eld **NET**work, open Industrial Ethernet standard which further develops PROFIBUS and Industrial Ethernet. A cross-manufacturer communication, automation, and engineering model defined by PROFIBUS International e.V. as an automation standard.

PROFINET IO

Communication concept for the realization of modular, distributed applications within the scope of PROFINET.

PROFINET IO controller

Device used to address connected I/O devices (e.g. distributed I/O systems). The IO controller exchanges input and output signals with assigned I/O devices. The IO controller often corresponds to the CPU in which the automation program is running.

PROFINET IO device

Distributed field device that can be assigned to one or more IO controllers (e.g. distributed I/O system, valve terminals, frequency converters, switches).

Redundancy connection

The redundancy connection in an S7-1500R system is the PROFINET ring with MRP. The redundancy connection uses part of the bandwidth on the PROFINET cable to synchronize the CPUs, which means the bandwidth is not available for PROFINET IO communication.

Contrary to S7-1500R, PROFINET ring and redundancy connection are separate in an S7-1500H. The two redundancy connections are fiber-optic cables which directly connect the CPUs to each other via synchronization modules. The synchronization of the H-system does not affect the available bandwidth for PROFINET IO.

Redundant systems

Redundant systems are identified by the fact that important automation components are available in multiple units (redundant). Process control is maintained if a redundant component fails.

Retentivity

A memory area whose content is retained even after a power failure and after a transition from STOP to RUN is retentive. The non-retentive bit memory area, timers and counters are reset after a power failure and after a STOP-RUN transition.

System states

The system states of the S7-1500R/H redundant system result from the operating states of the primary and backup CPU. The term system state is used as a simplified expression that identifies the operating states of the two CPUs that occur at the same time. The S7-1500R/H redundant system features the STOP, STARTUP, RUN-Solo, SYNCUP and RUN-Redundant system states.

TIA Portal

Totally Integrated Automation Portal

The TIA Portal is the key to the full performance capability of Totally Integrated Automation. The software optimizes all operating, machine and process sequences.

Timers

Timers are components of the CPU system memory. The operating system automatically updates the content of the "timer cells" asynchronously to the user program. STEP 7 instructions define the precise function of the timer cell (e.g. on-delay) and trigger its execution.

User program

In SIMATIC, a distinction is made between user programs and the firmware of the CPU.

The user program contains all instructions, declarations and data by which a system or process can be controlled. The user program is assigned to a programmable module (for example, CPU, FM) and can be structured in smaller units.

Firmware: see glossary entry "Firmware of the CPU"

Index

C

Cycle
  Definition, 23

Cycle control point, 24

Cycle time
  Definition, 25
  Different, 26
  Update, 28
  Process image partition, 28

Cycle time statistics, 27

D

Dead time, 64, 74

E

Execution
  Time-driven, 16
  Event-driven, 16

F

FAQ
  Total cycle time of a program, 38

H

Hardware interrupts, 16, 59

I

Instruction
  RE_TRIGR, 27
  RT_Info, 27
  RUNTIME, 33
  RT_Info, 40
  RT_Info, 49
  RT_Info, 69
  RT_Info, 80

Interruptibility, 17

Interrupt response times
  CPU, 59
  R/H CPUs, 83

M

Maximum cycle time, 27, 39, 64

Minimum cycle time, 24, 26, 70

O

OB 80
  Time error OB, 27

P

Parameter
  Events to be queued, 19
  Report event overflow into diagnostic buffer, 19
  Enable time error, 20
  Event threshold for time error, 20

Process image partitions, 17

Program execution, 16

Program execution in the cyclic program, 16

Program execution times
  Without interruption, 31

Program execution times of R/H CPUs
  Without interruption, 80

Program organization, 16

R

R/H CPUs
  Interrupt response times, 83

Response time
  Definition, 54

Response time of CPU, 54
  Fluctuation, 54

Response time of R/H CPUs
  Fluctuation, 77

S

Synchronization
in SYNCUP system state, 67
in RUN-Redundant system state, 70

T

Time error OB
OB 80, 27
OB 80, 65
Times
For one operation, 31
Basic expenditure for interrupts, 34
Basic expenditure for error OB, 36
Cyclic interrupts for S7-1500 CPUs, 51
Basic expenditure for interrupts, 81
Basic expenditure for error OB, 82
Cyclic interrupts for S7-1500R/H-CPUs, 82

U

Update times
S7-1500 CPUs, 29
PROFINET IO, 55
PROFIBUS DP, 55
Backplane bus ET 200SP CPUs, 56
S7-1500R/H-CPUs, 80

SIEMENS

Function manual

SIMATIC

S7-1500, ET 200SP, ET 200pro, SIMATIC Drive Controller

Structure and Use of the CPU Memory

Edition 11/2019

support.industry.siemens.com

SIEMENS

SIMATIC

S7-1500, S7-1500R/H, SIMATIC Drive Controller, ET 200SP, ET 200pro Structure and Use of the CPU Memory

Function Manual

Preface

Function manuals Documentation Guide 1

Memory areas and retentive memory 2

Memory usage and application examples 3

SIMATIC memory card 4

11/2019

A5E03461664-AD

Legal information

Warning notice system

This manual contains notices you have to observe in order to ensure your personal safety, as well as to prevent damage to property. The notices referring to your personal safety are highlighted in the manual by a safety alert symbol, notices referring only to property damage have no safety alert symbol. These notices shown below are graded according to the degree of danger.

⚠ DANGER

indicates that death or severe personal injury **will** result if proper precautions are not taken.

⚠ WARNING

indicates that death or severe personal injury **may** result if proper precautions are not taken.

⚠ CAUTION

indicates that minor personal injury can result if proper precautions are not taken.

NOTICE

indicates that property damage can result if proper precautions are not taken.

If more than one degree of danger is present, the warning notice representing the highest degree of danger will be used. A notice warning of injury to persons with a safety alert symbol may also include a warning relating to property damage.

Qualified Personnel

The product/system described in this documentation may be operated only by **personnel qualified** for the specific task in accordance with the relevant documentation, in particular its warning notices and safety instructions. Qualified personnel are those who, based on their training and experience, are capable of identifying risks and avoiding potential hazards when working with these products/systems.

Proper use of Siemens products

Note the following:

⚠ WARNING

Siemens products may only be used for the applications described in the catalog and in the relevant technical documentation. If products and components from other manufacturers are used, these must be recommended or approved by Siemens. Proper transport, storage, installation, assembly, commissioning, operation and maintenance are required to ensure that the products operate safely and without any problems. The permissible ambient conditions must be complied with. The information in the relevant documentation must be observed.

Trademarks

All names identified by ® are registered trademarks of Siemens AG. The remaining trademarks in this publication may be trademarks whose use by third parties for their own purposes could violate the rights of the owner.

Disclaimer of Liability

We have reviewed the contents of this publication to ensure consistency with the hardware and software described. Since variance cannot be precluded entirely, we cannot guarantee full consistency. However, the information in this publication is reviewed regularly and any necessary corrections are included in subsequent editions.

Siemens AG
Digital Industries
Postfach 48 48
90026 NÜRNBERG
GERMANY

A5E03461664-AD
℗ 10/2019 Subject to change

Copyright © Siemens AG 2013 - 2019.
All rights reserved

Preface

Purpose of the documentation

This documentation describes the various memory areas of the following systems:

- SIMATIC S7-1500 automation system
- SIMATIC S7-1500R/H redundant system
- SIMATIC Drive Controller
- The CPUs of the ET 200SP distributed I/O system
- The CPUs of the ET 200pro distributed I/O system based on SIMATIC S7-1500

The book also shows:

- How to make the best use of the memory areas
- How to reduce work memory utilization by:
  - Using recipes and data logs
  - Saving data blocks on the SIMATIC memory card

Basic knowledge required

The following knowledge is required in order to understand the documentation:

- General knowledge of automation technology
- Knowledge of the SIMATIC industrial automation system
- Knowledge about the use of computers
- Proficiency with STEP 7

Conventions

STEP 7: in this documentation, "STEP 7" is used as a synonym for all versions of the "STEP 7 (TIA Portal)" configuring and programming software.

Please also observe notes marked as follows:

Note

A note contains important information on the product described in the documentation, on the handling of the product or on the section of the documentation to which particular attention should be paid.

Scope of the documentation

This documentation is valid for the central modules of the SIMATIC S7-1500, SIMATIC Drive Controller and ET 200SP systems and for ET 200pro.

The CPUs of the redundant system S7-1500R/H do not support all the memory objects described in this function manual. The limitations of the redundant S7-1500R/H system are pointed out where appropriate in the manual. You can find a list of the unsupported functions in the Redundant System S7-1500R/H (https://support.industry.siemens.com/cs/ww/en/view/109754833) system manual.

What's new in edition 11/2019 as compared to edition 10/2018?

What's new?		What are the customer benefits?	Where can I find information?
Changed contents	Scope of the function manual expanded to include the CPUs of the SIMATIC Drive Controller	SIMATIC Drive Controller and SINAMICS Integrated support the memory structure familiar from the S7-1500 automation system. Information on the special features of the SIMATIC Drive Controller is explained at the relevant points in the manual.	• In the corresponding sections of the manual • SIMATIC Drive Controller (https://support.industry.siemens.com/cs/ww/en/view/109766665) system manual

What's new in Edition 10/2018 compared to Edition 09/2016

What's new?		What are the customer benefits?	Where can I find information?
Changed contents	Scope of the function manual expanded to include the CPUs of the redundant system S7-1500R/H.	The CPUs of the redundant system S7-1500R/H support the memory structure familiar from the S7-1500 automation system. Information on the particularities of the redundant S7-1500R/H system is provided where appropriate in the manual.	• In the corresponding sections of the manual • System manual Redundant System S7-1500R/H (https://support.industry.siemens.com/cs/ww/en/view/109754833)

What's new in Edition 09/2016 compared to Edition 01/2013

What's new?		What are the customer benefits?	Where can I find information?
New contents	Analyzing memory requirements and memory usage	You have various options for analyzing the memory requirements and the memory usage of the CPU: • With STEP 7 • With the display of the CPU • With the web server of the CPU	Section Memory requirements and memory usage (Page 15)
	Memory requirements in load memory for downloading software changes	When loading software changes to the SIMATIC memory card, the files in question are only deleted after creation of the new files. For this reason, the CPU requires adequate free memory space on the SIMATIC memory card. You have various options for creating memory space; these will be explained.	Section Memory requirements for downloading software changes (Page 28)
	Service life of SIMATIC memory cards	Using calculation examples of the service life of a SIMATIC memory card, you can estimate which SIMATIC memory card is required for your automation task.	Section Service life of the SIMATIC memory card (Page 63)
Changed contents	Scope of the function manual expanded to include the CPUs of the ET 200SP distributed I/O system and the CPU 1516pro-2 PN	Functions that you will be familiar with from the SIMATIC S7-1500 CPUs are implemented in CPUs in other designs (ET 200SP) and in the CPU 1516pro-2 PN (degree of protection IP65, IP66 and IP67).	• Manual CPU 1510SP-1 PN (https://support.industry.siemens.com/cs/ww/en/view/90157130) • Manual CPU 1512SP-1 PN (https://support.industry.siemens.com/cs/ww/en/view/90157013) • Operating instructions CPU 1516pro-2 PN (https://support.industry.siemens.com/cs/ww/en/view/109482416)

Recycling and disposal

For environmentally friendly recycling and disposal of your old equipment, contact a certified electronic waste disposal company and dispose of the equipment according to the applicable regulations in your country.

Security information

Siemens provides products and solutions with industrial security functions that support the secure operation of plants, systems, machines and networks.

In order to protect plants, systems, machines and networks against cyber threats, it is necessary to implement – and continuously maintain – a holistic, state-of-the-art industrial security concept. Siemens' products and solutions constitute one element of such a concept.

Customers are responsible for preventing unauthorized access to their plants, systems, machines and networks. Such systems, machines and components should only be connected to an enterprise network or the internet if and to the extent such a connection is necessary and only when appropriate security measures (e.g. firewalls and/or network segmentation) are in place.

For additional information on industrial security measures that may be implemented, please visit (https://www.siemens.com/industrialsecurity).

Siemens' products and solutions undergo continuous development to make them more secure. Siemens strongly recommends that product updates are applied as soon as they are available and that the latest product versions are used. Use of product versions that are no longer supported, and failure to apply the latest updates may increase customers' exposure to cyber threats.

To stay informed about product updates, subscribe to the Siemens Industrial Security RSS Feed visit (https://www.siemens.com/industrialsecurity).

Siemens Industry Online Support

You can find current information on the following topics quickly and easily here:

- **Product support**

  All the information and extensive know-how on your product, technical specifications, FAQs, certificates, downloads, and manuals.

- **Application examples**

  Tools and examples to solve your automation tasks – as well as function blocks, performance information and videos.

- **Services**

  Information about Industry Services, Field Services, Technical Support, spare parts and training offers.

- **Forums**

  For answers and solutions concerning automation technology.

- **mySupport**

  Your personal working area in Industry Online Support for messages, support queries, and configurable documents.

This information is provided by the Siemens Industry Online Support in the Internet (https://support.industry.siemens.com).

Industry Mall

The Industry Mall is the catalog and order system of Siemens AG for automation and drive solutions on the basis of Totally Integrated Automation (TIA) and Totally Integrated Power (TIP).

You can find catalogs for all automation and drive products on the Internet (https://mall.industry.siemens.com).

Table of contents

Preface 3

1 Function manuals Documentation Guide 9

2 Memory areas and retentive memory 11

2.1 Memory areas 11
2.1.1 Specifics of the CPUs of the redundant system S7-1500R/H 14

2.2 Memory requirements and memory usage 15

2.3 Retentive memory areas 21

2.4 Summary of retentive behavior 25
2.4.1 Retentive behavior of the memory objects 25

2.5 Memory behavior when loading software changes 26

2.6 Memory requirements for downloading software changes 28

3 Memory usage and application examples 33

3.1 Memory usage for data blocks 33

3.2 Memory usage for recipes 35

3.3 Memory usage for data logging 37
3.3.1 Overview of data logging 37
3.3.2 Data structure of the data logs 39
3.3.3 Instructions for data logging 40
3.3.4 Example program for data logging 41
3.3.5 Calculation of the data log size 47

4 SIMATIC memory card 51

4.1 SIMATIC memory card - Overview 51

4.2 Setting the card type 58

4.3 Data transfer with SIMATIC memory cards 60

4.4 Service life of the SIMATIC memory card 63

4.5 Expanding the load memory of the CPUs of the redundant system S7-1500R/H 68

Glossary 69

Index 75

Function manuals Documentation Guide

1

The documentation for the SIMATIC S7-1500 automation system, for CPU 1516pro-2 PN based on SIMATIC S7-1500, and for the distributed I/O systems SIMATIC ET 200MP, ET 200SP and ET 200AL is divided into three areas.
This division allows you easier access to the specific information you require.

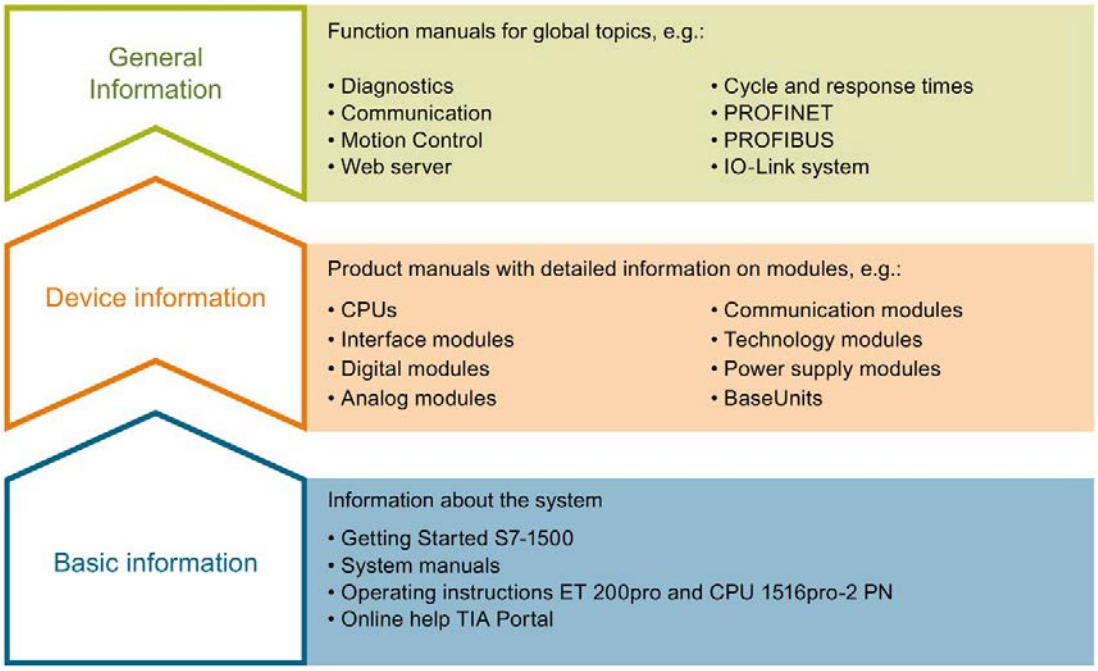

Basic information

System manuals and Getting Started manuals describe in detail the configuration, installation, wiring and commissioning of the SIMATIC S7-1500, ET 200MP, ET 200SP and ET 200AL systems; use the corresponding operating instructions for CPU 1516pro-2 PN. The STEP 7 online help supports you in configuration and programming.

Device information

Product manuals contain a compact description of the module-specific information, such as properties, terminal diagrams, characteristics and technical specifications.

General information

The function manuals contain detailed descriptions on general topics such as diagnostics, communication, Motion Control, Web server, OPC UA.

You can download the documentation free of charge from the Internet (https://support.industry.siemens.com/cs/ww/en/view/109742705).

Changes and additions to the manuals are documented in product information sheets.

You will find the product information on the Internet:

- S7-1500/ET 200MP (https://support.industry.siemens.com/cs/us/en/view/68052815)
- ET 200SP (https://support.industry.siemens.com/cs/us/en/view/73021864)
- ET 200AL (https://support.industry.siemens.com/cs/us/en/view/99494757)

Manual Collections

The Manual Collections contain the complete documentation of the systems put together in one file.

You will find the Manual Collections on the Internet:

- S7-1500/ET 200MP (https://support.industry.siemens.com/cs/ww/en/view/86140384)
- ET 200SP (https://support.industry.siemens.com/cs/ww/en/view/84133942)
- ET 200AL (https://support.industry.siemens.com/cs/ww/en/view/95242965)

"mySupport"

With "mySupport", your personal workspace, you make the best out of your Industry Online Support.

In "mySupport", you can save filters, favorites and tags, request CAx data and compile your personal library in the Documentation area. In addition, your data is already filled out in support requests and you can get an overview of your current requests at any time.

You must register once to use the full functionality of "mySupport".

You can find "mySupport" on the Internet (https://support.industry.siemens.com/My/ww/en).

Application examples

The application examples support you with various tools and examples for solving your automation tasks. Solutions are shown in interplay with multiple components in the system - separated from the focus on individual products.

You will find the application examples on the Internet (https://support.industry.siemens.com/sc/ww/en/sc/2054).

Memory areas and retentive memory 2

2.1 Memory areas

The automation data is located in the automation system in different memory areas.

The offline data of the project created in STEP 7 is located on the hard disk of the programming device. The online data of the project is located in the load memory on the SIMATIC memory card. In addition, the work memory, retentive memory and other memory areas are located on the CPU.

The following figure shows an overview of the memory areas of the CPUs:

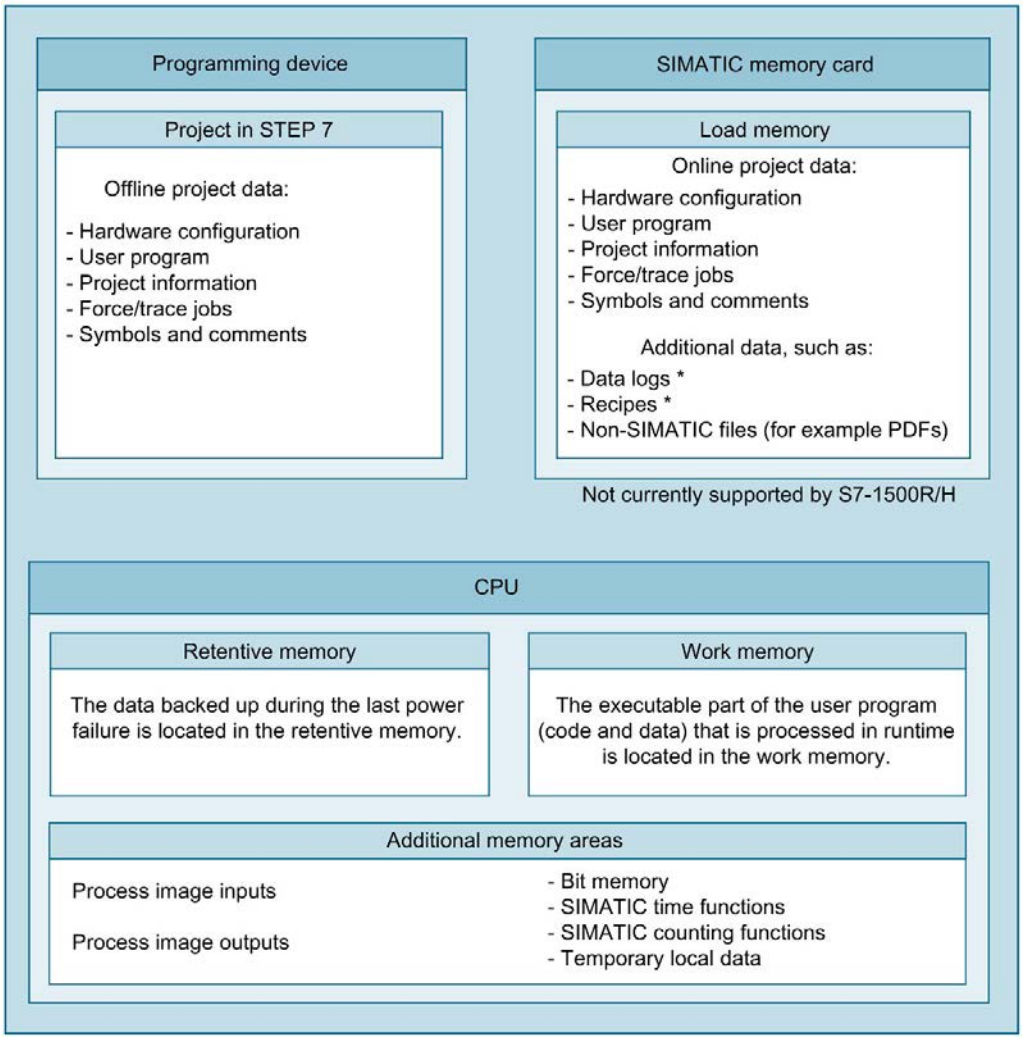

Figure 2-1 Memory areas

Load memory

Load memory is non-volatile memory for code blocks, data blocks, technology objects and the hardware configuration. This load memory is located on the SIMATIC memory card. STEP 7 transfers the project data from the programming device to the load memory.

You can copy additional data (for example HMI backups and other files) to the SIMATIC memory card using the web server or Explorer. This data can then be found in the load memory on the SIMATIC memory card.

Note

An inserted SIMATIC memory card is required to operate the CPU.

Load memory: CPU 1518-4 PN/DP MFP and CPU 1518F-4 PN/DP MFP

On these CPUs additional memory space is used in the load memory by:

- Linux runtime, which runs in parallel with the CPU runtime
- C/C++ runtime applications
- Files that are needed for C/C++ runtime applications
- CPU function libraries

Note

CPU runtime

In the context of the CPU 1518-4 PN/DP MFP and the CPU 1518F-4 PN/DP MFP as well as the Open Development Kit (ODK), the term "CPU runtime" has the following meaning:

The CPU runtime is the runtime environment in which a CPU runtime application can be executed. CPU 1518-4 PN/DP MFP and CPU 1518F-4 PN/DP MFP run a Linux runtime in parallel with the CPU runtime. The Linux runtime is the runtime environment for applications that are executable in Linux, e.g. C/C++ runtime applications.

For additional information on the CPUs, refer to the CPU 1518-4 PN/DP MFP (https://support.industry.siemens.com/cs/ww/en/view/109749061) manual and the CPU 1518(F)-4 PN/DP MFP (https://support.industry.siemens.com/cs/ww/en/view/109756478) product information. You can find information on creating C/C++ runtime applications in the SIMATIC S7-1500 ODK 1500S (https://support.industry.siemens.com/cs/ww/en/view/109752683) manual.

Work memory

The work memory is volatile memory that contains the code and data blocks. The work memory is integrated into the CPU and cannot be extended. The work memory is only used in operation of the CPU.

In the CPUs, the work memory is divided into two areas:

- Code work memory: The code work memory contains runtime-relevant parts of the program code.
- Data work memory: The data work memory contains the runtime-relevant parts of the data blocks and technology objects.
  Tags of global data blocks, instance data blocks and technology objects are initialized with their start values at the operating states changes below. Retentive tags receive their actual values saved in the retentive memory.
  - STOP → STARTUP
  - POWER ON → STARTUP
  - POWER ON → STOP

Work memory of CPU 1518-4 PN/DP MFP and CPU 1518F-4 PN/DP MFP

Additional work memory is needed for use of the CPU function libraries and C/C++ runtime applications.

Retentive memory

The retentive memory is non-volatile memory for saving a limited amount of data in the event of power failure.

The following actions delete certain memory objects of the retentive memory:

- Memory reset
- Reset to factory settings

You can find an overview of the retentive behavior of the individual memory objects in section Retentive behavior of the memory objects (Page 25).

You can find additional information on the memory reset and reset to factory settings functions in the following manuals:

- System manual S7-1500, ET 200MP Automation System (http://support.automation.siemens.com/WW/view/en/59191792)
- SIMATIC Drive Controller (https://support.industry.siemens.com/cs/ww/en/view/109766665) system manual
- System manual ET 200SP Distributed I/O System (http://support.automation.siemens.com/WW/view/en/58649293)
- Operating instructions ET 200pro CPU 1513pro-2 PN (https://support.industry.siemens.com/cs/ww/en/view/109769507) and ET 200pro CPU 1516pro-2 PN (https://support.industry.siemens.com/cs/ww/en/view/109482416)

Additional memory areas

Besides the memory areas that have been described for the user program and data, the CPU has additional memory areas available.

The additional memory areas include the following:

- Process images
- Temporary local data

The CPU-specific sizes can be found in the technical specifications for the respective CPU.

2.1.1 Specifics of the CPUs of the redundant system S7-1500R/H

The redundant system S7-1500R/H consists of two CPUs. There must be a SIMATIC memory card in each of the CPUs. We recommend the same memory size for each SIMATIC memory card. During redundant operation, both CPUs execute the user program in parallel. In so doing, one CPU takes the role of the leading CPU (Primary CPU) and one CPU takes the role of the following CPU (Backup CPU). If one CPU fails, the second CPU maintains control over the process.

Memory areas

The two CPUs of the redundant system S7-1500R/H have the same memory areas as the CPUs of non-redundant systems.

You create the hardware configuration of the offline project data only once in STEP 7 STEP 7 loads the offline project data into the current primary CPU. The system synchronizes all data required for redundant operation from the primary CPU to the backup CPU.

Both CPUs receive identical online project data. The online project data contains the hardware configuration of the H-system.

Particularities of the retentive memory

Like for non-redundant CPUs, the retentive memory is a non-volatile memory. The retentive memory saves a limited amount of data in the event of power failure.

Each of the CPUs of the redundant system S7-1500R/H has its own retentive memory. If one of the CPUs changes to POWER OFF and the second CPU is still in RUN, the retentive data of the CPU in RUN continues to be updated. If the remaining CPU also goes from RUN to POWER OFF, the retentive memory of this CPU contains the more up-to-date retentive data. Note the following for when you switch the CPUs back to RUN afterwards.

Note

Characteristics of retentive data after a STOP or POWER OFF of both CPUs

After a STOP or POWER OFF of both CPUs, switch the CPU with the more up-to-date data to RUN first. The more up-to-date data is located in the CPU that controlled the process before STOP or POWER OFF. This procedure gives you certainty that you are using the more up-to-date retentive data. The precondition for this is that you did not change any data using STEP 7 or the HMI while the CPUs were in STOP.

Redundancy ID

Unlike in a non-redundant CPU, an additional memory object is contained in the retentive memory of the respective redundant CPU. Each CPU saves its respective redundancy ID in this memory object. The redundancy IDs can assume the values 1 and 2. Different redundancy IDs are required for redundant operation in order to clearly identify the CPUs and assign the project data to the respective CPUs. For additional information on redundancy IDs of the CPUs, refer to the Redundant System S7-1500R/H (https://support.industry.siemens.com/cs/ww/en/view/109754833) system manual.

You can find an overview of the retentive behavior of the individual memory objects in section Retentive behavior of the memory objects (Page 25).

2.2 Memory requirements and memory usage

You can access information regarding the memory areas of the CPUs in the following ways depending on product family used:

Product family	Information regarding the memory areas of the CPU is accessible via:		
	STEP 7	Web server	Display
S7-1500	✓	✓	✓
S7-1500R/H	✓	--	✓
SIMATIC Drive Controller	✓	✓	--
ET 200SP	✓	✓	--
ET 200pro CPU 151xpro-2 PN	✓	✓	--

Memory requirements of the program in the offline project

During creation or modification of a project, the display of memory utilization in STEP 7 shows you the size of the project in the following memories:

- Load memory
- Work memory
- Retentive memory

You can find this information for the CPU under "Program info" in the project tree, "Resources" tab.

- Total size of the memory areas of the respective CPU project (in the figure below line "Total:")
- Memory requirements of the program elements (blocks, data types, objects for motion technology and PLC tags)
- Memory amounts in the respective memory area of the offline project (in figure below, line "Used:")
- Used inputs and outputs

The following figure shows an overview of the utilization of the various memory areas of the "Resources" tab:

Resources of PLC_1

	Objects	Load memory	Code work-memory	Data work-memory	Retain memory
1		?%	0 %	0 %	0 %
2					
3	Total:	not specified	1048576 bytes	5242880 bytes	484000 bytes
4	Used:	not specified	164 bytes	0 bytes	0 bytes
5	Details	2 MB			
6	OB	4 MB	>164 bytes		
7	FC	12 MB	-		
8	FB	24 MB	?		
9	DB	256 MB		-	0 bytes
10	Objects for Motion Technology	2 GB ?		-	0 bytes
11	Data types	32 GB 43941 bytes			
12	PLC tags	1426 bytes			0 bytes

Figure 2-2 Display of the utilization of the various memory areas

For a CPU, you can select the total size of the load memory in a drop-down list. Select the size of the load memory in accordance with the size of the SIMATIC memory card you are using. The percentage shown in the Load memory column depends on the selected size of the load memory. As soon as the memory size exceeds the size of the load memory of the memory card you are using, the sizes indicated turn red.

Note

Determination of the memory utilization

Note that the SIMATIC memory card also contains data other than the user program that you cannot determine using "Resources". This data includes:

- Hardware configuration
- Recipes, data logs and HMI backups (not supported for S7-1500R/H)
- Non-SIMATIC files, such as PDF, etc.

Therefore, the drop-down list with the size of your SIMATIC memory card only serves as a visual orientation aid.

Also refer to the FAQ "How do you estimate the memory requirements of your project in the load memory of a SIMATIC S7-1500" on the Internet (https://support.industry.siemens.com/cs/ww/en/view/97553417).

Note

Display of the memory utilization under "Program info"

The display of the memory utilization in the program information is an offline display in STEP 7 and only shows the memory requirements of the program in the project. The program on the memory card of the CPU may differ, however, for example if the program:

- is more up to date
- contains blocks generated by other projects
- contains blocks generated on the CPU

Data on the SIMATIC memory card

In addition to the program and the associated program elements (blocks, data types, objects for motion technology and PLC tags), the following data is also stored on the memory card:

- Hardware configuration
- Project information
- Force jobs
- Trace recordings (not supported for S7-1500R/H)
- Symbols and comments

The following further data may also be found on the memory card:

- Recipes, data logs and HMI backups (not supported for S7-1500R/H)
- Non-SIMATIC files that were copied to the memory card via the web server of the CPU or offline in Windows Explorer (for example PDF files, etc.)

Display of the memory utilization in STEP 7

In online mode, the online function "Memory" provides you with the following up-to-date memory information:

- Size of the total free and already allocated load memory on the SIMATIC memory card.
- Size of the total free and already allocated work memory, separated by code and data.
- Size of the total free and already allocated retain memory.

The online function "Memory" can be found in Online & Diagnostics under "Diagnostics > Memory". You can access the functions under Online & Diagnostics in various ways:

- In the project tree under each configured CPU.
- In the project tree under Online access > Accessible devices, in order to display the memory utilization of CPUs that were not configured in the project.
- In all views of the device configuration (topology view, network view, device view) by selecting a CPU with the right mouse button.

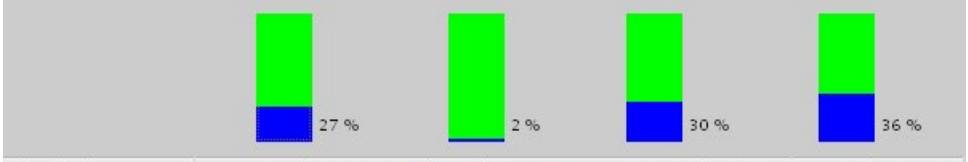

Sizes in bytes	Load memory	Code work-memory	Data work-memory	Retain memory
Free:	6291456	1048576	5242880	524288
In use:	2316997	17355	2299642	301234
Total:	8608453	1065931	7542522	825522

Figure 2-3 "Memory" online function

Note

Fill levels of the CPUs of the redundant system S7-1500R/H

The CPUs of the redundant system S7-1500R/H can have CPU-specific fill levels in non-redundant operation.

The fill levels of the load memory of the CPUs can differ in redundant operation and non-redundant operation (e.g. due to stored PDF files or SIMATIC memory cards of different sizes).

You can have the memory utilization of both CPU 1 and CPU 2 displayed in STEP 7.

Alternatively to the "Memory" online function, you will also find a display of the current memory functions on the "Online tools" task card in the "Memory" section.

Display of the memory utilization on the display of the CPU

To obtain information about the available memory via the display, proceed as follows:

- Select the "Diagnostics" menu on the display with the help of the arrow keys.
- Select the "Used memory" command from the "Diagnostics" menu.

Under the "Used memory" menu item, you can find information about the utilization of the various memory areas (see following figure). Note that the memory usage is a snapshot of the memory used at the time of the request and is not continuously updated.

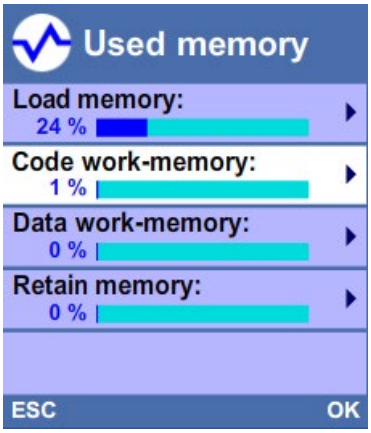

To find out details about the respective memory areas (e.g. code work memory), select the required memory area with the help of the arrow keys (see following figure).

In the detail view, e.g. of the code work memory, the display provides you with the following information:

- Memory space which is still available in the code work memory.
- Memory space which is already allocated in the code work memory.
- Total available memory space in the code work memory.

Display of the memory usage in the Web server

On the Web server, you can find information about the current usage of the individual memory areas on the Web page "Diagnostics" in the "Memory" tab.

Detailed information about the use of the Web server can be found in the S7-1500 Web server (https://support.industry.siemens.com/cs/ww/en/view/59193560) function manual.

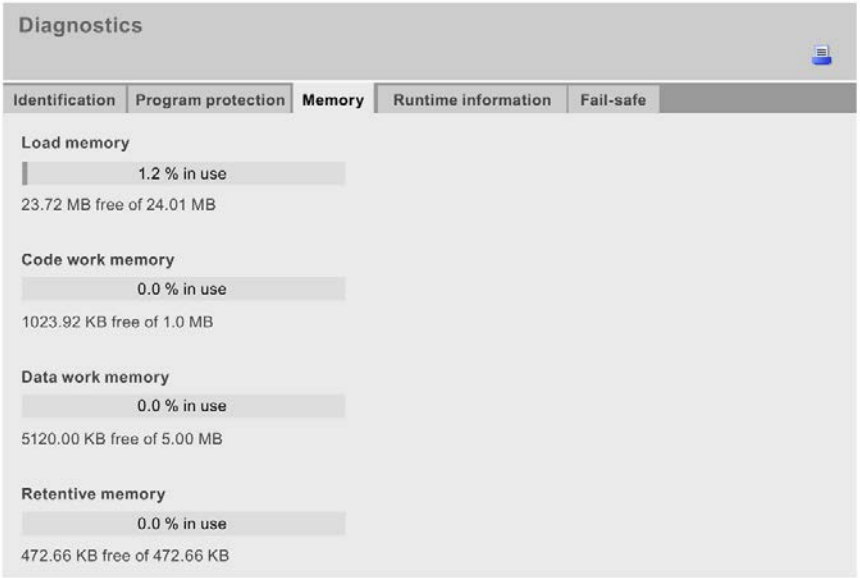

Figure 2-4 Display of the memory usage in the Web server

Note

Redundant system S7-1500R/H

The web server is not supported by the CPUs of the redundant system S7-1500R/H.

2.3 Retentive memory areas

Introduction

The CPUs have a memory for storing retentive data at POWER OFF. You can find the size of the retentive memory in the technical specifications of the respective CPU.

You can find the utilization of the retentive memory of the configured CPU in STEP 7 offline under "Program info > Resources" or online under Online & diagnostics with "Diagnostics > Memory".

If you define data as retentive, its content is retained for the startup of a program after STOP or a power failure.

You can define the following data and objects as retentive:

- Tags of global data blocks
- Tags of instance data blocks of a function block
- Bit memories, timers and counters

Tags of technology objects are retentive, e.g. calibration values of absolute encoders. STEP 7 manages the retentivity of the technology object tags automatically. Hence, you do not have to configure retentivity.

The retentive tags of technology objects are unaffected by a memory reset. You can only delete these retentive tags with a reset to factory settings.

Tags of a global data block

In a global data block, you can define either individual tags from a block or all of its tags collectively as retentive, depending on the setting for the "Optimized block access" attribute:

- "Optimized block access" activated: In the declaration table of the data block, you can define individual tags as retentive.

		Name	Data type	Start value	Retain	Visible in HMI	Comment
1		Static			☐	☐	
2		var1	Bool	false	☑	☑	
3		var2	Bool	false	☐	☑	
4		var3	Bool	false	☑	☑	
5		var4	Bool	false	☐	☑	
6		var5	Bool	false	☑	☑	

Figure 2-5 Retentivity setting "Optimized block access" activated

- "Optimized block access" not activated: In the declaration table of the data block, you can only define the retentivity of all tags collectively.

		Name	Data type	Offset	Start value	Retain	Visible in HMI	Comment
1		Static				☐	☐	
2		var6	Bool	...	false	☑	☑	
3		var7	Bool	...	false	☑	☑	
4		var8	Bool	...	false	☑	☑	
5		var9	Bool	...	false	☑	☑	
6		var10	Bool	...	false	☑	☑	

Figure 2-6 Retentivity setting "Optimized block access" not activated

You can find additional information on optimized and non-optimized data blocks in the Programming guideline for S7-1200/S7-1500 (https://support.industry.siemens.com/cs/de/de/view/90885040/en).

Tags of an instance data block of a function block

You can define the tags of the instance data block of a function block as retentive in STEP 7. Depending on the setting for the "Optimized block access" attribute, you can define retentivity either for individual tags from a block or for all of its tags collectively:

- "Optimized block access" activated: In the interface of the function block, you can define individual tags as retentive.
- "Optimized block access" not activated: In the instance data block, you can only define the retentivity of all tags collectively.

Creation of a data block in the user program

The instruction "CREATE_DB" is used to create a new data block in the load and/or work memory. For data blocks which you create in the load memory, depending on the selection for the ATTRIB parameter, the generated data block either has the property "retentive" or the property "non-retentive". Setting the retentivity for individual tags is not possible here. The "Optimized block access" attribute is disabled.

You can find additional information on the "CREATE_DB" instruction in the STEP 7 online help under "Programming a PLC > Instructions > Extended instructions > Data block control > CREATE_DB: Create data block".

Note

Redundant S7-1500R/H system

The "CREATE_DB" instruction is not supported by the CPUs of the redundant system S7-1500R/H.

Tags of technology objects

Tags of technology objects are retentive, e.g. calibration values of absolute encoders. STEP 7 manages the retentivity of the technology object tags automatically. Hence, you do not have to configure retentivity.

The retentive tags of technology objects are unaffected by a memory reset. They can be deleted only by a reset to factory settings.

Note

Redundant S7-1500R/H system

Technology objects are not supported by the CPUs of the redundant system S7-1500R/H.

Bit memories, timers and counters

You can define the number of retentive bit memories, timers and counters in STEP 7 in the PLC tag table using the "Retain" button.

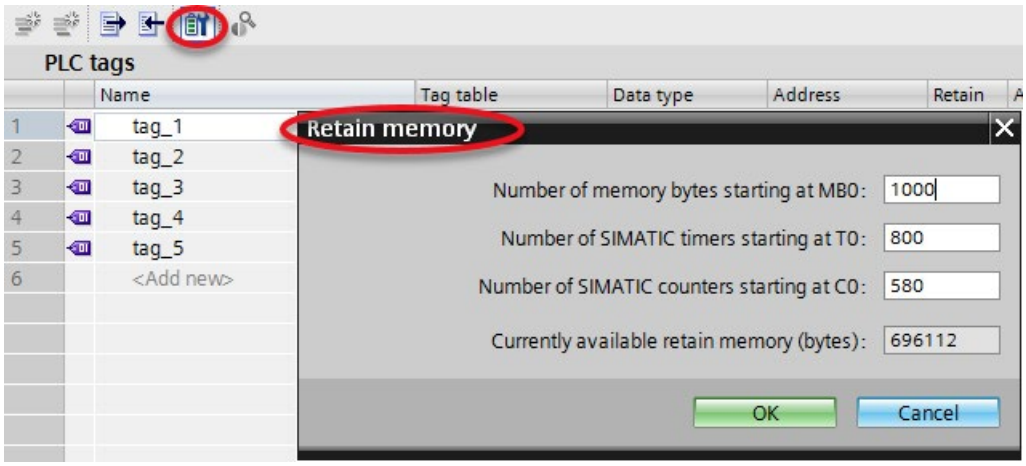

Figure 2-7 Definition of the number of retentive bit memories, timers and counters (beginning at 0, continuing without gaps) using the "Retain" button

Reference

You can find additional information on setting the retentivity in the STEP 7 online help.

2.4 Summary of retentive behavior

2.4.1 Retentive behavior of the memory objects

This section gives an overview of the retentive behavior of the memory objects of the CPUs.

In addition to the retentive memory areas described, there are other objects with retentive characteristics, for example, the diagnostics buffer. These objects do not occupy any storage space in the retentive memory.

The following table shows the retentive behavior of the memory objects in the case of the following:

- STOP → STARTUP
- POWER ON → STARTUP
- POWER ON → STOP
- "Memory reset"
- "Reset to factory settings"

Table 2- 1 Retentive behavior of the memory objects

Memory object	STOP → STARTUP POWER ON → STARTUP POWER ON → STOP	Memory reset	Reset to factory settings
Actual values of the data blocks, instance data blocks	Can be set in the properties of the DB in STEP 7 [1]	-	-
Bit memories, timers and counters - configured as retentive	x	-	-
Bit memories, timers and counters - configured as non-retentive	-	-	-
Retentive tags of technology objects (e.g. calibration values of absolute encoders) [2]	x	x	-
Diagnostics buffer entries	x	x	-
Operating hours counter	x	x	-
Clock time	x	x	-
Redundancy ID [3]	x	x	-
x = content is retained – = object is initialized			

[1] For DBs with optimized access the retentive behavior is configurable for specific tags.

[2] Not for the CPUs of the redundant system S7-1500R/H

[3] Only for the CPUs of the redundant system S7-1500R/H

Diagnostics buffer

The 500 most recent entries in the diagnostics buffer are retained after power failure and are not affected by a memory reset. The diagnostics buffer can be cleared only by a reset to factory settings. The entries in the diagnostics buffer do not occupy any memory space in the retentive memory.

Operating hours counter

The operating hours counters of the CPUs are retentive and are not affected by a memory reset. By resetting to factory settings, the operating hours counters are set to zero.

Clock time

The clock time of the CPUs is retentive and is not affected by a memory reset. A reset to factory settings resets the system time to 01.01.2012 00:00:00.

2.5 Memory behavior when loading software changes

Introduction

You can download software changes in STOP and RUN without affecting the actual values of previously loaded tags.

You load changes to the software in STEP 7 (in the project tree and with selected PLC station) under "Download to device > Software (only changes)".

Impact of software changes on PLC tags

You can load the following software changes without affecting the actual values of PLC tags that have already been loaded:

- Name change
- Comment change
- Addition of new tags
- Deletion of tags
- Change of retentivity settings for Retentive memory areas (Page 21)

The actual values are affected by loading the following software changes:

- Data type change
- Change to addresses

Memory reserve of global DBs and instance DBs

Each function block or data block with the "Optimized block access" attribute activated contains, by default, a memory reserve which you can use for subsequent interface changes. The memory reserve is initially not used. When you have compiled and loaded the block, and then observe that you want to reload interface changes, activate the memory reserve. All tags that you subsequently declare will be placed in the memory reserve. During the next load, the new tags are then initialized to their start values. Tags which have already been loaded are not reinitialized.

The setting of the memory reserve can be found in STEP 7 under the data block properties in the "Download without reinitialization" category.

Impacts of software changes on data blocks without memory reserve

If you are not using memory reserve, you can load the following software changes without this reinitializing the actual values of DB tags that have already been loaded:

- Start value change
- Comment change

Impacts of software changes on data blocks with memory reserve

If you are using the memory reserve for data blocks ("Optimized block access" attribute and "Enable download without reinitialization for retentive tags" button selected), you can load the following software changes. The actual values of previously downloaded DB tags are not reinitialized by this.

- Start value change
- Comment change
- Addition of new tags

If the button "Enable download without reinitialization for retentive tags" is deactivated, then all actual values of the data block are reinitialized on the next loading of the following software changes:

- Name change
- Data type change
- Retentivity change
- Deletion of tags
- Changes to the memory reserve settings
- Addition of new tags

Reference

You can find additional information on setting and activating the memory reserve and on downloading block changes in the STEP 7 online help under "Programming a PLC > Compiling and downloading PLC programs > Downloading blocks for S7-1200/1500 > Loading block extensions without reinitialization".

2.6 Memory requirements for downloading software changes

Memory requirements in RUN state

For the consistent and atomic execution of the complete download operation, the CPU requires adequate free memory space in the work memory and on the SIMATIC memory card. The files affected by loading the software changes to the CPU are only deleted after the new files have been created. This SIMATIC memory card therefore requires free memory space corresponding approximately to the space required for all program objects to be loaded on the memory card.

If this amount of memory is not available on your SIMATIC memory card, the following message is displayed in STEP 7 during the download operation to the CPU: "There is insufficient memory on the memory card for this amount of data."

In order to still enable the loading of changes to the CPU in such a case, we recommend one or more of the following options:

- Download in RUN state
  - Delete any files no longer required (e.g. CSV files, panel backups, etc.) on the memory card using the Web server.
  - Preferably, you should download extensive changes in RUN state in multiple steps or perform the download after each change step.

Note

RUN-Redundant Loading to the CPUs of the S7-1500R/H redundant system in the RUN-Redundant system state

Before a write function is performed, the system **does not** check whether there is enough free space on the SIMATIC memory cards of the CPUs for the function. Writing functions are online functions with the PG/PC, for example loading/deleting a block, test functions, loading a modified user program in the RUN-Redundant system state.

If insufficient memory is available on the SIMATIC memory card of a CPU:

- The CPU affected switches to STOP mode.
  - If insufficient memory is available on the SIMATIC memory card of the selected CPU (to which you wish to load), that CPU switches to STOP mode. The other CPU switches to RUN with the previous user program (redundant system → RUN-Solo system state).
  - If insufficient memory is available on the other CPU, that CPU switches to STOP mode. The selected CPU (to which you have loaded) switches to RUN with the modified user program (redundant system → RUN-Solo system state).
- The ERROR LED flashes red (temporary error)
- A corresponding error message is entered in the diagnostics buffer

If after that there is not enough free memory on the SIMATIC memory card of the other CPU either, this CPU remains in RUN. The CPU then responds like a standard CPU.

- Download in STOP state
  - If downloading in several steps is not possible, load extensive changes in STOP state.
- Use a larger memory card
  - In order to perform extensive downloads in RUN state of the CPU in the future, use a larger memory card. A description of how to change the memory card can be found in the section "Changing the memory card without loss of retentive data".

Impact of minor program changes on the load procedure

Under the objects of a program, there are dependencies, e.g.

- Of code blocks to called code blocks
- Of code blocks to data blocks
- Of data blocks to data types (PLC data types, FB types)

This means that the load procedure for a minor change may be very time-consuming if the change affects a large number of dependent objects.

Example:

A STEP 7 program contains an organization block (OB), 20 functions (FC) and a data block (DB). The OB calls the 20 FCs. All the FCs access the DB. If you change the program code in one of the FCs, the following load procedure only contains the changed FC. If you change the data type of a tag in the DB, however, the following load procedure then contains all the FCs and the DB.

The following figure shows the objects in the load procedure in a preview.

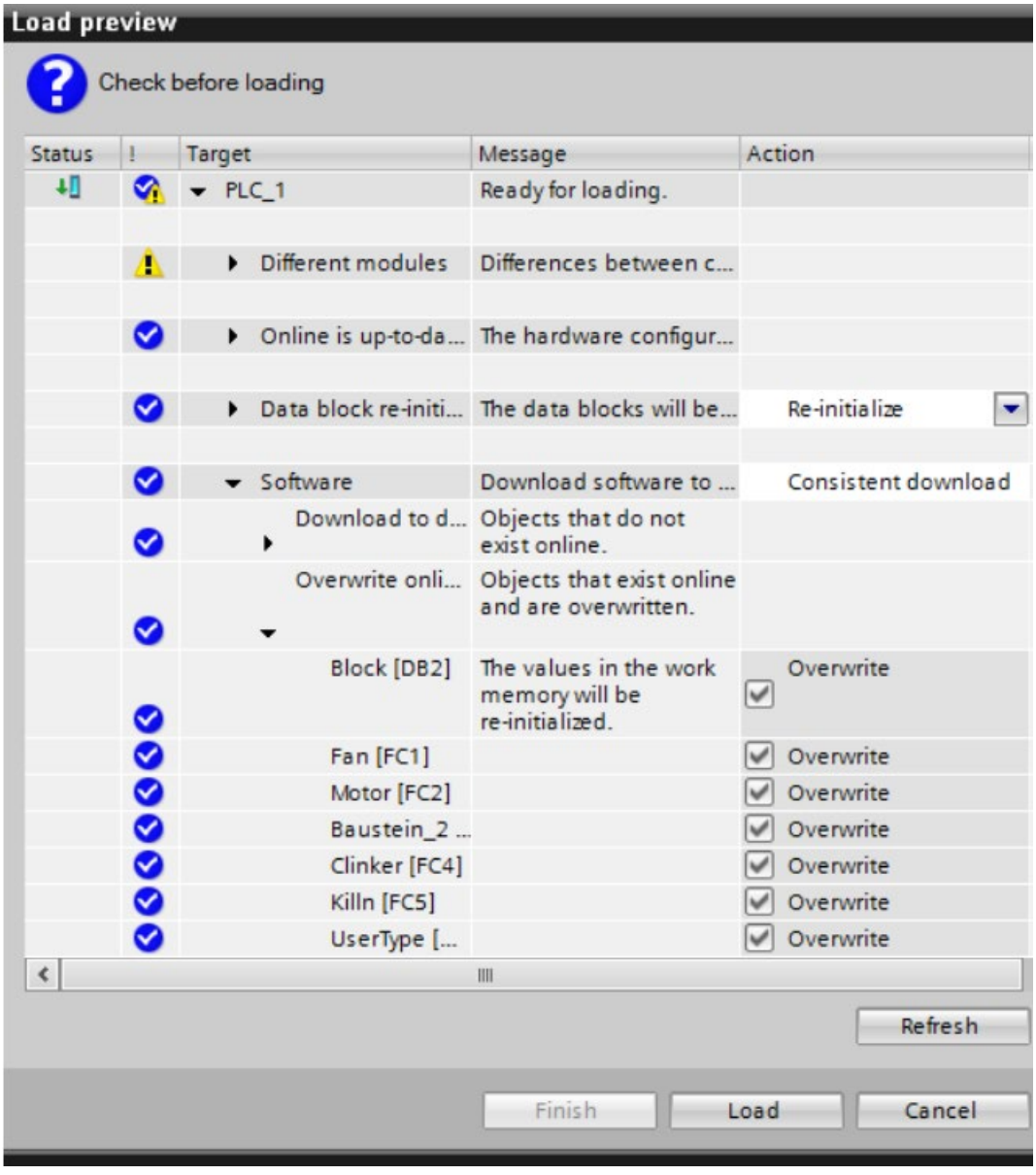

Figure 2-8 Preview for loading

To find the interdependencies of the individual objects, double-click "Program info" in the project tree. Change to the "Dependency structure" tab in the "Program info" dialog.

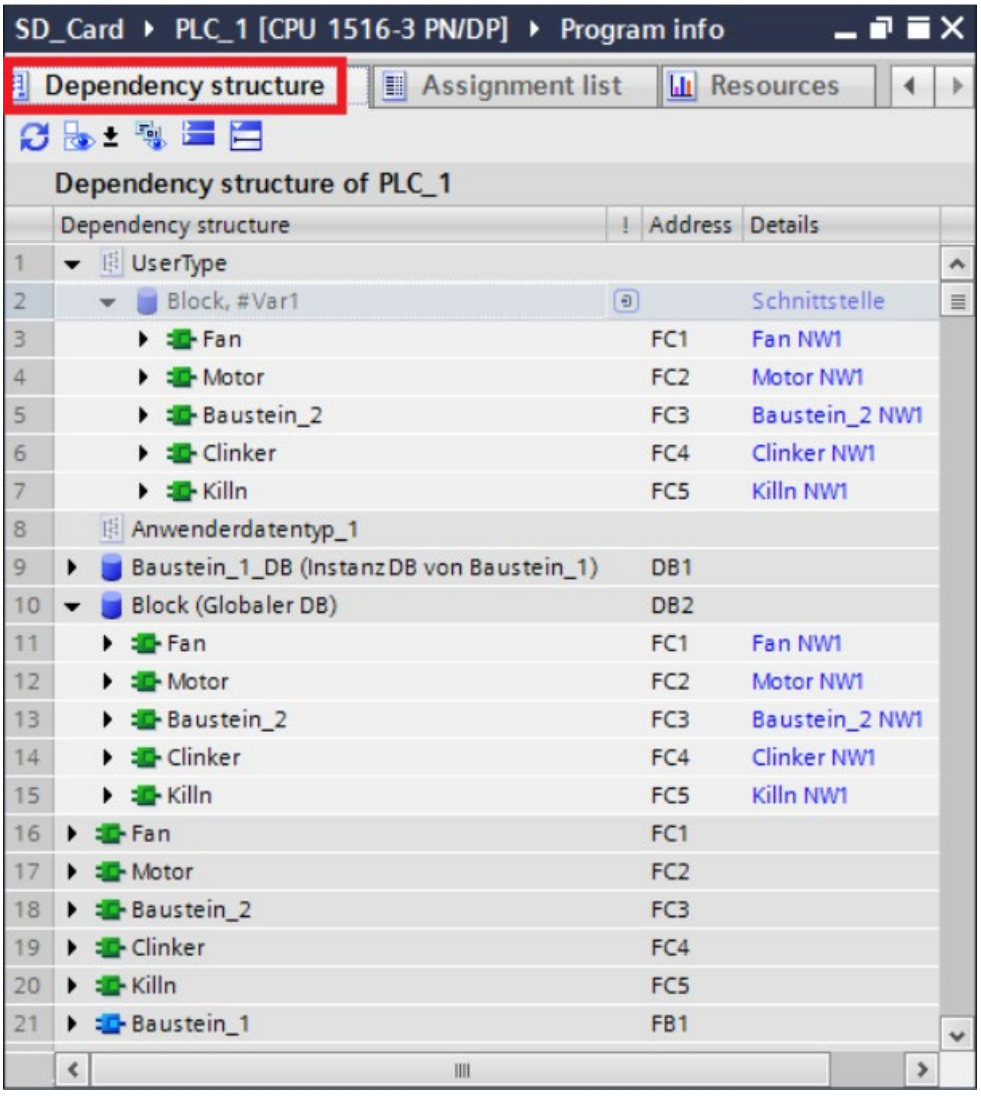

	Dependency structure	!	Address	Details
1	UserType			
2	Block, #Var1			Schnittstelle
3	Fan		FC1	Fan NW1
4	Motor		FC2	Motor NW1
5	Baustein_2		FC3	Baustein_2 NW1
6	Clinker		FC4	Clinker NW1
7	Killn		FC5	Killn NW1
8	Anwenderdatentyp_1			
9	Baustein_1_DB (Instanz DB von Baustein_1)		DB1	
10	Block (Globaler DB)		DB2	
11	Fan		FC1	Fan NW1
12	Motor		FC2	Motor NW1
13	Baustein_2		FC3	Baustein_2 NW1
14	Clinker		FC4	Clinker NW1
15	Killn		FC5	Killn NW1
16	Fan		FC1	
17	Motor		FC2	
18	Baustein_2		FC3	
19	Clinker		FC4	
20	Killn		FC5	
21	Baustein_1		FB1	

Figure 2-9 Dependency structure

Memory requirements in STOP state

Even when downloading in STOP state, a certain amount of reserve memory is required, because your CPU needs sufficient free memory on the memory card for consistent downloading of individual data blocks. The files affected by loading the data blocks are only deleted after the new files have been created. Therefore, for the modifications you must have available at least the memory requirement of the largest data block.

If insufficient reserve memory is available on your SIMATIC memory card when loading in STOP state, the following message is displayed in STEP 7 during the download to the CPU: "There is insufficient memory on the memory card for this amount of data."

In order to still enable the loading of changes to the CPU in such a case, we recommend one or more of the following options:

- Delete any files no longer required (e.g. CSV files, panel backups, etc.) from the memory card using the Web server.
- Use a larger memory card. A description of how to change the memory card can be found in the section "Changing the memory card without loss of retentive data".

Note

Please note that retentive data and possibly also project data is lost with the following three options. Therefore only use the following options described if the two options described previously did not lead to the desired result.

- In STEP 7, download your program to the CPU with menu command "Online > Download and reset PLC program".
- Remove the memory card from the slot of the CPU. Delete the content that is longer needed from the memory card with your programming device.
- Delete the entire contents, e.g. by formatting the memory card. A description of how to format the memory card can be found in the section "Formatting a SIMATIC memory card".

Note also the following FAQs:

- "When downloading to the S7-1500 CPU, why is the message "There is insufficient memory on the memory card for this amount of data" displayed although there is still enough memory available?" on the Internet (https://support.industry.siemens.com/cs/ww/en/view/107108015).
- "Why can you not load the project data into the load memory of the S7-1500 CPU when the number of alarms and messages is too large?" on the Internet (https://support.industry.siemens.com/cs/ww/en/view/109751485).

Memory usage and application examples 3

3.1 Memory usage for data blocks

Processing sequence

- **Storing data records in the load memory**

  STEP 7 stores individual data records in a non-runtime-relevant DB and downloads the DB to the CPU. In order to configure a non-runtime-relevant DB, you must enable the "Only store in load memory" block attribute. The data records then only use memory space in the load memory and not in the work memory.

- **Working with data record data in the user program**

  You use the "READ_DBL" instruction to copy a data record from the DB in the load memory to a runtime-relevant DB in the work memory. As a result, the work memory only has to accommodate the data for the data record currently required. The user program can now access the data of the current data record.

- **Saving back changed recipe data records**

  The "WRIT_DBL" instruction writes new or changed data records from the user program back to the load memory. The data written to the load memory is portable and not affected by a memory reset. To back up changed data records, you need to upload the data blocks and back them up on the PG/PC.
  You can find information on uploading data blocks in the STEP 7 online help under "Programming a PLC>Compiling and downloading blocks>Downloading blocks for S7-1200/1500>Uploading blocks from a memory card".

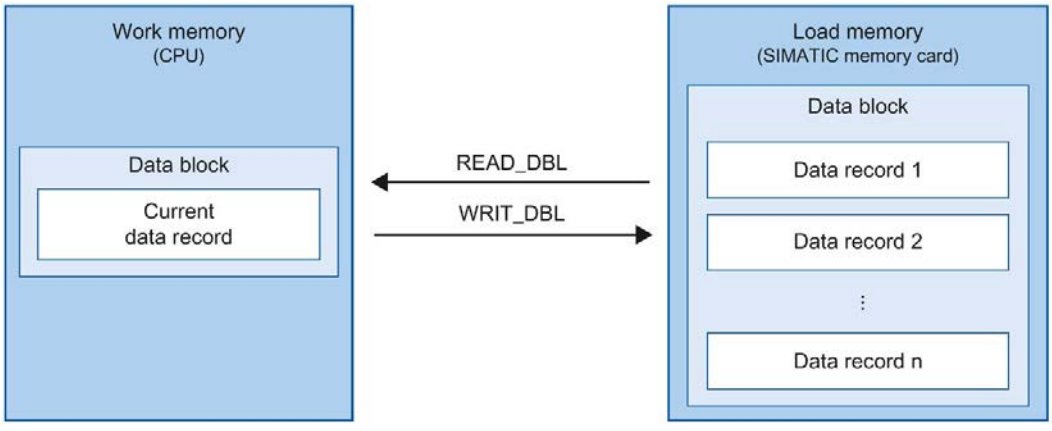

Figure 3-1 Processing sequence with "READ_DBL" and "WRIT_DBL"

Note

Redundant system S7-1500R/H

The data block functions are not supported by the CPUs of the S7-1500R/H redundant system. You therefore cannot use non-runtime-relevant DBs.

Please also note the FAQ "How do you configure data blocks with the "Only store in load memory" attribute for the S7-1200/S7-1500?" on the Internet (https://support.industry.siemens.com/cs/ww/en/view/53034113).

Note

Instructions that access the SIMATIC memory card have a lower performance than instructions that access the work memory. The associated blocks (e.g. READ_DBL and WRIT_DBL) are therefore asynchronous. Their execution extends if necessary over several cycles.

NOTICE

Service life of the SIMATIC memory card

Only a limited number of delete and write operations are possible on the SIMATIC memory card. After expiration of the service life, there is a risk that the card can no longer be used.

You can find additional information on the service life of the SIMATIC memory card in Service life of the SIMATIC memory card (Page 63).

Note

Memory size of the SIMATIC memory card

Use a SIMATIC memory card with sufficient memory for your particular purposes.

3.2 Memory usage for recipes

Introduction

A recipe is a collection of parameter sets with the same structure. These recipe data records are located in a data block in the load memory, and do not occupy any storage space in the work memory. You have the option of reading individual recipe data records to a data block in the work memory and accessing the data in the user program. You can write a recipe data record that has been changed in the user program back to the recipe data block.

Recipes contain, for example, the related data of a particular batch in production. You can export recipe data records of a recipe DB as a csv file. A web browser can read data via the web server of the CPU, even when the CPU is in STOP state. You can also directly access the data of the SIMATIC memory card using a card reader on the programming device.

Note

Redundant system S7-1500R/H

Recipes are not supported by the CPUs of the S7-1500R/H redundant system.

Import and export of recipe data

You have the option of exporting recipe data records of a recipe DB as a CSV file, and importing them from a CSV file into a DB. The CSV file is located in the "\recipes" directory on the SIMATIC memory card. You can open and process this file further with a spreadsheet program such as Microsoft Excel.

You can easily work with CSV files on the SIMATIC memory card via the web server of the CPU (e.g. rename, save to hard disk, delete, etc.). To avoid undesired manipulation, set access rights for the web server in STEP 7. You can find additional information on the Web server in the Web Server (http://support.automation.siemens.com/WW/view/en/59193560) function manual.

- **Export of recipe data**

  The "RecipeExport" instruction exports all the recipe data records of a recipe DB from the load memory to a CSV file on the SIMATIC memory card. The CSV file has the same name as the recipe of the DB. The CSV file is stored in the "\recipes" directory on the SIMATIC memory card.

  The "RecipeExport" instruction only exports valid and unencrypted recipe data records.

- **Import of recipe data**

  The "RecipeImport" instruction imports all recipe data records from the CSV file into the recipe DB in the load memory. The name of the CSV file must match the name of the recipe DB.

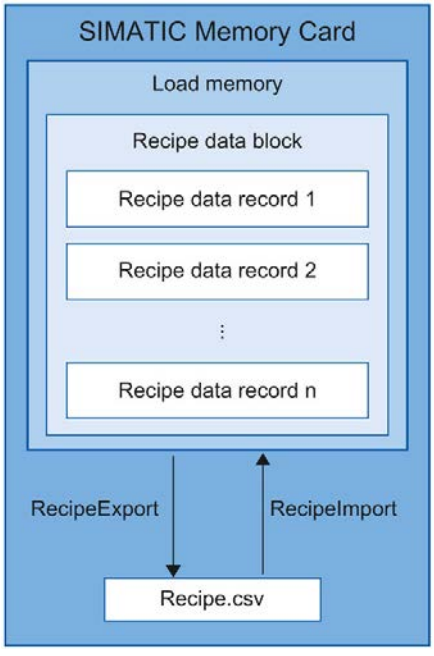

Figure 3-2 Import and export of recipe data

Note

Asynchronous instructions

Please note that the "RecipeExport" and "RecipeImport" instructions are asynchronous instructions.

In contrast to synchronous instructions, this means the execution of an asynchronous instruction can extend over multiple calls before execution is completed. The CPU processes asynchronous instructions in parallel with the cyclic user program.

A CPU can process several asynchronous instruction jobs in parallel. The CPU can process a maximum of 10 jobs of the instructions listed in parallel.

You can find additional information about asynchronous instructions in the following manuals:

- System manual S7-1500, ET 200MP (http://support.automation.siemens.com/WW/view/en/59191792)
- System manual Redundant System S7-1500R/H (https://support.industry.siemens.com/cs/ww/en/view/109754833)
- SIMATIC Drive Controller (https://support.industry.siemens.com/cs/ww/en/view/109766665) system manual
- System manual ET 200SP Distributed I/O System (http://support.automation.siemens.com/WW/view/en/58649293)
- Operating instructions ET 200pro CPU 1513pro-2 PN (https://support.industry.siemens.com/cs/ww/en/view/109769507) and ET 200pro CPU 1516pro-2 PN (https://support.industry.siemens.com/cs/ww/en/view/109482416)

Additional information

You can find additional information on the instructions for recipes in the STEP 7 online help under "Programming a PLC > Instructions > Instructions (S7-1200, S7-1500) > Extended instructions > Recipes and data logging > Recipe functions".

Note also the application example "Using recipe functions for persistent data with SIMATIC S7-1200 and S7 1500" on the Internet (https://support.industry.siemens.com/cs/ww/en/view/109479727).

3.3 Memory usage for data logging

3.3.1 Overview of data logging

With data logging, you save selected process values from the user program in a file, the data log. The data logs are saved on the SIMATIC memory card in csv format and stored in the "\datalogs" directory. A web browser can read data via the web server of the CPU, even when the CPU is in STOP state. You can also directly access the data of the SIMATIC memory card using a card reader on the programming device.

NOTICE
Service life of the SIMATIC memory card Only a limited number of delete and write operations are possible on the SIMATIC memory card. Cyclic write operations to the SIMATIC memory card by the user program reduce the service life of the SIMATIC memory card. After expiration of the service life, there is a risk that the card can no longer be used. Therefore, use a SIMATIC memory card with sufficient memory for your particular purposes. Information on the service life of the SIMATIC memory card can be found in the section Service life of the SIMATIC memory card (Page 63).

Note

Memory size of the SIMATIC memory card

Use a SIMATIC memory card with sufficient memory for your particular purposes.

The "data logging" instructions can be used in your program to create, open, write, close or delete data logs. You decide which tags are logged by creating a data block that defines a single data log data record. Your data block is used as temporary storage for a new data log data record. New current values for the tags must be transferred into the data block during runtime by means of user program instructions. If all tag values have been updated, you can execute the "DataLogWrite" instruction, in order to transfer data from the data block into the data log.

You manage your data logs with the integrated web server. You can download data logs from the standard "File Browser" website. After you have transferred a data log to your PC, you can analyze the data using popular spreadsheet programs, e.g. Microsoft Excel.

Note

Redundant system S7-1500R/H

Data logging is not supported by the CPUs of the redundant system S7-1500R/H.

The following figure shows the basic sequence for creating a data log:

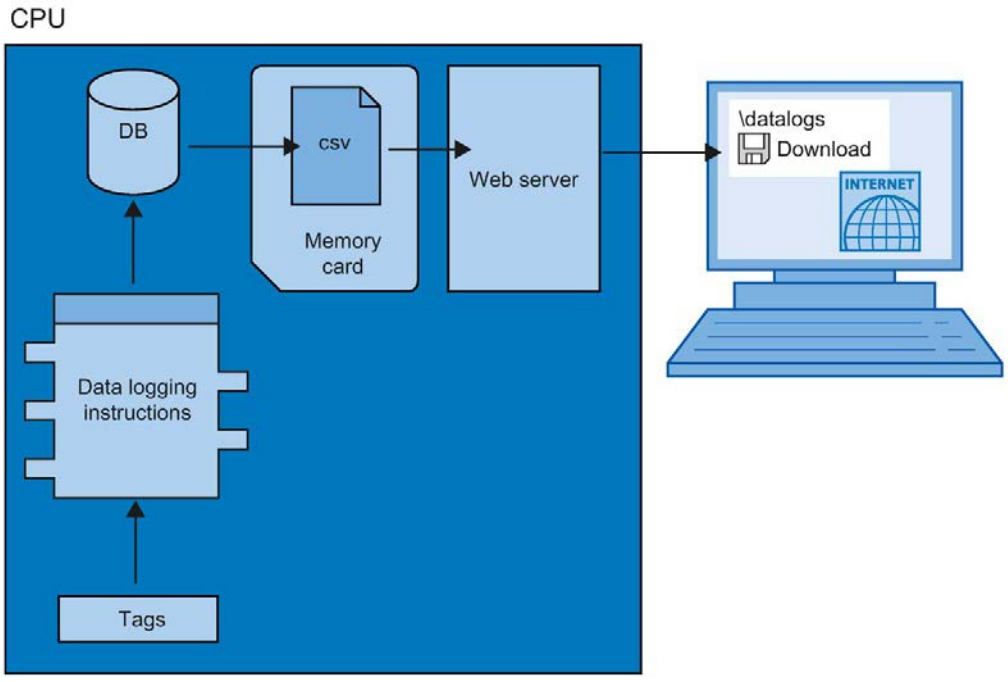

Figure 3-3 Basic sequence during the creation of a data log

3.3.2 Data structure of the data logs

Introduction

You use the "DataLogCreate" instruction to create a data log in STEP 7. The NAME parameter assigns the data log a name. The DATA and HEADER parameters specify the data type of all data elements in a data log data record, and the header line of the data log. The RECORDS parameter indicates the maximum number of records in the data log.

NAME parameter for the "DataLogCreate" instruction

You use the NAME parameter to assign a name for the data log. This is the name under which the data log is saved in the "\datalogs" directory of the SIMATIC memory card.

DATA parameter for the "DataLogCreate" instruction

The DATA block parameter specifies the structure of the data log's records. The columns and data types of a data record in the data log are determined by the elements of the structure declaration or array declaration of this data buffer. Each element of a structure or array corresponds to a column in a row in the data log.

HEADER parameter for the "DataLogCreate" instruction

Using the HEADER block parameter, you can assign a heading in the header row to each column in the data log.

RECORDS parameter for the "DataLogCreate" instruction

The RECORDS parameter specifies the maximum number of records that can be stored in a data log. When the specified maximum number of data records in a data log is reached, the next write operation overwrites the oldest data record.

3.3.3 Instructions for data logging

Overview

The following table gives an overview of the instructions for data logging. You will find the data logging instructions in "STEP 7" in the "Instructions" task card, under "Extended instructions > Recipe and data logging > Data Logging".

Table 3- 1 Overview of the data logging instructions

Name of the instruction	Description
"DataLogCreate": Create data log	With the "DataLogCreate" instruction you create a data log. The data log is saved on the SIMATIC memory card in the "\datalogs" directory. You can use the data logging instructions to save process data. The amount of data in a data log depends on the available memory space on the SIMATIC memory card.
"DataLogOpen": Open data log	With the "DataLogOpen" instruction, you open an existing data log on the SIMATIC memory card. A data log must be open before you can write new data records to it. The data log opens automatically when the "DataLogCreate" and "DataLogNewFile" instructions are executed. A maximum of 10 data logs can be open at any one time. The data log to be opened can be selected using the ID or name of the data log. The maximum file size of data logs is 2 GB. A maximum number of 1000 data log files is possible with firmware version V2.0.
"DataLogWrite": Write data log	With the "DataLogWrite" instruction you write a data record into an existing data log. Use the ID parameter to select the data log to which the data record is to be written. To write a new data record, the data log must be open.
"DataLogClose": Close data log	With the "DataLogClose" instruction, you close an open data log. You select the data log using the ID parameter. When the CPU changes to STOP state, all open data logs are closed.
"DataLogNewFile": Data log in new file	With the "DataLogNewFile" instruction you create a new data log. The new data log has the same properties as an already existing data log. By creating a new data log, you prevent cyclic overwriting of existing data records. When the instruction is called it creates a new data log on the SIMATIC memory card using the name defined in the NAME parameter. You use the ID parameter to specify the ID of the old data log whose properties you want to apply to the new data log. The ID parameter then outputs the ID of the new data log.
"DataLogClear": Empty data log	The "DataLogClear" instruction deletes all data records in an existing data log. The header of the data log is not deleted (see description of parameter Data structure of the data logs (Page 39)).
"DataLogDelete": Delete data log	The "DataLogDelete" instruction is used to delete a data log from the SIMATIC memory card. Select the data log to be deleted using the NAME and ID parameters.

Note

Asynchronous instructions

Note that the instructions in the table are asynchronous instructions.

In contrast to synchronous instructions, this means the execution of an asynchronous instruction can extend over multiple calls before execution is completed. The CPU processes asynchronous instructions in parallel with the cyclic user program.

A CPU can process several asynchronous instruction jobs in parallel. The CPU can process a maximum of 10 jobs of the instructions listed in the table in parallel.

You can find additional information about asynchronous instructions in the following manuals:

- System manual S7-1500, ET 200MP (http://support.automation.siemens.com/WW/view/en/59191792)
- System manual ET 200SP Distributed I/O System (https://support.industry.siemens.com/cs/ww/en/view/58649293)
- SIMATIC Drive Controller (https://support.industry.siemens.com/cs/ww/en/view/109766665) system manual
- Operating instructions ET 200pro CPU 1513pro-2 PN (https://support.industry.siemens.com/cs/ww/en/view/109769507) and ET 200pro CPU 1516pro-2 PN (https://support.industry.siemens.com/cs/ww/en/view/109482416)

3.3.4 Example program for data logging

This example program shows the storing of process values for counter content, temperature, and pressure in a data log.

The example shows the basic functioning of the instructions for data logs. The complete program logic is not shown.

Note

General use of data logs

- Data logs are automatically opened after execution of the "DataLogCreate" and "DataLogNewFile" instructions.
- Data logs are automatically closed at a change of the CPU from RUN to STOP or a restart of the CPU.
- A data log must be open so that data can be written to the data log with the "DataLogWrite" instruction.
- A maximum of 10 data logs can be open at any one time, even when more than 10 data logs exist.

Tags of the data block

The following figure shows the tags of the "My_Datalog_Vars" data block. These tags are used by the "Data logging" instructions "DataLogCreate" and "DataLogNewFile". The "MyDataLogName" and "MyNEWDataLogName" tags are called in the NAME block parameter, and give the data logs a name. The "MyData" structure is called in the DATA block parameter and specifies the structure of the csv file. The three MyData tags temporarily store new values. The tag values at these DB addresses are transferred to a data log using the "DataLogWrite" instruction. The "MyDataLogHeaders" tag is called in the HEADER block parameter and specifies a header for the data log.

My_Datalog_Vars

	Name	Data type	Start value
1	Static		
2	MyNEWDataLogName	String	'MyNEWDataLog'
3	MyDataLogName	String	'MyDataLog'
4	MyDataLogID	DWord	0
5	MyDataLogHeaders	String	'Count,Temperature,Pressure'
6	MyData	Struct	
7	MyCount	Int	0
8	MyTemperature	Real	0.0
9	MyPressure	Real	0.0

Figure 3-4 Declaration table with the data block's tags

Network 1

A rising edge at REQ starts the creation of the data log.

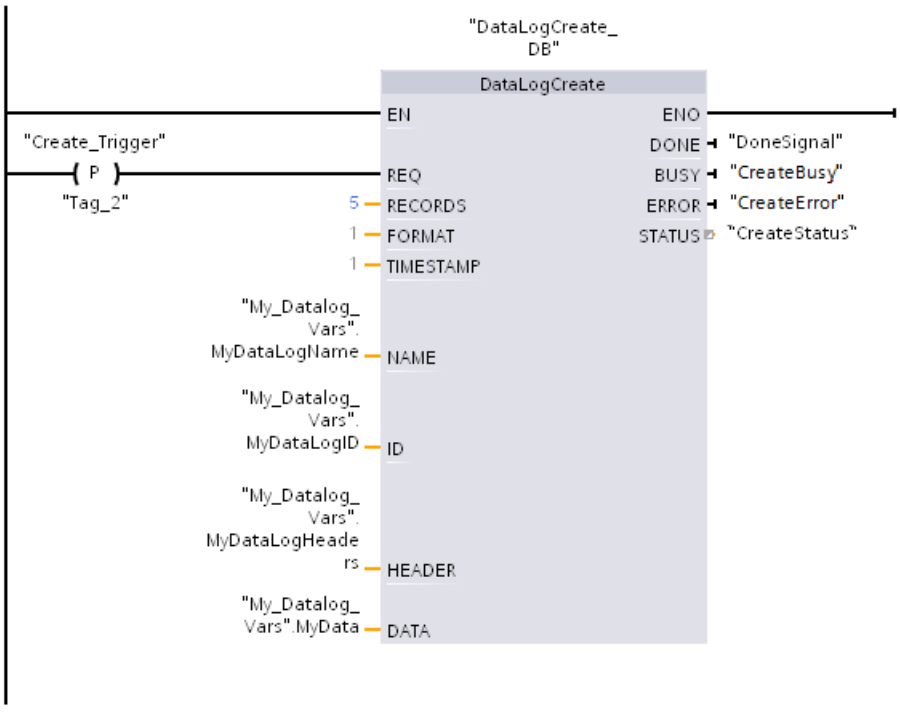

Figure 3-5 Network 1

Network 2

Detect the output DONE of "DataLogCreate", because after the execution of "DataLogCreate" it is only set to 1 for one cycle.

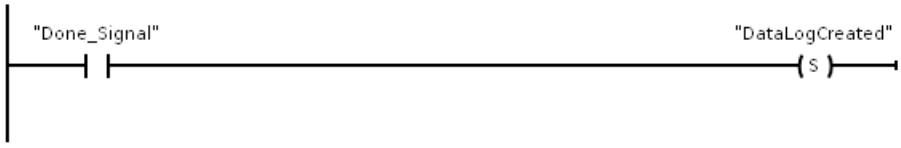

Figure 3-6 Network 2

Network 3

A rising edge triggers the point in time at which new process values are stored in the MyData structure.

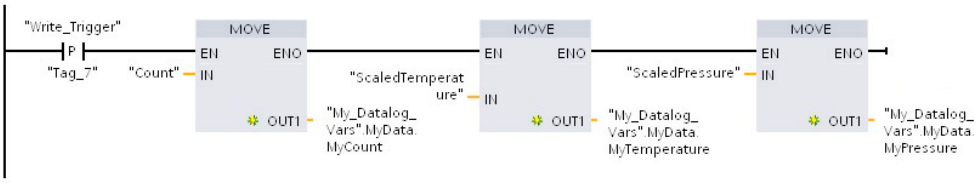

Figure 3-7 Network 3

Network 4

The state of the input EN is based on the point in time at which the execution of "DataLogCreate" was completed. One execution of "DataLogCreate" extends over multiple cycles, and must be completed before a write operation is executed. The rising edge at input REQ is the event that triggers an activated write operation.

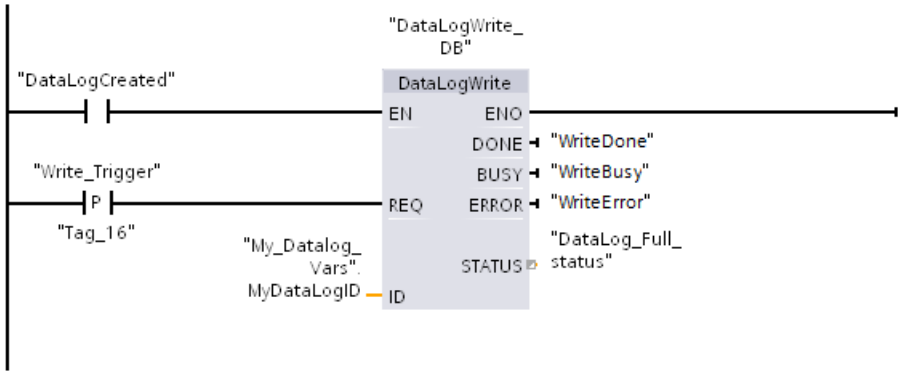

Figure 3-8 Network 4

Network 5

Close the data log after the last data record has been written. After execution of the "DataLogWrite" instruction, which writes the last data record, the STATUS output is set to "1".

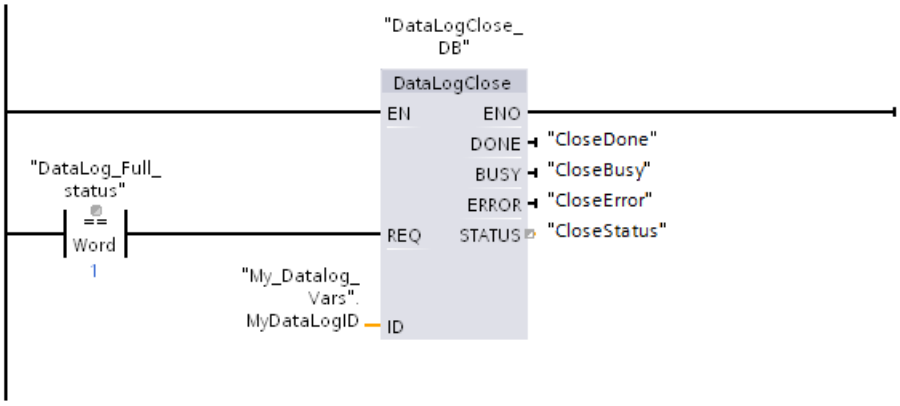

Figure 3-9 Network 5

Network 6

A rising edge at the input REQ of the instruction "DataLogOpen" simulates that the user presses a button on an HMI device, which opens a data log. If you open a data log in which all records are occupied by process data, then the next execution of the "DataLogWrite" instruction overwrites the oldest data record. You can however also preserve the old data log, and create a new data log instead. This is shown in network 7.

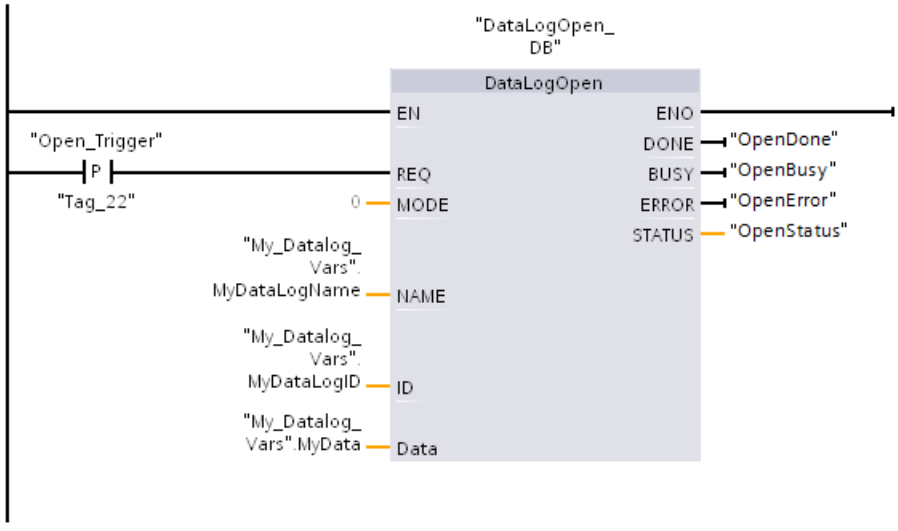

Figure 3-10 Network 6

Network 7

The ID parameter is an IN/OUT type. First you indicate the ID value of the existing data log whose structure you want to copy. After the "DataLogNewFile" instruction has been executed, a new and unique ID value for the new data log is written back into the address of the ID reference. The required detection DONE bit = TRUE is not shown. An example for the logic of the DONE bit can be found in networks 1, 2 and 4.

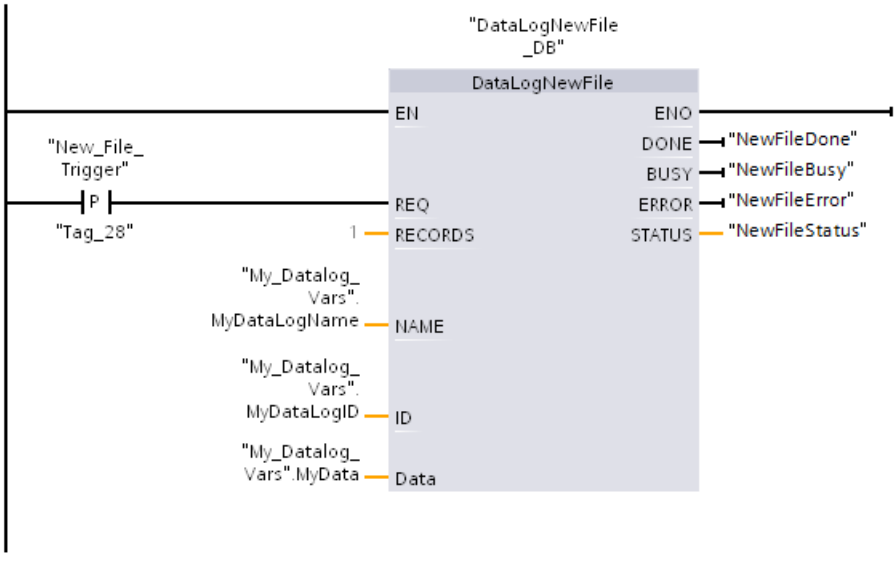

Figure 3-11 Network 7

The data logs created in the example program can be found on the CPU Web server's standard "File browser" Web page in the "\datalogs" folder.

The following figure shows the standard Web page of the Web server using the example of the CPU 1516-3 PN/DP.

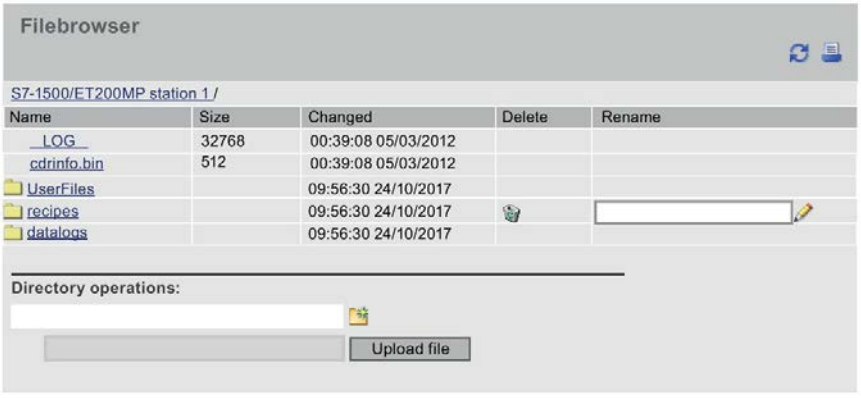

Figure 3-12 Standard "File browser" web page of the Web server

In the file browser, you can download the data logs created in the example program. It is not possible to delete or rename the data logs in the Web server. To delete a data log you either use the "DataLogDelete" instruction or you format the SIMATIC memory card.

On the DataLogs web page, you can have all the data logs that you created displayed. You can call and empty the relevant data log file by clicking the icon .

Note

Manipulation of the data logs using a card reader

Do not delete or change the data logs using a card reader on the PG/PC. You can copy the data logs on the SIMATIC memory card, however, using a card reader on the PG/PC.

The recommended medium for viewing, downloading (copying) and deleting data logs is the file browser of the web server, however. Direct file access via Windows Explorer brings with it the risk of inadvertent deletion of modification of data logs or system files. This can cause the files to be damaged or the SIMATIC memory card to become unusable.

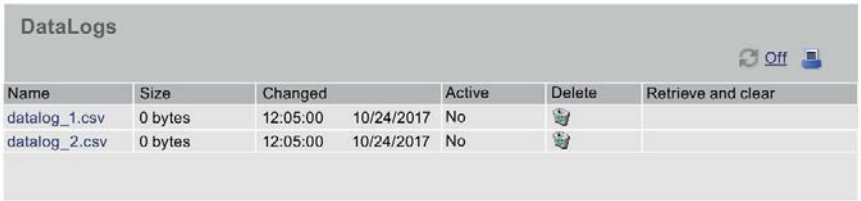

Figure 3-13 Example - Data logs in the folder "\datalogs" of the file browser

Table 3- 2 Downloaded examples of data logs displayed in Microsoft Excel

Two data records written in a data log which contains a maximum of five data records.

	A	B	C	D	E	F
1	Record	Date	Time	Count	Temperature	Pressure
2	1	1/3/2012	10:16:47	5	5,00E+00	5,00E+00
3	2	1/3/2012	10:16:48	5	5,00E+00	5,00E+00
4	//END					
5						

Five data records written in a data log which contains a maximum of five data records.

	A	B	C	D	E	F
1	Record	Date	Time	Count	Temperature	Pressure
2	1	1/3/2012	10:08:23	1	9,86E+01	3,52E+01
3	2	1/3/2012	10:08:39	2	1,00E+02	3,73E+01
4	3	1/3/2012	10:08:54	3	9,99E+01	3,68E+01
5	4	1/3/2012	10:09:11	4	9,95E+01	3,64E+01
6	5	1/3/2012	10:09:28	5	9,92E+01	3,74E+01
7						

After another data record has been written, the 6th write operation overwrites the oldest data record (record 1) with data record 6. Another write operation overwrites data record 2 with data record 7, etc.

	A	B	C	D	E	F
1	Record	Date	Time	Count	Temperature	Pressure
2	6	1/3/2012	10:09:42	6	9,87E+01	3,58E+01
3	2	1/3/2012	10:08:39	2	1,00E+02	3,73E+01
4	3	1/3/2012	10:08:54	3	9,99E+01	3,68E+01
5	4	1/3/2012	10:09:11	4	9,95E+01	3,64E+01
6	5	1/3/2012	10:09:28	5	9,92E+01	3,74E+01
7						

3.3.5 Calculation of the data log size

The maximum memory size is allocated when you create the data log. Besides ensuring enough memory space for all the data records, you must take into account the memory space of the following elements for the memory allocation:

- Data log header (if used)
- Time stamp header (if used)
- Data record index header
- Minimum block size

The formula below represents a method to help you determine the estimated size of your data log. Make sure that you observe the rule for the maximum size.

Data bytes of the data log = ((data bytes in a data record + time stamp bytes + 12 bytes) * number of data records)

Header

Header bytes of the data log = header character bytes + 2 bytes

Header character bytes

- No data header and no time stamp = 7 bytes
- No data header and time stamp (with time stamp header) = 21 bytes
- Data header and no time stamp = Number of character bytes in all column headers including separating commas
- Data header and time stamp (with time stamp header) = Number of character bytes in all column headers including separating commas + 21 bytes

Data

Data bytes of the data log = ((data bytes in a data record + time stamp bytes + 12 bytes) * number of data records)

Data bytes in a data record

The DATA parameter of the "DataLogCreate" instruction points to a structure. The structure assigns the number of data fields and the data type of each data field for a data log data record.

Multiply the number of the respective data type with the number of bytes required for this data type. Repeat this step for each data type in a data record. Add all the data bytes to obtain the sum of all the data elements in a data record.

Size of the individual data types

The data in data logs is saved as character bytes in csv format (comma separated values). The table below shows the number of bytes that are required to save each data type.

Data type	Bytes
Any	10
Bool	1
Byte	4
Char	1
Date	10
DInt	12
DTL	31
DWORD	11
Int	7
LDT	31
LReal	25
Real	16
Sint	5

Data type	Bytes
String	**Example 1:** MyString String[10] The maximum character string size is specified with 10 characters. • Text character + automatic filling with spaces = 10 bytes • Quotation marks at the start and end + comma character = 3 bytes 10 + 3 = 13 bytes total **Example 2:** Mystring2 String If no size is specified in square brackets, 254 bytes are assigned by default. • Text character + automatic filling with spaces = 254 bytes • Quotation marks at the start and end + comma character = 3 bytes 254 + 3 = 257 bytes total
Time	14
Tod	12
UDInt	12
UInt	7
USInt	5
WChar	1
Word	6

Number of data records in a data log

The RECORDS parameter of the "DataLogCreate" instruction specifies the maximum number of data records that can be stored in a data log.

Time stamp bytes in a data record

- No time stamp = 0 bytes
- Time stamp = 22 bytes

Example for size of a CSV file

The figure "Open CSV file" shows a CSV file opened in a spreadsheet program with five written data records in one data log.

The figure "Size of the header and the data records" shows the size of the header used in the CSV file and the size of the individual data records on the SIMATIC memory card.

The figure "Column size" shows the size of the respective columns depending on the data type used.

Open CSV file

	A	B	C	D	E	F
1						
2	Record	Date	UTC Time	Count	Temperature	Pressure
3	1	9/30/2010	20:26:56	1	9.86E+01	3.52E+01
4	2	9/30/2010	20:28:43	2	1.00E+02	3.73E+01
5	3	9/30/2010	20:29:03	3	9.99E+01	3.68E+01
6	4	9/30/2010	20:29:21	4	9.95E+01	3.64E+01
7	5	9/30/2010	20:30:19	5	9.92E+01	3.74E+01
8						

Size of the header and the data records

G
49 (42 characters + 5 commas + 2 line ending)
79 (72 + 5 commas + 2 line ending)
79 (72 + 5 commas + 2 line ending)
79 (72 + 5 commas + 2 line ending)
79 (72 + 5 commas + 2 line ending)
77 (72 + 5 commas)
Total = 442

Column size

9			Size of each column:			
10	index	Date	Time	int	real	real
11	11	10	12	7	16	16

Each data record also has a separator comma. Therefore, the calculation of the total size per column also includes 1 byte for each separator comma.

Note that the calculation of the size of the header, the data records and the columns is not an integral component of the open CSV file. The size information was added manually to illustrate the elements that make up the size of a data log. You can have the total size of a data log you have created as CSV file displayed in the web server on the "DataLogs" page.

SIMATIC memory card 4

4.1 SIMATIC memory card - Overview

Introduction

The automation system uses a SIMATIC memory card as the program memory. The SIMATIC memory card is a preformatted memory card compatible with the Windows file system. The memory card is available in different memory sizes and can be used for the following purposes:

- Transportable data carrier
- Program card
- Firmware update card
- Service data card

When you transfer the user program to the CPU via an online connection, it is written to the SIMATIC memory card. The SIMATIC memory card must be in the card slot of the CPU for this.

You can also write the SIMATIC memory card in the programming device or PC. A commercially available SD card reader is needed to read or write the SIMATIC memory card with the programming device or PC. You use this, for example, to copy files directly to the SIMATIC memory card with Windows Explorer.

Note

The SIMATIC memory card is mandatory for operation of the CPU.

Note

SIMATIC memory cards of the redundant system S7-1500R/H

For the redundant system S7-1500R/H you need a SIMATIC memory card for each of the two CPUs. During redundant operation, both CPUs access the memory cards.

There must be a SIMATIC memory card in each of the CPUs. We recommend the same memory size for each SIMATIC memory card. Both memory cards must have enough memory reserve.

Note

SIMATIC memory card of the SIMATIC Drive Controller

In addition to the CPU data of the SIMATIC Drive Controller, you also store the configuration of the SINAMICS Integrated on the SIMATIC memory card.

A description of how to store the online and offline data can be found in the SIMATIC memory card section of the SIMATIC Drive Controller (https://support.industry.siemens.com/cs/ww/en/view/109766665) system manual.

Labeling of the SIMATIC memory card

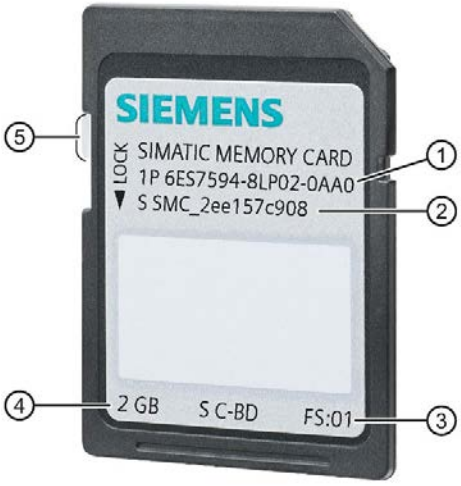

① Article number
② Serial number
③ Production version
④ Memory size
⑤ Slider for setting the write protection:
- Slider up: not write-protected
- Slider down: write-protected

Figure 4-1 Labeling of the SIMATIC memory card

Folders and files on the SIMATIC memory card

The following folders and files can be found on the SIMATIC memory card:

Table 4- 1 Folder structure

Folder	Description
FWUPDATE.S7S	Firmware update files for CPU, I/O modules or SINAMICS Integrated**
SIMATIC.S7S	User program, i.e. all blocks (OBs, FCs, FBs, DBs) and system blocks, project data of the CPU
SINAMICS.S7S**	SINAMICS Integrated project data The folder structure below the SINAMICS.S7S folder is based on the structure of a SINAMICS S120 memory card.
SIMATIC.HMI	HMI-relevant data
DataLogs*	DataLog files
Recipes*	Recipe files
UserFiles*	You have to manually create the folder named "UserFiles" on the memory card for your user data. Only files in this folder (*.pdf, *.txt, *.csv, etc) are also loaded into the STEP 7 project with the "Upload device as new station" function.
Backups	Files for backing up and restoring via the display
DUMP.S7S	Service data files

* The content of these folders is also loaded into the STEP 7 project with the "Upload device as new station" function.

** Only with SIMATIC Drive Controllers

Table 4- 2 File structure

File type	Description
S7_JOB.S7S	Job file
SIMATIC.HMI\Backup*.psb	Panel backup files
SIMATICHMI_Backups_DMS.bin	Protected file (necessary for use of panel backup files in STEP 7)
__LOG__	Protected system file (necessary for use of card)
crdinfo.bin	Protected system file (necessary for use of card)
*.pdf, *.txt, *.csv, etc.	Additional file with different formats that you can also store in folders of the SIMATIC memory card If you store the files in the "UserFiles" folder, the files are stored in the STEP 7 project with "Upload device as new station" and can be used, for example, for restoring files in the event of a defective SIMATIC memory card.

Note

Supported file/directory names and hierarchy levels on the SIMATIC memory card

The following rules apply to file names, directory names and hierarchy levels on the SIMATIC memory card:

- Do not use any umlauts (ö, ä, ü, Ö, Ä, Ü) in file and/or directory names.
- Use a maximum of 60 characters for file and/or directory names.
- Use a maximum of 6 hierarchy levels for the directory structure of the SIMATIC memory card (for example: /mountpoint/1/2/3/4/5/6/file.txt).
  The operating system of the CPU supports directories of no more than 8 levels, where one level is reserved for the mount point and one for the actual file.

Additional folders and files: CPU 1518-4 PN/DP MFP and CPU 1518F-4 PN/DP MFP

The SIMATIC memory card of the CPU 1518-4 PN/DP MFP and CPU 1518F-4 PN/DP MFP also contain the following folders and files:

- The following C/C++ runtime containers are located in the "/CppEnv1.MFP" directory on the SIMATIC memory card and are mounted in the file system in Linux:
  - System.img → Mount point: "/etc/mfp" (system files)
  - User.img → Mount point: "/home" (home directories of users, for C/C++ runtime application, for example)
  - Data.img → Mount point: "/var/userdata" (e.g. log data)
- RAM-Disk → Mount point: "/var/volatile"

Note

First-time startup of CPU 1518-4 PN/DP MFP and CPU 1518F-4 PN/DP MFP with empty SIMATIC memory card

When the CPU starts up for the first time with an empty SIMATIC memory card, the card is prepared for use with C/C++ runtime. This process takes up to three minutes. Do not turn off the CPU during this phase; the STOP LED flashes.

Note

Impact on performance of the CPU 1518-4 PN/DP MFP and CPU 1518F-4 PN/DP MFP

Depending on the type of programming, C/C++ runtime applications, such as mass storage accesses to the SIMATIC memory card, can affect the performance of the CPU.

You can find additional information on these CPUs in the CPU 1518-4 PN/DP MFP (https://support.industry.siemens.com/cs/ww/en/view/109749061) manual and the CPU 1518(F)-4 PN/DP MFP (https://support.industry.siemens.com/cs/ww/en/view/109756478) product information.

You can find information on creating C/C++ runtime applications in the SIMATIC S7-1500 ODK 1500S (https://support.industry.siemens.com/cs/ww/en/view/109752683) manual.

Using the serial number for copy protection

You can set up copy protection for CPUs that binds execution of the block to a specific SIMATIC memory card. You can then only execute the block if it is on the SIMATIC memory card with the specified serial number.

You can find additional information about copy protection in the following manuals:

- System manual S7-1500, ET 200MP Automation System (http://support.automation.siemens.com/WW/view/en/59191792)
- SIMATIC Drive Controller (https://support.industry.siemens.com/cs/ww/en/view/109766665) system manual and SINAMICS S120 Drive Functions (https://support.industry.siemens.com/cs/ww/en/view/109763287) function manual
- System manual ET 200SP Distributed I/O System (http://support.automation.siemens.com/WW/view/en/58649293)
- Operating instructions ET 200pro CPU 1513pro-2 PN (https://support.industry.siemens.com/cs/ww/en/view/109769507) and ET 200pro CPU 1516pro-2 PN (https://support.industry.siemens.com/cs/ww/en/view/109482416)

Note

Redundant system S7-1500R/H

The CPUs of the S7-1500R/H redundant system do not support the copy protection function.

Removing a SIMATIC memory card from the CPU

Note

Do not remove the SIMATIC memory card while a write operation is in progress.

If you remove the memory card from the CPU during a write operation, the contents of the memory card may become invalid. The retentivity of the memory areas can then be lost. It may be necessary to delete the memory card from the PG and reload the program.

To remove the memory card, follow these steps:

- Turn off the line voltage.

  Note

  If there are no write accesses via the PG, you can even remove the memory card when the power is on and the operating state is STOP. In this case, first disconnect all communication connections as a precaution.

Inserting the SIMATIC memory card in the CPU in STOP state triggers a re-evaluation of the SIMATIC memory card. The CPU compares the content of the configuration on the SIMATIC memory card with the backed-up retentive data. If the backed-up retentive data matches the data of the configuration on the SIMATIC memory card, the retentive data is retained. If the data differs, the CPU automatically performs a memory reset. A memory reset deletes the retentive data on the CPU. After the memory reset, the CPU goes to STOP.

With regard to removal of the SIMATIC memory card, note also the following FAQ on the Internet (https://support.industry.siemens.com/cs/ww/en/view/59457183).

Note

Using the SIMATIC memory card as a firmware update card

If you use the SIMATIC memory card as a firmware update card, removing and inserting the card will not result in the loss of retentive data.

Removing a SIMATIC memory card from Windows computers

If you are using the card in a commercially available card reader under Windows, use the "Eject" function before you remove the card from the card reader. If you remove the card without using the "Eject" function, you may lose data.

Deleting contents of the SIMATIC memory card

You have the following options for deleting the content of the SIMATIC memory card:

- Delete files with Windows Explorer
- Format with STEP 7

Note

Deletion of files and folders is permitted, with the exception of the "__LOG__" and "crdinfo.bin" system files. The CPU needs these system files. When you delete the files, you will no longer be able to use the SIMATIC memory card with the CPU.

If you have deleted the "__LOG__" and "crdinfo.bin" system files, format the SIMATIC memory card as described in the following section.

Formatting a SIMATIC memory card

NOTICE

Formatting the SIMATIC memory card

Do **not** format the memory card with Windows tools. Formatting with Windows renders the memory card unusable by a CPU initially.

You can find information on how to repair an inconsistent or incorrectly formatted card in the following FAQ on the Internet (https://support.industry.siemens.com/cs/ww/en/view/69063974).

To free up memory space on your SIMATIC memory card, you have the option of formatting the SIMATIC memory card. During formatting, the entire content of the memory card is deleted.

The SIMATIC memory card may only be formatted in the CPU. With a SIMATIC memory card inserted, follow these steps:

Formatting with STEP 7:

- Establish an online connection.
- Open the online and diagnostics view of the CPU (either from the project context or via "Accessible devices").
- In the dialog window select "Functions > Format memory card" and then select the "Format" button.

Formatting via the display of the CPU

- In the display of the CPU, select the menu "Settings" > "Card functions" > "Format card" and confirm with OK.

Changing the memory card without loss of retentive data

You can change the memory card or use a larger SIMATIC memory card without losing the retentive data. When you switch off the CPU, the retentive data is backed up in the retentive memory of the CPU. While the CPU is switched off, you can remove the memory card and copy its content to a larger memory card. After switching on the CPU, the data backed up in the CPU when the CPU was switched off is restored.

4.2 Setting the card type

Introduction

You can use the SIMATIC memory card as a program card or as a firmware update card.

Procedure using STEP 7

1. To set the card type, insert the SIMATIC memory card into the card reader of the programming device.
2. Select the "SIMATIC Card Reader" folder in the project tree.
3. In the properties of the selected SIMATIC memory card, specify the card type:

- **Program card**

  You use a program card as an external load memory for the CPU. It contains the complete user program for the CPU. The CPU transfers the user program from the load memory to the work memory. The user program runs in the work memory.

  The following folders are created on the SIMATIC memory card:

  – SIMATIC.S7

  – SINAMICS.S7S (only with SIMATIC Drive Controller)

- **Firmware update card**

  You can save firmware for a CPU and for I/O modules on a SIMATIC memory card. This enables you to perform a firmware update with the help of a specially prepared SIMATIC memory card.

  The following folder is created on the SIMATIC memory card: FWUPDATE.S7S

Reference

You can find additional information in the STEP 7 online help.

Procedure using the job file

You can also set whether the SIMATIC memory card works as a program card or a firmware update card via the job file S7_JOB.S7S on the SIMATIC memory card.

Entry in the job file:

- PROGRAM: The SIMATIC memory card is used as a program card
- FWUPDATE: The SIMATIC memory card is used as a firmware update card

Proceed as follows:

1. Open the job file S7_JOB.S7S with an editor.
2. Overwrite the PROGRAM entry with FWUPDATE using the editor (or vice versa).

   Do not use spaces, line breaks, or quotation marks.
3. Save the file under the existing file name.

Program card incl. firmware update files

If, for example, you want to deliver your project with a firmware that you have validated, you can store program data and firmware update files together on the memory card. Your customers then have the opportunity to upgrade the CPU to exactly this firmware version.

Note

Note that depending on the tool used (e.g. STEP 7, Display, Web server), the firmware update files are also deleted when the "Program card" is reset.

4.3 Data transfer with SIMATIC memory cards

Saving objects from the project to the SIMATIC memory card

When the SIMATIC memory card is inserted in the programming device or in the external card reader, you can save the following objects from the project tree (STEP 7) to the SIMATIC memory card:

- Individual blocks (multiple selection possible)
  In this case, the transfer is consistent, i.e. the function takes dependencies between blocks due to block calls into account.
- CPU folder
  In this case, all the runtime-relevant objects, such as blocks and the hardware configuration, are saved to the SIMATIC memory card, just as with downloading.
- Service data
  In this case, the service data saved beforehand is saved to the SIMATIC memory card. You will find additional information on the service data in the following manuals:
  - System manual S7-1500, ET 200MP Automation System (http://support.automation.siemens.com/WW/view/en/59191792)
  - System manual Redundant System S7-1500R/H (https://support.industry.siemens.com/cs/ww/en/view/109754833)
  - SIMATIC Drive Controller (https://support.industry.siemens.com/cs/ww/en/view/109766665) system manual
  - System manual ET 200SP Distributed I/O System (http://support.automation.siemens.com/WW/view/en/58649293)
  - Operating instructions ET 200pro CPU 1513pro-2 PN (https://support.industry.siemens.com/cs/ww/en/view/109769507) and ET 200pro CPU 1516pro-2 PN (https://support.industry.siemens.com/cs/ww/en/view/109482416).

You have the following options for performing the save operation:

- Save the objects using drag-and-drop.
- Use the "Card Reader/USB memory > Write to memory card" command in the "Project" menu.

Saving trace recordings to the SIMATIC memory card

The "Save measurements on device (memory card)" function allows you to save trace recordings on your SIMATIC memory card.

Note

Redundant system S7-1500R/H

The CPUs of the redundant system S7-1500R/H do not support the saving of measurements on the SIMATIC memory card.

To access the corresponding dialog, proceed as follows:

1. In the project tree, select the "Traces" > "Trace".
2. In the work area, select "Configuration" > "Recording conditions" > "Measurements in the device (memory card)"

Response when number reached

"Deactivate recording" repeats the measurements until the configured "Number of measurements" is reached.

"Overwrite oldest recording" replaces the oldest measurement with the latest measurement when the configured "Number of measurements" is reached. Note, however, that continuously writing data to the SIMATIC memory card shortens its service life.

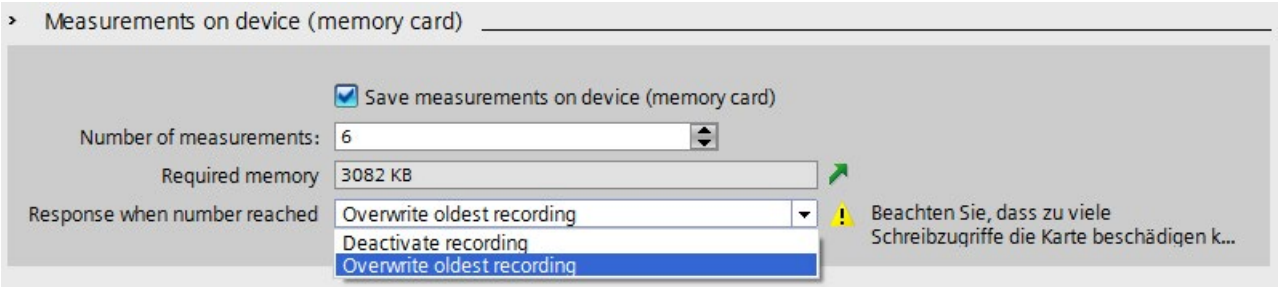

Figure 4-2 Dialog of settings for saving measurements on the memory card in STEP 7

Number of measurements

The CPU supports a maximum of 999 measurements. The CPU writes the trace recordings to the load memory of the memory card. Meanwhile, the CPU pauses the checking of trigger conditions for the trace job. Once the CPU finishes saving the trace recordings, the CPU continues checking the trigger conditions.

NOTICE
Memory required on the SIMATIC memory card When the trace function "Measurements on device (memory card)" requires more memory than is available on the SIMATIC memory card, undesired effects may result. Ensure there is always sufficient free memory space to use the "Measurements on device (memory card)" function. In addition to the "Measurements on device (memory card)" trace function, other functions such as storing data logs use memory space on the SIMATIC memory card. Ensure there is always sufficient memory space available for all functions that use memory.

You can find additional information about trace measurements and trace recordings in the following:

- Function manual Using the Trace and Logic Analyzer Function (http://support.automation.siemens.com/WW/view/en/64897128)
- Function manual Web Server (http://support.automation.siemens.com/WW/view/en/59193560)
- STEP 7 online help

Firmware update using SIMATIC memory card

You can find information on how to perform a firmware update in the following:

- System manual S7-1500, ET 200MP Automation System (http://support.automation.siemens.com/WW/view/en/59191792)
- System manual Redundant System S7-1500R/H (https://support.industry.siemens.com/cs/ww/en/view/109754833)
- In the SIMATIC Drive Controller (https://support.industry.siemens.com/cs/ww/en/view/109766665) system manual
- System manual ET 200SP Distributed I/O System (http://support.automation.siemens.com/WW/view/en/58649293)
- Operating instructions ET 200pro CPU 1513pro-2 PN (https://support.industry.siemens.com/cs/ww/en/view/109769507) and ET 200pro CPU 1516pro-2 PN (https://support.industry.siemens.com/cs/ww/en/view/109482416)

Reference

You can find additional information about the SIMATIC memory card in the STEP 7 online help.

4.4 Service life of the SIMATIC memory card

Calculation of the theoretical service life of a SIMATIC memory card serves as a decision-making aid for selecting which card you need for your automation task. The following examples only return a guide value, however. A precise calculation of the service life is not possible due to the fact that the description cannot cover all the theoretically possible scenarios.

Influences on the service life

You can influence the service life of SIMATIC memory cards by the following factors:

- Card size and number of guaranteed write operations
- Number of actual write operations

  The number of physical write operations to the memory blocks of the card results from the number of write operations from the application.

Structure of a SIMATIC memory card

The internal flash memory of the SIMATIC memory card is organized in memory blocks. A memory block is a memory area of a fixed size. A write operation always addresses entire memory blocks on the SIMATIC memory card. When a memory block has been written once it must be deleted before it can be written again. The number of delete/write operations per memory block is limited. The service life of the SIMATIC memory card is measured by the maximum number of supported delete or write operations per memory block.

In contrast to delete or write operations, read operations have a negligible impact on the service life. Therefore, the impact of the read operations on the service life is not included in this calculation. A very high number of read operations can, however, influence the service life to a small extent.

Maximum number of write/delete operations

The internal controller of the memory card ensures that the available memory blocks are evenly used. In this way, a maximum number of write operations is possible on the SIMATIC memory card. Internal algorithms distribute the write accesses to the same logical memory area over changing physical memory areas in order to use the memory blocks evenly.

The following table shows the maximum possible number of write/delete operations as a function of the SIMATIC memory card used. The number of maximum write/delete operations of the respective SIMATIC memory card is also available online in the technical specifications of the respective SIMATIC memory card.

Memory size of the SIMATIC memory card *	Article number	Max. number of write/delete operations per memory block
4 MB	6ES7954-8LCxx-0AA0	500 000
12 MB	6ES7954-8LExx-0AA0	500 000
24 MB	6ES7954-8LFxx-0AA0	500 000
256 MB	6ES7954-8LL03-0AA0	200 000
2 GB	6ES7954-8LP01-0AA0	100 000
2 GB	6ES7954-8LP02-0AA0	60 000
32 GB	6ES7954-8LT03-0AA0	100 000

* The memory size figures named in the table are theoretical values. The actual existing memory size in practice is below the theoretical value. The reason for this is that the internal controller of the card and the file system reserve part of the existing memory for internal memory management.

Note

Write or delete operations

Write or delete operations, particularly repeated (cyclic) write/delete operations by the user program on the SIMATIC memory card reduces its service life.

Cyclic execution of the following instructions reduces the service life of the memory card depending on the number of write operations and data:

- "CREATE_DB" (with ATTRIB "Create DB in load memory")
- "DataLogWrite"
- "RecipeExport"
- "RecipeImport" (if target DB in load memory)
- "WRIT_DBL"
- "SET_TIMEZONE"

Note also that, in addition to the cyclic write/delete operations, the writing or deleting of very large amounts of data also adversely affects the service life of the SIMATIC memory card.

Note

Redundant system S7-1500R/H

The CPUs of the S7-1500R/H redundant system do not support the instructions specified in the "Write or delete operations" note.

Guaranteed data retention time

If you do not use your SIMATIC memory card for an extended period of time, there is the risk that data contained on the memory card may no longer be readable after a certain amount of time.

The guaranteed data retention time of a SIMATIC memory card is 10 years on delivery and with proper storage. With a number of ≤ 10% of the maximum write/delete operations, the data stored on the card has a retention time of 10 years.

Please note that increasing numbers of write/delete operations to the card reduces its data retention time. If 90% of the maximum write/delete operations is reached, the guaranteed data retention time is reduced to 1 year. If 100% of the maximum write/delete operations is reached, the retention time of the saved data can no longer be guaranteed.

Determining the current usage level of a SIMATIC memory card in STEP 7

When you activate the "Aging of the SIMATIC memory card" option, you enter a threshold value as a percentage in the text box below. As soon as the service life of the SIMATIC memory card has reached the specified threshold value (e.g.: 80 %), the CPU outputs a diagnostics alarm and the MAINT LED lights up in yellow.

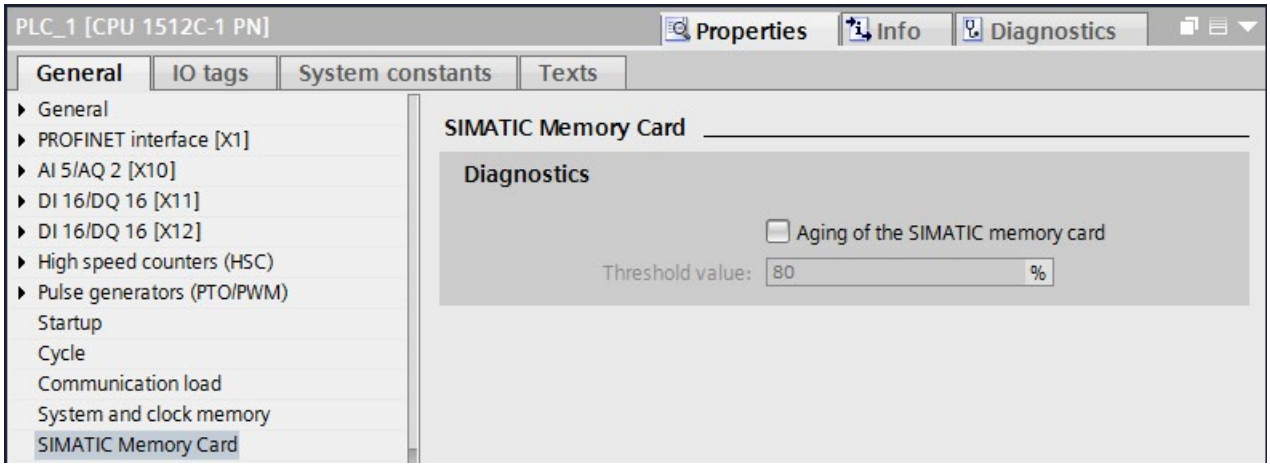

Figure 4-3 Enabled option "Aging of the SIMATIC memory card"

Calculation of the theoretical service life of a SIMATIC memory card

We will use the following example as a basis for calculation:

The user is using a new **256** MB memory card. In accordance with the table, this memory card type supports **200 000** write operations. After parameter changes, the user would like to write **200** DBs of **5** KB each to the SIMATIC memory card at a frequency of **50** times per day with the "RecipeExport" instruction.

Step 1: Calculating the write operations

First use the following formula to calculate the service life of the SIMATIC memory card:

$$\text{Write operations} = \frac{\text{Size of the memory card} \ * \ \text{Maximum number of write operations}}{\text{Number of written bytes}}$$

We first use the sizes from the example in the formula "Write operations" as a basis for calculating the service life:

- Size of the memory card: **256** MB = **268 435 456** bytes
- Maximum number of write operations: **200 000**
- Number of written bytes: **1024 000** bytes (**200** x **5** KB)

If we use the sizes from the example in the formula, we obtain the following result:

$$\text{Write operations} = \frac{268\,435\,456 \text{ byte} \ * \ 200\,000}{1\,024\,000 \text{ byte}} = 52\,428\,800 \text{ write operations}$$

Step 2: Calculating the service life

Use the following formula to calculate the service life in years:

$$\text{Service life} = \frac{\dfrac{\text{Write operations}}{\text{Write operations per day}}}{365 \text{ days}} : \text{Net-gross factor} = \text{years}$$

Note

Net-gross factor

Internal data (metadata) are also written to the SIMATIC memory card with each write operation. Due to this additional data, include the net-gross factor **100** when calculating the service life.

If we use the sizes from the example in the formula, we obtain the following result:

$$\text{Service life} = \frac{\dfrac{52\,428\,800}{50}}{365 \text{ days}} : 100 = 28.7 \text{ years}$$

Calculation with more frequent write accesses and a higher number of bytes written

If the frequency of write accesses and the number of bytes written per day increases, the service life of the SIMATIC memory card is reduced.

The following table shows, based on empirical values, how the service life of a SIMATIC memory card with a size of 256 MB is reduced

Write accesses per day	Number of bytes written per instruction	Service life of the SIMATIC memory card in years
50	1 024 000	28.7
100	1 024 000	14.3
400	1 024 000	3.6
400	2 048 000	1.8
400	4 096 000	0.9

The following table shows how the same values impact the service life of a SIMATIC memory card with a size of 2 GB (6ES7954-8LP01-0AA0).

Write accesses per day	Number of bytes written per instruction	Service life of the SIMATIC memory card in years
50	1 024 000	114.9
100	1 024 000	57.5
400	1 024 000	14.4
400	2 048 000	7.2
400	4 096 000	3.6

The result shows that a high number of write accesses together with a high number of written bytes significantly shortens the service life of the SIMATIC memory card.

Reference

You can find an alternative method for calculating the service life of a SIMATIC memory card in an FAQ on the Internet (https://support.industry.siemens.com/cs/ww/en/view/109482591).

GetSMCinfo instruction

When the SIMATIC memory card inserted, you can read out the following information in STEP 7 (TIA Portal) using the GetSMCinfo instruction:

- Memory size in (1 KB = 1 024 bytes)
- Memory space occupied in (1 KB = 1 024 bytes)
- Maintenance information: Previously used up portion of the service life in %
- Configured percentage of service life after which the CPU creates a diagnostics buffer entry.

You can find additional information on the GetSMCinfo instruction in the STEP 7 online help.

4.5 Expanding the load memory of the CPUs of the redundant system S7-1500R/H

Memory requirements

If the memory space on one of the two SIMATIC memory cards is not sufficient, you can replace this card during operation of the redundant system S7-1500R/H.

Note

To avoid errors on the SIMATIC memory card due to insufficient memory, use memory cards with enough memory space.

Expanding the load memory during operation

To expand the load memory of the CPUs of the redundant system S7-1500R/H during operation, follow these steps:

Action		System response
1.	Switch the first CPU to STOP while in redundant operation.	The system changes to system state RUN-Solo.
2.	Remove the existing SIMATIC memory card from the CPU that is in STOP. Insert a larger SIMATIC memory card.	The CPU performs a memory reset.
3.	After the memory reset switch the CPU back to RUN.	The CPU performs a SYNCUP.
4.	Wait until the SYNCUP of the CPU is complete and then switch the second CPU to STOP.	The system changes to system state RUN-Solo again.
5.	Remove the existing SIMATIC memory card from the CPU that is in STOP. Insert a larger SIMATIC memory card.	The CPU performs a memory reset.
6.	After the memory reset, switch the CPU back to RUN.	The CPU performs a SYNCUP.
7.	Wait until the SyncUp of the CPU is complete.	The CPUs now have a larger load memory and are in system state RUN-Redundant again.

Glossary

Backup CPU

When the R/H system is in RUN-Redundant system state, the Primary CPU controls the process. The Backup CPU synchronously executes the user program and can take over the process control at a failure of the Primary CPU.

Bit memory

Bit memory is a component of the system memory of the CPU for saving intermediate results. You access the bit memory from the user program in bit, byte, word or double-word mode.

Code block

In SIMATIC S7, a code block contains a portion of the STEP 7 user program.

Consistent data

Consistent data is data whose content belongs together. Consistent data is read and written contiguously.

Counter

Counters are components of the system memory of the CPU. You can modify the content of the "counter cells" using STEP 7 instructions. Example: Count up or down.

Data block

Data blocks (DBs) are data areas in the user program that contain user data. The following data blocks are available:

- Global data blocks that you access from all code blocks.
- Instance data blocks that are assigned to a particular FB call.

Data log

Data logs are CSV files for the saving of tag values. The data logs are stored on the SIMATIC memory card in the "\datalogs" directory. Instructions in the user program write data records of tag values to a data log.

Diagnostics

Monitoring functions include:

- Detection, localization, classification of errors, faults and alarms.
- Display and further evaluation of errors, faults and alarms.

The monitoring functions run automatically during system operation. This increases the availability of systems because commissioning times and downtimes are reduced.

Diagnostics buffer

The diagnostics buffer is a buffered memory area in the CPU in which diagnostics events are stored in their order of occurrence.

Firmware of the CPU

In SIMATIC, a distinction is made between the firmware of the CPU and user programs.

Firmware is software that is embedded in electronic devices, i.e. functionally connected permanently to the hardware. It is usually saved in a flash memory, EPROM, EEPROM or ROM and cannot be replaced by the user or can only be replaced with special tools or functions.

User program: see glossary entry "User program"

Firmware update

You use a firmware update to update the firmware of modules. A firmware update is performed, e.g. for functional extensions of a CPU or interface module.

Function block

A function block (FB) is a code block with static data. An FB allows you to pass parameters in the user program. Function blocks are thus suited for programming frequently recurring complex functions, such as closed-loop controls or operating states selection.

Global data block (DB)

Every function block, every function, and every organization block can read the data from a global data block, or write its own data to a global data block. This data is retained in the data block, even when the data block is exited.

I/O module

Device of the distributed I/O that is used as an interface between the controller and the process.

Instance data block (DB)

Each call of a function block in the STEP 7 user program is assigned a data block that is automatically generated. Values of the input, output and in/out parameters, as well as local block data, are stored in the instance data block.

IP address

The IP address is made up of four decimal numbers, each with a value range of 0 to 255. The decimal numbers are separated by a dot (e.g. 192.162.0.0).

The IP address consists of the following:

- Address of the network
- Device address (PROFINET interface of the IO controller/IO devices)

Local data

This memory area accepts the temporary local data of a block for the duration of processing.

Memory reset

Procedure for setting the memories of the CPU to a defined initial state.

Operating states

Operating states describe the behavior of an individual CPU at any given point in time.

The CPUs of the SIMATIC standard systems feature the STOP, STARTUP and RUN operating states.

The primary CPU of the redundant system S7-1500R/H has the operating states STOP, STARTUP, RUN, RUN-Syncup and RUN-Redundant. The backup CPU has the operating states STOP, SYNCUP and RUN-Redundant.

Optimized block access

Data blocks with optimized access have no fixed structure. In the declaration, the data elements only receive a symbolic name, and no fixed address within the block. The elements are automatically arranged in the block's available memory area in such a way that its capacity is optimally exploited.

In these data blocks, you can only address tags symbolically. For example, you would access the "FillState" tag in the "Data" DB as follows:

"Data".FillState

Optimized access offers the following advantages:

- The data is structured and saved in a manner that is optimal for the CPU used. This allows you to increase CPU performance.
- Access errors, e.g. from the HMI, are not possible.
- You can selectively define individual tags as retentive.

Organization block

Organization blocks (OBs) form the interface between the operating system of the CPU and the user program. The organization blocks determine the order in which the user program is executed.

Parameter

- Variable of a STEP 7 code block
- Variable for setting the behavior of a module (one or more per module). In delivery state, each module has an appropriate basic setting that can be changed by configuring in STEP 7. There are static and dynamic parameters.

Parameters, dynamic

In contrast to static parameters, you can change dynamic parameters of modules during operation by calling an SFC in the user program, e.g. limit values of an analog input module.

Parameters, static

In contrast to dynamic parameters, you cannot change static parameters of modules with the user program but only by configuring in STEP 7, e.g. input delay of a digital input module.

Primary CPU

When the R/H system is in RUN-Redundant system state, the Primary CPU controls the process. The Backup CPU synchronously executes the user program and can take over the process control at a failure of the Primary CPU.

Process image (I/O)

The CPU transfers the values from the input and output modules to this memory area. At the start of the cyclic program, the CPU transfers the process image output as a signal state to the output modules. The CPU then reads the signal states of the input modules to the process image of the inputs. Then the CPU executes the user program.

Redundant systems

Redundant systems are characterized in that important automation components are present multiple times (redundantly). Process control is maintained if a redundant component fails.

Reset to factory settings

Resetting to factory settings restores the CPU settings to the delivery state.

Restart

A restart (warm restart) deletes all non-retentive bit memory and resets non-retentive DB contents to the start values from the load memory. Retentive bit memory and retentive DB contents are retained. Program execution begins at the call of the first startup OB.

Retentivity

A memory area whose content is retained after power failure and after a transition from STOP to RUN is retentive. The non-retentive bit memory area, timers and counters are reset after power failure and after a STOP to RUN transition.

SIMATIC memory card

Memory for the user program for programmable modules and communications processors. You can also use the SIMATIC memory card for exchange of user software and user data.

Standard access

Data blocks with standard access have a fixed structure. In the declaration, the data elements contain both a symbolic name and a fixed address within the block. The address is displayed in the "Offset" column.

In these data blocks, you can address tags both symbolically and absolutely:

"Data".FillState

DB1.DBW2

System states

The redundant S7-1500R/H system has various system states. The system states result from the operating states of the Primary and Backup CPUs. The concept of the system state is used to obtain a simplified expression that characterizes the simultaneously occurring operating states of the two CPUs. The following system states are available for the redundant system S7-1500R/H: STOP, STARTUP, RUN-Solo, SYNCUP and RUN-Redundant.

Timer

Timers are components of the system memory of the CPU. The operating system automatically updates the content of the "timer cells" asynchronously to the user program. STEP 7 instructions specify the precise function of the timer cell (e.g. on delay) and trigger its execution.

User program

In SIMATIC, a distinction is made between user programs and the firmware of the CPU.

The user program contains all instructions, declarations and data that enable a plant or process to be controlled. The user program is assigned to a programmable module (e.g. CPU, FM) and can be structured in smaller units.

Firmware: see glossary entry "Firmware of the CPU"

Index

B

Bit memory, 24

C

C/C++, 12, 54
Counter, 24

D

Data block, 22, 27
Data logging
    Data structure, 39
    DataLogCreate, 39
    Example program, 42
    Overview of data logging, 37
Data retention time, 65
Diagnostics buffer, 26
Display, 19, 53, 57
Disposal, 5

F

FAQ
    Calculate service life SMC, 67
    Configure data blocks, 34
    Estimating memory requirements, 17
    Formatting a SIMATIC memory card, 57
    Insufficient load memory, 32
    Load project data in load memory, 32
    Removing a SIMATIC memory card, 56
    Repairing the SIMATIC memory card, 57
    Using recipe phases, 37
Function block, 22

I

Instructions
    Asynchronous, 36, 41
    CREATE_DB, 23
    DataLogClear, 40
    DataLogClose, 40
    DataLogCreate, 39, 40, 48
    DataLogDelete, 40
    DataLogNewFile, 40
    DataLogOpen, 40
    DataLogWrite, 40
    GetSMCinfo, 67
    READ_DBL, 33
    RecipeExport, 35
    RecipeImport, 36
    WRIT_DBL, 33

L

Linux, 12, 54
Load memory, 12
Load memory S7-1500/H-CPUs, 68

M

Memory reserve, 27

O

Offline project, 14, 16
Offline project data, 11
Online project data, 11
Operating hours counter, 26

P

PLC tags, 26

R

Redundancy ID, 15
Redundant S7-1500R/H system, 68
Retentive data, 15, 56, 58
Retentive memory, 11, 13, 21
    S7-1500R/H-CPUs, 15
Runtime, 12, 54

S

Scope, 4
SIMATIC memory card, 51, 58, 60
    Basics, 51
    Firmware card, 58

Possible applications, 60
Program card, 58
Repairing, 57
Updating firmware, 62
Software change, 26

T

Technology objects, 23
Timer, 24
Trace recordings, 61

W

Web server, 12, 20, 45, 62
Work memory, 11, 13

Edition 11/2022

FUNCTION MANUAL

SIMATIC

S7-1500, ET 200SP, ET 200pro

Web server

support.industry.siemens.com

SIEMENS

SIMATIC

S7-1500, SIMATIC Drive Controller, ET 200SP, ET 200pro Web server

Function Manual

Introduction 1

Safety and security instructions 2

General information 3

Web pages 4

API (Application Programming Interface) 5

11/2022

A5E03484625-AJ

Legal information

Warning notice system

This manual contains notices you have to observe in order to ensure your personal safety, as well as to prevent damage to property. The notices referring to your personal safety are highlighted in the manual by a safety alert symbol, notices referring only to property damage have no safety alert symbol. These notices shown below are graded according to the degree of danger.

⚠ DANGER
indicates that death or severe personal injury **will** result if proper precautions are not taken.

⚠ WARNING
indicates that death or severe personal injury **may** result if proper precautions are not taken.

⚠ CAUTION
indicates that minor personal injury can result if proper precautions are not taken.

NOTICE
indicates that property damage can result if proper precautions are not taken.

If more than one degree of danger is present, the warning notice representing the highest degree of danger will be used. A notice warning of injury to persons with a safety alert symbol may also include a warning relating to property damage.

Qualified Personnel

The product/system described in this documentation may be operated only by **personnel qualified** for the specific task in accordance with the relevant documentation, in particular its warning notices and safety instructions. Qualified personnel are those who, based on their training and experience, are capable of identifying risks and avoiding potential hazards when working with these products/systems.

Proper use of Siemens products

Note the following:

⚠ WARNING
Siemens products may only be used for the applications described in the catalog and in the relevant technical documentation. If products and components from other manufacturers are used, these must be recommended or approved by Siemens. Proper transport, storage, installation, assembly, commissioning, operation and maintenance are required to ensure that the products operate safely and without any problems. The permissible ambient conditions must be complied with. The information in the relevant documentation must be observed.

Trademarks

All names identified by ® are registered trademarks of Siemens AG. The remaining trademarks in this publication may be trademarks whose use by third parties for their own purposes could violate the rights of the owner.

Disclaimer of Liability

We have reviewed the contents of this publication to ensure consistency with the hardware and software described. Since variance cannot be precluded entirely, we cannot guarantee full consistency. However, the information in this publication is reviewed regularly and any necessary corrections are included in subsequent editions.

Siemens AG
Digital Industries
Postfach 48 48
90026 NÜRNBERG
GERMANY

A5E03484625-AJ
Ⓟ 09/2022 Subject to change

Copyright © Siemens AG 2012 - 2022.
All rights reserved

Table of contents

1 Introduction 7

1.1 Function manuals documentation guide 13
1.1.1 Information classes Function Manuals 13
1.1.2 Basic tools 15
1.1.3 SIMATIC Technical Documentation 16

2 Safety and security instructions 19

2.1 Security information 19

3 General information 20

3.1 Properties of the Web server 20
3.2 Configuring the Web server 23
3.3 Certificate 30
3.3.1 Web server certificates 30
3.3.2 Managing certificates via TIA Portal 30
3.3.3 Managing certificates in runtime 33
3.4 Language settings 36
3.5 Updating and saving information 38

4 Web pages 39

4.1 Start page with general CPU information 39
4.2 Diagnostics 46
4.3 Diagnostics buffer 56
4.4 Motion Control diagnostics 58
4.5 Module information 63
4.6 Firmware update 68
4.7 Alarms 70
4.8 Communication 72
4.9 Topology 78
4.9.1 Introduction 78
4.9.2 Graphical view 79
4.9.3 Tabular view 82
4.9.4 Status overview 83
4.9.5 Examples for graphical topology views 84
4.10 Tag status 87
4.11 Watch tables 89
4.12 Online backup 91
4.13 Record 95

4.14 DataLogs ... 113
4.14.1 Automated reading out of DataLogs ... 114
4.15 User files ... 115
4.15.1 Automatically read or upload user files ... 116
4.16 User pages ... 118
4.16.1 AWP commands ... 121
4.16.1.1 PLC tags ... 122
4.16.1.2 Special tags ... 125
4.16.1.3 Enum types ... 127
4.16.1.4 Fragments ... 128
4.16.1.5 Arrays ... 130
4.16.1.6 Structures ... 131
4.16.2 Configuring user pages ... 133
4.16.3 Programming the WWW instruction ... 134
4.16.4 Defining the user page as start page ... 136
4.16.5 Example of a user page ... 138
4.16.5.1 Website for monitoring and controlling a wind turbine ... 138
4.16.5.2 Reading and displaying data from the CPU ... 140
4.16.5.3 Using enum types ... 140
4.16.5.4 Writing user inputs into the controller ... 141
4.16.5.5 Writing special tags ... 142
4.16.5.6 HTML code of the user page "Remote Wind Turbine Monitor" ... 142
4.17 Filebrowser ... 142
4.18 Reading out service data ... 143
4.19 Basic websites ... 144

5 API (Application Programming Interface) ... 146

5.1 Web API basic functions ... 150
5.1.1 Api.Login ... 150
5.1.2 Api.GetPermissions ... 152
5.1.3 Api.Browse ... 154
5.1.4 Api.Version ... 155
5.1.5 Api.Ping ... 155
5.1.6 Api.GetCertificateUrl ... 155
5.1.7 Api.Logout ... 156
5.2 Web API integration ... 156
5.3 Web API sessions ... 159
5.4 Ticket mechanism ... 160
5.4.1 Api.BrowseTickets ... 165
5.4.2 Api.CloseTicket ... 166
5.5 Read and write process data ... 167
5.5.1 Supported data types ... 167
5.5.2 Parameter assignment of the block properties ... 171
5.5.3 PlcProgram.Read ... 172
5.5.4 PlcProgram.Write ... 174
5.5.5 PlcProgram.Browse ... 176
5.6 Reading and changing the operating mode ... 180

5.6.1 Plc.ReadOperatingMode ... 180
5.6.2 Plc.RequestChangeOperatingMode ... 180

5.7 Making time settings via Web API ... 181
5.7.1 Plc.ReadSystemTime ... 181
5.7.2 Plc.ReadTimeSettings ... 182

5.8 Backing up and restoring the configuration ... 184
5.8.1 Plc.CreateBackup ... 184
5.8.2 Plc.RestoreBackup ... 185

5.9 Accessing the contents of the SIMATIC Memory Card ... 189
5.9.1 Files.Browse ... 189
5.9.2 Files.Download ... 191
5.9.3 Files.Create ... 192
5.9.4 Files.Rename ... 194
5.9.5 Files.Delete ... 195
5.9.6 Files.CreateDirectory ... 196
5.9.7 Files.DeleteDirectory ... 197
5.9.8 DataLogs.DownloadAndClear ... 198

5.10 Web applications that can be loaded by the user ... 200
5.10.1 WebApp.Create ... 203
5.10.2 WebApp.Delete ... 204
5.10.3 WebApp.Rename ... 205
5.10.4 WebApp.Browse ... 206
5.10.5 WebApp.SetState ... 208
5.10.6 WebApp.SetDefaultPage ... 209
5.10.7 WebApp.SetNotFoundPage ... 210
5.10.8 WebApp.SetNotAuthorizedPage ... 211
5.10.9 WebApp.BrowseResources ... 213
5.10.10 WebApp.CreateResource ... 215
5.10.11 WebApp.DeleteResource ... 216
5.10.12 WebApp.RenameResource ... 217
5.10.13 WebApp.DownloadResource ... 219
5.10.14 WebApp.SetResourceVisibility ... 220
5.10.15 WebApp.SetResourceETag ... 221
5.10.16 WebApp.SetResourceMediaType ... 223
5.10.17 WebApp.SetResourceModificationTime ... 224

Glossary ... 226

Index ... 230

Introduction

1

Purpose of the documentation

This documentation supports you in the operation of the Web server.
The Web server offers, among other things, web page access to diagnostic data and to process data of the CPU.

Basic knowledge required

The following knowledge is required in order to understand the documentation:

- General knowledge in the field of automation technology
- Knowledge of the SIMATIC industrial automation system
- Experience of working with Windows-based computers
- Knowledge about how to use STEP 7 (TIA Portal)

Conventions

STEP 7: In this documentation, "STEP 7" is used as a synonym for all versions of the configuring and programming software "STEP 7 (TIA Portal)".
Please also observe notes marked as follows:

NOTE

A note contains important information on the product described in the documentation, on the handling of the product and on the section of the documentation to which particular attention should be paid.

Scope of the documentation

This documentation is valid for CPUs as of firmware version V2.5 and contains illustrations of the Web server user interface. The illustrations used can be transferred to the following CPUs:

- The CPUs of the SIMATIC S7-1500 automation system
- The CPUs of the SIMATIC Drive controller
- The CPUs of the ET 200SP distributed I/O system
- The CPUs 1516pro-2 PN and 1513pro-2 PN of the ET 200pro distributed I/O system

The displayed illustrations can differ from the interface of the Web server in some details, e.g. depending on the web browser used.

What's new in the Web Server Function Manual, Version 10/2022 compared to Version 05/2021

What's new?		What are the customer benefits?	Where can I find information?
New contents	New Web API methods	Many new API methods extend your access options to the CPU via the Web API.	Section API (Application Programming Interface) (Page 146)
	Management of certificates in runtime	In addition to loading Web server certificates via the TIA Portal, this option makes it possible to provide such certificates from a certificate management server at runtime. This allows you, for example, to update expiring certificates in time without interrupting the process.	Section Managing certificates in runtime (Page 33)
	Motion Control diagnostics (T CPUs)	Display of the diagnostics of the axis status for the "Encoder homed" signal of the encoders of all 4 possible axes.	Section Motion Control diagnostics (Page 58) Function manuals for S7-1500/1500T Motion Control on the Internet (https://support.industry.siemens.com/cs/ww/de/view/109751049)
Changed contents	Extension of the scope of this function manual to the CPU 1514SP-2 PN and the CPU 1514SPT-2 PN of the ET 200SP distributed I/O system.	Web server functions can now also be used on these CPUs.	• Equipment Manual CPU 1514SP-2 PN (https://support.industry.siemens.com/cs/ww/en/view/109813-105) • Equipment Manual CPU 1514SPT-2 PN (https://support.industry.siemens.com/cs/ww/en/view/109813-106)

What's new in the Web Server Function Manual, Version 05/2021 compared to Version 11/2019

What's new?		What are the customer benefits?	Where can I find information?
New contents	New Web API methods: • Plc.ReadOperatingMode • Plc.RequestChangeOperatingMode	Reading and changing CPU operating mode via Web API	Section Reading and changing the operating mode (Page 179)
	Ticket mechanism and ticket methods for handling the tickets: • Api.BrowseTickets • Api.CloseTicket	With the Web server as of firmware version V2.9, you can use the ticket mechanism of the Web API. You can use the ticket mechanism to transfer large amounts of data outside of the JSON RPC protocol. The ticket mechanism is the basis for all file-based methods, such as file upload/download of resources.	Section Ticket mechanism (Page 160)

What's new?		What are the customer benefits?	Where can I find information?
New contents	Web applications of the Web API that can be loaded by the user: Web applications that can be loaded by the user provide you with an additional set of methods to manage web applications via Web API. You can use all available Web API methods within the web application.	Web applications that can be loaded by the user offer you the following major advantages as of firmware version V2.9 compared to the older method that provided the customer pages via the system function SFC 99 in STEP 7: Only the TIA Portal project in the SIMATIC.S7S directory on the SIMATIC Memory Card changes. Your TIA Portal project is extended by the option of saving resources (e.g. HTML, CSS, JavaScript, etc.) in the project but outside of the data blocks of the user program. The resources are saved in the associated web application. Via the Web API you can download the resources to your PC, edit them and upload them back to the CPU. This procedure results in significantly reduced development times of customer pages. You can access resources independent of the CPU operating mode (e.g. RUN, STOP) and update these. Web applications are also available in the STOP mode of the CPU.	Section Web applications that can be loaded by the user (Page 200)
	Creating customer pages with TIA Portal WinCC Unified as of Version V17	Compared to creating customer pages with a random HTML editor, creating and loading customer pages with WinCC Unified for SIMATIC S7-1500 CPUs offers the following advantages: • No HTML code expertise required • You can make changes to the customer pages while the CPU is in the RUN mode.	Section Customer pages (Page 117) WinCC Unified online help
Changed contents	Diagnostics	The display in the "Memory" tab is extended by information on the data type memory so that the user program can be changed accordingly when the available memory is not sufficient.	Section Diagnostics (Page 46)
	Motion Control diagnostics	Comprehensive diagnostic options for Motion Control applications: • Diagnostics information is available for all technology objects • Improved display and grouping of the tags	Section Motion Control diagnostics (Page 58)
	Communication	Extension of the "Parameter" tab to assign the network configuration via a DHCP server and display the DNS settings	Section Communication (Page 71)

What's new in the Web Server Function Manual, Version 11/2019 compared to Version 12/2017

What's new?		What are the customer benefits?	Where can I find information?
New contents	The CPU has a web-based API (Application Programming Interface) as an interface for: • Reading and writing CPU data • Executing functions (e.g. backing up and restoring the CPU configuration, changing the operating mode) The Web API supports all common browsers and command line programs, such as cURL and Wget.	• Established standard mechanisms for creating web pages: Automation Web Programming commands (AWP commands) are no longer required for output of CPU data • No dependency between custom Web pages and CPU program: No synchronization between user program and Web server required by the SFC 99 instruction • Lower communication load: A smaller data packet (JSON instead of HTML) of the custom web page generated by the CPU is transferred between the server and the client. This improves the communication performance. The CPU needs less runtime to generate the information and make it available. • Secure data traffic: the Web API only supports the transmission protocol "HTTPS"	Section API (Application Programming Interface) (Page 146)
Changed contents	Extension of the scope of this function manual to the CPUs of the SIMATIC Drive Controller	Webserver functions which you are familiar with from the CPUs of the SIMATIC S7-1500 can now also be used on the CPUs of the SIMATIC Drive Controller.	• System Manual SIMATIC Drive Controller (https://support.industry.siemens.com/cs/ww/en/view/109766-665) • Equipment Manual SIMATIC Drive Controller (https://support.industry.siemens.com/cs/ww/en/view/109766-666)

What's new in the Web Server Function Manual, Version 12/2017 compared to Version 09/2016

What's new?		What are the customer benefits?	Where can I find information?
New contents	New web page "User files"	You can download ASCII files (files in binary format) from the SIMATIC Memory Card, directory UserFiles\ to the web page and delete them.	Section User files (Page 115)
	Time display as Coordinated Universal Time (UTC) or as PLC local time	The display of the UTC allows you to use a uniform time for the web pages. You can set the format of the time display to Coordinated Universal Time (UTC) or PLC local time (default setting).	Section Start page with general CPU information (Page 39)

What's new?		What are the customer benefits?	Where can I find information?
New contents	Automated downloading, reading out and archiving of DataLogs	You can, for example, read out and archive DataLogs daily from one or more CPUs at a specific time via the Web server. Automatic downloading of DataLogs is realized either by the execution of scripts in, for example, Bash or via JavaScript on your HTML customer page.	Section Automated reading out of DataLogs (Page 114)
	The "Permit access only with HTTPS" check box is activated in the default setting of a configured CPU.	The web pages are transmitted by default via a secure connection and are protected from attacks by third parties.	Section Configuring the Web server (Page 23)
Changed contents	Web page "Module information": New column Device number	You can read the assignment of the device number to the device name.	Section Module information (Page 63)
	Web page "Topology": Selection of the available PROFINET interfaces, for example X1, X2, CM 1542-1	You can select the topology display for the PROFINET interfaces X1, X2 and for connected PROFINET communication modules.	Section Topology (Page 77)
	Web page "DataLogs": New column for deleting DataLog files	You can delete DataLog files via the Web server.	Section DataLogs (Page 113)
	Web page "Record": Changes in the display of Trace recordings	You can evaluate the Trace recordings in more detail through the extension of the display.	Section Record (Page 95)
	Web page "Record": New arithmetic functions	In the case of completed measurements you can combine the measured signals mathematically with each other and this generate signals that were not recorded. You can, for example, form the difference of two signals in order to better display the deviation of the current pressure of a boiler from the set setpoint value.	

What's new in the Web Server Function Manual, Version 09/2016 compared to Version 12/2014

What's new?		What are the customer benefits?	Where can I find information?
New contents	Handling of certificate modified	You protect the Web server connection against tapping or distortion of the communication through access via the secure transmission protocol "HTTPS" including a special Web server certificate.	Section Configuring the Web server (Page 23)
	Four additional languages for the Web server interface	You can set the Web server interface to the following languages: • Korean • Russian • Turkish • Portuguese (Brazil)	Section Start page with general CPU information (Page 39)

What's new?		What are the customer benefits?	Where can I find information?
New contents	Assignment of different project languages extended	You can assign up to three different project languages for comments, alarm texts and diagnostics information to the user interface languages of the Web server.	Section Language settings (Page 35)
	"Start page" web page extended	The display of the TIA project name immediately indicates whether the desired project is selected.	Section Start page with general CPU information (Page 39)
	"Diagnostics" web page extended by one tab: • "Program protection" • "Runtime information" • "Fail-safe" (with an F-CPU)	Here you can find information about: • Know-how protection or copy protection of the PLC program • Program/communication load and cycle time • F-collective signatures, cycle times and runtimes of the F-runtime group(s)	Section Diagnostics (Page 46)
	"Alarms" web page extended	You can acknowledge alarms of the CPU via the Web server.	Section Alarms (Page 70)
	"Tag status" and "Watch tables" web pages extended	You can change the value of tags and write them to the CPU, also using the absolute address.	• Section Tag status (Page 86) • Section Watch tables (Page 89)
	New web page "Online backup"	You can back up and restore the CPU configuration to/from the SIMATIC Memory Card via the Web server.	Section Online backup (Page 90)
	New "Motion Control diagnostics" web page	You can monitor statuses, errors, technology alarms and the current values of configured technology objects (TOs) with the Web server without STEP 7.	Section Motion Control diagnostics (Page 58)
	New "Record" web page	You can read, view and save trace recordings via the Web server and thus obtain plant and project information for diagnostics and maintenance without STEP 7.	Section Record (Page 95)
Changed contents	Extension of the scope of this function manual to the CPUs of the ET 200SP distributed I/O system and the CPU 1516pro-2 PN	Functions that you will be familiar with from the SIMATIC S7-1500 CPUs are implemented in CPUs in other designs (ET 200SP) and in the CPU 1516pro-2 PN (degree of protection IP65, IP66 and IP67).	• Equipment Manual CPU 1510SP-1 PN (https://support.industry.siemens.com/cs/ww/en/view/901571-30) • Equipment Manual CPU 1512SP-1 PN (https://support.industry.siemens.com/cs/ww/en/view/901570-13) • Operating instructions CPU 1516pro-2 PN (https://support.industry.siemens.com/cs/ww/en/view/109482-416)
	Web page "Watch tables": Note added on the maximum configuration limits.		Section Watch tables (Page 89)
	Web page "Customer pages": Note added on the maximum size of the HTML pages.		Section User pages (Page 117)

Recycling and disposal

For environmentally sustainable recycling and disposal of your old equipment, contact a certified electronic waste disposal service and dispose of the equipment according to the applicable regulations in your country.

Industry Mall

The Industry Mall is the catalog and order system of Siemens AG for automation and drive solutions on the basis of Totally Integrated Automation (TIA) and Totally Integrated Power (TIP).

You can find catalogs for all Automation and Drives products on the Internet (https://mall.industry.siemens.com).

1.1 Function manuals documentation guide

1.1.1 Information classes Function Manuals

The documentation for the SIMATIC S7-1500 automation system, for the 1513/1516pro-2 PN, SIMATIC Drive Controller CPUs based on SIMATIC S7-1500 and the SIMATIC ET 200MP, ET 200SP, ET 200AL and ET 200eco PN distributed I/O systems is arranged into three areas.

This arrangement enables you to access the specific content you require.

You can download the documentation free of charge from the Internet (https://support.industry.siemens.com/cs/ww/en/view/109742705).

Basic information

The system manuals and Getting Started describe in detail the configuration, installation, wiring and commissioning of the SIMATIC S7-1500, SIMATIC Drive Controller, ET 200MP, ET 200SP, ET 200AL and ET 200eco PN systems. Use the corresponding operating instructions for 1513/1516pro-2 PN CPUs.

The STEP 7 online help supports you in the configuration and programming.

Examples:

- Getting Started S7-1500
- System manuals
- Operating instructions ET 200pro and 1516pro-2 PN CPU
- Online help TIA Portal

Device information

Equipment manuals contain a compact description of the module-specific information, such as properties, wiring diagrams, characteristics and technical specifications.
Examples:

- Equipment manuals for CPUs
- Equipment manuals for interface modules
- Equipment manuals for digital modules
- Equipment manuals for analog modules
- Equipment manuals for communication modules
- Equipment manuals for technology modules
- Equipment manuals for power supply modules
- Equipment manuals for BaseUnits

General information

The function manuals contain detailed descriptions on general topics relating to the SIMATIC Drive Controller and the S7-1500 automation system.
Examples:

- Function Manual Diagnostics
- Function Manual Communication
- Function Manuals Motion Control
- Function Manual Web Server
- Function Manual Cycle and Response Times
- PROFINET Function Manual
- PROFIBUS Function Manual

Product Information

Changes and supplements to the manuals are documented in a Product Information. The Product Information takes precedence over the device and system manuals.
You will find the latest Product Information on the Internet:

- S7-1500/ET 200MP (https://support.industry.siemens.com/cs/de/en/view/68052815)
- SIMATIC Drive Controller (https://support.industry.siemens.com/cs/de/en/view/109772684/en)
- Motion Control (https://support.industry.siemens.com/cs/de/en/view/109794046/en)
- ET 200SP (https://support.industry.siemens.com/cs/de/en/view/73021864)
- ET 200eco PN (https://support.industry.siemens.com/cs/ww/en/view/109765611)

Manual Collections

The Manual Collections contain the complete documentation of the systems put together in one file.

You will find the Manual Collections on the Internet:

- S7-1500/ET 200MP/SIMATIC Drive Controller (https://support.industry.siemens.com/cs/ww/en/view/86140384)
- ET 200SP (https://support.industry.siemens.com/cs/ww/en/view/84133942)
- ET 200AL (https://support.industry.siemens.com/cs/ww/en/view/95242965)
- ET 200eco PN (https://support.industry.siemens.com/cs/ww/en/view/109781058)

1.1.2 Basic tools

The tools described below support you in all steps: from planning, over commissioning, all the way to analysis of your system.

TIA Selection Tool

The TIA Selection Tool tool supports you in the selection, configuration, and ordering of devices for Totally Integrated Automation (TIA).

As successor of the SIMATIC Selection Tools , it assembles the configuration editors for automation technology already familiar into a single tool.

With the TIA Selection Tool , you can generate a complete order list from your product selection or product configuration.

You can find the TIA Selection Tool on the Internet.
(https://support.industry.siemens.com/cs/ww/en/view/109767888)

SIMATIC Automation Tool

You can use the SIMATIC Automation Tool to perform commissioning and maintenance activities on various SIMATIC S7 stations as bulk operations independent of TIA Portal.

The SIMATIC Automation Tool offers a wide range of functions:

- Scanning of a PROFINET/Ethernet system network and identification of all connected CPUs
- Assignment of addresses (IP, subnet, Gateway) and device name (PROFINET device) to a CPU
- Transfer of the date and the programming device/PC time converted to UTC time to the module
- Program download to CPU
- RUN/STOP mode switchover
- CPU localization through LED flashing
- Reading out of CPU error information
- Reading the CPU diagnostic buffer
- Reset to factory settings
- Firmware update of the CPU and connected modules

You can find the SIMATIC Automation Tool on the Internet.
(https://support.industry.siemens.com/cs/ww/en/view/98161300)

PRONETA

SIEMENS PRONETA (PROFINET network analysis) is a commissioning and diagnostic tool for PROFINET networks. PRONETA Basic has two core functions:

- The "Network analysis" offers a quick overview of the PROFINET topology. It is possible to make simple parameter changes (for example, to the names and IP addresses of the devices). In addition, a quick and convenient comparison of the real configuration with a reference system is also possible.
- The "IO test" is a simple and rapid test of the wiring and the module configuration of a plant, including documentation of the test results.

You can find SIEMENS PRONETA Basic on the Internet:
(https://support.industry.siemens.com/cs/ww/en/view/67460624)

SIEMENS PRONETA Professional is a licensed product that offers you additional functions. It offers you simple asset management in PROFINET networks and supports operators of automation systems in automatic data collection/acquisition of the components used through various functions:

- The user interface (API) offers an access point to the automation cell to automate the scan functions using MQTT or a command line.
- With PROFIenergy diagnostics, you can quickly detect the current pause mode or the readiness for operation of devices that support PROFIenergy and change these as needed.
- The data record wizard supports PROFINET developers in reading and writing acyclic PROFINET data records quickly and easily without PLC and engineering.

You can find SIEMENS PRONETA Professional on the Internet.
(https://www.siemens.com/proneta-professional)

SINETPLAN

SINETPLAN, the Siemens Network Planner, supports you in planning automation systems and networks based on PROFINET. The tool facilitates professional and predictive dimensioning of your PROFINET installation as early as in the planning stage. In addition, SINETPLAN supports you during network optimization and helps you to exploit network resources optimally and to plan reserves. This helps to prevent problems in commissioning or failures during productive operation even in advance of a planned operation. This increases the availability of the production plant and helps improve operational safety.

The advantages at a glance

- Network optimization thanks to port-specific calculation of the network load
- Increased production availability thanks to online scan and verification of existing systems
- Transparency before commissioning through importing and simulation of existing STEP 7 projects
- Efficiency through securing existing investments in the long term and the optimal use of resources

You can find SINETPLAN on the Internet
(https://new.siemens.com/global/en/products/automation/industrial-communication/profinet/sinetplan.html).

1.1.3 SIMATIC Technical Documentation

Additional SIMATIC documents will complete your information. You can find these documents and their use at the following links and QR codes.

The Industry Online Support gives you the option to get information on all topics. Application examples support you in solving your automation tasks.

Overview of the SIMATIC Technical Documentation

Here you will find an overview of the SIMATIC documentation available in Siemens Industry Online Support:

Industry Online Support International
(https://support.industry.siemens.com/cs/ww/en/view/109742705)

Watch this short video to find out where you can find the overview directly in Siemens Industry Online Support and how to use Siemens Industry Online Support on your mobile device:

Quick introduction to the technical documentation of automation products per video (https://support.industry.siemens.com/cs/us/en/view/109780491)

YouTube video: Siemens Automation Products - Technical Documentation at a Glance (https://youtu.be/TwLSxxRQQsA)

mySupport

With "mySupport" you can get the most out of your Industry Online Support.

Registration	You must register once to use the full functionality of "mySupport". After registration, you can create filters, favorites and tabs in your personal workspace.
Support requests	Your data is already filled out in support requests, and you can get an overview of your current requests at any time.
Documentation	In the Documentation area you can build your personal library.
Favorites	You can use the "Add to mySupport favorites" to flag especially interesting or frequently needed content. Under "Favorites", you will find a list of your flagged entries.
Recently viewed articles	The most recently viewed pages in mySupport are available under "Recently viewed articles".
CAx data	The CAx data area gives you access to the latest product data for your CAx or CAe system. You configure your own download package with a few clicks: • Product images, 2D dimension drawings, 3D models, internal circuit diagrams, EPLAN macro files • Manuals, characteristics, operating manuals, certificates • Product master data

You can find "mySupport" on the Internet. (https://support.industry.siemens.com/My/ww/en)

Application examples

The application examples support you with various tools and examples for solving your automation tasks. Solutions are shown in interplay with multiple components in the system - separated from the focus on individual products.
You can find the application examples on the Internet.
(https://support.industry.siemens.com/cs/ww/en/ps/ae)

Safety and security instructions 2

2.1 Security information

Siemens provides products and solutions with industrial security functions that support the secure operation of plants, systems, machines and networks.

In order to protect plants, systems, machines and networks against cyber threats, it is necessary to implement – and continuously maintain – a holistic, state-of-the-art industrial security concept. Siemens' products and solutions constitute one element of such a concept.

Customers are responsible for preventing unauthorized access to their plants, systems, machines and networks. Such systems, machines and components should only be connected to an enterprise network or the internet if and to the extent such a connection is necessary and only when appropriate security measures (e.g. firewalls and/or network segmentation) are in place.

For additional information on industrial security measures that may be implemented, please visit (https://www.siemens.com/industrialsecurity).

Siemens' products and solutions undergo continuous development to make them more secure. Siemens strongly recommends that product updates are applied as soon as they are available and that the latest product versions are used. Use of product versions that are no longer supported, and failure to apply the latest updates may increase customers' exposure to cyber threats.

To stay informed about product updates, subscribe to the Siemens Industrial Security RSS Feed visit (https://www.siemens.com/cert).

General information 3

3.1 Properties of the Web server

Benefits of the web server

The web server enables monitoring and administering of the CPU by authorized users over a network. Evaluations, diagnostics, and modifications are thus possible over long distances. Monitoring and evaluation is possible without STEP 7, only a web browser is required. Note that you must take appropriate measures to protect the CPU from compromise (such as restricting network access, using firewalls).

Activating the web server

The web server is deactivated in the delivery state of the CPU. This means that you must load a project in which the web server is activated to enable access using the web browser.

Security functions

The web server provides the following safety functions:

- Access via the secure transmission protocol "HTTPS" using the CA-signed web server certificate
- User authorizations you can configure by means of user list
- Activation for specific interfaces

Web browser

You need a web browser to access the HTML pages of the CPU.
The web browsers listed below have been tested for communication with the CPU. Other web browsers may also work, especially newer versions. However, if problems occur with web browsers not mentioned here that cannot be rectified, use one of the following tested web browsers:

- Microsoft Internet Explorer (Version 11.0)
- Microsoft Edge (Version 100.0)
- Google Chrome (Version 100.0)
- Mozilla Firefox (Version 90.0)
- Opera (Version 85.0)
- Mobile Safari and Chrome for iOS (iOS 12.5.1)

- Android browser (7.x, 8.x and 10.x)
- Chrome for Android (7.x, 8.x and 10.x)
- HMI Panels:
  - Basic Panel
  - Comfort Panel

NOTE

If you are using Internet Explorer, deactivate "Compatibility view" in the settings ("Options" menu).

NOTE

For access to display devices with low screen resolution, we recommend the use of basic web pages, see section Basic websites (Page 144).

NOTE

Older versions of the web browsers named above, which previously supported access to the HTML pages of the CPU, continue to allow this. However, these older versions do not support the new functions and HTML pages described in this edition.

NOTE

Two reserved communication connections are available to the web server for communication with the CPU.

Depending on the web browser used, different numbers of connections to the CPU are established. If more connections are available, more communication connections will be established.

If no more connections are available, display or functional problems may occur. This is because the web server will reject all other communication connections apart from the two that are reserved.
For this reason, the web pages may not load fully.

NOTE

If you access the web server of the CPU using a communications processor (CP), ensure that the cache (temporary Internet files) is activated in your web browser. Choose the "Automatically" option in the cache settings of your web browser.

If the cache is deactivated or if a setting other than "Automatically" is made in the cache settings of your web browser, this may result in slow access times and incomplete display.

NOTE

After a firmware update of the CPU, incorrect display of web pages can occur in various web browsers. This is caused by problems of the new CPU firmware with the cache of the web browser.

Solution: Press F5 or clear the web browser cache.

NOTE

Web browser behavior can be different if a certificate is not valid yet or is no longer valid. Siemens has no influence on this behavior. This means we cannot guarantee the reliable functionality of the web server with invalid certificates.

Reading out data

With the web server, you can read out the following data from the CPU and, in some cases, modify and write back the data to the CPU.

- Start page with general CPU information (Page 39)
- Information on Diagnostics (Page 46)
  - Identification
  - Program protection
  - Memory
  - Runtime information
  - Fail-safe (with an F CPU)
- Contents of the diagnostics buffer (Page 56)
- Module information (Page 63)
- Firmware update (Page 67)
- Alarms (Page 70)
- Information on Communication (Page 71)
  - Important interface parameters
  - Port statistics
  - Display of the communication resources
  - Display of the communication connections
- PROFINET-Topology (Page 77)
  - Graphical view (set and actual topology)
  - Table view (actual topology)
  - Status overview
- Tag status (Page 86)
- Watch tables (Page 89)
- User pages (Page 117)
- Filebrowser (Page 142)
- DataLogs (Page 113)
- User files (Page 115)

- Online backup and restoration of the configuration (Page 90)
- Diagnostics information for technology objects (Page 58)
- Evaluation of trace recordings (Page 95)
- Reading out service data (Page 143)
- Basic websites (Page 144)

The HTML pages are described in more detail on the following pages.

NOTE

Max. characters at data type WSTRING

Note that the data type WSTRING is limited to 254 characters for the display in the web server. If the 254 characters are exceeded, the web server does not display the superfluous characters.

Web access to the CPU via PG/PC, HMI devices and mobile end devices

Proceed as follows to access the web server:

1. Use STEP 7 to download a project in which the web server is activated to the CPU.
2. Connect the display device (PG/PC, HMI, mobile terminal device) with the CPU or a communication module using a PROFINET interface.
   If you are working with WLAN, activate the WLAN on the display device and establish a connection to the access point (e.g. SCALANCE W788-1RR or SCALANCE W784-1), which is in turn connected to the CPU.
3. Open the web browser on the display device.
4. Enter the IP address of the interface of the CPU which is connected to the client in the "Address" field of the web browser in the following format: https://a.b.c.d (entry example: https://192.168.3.141).
   The introduction page of the CPU opens. From the intro page you can navigate to more information.

More information on access using the secure transmission protocol "HTTPS" is available in the section Configuring the Web server (Page 23).

More information

Using a smartphone, you can access the web server of the CPU either via WLAN or access to the CPU via the SIMATIC S7 app (using web server functionality). You can find additional information in the FAQ entry ID 103473392 on the Service&Support (https://support.industry.siemens.com/cs/ww/en/view/103473392) Internet page.

Note: The web server must also be activated for access to the CPU via the SIMATIC S7 app.

The SIMATIC S7 app offers you additional functions. You can find a detailed application example with further documentation and example projects on the Service&Support (https://support.industry.siemens.com/cs/ww/en/view/84133612) Internet page.

3.2 Configuring the Web server

To use the full functionality of the Web server, the following settings in STEP 7 are necessary.

Procedure

You have opened the properties dialog of the CPU in STEP 7 in the project view.

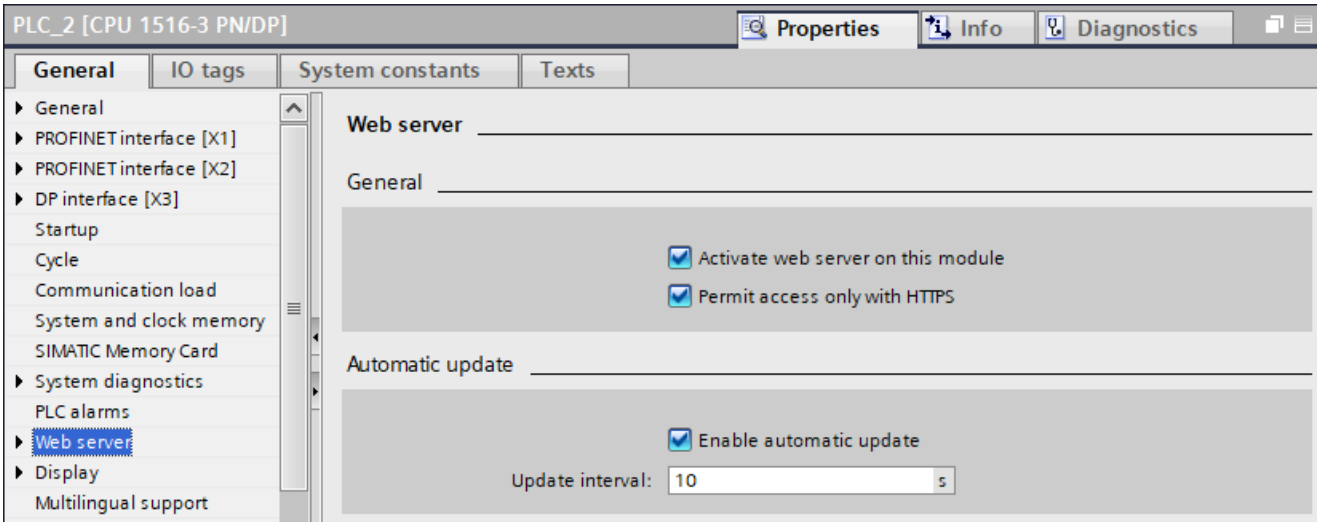

Figure 3-1 Web server settings in STEP 7

Activate Web server on this module

The Web server is deactivated in the default setting of a configured CPU. Proceed as follows to activate the Web server:

1. Open the "Devices & Networks" view by double-clicking in the project tree in STEP 7.
2. Select the desired CPU in the device, network or topology view.
3. Navigate to the "Web server" area in the Inspector window properties, "General" tab.
4. Select the "Activate Web server on this module" check box.
   The following note is output:

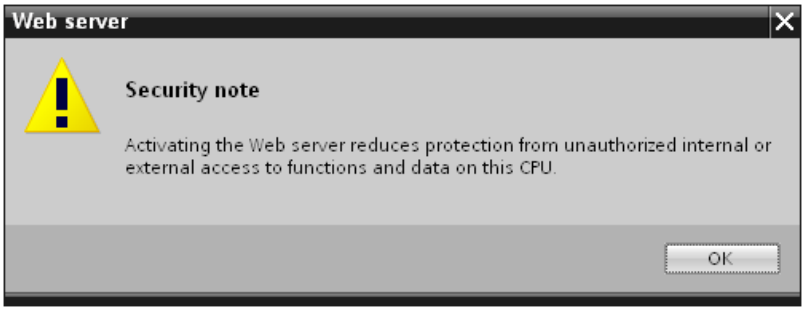

Figure 3-2 Security note upon activation of the Web server in STEP 7

NOTE

When projects from deliveries are applied in which the Web server was already activated and configured on the module, this security note is not shown.

Permit access only with HTTPS

Note: A valid Web server certificate is required in the CPU to operate the Web server using the secure transfer protocol "HTTPS". See "Creating and assigning a Web server certificate" in the section above.

To ensure secure access to the Web server the "Permit access only with HTTPS" check box is activated in the basic setting of a configured CPU.

The web pages are transmitted by default via a secure connection and are protected from attacks by third parties. Note that in this case the URL of the CPU starts with "https://".

The requirements for error-free HTTPS access to the CPU are as follows:

- The current date/time must be set in the CPU.

  NOTE

  When using secure communication (e.g. HTTPS), make sure that the corresponding modules have the current time of day and the current date. Otherwise the modules cannot check the validity period or evaluate the certificates used as invalid. Therefore, a secure connection cannot be established.

- The IP address of the CPU must be assigned.
- A valid Web server certificate offered by the CPU is installed in the web browser.

  NOTICE

  Safety-related functions only possible with CA-signed Web server certificate

  For the safety-relevant functions, backup and restoring the CPU configuration, see section Online backup (Page 90), are only possible with a CA-signed Web server certificate.

  A valid CA-signed Web server certificate in the CPU is also required:

  – User management with password-protected users
  – Saving and downloading diagnostics information in csv files

  To use the full functionality of the Web server, we therefore recommend that you use the Certificate Manager to create a CA-signed server certificate in the global security settings and assign it to the CPU.

  If no CA-signed Web server certificate is installed, a warning is output recommending that you do not use the page. To view the page, you may need to "Add an exception", depending on the web browser used.

  A valid CA certificate is available for download from the "Intro" web page under "Download certificate".

  You can find instructions for installing the certificate in the help system of your web browser and in the FAQ with the entry ID 103528224 at the Service&Support (https://support.industry.siemens.com/cs/ww/en/view/103528224) website.

NOTE

To protect against manipulation from the outside, download the certificate only in an environment that is guaranteed not to be compromised. Installation of the CA certificate has to be carried out once for each display device you wish to use.

Access protection

The encrypted connection created with the help of the certificate prevents eavesdropping or falsification of communication, but does not provide access protection. This means you have to protect your CPU from unauthorized access with the corresponding configuration in the user management.
You can find more information on the access protection in the online help for STEP 7, keyword: "Protection".

Activate automatic update

Automatic updating is activated in the default setting of a configured CPU.
The following web pages are updated automatically:

- Start page
- Diagnostics (memory, runtime information, fail-safe)
- Diagnostics buffer
- Motion Control diagnostics
- Module information
- Alarms
- Communication
- Topology
- Tag status
- Watch tables
- Record
- DataLogs
- User files
- Customer pages
- File browser

NOTE

The default activation interval is 10 seconds.
Larger data volumes or multiple HTTP/HTTPS-connections increase the update time.

Setting the language for the Web

In total, you can assign up to three different project languages to the user interface languages of the Web server.
In STEP 7, activate the project languages that you want to use and then assign one of the activated project languages to each of the Web server interface languages.
You can find more information about the language settings and a description of how to assign a project language to the interface languages in the section Language settings (Page 35).

Amending user management

Note: A valid CA-signed Web server certificate in the CPU along with a secure HTTPS connection are required for user administration with password-protected users. See "Creating and assigning a Web server certificate" and "Permit access only with HTTPS" in this section.

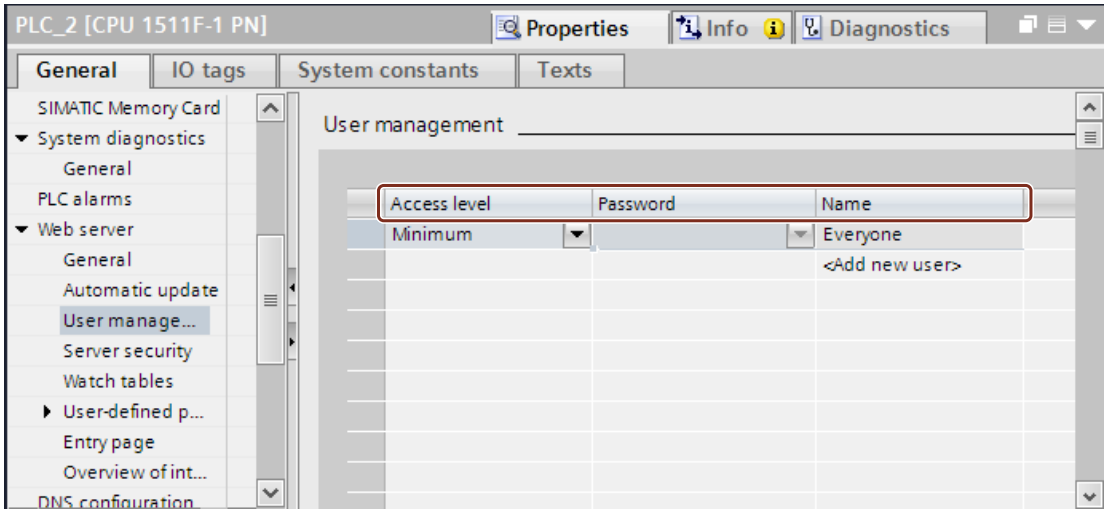

Figure 3-3 User administration in STEP 7

In STEP 7, you can manage the user list in the "Web server > User administration" area. The user list provides the following options:

- Create users
- Specify access permissions
- Assign passwords

Users only have access to the options that are permanently linked to the access rights. You can assign different user rights depending on the CPU and firmware used.

The available user rights can be selected in STEP 7 as follows:

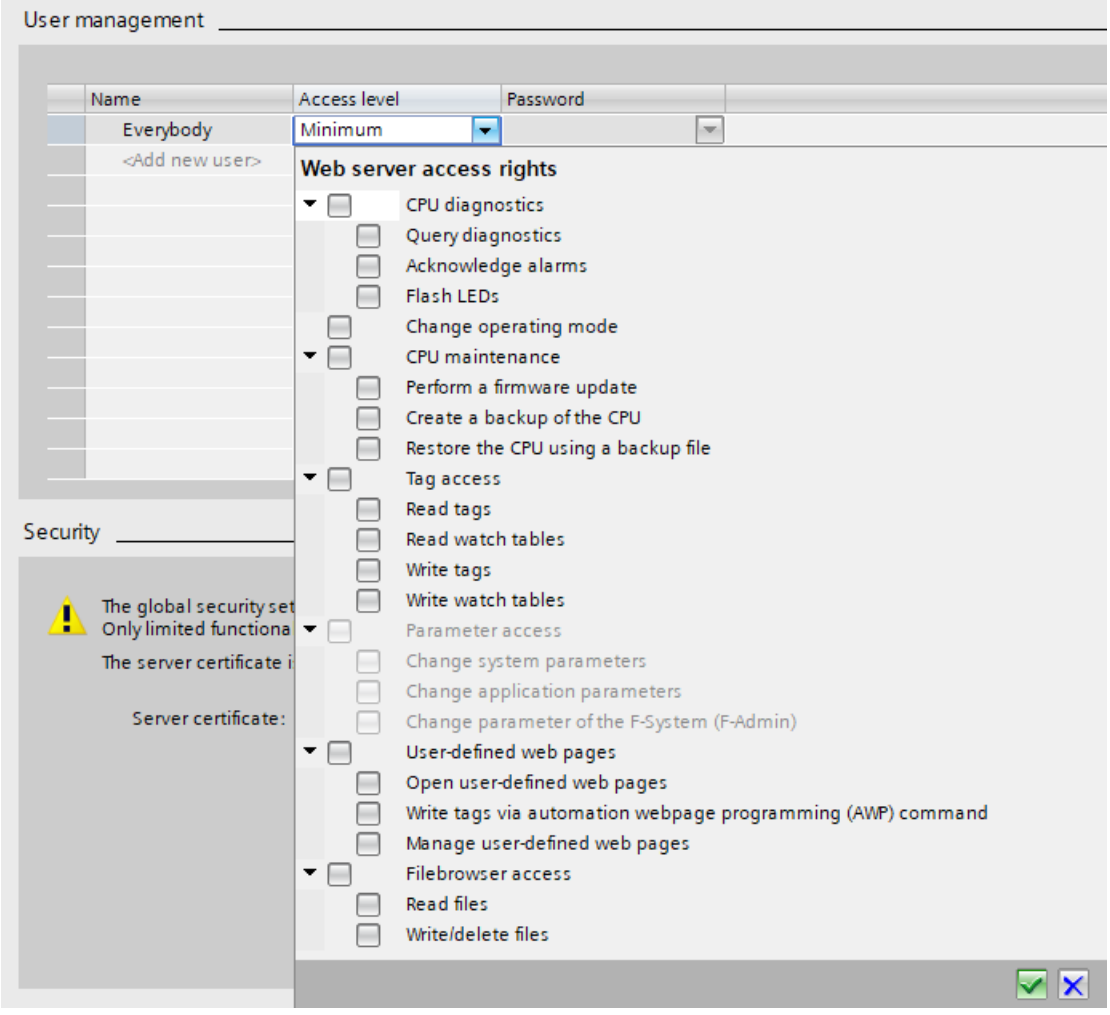

Figure 3-4 Assignment of user rights in STEP 7

If you are not logged in, you automatically access the Web server as the user "Everybody". It does not matter in this case whether you have configured additional users.

User "Everybody"

A user with the name "Everybody" is preset in the user list; this user has minimum access rights. These are read-only access to the intro page and start page. The user "Everybody" is defined without assigning a password, but you can assign all access authorizations available in STEP 7 to it.

You can create a maximum of 20 users and a user "Everybody".

Since the user "Everybody" is defined in STEP 7 without assigning a password, pay attention to which access authorizations you assign to this user.
Individual authorizations, such as the ability to change the operating mode, can represent a security risk.
When assigning security-relevant authorizations, we recommend that you create a user with password protection in STEP 7.

WARNING

For an F-CPU, do **not** assign the user "Everybody" the access authorization "Perform changes as F-Admin".

Make sure that you observe the warnings relating to this in the section "Restoring a backup of the safety program to an S7-300/1500 F-CPU" in the manual SIMATIC Safety - Configuring and Programming (https://support.automation.siemens.com/WW/view/en/54110126).

Passwords should always be more than 8 characters in length and contain uppercase and lowercase characters as well as special characters and numbers (?!+%$1234...). Computer keyboard character strings and words from the dictionary are unsuitable. Change the password regularly.

NOTE

When assigning rights, note that read and write access to the watch tables and the tag status is retained, even if you have deactivated the attribute "Accessible from HMI/OPC UA" in the PLC tag table when configuring the data block in STEP 7.

Customer pages

In the "Customer pages" area, you can download your own web pages to the CPU and make your own web applications available via the web browser.
You can find more information in section User pages (Page 117).

Activation of the Web server for specific interfaces

In the area "Overview of interfaces", you have the option to enable access to the Web server.

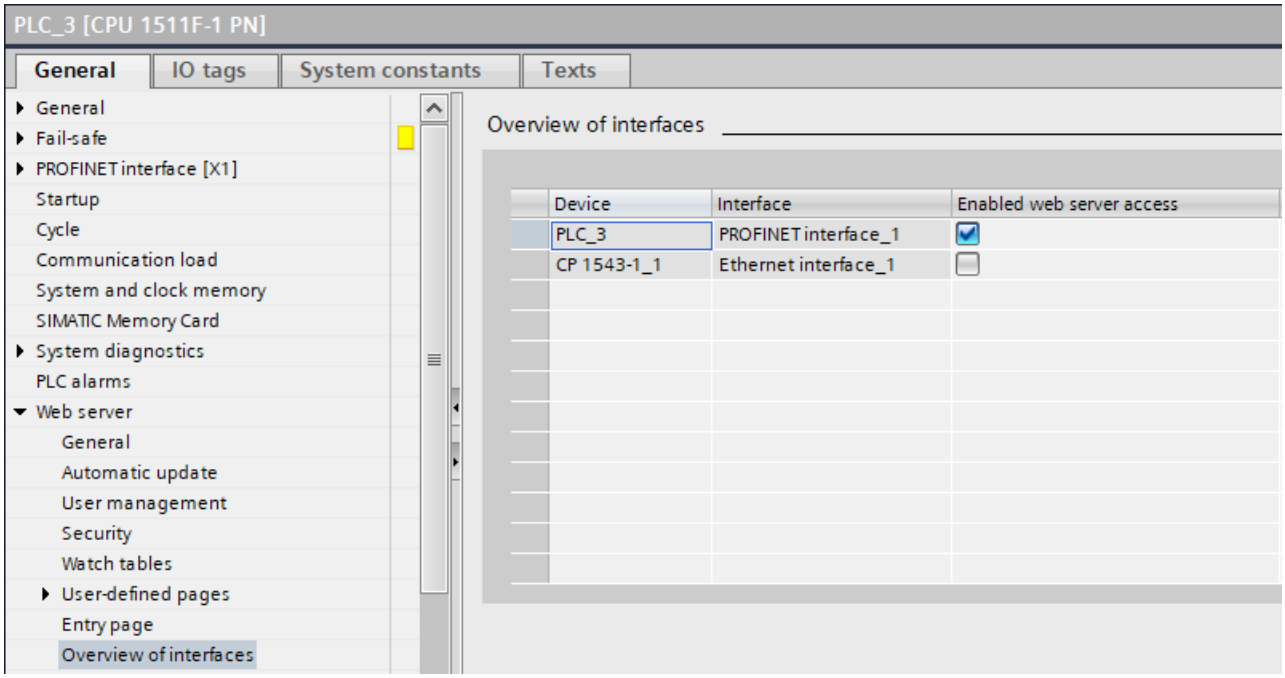

Figure 3-5 Activation of access to the Web server via the interfaces

3.3 Certificate

3.3.1 Web server certificates

To secure data exchange with a partner, different applications and communication functions of the CPU use device certificates that are managed specific to the application. In the case of the device certificate for the web server, this involves a web server certificate.

3.3.2 Managing certificates via TIA Portal

Creating and assigning a Web server certificate

Operation of the Web server using the secure transfer protocol "HTTPS" requires a valid Web server certificate.

For SIMATIC S7 1500 CPUs with firmware V2.0 and higher, you have to create the Web server certificate of the CPU yourself using STEP 7 and assign it to the Web server in the properties of the CPU. This certificate is also downloaded to the CPU automatically when the hardware configuration is downloaded.

NOTE

If you update the firmware of a SIMATIC S7 1500 CPU or ET 200SP CPU with a firmware version < V2.0 to a firmware version ≥ V2.0, a valid Web server certificate is automatically generated and used. The same applies to the replacement parts scenario in which a newer CPU replaces a CPU with firmware version < V2.0.

If you update or replace an already configured CPU, a valid Web server certificate is automatically generated and used for CPUs with a firmware version ≤ V1.8.

You can create different Web server certificates:

- If you use the global security settings for the certificate manager, the certification authority of the project (CA certificate) signs the device certificate of the Web server. During loading, the CA certificate of the project is automatically loaded as well.
- If you do not use the certificate manager in the global security settings, STEP 7 generates the device certificate as a self-signed certificate.

NOTICE

Utilizing the full functionality of the Web server

A valid CA-signed Web server certificate in the CPU is a requirement for the following functions:

- User management with password-protected users
- Saving and downloading diagnostic information in csv files
- Backup and restore of security-related functions such as the configuration of the CPU

To use the full functionality of the Web server, we therefore recommend you activate the global security settings of the certificate manager, create a CA-signed Web server certificate and assign it to the CPU.

Creating a self-signed Web server certificate

To create a self-signed Web server certificate with TIA Portal, follow these steps:

1. In the Inspector window Properties of the CPU, "General" tab, navigate to the "Web server > Security" area.
2. Click the "Add" button in the drop-down list to select a certificate.
   The "Create a new certificate" dialog opens.
3. Select the "Self-signed" check box in the follow-up dialog.
4. Enter the parameters for the new certificate or confirm the default settings.
   - Select "Web server" in the "Usage" box.
   - Enter the IP address(es) of the interface(s) or the domain name of the configured CPU in the "Subject Alternative Name" field.
5. Click "OK" to confirm.
6. Compile and load the configuration into the CPU.
   The device certificate of the Web server is a component of the configuration.

Creating and assigning a CA-signed Web server certificate

To create a CA-signed Web server certificate with TIA Portal, follow these steps:

1. Protect your project with the security settings "Protect this project".
   The "Security functions" appear in the project tree.
2. In the "General" tab of the Properties of the CPU Inspector window, navigate to the "Protection & Security > Certificate Manager" area and select the "Use global security settings for certificate manager" option.

   NOTE

   For managing certificates with the global security settings, you require the "Configure security" configuration permission.

3. Log in as a user in the project tree in the "Security settings" section. The "Administrator" role is the default for the first logon for a new project.
4. In the Inspector window Properties of the CPU, "General" tab, navigate to the "Web server > Security" area.
5. Click the "Add" button in the drop-down list to select a certificate.
   The "Create certificate" dialog opens.
6. In the follow-up dialog, select the "Signed by certificate authority" check box and select the certificate authority from the drop-down list.
7. Enter the parameters for the new certificate or confirm the default settings.
   - Select "Web server" in the "Usage" box.
   - Enter the IP address(es) of the interface(s) or the domain name of the configured CPU in the "Subject Alternative Name" field.
8. Click "OK" to confirm.
9. Compile and load the configuration in the CPU.
   The device certificate of the Web server and the CA certificate are components of the configuration.

NOTICE

Addressing the Web server of the CPU via domain names

If you enter the IP address(es) of the interface(s) of the configured CPU in the "Subject Alternative Name" field, the generated certificate may not be accepted by all Internet browsers. In addition, you must generate and load a new Web server certificate (end entity certificate) with each change of the IP address of an Ethernet interface of the CPU, since the identity of the CPU changes with the IP address.

You can avoid this problem by addressing the Web server of the CPU using domain names instead of IP address(es), e.g. "myconveyer-cpu.room13.myfactory.com". For this purpose, you have to manage the domain names of your CPU via a DNS server. Addressing via domain names is recommended especially for a configuration with reception of the IP address from a DHCP server, as in this case the assigned IP address is not known beforehand.

More information

For detailed information on local self-signed and global CA-signed certificates, on the "Public Key Infrastructure" (PKI) and on certificate management, refer to the Communications Function Manual (https://support.industry.siemens.com/cs/ww/en/view/59192925) and to the STEP 7 online help, keyword "Secure Communication".

The application example "The use of certificates with the TIA Portal (https://support.industry.siemens.com/cs/de/en/view/109769068)" includes detailed instructions on how to create a secure connection to the Web server of a SIMATIC S7-1500 CPU.

3.3.3 Managing certificates in runtime

If you manage certificates via the TIA Portal, load a certificate together with the hardware configuration into the CPU. To do this, the CPU must be in STOP mode. You cannot load a new certificate or renew an existing certificate without a RUN-STOP-RUN transition.

If you manage certificates at runtime of the CPU, loading or updating a certificate is also possible in RUN mode.

Managing the web server certificate during the CPU runtime

As of firmware version V3.0, it is also possible to transfer web server certificates to the CPU during runtime via the GDS server using OPC UA methods. The GDS server is part of the OPC UA server in the CPU. Through GDS push management functions, you can automatically update OPC UA certificates for the OPC UA server of the S7-1500 CPU.

You can find detailed information about the concept of automated certificate management with GDS (Global Discovery Services) in the Communication (https://support.industry.siemens.com/cs/ww/en/view/59192925) Function Manual.

Setting the type of certificate management

In the "Protection & Security" > "Certificate manager" category on the "General" tab of the "Properties" Inspector window, select how you want to handle certificates.

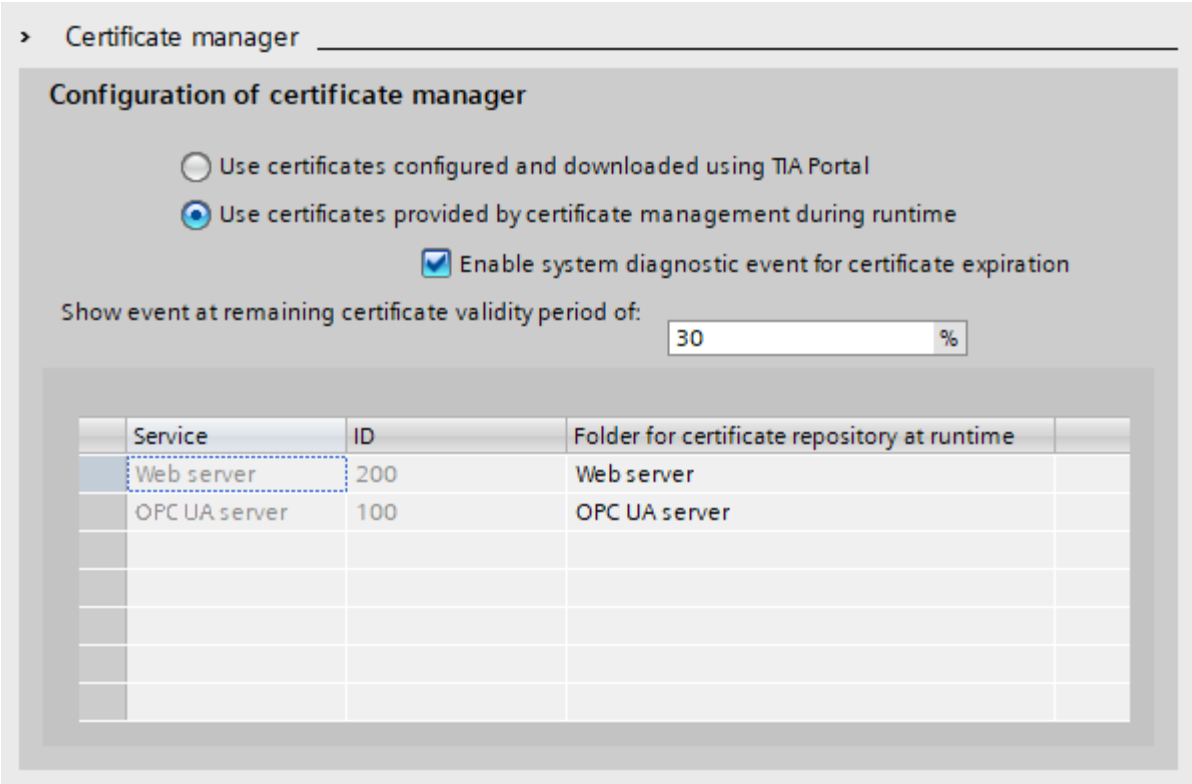

Figure 3-6 Configuration of the certificate manager

If you want to submit certificates via GDS at runtime, click the option "Use certificates provided by the certificate management during runtime".

By selecting the "Enable system diagnostics event for certificate expiration" button, you specify that you want to be notified when a certificate expires. In the input field "Show event at remaining certificate validity period of:" enter a percent value. At the time this value is reached, the CPU triggers a system alarm with a maintenance request.

Example:

The certificate transferred via GDS on 01/06/2022 has a validity from 01/06/2022 to 30/06/2022 (30 days). You have input a percent value of 10 for the diagnostics event. On 27/06/2022, after 90% of the validity period has expired, the system diagnostics alarm reports that the transmitted certificate will expire on 30/06/2022.

Regardless of the configured percentage value, a message appears in any case when the validity period of a certificate expires.

NOTE

Time settings in the CPU

In order for the CPU to detect the expiration of a certificate, you must set the system time to Coordinated Universal Time (UTC). An incorrect system time can lead to incorrect messages regarding the expiration of certificates.

In the lower area of the "Certificate manager" category in the table, you can find a list of all CPU applications with certificates you may transfer to the CPU at runtime. In the list, the CPU applications are assigned an ID. Under the "Folder for certificate repository at runtime" column, you can find the changeable name of the certificate group.

Handling of existing certificates during loading

Before you load a project into the CPU, you may determine in the "Load preview" dialog window what should happen with the certificates of the CPU received at runtime.
As of firmware version V3.0, you can use the "Delete selected" option to delete certificates of selected CPU applications.

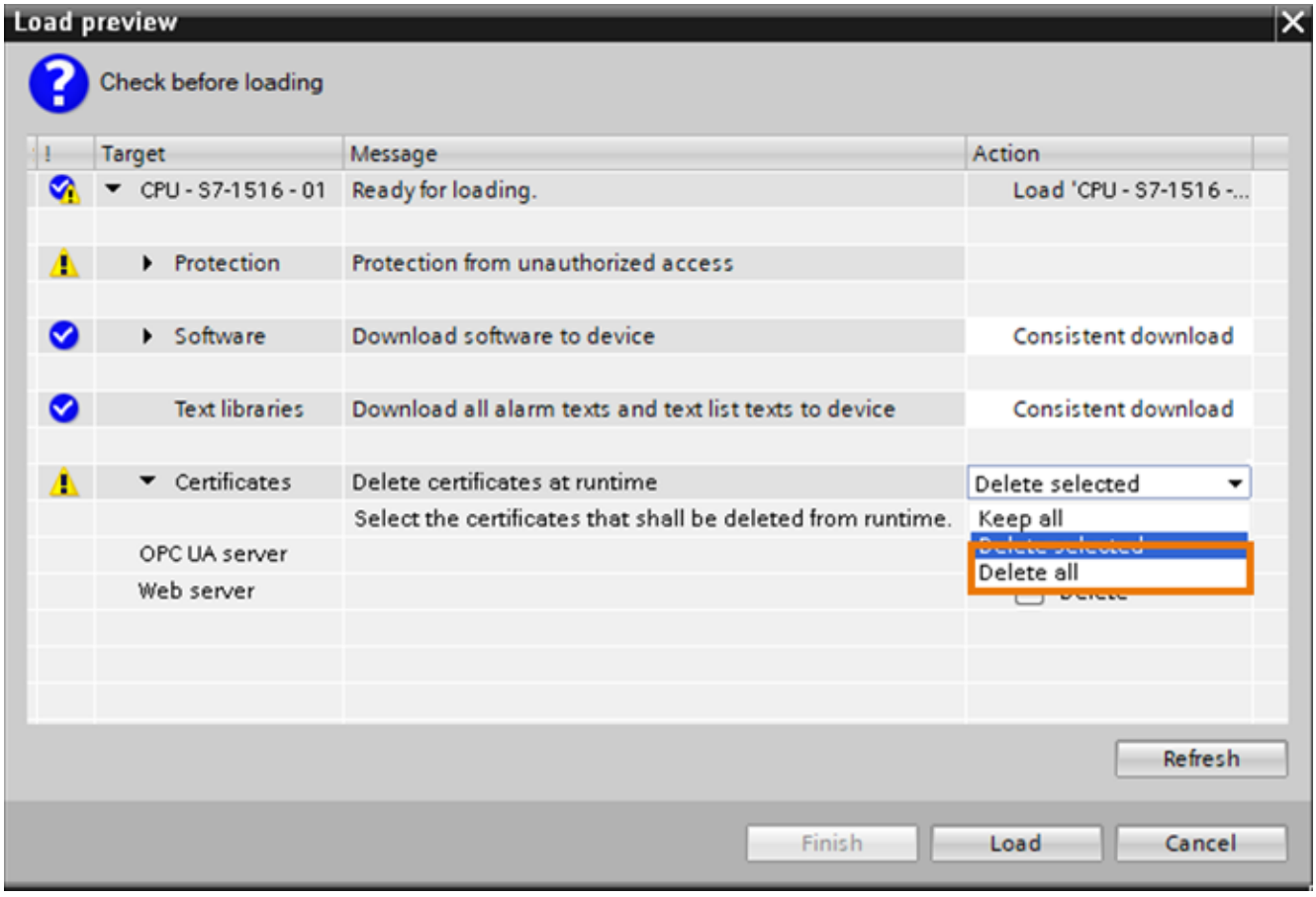

Figure 3-7 Deleting certificates

3.4 Language settings

Introduction

The Web server provides the user interface in the following languages:

- German (Germany)
- English (U.S.)
- French (France)
- Italian (Italy)
- Spanish (traditional sort)
- Japanese
- Chinese (Simplified)
- Korean
- Russian
- Turkish
- Portuguese (Brazil)

Requirements for the availability of the East Asian languages

The following requirements must be met for the East Asian languages:

- The appropriate package for the support of East Asian languages is installed on the display device (such as PC).
  For additional information on installing files for East Asian languages, refer to your Windows documentation.
- STEP 7 for East Asian languages is installed on the programming device for the configuration of the CPU.

NOTE

SIMATIC HMI devices with Windows CE operating system do not support East Asian languages.

Requirements for multilingual output of text

In order for the web server to correctly display messages, comments and diagnostic information in the different project languages, you must assign one project language to each of the desired web server interface languages in STEP 7.

NOTE

The project languages of the STEP 7 project that you want to assign must be activated and the corresponding texts (translations) must be available in the project. The project languages selection is available in the project tree under "Languages & Resources".

Setting the language for the Web

Once you have activated the Web server on your module, assign a project language of the STEP 7 project from the drop-down list to each interface language. This assignment has an impact of the display of pages with texts that depend on the project language, such as the diagnostic buffer.

1. Navigate to the "Multilingual support" area in the Inspector window Properties of the CPU, "General" tab.
2. Assign a project language from the drop-down list to each interface language of the Web server.

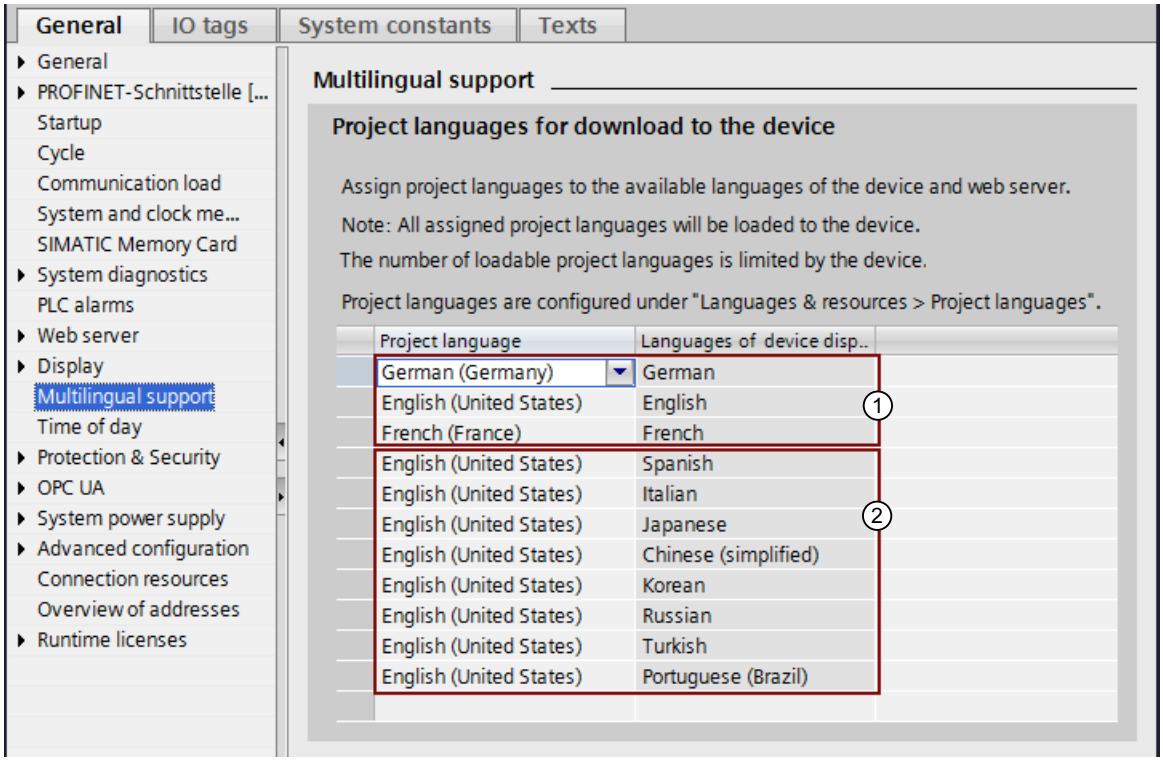

Figure 3-8 Language settings for the web server in STEP 7

You can also assign interface languages the same project language, for example:

- ① Project language German for user interface language German, English (US) for English, French for French.
- ② Project language English (US) for all other available interface languages of the Web server.

In total, you can assign up to three different project languages of the STEP 7 project to the user interface languages of the web server.

Reference

You can find additional information on how to set the project language in STEP 7 in the online help for STEP 7, keyword: "Selecting project languages".

3.5 Updating and saving information

Updating the screen content

Automatic updating is activated in the default setting. The preset update time is 10 s.
You update the web pages manually via the function key <F5>.

Disabling automatic updating for an individual web page

Click Off to temporarily deactivate automatic updating for a web page.
Note that the deactivation affects only the currently visited web page. Automatic updating is activated again when you change to a different web page.
You reactivate automatic updating by clicking On.

NOTE

If the load on the CPU is very high during operation, for example, due to a large number of PROFINET interrupts or extensive communication jobs, the updating of web pages may be significantly delayed for the duration of this high CPU load.

Printing web pages

The Web server offers you a print preview on most web pages. Click the symbol to open it.
Created printouts always contain the current information in the CPU. This means that it is possible that the information in the print preview is more up-to-date than the information in the standard view.

Web pages

4

4.1 Start page with general CPU information

Connecting to the Web server

Establish a connection to the Web server by entering the IP address of the interface of the configured CPU which is connected to the client in the address bar of the web browser, for example, https://192.168.3.141. The connection is set up and the "Intro" page opens.

The examples in the next section provide information about the different web pages.

Intro

The figure below shows the first page (Intro) called by the Web server.

Figure 4-1 Introduction page of the Web server of the CPU 1516-3 PN/DP

Click the NEXT link to go to the Web server pages.

NOTE

Select the "Skip Intro" check box in order to skip the intro. The Web server will then take you directly to its start page in future. This setting is saved in the user profile of the current PC user.

You can undo the setting "Skip Intro" by clicking the "Intro" link in the left-hand navigation bar of a web page.

Setting the user interface language

You can change the language for the Web server interface, e.g., from English to German, in the upper right corner. This option is available to you on all web pages of the Web server.

Switching the time display

You can set the format of the time display to Coordinated Universal Time (UTC) or PLC local time (default setting) on the left next to the language setting.

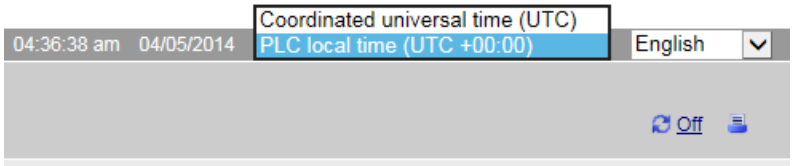

Figure 4-2 Switching the time display

You can switch the time display on all the Web pages that provide this drop-down list.

The displayed PLC local time comes from the time zone set in the CPU properties without consideration of the daylight saving / standard time setting.

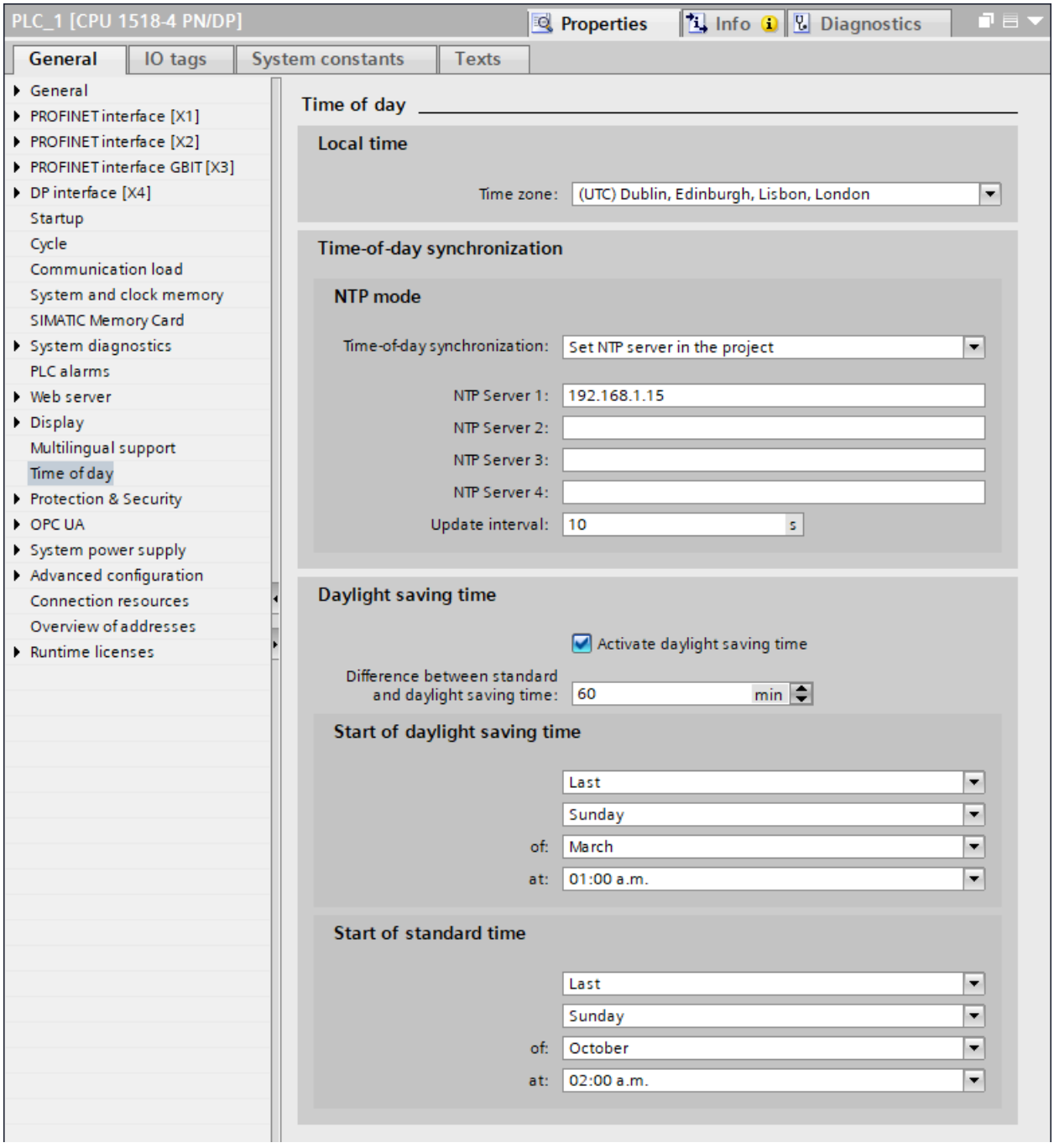

Figure 4-3 Setting the time in the CPU properties

The switchover has an effect on the following Web pages:

Table 4-1 Switching the time display: Display on Web pages

Web pages	Display as Coordinated Universal Time (UTC) or as PLC local time
Start page	Last F-change
Diagnostics buffer	Date and time of the diagnostic buffer entry
Alarms	Date and time of the alarms
Online backup	Backup file with date and time of the backup
DataLogs	Date of change and time of change
File browser	Date of change and time of change
User files	Date of change and time of change
Save service data	File with time stamp of the storage

Start page

The start page before login offers information as shown in the figure below. The image of the CPU with LEDs shows its current status at the time of the data request.

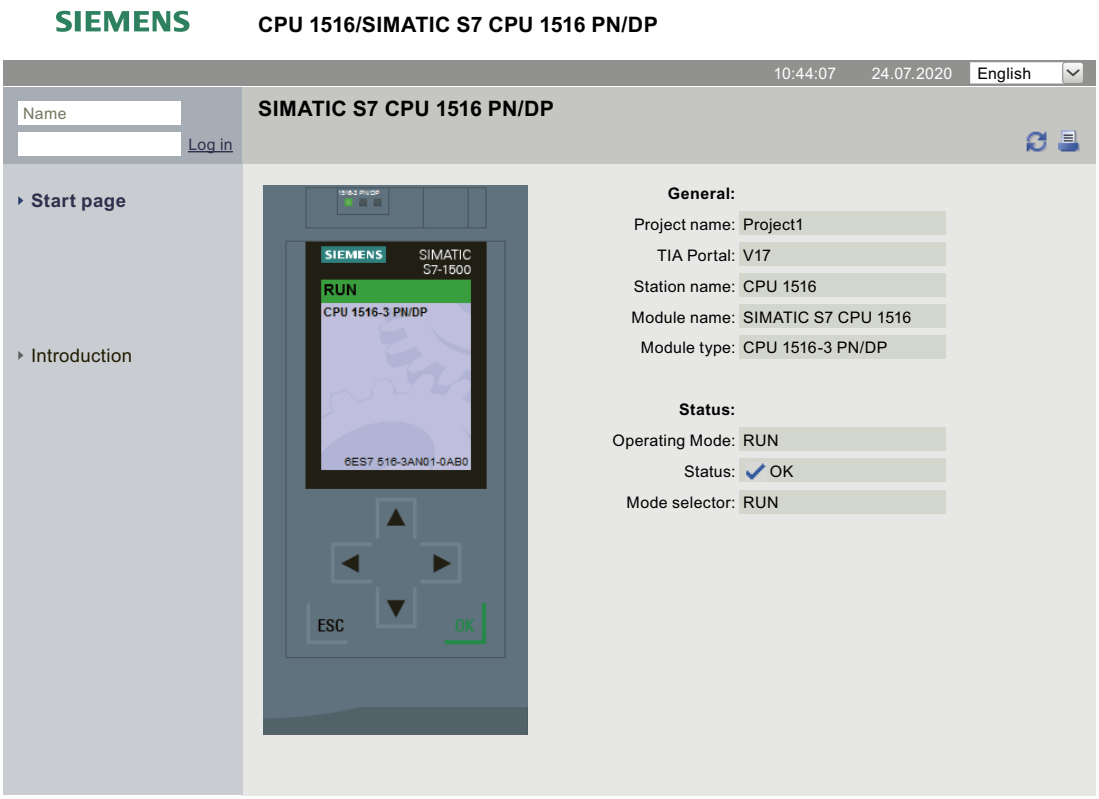

Figure 4-4 General information before login

Log in

To use the full functionality of the web pages, you must be logged in. Log in with a user name and password specified in the Web configuration in STEP 7. You now have corresponding permissions to access the web pages released for this user. If you have not configured a user, read-only access is granted to intro and start pages by default.

NOTE

After carrying out your required actions, log out explicitly from the Web server by clicking "Logout" in order to minimize the risk of unauthorized external access.

NOTE

Session timeout

The timeout for each started session is 30 minutes. After each update/automatic update, the session is automatically extended by another 30 minutes.

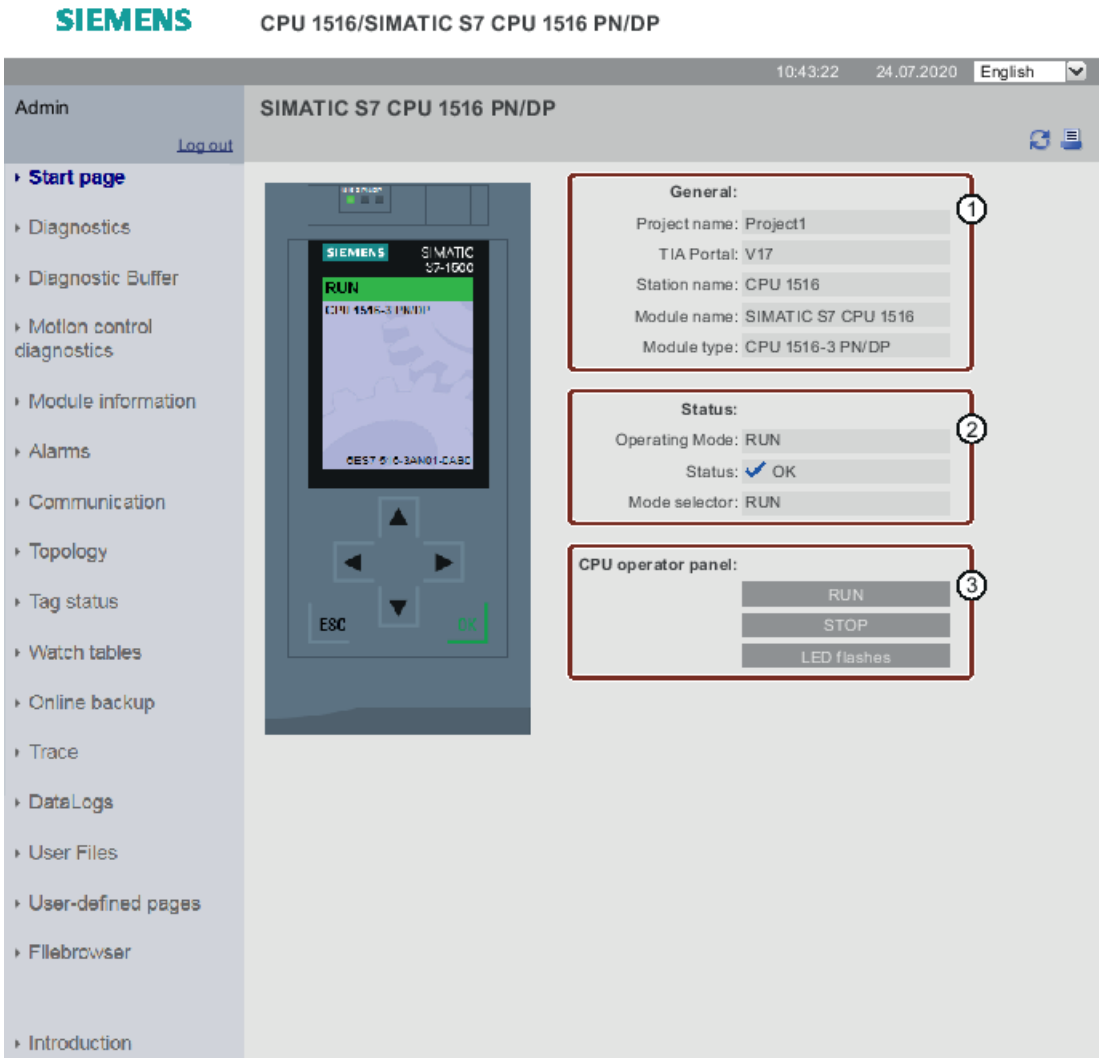

Figure 4-5 Start page after login

① "General"

"General" contains information about the CPU whose Web server you are currently connected to, as well as the project name and the version of the TIA Portal with which the CPU was configured. The displayed TIA Portal version is at least required to load or edit the entire project.

② "Status"

"Status" contains information about the CPU status at the time of the query.

③ "CPU operator panel"

In the area "CPU operator panel" you have the possibility to change the operating mode of the CPU ("RUN"/"STOP" buttons) or to have the LEDs blink ("LED blink" button) with corresponding access rights.

Additional information for F-CPUs

Figure 4-6 Start page after login to an F-CPU

④ "Fail-safe"

"Fail-safe" contains additional information on the F-CPU. Further information about the specification is available in the Programming and Operating Manual SIMATIC Safety - Config-

uring and Programming
(https://support.industry.siemens.com/cs/de/de/view/54110126/en?dl=en).

Reference

You can find additional information in the section Configuring the Web server (Page 23).

4.2 Diagnostics

Overview

The "Diagnostics" web page provides more information about the tabs:

- Identification
- Program protection
- Memory
- Runtime information
- Fail-safe (with an F CPU)

"Identification" tab

The CPU characteristics are available in the "Identification" tab.

Figure 4-7 "Identification" tab

"Identification"

The "Identification" info box contains the plant and location designation and the serial number. Plant and location designations can be configured in STEP 7 in the properties dialog of the CPU in the "General" tab.

"Order number"

The "Order number" info box contains the order number for the hardware.

"Version"

You can find the information on hardware version, firmware version on the CPU and bootloader version in the "Version" info box.

"Drive Controller Info"

If you are using a SIMATIC drive controller, you will find information about the hardware update version of the drive controller, the firmware version of SINAMICS Integrated, and a link to the readable information of SINAMICS Integrated.

You can find more information in the SIMATIC Drive Controller (https://support.industry.siemens.com/cs/ww/en/view/109766665) System Manual.

"Motion control package information"

Display of the name and version of the Motion Control technology package used (Technology Package Standard Motion Control or Technology Package Motion Control KinPlus).

For more information, refer to the SIMATIC S7-1500 S7-1500T Kinematics Functions (https://support.industry.siemens.com/cs/ww/en/view/109781850) manual.

"Program protection" tab

The "Program protection" tab provides information on whether the PLC program contains know-how protection or copy protection.

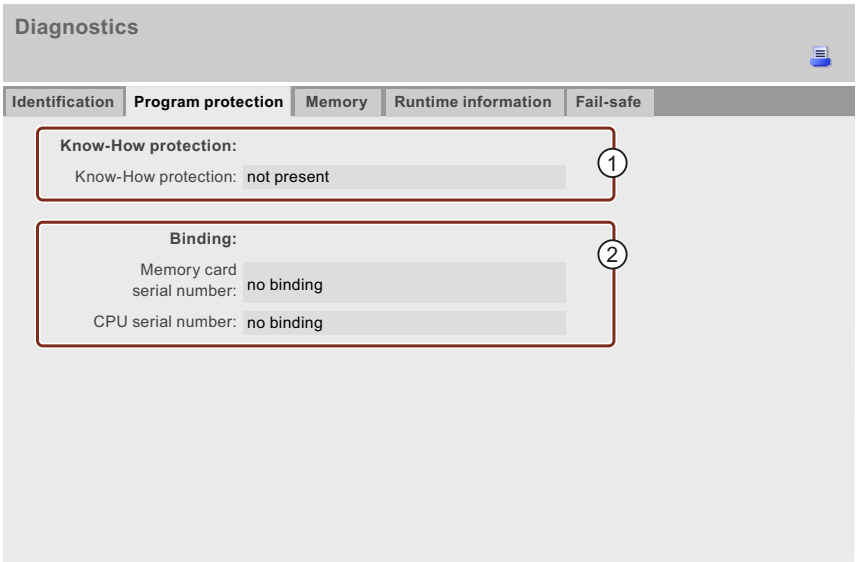

Figure 4-8 "Program protection" tab

"①Know-how protection"

Information on whether the PLC program contains at least one block with know-how protection or not can be found in the info field "Know-how protection".

②"Binding"

In the info field "Binding" you can find information on whether copy protection has been activated by binding at least one program block of the PLC program to the serial number of the CPU or memory card.

- "Binding"
- "No binding"
- "Binding mismatch": At least one block is bound to a different serial number (load process is rejected)

"Memory" tab

The "Memory" tab contains current values on the memory currently in use.

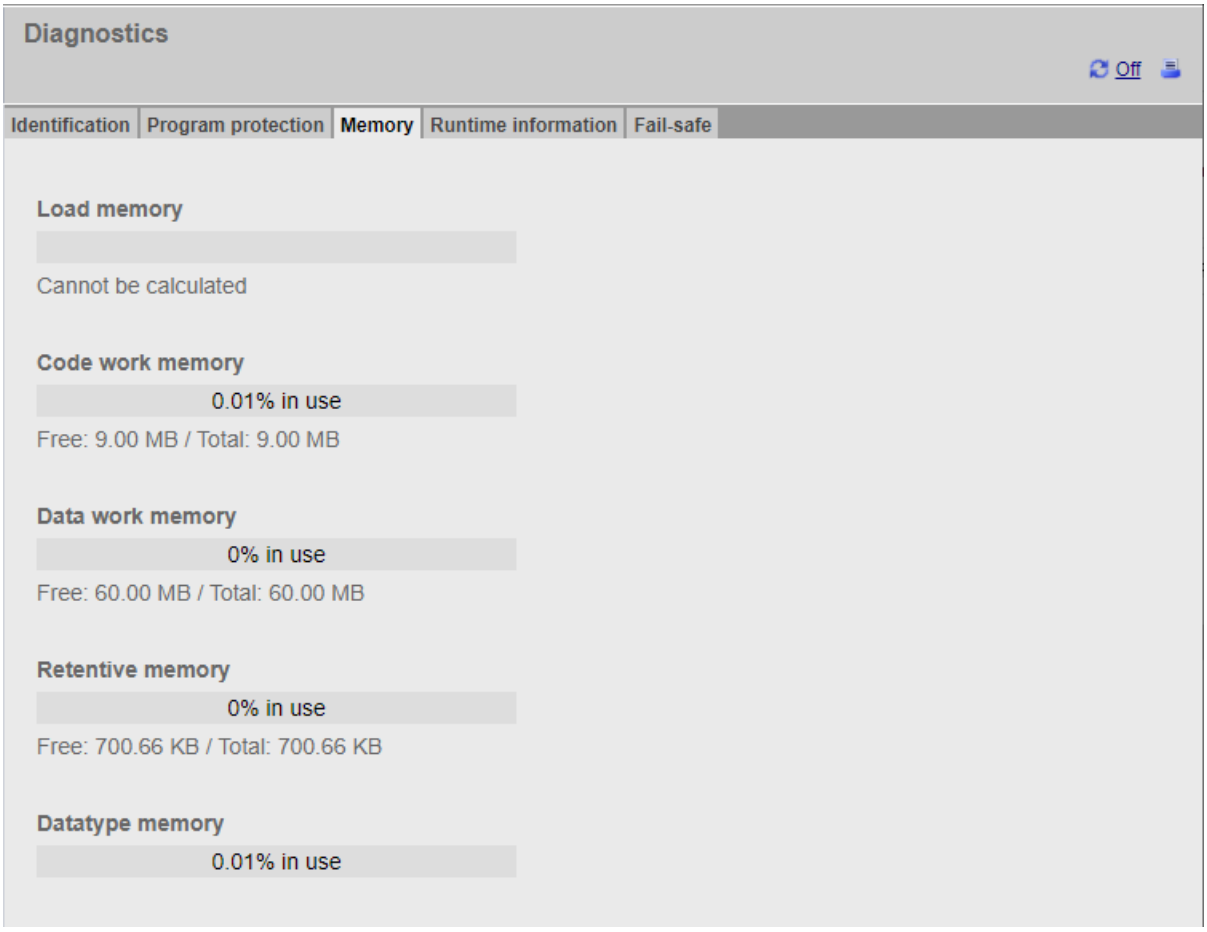

Figure 4-9 "Memory" tab

"Runtime information" tab

Current information on program/communication load and cycle time can be found in the "Runtime information" tab. This enables you to see whether there may be runtime problems during execution of your user program.

Figure 4-10 "Runtime information" tab

Program-/Communication load

With the "Value refresh" function, you update the data displayed in the bar charts:

- At intervals of 1 second
- Automatic (as configured in STEP 7)

With the "Measurement" function, you can decide which measurement the bar charts display. You can choose between:

- The current measurement
- The measurement of the longest cycle time

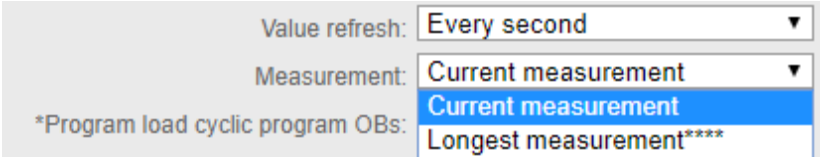

Figure 4-11 Program-/Communication load

The legend of the program-/communication load shows information on the following values, highlighted in color:

- "Program load cyclic program OBs"
  required computing time in percent within a cycle for cyclic program OBs
- "Program load high-priority OBs"
  Required calculation time in percent within a cycle for higher-priority OBs (priority ≥ 15)
- "Current communications load"
  Required calculation time in percent for current communications tasks within a cycle
- "Maximum permissible communication load"
  The configured maximum communication load as a percentage
- "No-load operation"
  There is no program-/communication load

NOTE

When you have configured a minimum cycle time, it can happen that no-load operation displays a high percentage value, although the value of the cycle time is also high.

The reason for this is that the loads are recorded as mathematical average of the last second, but the cycle time relates to the last cycle.

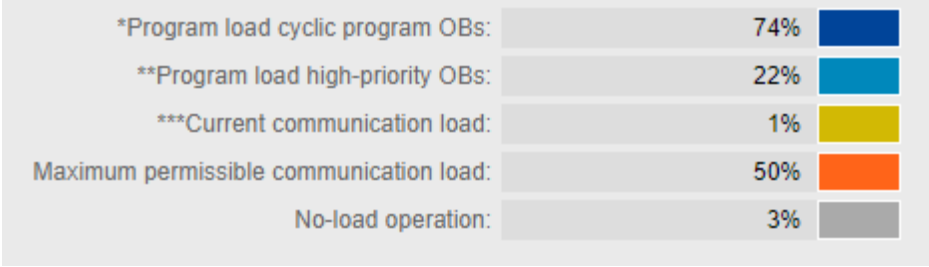

Figure 4-12 Color legend

If you click on a specific color, the selected color is highlighted in the chart. If you click on a highlighted color, you remove the highlighting.

Measurement of load distribution and cycle time

The "Measurement of load distribution and cycle time" bar chart shows the percentage of the calculation time within a cycle for the following values:

- "Program load cyclic program OBs"
- "Program load high-priority OBs"
- "Current communications load"
- "No-load operation"

Prognosis of load distribution and cycle time

The "Prognosis of load distribution and cycle time" bar chart predicts whether the CPU can process the user program with maximum communication load within the maximum cycle time.

Example 1:

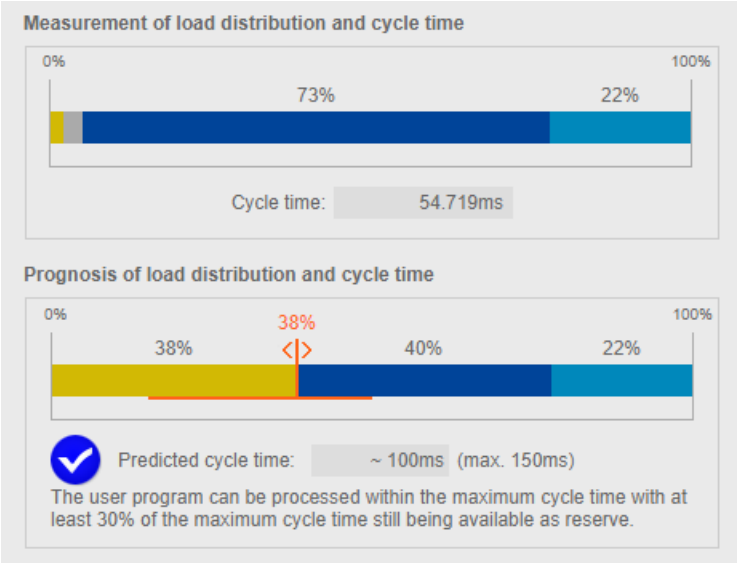

Figure 4-13 Cycle time < 70% of the maximum cycle time

Example 1 shows that the CPU can process the user program within the maximum cycle time of 150 ms when the maximum communication load of 38% is reached. The predicted cycle time is < 70% of the configured maximum cycle time.

Example 2:

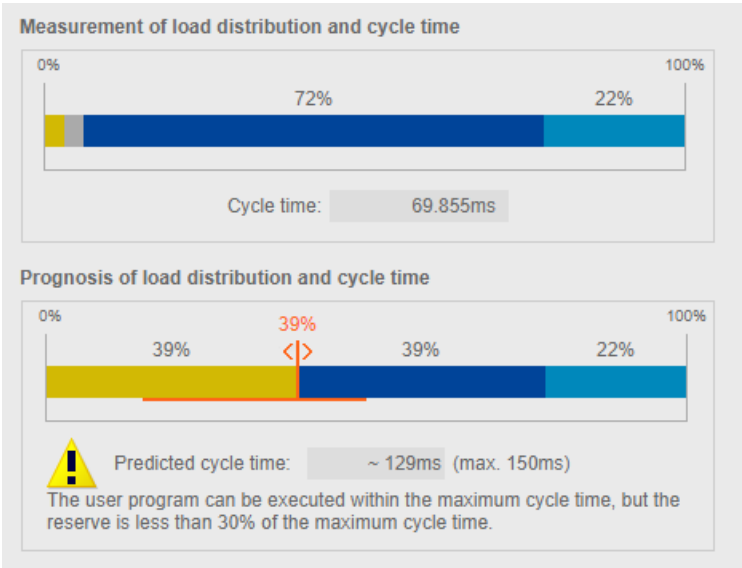

Figure 4-14 Cycle time ≥ 70% of the maximum cycle time

In example 2, the CPU can also process the user program with maximum communication load within the maximum cycle time. However, the predicted cycle time is already at 129 ms. As soon as the predicted cycle time is ≥ 70% of the maximum cycle time, the chart outputs a warning.

Example 3:

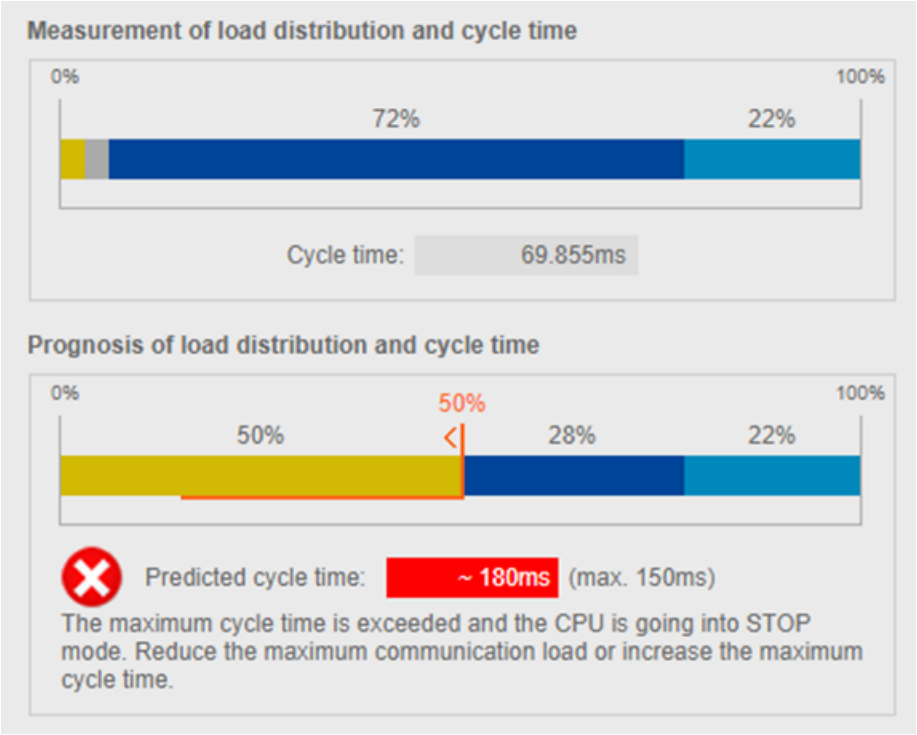

Figure 4-15 Cycle time longer than maximum cycle time

Example 3 shows that the CPU can no longer process the user program within the maximum cycle time when the maximum communication load is reached. If the predicted cycle time is longer than the maximum cycle time, the chart outputs an error message.

If it is predicted that the maximum cycle time will be exceeded, use the following controller in order to reduce the maximum communication load.

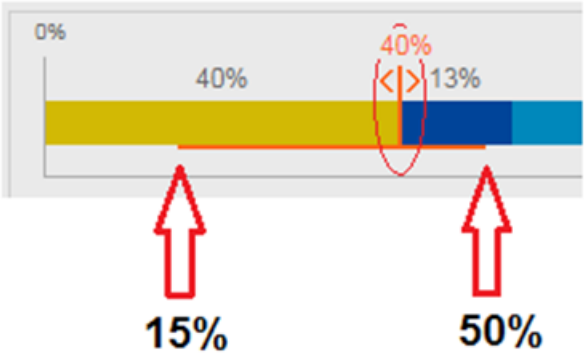

Figure 4-16 Controller for setting the maximum communication load

NOTE

Setting the communication load

The controller predicts the effects of the changed communication load on the cycle time. You configure the maximum communication load in STEP 7.

NOTE

For non-measurable fluctuations in the user program, e.g. for future changes in the user program, plan a sufficiently low value for the maximum communication load.

NOTE

Due to the different acquisition bases of cycle time and load, a settled system state is required to display reliable measured values.

You can find more information about the influence of the communication load on the cycle time in the Cycle and Response Times Function Manual (https://support.industry.siemens.com/cs/us/en/view/59193558).

Trend for program/communication load

If your web browser supports the display of SVG (Scalable Vector Graphics), the display in the "Runtime information" tab is expanded to show the trend for program/communication load.

With the line charts in the "Trend for program/communication load" area, you can track the progression of the following values:

- "Program load of the cyclic program OBs"
- "Program load high-priority OBs"
- "Current communications load"

With the "Number of recorded measuring points" option, you can choose between the last 20 to 1 000 measured values for the display of the measured values.

For the trend on the x-axis, you can choose between "Time" (CPU time) and "Samples" by clicking on the desired unit.

NOTE

If you have selected the "Time" unit on the x-axis, all measured values that are more than 24 hours old are deleted automatically.

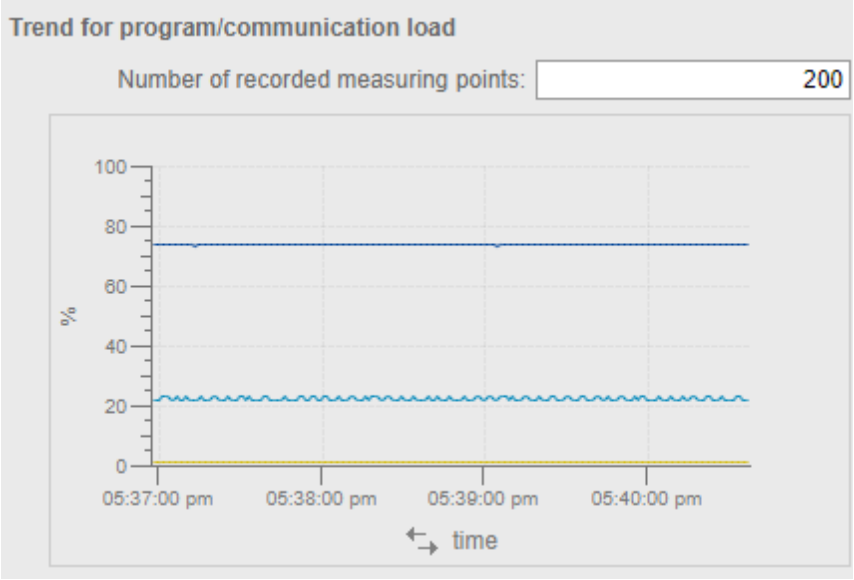

Figure 4-17 Line chart

"Fail-safe" tab (with an F-CPU)

The safety program of an F-CPU consists of one or two F-runtime groups. You can find their F-runtime group signature, cycle times (F-monitoring time) and runtimes in the "Fail-safe" tab.

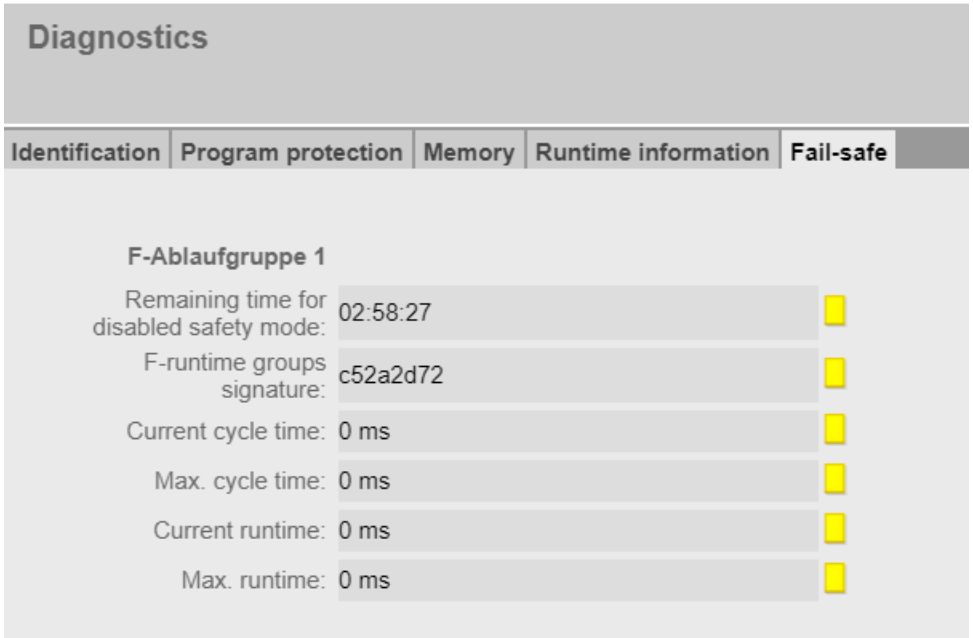

Figure 4-18 "Fail-safe" tab

4.3 Diagnostics buffer

Requirements

The web server is activated, languages are set, the text libraries are loaded and the project has been compiled and downloaded with STEP 7.

Diagnostics buffer

The content of the diagnostic buffer is displayed by the browser on the web page "Diagnostics buffer".

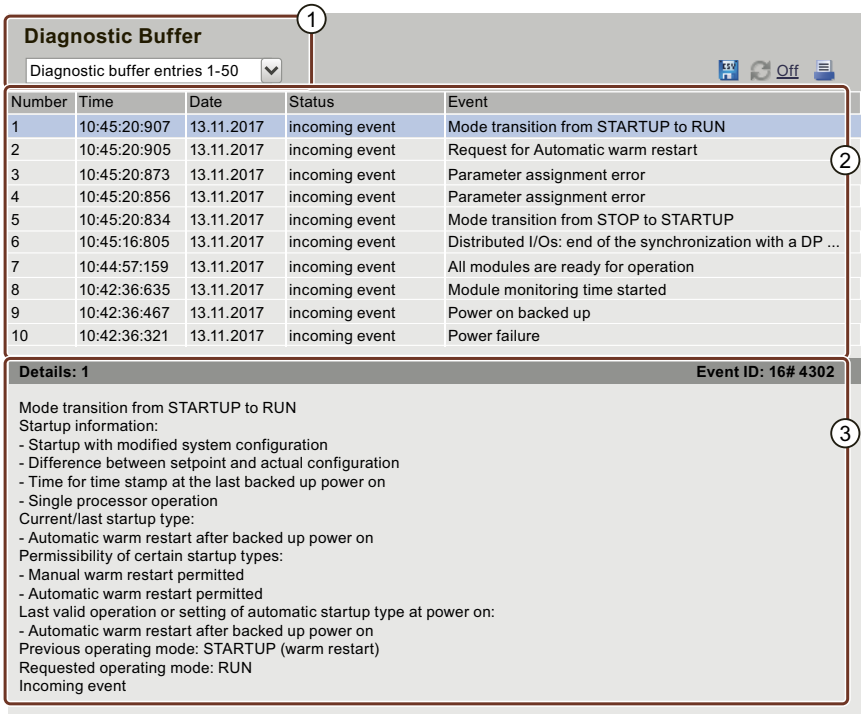

Figure 4-19 Diagnostics buffer

① "Diagnostics buffer entries 1-50"

The diagnostics buffer can accommodate different numbers of alarms depending on the CPU used.
For information on the maximum number of diagnostics buffer entries, refer to the technical specifications of the CPU used.
Select an interval for the entries from the drop-down list. Each interval comprises 50 entries.

② "Event"

The "Event" info box contains the diagnostics interrupts with date and time.
Note that the diagnostic events are displayed in the project language of the STEP 7 project that is assigned to the current web server interface language. You can find out how to assign project languages to interface languages in section Language settings (Page 35).

③ "Details"

This field outputs detailed information about a selected event. Select the corresponding event from the ② "Event" info field.

Saving diagnostics buffer entries

You can save diagnostics buffer entries to a csv file for further processing in a spreadsheet program or database program.
Save the data by clicking the icon.
A dialog opens in which you can specify the file name and target directory.

4.4 Motion Control diagnostics

Overview

On the "Motion Control Diagnostics" web page, you will find the status, error, and warning bits as well as the latest values for the configured technology objects (TO).
The Web server supports the following technology objects:

- Speed-controlled axis (TO_SpeedAxis)
- Positioning axis (TO_PositioningAxis)
- Synchronous axis (TO_SynchronousAxis)
- External encoder (TO_ExternalEncoder)
- Measuring input (TO_MeasuringInput)
- Output cam (TO_OutputCam)
- Cam track (TO_CamTrack)
- Cam disk (TO_Cam, TO_Cam_10k) (S7-1500T)
- Kinematics (TO_Kinematics) (S7-1500T)
- Leading axis proxy (TO_LeadingAxisProxy) (S7-1500T)

The web page is subdivided into the tabs:

- Diagnostics
- Service overview

"Diagnostics" tab

In the "Diagnostics" view you will see:

- ① A list of the configured technology objects
- ② The status and error bits of a selected technology object
- ③ Specific diagnostic information for the technology objects

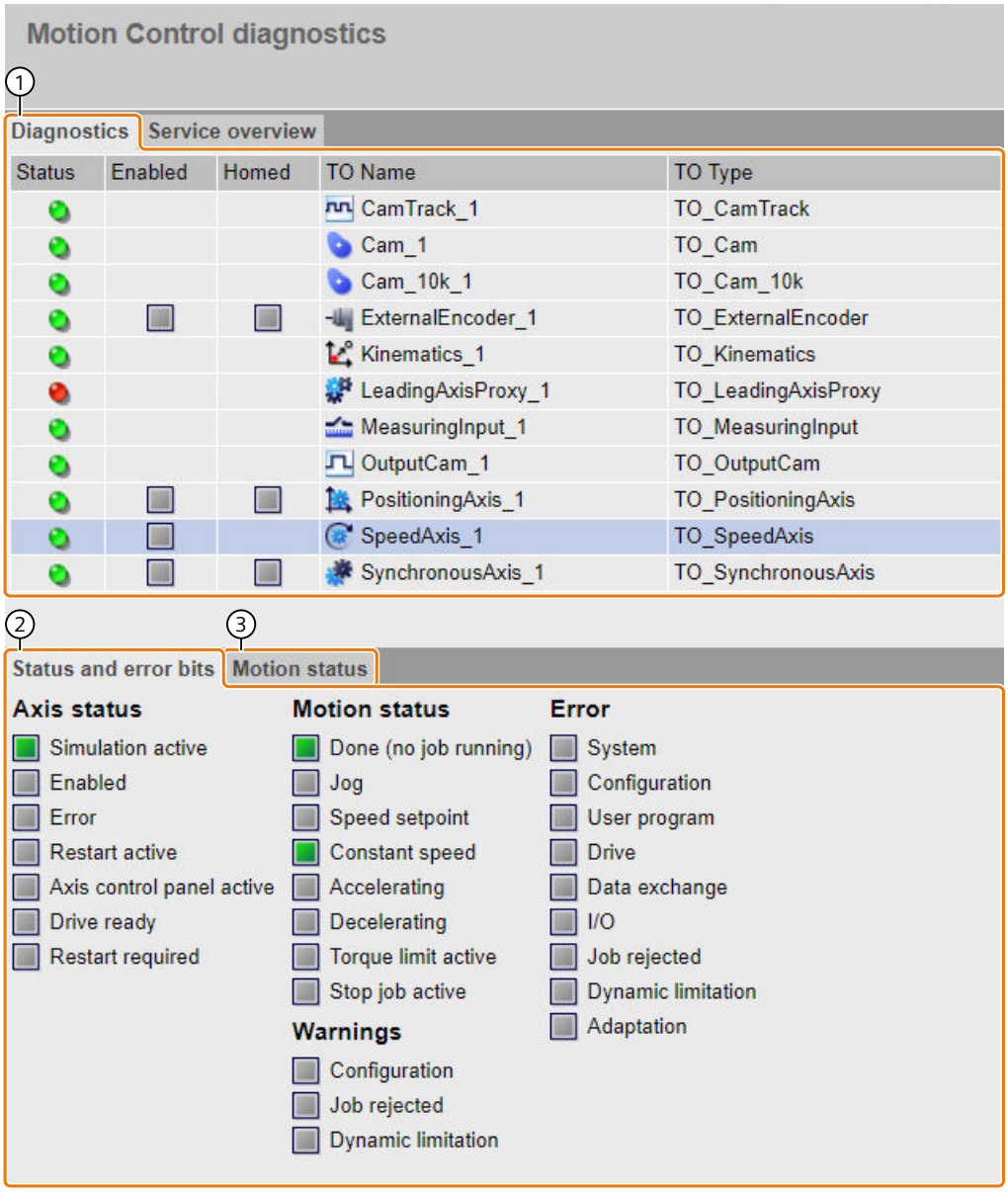

Figure 4-20 Diagnostics - Speed axis status and error bits

① List of the configured technology objects

Check the following diagnostic information in the list of technology objects:

- Status (green = no warning, no alarm; yellow = warning is pending; red = error is pending)
- Enabled
- Homed

Click on a technology object in the list to display the current status and error bits ② as well as specific diagnostic information ③ for this technology object.

② Status and error bits

The displayed status and error bits correspond to the diagnostics of the technology object in STEP 7.

③ **Specific diagnostic information for the technology objects**

Depending on the type of technology object, you will receive additional diagnostic information, for example, the status of a speed axis. The displayed diagnostic information corresponds to the diagnostics of the technology object in STEP 7.

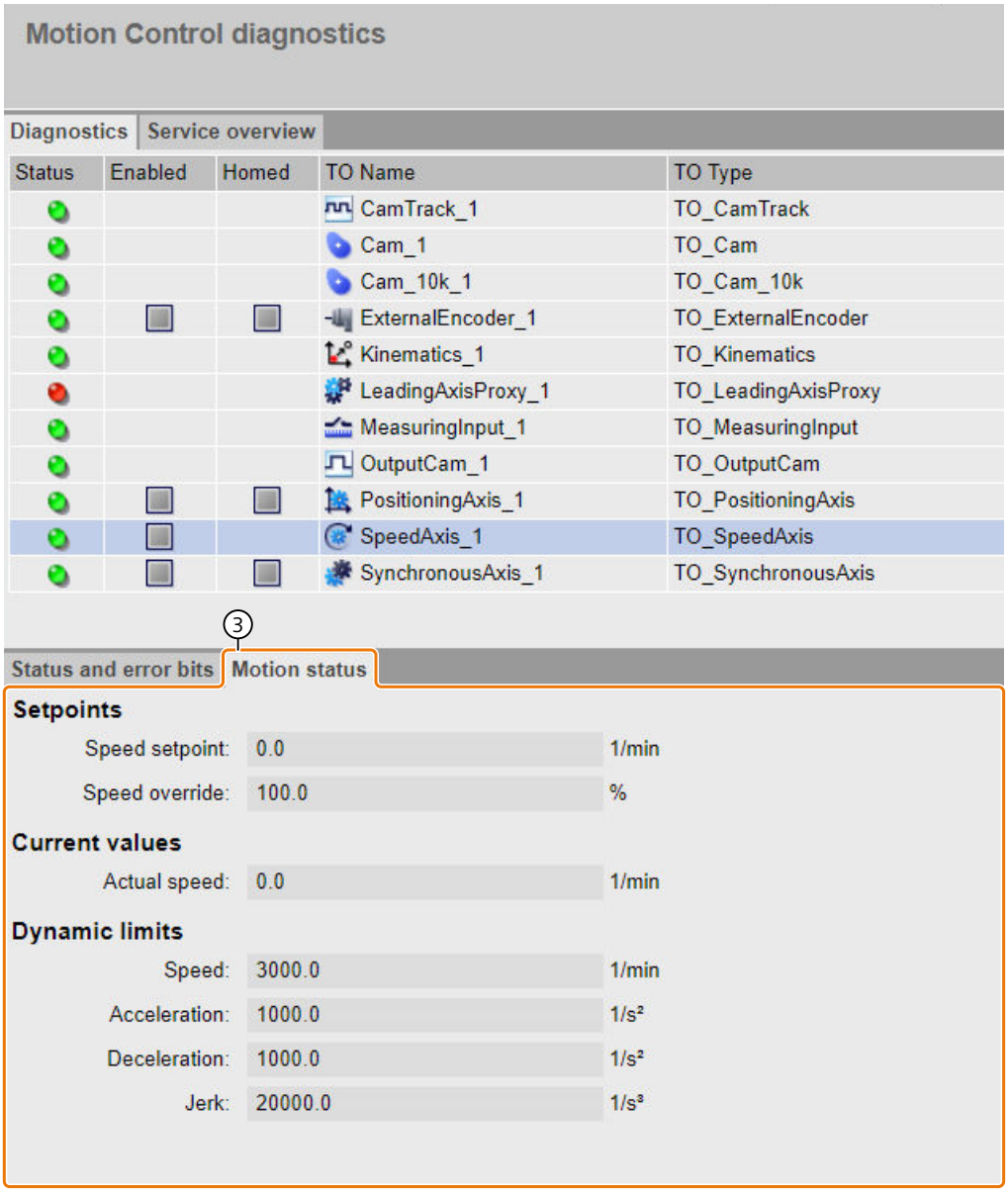

Figure 4-21 Diagnostics - Speed axis motion status

"Service overview" tab

In the "Service overview" tab, you observe selected signals of multiple technology objects at the same time, for example, the actual position of multiple axes.

The "Service overview" is subdivided into the areas:

- ① Select technology objects
- ② Signal table

① Select technology objects

In this area, you select which technology objects you want to observe in the signal table.

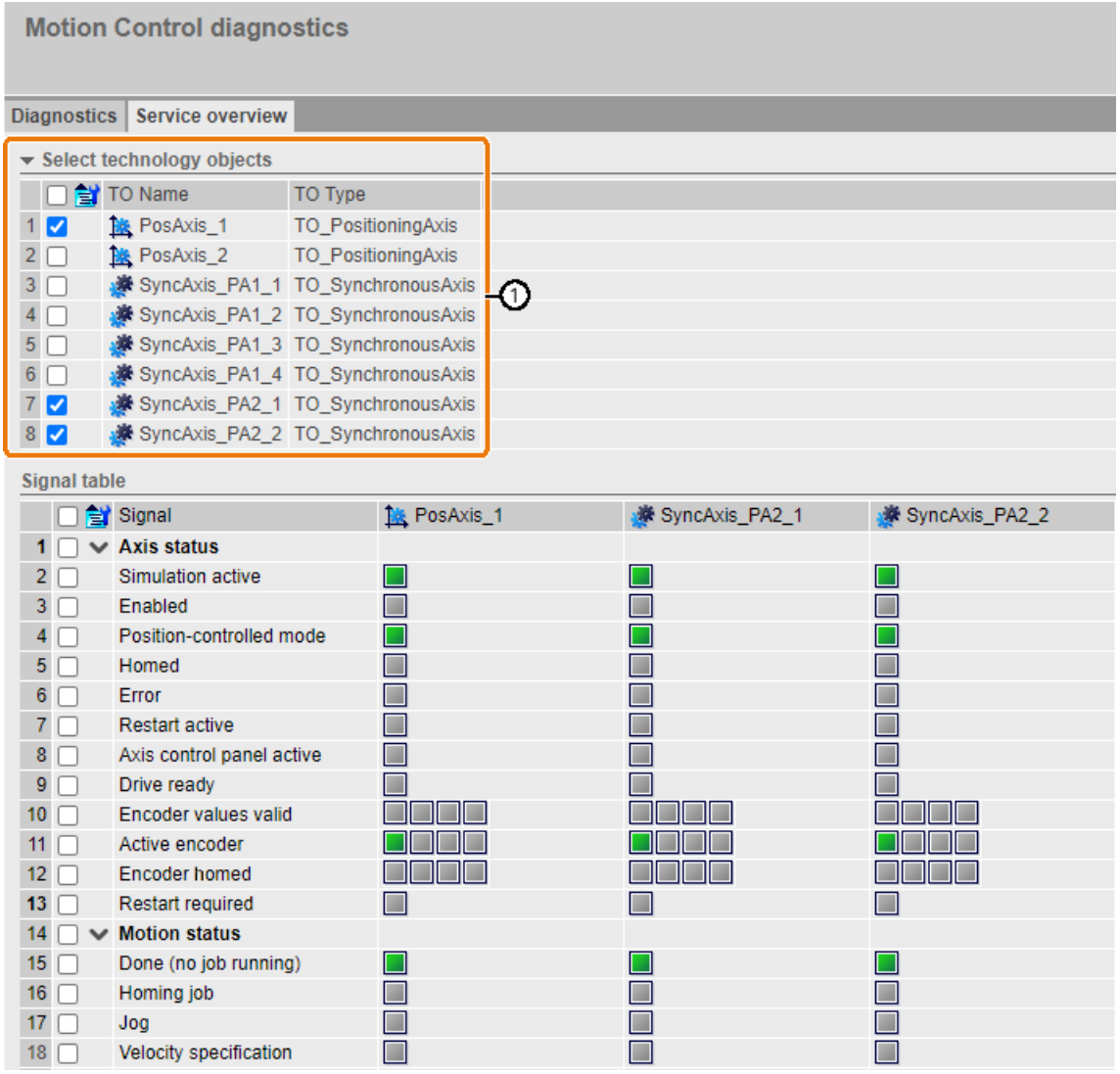

Figure 4-22 Service overview - Select technology objects

1. To sort the list of technology objects, click on the column header "TO Name" or "TO Type".
2. To observe a technology object in the signal table, select the check box in front of the technology object.
   A column is only displayed for the selected technology objects in the signal table. Signals that do not exist for the selected technology objects are hidden.
3. Click the icon.
   Only the selected technology objects are displayed in the "Select technology objects" area.
4. Click the icon again.
   All technology objects are displayed once again in the "Select technology objects" area.

② **Signal table**

In this area, you select which signals of the selected technology objects you want to observe. The signals are grouped.

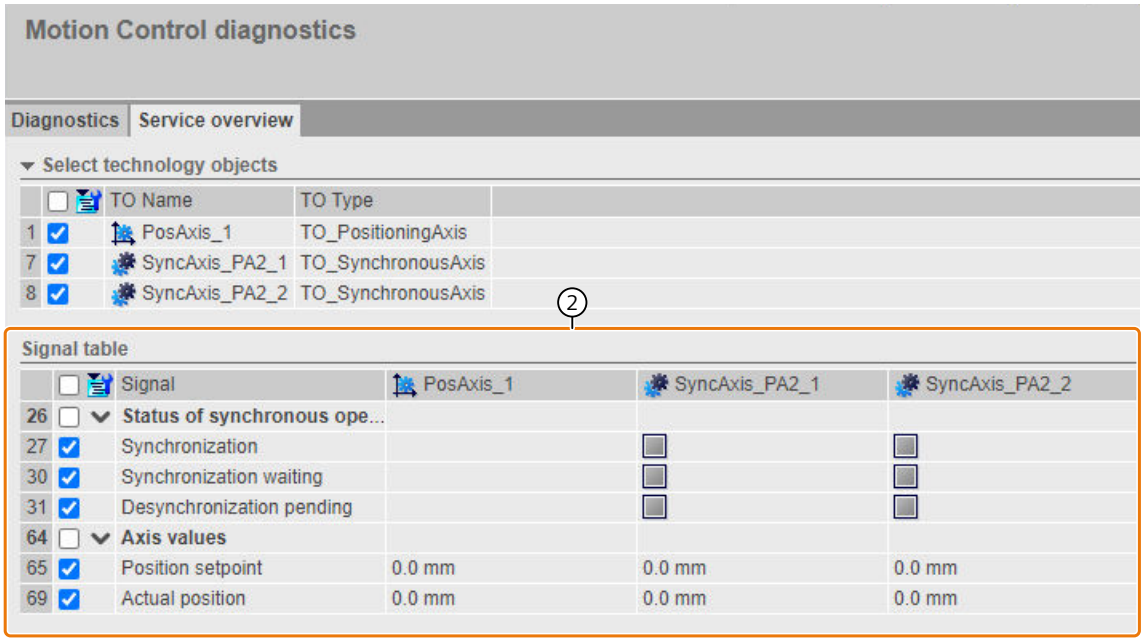

Figure 4-23 Service overview - Signal table

1. To expand or collapse a scaling group, click the arrow in front of the scaling group.
2. To only observe selected scaling groups or signals, select the check box in front of the scaling group or signal.
3. Click the icon.
   Only the selected signal groups or signals are displayed.
4. Click the icon again.
   All signal groups and signals are displayed.

Displaying and acknowledging technology alarms

On the "Alarms (Page 70)" web page you will find an overview of the pending technology alarms with error numbers.

You can acknowledge the pending technology alarms on the "Alarms" web page.

More information

You can find explanations for the diagnostics functions of the individual technology objects in the STEP 7 online help or the S7-1500/1500T Motion Control function manuals on the Internet (https://support.industry.siemens.com/cs/ww/en/view/109751049).

4.5 Module information

Module information

The status of a device is indicated by means of symbols and comments on the "Module information" web page.

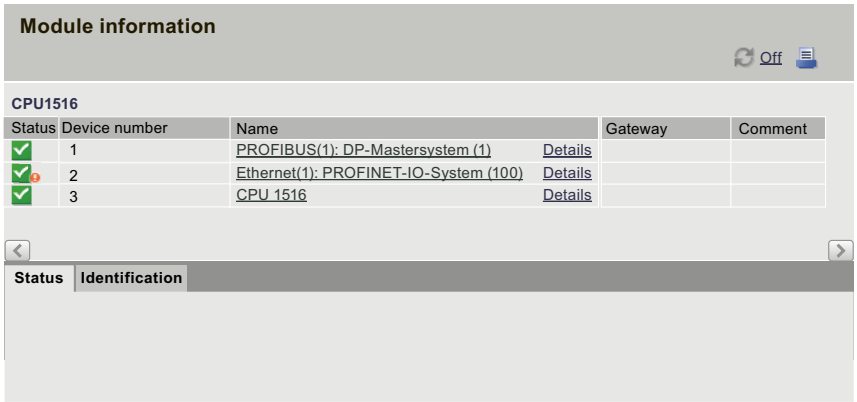

Figure 4-24 Module information

Meaning of the symbols in the "Status" column

Table 4-2 Meaning of symbols

Symbol	Symbol color	Meaning
	green	Component is OK
	gray	Deactivated PROFIBUS or PROFINET devices.
	gray	State cannot be determined • "State cannot be determined" is displayed during system diagnostics for all configured I/O modules and I/O systems after restart of the CPU. • However, this state can also be displayed temporarily during operation if a diagnostics interrupt burst occurs for all modules. • It is not possible to determine the status of modules on a subsystem that is connected to a CP.
	red	Component "not reachable" "Not reachable" is displayed when a module has been removed or a module has been configured but does not exist.
	black	No input or output data available. Input or output channels of the (sub)module are disabled.

Symbol	Symbol color	Meaning
	green	Maintenance required (Maintenance Required)
	yellow	Maintenance demanded (Maintenance Demanded)
	red	Error - component faulty or not available due to an incorrect type
	red	A module in a lower module level does not have the status "Component OK"

Navigation to further module levels

The status of individual components/modules/submodules is displayed when you navigate to the further module levels:

- To the next higher module level using the links in the display of the module levels
- To the next lower module level using the links in the "Name" column

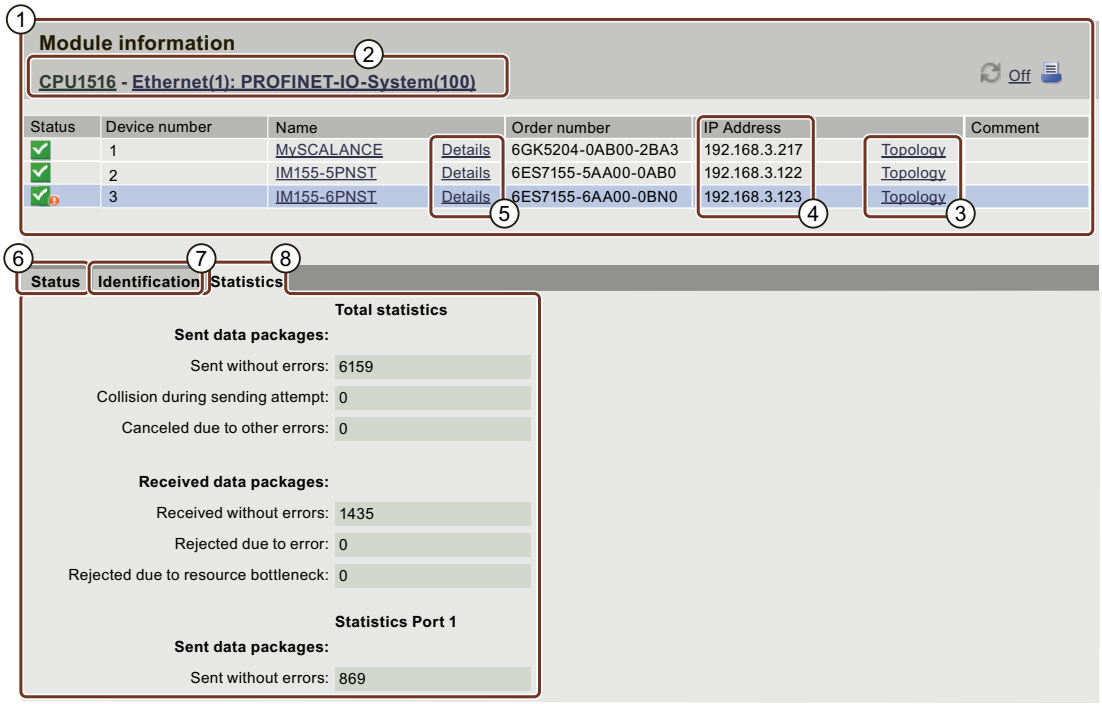

Figure 4-25 Navigation to further module levels

① "Module information"

Depending on the selected level, the table contains information on the rack, the DP master system, the PROFINET IO master system, the stations, the individual modules or the modules or submodules of the station.

② "Display of the module levels"

The links are used to access the "Module information" of the higher module levels.

③ "Topology"

The two web pages, "Topology" and "Module information", are linked. A click on "Topology" of the selected module automatically takes you to this module in the graphic view of the set topology on the "Topology" web page. The module is displayed in the visible area of the "Topology" web page. The device header of the selected module flashes for a few seconds.

④ "IP address"

If a link is available, you can use it to access the Web server of the configured device you selected.

⑤ "Details"

Additional information about the selected module is provided in the "Status" and "Identification" tabs via the "Details" link.

⑥ "Status" tab

The tab contains information about the status of the selected module when a fault or alarm exists.

⑦ "Identification" tab

The tab contains data on the identification of the selected module.

NOTE

This tab displays only the data configured offline of the module.

⑧ "Statistics" tab

The tab is only displayed for PROFINET IO devices and contains the following information on the communication statistics of the selected IO device:

- "Total statistics - Sent data packages"
  You can assess the data transmission on the transmit line based on the key data in this info box.
- "Total statistics - Received data packages"
  You can assess the data transmission on the receive line based on the key data in this info box.
- "Statistics port x - Sent data packages"
  You can assess the data transmission on the transmit line for each port based on the key data in this info box.
- "Statistics port x - Received data packages"
  You can assess the data transmission on the receive line for each port based on the key data in this info box.

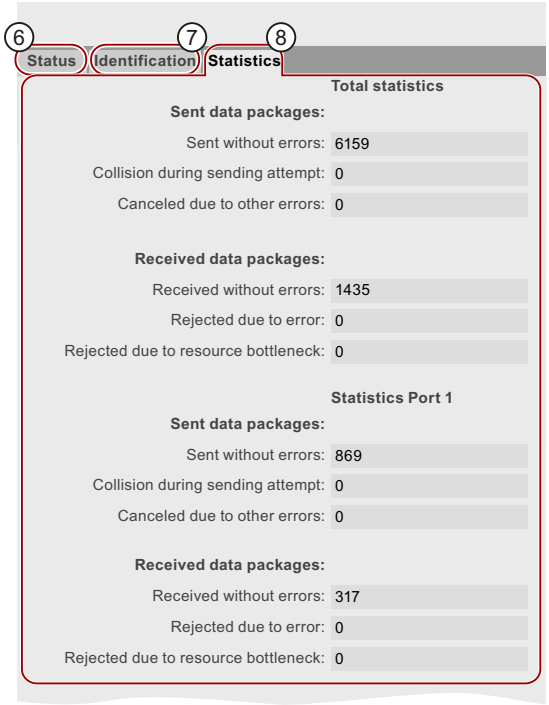

Figure 4-26 "Statistics" tab

Reference

You can find additional information in the "Statistics" tab in the section Communication (Page 71).

Example: Module information - module

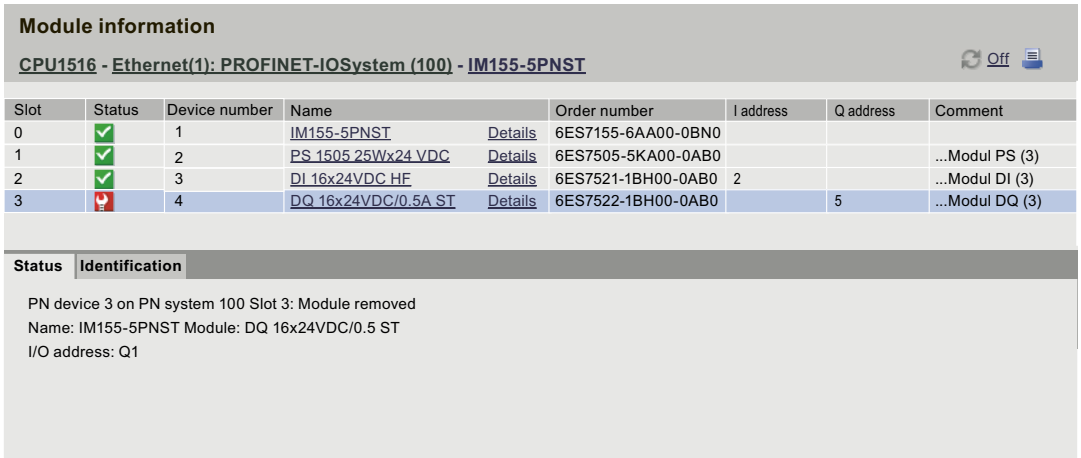

Figure 4-27 Example: Module information - module

NOTE

If you are using the function Configuration control (option handling) in the central configuration of your plant, the information text in the headings area of the web page informs you that the status of the I/O modules may be displayed inconsistently. No corresponding text is displayed for the distributed I/O.

Example: Module information - submodule

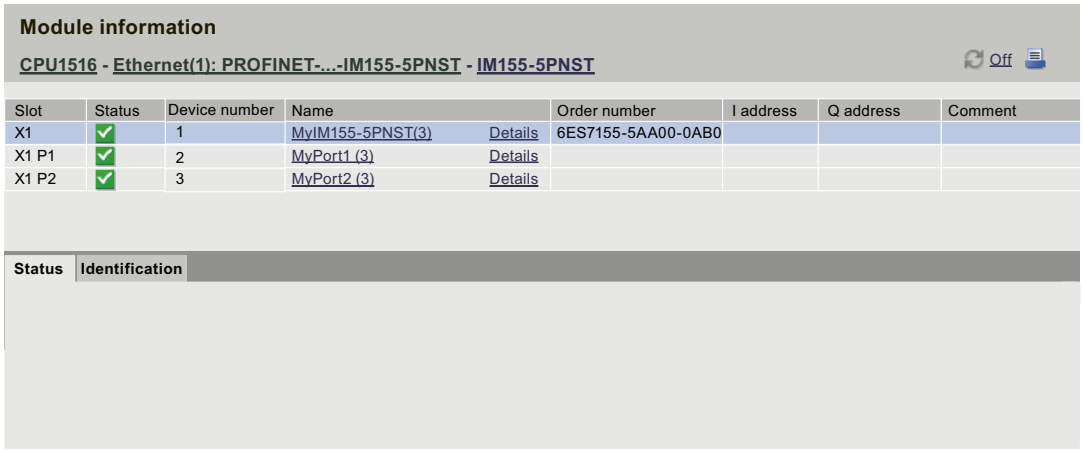

Figure 4-28 Example: Module information - submodule

Reference

You can find additional information on the "Module information" in the online help for STEP 7, keyword: "Module information".

4.6 Firmware update

Introduction

You can update the firmware as a user with the corresponding access rights on the "Module information" web page at the module level. You can find information on user management in section Configuring the Web server (Page 23) under "Amending user management".
With the help of an update file, you can update the firmware of the CPU, the display of the CPU, or individual centralized and distributed modules. Note that all modules you want to update must be compatible with the TIA Portal as of V12.0.

NOTE

A firmware update is not possible if access is via a mobile terminal device with the "iOS" operating system.

Procedure

The following steps are required to perform a firmware update:

- Click on "Browse" in the Firmware Loader area.

- Select the file you would like to use for the firmware update. You can find the available firmware updates on the Service&Support page on the Internet (https://support.automation.siemens.com).

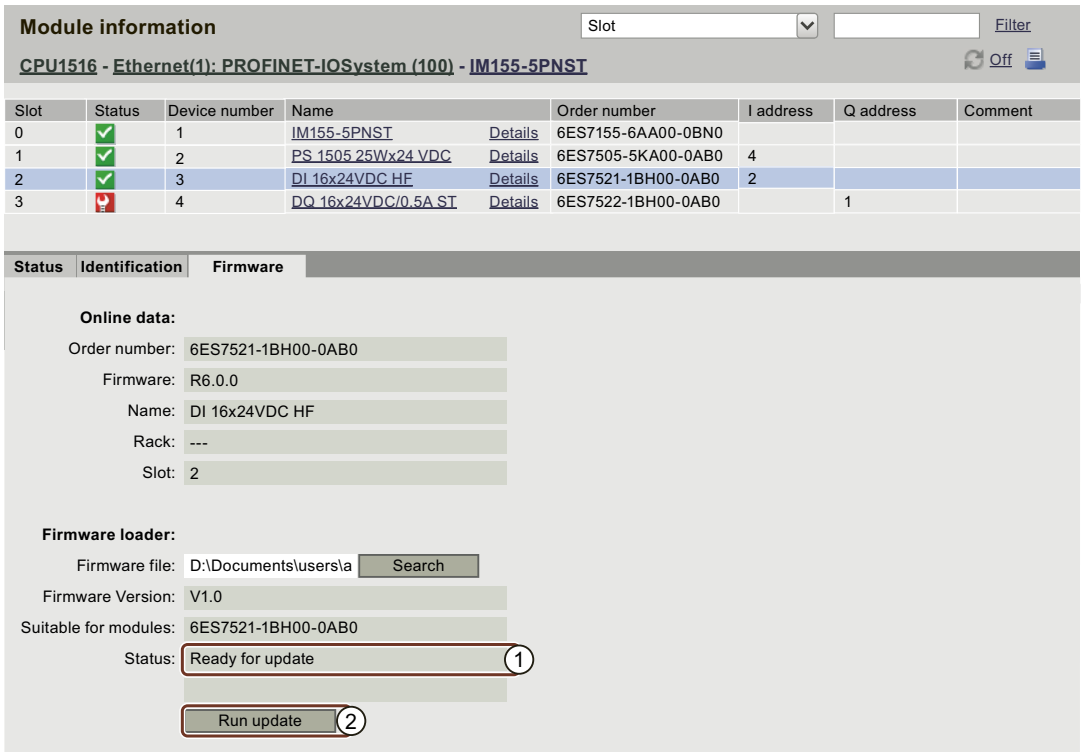

① Status of the selected firmware file

② Button to execute the update

Figure 4-29 Module information, "Firmware" tab, "Ready for update" status

- If the status is "Ready for update", click "Run update". If the CPU is in RUN mode during the update, the following alarm is output:

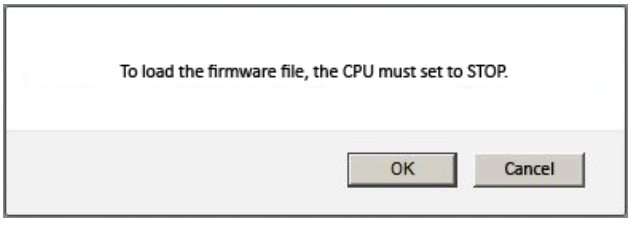

Figure 4-30 Alarm after clicking "Run update"

Acknowledge the alarm output by clicking "OK". The CPU is set to STOP mode and the firmware update is executed.
If you click "Cancel", the CPU remains in the current operating mode and the firmware update is canceled.

- A alarm informs you about the order number and version ID of the updated firmware once the update is complete.
  The CPU is automatically placed in RUN mode when the mode selector of the CPU is in RUN and when you acknowledge the alarm with "OK". This may take a few minutes; there is no progress indicator.
  If you click "Cancel", the CPU remains in STOP mode and you can run additional updates.

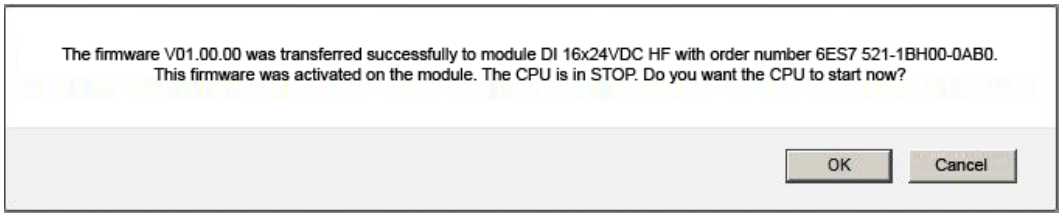

Figure 4-31 Alarm: Firmware successfully transferred

Reference

For more information on the topic of firmware update, refer to the STEP 7 online help and the following FAQ on the Internet (https://support.industry.siemens.com/cs/ww/en/view/67190848).

4.7 Alarms

Requirements

The alarm texts were configured in the user-specific languages. You can find information about the configuration of alarm texts in STEP 7.

Alarms

To receive compact information on fault analysis, we recommend that you always first read out the content of the alarm buffer. This is the most effective method to get an overview of the pending faults.
The browser displays the content of the alarm buffer on the "Alarms" web page.

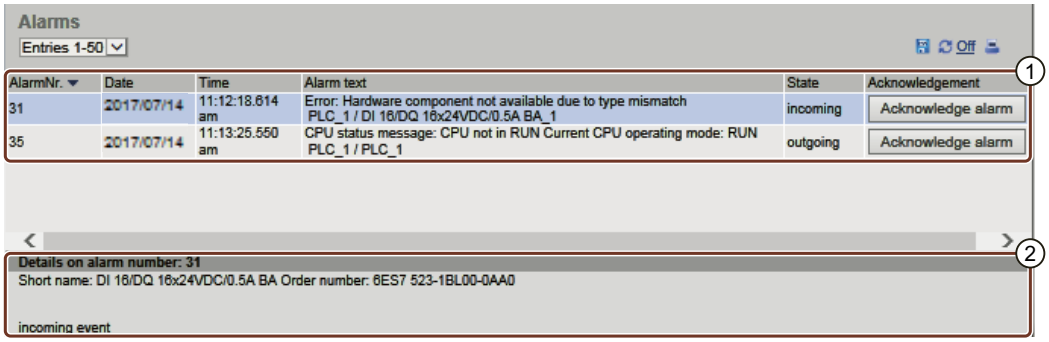

Figure 4-32 Alarms

① "Alarms"

Alarms of the CPU are displayed in descending chronological order with **date** and **time** in info box ①.

The **alarm text** parameter is an entry which contains the alarm texts configured for the corresponding fault definitions.

Note that the message texts are displayed in the project language of the STEP 7 project that is assigned to the current Web server interface language. You can find out how to assign project languages to interface languages in section Language settings (Page 35).

Sorting

You also have the option to display the individual parameters of the currently displayed web page (max. 50 entries) sorted in ascending or descending order. For this purpose, click on one of the parameters in the column header:

- Alarm number
- Date
- Time (of the CPU)
- Alarm text
- Status
- Acknowledgment

The alarms are returned in chronological order when you click the "Date" entry. Incoming and outgoing events are output at the **Status** parameter.

If you have the appropriate user rights (see section Configuring the Web server (Page 23)), for alarms which can be acknowledged, a button is available to you in the "Acknowledgment" column with which you can acknowledge the alarm.

② "Details on alarm number"

You can view detailed alarm information in this info box. Select the corresponding alarm from the info field ②.

Saving alarms

You can save alarms to a csv file for further processing in a spreadsheet program or database program.

Save the data by clicking the icon.

A dialog opens in which you can specify the file name and target directory.

4.8 Communication

Overview

The "Communication" web page provides detailed information about the following tabs:

- Parameters
- Statistics
- Resources
- Connections

① "Parameter" tab

A summary of the information on the PROFINET and Ethernet interfaces of the selected CPU is available in the "Parameter" tab.

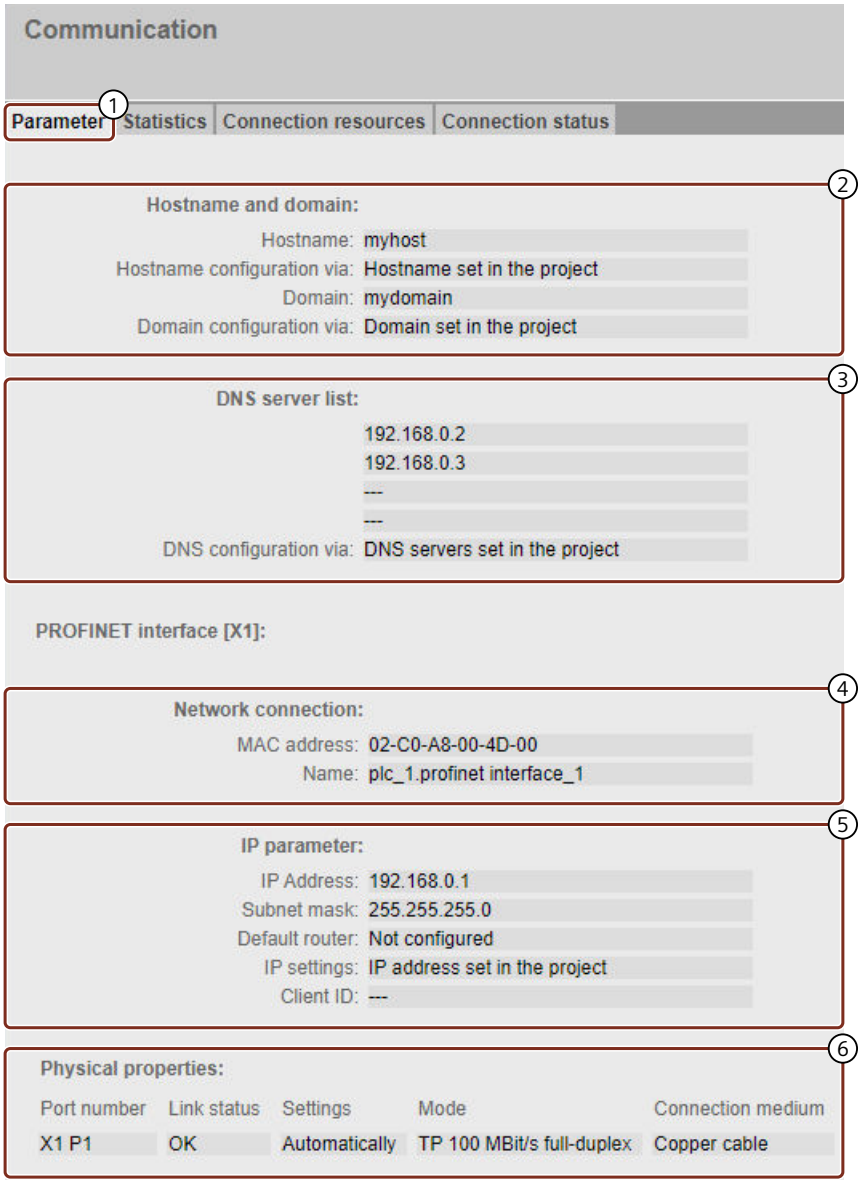

Figure 4-33 "Parameter" tab for communication via PROFINET

② "Host name and domain"

The CPU can use the DHCP communication protocol to assign the network configuration via a DHCP server. The CPU can make its host name and the domain available to the DHCP server.

Here, you will receive information on the host name and the domain of the CPU and where the configuration was specified, for example, remotely via DHCP, in the project or the user program.

③ "DNS server list"

Here, you will receive information on which DNS servers can communicate with the CPU and where the DNS configuration was specified, for example, remotely via DHCP, in the project or in the user program.

④ "Network connection"

Under "Network connection", you will find information for identification of the integrated PROFINET and Ethernet interfaces of the corresponding CPU. The MAC address is located on the CPU above the respective PROFINET or Ethernet interface.

⑤ "IP parameter"

This parameter includes information on the configured IP address and number of the subnet in which the corresponding CPU is located. If a client ID for DHCP was configured for the CPU, it is displayed here.

⑥ "Physical properties"

The following information on the interface hardware is available in the "Physical properties" field:

- Port number
- Link status
- Settings
- Mode
- Connection medium

① "Statistics" tab

Information on the data transmission can be found on the "Statistics" tab.

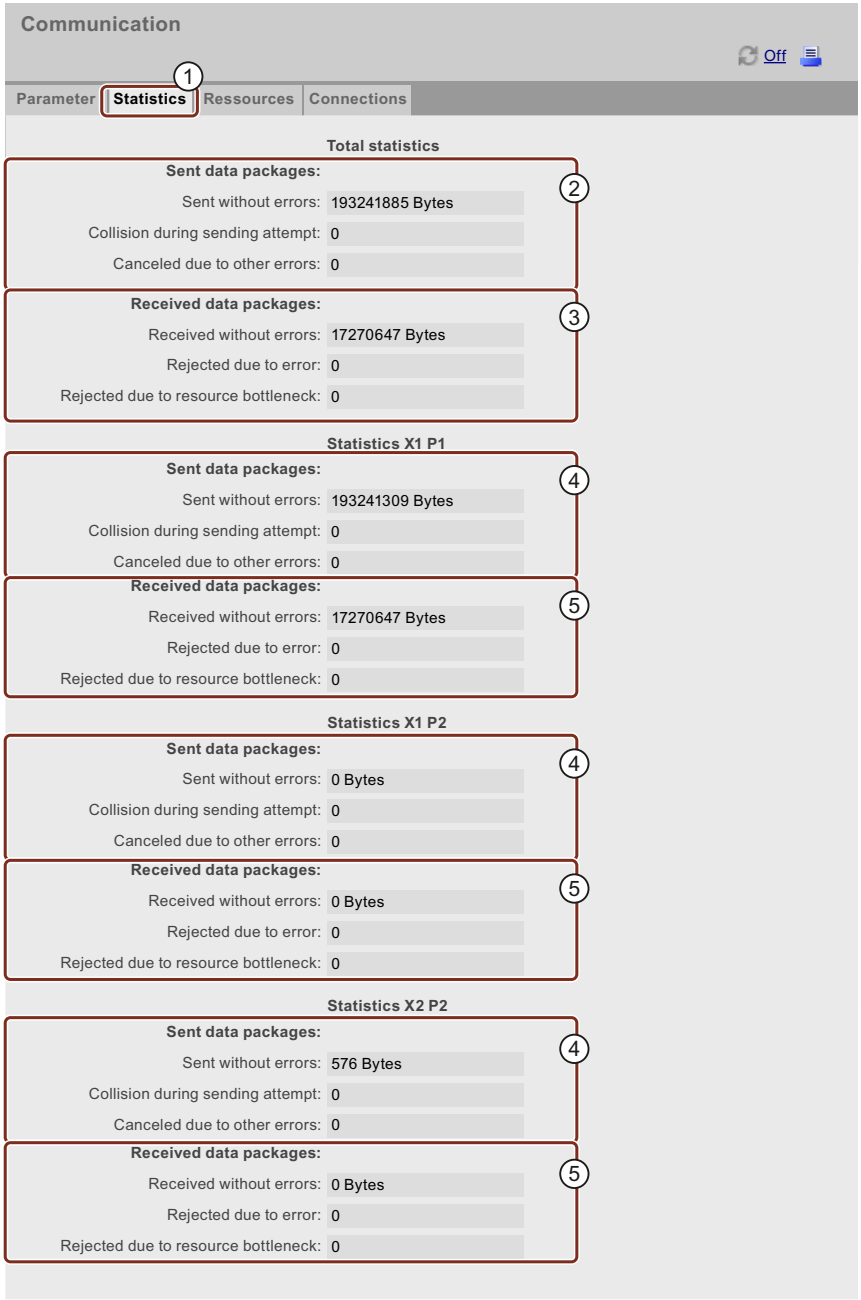

Figure 4-34 "Statistics" tab with key data on data transmission

② "Total statistics - Sent data packages"

You can assess the data transmission on the transmit line based on the key data in this info box.

③ "Total statistics - Received data packages"

You can assess the data transmission on the receive line based on the key data in this info box.

④ "Statistics Port x - Sent data packages"

You can assess the data transmission on the transmit line for each port based on the key data in this info box.

⑤ "Statistics port x - Received data packages"

You can assess the data transmission on the receive line for each port based on the key data in this info box.

① The "Resources" tab

For information about the resource consumption of the connections, refer to the "Resources" tab.

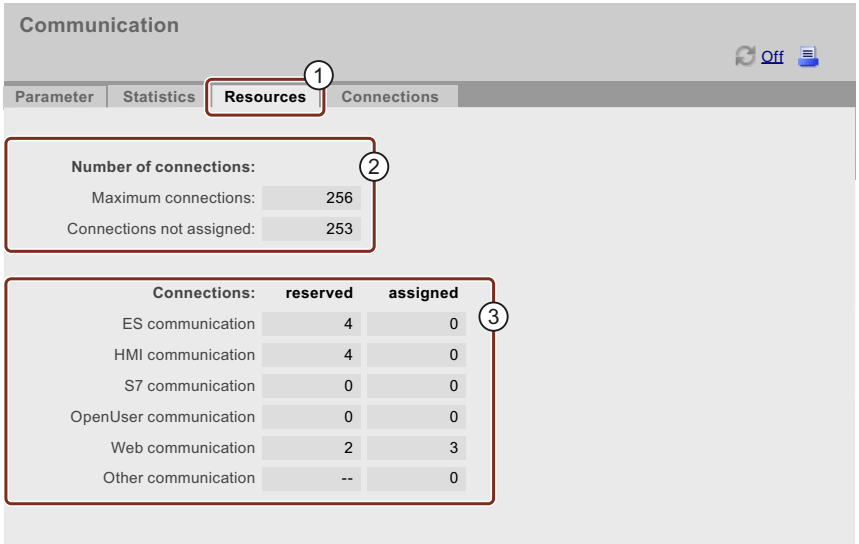

Figure 4-35 "Resources" tab

② Number of connections

Under "Number of connections", you will find information on the maximum number of connections and the number of connections not assigned.

③ Connections

The item "Connections" provides information on the number of connections reserved or used for ES, HMI, S7, OpenUser, web communication and other communication functions.

① "Connections" tab

The "Connections" tab contains information on the status of the communication connections.

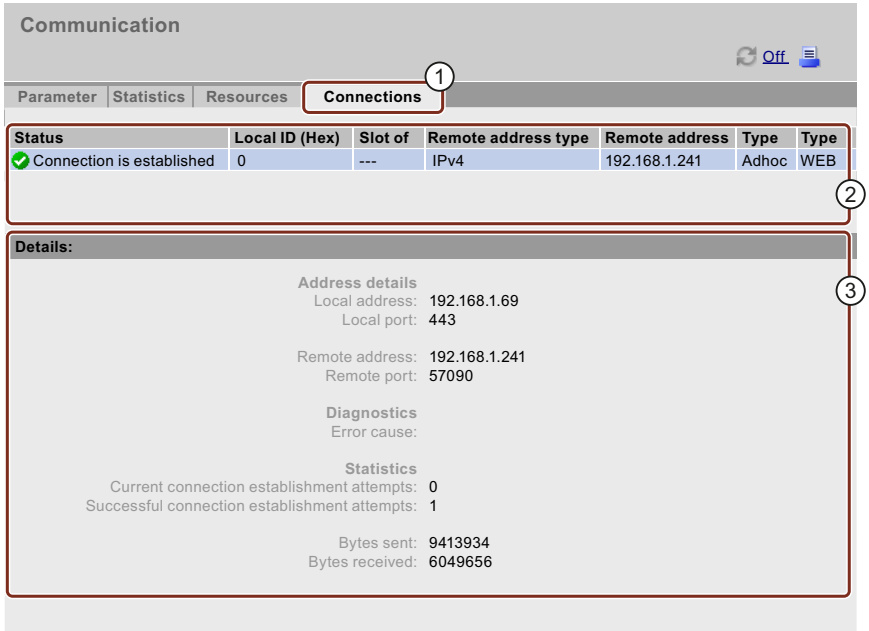

Figure 4-36 "Connections" tab

② Status

Under "Status", you will find an overview of the communication connections being established and the already established communication connections.
For each of these connections, the table contains information about the connection status, the local ID, the slot of the gateway, the remote address (IP address), the corresponding remote address type, and the connection types.

③ Details

Under "Details", you will find detailed information about the selected connection.

Reference

For an explanation of the error message displayed when a connection is interrupted or an attempt to establish a connection fails, refer to the STEP 7 online help.

4.9 Topology

4.9.1 Introduction

Topology of the PROFINET devices

The "Topology" web page provides information on the topological configuration and status of the PROFINET devices on your PROFINET IO system.

There are three tabs for the following views:

- Graphical view (set and actual topology)
- Table view (actual topology only)
- Status overview (excluding topological correlations)

You can print the table view and status overview. Before printing, use the print preview of your browser and, if necessary, correct the format.

Set topology

The set topology is displayed if you have topologically interconnected the connections in the configuration with STEP 7.

This view identifies the topological assignment of PROFINET devices that have failed, the differences between the set and actual topology, and interchanged ports.

NOTE

The configured set topology is always displayed by default in the following scenarios:

- When the "Topology" web page is called via the navigation bar
- When you change from the overview of PROFINET IO devices on the "Module information" web page to the "Topology" web page by means of the "Topology" link.

If a setpoint topology was not configured, the actual topology is displayed.

Actual topology

Displays the current topological structure of the "configured" PROFINET devices of a PROFINET IO system and the directly adjacent, non-configured PROFINET devices (display of the neighbor relationships, provided these can be determined; but the status of these adjacent PROFINET devices is not displayed).

4.9.2 Graphical view

Requirements

For error-free operation of the topology, the following conditions must be met:

- You have made the Language settings (Page 35).
- In the Topology Editor of STEP 7, you configured the topological interconnection of ports (requirement for display of the set topology and the corresponding topological target connections).
- The project has been compiled in STEP 7.
- The project is completely loaded.

Set and actual topology - graphical view

You can select the interface with the topology you want to display (X1, X2, X3 or PROFINET communication modules such as CM 1542-1) at the top left of the "Topology" Web page.

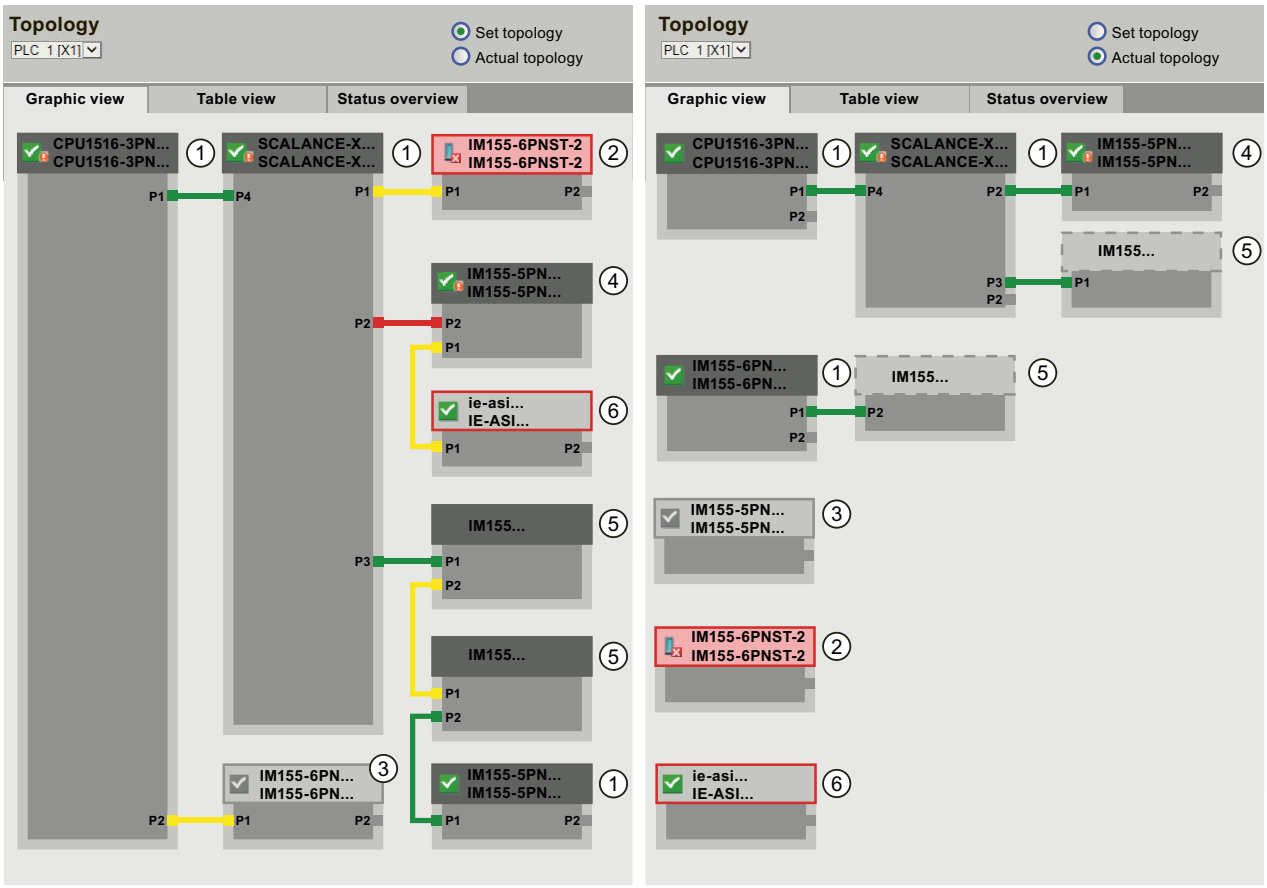

Figure 4-37 Graphical view - Set and actual topology

Meaning of the colored connections in the set/actual topology:

Table 4-3 Meaning of the colored connections in the set/actual topology

Connection	Meaning	
	Set topology	**Actual topology**
Green	The current actual connection matches the configured target connection.	Connections detected
Red	Mismatch between the current actual connection and the configured target connection (e.g., port interchanged).	-
Yellow	Connection diagnostics not possible. Causes: • Malfunction of communication with a device (e.g., cable was removed) • Connection to a passive component (e.g., switches or cables) • Connection to devices/PROFINET devices on a different IO controller or IO subsystem.	-

① Configured and accessible PROFINET devices

Configured and accessible PROFINET devices are displayed in dark gray. Connections indicate the ports used to connect the PROFINET devices of a station.

② Configured but inaccessible PROFINET devices

Configured but inaccessible PROFINET devices are indicated in pink with red frame (e.g., device failure, cable disconnected).

③ Deactivated devices

All deactivated, configured PROFINET devices are displayed in light gray.

④ Interchanged ports

Interchanged ports are highlighted in red in the set topology view. The actual topology view indicates the actually connected ports, while the set topology view displays the configured target connections.

⑤ PROFINET devices of a different PROFINET IO subsystem

- In the set topology:
  A PROFINET device of a different PROFINET IO subsystem is indicated by means of a green link (or red link for interchanged ports) if it is available on the bus and directly adjacent to an accessible configured PROFINET device ①. If the PROFINET device of a different PROFINET IO subsystem is inaccessible, it is identified by means of a yellow connecting

line.
The connection between two PROFINET devices which both belong to a different PROFINET IO subsystem cannot be identified and is always indicated in yellow color.

- In the actual topology:
  The PROFINET device of a different PROFINET IO subsystem is not displayed unless it is directly adjacent to a configured PROFINET device. The PROFINET device is shown in light gray with a dashed line around the device header.

The status of PROFINET devices of a different PROFINET IO subsystem is **not** displayed in the device header.

⑥ Displaying faulty neighbor relationships

Devices from which the relation data could not be read completely or with error are highlighted in light gray with a red frame.

NOTE

Displaying faulty neighbor relationships

If a device does not have the matching firmware, the relationships cannot be displayed correctly. This means a firmware update of the respective device is required in case a faulty neighbor relationship is displayed.

Views after changes to the configuration

- If a device fails, it remains at the same position in the "Set topology" view. This error state is indicated with a red border around the device header and the icon .
- If a device fails, it is displayed in the "Actual topology" view. This error state is indicated separately in the bottom area with a red border around the device header and the icon .

Link between the "Topology" and "Module information" web pages

The two web pages, "Topology" and "Module information", are linked. A click on the header of a selected module in the topology view automatically takes you to this module on the "Module information" web page.
You can find additional information on this in the section Module information (Page 63).

Reference

Additional examples for graphical topology view are available in the section Examples for graphical topology views (Page 84).

4.9.3 Tabular view

Topology - tabular view

The "Tabular view" always shows the "Actual topology".

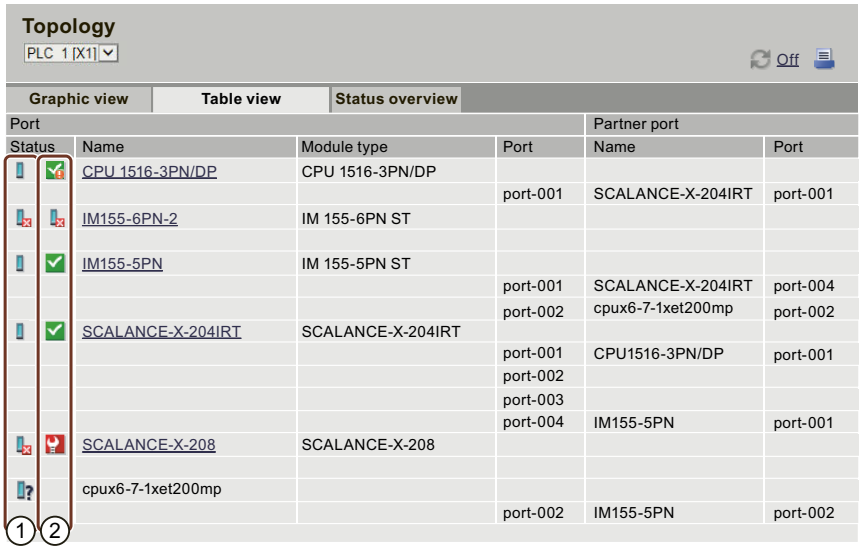

Figure 4-38 Topology - tabular view

① Meaning of the symbols relating to the status of the PROFINET devices

Table 4-4 Meaning of the symbols relating to the status of the PROFINET devices

Symbol	Meaning
	Configured and accessible PROFINET devices
?	Unconfigured and accessible PROFINET devices
	Configured but inaccessible PROFINET devices
!	Devices for which neighbor relations cannot be determined, or for which the neighbor relationship could not be read out completely, or only with errors

② Meaning of the symbols relating to the module status of the PROFINET devices

Table 4-5 Meaning of the symbols relating to the module status of the PROFINET devices

Symbol	Color	Meaning
	green	Component is OK.

Symbol	Color	Meaning
	gray	Deactivated PROFIBUS or PROFINET devices.
	black	State cannot be determined • For example, "Status cannot be determined" is always displayed while the CPU is in STOP mode, or during startup evaluation of "Report system error" for all configured I/O modules and I/O systems after a CPU restart. • However, this status can also be displayed temporarily during operation if a diagnostics interrupt burst occurs at all modules. • It is not possible to determine the status of modules on a subsystem that is connected to a CP.
	red	Component failed or is not reachable • "Not reachable" is displayed for e.g. a module that has been removed or a module that has been configured but does not exist.
	green	Maintenance required (Maintenance Required)
	yellow	Maintenance demanded (Maintenance Demanded)
	red	Error - component faulty or not available due to an incorrect type.
	-	A module in a lower module level does not have the status "Component OK".

Reference

For additional information on the "Report System Error" function, refer to the STEP 7 online help, keyword: "System diagnostics".

4.9.4 Status overview

Topology - status overview

The "Status overview" provides a clear presentation of all PROFINET IO devices/PROFINET devices (without connection relations) on one page. A quick error diagnostics is possible based on the symbols that show the module statuses.

The overview also provides a link of the modules to the Web page Module information (Page 63).

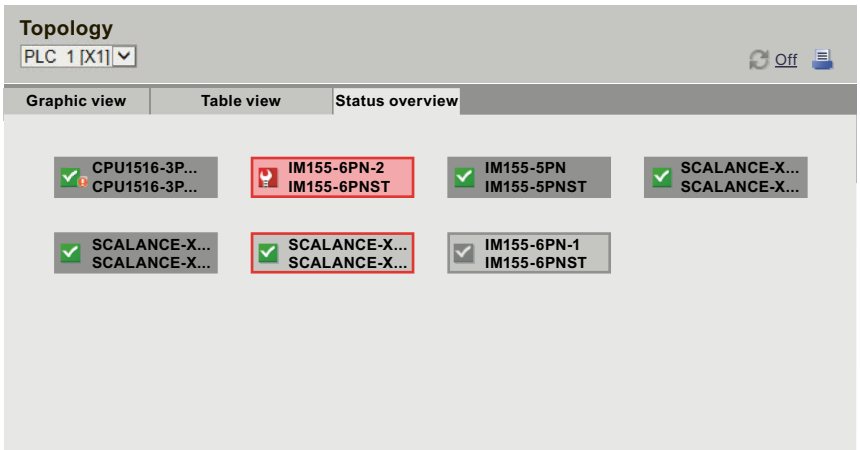

Figure 4-39 Topology - status overview

4.9.5 Examples for graphical topology views

The following section shows, as an example, some displays of the different topology views for a simple project.

"Set topology" is OK

Here you see the connections as they are configured in the topology editor by STEP 7. The configuration and wiring match.

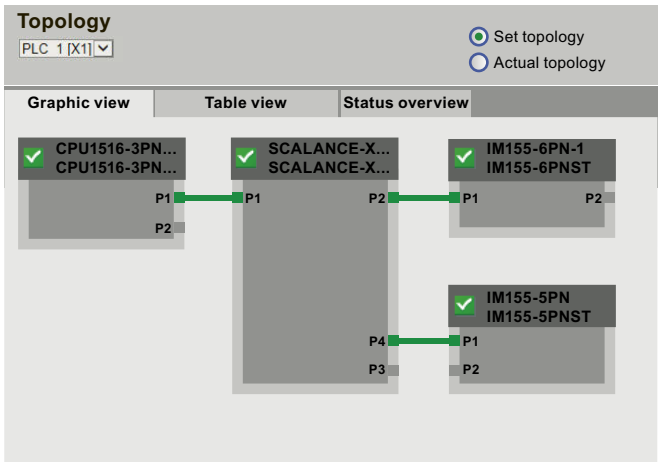

Figure 4-40 "Set topology" is OK

"Actual topology" is OK

Shows the actual layout of all configured devices that can be reached topologically.

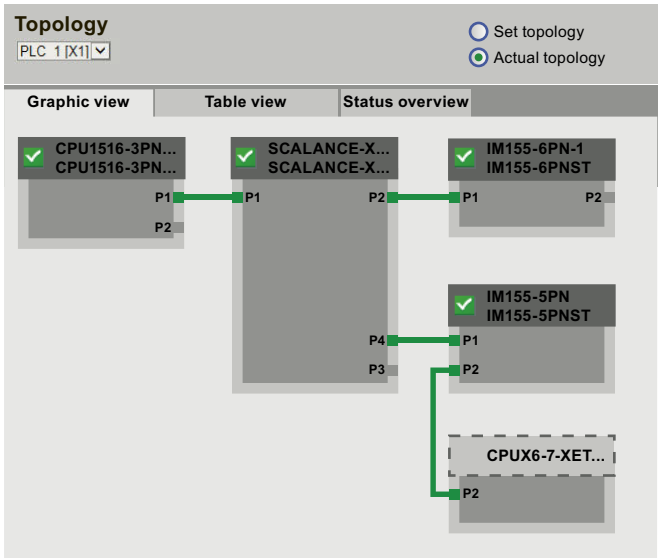

Figure 4-41 "Actual topology" is OK

"Set topology" with failed device

If a device has failed in the meantime, this device remains in the same place in the "Set topology" view. The failed device is displayed with a red border around the device header and the icon.

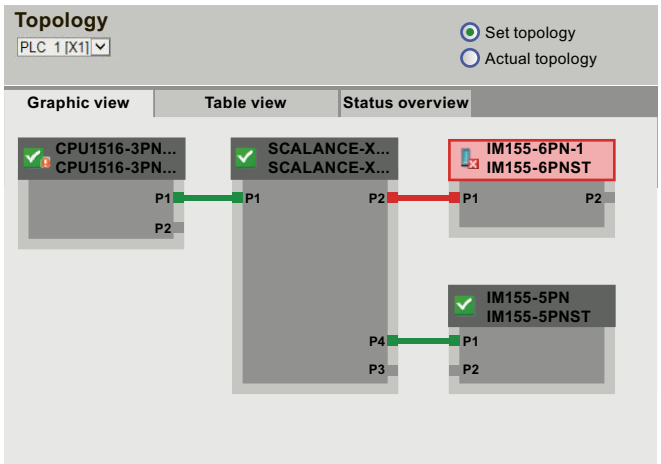

Figure 4-42 "Set topology" with failed device

"Actual topology" with failed device

In the "Actual topology" view, the device that has failed in the meantime is displayed separately in the bottom area of the view. The failed device is displayed with a red border around the device header and the icon.

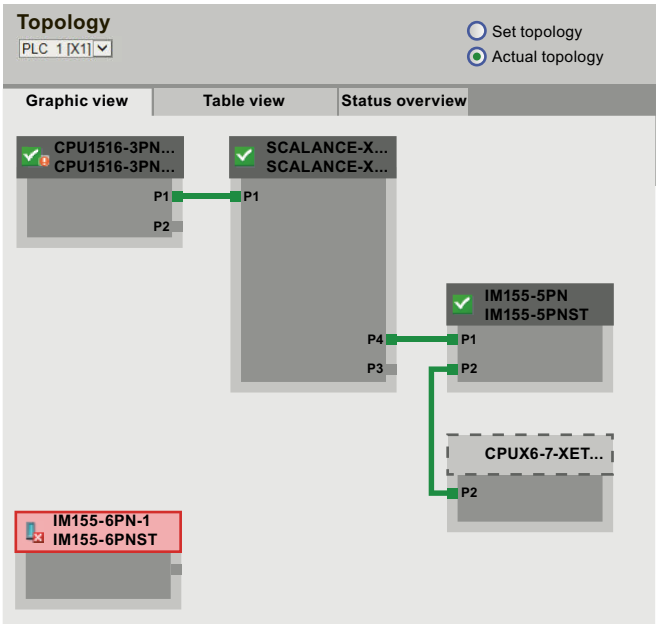

Figure 4-43 "Actual topology" with failed device

"Set topology" with interchanged ports

If a port was interchanged for a configured, directly adjacent PROFINET device, this device remains in the same place in the "Set topology" view. The interchanged connection is indicated by a red line.

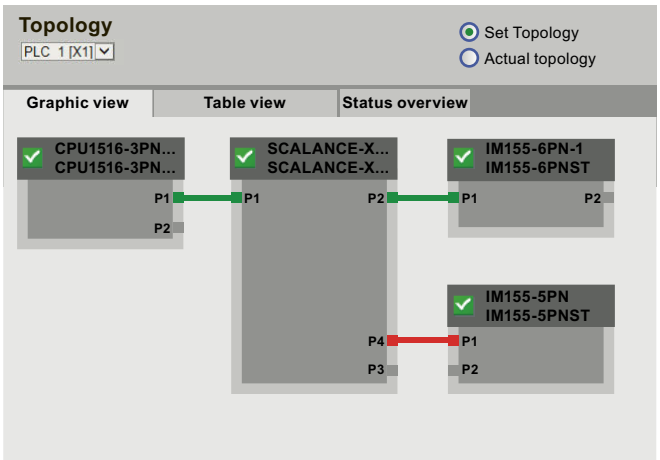

Figure 4-44 "Set topology" with interchanged ports

4.10 Tag status

Tag status

The web browser outputs the tag status on the web page of the same name.

NOTE

Saving the tag status as a bookmark

When the page is exited, the entries made on it are not saved. If you want to monitor the same entered tags again later on, then create a bookmark in your web browser for the "Tag status" page. Otherwise, you will have to enter the tags again when the page is reopened.

NOTE

Selected tag addresses are copied to the URL

The maximum number of characters for the URL of the tag status page is 2083. You can see the URL which corresponds to your current tag status page in the address bar of your web browser.

To monitor several tags, we recommend the use of the watch tables (Page 89).

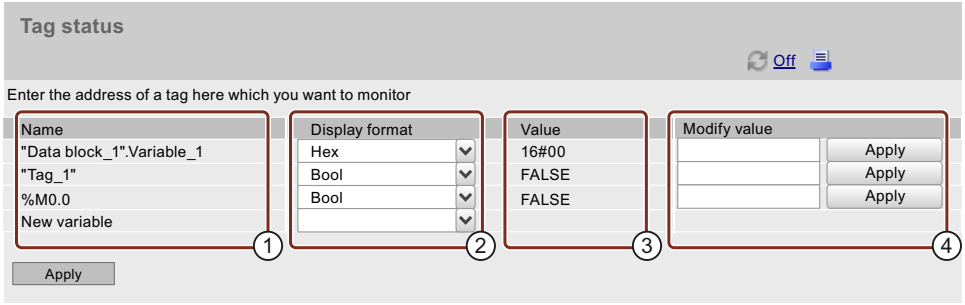

Figure 4-45 Tag status

① "Name"

In the "Name" text box, enter the address of the tag whose behavior you want to monitor. This may be a symbolic or absolute address.

- PLC tags (inputs and outputs, bit memories, times and counters) and DB tags in blocks with standard access have an absolute and a symbolic address.
- DB tags in blocks with optimized access have a symbolic address and no absolute address.

Example for access to the absolute address of a data block with standard access:
The absolute address consists of the preceding address ID %, the number of the data block and the absolute address of the tags in the data block, separated by a period: `%DB1.DBX1.0` = absolute addressing of the tags "DBX1.0" in the global data block "DB1".

Invalid entries are displayed in red font.

② "Display format"

Using the drop-down list box, select the desired display format for the tag. If the tag cannot be displayed in the desired format, it will be displayed in hexadecimal format.

③ "Value"

Under "Value", the value of the corresponding operand is displayed in the selected format.

④ "Modify value"

You can change the value of tags and write them to the CPU in this column. To transfer several changed values in one operation, click the "Apply" button below the table.

To be able to read values and write values to the CPU, you need to have configured a user with the appropriate access rights in STEP 7.

If the value you entered is not valid (e.g. binary value in a BOOL field), the entry is not applied and the corresponding input field remains empty. A specific message relating to this is not output.

You can change the values of the following data types:

- Bool, Byte
- DWord, LWord, Word
- Int, DInt, LInt, SInt, UDInt, UInt, ULInt, USInt
- Real, LReal
- LDT
- Counter, Date
- Time, LTime, Time_Of_Day, LTime_Of_Day, Timer
- S5Time
- Char, WChar, String

NOTE

The following generally applies: To be able to write data, the "Referrer" transfer must be activated in your web browser (this is the default in all common browsers).

Special considerations when changing languages

You can change the language, e.g., from German to English, in the upper right corner. Note that the German mnemonics differ from those of the other languages.

For monitoring available data types

Basically, you can monitor all data types of PLC tags via the web Server, which you can also monitor in STEP 7.

Note that structured data types such as ARRAY, STRUCT and DTL are not available as data types for PLC tags due to their data volume.

Reference

You can find additional information on the available data types in the STEP 7 online help, keyword: "Overview of the valid data types".

4.11 Watch tables

Watch tables

The browser displays the content of the configured, web-enabled watch tables on the web page of the same name.

NOTE

Please note that you can observe a maximum of 50 of the watch tables configured in STEP 7 in the Web server.

Each of these tables is displayed in the Web server with a maximum of 200 entries.

If you are monitoring many large watch tables in the Web server, the update time may increase due to the large data volumes.

The number of watch tables that you can monitor download into the CPU also depends on the size of the SIMATIC memory card used.

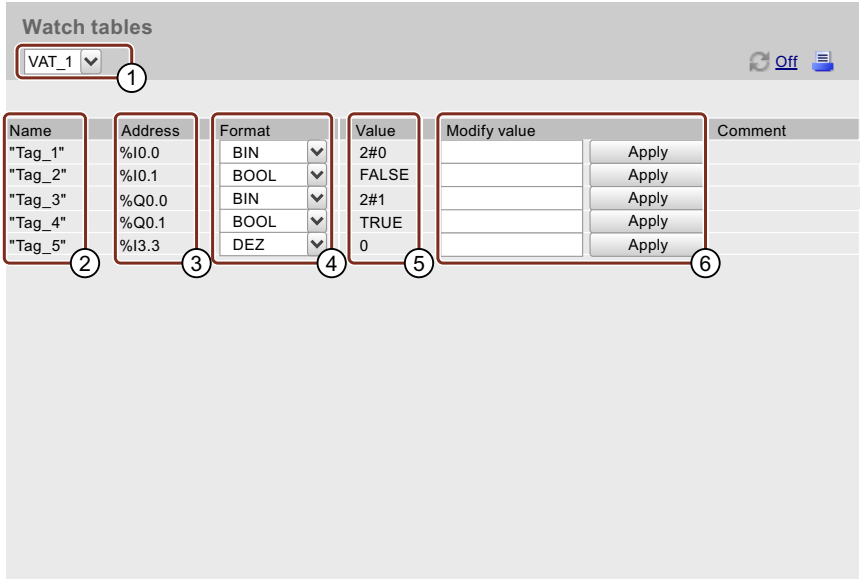

Figure 4-46 Watch tables

① Selection

Select one of the configured watch tables from the drop-down list.

② "Name"

The symbolic name of the tag is shown in this info box.

③ "Address"

The absolute address of the tags is displayed within this info field (if present, e.g. for inputs or outputs; DB tags in blocks with optimized access have no absolute address).

③ "Format"

Select the display format of the respective tag from the drop-down list.

⑤ "Value"

This column shows the values in the corresponding display format.

⑥ "Modify value"

You can change the value of tags and write them to the CPU in this column.
To be able to read values and write values to the CPU, you need to have configured a user with the appropriate access rights in STEP 7.
If the value you entered is not valid (e.g. binary value in a BOOL field), the entry is not applied and the corresponding input field remains empty. A specific message relating to this is not output.

NOTE

The following generally applies: To be able to write data, the "Referrer" transfer must be activated in your Web browser (this is the default in all common browsers).

Note that the comments are displayed in the project language of the STEP 7 project that is assigned to the current user interface language of the Web server. You can find out how to assign project languages to interface languages in section Language settings (Page 35).

Reference

You can find additional information on the available data types in the STEP 7 online help, keyword: "Overview of the valid data types".

4.12 Online backup

Backing up and restoring the CPU configuration

You can back up a CPU configuration using the Web server with the corresponding access rights. If necessary, you can also restore this configuration at a later time using the Web server.
You can create as many backups as you want and store a variety of configurations for a CPU.

NOTICE

Prior to every restoration of the CPU configuration, always first perform an online backup of the current CPU configuration and save this backup file to a local directory of your PC.

This ensures that you can undo a restoration which failed (e.g. due to a damaged backup file) or which does not show the desired result.

NOTE

You can also perform online backup and restoration of the CPU configuration in STEP 7 (see STEP 7 online help, keyword: "Creating a backup of an S7 CPU").

When backing up using STEP 7, the backup file is saved within the STEP 7 project. With a backup using the Web server, the backup file is saved to a local directory of your PG/PC (e.g. "Downloads" directory). Web server backup files cannot be restored via STEP 7, nor can STEP 7 backup files be restored directly using the web server.

To restore a STEP 7 backup file using the web server, first save the STEP 7 backup file to a local directory of your programming device/PC (e.g. "Downloads" directory). From there, you can restore the backup with the Web server.

NOTE

The "Online backup" function is not available if you access the web server via:

- a virtual IP address
- a communication module (CM)
- a communication processor (CP)

Requirements

- You access the CPU via the secure transmission protocol "HTTPS".
- A valid CA-signed certificate is installed in the Web browser; see section Configuring the Web server (Page 23).

Online backup

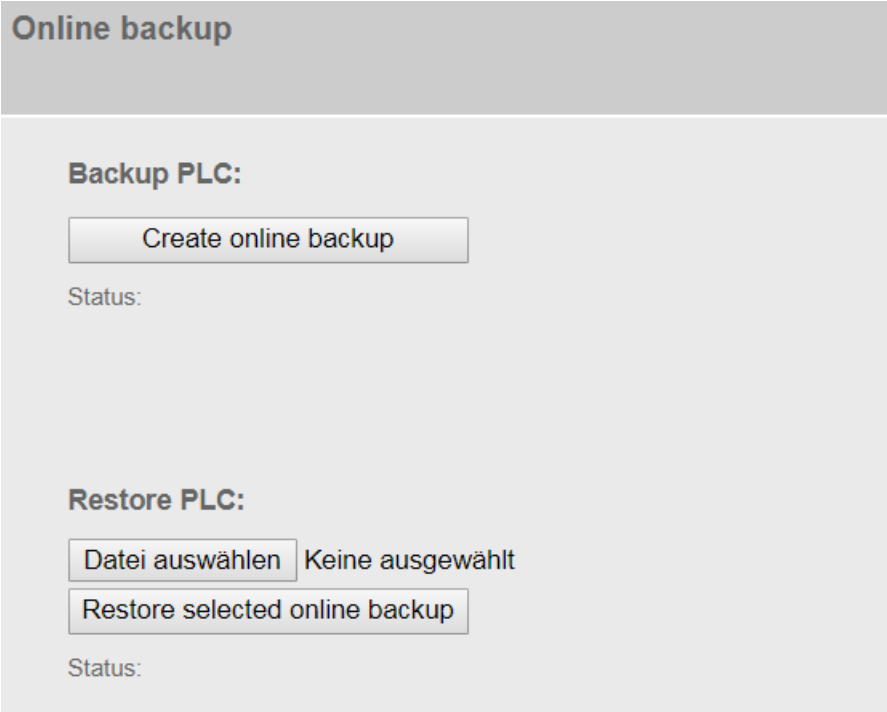

Figure 4-47 Online backup

Perform online backup of the configuration

To perform an online backup of the CPU configuration, proceed as follows:

1. Click the "Create online backup" button in the "PLC backup" area.
2. If the CPU is in RUN mode, the following alarm is output:
   "Creation of an online backup requires PLC STOP. Do you want to set the PLC to STOP mode?"
   Acknowledge the alarm output by clicking "OK". The CPU is set to STOP mode and online backup is performed. (If you click "Cancel", the CPU remains in the current mode and the online backup is canceled.)
3. Save the backup file to a local directory of your PC.
4. Set the CPU back to RUN mode ("RUN" button in the "CPU operator panel" area of the start page).

NOTE

During the execution of the online backup, some data is not available in the web page view of the web server.

Scope of the backup

The backup includes all data needed to restore a particular state of a CPU, i.e. the specific combination of the configuration of the CPU with the current values of the user-related retentive data.

The following data of the configuration of the CPU is backed up:

- The contents of the SIMATIC memory card, e.g. configuration, program code, recipes and archives, DataLogs

The following user-relevant retentive data is backed up:

- Retentive memory areas of data blocks, bit memories, counters and timers
- Front-panel settings, dynamic IP configuration data, operating hours counters, retentive Motion Control sensor data

Note:

- Entries in the diagnostic buffer are not included in the backup.
- With a SIMATIC S7-1500 CPU, the current time is not saved.
- The complete content of the SIMATIC memory card is saved, i.e. also any data stored on the card (e.g. PDF files, GSD files).
- The backup file is assigned the name of the CPU and the project with the time and date of the backup, e.g. "2015-09-10_11-01_03_online backup_PLC69_machineControl.s7pbkp".
- The backup file of an F-CPU also contains the collective signature of the safety program in the file name. Check whether it is the expected F-collective signature.
- You can rename the backup, but you cannot make any changes to the contents of the backup.
- For the Motion Control technology objects positioning axis, synchronous axis and external encoder with absolute encoder, the position actual value does not match the actual mechanical axis position after the configuration is restored. Reference the technology object once again using absolute adjustment.

Restoring the configuration

To restore the CPU configuration, follow these steps:

1. Enter the password of the currently logged-in user in the "Restore PLC" area.
2. Click the "Select file" button and select the backup file of the configuration that you want to restore.
3. Click "Restore selected online backup".
4. If the CPU is in RUN mode, the following alarm is output:
   "Download online backup to device. The CPU is set to STOP and the contents of the CPU will be overwritten. Do you want to continue?"
   If the CPU is already in STOP mode, the following alarm is output:
   "Download online backup to device. The contents of the CPU will be overwritten. Do you want to continue?"
   Acknowledge the alarm output by clicking "OK". The CPU is set to "STOP" mode if required, and the online backup is downloaded. (If you click "Cancel", the CPU remains in the current mode and downloading is canceled.)

5. An alarm informs you that you must not leave the web page during the "restore procedure". Acknowledge the alarm output by clicking "OK".
   The restoration of the CPU configuration starts and you will be continuously informed of the current status:
   – "Download of online backup has been started."
   – "Checking backup file."
   – "Formatting memory card and resetting CPU."
6. If you have started the restoration procedure with a user name and password defined in the Web server configuration, you will be asked to enter these again after restoration of the CPU. Enter the required information and click "Login".
   If you have started the restoration procedure as the user "Everybody" without a password (but with appropriate access rights), this prompt is not displayed.

NOTE

To restore the configuration of an F-CPU whose security program and/or password has been changed for the F-CPU in the meantime, you also need the access authorization "Perform changes as F-Admin"; see "Amending user management" in the section Configuring the Web server (Page 23).

WARNING

The authorization "Perform changes as F-Admin" on the web server without password protection (user "Everyone") is only for test purposes, commissioning, etc. i.e. only when the system is in productive operation. In this case, you have to ensure the security of the plant through other organizational measures, e.g. through spatial protection.

Before the transition to productive operation, you must remove the right "Perform changes as F-Admin" from the user "Everybody".

The password of the user of the web server with the right "Perform changes as F-Admin" must only be accessible to authorized persons.

   The restoration of the CPU configuration starts and you will be continuously informed of the current status:
   – "Loading configuration."
   – "Resetting CPU."
   This may take a few minutes.
7. When the procedure is complete, you will be logged out and the "Reload page..." button will be displayed.
   If you did not receive an error message during the restoration procedure, the restoration of the CPU configuration was successfully completed and you will receive a corresponding message.
   Click the "Reload page..." button and log on to the newly downloaded CPU configuration with your user name and password.

You will receive the following error message if:

- the newly downloaded CPU configuration does not contain the same IP address as the former one
- the Web server is deactivated in the newly downloaded CPU configuration
- the browser does not receive a response from the CPU after 3 minutes

Error message: "The CPU is not reachable anymore. Please check the IP address and the Web server configuration. The result of the restore can be checked in the ASLog."

4.13 Record

Trace and logic analyzer function

You record device tags and evaluate the recordings with the trace and logic analyzer function. Tags are, for example, drive parameters or system and user tags of a CPU.

The recordings are saved on the device and can be read out by users with appropriate access rights via the Web server and saved. The trace and logic analyzer function is therefore suitable for monitoring highly dynamic processes in the Web server.

Requirements

- A trace configuration has been created, i.e. you have defined the recording and trigger conditions and selected the signals to be recorded.
  - Note: You can only display measurements stored on the SIMATIC Memory Card on the "Record" web page.

    In order for the CPU to save the measurements on the SIMATIC Memory Card, you must make the following settings in the trace configuration in STEP 7:

    1. Set the "Trigger mode" to "Trigger on tag".
    2. Select the "Save measurements on device (memory card)" check box.
- You have transferred the trace configuration to the device and activated it there.
- You have been assigned the access right "The user is authorized to..." > "...query diagnostics" in the user administration of the Web server; see section Configuring the Web server (Page 23).

Space requirements for storing trace recordings

The "Save measurements on device (memory card)" function in STEP 7 saves Trace recordings on your SIMATIC Memory Card.

Response when number reached

The "Deactivate recording" parameter repeats the measurements until the configured "Number of measurements" is reached.

The "Overwrite oldest recording" parameter replaces the oldest measurement with the latest measurement when the configured "Number of measurements" is reached. Please note, however, that continuously writing data to the SIMATIC Memory Card shortens its service life.

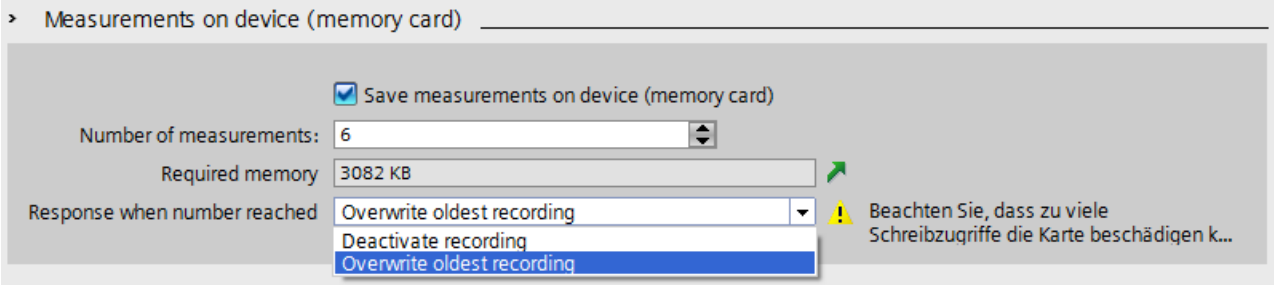

Figure 4-48 Dialog of the settings for saving measurements to the Memory Card in STEP 7

Number of measurements

The CPU supports a maximum of 999 measurements. While the CPU writes the trace recordings to the load memory of the memory card, it pauses monitoring of the trigger conditions for the trace job. After the CPU has terminated the storing of Trace recordings, the CPU continues checking of the trigger conditions.

NOTICE
Memory required on the SIMATIC Memory Card When the trace function "Measurements on device (memory card)" requires more memory than is available on the SIMATIC Memory Card, undesired effects may result. Ensure there is always sufficient free storage space to use the "Measurements on device (memory card)" function. In addition to the "Measurements on device (memory card)" Trace function, other functions, such as storing DataLogs, use storage space on the SIMATIC Memory Card. Make sure that enough memory space is available for all functions that occupy memory.

You can view the current values on the currently used storage space in the load memory in the "Memory" tab on the "Diagnostics" web page.

More information

The user interface of the "Trace" web page is largely the same as that of the trace function in STEP 7. See the Using the trace and logic analyzer Function Manual (https://support.industry.siemens.com/cs/ww/en/view/64897128) and the online help for STEP 7 for more details.

Displaying the trace recordings

The web page of the trace and logic analyzer function consists of several areas. The example in the figure below shows how the Web server user interface is divided when the "Trace" web page is first called.

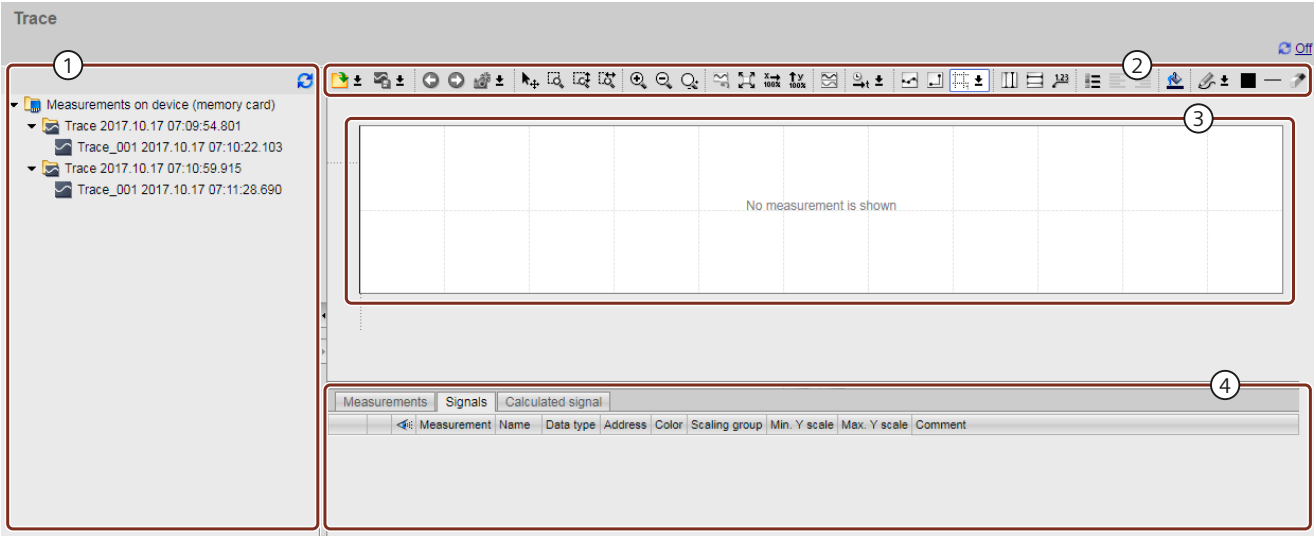

① Trace recordings

② Toolbar of the trend diagram

③ Trend diagram and bit trace

④ Signal tables

Figure 4-49 Trace start page without measurement

Opening measurements

To open a measurement, right-click on a measurement to select it from the "Trace recordings" area. Then select the command "Show in chart" in the shortcut menu.

The measurement is displayed in the "Trend diagram and bit trace" area.

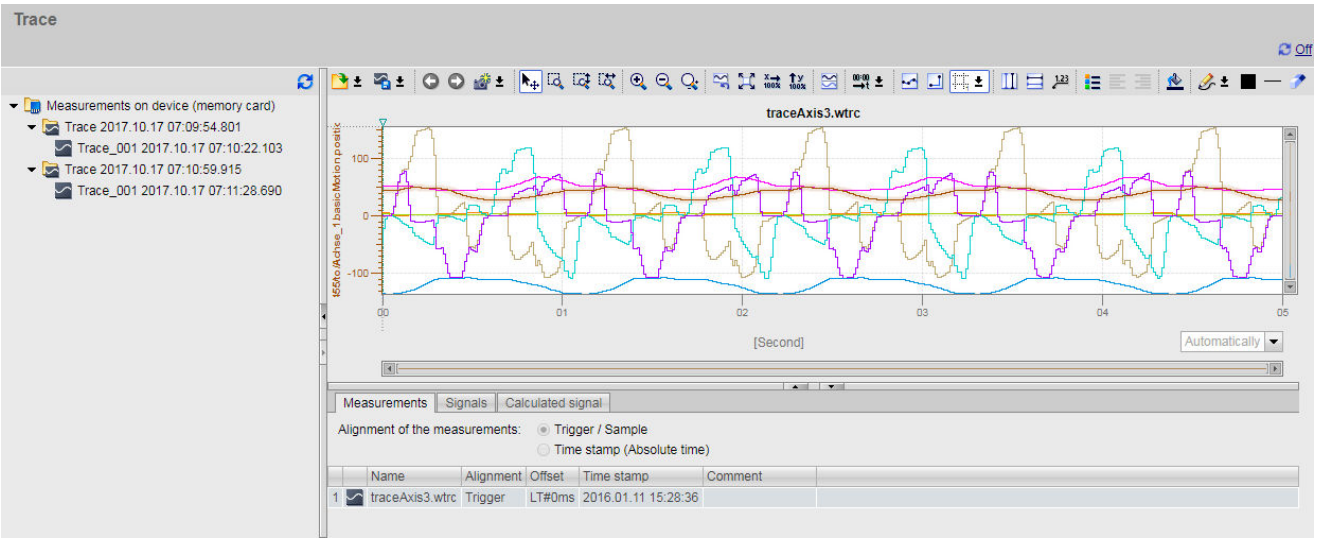

Figure 4-50 Displaying an individual measurement

To display multiple measurements at once, right-click on a measurement to select it from the "Trace recordings" area. Then select the command "Add to table" in the shortcut menu.
The measurements are displayed in the "Trend diagram and bit trace" area.

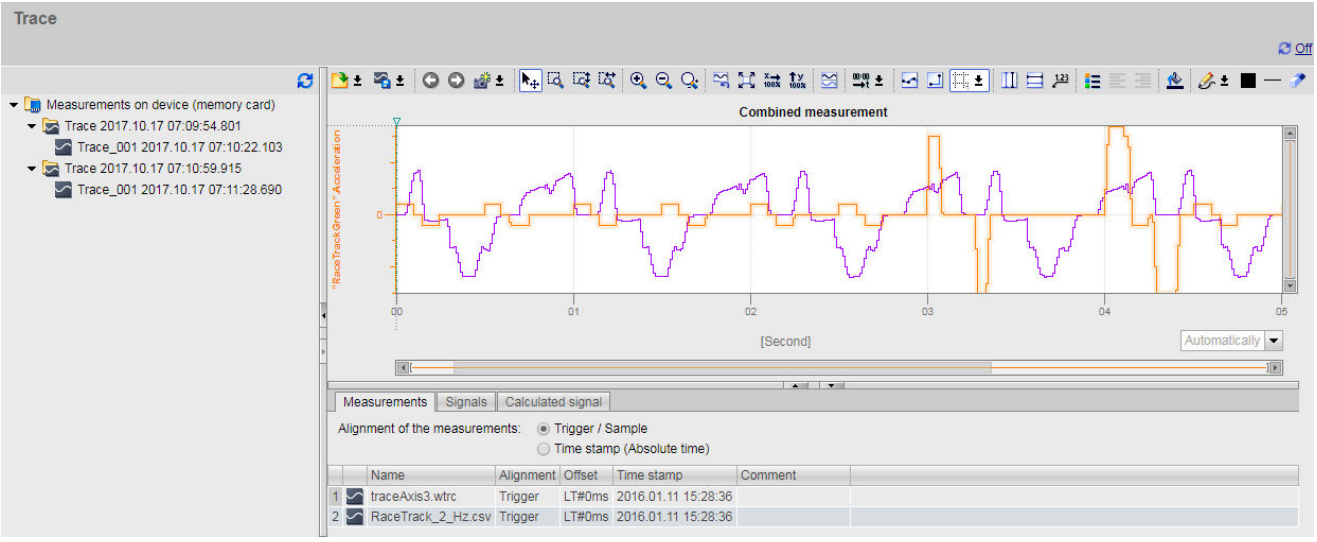

Figure 4-51 Displaying several measurements

Trace recordings

The "Trace recordings" area shows a list of all existing measurements, sorted by date and time of the trace recordings. A measurement always consists of a trace configuration with an associated recording.

The following table shows the special Web server shortcut menu commands in the Trace recordings area:

Table 4-6 Web server shortcut menu commands in the trace recordings area

Shortcut menu command	Description
"Delete"	Deletes the selected measurement on the memory card of the CPU. A confirmation dialog opens. After deletion, the display in the trend diagram is not automatically overwritten.
"Save as"	Saves the selected measurement.
"Show in chart"	Loads the selected measurement to the display area of the Web server.
"Add in table"	Inserts the selected measurement into the table in the "Measurements" tab.

Some data types offer the display of individual bit traces. Activate the individual bit traces of the signal opened in the signal table using the icon.

You can adjust the display of the signals in the signal table and with the aid of the toolbar of the trend diagram.

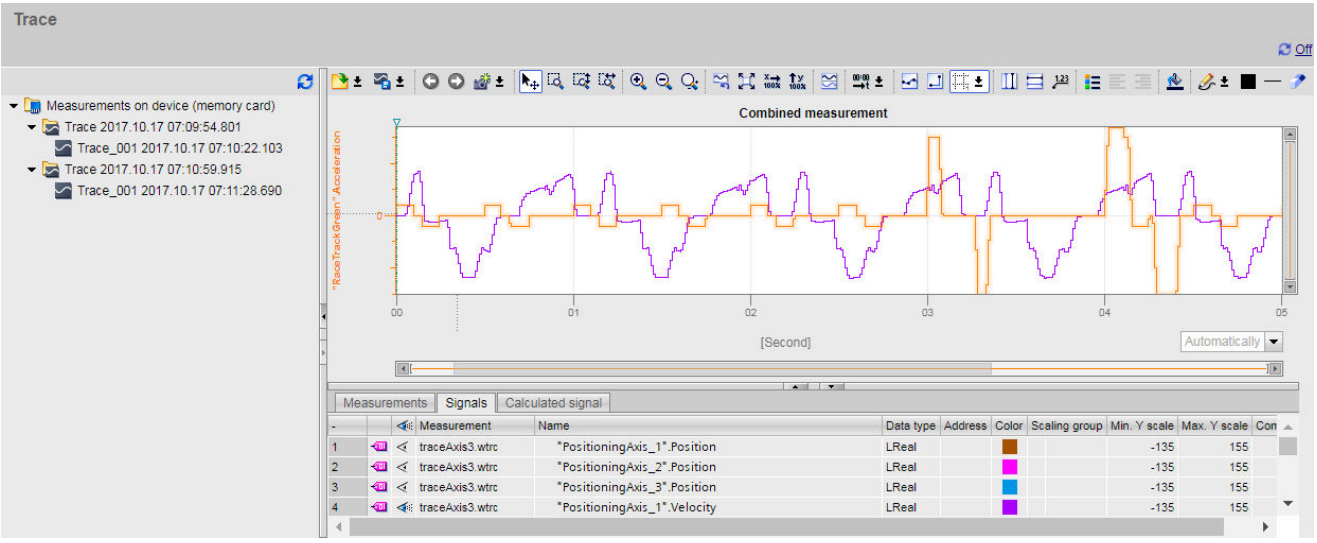

Figure 4-52 Trace measurement - All areas visible

Toolbar of the trend diagram

As in STEP 7, the buttons in the toolbar of the trend diagram provide you with tools for adjusting the display.

The following table shows the Web server buttons in the trend diagram toolbar:

Table 4-7 Buttons of the trend diagram toolbar

Symbol	Function	Description
	Open / add measurement	Opens measurements or adds measurement to an existing measurement.

Symbol	Function	Description
	Save as	Saves measurement(s) as a file with the extension .csv, .wtrc (SIMOTION format for saving Trace data) or .ttrecx (TIA Portal format for saving Trace data). In addition to the measured data the command also saves the diagram, snapshots, marking and calculated signals. Condition for saving in the .wtrc format: • Only one measurement in the .wtrc format was loaded to the "Trace recordings" area. Condition for saving in the .ttrecx format: • Only one measurement in the .ttrecx format was loaded to the "Trace recordings" area. In all other cases, you can only save the measurements in the .csv format.
	Undo move / zoom	Undoes the move / zoom function executed last. If you have carried out several move / zoom functions, you can undo these step-by-step.
	Repeat move / zoom	Redoes the last undone move / zoom function. If you have undone several move / zoom functions, you can redo these step-by-step.
	Snapshot	Saves the current view as a snapshot (see the section "Settings and displays of the Snapshot symbol").
	Move view	Moves the display with a pressed mouse button - corresponds to the button in STEP 7.
	Zoom selection	Selection of an arbitrary range with the mouse button pressed. The button scales the display to the range selection.
	Vertical zoom selection	Selection of a vertical range with the mouse button pressed. The button scales the display to the range selection.
	Horizontal zoom selection	Selection of a horizontal range with the mouse button pressed. The button scales the display to the range selection.
	Zoom in	Enlargement of the display. The ranges of the X axis and Y axis are reduced every time the button is clicked. The curves are displayed larger.
	Zoom out	Reduction of the display. The ranges of the X axis and Y axis are reduced every time the button is clicked. The curves are displayed smaller.
	Scaling	Scales all the signals or also just signal / signal group vertically and horizontally.
	Restore standard view	The button undoes scaling and move commands. The view is reset to the status at the time of loading of the measurement. Hidden signals are also reset but remain deactivated.
	Display all	The button moves all the signals completely into the display area without changing the relative positions of the signals to each other.
	Scale X automatically	Automatic scaling of all visible signals on the horizontal X area.
	Scale Y automatically	Automatic scaling of all visible signals on the vertical Y area.
	Arrange in tracks	Activate or deactivate the trace arrangement. When the trace arrangement is activated the signals are arranged among themselves with the relevant value axes. Signal groups are displayed in the same trace. This setting does not affect the display for the bit traces.

Symbol	Function	Description
	Unit switching of the time axis	Switching the unit of the time axis You can enter the following information: • Measuring points • Time (relative time related to the trigger time) • Time stamp of the measurement points
	Display measurement points	The button displays the measurement point as small circles on the curves.
/	Interpolation on/off	The buttons activate / deactivate the interpolation of the data of the trend diagram.
	Grid	The button activates / deactivates the grid of the trend diagram and regulates its brightness in the Levels 1 to 9.
	Vertical measurement cursor	Display of vertical measurement cursor. The vertical position of the two measurement cursors can be moved with the mouse. The values of the signals and the difference between two measuring points are displayed in the signal table for all displayed signals and also in the trend diagram for the selected signal. The measuring point or the relative/absolute time to the measurement cursors is displayed depending on the set unit of the time axis (X axis) in the movable pop-up window "Measuring points/Time values".
	Horizontal measurement cursor	Display of the horizontal measurement cursors. The horizontal position of the two measurement cursors can be moved with the mouse. The Y values of the measurement cursor for the selected signal are displayed in the movable pop-up window "Y values".
	Difference of the measurement cursor	Display of the difference of the horizontal and vertical measurement cursors and the Y values at the intersections with the vertical measurement cursors.
	Show legend	Showing or hiding of the legend in the trend diagram and the bit trace labels.
	Align the chart legend to the left	Display of the legend and the bit trace labels on the left side of the trend diagram.
	Align the chart legend to the right	Display of the legend and the bit trace labels on the right side of the trend diagram.
	Change background color	Changeover between various background colors.
	Identification	The following table provides an overview of marked signal areas. Note that selections are possible only for analog and real signals (no calculated signals).

All icons in the toolbar are equipped with tooltips.

Trend diagram

The trend diagram displays the selected signals of a recording. Bits are shown in the lower diagram as a bit trace.

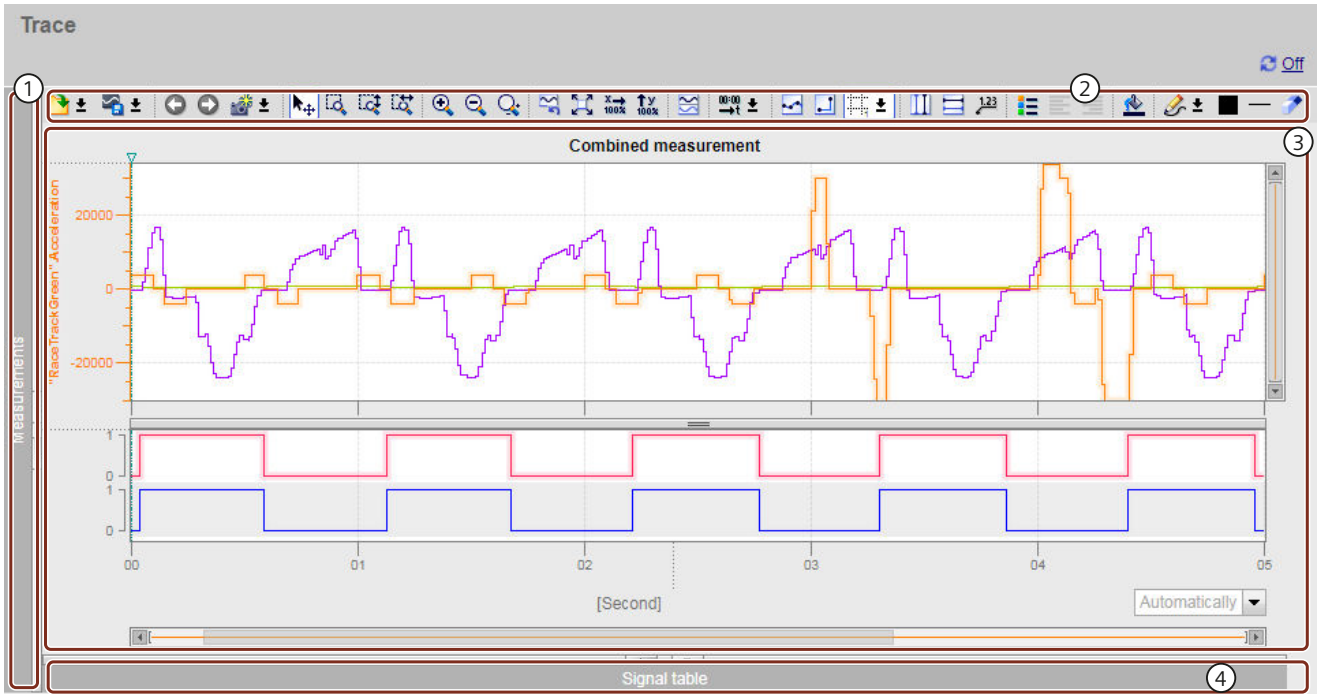

① Trace recordings (minimized)

② Toolbar of the trend diagram

③ Trend diagram and bit trace

④ Signal table (minimized)

Figure 4-53 Trace measurement - only trend diagram visible

The following table shows the special Web server shortcut menu commands of a selected signal in the trend diagram:

Table 4-8 Web server shortcut menu commands in the trend diagram area

Shortcut menu command	Description
"Scale Y automatically"	Automatic scaling of the selected signal in the Y direction.
"Hide signal"	Hides the selected signal in the trend diagram.

Use of the trend diagram

You can zoom the display area as you like. Measurement cursors (see "② Toolbar of the trend diagram") can be used to select individual values for display in the signal table.

The following image shows how you can change the display area of the trend diagram as required with rulers and scroll bars.

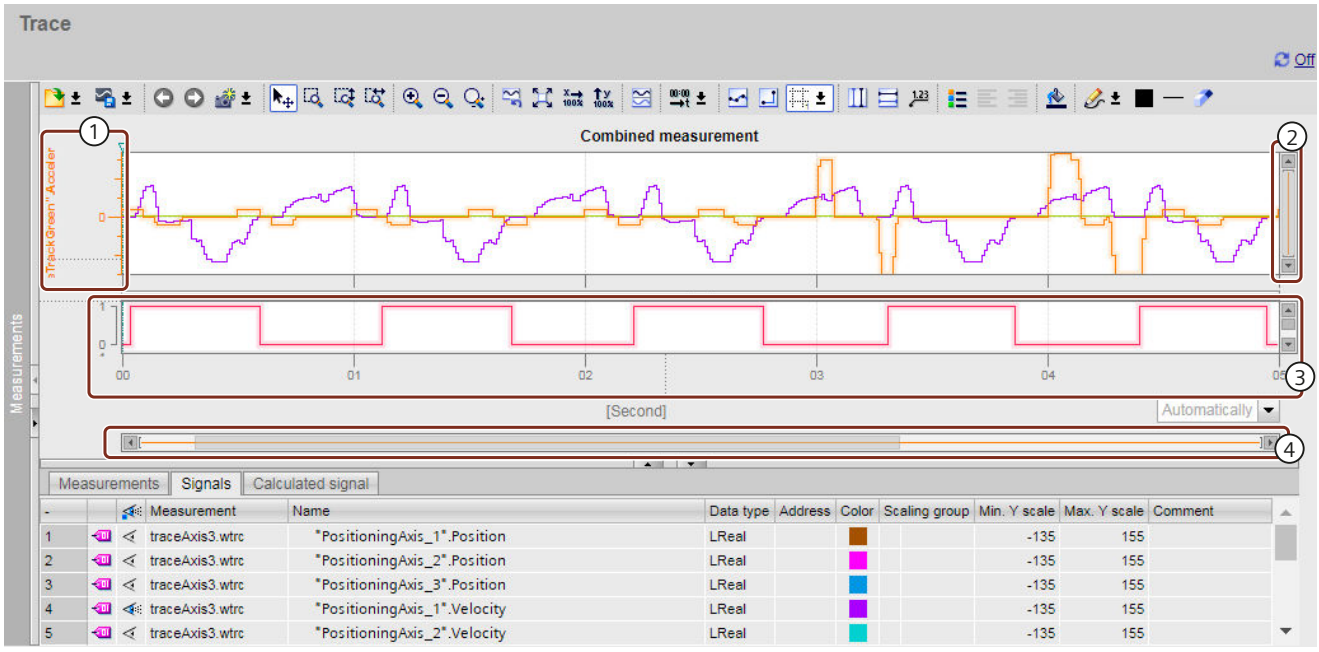

① Vertical ruler

② Vertical scroll bar

③ Horizontal ruler

④ Horizontal scroll bar

Figure 4-54 Trace measurement - rulers and scroll bars

Using the vertical ruler

- If you click the vertical ruler at the top or the bottom, you increase the size of the display at the top or bottom.
- If you click the vertical ruler at the top or the bottom while keeping the shift key pressed, you scale both ends.
- If you click the vertical ruler at the top or the bottom while keeping the Ctrl key pressed, you move the display up or down.

Using the horizontal ruler

- If you click the horizontal ruler on the left or the right, you increase the size of the display on the left or right.
- If you click the horizontal ruler on the left or right while keeping the shift key pressed, you scale both ends.
- If you click the horizontal ruler on the left or the right while keeping the Ctrl key pressed, you move the display to the left or right.

Using the mouse wheel

- If you activate the mouse wheel in the display, you move the display up or down.
- If you activate the mouse wheel in the display while keeping the shift key pressed, you move the display to the left or right.
- If you activate the mouse wheel in the display while keeping the Ctrl key pressed, you increase/reduce the size of the display at the position of the mouse pointer.

Signal tables

The signal tables list the signals of the selected measurement and provides setting options for some properties. The area of the signal tables is divided into the tabs "Measurements", "Signals" and "Calculated signal".

Settings and displays in the "Signals" tab

The following figure shows the signal table of the "Signals" tab.

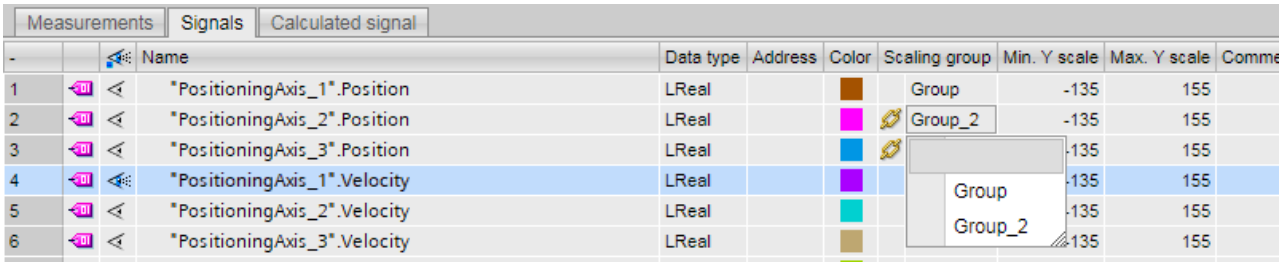

Figure 4-55 Display in the "Signals" tab

The following table shows the settings and displays of the recorded signals of the "Signals" tab:

Column	Description
Signal or error symbol	
	Signal symbol
	Symbol for calculated signals (formulas)
	Selection for the display in the trend diagram
	The point indicates that at least one bit has been selected for display as bit trace for the signal in the bit selection.
Signal number	Automatically generated number of the signal The signal can be accessed via the signal number in the formulas.
Name	Display of the signal name A click on the name of a displayed signal updates the scale in the trend diagram.

Column	Description
▸	Open bit selection Individual bits can also be selected for the following data types for display as a bit trace in the lower trend diagram: • Byte, Word, DWord, LWord • SInt, USInt, Int, UInt, DInt, UDInt, LInt, ULInt Example of an opened bit selection for the DWORD data type: 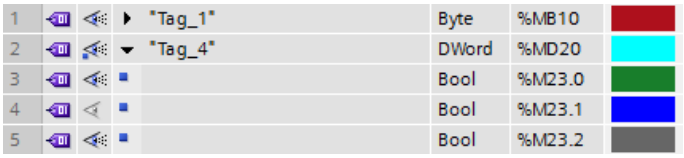 Select or deselect the relevant bit for display by clicking the icon.
Data type	Display of the data type
Address	Display of the address of the signal The field remains empty with optimized / type correct tags.
Color	Display and setting option for the color of the signal
Signal group	Display or input of the signal group name for one signal group. The Y-scales are scaled identically for all signals of one signal group. Enter an identical signal group name for those signals that you want to scale identically. To remove signals from a signal group: • Delete the signal group name. • Click the empty entry in the shortcut menu of the signal group. Note that you cannot group binary signals.
Gray field for the chain icon of the signal group	To add or delete the signal from a signal group, move the mouse pointer over the grey field or the chain icon (or), Clicking the chain icon adds the signal to a signal group or creates a new signal group. Clicking the chain icon removes the signal from the signal group. For a selected signal with signal group, the chain icon displays all signals of the same signal group.
Input field of the signal group	The input field displays the signal group name. As an alternative to the chain icon, you can assign or delete a group name via text input in this field.
Min. Y-scale	Display or input of the minimum value for the scaling of the signal.
Max. Y-scale	Display or input of the maximum value for the scaling of the signal.
Comment	Display and input option for a comment about the signal
Y(t1)	Display of the value at the position of the first measuring cursor
Y(t2)	Display of the value at the position of the second measuring cursor
ΔY	Display of the value difference between the first and the second measuring cursor

The following table shows the possible Web server shortcut menu commands of the "Signals" tab:

Table 4-9 Web server shortcut menu commands of the "Signals" tab

Shortcut menu command	Description
"Scale Y automatically"	Automatic scaling of the selected signal in the Y direction.
"Show signal"	Shows the signal in the trend diagram
"Hide signal"	Hides the signal in the trend diagram
"Show all bits"	Shows all the bits of a signal
"Hide all bits"	Hides all the bits of a signal

Shortcut menu command	Description
"Use for determined signal"	Calculates a new signal based on the selected real signal
"Process calculated signal"	Switches the selected calculated signal to the editing mode.
"Delete calculated signal"	Deletes the selected calculated signal

Settings and displays in the "Measurements" tab

The following figure shows the display of the "Measurements" tab and the shortcut menu of the "Alignment" column of a selected measurement.

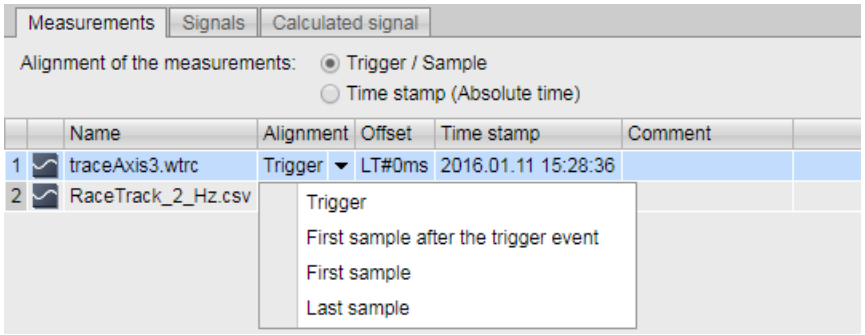

Figure 4-56 Tab "Measurements" with shortcut menu

The following table shows the settings and displays for the measurements:

Column	Description
Alignment of the measurements	
Trigger/Sample	Alignment of the measurements in accordance with the trigger or measurement point. The individual zero point for the measurement is predefined in the table under the "Alignment" column.
Time stamp (absolute time)	Alignment of the measurements in accordance with their time stamp. The signals are aligned in accordance with the time from the absolute time stamp.
Table columns	
	Static display of the measurement icon
Name	Display and change options for the name Note that the name must be unique.
Alignment	Alignment of the measurement (only adjustable with the "Trigger/Sample" check box selected). Determines the individual zero point for a measurement. All signals for the measurement are displayed in relation to this zero point. The following settings are possible: • Trigger • First sample after the trigger event • First sample • Last sampling
Offset	Offset related to the time axis Moves the measurement left or right by the offset stated on the time axis. If you enter solely a numerical value without a unit of measurement, the system automatically assigns the unit "ms" (for example 0=0ms, 100=100ms, 1000=1s, -1001=-1s 1ms , LT#2000ms=2s, LT#-3605000ms=-1h 5s , LT#-1h5s=-1h 5s)

Column	Description
Time stamp	Display of the trigger time
Comment	Display and input option for a comment about the signal
Shortcut menu commands	
"Save as WTRC"	Saves the measurement(s) as a file with the extension .csv, .wtrc (SIMOTION format for saving Trace data) or .ttrecx (TIA Portal format for saving Trace data).
"Save as CSV"	Exports a measurement as a file with the file extension .´csv. Note that the command only saves the measured data. The command does not save the diagram, snapshots, markings and calculated signals.
"Edit name"	Switches the name in editing mode
"Edit offset"	Switches the offset in editing mode
"Edit comment"	Switches the comment in editing mode
"Delete measurement"	Deletes the measurement

Settings and displays in the "Calculated signal" tab

You can use this function to calculate new signals based on real signals. The system calculates the Y-values of the signal points in the process.

To parameterize the signals to be calculated, open the "Calculated signal" tab.

In the "General" section specify the name, the data type and color of a signal to be calculated. Note that the name of the signal to be calculated must differ from the name of a real signal.

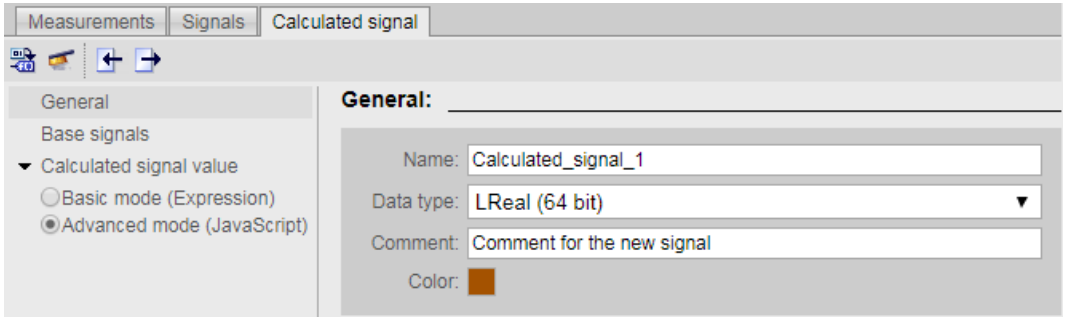

Figure 4-57 "General" section of the "Calculated signal" tab

Add the basic signals in the "Basic signals" section. The basic signals form the basis for calculating the new signal. You can change the default name of the variable in the "Name" column. You select real signals for the specification of the number of signal points to be calculated in the "Signal" column.

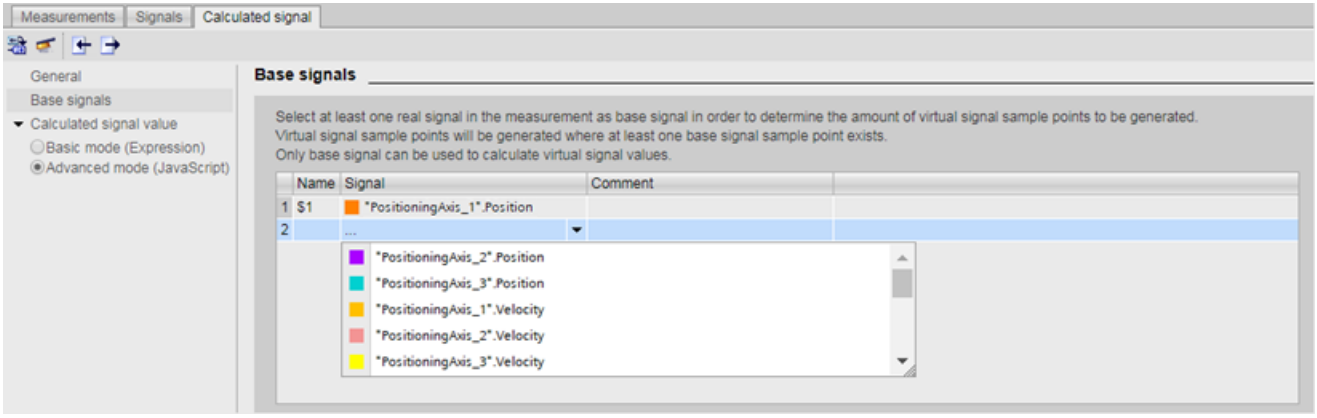

Figure 4-58 "Basic signals" section of the "Calculated signal" tab

Enter the code for the calculation of the Y values of the signal points in the "Calculated signal value" section. The section is divided into:

- Basic mode (expression)
- Advanced mode (JavaScript)

Use the JavaScript syntax to enter the code for both modes. Take into account, however, that not the full JavaScript functionality is supported.

Basic mode (expression)

In this mode you use the following to create your code:

- Standardized JavaScript expressions and operators (for example +, -, /, *, %, ~, &, |, ?, !)
- Standardized math libraries
- The tag names specified under "Basic signals"
  (the system writes the Y-value directly to the tag name)

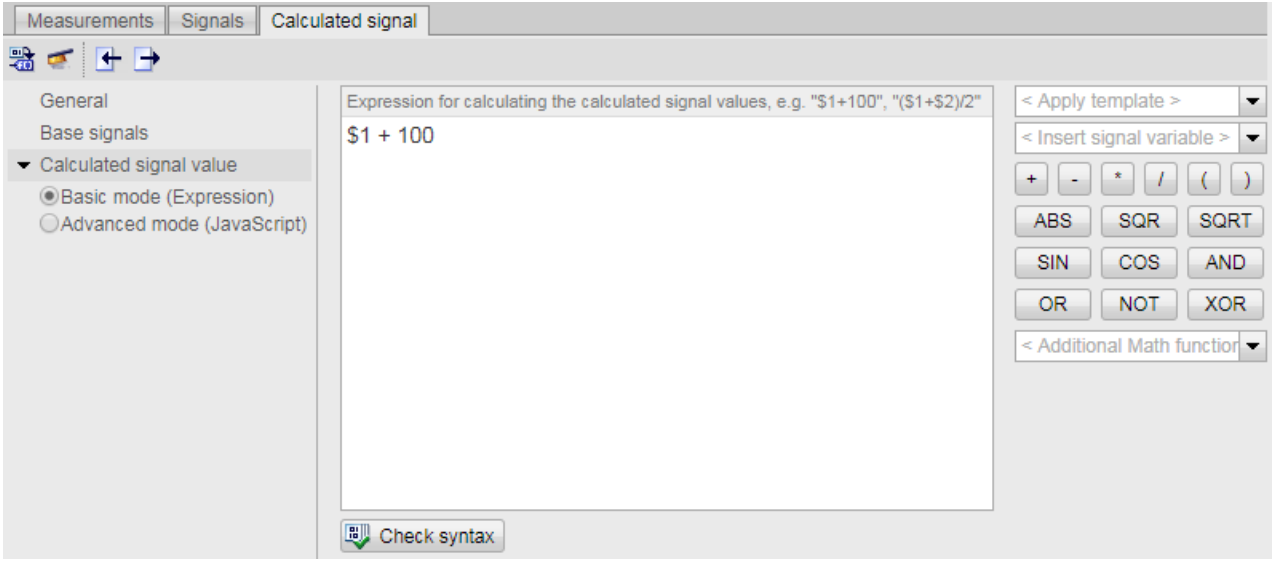

Figure 4-59 Basic mode (expression)

Advanced mode (JavaScript)

This mode offers you an advanced functional scope for the calculation of the Y value by means of a complex JavaScript code. You can, for example, specify own static tags for the iteration of code sections:

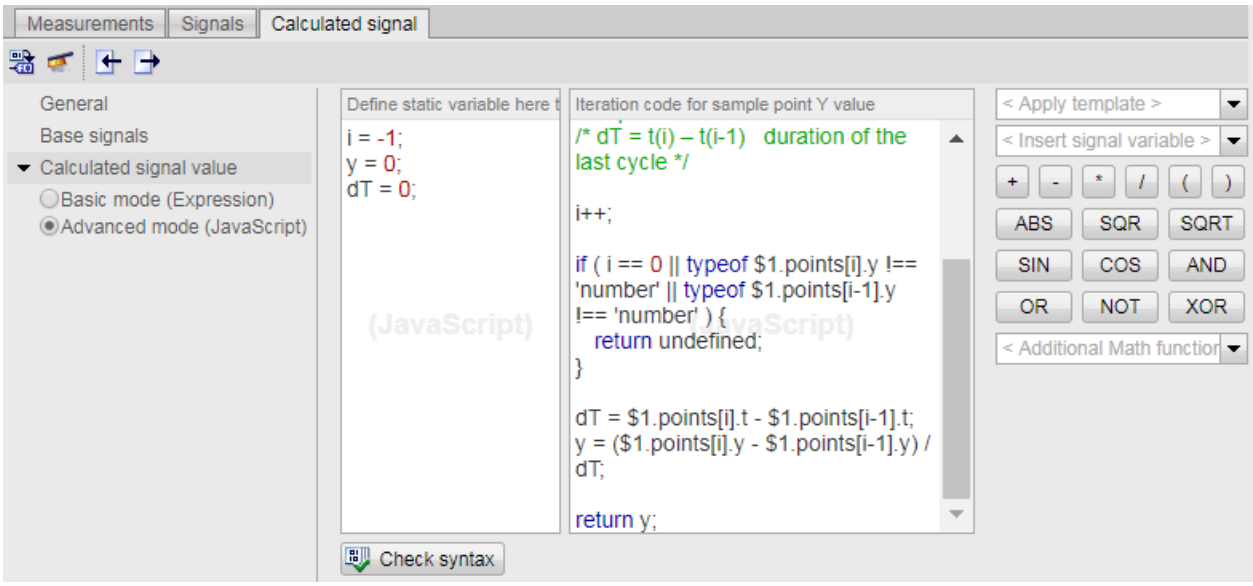

Figure 4-60 Advanced mode (JavaScript)

The following table shows all the elements that you can use for your code:

Reserved words (case-sensitive)						
if	var	Math	Array	catch	typeof	unescape
encodeURI	in	for	else	break	escape	delete
Infinity	decodeURI	do	Date	case	false	String
Object	continue	parseFloat	new	case	true	while

return	Number	parseInt	try	null	isNaN	throw
switch	default	undefined				
Operators						
%	-	*=	!=	<=	|=	&&
!==	+	--	/	>	=	||
^	===	++	-=	/=	>=	==
&	~	+=	*	!	<	|
&=	?					
Delimiters						
(	)	{	}	[	]	.
,	:	;				
Comments						
/*	*/					

Every signal point consists of the following attributes:

1. x (measuring point)
2. t (relative ^time in milliseconds)
3. y (Y value)
4. points (number of signal points that are available for the calculation of a new signal)

In "Advanced Mode (JavaScript)" you can access all four attributes (e.g. "$1.y", "$1.t", "$1.x", $1.points[i].y, ...).

The following function tables support you in writing expressions or complex code in JavaScript. The function table contains the functions used most often:

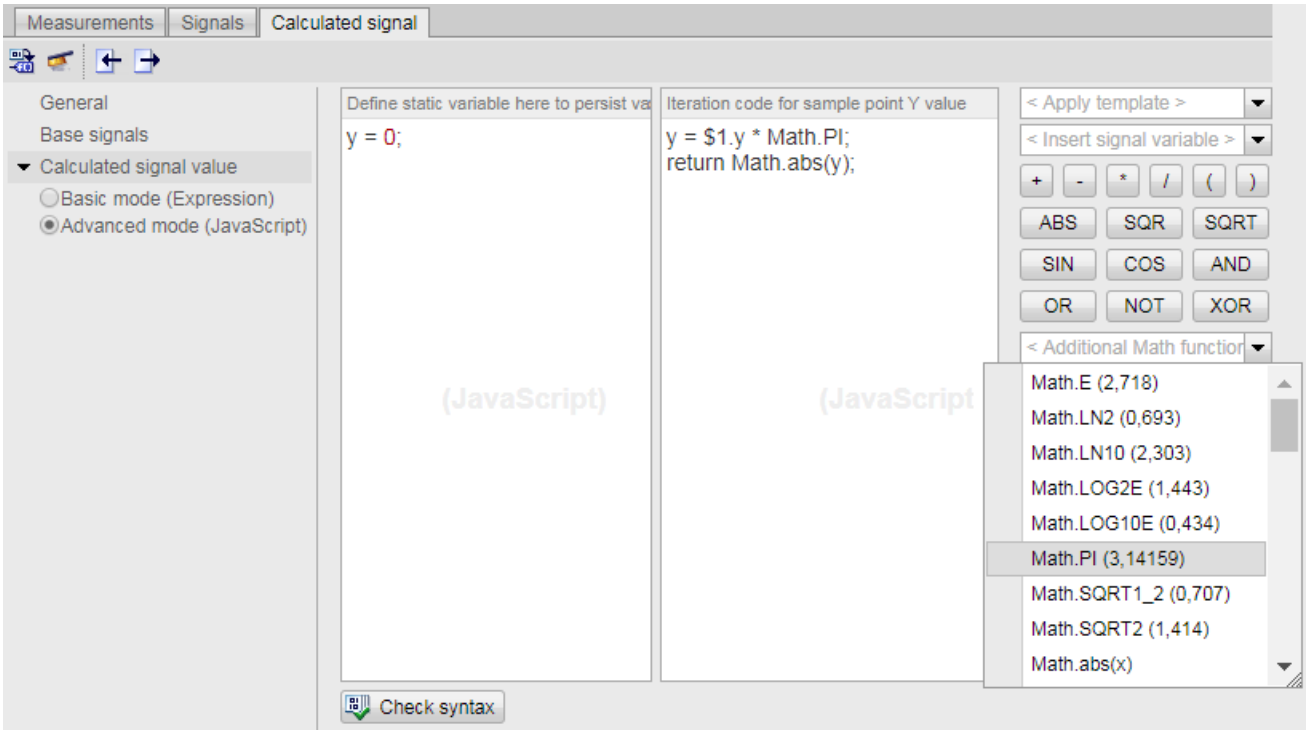

Figure 4-61 "Calculated signal" tab with function table

You can also generate the JavaScript code of a real signal from the "Signals" tab. Alternatively, you can also select one of predefined templates of the function table, change the code and generate a calculated signal.

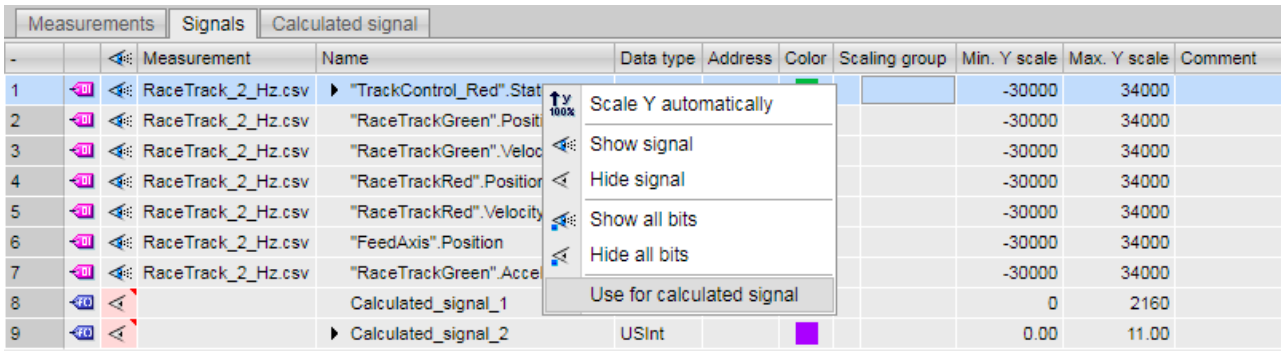

Figure 4-62 Real signals of the "Signals" tab

The following templates are available in the function table:

- Numerical differentiation
- Numerical integration
- Arithmetic mean

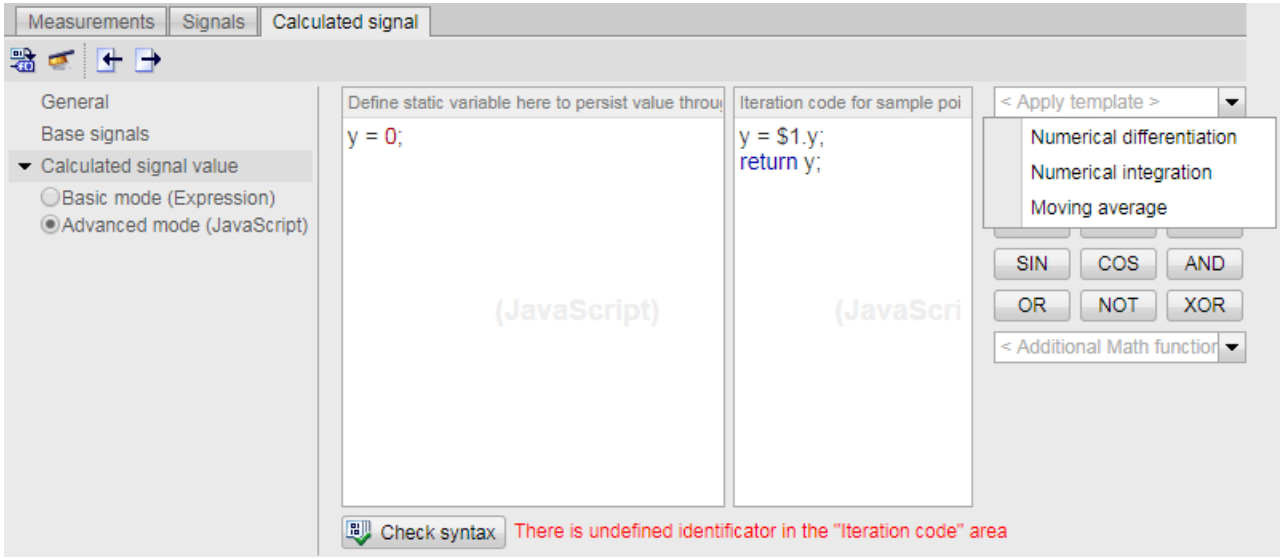

Figure 4-63 Templates

To check the syntax, click the symbol "Check syntax" or generate the signal by clicking the icon in the toolbar. If the code has any errors, these are displayed to the right of the "Check syntax" icon in red lettering. If the code does not have any errors, the "Syntax check successful" message is displayed.

How does the system calculate a new signal?

The system checks:

- Whether you have selected a basic signal for the calculation of a new signal
- The name of the signal to be calculated
- The syntax of your JavaScript code

Subsequently, the system defines the counting of the measuring points and executes the code for each measuring point to be calculated. In each iteration the system stores the measuring points of the new signal on the basis of the following four attributes:

- Measuring point
- Relative time
- Calculated Y value
- Signal point with x-, t, y-values

The course is displayed after calculation has been completed.

Example for calculating on the basis of a basic signal

You use a single basic signal to calculate the new signal. The basic signal consists of 1000 measuring points.

In this case, the system carries out your written code a thousand times. The calculated signal then consists of 1000 calculated signal points with the same x- and t-values, but with own y-values.

Import/export settings

You can import/export certain parameters (formulas, calculation method, signal type and signal name. To import parameters, click the icon in the toolbar of the "Calculated signal" tab. To export parameters, click the icon in the toolbar of the "Calculated signal" tab.

Settings and displays of the Snapshot icon

With the "Snapshot" icon in the toolbar of the trend diagram, you save the current signal course in the form of a snapshot.

To create a snapshot of the signal course click the icon. To manage the created snapshots, click the arrow on the left next to the "Snapshot" icon and select the entry "Manage snapshots".

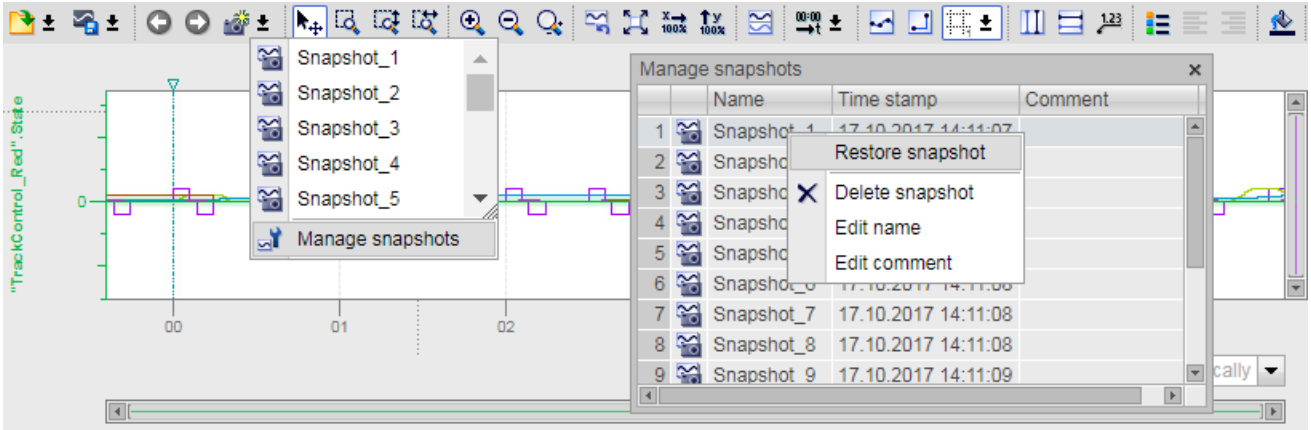

Figure 4-64 Managing snapshots

The following table shows the settings and displays of the "Managing snapshots" window.

Column	Description
	Static display of the snapshot icon
Name	Display and change options for the name
Time stamp	Display of the creation time of the snapshot
Comment	Display and input option for a comment

The following table shows the possible shortcut menu commands:

Shortcut menu command	Description
"Restore snapshot"	Shows the measurement with the saved view in the "Diagram" tab.
"Remove snapshot"	Deletes the snapshot.
"Edit name"	Switches the name in editing mode
"Edit comment"	Switches the comment in editing mode

NOTE
Delete measurement
If you delete a measurement of a calculated signal, all the associated snapshots are also deleted.

4.14 DataLogs

DataLogs

On the DataLogs web page, you can view all the DataLogs that you have created.
You can sort the DataLogs according to individual parameters in ascending or descending order.
For this purpose, click on one of the parameters in the column header:

- Name
- Size
- Changed

You can download the relevant DataLog file by clicking the file name.
The "Active" column shows whether the respective DataLog file is used (is active) or not.
When the DataLog file is active, you can call (download) and empty the relevant DataLog file by clicking the icon . The file must be closed. The empty DataLog file is still maintained in the list of DataLogs.
You delete the DataLog file by clicking the icon in the "Delete" column. The file must be closed.

You close an opened DataLog file in STEP 7 by using the "DataLogClose" instruction.

Figure 4-65 DataLogs

4.14.1 Automated reading out of DataLogs

In addition to the downloading of individual DataLogs via the user interface of the Web server, you can download, read out and archive DataLogs. Automatic downloading of DataLogs is realized either by the execution of scripts in, for example, Bash or on your HTML customer page via JavaScript.

A typical application for this functionality is the daily reading out and archiving of DataLogs from one or more CPUs at a specific time.

Calling up of the DataLogs from the SIMATIC memory card

The CPU makes a URL in the following format available so that you can download DataLogs automatically from the SIMATIC memory card of your CPU:

`https://[ip]/DataLogs?Action=List`

Enter the correct IP address of the interface of your CPU at this URL and use the appropriate transfer protocol (HTTP or HTTPS), for example `https://192.168.2.132/DataLogs?Action=LIST`. Subsequently call up the URL in your browser or command line interpreter.

The URL returns a list of the DataLogs on the SIMATIC memory card. Each entry returns the URL by which you download the corresponding DataLog.

For simple syntax analysis of the list by command line interpreters (such as Bash) or web-based programming languages (such as JavaScript) the individual URLs are separated by a line break `<CR><LF>`. The following example shows the syntax of two URLs that access the DataLog files `Test.txt` and `Test2.txt`:

```
/DataLogs?Path=/DataLogs/Test.txt&Action=DOWNLOAD&E=1<CR><LF>
/DataLogs?Path=/DataLogs/Test2.txt&Action=DOWNLOAD&E=1<CR><LF>
<CR><LF>
```

When the URLs are called successfully, the CPU returns the status code `200 OK`. The CPU also returns this status code if no DataLogs exist on the SIMATIC memory card.

NOTE

Access authorization to the CPU for the reading out of data

In order to download DataLogs from the CPU, the user has to dispose of reading rights on the CPU. If the user does not have the required rights, the CPU returns the status code `403 FORBIDDEN` in the HTTP Response.

Downloading of the DataLogs via Bash scripts

The following example shows how you can download DataLogs automatically from the CPU by using a Bash script. Replace the URL of the example by the correct IP address of the interface of your CPU at this URL and use the appropriate transfer protocol (HTTP or HTTPS).

```
wget --content-disposition -i
"https://192.168.2.132/DataLogs?Action=LIST"
```

Downloading of the DataLogs via JavaScript

The following example shows how you can download DataLogs automatically by using JavaScript. Replace the URL of the example by the correct IP address of the interface of your CPU at this URL and use the appropriate transfer protocol (HTTP or HTTPS).

```
<html>
<head>
<title>DataLog JavaScript Test</title>
<script type="text/javascript" src="jquery-1.12.4.min.js"></script>
</head>
<body>
<h1>DataLog JavaScript Test</h1>
<div><button id="load">Load DataLogs</button></div>
<div><ul id="list"></ul></div>
<script type="text/javascript">
$('#load').click(function(){
$.get('https://192.168.2.132/DataLogs', {'Action': 'LIST'},
function(data){
$('#list').empty();
$.each(data.split(/\r\n/), function(){
if (this.length == 0) continue;
$('#list').append('<li><a href="https://192.168.2.132' +
this + '">' + this + '</a></li>');
});
});
});
</script>
</body>
</html>
```

4.15 User files

Introduction

You read and write with the instructions "FileReadC" (Compact Read Data of a File) or "FileWriteC" (Compact Write Data to a File) in STEP 7 ASCII files (files in binary format).

Requirements

You need to save the UserFiles in the "UserFiles" directory on the SIMATIC memory card. You specify the storage location in the path of the "FileReadC" or "FileWriteC" instruction.
Path and file name for UserFiles have to fulfill the following rules:

- The file name must not be longer than 55 characters.
- The following characters are permitted for the directory and file name: 0 to 9, a to z in upper- and lower-case, "-" and "_"
- The path name must not start with "/", "\" or "."
- The path name must not contain ".."

Examples:

- UserFiles\Lift16_DataBase.txt
- UserFiles\2017-04-13_ErrorLog.bin

"User files" Web page

The browser displays the content of the SIMATIC memory card, directory UserFiles\ on the "User files" Web page.
You can sort the UserFiles according to the individual parameters in ascending or descending order.
To do this, click on one of the parameters in the column header:

- Name
- Size
- Changed

You can download, delete, and upload files.
You download the UserFile by clicking the file name.
By clicking on the ✕ icon, you can delete the UserFile. The file must be closed.

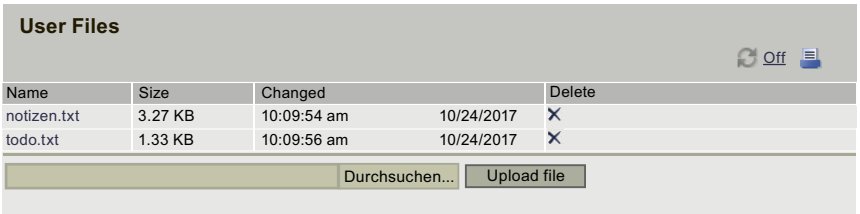

Figure 4-66 User files view

NOTICE
Size UserFiles When you open a large UserFile through this Web page, the processing times of the instructions that process this file can increase notably.

4.15.1 Automatically read or upload user files

In addition to the Web server's user interface, you can automatically list, delete, download and upload UserFiles. Use JavaScript or Bash for this, for example.

Opening UserFiles from the SIMATIC memory card

The CPU makes a URL in the following format available so that you can list UserFiles automatically from the SIMATIC memory card of your CPU:

`https://[ip]/UserFiles?Action=List`

Enter the correct IP address of the interface of your CPU at this URL and use the appropriate transfer protocol (HTTP or HTTPS), e.g. `https://192.168.2.132/UserFiles?Action=LIST`. Subsequently call up the URL in your browser or command line interpreter.

The URL returns a list of the UserFiles on the SIMATIC memory card. Each entry returns the URL by which you download or delete the corresponding UserFile from the CPU. The actions to be performed are separated by a vertical line "|".

For simple syntax analysis of the list by web-based programming languages (such as JavaScript), the individual URLs are separated by a line break `<CR><LF>`. The following example shows the syntax of two URLs that access the UserFiles `File1.csv` and `File2.csv`:

```
File1.csv|/UserFiles?Name=File1.csv&Action=DOWNLOAD&E=1|/User-
Files?Name=File1.csv&Action=DELETE&E=1<CR><LF>
File2.csv|/UserFiles?Name=File2.csv&Action=DOWNLOAD&E=1|/User-
Files?Name=File2.csv&Action=DELETE&E=1<CR><LF>
<CR><LF>
```

When the URLs are called successfully, the CPU returns the status code `200 OK`. The CPU also returns this status code if there are no UserFiles on the SIMATIC memory card.

NOTE

Access authorization to the CPU for the reading out of data

In order to download UserFiles from the CPU, the user must have reading rights for the CPU. If the user does not have the required rights, the CPU returns the status code `403 FORBIDDEN` in the HTTP Response.

Downloading UserFiles via Bash scripts

The following example shows how you can download UserFiles automatically from the CPU using a Bash script. Replace the URL of the example by the correct IP address of the interface of your CPU at this URL and use the appropriate transfer protocol (HTTP or HTTPS).

```
wget --content-disposition -i
"https://192.168.2.132/UserFiles?Action=LIST"
```

4.16 User pages

User-defined pages

In the "User-defined pages" area of the Web server you can upload HTML pages you have created yourself for reading out data of the target system.

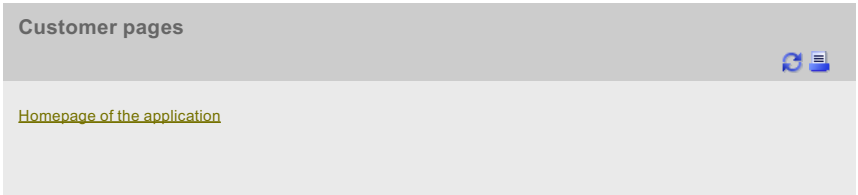

Figure 4-67 User-defined pages

You create the pages with an HTML editor of your choice from which you generate data blocks (Web control DB and Fragment DBs) in STEP 7 and download them to the CPU. The "WWW" instruction synchronizes the user program with the Web server on the CPU and initializes the Web server. With the first call of the "WWW" instruction, the link to the user page is displayed on the web page of the CPU. A click on the link opens the user page in a new window.

NOTE

Write access to user-defined pages allows the process parameters and, thus, the operation of the CPU to be influenced.
To prevent external manipulation, always assign a password for users with write access to user pages in the user management. You can find information on user management in section Configuring the Web server (Page 23) under "Amending user management".

Creating user-defined pages

To create your own user page(s), you can use TIA Portal WinCC Unified as of version V17 or any HTML editor.

Creating user-defined pages with WinCC Unified in the TIA Portal (as of version V17)

With "View of Things" (VoT), you use WinCC Unified Engineering in the TIA Portal to create web pages for a SIMATIC S7-1500 CPU, ET 200SP CPU or CPU 1513/1516pro and to map the process.
You connect to the Web server of the CPU via a web browser. You can operate the objects that you have created with WinCC Unified on the "ViewOfThings" web page.
Compared to a random HTML editor, creating and loading with WinCC Unified offers you the following advantages:

- No HTML code expertise required; the web pages can be created as screen in the WinCC Unified editor and then downloaded to the CPU.
- You can make changes to the user-defined pages while the CPU is in the RUN mode.

More information on creating, loading and operating user-defined pages with VoT as well as special features in the hardware configuration, is available in the WinCC Unified online help under the keyword "View of Things".

Requirements for creating user-defined pages with an HTML editor

- You have assigned symbolic names to the tags you want to use on your web page in STEP 7 .
- In the Inspector window under "Properties > General > Web server", you have at least:
  - Activated the Web server
  - Assigned read-only or read and write permissions to the users for user-defined pages (see section Configuring the Web server (Page 23))
- You have completed all necessary communication settings (IP address parameter, subnet mask, etc.).
- You have downloaded the configuration.
- You have created your user page in an HTML editor of your choice.

Creating user-defined pages with an HTML editor

To create your user page(s) with any HTML editor, make sure that your HTML code complies with the standards of the W3C (World Wide Web Consortium), because STEP 7 does not check the HTML syntax in any way. In addition to the simple HTML code, you can also use JavaScript commands in your user-defined pages.

Proceed as follows:

1. Create the HTML file for your user page with an HTML editor.
   To allow data from the CPU to be output on your web page, integrate the AWP commands as HTML comments (see section AWP commands (Page 121)).
2. Store the HTML file and all associated source files (e.g., *.gif, *.jpg, *.js, etc.) in a directory on your PG/PC and note the storage path.
3. Call the "WWW" instruction in STEP 7 and program it (see section Programming the WWW instruction (Page 134)).

4. Configure the user page in STEP 7 (see section Configuring user pages (Page 132)). In this way, you compile the contents of your HTML files, among other things, into data blocks.
5. Download the configuration and the user program to the CPU.
6. Open your user page with your display device by means of a web browser in the Web server of the CPU.

NOTE

Extensive HTML pages, especially those with a lot of images, take up a lot of space in the load memory. Make sure you select a SIMATIC memory card with enough storage space to provide sufficient load memory.

If the **sum of the HTML pages** > 1 MB, performance losses may occur as only 1 MB data is saved in the cache.

We recommend that you create **each individual file of an HTML page** with a size not exceeding 512 KB; otherwise, problems can occur when sending the file from the Web server to the web browser. You can view the size of the respective file in the file explorer of the directory.

Updating user-defined pages

User-defined pages are not updated automatically in the web browser. You can program the HTML code so that the pages are updated automatically.
Pages which read out data from the controller are always up-to-date due to regular updates.

NOTE

If the HTML page contains form fields for data input, automatic update can impair the correct data input by the user.

To update the entire page automatically, you can add the following instruction to the <head> area of your HTML page, whereby the number "10" stands for the update interval in seconds:

```
<meta http-equiv="refresh" content="10">
```

References

The description of a user page is available in the section Example of a user page (Page 138).
Additional help for visualization with user-defined pages is available in the application examples on the Internet:

- Creating and using your own web pages for S7-1200 (https://support.automation.siemens.com/WW/view/en/58862931)
- Creating and using your own web pages for S7-1200 / S7-1500 (https://support.industry.siemens.com/cs/de/en/view/68011496)
- Visualizing with user-defined web pages on SIMATIC CPUs with PROFINET interface (https://support.automation.siemens.com/WW/view/en/44212999)
- How do you integrate the string contents in your user-defined web page of the S7-1500 CPU as of Firmware V1.6? (https://support.industry.siemens.com/cs/ww/en/view/98754370)

You will find more information on JavaScript commands in the ECMAScript specification on the Internet (https://www.ecma-international.org/ecma-262/5.1/).

For more information about how to automatically update web pages and how to incorporate user-defined pages with relative path names, refer to the FAQ with entry ID 62543256 on the Service&Support (https://support.industry.siemens.com/cs/ww/en/view/62543256) Internet page.

4.16.1 AWP commands

Overview

Automation Web Programming (AWP) commands are a special command syntax for exchanging data between the CPU and the customer page (HTML file).
AWP commands are entered as HTML comments and offer you the following options for your customer pages:

- Reading PLC tags
- Writing PLC tags
- Reading special tags
- Writing special tags
- Defining enum types
- Assigning enum types to tags
- Defining data block fragments
- Importing data block fragments
- Accessing the values of an array
- Accessing the values of a PLC tag of the data type STRUCT

General syntax

All AWP commands, except for the command for reading a PLC tag, have this structure:

```
<!-- AWP_< command name and parameter> -->
```

Files including AWP commands:

- must be UTF-8 encoded.
  To define UTF-8 as the character set of the page, include the following line in your HTML code:
  ```
  <meta http-equiv="content-type" content="text/html; charset utf-8">
  ```

  NOTE
  Saving the HTML page
  Make sure that you save the file in the editor in UTF 8 character encoding as well.

- may not include the following sequence:]]>
- may not include the following sequence outside "read tag areas" (:="<Varname>":):
- depending on the use, must identify special characters in tag names or data block names with character escape sequences or quotation marks

- are case-sensitive
- should be additionally enclosed by JavaScript comments ("/*...*/") in JavaScript files
- must not exceed a file size of 64 KB
  To reduce the size of a file, you can subdivide the file into individual fragments (dynamic files). The maximum size of each individual fragment within the file (AWP command) is 64 KB.

Overview of AWP commands

Table 4-10 AWP commands

Function	Representation
Reading PLC tags	:=<Varname>:
Writing PLC tags	<!-- AWP_In_Variable Name='<Varname1>' -->
Reading special tags	<!-- AWP_Out_Variable Name='<Typ>:<Name>' -->
Writing special tags	<!-- AWP_In_Variable Name='<Typ>:<Name>' -->
Defining enum types	<!-- AWP_Enum_Def Name='<Name Enum-Typ>' Values='0: "<Text_1>",1:"<Text_2>",...,x:"<Text_y>"' -->
Assigning enum types to tags	<!-- AWP_Enum_Ref Name='<Varname>' Enum='<Name Enum-Typ>' -->
Defining data block fragments	<!-- AWP_Start_Fragment Name='<Name>'[Type=<Typ>] [ID=<Id>] -->
Importing data block fragments	<!-- AWP_Import_Fragment Name='<Name>' -->
Accessing the values of an array	<!-- AWP_Start_Array Name='"<DB name>".<array name>' --> ... <!-- AWP_End_Array -->
Accessing the values of a PLC tag of the data type STRUCT	<!-- AWP_Start_Struct Name='"<DB name>".<struct name>' --> ... <!-- AWP_End_Struct -->

4.16.1.1 PLC tags

Introduction to PLC tags

User pages can read PLC tags from the CPU and write data to the CPU.
To do so, PLC tags must:

- be enclosed by double quotation marks ("...").
- also be enclosed by single quotation marks ('" ... "') or with quotation marks masked with a backslash ("\" ... "\").
- be specified by a PLC tag name.
- if the PLC tag name includes the characters \ (backslash) or ', identify these characters with the escape sequence \\ or \' as normal characters of the PLC tag name.
- be enclosed with single quotation marks ('...'), if an absolute address (input, output, bit memory) is used in the AWP command.

Reading PLC tags

These out-tags (output direction as seen from the controller) are inserted at any place in the HTML text with the syntax described below.

Syntax

```
:=<Varname>:
```

<Varname> corresponds to the tag to be read from your STEP 7 project and can be a simple shared tag or a complete tag path to a structural element. Make sure that you use the name of the data block and not its number when you use data blocks.

Examples

```
:="Conveying speed":
:="My_datablock".bitmemory1:
:=%MW100:
```

Reading tags of the String and Character type

Below, these types of quotation marks are used in the explanation: single quotation marks ('), double quotation marks (").

As of firmware V1.6, with the "Read PLC tags" function, the CPU outputs tags of the String or Character type enclosed in single quotation marks to the browser.

For example:

- "Varname".MyString = ABC string tag
- You read the tag in HTML using the function :="Varname".MyString:
- The Web server outputs the character string 'ABC' to the browser

Using String or Character tags in expressions

On your HTML page, you use an expression in which the character string for reading a tag is enclosed in quotation marks, for example in forms.

Possible HTML code used:

```
<input type="text" name="appfield" value="myvalue">
```

If you read the displayed value for the "value" attribute from a PLC tag in this expression, the HTML code appears as follows:

```
<input type="text" name="appfield" value=":="Varname".MyString:">
```

By reading the PLC tag, the Web server outputs the value 'ABC'. In HTML, the code is then represented as follows:

```
<input type="text" name="appfield" value=" 'ABC' ">
```

If you have used single quotes instead of double quotes in your HTML code to enclose the attributes, the web server passes on the content of the tag enclosed in two single quotes to the browser. As a result of this, the browser does not output the content of the String or Character tag, since two consecutive single quotation marks each form a closed sequence. The values to be read are located between these sequences and are not output by the browser.

In this context, note in particular that the character string with double quotation marks is not identical to two single quotation marks even if they appear to be identical.

NOTE

The code is not adapted automatically during an update to firmware as of V1.6.
Adapt your HTML code if you have used single quotation marks to enclose attributes for the "Read PLC tags" function.

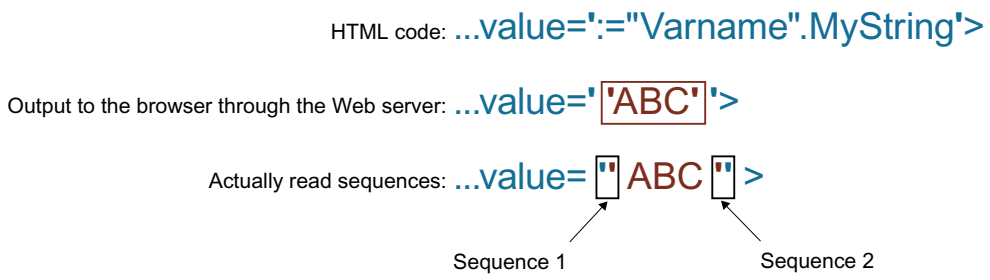

Figure 4-68 Example of HTML code with attribute in single quotation marks

Writing PLC tags

These in-tags (input direction as seen from the controller) are set on the browser page. This can take place in a form on your HTML page, for example, with text input or list selection boxes that correspond to the tags that can be written.
The tags are either set in the HTTP header (by cookie or POST method) or in the URL (GET method) by the browser in the HTTP request and are then written by the web server into the respective PLC tag.

NOTE

Write access during operation

In order for data to be written to the CPU from a user page, a user with corresponding write rights must be set up and the user must be logged in as this user. This applies to all write accesses of web pages to the CPU.

Syntax

```
<!-- AWP_In_Variable Name='"<Varname1>"' Name='"<Varname2>"'
Name='"<Varname3>"' -->
```

If the name of the tag that you are using for the web application is not identical with the name of the PLC tag, you can assign it to a PLC tag with the "Use" parameter.

```
<!-- AWP_In_Variable Name='<Varname_Webapp>' Use='<PLC_Varname>' -->
```

Examples with HTML input fields

```
<!-- AWP_In_Variable Name='"Target_Level"' -->
<form method="post">
<p>Input Target Level: <input name='"Target_Level"'
type="text"><input type="submit" value="Write to PLC"> </p>
```

```
</form>

<!-- AWP_In_Variable Name='"Data_block_1".Braking' -->
<form method="post">
<p>Braking: <input name='"Data_block_1".Braking' type="text"> <input
type="submit" value="Write to PLC"></p>
</form>
```

Example with HTML selection list

```
<!-- AWP_In_Variable Name='"Data_block_1".ManualOverrideEnable' -->
<form method="post">
<select name='"Data_block_1".ManualOverrideEnable'>
<option value=1>Yes</option>
<option value=0>No</option>
</select><input type="submit" value="submit setting"> </form>
```

4.16.1.2 Special tags

Special tags

The special tags are mainly the so-called HTTP tags that are defined in the definitions of the World Wide Web Consortium (W3C). Special tags are also used for cookies and server tags.

Reading special tags

The Web server can read PLC tags and pass them to special tags in the HTTP response header. You can, for example, read out a path name from a PLC tag to redirect the URL to another storage location with the special tag "HEADER:Storage location".

Syntax

```
<!-- AWP_Out_Varible Name='<Type>:<Name>' Use='<Varname>' -->
```

<Type> corresponds to the type of the special tag.
Options are:

- HEADER
- COOKIE_VALUE
- COOKIE_EXPIRES

<Name> corresponds to the name of the HEADER tag or the cookie:

- HEADER tags:
  - Status: HTTP status code (if no other value is set, status code 302 is returned).
  - Location: Path for redirection to another page. Status code 302 must be set.
  - Retry-After: Time for which the service is most likely not available. Status code 503 must be set.
- COOKIE_VALUE:name: Value of the named cookies.
- COOKIE_EXPIRES:name: Delay time of the named cookie in seconds.

Examples

The HTTP HEADER tag is written to the PLC tag of the same name:

```
<!-- AWP_Out_Variable Name='"HEADER:Status"' -->
```

If the name of the special tag is not identical with the name of the PLC tag, you can assign it to a PLC tag with the "Use" parameter:

```
<!-- AWP_Out_Variable Name='"HEADER:Status"' Use='"Status"' -->
```

Writing special tags

The Web server allows you to write values of special tags written in the HTTP header to the CPU. In STEP 7, for example, you can store information on the cookie of a customer page or on the user who accesses a page.

Syntax

```
<!-- AWP_In_Variable Name='<Type>:<Name>' Use='Varname' -->
```

<Type> corresponds to the type of the special tag.
Options are:

- HEADER
- SERVER
- COOKIE_VALUE

<Name> corresponds to the name of the HEADER tag or the cookie:

- HEADER tags:
  - Accept-Language: Accepted or preferred language
  - User-Agent: Browser information
  - Authorization: Credentials for a requested resource
- SERVER tags:
  - current_user_id: Indicates whether a user is logged in:
    current_user_id=0: No user is logged on / user "Everybody" has access.
    current_user_id=1: At least one user is logged on.
  - current_user_name: User name of the logged-on user
- COOKIE_VALUE:name: Value of the named cookies.

Examples

The HTTP SERVER tag is written to the PLC tag of the same name:

```
<!-- AWP_In_Variable Name='"SERVER:current_user_id"' -->
```

The HTTP SERVER tag is written to the PLC tag "My_User ID":

```
<!-- AWP_In_Variable Name='"SERVER:current_user_id"' Use='"My_User-
ID"' -->
```

4.16.1.3 Enum types

Enumeration types (enum types)

Enum types convert numerical values from the PLC program into texts or vice versa. The numerical values may also be assigned for use with several languages.

Define enum types

You can define enum types in your user pages and assign the values in an AWP command.

Syntax

```
<!-- AWP_Enum_Def Name='<Name Enum-Typ>' Values='0:"<Text_1>",
1:"<Text_2>",...,x:"<Text_y>"' -->
```

Examples

To store German values as HTML file in the "de" folder of the HTML directory:

```
<!-- AWP_Enum_Def Name="Enum1" Values='0:"an", 1:"aus", 2:"Störung"'
-->
```

To store English values as HTML file in the "en" folder of the HTML directory:

```
<!-- AWP_Enum_Def Name="Enum1" Values='0:"on", 1:"off", 2:"error"' -
->
```

Assigning enum types to tags

The assignment of tags from the user program to the individual enum types takes place by means of a separate AWP command. The used tag can be used at a different location of the user pages in a read operation or in a write operation.

During a read operation, the web server replaces the value read from the CPU with the correspondingly defined enum text value. During a write operation, the web server replaces the defined enum text value with the corresponding integer value of the enumeration before the value is written to the CPU.

Syntax

```
<!-- AWP_Enum_Ref Name='<Varname>' Enum="<Enum-Type>" -->
```

<Varname> is the symbolic tag name from the user program, <Enum-Type> of the previously defined name of the enum type.

Example for a declaration

```
<!-- AWP_Enum_Ref Name='"Alarm"' Enum="AlarmEnum" -->
```

Example of how to use when reading a tag

```
<!-- AWP_Enum_Def Name='AlarmEnum' Values='0:"No Alarm", 1:"Vessel
is full", 2:"Vessel is empty"' -->
```

```
<!-- AWP_Enum_Ref Name='"Alarm"' Enum="AlarmEnum" -->
...
<p> The current value of "Alarm" is :="Alarm": </p>
```

If the value of "Alarm" in the CPU is 2, the HTML page shows 'The current value of "Alarm" is container is empty' because the definition of the enum type assigns the numerical value 2 to the character sequence "Container is empty".

Example of how to use when writing a tag

```
<!-- AWP_Enum_Def Name='AlarmEnum' Values='0:"No Alarm", 1:"Vessel
is full", 2:"Vessel is empty"' -->
<!-- AWP_In_Variable Name='"Alarm"' -->
<!-- AWP_Enum_Ref Name='"Alarm"' Enum="AlarmEnum" -->
...
<form method="post">
<p><input type="hidden" name ='"Alarm"' value='Vessel is full'
/></p>
<p><input type="submit" value='Set vessel is full' /></p>
</form>
```

The value 1 is written to the PLC tag "Alarm" because the definition of the enum type assigns the numerical value 1 the text "Container is full".

Note that the name specified in "AWP_In_Variable" must be exactly the same as the name specified in "AWP_Enum_Ref".

4.16.1.4 Fragments

Fragments

Fragments are "logical sections" of a web page to be processed by the CPU individually.

Fragments are usually entire pages, but they can be individual elements, such as files (e.g. images) or documents.

NOTE

In each fragment in which enum texts are referenced by a PLC tag, this PLC tag must be assigned to the enum type name with the appropriate AWP command.

Defining fragments

A fragment extends to the beginning of the next fragment or to the end of the file.

Syntax

```
<!-- AWP_Start_Fragment Name='<Name>' [Type="<Typ>"] [ID="<Id>"] -->
```

This command specifies the start of a fragment.

- <Name> Specifies the name of the fragment. The name must start with a letter [a-zA-Z] or an underscore (_). This first character can be followed by letters, underscores or numbers [0-9].
- <Type> Specifies the type of the fragment.
  - "manual": The application program is notified of the request for a fragment and can react accordingly. The functionality of the fragment must be controlled with STEP 7 and the tags of the control DB.
  - "automatic": The page is edited automatically (default)
- <Id> You can specify a numerical ID for the fragment. If no ID is assigned, the fragment is automatically assigned an ID. For manual pages (<Type>=manual), the fragment can be addressed with this ID in the user program of the CPU.

  NOTE
  ID assignment
  Set the ID as low as possible because the highest ID influences the size of the Web control DB.

- <Modus>
  - "visible": The contents of the fragment are displayed on the user page (default).
  - "hidden": The contents of the fragment are **not** displayed on the user page.

Importing fragments

You can specify a fragment in an HTML page and import this fragment into other websites.

NOTE
Ensure that no AWP command for importing fragments is positioned between an enum assignment and enum usage, because this import can result in the enum assignment being located in a different fragment than the enum usage.

Example

A company logo is to be displayed on all websites of a web application.
The HTML code for the fragment that displays the company logo exists only once. You can import the fragment as many times and into as many HTML files as required.

Syntax

```
<!-- AWP_Import_Fragment Name='<Name>' -->
```

<Name> corresponds to the name of the fragment to be imported.

Example

HTML code within a web page that creates a fragment for displaying an image:

```
<!-- AWP_Start_Fragment Name='Mein_Firmenlogo' -->
<p><img src="CompanyLogo.jpg"></p>
```

HTML code that imports the created fragment into another web page:

```
<!-- AWP_Import_Fragment Name='My_Company_Logo' -->
```

4.16.1.5 Arrays

Arrays

The Web server provides the user program commands AWP_Start_Array and AWP_End_Array for accessing all values of an array.
Only one-dimensional arrays are supported.
Multidimensional arrays of the form array[x][y] are not supported.

Syntax

```
<!-- AWP_Start_Array Name='"<DB name>".<array name>' -->
... Content of the array, utilized keywords: ArrayIndex and value..
<!-- AWP_End_Array -->
```

Parameter

- <Name> defines the name of the array with the elements you want to access.
  - You require the DB name and the name of the array corresponding to the data block structure defined in STEP 7.
  - The name must be within single or double quotation marks.
  - The DB name is within double quotation marks.
- <ArrayIndex> Index of an array element
- <value> Value of an array element

Example

The example reads all elements of the "MyArray" structure in the "DB_Name" data block of the CPU and displays the index and the values of the tags on the user-defined web page.

DB_Name

		Name	Data type	Start value
1		Static		
2		myArray	Array [0..2] of Int	
3		myArray[0]	Int	42
4		myArray[1]	Int	43
5		myArray[2]	Int	44

```
<!-- AWP_Start_Array Name='"DB_Name".MyArray' -->
Index: :=ArrayIndex: Value: :=value:
```

```
<!-- AWP_End_Array -->
```

The code indicated above generates the following display:
Index: 1 Value: 42
Index: 2 Value: 43
Index: 3 Value: 44

Representation of arrays of the BOOL data type

The output of arrays of the BOOL type is always filled to the next full 8 bits. This particular feature only occurs with BOOL arrays.

Example:

```
"DB_1".bitArray is a BOOL array with 5 elements.
<!-- AWP_Start_Array Name='"DB_1".bitArray' -->
:=ArrayIndex: -> :=value:
<!-- AWP_End_Array -->
```

Edition:
0 -> Value from "DB_1".bitArray[0]
1 -> Value from "DB_1".bitArray[1]
2 -> Value from "DB_1".bitArray[2]
3 -> Value from "DB_1".bitArray[3]
4 -> Value from "DB_1".bitArray[4]
5 -> 0
6 -> 0
7 -> 0

4.16.1.6 Structures

Structures

The web server provides AWP commands for accessing structures in order to access the values of a PLC tag of the data type STRUCT.

Syntax

```
<!-- AWP_Start_Struct Name='"<DB name>".<struct name>' -->
... Content of structure ...
<!-- AWP_End_Struct -->
```

Parameter

- <Name> defines the name of the structure with the elements you want to access.
  - You require the DB name and the name of the structure corresponding to the data block structure defined in STEP 7.
  - The name must be within single or double quotation marks.
  - The DB name is within double quotation marks.

Example

The example reads elements of the "MyStruct" structure in the "DB_Name" data blocks of the CPU and displays the value of the tag on the user-defined web page.

DB_Name1

		Name	Data type	Start value
1		Static		
2		myStruct	Struct	
3		A	Int	0
4		B	Word	16#0
5		C	Bool	false

```
<!-- AWP_Start_Struct Name='"DB_Name".MyStruct' -->
:=A:
:=B:
:=C:
<!-- AWP_End_Struct -->
```

The code indicated above corresponds to the following commands:

```
:="DB_Name".MyStruct.A:
:="DB_Name".MyStruct.B:
:="DB_Name".MyStruct.C:
```

4.16.2 Configuring user pages

Configuring customer pages

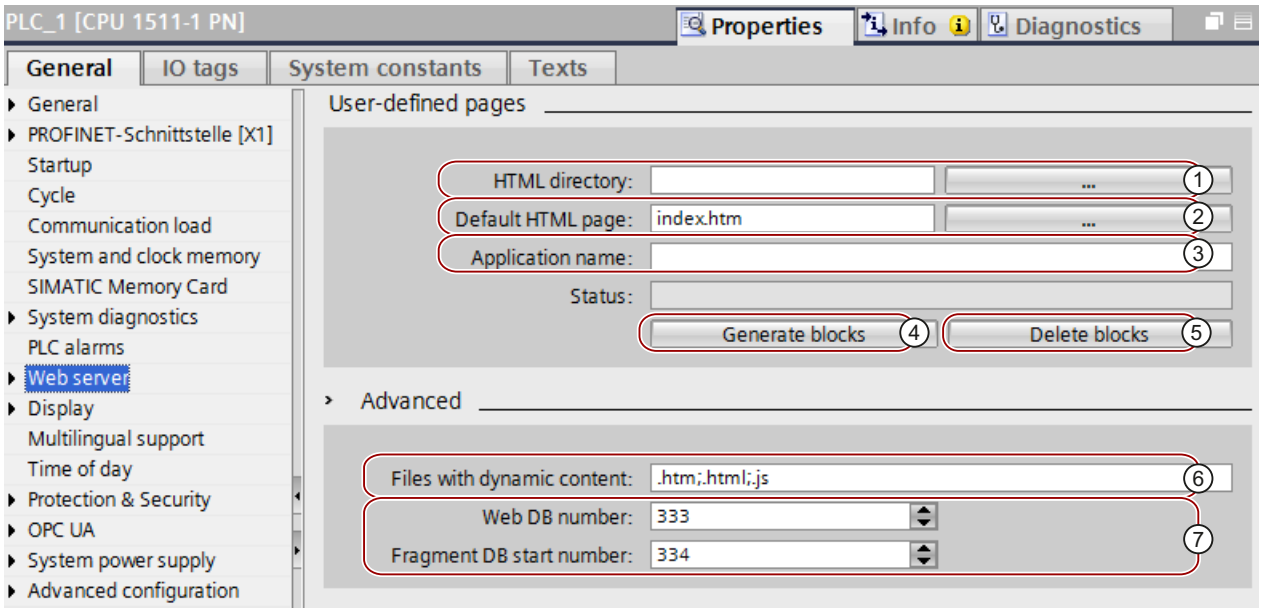

Figure 4-69 Configuring customer pages in STEP 7

To configure the customer pages in STEP 7, follow these steps:

1. Select the CPU in the device configuration.
2. Open the settings in the Inspector window of the CPU under "Properties > General > Web server".
3. Select the folder on your display device in which you have saved your HTML page in the "Customer pages" area under ① "HTML directory".
4. Enter the name of the HTML page under ② "Default HTML page" that is to open when you start the application.
5. You can also specify a name for your application under ③ "Application name". This name is used to further divide or group the webpages. If an application name already exists, the URL is displayed in the following format: https://a.b.c.d/awp/<Application name>/<Page name>.html
6. In the "Extended" area, enter the file extensions that have to be checked for AWP commands in input box ⑥ "Files with dynamic contents". By default, STEP 7 analyses files with the extensions "htm" and "html". Here you can enter other file extensions that you have used when creating your customer page.

7. You can accept the number for the Web DB ⑦ and the fragment DB start number ⑦ or you can assign a new number of your choice that is not assigned.
8. Click the button ④ "Create blocks" to create data blocks from the source files. The generated data blocks are stored in the STEP 7 project tree in the folder "System blocks > Web server". These data blocks consist of a control data block (Web control DB) that controls the display of the webpages and one or several data block fragments (fragment DBs) with the compiled webpages.
9. In the network view, select the CPU to be loaded and then select the "Download to device" command in the "Online" menu to download the blocks. The compilation of the blocks is implicitly triggered before the download. If errors are signaled during this process, they must be remedied before you can download the configuration.

Deleting data blocks

Click the "Delete blocks" button ⑤ to delete previously generated data blocks. STEP 7 deletes the Web Control DB and all fragment DBs from the project in which your customer pages are located.

4.16.3 Programming the WWW instruction

The WWW instruction

The instruction WWW initializes the Web server of the CPU or synchronizes the user-defined pages with the user program in the CPU. The Web Control DB is the input parameter for the WWW instruction and specifies the content of the pages as they are displayed in the fragment DBs, as well as the status and control information. STEP 7 creates the Web-Control DB when you click on the "Generate blocks" button.

NOTE

DB number of the web control DB.

If you change the DB number of the DB 333, the user pages in the Web server can no longer be reached at renewed downloading into the CPU. Error code W#16#007F is output at the parameter RET_VAL. Therefore observe the default setting DB 333 for the Web Control DB.

If you want to change the DB number nevertheless, you have to switch the CPU POWER-OFF → POWER ON, so that the user pages in the Web server can be reached.

NOTE

Calling the WWW instruction

You have created your user page in an HTML editor of your choice.

- Use automatic HTML pages if you want to **deactivate** control of the page layout by means of the user program (requires at least one call of SFC 99) Operating mode changes from RUN to STOP do not affect the call of the user-defined pages.
- Use manual HTML pages if you want to **enable** control of the page layout by means of the user program (cyclic call of SFC 99 required).

Programming the WWW instruction

The user program must execute the WWW instruction in order that the user-defined pages can be called in the Web server.

Table 4-11 WWW instruction

LAD/FBD	SCL	Description
	ret_val :=WWW(ctrl_db:=uint_in_);	Access to user pages by means of the Web server

Parameters

The following table shows the parameters of the WWW instruction.

Table 4-12 Parameters

Parameters	Declaration	Data type	Description
CTRL_DB	Input	DB_WWW	Data block that describes the user pages (Web control DB)
RET_VAL	Output	INT	Error information

RET_VAL parameter

Table 4-13 RET_VAL

Error code (W#16#...)	Explanation
0000	No error has occurred. There are no pending website requests that must be released by the user program.

Error code (W#16#...)	Explanation
00xy	x: Indicates whether an error occurred during initialization of the Web Control DB (CTRL_DB): x=0: No errors occurred. x=1: Error(s) occurred. The error is encoded in the byte "CTRL_DB.last_error" of the Web Control DB. y: Number of the pending request. Several requests are possible (e.g., request "0" and "1" are pending: y="3"). y="1": Request "0" y="2": Request "1" y="4": Request "2" y="8": Request "3"
803A	The specified Web Control DB does not exist on the CPU.
8081	Incorrect version or incorrect format of the Web Control DB.
80C1	There are no resources available to initialize the web application.

4.16.4 Defining the user page as start page

Defining the customer page as start page

In addition to the default introduction page, you can also define the start page of your customer pages as the start page of the Web server.

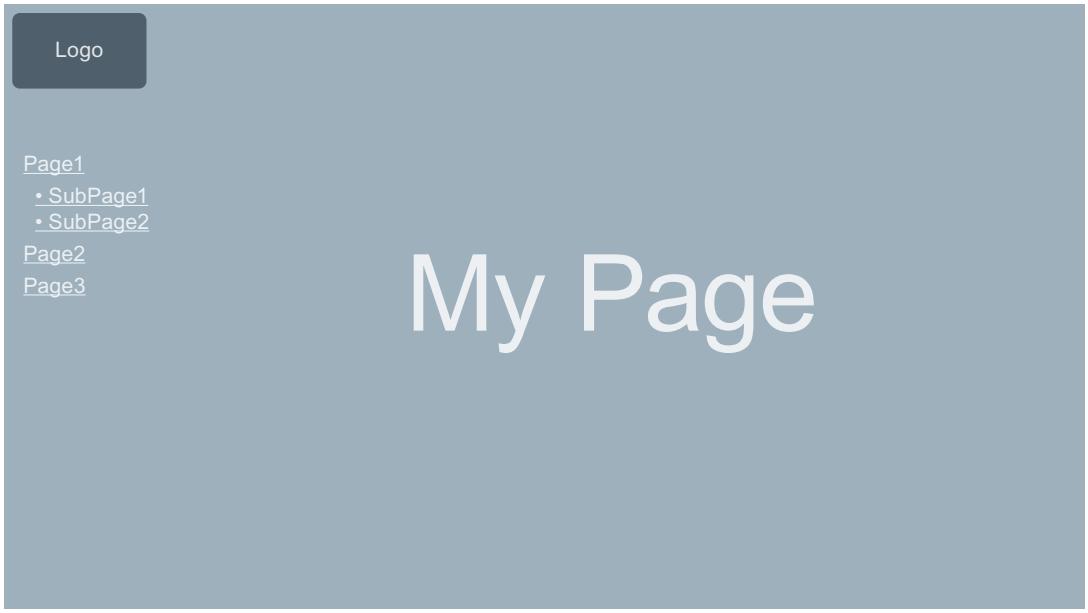

Figure 4-70 Example of customer page as start page of the Web server

Requirements

The following requirements must be met before the customer page is displayed as the start page of the Web server:

- You have configured the customer page as the start page.
- You have configured a user in STEP 7 whom you have assigned at least the authorization "... open customer web pages".
- The CPU is in RUN mode.

Procedure

To define the customer pages in STEP 7 as the start page of the Web server, proceed as follows:

1. Select the CPU in the device configuration.
2. Open the settings in the Inspector window of the CPU under "Properties > General > Web server".
3. Select the entry "AWP1" in the area "Entry page" under "Select entry page".

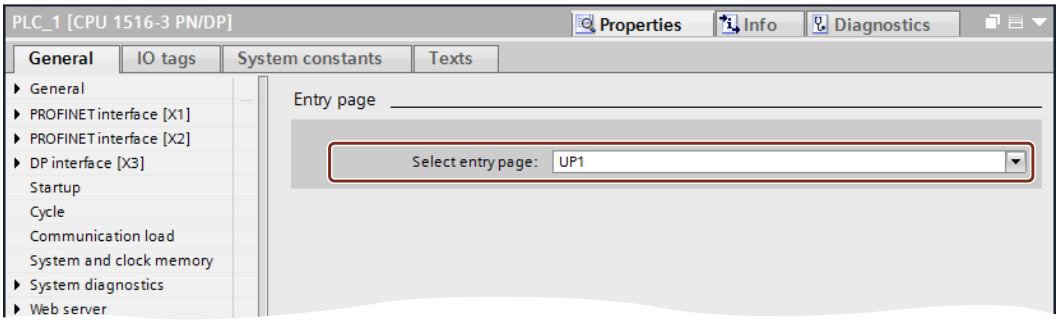

Figure 4-71 Set customer page as start page in STEP 7

4. Download the configuration to the CPU.

If you now enter the IP address of the CPU in the browser, a connection is automatically established to your customer pages.
If you want to access the web pages of the CPU again, link the web pages from your customer pages, e.g. via the URL "https://a.b.c.d./Portal/Portal.mwsl?PriNav=Start" or "https://a.b.c.d/Portal/Portal.mwsl?PriNav=Start". The specification "a.b.c.d" is an example of the IP address of the configured CPU.
Example of link in HTML:

```
<a href="/Portal/Portal.mwsl?PriNav=Start">SIMATIC web pages</a>
```

Reading out service data

If you define your customer page as start page of the Web server, all direct access to the web pages for reading out the service data is also disabled.
If you want to continue to read out service data via the Web server when servicing is required, here is how you can link the service data page directly to your customer page.
Just as for the web pages of the CPU, link the service data page, e.g. via the URL "https://a.b.c.d/save_service_data" or "https://a.b.c.d/save_service_data", the "a.b.c.d" here is an example of the IP address of the configured CPU.
Example of link in HTML:

```
<a href="/save_service_data">Service data</a>
```

Reference

You can find additional information on the topic of customer page as start page in the FAQ with entry ID 67184104 on the Service&Support (https://support.industry.siemens.com/cs/ww/en/view/67184104) Internet page.

4.16.5 Example of a user page

4.16.5.1 Website for monitoring and controlling a wind turbine

Example of a user page

Here you see a user page for monitoring and controlling a wind turbine:

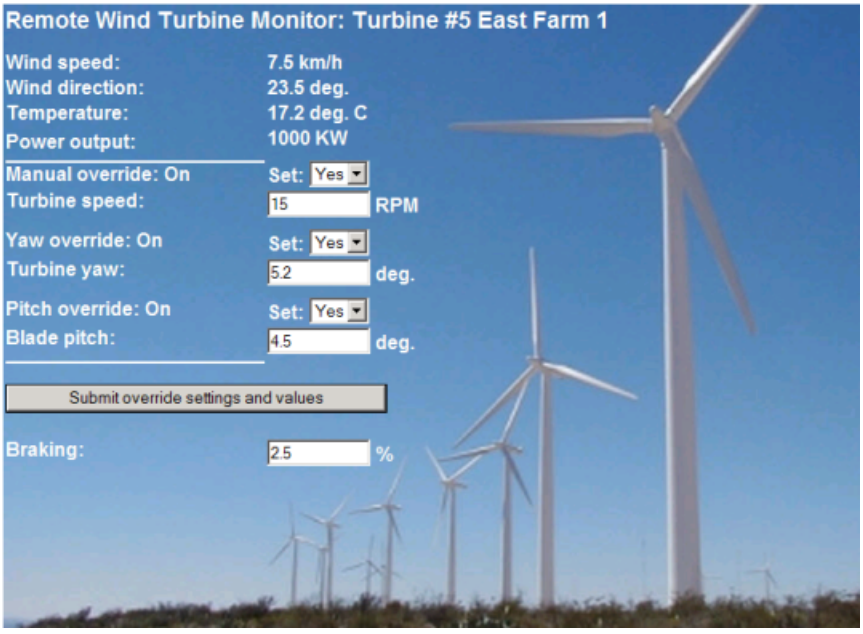

Figure 4-72 Overview of user page wind turbine

The user page was created in English in this example, but you can select any language you wish when you create your own user page.

In this application, each wind turbine of the wind farm in STEP 7 has a data block with specific data for the respective location and respective turbine.

The user page gives you the option to access the turbine remotely with a display device. Users can call the standard web pages of a CPU of a specific wind turbine and switch to the user page "Remote Wind Turbine Monitor", where they can view the turbine data. A user with the corresponding access permissions can also set the turbine into the manually controlled mode and thus control the tags for speed, orientation and angle of attack of the turbine by means of the website. The user can also specify a brake value regardless of manual or automatic control of the turbine.

STEP 7 checks the Boolean values for override of the automatic control and, if set, uses the values for speed, orientation and angle of attack of the turbine as defined by the user.

Files used

Three files are used in the application example:

- Wind_turbine.html: The user page in the figure shown above. The control data is accessed by AWP commands.
- Wind_turbine.css: The Cascading Style Sheet which includes the formatting specifications of the user page. The use is optional but can simplify the design of the user page.
- Wind_turbine.jpg: The background image displayed on the user page. The use of images is optional, user pages with lots of images require a lot more memory in the load memory.

These files are not part of your installation but they are described as an example below.

Implementation

The user page uses AWP commands to read out values from the CPU as well as writing values to it. The user page also uses AWP commands for the definition of enum types, such as the assignment of tags to enum types for handling the ON/OFF settings.
The user page is structured as follows:

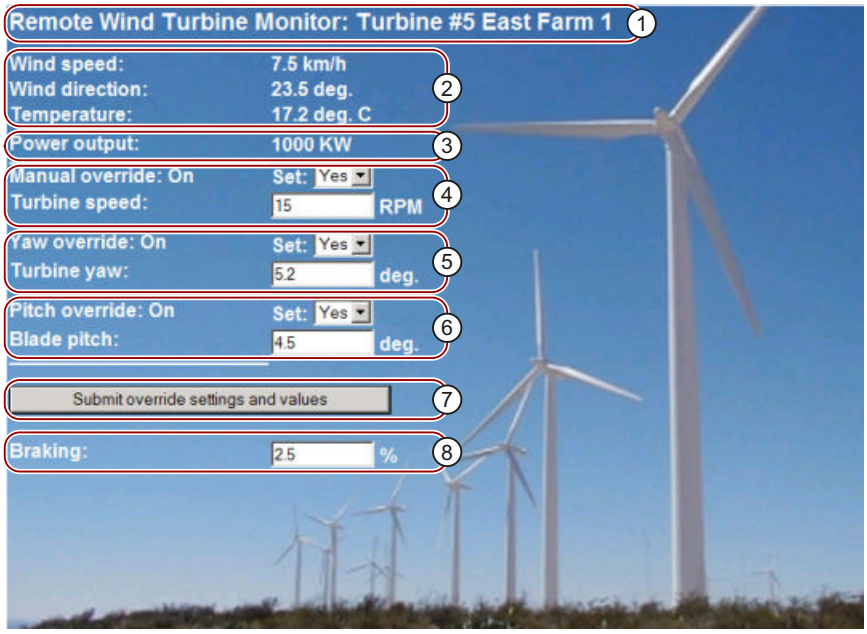

① Header of the website with number and location of the wind turbine.

② Atmospheric conditions at the turbine, wind speed, wind direction and current temperature are displayed.

③ Read-out power output.

④ Manual override: Activates manual override of the turbine. To make manual settings for speed, orientation and angle of attack, the STEP 7 user program requires that manual override has been activated.

⑤ Override of the orientation: Activates manual override of the turbine orientation.

⑥ Override of the angle of attack: Activates manual override of the angle of attack of the rotor blades.

⑦ By clicking this button, you transfer the override settings to the CPU.

⑧ Manual setting of a percentage value for braking. The setting "Manual override" is not required to enter a brake value.

Figure 4-73 Overview of user page wind turbine

In addition, the user page uses an AWP command that writes the special tag to the tag table. The tag table contains the ID of the user who is currently accessing the page.

4.16.5.2 Reading and displaying data from the CPU

Example of HTML code for reading and displaying data from the CPU

This part of the HTML code is used to display the power output on the user page.

On the left-hand side the "Power Output": text is displayed, on the right-hand side, the value of the tags for the power output including the unit ("KW").

The AWP command `:="Data_block_1".PowerOutput` executes the read operation. The data block is referenced here by its symbolic name and not by its number ("Data_block_1" instead of "DB1").

The code used in the example is:

```
<tr style="height:2%;">
<td>
<p>Power output:</p>
</td>
<td>
<p style="margin-bottom:5px;"> :="Data_block_1".PowerOutput: KW</p>
</td>
</tr>
```

4.16.5.3 Using enum types

Definition of enum types

The described user page uses enum types in three locations. "On" or "Off" is displayed for a Boolean value at these locations.

The enum type for "On" results in a value of 1, the enum type for "Off" results in a value of 0. The following statements from the HTML code of the user page show the declaration of an enum type with the name "OverrideStatus" and the values "0" and "1" for "Off" or "On" as well as the definition of an enum type reference from "OverrideStatus" to the tag "ManualOverrideEnable" in the data block "Data_block_1".

NOTE

Assignment of enum types

If the user page writes into a tag by using an enum type, there has to be a declaration "AWP_In_Variable" for each "AWP_Enum_Ref" declaration.

The code used in the example is:

```
<!-- AWP_In_Variable Name='"Data_block_1".ManualOverrideEnable' -->
```

```
<!-- AWP_Enum_Def Name="OverrideStatus" Values='0:"Off",1:"On"' -->
<!-- AWP_Enum_Ref Name='"Data_block_1".ManualOverrideEnable'
Enum="OverrideStatus" -->
```

The following code describes a display box for displaying the current status of "ManualOverrideEnable". A normal read command for tags is used but because of the declared and referenced enum type, the website displays the values "On" and "Off" instead of "1" and "0".

```
<td style="width:24%; border-top-style: Solid; border-top-width:
2px; border-top-color: #ffffff;">
<p>Manual override: :="Data_block_1".ManualOverrideEnable:</p>
</td>
```

The following code describes a drop-down list for changing "ManualOverrideEnable" by the user. The drop-down list consists of the "Yes" and "No" options that are assigned to the "On" or "Off" values by means of the enum type reference. If you make no selection, the status remains the same.

```
<select name='"Data_block_1".ManualOverrideEnable'>
<option value=':"Data_block_1".ManualOverrideEnable:'> </option>
<option value="On">Yes</option>
<option selected value="Off">No</option>
</select>
```

The drop-down list is included in the form on the website. The form is uploaded, when the user clicks on the "Submit override settings and values" button. If the user has selected "Yes", the value "1" is written in the tag "ManualOverrideEnable" in the "Data_block_1" data block; if the user has selected "No", the value "0" is written.

4.16.5.4 Writing user inputs into the controller

Setting options

The user page "Remote Wind Turbine Monitor" includes different AWP commands for writing data into the controller. A user with the corresponding access permissions can control the wind turbine manually, activate the override for the turbine speed and the turbine orientation as well as the angle of attack of the rotor blades with the declaration of different "AWP_In_Variable" write commands. The user can also specify floating-point numbers for turbine speed, orientation angle of attack and percentage of braking. The user page uses an HTTP command in the format "POST" to write the tags into the controller.

The code used in the example for setting the brake value is:

```
<!-- AWP_In_Variable Name='"Data_block_1"' -->
...
<tr sytle="vertical-align: top; height: 2%;">
<td style="width: 22%;"><p>Braking:</p></td>
<td>
<form method="POST">
<p><input name='"Data_block_1".Braking' size="10" type ="text">
%</p>
</form>
</td>
</tr>
```

This excerpt from the HTML code first defines a "AWP_In_Variable" for the "Data_block_1" data block which enables the user page to write any number of tags into the data block. The text "Braking:" is displayed on the left-hand side; on the right-hand side is a box in which the user can make entries for the "Braking" tag in the data block.

The user page reads out the actual braking value from the controller and displays it in the text box. A user with the corresponding access permissions can then write a brake value that controls the braking process into the data block of the CPU.

NOTE

Declaration of data blocks

If you declare an entire data block by means of a "AWP_In_Variable", each tag in the data block can be written by means of the user page. If only certain tags in the data block are to be writable, you declare this specifically using `<!-- AWP_In_Variable Name='"Data_block_1".Braking' -->`, for example.

4.16.5.5 Writing special tags

Using special tags

The user page "Remote Wind Turbine Monitor" writes the special tag "Server:current_user_id" into a tag of the CPU. The tag value contains the value "1" if a user is logged on and "0" if a user is not logged on. In this example, a user is logged on, so the tag value is set to "1". The special tag is written into the CPU by the user page and does not need a user interface.

The code used in the example is:

```
<!-- AWP_in_variable Name="SERVER:current_user_id" Use="User_ID" -->
```

4.16.5.6 HTML code of the user page "Remote Wind Turbine Monitor"

Example

You can find the complete HTML code of the sample customer page "Remote Wind Turbine Monitor" as well as the used Cascading Style Sheet (CSS) on the Internet (https://support.industry.siemens.com/cs/ww/en/view/107623221/71849346059).

4.17 Filebrowser

Requirements

Access rights must be assigned for the user in the user management.

Filebrowser

The contents of the SIMATIC memory card are displayed by the browser on the "Filebrowser" web page. This means, for example, that you can read and edit the log files generated by the CPU without having to use STEP 7.

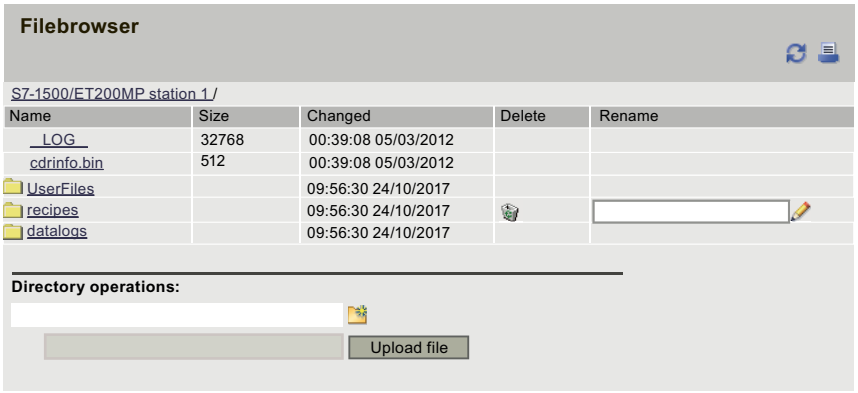

Figure 4-74 Filebrowser view

The file browser lists all existing files and directories located on the SIMATIC memory card. You can download, delete, rename and upload the files. You can create, delete and rename the directories.

NOTE

The Filebrowser only grants you read access to the “DataLogs”, "Backups" and “UserFiles” directories.

Exception system files

The system files include the job file and all special directories including their contents to which the job file refers. System files are not displayed, and cannot be changed or deleted.

4.18 Reading out service data

The Web server gives you the option to save service data. In addition to the content of the diagnostics buffer, they include more information on the internal status of the CPU. If you should encounter a problem with the CPU that cannot be resolved otherwise, you therefore have the option to submit the service data to the Service&Support team.

Procedure

1. Enter the following address in the address bar of your web browser:
   "https://<CPU IP address>/save_service_data", e.g.
   "https://192.168.3.141/save_service_data"
2. Your screen displays the service data page with a button for saving the service data.

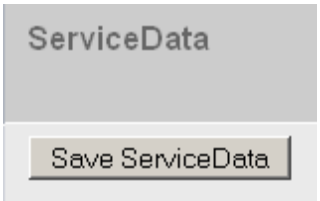

3. Save the service data locally on your display device by clicking on "Save ServiceData".

Result

The data is stored in a .dmp file with the following naming convention: "<MLFB><Serial number><Time stamp>.dmp." The user can change the file name at a later time.

NOTE

If you have defined your customer page as the start page, observe the note on reading out service data in section Defining the user page as start page (Page 136).

4.19 Basic websites

Web pages with reduced contents

Basic websites are offered for display devices with smaller screens, for example HMI, on the Web server.
Basic websites are web pages with reduced content that are adapted to the requirements of small screens with low resolution.
These sites do not support JavaScript for the sake of fast access. This means that not all standard websites are available as basic websites. The basic website can also have fewer functions than the standard website.
The switch to basic websites takes place automatically for HMI devices.
You access basic websites from other end devices by entering the IP address of the configured CPU and the extension "/basic" in the address bar of the Web browser, for example, https://192.168.3.141/basic.
The following standard websites are also available as basic websites:

- Start page (in Basic: "Status")
- Diagnostics (without the "Program protection", "Runtime information" and "Fail-safe" tabs)
- Diagnostics buffer
- Memory usage
- Module information

- Alarms (without acknowledgment option)
- Communication
- Tag status
- Watch tables
- Customer pages
- Filebrowser (read access only)
- DataLogs
- Intro

The basic websites are displayed as follows:

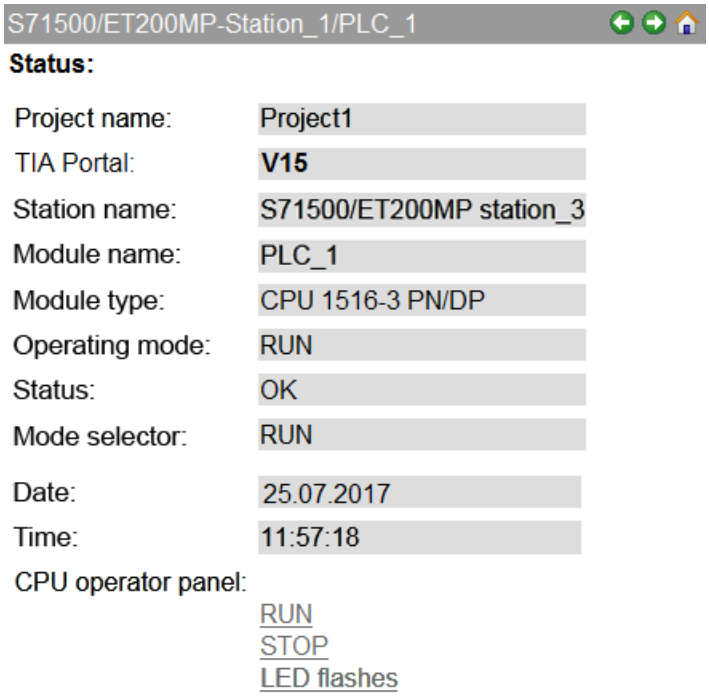

Figure 4-75 Example basic websites, "Status" web page

API (Application Programming Interface) 5

Web API

The CPU offers you a Web-based API (Web API) as an interface for reading and writing CPU data.

The Web API enables you to:

- Implement web applications at the latest state-of-the-art technology
- Communicate with the Web server of the CPU via script and programming languages
- Create web applications that connect to multiple CPUs at the same time, for example, to create dashboards that visualize the status of multiple CPUs

Connection established between CPU, Web API and terminal device.

The following graphic shows an example of the Web API between CPU and terminal device.

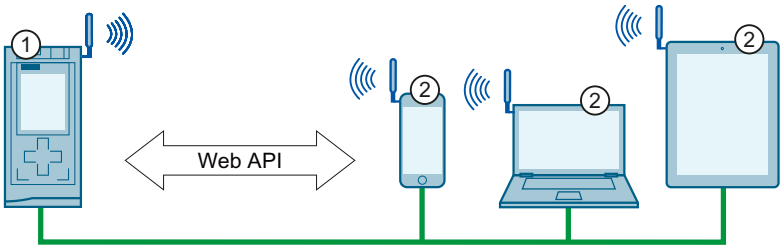

① CPU

② Terminal devices

Figure 5-1 Web API

Communication between the CPU and the terminal device takes place via PROFINET or WLAN integration.

NOTE

Security information

Please note that the following graphic only shows the role of the Web API between CPU and terminal device.

For the correct setup of a secure WLAN connection, observe the Security Information in the preface of this manual.

Requirements

The Web API can only be used for CPUs as of firmware version from V2.8 for the following systems:

- The CPUs of the S7-1500 automation system
  (the CPUs of the S7-1500R/H redundant system are not supported)
- The CPUs 1504D TF and 1507D TF of the SIMATIC Drive Controller
- The CPUs of the ET 200pro distributed I/O system
- The CPUs of the ET 200SP distributed I/O system

The following requirements must be met before you can use the Web API.

- You have assigned the correct firmware version (≥ V2.8) in the Hardware catalog of STEP 7.
- You have created and configured a project and downloaded it to the CPU.
- You have selected the following check box in STEP 7
  – Activate web server on this module

Overview of the functions depending on the firmware version of the CPU

The web API is being continuously extended. The following table shows which mechanisms and methods you can use with which firmware version of the CPUs listed above:

Functions	As of CPU firmware version
Api.Browse (Page 153) Api.GetCertificateUrl (Page 155) Api.GetPermissions (Page 152) Api.Login (Page 150) Api.Logout (Page 156) Api.Ping (Page 155) Api.Version (Page 155) PlcProgram.Browse (Page 176) PlcProgram.Read (Page 172) PlcProgram.Write (Page 173)	V2.8

Functions	As of CPU firmware version
Web applications that can be loaded by the user (Page 200) Api.BrowseTickets (Page 164) Api.CloseTicket (Page 166) Plc.ReadOperatingMode (Page 180) Plc.RequestChangeOperatingMode (Page 180) Ticket mechanism (Page 160) WebApp.Browse (Page 206) WebApp.BrowseResources (Page 213) WebApp.Create (Page 203) WebApp.CreateResource (Page 215) WebApp.Delete (Page 204) WebApp.DeleteResource (Page 216) WebApp.DownloadResource (Page 219) WebApp.Rename (Page 205)	V2.9

Functions	As of CPU firmware version
WebApp.RenameResource (Page 217) WebApp.SetDefaultPage (Page 209) WebApp.SetNotAuthorizedPage (Page 211) WebApp.SetNotFoundPage (Page 210) WebApp.SetResourceETag (Page 221) WebApp.SetResourceMediaType (Page 222) WebApp.SetResourceModificationTime (Page 224) WebApp.SetResourceVisibility (Page 220) WebApp.SetState (Page 208)	

Functions	As of CPU firmware version
DataLogs.DownloadAndClear (Page 198) Files.Browse (Page 189) Files.Create (Page 192) Files.CreateDirectory (Page 196) Files.Delete (Page 195) Files.DeleteDirectory (Page 197) Files.Download (Page 191) Files.Rename (Page 194) Plc.CreateBackup (Page 184) Plc.ReadSystemTime (Page 181) Plc.ReadTimeSettings (Page 182) Plc.RestoreBackup (Page 185)	V3.0

API endpoint

As an RPC protocol, JSON-RPC V2.0 is based on HTTP. The Web API can be reached via POST Requests to the following URL:

```
https://[ip]/api/jsonrpc
```

The Web API supports bulk operations as defined in JSON-RPC 2.0. While bulk operations are not explicitly limited by a fixed number of method calls, there is a 64 KB limit for the HTTP request body.
An example of the required structure of an HTTP Request and HTTP Response for successfully making a Web API request can be found in the chapter Web API integration (Page 156).

Compatibility with regard to future extensions of the Web API

The order of attributes within a JSON object does not affect API clients.

Web server responses to requests via the API may be extended with new JSON attributes in future firmware versions, e.g. to enrich results with more details.

Error codes of possible API error messages based on JSON-RPC may change in future firmware versions, if applicable, and existing error messages may be made more precise.

NOTE

To check if your API request was successful, first check if the request was successful in general. You can evaluate the JSON-RPC error codes for detailed information.

Textual error information only provides information. If you want to implement error evaluation in a way specific to an application, use the corresponding numeric error codes of the error message.

The precision of floating point values may differ in the display from other clients, such as the TIA Portal.

Bulk requests are always processed in descending order, whereby the individual requests are contained in the HTTP request body in descending order.

If an API method includes time stamps, these time stamps are always returned based on UTC time. Examples of this are the time stamps of the Files.Browse and Api.BrowseTickets methods.

With the API methods Plc.ReadSystemTime and Plc.ReadTimeSettings, you can read out the system time and determine the PLC local time.

Supported clients

The products and versions listed in the following table were tested for the Web API. The column "As of Version" lists the tested version as of which the clients are supported:

Product *	As of Version	Supported functions
Chrome-based Desktop web browser (e.g. Google Chrome) (https://chromium.woolyss.com/)	75.x (Windows and Android)	Web API access with JavaScript for asynchronous requests
Mozilla Firefox (https://www.mozilla.org/en-US/firefox/)	64.x (long-term support)	
Microsoft Internet Explorer	11.x (Windows 7, Windows 10)	
Microsoft Edge	44.x Windows 10	
Apple Safari	12.x iOS	
Opera	58.x	
SIMATIC HMI Panels	2	
Microsoft C# (https://docs.microsoft.com/en-us/dotnet/api/system.net.webrequest?view=netframework-4.7.2) with WebRequest class and Json.Net library (https://www.newtonsoft.com/json)	.Net Framework 4.7	Web API access for pure HTTP requests and Json.Net for generating and parsing content

* Not included in the scope of delivery of the product described here

Product *	As of Version	Supported functions
GNU Wget (https://www.gnu.org/software/wget/)	1.20 Windows	Web API access for pure HTTP requests, e.g. for automatic archiving of Data-Logs.
cURL (https://curl.haxx.se/)	7.63.x Windows	
Python (https://www.python.org/downloads/)	3.10	
Microsoft PowerShell	5.0	Web API access for pure HTTP Requests with Invoke WebRequest and ConvertTo-Json/ConvertFrom-Json for generating and parsing content
WebserverApi Client Library for .NET (https://github.com/siemens/simatic-s7-webserver-api)	1.0.1	Web API access for pure HTTP requests in C#. The library is also available as a NuGet packet at the following address (https://www.nuget.org/packages/Siemens.Simatic.S7.Webserver.API):

* Not included in the scope of delivery of the product described here

Github

You can also find examples of using API methods in practice on Github at the following repository (https://github.com/siemens/simatic-s7-webserver-api).

5.1 Web API basic functions

The following section gives an overview of all Web API basic functions with extracts from the corresponding HTML code.

NOTE

Files which contain Web API methods must be encoded and stored in the UTF-8 character encoding.

For detailed examples of an integration of the Web API into your web application, refer to the section Web API integration (Page 156).

5.1.1 Api.Login

The Api.Login method checks the login data of the user and on successful verification opens a new Web API session. The method requests the name and the password of the user in plain text as proof of authorization. The user name and the password are encrypted before they are transferred to the server.

Example

The following example shows the parameters that are required or optional for calling the Api.Login method.

```
{
"user": "User1",
"password": "SecurePassword"
}
```

The web Server as of CPU firmware version V2.9 supports the optional parameter "include_web_application_cookie". This parameter specifies:

- Whether a "web_application_cookie" cookie was generated for access to protected web applications
- Whether you want to return the cookie with the response to the successful login

```
{
"user": "User1",
"password": "SecurePassword",
"include_web_application_cookie": true
}
```

After successful authentication the user receives a token. The token identifies the user as successfully authenticated.
In addition to the token, the Api.Login method optionally returns a cookie that is required to access web applications:

```
{
"token": "eG9mcHdhaGR0dWVsdm5teGFxcGw=",
"web_application_cookie": "Cb5xdhgiokr0dWVsdm5teGCncFb="
}
```

The "web_application_cookie" cookie is set with a value from the HTTP response of the login as "siemens_web_secure" cookie.

Token

The token comprises a 28-byte string. The token is transferred in encrypted form.
For every additional request which requires authentication, you have to specify the assigned token in the HTTP request header. If further communication no longer takes place in the meantime, the token becomes invalid after maximum 2.5 minutes. Each new request within a session extends the validity of the token by another 2 to 2.5 minutes, calculated from the completion of the request processing by the server.
The token is not required for methods that do not require authentication. However, you can still enter the token. If the token is passed when a method is called, the timeout of the corresponding session is reset.
When you call the Api.Ping method without a token, for example, the session is not extended because the CPU cannot assign a token to the user.

The following methods work with and without tokens:

- Api.Browse
- Api.Ping
- Api.GetPermissions

"Everybody" user

The "Everybody" user is set without assigning a password.
If you want to get a token for the "Everybody" user, then send "Everybody" as the user and an empty password ("").

NOTE
"Everybody" user
Note that, unlike the TIA Portal, the API only accepts the English notation "Everybody".

Possible error messages

The following table shows the possible error messages of the Api.Login method.

Error code	Error message	Meaning
100	Login failed	The user name and/or password are not valid. Assign a reliable user name and password. Another reason why the login failed may be an active brute force attack.
101	Already authenticated	The current X-Auth-Token is already authenticated. Use Api.Logout before you authenticate yourself again.
4	No resources	The system does not have the required resources to carry out this request. Carry out the request again as soon as sufficient resources are available.

Example

You can find an example with further processing of the cookie "web_application_cookie" in section Example: Web page for monitoring and controlling a wind turbine.

5.1.2 Api.GetPermissions

After the successful login, the Api.GetPermissions returns a list of actions for whose execution the user is authorized.

Response structure

The following table shows the structure of server responses to successful requests:

Table 5-1 Api_GetPermissions_Response (array of objects)

Name	Required	Data type	Description
Name	yes	string	Name of authorization

Example

The following example shows the actions for which the user is authorized.

```
[
{ "name": "read_value" },
{ "name": "change_operating_mode" }
]
```

Checkable authorizations

You can use the Web API to check the authorizations for the following actions.

Action	User authorization
read_diagnostics	Query diagnostics data from the CPU without being permitted to change data.
read_value	Read process data from the CPU.
write_value	Write process data to the CPU.
acknowledge_alarms	Acknowledge alarms.
update_firmware	Install firmware updates on the CPU, central and distributed I/O modules.
open_user_pages	Call customer pages on the CPU.
manage_user_pages	Change customer pages on the CPU.
read_file	Read the contents of files on the CPU.
write_file	Change the contents of files and folders on the CPU.
change_operating_mode	Change the operating mode.
flash_leds	Request identification of the device.
backup_plc	Back up the CPU configuration.
restore_plc	Restore configuration of the CPU.
failsafe_admin	Make fail-safe changes on the CPU.

The Web API checks the authorization on the basis of the rights and passwords assigned in STEP 7 in the area "Web server > User administration".

A description of the user management can be found in section "Configuring the Web server (Page 23)".

5.1.3 Api.Browse

The Api.Browse method gives you a list of all methods that you can call via the Web API with the current firmware. This provides you with an overview of all the methods supported by the CPU.
No authorizations are needed for calling the Api.Browse method.

Example

The following example shows the HTTP request and a possible response to the request for the Api.Browse method.

```
POST /api/jsonrpc HTTP/1.1
Host: 192.168.3.14
Content type: application/json
Content length: 48

[{"jsonrpc":"2.0","method":"Api.Browse","id":1}]
```

Response of the server:

```
[
{ "name": "Api.Browse" },
{ "name": "Api.GetCertificateUrl" },
{ "name": "Api.GetPermissions" },
{ "name": "Api.Login" },
{ "name": "Api.Logout" },
{ "name": "Api.Ping" },
{ "name": "Api.Version" },
{ "name": "PlcProgram.Browse" },
{ "name": "PlcProgram.Read" },
{ "name": "PlcProgram.Write" }
]
```

NOTE
Checking authorizations
The Api.Browse method does not filter the list of the available methods by the individual authorizations of users.
The list of available methods may therefore contain methods which the user may not execute without authorization.

Possible error messages

The following table shows the possible error messages of the Api.Browse method.

Error code	Error message	Meaning
4	No resources	The system does not have the necessary resources to execute the Web API request. Carry out the request again as soon as sufficient resources are available again.

5.1.4 Api.Version

Use the Api.Version method to request the current version number of the Web API. You can draw conclusions from the version number:

- The functions supported by the CPU version
- The hardware functional status of the CPU

This information lets you implement applications that dynamically adapt to the scope of functions offered by the contacted CPU. An application can support multiple CPU versions.

No authorizations are needed for calling the Api.Version method.

Example

The following example shows a possible result of calling the Api.Version method.

```
3.28
```

The version number is displayed as a floating-point number and is incremented with every release and every change of the Web API.

5.1.5 Api.Ping

The Api.Ping method outputs a unique ID for the CPU used. You can use it to determine whether the CPU can be reached. The CPU ID comprises a 28-byte string. The system assigns a new, unique CPU ID after each restart (POWER ON - POWER OFF) or warm start of the CPU. By comparing this with previously output IDs, you can also determine whether the CPU was restarted in the meantime.
No authorizations are needed for calling the Api.Ping method.

Example

The following example shows the output of a CPU ID:

```
"ZWlmbnJwZmplb3Nwd2l1Y3N3dWE="
```

5.1.6 Api.GetCertificateUrl

The Api.GetCertificateUrl method returns a relative URL (https://<IP>) with which you can retrieve the SSL certificate of the Web server.

Example

The following example shows the result of the Api.GetCertificateUrl method call.

```
"/MiniWebCA_Cer.crt"
```

The method outputs a string with a relative URL to the root directory of the CPU Web server (https://[ip-address]).
If the Web server has not been configured with a CA certificate generated via the global security settings, the method outputs an empty string.

5.1.7 Api.Logout

The Api.Logout method removes the token from the list of active Web API sessions and ends the session.
The Api.Logout method returns the status of whether the logout was successful or not. For security reasons, however, the method always returns the Boolean value "true" even if the token is invalid.

5.2 Web API integration

In the following section you will find examples of how to integrate the Web API into your application.

Structure of an HTTP Request and HTTP Response

The following section shows the example of the required structure of an HTTP Request and HTTP Response for successfully making a Web API request.

```
POST /api/jsonrpc HTTP/1.1
Host: 192.168.3.14
Content type: application/json
Content length: 92

[{"jsonrpc":"2.0","method":"Api.Login","params":{"user":"User1",
"password":"SecurePassword"},"id":999}]

HTTP/1.1 200 OK
Content type: application/json
Cache-Control: no-cache
Pragma: no-cache
Expires: 0
Access-Control-Allow Origin: *
Access-Control-Allow Headers: Content-Type,X-Auth Token
Access-Control-Allow Methods: POST,OPTIONS
transfer-encoding: chunked
```

```
date: Tue, 23 Apr 2019 17:50:31 GMT

[{"jsonrpc":"2.0","id":999,"result":{"token":
"Sy8pe3VNv86rTMldzFBsYzmw12Lg"}}]
```

Web API examples

The following section contains related examples of how you can use the described methods in the Web API.

The examples use HTML, JSON and JQuery library for asynchronous requests.

NOTE

Information used in the examples

Note that the names of the methods, parameters and the JavaScript code are specified without liability and can deviate from the current API methods.

Example 1

Example 1 shows a code section that wants to maintain a session with JavaScript. For this purpose, a one-time ping request is sent using the Api.Ping method. If the intervals at which the ping request is sent are less than the timeout of 2 minutes, the user remains permanently logged in.

A maintained session lends itself to scenarios such as operating and monitoring tasks.

```
$.post({
url:"https://192.168.2.132/api/jsonrpc",
headers:{
'X-Auth-Token':"Sy8pe3VNv86rTMldzFBsYzmw12Lg"
},
data:JSON.stringify({"jsonrpc":"2.0", method:"Api.Ping", "id":1}),
success:function(data){ console.log(data); }
dataType:"text",
contentType:"application/json"
});
```

NOTE

X-Auth-Token

To extend the session, you must send the token (X-Auth-Token) as an HTTP header to the CPU.

When you call the Api.Ping method without a token, the session is not extended because the CPU cannot assign a token to the user.

Example 3 shows an example of a token in the HTTP request.

In the example, the selected user has the necessary authorizations. The methods after the login request were successfully carried out, as the following result shows.

```
{"jsonrpc":"2.0","id":1,"result":"ZWlmbnJwZmplb3Nwd2l1Y3N3dWE="}
```

Example 2

Example 2 shows a client that wants to log in to the CPU with JavaScript and calls several methods within an HTTP request using a bulk request.

```
$.post({
url:"https://192.168.2.132/api/jsonrpc",
data:JSON.stringify([
{"jsonrpc":"2.0", "id":1, method:"Api.Login",
params:{user:"Admin",password:"12345"} },
{"jsonrpc":"2.0", "id":2, method:"Api.GetPermissions" },
{"jsonrpc":"2.0", "id":3, method:"Api.Browse" }]),
success: function(data){ console.log(data); },
dataType: "text",
contentType: "application/json"});
```

The following section shows an example of a bulk request response. The selected user has the necessary authorizations. The methods after the login request were successfully carried out with the authorizations of the authenticated user.

```
[
"jsonrpc": "2.0", "id": 2, "result":[
{ "name": "Api.Browse" },
{ "name": "Api.Login" },
{ "name": "Api.Logout" },
{ "name": "Api.GetPermissions" },
{ "name": "PlcProgram.Read" },
{ "name": "PlcProgram.Write" }
]
```

Example 3

Example 3 shows a bulk request for read and write access to a stack of tags in a single HTTP request. This procedure is recommended for bulk requests, as it is more efficient than a series of single accesses and therefore places less load on the CPU.

```
$.post({
url:"https://192.168.2.132/api/jsonrpc",
data:JSON.stringify([
{"jsonrpc":"2.0", "id":1, method:"PlcProgram.Read"},
```

```
{"jsonrpc":"2.0", "id":2, method:"PlcProgram.Read",
params:{"var":"\"MyDB\".InvalidField"}},
{"jsonrpc":"2.0", "id":3, method:"PlcProgram.Read",
params:{"var":"MyDB.MyDate"} },
{"jsonrpc":"2.0", "id":4, method:"PlcProgram.Write",
params:{"var":"\"BoilerControl\".TempSetPoint", value:9001} }]),
success: function(data){ console.log(data); },
dataType: "text",
contentType: "application/json",
headers: {
"X-Auth-Token":"d29kamV3cGxtdm5keHNhcXd1aXJ0empkZXN3cQ=="}});
```

The bulk request contains an invalid tag with an error message providing information about this. All other methods were successfully carried out, as the following result shows.

```
[
{"jsonrpc":"2.0","id":1,"result":{"value":42}},
{"jsonrpc":"2.0","id":2,"error":{"code":201,"message":"Invalid
address"}},
{"jsonrpc":"2.0","id":3,"result":{"value":"1990-01-01"}},
{"jsonrpc":"2.0","id":4,"result":true}
]
```

5.3 Web API sessions

Timeout for Web API sessions

NOTE

If a Web API call is not made within a session before 120 seconds have elapsed, the CPU ends the session with a logout event. A timeout reset is initiated by every successful action of the user in which a toke is supplied.

Call the Api.GetPermission or Api.Ping method cyclically within the timeout grid to ensure that:

- Your session remains active
- Your authorizations for the call of other methods remain active

Limitations for Web API sessions

The CPU limits the number of active sessions. The following table shows the limitations based on the memory platform used.

CPUs	Limitation
1510 to 1513	50
1514, 1515, 1516 and 1504D TF	100
1517, 1518 and 1507D TF	200

Limitation of the active Web API sessions

If you request another authentication token and none are available, then the request is rejected.

Changes to CPU user administration

If the configuration of CPU user management changes (by downloading the HW configuration in the TIA Portal), e.g. password changed or user removed, the CPU ends all sessions with a logout event.

Security events

The CPU generates a security event for successful and failed logins. The CPU enters this security event in the diagnostics buffer.

5.4 Ticket mechanism

With the web server as of firmware version V2.9, you can use the ticket mechanism of the Web API . The ticket mechanism is the basis for all file-based methods, such as the download of resources from the CPU.

The ticket mechanism enables you to:

- Transfer large amounts of data outside of the JSON-RPC protocol.
- Call status information, for example, to implement progress indicators in your application and respond conveniently to mode changes

NOTE

4 tickets per session

The ticket mechanism enables you to use up 4 tickets simultaneously per session.

The number of tickets that can be created per type is additionally limited. For more information, see the API methods that create a ticket:

- WebApp.CreateResource (Page 215)
- WebApp.DownloadResource (Page 219)
- Backing up and restoring the configuration (Page 184)
- Backing up and restoring the configuration (Page 184)
- Files.Download (Page 191)
- Files.Create (Page 192)

Principle of the ticket mechanism

Data transfers outside the JSON-RPC protocol are initiated by Web API methods, such as WebApp.DownloadResource. This method returns a specific identifier, a so-called "ticket". The ticket can be redeemed by a subsequent request to another HTTP end point. In the request, the data are exchanged with standard HTTP mechanisms.

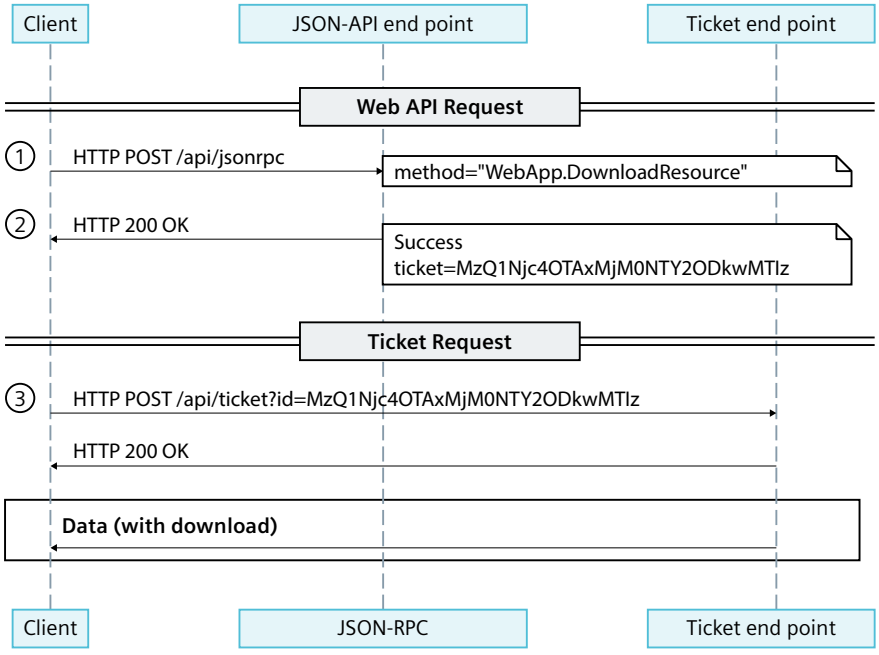

Figure 5-2 Ticket mechanism

① To request the upload or download of a resource from/to the CPU, a client sends a request to the JSON-RPC.

② After successful authorization and resource check, the client receives a valid ticket ID.

③ The client sends a request to the ticket end point with the valid ticket ID and an X-Auth-Token. The data is included here during upload to the CPU. The request is confirmed to the client with "HTTP 200 OK" or "204 No Content". The data is returned in a download from the CPU.

Ticket IDs are one-time tokens that may not be reused by the client or by the CPU after being redeemed.

NOTE

Changes in firmware version V3.0

As of firmware version V3.0, no X-Auth-Token is required for the ticket end point.

Do not share the token with third parties, because the owner of the token gets control over a ticket.

As of firmware version V3.0, GET requests for downloads are possible in addition to POST requests. For GET requests, a content disposition header is returned with the HTTP response. It contains a default file name for storage in the web browser. The browser uses the file name as the storage location. However, you can also evaluate the file name programmatically using a programming language (for example, via C#).

Ticket end point

The ticket end point is accessible via GET (for downloads only), POST and OPTIONS requests to the following URL:

```
https://[ip]/api/ticket?id=<ticket-id>
```

The ticket mechanism alone is not enough to execute a file action. To do this, you must call a specific method. In the web server of the firmware version V2.9, you use the ticket mechanism for the following methods:

- WebApp.CreateResource (Page 215)
- WebApp.DownloadResource (Page 219)

Procedure to execute a file action

To create a resource or download one from the CPU, follow these steps:

1. Call the corresponding method with the necessary method parameters, for example, WebApp.DownloadResource. The method returns a character string that includes a valid ticket ID.
2. Call the ticket end point via POST request with the returned ticket ID. The method will then execute the download, for example.

For more information, see the paragraph "Principle of the ticket mechanism".

NOTE

In some cases, programming languages perform preprocessing of text files before the upload.

For example, a UTF-8 BOM-encoded (Byte Order Mark) file in Javascript is converted to a UTF8 file in advance.

Examples

Below you will find two examples for further processing of the tickets. The examples use HTML, Json and JQuery library.

WebApp.CreateResource (upload a resource):

```
<td><input id="fileForticketCustomerExampleUpload" type="file"
onchange="fReadFile()" /></td>
var fileReader = new FileReader();
function fReadFile() {
    fileReader = new FileReader();
    fileReader.readAsText(this.files[0]);
}
$("#ApiUploadticketCustomerExample").click(function () {
        var ticketId =
$("#iApiUploadticketIdCustomerExample").val();
        var content = fileReader.result; // e.g. <!DOCTYPE
html><html><head>...
        $.post({
            url: "https://" + window.location.hostname +
"/api/ticket?id=" + ticketId,
            headers: { "X-Auth-Token": token, "Content-Type":
"application/octet-stream" },
            contentType: "application/json",
            data: content,
            // ticketing: status = 204: No content (=> no data)
upload has finished successfully:
            success: function (data, textStatus, jqXHR) { if
(jqXHR.status == 204) {
$("#ApiUploadticketCustomerExampleRes").text("true"); } },
//print error to the document
            error: function (jqXHR, textStatus, errorThrown) {
$("#ApiUploadticketCustomerExampleRes").html("<tr><td>code:
</td><td>" + jqXHR + "</td></tr><tr><td>textStatus:</td><td>" +
textStatus + "</td></tr><tr><td>error:</td><td>" + errorThrown +
"</td></tr>"); }
        });
    });
```

WebApp.DownloadResource (download a resource):

```
// Function to save data in a file - will be stored in the default
download folder
function saveDataInFile(data, filename, type) {
    var file = new Blob([data], { type: type });
```

```
    if (window.navigator.msSaveOrOpenBlob) // IE10+
        window.navigator.msSaveOrOpenBlob(file, filename);
    else { // Others
        var a = document.createElement("a"),
            url = URL.createObjectURL(file);
        a.href = url;
        a.download = filename;
        document.body.appendChild(a);
        a.click();
        setTimeout(function () {
            document.body.removeChild(a);
            window.URL.revokeObjectURL(url);
        }, 0);
    }
}
 $("#ApiDownloadTicketCustomerExample").click(function () {
        var ticketId =
$("#iApiDownloadTicketIdCustomerExample").val();
        var filename =
$("#iApiDownloadTicketCustomerExampleFileName").val();   //e.g.
index
        var type =
$("#iApiDownloadTicketCustomerExampleFileType").val();       //e.g.
text/html
        $.post({
            url: "https://" + window.location.hostname +
"/api/ticket?id=" + ticketId,
            headers: { "X-Auth-Token": token, "Content-Type":
"application/octet-stream" },
            contentType: "application/json",
            // ticketing: status = 200: download has finished
successfully:
            success: function (data, textStatus, jqXHR) { if
(jqXHR.status == 200) { download(data, filename, type); } },
//print error to document
            error: function (jqXHR, textStatus, errorThrown) {
$("#ApiDownloadTicketCustomerExampleRes").html("<tr><td>code:
</td><td>" + jqXHR + "</td></tr><tr><td>textStatus:</td><td>" +
textStatus + "</td></tr><tr><td>error:</td><td>" + errorThrown +
"</td></tr>"); }
        });
    });
```

Ticket methods

Two methods are available for handling your tickets as an authenticated user:

- You can use the Api.BrowseTickets (Page 164) method to find out which tickets are currently active for you and read out the status for the active tickets in each case.
- After the action, you can delete your ticket with the Api.CloseTicket (Page 166) method to clean the application with regard to active tickets.

5.4.1 Api.BrowseTickets

The Api.BrowseTickets method calls the status of all active tickets of a logged-in user. Alternatively, the status of a specific ticket can be called. This will provide information on the ticket status. You can also call this method during an active file action to retrieve the current status. Depending on the file action, additional information is provided by Api.BrowseTickets.

To call the Api.CloseTicket method, you do not need an authorization but you do need a valid session token. You can find information on the session token in the section Api.Login (Page 150).

Structure of the request

The following table informs you about the necessary parameters for the request.

Table 5-2 Api_BrowseTickets_Request (object)

Name	Required	Data type	Description
id	No	string	The ticket ID that was returned by an API method for use by the ticket system. If the parameter is not specified, then the response structure returns all valid tickets of the user.

Example

In the following example, a ticket ID is transferred as parameter.

```
{
"id": "U2VyaW91c2x5LCBTdG9wIGl0ISE6"
}
```

Response structure

The following table shows you the structure of the server response to a successful request.

Table 5-3 Api_BrowseTickets_Response (object)

Name	Required	Data type	Description
max_tickets	yes	number	Maximum number of tickets for one session (4)
id	yes	string	Ticket ID
date_created	yes	string	ISO8601 time stamp as string. Time of the ticket creation based on the CPU time
provider	yes	string	Name of the method that has created the ticket, for example, WebApp.DownloadResource
state	yes	string	Current ticket status. The following alternatives are possible: "created", "active", "", "completed" or "failed"
data	No	object	Additional ticket data: Some ticket-based methods offer users additional information. This additional information is provided via "data" and described in the sections of the respective API methods.

Example

A response is shown in the following example.


```
{
"max_tickets": 4,
"tickets":
[
{
"id": "U2VyaW91c2x5LCBTdG9wIGl0ISE6",
"date_created": "2021-01-15T08:00:00-05:00",
"provider": "WebApp.DownloadResource",
"state": "active"
}
]
}
```


NOTE

Additional ticket data (as of version V18)

As of version V18, each ticket is extended by the entry "bytes_processed" as part of the "data" object. This entry specifies how many bytes have been transferred when downloading or uploading a ticket until the Api.BrowseTicket method is called.

Possible error messages

The following table shows the possible error messages of the Api.BrowseTickets method.

Error code	Error message	Meaning
400	Not Found	The returned ticket ID does not exist in the ticket list of the user or does not match the assigned session token.

5.4.2 Api.CloseTicket

You use the Api.DeleteTicket method to delete a ticket provided by the system that is assigned to the current user session.

To call the Api.CloseTicket method, you do not need an authorization but a valid session token. You can find information on the session token in the section Api.Login (Page 150).

Structure of the request

The following table informs you about the necessary parameters for the request.

Table 5-4 Api_CloseTicket_Request (object)

Name	Required	Data type	Description
id	yes	string	The ticket ID that was returned by an API method for use by the ticket system.

Example

In the following example, a ticket ID is transferred as parameter.

```
{
"id": "U2VyaW91c2x5LCBTdG9wIGl0ISE6"
}
```

Response structure

If successful, the method returns the Boolean value "true".

Possible error messages

The following table shows the possible error messages of the Api.GetTicketStatus method.

Error code	Error message	Meaning
400	Not Found	The returned ticket ID does not exist in the ticket list of the user. The returned ticket ID or does not match the assigned session token.

5.5 Read and write process data

5.5.1 Supported data types

Binary representation

The Web API presents the values of primitive data types as pure binary data ("raw"). The binary data is formatted as a JSON array. Each element within an array represents a single data byte.

Simple display ("simple")

The Web API formats primitive data types into a readable form while preserving the ability to process the data using a program. The following section describes how primitive data types are represented as JSON data type.

Supported data types

The following table shows:

- The data types supported by the Web API for reading and writing process values
- The representation in the Web API
- The respective match of the data type in the TIA Portal

Name of the data type in the TIA Portal	Name of the data type in Web API	Representation in the Web API
Bool	bool	Boolean JSON value: **true** or **false**
Byte	Byte	JSON unsigned integer in a range from 0 to 255
USInt	usint	
Word	word	JSON unsigned integer in a range from 0 to 65 535
UInt	uint	
HW_ANY	hw_any	
HW_IOSYSTEM	hw_iosystem	
HW_DPMASTER	hw_dpmaster	
HW_DEVICE	hw_device	
HW_DPSLAVE	hw_dpslave	
HW_IO	hw_io	
HW_MODULE	hw_module	
HW_SUBMODULE	hw_submodule	
HW_HSC	hw_hsc	
HW_PWM	hw_pwm	
HW_PTO	hw_pto	
HW_INTERFACE	hw_interface	
HW_IEPORT	hw_ieport	
CONN_ANY	conn_any	
CONN_PRG	conn_prg	
CONN_OUC	conn_ouc	
PORT	port	
RTM	rtm_id	
PIP	pip	
DB_ANY	db_any	
DB_WWW	db_www	
DB_DYN	db_dyn	
DWord	dword	JSON unsigned integer in a range from 0 to 4 294 967 295
UDInt	udint	
AOM_IDENT	aom_ident	
EVENT_ANY	event_any	
EVENT_ATT	event_att	
EVENT_HWINT	event_hwint	

Name of the data type in the TIA Portal	Name of the data type in Web API	Representation in the Web API
CONN_R_ID	conn_r_id	JSON unsigned integer in a range from 0 to 4 294 967 295
LWord	lword	JSON string with a numerical representation of an unsigned integer based on the number 10 in a range from 0 to 18 446 744 073 709 551 615
ULInt	ulint	
SInt	sint	JSON signed integer in a range from -128 to 127
Int	int	JSON signed integer in a range from -32 768 to 32 767
OB_ANY	ob_any	
OB_DELAY	ob_delay	
OB_TOD	ob_tod	
OB_CYCLIC	ob_cyclic	
OB_ATT	ob_att	
OB_PCYCLE	ob_pcycle	
OB_HWINT	ob_hwint	
OB_DIAG	ob_diag	
OB_TIMEERROR	ob_timeerror	
OB_STARTUP	ob_startup	
DInt	dint	JSON signed integer in a range from -2 147 483 648 to 2 147 483 647.
LInt	lint	JSON string with a numerical representation of an unsigned integer based on the number 10 in a range from -9 223 372 036 854 775, 808 to 9 223 372 036 854 775 807
Real	real	JSON floating-point number If the floating-point number is infinite or NaN (not-a-number), the Web API returns the value **null** when reading a tag of this type.
LReal	lreal	
Character	char	JSON string with a single ASCII character in a valid range from 0 to 127 If a tag of this type is read with a value outside the valid range, the Web API outputs the value **null**.
WChar	wchar	JSON string with a UTF-8 string that represents a single UCS-2 character in a valid range from 0 to 55 295. If a tag of this type is read with a value outside the valid range, the Web API returns the value **null**.
String	string	JSON string with a UTF-8 string If a tag of this type is read with a value outside the valid UTF-8 string (max. length 254 characters), the Web API returns the value **null**.
WString	wstring	JSON string with a UTF-8 string that represents a USC-2 string in a valid range from 0 to 55 295. If a tag of this type is read with a value outside the valid range (max. length 254 characters), the Web API outputs the value **null**.
Date	date	JSON unsigned integer in a range from 0 to 65 535 This value represents the number of days since 01.01.1990.
Time_Of_Day	time_of_day	JSON unsigned integer in a range from 0 to 4 294 967 295 This value represents the number of milliseconds since the beginning of the day.

Name of the data type in the TIA Portal	Name of the data type in Web API	Representation in the Web API
LTime_Of_Day	ltime_of_day	JSON string with a numerical representation of an unsigned integer based on the number 10 in a range from 0 to 18 446 744 073 709 551 615 This value represents the number of nanoseconds since the beginning of the day.
Time	time	JSON signed integer in a range from -2 147 483 648 to 2 147 483 647) This value represents the number of milliseconds since a user-defined point in time.
LTime	ltime	JSON string with a numerical representation of an unsigned integer based on the number 10 in a range from -9 223 372 036 854 775 808 to 9 223 372 036 854 775 807 This value represents the number of nanoseconds since a user-defined point in time.
S5Time	s5time	JSON object with the keys **basis** and **value**: • The **basis** value is a JSON Unsigned Integer with a value of either 10, 100, 1000, or 10 000. The value **basis** represents the millisecond multiplier of the value **value**. • The value **value** is a JSON unsigned integer in the range from 0 to 999. The value **basis** multiplied by the value **value** gives the timer interval in milliseconds.
Date_And_Time	date_and_time	JSON object with the keys **year**, **month**, **date**, **hour**, **minute**, **second**, and **day_of_week**: • **year** is a JSON unsigned integer with a value in the range from 1 990 to 2 089 • **month** is a JSON unsigned integer with a value in the range 1 to 12 • **day** is a JSON unsigned integer with a value in the range 1 to 31 • **hour** is a JSON unsigned integer with a value in the range 0 to 23 • **minute** is a JSON unsigned integer with a value in the range 0 to 59 • **second** is a JSON floating point number with a value in the range 0 to 60 • **day_of_week** is a JSON string with a value of either **sun**, **mon**, **tue**, **wed**, **thu**, **fri**, or **sat**
LDT	ldt	JSON string with a numerical representation of an unsigned integer based on the number 10 in a range from 0 to 18 446 744 073 709 551 615 This value represents the number of nanoseconds since 01.01.1970 midnight (12:00:00.0 am).
Struct	struct	Structured data type whose data structure can be determined using the PlcProgram.Browse method.
IEC_COUNTER	iec_counter	
IEC_TIMER	iec_timer	
DTL	dtl	
IEC_LTIMER	iec_ltimer	
IEC_SCOUNTER	iec_scounter	
IEC_DCOUNTER	iec_dcounter	
IEC_LCOUNTER	iec_lcounter	
IEC_UCOUNTER	iec_ucounter	
IEC_USCOUNTER	iec_uscounter	
IEC_UDCOUNTER	iec_udcounter	
IEC_ULCOUNTER	iec_ulcounter	

Name of the data type in the TIA Portal	Name of the data type in Web API	Representation in the Web API
ERROR_STRUCT	error_struct	Structured data type whose data structure can be determined using the PlcProgram.Browse method.
NREF	nref	
CREF	cref	

Arrays

Arrays are displayed as JSON objects. The key is a string with a numeric representation of the index.
The following example shows the representation in the TIA Portal:

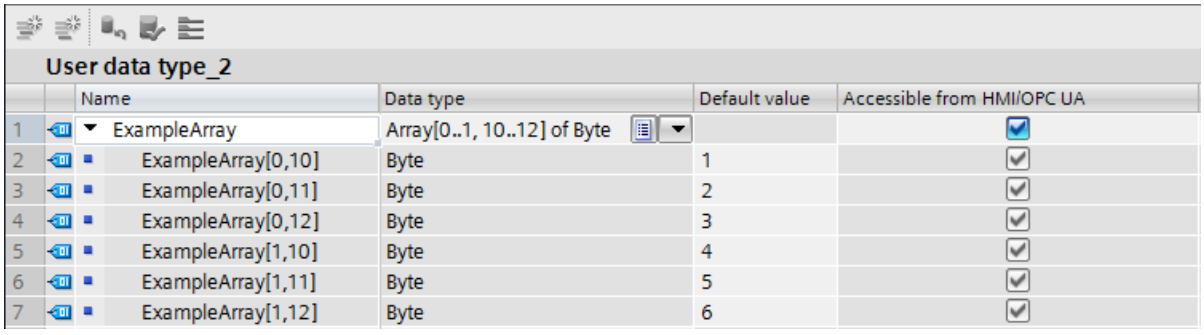

Figure 5-3 Representation in the TIA Portal

Addressing the user data

The Web API supports the following addressing formats:

- Symbolic addressing of a tag in the tag table, e.g. Tag_1
- Symbolic addressing of a tag in a data block, e. g. "MyDB".Static_1

5.5.2 Parameter assignment of the block properties

Configuring access to the Web API in the TIA Portal

To restrict the read and write access to data blocks of your project, you can define the desired parameters in the attributes of the respective block.
To allow the Web API to access the data block, select the check box "DB accessible from Webserver".

NOTE
F-blocks
Note that fail-safe blocks allow read access only. It is not possible to write tags into fail-safe blocks.

Parameter assignment for access to the Web API in tag tables

For read and write access of Web API to tags, the options "Accessible from HMI/OPC UA/Web API" and "Writable from HMI/OPC UA/Web API" must be enabled:

Tag table_1

	Name	Data type	Address	Retain	Accessible from HMI/OPC UA	Writable from HMI/OPC UA
1	Lint	LInt	%M99.0	☐	☑	☑
2	word	Word	%MW100	☐	☑	☑
3	MyTimer1	Timer	%T15	☐	☑	☑
4	MyCounter1	Counter	%C16	☐	☑	☑
5	MyTimer2	S5Time	%MW1000	☐	☑	☑
6	<Add new>			☐	☑	☑

Figure 5-4 Tag table in the TIA Portal

5.5.3 PlcProgram.Read

Use the PlcProgram.Read method to read a single variable from a CPU.
To call the PlcProgram.Read method, you need the "read_value" authorization.

Structure of the request

The following table informs you about the properties of the tag to be read.

Table 5-5 PlcProgram_Read_Request (object)

Name	Required	Data type	Description
var	yes	string	Name of the tag to be read.
mode	no, default is "simple"	string	Enumeration that determines the response format for this method: • "simple": Returns tag values according to the "simple" representation (see section Supported data types (Page 167)). • "raw": Returns tag values according to the "raw" representation (see section Supported data types (Page 167)).

Examples

In the following example, the user requests a global tag in the "simple" representation.

```
{
"var": "\"MotorSpeed\""
}
```

In the following example, the user requests a data block tag in the "raw" representation.

```
{
"var": "\"MyDB\".MyVariable",
"mode": "raw"
```

```
}
```

Response structure

If the request to the server was successful, the server returns JSON data values.

Examples

The following example shows the result of reading in a tag of type "int" in the "simple" representation.

```
-42
```

The following example shows the result of reading in a tag of type "dword" in the "raw" representation.

```
[ 1, 47, 233, 0 ]
```

Possible error messages

The following table shows the possible error messages of the PlcProgram.Read method.

Error code	Error message	Meaning
2	Permission denied	The current authentication token is not authorized to call this method. Log on with a user account that has sufficient privileges to call this method.
4	No resources	The system does not have the necessary resources to read the requested address. Carry out the request again as soon as sufficient resources are available.
200	Address does not exist	The requested address does not exist or the Web server cannot access it.
201	Invalid address	The name structure of the symbolic address is not correct.
203	Invalid array index	The dimensions and limits of the array indexes do not correspond to the type information of the CPU.
204	Unsupported address	The data type of the address cannot be read.

NOTE

Tag access with the methods PlcProgram.Read, PlcProgram.Write, and PlcProgram.Browse

With these methods it is not yet possible to access all tags in firmware version V3.0.

There are selective restrictions when reading tags of technology objects. If access to specific tags is not possible, the API returns the message "unsupported".

5.5.4 PlcProgram.Write

Use the PlcProgram.Write method to write a single process tag to the CPU.
To call the PlcProgram.Write method, you need the "write_value" authorization.

Structure of the request

The following table informs you about the properties of the tag to be written.

Table 5-6 PlcProgram_Write_Request (object)

Name	Required	Data type	Description
var	yes	string	Name of the tag to be written.
value	yes	variant	of the value to be written; The value depends on the operating mode.
mode	no, default is "simple"	string	Enumeration that specifies the format of "value": • "simple": The user must specify the values according to the "simple" representation (see section Supported data types (Page 167)) • "raw": The user must specify the values according to the "raw" representation (see section Supported data types (Page 167))

Examples

In the following example, the user writes a global tag in the "simple" display.

```
{
"var": "\"MotorSpeed\"",
"value": 9001
}
```

In the following example, the user writes a tag to a data block in the "raw" representation.

```
{
"var": "\"MyDB\".MyVariable",
"value": [ 255, 77, 1, 99 ],
"mode": "raw"
}
```

In the following example, the user writes a string tag consisting of 10 characters to the "simple" representation:

```
{
"var": "\"MyDB\".MyString",
"value": "Short Str",
"mode": "simple"
}
```

In the following example, the user writes a string tag consisting of 10 characters with the text "Short Str" in the "raw" representation:

```
{
"var": "\"MyDB\".MyString",
"value": [ 10, 9, 83, 104, 111, 114, 116, 32, 83, 116, 114, 0 ],
"mode": "raw"
}
```

In the following example, the user writes a Wstring tag consisting of 6 characters in the "simple" representation:

```
{
"var": "\"MyDB\".MyWString",
"value": "Hello",
"mode": "simple"
}
```

In the following example, the user writes a string tag consisting of 6 characters with the text "Hello" in the representation "raw":

```
{
"var": "\"MyDB\".MyWString",
"value": [ 0, 6, 0, 5, 0, 72, 0, 101, 0, 108, 0, 108, 0, 111, 0, 0
],
"mode": "raw"
}
```

Response structure

If the write operation was successful, the server returns the Boolean value "true".

Possible error messages

The following table shows the possible error messages of the PlcProgram.Read method.

Error code	Error message	Meaning
2	Permission denied	The current authentication token is not authorized to call this method. Log on with a user account that has sufficient privileges to call this method.
4	No resources	The system does not have the necessary resources to write the requested address. Carry out the request again as soon as sufficient resources are available.
200	Address does not exist	The requested address does not exist or the Web server cannot access the requested address.

Error code	Error message	Meaning
201	Invalid address	The name structure of the symbolic address is not correct.
203	Invalid array index	The dimensions and limits of the array indexes do not correspond to the type information of the CPU.
204	Unsupported address	The data type of the address cannot be written.

NOTE

Tag access with the methods PlcProgram.Read, PlcProgram.Write, and PlcProgram.Browse

With these methods it is not yet possible to access all tags in firmware version V3.0.

There are selective restrictions when reading tags of technology objects. If access to specific tags is not possible, the API returns the message "unsupported".

5.5.5 PlcProgram.Browse

The PlcProgram.Browse method allows you to search for tags and the corresponding metadata according to your individual requirements.
To call the PlcProgram.Browse method, you need the "read_value" authorization.

Structure of the request

The following table informs you about the properties of the tag to be searched.

Table 5-7 PlcProgram_Browse_Request (object)

Name	Required	Data type	Description
var	Yes/no, see "Description" column	string	Name of the tag to be searched • If "mode" = "var", this attribute is required. The Browse method searches for the tag to find the tag metadata. • If "mode" = "children", this attribute is optional. The Browse method searches for the tag and returns a list of child tags and metadata. • If the "var" attribute is not present, then the Browse method returns a list of data blocks and tags.
mode	yes	string	Enumeration that determines the behavior of this method: • "var": Displays information about the specified tag. • "children": Outputs information about the immediate descendants (children) of the specified tags.

Example 1

In the following example the user searches the root node ("root") of the CPU.

```
{
"mode": "children"
}
```

The following example shows a possible response from the server.

```
[
{
"name": "TestDB",
"has_children": true,
"db_number": 2,
"datatype": "datablock"
},
{
"name": "GenUsrMsg_Ret",
"address": "%MW43",
"area": "M",
"datatype": "int"
}
]
```

Example 2

In the following example, the user searches the descendants (children) of a data block.

```
{
"var": "\"MyDB\"",
"mode": "children"
}
```

The following example shows a possible response from the server.

```
[
{
"name": "Static_1",
"db_number": 1,
"datatype": "int"
},
{
"name": "Static_2",
"db_number": 1,
"datatype": "int"
}
]
```

Example 3

In the following example, the user requests information about a specific tag.

```
{
"var": "\"MyDB\".MyStruct.MyField",
"mode": "var"
}
```

The following example shows a possible response from the server.

```
[
{
"name": "MyDateTimeValue",
"db_number": 2,
"datatype": "date_and_time",
"array_dimensions": [
{
"start_index": 0,
"count": 3
}
]
}
]
```

Response structure

The following tables show the structure of server responses to successful requests.

Table 5-8 PlcProgram_Browse_Response (array of objects)

Name	Required	Data type	Description
name	yes	string	Tag name; can be used as a string identifier for the field.
address	No	string	Address of the tag in STEP 7; only applicable for the tags in the ranges M, I, Q, timer and counter and tags in non-optimized data blocks. The representation corresponds to the addresses in the watch tables in the TIA Portal.
read_only	No	bool	Query whether the tag is read-only. The only valid value is "true". If the tag is to be written, this attribute does not appear.
has_children	No	bool	Query whether the tag is a structured tag with child tags The only valid value is "true". If the tags are an unstructured data type, this attribute is not displayed.
db_number	No	integer	Numerical data block identifier; Appears for "datatype" = "datablock" and for each child element of a data block (with corresponding data block number).
area	No	string	Letter which defines the range (M/I/Q/timer/counter) of the tag. If the tag is not in one of these ranges, the attribute does not appear.

Name	Required	Data type	Description
datatype	yes	string	Data type of the tag For data blocks, this is the "datablock" data type; for tags, see the table in the section Supported data types (Page 167). If the data type is not supported, the data type is "unsupported".
max_length	No	integer	If the data type is a "string" or "wstring", this value is the maximum number of characters allowed in the tag.
array_dimensions	No	PlcProgram_Browse_Response_ArrayData	Object arrays arranged from the most significant to the least significant array dimension. The attribute is only displayed if the tag is an array.

Table 5-9 PlcProgram_Browse_Response_ArrayData (array of objects)

Name	Required	Data type	Description
start_index	yes	integer	Start index for this array dimension, as specified in the TIA Portal project.
count	yes	integer	Number of elements in this array dimension

Possible error messages

The following table shows possible error messages of the PlcProgram.Browse method.

Error code	Error message	Meaning
2	Permission denied	The current authentication token is not authorized to call this method. Log on with a user account that has sufficient privileges to call this method.
3	System is busy	The desired operation cannot be performed because the system is currently performing a different request. Restart the query as soon as the current operation is complete.
4	No resources	The system does not have the necessary resources to retrieve the type information. Carry out the request again as soon as sufficient resources are available.
200	Address does not exist	The requested address does not exist or the Web server cannot access the requested address.
201	Invalid address	The name structure of the symbolic address is not correct.
202	Variable is not a structure	It is not possible to search the specific address because the tag is not a structured data type.
203	Invalid array index	The dimensions and limits of the array indexes do not correspond to the type information of the CPU.

NOTE

Tag access with the methods PlcProgram.Read, PlcProgram.Write, and PlcProgram.Browse

With these methods it is not yet possible to access all tags in firmware version V3.0.

There are selective restrictions when reading tags of technology objects. If access to specific tags is not possible, the API returns the message "unsupported".

5.6 Reading and changing the operating mode

5.6.1 Plc.ReadOperatingMode

With the Plc.ReadOperatingMode method you can read the operating mode of the CPU.
To call the Plc.ReadOperatingMode method, you need the "read_diagnostics" authorization.

Response structure

If the request to the server was successful, the server returns the operating mode as a string. The following strings are possible for operating modes:

String	Operating mode
`stop`	STOP
`startup`	STARTUP
`run`	RUN
`hold`	HOLD
`unknown`	-

Possible error messages

The following table shows the possible error messages of the Plc.ReadOperatingMode method.

Error code	Error message	Meaning
2	Permission denied	The current authentication token is not authorized to call this method. Log on with a user account that has sufficient privileges to call this method.

5.6.2 Plc.RequestChangeOperatingMode

With the Plc.RequestChangeOperatingMode method, you request a new operating mode for the CPU.
Note that this is only a request for an operating mode. The conditions for an operating mode change must be given at the CPU, e.g. by the corresponding position of the mode selector. You can use the Plc.ReadOperatingMode (Page 180) method to check whether the operating mode change on the CPU was successful.
To call the Plc.RequestChangeOperatingMode method, you need the "change_operating_mode" authorization.

Structure of the request

The following table informs you about the necessary parameters for the request.

Table 5-10 Plc_RequestChangeOperatingMode_Request (object)

Name	Required	Data type	Description
mode	yes	string	Requested operating mode: "stop" STOP mode "run" RUN mode

Example

In the following example, the RUN mode is requested.

```
{
"mode": "run"
}
```

Response structure

If the request to the server was successful, the server returns the Boolean value "true".

Possible error messages

The following table shows the possible error messages of the Plc.RequestChangeOperatingMode method.

Error code	Error message	Meaning
2	Permission denied	The current authentication token is not authorized to call this method. Log on with a user account that has sufficient privileges to call this method.

5.7 Making time settings via Web API

5.7.1 Plc.ReadSystemTime

This API method provides the system time of the CPU. If you have synchronized the system time of the CPU, for example via the TIA Portal function "Online & diagnostics", the system time corresponds to Coordinated Universal Time (UCT).

Response structure

The following table shows you the structure of server responses to successful requests.

Table 5-11 Plc_ReadSystemTime_Response (object)

Name	Required	Data type	Description
timestamp	yes	string	ISO8601 time stamp as string.

Example

The following example shows the structure of the time stamp.

```
{
"timestamp": "2012-04-23T18:25:43.123456789Z"
}
```

5.7.2 Plc.ReadTimeSettings

This API method returns the currently active time, the deviation of the time zone from Coordinated Universal Time (UCT), and any daylight saving time rules.

Structure of the request

The following table contains information about the individual parameters of the request:

Table 5-12 Plc_ReadTimeSettings_Response (object)

Name	Required	Data type	Description
current_offset	yes	string the time range, shown in accordance with ISO 8601	The currently active deviation of the PLC local time from the coordinated universal time (UTC) configured on the CPU in minutes, e.g. "PT1H30M" for a deviation of 1 hour and 30 minutes.
utc_offset	yes	string the time range, shown in accordance with ISO 8601	The deviation of the time zone from the coordinated universal time (UTC) in minutes without consideration of the daylight saving time rules.
rule	No	object	Displays the daylight saving time settings. If no settings are active, daylight saving time is not set and only the "utc_offset" value is used to calculate the PLC local time.
rule.std	yes	object	Stands for the zone time setting.
rule.std.start	yes	object	Stands for the start time of the zone time.
rule.dst	yes	object	Stands for the daylight saving time settings.
rule.dst.start	yes	object	Stands for the start time of daylight saving time.
rule.dst.offset	yes	string the time range, shown in accordance with ISO 8601	Stands for the deviation of daylight saving time from the zone time in minutes (only used in the dst object).
rule.*.start.month	yes	number	Used in the "dst.start/std.start" objects. Stands for the month in which the time starts.
rule.*.start.week	yes	number	Used in the "dst.start/std.start" objects. Stands for the week in which the time change is performed. Value 1: First occurrence of the day of the week in the month Value 5: Last occurrence of the day of the week in the month

Name	Required	Data type	Description
rule.*.start. day_of_week	yes	string	Used in the "dst.start/std.start" objects. Describes the day of the week on which the time change is performed as a string with 3 characters. The following values are possible: • sun • mon • tue • wed • thu • fri • sat
rule.*.start.hour	yes	number	Used in the "dst.start/std.start" objects. Describes the hour in which the time change is performed.
rule.*.start.minute	yes	number	Used in the "dst.start/std.start" objects. Describes the minute in which the time change is performed.

Example 1

A daylight saving time rule is configured in the following example.

```
{
"current_offset": 60,
"utc_offset": 120,
"rule":
{
"dst":
{
"offset": 60,
"start":
{
"month": 4,
"week": 4,
"day_of_week": "sun",
"hour": 3,
"minute": 0
}
},
"std":
{
"start":
{
"month": 10,
"week": 5,
"day_of_week": "sun",
"hour": 2,
```

```
"minute": 0
}
}
}
}
```

Example 2

In the following example, no daylight saving time rule is configured.

```
{
"current_offset": 60,
"utc_offset": 300
}
```

5.8 Backing up and restoring the configuration

5.8.1 Plc.CreateBackup

With this API method, you request a ticket to create a backup file of the CPU configuration. To call the Plc.CreateBackup method, you need the "backup_plc" permission.

Response structure

The method returns a string with a ticket ID for creating a backup file.

Example

The following example shows a generated ticket ID for creating a backup file.

```
"NDU2Nzg5MDEyMzQ1Njc4OTAxMjM0"
```

An example of further processing of the ticket ID can be found in the Ticket mechanism (Page 160) section.

Possible error messages

Error code	Error message	Meaning
2	Permission denied	The current authentication token is not authorized to call this method. Log on with a user account that has sufficient privileges to call this method.
4	No resources	You have exhausted all tickets in this user session. Close existing tickets to free up resources. Then call the method again.

Error code	Error message	Meaning
1000	Backup creation in progress	The creation of a backup file is in progress.
1001	Backup restoration in progress	The restoration of a saved configuration is currently being carried out. It is not possible to perform both operations at the same time.
1004	PLC not in STOP	A backup file can only be created when the CPU is in STOP mode. Set the CPU to STOP mode and execute the request again.

Overview of creating a backup file

Perform the steps below to create a backup file:

1. Authenticate yourself with the API method Api.Login.
2. Request a ticket for creating a backup file using the Plc.CreateBackup method.
   If you are authorized to call this method and the CPU is in STOP, the CPU creates a ticket. Once a ticket has been created for the creation of a backup file, it is no longer possible to switch to the RUN operating state. This ensures the consistency of the backup file.
3. Use the ticket end point to start downloading the backup file.
   The CPU informs you about the current status of the generation in the additional ticket information. Additional information is available using the Api.BrowseTickets(id) method.
4. After the download has been completed successfully, the CPU sets the ticket to the "completed" status.
5. Close the ticket using the Api.CloseTicket(id) method.
6. Now you can set the CPU back to RUN mode.

Format of the backup file name

The default file name of the backup file, which is returned by the HTTP content disposition header, contains the following information:

- Time stamp in Coordinated Universal Time (UTC)
- Module name
- Name of the TIA Portal project
- F-collective signature (for F-CPUs)

5.8.2 Plc.RestoreBackup

Use this API method to request a ticket that restores the configuration of a CPU via a backup file.

To call the Plc.RestoreBackup method, you need the "restore_plc" permission.

Structure of the request

The following table contains information about the individual parameters of the request:

Table 5-13 Plc_RestoreBackup_Request (object)

Name	Required	Data type	Description
password	yes	string	The required password for the logged on user An empty password string is transferred for the "Everybody" user. The "passwort" attribute is therefore always required. The password must be the password of the user who previously authenticated via Api.Login and whose session token was used to call the Plc.RestoreBackup method.

Example

The following example shows how to enter a password.

```
{
"password": "SecurePassword"
}
```

Response structure

The method returns a string. The string contains a ticket ID that you can use to restore the configuration on a backup file.

Example

The following example shows a generated ticket ID for restoring the configuration of a CPU.

```
"NDU2Nzg5MDEyMzQ1Njc4OTAxMjM0"
```

An example of further processing of the ticket ID can be found in the Ticket mechanism (Page 160) section.

Possible error messages

Error code	Error message	Meaning
2	Permission denied	The current authentication token is not authorized to call this method.
4	No resources	You have exhausted all tickets in this user session. Close existing tickets to free up resources. Then call the method again.
5	System is read-only	The system cannot be written to (SIMATIC Memory Card is read-only). Changes are currently not permitted.
1000	Backup creation in progress	The creation of a backup file is in progress.

Error code	Error message	Meaning
1001	Backup restoration in progress	The restoration of a saved configuration is currently being carried out. It is not possible to perform both operations at the same time.
1003	Restore not possible through this interface	Calling the method via CM/CP modules, via IP the address or via a virtual CP is not allowed. Perform the recovery via the IP address of one of the network interfaces of a CPU.
1004	PLC not in STOP	A backup file can only be created when the CPU is in STOP mode. Set the CPU to STOP mode and execute the request again.
1005	Legitimation failed	The user legitimation was not successful. Reasons for this can be the password for the "Everybody" user, or an invalid password was entered.

Overview of the recovery of the CPU configuration

The following section shows you all steps that are required to restore the CPU configuration.

NOTE

Tracking the recovery process via Api.BrowseTickets

The Api.BrowseTickets method provides information about the current status of the recovery.

Use this method to found out the recovery process phase, and whether the recovery process was successful.

1. Authenticate yourself with the API method Api.Login.
2. Request a ticket for restoring a CPU configuration using the Plc.RestoreBackup method.
3. Use the ticket end point to start the upload of the backup file.
   The CPU receives the file header and checks whether it is valid. After a successful check, the CPU restarts after 3 seconds. If the file header is invalid, the CPU aborts the restoration process and the ticket changes to the `failed` status.
   When checking the restoration process, the following states may occur. These states can be read out via the API method Api.BrowseTickets.

Status	Description
`waiting`	The waiting state is active until the upload of the backup file is started.
`ongoing`	As soon as the upload of the backup file has started, the state changes to `ongoing`.
`rebooting_format`	The CPU is restarting. The reason for the restart is the formatting of the SIMATIC Memory Card.
`rebooting`	The CPU is restarting. The reason for the restart is the activation of the restored project.

Status	Description
`failed`	An error occurred during the upload of the backup file. You can abort the upload when an error occurs.
`failed_failsafe`	An error occurred during the execution of the fail-safe function. Ensure that the password passed to the Plc.RestoreBackup method is correct and the user has the F-Admin function right.
`failed_wrong_interface`	You have started the upload of the backup file to the CPU via a CM or CP interface.

NOTE

Loss of the configuration during the restoration process

Note that the CPU loses the configuration during the restoration process.

4. Before restarting the CPU, it is possible to read the status with the Api.BrowseTickets(id) method. The additional information informs you about restarting the CPU and formatting the SIMATIC Memory Card as next steps.
   To be informed about the process and all messages, we recommend that you read the information of the Api.BrowseTickets method cyclically, e.g. every second.
5. The CPU then restarts and formats the SIMATIC Memory Card.
   During the restart you can use the Api.Ping method to determine when the CPU is available again.
   During the restart, the Api.BrowseTickets and Api.Ping methods do not respond.
6. The CPU puts the web server into a state with reduced functionality. Only a limited number of API methods is available to you during this time.

NOTE

If you want to restore the CPU to its normal state during the restoration process, perform a download via the TIA Portal. After the download, the CPU and the web server are again in normal operation and all functions are available for use.

7. Use the Api.Login method to log on with the logon data that were also valid at the beginning of the restoration process.
8. Request a ticket for the restore using the Plc.RestoreBackup method.
9. Upload the backup file via the ticket end point.
   After successful upload, the CPU restarts after 3 seconds.
10. Before restarting the CPU, it is possible to read the status with the Api.BrowseTickets(id) method. The additional information informs you about the restart and about the successful upload.
    The restart is required to activate the new project.
11. During the restart you can use the Api.Ping method to determine when the CPU is available again.
12. As soon as the CPU is available again, the restoration process is completed and the recovered project is loaded into the CPU.

You can now log in with the credentials of a user of the project loaded into the CPU, if desired.

Further work in the API requires a new login with the Api.Login method.

5.9 Accessing the contents of the SIMATIC Memory Card

The methods described in this section allow you to access the files in the file system on the SIMATIC Memory Card. You can access standard files as well as your own user files (UserFiles), DataLogs, and recipes.

5.9.1 Files.Browse

This method returns a list of the contents of subdirectories and attributes of specific directories or files which are located on the SIMATIC Memory Card of a CPU.
To call the Files.Browse method, you need the "read_file" permission.

Structure of the request

The following table contains information about the individual parameters of the request:

Table 5-14 Files_Browse_Request (object)

Name	Required	Data type	Description
resource	yes	string	Path to the directory or file from the root node. For the root node, the use of a "/" is necessary. You can optionally use a "/" for the root node. If the attribute "resource" is missing or empty, the system interprets it as "/".

Example

The following example shows a request specifying the desired path to a txt file:

```
{
"resource": "/myfolder/file.txt"
}
```

The following example shows a request specifying the desired path to a csv file (datalog).

```
{
"resource": "/Datalogs/datalog1.csv"
}
```

Response structure

The following tables show the structure of server responses to successful requests.

Table 5-15 Communication_ReadStatistics_Response (object)

Name	Required	Data type	Description
resources	yes	array of files_Browse_Entry_Response	Resource list.

Table 5-16 Files_Browse_Entry_Response (object)

Name	Required	Data type	Description
name	yes	string	Name of the entry.
type	yes	string	Type of entry, either "file" or "dir".
size	No	number	Size of the file in bytes (if type is "file").
last_modified	yes	string	ISO8601 time stamp as string; time stamp of the last change.
state	No	string	Attribute reserved for active or inactive DataLogs in the "Data-Logs" folder

Example

The following example shows the response to a request with a file and a folder:

```
{
"resources":
[
{
"name": "my_dir",
"type": "dir",
"last_modified": "2012-04-23T18:25:43Z"
},
{
"name": "my_file.txt",
"type": "file",
"size": 87654567,
"last_modified": "2012-04-23T18:25:43Z"
}
]
}
```

The following example shows the response to a query with an active csv file:

```
{
"resources":
[
{
"name": "datalog1.csv",
"type": "file",
"size": 87654567,
"last_modified": "2012-04-23T18:25:43Z",
"state": "active"
}
]
}
```

Possible error messages

Error code	Error message	Meaning
2	Permission denied	The current authentication token is not authorized to call this method.
4	No resources	The system does not have the required resources to carry out this request.
300	Path contains an illegal sequence	The parameter specified under "resource" violates the naming convention (e.g. contains invalid characters).
301	Entity access is restricted	The parameter specified under "resource" is subject to access restrictions.
302	Entity does not exist	The file or path to be accessed by the "resource" parameter does not exist.
307	Maximum path depth exceeded	The parameter specified under "resource" exceeds the maximum path length.

5.9.2 Files.Download

This method creates a ticket that you can use to download a file from the CPU.
To call the Files.Download method, you need the "read_file" permission.
For more information about the ticket mechanism, see the Ticket mechanism (Page 160) section.

Structure of the request

The following table contains information about the individual parameters of the request:

Table 5-17 Files_Download_Request (object)

Name	Required	Data type	Description
resource	yes	string	Path to the file from the root node of the SIMATIC Memory Card

Examples

The following example shows a request specifying the path to a txt file:

```
{
"resource": "/myfolder/file.txt"
}
```

The following example shows a request specifying the path to a csv file (datalog):

```
{
"resource": "/Datalogs/datalog1.csv"
}
```

Response structure

If successful, the method returns a string with a ticket ID.

Example

The following example shows a generated ticket ID for downloading the file:

```
"NDU2Nzg5MDEyMzQ1Njc4OTAxMjM0"
```

NOTE
Ticket-based file downloads
For all ticket-based file downloads, the ticket returns a file name in the HTTP content disposition header. You can use this file name as the default file name, or as the name used by the web browser as the default name.

Possible error messages

Error code	Error message	Meaning
2	Permission denied	The user does not have read permissions.
4	No resources	The system does not have the required resources to carry out this request.
300	Path contains an illegal sequence	The parameter specified under "resource" violates the naming convention (e.g. contains invalid characters).
301	Entity access is restricted	The parameter specified under "resource" is subject to access restrictions.
302	Entity does not exist	The file or path to be accessed by the "resource" parameter does not exist.
303	Entity in use	The file or path to be accessed by the "resource" parameter is locked because of another operation (e.g. because of a write access).
305	Entity not a directory	The directory or subdirectory specified under "resource" is attempting to access a file.
306	Entity not a file	The file name specified under "resource" is attempting to access a directory.
307	Maximum path depth exceeded	The parameter specified under "resource" exceeds the maximum path length.

5.9.3 Files.Create

This method creates a ticket that you use to upload a file to the CPU.
To call the Files.Create method, you need the "write_file" permission.
For more information about the ticket mechanism, see the Ticket mechanism (Page 160) section.

Structure of the request

The following table contains information about the individual parameters of the request:

Table 5-18 Files_Create_Request (object)

Name	Required	Data type	Description
resource	yes	string	Path to the file from the root node of the SIMATIC Memory Card

Example

The following example shows a request specifying the path to the desired file:

```
{
"resource": "/mydir/file.txt"
}
```

Response structure

If successful, the method returns a string with a ticket ID.

Example

The following example shows a generated ticket ID for uploading the file:

```
"NDU2Nzg5MDEyMzQ1Njc4OTAxMjM0"
```

Possible error messages

Error code	Error message	Meaning
2	Permission denied	The user does not have read permissions.
4	No resources	The system does not have the required resources to carry out this request.
5	System is read-only	The system cannot be written to at present. File changes are not possible because the SIMATIC Memory Card is read-only.
300	Path contains an illegal sequence	The parameter specified under "resource" violates the naming convention (e.g. contains invalid characters).
301	Entity access is restricted	The parameter specified under "resource" is subject to access restrictions.
302	Entity does not exist	The directory or subdirectory to be accessed by the "resource" parameter does not exist.
304	Entity already exists	The parameter specified under "resource" is attempting to create a file that already exists.
305	Entity not a directory	The directory or subdirectory specified under "resource" is attempting to access a file.

Error code	Error message	Meaning
307	Maximum path depth exceeded	The parameter specified under "resource" exceeds the maximum path length.

5.9.4 Files.Rename

This method changes the name of a file or directory. You can also use this method to move files from one directory to another.
To call the Files.Rename method, you need the "write_file" permission.

NOTE

Note that you cannot use this method for the "DataLogs" folder.

Structure of the request

The following table contains information about the individual parameters of the request:

Table 5-19 Files_Rename_Request (object)

Name	Required	Data type	Description
resource	yes	string	Current file path or directory path.
new_resource	yes	string	New file path or directory path.

Example

The following example shows a change of the file name.

```
{
"resource": "/folder/old_file_name.txt",
"new_resource": "/folder/new_file_name.txt"
}
```

Response structure

If successful, the method returns the Boolean value "true".

Possible error messages

Error code	Error message	Meaning
2	Permission denied	The user does not have write permission for the file.
4	No resources	The system does not have the required resources to carry out this request.

Error code	Error message	Meaning
5	System is read-only	The system cannot be written to (SIMATIC Memory Card is read-only). Changes are currently not permitted.
300	Path contains an illegal sequence	The parameter specified under "resource" and/or "new_resource" violates the naming convention (e.g. contains invalid characters).
301	Entity access is restricted	The parameter specified under "resource" and/or under "new_resource" is subject to access restrictions.
302	Entity does not exist	The file or path to be accessed by the parameter "resource" and/or under "new_resource" does not exist.
303	Entity in use	The parameter specified under "resource" is accessing a file or directory that is already locked by another operation (e.g. read or write).
304	Entity already exists	The parameter specified in "new_resource" is attempting to create a file or directory that already exists.
305	Entity not a directory	The parameter specified under "resource" and/or "new_resource" is attempting to access a file.
307	Maximum path depth exceeded	The parameter specified under "resource" exceeds the maximum path length.
308	Directories cannot be moved	The parameter specified under "resource" and/or "new_resource" is attempting to move a directory structure. Moving a directory structure is not allowed.

5.9.5 Files.Delete

This method deletes files from the CPU.
To call the Files.Delete method, you need the "write_file" permission.

NOTE

You can also delete DataLogs with this method, but only if the DataLog is not currently in use. If the DataLog is currently in use, error message 303 appears: Entity in use.

Structure of the request

The following table contains information about the individual parameters of the request:

Table 5-20 Files_Delete_Request (object)

Name	Required	Data type	Description
resource	yes	string	Path to the file from the root node of the SIMATIC Memory Card

Example

The following example shows a request specifying the path to a txt file:

```
{
"resource": "/myfolder/file.txt"
}
```

The following example shows a request specifying the path to a csv file (datalog).

```
{
"resource": "/Datalogs/datalog1.csv"
}
```

Response structure

If successful, the method returns the Boolean value "true".

Possible error messages

Error code	Error message	Meaning
2	Permission denied	The user does not have write permission for the file.
4	No resources	The system does not have the required resources to carry out this request.
5	System is read-only	The system cannot be written to at present. File changes are not possible because the SIMATIC Memory Card is read-only.
300	Path contains an illegal sequence	The parameter specified under "resource" violates the naming convention (e.g. contains invalid characters).
301	Entity access is restricted	The parameter specified under "resource" is subject to access restrictions.
302	Entity does not exist	The directory or subdirectory to be accessed by the "resource" parameter does not exist.
303	Entity in use	The parameter specified under "resource" is accessing a file or directory that is already locked by another operation (e.g. read or write).

5.9.6 Files.CreateDirectory

This method creates a new directory on the CPU.
To call the Files.CreateDirectory method, you need the "write_file" permission.

Structure of the request

The following table contains information about the individual parameters of the request:

Table 5-21 Files_CreateDirectory_Request (object)

Name	Required	Data type	Description
resource	yes	string	Path to the file from the root node of the SIMATIC Memory Card

Example

The following example shows a request specifying the path to the desired directory:

```
{
"resource": "/SPH_Storage/OPCUA"
```

```
}
```

Response structure

If successful, the method returns the Boolean value "true".

Possible error messages

Error code	Error message	Meaning
2	Permission denied	The user does not have write permissions.
4	No resources	The system does not have the required resources to carry out this request.
5	System is read-only	The system cannot be written to at present. Changes are not possible because the SIMATIC Memory Card is read-only.
300	Path contains an illegal sequence	The parameter specified under "resource" violates the naming convention (e.g. contains invalid characters).
301	Entity access is restricted	The parameter specified under "resource" is subject to access restrictions.
302	Entity does not exist	The directory to be accessed by the "resource" parameter does not exist.
304	Entity already exists	The parameter specified under "resource" is attempting to create a directory that already exists.
305	Entity not a direct-ory	The parameter specified under "resource" is attempting to access a file.
307	Maximum path depth exceeded	The parameter specified under "resource" exceeds the maximum path length.

5.9.7 Files.DeleteDirectory

This method deletes an existing directory from the CPU.
To call the Files.DeleteDirectory method, you need the "write_file" permission.

NOTE
Recursive deletion
Note that recursive deletion is not possible, and that the directory must be empty before you can delete it.

Structure of the request

The following table contains information about the individual parameters of the request:

Table 5-22 Files_DeleteDirectory_Request (object)

Name	Required	Data type	Description
resource	yes	string	Path of the directory to be deleted.

Example

The following example shows a request specifying the path to the desired directory:

```
{
"resource": "/SPH_Storage"
}
```

Response structure

If successful, the method returns the Boolean value "true".

Possible error messages

Error code	Error message	Meaning
2	Permission denied	The user does not have write permissions.
4	No resources	The system does not have the required resources to carry out this request.
5	System is read-only	The system cannot be written to at present. Changes are not possible because the SIMATIC Memory Card is read-only.
300	Path contains an illegal sequence	The parameter specified under "resource" violates the naming convention (e.g. contains invalid characters).
301	Entity access is restricted	The parameter specified under "resource" is subject to access restrictions.
302	Entity does not exist	The directory to be accessed by the "resource" parameter does not exist.
303	Entity in use	The parameter specified under "resource" is accessing a directory that is already locked by another operation (e.g. read or write).
305	Entity not a directory	The parameter specified under "resource" is attempting to access a file.
307	Maximum path depth exceeded	The parameter specified under "resource" exceeds the maximum path length.

5.9.8 DataLogs.DownloadAndClear

The DataLogs.DownloadAndClear method creates a ticket to download DataLogs from the CPU and delete them after processing.

NOTE

If you do not want to delete the contents of DataLogs after downloading, use the Files.Download method instead.

For more information about this method, see the Files.Download (Page 191) section.

NOTE

You can apply the DataLogs.DownloadAndClear method only if the DataLog is not currently in use. If the DataLog is currently in use, the error message 303: Entity in use appears.

To call the Files.DownloadAndClear method, you need the write_file permission.

Structure of the request

The following table contains information about the individual parameters of the request:

Table 5-23 DataLogs_DownloadAndClear_Request (object)

Name	Required	Data type	Description
resource	yes	string	The name of the DataLog you want to download. Alternatively, you can use a path starting with /datalogs/ (see examples below).

Examples

The following example shows a request specifying the name of the desired DataLog.

```
{
"resource": "datalog1"
}
```

The following example shows a request with specification of the path to the desired DataLog:

```
{
"resource": "/datalogs/datalog1"
}
```

Response structure

If successful, the method returns a string with a ticket ID.

Example

The following example shows a generated ticket ID for downloading and deleting the DataLog:

```
"NDU2Nzg5MDEyMzQ1Njc4OTAxMjM0"
```

Possible error messages

Error code	Error message	Meaning
2	Permission denied	The user does not have write permissions.
4	No resources	The system does not have the required resources to carry out this request.
5	System is read-only	The system cannot be written to at present. Changes to the log file are not possible because the SIMATIC Memory Card is write-protected.
303	Entity in use	The file or path to be accessed by the "resource" parameter is locked because of another operation (e.g. the user program is currently accessing the DataLog).
309	Entity is not a valid data log	The parameter specified under "resource" is attempting to access an unlinked DataLog. An unlinked DataLog cannot be deleted.

5.10 Web applications that can be loaded by the user

With the Web server as of firmware version V2.9, you can use web applications that can be loaded by the user (user-defined). In the following, we will refer to "web applications" for short.

Web applications offer you a set of methods to manage web applications via Web API. You can use all available Web API methods within a web application.

NOTE

HTTP-Range-Requests

For access to web application resources, the web Server provides you with a limited support for HTTP range requests. These requests allow you to read individual areas of a resource.

Advantages

Web applications offer you advantages compared to the older method that provided customer pages via the system function SFC 99 in STEP 7:

- The resources are saved in the associated web application. Via the Web API, you can download the resources to your PC, edit them and upload them back to the CPU. This procedure results in significantly reduced development times of customer pages.
- Unlike the previous customer pages, you can test the web application during implementation without having to load it onto the CPU.
- You can access resources independent of the CPU mode (e.g. RUN, STOP) and update these.
- Web applications are also available in the STOP mode of the CPU.
- No synchronization between the user program and Web server required by the SFC 99 instruction.
- You can access multiple CPUs within a web application using the Web API .
- The CPU supports saving multiple web applications that you can access simultaneously via the HTTP end point.
- Access to the resources of a web application via the HTTP end point can be activated or deactivated for each application. In so doing, an administrator can deactivate access to a web application, for example, to update the resources consistently.

- You can specify a standard entry page for each application. When you visit the basic URL of a web application, such as https://[ip]/~[application_name], you are automatically being forwarded to the configured home page.
- You can specify an individual media type (MIME type) for each resource.
- You can specify a visibility flag for each resource:
  - Public resource: Access without user authentication
  - Protected resource: Access limited to authenticated users with access right "open_user_pages"
- You can specify for each resource:
  - The time stamp of the resource change
  - The value for the HTTP header ETag

  In so doing, you reduce the communication load on the CPU. This enables the caching of resource files by the web browser.

NOTE

When you use the Web API for managing web applications, the TIA Portal project in the SIMATIC.S7S directory on the SIMATIC Memory Card changes. Your TIA Portal project is extended by the option of saving resources (e.g. HTML, CSS, JavaScript, etc.) in the project but outside of the data blocks of the user program.

As with the previous customer pages, the web applications must not contain any instructions in the STEP 7 user program and are thus purely static files without dynamic content.

Methods for managing web applications

The following methods are available to manage web applications using Web API:

Table 5-24 Methods for managing web applications

Method	Explanation
WebApp.Create (Page 203)	Enables users to create a new web application.
WebApp.Delete (Page 204)	Enables users to delete an existing web application.
WebApp.Rename (Page 205)	Enables users to change the name of an existing web application.
WebApp.Browse (Page 206)	Enables users to display a list of web applications with the associated properties.
WebApp.SetState (Page 208)	Enables users to activate /deactivate a web application for access from the HTTP end point.
WebApp.SetDefaultPage (Page 209)	Enables users to define a default page for the web application.
WebApp.SetNotFoundPage (Page 210)	Enables users to define a page that is loaded when a requested resource does not exist in the web application.
WebApp.SetNotAuthorizedPage (Page 211)	Enables users to define a page that is loaded when a requested resource is not public (protected) in the web application.

Methods for managing resources

The following methods are available to manage the resources of a web application using Web API:

Table 5-25 Web applications: Methods for managing resources

Method	Explanation
WebApp.BrowseResources (Page 213)	Enables users to display all resources with their properties that are assigned to a web application.
WebApp.CreateResource (Page 215)	Enables users to create a new resource in a web application.
WebApp.DeleteResource (Page 216)	Enables users to delete an existing resource in a web application.
WebApp.RenameResource (Page 217)	Enables users to change the name of an existing resource in a web application.
WebApp.DownloadResource (Page 219)	Allows the user to download a resource from a web application from the CPU.
WebApp.SetResourceVisibility (Page 220)	Enables users to change the visibility of a resource in a web application.
WebApp.SetResourceETag (Page 221)	Enables users to change or delete the ETag value of a resource in a web application.
WebApp.SetResourceMediaType (Page 222)	Enables users to change the media type of a resource in a web application.
WebApp.SetResourceModificationTime (Page 224)	Enables users to set the modification time of a resource in a web application.

End point for web applications

Web applications are only accessible via secure HTTPS communication. This increases security when accessing the resources of the CPU. When the Web server was configured for HTTP access, requests via HTTP are automatically rerouted to an HTTPS connection.

A web application is accessible via the following URL, provided that the default page (default_page) or the substitute page of an application (not_found_page) is configured:

```
https://[ip]/~[application_name]
```

A resource of a web application can be reached via the following URL:

```
https://[ip]/~[application_name]/[resource_name]
```

NOTE

The tilde symbol "~" is important in the path and must always exist for web applications.

Procedure to access resources of a protected web application

If resources of a web application are protected and you want to access/modify data of this web application, then you have to authenticate yourself first, for example on a public page.

For example, perform the following step on the default page:

- From JavaScript, call the Api.Login method using the "include_web_application_cookie" parameter.
  Result: If authentication is successful, the Api.Login method returns the session token and a cookie for accessing the protected files of a web application (see also section Api.Login (Page 150)).
  JavaScript is used to set the cookie "web_application_cookie" with a value from the HTTP response of the login as cookie "siemens_web_secure".

NOTE

To ensure that the API token is not lost after the web page is called up again, you can save the API token in a cookie or in the LoadStorage of the web browser, for example, using JavaScript.

The behavior after timeout for protected web applications is the same as the behavior after timeout for web API sessions: After a timeout, the cookie becomes invalid for access to the protected web applications. Reloading a resource file of a web application does not extend the session. Use appropriate methods of the Web API to stay logged in (see section Web API Sessions (Page 159)).

Rules for a valid application name

The application name may be max. 100 letters/characters long. The following letters and characters are permitted for the application name:
`A-Z, a-z, 0-9, -_.+"`

Rules for a valid resource name

The resource name can be max. 200 letters/characters in length. The following letters and characters are permitted for the resource name:
`A-Z, a-z, 0-9, -_.+()/|,*!'"`

Rules for a valid name for the media type

The web browser needs a media type to display a file correctly or to open it. The format of the media type is standardized. Valid media types are, for example, "text/html" or "image/jpeg". You can use all valid media types.

More information can be found on the Internet by entering "MIME type" or "media type".

5.10.1 WebApp.Create

With the WebApp.Create method, you can create a new web application in the CPU.

To call the WebApp.Create method, you need the "manage_user_pages" authorization.

Structure of the request

The following table informs you about the necessary parameters for the request.

Table 5-26 WebApp_Create_Request (object)

Name	Required	Data type	Description
name	yes	string	The name of the user-defined web application.
state	no, default is "enabled"	string	The status of the application is: • "disabled": Pages cannot be reached via HTTP end point • "enabled": Pages can be reached via HTTP end point

Example

In the following example, the user creates an application with the name "application_1".

```
{
"name": "application_1",
"state": "enabled"
}
```

Response structure

If successful, the server returns the Boolean value "true".

Possible error messages

The following table shows the possible error messages of the WebApp.Create method.

Error code	Error message	Meaning
2	Permission denied	The current authentication token is not authorized to call this method. Log on with a user account that has sufficient privileges to call this method.
5	System is read only	The system is currently in a write-protected state. Changes to web applications are currently not permitted.
500	Application name already exists	An application with the name already exists. Assign a name that does not exist yet.
502	Application limit reached	The maximum number of web applications has been reached. Delete applications that you do not need to free up resources for new applications.
503	Invalid application name	The name of the application is invalid. Assign an application name that meets the rules for a valid application name (see section Web applications that can be loaded by the user (Page 200)).

5.10.2 WebApp.Delete

With the WebApp.Delete method, you delete an existing web application that was loaded by the user with all its web page resources.

To call the WebApp.Delete method, you need the "manage_user_pages" authorization.

Structure of the request

The following table informs you about the necessary parameters for the request.

Table 5-27 WebApp_Delete_Request (object)

Name	Required	Data type	Description
name	yes	string	The name of the web application that is deleted

Example

In the following example, the user deletes an application with the name "application1".

```
{
"name": "application1"
}
```

Response structure

If successful, the server returns the Boolean value "true".

Possible error messages

The following table shows the possible error messages of the WebApp.Delete method.

Error code	Error message	Meaning
2	Permission denied	The current authentication token is not authorized to call this method. Log on with a user account that has sufficient privileges to call this method.
3	System is busy	The desired operation cannot be performed because the system is currently performing a different request. Restart the query as soon as the current operation is complete.
5	System is read only	The system is currently in a write-protected state. Changes to web applications are currently not permitted.
501	Application does not exist	An application with this name does not exist.

5.10.3 WebApp.Rename

With the WebApp.Rename method, you change the name of the web application to a new name.
To call the WebApp.Rename method, you need the "manage_user_pages" authorization.

Structure of the request

The following table informs you about the necessary parameters for the request.

Table 5-28 WebApp_Rename_Request (object)

Name	Required	Data type	Description
name	yes	string	The current name of the web application.

Name	Required	Data type	Description
new_name	yes	string	The new name of the web application.

Example

In the following example, the user changes the name of the application from "application1" to "application_new".

```
{
"name": "application1"
"new_name": "application_new"
}
```

Response structure

If successful, the server returns the Boolean value "true".

Possible error messages

The following table shows the possible error messages of the WebApp.Rename method.

Error code	Error message	Meaning
2	Permission denied	The current authentication token is not authorized to call this method. Log on with a user account that has sufficient privileges to call this method.
5	System is read only	The system is currently in a write-protected state. Changes to web applications are currently not permitted.
500	Application name already exists	An application with the name already exists. Assign a name that does not exist yet.
501	Application does not exist	An application with this name does not exist.
503	Invalid application name	The name of the application is invalid. Assign an application name that meets the rules for a valid application name (see section Web applications that can be loaded by the user (Page 200)).

5.10.4 WebApp.Browse

The WebApp.Browse method returns alternatively:

- A list of all web applications with the associated properties.
- The properties for a specific web application

No authorizations are needed for calling the WebApp.Browse method.

Structure of the request

The following table informs you about the necessary parameters for the request.

Table 5-29 WebApp_Browse_Request (object)

Name	Required	Data type	Description
name	No, default is an empty string	string	If this parameter does not exist, all applications will be returned by the method. If the parameter is available, the list will contain only the application whose name matches this parameter. If you have not specified a name, the list may also be empty, depending on whether applications are present or not.

Example

In the following example, the user specifies the name of the "application1" for the list.

```
{
"name": "application1"
}
```

Response structure

The following tables show the structure of server responses to successful requests.

Table 5-30 WebApp_Browse_Request (object)

Name	Required	Data type	Description
max_applications	yes	number	Maximum number of applications supported by the CPU
applications	yes	array of WebApp_Browse_Application_Respon-se	List of the applications in the CPU

Table 5-31 WebApp_Browse_Application_Response (object)

Name	Required	Data type	Description
name	yes	string	The name of the application
state	yes	string	The status of the application: • "disabled": Pages cannot be reached via HTTP end point • "enabled": Pages can be reached via HTTP end point
type	yes	string	The type of application: • "user": created by the user
default_page	No	string	Default page of the application when no resource name was specified when accessing the web application
not_found_page	No	string	Substitute page in an application when the requested resource does not exist
not_authorized_page	No	string	If the user has tried to access a protected resource to which the user does not have access. This page can, for example, be implemented as a login page.

Example

In the following example, the user requests responses from the server.

```
{
"max_applications": 4,
"applications": [
{
"name": "application1",
"state": "enabled",
"type": "user",
"default_page": "index.html"
},
{
"name": "vottheapp",
"state": "enabled",
"type": "vot"
}
]
}
```

Possible error messages

The following table shows the possible error messages of the WebApp.Browse method.

Error code	Error message	Meaning
501	Application does not exist	An application with this name does not exist.

5.10.5 WebApp.SetState

With the WebApp.SetState method, you can activate or deactivate a web application that was loaded by the user. A web application that was loaded by the user and is deactivated cannot be called by the HTTP end point.
To call the WebApp.SetState method, you need the "manage_user_pages" authorization.

Structure of the request

The following table informs you about the necessary parameters for the request.

Table 5-32 WebApp_SetState_Request (object)

Name	Required	Data type	Description
name	yes	string	Name of the web application whose status is changed
state	yes	string	The status of the application is: • disabled; pages cannot be reached via HTTP end point • enabled; pages can be reached via HTTP end point

Example

In the following example, the user deactivates the application with the name "webapp":

```
{
"name": "webapp",
"state": "disabled"
}
```

Response structure

If successful, the server returns the Boolean value "true".

Possible error messages

The following table shows the possible error messages of the WebApp.SetState method.

Error code	Error message	Meaning
2	Permission denied	The current authentication token is not authorized to call this method. Log on with a user account that has sufficient privileges to call this method.
5	System is read only	The system is currently in a write-protected state. Changes to web applications are currently not permitted.
501	Application does not exist	An application with this name does not exist.

5.10.6 WebApp.SetDefaultPage

With the WebApp.SetDefaultPage method, you set a default page for a user-defined web application. This page is loaded if you have not assigned a resource name when accessing the web application.

To call the WebApp.SetDefaultPage method, you need the "manage_user_pages" authorization.

Structure of the request

The following table informs you about the necessary parameters for the request.

Table 5-33 WebApp_SetDefaultPage_Request (object)

Name	Required	Data type	Description
name	yes	string	The name of the web application for which the default page is to be configured
resource_name	yes	string	The name of the resource in the web application that was loaded by the user An empty character string indicates that the default page is to be deleted.

Example

In the following example, the page "index.html" is used as a resource in the web application "application_1".

```
{
"name": "application_1",
"resource_name": "index.html"
}
```

Response structure

If successful, the server returns the Boolean value "true".

Possible error messages

The following table shows the possible error messages of the WebApp.SetDefaultPage method.

Error code	Error message	Meaning
2	Permission denied	The current authentication token is not authorized to call this method. Log on with a user account that has sufficient privileges to call this method.
5	System is read only	The system is currently in a write-protected state. Changes to web applications are currently not permitted.
501	Application does not exist	An application with this name does not exist.
506	Resource does not exist	The requested resource does not exist in the application. When calling this method, select a resource in the application.
505	Resource visibility is not public	The requested resource is not marked as "public". You should change the resource to "public" or select another resource that is already "public".

5.10.7 WebApp.SetNotFoundPage

With the WebApp.SetNotFoundPage method, you set a page for a user-defined web application. This page is loaded if you have used a resource name that does not exist when accessing the web application.
To call the WebApp.SetNotFoundPage method, you need the "manage_user_pages" authorization.

Structure of the request

The following table informs you about the necessary parameters for the request.

Table 5-34 WebApp_SetNotFoundPage_Request (object)

Name	Required	Data type	Description
name	yes	string	The name of the web application whose page must be changed

Name	Required	Data type	Description
resource_name	yes	string	The name of the resource in the web application that was loaded by the user An empty character string indicates that the PageNotFound page should no longer be set.

Example

In the following example, the page "404.html" is used as a resource in the "application_1" web application.

```
{
"name": "application_1",
"resource_name": "404.html"
}
```

Response structure

If successful, the server returns the Boolean value "true".

Possible error messages

The following table shows the possible error messages of the WebApp.SetNotFoundPage method.

Error code	Error message	Meaning
2	Permission denied	The current authentication token is not authorized to call this method. Log on with a user account that has sufficient privileges to call this method.
5	System is read only	The system is currently in a write-protected state. Changes to web applications are currently not permitted.
501	Application does not exist	An application with this name does not exist.
506	Resource does not exist	The requested resource does not exist in the application. When calling this method, select a resource in the application.
505	Resource visibility is not public	The requested resource is not marked as "public". You should change the resource to "public" or select another resource that is already "public".

5.10.8 WebApp.SetNotAuthorizedPage

With the WebApp.SetNotAuthorizedPage method, you set a publicly visible page for a user-defined web application. This page is loaded if you have used a resource name that cannot be accessed publicly (protected) when accessing the web application, thus accessing the web application without a valid cookie.

You can get a valid cookie using the Api.Login (Page 150) method with the "include_web_application_cookie" parameter.

To call the WebApp.SetNotAuthorizedPage method, you need the "manage_user_pages" authorization.

Structure of the request

The following table informs you about the necessary parameters for the request.

Table 5-35 WebApp_SetDefaultPage_Request (object)

Name	Required	Data type	Description
name	yes	string	The name of the web application whose public page must be changed
resource_name	yes	string	The name of the resource in the web application that was loaded by the user An empty character string indicates that the non-public page is to be deleted.

Example

In the following example, the page "login.html" is used as a resource in the "application_1" web application.

```
{
"name": "application_1",
"resource_name": "login.html"
}
```

Response structure

If successful, the server returns the Boolean value "true".

Possible error messages

The following table shows the possible error messages of the WebApp.SetNotAuthorizedPage method.

Error code	Error message	Meaning
2	Permission denied	The current authentication token is not authorized to call this method. Log on with a user account that has sufficient privileges to call this method.
5	System is read only	The system is currently in a write-protected state. Changes to web applications are currently not permitted.
501	Application does not exist	An application with this name does not exist.
506	Resource does not exist	The requested resource does not exist in the application. When calling this method, select a resource in the application.

Error code	Error message	Meaning
505	Resource visibility is not public	The requested resource is not marked as "public". You should change the resource to "public" or select another resource that is already "public". An example with a set cookie "web_application_cookie" for access to protected web applications can be found in section Example: Web page for monitoring and controlling a wind turbine.

5.10.9 WebApp.BrowseResources

The WebApp.BrowseResources method provides a list of all resources with their properties that are assigned to a web application.
To call the WebApp.BrowseResources method, you need the "manage_user_pages" authorization.

Structure of the request

The following table informs you about the necessary parameters for the request.

Table 5-36 WebApp_BrowseResources_Request (object)

Name	Required	Data type	Description
app_name	yes	string	The name of the web application whose list is provided
name	No, default is an empty string	string	If this parameter does not exist, all resources must be returned. Otherwise, the list of returned resources only contains one resource whose name matches this parameter. If no such resource is found, then: • The return list must be empty • It is not an error

Example

In the following example, the user specifies the name of the "application1" application for the list.

```
{
"app_name": "application_1"
}
```

Response structure

The following tables show the structure of the server response to a successful request.

Table 5-37 WebApp_BrowseResources_Response (object)

Name	Required	Data type	Description
max_resources	yes	number	Maximum number of resources supported by the CPU.
resources	yes	array of WebApp_BrowseResources_Resource_Response	List of the resources in the specific application.

Table 5-38 WebApp_BrowseResources_Resource_Response (object)

Name	Required	Data type	Description
name	yes	string	The name of the resource.
size	yes	integer	The size of the resource in bytes.
media_type	yes	string	The media type of the resource.
etag	No	string	The ETag value of the resource.
visibility	yes	string	The visibility of the resource.
last_modified	yes	string	ISO8601 time stamp as string. The time stamp of the last modification.

Example

In the following example, the user requests responses from the server.

```
{
"max_resources": 200,
"resources": [
{
"name": "index.html",
"size": 24387,
"media_type": "text/html",
"etag": "896a9s8df0897g098a",
"visibility": "public",
"last_modified": "2020-08-24T07:08:06Z"
},
{
"file_name": "secret.js",
"size": 97826348,
"media_type": "application/javascript",
"visibility": "protected",
"last_modified": "2020-08-24T07:08:06Z"
}
]
}
```

Possible error messages

The following table shows the possible error messages of the WebApp.BrowseResources method.

Error code	Error message	Meaning
2	Permission denied	The current authentication token is not authorized to call this method. Log on with a user account that has sufficient privileges to call this method.
501	Application does not exist	An application with this name does not exist.
506	Resource does not exist	A resource with this name does not exist. When calling this method, select a resource in the application.

5.10.10 WebApp.CreateResource

With the WebApp.CreateResource method, you create a new resource in a web application that was loaded by the user on the CPU.

To call the WebApp.CreateResource method, you need the "manage_user_pages" authorization.

Structure of the request

The following table informs you about the necessary parameters for the request.

Table 5-39 WebApp_CreateResource_Request (object)

Name	Required	Data type	Description
app_name	yes	string	The name of the web application (Page 200) for which a resource must be created
name	yes	string	The name of the resource (Page 200) that is uploaded
media_type	yes	string	The media type of the resource (Page 200).
visibility	no; the default value is "public"	string	The visibility of the resource (Page 220).
etag	no; the default value is an empty character string	string	The ETag value of the resource (Page 221).
last_modified	yes	string	ISO8601 time stamp as string. The time stamp of the last modification.

Example

In the following example, the user creates a new resource "index.html" of the application "application_1" with the media type "text/html".

```
{
"app_name": "application_1",
"name": "index.html",
"media_type": "text/html",
"last_modified": "2020-08-24T07:08:06Z"
```

```
}
```

Response structure

This method returns a character string that includes a valid ticket ID. The user uses this ticket to upload the content of the resource to the CPU using the ticket end point.

NOTE

A maximum of only one WebApp.CreateResource ticket can be created. A new ticket can be created for this method only after this ticket has been closed.

Example of ticket ID:

```
"NDU2Nzg5MDEyMzQ1Njc4OTAxMjM0"
```

An example of further processing of the ticket ID can be found in the Ticket mechanism (Page 160) section.

Possible error messages

The following table shows the possible error messages of the WebApp.CreateResource method.

Error code	Error message	Meaning
2	Permission denied	The current authentication token is not authorized to call this method. Log on with a user account that has sufficient privileges to call this method.
4	No resources	You have exhausted all tickets in this user session or already have a ticket for WebApp.CreateResource that has not yet been closed. Close existing tickets to free up resources. Then call the method again.
5	System is read only	The system is currently in a write-protected state. Changes to web applications are currently not permitted.
501	Application does not exist	An application with this name does not exist.
507	Resource alredy exists	A resource with the specified name already exists for this application. Select a new resource name or delete/rename the resource before you call this method.
508	Invalid resource name	The resource name is invalid. Correct the resource name (Page 200) before you call this method.
509	Resource limit reached	The maximum number of resources has been exhausted for this application. Delete some resources before you call this method.
511	Invalid modification time	The planned modification time is not within the permissible time window of the modification time. Reduce the modification time accordingly before you call this method.
512	Invalid media type	The media type is invalid. Correct the media type (Page 200) before you call this method.
513	Invalid ETag	The ETag value is invalid. Correct the ETag value (Page 221) before you call this method.

5.10.11 WebApp.DeleteResource

With the WebApp.Delete method, you can delete a resource from a specific web application.

To call the WebApp.DeleteResource method, you need the "manage_user_pages" authorization.

Structure of the request

The following table informs you about the necessary parameters for the request.

Table 5-40 WebApp_DeleteResource_Request (object)

Name	Required	Data type	Description
app_name	yes	string	The name of the user-defined web application from which the resource is to be deleted
name	yes	string	The name of the resource that is to be deleted

Example

In the following example, the user deletes the resource "img/wrong.png" of the application "application_1".

```
{
"app_name": "application1",
"name": "img/wrong.png"
}
```

Response structure

If successful, the server returns the Boolean value "true".

Possible error messages

The following table shows the possible error messages of the WebApp.DeleteResource method.

Error code	Error message	Meaning
2	Permission denied	The current authentication token is not authorized to call this method. Log on with a user account that has sufficient privileges to call this method.
5	System is read only	The system is currently in a write-protected state. Changes to web applications are currently not permitted.
501	Application does not exist	An application with this name does not exist.
506	Resource does not exist	A resource with the specified name does not exist. When calling this method, select a resource in the application.

5.10.12 WebApp.RenameResource

With the WebApp.RenameResource method, you change the name of a resource in a specific web application.

To call the WebApp.RenameResource method, you need the "manage_user_pages" authorization.

Structure of the request

The following table informs you about the necessary parameters for the request.

Table 5-41 WebApp_RenameResource_Request (object)

Name	Required	Data type	Description
app_name	yes	string	The name of the user-defined web application in which the name of the resource is changed
name	yes	string	The name of the resource that is changed
new_name	yes	string	The new name of the resource.

Example

In the following example, the user changes the name of the resource to "corrspelled.png" in the "application1" application.

```
{
"app_name": "application1",
"name": "msspelled.png",
"new_name": "corrspelled.png"
}
```

Response structure

If successful, the server returns the Boolean value "true".

Possible error messages

The following table shows the possible error messages of the WebApp.RenameResource method.

Error code	Error message	Meaning
2	Permission denied	The current authentication token is not authorized to call this method. Log on with a user account that has sufficient privileges to call this method.
5	System is read only	The system is currently in a write-protected state. Changes to web applications are currently not permitted.
501	Application does not exist	An application with this name does not exist.
506	Resource does not exist	A resource with this name does not exist. When calling this method, select a resource in the application.
507	Resource already exists	A resource with the new name already exists for this application. Select a new resource name or delete/rename the resource before you call this method.

Error code	Error message	Meaning
508	Invalid resource name	The new resource name is invalid. Correct the resource name (Page 200) before you call this method.

5.10.13 WebApp.DownloadResource

With the WebApp.DownloadResource method, you can load a resource to a web application that was loaded by the user from the CPU.
To call the WebApp.DownloadResource method, you need the "manage_user_pages" authorization.

Structure of the request

The following table informs you about the necessary parameters for the request.

Table 5-42 WebApp_DownloadResource_Request (object)

Name	Required	Data type	Description
app_name	yes	string	The name of the web application that contains the resource
name	yes	string	The name of the resource that is downloaded

Example

In the following example, the user downloads the resource "secrets.pdf" of the application "application_1".

```
{
"app_name": "application_1",
"name": "secrets.pdf"
}
```

Response structure

This method returns a character string that includes a valid ticket ID. The user uses this ticket to download the content of the resource from the CPU using the ticket end point.

NOTE

A maximum of 1 WebApp.DownloadResource ticket can be created at the same time.

Example of ticket ID:

`"NDU2Nzg5MDEyMzQ1Njc4OTAxMjM0"`

An example of further processing of the ticket ID can be found in the Ticket mechanism (Page 160) section.

Possible error messages

The following table shows the possible error messages of the WebApp.DownloadResource method.

Error code	Error message	Meaning
2	Permission denied	The current authentication token is not authorized to call this method. Log on with a user account that has sufficient privileges to call this method.
4	No resources	You have exhausted all tickets in this user session or already have a ticket for WebApp.DownloadResource that has not yet been closed. Close existing tickets to free up resources. Then call the method again.
501	Application does not exist	An application with this name does not exist.
506	Resource does not exist	A resource with this name does not exist. Select a resource name that exists in the application before you call the method.

5.10.14 WebApp.SetResourceVisibility

With the WebApp.SetResourceVisibility method, you change the visibility of a resource, public or protected, in a web application that was loaded by the user. A protected resource cannot be called by the HTTP end point without authentication.
To call the WebApp.SetResourceVisibility method, you need the "manage_user_pages" authorization.

Structure of the request

The following table informs you about the necessary parameters for the request.

Table 5-43 WebApp_SetResourceVisibility_Request (object)

Name	Required	Data type	Description
app_name	yes	string	The name of the web application that contains the resource
name	yes	string	The name of the resource that is changed
visibility	yes	string	The visibility of the resource. public: public protected: only for authorized users An example with a set cookie "web_application_cookie" for access to protected web applications can be found in section Example: Web page for monitoring and controlling a wind turbine.

Example

In the following example, the user sets the "secrets.html" resource of the "myapp" application to "protected":

```
{
"app_name": "myapp",
"name": "secrets.html",
"visibility": "protected"
```

```
}
```

Response structure

If successful, the server returns the Boolean value "true".

Possible error messages

The following table shows the possible error messages of the WebApp.SetResourceVisibility method.

Error code	Error message	Meaning
2	Permission denied	The current authentication token is not authorized to call this method. Log on with a user account that has sufficient privileges to call this method.
5	System is read only	The system is currently in a write-protected state. Changes to web applications are currently not permitted.
501	Application does not exist	An application with this name does not exist.
506	Resource does not exist	A resource with this name does not exist. Select a resource name that exists in the application before you call the method.
505	Resource visibility must be public	The respective resource is referenced: • as default page, • as unauthorized page or • as page not found You cannot mark the resource as protected. You must set the visibility in the application to "public" before calling this method.

5.10.15 WebApp.SetResourceETag

With the WebApp.SetResourceETag method, you change or delete the ETag attribute that is returned when accessing the resource via the HTTP header. ETag (Entity Tag) is an HTTP header field. It only serves to determine changes at the requested resource and is used to avoid redundant data transfers.

To call the WebApp.SetResourceETag method, you need the "manage_user_pages" authorization.

Rules for a valid ETag value

You can use any character string as ETag value as seen in the example below. The length is limited to a maximum of 128 characters.

Structure of the request

The following table informs you about the necessary parameters for the request.

Table 5-44 WebApp_SetResourceETag_Request (object)

Name	Required	Data type	Description
app_name	yes	string	The name of the web application that contains the resource
name	yes	string	The name of the resource that is to be changed.
etag	yes	string	The ETag value of the resource. An empty character string indicates that the value is to be deleted.

Example

In the following example, the user sets the ETag value to "09as7df09h8j23r" for the "secrets.html" resource in the "myapp" application.

```
{
"app_name": "myapp",
"name": "secrets.html",
"etag": "09as7df09h8j23r"
}
```

Response structure

If successful, the server returns the Boolean value "true".

Possible error messages

The following table shows the possible error messages of the WebApp.SetResourceETag method.

Error code	Error message	Meaning
2	Permission denied	The current authentication token is not authorized to call this method. Log on with a user account that has sufficient privileges to call this method.
5	System is read only	The system is currently in a write-protected state. Changes to web applications are currently not permitted.
501	Application does not exist	An application with this name does not exist.
506	Resource does not exist	A resource with this name does not exist. Select a resource name that exists in the application before you call the method.
513	Invalid ETag	The ETag value is invalid. Correct the value before you call this method.

5.10.16 WebApp.SetResourceMediaType

With the WebApp.SetResourceMediaType method, you change the media type of a resource in a web application that was loaded by the user.
To call the WebApp.SetResourceMediaType method, you need the "manage_user_pages" authorization.

Structure of the request

The following table informs you about the necessary parameters for the request.

Table 5-45 WebApp_SetResourceMediaType_Request (object)

Name	Required	Data type	Description
app_name	yes	string	The name of the web application that contains the resource
name	yes	string	The name of the resource that is changed
media_type	yes	string	The media type of the resource (Page 200).

Example

In the following example, the user sets the media type to "image/jpeg" for the "secrets.jpg" resource in the "myapp" application.

```
{
"app_name": "myapp",
"name": "secrets.jpg",
"media_type": "image/jpeg"
}
```

Response structure

If successful, the server returns the Boolean value "true".

Possible error messages

The following table shows the possible error messages of the WebApp.SetResourceMediaType method.

Error code	Error message	Meaning
2	Permission denied	The current authentication token is not authorized to call this method. Log on with a user account that has sufficient privileges to call this method.
5	System is read only	The system is currently in a write-protected state. Changes to web applications are currently not permitted.
501	Application does not exist	An application with this name does not exist.
506	Resource does not exist	A resource with this name does not exist. Select a resource name that exists in the application before you call the method.

Error code	Error message	Meaning
512	Invalid media type	The media type is invalid. Correct the media type (Page 200) before you call this method.

5.10.17 WebApp.SetResourceModificationTime

With the WebApp.SetResourceModificationTime method, you set the modification time of a resource in a web application that was loaded by the user.

To call the WebApp.SetResourceModificationTime method, you need the "manage_user_pages" authorization.

Structure of the request

The following table informs you about the necessary parameters for the request.

Table 5-46 WebApp_SetResourceModificationTime_Request (object)

Name	Required	Data type	Description
app_name	yes	string	The name of the web application that contains the resource
name	yes	string	The name of the resource that is changed
last_modified	yes	string	ISO8601 time stamp as a string; the time stamp of the last change

Example

In the following example, the user sets the modification time to "24.08.2020 07:08:06" for the "secrets.html" resource in the "myapp" application:

```
{
"app_name": "myapp",
"name": "secrets.html",
"last_modified": "2020-08-24T07:08:06Z"
}
```

Response structure

If successful, the server returns the Boolean value "true".

Possible error messages

The following table shows the possible error messages of the WebApp.SetResourceModificationTime method.

Error code	Error message	Meaning
2	Permission denied	The current authentication token is not authorized to call this method. Log on with a user account that has sufficient privileges to call this method.

Error code	Error message	Meaning
5	System is read only	The system is currently in a write-protected state. Changes to web applications are currently not permitted.
501	Application does not exist	An application with this name does not exist.
506	Resource does not exist	A resource with this name does not exist. Select a resource name that exists in the application before you call the method.
511	Invalid modification time	The planned modification time is not within the permissible time window of the modification time. Reduce the modification time accordingly before you call this method.

Glossary

API

Application Programming Interface

Automation system

An automation system is a programmable logic controller that consists of at least one CPU, various input and output modules, as well as operating and monitoring devices.

AWP

Automation Web Programming

AWP commands

Special command syntax for exchanging data between CPU and HTML file.

Configuration

Systematic arrangement of individual modules (design).

CSS

A CSS (Cascading Style Sheet) specifies how an area or content marked up in HTML is displayed.

Device

Device that can send, receive or amplify data via the bus, e.g., IO controller.

Diagnostics

The detection, localization, classification, visualization and further evaluation of errors, malfunction and alarms.
Diagnostics provides monitoring functions that run automatically during plant operation. This increases the availability of plants by reducing commissioning times and downtimes.

EBNF

Extended Backus-Naur form: Formal metalanguage to represent context-free grammar. Formal languages can be expressed in EBNF; especially used in computer science for the definition of programming languages. The EBNF is standardized by ISO as ISO/IEC 14977:1996(E).

Firewall

A firewall is used to restrict the network access based on sender or target address of the used services. The firewall decides based on specified rules which of the network packets it

handles are forwarded and which are not. This way the firewall tries to prevent unauthorized network access.
It is not the function of a firewall to detect attacks. It only implements rules for network communication.

HTTP

Hypertext Transfer Protocol (HTTP). Protocol for data transmission across a network.

HTTPS

Hypertext Transfer Protocol Secure (HTTPS). Protocol for tap-proof transmission of sensitive data across a network.

Identification data

Identification data is stored on a module, and contains information which supports the user in

- Checking the system configuration
- Locating hardware changes in a system
- Correcting errors in a system

Modules can be clearly identified online using the identification data.

JSON

JSON (JavaScript Object Notation) is a compact data format in an easy-to-read text form and is used to exchange data between applications. JSON is independent of the programming language. Parsers and generators exist in all common programming languages.

Master

The master in possession of the token is an active device. This master has the option to receive data from other devices and to send data to other devices.

PROFIBUS

PROcess **FIeld BUS**, German process and fieldbus standard that is defined in IEC 61784-1:2002 Ed1 CP 3/1. This standard specifies functional, electrical, and mechanical properties for a bit-serial fieldbus system.
PROFIBUS is available with the protocols DP (= Distributed I/O), FMS (= Fieldbus Message Specification), PA (= Process Automation), or TF (= Technological Functions).

PROFINET

Within the context of Totally Integrated Automation (TIA), PROFINET is the systematic continuation of:

- PROFIBUS DP, the established fieldbus
- Industrial Ethernet, the communications bus for the cell level

Experiences from both systems have been are integrated in PROFINET.
PROFINET as an Ethernet-based automation standard of PROFIBUS International (formerly PROFIBUS User Organization e.V.) thus defines a manufacturer-independent communication, automation and engineering model.

PROFINET components

A PROFINET component includes all data of the hardware configuration, the parameters of the modules, and the associated user program. The PROFINET component comprises the following elements:

- Technological Function
  The (optional) technological (software) function includes the interface to other PROFINET components as interconnectable inputs and outputs.
- Device
  The device is the representation of the physical programmable controller or field device including the I/O, sensors and actuators, mechanical parts, and the device firmware.

PROFINET IO

Within the context of PROFINET, PROFINET IO is a communication concept for implementing modular, distributed applications.

PROFINET IO allows you to create automation solutions familiar from PROFIBUS.

Implementation of PROFINET IO is carried out on the one hand via the PROFINET standard for programmable controllers and on the other by using the engineering tool STEP 7.

This means that you have the same application layer in STEP 7 – regardless of whether you are configuring PROFINET or PROFIBUS devices. The programming of your user program is identical for PROFINET IO and PROFIBUS DP when using the blocks and system status lists expanded for PROFINET IO.

PROFINET IO controller

Device used to address connected I/O devices. This means that the IO controller exchanges input and output signals with assigned field devices. The IO controller is often the controller on which the automation program runs.

PROFINET IO device

A distributed field device that is assigned to one of the IO controllers (e.g., remote IO, valve terminals, frequency converters, switches).

URL

Uniform Resource Locator (URL). Identifies and localizes a source, such as a web page, uniquely via the method of access used and the location of the source in computer networks.

UTF-8

UTF-8 is the abbreviation for 8-bit UCS (Universal Character Set) Transformation Format. UTF-8 is the most widely used encoding of Unicode characters.

Each Unicode character is assigned a specially encoded byte string of variable length. UTF-8 supports up to four bytes onto which all Unicode characters can be mapped.

Web browser

Web browsers are visualization programs for web pages and can communicate with Web servers.

Typical web browsers are, for example:

- Microsoft Internet Explorer
- Mozilla Firefox

Index

A

Access restriction, 30

Activating the Web server, 24

Alarms, 70

API, 146

API endpoint, 148

Application name, 203

Arrays, 171

Automatic updating, 26

AWP commands, 121
- PLC tags, 122
- PLC tags, 124
- Special tags, 125
- Enumeration types, 127
- Fragments, 128
- Arrays, 130
- Structures, 131

B

Backup of configuration, 92

Binary representation, 167

Binding, 48

C

CA certificate, 31

Certificate
- Web server certificate, 30

Certificate manager
- Local CPU-specific certificate, 31
- Global CA-signed certificate, 32
- Global security settings, 32

Communication, 72
- Parameters, 73
- Statistics, 75
- Resources, 76
- Connections, 77

Configuring
- Backup, 91
- Restoring, 91

Copy protection, 48

CPU-specific certificate, 31

Customer pages, 29
- Configuring customer pages, 133
- Customer page as start page, 136

D

Diagnostics (Motion Control), 58

Diagnostics buffer, 57

Display of texts in different languages, 36

Download, 162

E

East Asian languages, 36

End point
- API, 148
- Ticket, 162
- Web applications that can be loaded by the user, 202

F

Fail-safe, 56

FAQs
- Web server access via smartphone, 23
- Download certificate, 25
- Incorporating web pages with relative path names, 120-121
- Automatically updating web pages, 120-121
- Customer page as start page, 138

Filebrowser, 142
- System files, 143

Firmware update, 68

F-runtime groups, 56

G

Github, 150

Global security settings, 32

H

HTTPS, 25

I

Identification, 46
- Diagnostics, 46
- Module information, 65

J

JSON-RPC, 148, 161

K

Know-how protection, 48

L

Language settings, 36

M

Measurements (trace), 98

Media type
- Name, 203

Memory, 49

Motion Control
- Diagnostics, 58
- Service overview, 58

P

Program protection, 48

R

Reading out service data, 144

Reading PLC tags
- Overview, 123
- Tags of the String and Character type, 123
- String or character tags in expressions, 123

Resource name, 203

Restoring the configuration, 93

Runtime information, 50

S

Security functions, 20

Self-signed certificates, 31

Signal table (Trace), 104, 104

Start page, 39
- Intro, 39
- Log in, 43
- Logout, 43

Statistics
- Module information, 66
- Communication, 75

T

Tags
- writing, 88
- writing, 90

Technology objects
- Status, errors, technology alarms, 58

Ticket end point, 162

Ticket ID, 162

Ticket mechanism, 161

Ticket methods, 164

Topology, 78
- Set topology, 78
- Actual topology, 78
- Graphical view, 79
- Tabular view, 82
- Status overview, 83
- Examples, 84

Trace recordings, 97

Trend diagram (Trace), 99

U

Updating and saving, 38
Deactivating automatic updating, 38
Printing web pages, 38
Saving diagnostics buffer entries, 58
Saving alarms, 71

Updating user-defined pages, 120

Upload, 162

User-defined pages, 118
WWW instruction, 134

User-defined web applications, 200

User interface language
assign to project language, 37
Setting, 40

User management, 27

User pages
Example user page, 138

W

Web access
Via PG/PC, 23
Via HMI devices and mobile terminal devices, 23

Web API, 146
supported data types, 168
Web applications, 200

WEB API
supported clients, 149

Web applications, 200

Web applications that can be loaded by the user, 200

Web browser, 20

Web server
Properties, 20
Certificate, 30

Web server certificate
creating and assigning, 30

Web server language, 26

Web server - web pages
Tag status, 87
Watch table, 89

SIEMENS

SIMATIC

STEP 7 (TIA Portal) options Target 1500S™ for Simulink® V4.0 Update 2

Programming Manual

Introduction 1

Security information 2

Siemens Industry Online Support 3

Industry Mall 4

Product overview 5

Installing 6

Example of a workflow 7

Using an example project 8

Files generated by coders A

Referenced models B

External mode C

Parameter access from STEP 7 D

Access to internal signals E

Display model on the Web server F

Using data types G

Alarms H

12/2020

A5E38915112-AG

Legal information

Warning notice system

This manual contains notices you have to observe in order to ensure your personal safety, as well as to prevent damage to property. The notices referring to your personal safety are highlighted in the manual by a safety alert symbol, notices referring only to property damage have no safety alert symbol. These notices shown below are graded according to the degree of danger.

⚠ DANGER
indicates that death or severe personal injury **will** result if proper precautions are not taken.

⚠ WARNING
indicates that death or severe personal injury **may** result if proper precautions are not taken.

⚠ CAUTION
indicates that minor personal injury can result if proper precautions are not taken.

NOTICE
indicates that property damage can result if proper precautions are not taken.

If more than one degree of danger is present, the warning notice representing the highest degree of danger will be used. A notice warning of injury to persons with a safety alert symbol may also include a warning relating to property damage.

Qualified Personnel

The product/system described in this documentation may be operated only by **personnel qualified** for the specific task in accordance with the relevant documentation, in particular its warning notices and safety instructions. Qualified personnel are those who, based on their training and experience, are capable of identifying risks and avoiding potential hazards when working with these products/systems.

Proper use of Siemens products

Note the following:

⚠ WARNING
Siemens products may only be used for the applications described in the catalog and in the relevant technical documentation. If products and components from other manufacturers are used, these must be recommended or approved by Siemens. Proper transport, storage, installation, assembly, commissioning, operation and maintenance are required to ensure that the products operate safely and without any problems. The permissible ambient conditions must be complied with. The information in the relevant documentation must be observed.

Trademarks

All names identified by ® are registered trademarks of Siemens AG. The remaining trademarks in this publication may be trademarks whose use by third parties for their own purposes could violate the rights of the owner.

Disclaimer of Liability

We have reviewed the contents of this publication to ensure consistency with the hardware and software described. Since variance cannot be precluded entirely, we cannot guarantee full consistency. However, the information in this publication is reviewed regularly and any necessary corrections are included in subsequent editions.

Siemens AG
Digital Industries
Postfach 48 48
90026 NÜRNBERG
GERMANY

A5E38915112-AG
Ⓟ 12/2020 Subject to change

Copyright © Siemens AG 2016 - 2020.
All rights reserved

Table of contents

1 Introduction ... 5

1.1 Guide for this manual ... 5

2 Security information ... 9

3 Siemens Industry Online Support ... 10

4 Industry Mall ... 11

5 Product overview ... 12

5.1 Overview of functions ... 12

5.2 Basic procedure ... 13

6 Installing ... 14

6.1 System requirements ... 14

6.2 Installing Target 1500S ... 15

6.3 Licensing Target 1500S ... 17

6.4 Uninstalling Target 1500S ... 19

6.5 Repairing Target 1500S ... 20

7 Example of a workflow ... 21

7.1 Creating a Simulink model ... 21

7.2 Description of Simulink parameters ... 21

7.3 Target 1500S configuration parameters ... 26

7.3.1 Description of the TIA Portal integration options ... 26

7.3.2 Description of the external mode options ... 30

7.3.3 Description of the Accessibility options ... 33

7.3.4 Description of the Post-build Options ... 36

7.3.5 Description of the ODK options ... 38

7.4 Command line access to options ... 40

7.5 Running Simulink build ... 45

7.6 The Diagnostic Viewer ... 47

7.7 Loading and running the ODK application ... 47

8 Using an example project ... 50

A Files generated by coders ... 51

B Referenced models ... 52

C External mode ... 54
C.1 The external mode ... 54
C.2 Setting communication parameters for external mode ... 55
C.3 The function block CallExtMode ... 56
C.4 Establishing an external mode connection ... 58
D Parameter access from STEP 7 ... 60
D.1 Introduction ... 60
D.2 Enabling parameter access ... 60
D.3 The ReadWriteParameters function block ... 62
D.4 Establishing parameter access ... 63
E Access to internal signals ... 64
F Display model on the Web server ... 66
F.1 Notes on protection ... 66
F.2 The WebReadWrite function block ... 67
F.3 Adding files to a STEP 7 project ... 68
F.4 Using the Web server ... 70
F.5 Web access to parameters ... 71
F.6 Display signals on the Web server ... 72
F.7 Show active Stateflow states on the Web server ... 73
G Using data types ... 76
G.1 Bus objects ... 76
G.2 Supported basic data types ... 77
G.3 Complex data types ... 77
H Alarms ... 78
H.1 Alarms during the build process ... 78
H.2 Information messages ... 78
H.3 Warnings ... 81
H.4 Error messages ... 84
Index ... 87

Introduction 1

1.1 Guide for this manual

Purpose of the documentation

This documentation provides important information about installing and setting up SIMATIC Target 1500S for Simulink and generating an ODK object.

Basic knowledge required

The following knowledge is required in order to understand the documentation:

- General knowledge of automation technology
- Knowledge of the SIMATIC industrial automation system
- Knowledge of working with STEP 7
- Use of Microsoft Windows operating systems
- Proficiency with Mathworks MATLAB and Simulink

Validity of the documentation

This documentation is valid for the product SIMATIC Target 1500S for Simulink.

Notes

Please also observe notes labeled as follows:

Note

A note contains important information on the product described in the documentation, on the handling of the product or on the part of the documentation to which particular attention should be paid.

Definitions and naming conventions

The following terms are used in this documentation:

- Target 1500S: This term refers to the product SIMATIC Target 1500S for Simulink.
- ODK: This term refers to the product Open Development Kit 1500S in the compatible version.
- SO: Shared Object. Output object after an ODK build.
- SCL: Structure Control Language. Programming language in STEP 7.
- STEP 7: In this documentation, "STEP 7" is used as a synonym for all versions of the configuration and programming software "STEP 7 (TIA Portal V15.1 or higher)".
- MATLAB: Mathworks MATLAB

  MATLAB and Simulink are registered trademarks of The MathWorks, Inc.
- TIA Portal Openness: TIA Portal automation interface

The documentation for the SIMATIC S7-1500 automation system and the SIMATIC ET 200MP distributed I/O system is arranged into three areas.
This arrangement enables you to access the specific content you require.

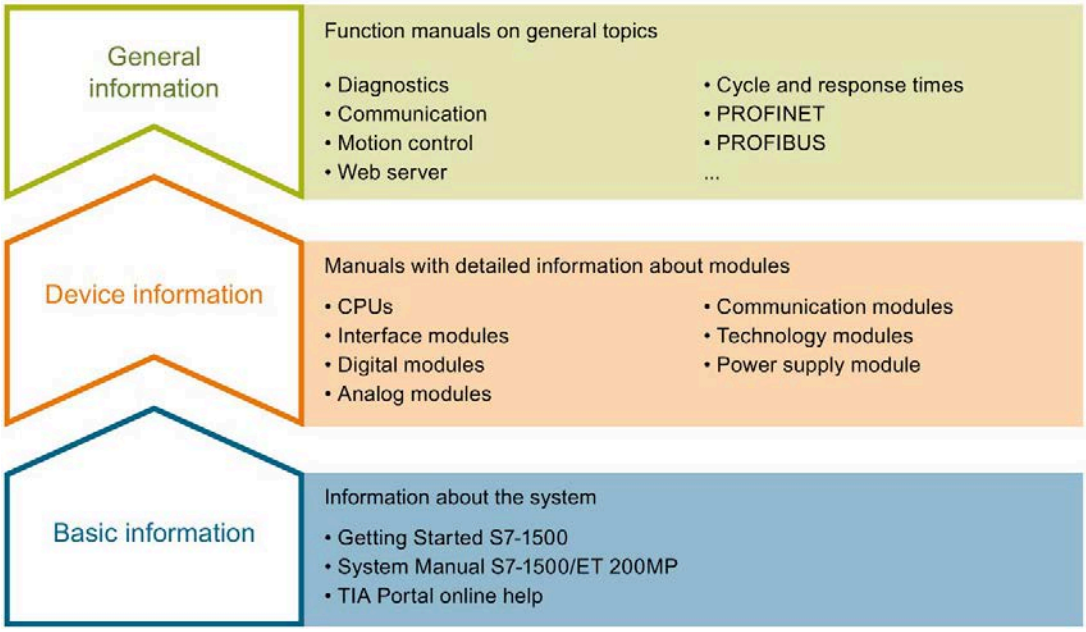

Basic information

The System Manual and Getting Started describe in detail the configuration, installation, wiring and commissioning of the SIMATIC S7-1500 and ET 200MP systems. The STEP 7 online help supports you in the configuration and programming.

Device information

Product manuals contain a compact description of the module-specific information, such as properties, wiring diagrams, characteristics and technical specifications.

General information

The function manuals contain detailed descriptions on general topics regarding the SIMATIC S7-1500 and ET 200MP systems, e.g. diagnostics, communication, motion control, Web server, OPC UA.

You can download the documentation free of charge from the Internet (https://support.industry.siemens.com/cs/ww/en/view/109742691).

Changes and supplements to the manuals are documented in a Product Information.

You can download the product information free of charge from the Internet (https://support.industry.siemens.com/cs/us/en/view/68052815).

Manual Collection S7-1500/ET 200MP

The Manual Collection contains the complete documentation on the SIMATIC S7-1500 automation system and the ET 200MP distributed I/O system gathered together in one file.

You can find the Manual Collection on the Internet (https://support.industry.siemens.com/cs/ww/en/view/86140384).

SIMATIC S7-1500 comparison list for programming languages

The comparison list contains an overview of which instructions and functions you can use for which controller families.

You can find the comparison list on the Internet (https://support.industry.siemens.com/cs/ww/en/view/86630375).

"mySupport"

With "mySupport", your personal workspace, you make the best out of your Industry Online Support.

In "mySupport", you can save filters, favorites and tags, request CAx data and compile your personal library in the Documentation area. In addition, your data is already filled out in support requests and you can get an overview of your current requests at any time.

You must register once to use the full functionality of "mySupport".

You can find "mySupport" on the Internet (https://support.industry.siemens.com/My/ww/en).

Application examples

The application examples support you with various tools and examples for solving your automation tasks. Solutions are shown in interplay with multiple components in the system - separated from the focus on individual products.

You will find the application examples on the Internet (https://support.industry.siemens.com/sc/ww/en/sc/2054).

The Manual Collection includes the complete documentation for distributed I/O system SIMATIC ET 200SP assembled in a single file.

You can find the Manual Collection on the Internet (http://support.automation.siemens.com/WW/view/en/84133942).

Security information 2

Siemens provides products and solutions with industrial security functions that support the secure operation of plants, systems, machines and networks.

In order to protect plants, systems, machines and networks against cyber threats, it is necessary to implement – and continuously maintain – a holistic, state-of-the-art industrial security concept. Siemens' products and solutions constitute one element of such a concept.

Customers are responsible for preventing unauthorized access to their plants, systems, machines and networks. Such systems, machines and components should only be connected to an enterprise network or the internet if and to the extent such a connection is necessary and only when appropriate security measures (e.g. firewalls and/or network segmentation) are in place.

For additional information on industrial security measures that may be implemented, please visit (https://www.siemens.com/industrialsecurity).

Siemens' products and solutions undergo continuous development to make them more secure. Siemens strongly recommends that product updates are applied as soon as they are available and that the latest product versions are used. Use of product versions that are no longer supported, and failure to apply the latest updates may increase customers' exposure to cyber threats.

To stay informed about product updates, subscribe to the Siemens Industrial Security RSS Feed visit (https://www.siemens.com/industrialsecurity).

Siemens Industry Online Support 3

You can find current information on the following topics quickly and easily here:

- **Product support**

  All the information and extensive know-how on your product, technical specifications, FAQs, certificates, downloads, and manuals.

- **Application examples**

  Tools and examples to solve your automation tasks – as well as function blocks, performance information and videos.

- **Services**

  Information about Industry Services, Field Services, Technical Support, spare parts and training offers.

- **Forums**

  For answers and solutions concerning automation technology.

- **mySupport**

  Your personal working area in Industry Online Support for messages, support queries, and configurable documents.

This information is provided by the Siemens Industry Online Support in the Internet (http://www.siemens.com/automation/service&support).

Industry Mall

4

The Industry Mall is the catalog and order system of Siemens AG for automation and drive solutions on the basis of Totally Integrated Automation (TIA) and Totally Integrated Power (TIP).

You can find catalogs for all automation and drive products on the Internet (https://mall.industry.siemens.com) and in the Information and Download Center.

Product overview 5

5.1 Overview of functions

Basics

Mathworks MATLAB is software for the primary solution of mathematical problems and their visualization.

Simulink is an add-on for MATLAB for graphical modeling of systems and their simulation.

Target 1500S

Target 1500S is an add-on for Simulink that generates an executable object from a Simulink model for an ODK-enabled controller. It enables you to run a Simulink model on a controller. In an automated process, Target 1500S integrates the generated program logic and the executable object. Target 1500S automatically generates all the required blocks and files for this. An SCL and SO file is created from the generated C/C++ code. The SCL file is imported as external source to STEP 7 and contains the generated function blocks. The SO file contains the C/C++ implementation and is available to the CPU after transfer to the Web server.

5.2 Basic procedure

Overview of the individual steps

To run a Simulink model on a controller, follow these steps:

1. Create a model in Simulink.
2. Configure the properties of the model in Simulink.
3. Under "Code Generation", select Target 1500S as System Target File.
4. Adapt the parameters for Simulink and Target 1500S.
   - Select a TIA Portal project in which to integrate the generated code.
   - Select the options for integration in the CPU user program.
   - Select the settings for External Mode, access to Model Dynamics, and Web visualization.
   - Set up automatic SO file transfer and loading to the CPU.
5. Start the build in Simulink.

   The SO and SCL files are generated and stored in the "outputs" output directory. Depending on your selected settings, these files are either automatically integrated into the TIA Portal project and loaded into the CPU, or you have to perform the integration into the TIA Portal project and loading into the CPU manually (see also Loading and running the ODK application (Page 47)).

Installing

6

6.1 System requirements

Requirements

Your PC must meet the following system requirements in order to use the Target 1500S:

Category	Requirement
Operating system	Microsoft Windows 10, 64-bit
Processor and memory	PC system: • 100 MB of free space on the hard disk C:\ • At least systems with Intel Core i5 processor • 1.2 GHz or higher • At least 4 GB RAM
Operator interface	Monitor, keyboard and mouse.
SIMATIC Software	• SIMATIC ODK 1500S V2.0 or higher • Optional: SIMATIC STEP 7 Professional (TIA Portal) V15.1 or higher with TIA Portal Openness • Optional: SIMATIC CPU 15xx that supports ODK 1500S V2.0 or higher • Optional: S7-PLCSIM Advanced V3.0 or higher
Additional software	• MATLAB 2020b (64-bit) in the following configuration: – MATLAB 9.9 – MATLAB Coder 5.1 – Simulink 10.2 – Simulink Coder 9.4 • Java Runtime Environment (32-bit)

6.2 Installing Target 1500S

To install Target 1500S, select the installation folder. Follow the instructions of the setup program.

If the setup program does not start automatically, manually start the "Start.exe" file by double clicking it.

Note

Use of antivirus software

To avoid problems during the installation, disable the antivirus software for the period of the installation or exclude the directory "C:\Program Files\Common Files\Siemens\Automation\Siemens Installer Assistant" and the directory in which Start.exe is located, for the antivirus software.

Order of the installed Target 1500S versions

When you install multiple versions, make sure that the older version is installed before the newer one. If problems occur, uninstall all versions and install these again in this order.

Requirements

- You have installed a compatible ODK 1500S version and a 32-bit Java Runtime Environment .
- You need administrator rights for this action.
- MATLAB and Simulink are installed in the required configuration.
- Close all MATLAB instances.

Procedure

You can also run the installation automatically with the batch file "SilentInstall_Target_1500S.bat".

To install Target 1500S manually, follow these steps:

1. Launch the "Start.exe" file manually with a double-click.
2. Select the language for performing the installation.
3. Confirm with "Next".

   The "Configuration" view opens.
4. Click "Next" to confirm the list of components that are to be installed.

   The check mark for Automation License Manager (ALM) cannot be removed.

   Note

   Target 1500S is already installed

   If Target 1500S is already installed, you can select between "Repair (Page 20)" and "Uninstall (Page 19)" here.
5. Confirm with "Next".
6. Agree to the license conditions and safety information.
7. Confirm with "Next".

   The "Overview" with the installation settings opens.
8. Start the installation with "Install"

   The following directory is created:

   ProgramFiles(x86)%\Siemens\Automation\Target1500S*<current version>*
9. Choose whether you want to carry out the licensing (Page 17) during the installation or at a later time.

Result

The installation is complete. All product languages were installed by default during the installation process. During the installation, Target 1500S was integrated in Simulink and the product help was created in the Windows Start menu.

Note

You can install ODK after Target. Close MATLAB and other applications and then restart it after the installation.

6.3 Licensing Target 1500S

The software requires a product-specific license key that you install with the Automation License Manager. Each SIMATIC software product for automation that is subject to license (e.g., STEP 7) has its own license key. You must install the license key for each product.

Working with the Automation License Manager

The Automation License Manager is a product of Siemens AG and is used for managing license keys. The Automation License Manager is supplied on the installation data medium of this product by default and is transferred automatically during the installation process.

Software products that require license keys for operation register the requirement for license keys automatically in the Automation License Manager. If the Automation License Manager finds a valid license key for this software, the software can be used according to the conditions of use associated with this license key.

Certificate of license

A Certificate of License is included in the scope of delivery. It contains your unique license number. The license certificate serves as proof that you have a valid license key. Store this certificate in a safe place.

Note

Obtaining a replacement license key

You must have a valid certificate of license to get a replacement license key.

Recovering the license key in case of defective mass storage

If an error has occurred on the mass storage or USB flash drive containing your license key file, you can restore the license using the license certificate. You can find additional information in a FAQ (https://support.industry.siemens.com/cs/ww/en/view/772175).

Validity of license keys for older versions of Target 1500S

With a valid license key for Target 1500S™ for Simulink® V4.0, you can also operate older versions of Target 1500S without restrictions.

License key

The download of Target 1500S allows you to access ordered license keys.

For access, you need:

- A personalized login that you can use to call all license keys assigned to you.
- An anonymous login that you can use to fetch an individual license key, and the corresponding license certificate. This document contains all data required for the anonymous download.

Additional information on the license key and the download is available in the Automation License Manager manual (https://support.industry.siemens.com/cs/ww/en/view/102770153).

Transferring the license key

The license key can be transferred during the installation or afterwards.

If the USB flash drive with the relevant license key is inserted in the USB port of the PC at the start of installation, the license key will be transferred automatically during the installation. If the USB flash drive is not inserted at the start of installation, you have three options for installing the license key subsequently:

- To transfer the license key **manually** from a network computer or other storage medium, select the "Manual license transfer" button.
- Insert the USB flash drive with license key, and select the "Retry license transfer" button. The Automation License Manager opens in order to transfer the license key.
- If you do not want to install a license key, select the "Skip license transfer" button.

Working without valid license key

For legal reasons, a valid license key is required for this product.

If no valid license key is present on your PC, you cannot generate any projects and the system indicates the non-licensed mode with a message. You have the one-time option of activating a trial license. However, this license is valid for a limited period only and expires after 21 days. Therefore, the system prompts you to activate your Trial License during the first build. The runtime of the license starts with the activation. When the trial license has expired, an error message appears during the build process.

Manually transferring the license key subsequently

A message is displayed if you start the Target 1500S without transferred license key. If the Automation License Manager is not yet installed on your computer, you must install it beforehand.

To **manually** transfer the license key for Target 1500S subsequently, follow these steps:

1. Start the installation of Target 1500S with administrator rights.
2. In the "License Transfer" section, select the "Manual license transfer" button.

   A dialog box for synchronization of the license opens.
3. Select the destination and the source of the license key.
4. To transfer the license key, click the "Synchronize" button.

   The license key is transferred.

6.4 Uninstalling Target 1500S

Requirement

- You need administrator rights for this action.
- You have already installed Target 1500S .
- Close all MATLAB instances.

Procedure

You can also run the uninstallation automatically with the batch file "SilentUnInstall_Target_1500S.bat".

To uninstall Target 1500S manually, follow these steps:

1. Launch the "Start.exe" file manually with a double-click.
2. Select the language for performing the installation.
3. Confirm with "Next".

   The "Configuration" view opens.
4. Select the "Uninstall" option.
5. Confirm with "Next".

Result

- Target 1500S is removed from the MATLAB environment.
- The entries in the Start menu are deleted.
- Target-specific folders are deleted.

  Previously generated output of Target 1500S is not deleted.

6.5 Repairing Target 1500S

Requirement

- You require administrator rights for this procedure.
- You have already installed Target 1500S .
- Close all MATLAB instances.

Procedure

1. Launch the "Start.exe" file manually with a double-click.
2. Select the language for performing the installation.
3. Confirm with "Next".
   The "Configuration" view opens.
4. Select the "Repair" option.
5. Confirm with "Next".

Result

Target 1500S is re-installed.

Example of a workflow

7

7.1 Creating a Simulink model

Procedure

1. In MATLAB, select the storage path for the model under "Current Folder".

   Alternatively, you can also set the storage path in the Simulink preferences under "File generation control".

2. Create the model in Simulink.

   You can also use an existing model or one provided by Simulink.

7.2 Description of Simulink parameters

Some configuration parameters are preset when you select Target 1500S as the System Target File . To do so, select the system target file for Target_1500S (*.tlc) of the required version in the "Configuration Parameters".

Note

Change/migrate the System Target File

If you change parameters in the "Configuration Parameters" and then want to change the System Target File, you need to first confirm the changes with the "Apply" button.

When you migrate from an older Target 1500S version to a newer version, the Target 1500S parameters that are identical in the versions are applied. Parameters that are not present in the older version are set to the default value by the system.

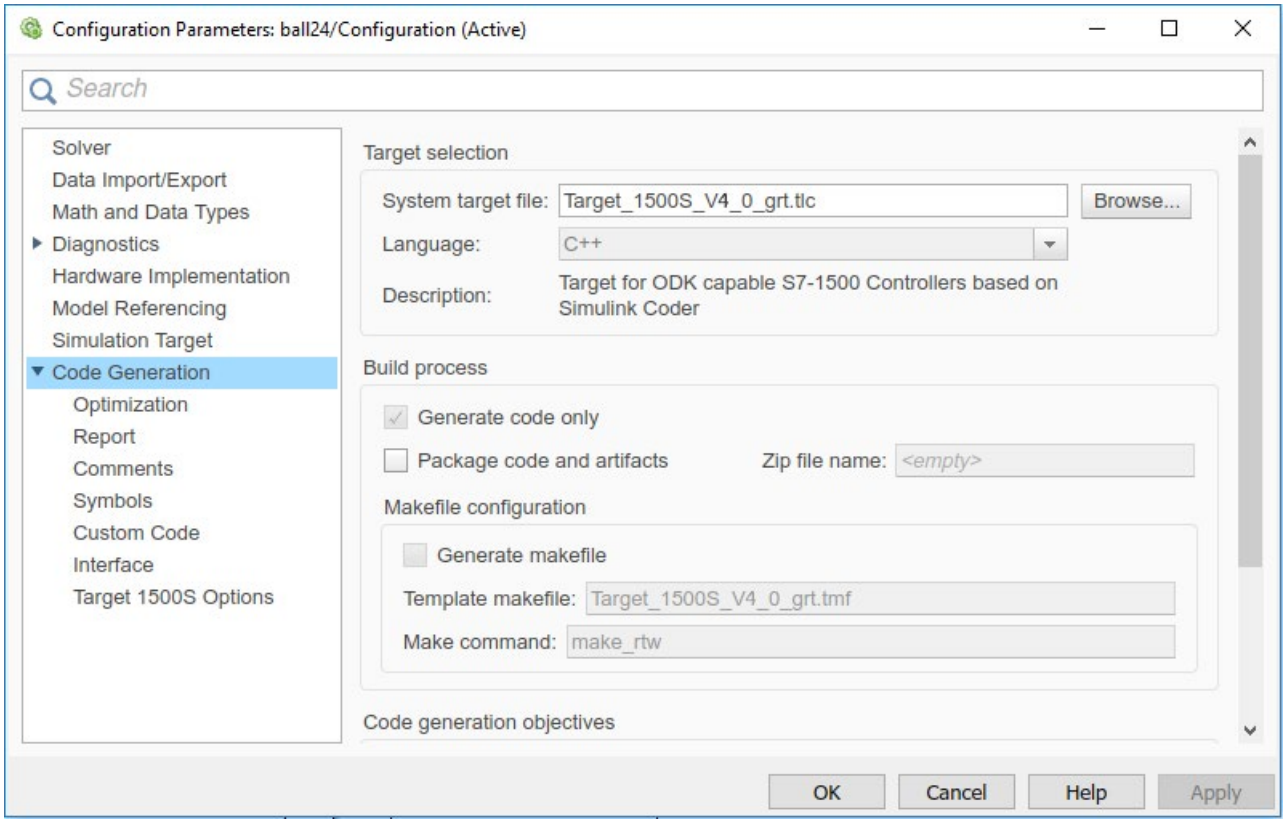

Figure 7-1 Configuration parameters using the System Target File for Target 1500S as an example

The default parameters are listed below. To successfully create an ODK object, you are not allowed to change some parameters. These parameters are marked in this product help with "(fixed)". Use the default values whenever possible.

You can also set special Target 1500S options here.

Note

Default parameters

The system assigns default parameters, and these may overwrite existing entries.

Requirement

You have selected Target 1500S as the System Target File .

Relevant parameters

Solver

A dynamic system is modeled as a mathematical calculation in Simulink. This calculation is performed at certain time intervals to simulate the execution of the system. The size of this time interval is referred to as the "Step-Size". The method for calculating the states of a model is referred to here as solving the model.

- Solver options

  Determine the solver selection

  - Type (fixed): Fixed Step
  - Solver: auto (Automatic solver selection)
- Tasking and sample time options
  - Periodic sample time constraint: Unconstrained
  - Tasking mode for periodic sample times: Treat each discrete rate as a separate task (disabled)

Data Import/Export

- Time (disabled)
- States (disabled)
- Output (disabled)
- Final States (disabled)
- Format ("Array" option activated)
- Limit data points to last (activated and "1000" value set)
- Decimation ("1" value set)

Hardware Implementation

- Device vendor (fixed): Intel
- Device type(fixed): x86-32 (Windows32)

Code Generation General

- Language (fixed): C++
- Makefile configuration (fixed): "Generate makefile" option disabled
- Generate code only (fixed): "Generate code only" option enabled
- Advanced parameters
  - Verbose Build

    This option is disabled by default. Only relevant information is displayed in the Diagnostic Viewer during the build process.

    Enable this option to get more detailed information during the build process.

Code Generation > Optimization

- Code generation

  You can select between "Tunable" and "Inlined" under "Default parameter behavior".

  Select "Tunable" if you want to allow parameter access from STEP 7. You can also change the parameter values during runtime.

  Select "Inlined" so that the values of the parameters are fixed and cannot be changed during runtime. The execution of the code is then faster.

Code Generation > Identifiers

- Maximum identifier length

  The default value is 256.

  You can enter a higher value, but be aware of the ODK limits.

Code Generation > Interface

- Code interface packaging (fixed): Nonreusable function
- Classic call interface (fixed): "Classic call interface" option disabled
- Single output/update function (fixed): "Single output/update function" option enabled
- MAT-file logging (fixed): "MAT-file logging" option disabled
- Data exchange interface

  Select "External mode (Page 54)" to use this. The settings are thereby made automatically.

  You can find the description of the individual parameters under "Setting communication parameters for external mode (Page 55)".

Code Generation > Target 1500S Options

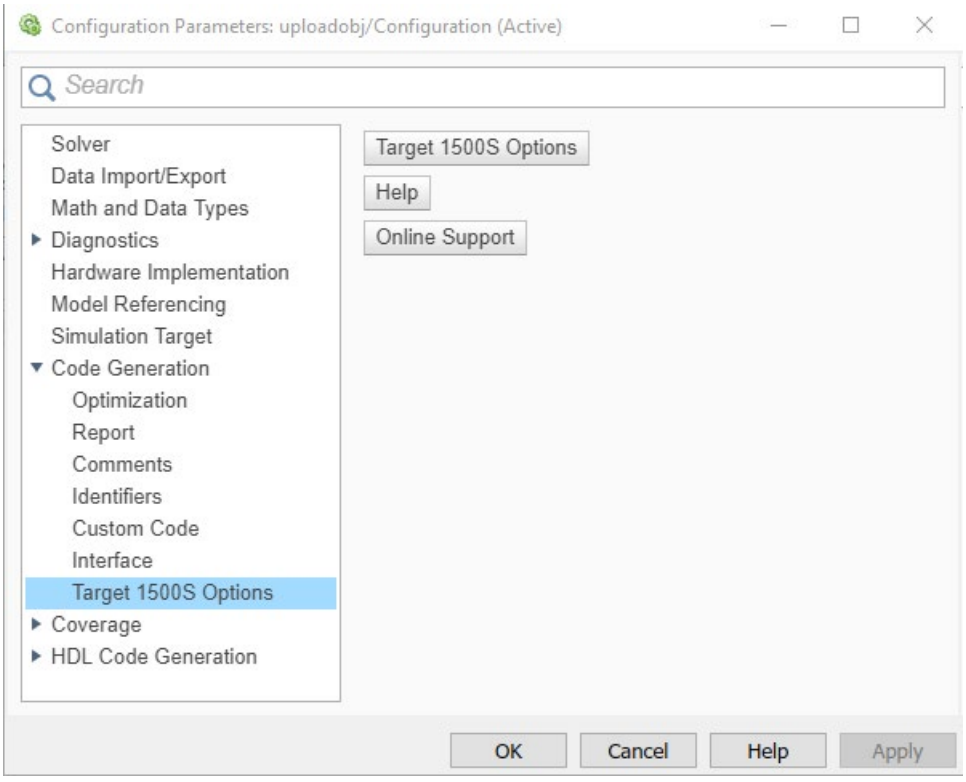

Figure 7-2 Target 1500S options

Target 1500S Options

When you click on this button, a new dialog opens with the Target 1500S options in individual tabs. The options are described in more detail in the following sections:

- Description of the TIA Portal integration options (Page 26)
- Description of the external mode options (Page 30)
- Description of the Accessibility options (Page 33)
- Description of the Post-build Options (Page 36)
- Description of the ODK options (Page 38)

Help

Click this button to open the online help for Target 1500S.

Online Support

To open the Support website, click this button.

7.3 Target 1500S configuration parameters

7.3.1 Description of the TIA Portal integration options

Requirement

- You have installed one of the following TIA Portal versions with STEP 7 Professional and the Openness plugin:
  - TIA Portal V15.1
  - TIA Portal V16
- You have selected Target 1500S as the System Target File.
- You are included in the Computer Management in the user group "Siemens TIA Openness" with your registered user and have restarted the operating system.

Parameters that can be set

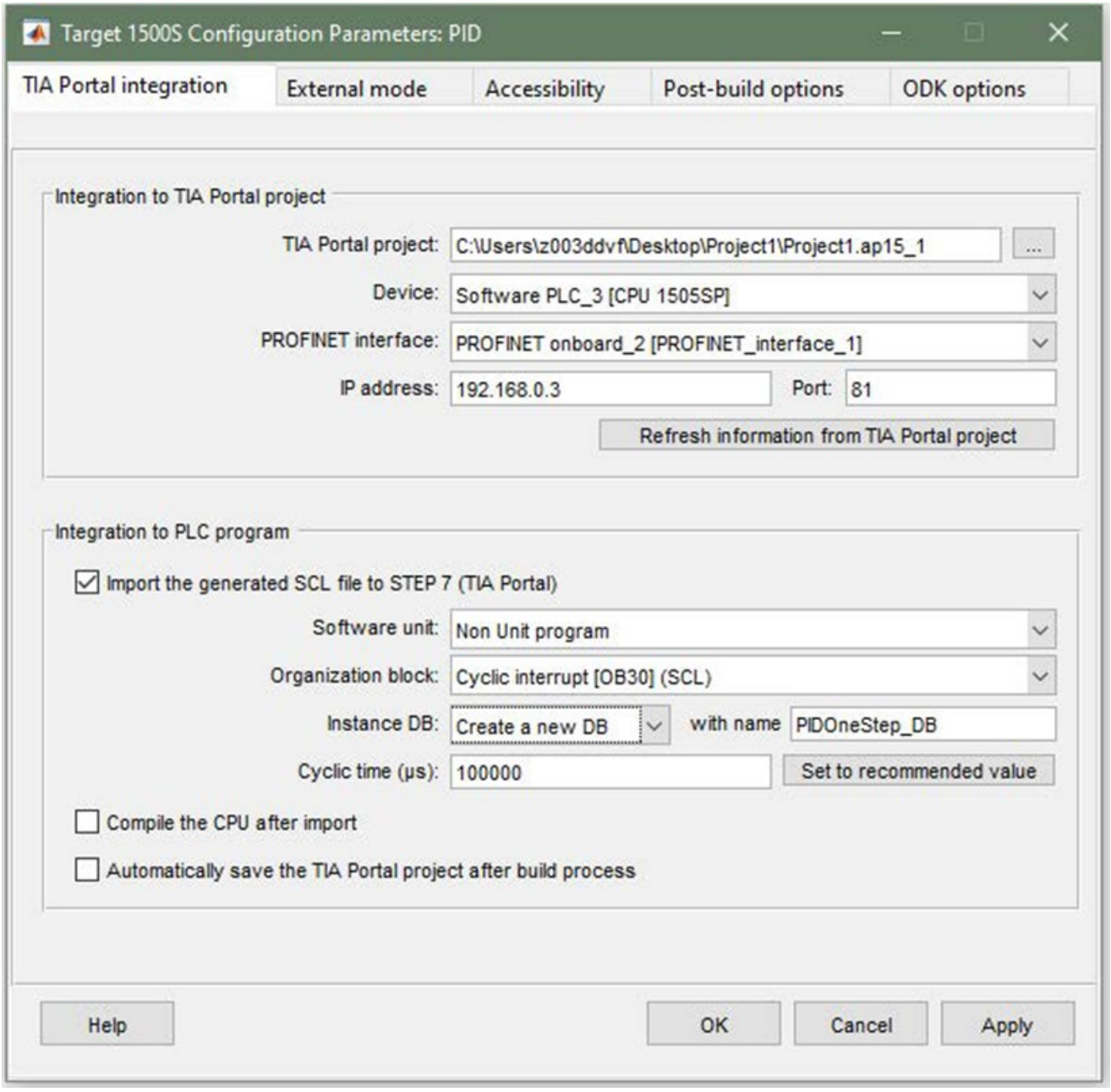

Figure 7-3 TIA Portal Integration options

TIA Portal project

Define the path to the STEP 7 project into which the generated SCL file is imported.

For example: D:\tiaprojects\project\project.ap15

Device

From this list, select the name of the CPU in the STEP 7 project into which the generated SCL file is to be imported.

PROFINET interface

Select the PROFINET interface of the selected CPU from this list.

The selected PROFINET interface is used for:

- External mode
- Import of the SO file

IP address

Displays the IP address of the PROFINET interface.

Port

Shows the used port number of the IP address.

Note

When you do not fill the input fields for integration into a TIA Portal project with values or configure the IP address and the port number using the command line, the "Port:" input field is not visible.

Import the generated SCL file to STEP 7 (TIA Portal)

Automatic import of the generated SCL file into the TIA Portal project once the build is complete.

Software unit

Select the software of the selected CPU from this list.

Organization block

From this list, select the organization block of the selected CPU into which the generated "OneStep" FB is to be imported. To create a new cyclic interrupt OB, click "Create a new OB".

Instance DB

From this list, select the instance DB for the generated "OneStep" FB. To create a new instance DB, click "Create a new DB".

Cyclic time (µs)

For cyclic interrupt OBs, enter the cycle time of the selected organizational block. To set the value recommended by the model, click "Set to recommended value". The recommended value is the "Fixed-step size (fundamental sample time)" setting of the model.

Compile the CPU after import

Compiles the CPU after the file import.

Automatically save the TIA Portal project after build process

Saves the TIA Portal project once the build is completed.

7.3.2 Description of the external mode options

Requirement

You have selected Target 1500S as the System Target File.

Parameters that can be set

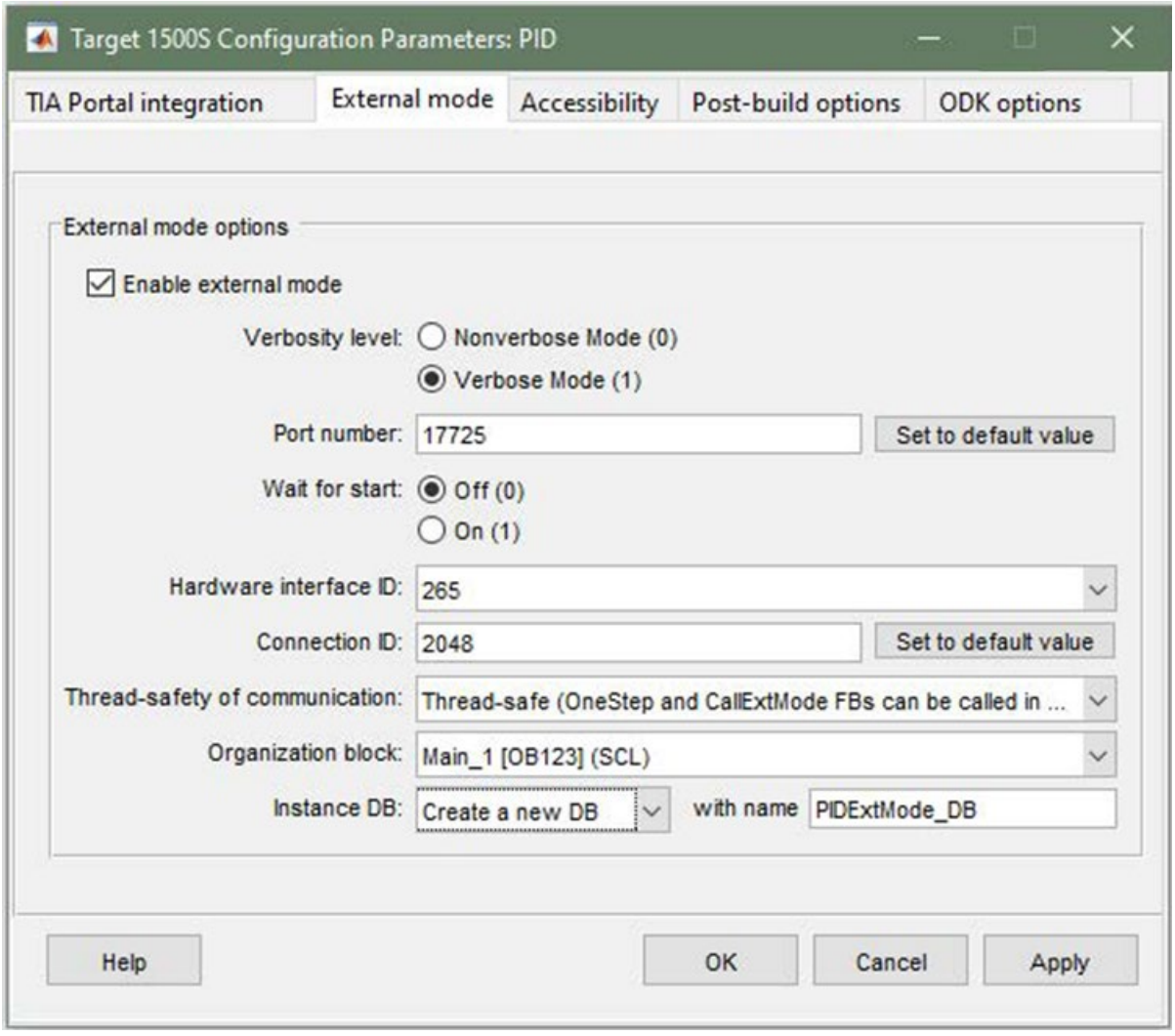

Figure 7-4 External mode options

Enable external mode

Enable this option to permit external mode communication for the model.

Verbosity level

Enable the "Verbose Mode (1)" option to get more detailed information during External mode communication in the "Diagnostic Viewer".

Port number

Enter the CPU-side port number for the TCP/IP connection during External mode communication.

Standard: 17725

Wait for start

The simulation starts automatically as soon as the "OneStep" function is executed. When you enable the "On (1)" option, the execution of the Simulink model does not start automatically. In this case, you need to start the simulation in the Simulink window after the connection is established using the "▶" button.

Hardware interface ID

Here, you can manually change the numeric value of the hardware ID of the corresponding communication interface. The value must correspond to the value assigned under "Hardware identifier" for a communication interface in the TIA Portal. If the values do not match, the connection between Simulink and the controller cannot be established via External Mode.

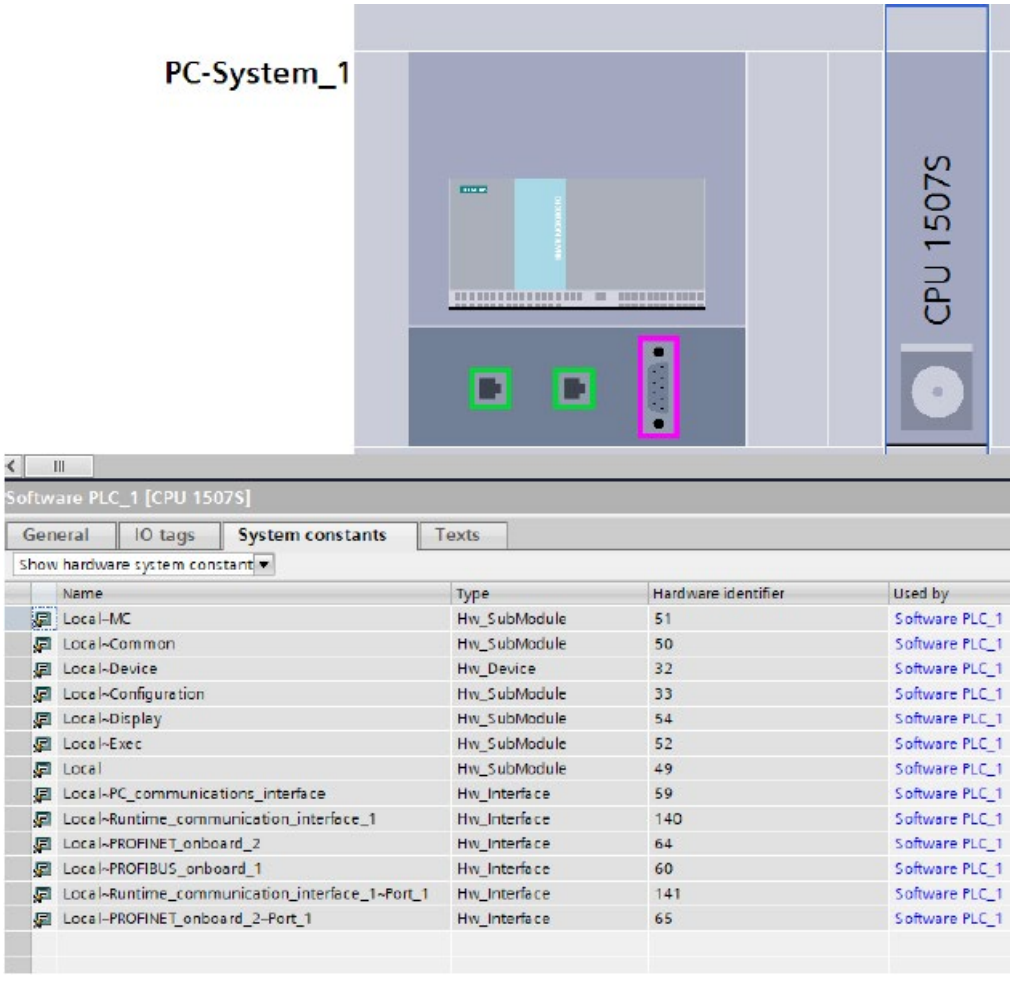

Figure 7-5 Example of a Hardware identifier setting

Connection ID

Enter a value between 1 and 4095 for the Open User Communication in STEP 7 for the communication of the External Mode.

The value must be unique for the STEP 7 user program.

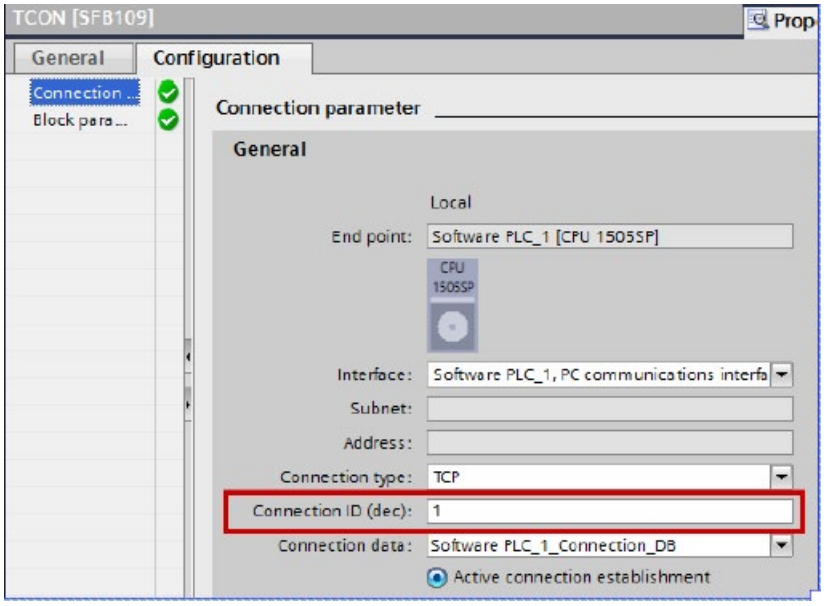

Figure 7-6 Example of the setting of the connection ID in STEP 7

Thread-safety of communication

Select the thread safety of the connection from this list. If the communication is thread-safe, you can call the "CallExtMode" FB and the "OneStep" FB in different OBs.

Organization block

From this list, select the OB of the selected CPU into which the generated "CallExtMode" FB is imported. To create a new OB, click "Create a new OB".

Instance DB

From this list, select the instance DB for the generated "CallExtMode" FB. To create a new instance DB, click "Create a new DB".

7.3.3 Description of the Accessibility options

Requirement

You have selected Target 1500S as the System Target File.

Parameters that can be set

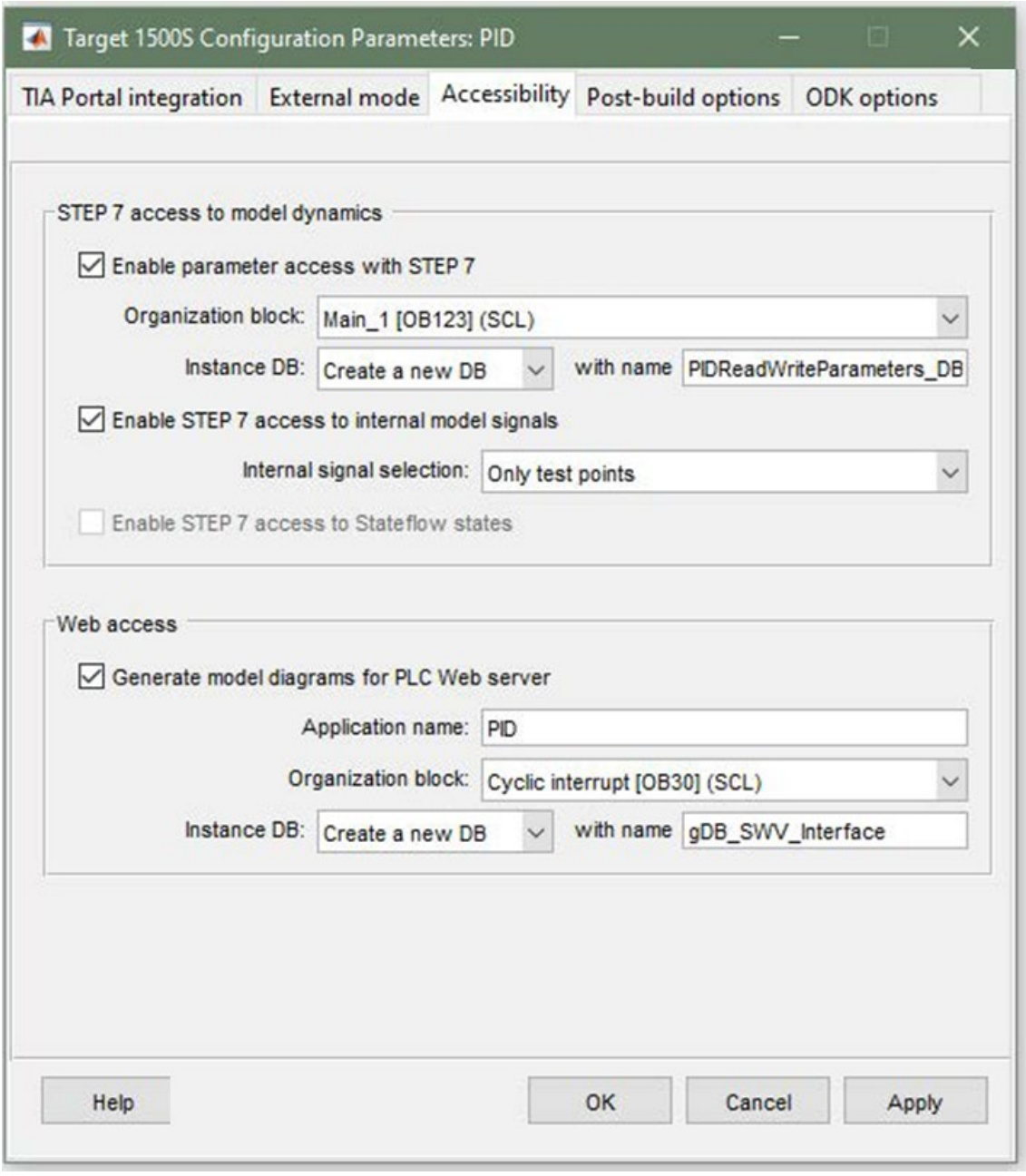

Figure 7-7 Accessibility options

Enable parameter access with STEP 7

Select this option to generate a special code for accessing the model parameters from the STEP 7 program.

Note

Enable / disable Parameter access with STEP 7.

If you enable "Parameter access with STEP 7" under "Optimization" in the "Code generation" area, select the setting "Tunable" from the "Default parameter behavior" selection.

If you disable "Parameter access with STEP 7" under "Optimization" in the "Code generation" area, select the setting "Inlined" from the "Default parameter behavior" selection.

- Organization block

  From this list, select the OB of the selected CPU into which the generated "ReadWriteParameters" FB is imported. To create a new OB, click "Create a new OB".

- Instance DB

  From this list, select the instance DB for the generated "ReadWriteParameters" FB. To create a new instance DB, click "Create a new DB".

Enable STEP 7 access to internal model signals

Enable this option to obtain defined measurement points (internal signals) in the Simulink model as output(s) of the "OneStep" FB.

You can find additional information in the section "Access to internal signals (Page 64)".

From the "Internal signal selection" list, select the type of internal signals for the access from STEP 7.

- All measurement points including test points

  All measurement points are used as internal signals.

- All measurement points excluding test points

  All measurement points, excluding test points, are used as internal signals.

- Only test points

  Only measurement points defined as test point are used as internal signals.

Enable STEP 7 access to Stateflow states

Allows STEP 7 access to Stateflow states defined in Simulink models.

Generate model diagrams for PLC Web server

To display the Simulink model in the Web server, enable this option.

You can find additional information in the section "Display model on the Web server (Page 66)".

- Application name

  Enter the name of the Web server application. If you do not enter a name, the model name is automatically assigned for the application.

- Organization block

  From this list, select the OB of the selected CPU into which the generated "WebReadWrite" FB is imported. To create a new OB, click "Create a new OB".

- Instance DB

  To create a new instance DB with the fixed name "gDB_SWV_Interface", select "Create a new DB" from the list.

7.3.4 Description of the Post-build Options

If you have selected Target 1500S as System Target File, you can set a number of configuration parameters specific to Target 1500S. These parameters are listed below.

Parameters that can be set

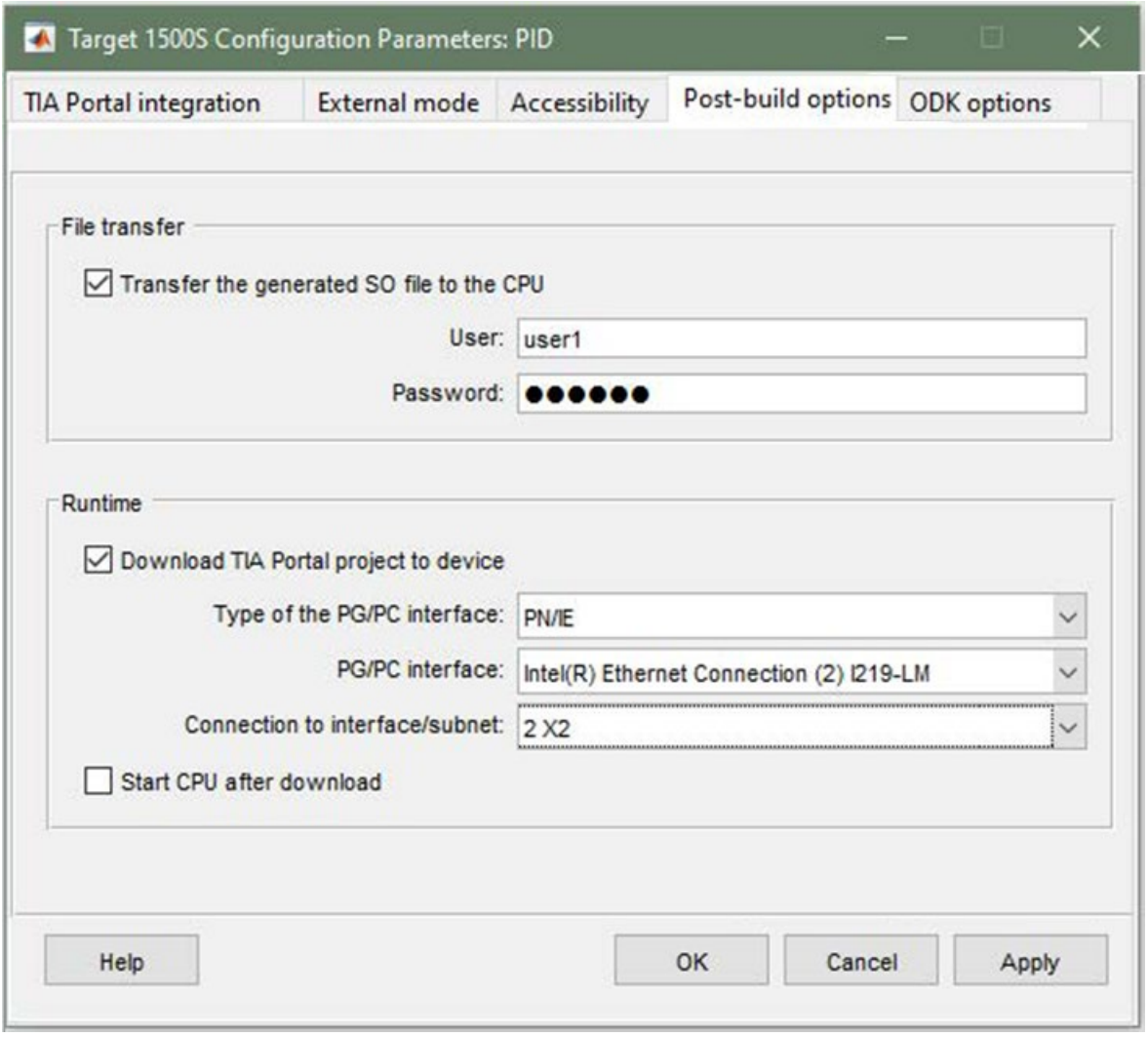

Figure 7-8 Post-build Options

Transfer the generated SO file to CPU

To automatically import the generated SO files into the CPU after the build, enable this option.

- User

  If a login is required, select a user for Web server access to the CPU from this list.

- Password

  If a login is required, enter the password for Web server access to the CPU.

Note

Note that neither the password nor the user name is saved for security reasons.

Download TIA Portal project to device

To automatically download the STEP 7 project to the CPU after the build, enable this option.

- Type of the PG/PC interface

  Select a PG/PC interface from this list. Only PN/IE is available.

- PG/PC interface

  Select a PG/PC interface from this list, depending on the selected interface type.

- Connection to interface/subnet

  Select a subnet from this list, depending on the selected interface.

- After the download, start the CPU.

Note

Automatic download to fail-safe CPUs

Note that automatic download of a STEP 7 project to a fail-safe CPU is not possible.

7.3.5 Description of the ODK options

In the "ODK options" tab, you can set the following configuration parameters.

Requirement

You have selected Target 1500S as the System Target File.

Parameters that can be set

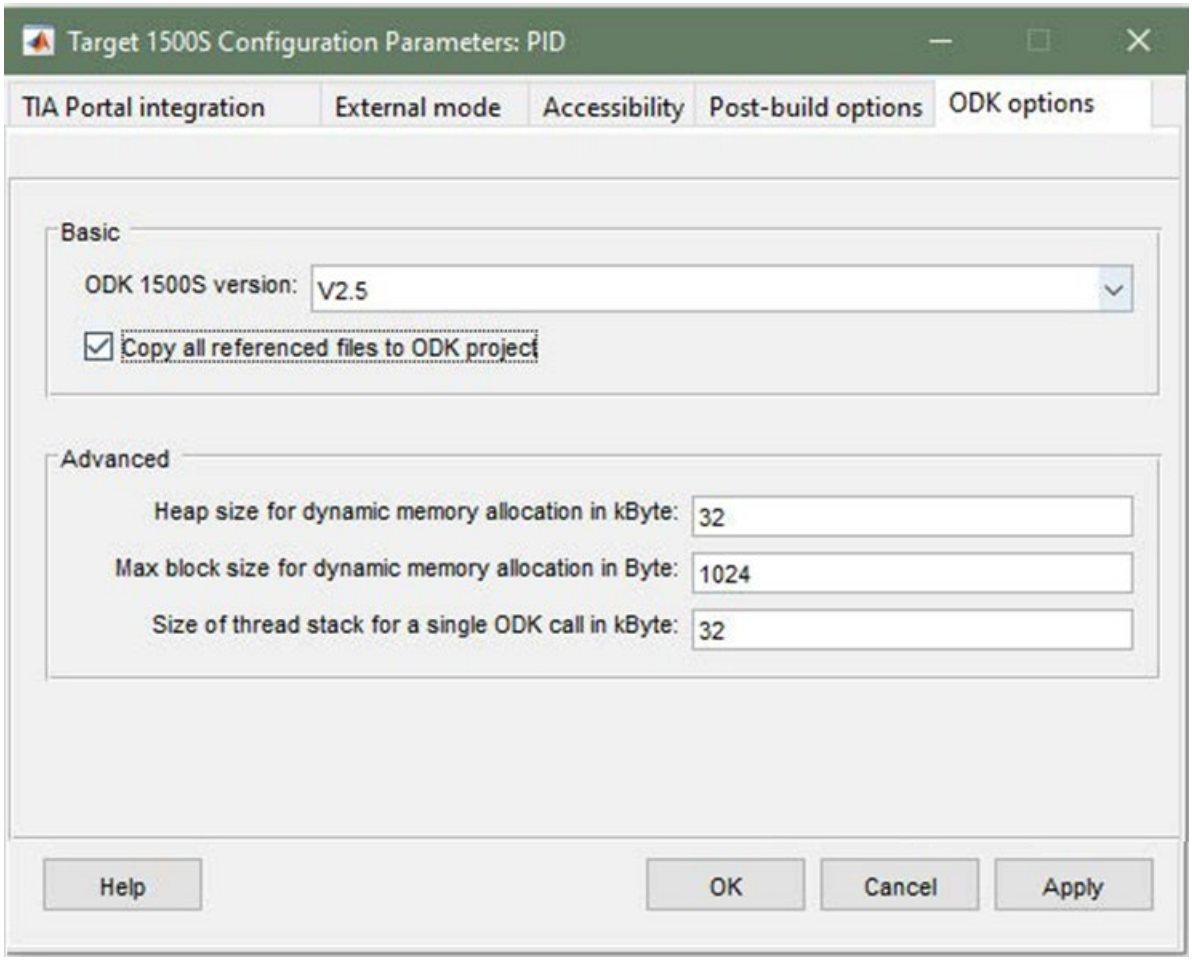

Figure 7-9 ODK options

ODK 1500S version

Choose an installed ODK version from this list. All versions that are compatible with the installed Target version are shown. Restarting MATLAB updates the list, if you have subsequently installed ODK.

Copy all referenced files to ODK project

To copy all MATLAB source files and other code into the ODK project, enable this option. The ODK project can then still be compiled on a PC without a MATLAB installation.

The referenced files are copied to the "references" folder under "<Model name>_Target_1500S_<Current version>_grt_Output".

Heap size for dynamic memory allocation in kByte

Specify the memory for dynamic memory allocation in the ODK object numerically. You need a greater memory allocation in the following cases:

- When you append additional source files to create an ODK project.
- When you are using "malloc".
- When you use new operations in your own functions.

  The value must be between 4 and [<available CPU memory>].

You can find additional information in the ODK documentation (https://support.industry.siemens.com/cs/ww/en/ps/13914/man).

Max block size for dynamic memory allocation in Byte

Specify the memory for dynamic memory allocation in the ODK object numerically. You need a greater memory allocation in the following cases:

- When you append additional source files to create an ODK project.
- When you are using "malloc".
- When you use new operations in your own functions.

  The value must be between 8 and [<Heap size>].

You can find additional information in the ODK documentation (https://support.industry.siemens.com/cs/ww/en/ps/13914/man).

Size of thread stack for a single ODK call in kByte

Numerically specify the memory for the thread stack of a call in the ODK application.

The value must be between 1 and 1024.

You can find additional information in the ODK documentation (https://support.industry.siemens.com/cs/ww/en/ps/13914/man).

7.4 Command line access to options

As an alternative to setting the Target 1500S parameters via the user interface, you can also access the parameters from the MATLAB command line window. To do this, use the command set_param as:

```
>> set_param ('<SimulinkModel>','ParameterName>','<NewValue');
```

Note

However, to maintain consistency, we recommend that you set the parameters via the user interface.

Callable options

The following tables show all callable options together with their parameter names in the program line, possible parameter values and mutual dependencies.

Table 7- 1 TIA Portal integration

Option	Command line parameters	Possible parameter values	Requirements and dependencies
TIA Portal project	`TiaPortalProject`	A valid file path string and file extension	• TIA Portal Openness is installed • Windows user was added to the 'Siemens TIA Openness' group
Device	`CpuName`	Device name in the TIA Portal	• TIA Portal Openness is installed • Windows user was added to the 'Siemens TIA Openness' group • A TIA Portal project has been specified
PROFINET interface	`PNInterface`	Interface name in the TIA Portal	• TIA Portal Openness is installed • Windows user was added to the 'Siemens TIA Openness' group • 'Device' was selected
IP address	`IPAddress`	A valid IPv4 string	Manual setting: • No requirements Automatic extraction: • TIA Portal Openness is installed • Windows user was added to the 'Siemens TIA Openness' group • PROFINET interface selected
Port	`IPAddressPort`	A positive number as string	• TIA Portal Openness is installed • Windows user was added to the 'Siemens TIA Openness' group • PROFINET interface was assigned to the selected PC station

Option	Command line parameters	Possible parameter values	Requirements and dependencies
Import the generated SCL file to STEP 7 (TIA Portal)	`ImportScl`	'on', 'off'	• TIA Portal Openness is installed • Windows user was added to the 'Siemens TIA Openness' group
Software unit	`SoftwareUnit`	'Non Unit program' or unit name in the TIA Portal	• TIA Portal Openness is installed (V16 or later) • Windows user was added to the 'Siemens TIA Openness' group • 'Import the generated SCL file to STEP 7' is selected
Organization block	`CyclicOB`	OB name in the TIA Portal	• TIA Portal Openness is installed • Windows user was added to the 'Siemens TIA Openness' group • 'Import the generated SCL file to STEP 7' is selected
Instance DB	`CyclicDB`	DB name in the TIA Portal	• TIA Portal Openness is installed • Windows user was added to the 'Siemens TIA Openness' group • 'Import the generated SCL file to STEP 7' is selected
Cyclic time (µs)	`CyclicOBTime`	A value between 100 and 60000000 as a string	• TIA Portal Openness is installed • Windows user was added to the 'Siemens TIA Openness' group • 'Import the generated SCL file to STEP 7' is selected • 'Organization block' is selected as cyclic interrupt OB
Compile the CPU after import	`CompileCpuAfterImport`	'on', 'off'	• TIA Portal Openness is installed • Windows user was added to the 'Siemens TIA Openness' group • 'Import the generated SCL file to STEP 7' is selected
Automatically save the TIA Portal project after build process	`SaveTiaPortalProj`	'on', 'off'	• TIA Portal Openness is installed • Windows user was added to the 'Siemens TIA Openness' group • 'Import the generated SCL file to STEP 7' is selected

Table 7- 2 External mode options

Option	Command line parameters	Possible parameter values	Requirements and dependencies
Enable external mode	`ExtMode`	'on', 'off'	'Enable external mode' is selected
Verbosity level	`ExtMode_VerbosityLevel`	'on', 'off' or '1', '0'	
Port number	`ExtMode_PortNumber`	A positive number as string	
Wait for start	`ExtMode_WaitForStart`	'on', 'off' or '1', '0'	
Hardware interface ID	`InterfaceID`	A positive number as string	
Connection ID	`ConnectionID`	A value between 1 and 4095 as a string	
Thread-safety of communication	`AllowExtModeInDifferentOB`	'on', 'off'	
Organization block	`ExtModeOB`	OB name in the TIA Portal	• TIA Portal Openness is installed • Windows user was added to the 'Siemens TIA Openness' group • 'Import the generated SCL file to STEP 7' is selected • 'Enable external mode' is selected
Instance DB	`ExtModeDB`	DB name in the TIA Portal	

Table 7- 3 Accessibility options

Option	Command line parameters	Possible parameter values	Requirements and dependencies
Enable parameter access with STEP 7	`Control_Parameters`	'on', 'off'	
Organization block	`ParamAccessOB`	OB name in the TIA Portal	• TIA Portal Openness is installed • Windows user was added to the 'Siemens TIA Openness' group • 'Import the generated SCL file to STEP 7' is selected • 'Enable parameter access with STEP 7' is selected
Instance DB	`ParamAccessDB`	DB name in the TIA Portal	
Enable STEP 7 access to internal model signals	`GenerateCodeForInternalSignals`	'on', 'off'	

Option	Command line parameters	Possible parameter values	Requirements and dependencies
Internal signal selection	`InternalSignalSelection`	• 'All measurement points including test points' • 'All measurement points excluding test points' • 'Only test points'	
Enable STEP 7 access to Stateflow states	`StateflowAccess`	'on', 'off'	Stateflow toolbox installed and valid license available
Generate model diagrams for PLC Web server	`GenerateCodeForWebPage`	'on', 'off'	
Application name	`GenerateCodeForWebPage_AppName`		
Organization block	`WebAccessOB`	OB name in the TIA Portal	• TIA Portal Openness is installed • Windows user was added to the 'Siemens TIA Openness' group • 'Import the generated SCL file to STEP 7' is selected • 'Generate model diagrams for PLC Web server' is selected
Instance DB	`WebAccessDB`	DB name in the TIA Portal	

Table 7- 4 Post-build options

Option	Command line parameters	Possible parameter values	Requirements and dependencies
Transfer the generated SO file to the CPU	`UploadObject`	'on', 'off'	
User	For security reasons, no tag is accessible via the command line	Web server user name in the TIA Portal	Manual setting: • 'Transfer the generated SO file to the CPU' is selected Automatic extraction: • TIA Portal Openness is installed (V16 or later) • Windows user was added to the 'Siemens TIA Openness' group • 'Transfer the generated SO file to the CPU' is selected
Password	For security reasons, no tag is accessible via the command line	Web server user password	'Transfer the generated SO file to the CPU' is selected

Option	Command line parameters	Possible parameter values	Requirements and dependencies
Download TIA Portal project to device	`DownloadTiaProjToDevice`	'on', 'off'	• TIA Portal Openness is installed • Windows user was added to the 'Siemens TIA Openness' group
Type of the PG/PC interface	`PgPcInterfaceType`	'PN/IE'	• TIA Portal Openness is installed • Windows user was added to the 'Siemens TIA Openness' group • 'Download TIA Portal project to device' is selected
PG/PC interface	`PgPcInterface`	Interface name in the TIA Portal	• TIA Portal Openness is installed • Windows user was added to the 'Siemens TIA Openness' group • 'Download TIA Portal project to device' is selected • 'Device' is selected
Connection to interface/subnet	`PgPcInterfaceConnection`	Connection name in the TIA Portal (e.g.: '1 X1', '2 X3')	• TIA Portal Openness is installed • Windows user was added to the 'Siemens TIA Openness' group • 'Download TIA Portal project to device' is selected • 'PG/PC interface' is selected
Start CPU after download	`StartCpuAfterDownload`	'on', 'off'	• TIA Portal Openness is installed • Windows user was added to the 'Siemens TIA Openness' group • 'Download TIA Portal project to device' is selected

Table 7- 5 ODK options

Option	Command line parameters	Possible parameter values	Requirements and dependencies
ODK 1500S version	`ODK_Versiontype`	'V2.0', 'V2.5'	A compatible ODK 1500S version
Copy all referenced files to ODK project	`PortableProject`	'on', 'off'	
Heap size for dynamic memory allocation in kByte	`HeapSize`	[4...<available CPU memory>]k	
Max block size for dynamic memory allocation in kByte	`MaxBlockSize`	[8...<HeapSize>]	
Size of thread stack for a single ODK call in kByte	`SyncCallStack-Size`	[1...1024]k	

7.5 Running Simulink build

Procedure

1. Start the build process in Simulink via the menu "Code > C/C++ Code > Build Model".

   The system creates a new ODK Eclipse project in the following folder:

   C:\ProgramData\Siemens\Automation\ODK1500S\<ODK version>\workspace

2. If the ODK workspace is already being used by another Eclipse application, the dialog "ODK 1500S default workspace is locked" opens.

   Close the Eclipse application and confirm the dialog with "OK".

3. If there is already an ODK project of the same name in the ODK workspace, the "Existing ODK 1500S Project" dialog opens.

   Click "Yes" to replace the existing project in the ODK workspace.

   Click "No" to cancel the build process.

Note

Rebuild model with a different Target version

If you rebuild a model with the same ODK version but a different version of the Target 1500S, the existing ODK project is overwritten.

Results

- The Diagnostic Viewer (Page 47) displays information about the build process.
- A folder containing all generated files was created. The folder name is: <Model name>_Target_1500S_V<Current version>_grt_Output.
- The relevant files are stored in the "outputs" subfolder.
- Depending on the selected target settings, the generated code is loaded into the TIA Portal project, compiled and transferred to the CPU.

You can find more information on the generated files in the appendix (Page 51).

Integration of files in program/data blocks

If you configured integration in program/data blocks before running the build, the program blocks are arranged in the TIA Portal project for the corresponding CPU:

- Add instance DB calls to the selected program blocks (at the end of each program block)
- Overwrite existing DB calls in program blocks
- Remove instance DB calls whose functionality cannot be called for the new build

Note

If there is an instance DB call to a previous build in a function block (FB), that call cannot be modified during automatic integration into the STEP 7 project and can cause a compilation error in the affected CPU. In such a case, remove or edit the call manually before you run the build.

Note

Automatic program block operations are currently only supported for SCL.

Compatible devices

The generated SO file can be executed in the following environments:

- S7-1500 Software Controller
- ET 200SP Open Controller
- CPU 1518 MFP/ODK
- S7-PLCSIM Advanced (as of V3.0)

7.6 The Diagnostic Viewer

The Diagnostic Viewer displays information about the build process.

Layout

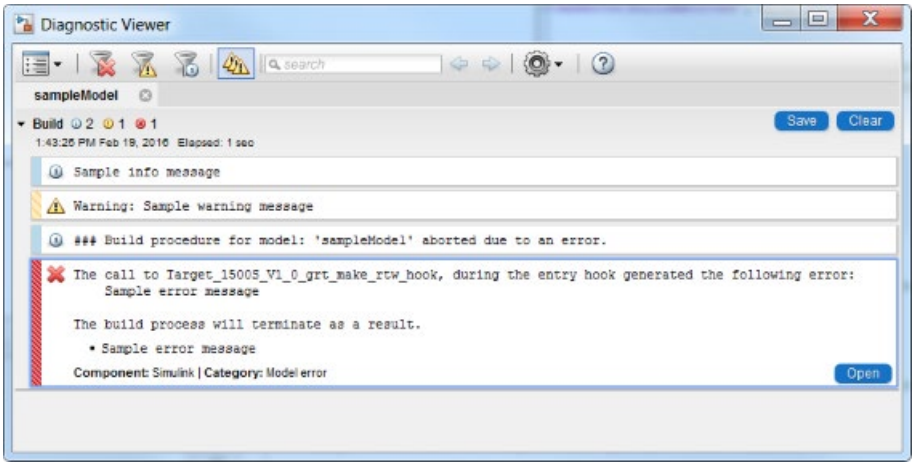

Symbol	Designation	Meaning
	Information	This alarm provides information about the progress of the build process.
	Warning	This alarm does not abort the build process. You are made aware of special considerations and possible problems.
	Error	This alarm indicates an error that results in termination of the build process.

You can find the possible information, warning and error messages under Alarms (Page 78).

7.7 Loading and running the ODK application

The procedure for loading and executing an ODK application is described in the next steps. More information about the individual steps is provided in the manual of the Open Development Kit 1500S (https://support.industry.siemens.com/cs/ww/en/ps/13914/man).

Note

If the ODK application is not loaded automatically during the build, you can load the ODK application into the CPU manually.

Procedure

1. Open the Web server of the ODK-enabled S7-1500 CPU.
2. Upload the SO file to the ODK 1500S folder via "Filebrowser".

   Steps 1 and 2 describe manual steps. Only perform these steps manually if automatic execution is disabled or not possible.

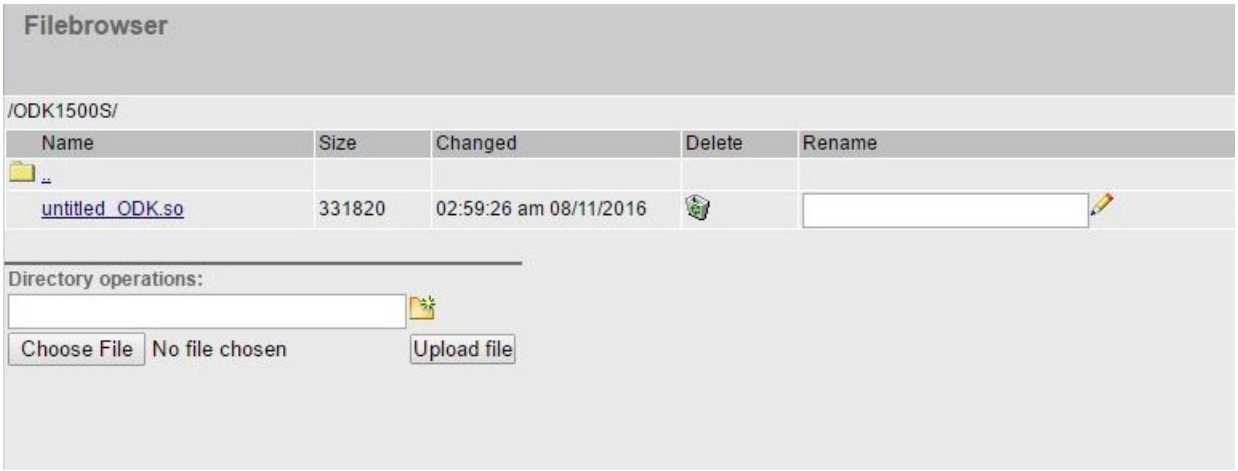

   The SO file is transferred to the load memory.

3. Insert the SCL file in the project tree in STEP 7 as an external source.
4. Generate the program blocks from the external source in STEP 7 by right-clicking on the SCL file > "Generate blocks from source".

   Depending on the parameters set, the following function blocks are created:

   – <Simulink model>_Load
   – <Simulink model>_Unload
   – <Simulink model>CallExtMode
   – <Simulink model>OneStep
   – <Simulink model>ReadWriteParameters
   – <Simulink model>WebReadWrite

   Steps 3 and 4 describe manual steps. Only perform these steps manually if automatic execution is disabled or not possible.

5. Load the application from the load memory to the work memory of the CPU with the instruction "<Simulink model>_ Load".

   Note

   Loading and unloading blocks

   Note that the "Load/Unload blocks" function is not automatically integrated into the TIA Portal project within the block options.

6. Run the application with the instruction "<Simulink model>OneStep".

Note

Run a modified SO file

A modified SO file is not executed until the old SO file is unloaded with the <Simulink model>_Unload function and the new SO file is loaded with the <Simulink model>_Load function to the work memory.

If previously loaded SO files are not unloaded, they remain in the work memory and reduce it. This can mean that no more SO files can be loaded because the available work memory is no longer sufficient. To empty the work memory, shut down your system and restart it.

Procedure:

1. Unload previously loaded SO files.
2. During the build, perform an automatic import of the new SCL file into the CPU of the TIA Portal project or manually import the new SCL file after the build.
3. During the build, perform an automatic transfer of the new SO file to the TIA Portal project CPU or manually transfer the new SO file after the build.
4. Load the new changed SO file.

Using an example project

8

An example project is ready for you on the Internet (https://support.industry.siemens.com/cs/ww/en/view/109482830) to help getting started with the Target 1500S.

An application example for virtual commissioning with SIMATIC and Simulink is available on the Internet (https://support.industry.siemens.com/cs/ww/en/view/109749187) under application case 3.

Files generated by coders

A

To create ODK-enabled data, the Target 1500S TLC is used based on the Simulink Coder. The generated files and their main functions are explained below.

Files created by Simulink Coder

- <Simulink model>.cpp

  This file has three main functions:

  - void <Simulink model>_step(void)

    This function is called by the OneStep FB and is casted to the Simulink model.
  - void <Simulink model>_initialize(void)

    This function is called by the <Simulink model>_Load FB.
  - void <Simulink model>_terminate(void)

    This function is called by the <Simulink model>_UnLoad FB.
- <Simulink model>.h

Files created by the Target 1500S TLC

- <Simulink model>_ODK.odk

  This file is used as input for the ODK code generator.
- <Simulink model>_ODK.cpp

  This file contains the execution of OnLoad, OnUnload and OneStep functions.
- <Simulink model>_ODK.scl.additional

  This file is only generated when external mode (Page 54) is activated.

Target 1500S TLC generated a comment with the following information in the files:

- Name and version of the Simulink model.
- Name and date of creation of file.
- Target 1500S version and the System Target File used.
- ODK 1500S version
- Versions of the MATLAB configuration

Referenced models

B

Since Version V1.0 Update 1, Target 1500S has been supporting the code generation of referenced models for controllers with ODK capability. With referenced models, a parent model contains one or more referenced models. A referenced model itself can refer to further referenced models.

Special considerations for code generation with referenced models

Target 1500S detects referenced models and processes the models from the referenced models to the parent model during the build. The system creates an ODK Eclipse project at the end of the build.

You can configure the parameters for the parent model and the referenced models differently under "Configuration Parameters (Page 21)". In the following table, you can see the response to the respective parameters.

Parameter	**Response to referencing**	
	Only the settings of the parent model are taken into consideration	**The settings are individually evaluated**
ODK 1500S version	✓	
Copy all referenced files to ODK project	✓	
Parameter access with STEP 7		✓
Enable STEP 7 access to internal model signals		✓
Enable STEP 7 access to Stateflow states		✓
Generate model diagrams for PLC Web server	✓	
Enable external mode	✓	
Settings for "Integration to TIA Portal project"	✓	
Import the generated SCL file to CPU(s)	✓	
Compile the CPU after import	✓	
Automatically save the TIA Portal project after build process	✓	
Transfer the generated SO file to the CPU	✓	
Download TIA Portal project to device	✓	
Start CPU after download	✓	

External mode

If the external mode (Page 54) is enabled in the parent model, it can also be used for the referenced models contained therein.

For code generation, the "Interface" settings of the referenced models are ignored and the settings of the parent model are used.

If you select a setting other than "External mode" or "None" for the referenced model under "Interface", an error message appears during the compiling.

External mode

C

C.1 The external mode

The external mode of Simulink enables you to monitor the model during runtime and change the parameters of the model online.

For Simulink to be able to communicate with the model on the controller via external mode, external mode must be activated before starting the build process. In this case, the code is supplemented by communication code for the data exchange between Simulink and the controller. The communication is realized on the basis of TCP/IP.

DANGER

Changes to the model only in the test environment

Use the external mode for test purposes only.

Changing the tag values while the plant is operating may result in severe damage to property and personal injury in the event of malfunctions or program errors. Make sure that dangerous states cannot occur before you use the "Modify" function.

When using the external mode, note that no CPU password is required to control tags.

Activating external mode

To activate external mode, select the value "External mode" under "Code Generation > Interface > Data exchange interface" in the Simulink parameters (Page 21). Alternatively, activate the "Enable external mode" option in the user interface of the Target 1500S configuration parameters.

C.2 Setting communication parameters for external mode

- External mode options on the Target 1500 user interface
  - IP address:

    IP address of the ODK-enabled controller which is to run the application.

    Uses the IP address of the "IP Address" option of the "TIA Portal integration" tab of the Target 1500S user interface.
  - Verbosity level (optional):

    Set the value "1" in order to obtain detailed information about the external mode in the "Diagnostic Viewer (Page 47)".
  - Port number (optional):

    The port number of the server for the TCP/IP connection (ODK-enabled controller).

    Default: 17725
  - Wait for start (optional):

    If you set the value to "0", the simulation starts automatically when the "OneStep" function is executed.

    If you set the value to "1", the execution of the Simulink model does not start automatically. In this case, you need to start the simulation in the Simulink window after the connection is established using the " " button.
- Other external mode options in the Simulink configuration
  - Static memory buffer size

    This memory is required for communication of the external mode.

    Increasing "Static memory buffer size", however, simultaneously reduces the available memory for loading the ODK object. Adhere to the ODK limits. If necessary, you can enter a higher value or change your model.

You can find a description of the other options of the "External mode" tab in section "Description of the external mode options (Page 30)".

Note

Change the parameters of the external mode

If you change the parameters of the external mode, you need to rebuild the Simulink model. Then update the STEP 7 user program and the SO file on the CPU (see "Loading and running the ODK application (Page 47)").

C.3 The function block CallExtMode

Structure of the function block (FB)

If the block call is not generated automatically, you can also insert the block manually as described below.

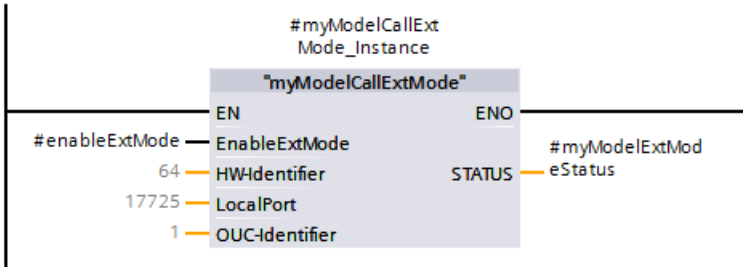

The "<Simulink model>CallExtMode" FB has the following input parameters:

- EnableExtMode (Bool)

  To establish an external mode connection, set this parameter to "true" using a tag.

- HW-Identifier (UInt)

  You specify the value of the hardware interface ID for the communication interface in the Target 1500S options.

  The default value is "64".

- LocalPort (UInt)

  The port number value is set in the Target 1500S options.

  Change the value to establish the external mode connection using a different CPU port.

- OUC-Identifier

  The value for the Connection ID is set in the Target 1500S options.

  The Connection ID is required for Open User communication and the value must be unique for the STEP 7 user program.

The "<Simulink model>CallExtMode" FB has the following output parameters:

- STATUS

  The status parameter has the type <Simulink model>ExtModeStatus_UDT (User Definied Datatype) and contains the following parameters:

  - Status_TCON (Word)
  - Status_TDISCON (Word)
  - Status_TRCV (Word)
  - Status_TSEND (Word)
  - Status_ODK (Int)
  - Status_ExtMode (Word)

  You can find the status descriptions for "TCON", "TDISCON", "TRCV", "TSEND" in the STEP 7 help.

  You can find the status descriptions for ODK in the manual (https://support.industry.siemens.com/cs/ww/en/ps/13914/man).

Note

Special features of the option "Thread-safety of communication"

If the option is set to "Not thread-safe", call the "CallExtMode" FB in the same block (OB, FB) as "OneStep". Otherwise, the model calculation is not performed synchronously with the data connection.

If the option is set to "Thread-safe", you can call the FB "CallExtMode" in a different "OneStep" block.

Note the following when option is "Thread-safe":

- The block which contains the FB "OneStep" must have a higher priority than the block with the FB "CallExtMode".
- The possible available memory for running ODK applications is reduced.
- Call the FB "CallExtMode" in a program cycle OB.
- If the cycle interruption time of the OB in which the FB "OneStep" is called is too short, interruptions may occur in the graphs (scope) during simulation of the model in Simulink.

Functionality of the block

The FB has the following tasks:

- Communication between Simulink and controller.
- Data transfer between Simulink and controller.

Return value for Status_ExtMode	Description
0x0000	Return value after successful execution or initial state.
0x0001	Not enough memory for the external mode. The allocated memory may be too small for a complex Simulink model. Increase the value in the interface options under "Static memory buffer size". To apply the value, generate the ODK object again. "Static memory Buffer size", however, reduces the space available for the application at the same time.

C.4 Establishing an external mode connection

Procedure

1. Call the FB "<SimulinkModel>CallExtMode" and enable access (EnableExtMode).

   Note

   Run the OneStep FB before the external mode connection is made.

   Simulation steps are executed as soon as the OneStep FB of a cyclic OB is called. If the external mode connection is not yet established, these steps are lost.

   To prevent this, set the "Wait for start" option to "On" (1) in the "External mode" dialog of the Target 1500S.

2. Select "External" as the simulation mode.

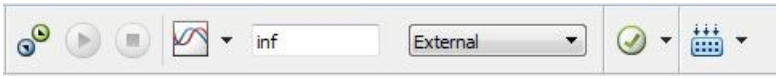

3. As the simulation stop time, select the value "inf" for endless simulation or an appropriate value for your model.

Note

Checking the solver settings

Check whether the setting "fixed-step-size (fundamental sample time)" under "Solver > Solver details" is set appropriately for your model.

You can find more information about parameters in the MATLAB and Simulink documentation.

4. To establish the external mode connection, click on the connect symbol " ".

Result

You can monitor the model during runtime of the controller and change parameters of the model online.

Note

When the simulation is completed or canceled, the CPU must be switched from "STOP" to "RUN" in order to start a new connection with subsequent simulation. Data from the previous simulation is overwritten.

Parameter access from STEP 7

D

D.1 Introduction

Certain parameters can be read and changed at runtime after you enable parameter access in the STEP 7 user program. These parameters can be user parameters used in the model or parameters integrated in the blocks of the model.

It is also possible to read and change the model parameters via External Mode in order to test and adapt your model at runtime.

D.2 Enabling parameter access

Parameter types

For a parameter used in a Simulink model, there are two different contexts for optimizing the parameters.

Block parameters

Block parameters are integrated parameters of a Simulink block in the model. To allow access to these parameters, select "Tunable" under "Default parameter behavior" in "Code Generation > Optimization".

Workspace parameters

You define the workspace parameters in a MATLAB workspace.

Procedure

1. Enable the "Parameter access with STEP 7" in the Target 1500S options.
2. In order to generate the UDT "<Simulink model>Params" and FB "<Simulink model>ReadWriteParameters" in the SCL file, select "Tunable" under "Default parameter behavior" in "Code Generation > Optimization".

   You can also configure parameters other than "Tunable". You can add the parameters defined in the MATLAB workspace in the "Model Parameter configuration" area.

   To do this, select a supported storage class.

Storage class	Support
Model default	Yes
ExportedGlobal	Yes
ImportedExtern	Yes
ImportedExternPointer	No

3. Compile the model, transfer the corresponding files to STEP 7 as before and load the STEP 7 project into the CPU.

D.3 The ReadWriteParameters function block

In order to read and change parameters, you need the UDT "<Simulink model>Params" and the FB "<Simulink model>ReadWriteParameters".

Structure of the function block (FB)

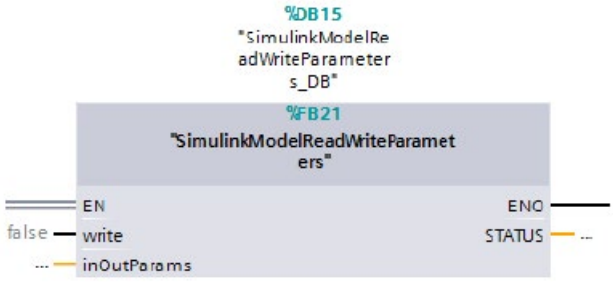

The "<Simulink model>ReadWriteParameters" FB has the following input parameters:

- write (Bool)

  To write the parameters from the S7 program to the Simulink model, set this value to "true". The values passed with the "inOutParams" parameter are processed by the Simulink model.

  To read the parameters from the Simulink model, set this value to "false". The current values of the Simulink model parameters are written to a tag interconnected to "inOutParams".

The "<Simulink model>ReadWriteParameters" FB has the following parameters:

- inOutParams

  The inOutParams has the type <Simulink model>Params UDT and is used for reading or writing parameters in the Simulink model.

The "<Simulink model>ReadWriteParameters" FB has the following output parameters:

- STATUS

  This return value is automatically generated by ODK.

  The return value is "0" when the execution is successful.

  You can find information on the other error codes in the ODK manual (https://support.industry.siemens.com/cs/ww/en/ps/13914/man)

The UDT parameter values are initialized with their default values as defined in MATLAB/Simulink.

D.4 Establishing parameter access

Procedure

If automatic block call is not possible, proceed as follows:

1. Generate blocks from the SCL file in STEP 7.
2. Use the blocks generated in STEP 7.
   - To set the values in the same cycle, call the "ReadWriteParameters" FB before "OneStep".
   - To set the values in the following cycle, call the "ReadWriteParameters" FB after "OneStep".

Note

Thread-safety requirement of the "ReadWriteParameters" FB

You cannot change the model parameters dynamically using the "OneStep" model function block.

To change the parameters dynamically, use the "ReadWriteParameters" FB in STEP 7.

Note

The "ReadWriteParameters" FB is thread-safe, i.e. you can call the "ReadWriteParameters" FB and the "OneStep" FB in different OBs.

The UDT parameter values are initialized with their default values set in MATLAB/Simulink.

Note

Changed model parameters in the S7 program are kept in the work memory. If the associated ODK object is re-initialized, the parameters are reset to their default values.

Access to internal signals

E

You can define measurement points in the Simulink model by giving names to the lines of a model. Measurement points are referred to as "internal signals" in the context of Target 1500S.

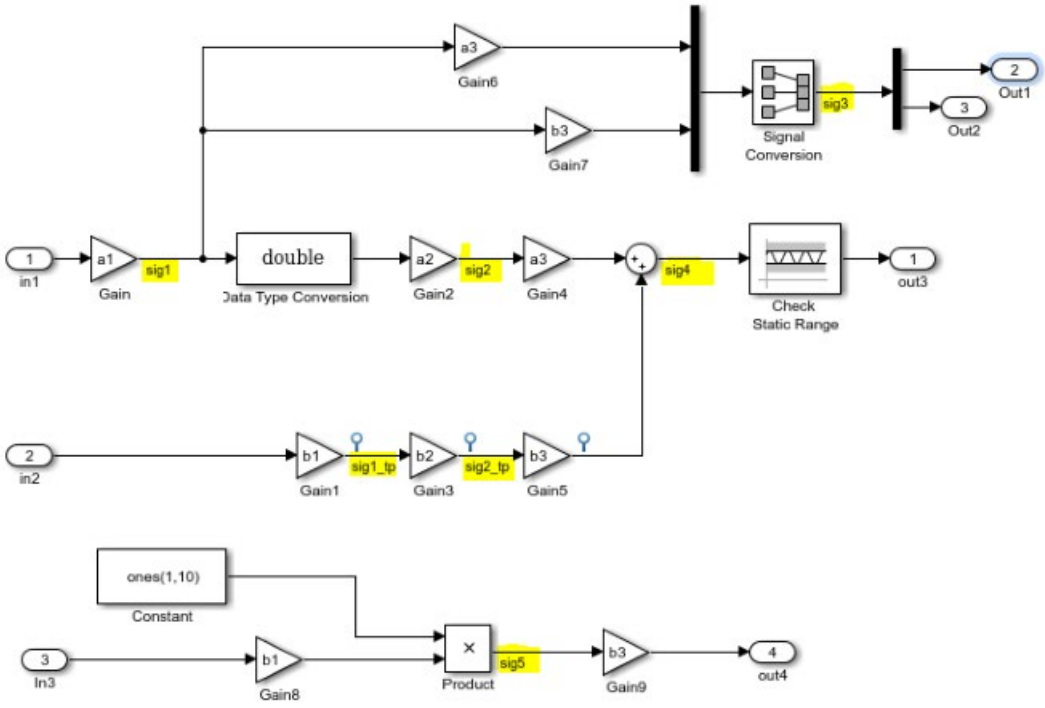

Figure E-1 Example model with internal signals

If you enable the "Enable STEP 7 access to internal model signals" option in the Target 1500S options, these internal signals are defined as output of the "OneStep" FB during the generation of the code.

Special features for the FB "OneStep"

Target 1500S defines the internal signals during the generation of the code in an ODK_STRUCT with the name "InternalModelSignals". The FB "OneStep" needs a new output parameter "OUT" with the name "internalSignals" for this purpose.

Properties of the signal

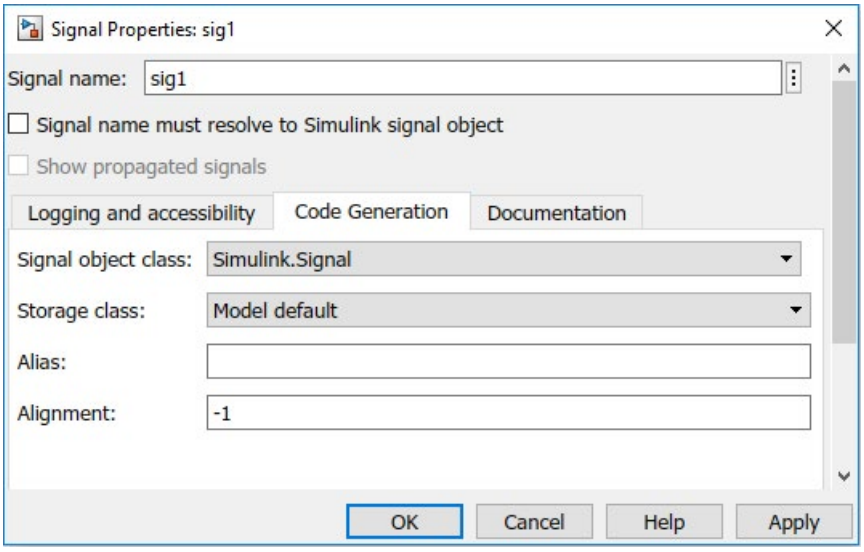

Figure E-2 Dialog box Signal Properties

1. Under "Signal name:", enter the name of the signal.
2. Select a supported storage class for the signal under "Storage class:".

Storage class	Support
Auto	Yes, if it is casted to a supported storage class.
Model default	Yes
ExportedGlobal	Yes
ImportedExtern	Yes
ImportedExternPointer	No
Custom storage class	No

Display model on the Web server

F

F.1 Notes on protection

Configuration of the Web server

A user with the name "Everybody" is created by default in the user list of the Web server. The user stands for any user who uses the Web server without a user name. By default, the user has minimal access rights, such as read access to the intro and start page. Because the user "Everybody" does not have a password assigned in STEP 7, pay close attention to the access rights you assign to this user. Individual authorizations, such as the option to change the operating mode, may represent a security risk.

To assign safety-related authorizations, configure a new user and always assign a password in STEP 7. Assign secure passwords to users during configuration. An example of a secure password is one which is only used for a single application, is more than 8 characters long, and consists of lower-case and upper-case letters as well as special characters and numbers (?!+%$1234...).

Whenever possible, select the option "Permit access only with HTTPS" as soon as you have assigned a password to at least one user.

Reference

You will find more information on the configuration of the Web server in the Web Server (http://support.automation.siemens.com/WW/view/en/59193560) function manual.

F.2 The WebReadWrite function block

Since version V3.0, Target 1500S supports a Web interface to display and control a Simulink model using all values on the CPU's Web server.

Structure of the function block (FB)

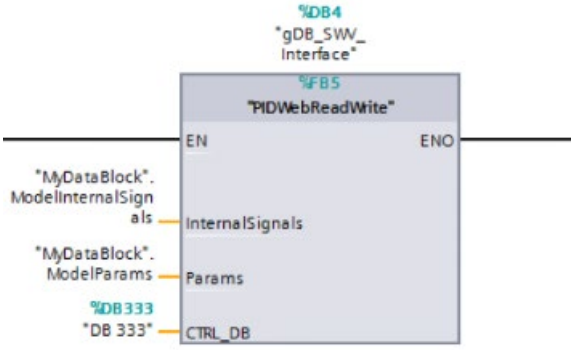

Figure F-1 WebReadWrite

The "<Simulink model>WebReadWrite" FB has the following input parameter:

- InternalSignals

  The parameter is available when you enable the Access to internal signals (Page 64).

- Params

  The parameter is available when you enable the Parameter access (Page 60).

- CTRL_DB

  Specify the start number of the first data block of the generated Web server blocks. The value corresponds to the Web DB number in the STEP 7 settings.

Calling the FB

Call "WebReadWrite" in the same OB as "OneStep" and "ReadWriteParameters". The name of the instance DB for calling the "WebReadWrite" FB in the STEP 7 user program must be "gDB_SWV_Interface".

F.3 Adding files to a STEP 7 project

Generating files for Web access

To create all required files for access via the Web server, enable the "Generate model diagrams for PLC Web server" option.

The files are generated during the build in the folder "website" under "<Model_name>_Target_1500S_<current version>_grt_Output".

Adding files automatically to a STEP 7 project

To create all required files for access via the Web server, enable the "Generate model diagrams for PLC Web server" option.

All required settings for "user pages" are performed automatically in the TIA Portal project:

- Set the HTML directory as the "website" folder generated during the build
- Set the default HTML pages as "home.html" in the folder
- Set the application name as specified by the user
- Add ".json" to the list of files with dynamic content
- Generation of blocks for Web access

Note

The automatic steps described are only possible as of TIA Portal V16.

Adding files manually to a STEP 7 project

To create the required data blocks for the Web server from the generated Web content, proceed as follows:

1. Open your project in STEP 7.
2. In the properties of the CPU in the "General" tab, select the "User-defined pages" property in the "Web server" group.

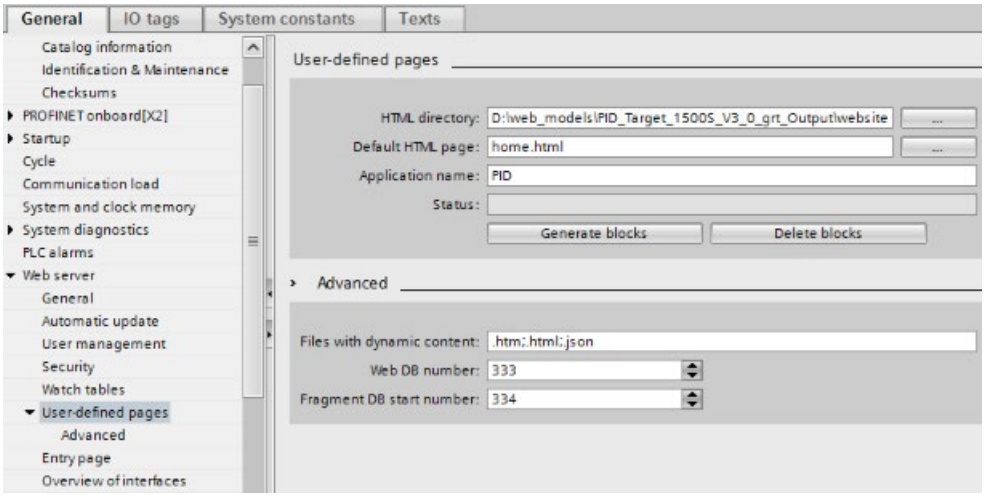

3. Make the following settings under "User-defined pages":
   - HTML directory: Enter the path of the "website" folder.
   - Default HTML page: Specify the created file "home.html".
   - Application name: Enter the name of the application.
4. In addition to ".htm" and ".html" enter the type ".json" under "Advanced" in the "Files with dynamic content" input field.
5. Create the data blocks for the Web server by clicking on "Generate blocks".

Result

The data blocks for the Web server are generated, starting with the value defined under "Web DB number".

F.4 Using the Web server

Requirement

- You have installed one of the following browsers:
  - Google Chrome
  - Microsoft Edge
  - Microsoft Internet Explorer 11
  - Mozilla Firefox 31 or later
- You have loaded the STEP 7 project.
- The model runs on the CPU.

Procedure

Follow these steps to access the model from the Web server:

1. Enter the IP address of the CPU in the Web browser.
2. Select the user interface language.

   Log on to the system if needed. The user requires authorization to open user pages.
3. Select "User-defined pages".
4. To display the model, click "Start page of the application <application name>:".

   A new page with the diagram of the model opens.

Properties of the Web page

The following properties are available to you on the page:

- To get to the main diagram, click "Home".
- To gain Web access to the parameters (Page 71), click on the respective ("Params", "WorkspaceParams" or "ModelWorkspaceParams") parameter in the menu.
- Referenced models, subsystems, visualizable Stateflow blocks (e.g. charts and state transition tables) can be opened via the menu or by clicking on the block in the diagram.
- Clicking on a "Scope" block opens a pop-up window that graphically displays the current values of internal signals.
- You can run "OpenFcn" callbacks defined in Simulink via the diagram.
- Commented out model parts are grayed-out.
- In "RUN" mode of the CPU, internal signals are displayed dynamically at the corresponding connection in the diagram.

F.5 Web access to parameters

You can read and write the parameters on the Web server.

Requirement

- You have enabled parameter access.
- The parameter is used in the model.

Parameter categories

There are three parameter categories in Simulink that you can select in the Web server.

- Model parameters

  Parameters of the blocks in a model.
- Base workspace parameters

  These parameters are defined in the basic workspace of MATLAB and can be used on every level of the model hierarchy.
- Model workspace parameters

  These parameters are defined in the context of a model and only apply to the respective model.

To open a list with the parameters, click on the respective parameter category in the menu.

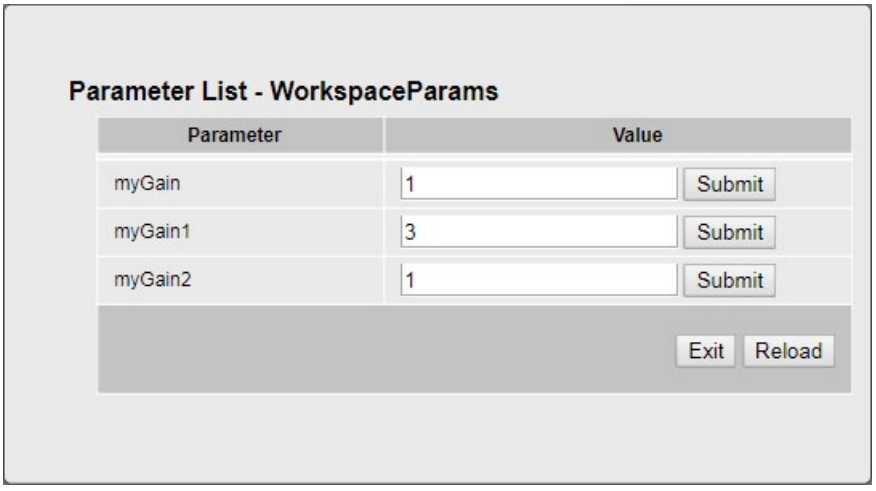

You can change the value of the parameter using the input field. To send the new value, click "Submit" for the relevant parameter. To update all parameters in the list, click "Reload".

Click "Exit" to close the list with the parameters.

F.6 Display signals on the Web server

You can display and monitor the internal signals of your model in a graph. Only internal signals that are connected to a "Scope" block are displayed.

Requirements

- You have enabled access to internal signals.
- You have assigned names for the signals.

Procedure

1. To open the graph, click the "Scope" block in the model.

   A window with the graph opens. The individual signals are shown in different colors.

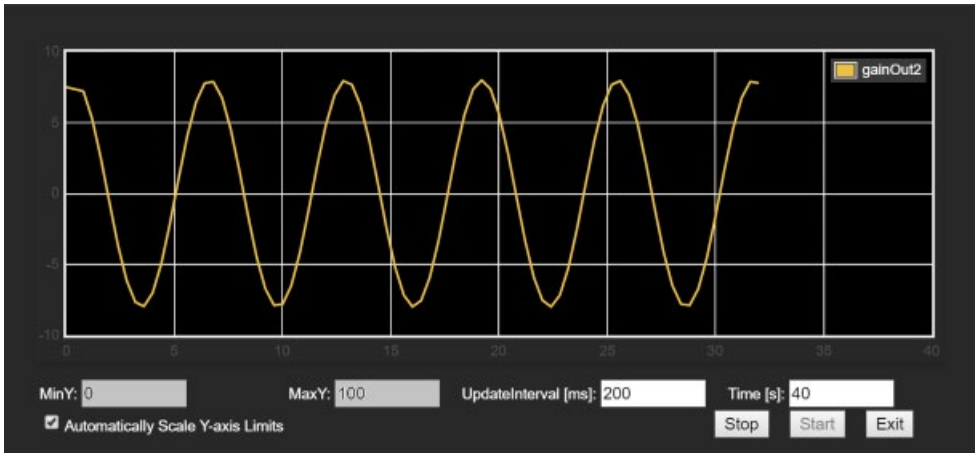

   – MinY; MaxY:

     Specify the range of the Y axis.

   – Automatically Scale Y-axis Limits

     To dynamically scale the area of the Y-axis, enable this option. The input fields "MinY" and "MaxY" are blocked when the option is enabled.

   – UpdateInterval [ms]:

     Enter in milliseconds the interval at which the values are read from the CPU.

   – Time [s]:

     Specify the size of the X axis.

2. To start the recording, click "Start". To stop the recording, click "Stop".
3. To close the window with the graph, click "Exit".

F.7 Show active Stateflow states on the Web server

Mathworks offers the licensed "Stateflow" toolbox for modeling and simulation of decision-making logic via flowcharts. Target 1500S supports the use of Stateflow. In Simulink, you can visualize the active states in the charts and transition tables of states. This feature is also available in the Web server of the CPU.

You can use the Web server of the CPU to check the current state without Simulink.

To handle complex logical decision-making algorithms, Stateflow provides three main blocks:

- TruthTables
- Charts
- State Transition Tables

Parameters for accessing states

To display the active Stateflow states on the Web server, you need enabled Target 1500S parameters in the Accessibility options (Page 33).

Enable STEP 7 access to Stateflow states

To have access to the active Stateflow states in the created project, enable the "Enable STEP 7 access to Stateflow states" parameter.

During the build process, Target 1500S creates an ODK_STRUCT named "StateflowChartStates" that contains string tags. These string tags contain the names of the active states. They are divided into two classes of string tags with different naming conventions:

- Chart state variables

  Representation of the active states at the top level of a chart. The name of the tag consists of the name of the chart and an ID, e.g. "myChart_2".

- Parent state variables

  Representation of the active child states of a parent state. The name of the tag consists of the name of the chart, the name of the parent state and an ID, for example "myChart_myParentState_3".

ODK_STRUCT "StateflowChartStates" is an output type in the "chartStates" tag in the FB "<Simulink model>OneStep".

Generate model diagrams for PLC Web server

To display the Stateflow blocks and activities on the Web server, enable the "Generate model diagrams for PLC Web server".

You can navigate in the Web server over the Stateflow blocks and state changes are displayed.

Restrictions of the Stateflow toolbox

The visualization is identical to a normal simulation in Simulink. However, there are some restrictions in the Stateflow blocks and activities.

Supported Stateflow blocks

Stateflow block type or use case	Can be displayed and navigated on the Web server
Charts	Yes
Simulink functions in charts	Yes
Simulink states in charts	Yes
Graphic functions in charts	Yes
Hierarchies of parent and child states in charts	Yes
Grouping of states in charts	Yes (as ungrouped states)
MATLAB functions in charts	No
TruthTables in charts	No
Subcharts in subcharts	No
Preview of subcharts and subcharts	Yes
Atomic subcharts in charts	Yes
Boxes	Yes
Transition tables of states	Yes (as underlying Stateflow chart)
TruthTables	No

Supported Stateflow activities

Type of Stateflow activity	Can be displayed on the Web server
Active states in charts	Yes
Active Simulink states in charts	Yes
Active subcharts in charts	Yes
Active Simulink states / states in subcharts	No
Active atomic subcharts in charts	Yes
Active Simulink states / States in atomic subcharts	Yes
Active paths in graphic functions	No
Active transitions in charts	No
Active states in previews of charts	No
Active states in previews of subcharts	Yes
Parallel execution of states	No
Active states in 'moore' charts	No

Additional restrictions

Using state names in programs:

For a Simulink model with stateflow® charts in which state names are used in the program as an argument in another state, runtime access to states is not possible and build operations can fail. An example of this is the use of the in operator in a stateflow® chart with parallel state decomposition to verify that a state is active within a certain time step during chart execution. Additional information is available under:

https://www.mathworks.com/help/stateflow/ug/checking-state-activity.html (https://www.mathworks.com/help/stateflow/ug/checking-state-activity.html)

Using data types

G

G.1 Bus objects

You can define bus objects in the Simulink model. These objects can contain simple data types or other bus objects.

Converting bus objects

Bus objects are compiled with the Simulink build in PLC data types for the S7 program.

The following figure shows bus objects in Simulink on the right and the generated PLC data types in STEP 7 on the left.

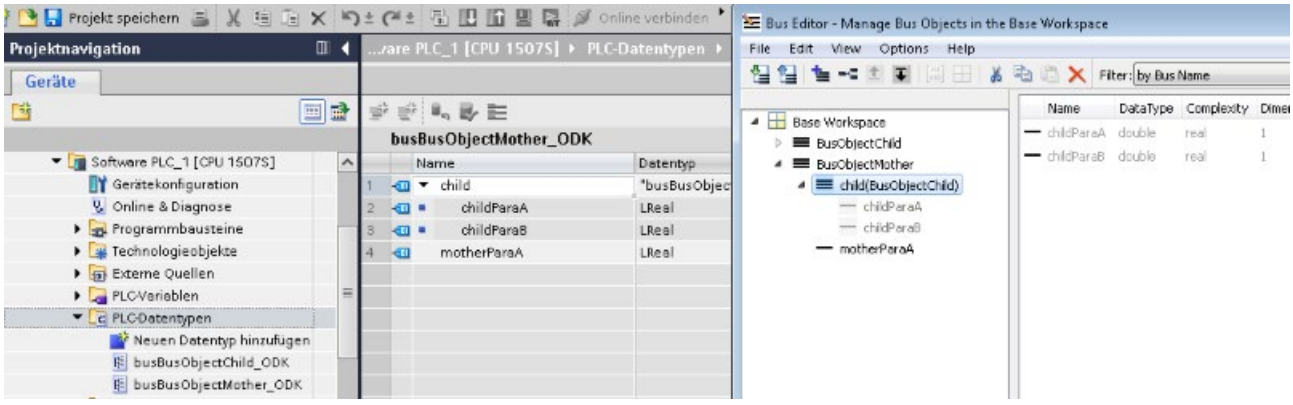

A bus object can be used as a data type for a signal of the Simulink model.

Reference

You can find more information about using PLC data types in the STEP 7 help system.

G.2 Supported basic data types

The following table represents the supported basic data types in Simulink and their assignment in ODK, STEP 7 and C/C++:

Simulink	ODK	C++	STEP 7	Description
double	ODK_DOUBLE	double	LREAL	64-bit Floating Point, IEEE 754
single	ODK_FLOAT	float	REAL	32-bit Floating Point, IEEE 754
int8	ODK_INT8	char	SINT	8-bit signed integer
uint8	ODK_UINT8	unsigned char	USINT	8-bit unsigned integer
int16	ODK_INT16	short	INT	16-bit signed integer
uint16	ODK_UINT16	unsigned short	UINT	16-bit unsigned integer
int32	ODK_INT32	int	DINT	32-bit signed integer
uint32	ODK_UINT32	unsigned int	UDINT	32-bit unsigned integer
int64	ODK_INT64	long long	LINT	64-bit signed integer
uint64	ODK_UINT64	unsigned long long	ULINT	64-bit unsigned integer
boolean	ODK_BOOL	bool	BOOL	1 bit bitstring

G.3 Complex data types

The following table represents the complex data types for STEP 7 access:

Contents	Complex types			
	Arrays	Bus objects	Enumeration types	Complex numbers
Inputs/Outputs	✓	✓	✓	✓
Parameters	✓	✓	✓	✓
Internal signals	✓	✓	✓	✓

✓: Supported

X: Not supported

The following table represents the complex data types for Web server access:

Contents	Complex types			
	Arrays	Bus objects	Enumeration types	Complex numbers
Parameters	✓	✓	X	✓
Internal signals	X	X	X	X
Scoping	X	X	X	X

✓: Supported

X: Not supported

Alarms

H

H.1 Alarms during the build process

Meaning of the alarms

- Information messages (Page 78)

  This alarm provides information about the progress of the build process.
- Warnings (Page 81)

  This alarm does not abort the build process. You are made aware of special considerations and possible problems.
- Error messages (Page 84)

  This alarm indicates an error that results in termination of the build process.

H.2 Information messages

Info no.	Alarm	Meaning
1	"Build of <SimulinkModel> with Target 1500S <Version> is started"	The build process starts
2	"Generating Target 1500S specific files:"	Target 1500S is creating files.
3	"<Filename> is generated"	Target 1500S has created files.
4	"Generating Simulink Model sources"	The Simulink Coder is generating source files.
5	"Creating ODK 1500S project <SimulinkModel>_ODK under <OutputPath>"	Target 1500S is creating an ODK project.
6	"ODK 1500S Project <SimulinkModel>_ODK is created successfully"	The ODK project has been successfully created.
7	"Building ODK 1500S project <SimulinkModel>_ODK"	An ODK project is being built. If you have selected the "Verbose" option in the Options menu of the code generator, the Diagnostic Viewer displays each output.
8	"<SimulinkModel>_ODK project build is finished successfully"	The ODK project build was completed successfully.

Info no.	Alarm	Meaning
9...12	"<SimulinkModel> build is finished successfully. <SimulinkModel>_ODK.scl and <SimulinkModel>_ODK.so files are available in folder "outputs". TIA Portal: 1. Navigate to the CPU / 'External Source' area and import the <SimulinkModel>_ODK.scl file. 2. Select the imported file and generate blocks out of this source (right-click or Toll menu) 3. Integrate the blocks into your CPU program in order to load and execute it. Web server (CPU): 1. <SimulinkModel>_ODK.so file has to be uploaded using the Web server into ODK1500S folder. You can find details about deploying an ODK 1500S Object to CPU in ODK 1500S documentation (https://support.industry.siemens.com/cs/ww/en/view/109752683)." For Web access to the runtime model, the file 'home.html' is available in folder "website" TIA Portal: 1. Navigate to Web server > User-defined pages in CPU properties 2. Select the path to the 'website' folder as HTML directory 3. Set the default HTML page as 'home.html' 4. Define an application name 5. Make sure that '.htm', '.html' and '.json' are defined in files with dynamic content 6. Generate blocks 7. Integrate the generated FB for Web access into your CPU program and name its DB as 'gDB_SWV_Interface'	The Simulink build was completed successfully. The files "<Simulink model>_ODK.scl" and "<Simulink model>_ODK.so" are available in the "outputs" folder. TIA Portal: This message is only output when the option "Import the generated SCL file to STEP 7 (TIA Portal)" is disabled or the process was unsuccessful. 1. Navigate to the CPU in the "External sources" area and import the file "<SimulinkModel>_ODK.scl". 2. Mark the imported files and generate blocks from the source with a right-click. 3. Integrate the blocks into your program to download and execute it. Web server of the controller: This message is only displayed if the "Generated model diagrams for PLC Web server" option is enabled and the process was successful. 1. Download the file "<SimulinkModel>_ODK.so" over the Web server to the ODK 1500S folder. If you have disabled the option "Import the SCL file generated by the build to a CPU" or if the execution was unsuccessful, you can update the sources manually via the TIA Portal. Proceed as follows for this: You can find additional information in the ODK manual (https://support.industry.siemens.com/cs/ww/en/view/109752683).
13	"Removing <SimulinkModel>_ODK from ODK 1500S default workspace"	You have confirmed the "Existing ODK Project" dialog with "Yes". The existing project is overwritten.
14	"<SimulinkModel>_ODK is removed from ODK 1500S default workspace"	You have confirmed the "Existing ODK Project" dialog with "Yes". The existing project was overwritten.
15	"Terminating all running Eclipse instances"	The running Eclipse instances are being terminated.
16	"All running Eclipse instances are terminated successfully. Proceeding with build"	The running Eclipse instances are terminated.
17	"Generating Simulink Model sources"	The Simulink Coder is generating source files.
18	"Creating the static library project <ProjectName> under <ProjectPath>"	The process requires another static library besides the ODK project.
19	"Building the static library project <ProjectName>"	The static library is being built.
20	"Importing the static library project <ProjectName>"	The static library is being imported.
21	"The project <ProjectName> is imported successfully."	The project was imported successfully.
101	"SCL file import started"	The SCL file import starts.

Info no.	Alarm	Meaning
102	"Checking for compatible TIA Portal and Openness installations"	The compatibility of STEP 7 and Openness plugin is being checked.
103	"Opening / attaching to the TIA Portal project <TiaPortalProjectName>"	The STEP 7 instance used is being attached to the STEP 7 project.
104	"CPU <CpuName>: Searching for it in the TIA Portal project"	Searching for CPU(s) in the STEP 7 project.
105	"CPU <CpuName>: <SimulinkModel>_ODK.scl is being imported"	The SCL file is being imported.
106	"CPU <CpuName>: Blocks are being generated out of the imported SCL source"	Blocks are being generated from the SCL file.
107	"CPU <CpuName>: CPU is being compiled"	You have selected the option "Compile the CPU after import". The CPU is being compiled.
108	"The TIA Portal project is being saved"	The STEP 7 project is being saved.
109	"SCL file import finished successfully"	The SCL file import was finished successfully.
110	"In order to manually import the SCL file: 1. In TIA Portal project tree, double click on '<CPUName> > External source files > Add new external file' 2. Select the SCL file in folder "outputs". 3. Right click on the added file '<ModelName>_ODK.scl' and select 'Generate blocks from source'	To import the SCL file manually, follow these steps: 1. In the project view in STEP 7, double-click "<CPUName> > External source files > Add new external file". 2. Select the SCL file in the "outputs" folder. 3. In the shortcut menu of the added "<ModelName>_ODK.scl" file, select the command "Create blocks from the source".
111	"In order to manually complete the SCL import process: 1. In TIA Portal project tree, right click on the added file '<ModelName>_ODK.scl' under '<CpuName> > External source files' and select 'Generate blocks from source'	To complete the SCL import manually, follow these steps: 1. In the project view in STEP 7, navigate to "<CPU name> > External source files". 2. In the shortcut menu of the added "<ModelName>_ODK.scl" file, select the command "Create blocks from the source".
121	"TIA Portal project download is started"	The download of the STEP 7 project begins.
122	"TIA Portal project download finished successfully"	The download of the STEP 7 project was successfully completed.
123	"Configuration of the user defined page is started""	The configuration of the customized page begins.
124	"Configuration of the user defined page is finished successfully""	The configuration of the customized page was successfully completed.
125	"Program block operations started"	The calculation of the program block begins.
126	"Program block operations finished successfully"	The calculation of the program block has been successfully completed.
201	"Generation of Web content for <ModelName> is started"	Process for generation of the Web content for the model starts.
202	"Checking preconditions for generation of Web content"	The requirements for generating the Web content are being checked.
203	"Clearing existing content"	Any existing content is being deleted.
204	"Getting internal signal info"	The information of the internal signals is being obtained.
205	"Getting workspace parameter info"	The information of the "Base workspace parameters" is being obtained.
206	"Getting model workspace parameter info"	The information of the "Model workspace parameters" is being obtained.

Info no.	Alarm	Meaning
207	"Getting external input info"	The port information of the inputs is being obtained.
208	"Getting external output info"	The port information of the outputs is being obtained.
209	"Getting scope info"	The graph (scope) information is being obtained.
210	"Getting model hierarchy"	The model hierarchy is being obtained.
211	"Creating SVG files for model view"	The SVG files are being created.
212	"Generating JSON files for parameters"	The JSON file for the parameters is being created.
213	"Generating JSON files for model"	The JSON file for the model is being created.
214	"Generating JSON files for internal signals"	The JSON file for the internal signals is being created.
215	"Generating JSON files for scopes"	The JSON file for the graphs (scopes) is being created.
216	"Generating files for Web application"	The files for the Web application are being created.
217	"Generation of Web content for <ModelName> completed successfully"	Process for generation of the Web content for the model was completed successfully.
301	“SO file transfer started”	The SO file import starts.
302	“Logging in to the CPU Web server over <IP-Address>”	Logging in to the CPU Web server.
303	“Deleting a possibly existing file on the server”	If a file already exists, it is deleted.
304	“Uploading the SO file to ODK1500S folder on <IP-Address>”	The SO file is being uploaded to the ODK 1500S folder.
305	“SO file transfer finished successfully”	The SO file import was finished successfully.
306	"SO file transfer finished with an error"	The process for import of the SO file was completed with an error.

H.3 Warnings

Warning no.	Alarm	Meaning
1	"Using ‘External Mode’ can cause serious damage to property or injury to persons if there are functional disturbances or program errors. Make sure that no dangerous situations can arise before you conduct a test with the ‘External Mode’ function."	If "External Mode" is enabled in the settings under "Code Generation", this alarm appears at the end of the build process.
2	"’Default parameter behavior’ shall be set to ‘Tunable’ for STEP 7 access also tunable block parameters of the model. Otherwise STEP 7 access only to global tunable parameters will be possible."	You have activated the "Parameter access with STEP 7" option and selected "Inlined" under "Default parameter behavior". Set the selection to "Tunable".

Warning no.	Alarm	Meaning
3	"The syntax of the current MEX-file arguments is not correct. It might happen, that the External Mode cannot be established. The correct syntax: '<IPAddress>' <VerbosityLevel> <PortNumber> <WaitForStart> • IPAdress and PortNumber is related with your PLC. • Set VerbosityLevel to 1 for getting detailed information in diagnostic viewer. • If WaitForStart is set to 1, the application will wait for the Simulink start command Please check the SIMATIC Target 1500S documentation for further information."	The structure of the "MEX-file arguments" is incorrect. External mode may not run properly. The correct structure is: '<IPAddress>' <VerbosityLevel> <PortNumber> <WaitForStart> • The IP address and port number depends on your controller. • Set the VerbosityLevel to 1 to get detailed information in the Diagnostic Viewer. • If WaitforStart is set to 1, the application waits for the start command from Simulink.
4	Establishing external mode communication will not be possible since 'UpdateModelReferenceTargets' is set to 'Always' for the model <SimulinkModel>. Please change it to another option in order to be able to use external mode.	Communication for the external mode cannot be set up because the "UpdateModelReferenceTargets" setting for the <SimulinkModel> is set to "Always". Change this to another setting to use external mode.
5	Since multiple number of instances of <ChildModel> is allowed to be referenced, STEP 7 access to some internal signals of this model may not be possible because 'Model default' or 'Auto' storage class definition has been detected. For <ChildModel>, set 'Total number of instances allowed per top model' to 'One' or set storage class for internal signals to 'ExportedGlobal' or 'ImportedExtern' in order to access all internal signals.	Since multiple instances of the referenced model can be referenced, access from STEP 7 to some internal signals of this model may not be possible because the storage class "Model default" or "Auto" was selected. To access all internal signals, set "Total number of instances allowed per top model" to "One" for the referenced model or set the storage class for internal signals to "ExportedGlobal" or "ImportedExtern".
701	"The required dll for <OperationName> import does not exist in the bin folder. Please repair or uninstall/install Target 1500S setup."	The required DLL for the output operation does not exist in the directory "<TARGET_ROOT_DIR>\bin\tools". Repair or uninstall/install the Target 1500S.
703	"Empty or invalid field: <OptionName>"	You have installed no compatible Openness plugin. You can find the compatible Openness plugin at "Description of the TIA Portal integration options (Page 26)".
704	"The required functionality is not supported by the TIA Openness version."	An error has occurred while loading the Openness.dll.
705	"An error occurred during TIA Openness operation: <OperationName>"	An error occurred during the TIA Openness operation <OperationName>.
750	"Download provider is NULL"	The download provider is set to ZERO.
751	"Download configuration does not seem to be correct"	The configured download options do not correspond to the selectable options in the TIA Portal.
752	"PCStation download has just failed"	Error downloading the HW Config (PC station download)
753	"CPU download has just failed"	Error downloading to the CPU.
799	"Unknown error"	An unknown error occurred during a TIA Portal Openness operation.
801	"Error while extracting internal signal info"	Error while extracting the information of the internal signals.
802	"Error while extracting workspace parameter info"	Error while extracting the information of the "Base workspace parameters".
803	"Error while extracting model workspace parameter info"	Error while extracting the information of the "Model workspace parameters".

Warning no.	Alarm	Meaning
804	"Error while extracting external input info"	Error while obtaining the port information of the inputs.
805	"Error while extracting external output info"	Error while obtaining the port information of the outputs.
806	"Error while extracting scope info"	Error while obtaining the graph (scope) information.
807	"Error while extracting model hierarchy"	Error referencing the model hierarchy.
808	"Error while creating SVG file <SvgFileName>"	Error while creating the SVG file.
809	"Error while modifying SVG file <SvgFileName>"	Error while modifying the SVG file.
810	"Error while extracting field <FieldName> from model data structure."	A data field required for creating the SVG file could not be read.
811	"Error while generating JSON files for parameters"	Error while creating the JSON file for the parameters.
812	"Error while generating JSON files for model"	Error while creating the JSON file for the model.
813	"Error while generating JSON files for internal signals"	Error while creating the JSON file for the internal signals.
814	"Error while generating JSON files for scopes"	Error while creating the JSON file for the graph (scope).
815	"The file <FileName> could not be opened"	Unable to open a temporary file.
899	"Unknown error"	An unknown error occurred during Web file generation.
901	“Error while renaming the file or directory - Memory Card is write-protected”	Error while renaming the file or the directory. The memory card is write-protected.
902	“Error while renaming the file or directory - name already exists”	Error while renaming the file or the directory. The name has already been assigned.
903	“Error while renaming the file or directory - Memory Card is full”	Error while renaming the file or the directory. The memory card is full.
904	“Error while creating the directory”	Error while creating the directory.
905	“Error while creating the directory - Memory Card is write-protected”	Error while creating the directory. The memory card is write-protected.
906	“Error while creating the directory - name already exists”	Error while creating the directory. The name has already been assigned.
907	“Error while creating the directory - Memory Card is full”	Error while creating the directory. The memory card is full.
908	“Error while uploading the file”	Error while uploading the file.
909	“Error while uploading the file - name already exists”	Error while uploading the file. The memory card is write-protected.
910	“Error while uploading the file - Memory Card is write-protected”	Error while uploading the file. The name has already been assigned.
951	“IP address is empty. Please provide IP address of the CPU to transfer the SO file”	No IP address assigned. Enter the IP address of the CPU.
952	“IP address is not in correct format”	Enter the IP address in the correct format.
953	“Connection Error”	The host is not reachable.
954	“Invalid login information”	Login has failed.
955	"Error while uploading the file - file too big"	Error while uploading the SO file. The SO file must not be larger than 2147483648 bytes.
956	"Allowed characters are a-z A-Z 0-9 ._- (){}[]$!=~ (space)"	An invalid character was used for the name of the SO file.
957	“The file could not be found”	The SO file was not found.
958	“IO Exception”	An error occurred while reading the content for opening the SO file.

Warning no.	Alarm	Meaning
959	“Unauthorized Access“	An authorization error occurred while accessing the SO file.
960	"File write protected"	File is read-only
961	"An error occurred while uploading the so file: <Error-String>"	Error uploading the SO file
999	“Unknown error”	Unknown error
1000	Building model with Target 1500S trial mode: <RemainingDaysInTrialPeriod> day(s) left	The model was created with the Target 1500S test version.

H.4 Error messages

Error no.	Alarm	Meaning
1	Depending on the error, the corresponding error message is displayed.	Appears in case of Simulink Coder errors.
10	"Eclipse workspace is locked. Please close any Eclipse instance(s) that might have locked ODK 1500S default workspace."	Close all affected Eclipse instances with a standard ODK Workspace, which is also used by Target 1500S.
600	"ODK 1500S Code Generator gives the following error for <SimulinkModel>_ODK project: <Error text of the ODK Code Generator> Please refer to ODK 1500S documentation (https://support.industry.siemens.com/cs/ww/en/view/109752683) or contact customer support!"	If the code generator of ODK detects an error during the build process, this alarm appears. You can find additional information in the ODK manual (https://support.industry.siemens.com/cs/ww/en/view/109752683) or by contacting Customer Support.
30	**For MATLAB versions older than R2016b:** "Only ‘SingleTasking’ is allowed as tasking mode for Target 1500S <Version>. Please choose ‘SingleTasking’ in the solver options menu in order to proceed with build." **For MATLAB version R2016b or higher:** "Only ‘SingleTasking’ is allowed as tasking mode for Target 1500S <Version>. Please uncheck the option 'Treat each discrete rate as a separate task' under the solver options in order to proceed with build."	Disable the option "Treat each discrete rate as a separate task" in the properties of the code generator under "Solver".
31	"'ImportedExternPointer' is not allowed as Storage Class for tunable parameters for Target 1500S <Version>. Please change Storage Class of <ParameterName> to other than ‘ImportedExternPointer’ in order to proceed with build."	Select a different memory class than "ImportedExternPointer".
20	"No compatible ODK 1500S version is installed. Please first install a compatible version and restart MATLAB in order to proceed with build. A list of compatible ODK 1500S versions can be found in the Target 1500S documentation."	No compatible ODK version available. Install a compatible ODK 1500S version (Page 14) and restart MATLAB.

Error no.	Alarm	Meaning
22	"The selected ODK 1500S version doesn't work properly. The reason could be installation of the selected ODK 1500S version failed due to some reason. ODK 1500S <OdkVersion> documentation describes, how to check the functionality of the ODK 1500S installation."	The selected ODK version is not working properly. The reason can be the installation of the selected ODK version failed. You can find information on checking the functionality in the ODK manual (https://support.industry.siemens.com/cs/ww/en/view/109752683).
519	"Size of input and output parameters of <SimulinkModel> reaches to the limits of ODK 1500S. Please reconsider your model and try to reduce the size of your parameters in order to proceed with build."	The maximum ODK data volume is exceeded. Check the model and reduce the parameter size.
520	"A parameter which exceeds limits of ODK 1500S maximum array size is defined in <SimulinkModel>. Please reconsider your model and try to reduce the size of array which exceeds ODK 1500S limits in order to proceed with build."	The maximum array size is exceeded. Check the model and reduce the array size.
515	"<SimulinkModel> causes to exceed limits of ODK 1500S naming rules for generated functions or structs. Please perform one of the following actions in order to proceed with build: 1- Set 'Maximum identifier length' in symbols options to a smaller value. 2- Set <SimulinkModel> to a shorter name."	Prefix and function name are too long. Reduce the value of "maximum identifier length" in the properties of the code generator under "Symbols" or shorten the name of the Simulink model.
516	"<Variable> name exceeds the limits of ODK 1500S maximum variable name size. Please perform one of the following actions in order to proceed with build: 1- Set 'Maximum identifier length' in symbols option to a smaller value. 2- Set <Variable> to a shorter name."	The tag name is too long. Decrease the value of "maximum identifier length" in the properties of the code generator under "Symbols" or shorten the name of the tag.
32	"Because of the length of <SimulinkModel> name and path of your model, some generated files reach to the path limits of Windows. Please perform one of the following actions in order to proceed with build: 1- Set your <SimulinkModel> name to a shorter string. 2- Move your <SimulinkModel> to a shorter path."	The maximum Windows path length has been exceeded. Shorten the name of the Simulink model or move your Simulink model to a shorter path.
11	"A project with same name as <SimulinkModel>_ODK exists in ODK 1500S default workspace. In order to proceed, either change the name of the existing project or remove/rename it from workspace manually."	The ODK workspace already contains an ODK project with the same name. Change the name of the Simulink model or delete/rename the existing project manually.
12	"An error occurred during removing <SimulinkModel>_ODK project from default workspace of ODK 1500S. Please either change name of your <SimulinkModel> or remove/rename the project from workspace manually"	Removal of the ODK project from the workspace was unsuccessful. Change the name of the Simulink model or delete/rename the project manually from the workspace.

Error no.	Alarm	Meaning
40	"Build of <SimulinkModel>_ODK is failed due to the following error(s): <Error text coming from gcc compiler with the complete line and multiple errors> Please enable 'Verbose' mode in Code Generation Options to see the stack trace and contact customer support!"	Generation of the ODK project was unsuccessful due to a compiler error. Enable "Verbose" mode in the properties of the code generator to see the stack trace and contact Customer Support.
33	"'Device vendor' can be only selected as 'Intel' and 'Device type' can be only selected as 'x86-32 (Windows32)' in hardware implementation options. Please select the proper values in order to proceed with build."	Select "x86-32 (Windows32)" in the properties under "Device type".
34	"The maximum data size for external mode is 64k. The current used data (<sizeOfData>) exceeds this limit. Please reconsider your model and try to reduce the size of the parameters."	The maximum data size for external mode is 64k. The data currently used exceeds this limit. Revise your model and reduce the size of the parameters.
23	"An incompatible version of Java Runtime Environment (JRE) could be installed. Please prove, if the installed Java Runtime Environment (JRE) and its architecture (x86, x64) is compatible with the selected ODK 1500S Version. ODK 1500S <ODK Version> documentation describes, how to check the functionality of the ODK 1500S installation."	No compatible JRE is installed on the PC. You can find information on checking the functionality in the ODK manual (https://support.industry.siemens.com/cs/ww/en/view/109752683).
14	"An error occurred while creating the shared object file"	The SO file could not be created.
1000	License key missing	The Target 1500S license was not transferred and the test version has expired.
1001	Retrieving license key not possible	ALM is not installed, cannot be reached or unknown error occurred during the license check.

Index

A

Access to internal signals, 65
Alarms, 78
    Error messages, 84
    Information messages, 78
    Warnings, 81

B

Bus objects, 76

C

Certificate of license, 17

D

Diagnostic Viewer, 47

E

External mode, 54
    CallExtMode function block, 56
    Establish connection, 58
    External mode parameters, 55

I

Installation
    Installation procedure, 16
    Licensing, 17
    Repairing, 20
    System requirements, 14
    Uninstallation procedure, 19
Internal signals, 65

L

License key, 17

O

ODK application
    Loading and running an ODK application, 48

P

Parameter
    Accessibility options, 33
    External mode options, 30
    Post-build Options, 36
    TIA Portal Integration options, 27
Parameter access, 60
    Enable parameter access, 61, 63
    ReadWriteParameters function block, 62
Parameters
    External mode parameters, 55
    ODK options, 38
    Simulink parameters, 23

R

Referenced models, 52

S

Security functions, 66
Simulink build, 45
Stateflow, 73

W

Web server
    Access from the Web server, 70
    Adding files to the STEP 7 project, 69
    Generating files, 68
    Stateflow, 73
    Web access to parameters, 71
    WebReadWrite function block, 67

SIEMENS

SIMATIC

STEP 7 (TIA Portal) Options Open Development Kit 1500S V2.5 SP2

Programming and Operating Manual

Preface

Security information 1

Documentation guide 2

Product overview 3

Installation 4

Developing a CPU function library for the Windows environment 5

Developing a CPU function library for the realtime environment 6

Development of a C/C++ runtime application 7

Developing a PLCSIM Advanced function library 8

Using example projects 9

General conditions A

Syntax Interface file <project>.odk for CPU function libraries B

Code generator messages for CPU function libraries C

Helper functions for CPU function libraries D

Instructions for CPU function libraries E

05/2020

A5E35253941-AF

Legal information

Warning notice system

This manual contains notices you have to observe in order to ensure your personal safety, as well as to prevent damage to property. The notices referring to your personal safety are highlighted in the manual by a safety alert symbol, notices referring only to property damage have no safety alert symbol. These notices shown below are graded according to the degree of danger.

⚠ DANGER
indicates that death or severe personal injury **will** result if proper precautions are not taken.

⚠ WARNING
indicates that death or severe personal injury **may** result if proper precautions are not taken.

⚠ CAUTION
indicates that minor personal injury can result if proper precautions are not taken.

NOTICE
indicates that property damage can result if proper precautions are not taken.

If more than one degree of danger is present, the warning notice representing the highest degree of danger will be used. A notice warning of injury to persons with a safety alert symbol may also include a warning relating to property damage.

Qualified Personnel

The product/system described in this documentation may be operated only by **personnel qualified** for the specific task in accordance with the relevant documentation, in particular its warning notices and safety instructions. Qualified personnel are those who, based on their training and experience, are capable of identifying risks and avoiding potential hazards when working with these products/systems.

Proper use of Siemens products

Note the following:

⚠ WARNING
Siemens products may only be used for the applications described in the catalog and in the relevant technical documentation. If products and components from other manufacturers are used, these must be recommended or approved by Siemens. Proper transport, storage, installation, assembly, commissioning, operation and maintenance are required to ensure that the products operate safely and without any problems. The permissible ambient conditions must be complied with. The information in the relevant documentation must be observed.

Trademarks

All names identified by ® are registered trademarks of Siemens AG. The remaining trademarks in this publication may be trademarks whose use by third parties for their own purposes could violate the rights of the owner.

Disclaimer of Liability

We have reviewed the contents of this publication to ensure consistency with the hardware and software described. Since variance cannot be precluded entirely, we cannot guarantee full consistency. However, the information in this publication is reviewed regularly and any necessary corrections are included in subsequent editions.

Siemens AG
Digital Industries
Postfach 48 48
90026 NÜRNBERG
GERMANY

A5E35253941-AF
Ⓟ 07/2020 Subject to change

Copyright © Siemens AG 2014 - 2020.
All rights reserved

Preface

Purpose of the documentation

This documentation describes the specific characteristics of the Open Development Kit (ODK) V2.5 SP2.

Definitions and naming conventions

The following terms are used in this documentation:

- **CPU**: Designates the products named under "Scope of documentation".
- **ODK**: Open Development Kit
- **MFP**: Multifunctional platform
- **Windows**: Designates the Microsoft operating systems supported by ODK.
- **STEP 7**: For the designation of the configuring and programming software, we use "STEP 7" as a synonym for the version "STEP 7 (TIA Portal) V13 SP1 and higher".
- **DLL**: Dynamic Link Library
- **SO**: Shared Object
- **Visual Studio**: Microsoft Visual Studio
- **TCF**: Target Communication Framework

Basic knowledge required

This documentation is intended for engineers, programmers, and maintenance personnel with general knowledge of automation systems and programmable logic controllers.

To understand this documentation, you need to have general knowledge of automation engineering. You also need basic knowledge of the following topics:

- SIMATIC Industrial Automation System
- PC-based automation
- Using STEP 7
- Use of Microsoft Windows operating systems
- Programming with C/C++, C#, Visual Basic

Validity of the documentation

This documentation applies to use of ODK with the following products:

- CPU 1505SP (T/F/TF)
- CPU 1507S (F)
- CPU 1508S (F)
- CPU 1518-4 PN/DP MFP (F)

Notes

Please also observe notes labeled as follows:

Note

A note contains important information on the product described in the documentation, on the handling of the product or on the section of the documentation to which particular attention should be paid.

Siemens Industry Online Support

You can find current information on the following topics quickly and easily here:

- **Product support**

  All the information and extensive know-how on your product, technical specifications, FAQs, certificates, downloads, and manuals.

- **Application examples**

  Tools and examples to solve your automation tasks – as well as function blocks, performance information and videos.

- **Services**

  Information about Industry Services, Field Services, Technical Support, spare parts and training offers.

- **Forums**

  For answers and solutions concerning automation technology.

- **mySupport**

  Your personal working area in Industry Online Support for messages, support queries, and configurable documents.

This information is provided by the Siemens Industry Online Support in the Internet (http://www.siemens.com/automation/service&support).

Industry Mall

The Industry Mall is the catalog and order system of Siemens AG for automation and drive solutions on the basis of Totally Integrated Automation (TIA) and Totally Integrated Power (TIP).

You can find catalogs for all automation and drive products on the Internet (https://mall.industry.siemens.com) and in the Information and Download Center.

Information about third-party software updates

This product contains third-party software. Siemens accepts liability with respect to updates/patches for the third-party software only when these are distributed by Siemens in the context of a Software Update Service contract or officially approved by Siemens. Otherwise, updates/patches are installed at the user's own risk. You can find more information in our Software Update Service (http://w3.siemens.com/mcms/automation-software/en/software-update-service/Pages/Default.aspx).

Notes on protecting administrator accounts

A user with administrator rights has extensive access and manipulation possibilities.

Therefore, make sure that the administrator account is adequately protected to prevent unauthorized changes. To do this, set secure passwords and use a standard user account for regular operation. Other measures, such as the use of security policies, should be applied as required.

Table of contents

Preface **3**

1 Security information **9**

2 Documentation guide **10**

3 Product overview **11**

3.1 Introduction to ODK 1500S 11

3.2 Development environments 14

3.3 Basic procedure 15

4 Installation **17**

4.1 System Requirements 17

4.2 Installing ODK 18

4.3 Licensing ODK 1500S 20

4.4 Subsequently integrating project template for Windows CPU function libraries in Visual Studio 22

4.5 Uninstalling ODK 22

5 Developing a CPU function library for the Windows environment **24**

5.1 Creating a CPU function library 24
5.1.1 Requirements 24
5.1.2 Creating a project 24
5.1.2.1 Solution Explorer structure: C++ project 25
5.1.2.2 Solution Explorer structure: C# project 28
5.1.2.3 Solution Explorer structure: VB Project 29
5.1.3 Generating a CPU function library 29
5.1.4 Defining the runtime properties of a CPU function library 30
5.1.5 Environment for loading or executing the CPU function library 31
5.1.6 Defining functions and structures of a CPU function library 33
5.1.6.1 Using ODK_VARIANT as parameter 36
5.1.6.2 Handling strings 38
5.1.6.3 Definition of the <Project>.odk file 38
5.1.6.4 Modifying the <Project>.odk file 40
5.1.6.5 Comments 41
5.1.6.6 Comments in Visual Basic 43
5.1.7 Implementing functions 44
5.1.7.1 General notes 44
5.1.7.2 Callback functions 45
5.1.7.3 Implementing custom functions 46

5.2 Transferring a CPU function library to the target system 48

5.3 Importing and generating an SCL file in STEP 7 49

5.4 Executing a function ... 50
5.4.1 Loading functions ... 50
5.4.2 Calling functions ... 54
5.4.3 Unloading functions ... 57

5.5 Remote debugging ... 59
5.5.1 Performing remote debugging ... 59

6 Developing a CPU function library for the realtime environment ... 62

6.1 Creating a CPU function library ... 62
6.1.1 Requirements ... 62
6.1.2 Creating a project ... 62
6.1.3 Generating a CPU function library ... 65
6.1.4 Defining the runtime properties of a CPU function library ... 66
6.1.5 Environment for loading or running the CPU function library ... 67
6.1.6 Defining functions and structures of a CPU function library ... 68
6.1.6.1 Defining functions a CPU function library ... 68
6.1.6.2 Use of ODK_CLASSIC_DB as parameter ... 72
6.1.6.3 Handling strings ... 72
6.1.6.4 Definition of the <Project>.odk file ... 73
6.1.6.5 Modifying the <Project>.odk file ... 75
6.1.6.6 Comments ... 75
6.1.7 Implementing functions ... 77
6.1.7.1 General notes ... 77
6.1.7.2 Callback functions ... 77
6.1.7.3 Implementing custom functions ... 78
6.1.7.4 Dynamic memory management ... 79
6.1.7.5 Debug (Test) ... 81

6.2 Transferring a CPU function library to the target system ... 85

6.3 Importing and generating an SCL file in STEP 7 ... 87

6.4 Executing a function ... 88
6.4.1 Loading functions ... 88
6.4.2 Calling functions ... 91
6.4.3 Unloading functions ... 93
6.4.4 Reading the trace buffer ... 95

6.5 Post Mortem analysis ... 97
6.5.1 Introduction ... 97
6.5.2 Execute post mortem analysis ... 98

7 Development of a C/C++ runtime application ... 103

7.1 Install additional Eclipse plugins ... 103

7.2 Create C/C++ application ... 104
7.2.1 Requirements ... 104
7.2.2 Creating a C/C++ Runtime Application project ... 104
7.2.3 Editing C/C++ code ... 107
7.2.4 Generate C/C++ runtime application ... 109

7.3 Load C/C++ runtime application in the target system ... 110
7.3.1 Configuring PuTTY ... 110
7.3.2 Commissioning C/C++ Runtime ... 111
7.3.3 Set up new connection to the target system in Eclipse ... 112
7.3.4 Load and execute C/C++ runtime application in the target system via Eclipse ... 115
7.3.5 Load and debug C/C++ runtime application in the target system via Eclipse ... 115

7.4 Execute C/C++ runtime application ... 117
7.4.1 Start application via secure shell ... 117

8 Developing a PLCSIM Advanced function library ... 118

8.1 Creating a PLCSIM Advanced function library ... 118
8.1.1 Requirements ... 118
8.1.2 Creating a PLCSIM Advanced function library with Visual Studio ... 118

8.2 Transferring the PLCSIM Advanced function library to PLCSIM Advanced ... 121

8.3 Defining the runtime properties of a PLCSIM Advanced function library ... 121

8.4 Definition of the <Project>.odk file ... 123

8.5 Modifying the <Project>.odk file ... 124

8.6 Editing PLCSIM Advanced function library ... 124

8.7 Generating a PLCSIM Advanced function library ... 126

8.8 Executing a function ... 126

8.9 Debugging C/C++ Code ... 127

9 Using example projects ... 128

A General conditions ... 129

A.1 Number of loadable CPU function libraries ... 129

A.2 Compatibility ... 130

B Syntax Interface file <project>.odk for CPU function libraries ... 131

B.1 Data types ... 131

B.2 Parameters ... 133

C Code generator messages for CPU function libraries ... 135

C.1 Error messages of the code generator ... 135

C.2 Warnings of the code generator ... 137

D Helper functions for CPU function libraries ... 138

D.1 C++ helper functions ... 138

D.2 C#/VB helper functions ... 141

E Instructions for CPU function libraries ... 144

E.1 "Load" instruction ... 144

E.2 "Unload" instruction ... 144

E.3 "GetTrace" instruction ... 144

Index ... 145

Security information 1

Siemens provides products and solutions with industrial security functions that support the secure operation of plants, systems, machines and networks.

In order to protect plants, systems, machines and networks against cyber threats, it is necessary to implement – and continuously maintain – a holistic, state-of-the-art industrial security concept. Siemens' products and solutions constitute one element of such a concept.

Customers are responsible for preventing unauthorized access to their plants, systems, machines and networks. Such systems, machines and components should only be connected to an enterprise network or the internet if and to the extent such a connection is necessary and only when appropriate security measures (e.g. firewalls and/or network segmentation) are in place.

For additional information on industrial security measures that may be implemented, please visit (https://www.siemens.com/industrialsecurity).

Siemens' products and solutions undergo continuous development to make them more secure. Siemens strongly recommends that product updates are applied as soon as they are available and that the latest product versions are used. Use of product versions that are no longer supported, and failure to apply the latest updates may increase customers' exposure to cyber threats.

To stay informed about product updates, subscribe to the Siemens Industrial Security RSS Feed visit (https://www.siemens.com/industrialsecurity).

Documentation guide

2

Introduction

You can find all information required to use the software in this documentation for the Open Development Kit (ODK).

Overview of the documentation for the CPU

The following table lists additional documents which supplement this description and are available on the Internet.

Table 2- 1 Documentation for the CPU

Topic	Documentation	Most important contents
Description of CPU 1505SP, CPU 1507S and CPU 1508S	Operating Manual CPU 1505SP, CPU 1507S, CPU 1508S (http://support.automation.siemens.com/WW/view/en/90466248/133300)	This documentation describes the full functionality of CPU 1505SP, CPU 1507S and CPU 1508S.
Description of the CPU 1518-4 PN/DP MFP	CPU 1518-4 PN/DP MFP (http://support.automation.siemens.com/WW/view/en/109749061) manual	This documentation describes the full functionality of the CPU 1518-4 PN/DP MFP.
Web server	Function manual Web Server (http://support.automation.siemens.com/WW/view/en/59193560)	Basics Function Operation Diagnostics via web server
Automation License Manager	Automation License Manager (https://support.industry.siemens.com/cs/document/102770153/automation-license-manager?dti=0&lc=en-WW) manual	This documentation describes the full functionality of the Automation License Manager.

Product overview 3

3.1 Introduction to ODK 1500S

Overview

ODK is a development kit that allows you to program custom functions and generate files that STEP 7 can call directly.

ODK serves as a tool for:

- Windows environment
  - Execution on your Windows PC
  - Use of resources of your Windows PC
  - Use of operating system functions and system resources with access to external hardware and software components
- Realtime environment
  - Execution on your CPU
  - Synchronous function call (algorithmic, controllers)

Calling multiple applications under Windows or in the realtime environment is possible.

The CPU function libraries must be used in the STEP 7 program.

C/C++ runtime applications running in SIMATIC S7-1500 MFP C/C++ Runtime can be used independently of the STEP 7 program.

With the PLCSIM Advanced function libraries, you can run a project in a simulated environment instead of on a hardware or software CPU.

Structure and design of a CPU function library

ODK supports the interface for calling custom high-level language programs from the controller program of the CPU.

ODK supports the following templates:

- Templates in different programming languages for Microsoft Visual Studio. This allows you to generate a DLL file. The C++, C# and Visual Basic programming languages are supported.
- A template for programming in Eclipse. This allows you to generate an SO file. ODK also supplies a class library for Eclipse. The C++ programming language is supported.

You can create a CPU function library for both the Windows and the real-time environment. The programming languages mentioned are available to you for this purpose.

The ODK program can be executed in the following ways:

- Synchronous, i.e. executed as part of the CPU cycle (executed in the realtime environment).
- Asynchronous, i.e. started by the CPU program and ended in the background (executed in the Windows environment).

CPU function libraries can be run both under Windows (DLL) and in the realtime core of the CPU (SO). You call the functions of the DLL or SO file using instructions in the user program.

The CPU can perform functions in libraries that can be loaded dynamically. There are several possible functions in a CPU function library. There are specific function blocks for a CPU function library:

- Loading and unloading of the CPU function library.
- In each case a specific function block for calling a function.

The following illustration provides a schematic overview of how CPU function libraries run on a PC. This graphic applies to the S7-1500 Software Controller.

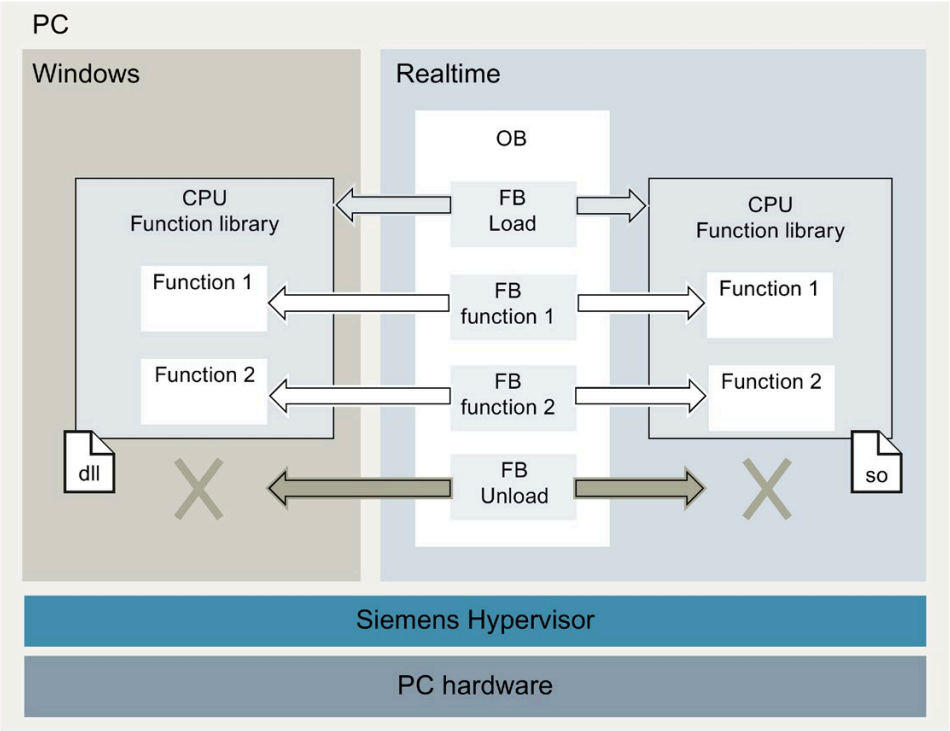

Figure 3-1 Running a CPU function library on a PC

Structure and design of a C/C++ runtime application

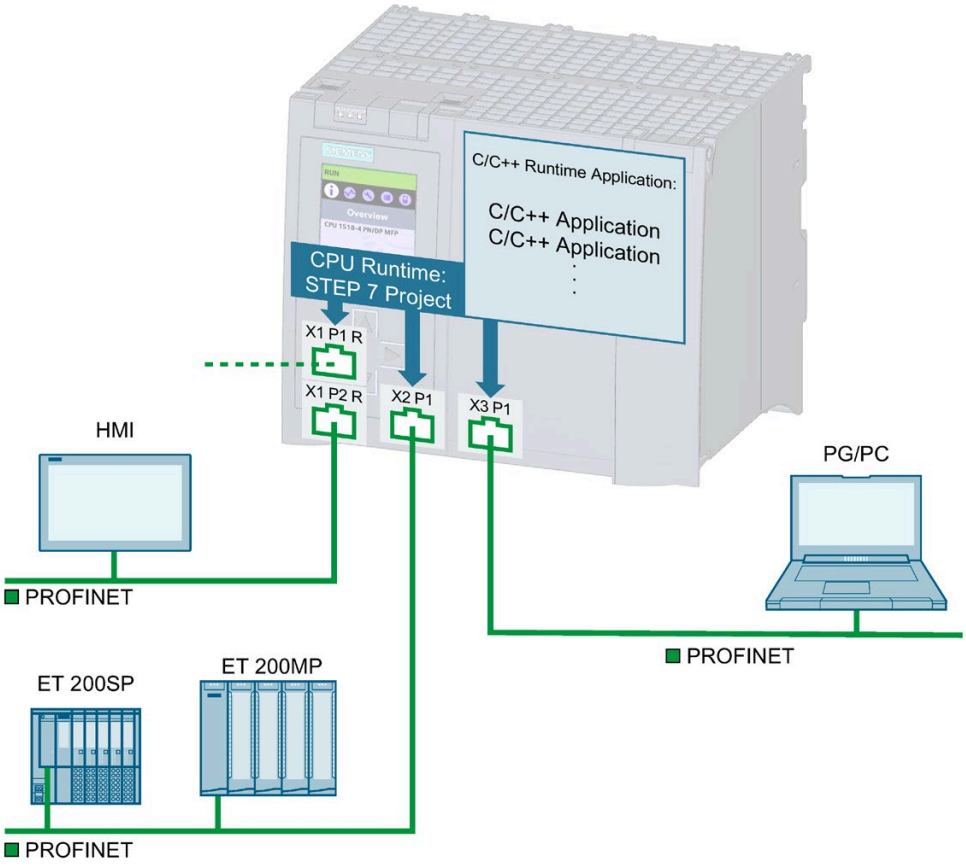

Figure 3-2 Overview of the performance segment

You can use C/C++ runtime applications to implement parallel processes to the STEP 7 user program, for example, for pre-processing or transmitting data via Industrial Ethernet. A CPU can perform several tasks at the same time, the complexity of functions is reduced and the time required for implementation is reduced.

You can reuse existing C/C++ algorithms. In order to continue using existing technological know-how, you can integrate the existing C/C++ code via the Open Development Kit as C/C++ runtime applications in the SIMATIC S7-1500 MFP C/C++ Runtime.

Once you integrate the C/C++ sources, you can execute them on the CPU.

The following options are available for communication between CPU Runtime and C/C++ Runtime:

- On Open User Communication with the "TSTEND" and "TRCV" function blocks.
- About the Communication protocol OPC UA.

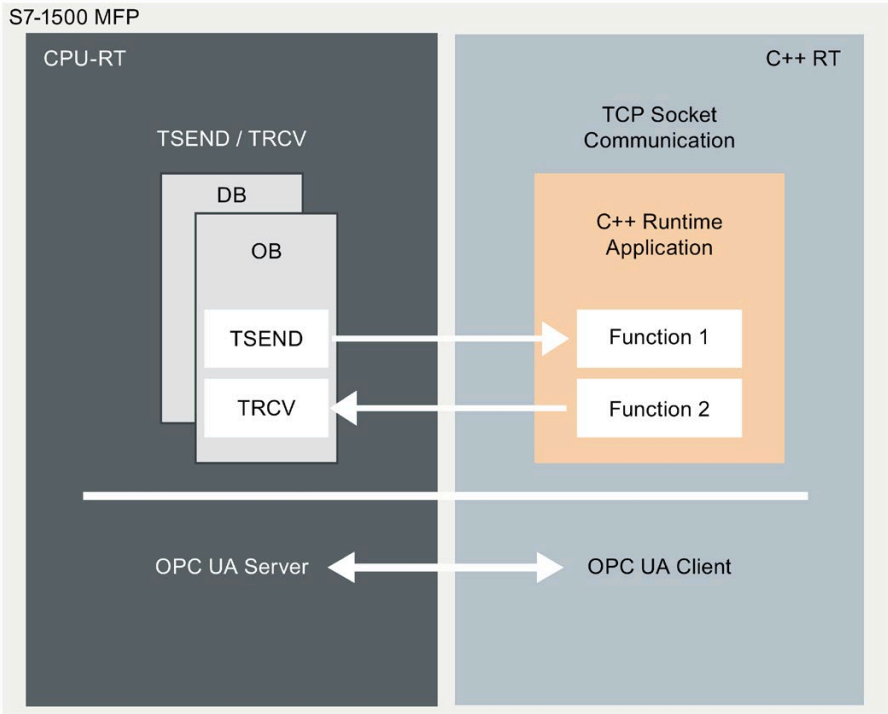

Figure 3-3 Communication between CPU Runtime and C/C++ Runtime

3.2 Development environments

The following development environments for creating an ODK project are available for selection.

- Microsoft Visual Studio for CPU function libraries for the Windows environment (DLL file) and PLCSIM Advanced function libraries.
- Eclipse CPU function libraries for the realtime environment (SO file) and C/C++ runtime applications.

Microsoft Visual Studio as a development environment

Use Microsoft Visual Studio. To help you develop a CPU function library, a template for a Microsoft Visual Studio project is included in the installation of ODK 1500S. The ODK template can be found under the entry of the corresponding programming language when a new project is created.

Eclipse as a development environment

Use Eclipse. To help you develop a C/C++ runtime application, a template for an Eclipse project is included in the installation of ODK 1500S. The template can be found in the folder "ODK 1500S Templates".

3.3 Basic procedure

The following sections describe the development tasks and procedures for the development and execution of a CPU function library/C/C++ runtime application:

- Developing a CPU function library for the Windows environment (Page 24)
- Developing a CPU function library for the realtime environment (Page 62)
- Development of a C/C++ runtime application (Page 103)
- Developing a PLCSIM Advanced function library (Page 118)

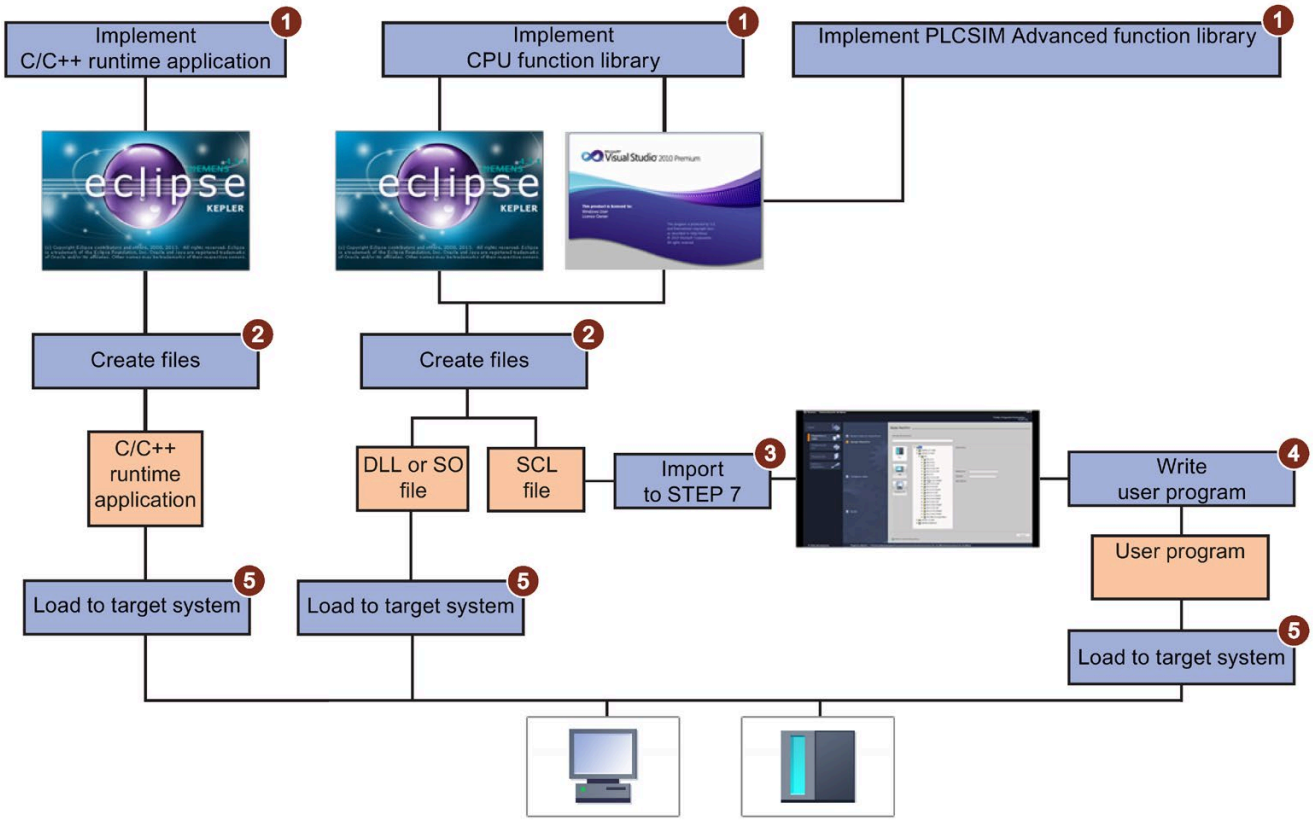

Figure 3-4 Overview of the development steps

Overview of the development steps

To develop and execute a C/C++ runtime application/CPU function library, follow these steps:

1. Implement your function.
   - Implement your function for CPU function libraries in Visual Studio (DLL file) or Eclipse (SO file).
   - Implement your function for C/C++ runtime application in Eclipse.
2. Create the C/C++ runtime application, DLL or SO file and the SCL file.
3. Import the SCL file into STEP 7.
4. Write your user application in STEP 7.
5. Load the user program in the CPU and the C/C++ runtime application or DLL or SO file into the target system.

Result

Your C/C++ runtime application/CPU function library is loaded in the target system.

The CPU function library is loaded and executed by the user program in STEP 7.

Installation

4

4.1 System Requirements

Requirements

Your PC must meet the following system requirements in order to use the ODK:

Category	Requirements
Operating system	• Microsoft Windows 7 SP1, 64-bit • Microsoft Windows 8.1, 64-bit • Microsoft Windows 10, 64-bit
Processor and memory	PC system: • At least systems with Intel Core i5 processor • 1.2 GHz or higher • At least 4 GB of RAM
Mass storage	Depending on the already installed components, you need up to 3 GB of free space on the hard disk C:\. The exact amount of space required is displayed during the installation. **Note**: The setup files are deleted when the installation is complete.
Operator interface	Color monitor, keyboard and mouse or another pointing device (optional) supported by Microsoft Windows
SIMATIC software	• SIMATIC STEP 7 Professional (TIA Portal) V15 or higher
Additional software	Not included in the product package: • Java Runtime 32-bit as of V1.7 (for Eclipse) • Microsoft Visual Studio 2015 • Microsoft Visual Studio 2017 • Microsoft Visual Studio Community 2017 • Microsoft Visual Studio 2019 • Eclipse plugins (for MFP use) • SSH Client, for example PuTTY (for MFP use) • Microsoft Development Tool: Download Center (https://www.microsoft.com/en-us/download/developer-tools.aspx)

ODK 1500S V2.5 SP2 is compatible with the following devices (support for loadable function libraries depends on the device):

	CPU function library DLL (Windows)	CPU function library SO (Real-time)	C/C++ runtime application
CPU 1505SP (F/T/TF) as of V2.5	Yes	Yes	No
CPU 1507S (F) as of V2.5			
CPU 1508S (F) as of V2.6			
CPU 1518-4 PN/DP MFP (F) up to FW V2.6.1 CPU 1518-4 PN/DP MFP (F) FW as of V2.8	No	Yes	Yes
PLCSIM Advanced as of V3.0	no*	Yes	No

* PLCSIM Advanced has its own function library type "PLCSIM Advanced Function Library DLL (Windows)"

4.2 Installing ODK

To install the ODK, insert the Installation DVD. Follow the instructions of the setup program.

If the setup program does not start automatically, open the "Start.exe" file on the Installation DVD manually with a double-click.

Requirements

You need administrator rights for this procedure.

It is possible to operate different ODK major versions (e.g. V2.0 and V2.5) on one PC at the same time.

It is not possible to operate the major version and service pack (e.g. V2.5 and V2.5.2) on one PC at the same time.

Note

Close applications before a repair installation/uninstall

Close all applications (especially ODK-related applications), before performing the repair installation/uninstall.

Procedure

If you want to use the Microsoft Visual Studio development environment, we recommend that you install this before ODK.

To install ODK, follow these steps:

1. Start the "Start.exe" file from the Installation DVD manually with a double-click.
2. Select the language for performing the installation.
3. Confirm with "Next".

   If you want to upgrade an installed version V2.5 or V2.5.1 to V2.5.2, confirm with "Change".
4. Click "Next" to confirm the list of components that are to be installed.

   The check mark for Automation License Manager (ALM) cannot be removed.
5. Follow the instructions of the installation wizard.
6. Confirm the installation dialog with the "Install" button.
7. Choose whether you want to carry out the licensing (Page 20) during the installation or at a later time.

Result

The installation is complete. All product languages are installed by default during the installation process. The installation creates a shortcut in the Start menu of Windows.

Note

Directory and workspace path for V2.5 SP2

The name of the directory and the path for the V2.5 workspace are retained after the update to V2.5 SP2.

Example:

C:\Program Files (x86)\Siemens\Automation\ODK1500S\V2.5

C:\Program Data\Siemens\Automation\ODK1500S\V2.5

The setup program installs the following components:

- "Eclipse" development environment for the development of a CPU function library for the realtime environment or a C/C++ runtime application
- Project templates for Eclipse
  - C++ Project for CPU function library (CPU Runtime)
  - C++ Project for MFP Linux application (CPU 1518 MFP - up to FW v2.6.1)
  - C++ Project for MFP Linux application (CPU 1518 MFP FW v2.8 or higher)
- Project templates for Visual Studio
  - For the Windows CPU function library
  - For the PLCSIM function library

- Tool to integrate Visual Studio templates
- Installation script for MinGW32
- Code generator
- Online help
- HelpStarter tool
- Automation License Manager, if this is out of date or was not yet installed
- Certificate of license (Certificate of License)

4.3 Licensing ODK 1500S

To create CPU function libraries, the software requires a product-specific license key that you install with the Automation License Manager. Each SIMATIC software product for automation that is subject to license (e.g., STEP 7) has its own license key. You must install the license key for each product.

Working with the Automation License Manager

The Automation License Manager is a product of Siemens AG and is used for managing license keys. The Automation License Manager is supplied on the installation data medium of this product by default and is transferred automatically during the installation process.

Software products that require license keys for operation register the requirement for license keys automatically in the Automation License Manager. If the Automation License Manager finds a valid license key for this software, the software can be used according to the conditions of use associated with this license key.

Certificate of license

A Certificate of License is included in the scope of delivery. It contains your unique license number. The license certificate serves as proof that you have a valid license key. Store this certificate in a safe place.

Note

Obtaining a replacement license key

You must have a valid certificate of license to get a replacement license key.

Recovering the license key in case of defective mass storage

If a error has occurred on the mass storage or USB flash drive containing your license key file, contact your Siemens representative (http://www.siemens.com/automation/service&support). Make sure you have your certificate of license available for this.

License key

The license key for ODK 1500S is located on a USB flash drive that is included in the scope of delivery.

If the USB flash drive containing the license key is lost or damaged, you can contact Support (http://www.siemens.com/automation/service&support) to obtain a new license key. You need the certificate of license to receive a replacement license key from Siemens.

Handling of license key for download version of ODK 1500S

The download of ODK 1500S allows you to access ordered license keys.

For access, you need:

- A personalized login that you can use to fetch all license keys assigned to "your company".
- An anonymous login that you can use to fetch an individual license key, and the corresponding license certificate. This document contains all data required for the anonymous download.

Additional information on the license key and the download is available in the Automation License Manager manual (https://support.industry.siemens.com/cs/document/102770153/automation-license-manager?dti=0&lc=en-WW).

Transferring the license key

The license key can be transferred during the installation or afterwards.

If the USB flash drive with the relevant license key is inserted in the USB port of the PC at the start of installation, the license key will be transferred automatically during the installation. If the USB flash drive is not inserted at the start of installation, you have three options for installing the license key subsequently:

- To transfer the license key **manually** from a network computer or other storage medium, select the "Manual license transfer" button.
- Insert the USB flash drive with license key, and select the "Retry license transfer" button. The Automation License Manager opens in order to transfer the license key.
- If you do not want to install a license key, select the "Skip license transfer" button.

Note

Working without license key

For legal reasons, a valid license key is required for this product.

If no valid license key is present on your PC, you cannot generate any projects. An error message will inform you at regular intervals that no valid license key is present.

Manually transferring the license key subsequently

A message is displayed if you generate a project for a CPU function library without transferred license key.

To **manually** transfer the license key for ODK subsequently, follow these steps:

1. Start the installation of ODK 1500S with administrator rights.
2. In the "License Transfer" section, select the "Manual license transfer" button.

   A dialog box for synchronization of the license opens.
3. Select the destination and the source of the license key.
4. To transfer the license key, click the "Synchronize" button.

   The license key is transferred.

4.4 Subsequently integrating project template for Windows CPU function libraries in Visual Studio

When Visual Studio is already installed, the project template for Windows CPU function libraries is automatically installed during the ODK installation. If Visual Studio is installed later, you have the following options to integrate the project template for Windows CPU function libraries:

- Perform a repair installation of ODK.
- Run the integration manually. Call your ODK installation file "ODK_VSTemplate_Integration.exe" in the "bin" folder.

Result

The project templates for Windows CPU function libraries is installed for Visual Studio. You can find this under the corresponding programming language.

4.5 Uninstalling ODK

Procedure

To remove ODK from your PC, follow these steps:

1. Close all running programs, especially ODK-related applications.
2. Select the menu "Control Panel > Programs and Features", select the entry "SIMATIC ODK 1500S" and click "Uninstall".
3. Select the "Uninstall" command in the shortcut menu.

   A dialog box for uninstalling appears.
4. Follow the steps for uninstalling.

Result

ODK is removed.

Developing a CPU function library for the Windows environment 5

5.1 Creating a CPU function library

5.1.1 Requirements

The Microsoft Visual Studio development environment is not included in the scope of delivery of ODK.

You can find the Download Center for Microsoft development tools in the Internet (http://www.microsoft.com/en-us/download/developer-tools.aspx).

5.1.2 Creating a project

To help you develop a CPU function library, a project template for CPU function libraries for a project in Visual Studio is included in the installation of ODK 1500S. The template supports 32-bit and 64-bit applications.

Procedure

To create a project in Microsoft Visual Studio using the project template, follow these steps:

1. Open Microsoft Visual Studio as a development environment.
2. In the "File > New" menu, select the command "Project..."

   The "New Project" dialog opens.

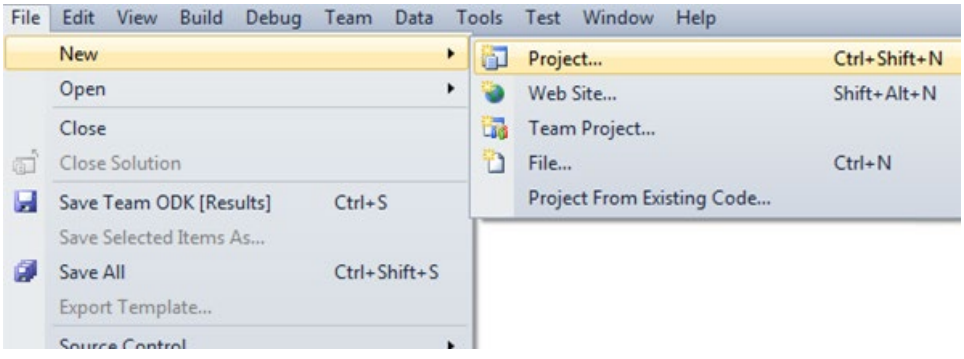

Figure 5-1 Creating a new project in Visual Studio

3. Select your preferred programming language and the corresponding project template (C++, C# or VB).
4. Enter a project name.
5. Click "OK" to confirm.

Result

The CPU function library is created using the project template and sets the following project settings:

- Project settings for generating the DLL file
- Automates the generation of the DLL and SCL file

The project template set ups various structures depending on the programming language:

- C++ project (Page 25)
- C# project (Page 28)
- VB Project (Page 29)

5.1.2.1 Solution Explorer structure: C++ project

Folder / file			Description
<project>			
	Definition File		
		<project>.odk	ODK interface description
		<project>.scl.additional	S7 blocks that are appended to the <project>.scl file. Although the file is not part of the project template, the code generator processes the file.
	Generated Files		**Files from this folder may not be edited!**
		ODK_Types.h	Definition of the ODK base types
		ODK_Functions.h	Function prototypes
		ODK_Execution.cpp	Implementation of the "Execute" method
	Header Files		Header file
	ODK Helpers		**Files from this folder may not be edited!**
		ODK_CpuReadData.h	Definition: Help functions for reading the data blocks
		ODK_CpuReadData.cpp	Implementation: Help functions for reading the data blocks
		ODK_CpuReadWriteData.h	Definition: Help functions for reading/writing the data blocks
		ODK_CpuReadWriteData.cpp	Implementation: Help functions for reading/writing the data blocks
		ODK_StringHelper.h	Definition: Help functions S7 strings / W strings
		ODK_StringHelper.cpp	Implementation: Help functions S7 strings / W strings
	Resource Files		
		<project>.rc	
	Source Files		Source Files
		<project>.cpp	Function code
		dllmain.cpp	Implementation of the "dllmain" file
	STEP7		**Files from this folder may not be edited!**
		<project>.scl	S7 blocks

The C++ Native project template supports the following applications:

Configuration and platform	Visual Studio Version older than 2015	Visual Studio 2015 and later
Debug Win32	Yes	Yes
Release Win32	Yes	Yes
Debug x64	To be created manually	Yes
Release x64	To be created manually	Yes

Note

Configuration of C/C++ Redistributables

Since the software controller contains the C/C++ redistributables for the release configuration, build the CPU function library with the configuration "Release".

To use the "Debug" configuration, add the redistributables for the debug configuration on the target system.

Creating a CPU function library for x64 platform with Visual Studio version older than 2015

To create a project template for an x64 platform with a Visual Studio version older than 2015, proceed as follows:

1. Open the "Configuration Manager".

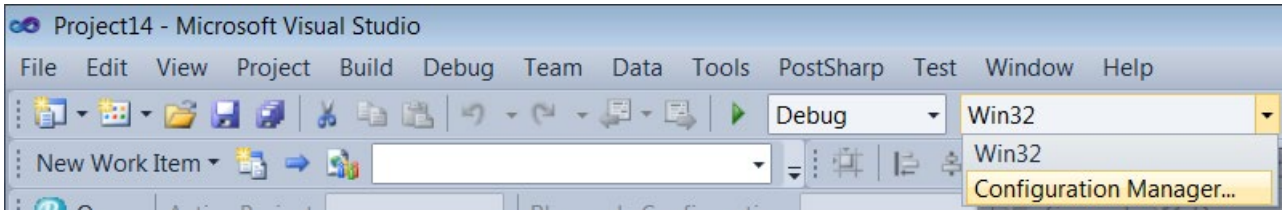

2. Create an x64 platform.

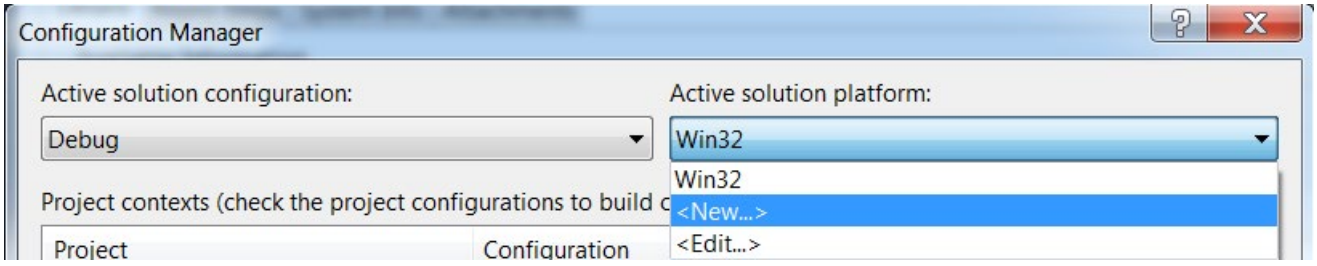

The "New Solution Platform" dialog opens.

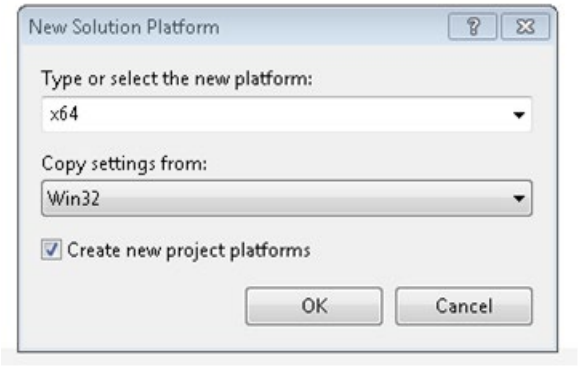

Select "Win32" from the drop-down list box "Copy settings from:" .

3. Define a solution configuration for an x64 platform.

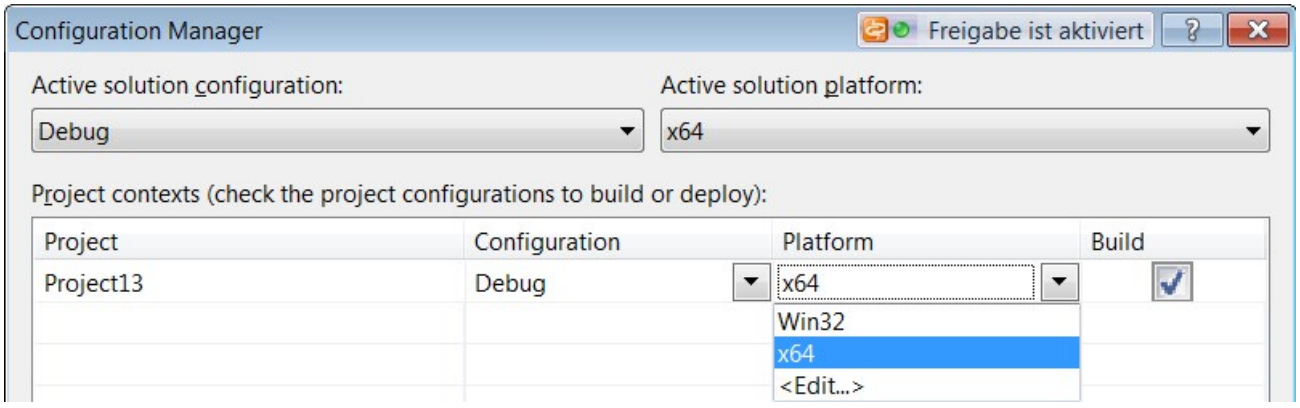

4. Select "Debug" or "Release" from the drop-down list box "Active solution configuration" and "x64" from the drop-down list box "Platform".

5.1.2.2 Solution Explorer structure: C# project

Directory / file			Description
<project>			
	Properties		
		AssemblyInfo.cs	
	Definition File		
		<project>.odk	ODK interface description
		<project>.scl.additional	S7 blocks that are appended to the <project>.scl file. The file is not part of the project template, but the code generator processes the file.
	Generated Files		**Files from this folder may not be edited!**
		OdkTypes.cs	Definition of the ODK base types
		OdkFunctions.cs	Function prototypes
		OdkExecution.cs	Implementation of the "Execute" method
	ODK Helpers		**Files from this folder may not be edited!**
		OdkReadVariant.cs	Help functions for reading the data blocks
		OdkReadWriteVariant.cs	Help functions for reading/writing the data blocks
	Source		Source Files
		<project>.cs	Function code
	STEP7		**Files from this folder may not be edited!**
		<project>.scl	S7 blocks

The C++ project template supports the following applications:

Configuration and platform	Visual Studio Version older than 2015	Visual Studio 2015 and later
Debug each CPU	Not supported	Yes
Release each CPU	Not supported	Yes

5.1.2.3 Solution Explorer structure: VB Project

Directory / file			Description
<project path>			
	My Project		
		AssemblyInfo.vb	
	Definition File		
		<project>.odk	ODK interface description
		<project>.scl.additional	S7 blocks that are appended to the <project>.scl file. The file is not part of the project template, but the code generator processes the file.
	Generated Files		**Files from this folder may not be edited!**
		OdkTypes.vb	Definition of the ODK base types
		OdkFunctions.vb	Function prototypes
		OdkExecution.vb	Implementation of the "Execute" method
	ODK Helpers		**Files from this folder may not be edited!**
		OdkReadVariant.vb	Help functions for reading the data blocks
		OdkReadWriteVariant.vb	Help functions for reading/writing the data blocks
	Source		Source Files
		<project>.vb	Function code
	STEP7		**Files from this folder may not be edited!**
		<project>.scl	S7 blocks
		<project>.vb	Function code

The VB project template supports the following applications:

Configuration and platform	Visual Studio Version older than 2015	Visual Studio 2015 and later
Debug each CPU	Not supported	Yes
Release each CPU	Not supported	Yes

5.1.3 Generating a CPU function library

The generation of the project data is divided into two automated steps.

- **Pre-Build**: Generation of the files created by default based on the changed <project>.odk file and generation of the SCL file.
- **Actual-Build**: Generation of the DLL file.

Procedure

To generate the project data, follow these steps:

1. Save all edited files.
2. In the "Build" menu, select the command "Build Solution".

Note

C/C++ projects

Perform the build of the CPU function library in the "Release" configuration, as the software controller has already installed the C/C++ Redistributables (Release Runtime files).

To use the "Debug" configuration, copy the Debug Runtime files to the software controller.

Note

The project data is only generated if the files have been changed.

Result

The generation of the project data is started. The automatically generated files are stored in the file system.

- DLL file: Project directory\<project>\<BuildConfiguration>\<project>.dll
- SCL file: Project directory\<project>\STEP7\<project>.scl

5.1.4 Defining the runtime properties of a CPU function library

The next step is to define the interface description of the CPU function library in the <project>.odk file. The file contains the following elements:

- Comments
- Parameters
- Definitions of functions and structures

Procedure

To define the interface description in the <project>.odk file, follow these steps:

1. Open the <project>.odk file.
2. Change the elements depending on your requirements.

Description of the elements

Comments

You can use comments for explanation purposes.

Parameters

The definition of the parameters must be within a line of code.
`<parameter name>=<value> // optional comment`

The interfaces file supports the following parameters:

Parameter	Value	Description
Context	user	Specifies that the CPU function library is loaded in the context of a Windows user (Page 31).
	system	Specifies that the CPU function library is loaded in the context of the Windows system (Page 31).
STEP7Prefix	<String>	Describes the string that precedes your functions and is shown after importing the SCL file in STEP 7. The following characters are allowed: {A...Z, a...z, 1...9, -, _} Umlauts are not permitted. The project name is entered without spaces by default.
FullClassName	<String>	The parameter is required for the C# and VB programming languages. To change the class names or namespace of the source files of the CPU function library, you need to adjust the "FullClassName" parameter.

Note
Spaces in the project name

With the STEP7 prefix, invalid characters are replaced by an underscore.

5.1.5 Environment for loading or executing the CPU function library

When the SCL file is imported into STEP 7 as an external source, the ODK instructions are created in the selected directory in STEP 7. The ODK instructions enable you to control your CPU function library regardless of the STEP 7 user program after programming and the initial loading. You can load up to 32 CPU function libraries.

Depending on whether you have created the CPU function library for a 32-bit, 64-bit system or with the "Any CPU" option, this is loaded into a 32-bit or 64-bit ODK host process.

You can choose one of two contexts for your CPU function library:

- **"System" context**

  Windows is started, a user can be logged on

- **"User" context**

  Windows is started, a user must be logged on

The following graphic shows you when a CPU function library may be loaded depending on the context.

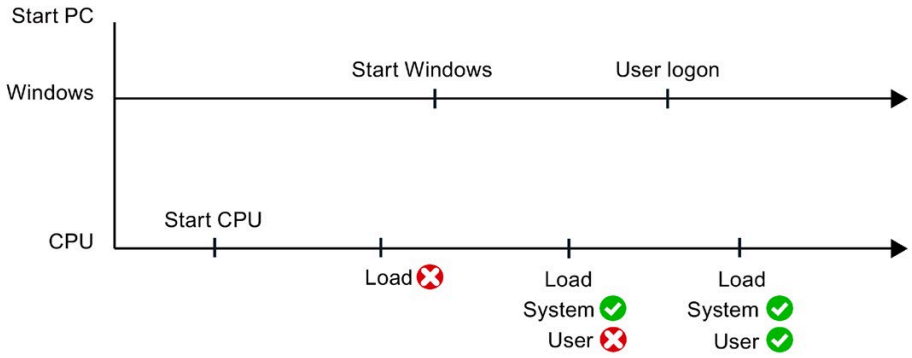

"System" context

Change the following line of code in your <project>.odk file to use the CPU function library in the system context (Session 0):

```
Context=system
```

In the system context, the CPU function library is running without the logon of a Windows user. This means the CPU function library cannot be actively controlled with user interface elements such as message dialogs.

"User" context

Change the following line of code in the <project>.odk file to use the CPU function library in the user context:

```
Context=user
```

When you load the CPU function library in the user context, it automatically unloads as soon as the user logs off in Windows. The CPU function library can be actively controlled by Windows user interface elements such as message dialogs and provides access to additional resources of the Windows environment.

If multiple users are logged on to Windows, the CPU function library loads or unloads for the user, who has the current screen rights until he logs off in Windows.

5.1.6 Defining functions and structures of a CPU function library

Functions

Functions are defined by the following general lines of code:

```
ODK_RESULT <FunctionName>
([<InOut identifier>] <data type> <tag name>, etc.);
```

The <project>.odk file is the ODK interface description for CPU function libraries. This is available for all supported programming languages.

The <project>.odk file contains an example function description by default. You can change this description and/or add more function descriptions.

```
ODK_RESULT MyFunc1([IN] INT param1, [OUT] INT param2);
```

Syntax rules for functions

The following syntax rules apply to functions within the <project>.odk file:

- Note that the function names are case-sensitive.
- You can split function definitions into several lines.
- End a function definition with a semicolon.
- TAB and SPACE are allowed.
- Do not define a tag name in a function twice.
- Do not use any keywords for the programming language that is used (for example "EN / ENO" as parameter name)
- Use ODK_RESULT only for the return values of the function.
- The tag name must start with a letter or an underscore.
- Illegal function names are displayed during generation in the development environment.
- The following names are not allowed in combination of *<STEP 7Prefix>* and <function name>: ODK_Load, ODK_Unld, ODK_ExcA, ODK_ExcS

<FunctionName>

Function names are valid with the syntax and character restrictions of the used programming language.

<InOut-Identifier>

There are three defined InOut-Identifiers. Use these in the following order: [IN], [OUT], [INOUT]

- [IN]: Specifies an input tag. The tag is copied to the function when it is called. This is constant and cannot be changed.
- [OUT]: Specifies an output tag. The tag is copied back after the function has been completed.
- [INOUT]: Specifies an input and output tag. The tag is copied to the function when it is called. This is not constant and can be changed. The tag is copied back after the function has been completed.

<DataType>

The data type defines the type of a tag. The following table defines the possible data types and their representation in the individual programming languages or STEP 7:

Elementary data types:

ODK data type	SIMATIC data type	C++ data type	C# data type	VB data type	Description
ODK_DOUBLE	LREAL	double	double	Double	64-bit floating point, IEEE 754
ODK_FLOAT	REAL	float	float	Single	32-bit floating point, IEEE 754
ODK_INT64	LINT	long long	long	Long	64-bit signed integer
ODK_INT32	DINT	long	int	Integer	32-bit signed integer
ODK_INT16	INT	short	short	Short	16-bit signed integer
ODK_INT8	SINT	char	sbyte	SByte	8-bit signed integer
ODK_UINT64	ULINT	unsigned long long	ulong	ULong	64-bit unsigned integer
ODK_UINT32	UDINT	unsigned long	uint	UInteger	32-bit unsigned integer
ODK_UINT16	UINT	unsigned short	ushort	UShort	16-bit unsigned integer
ODK_UINT8	USINT	unsigned char	byte	Byte	8-bit unsigned integer
ODK_LWORD	LWORD	unsigned long long	ulong	ULong	64-bit bit string
ODK_DWORD	DWORD	unsigned long	uint	UInteger	32-bit bit string
ODK_WORD	WORD	unsigned short	ushort	UShort	16-bit bit string
ODK_BYTE	BYTE	unsigned char	byte	Byte	8-bit bit string
ODK_BOOL	BOOL	unsigned char	bool	Boolean	1-bit bit string, remaining bits (1..7) are empty
ODK_LTIME	LTIME	long long	long	Long	64-bit during in nanosec-onds
ODK_TIME	TIME	long	int	Integer	32-bit during in milliseconds
ODK_LDT	LDT	unsigned long long	ulong	ULong	64-bit date and time of the day in nanoseconds since 01/01/1970 00:00
ODK_LTOD	LTOD	unsigned long long	ulong	ULong	64-bit time of the day in nanoseconds since midnight
ODK_TOD	TOD	unsigned long	uint	UInteger	32-bit time of the day in milliseconds since midnight
ODK_WCHAR	WCHAR	wchar_t	char	Char	16-bit character
ODK_CHAR	CHAR	char	sbyte	SByte	8-bit character

Complex data types:

ODK data type	SIMATIC data type	C++ data type	C# data type	VB data type	Description
ODK_DTL	DTL	struct ODK_DTL	OdkInternal. Dtl (class)	OdkInternal. Dtl (class)	Structure for date and time
ODK_S7WSTRING	WSTRING	unsigned short	string	String	Character string: • For SIMATIC and C++: 16-bit character with length max. and act. (4xUSINT) • For other languages: native
ODK_S7STRING	STRING	unsigned char	string	String	Character string: • For SIMATIC and C++: 8-bit character with length max. and act. (2xUSINT) • For other languages: native
ODK_VARIANT	VARIANT	struct ODK_VARIANT	byte [ ]	byte [ ]	Classic data (each data type that can be serialized with classic data.)
[ ]	ARRAY	[ ]	[ ]	[ ]	Range of same data types. You can use all data types as array except IN_DATA / INOUT_DATA / OUT_DATA.

User-defined data types:

User-defined data types (UDT) include structured data, especially the names and data types of this component and their order.

A user-defined data type can be defined in the ODK interface description with the keyword "ODK_STRUCT".

Example

```
ODK_STRUCT <StructName>
{
 <DataType> <TagName>;
 ...
};
```

The following syntax rules apply to the structure:

- You can divide the structure into multiple lines.
- The structure definition must end with a semicolon.
- Any number of tabs and spaces between the elements is permitted.
- It is not permitted to use any keywords for the generated language used (for example "en / eno" as tag name).

You can create additional structures within a structure.

<StructName>

Structure names are valid with the syntax and character restrictions of the programming language and as defined for tag definitions in STEP 7.

In STEP 7, the structure name is extended with the STEP 7 prefix.

<TagName>

Tag names are subject to the syntax and character restrictions of the programming language.

Example

The following code example explains the definitions of functions and structures. Sort the parameters by: IN, OUT, INOUT.

```
//INTERFACE
…
ODK_STRUCT MyStruct
  {
    ODK_DWORD myDword;
    ODK_S7STRING myString;
  };
ODK_RESULT MyFct([IN] MyStruct myInStruct
                 ,[OUT] MyStruct myOutStruct);
```

5.1.6.1 Using ODK_VARIANT as parameter

Restrictions of the data type ODK_VARIANT:

- When a parameter of the data type ODK_VARIANT is used, it is not permitted to use other parameters with the same InOut-Identifier, regardless of data type.
- With the data type ODK_VARIANT, an [OUT] is modeled as [INOUT] in the generated FB.

Example

```
// INTERFACE
...
// OK:
ODK_RESULT MyFunc1([IN]    ODK_VARIANT myClassicData);
ODK_RESULT MyFunc2([IN]    ODK_VARIANT myDataIn
                 , [OUT]   ODK_VARIANT myDataOut
                 , [INOUT] ODK_VARIANT myDataInout);
//
// NOT OK (Code Generator will throw an error):
// If ODK_VARIANT is used for [IN], no other [IN] parameter
// may be defined in this function
ODK_RESULT MyFunc4([IN] ODK_VARIANT myClassicData
                 , [IN] ODK_INT32 myint);
```

Application example for C++

```
#include "ODK_CpuReadData.h"
...
ODK_RESULT MyFunc1 (const ODK_VARIANT& myClassicData)
{
  CODK_CpuReadData myReader(myClassicData);
  ODK_INT32 myInt1, myInt2;
  myReader.ReadS7DINT(0, myInt1);
  myReader.ReadS7DINT(4, myInt2);
  return myInt1 + myInt2;
}
```

Helper functions (Page 138) of the following classes are available to help you access the data type ODK_VARIANT inside a user function:

- Class "CODK_CpuReadData"
- Class "CODK_CpuReadWriteData"

Note

Size of the ODK_VARIANT tags

The size of the ODK_VARIANT tags is not known at the time of compiling and is therefore not checked during the compiling process. When selecting the other parameters, consider the possible size of the ODK_VARIANT parameter in your application.

5.1.6.2 Handling strings

You can define a maximum length for strings (String or WString). Define the maximum number of characters in square brackets directly after the data type:

- ODK_S7STRING[30] or
- ODK_S7WSTRING[1000]

Without limitation, a string has a default length of 254 characters.

In order to access the data types ODK_S7STRING or ODK_S7WSTRING within a user function, the string helper functions (Page 138) are available:

Example

```
//INTERFACE
…
ODK_RESULT MyFct(
    [IN]    ODK_S7STRING      myStrHas254Chars
  , [OUT]   ODK_S7STRING[10]  myStrHas10Chars
  , [INOUT] ODK_S7STRING[20]  myStrArrayHas20Chars5Times[5]);
```

If you use [INOUT], you can set the string with a length that differs from the [INOUT of the function block in STEP 7.

5.1.6.3 Definition of the <Project>.odk file

The function prototypes and function blocks are generated based on the selected parameters in the <project>.odk file. Define the <project>.odk file for this.

By default, the <project>.odk file contains the following:

- Description

  The possible data types that are used for the interface are described in comment lines. This simplifies the definition of the correct tag type for your task.

- Context=user

  The CPU function library is loaded in the "User" context. You can change the parameter to Context=system.

- STEP7Prefix="<project>"

  Sets a string for the SCL generation in front of the functions of the CPU function library. The string is visible in STEP 7. You can change the parameter. The string length of the prefix including the function name must not exceed a length of 125 characters (for example, ODK_App_SampleFunction)

- "SampleFunction" function definition

  You can change this default function as you wish in the <project>.odk file and add more functions. The string length may not exceed a length of 125 characters. The associated function is located in the CPP file.

  FullClassName="<OdkProject1.Source.CpuFunctionLibrary>"

  The parameter is required for the C# and VB programming languages.

  To change the class names or namespace of the source files of the CPU function library, you need to adjust the "FullClassName" parameter.

Example

```
//INTERFACE
Context=user
STEP7Prefix=ODKProject
FullClassName=ODKProject.Source.CpuFunctionLibrary

 /*
* Elementary data types:
*  ODK_DOUBLE      LREAL    64-bit floating point, IEEE 754
*  ODK_FLOAT       REAL     32-bit floating point, IEEE 754
*  ODK_INT64       LINT     64-bit signed integer
*  ODK_INT32       DINT     32-bit signed integer
*  ODK_INT16       INT      16-bit signed integer
*  ODK_INT8        SINT     8-bit signed integer
*  ODK_UINT64      ULINT    64-bit unsigned integer
*  ODK_UINT32      UDINT    32-bit unsigned integer
*  ODK_UINT16      UINT     16-bit unsigned integer
*  ODK_UINT8       USINT    8-bit unsigned integer
*  ODK_LWORD       LWORD    64-bit bit string
*  ODK_DWORD       DWORD    32-bit bit string
*  ODK_WORD        WORD     16-bit bit string
*  ODK_BYTE        BYTE     8-bit bit string
*  ODK_BOOL        BOOL     1-bit bit string
*  ODK_LTIME       LTIME    64-bit duration in nanoseconds
*  ODK_TIME        TIME     32-bit duration in milliseconds
*  ODK_LDT         LDT      64 bit date and time of day
*                           in nanoseconds
*  ODK_LTOD        LTOD     64 bit time of day in nanoseconds
*                           since midnight
*  ODK_TOD         TOD      32 bit time of day in milliseconds
*                           since midnight
*  ODK_CHAR        CHAR     8 bit character
*  ODK_WCHAR       WCHAR    16 bit character
* Complex Datatypes:
*  ODK_DTL         DTL      structure for date and time
*  ODK_S7STRING    STRING   character string with 8-bit characters
*  ODK_VARIANT     VARIANT  classic data (any datatype which can be
serialized
*                           to classic data)
*  ODK_S7WSTRING   WSTRING  character string with 16 bit characters
*  []              ARRAY    field of this datatype
* User Defined Datatype:
*  ODK_STRUCT      UDT      user defined structure
* Return Datatype:
*  ODK_RESULT      0x0000-0x6FFF function succeeded
*                               (ODK_SUCCESS = 0x0000)
*                  0xF000-0xFFFF function failed
*                               (ODK_USER_ERROR_BASE = 0xF000)
*/

// Basic function in order to show
// how to create a function in ODK 1500S.
ODK_RESULT SampleFunction([IN]   ODK_INT32   myInt   // integervalue
                                                     // as input
                        , [OUT]  ODK_BOOL    myBool  // bool value
```

```
                                                        // as output
                                , [INOUT] ODK_DOUBLE myReal);// double value
                                                        // as input
                                                        // and output
```

5.1.6.4 Modifying the <Project>.odk file

The following examples show you how you can change the <project>.odk file to suit your needs.

```
//INTERFACE
Context=user
STEP7Prefix=ODK_SampleApp_

ODK_RESULT GetString ([OUT]    ODK_S7STRING myString);

ODK_RESULT Calculate ([IN]     ODK_INT64   In1,
                      [IN]     ODK_DOUBLE  In2,
                      [OUT]    ODK_FLOAT   Out1,
                      [OUT]    ODK_INT32   Out2,
                      [INOUT]  ODK_BYTE    InOut1[64],
                      [INOUT]  ODK_BYTE    InOut2[64]);
```

Function prototypes in the ODK file

Example for C++

```
ODK_RESULT GetString (
    /*OUT*/  ODK_S7STRING myString[256]);
#define _ODK_FUNCTION_GETSTRING ODK_RESULT GetString (/*OUT*/
ODK_S7STRING myString[256])

ODK_RESULT Calculate (
    /*IN*/     const ODK_INT64&   In1,
    /*IN*/     const ODK_DOUBLE&  In2,
    /*OUT*/    ODK_FLOAT&   Out1,
    /*OUT*/    ODK_INT32&   Out2,
    /*INOUT*/  ODK_BYTE    InOut1[64],
    /*INOUT*/  ODK_BYTE    InOut2[64]);
#define ODK_FUNCTION_CALCULATE ODK_RESULT Calculate(/*IN*/ const
ODK_INT64& In1,/*IN*/ 2480 const ODK_DOUBLE& In2,/*OUT*/ ODK_FLOAT&
Out1,/*OUT*/ ODK_INT32& Out2,/*INOUT*/ ODK_BYTE2481
InOut1[64],/*INOUT*/ ODK_BYTE InOut2[64])

#endif // ODK_FUNCTIONS_H
```

Example for C#

```
namespace OdkInternal
{
  interface IOdkFunctions
  {
    // declaration of the callback methods
    ushort OnLoad();
    ushort OnUnload();
    ushort OnRun();
```

```
    ushort OnStop();

    ushort GetString(
           /*OUT*/   out string myString);

    ushort Calculate(
           /*IN*/    ref long   In1,
           /*IN*/    ref double In2,
           /*OUT*/   out float  Out1,
           /*OUT*/   out int    Out2,
           /*INOUT*/ ref byte[] InOut1,
           /*INOUT*/ ref byte[] InOut2);
  }
}
```

Example for VB

```
Namespace Global.OdkInternal
  Public Interface IOdkFunctions
    // declaration of the callback methods
    Function OnLoad() As UShort
    Function OnUnload () As UShort
    Function OnRun () As UShort
    Function OnStop () As UShort

    Function GetString(
                      ByRef myString As String 'OUT
  ) As UShort
    Function Calculate(
                      ByRef In1 As Long,       'IN
  ByRef In2 As Double,     'IN
   ByRef Out1 As Float,     'OUT
  ByRef Out2 As Integer,   'OUT
   ByRef InOut1() As Byte,  'INOUT
                      ByRef InOut2() As Byte   'INOUT
                      ) As UShort
  End Interface
End Namespace
```

5.1.6.5 Comments

The following examples for using comments are valid for C++ and C#. Differences to Visual Basic are available under "Comments in Visual Basic (Page 43)"

Comments are started with a double slash "//" and end automatically at the end of the line.

Alternatively, you can limit comments by /* *<comment>* */, which enables new lines in a comment. Characters after the end of the comment identifier "*/" are further processed by the code generator.

Comments for functions and structures

You place comments on functions and structures directly in front of the functions/structures.

These comments are transferred to the ODK_Functions.h/.cs/.vb and <project>.scl files.

In the <project>.scl file, the comments are copied to the block properties and duplicated in the code area of the function.

Observe the following rules:

- Comments for functions and structures must be located directly in front of the functions/structures (without blank line).
- The end of the comment is located in front of the ODK_RESULT or ODK_STRUCT keyword.
- You can use both identifiers "//" and "/* */" but not in combination within a comment.

Example

```
// this comment did not appear in MyStruct, because of the empty
line.

// comment MyStruct
// ...
ODK_STRUCT MyStruct
{
  ODK_DWORD     myDword;
  ODK_S7STRING  myString;
};

/*
comment MyFct
...
*/
ODK_RESULT MyFct([IN] MyStruct myInStruct
               ,[OUT] MyStruct myOutStruct);
```

Comments for tags in functions and structures

Comments for function and structure tags are placed directly in front of or behind the tag.

These comments are transferred to the ODK_Functions.h/ and <project>.scl files.

The following rules apply to comments **in front of** tags:

- Comments must be directly in front of the tag (without blank line).
- The end of the comment is the <InOut-Identifier> of the tags.

The following rules apply to comments **after** tags:

- Comments must be after the tag name (without blank line).

The following general rules apply to comments for tags:

- You can use both identifiers "//" and "/* */" but not in combination within a comment.
- In the header file, the same comment identifier is used ("//" or "/* */").

Example

```
ODK_STRUCT MyStruct
{
  // comment myDword BEFORE definition
  ODK_DWORD    myDword;

  ODK_S7STRING myString; /* comment myString AFTER definition */
};

ODK_RESULT MyFct([IN]  MyStruct myInStruct    // comment
                                              // myInStruct ...
                                              // ... "second line"
               , [OUT] MyStruct myOutStruct); /* comment
                                                 myOutStruct ...
                                                 ...
                                               */
```

5.1.6.6 Comments in Visual Basic

Not all comments can be transferred unchanged from the Interface file to the VB source.

The following rules are valid only for comments in Visual Basic:

- Comments are marked with a apostrophe.
- To mark multiple lines as comment, you need to set an apostrophe before each line.

  Example:

<project>.odk	**ODK_Functions.vb**

`/* Multi line comment 1`
`  comment 2`
`  comment 3*/`
`ODK_RESULT f1();`
	`' This file is AUTO GENERATED …`
	`' <automatically generated comment>`
	`...`
	`' Multi line comment 1`
	`' comment 2`
	`' comment 3`
	`Function f1() As UShort`

- Comments are not permitted in front of source code.

  Set the InOut identifier after the function parameter.

  Example:

<project>.odk	ODK_Functions.vb

`ODK_RESULT f1([IN] ODK_BYTE b);`	`Function f1(`
	` b As Byte ` [IN]
	` ) As UShort`

- Multi-line comments are not permitted between function parameters.

  Set multiple comments in a line.

  Example:

<project>.odk	ODK_Functions.vb

`ODK_RESULT f1(`
` // c1`
` // c2`
` [IN] ODK_BYTE b // c3`
`  // c4`
` );`
	`Function f1(`
	`  b As Byte ` [IN] c1` c2` c3` c4`
	` ) As UShort`

5.1.7 Implementing functions

5.1.7.1 General notes

This section provides an overview of the basic topics relating to the implementation of functions in a Windows environment.

- The function call is not limited in time, because the function is called asynchronously.
- Traces are possible via OutputDebugString instructions
- All asynchronous functions are executed with equal priority - regardless of the priority of the OBs
- The complete Windows API (Application Programming Interface) and C++-Runtime library are available

5.1.7.2 Callback functions

The project template includes an execute file to define your functions.

Programming language	Name of the execute file
C++	<project>.cpp
C#	<project>.cs
VB	<project>.vb

This execute file contains functions filled by default. This file does not necessarily need to be filled with additional user code to be usable. However, neither may the functions be deleted under any circumstances.

The empty function has the following code (using the "OnLoad()" function as an example):

You can define the following functions in the execute file:

- OnLoad(): Called after loading the CPU function library
- OnUnload(): Called before unloading the CPU function library
- OnRun(): Called when the CPU changes to RUN mode after the OnLoad() function
- OnStop(): Called when the CPU changes to the STOP mode and before the function OnUnload()

The following table provides an overview of the various actions to invoke the callback functions:

Current operating state	New operating state	User action	ODK action
RUN	RUN	ODK_Load	1. OnLoad() 2. OnRun()
STOP	RUN	ODK_Load in startup OB (e.g. OB100)	1. OnLoad() 2. OnRun()
RUN	STOP	*<already loaded>*	OnStop()
STOP	RUN	*<already loaded>*	OnRun()
RUN	RUN	ODK_Unload	1. OnStop() 2. OnUnload()
RUN	SHUTDOWN / MRES	*<already loaded>*	OnStop()
any	*any*	*<already loaded>* Exit ODK host	1. OnStop() (optional, if not already executed) 2. OnUnload()

"OnLoad()" and "OnUnload()" function

The functions have a return value of type "ODK_RESULT" and typically provide information about the status of the "ODK_SUCCESS" value.

The following return values are possible:

Return value for "ODK_RESULT"	Description
ODK_SUCCESS = 0x0000	Return value following a successful execution of the "OnLoad()" or "OnUnload()" function
0x0001 – 0xEFFF	Invalid values (system-internal)
0xF000 – 0xFFFF ODK_USER_ERROR_BASE = 0xF000	You can define your own error values. The loading stops and the CPU function library unloads for the "OnLoad()" function. The CPU function library within the specified value range is still unloaded for the "OnUnload()" function.

"OnRun()" and "OnStop()" function

The functions have a return value of type "ODK_RESULT" and typically provide information about the status of the "ODK_SUCCESS" value.

The following return values are possible:

Return value for "ODK_RESULT"	Description
ODK_SUCCESS = 0x0000	Return value following a successful execution of the "OnRun()" or "OnStop()" function
0x0001 – 0xFFFF	No direct feedback to the user program is possible. The return value is sent to Windows (WindowsEventLog).

5.1.7.3 Implementing custom functions

Once you have defined the ODK interface in the <project>.odk file, you must edit the functions of the CPU function library in the Project Source file.

Procedure

To edit the function of a CPU function library, follow these steps:

1. To generate the function prototypes, execute the build.
2. Open the project source file, or create a custom source file if necessary.
3. Transfer the function prototypes from <ODK_Functions.h>/<OdkFunctions.cs/vb> to the source file.

Note

Use the function prototype macro to transfer the step 3 in the future when there is a change to the function parameters.

4. Edit the code of your CPU function library in the execute file.

CPU function library

The execute file contains a schematically represented function description by default. You can change this description with corresponding changes in the <project>.odk file and/or add more function descriptions.

Execute file based on C++ example

```
#include "ODK_Functions.h"

EXPORT_API ODK_RESULT OnLoad (void)
{
    return ODK_SUCCESS;
}
EXPORT_API ODK_RESULT OnUnload (void)
{
    return ODK_SUCCESS;
}
EXPORT_API ODK_RESULT OnRun (void)
{
    return ODK_SUCCESS;
}
EXPORT_API ODK_RESULT OnStop (void)
{
    return ODK_SUCCESS;
}
ODK_RESULT SampleFunction( const ODK_INT32& myInt,
                               ODK_BOOL& myBool,
                               ODK_DOUBLE& myReal)
{
    return ODK_SUCCESS;
}
```

5.2 Transferring a CPU function library to the target system

Manually transfer the DLL file to a specific Windows folder on the target system (e.g. via a network share or USB flash drive). Use the standard Windows data transfer procedure to transfer of the CPU function library. The storage location in Windows is specified by a registry key. When loading an CPU function library, the ODK service automatically searches for the file in the path specified by the registry key.

Note

CPU function library in the debug configuration

When the CPU function library has been transferred to the debug configuration, you also need to transfer the debug DLLs of the development environment to the target system.

The default value that describes the file path is:

%ProgramData%\Siemens\Automation\ODK1500S\

Note

Administrator rights

Assign write permission to this folder only for the administrator. This prevents unauthorized personnel from uploading CPU function libraries.

Please note:

The setup of the SIMATIC S7-1500 Software Controller checks whether the file path already exists and the required administrator rights are assigned.

If not, the directory is renamed to "ODK1500S_OLD1" or "ODK1500S_OLD2" and a new directory with the correct access rights is created.

The Windows file system can hide the folder based on your setting. You can view the folder using the Windows option "Show hidden files, folders, and drives".

The registry key for 32-bit systems is:
HKEY_LOCAL_MACHINE\SOFTWARE\Siemens\Automation\ODK1500S\odk_app_path

The registry key for 64-bit systems is:
HKEY_LOCAL_MACHINE\SOFTWARE\Wow6432Node\Siemens\Automation\ODK1500S\odk_app_path

You can change the default value of the registry key and thus adapt to the expected location for the DLL file to suit your needs.

Note

Changing the path in the registry key

To protect the DLL file, select a storage location that is secured by access protection.

5.3 Importing and generating an SCL file in STEP 7

The following files are created when the project map is created:

- SCL file for importing into STEP 7
- All files depending on the configuration, e.g. DLL file

If STEP 7 is installed on another PC as the development environment, you must transfer the generated SCL file to the PC where the STEP 7 is installed.

Requirements

The project data were generated.

Procedure

To import and compile the SCL file, follow these steps:

1. Start STEP 7.
2. Open your project.
3. Select the project view.
4. Select the CPU in the project tree.
5. Select the "External Sources" subfolder.

   The "Open" dialog box opens.
6. Navigate in the file system to the SCL file that was created during the generation of the project data.
7. Confirm your selection with "Open".

   The SCL file is imported. After completion of the import process, the SCL file is displayed in the "External Sources" folder.
8. You need to compile the SCL file before you can use the blocks in your project.
9. To do this, select the SCL file in "External sources" subfolder.
10. Select the "Generate blocks from source" command in the shortcut menu.

Result

STEP 7 creates the S7 blocks based on the selected SCL file.

The created blocks are now automatically displayed in the "Program blocks" folder below the selected CPU in the project tree. You can load the function blocks during the next download to the target device.

5.4 Executing a function

5.4.1 Loading functions

Introduction

Regardless of the context in which the CPU function library is running, the loading procedure consists of the following steps:

- Call the "*<STEP7Prefix>*_Load" instruction in the STEP 7 user program.
- In the Windows context, the loading process checks if a 32-bit or 64-bit process is required and starts the appropriate host. Each CPU function library runs in a separate Windows process (ODK_Host).
- The host loads the CPU function library and calls the "OnLoad()" function and then the "OnRun()" functions.

Note

Loading the same CPU function libraries with a modified <project>.odk file

When you load an CPU function library and subsequently change the <project>.odk file, we recommend that you unload your CPU function library first before you load the newly generated CPU function library. If the "*<STEP7Prefix>*_Unload" instruction is not executed, both CPU function libraries are in the memory. This can lead to insufficient memory being available for the CPU.

"*<STEP7Prefix>*_Load" instruction

A CPU function library is loaded by calling the "*<STEP7Prefix>*_Load" instruction in the STEP 7 user program.

***<STEP7Prefix>*_Load**	
REQ	DONE
	BUSY
	ERROR
	STATUS

The following table shows the parameters of the instruction "<*STEP7Prefix*>_Load":

Section	Declaration	Data type	Description
Input	REQ	BOOL	A rising edge activates the loading of the CPU function library.
Output	DONE	BOOL	Indicates that the instruction has finished loading the CPU function library.
Output	BUSY	BOOL	Indicates that the instruction is still loading the CPU function library.
Output	ERROR	BOOL	Indicates that an error occurred during the loading of the CPU function library. STATUS gives you more information about the possible cause.
Output	STATUS	INT	Provides information about possible sources of error, if an error occurs during the loading of the CPU function library.

Input parameters

An edge transition (0 to 1) at the "REQ" input parameter starts the function.

Output parameters

The following table shows the information that is returned after loading.

DONE	BUSY	ERROR	STATUS	Meaning
0	0	0	0x7000 =28672	No active loading
0	1	0	0x7001 =28673	Loading in progress, first call
0	1	0	0x7002 =28674	Loading in progress, ongoing call
1	0	0	0x7100 =28928	CPU 1500 V2.0 and later: CPU function library is already loaded.
1	0	0	0x0000 =0	Loading was performed successfully.

DONE	BUSY	ERROR	STATUS	Meaning
0	0	1	0x80A4 =-32604	CPU function library could not be loaded. Start the ODK service manually or restart Windows.
			0x80C2 =-32574	CPU function library could not be loaded. There are currently not enough resources available from Windows. Reload the CPU function library after a few seconds.
			0x80C3 =-32573	CPU function library could not be loaded. The CPU currently does not have enough resources. Reload the CPU function library after a few seconds.
			0x8090 =-32624	CPU function library could not be loaded. An exception occurred during execution of the "OnLoad()" function.
			0x8092 =-32622	CPU function library could not be loaded because the library name is invalid.
			0x8093 =-32621	CPU function library could not be loaded because the CPU function library could not be found. Check the file name and path of the file.
			0x8094 =-32620	CPU function library could not be loaded. The CPU function library was created for the Windows user context, but no user is logged on.
			0x8095 =-32619	CPU function library could not be loaded due to the following reasons: • The DLL file is not a CPU function library • An attempt has been made to load a 64-bit application into a 32-bit system • Dependencies on other Windows DLL files could not be resolved. – Check that the release build of the CPU function library is used. – Check whether the "Visual C++ Redistributables" are installed for the Visual Studio version you are using. • The CPU does not support the utilized ODK version.
			0x8096 =-32618	The CPU function library could not be loaded because the internal identification is already being used by another loaded CPU function library.
			0x8097 =-32617	CPU 1500 V1.8 and earlier: CPU function library is already loaded.
			0x8098 =-32616	The CPU function library could not be loaded because the CPU function library is currently being unloaded.
			0x809B =-32613	CPU 1500 V2.0 and later: The CPU function library could not be loaded and returns an invalid value (the values 0x0000 and 0xF000 - 0xFFFF are allowed)
			0xF000 – 0xFFFF =-4096 – -1	CPU 1500 V2.0 and later: CPU function library could not be loaded. An error occurred during execution of the "OnLoad()" function.

Example

This example describes how the loading and execution of a Windows CPU function library can be implemented for the Windows environment in STEP 7 after communication disturbances.

When Windows is again available the CPU function library is loaded and the execution of the functions is again possible.

A communication disturbance can be caused by the following:

- Windows Restart (or Shut down)
- Windows Log off (if application in user area)
- TerminateProcess/ODK_Host crash

A flag is necessary for this (here: ODK_Loaded), which is set after successful loading and is reset following a faulty execution of the ODK function.

```
FUNCTION_BLOCK "ODK_AutoLoad"
{ S7_Optimized_Access := 'TRUE' }
VERSION: 0.1
  VAR
    ODK_Loaded : Bool;
  END_VAL
BEGIN
  // Loading of the Windows-CPU function library
  IF NOT #ODK_Loaded THEN
    // Toggle request flag if loading is not active
    IF NOT "ODKProject_Load_DB".BUSY THEN
           "ODKProject_Load_DB".REQ := NOT "ODKProject_Load_DB".REQ;
    END_IF;

    // Loading of the CPU function library
    "ODKProject_Load_DB"();

    // Set "Loaded" flag if loading is successful
    IF "ODKProject_Load_DB".DONE THEN
      #ODK_Loaded := true;
    END_IF;
  END_IF;

  // Execute the ODK function(s) (only in loaded state)
  IF #ODK_Loaded THEN
    // Toggle request flag if function call is not active
    IF NOT "ODKProjectSampleFunction_DB".BUSY THEN
           "ODKProjectSampleFunction_DB".REQ := NOT
           "ODKProjectSampleFunction_DB".REQ;
    END_IF;

    // Execute the function
    "ODKProjectSampleFunction_DB"();

    // The "Loaded" flag must be reset when
    // a) An error is present in the communication with Windows
(0x80A4)
```

```
    // b) the CPU function library was already unloaded before this
function call (0x8096)
    IF "ODKProjectSampleFunction_DB".STATUS = 16#80A4 OR
"ODKProjectSampleFunction_DB".STATUS = 16#8096
    THEN
    #ODK_Loaded := false;
    END_IF;
  END_IF;
END_FUNCTION_BLOCK
```

5.4.2 Calling functions

Introduction

Once the CPU function library is loaded, you can execute functions via your STEP 7 user program. This call is made from the corresponding "*<STEP7Prefix>*SampleFunction" instruction.

You can load up to 32 CPU function libraries at the same time.

"*<STEP7Prefix>*SampleFunction" instruction

A CPU function library is called by the "*<STEP7Prefix>*SampleFunction" instruction.

***<STEP7Prefix>*SampleFunction**	
REQ	DONE
myInt	BUSY
myReal	ERROR
	STATUS
	myBool

The following table shows the parameters of the instruction "<*STEP7Prefix*>SampleFunction":

Section	Declaration	Data type	Description
Automatically generated parameters			
Input	REQ	BOOL	A rising edge of this input value activates the execution of the CPU function library.
Output	DONE	BOOL	This output value indicates that the instruction has finished execution of the CPU function library.
Output	BUSY	BOOL	This output value indicates that the instruction is still unloading the CPU function library.
Output	ERROR	BOOL	This output value indicates that an error occurred during the execution of the CPU function library. The STATUS output value provides more information on this.
Output	STATUS	INT	This output value provides information about possible sources of error, if an error occurs during the execution of the CPU function library.
User-defined parameter			
Input	myInt		User-defined input tags
InOut	myReal		User-defined input-output tags
Output	myBool		User-defined output tags

Input parameters

An edge transition (0 to 1) at the "REQ" input parameter starts the function.

Output parameters

The following table shows the information for the output parameters returned after execution.

DONE	BUSY	ERROR	STATUS	Meaning
0	0	0	0x7000 =28672	No active process
0	1	0	0x7001 =28673	First call (asynchronous)
0	1	0	0x7002 =28674	Continuous call (asynchronous)

DONE	BUSY	ERROR	STATUS	Meaning
1	0	0	0x0000 – 0x6FFF =0 – 28671	Function has been executed and returns a value between 0x0000 and 0x6FFF. (ODK_SUCCESS = 0x0000)
0	0	1	0x80A4 =-32604	CPU function library could not be executed for the following reasons: • The "*<STEP7Prefix>*_Unload" instruction was executed during a function execution. The function execution was aborted at the CPU end. Windows terminates the execution of the function normally. No return value is sent to the CPU. Wait until the "*<STEP7Prefix>*_Unload" instruction has ended. Then load the CPU function library again. • Windows is not available • ODK service is not running Start the ODK service manually or restart Windows.
			0x80C2 =-32574	CPU function library could not be executed. There are currently not enough resources available from Windows. Execute the CPU function library again after a few seconds.
			0x80C3 =-32573	CPU function library could not be executed. The CPU currently does not have enough resources. Execute the CPU function library again after a few seconds.
			0x8090 =-32624	CPU function library could not be executed. An error occurred during execution.
			0x8091 =-32623	CPU function library could not be executed. A "STOP" occurred during the function call.
			0x8096 =-32618	CPU function library could not be executed because the CPU function library was not loaded or unloading is not yet finished.
			0x8098 =-32616	CPU function library could not be executed because the function is not supported.
			0x8099 =-32615	CPU function library could not be executed because the maximum amount of input data (1 MB) was exceeded (declarations with "In" and "InOut")
			0x809A =-32614	CPU function library could not be executed because the maximum amount of output data (1 MB) was exceeded (declarations with "Out" and "InOut")
			0x809B =-32613	The function returns an invalid value (a value between 0x0000 and 0x6FFF; 0xF000 and 0xFFFF is permitted)
			0x809C =-32612	Function uses an invalid data type: • IN_DATA • INOUT_DATA • OUT_DATA
			0xF000 – 0xFFFF =-4096 – -1	CPU 1500 V2.0 and later: The function could not be executed and returns a value between 0xF000 and 0xFFFF. (ODK_USER_ERROR_BASE = 0xF000)

Note

Call of function(s) influences the cycle time

When you call a function, the function parameters are copied. In particular in the case of large amounts of data or of structured data, this can lead to the cycle time being influenced.

5.4.3 Unloading functions

Introduction

The CPU function library is unloaded by calling the "*<STEP7Prefix>*_Unload" instruction. Call is made from the STEP 7 user program.

In addition to this call, the CPU function library is also automatically unloaded for the following reasons.

- The CPU is switched off
- Memory reset of CPU
- Windows is restarted
- Logoff off the Windows user (in the context of a Windows user)

Regardless of the context in which the CPU function library is running, the unloading procedure consists of the following steps:

- Call the "*<STEP7Prefix>*_Unload" instruction in the STEP 7 user program.
- From now on, no new executes can be carried out for this CPU function library. Still active executes are terminated at the CPU end. Windows terminates the execution of the function normally ("Unload" waits). No return value is sent to the CPU.
- The host calls the "OnStop()" and "OnUnload()" functions.
- The CPU function library is being unloaded.

"*<STEP7Prefix>*_Unload" instruction

A CPU function library is unloaded by calling the "*<STEP7Prefix>*_Unload" instruction in the STEP 7 user program.

***<STEP7Prefix>*_Unload**	
REQ	DONE
	BUSY
	ERROR
	STATUS

The following table shows the parameters of the instruction "<*STEP7Prefix*>_Unload":

Section	Declaration	Data type	Description
Input	REQ	BOOL	A rising edge activates the unloading of the CPU function library.
Output	DONE	BOOL	Indicates that the instruction has finished unloading the CPU function library.
Output	BUSY	BOOL	Indicates that the instruction is still unloading the CPU function library.
Output	ERROR	BOOL	Indicates that an error occurred during the unloading of the CPU function library. STATUS gives you more information about the possible cause.
Output	STATUS	INT	Provides information about possible sources of error, if an error occurs during the unloading of the CPU function library.

Input parameters

An edge transition (0 to 1) at the "REQ" input parameter starts the function.

Output parameter STATUS

The following table shows the information that is returned after unloading.

DONE	BUSY	ERROR	STATUS	Meaning
0	0	0	0x7000 =28672	No active unloading
0	1	0	0x7001 =28673	Unloading in progress, the first call
0	1	0	0x7002 =28674	Unloading in progress, ongoing call
1	0	0	0x0000 =0	Unloading was carried out successfully
0	0	1	0x80A4 =-32604	CPU function library could not be unloaded for the following reasons: • Windows is not available Start the ODK service manually or restart Windows.
			0x80C2 =-32574	CPU function library could not be unloaded. There are currently not enough resources available from Windows. Reload the CPU function library after a few seconds.
			0x80C3 =-32573	CPU function library could not be unloaded. The CPU currently does not have enough resources. Reload the CPU function library after a few seconds.
			0x8090 =-32624	An exception occurred during the unloading of the CPU function library. The CPU function library has been unloaded nevertheless.
			0x8096 =-32618	CPU function library could not be unloaded because the CPU function library was not loaded or unloading is not yet finished.
			0x809B =-32613	CPU 1500 V2.0 and later: The CPU function library could be unloaded and returns an invalid value (the values 0x0000 and 0xF000 - 0xFFFF are allowed)
			0xF000 – 0xFFFF =-4096 – -1	CPU 1500 V2.0 and later: CPU function library could be unloaded. An error occurred in the CPU function library during the execution of the "OnUnload()" function.

5.5 Remote debugging

If you use Microsoft Visual Studio as a development environment, you can use the debugger for debugging.

You can use the remote debugger to debug a CPU function library on a target system without Visual Studio. It should be noted that the generated CPU function libraries (DLLs) are loaded into one of the following processes:

- ODK_Host_x86.exe process (32-bit)
- ODK_Host_x64.exe process (64-bit)

The required remote debugger is dependent on the Visual Studio version used on the host system and on the system type (32-bit/64-bit) of the target system.

You can find links to download the remote debugger for the relevant Visual Studio version on the Microsoft website (https://docs.microsoft.com/en-us/visualstudio/debugger/remote-debugging?#download-and-install-the-remote-tools).

After downloading, you can install the remote debugger on the target system.

5.5.1 Performing remote debugging

Procedure

1. Start the Visual Studio remote debugger on the target system using "Start > All Programs > Visual Studio 20xx > Remote Debugger".
2. Configure the authentication.

   Select the "No authentication" option and select the "Allow any user to debug" check box.

   Observe the security information.

3. With a C++ CPU function library, copy the Visual Studio Debug DLLs from the folder "<installation path VS>\VC\redist\Debug_NonRedist\<ApplicationType>\Microsoft.<VS version>.DebugCRT" in the target folder. With a managed (C# / VB) CPU function library you can skip step 3.
   - Destination folder with 32-bit Windows and a 32-bit application:

     <windows install path>\System32
   - Destination folder with 64-bit Windows and a 64-bit application:

     <windows install path>\System32
   - Destination folder with 64-bit Windows and a 32-bit application:

     <windows install path>\SysWOW64

   Note

   You need the file "ucrtbased.dll".

   If this DLL is not present in the target system, copy it from the host in the folder:

   With 32-bit Windows under Program Files\...

   With 64-bit Windows under Program Files (x86)\...

   ...\Microsoft SDKs\Windows Kits\10\ExtensionSDKs\Microsoft.UniversalCRT.Debug\<Highest available version>\Redist\Debug\<Application type (32/64-bit)>

4. Load the CPU function library on the target system in the folder "C:\ProgramData\Siemens\Automation\ODK1500S".

   Note

   If the CPU function library is loaded, unload (Page 57) it before copying.

5. Load (Page 50) the CPU function library on the target system.

6. Set the breakpoints in the source code and start the debugger via "Debug > Attach to Process...".

   Select the following settings in the "Attach to Process" dialog:

   – Transport: Remote
   – Qualifier: IP address of the target system and port of the remote debugger.
   – Attach to:

     Use the default value "Automatic: Managed (...) code" for managed CPU function libraries.

     Only for a C++ CPU function library: Click "Select...", and select the code type "Native" in the "Select Code Type" dialog.

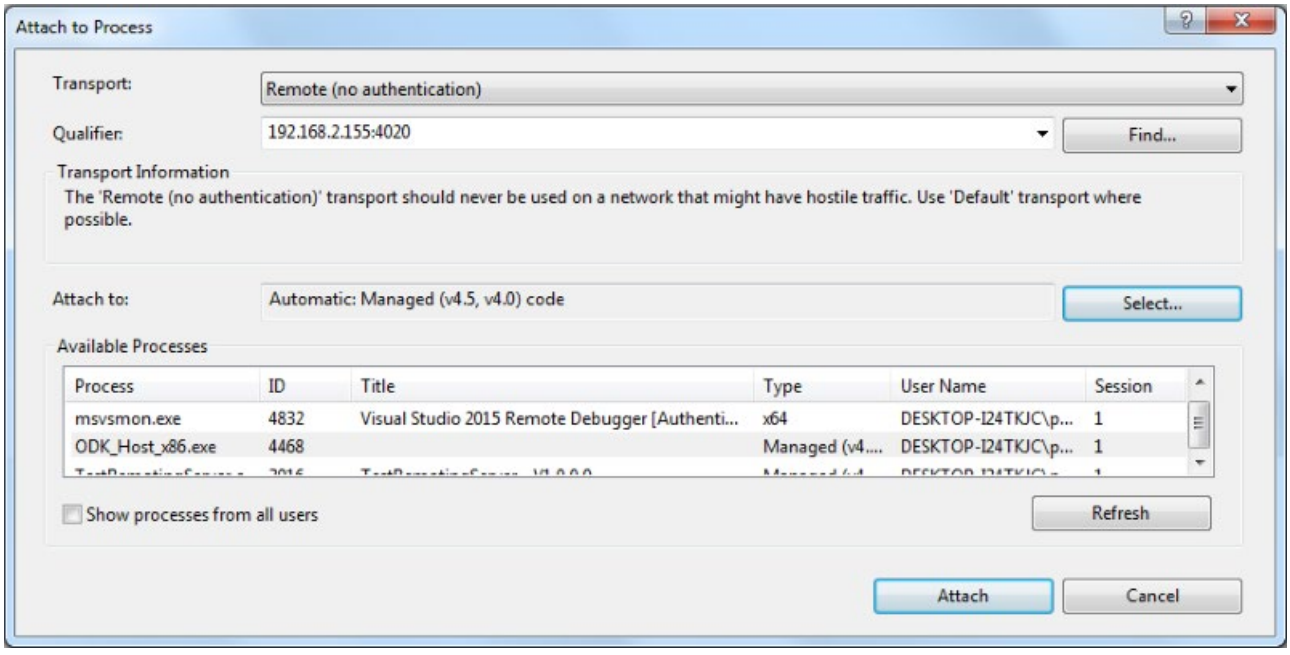

Debugging OnLoad/OnRun

To attach the debugger to the OnLoad() or OnRun() function, incorporate a wait loop at the start of OnLoad().

Example of a wait loop:

```
EXPORT_API ODK_RESULT OnLoad (void)
{
#if defined _DEBUG  // available in debug configuration, only
  while (!IsDebuggerPresent()) // wait for debugger

  {
    Sleep(100);
  }
#endif
  // your code for OnLoad() ...
```

Result

The debugger stops the execution of the code after the activated breakpoint.

Developing a CPU function library for the realtime environment 6

6.1 Creating a CPU function library

6.1.1 Requirements

- ODK is installed. The Eclipse development environment is installed.
- You need administrator rights to create and edit an Eclipse project (CPU function library for the realtime environment).

Note

If you have to move the workspace to a different storage location, make sure you copy the entire workspace.

Note

SO files (CPU function libraries)

The SO files are not know-how-protected. The customer is responsible for the SO files and their know-how protection.

6.1.2 Creating a project

To help you develop a CPU function library, an Eclipse Project template is included in the installation of ODK 1500S.

Procedure

To create a CPU project in Eclipse using an ODK template, follow these steps:

1. Start Eclipse as a development environment.
2. In the "File > New" menu, select the command "Project..."

   The "New Project" dialog opens.

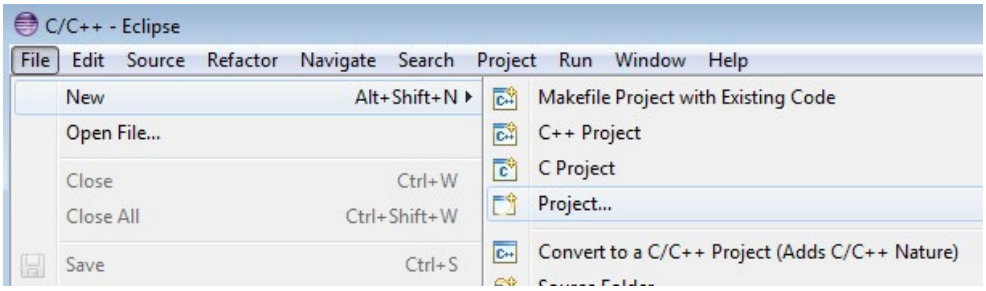

Figure 6-1 Creating a new project with Eclipse

3. Select the project template "C++ Project for CPU function library (CPU Runtime)" .

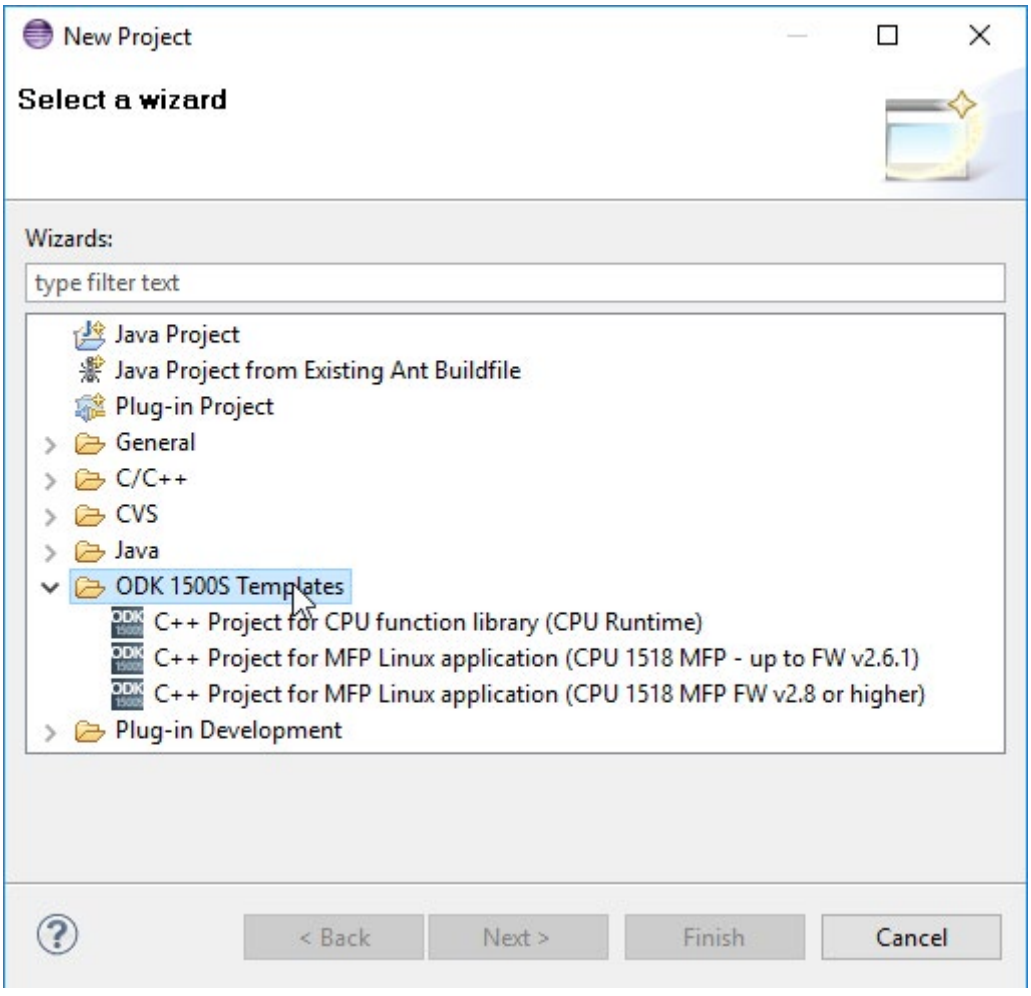

Figure 6-2 Selecting a template

4. Enter a project name.
5. Click "OK" to confirm.

Result

The CPU function library for the realtime environment is created using the project template and sets the following project settings:

- Project settings for generating the SO file
- Automates the generation of the SO and SCL file

The project template sets up the following Project Explorer by default:

Folder / file			Description
<project path>			
	def		
		<project>.odk	ODK interface description
		<project>.scl.additional	S7 blocks that are appended to the <project>.scl file. Although the file is not part of the project template, the code generator processes the file.
	STEP7		**Files from this folder may not be edited!**
		<project>.scl	S7 blocks
	scr_cg_priv		**Files from this folder may not be edited!**
		ODK_Types.h	Definition of the ODK base types
		ODK_Functions.h	Function prototypes
		ODK_Execution.cpp	Implementation of the "Execute" method
	src		
		<project>.cpp	Function code: This file has always the suffix CPP, regardless of whether you are creating a C or C++ project.
	src_odk_helpers		**Files from this folder may not be edited!**
		ODK_CpuReadData.h	Definition of the helper function for reading classic DBs.
		ODK_CpuReadData.cpp	Implementation of the helper function for reading classic DBs.
		ODK_CpuReadWriteData.h	Definition of the helper function for reading/writing classic DBs.
		ODK_CpuReadWriteData.cpp	Implementation of the helper function for reading/writing classic DBs.
		ODK_StringHelper.h	Definition of the helper function for access to S7String/S7WString.
		ODK_StringHelper.cpp	Implementation of the helper function for access to S7String/S7WString.
	release_so		
		<project>.so	ODK Application Binary (release version) that must be transferred to the target system.
		<project>.debuginfo.so	ODK Application Binary (debug version) that is required for the post mortem analysis.
		<project>.symbols	Symbol information that is required for the post mortem analysis.
	launches		
		<project>.gdb.launch	Start for the post mortem analysis.

Note

Invalid characters in the project name

All invalid characters in the project name are automatically replaced by an underscore. These characters are allowed {A...Z, a...z, 1...9, -, _}.

"My + first#project" becomes, for example, "My___first_project".

6.1.3 Generating a CPU function library

The generation of the project data is divided into two automated steps.

- **Pre-Build**: Generation of the files created by default based on the changed <Project>.odk file
- **Build**: Generation of the SO file

Procedure

To generate the project data, follow these steps:

1. Save all edited files.
2. In the "Build" menu, select the command "Build Project".

Note

The project data is only generated if the files have been changed.

Result

The generation of the project data is started. The automatically generated files are stored in the file system.

- SO file: Project directory\<Project>\<BuildConfiguration>\<Project>.so
- SCL file: Project directory\<Project>\STEP7\<Project>.scl

6.1.4 Defining the runtime properties of a CPU function library

The next step is to define the interface description of the CPU function library in the <project>.odk file. The file contains the following elements:

- Comments
- Parameters
- Definitions of functions and structures

Procedure

To define the interface description in the <project>.odk file, follow these steps:

1. Open the <project>.odk file.
2. Change the elements depending on your requirements.

Description of the elements

Comments

You can use comments for explanation purposes.

Parameters

The definition of the parameters must be within a line of code.
`<parameter name>=<value> // optional comment`

The interfaces file supports the following parameters:

Parameter	Value	Description
Context	realtime	Specifies that the CPU function library is loaded in the context of the realtime environment (Page 67).
Trace	on	Specifies the trace function in the CPU function library. In this case, the CPU function library requires 32 KB if memory as an additional trace buffer. A "GetTrace" function block is created by default for use in a STEP 7.
	off	A "GetTrace" function block is created. The trace buffer contains only one trace entry with the contents: trace is off.
HeapSize	[4...<Available CPU memory (Page 129)>]k	Specifies a memory in KB that can be used as heap for these realtime applications.
HeapMaxBlockSize	[8...<HeapSize>]	Specifies the maximum memory size in bytes that can be allocated at one time.
SyncCallParallelCount	[1...9] Default=3	If a optional parameter and defines the maximum number of parallel calls in this CPU function library. The size of the memory which is reserved for calls in this CPU function library: SyncCallParallelCount * (SyncCallStackSize + SyncCallDataSize)
SyncCallStackSize	[1...1024]k Default=32k	Is a optional parameter and defines the size of the thread stack for a call in this CPU function library. Each new call receives its own stack memory.

Parameter	Value	Description
SyncCallDataSize	[1...1024]k	Is a optional parameter and defines the size of the data area for a call in this CPU function library. The data area contains IN, INOUT and OUT parameters. Each new call receives its own stack memory.
	Default=auto	The required data size is automatically calculated by the code generator. With an ODK_CLASSIC_DB, 65 KB is applied.
STEP7Prefix	<String>	Describes the string that precedes your functions and is shown after importing the SCL file in STEP 7. The following characters are allowed: {A...Z, a...z, 1...9, -, _} The project name is entered without spaces by default.

6.1.5 Environment for loading or running the CPU function library

When the SCL file is imported into STEP 7 as an external source, the ODK instructions are created in the selected directory in STEP 7. You can load up to 32 CPU function libraries.

You can load and run your CPU function library in the context of the realtime environment:

Realtime environment

Add the following line of code in your <project>.odk file to use the CPU function library in the context of the realtime environment:
`Context=realtime`

In this context, the CPU function library is not running in a host process at the Windows end, but instead in the realtime environment. Because the CPU function library is loaded synchronously, it should be loaded in a startup OB (e.g. OB 100).

The number of loadable CPU function libraries (Page 129) is limited in the context of the realtime environment.

If the CPU function library has to be loaded in a cyclic OB (for example, OB 1), note the following loading times:

CPU	Small SO file → Loading time	Large SO file → Loading time
CPU 1505SP	0.5 MB → 20 ms	3 MB → 70 ms
CPU 1507S (with SSD)	0.5 MB → 20 ms	5 MB → 100 ms

Determining the size of the CPU function library in the CPU memory

To determine the required size of the CPU function library in the CPU memory, follow these steps:

1. Open a command line dialog.
2. Enter the following path from the ODK installation folder (the appended option "-l" is a lower-case "L"): eclipse\ build_tools\x86_64_gcc_pc_elf_4.8.1-1\bin\x86_64-pc-elf-readelf.exe "*StorageLocation\File.so>*" -l

   You can see the size of your CPU function library under the heading "Program Headers" in the "MemSiz" column.

   Additional administrative memory is required for each CPU function library in addition to the amount specified here. The administrative memory can be calculated as follows:

   Administrative memory = SyncCallParallelCount * (SyncCallStackSize + SyncCallDataSize)

6.1.6 Defining functions and structures of a CPU function library

6.1.6.1 Defining functions a CPU function library

Functions

Functions are defined by the following general lines of code:

```
ODK_RESULT <FunctionName>
([<InOut identifier>] <data type> <tag name>, etc.);
```

The <project>.odk file contains an example function description by default. You can change this description and/or add more function descriptions.

```
ODK_RESULT MyFunc1([IN] INT param1, [OUT] INT param2);
```

Syntax rules for functions

The following syntax rules apply to functions within the <project>.odk file:

- Note that the function names are case-sensitive.
- You can split function definitions into several lines.
- End a function definition with a semicolon.
- TAB and SPACE are allowed.
- Do not define a tag name in a function twice.
- Do not use any keywords for the programming language that is used (for example "EN / ENO" as parameter name)
- Use ODK_RESULT only for the return values of the function.
- The tag name must start with a letter or an underscore.
- Illegal function names are displayed during generation in the development environment.
- The following names are not allowed in combination of *<STEP 7Prefix>* and <function name>: ODK_Load, ODK_Unld, ODK_ExcA, ODK_ExcS

<FunctionName>

Function names are valid with the syntax and character restrictions of the used programming language.

<InOut-Identifier>

There are three defined InOut-Identifiers. Use these in the following order: [IN], [OUT], [INOUT]

- [IN]: Specifies an input tag. The tag is copied to the function when it is called. This is constant and cannot be changed.
- [OUT]: Specifies an output tag. The tag is copied back after the function has been completed.
- [INOUT]: Specifies an input and output tag. The tag is copied to the function when it is called. This is not constant and can be changed. The tag is copied back after the function has been completed.

<DataType>

The data type defines the type of a tag. The following tables define the possible data types and their method of representation in C++ or STEP 7:

Elementary data types:

ODK data type	SIMATIC data type	C++ data type	Description
ODK_DOUBLE	LREAL	double	64-bit floating point, IEEE 754
ODK_FLOAT	REAL	float	32-bit floating point, IEEE 754
ODK_INT64	LINT	long long	64-bit signed integer
ODK_INT32	DINT	long	32-bit signed integer
ODK_INT16	INT	short	16-bit signed integer

ODK data type	SIMATIC data type	C++ data type	Description
ODK_INT8	SINT	char	8-bit signed integer
ODK_UINT64	ULINT	unsigned long long	64-bit unsigned integer
ODK_UINT32	UDINT	unsigned long	32-bit unsigned integer
ODK_UINT16	UINT	unsigned short	16-bit unsigned integer
ODK_UINT8	USINT	unsigned char	8-bit unsigned integer
ODK_LWORD	LWORD	unsigned long long	64-bit bit string
ODK_DWORD	DWORD	unsigned long	32-bit bit string
ODK_WORD	WORD	unsigned short	16-bit bit string
ODK_BYTE	BYTE	unsigned char	8-bit bit string
ODK_BOOL	BOOL	unsigned char	1-bit bit string, remaining bits (1..7) are empty
ODK_LTIME	LTIME	long long	64-bit during in nanoseconds
ODK_TIME	TIME	long	32-bit during in milliseconds
ODK_LDT	LDT	unsigned long long	64-bit date and time of the day in nanoseconds since 01/01/1970 00:00
ODK_LTOD	LTOD	unsigned long long	64-bit time of the day in nanoseconds since midnight
ODK_TOD	TOD	unsigned long	32-bit time of the day in milliseconds since midnight
ODK_CHAR	CHAR	char	8-bit character

Complex data types:

ODK data type	SIMATIC data type	C++ data type	Description
ODK_DTL	DTL	ODK_DTL (struct)	Structure/class for date and time
ODK_S7STRING	STRING	unsigned char	Character string: • For SIMATIC and C++: 8-bit character with length max. and act. (2xUSINT) • For other languages: native
ODK_CLASSIC_DB	VARIANT	ODK_CLASSIC_DB (struct)	Classic DB (global or based on UDT)
[ ]	ARRAY	[ ]	Range of same data types. You can use all data types as an array except ODK_CLASSIC_DB.

User-defined data types:

User-defined data types (UDT) include structured data, especially the names and data types of this component and their order.

A user-defined data type can be defined in the user interface description with the keyword "ODK_STRUCT".

Example

```
ODK_STRUCT <StructName>
{
 <DataType> <TagName>;
 ...
};
```

The following syntax rules apply to the structure:

- You can divide the structure into multiple lines.
- The structure definition must end with a semicolon.
- Any number of tabs and spaces between the elements is permitted.
- It is not permitted to use any keywords for the generated language used (for example "en / eno" as tag name).

You can create additional structures within a structure.

<StructName>

Structure names are valid with the syntax and character restrictions of the programming language and as defined for tag definitions in STEP 7.

In STEP 7, the structure name is extended with the STEP 7 prefix.

<TagName>

Tag names are subject to the syntax and character restrictions of the programming language.

Example

The following code example explains the definitions of functions and structures. Sort the parameters by: IN, OUT, INOUT.

```
//INTERFACE
…
ODK_STRUCT MyStruct
  {
    ODK_DWORD myDword;
    ODK_S7STRING myString;
  };
ODK_RESULT MyFct([IN] MyStruct myInStruct
                 ,[OUT] MyStruct myOutStruct);
```

6.1.6.2 Use of ODK_CLASSIC_DB as parameter

The ODK_CLASSIC_DB data type may only be used with the InOut-Identifier [IN] and [INOUT]. If a parameter of data type ODK_CLASSIC_DB with InOut-Identifier [IN] or [INOUT] is used, no other parameters, regardless of the data type, can be used with the same InOut-Identifier.

Example

```
// INTERFACE
...
// OK:
ODK_RESULT MyFunc1([IN] ODK_CLASSIC_DB myDB);
ODK_RESULT MyFunc2([IN] ODK_CLASSIC_DB myDB1, [INOUT] ODK_CLASSIC_DB
myDB2);
//
// NOT OK (Code Generator will throw an error):
// ODK_CLASSIC_DB not permitted for [OUT]
ODK_RESULT MyFunc3([OUT] ODK_CLASSIC_DB myDB);
// if ODK_CLASSIC_DB is used for [IN], no other [IN] parameter may
be
// defined in this function
ODK_RESULT MyFunc4([IN] ODK_CLASSIC_DB myDB, [IN] ODK_INT32 myint);
```

Application example for C++

```
#include "ODK_CpuReadData.h"
...
ODK_RESULT MyFunc1 (const ODK_CLASSIC_DB& myDB)
{
    CODK_CpuReadData myReader(&myDB);
    ODK_INT32 myInt1, myInt2;

    myReader.ReadS7DINT(0, myInt1);
    myReader.ReadS7DINT(4, myInt2);

    return myInt1 + myInt2;
}
```

In order to access the data type ODK_CLASSIC_DB within a user function, the helper functions (Page 138) of the following classes are available:

- Class "CODK_CpuReadData"
- Class "CODK_CpuReadWriteData"

6.1.6.3 Handling strings

You can define a maximum length for strings (String or WString). Define the maximum number of characters in square brackets directly after the data type:

- ODK_S7STRING[30] or
- ODK_S7WSTRING[1000]

Without limitation, a string has a default length of 254 characters.

In order to access the data types ODK_S7STRING or ODK_S7WSTRING within a user function, the string helper functions (Page 138) are available:

Example

```
//INTERFACE
…
ODK_RESULT MyFct(
    [IN]    ODK_S7STRING      myStrHas254Chars
  , [OUT]   ODK_S7STRING[10]  myStrHas10Chars
  , [INOUT] ODK_S7STRING[20]  myStrArrayHas20Chars5Times[5]);
```

If you use [INOUT], you can set the string with a length that differs from the [INOUT of the function block in STEP 7.

6.1.6.4 Definition of the <Project>.odk file

The function prototypes and function blocks are generated based on the selected parameters in the <project>.odk file. Define the <project>.odk file for this.

By default, the <project>.odk file contains the following:

- Description

  The possible data types that are used for the interface are described in comment lines. This simplifies the definition of the correct tag type for your task.

- Context=realtime

  The CPU function library is loaded in the context of the realtime environment.

- Trace=on

  Specifies the trace function in the CPU function library. A "GetTrace" function block is created by default for use in a STEP 7.

  When you define the "ODK_TRACE" instruction (Page 95), it is also compiled and executed. When you define the parameter Trace=on in the <project>.odk file, the instruction is automatically defined with the following code:

  ```
  #define ODK_TRACE(msg, ...);
  ```

  Example: ODK_TRACE("number=%d", 13);

  Calling the instruction creates an entry in the trace buffer.

- HeapSize

  Specifies a memory in KB that can be used as heap for these realtime applications.

- HeapMaxBlockSize

  Specifies the maximum memory size in bytes that can be allocated at one time.

- STEP7Prefix="<project>"

  Sets a string for the SCL generation in front of the functions of the CPU function library. This is visible in STEP 7. You can change the parameter. The string length of the prefix including function name must not exceed 125 characters (e.g. ODK_App_SampleFunction).

- "SampleFunction" function definition

  You can change this default function as you wish in the <project>.odk file and add more functions. The string length may not exceed a length of 125 characters. The associated function is located in the CPP file.

Example

```
//INTERFACE
Context=realtime
Trace=on
HeapSize=4k
HeapMaxBlockSize=1024
STEP7Prefix=ODK_App

 /*
* Elementary data types:
*
*  ODK_DOUBLE      LREAL    64-bit floating point, IEEE 754
*  ODK_FLOAT       REAL     32-bit floating point, IEEE 754
*  ODK_INT64       LINT     64-bit signed integer
*  ODK_INT32       DINT     32-bit signed integer
*  ODK_INT16       INT      16-bit signed integer
*  ODK_INT8        SINT     8-bit signed integer
*  ODK_UINT64      ULINT    64-bit unsigned integer
*  ODK_UINT32      UDINT    32-bit unsigned integer
*  ODK_UINT16      UINT     16-bit unsigned integer
*  ODK_UINT8       USINT    8-bit unsigned integer
*  ODK_LWORD       LWORD    64-bit bit string
*  ODK_DWORD       DWORD    32-bit bit string
*  ODK_WORD        WORD     16-bit bit string
*  ODK_BYTE        BYTE     8-bit bit string
*  ODK_BOOL        BOOL     1-bit bit string
*  ODK_LTIME       LTIME    64-bit duration in nanoseconds
*  ODK_TIME        TIME     32-bit duration in milliseconds
*  ODK_LDT         LDT      64 bit date and time of day
*                           in nanoseconds
*  ODK_LTOD        LTOD     64 bit time of day in nanoseconds
                            since midnight
*  ODK_TOD         TOD      32 bit time of day in milliseconds
                            since midnight
*  ODK_DTL         DTL      structure for date and time
*  ODK_CHAR        CHAR     8 bit character
*  ODK_S7STRING    STRING   character string with 8-bit characters
*  ODK_CLASSIC_DB  VARIANT  classic DB (global or based on UDT)
*  []              ARRAY    field of this datatype
* User Defined Datatype:
*  ODK_STRUCT      UDT      user defined structure
* Return data type:
*  ODK_RESULT      0x0000 - 0x6FFF function succeeded
*                                  (ODK_SUCCESS = 0x0000)
*                  0xF000 - 0xFFFF function failed
*                                  (ODK_USER_ERROR_BASE = 0xF000)
*/

ODK_RESULT SampleFunction([IN]    ODK_INT32    myInt
                        , [OUT]   ODK_BOOL     myBool
                        , [INOUT] ODK_DOUBLE   myReal);
```

6.1.6.5 Modifying the <Project>.odk file

The following example shows you how you can change the <Project>.odk file to suit your needs.

```
//INTERFACE
Context=realtime
Trace=on
HeapSize=4k
HeapMaxBlockSize=1024
STEP7Prefix=ODK_SampleApp_

ODK_RESULT GetString ([OUT]    ODK_S7STRING myString);

ODK_RESULT Calculate ([IN]     ODK_INT64   In1,
                      [IN]     ODK_DOUBLE  In2,
                      [OUT]    ODK_FLOAT   Out1,
                      [OUT]    ODK_INT32   Out2,
                      [INOUT]  ODK_BYTE    InOut1[64],
                      [INOUT]  ODK_BYTE    InOut2[64]);
```

6.1.6.6 Comments

Comments are started with a double slash "//" and end automatically at the end of the line.

Alternatively, you can limit comments by /* *<comment>* */, which enables new lines in a comment. Characters after the end of the comment identifier "*/" are further processed by the code generator.

Comments for Visual Basic are marked with a apostrophe.

Comments for functions and structures

You place comments on functions and structures directly in front of the functions/structures.

These comments are transferred to the ODK_Functions.h and <project>.scl files.

In the <project>.scl file, the comments are copied to the block properties and duplicated in the code area of the function.

Observe the following rules:

- Comments for functions and structures must be located directly in front of the functions/structures (without blank line).
- The end of the comment is located in front of the ODK_RESULT or ODK_STRUCT keyword.
- You can use both identifiers "//" and "/* */" but not in combination within a comment.

Example

```
// this comment did not appear in MyStruct, because of the empty
line.

// comment MyStruct
// ...
ODK_STRUCT MyStruct
{
  ODK_DWORD     myDword;
  ODK_S7STRING  myString;
};

/*
comment MyFct
...
*/
ODK_RESULT MyFct([IN] MyStruct myInStruct
               ,[OUT] MyStruct myOutStruct);
```

Comments for tags in functions and structures

Comments for function and structure tags are placed directly in front of or behind the tag.

These comments are transferred to the ODK_Functions.h/ and <project>.scl files.

The following rules apply to comments **in front of** tags:

- Comments must be located directly in front of the tag (without blank line)
- The end of the comment is the <InOut-Identifier> of the tag

The following rules apply to comments **after** tags:

- Comments must be located after the tag name (without blank line)

The following general rules apply to comments for tags:

- You can use both identifiers "//" and "/* */" but not in combination within a comment.
- In the header file, the same comment identifier is used ("//" or "/* */").

Example

```
ODK_STRUCT MyStruct
{
  // comment myDword BEFORE definition
  ODK_DWORD    myDword;

  ODK_S7STRING myString; /* comment myString AFTER definition */
};

ODK_RESULT MyFct([IN]  MyStruct myInStruct    // comment
                                              // myInStruct ...
                                              // ... "second line"
               , [OUT] MyStruct myOutStruct); /* comment
                                                 myOutStruct ...
                                                 ...
                                               */
```

6.1.7 Implementing functions

6.1.7.1 General notes

This section provides an overview of the basic topics relating to the implementation of functions in a realtime environment.

- The function call is limited in time

  Since the function is called synchronously, the function call must be adjusted to the timing of the cycle.

- Trace functionality

  ODK provides a trace function (Page 95) to check variables or the execution of functions in the realtime environment.

- The execution of synchronous functions can be interrupted by higher priority OBs (Page 91) running in the same CPU.

- Application size

  The number of loadable CPU function libraries (Page 67) is limited in the context of the realtime environment.

- C++ Runtime library

  Functions that need operating system functionality (threading) cannot be used

6.1.7.2 Callback functions

The project for the realtime CPU function library contains a CPP file (**execute file:** <project>.cpp) to define your functions. This CPP file contains functions filled by default. You do not necessarily have to fill these with additional user code to be usable. However, neither may the functions be deleted under any circumstances.

The empty function has the following code (using the "OnLoad()" function as an example):

```
ODK_RESULT OnLoad (void)
{
  // place your code here
  return ODK_SUCCESS;
}
```

You can define the following functions in the CPP file:

- OnLoad(): Called after loading the CPU function library
- OnUnload(): Called before unloading the CPU function library
- OnRun(): Called when the CPU changes to RUN mode after the OnLoad() function
- OnStop(): Called when the CPU changes to the STOP mode and before the function OnUnload()

  The OnStop() function is terminated if the execution takes longer than 50 ms when CPU changes to STOP mode.

"OnLoad()" and "OnUnload()" function

The functions have a return value of type "ODK_RESULT" and typically provide information about the status of the "ODK_SUCCESS" value.

The following return values are possible:

Return value for "ODK_RESULT"	Description
ODK_SUCCESS = 0x0000	Return value following a successful execution of the "OnLoad()" or "OnUnload()" function
0x0001 – 0xEFFF	Invalid values (system-internal)
0xF000 – 0xFFFF ODK_USER_ERROR_BASE = 0xF000	You can define your own return values. The loading stops and the CPU function library unloads for the "OnLoad()" function. The CPU function library within the specified value range is still unloaded for the "OnUnload()" function.

"OnRun()" and "OnStop()" function

The functions have a return value of type "ODK_RESULT" and typically provide information about the status of the "ODK_SUCCESS" value.

The following return values are possible:

Return value for "ODK_RESULT"	Description
ODK_SUCCESS = 0x0000	Default return value for a successful execution of the function "OnRun()" or "OnStop()"
0x0001 – 0xFFFF	Direct feedback to the user program is not possible because these functions are not called directly by the user at RUN/STOP mode transitions.

6.1.7.3 Implementing custom functions

Once you have defined the ODK interface in the <project>.odk file, you must edit the functions of the CPU function library in the Project Source file.

Procedure

To edit the function of a CPU function library, follow these steps:

1. To generate the function prototypes, execute the build.
2. Open the project source file, or create a custom source file if necessary.
3. Transfer the function prototypes from <ODK_Functions.h>/<OdkFunctions.cs/vb> to the source file.

Note

Use the function prototype macro to transfer the step 3 in the future when there is a change to the function parameters.

4. Edit the code of your CPU function library in the execute file.

CPU function library

The execute file contains a schematically represented function description by default. You can change this description with corresponding changes in the <project>.odk file and/or add more function descriptions.

Execute file based on C++ example

```
#include "ODK_Functions.h"

EXPORT_API ODK_RESULT OnLoad (void)
{
    return ODK_SUCCESS;
}
EXPORT_API ODK_RESULT OnUnload (void)
{
    return ODK_SUCCESS;
}
EXPORT_API ODK_RESULT OnRun (void)
{
    return ODK_SUCCESS;
}
EXPORT_API ODK_RESULT OnStop (void)
{
    return ODK_SUCCESS;
}
ODK_RESULT SampleFunction( const ODK_INT32& myInt,
                               ODK_BOOL& myBool,
                               ODK_DOUBLE& myReal)
{
    return ODK_SUCCESS;
}
```

6.1.7.4 Dynamic memory management

Introduction

ODK objects work with a dynamic memory management (heap). The following instructions and functionalities are supported by using the dynamic memory management:

- The new/delete and malloc/free instructions.
- STL (Standard Template Library)
- Software exceptions

The default setting for the heap size is 4 KB. The heap size can be from 4 KB up to the available memory of the CPU (Page 129). You change the heap size in the <project>.odk file using the following parameters:

- HeapSize
- HeapMaxBlockSize

Special features

Because the used memory area (heap) has been optimized with regard to realtime and cyclic processing, it has some special features:

- Blocks can only be allocated up to a specified size during the compiling time of the ODK object.

  Note

  You can specify the maximum block size with the HeapMaxBlockSize parameter in <project>.odk. However, this has an effect on the global memory use for CPU function libraries, because the management information of the following memories is required in addition to the actual heap:

  size_heap_admin_data = HeapMaxBlockSize * 3

  Example: Therefore, with a maximum block size of 100 KB, this project needs 300 KB of global data in addition to the heap. This data is used for heap administration.

  You can find additional information under Environment for loading or running the CPU function library (Page 67).

- Blocks can initially be requested in any size. When the blocks are released again, they are entered in free lists. There is a free list in each case for all possible block sizes (up to HeapMaxBlockSize) so that later allocations can be performed in constant time.

  There is, however, no merging of neighboring released blocks to form a larger block.

  This means continuously recurring requests can be met faster than constantly different requests.

  Example: The user allocates only blocks with 8 bytes until the heap is full. The user then releases everything again so that the heap is completely empty. An allocation of a block with 16 bytes is then no longer possible, however, because all free blocks are entered in the free list for 8 bytes and merging is not possible.

Example

```
#include <assert.h>
#include <exception>
#include <vector>
…
   // check parameter
   assert (NULL != myPointer);

   // allocate heap memory with malloc()
   char* p1 = (char*) malloc(32);
   if (NULL == p1)
   {
     ODK_TRACE("ERROR: malloc() failed");
   }
   else
   {
     ODK_TRACE("malloc() done");
     // free allocated memory
     free(p1);
     ODK_TRACE("free() done");
   }

   // allocate heap memory with new()
   char* p2 = NULL;
   try
   {
     p2 = new char [64];
     ODK_TRACE("new done");
     // delete allocated memory
     delete[] p2;
     ODK_TRACE("delete done");
   }
   catch (std::exception& e)
   {
     ODK_TRACE("exception: %s", e.what());
   }
   std::vector<int> vec; // empty vector of ints
```

6.1.7.5 Debug (Test)

You have the possibility to write a custom test to debug the CPU function library for the realtime environment in a Windows environment. This will ensure the quality of the code.

Requirements

You need an Internet connection for this procedure.

You need administrator rights for this procedure.

Procedure before the first debug process

To perform a test on a CPU function library for the realtime environment in a Windows environment, perform the following once:

1. Close Eclipse.
2. Open the "bin" folder of your ODK installation.
3. Run the "MinGW32_Install.cmd" file with the "Run as administrator" command from the shortcut menu.

   A text editing dialog opens. The Windows prompt installs all necessary components.

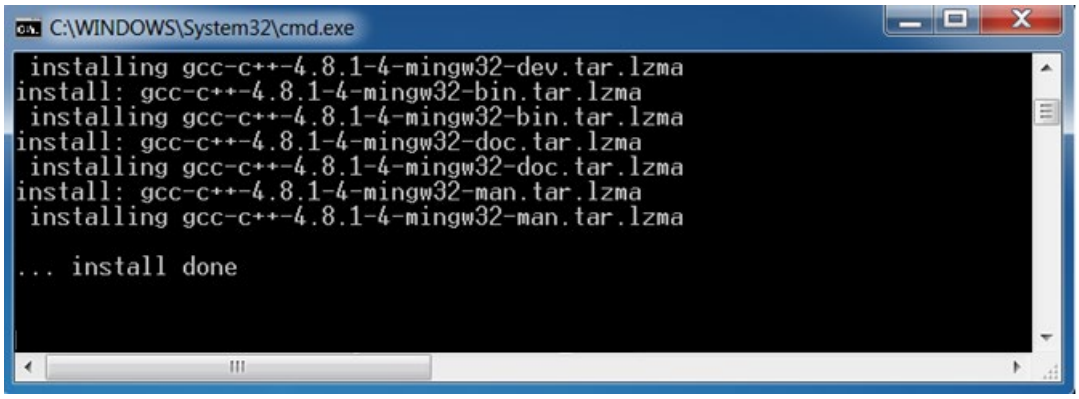

4. Click on any button.

   MinGW32 is installed.

Basic procedure

To perform the test, proceed as follows:

1. Open your project in Eclipse.
2. Change the debug environment to "Windows". To do this, select the "debug (win32)" option in menu "Project > Build Configurations > Set Active".

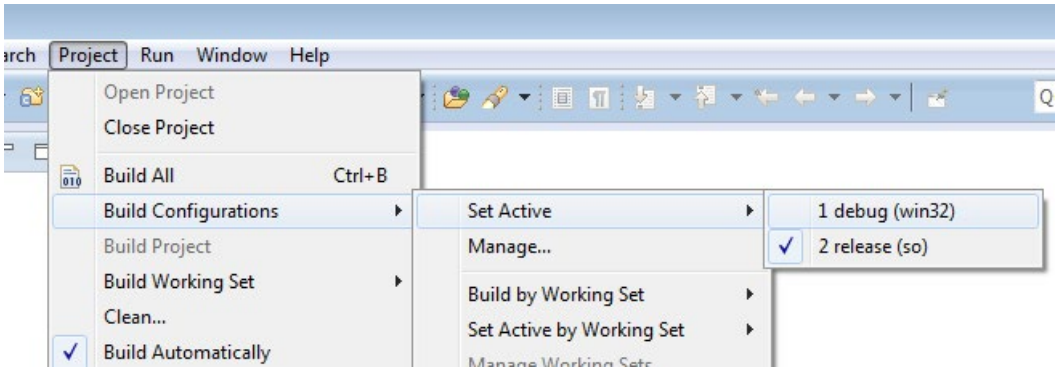

3. Create the project as debug version. To do so, select the "Build Project" command in the "Project " menu.
4. If you debug the project for the first time, you must now set the debug configuration. Otherwise, continue with step 8.

5. To do this, select the "Debug Configurations" command in the "Run" menu.

   The "Debug Configurations" dialog opens.

6. To create a new application, select the entry "C/C++ Application" and select the "New" command in the context menu.

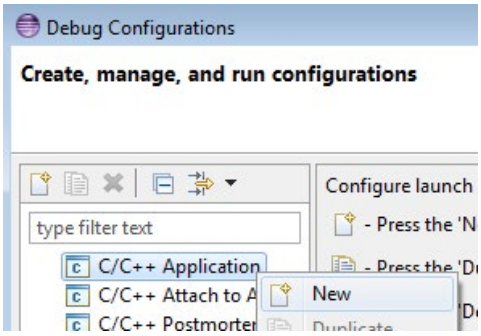

7. Configure your test environment.
8. Click the "Search Project" button to select your application.

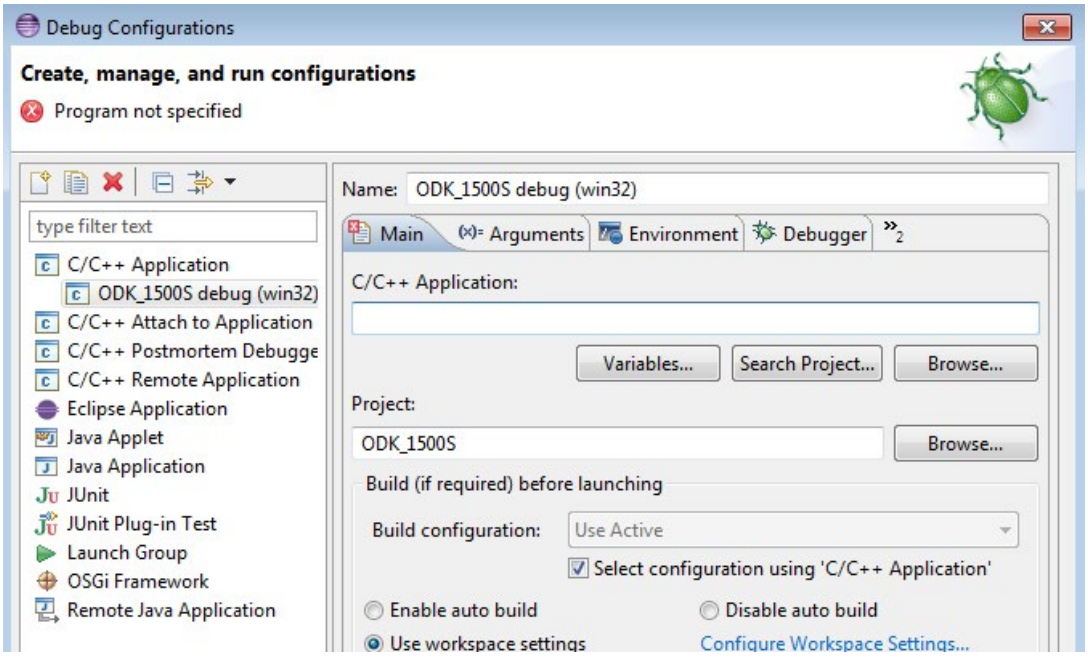

9. Start the debug process by clicking the "Debug" button.
10. If you want to debug your project again, select the "Local C/C++ Application" command in the menu "Run > Debug as".

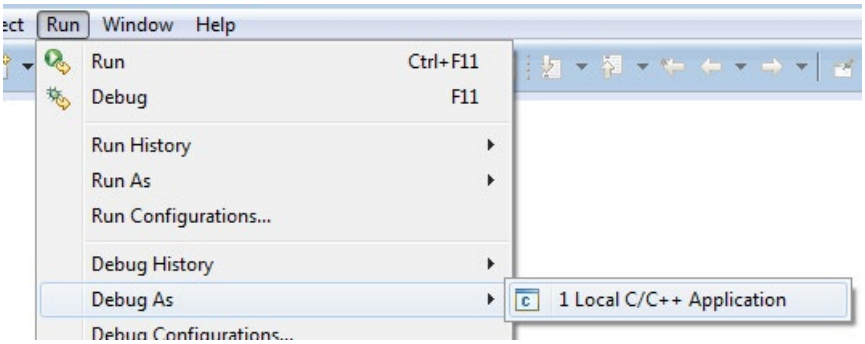

Result

Eclipse suggests a change in the debug perspective.

The test code is executed. The test code for the test is compiled only in the debug environment and is implemented in the "main()" function. This function is located in the <project>.cpp file.

The "main()" function offers you the following possibilities:

- Test data are provided and results can be reviewed.
- You can monitor tags of the function.
- You can use breakpoints to check the execution.

Test code

The following sample code shows the default contents of the "main()" function.

```
/*
 * main() is defined for windows debugging, only.
 * Therefore all automatically invoked functions
 * (OnLoad, OnRun, OnStop, OnUnload) have to be called manually.
 */
#ifdef _DEBUG
int main (int argc, char* argv[])
{
    ODK_RESULT ret = ODK_SUCCESS;
    ret = OnLoad();
    // error handling
    ret = OnRun();
    // error handling

    // place your test code here

    ret = OnStop();
    // error handling
    ret = OnUnload();
    // error handling
```

```
    return ret;
}
#endif // _DEBUG
```

6.2 Transferring a CPU function library to the target system

Procedure

Manually transfer the SO file to the target system. Use the file explorer of the web server of the CPU to transfer the CPU function library.

To transfer an SO file, follow these steps:

1. Enable the Web server in your STEP 7 project.
2. Open the web server of the CPU in the browser.
3. Open the "Filebrowser" menu.

4. Open the following directory as the storage location for the CPU function libraries: \ODK1500S\

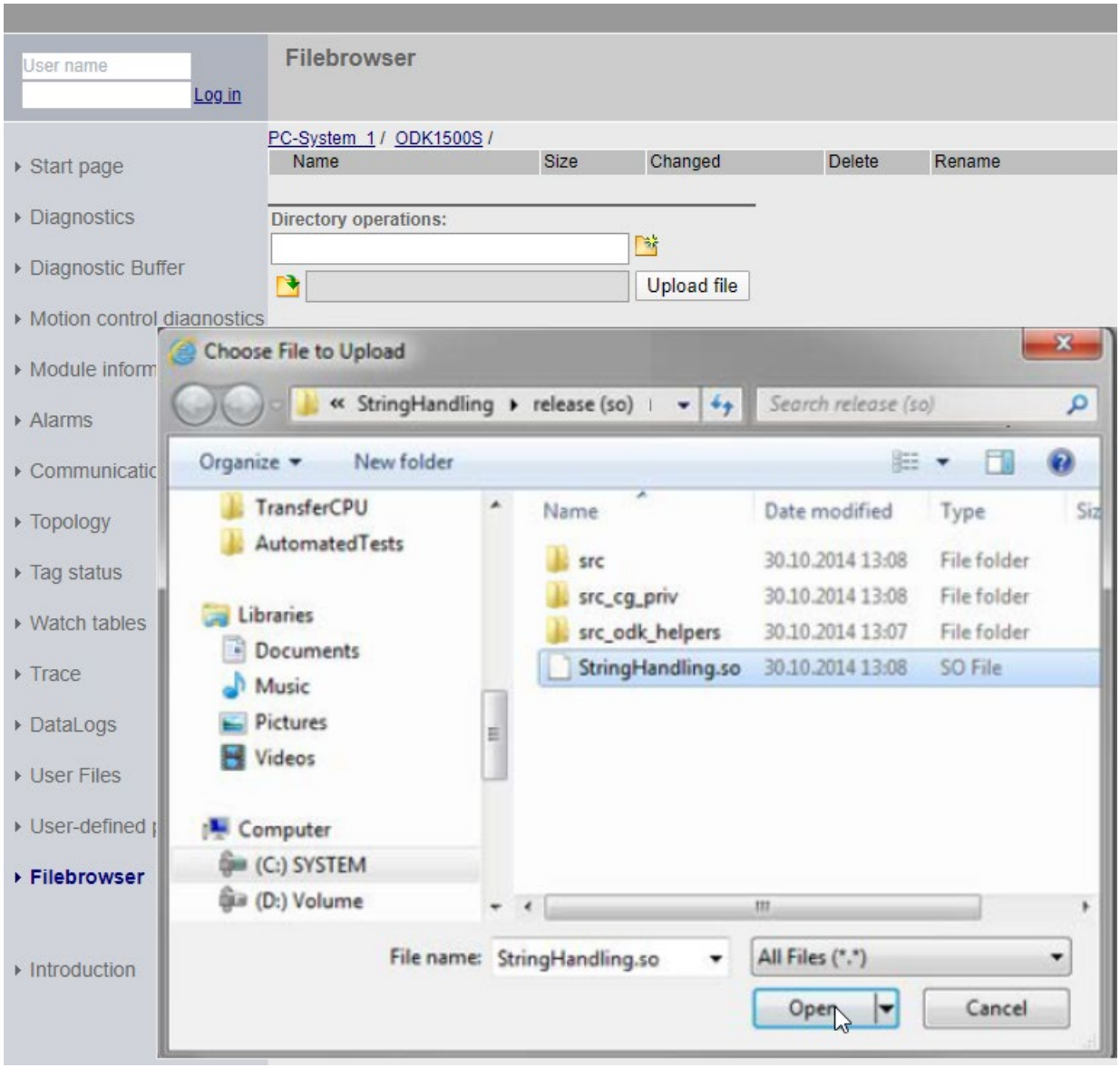

Figure 6-3 Transferring the SO file via the file explorer from the web server of the CPU

5. Click the "Browse" button.
6. Navigate in the file system to the SO file or copy the location from the properties of the SO file in Eclipse.
7. Confirm the transfer of the SO file to the web server of the CPU by pressing the "Load File" button.

Result

The SO file is transferred to the load memory of the CPU.

After a successful transfer, the SO file is loaded by calling the "<*STEP7Prefix*>_Load" instruction.

6.3 Importing and generating an SCL file in STEP 7

When generating the project data, the following files are created:

- SCL file for importing into STEP 7
- All files depending on the configuration, e.g. SO file

If STEP 7 is installed on another PC as the development environment, you must transfer the generated SCL file to the PC where the STEP 7 is installed.

Requirements

The project data were generated.

Procedure

To import and compile the SCL file, follow these steps:

1. Start STEP 7.
2. Open your project.
3. Select the project view.
4. Select the CPU in the project tree.
5. Select the "External Sources" subfolder.

   The "Open" dialog box opens.
6. Navigate in the file system to the SCL file that was created during generation of the project data or copy the storage location from the properties of the SCL file to Eclipse.
7. Confirm your selection with "Open".

   The SCL file is imported. After completion of the import process, the SCL file is displayed in the "External Sources" folder.
8. Compile the SCL file before you use the blocks in your project.
9. To do this, select the SCL file in "External sources" subfolder.
10. Select the "Generate blocks from source" command in the shortcut menu.

Result

STEP 7 creates the S7 blocks based on the selected SCL file.

The "GetTrace" function block, which makes it possible to read the trace buffer, is created by default.

The created blocks are now automatically displayed in the "Program blocks" folder below the selected CPU in the project tree. You can load the function blocks during the next download to the target device.

6.4 Executing a function

6.4.1 Loading functions

Introduction

Regardless of the context in which the CPU function library is running, the loading procedure consists of the following steps:

- Call the "<*STEP7Prefix*>_Load" instruction in the STEP 7 user program.
- The loading process takes place synchronously

  To avoid influencing the cycle time, load the CPU function library in startup OB (e.g. OB 100).

  If the CPU function library has to be loaded in a cyclic OB (for example, OB 1), note the following loading times:

CPU	Small SO file → Loading time	Large SO file → Loading time
CPU 1505SP	0.5 MB → 20 ms	3 MB → 70 ms
CPU 1507S (with SSD)	0.5 MB → 20 ms	5 MB → 100 ms

- As soon as the "<*STEP7Prefix*>_Load" instruction returns after the first call, the CPU function library is loaded.

Note

Loading the same CPU function libraries with a modified <project>.odk file

When you load a CPU function library and subsequently change the <project>.odk file, we recommend that you unload your CPU function library first before you load the newly generated CPU function library. If the "<*STEP7Prefix*>_Unload" instruction is not executed, both CPU function libraries are in the memory. This can lead to insufficient memory being available for the CPU.

"*<STEP7Prefix>*_Load" instruction

A CPU function library is loaded by calling the "*<STEP7Prefix>*_Load" instruction in the STEP 7 user program.

***<STEP7Prefix>*_Load**	
REQ	DONE
	BUSY
	ERROR
	STATUS

The following table shows the parameters of the instruction "*<STEP7Prefix>*_Load":

Section	Declaration	Data type	Description
Input	REQ	BOOL	A rising edge activates the loading of the CPU function library.
Output	DONE	BOOL	Indicates that the instruction has finished loading the CPU function library.
Output	BUSY	BOOL	Indicates that the instruction is still loading the CPU function library.
Output	ERROR	BOOL	Indicates that an error occurred during the loading of the CPU function library. STATUS gives you more information about the possible cause of the error.
Output	STATUS	INT	Provides information about possible sources of error, if an error occurs during the loading of the CPU function library.

Input parameters

An edge transition (0 to 1) at the "REQ" input parameter starts the function.

Output parameters

The following table shows the information that is returned after loading.

DONE	BUSY	ERROR	STATUS	Meaning
0	0	0	0x7000 =28672	No active loading
1	0	0	0x7100 =28928	CPU 1500 V2.0 and later: CPU function library is already loaded.
1	0	0	0x0000 =0	Loading was performed successfully.

DONE	BUSY	ERROR	STATUS	Meaning
0	0	1	0x80A4 =-32604	CPU function library could not be loaded.
			0x80C3 =-32573	CPU function library could not be loaded. The CPU currently does not have enough resources. Unload the CPU function library before you load a new CPU function library or restart the CPU.
			0x8090 =-32624	CPU function library could not be loaded. An exception occurred during execution of the "OnLoad()" function.
			0x8092 =-32622	CPU function library could not be loaded because the library name is invalid.
			0x8093 =-32621	CPU function library could not be loaded because the CPU function library could not be found. Check the file name and path of the file.
			0x8095 =-32619	CPU function library could not be loaded due to the following reasons: • The SO file is not a CPU function library. • The CPU does not support the utilized ODK version.
			0x8096 =-32618	The CPU function library could not be loaded because the internal identification is already being used by another loaded CPU function library.
			0x8097 =-32617	CPU 1500 V1.8 and earlier: CPU function library is already loaded.
			0x8098 =-32616	CPU function library could not be loaded because the CPU function library is currently being unloaded.
			0x8099 =-32615	Unable to load the CPU function library because the instruction was not called in an OB with lowest priority. Use a Startup OB (e.g. OB100) or a Program cycle OB (e.g. OB1).
			0x809B =-32613	CPU 1500 V2.0 and later: The CPU function library could not be loaded and returns an invalid value (the values 0x0000 and 0xF000 - 0xFFFF are allowed)
			0xF000 – 0xFFFF =-4096 – -1	CPU 1500 V2.0 and later: CPU function library could not be loaded. An error occurred during execution of the "OnLoad()" function.

6.4.2 Calling functions

Introduction

Once the CPU function library is loaded, you can execute C functions via your STEP 7 user program. This call is made from the corresponding "*<STEP7Prefix>*SampleFunction" instruction.

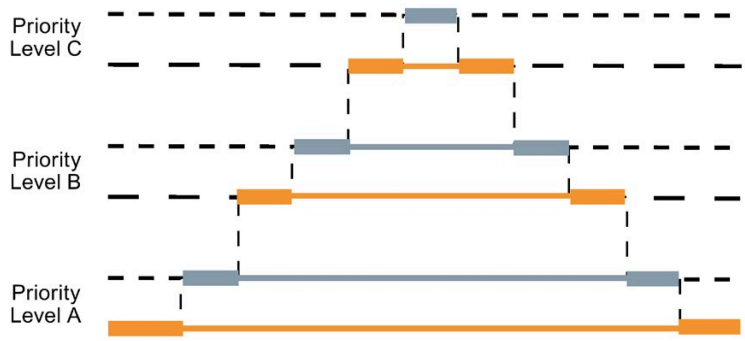

Figure 6-4 Calling functions

The execution of synchronous functions can be interrupted by higher priority OBs running in the same CPU.

- Call another ODK function
- Call the same function

  Therefore, when creating your CPU function library make sure that the function calls are implemented as re-entrant or avoid parallel execution.

If you implement more than the number of parallel calls set in "SyncCallParallelCount", the function returns the status 0x80C3.

"*<STEP7Prefix>*SampleFunction" instruction

A CPU function library is called by the "*<STEP7Prefix>*SampleFunction" instruction.

***<STEP7Prefix>*SampleFunction**	
myInt	STATUS
myReal	myBool

The following table shows the parameters of the instruction "*<STEP7Prefix>*SampleFunction":

Section	Declaration	Data type	Description
Automatically generated parameters			
Output	STATUS	INT	This output value provides information about possible sources of error, if an error occurs during the execution of the CPU function library.
User-defined parameter			
Input	myInt		User-defined input tags
InOut	myReal		User-defined input-output tags
Output	myBool		User-defined output tags

Output parameters

The "*<STEP7Prefix>*SampleFunction" instruction only has the "STATUS" output parameter.

The following table shows the information for the output parameter returned after execution.

STATUS	Meaning
0x0000 – 0x6FFF =0 – 28671	Function has been executed and returns a value between 0x0000 and 0x6FFF. (ODK_SUCCESS = 0x0000)
0x80A4 =-32604	CPU function library could not be executed for the following reasons: • A stack overflow was detected after execution of the function. To avoid sequential errors, unload the CPU function library. The developer of the CPU function library must ensure that the stack is not overwritten. • The "<STEP7Prefix>_Unload" instruction was executed during a function execution. The execution of the function was interrupted and terminated immediately. No return value is sent to the CPU. Wait until the "<STEP7Prefix>_Unload" instruction has ended. Then load the CPU function library again.
0x80C3 =-32573	CPU function library could not be executed. The CPU currently does not have enough resources. Pay attention to the maximum number of parallel calls (SyncCallParallelCount).
0x8090 =-32624	CPU function library could not be executed. An exception occurred during execution. Each unhandled exception reduces the available heap size. An unhandled exception can damage the CPU function library and lead to this no longer being used for further calls. The CPU function library must be unloaded. The developer of the CPU function library must handle the exception and deliver an application-specific error value.
0x8091 =-32623	CPU function library could not be executed. A "STOP" occurred during the function call.
0x8096 =-32618	CPU function library could not be executed because the CPU function library was not loaded or unloading is not yet finished.
0x8098 =-32616	CPU function library could not be executed because the CPU function library is different than the ODK instructions (FBs) in STEP 7: • older • newer • different parameters
0x8099 =-32615	CPU function libraries could not be executed because the maximum amount of input data (SyncCallDataSize) was exceeded (declarations with "In" and "InOut").
0x809A =-32614	CPU function libraries could not be executed because the maximum amount of data (SyncCallDataSize) was exceeded (declarations with "In", "Out" and "InOut").
0x809B =-32613	The function returns an invalid value (a value between 0x0000 and 0x6FFF; 0xF000 and 0xFFFF is allowed).
0x809C =-32612	Function uses an invalid data type: • IN_DATA • INOUT_DATA • OUT_DATA
0xF000 – 0xFFFF =-4096 – -1	CPU 1500 V2.0 and later: The function could not be executed and returns a value between 0xF000 and 0xFFFF. (ODK_USER_ERROR_BASE = 0xF000)

Note

Call of function(s) influences the cycle time

When you call a function, the function parameters are copied. In particular in the case of large amounts of data or of structured data, this can lead to the cycle time being influenced.

6.4.3 Unloading functions

Introduction

The CPU function library is unloaded by calling the "*<STEP7Prefix>*_Unload" instruction. Call is made from the STEP 7 user program.

In addition to this call, the CPU function library is also automatically unloaded for the following reasons.

- The CPU is switched off
- The CPU is reset

Regardless of the context in which the CPU function library is running, the unloading procedure consists of the following steps:

- Call the "*<STEP7Prefix>*_Unload" instruction in the STEP 7 user program.
- From now on, no new executes can be carried out for this CPU function library. Executions still running are aborted. The execution of the function is interrupted and terminated immediately. No return value is sent to the CPU.
- The host calls the "OnStop()" and "OnUnload()" functions.

  The unloading of the cycle time can be influenced because the "OnStop()" and "OnUnload()" functions are called synchronously.
- The CPU function library is being unloaded.

"*<STEP7Prefix>*_Unload" instruction

A CPU function library is unloaded by calling the "*<STEP7Prefix>*_Unload" instruction in the STEP 7 user program.

***<STEP7Prefix>*_Unload**	
REQ	DONE
	BUSY
	ERROR
	STATUS

The following table shows the parameters of the instruction "<*STEP7Prefix*>_Unload":

Section	Declaration	Data type	Description
Input	REQ	BOOL	A rising edge activates the unloading of the CPU function library.
Output	DONE	BOOL	Indicates that the instruction has finished unloading the CPU function library.
Output	BUSY	BOOL	Indicates that the instruction is still unloading the CPU function library.
Output	ERROR	BOOL	Indicates that an error occurred during the unloading of the CPU function library. STATUS gives you more information about the possible cause.
Output	STATUS	INT	Provides information about possible sources of error, if an error occurs during the unloading of the CPU function library.

Input parameters

An edge transition (0 to 1) at the "REQ" input parameter starts the function.

Output parameter STATUS

The following table shows the information that is returned after unloading.

DONE	BUSY	ERROR	STATUS	Meaning
0	0	0	0x7000 =28672	No active unloading
0	1	0	0x7001 =28673	Unloading in progress, the first call
0	1	0	0x7002 =28674	Unloading in progress, ongoing call
1	0	0	0x0000 =0	Unloading was carried out successfully
0	0	1	0x80A4 =-32604	CPU function library could not be unloaded. A communication error between the CPU and ODK occurred during the execution of the "OnUnload()" function.
			0x80C3 =-32573	CPU function library could not be unloaded. The CPU currently does not have enough resources.
			0x8090 =-32624	An exception occurred during the unloading of the CPU function library. The CPU function library has been unloaded nevertheless.
			0x8096 =-32618	CPU function library could not be unloaded because the CPU function library was not loaded or unloading is not yet finished.
			0x809B =-32613	CPU 1500 V2.0 and later: The CPU function library could be unloaded and returns an invalid value (the values 0x0000 and 0xF000 - 0xFFFF are allowed)
			0xF000 – 0xFFFF =-4096 – -1	CPU 1500 V2.0 and later: CPU function library could be unloaded. An error occurred in the CPU function library during the execution of the "OnUnload()" function.

6.4.4 Reading the trace buffer

ODK provides a trace function to check variables or the execution of functions in the realtime environment. The trace function supports the following elements:

- An integrated trace buffer for each CPU function library.
- An "ODK_TRACE" instruction that you can add to your code
- A "GetTrace" function block, which makes it possible to read the trace buffer

"ODK_TRACE" instruction

If you define the "ODK_TRACE" instruction, it is also compiled and executed. When you define the parameter Trace=on in the <project>.odk file, the instruction is automatically defined with the following code:

```
#define ODK_TRACE(msg, ...);
```

Example: ODK_TRACE("number=%d", 13);

Calling the instruction creates an entry in the trace buffer.

When you define the parameter Trace=off in the <project>.odk file, no trace data is written.

Trace data is written automatically when an exception occurs.

Reading the trace buffer

The "GetTrace" function block enables you to read the trace buffer. The entries of the trace buffer can be read in the following ways:

- By a variable table in the web server of the CPU
- By a variable table in STEP 7 (online)
- On an HMI display

The function block is included in the standard CPP file "<project>.cpp".

GetTrace	
TraceCount	STATUS

The following table shows the parameters of the "GetTrace" function block:

Section	Declaration	Data type	Description
Output	STATUS	INT	Number of trace entries actually read
Input	TraceCount	INT	Number of trace entries to be read
Output	TraceBuffer	Array [0..255] of String[125]	Trace string array for the user Each trace string consists of: • Date • Time-of-day • OB number • File name • Line number • Trace text (trace implemented by the user)

Define the function block in the SCL file as follows:

```
#ret := "ODK_App_MyFct_DB_1"(myInt:=4);
IF (#ret > 0)
{
#ret := "ODK_App_GetTraces_DB_1"(TraceCount:=20);
// ret_val = number of entries
}
```

When the "GetTrace" function block is called in STEP 7, the instance block appears as follows:

ODK_RT_GetTrace_DB

	Name	Data type	Start value	Monitor value
1	Input			
2	TraceCount	Int	0	0
3	Output			
4	STATUS	Int	0	256
5	TraceBuffer	Array[0..255...		
6	TraceBuffer[0]	String[254]	''	'2014/10/17 12:06:52.201189 OB1 ..\src\myODKApp.cpp(87): Executing ADD (IN1 = 561, IN2 = 99, OUT1 = 660)'
7	TraceBuffer[1]	String[254]	''	'2014/10/17 12:06:33.747131 OB1 ..\src\myODKApp.cpp(87): Executing ADD (IN1 = 15, IN2 = 31, OUT1 = 46)'
8	TraceBuffer[2]	String[254]	''	''
9	TraceBuffer[3]	String[254]	''	''
10	TraceBuffer[4]	String[254]	''	''
11	TraceBuffer[5]	String[254]	''	''
12	TraceBuffer[6]	String[254]	''	''
13	TraceBuffer[7]	String[254]	''	''
14	TraceBuffer[8]	String[254]	''	''
15	TraceBuffer[9]	String[254]	''	''
16	TraceBuffer[10]	String[254]	''	''
17	TraceBuffer[11]	String[254]	''	''
18	TraceBuffer[12]	String[254]	''	''
19	TraceBuffer[13]	String[254]	''	''
20	TraceBuffer[14]	String[254]	''	''
21	TraceBuffer[15]	String[254]	''	???
22	TraceBuffer[16]	String[254]	''	???
23	TraceBuffer[17]	String[254]	''	???
24	TraceBuffer[18]	String[254]	''	???
25	TraceBuffer[19]	String[254]	''	???
26	TraceBuffer[20]	String[254]	''	???
27	TraceBuffer[21]	String[254]	''	???
28	TraceBuffer[22]	String[254]	''	???
29	TraceBuffer[23]	String[254]	''	???
30	TraceBuffer[24]	String[254]	''	???
31	TraceBuffer[25]	String[254]	''	???

6.5 Post Mortem analysis

6.5.1 Introduction

You use the post mortem analysis to evaluate the system after an exception. The post mortem files map a snapshot at the time of the exception.

You can analyze the dump with the post mortem analysis. It includes, for example:

- Register
- Stack
- Local/global data
- Transfer parameters
- The exception number under "g_PostMortemExceptionNr" in the window "Expressions"

An exception can be triggered by one of the following cases:

- Execution of an illegal command
  - Division by zero
  - Access to protected memory
- An exception triggered by the "throw" instruction but not handled by the "try...catch" instruction

The objective of the post mortem analysis is to find the error within the CPU function library that caused the exception.

NOTICE
Exception influences the cycle time When an exception occurs in your application, the complete application memory is buffered. This may take some milliseconds and influence the cycle time.

The post mortem files for the snapshot of the first exception are not created until the CPU changes from RUN to STOP. You can use it for the following post mortem analysis. They are stored in the following directory: <load memory>/ODK1500S

The following files are created or overwritten during this process and can, for example, be downloaded via the web server:

- <project>.ed

  Binary dump of the shared object in which the exception has occurred
- <project>.es

  Stack at the time of the exception
- <project>.er

  Script for restoring the snapshot at the time of the exception

NOTICE
Insufficient load memory When there is not enough load memory, the post mortem files are not saved properly. Make sure that you have enough load memory for your applications.

6.5.2 Execute post mortem analysis

Procedure

To run a post mortem analysis, follow these steps:

1. Open Eclipse.
2. Load the post mortem files to the engineering PC via the web server. Load these files to the same directory in which the SO file is stored.

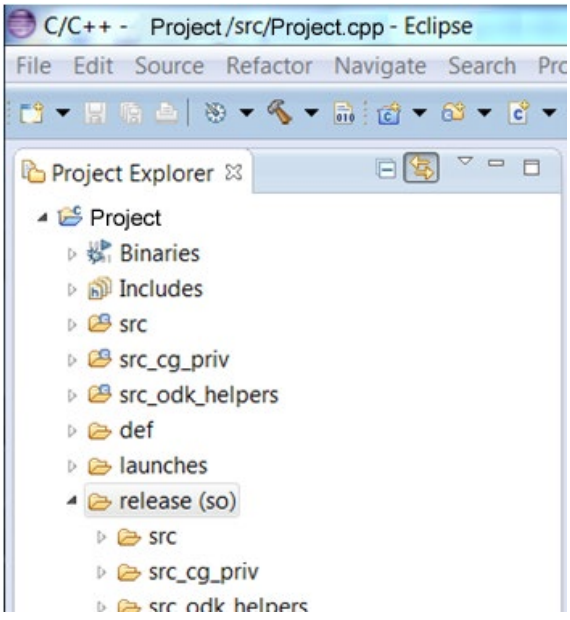

3. Select the required project.

4. Start the debugging in one of the following ways:
   - From Favorites:

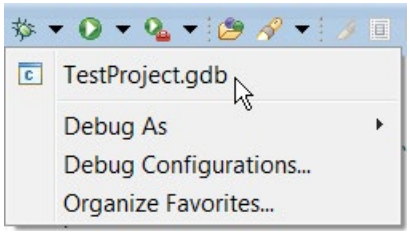

   - Using "Debug Configurations"

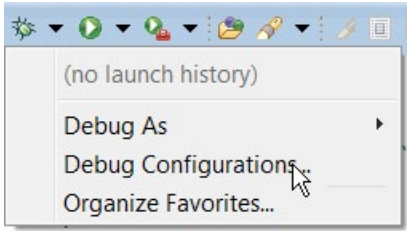

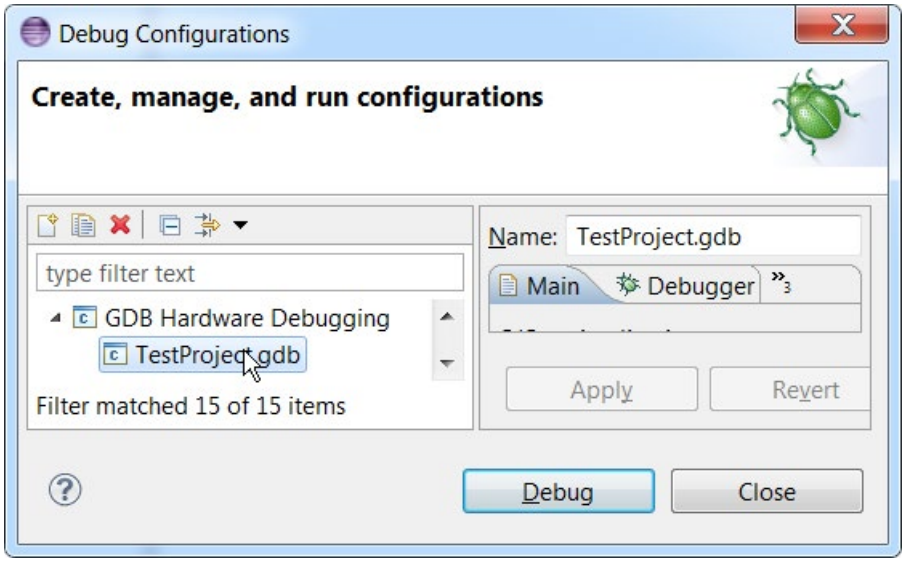

When you start a debug process for the first time, a dialog opens prompting you to select the required launch environment.

Select the item "GDB (DSF) Hardware Debugging Launcher".

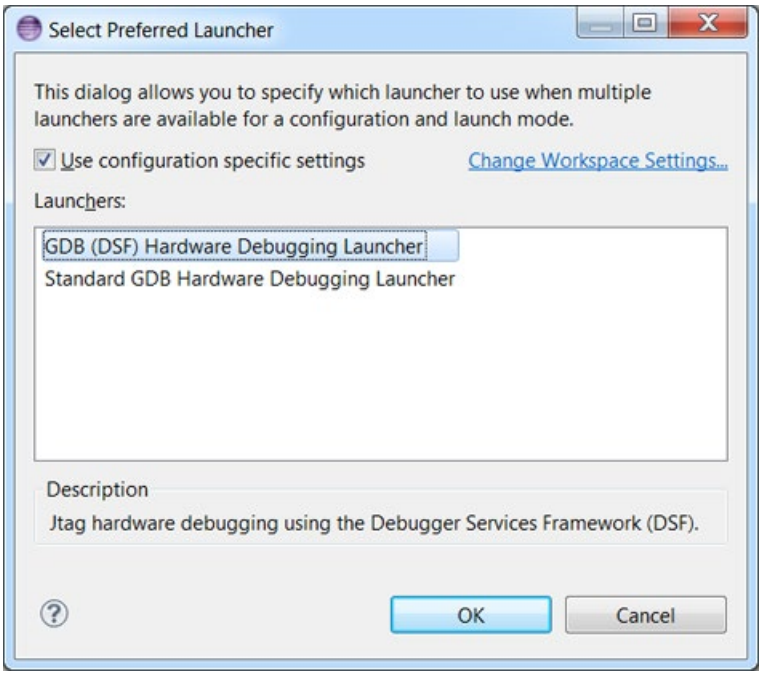

A dialog opens showing you the progress of the loading process for the post mortem image. The loading process can take several minutes, depending on the size of the post mortem image.

5. Select the required debug view.

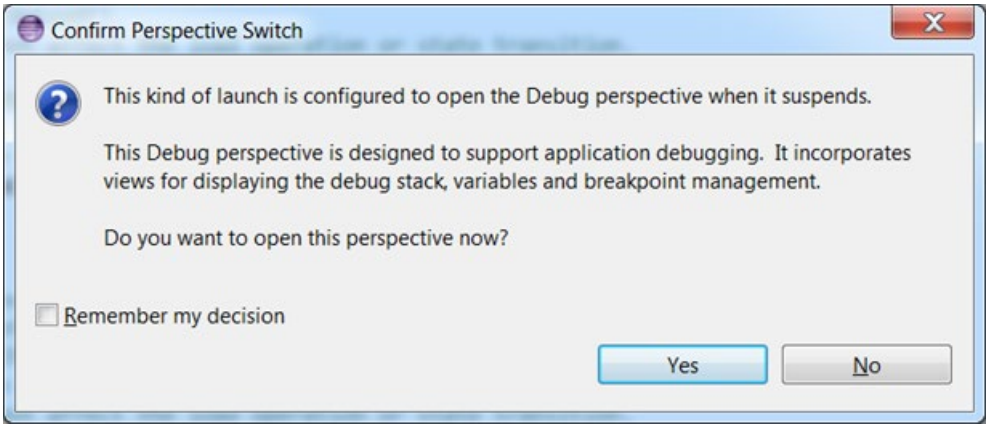

6. Run the debug process.

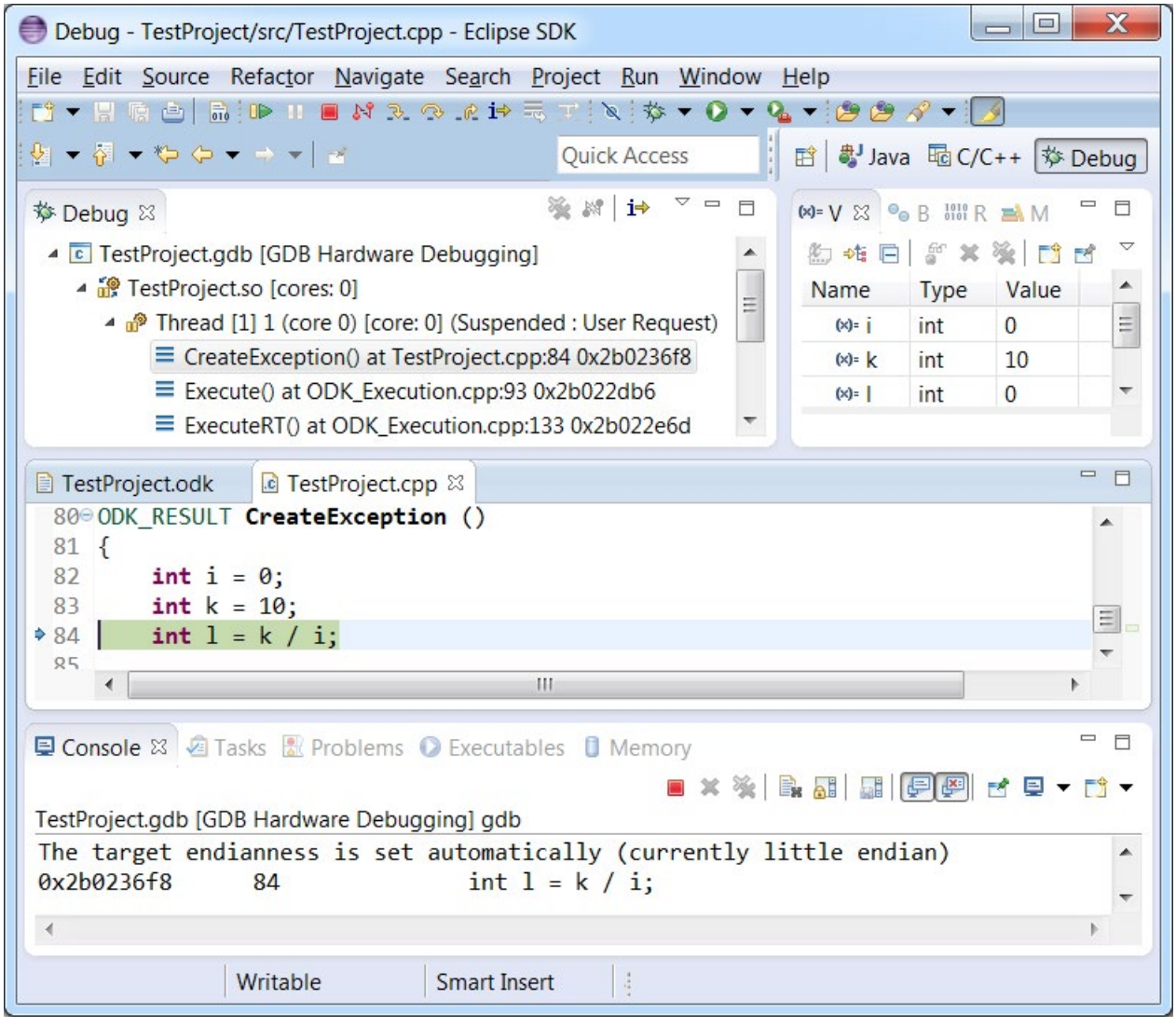

The exception number is displayed as "g_PostMortemExceptionNr" in the window "Expressions".

Development of a C/C++ runtime application

7

7.1 Install additional Eclipse plugins

Requirement

- ODK is installed.
- The Eclipse development environment is installed.

Procedure

1. Start Eclipse as a development environment.
2. Select the command "Install New Software..." in the menu bar under "Help".

   The "Install" dialog opens.
3. Select the "--All Available Sites--" selection under "Work with:".

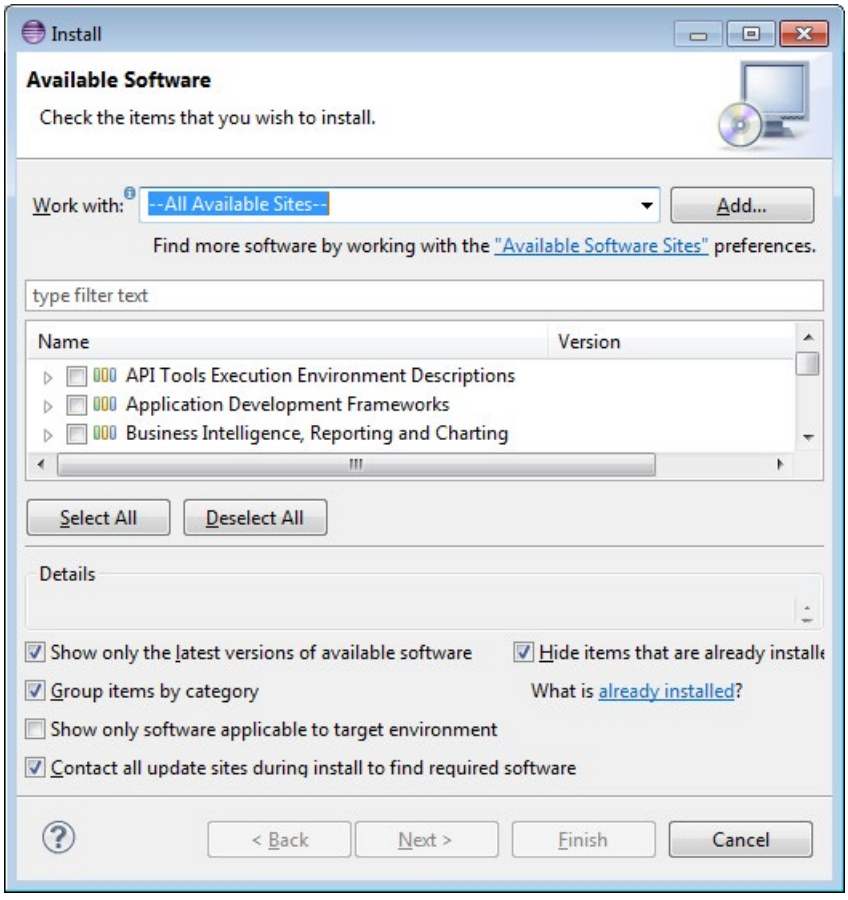

Figure 7-1 Install dialog

4. Select the following plugins:
   - C/C++ Remote Launch
   - TCF Target Explorer
   - TCF Remote System Explorer
   - TCF C/C++ Debugger

   You can filter the selection via the text box.
5. Confirm with "Next".
6. Accept the license provisions and install the plugin with "Finish".

Result

The plugins are installed and Eclipse restarted.

7.2 Create C/C++ application

7.2.1 Requirements

- ODK is installed.
- The Eclipse development environment is installed.
- Additional Eclipse plugins are installed.
- SSH client (for example, PuTTY) is installed.

Note

Root rights

The default user and the C/C++ application must not have any root rights. Create a new user to execute the C/C++ application.

Performance and jitter influence through C/C++ application

Depending on the programming type in the C/C++ application, CPU performance may be influenced by jitter.

Know-how protection

The customer is responsible for the C/C++ application and its know-how protection.

7.2.2 Creating a C/C++ Runtime Application project

A template for an Eclipse project is included in the installation of ODK 1500S to help you develop a C/C++ runtime application.

Procedure

To create a project in Eclipse using a C++-project ODK template, follow these steps:

1. Start Eclipse as a development environment.
2. In the "File > New" menu, select the command "Project..."

   The "New Project" dialog opens.

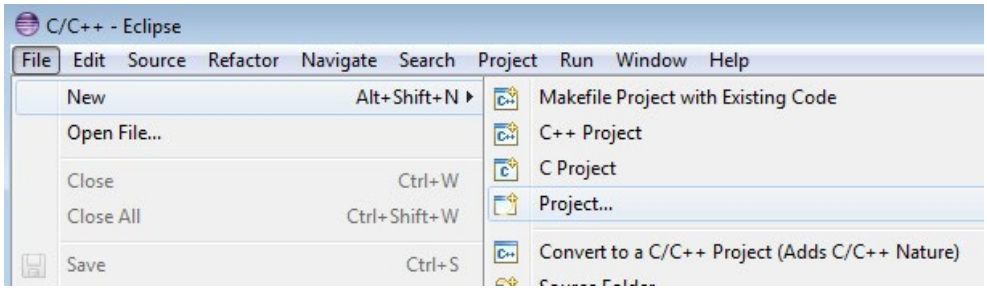

Figure 7-2 Creating a new project with Eclipse

3. Select one of the following templates depending on the CPU firmware version:
   - "C++ Project for MFP Linux application (CPU 1518 MFP - up to FW v2.6.1)"
     (Template for CC++ applications for 1518 MFP CPUs with firmware version ≤ V2.6.1)
   - "C++ Project for MFP Linux application (CU 1518 MFP FW v2.8 or higher)"
     (Template for CC++ applications for 1518 MFP CPUs with firmware version ≥ V2.8)

   Confirm your selection with "Next".

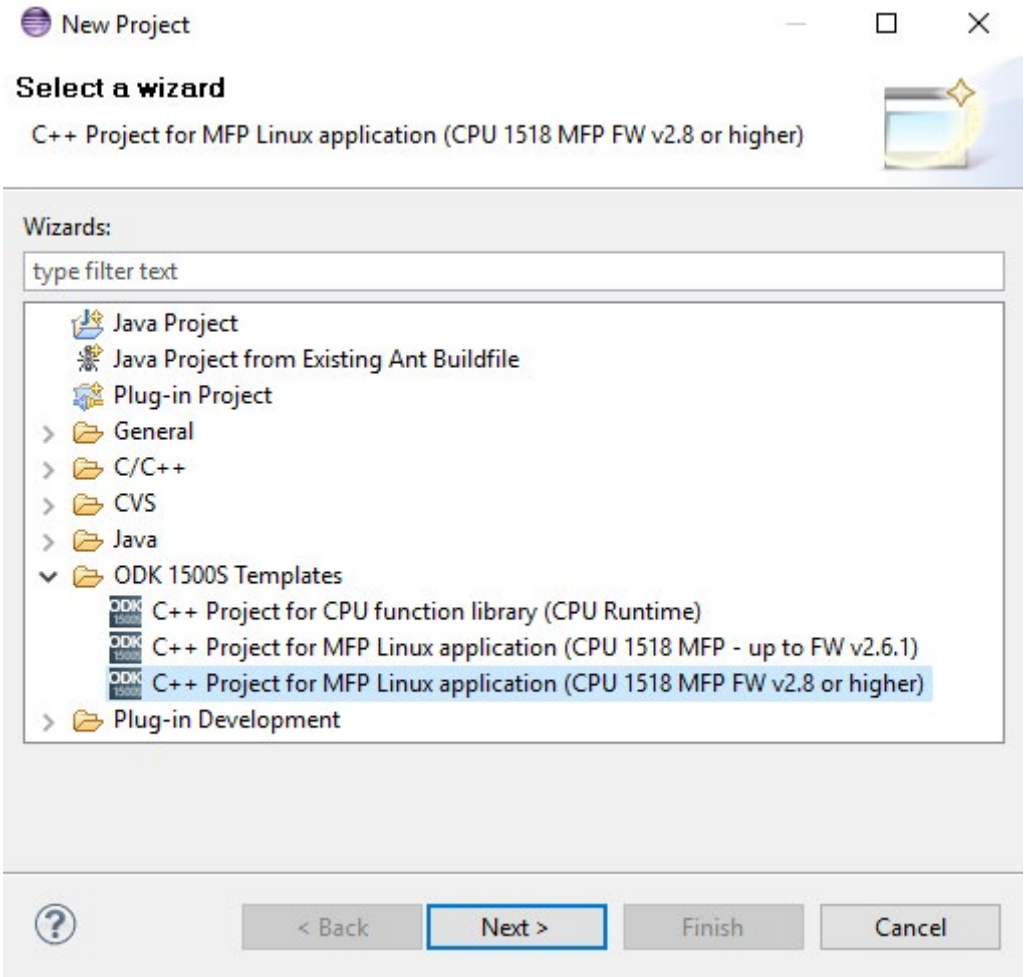

Figure 7-3 Selecting a template

4. Enter a project name.
5. Confirm with "Finish".

Result

The C/C++ project is created using the template for the C/C++ runtime application.

The template for the C/C++ runtime application configures the following data structure by default:

Project Explorer			Description
Project name:			
	src		
		<project>.cpp	Function code: This file always has the suffix CPP, regardless of whether you are creating a C or C++ project.
	launches		
		<project>.gdb.launch	Start for the post mortem analysis.
	MFP 1518_release		
		"<project>"	C/C++ Runtime Application Binary (release version) that must be transferred to the target system.

Note

Spaces in the project name

All spaces in the project name are automatically replaced by an underscore.

In the example, "My first project" becomes "My_first_project".

Note

If you need to store the workspace at another storage location, ensure that you copy the entire workspace.

7.2.3 Editing C/C++ code

Requirement

- You have created a project.
- Eclipse is open

Procedure

1. Select the "<project>.cpp" file in the project folder under "src".

   The editing mask opens.

   Figure 7-4 Editing a project

2. Edit the code.
3. To add the new C/C++ files to the project, right-click on the "src" folder and select "New > Source File" from the shortcut menu.

   The "New Source File" dialog opens.

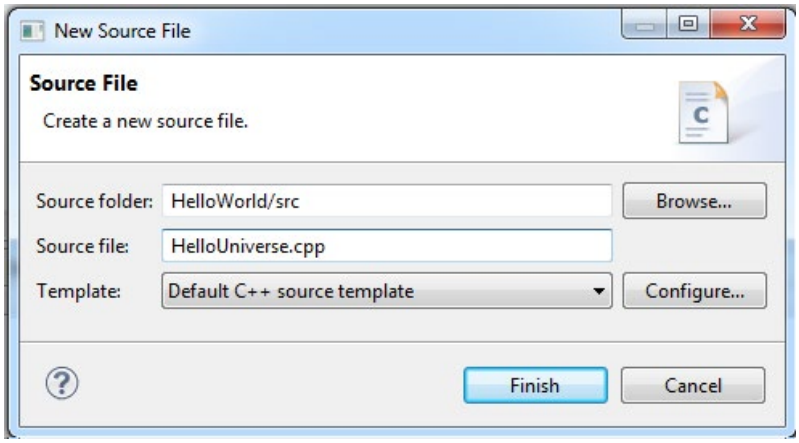

   Figure 7-5 Dialog box New Source File

4. Enter a name for the CPP file in the "Source File" and confirm with "Finish".

   The new CPP file is stored in the "src" folder.

7.2.4 Generate C/C++ runtime application

The generation of the project data runs in an automated "**Build**" and generates the C/C++ runtime application.

Requirement

A project has been created for the C/C++ runtime application.

Procedure

To generate the project data, follow these steps:

1. Select the project for the C/C++ runtime application.
2. Select the "Build Project" command in the "Project" menu in the system bar.

   You can also select the "Build Project" command by right-clicking on the project for the C/C++ Runtime Application in the shortcut menu.

Note

The project data is only generated if you have changed the files.

Result

The generation of the project data starts. The automatically generated files are stored in the file system.

7.3 Load C/C++ runtime application in the target system

7.3.1 Configuring PuTTY

You require a configured SSH client to establish a secure connection between Eclipse and the C++ Runtime of the CPU 1518MFP (for example, PuTTY).

Procedure based on "PuTTY" example

1. Start PuTTY.
2. Enter the target address "Host Name (or IP address)" (default address: 192.168.15.18) in the text box.

   This is the IP address of the C/C++ Runtime and not the project IP address of the CPU.
3. Make sure that the following default settings are retained:
   - Port: 22
   - Connection type: SSH

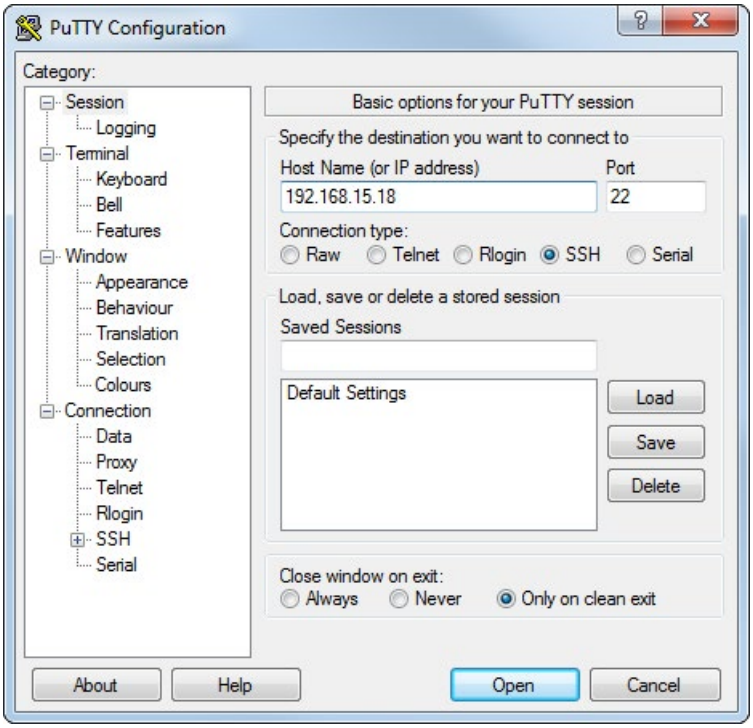

4. To identify the PuTTY window and to create the association of the connection to the CPU in Eclipse, enter the title "CPU 1518MFP Linux Secure Connection" in the category "Window > Behavior" in the text box "Window title".

5. Enter the following values in the category "Connection > SSH > Tunnels".
   – Under "Source port" "1534" or "2345".
   – Under "Destination" "localhost:1534" or "localhost: 2345".

   In each case, confirm the entries with "Add".

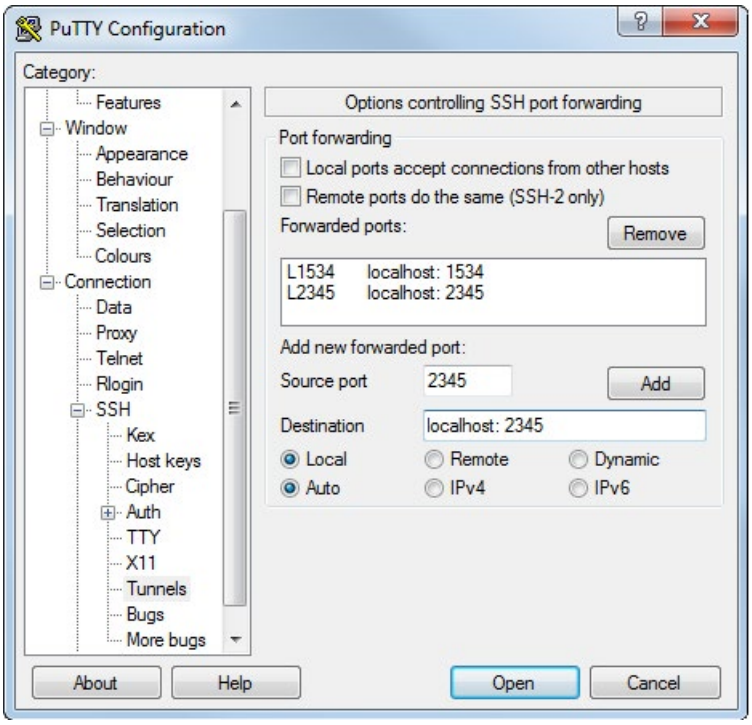

6. Enter "CPU-1518MFP-Linux-Secure-Connection" in the category "Session" under "Saved Sessions" and confirm it with "Save".
7. To log on to the CPU 1518MFP, click "Open".

7.3.2 Commissioning C/C++ Runtime

Requirement

- You have started the CPU 1518-4 PN/DP MFP (F).

Procedure

1. Start the secure shell client (for example, PuTTY).
2. Connect the secure shell client to the CPU 1518-4 PN/DP MFP (F) using the PuTTY configuration "CPU 1518MFP Linux Secure Connection" via the target address (default address: 192.168.15.18).
3. Type in the user name and password and establish a secure shell connection.

   The default user name is "root".

   The default password is displayed under "Overview > MFP > Default Password:".
4. Change the default password after the first startup of the CPU.
5. Start the TCF Agent with the following command:

   ```
   /usr/sbin/tcf-agent -d -L- -I0 -sTCP:localhost
   ```
6. On the CPU 1518-4 PN/DP MFP (F), in the directory "/home/<user>" create a folder in which to load the application.

Reference

You can find more information on commissioning and the CPU 1518-4 PN/DP MFP (F) in the CPU manual (http://support.automation.siemens.com/WW/view/en/109749061).

7.3.3 Set up new connection to the target system in Eclipse

Requirements

- An MFP is created in Eclipse.
- An MFP is generated in Eclipse.

Procedure

Create a C/C++ remote application connection to the CPU 1518-4 PN/DP MFP (F).

1. Select the "Run Configurations..." command in the "Run" menu in the system bar.

   The "Run Configurations" dialog opens.

2. Configure your connection.

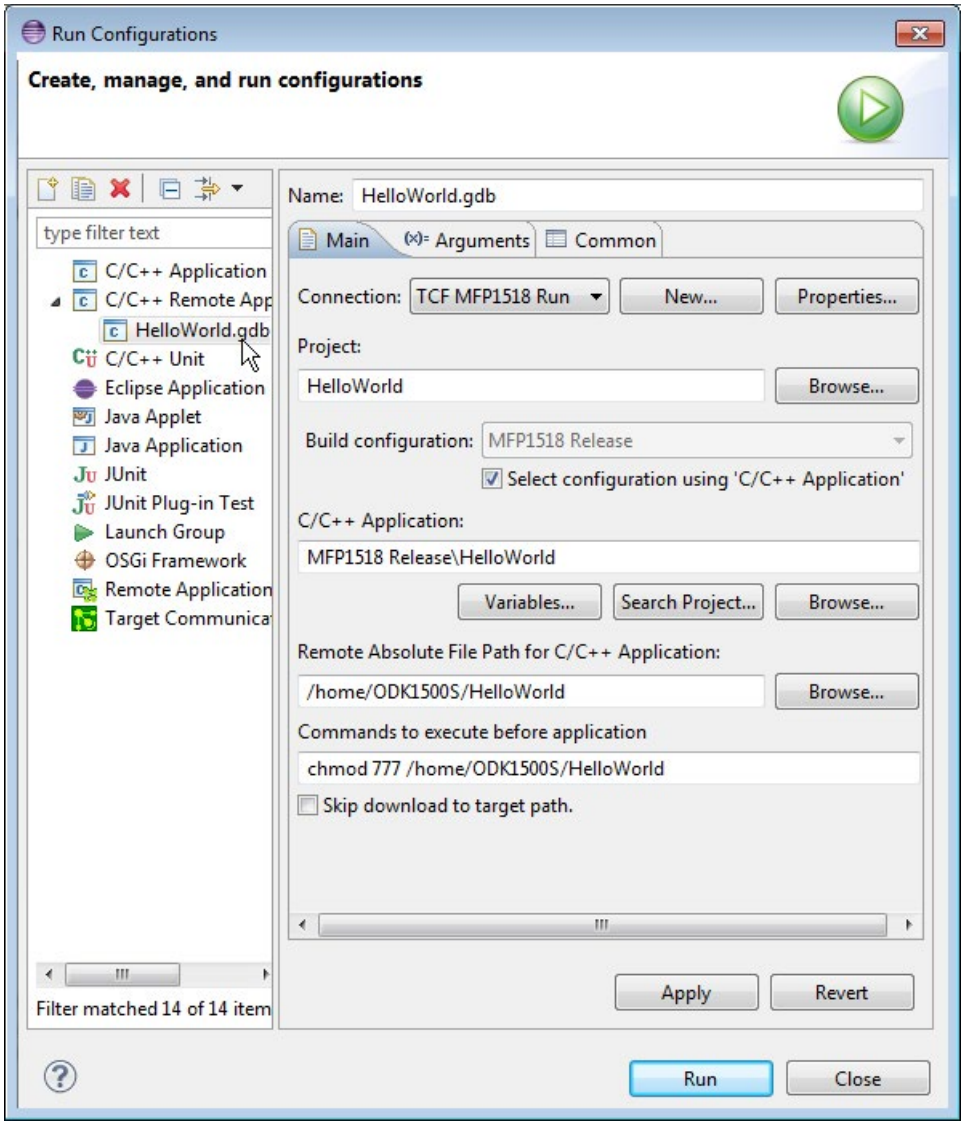

Figure 7-6 "Run Configurations" dialog with example configuration of a connection

3. To set up a new connection, click "New" in the "Main" tab under "Connection".

   The "New Connection" dialog opens.

4. Select "TCF" and confirm with "Next".

5. Fill the dialog as in the following figure and confirm with "Finish".

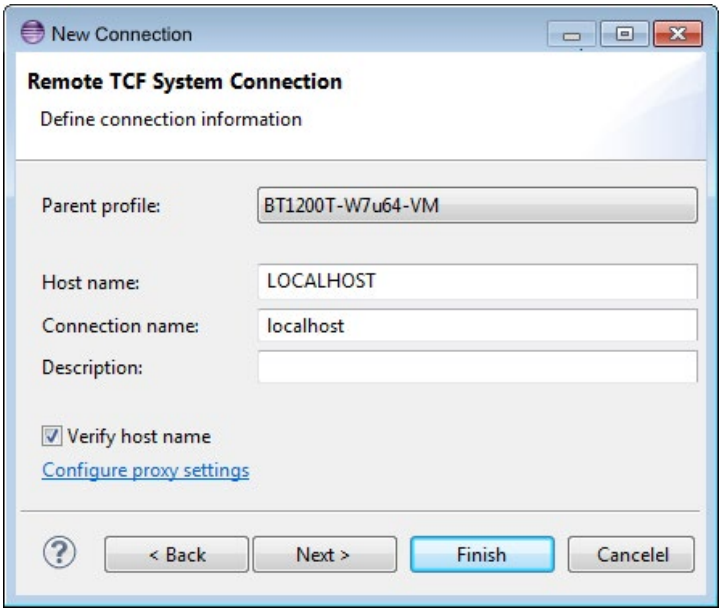

Figure 7-7 New connection dialog

6. In the "Run Configurations" dialog, select the connection "localhost" under "Connections".
7. Apply the configuration settings with "Apply"

Result

A new connection to target system has been established.

Note

Folder structure on the Linux target system

Create the folder structure manually on the Linux target system. Otherwise, remote launch is not possible and the project folder is not created automatically.

7.3.4 Load and execute C/C++ runtime application in the target system via Eclipse

Procedure

Transfer the C/C++ runtime application to the target system.

1. Select the "Run Configurations..." command in the "Run" menu in the system bar.

   The "Run Configurations" dialog opens.
2. Select the required configuration under "C/C++ Remote Application".
3. Run the loading process with "Run".

Result

Your program is executed on the CPU 1518-4 PN/DP MFP (F).

7.3.5 Load and debug C/C++ runtime application in the target system via Eclipse

To debug C/C++ applications, you have the option to write a custom test. This will ensure the quality of the code.

Procedure

To perform the test, proceed as follows:

1. Open your project in Eclipse.
2. In the "Run" menu, select the command "Debug Configurations".

   The "Debug Configurations" dialog opens.
3. If you debug the project for the first time, you must now set the debug configuration. Otherwise, continue with step 5.

4. Configure your connection in the "Main" tab as described under Set up new connection to the target system in Eclipse (Page 112).

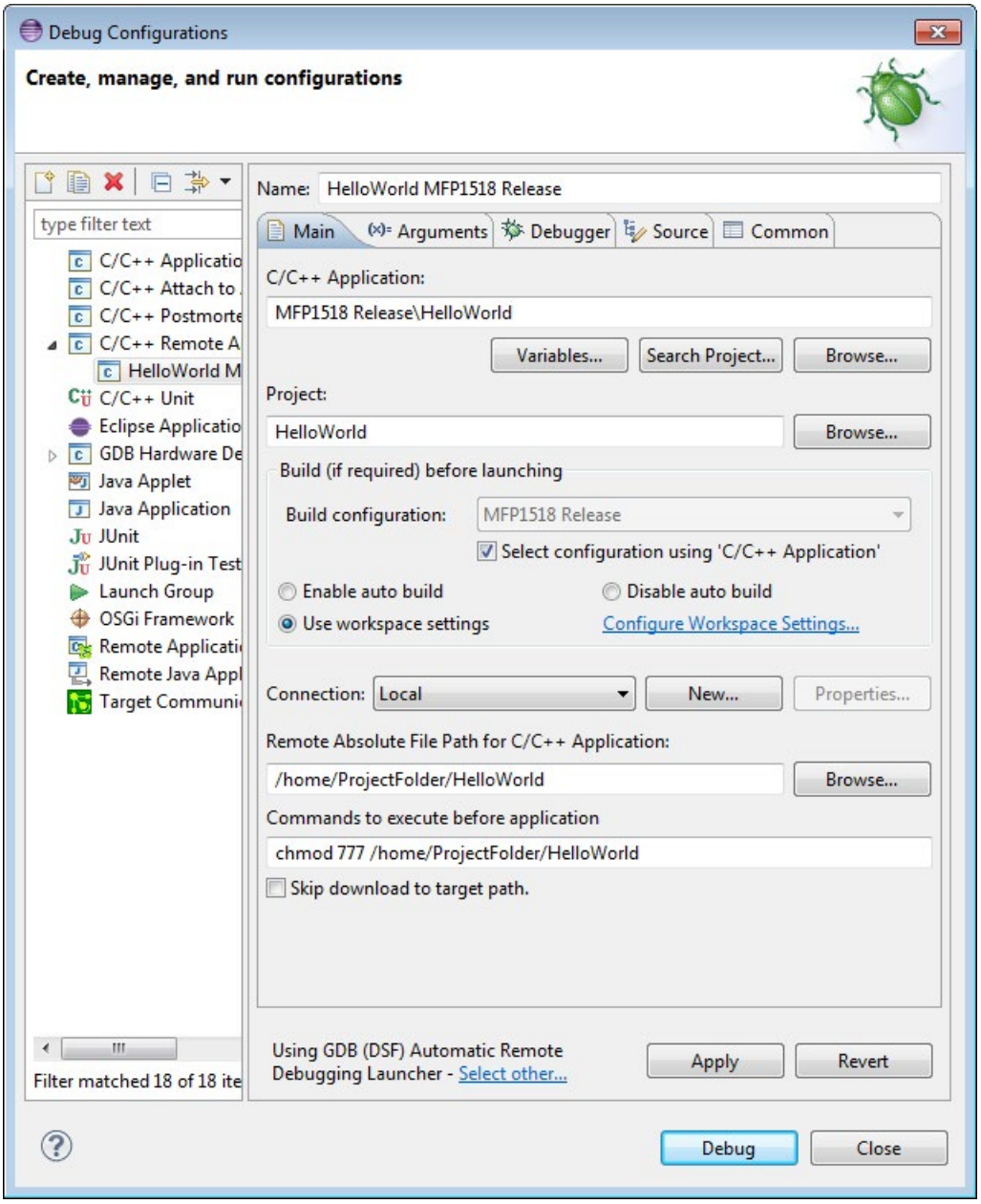

Figure 7-8 Configuring the connection

5. Select the required configuration under "C/C++ Remote Application".
6. Start the debug process by clicking the "Debug" button.

Result

Eclipse suggests a change in the debug perspective.

The test code is executed.

7.4 Execute C/C++ runtime application

7.4.1 Start application via secure shell

Requirement

The CPU is connected to a secure shell client.

Procedure

1. Open the secure shell client.
2. To decouple the application from the secure shell, enter the command "nohup" before calling the application.
3. Call the application via the secure shell client.

Result

The CPU executes the application.

Note

The CPU executes the application also after the secure shell client has terminated.

Developing a PLCSIM Advanced function library 8

8.1 Creating a PLCSIM Advanced function library

8.1.1 Requirements

The Microsoft Visual Studio development environment is not included in the ODK product package. You can find the Download Center for Microsoft development tools on the Internet (https://www.microsoft.com/en-us/download/developer-tools.aspx).

The C++ PLCSIM Advanced project template supports the applications as of Visual Studio 2015. To debug the generated DLL file, you need Visual Studio 2017 or newer.

8.1.2 Creating a PLCSIM Advanced function library with Visual Studio

To help you develop a PLCSIM Advanced function library, a project template for PLCSIM Advanced function libraries for a project in Visual Studio is included in the installation of ODK 1500S. The template supports 32-bit and 64-bit applications.

Procedure

To create a project in Microsoft Visual Studio using the project template, follow these steps:

1. Open Microsoft Visual Studio as a development environment.
2. In the "File > New" menu, select the command "Project..."

   The "New Project" dialog opens.

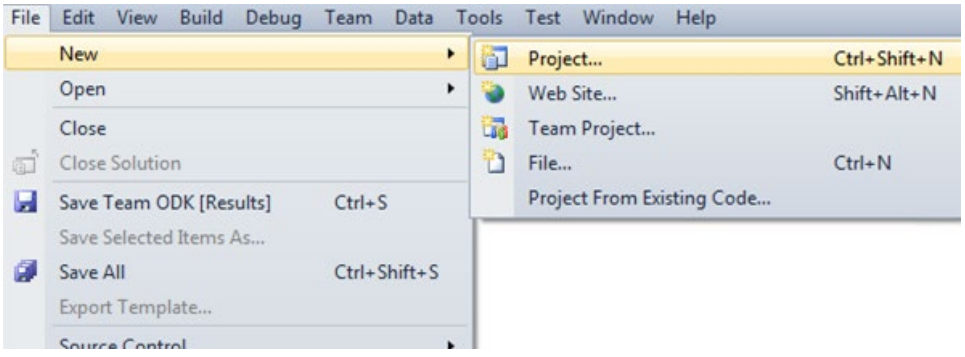

Figure 8-1 Creating a new project in Visual Studio

3. Select the project template
   "ODK 1500S V2.5.1 PLCSIM Advanced function library C++ (Windows Sync)" under "Visual C++".

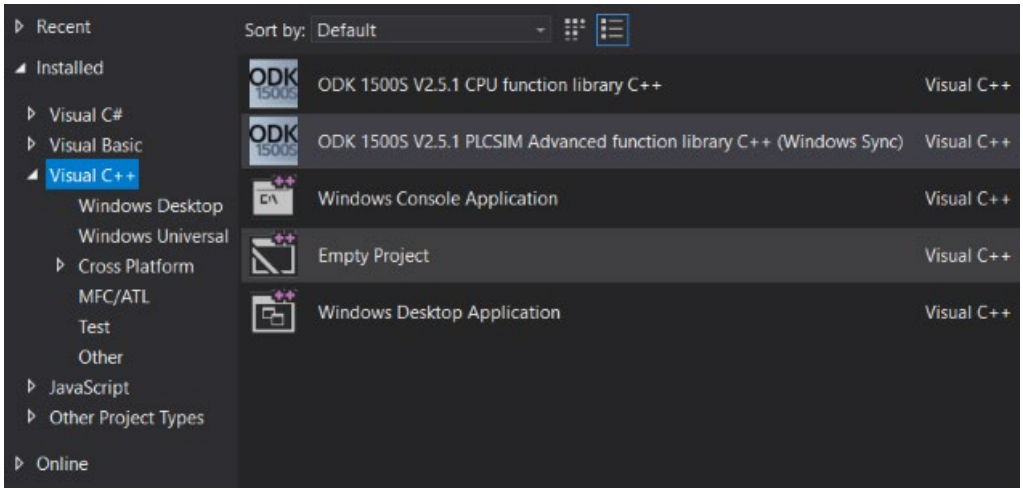

Figure 8-2 Select a template

4. Enter a project name.
5. Click "OK" to confirm.

Result

The PLCSIM Advanced function library is created using the project template and sets the following project settings:

- Project settings for generating the DLL file
- Automates the generation of the DLL and SCL file

By default, the project template sets up the following Solution Explorer structure:

Folder / file			Description
<project>			
	Definition File		
		<project>.odk	ODK interface description
		<project>.scl.additional	S7 blocks that are appended to the <project>.scl file. Although the file is not part of the project template, the code generator processes the file.
	Generated Files		**Files from this folder must not be edited!**
		ODK_Types.h	Definition of the ODK base types
		ODK_Functions.h	Function prototypes
		ODK_Execution.cpp	Implementation of the "Execute" method
	Header Files		Header file
	ODK Helpers		**Files from this folder must not be edited!**
		ODK_CpuReadData.h	Definition: Help functions for reading the data blocks
		ODK_CpuReadData.cpp	Implementation: Help functions for reading the data blocks
		ODK_CpuReadWriteData.h	Definition: Help functions for reading/writing the data blocks
		ODK_CpuReadWriteData.cpp	Implementation: Help functions for reading/writing the data blocks
		ODK_StringHelper.h	Definition: Help functions S7 strings / W strings
		ODK_StringHelper.cpp	Implementation: Help functions S7 strings / W strings
	Resource Files		
		<project>.rc	
	Source Files		Source files
		<project>.cpp	Function code
		dllmain.cpp	Implementation of the "dllmain" file
	STEP7		**Files from this folder must not be edited!**
		<project>.scl	S7 blocks

8.2 Transferring the PLCSIM Advanced function library to PLCSIM Advanced

After creating it, transfer the PLCSIM function library to the PLCSIM Advanced program.

Transferring PLCSIM Advanced function library

Transfer the DLL file manually to PLCSIM Advanced. Use the standard Windows data transfer procedure to transfer the PLCSIM Advanced function library.

Save the DLL file on the virtual memory card with the S7-PLCSIM Advanced Control Panel.

The default value that describes the file path is:

C:\Users\<user name>\Documents\Siemens\Simatic\Simulation\Runtime\Persistence\<name of instance>\SIMATIC_MC\ODK1500S

Note

Administrator rights

Assign write permission to this folder only for the administrator. This prevents unauthorized personnel from importing PLCSIM Advanced function libraries.

8.3 Defining the runtime properties of a PLCSIM Advanced function library

The next step is to define the interface description of the PLCSIM Advanced function library in the <project>.odk file. The file contains the following elements:

- Comments
- Parameters
- Definitions of functions and structures

Procedure

To define the interface description in the <project>.odk file, follow these steps:

1. Open the <project>.odk file.
2. Change the elements depending on your requirements.

Description of the elements

Comments

You can use comments for explanation purposes.

Parameters

The definition of the parameters must be within a line of code.
`<parameter name>=<value> // optional comment`

The interfaces file supports the following parameters:

Parameter	Value	Description
Context	user	Specifies that the PLCSIM Advanced function library is loaded in the context of a user.
STEP7Prefix	<String>	Describes the string that precedes your functions and is shown after importing the SCL file in STEP 7. The following characters are allowed: {A...Z, a...z, 1...9, -, _} Umlauts are not permitted. The project name is entered without spaces by default.

Note

Spaces in the project name

With the STEP7 prefix, invalid characters are replaced by an underscore.

8.4 Definition of the <Project>.odk file

The function prototypes and function blocks are generated based on the selected parameters in the <project>.odk file. Define the <project>.odk file for this.

By default, the <project>.odk file contains the following:

- Description

  The possible data types that are used for the interface are described in comment lines. This simplifies the definition of the correct tag type for your task.

- Context=user

  The CPU function library is loaded in the "User" context. You can change the parameter to Context=system.

- STEP7Prefix="<project>"

  Sets a string for the SCL generation in front of the functions of the PLCSIM function library. The string is visible in STEP 7. You can change the parameter. The string length of the prefix including the function name must not exceed a length of 125 characters (for example, ODK_App_SampleFunction)

- "SampleFunction" function definition

  You can change this default function as you wish in the <project>.odk file and add more functions. The string length must not exceed a length of 125 characters. The associated function is located in the CPP file.

Example

```
//INTERFACE ODK 1500S V2.5.1
Context=user
STEP7Prefix=ODKProject
Trace=on

 /*
* Elementary data types:
*  ODK_DOUBLE      LREAL    64-bit floating point, IEEE 754
*  ODK_FLOAT       REAL     32-bit floating point, IEEE 754
*  ODK_INT64       LINT     64-bit signed integer
*  ODK_INT32       DINT     32-bit signed integer
*  ODK_INT16       INT      16-bit signed integer
*  ODK_INT8        SINT     8-bit signed integer
*  ODK_UINT64      ULINT    64-bit unsigned integer
*  ODK_UINT32      UDINT    32-bit unsigned integer
*  ODK_UINT16      UINT     16-bit unsigned integer
*  ODK_UINT8       USINT    8-bit unsigned integer
*  ODK_LWORD       LWORD    64-bit bit string
*  ODK_DWORD       DWORD    32-bit bit string
*  ODK_WORD        WORD     16-bit bit string
*  ODK_BYTE        BYTE     8-bit bit string
*  ODK_BOOL        BOOL     1-bit bit string
*  ODK_LTIME       LTIME    64-bit duration in nanoseconds
*  ODK_TIME        TIME     32-bit duration in milliseconds
*  ODK_LDT         LDT      64-bit date and time of day
*                           in nanoseconds
*  ODK_LTOD        LTOD     64-bit time of day in nanoseconds
```

```
*                           since midnight
*  ODK_TOD         TOD      32-bit time of day in milliseconds
*                           since midnight
*  ODK_CHAR        CHAR     8-bit character
* Complex Datatypes:
*  ODK_DTL         DTL      structure for date and time
*  ODK_S7STRING    STRING   character string with 8-bit characters
*  ODK_CLASSIC_DB  VARIANT  classic DB (global or based on UDT
*                           "optimized block access" must be
unchecked)
*  []              ARRAY    field of this datatype
* User Defined Datatype:
*  ODK_STRUCT      UDT      user defined structure
* Return Datatype:
*  ODK_RESULT      0x0000-0x6FFF function succeeded
*                                (ODK_SUCCESS = 0x0000)
*                  0xF000-0xFFFF function failed
*                                (ODK_USER_ERROR_BASE = 0xF000)
*/

// Basic function in order to show
// how to create a function in ODK 1500S.
ODK_RESULT SampleFunction([IN]   ODK_INT32   myInt   // integervalue
                                                     // as input
                        , [OUT]  ODK_BOOL    myBool  // bool value
                                                     // as output
                        , [INOUT] ODK_DOUBLE myReal);// double value
                                                     // as input
                                                     // and output
```

8.5 Modifying the <Project>.odk file

The following example shows you how you can change the <project>.odk file to suit your needs.

```
//INTERFACE ODK 1500S V2.5.1
Context=user
STEP7Prefix=SampleProject
Trace=on

// Basic function in order to show
// how to create a function in ODK 1500S.
ODK_RESULT SampleFunction([IN]  ODK_INT32 num1
                        , [IN]  ODK_INT32 num2
                        , [OUT] ODK_INT32 sum);
```

8.6 Editing PLCSIM Advanced function library

Once you have defined the ODK interface in the <project>.odk file, you must edit the functions of the PLCSIM Advanced function library in the Project Source file.

Procedure

To edit the function of a PLCSIM Advanced function library, follow these steps:

1. To generate the function prototypes, execute the build.
2. Open the project source file, or create a custom source file if necessary.
3. Transfer the function prototypes from <ODK_Functions.h> to the source file.

Note

Use the function prototype macro to transfer the step 3 in the future when there is a change to the function parameters.

4. Edit the code of your PLCSIM Advanced function library in the execute file (<project>.cpp).

PLCSIM Advanced function library

The execute file contains a schematically represented function description by default. You can change this description with corresponding changes in the <project>.odk file and/or add more function descriptions.

Execute file based on C++ example

```
#include "stdafx.h"
#include "ODK_Functions.h"
#include "tchar.h"

EXPORT_API ODK_RESULT OnLoad (void)
{
    // place your code here
    return ODK_SUCCESS;
}
EXPORT_API ODK_RESULT OnUnload (void)
{
    // place your code here
    return ODK_SUCCESS;
}
EXPORT_API ODK_RESULT OnRun (void)
{
    // place your code here
    return ODK_SUCCESS;
}
EXPORT_API ODK_RESULT OnStop (void)
{
    // place your code here
    return ODK_SUCCESS;
}
ODK_RESULT SampleFunction(
                    /*IN*/      const ODK_INT32& myInt,
                    /*OUT*/     ODK_BOOL& myBool,
                    /*INOUT*/   ODK_DOUBLE& myReal)
{
    return ODK_SUCCESS;
}
```

8.7 Generating a PLCSIM Advanced function library

The generation of the project data is divided into two automated steps.

- **Pre-Build**: Generation of the files created by default based on the changed <project>.odk file and generation of the SCL file.
- **Actual-Build**: Generation of the DLL file.

Procedure

To generate the project data, follow these steps:

1. Save all edited files.
2. In the "Build" menu, select the command "Build Solution".

Note

C/C++ projects

Perform the build of the PLCSIM Advanced function library in the "Release" configuration, because the software controller has already installed the C/C++ Redistributables (Release Runtime files).

To use the "Debug" configuration, copy the Debug Runtime files to the software controller.

Note

The project data is only generated if the files have been changed.

Result

The generation of the project data is started. The automatically generated files are stored in the file system.

- DLL file: Project directory\<project>\<BuildConfiguration>\<project>.dll
- SCL file: Project directory\<project>\STEP7\<project>.scl

8.8 Executing a function

Executing functions is described in the section "Executing a function (Page 50)" using the example of a CPU function library for the Windows environment.

Special features about PLCSIM Advanced, as well as advanced error codes are described in the manual "SIMATIC S7-1500 S7-PLCSIM Advanced (https://support.automation.siemens.com/WW/view/en/109760835)".

8.9 Debugging C/C++ Code

The debugging of Visual Studio C/C++ code is described in the section "Remote debugging (Page 59)". To debug the generated DLL file, you need Visual Studio 2017 or newer.

While Visual Studio is connected to the client, PLCSIM Advanced is also in debug mode and therefore remains in the "RUN" state. The cycle time is not exceeded.

Using example projects

9

To facilitate your introduction , ODK 1500S offers example projects for both development environments. The example projects consist of the following elements:

- A project for Microsoft Visual Studio or Eclipse
- A compiled binary and SCL source that enables you to immediately test the example projects
- A STEP 7 example project

Storage location of example projects

- The example projects for the CPU function libraries are available on the Internet (https://support.industry.siemens.com/cs/document/106192387/simatic-odk-1500s-examples?dti=0&lc=en-WW) for download.
- Example projects for C/C++ Runtime applications:
  - Setting up communication between CPU and C/C++ runtime for a multifunctional platform using OPC UA (https://support.industry.siemens.com/cs/ww/en/view/109749176)
  - Establishment of Open User Communication between CPU runtime and C/C++ runtime of a multifunctional platform (https://support.industry.siemens.com/cs/ww/en/view/109756757)

Using example projects

To open the example projects, follow these steps:

1. Transfer the example projects onto the hard disk of your PC.
2. Transfer the C/C++ runtime application, DLL or SO file to the target system.

General conditions

A

A.1 Number of loadable CPU function libraries

You can load up to 32 CPU function libraries for Windows and realtime environment.

Configuration limits for CPU function libraries:

- CPU function libraries for the Windows environment:
  - Up to 32 parallel function calls (total)
  - Up to 1 MB input and output data (in total)
  - Up to 1 MB input data per function call
  - Up to 1 MB output data per function call

Note

The memory for input and output parameters is allocated dynamically, depending on the quantity needed. The memory is allocated here in blocks of 8 KB each.

- Development of a CPU function library for the real time environment
  - Parallel function calls in a CPU function library defined by the "SyncCallParallelCount" parameter
  - Up to 32 parallel function calls (in total)
  - Up to 1 MB input data and output data per function call

Memory for loading CPU function libraries

The available memory for loading of CPU function libraries is limited in the context of the real time environment. The table below provides an overview of the available memory of the different CPUs for loading CPU function libraries:

CPU	Memory available for loading	Maximum size of the SO file
CPU 1505SP (T)(F)	20 MB	5.8 MB
CPU 1507S (F)	50 MB	9.8 MB
CPU 1518-4 PN/DP MFP (F)	50 MB	9.8 MB

The following restrictions are also in effect in the context of the realtime environment:

- SO file name may not exceed 56 characters.

A.2 Compatibility

If you use an ODK version V2.5, note the following:

- Engineering:

  A CPU function library project that was created with an ODK version < V2.5 is not compatible. You need to recreate a CPU function library in the version V2.5.

- Runtime:

  A CPU function library that was created with an ODK version < V2.5 is not compatible with newer CPU versions.

Syntax Interface file <project>.odk for CPU function libraries

B

B.1 Data types

The data type defines the type of a tag. The following table defines the possible data types and their representation in the individual program languages or in C++ or STEP 7:

Elementary data types:

ODK data type	SIMATIC data type	C++ data type	C# data type	VB data type	Description
ODK_DOUBLE	LREAL	double	double	Double	64-bit floating point, IEEE 754
ODK_FLOAT	REAL	float	float	Single	32-bit floating point, IEEE 754
ODK_INT64	LINT	long long	long	Long	64-bit signed integer
ODK_INT32	DINT	long	int	Integer	32-bit signed integer
ODK_INT16	INT	short	short	Short	16-bit signed integer
ODK_INT8	SINT	char	sbyte	SByte	8-bit signed integer
ODK_UINT64	ULINT	unsigned long long	ulong	ULong	64-bit unsigned integer
ODK_UINT32	UDINT	unsigned long	uint	UInteger	32-bit unsigned integer
ODK_UINT16	UINT	unsigned short	ushort	UShort	16-bit unsigned integer
ODK_UINT8	USINT	unsigned char	byte	Byte	8-bit unsigned integer
ODK_LWORD	LWORD	unsigned long long	ulong	ULong	64-bit bit string
ODK_DWORD	DWORD	unsigned long	uint	UInteger	32-bit bit string
ODK_WORD	WORD	unsigned short	ushort	UShort	16-bit bit string
ODK_BYTE	BYTE	unsigned char	byte	Byte	8-bit bit string
ODK_BOOL	BOOL	unsigned char	bool	Boolean	1-bit bit string, remaining bits (1..7) are empty
ODK_LTIME	LTIME	long long	long	Long	64-bit during in nanosec-onds
ODK_TIME	TIME	long	int	Integer	32-bit during in milliseconds
ODK_LDT	LDT	unsigned long long	ulong	ULong	64-bit date and time of the day in nanoseconds
ODK_LTOD	LTOD	unsigned long long	ulong	ULong	64-bit time of the day in nanoseconds since midnight
ODK_TOD	TOD	unsigned long	uint	UInteger	32-bit time of the day in milliseconds since midnight
ODK_WCHAR	WCHAR	wchar_t	char	Char	**Only for Windows:** 16-bit character
ODK_CHAR	CHAR	char	sbyte	SByte	8-bit character

Complex data types:

ODK data type	SIMATIC data type	C++ data type	C# data type	VB data type	Description
ODK_DTL	DTL	struct ODK_DTL	OdkInternal. Dtl (class)	OdkInternal. Dtl (class)	Structure for date and time
ODK_S7STRING	STRING	unsigned char	string	String	Character string (8-bit character) with max. and act. length (2xUSINT)
ODK_S7WSTRING	WSTRING	unsigned short	string	String	**Only for Windows:** Character string (16-bit character) with max. and act. length (2xUINT)
ODK_VARIANT	VARIANT	struct ODK_VARIANT	byte [ ]	byte [ ]	**For Windows only:** Classic data (each data type that can be serialized with classic data.)
ODK_CLASSIC_DB	VARIANT	struct ODK_CLASSIC_DB	-	-	**Only for realtime environment:** Classic DB (global or based on UDT)
[ ]	ARRAY	[ ]	[ ]	[ ]	Range of same data types. The maximum number of array elements is 2^{20} (=1,048,576). You can use all data types as array except IN_DATA / INOUT_DATA / OUT_DATA.

User-defined data types:

User-defined data types (UDT) include structured data, especially the names and the data types of this component and their order.

A user-defined data type can be defined in the user interface description with the keyword "ODK_STRUCT".

Example

```
ODK_STRUCT <StructName>
{
 <DataType> <TagName>;
 ...
};
```

The following syntax rules apply to the structure:

- You can divide the structure into multiple lines.
- The structure definition must end with a semicolon.
- Any number of tabs and spaces between the elements is permitted.
- It is not permitted to use any keywords for the generated language used (for example "en / eno" as tag name).

Restrictions of the data type ODK_VARIANT:

- When a parameter of the data type ODK_VARIANT is used, it is not permitted to use other parameters with the same InOut-Identifier, regardless of data type.
- With the data type ODK_VARIANT, an [OUT] is modeled as [INOUT] in the generated FB.

Restrictions of the data type ODK_CLASSIC_DB:

- The data type ODK_CLASSIC_DB can only be used with the InOut-Identifier [IN] and [INOUT].
- When a parameter of the data type ODK_CLASSIC_DB is used with the InOut-Identifier [IN] or [INOUT], it is not permitted to use other parameters with the same InOut-Identifier, regardless of data type.

B.2 Parameters

The parameters of the <project>.odk file are different:

- Developing a CPU function library for the Windows environment
- Developing a CPU function library for the realtime environment

Parameters for the Windows environment

The definition of the parameters must be within a line of code.

```
<parameter name>=<value> // optional comment
```

The <project>.odk file supports the following parameters:

Parameter	Value	Description
Context	user	Specifies that the CPU function library is loaded in the context of a Windows user.
	system	Specifies that the CPU function library is loaded in the context of the Windows system.
STEP7Prefix	<String>	Describes the string that precedes your functions and is shown after importing the SCL file in STEP 7. The following characters are allowed: {A...Z, a...z, 1...9, -, _}
FullClassName	<String>	The parameter is required for the C# and VB programming languages. To change the class names or namespace of the source files of the CPU function library, you need to adjust the "FullClassName" parameter.

Parameters for the realtime environment

The definition of the parameters must be within a line of code.

```
<parameter name>=<value> // optional comment
```

The <project>.odk file supports the following parameters:

Parameter	Value	Description
Context	realtime	Specifies that the CPU function library is loaded in the context of the real time environment.
Trace	on	Specifies the trace function in the CPU function library. In this case, the CPU function library requires 32 KB if memory as an additional trace buffer. A "GetTrace" function block is created by default for use in a STEP 7.
	off	A "GetTrace" function block is created. The trace buffer contains only one trace entry with the contents: trace is off.
HeapSize	[4...<Available CPU memory> (Page 129)]k	Specifies a memory in KB that is used as heap for realtime applications.
HeapMaxBlockSize	[8...<HeapSize>]	Specifies the memory size in bytes that can be allocated at one time.
SyncCallParallelCount	[1...9] Default=3	If a optional parameter and defines the maximum number of parallel calls in this CPU function library. The size of the memory which is reserved for calls in this CPU function library: SyncCallParallelCount * (SyncCallStackSize + SyncCallDataSize)
SyncCallStackSize	[1...1024]k Default=32k	Is a optional parameter and defines the size of the thread stack for a call in this CPU function library. Each new call contains a separate stack memory.
SyncCallDataSize	[1...1024]k	Is a optional parameter and defines the size of the data area for a call in this CPU function library. The data area contains IN, INOUT and OUT parameters. Each new call contains a separate stack memory.
	Default=auto	The required data size is automatically calculated by the code generator.
STEP7Prefix	<String>	Describes the string that precedes your functions and is shown after importing the SCL file in STEP 7. The following characters are allowed: {A...Z, a...z, 1...9, -, _} By default the name is entered without blanks.

Code generator messages for CPU function libraries

C

C.1 Error messages of the code generator

The code generator stops the build process and generates the following error messages:

File errors:

Error number	Error message	Possible solution
100	'<Project>.odk' is missing	Rename the file to <project>.odk.
101	Context is missing in resource file	Valid for Visual Studio only. One of the following resource files is faulty: • C++: <project>.rc • C#: AssemblyInfo.cs • VB: AssemblyInfo.vb
102	resource file '...' is missing	Valid for Visual Studio only. One of the following resource files is missing: • C++: <project>.rc • C#: AssemblyInfo.cs • VB: AssemblyInfo.vb
103	'...' write protected	One of the following files is write-protected: • C++ – <project>.rc (only for Visual Studio) – ODK_Types.h – ODK Functions.h – ODK_Execution.cpp • C# (only for Visual Studio) – AssemblyInfo.cs – OdkTypes.cs – OdkFunctions.cs – OdkExecution.cs • VB (for Visual Studio only) – AssemblyInfo.vb – OdkTypes.vb – OdkFunctions.vb – OdkExecution.vb • General – cg.tmp Temporary file for the code generator to detect changes in the interface file. – <project>.scl

Error number	Error message	Possible solution
110	license key missing	Transfer a current license key.
111	retrieve license key not possible	Install the ALM with the version ≥ 6.0.

Parameter errors:

Error number	Error message	Possible solution
200	parameter '...' is not allowed for current context	The indicated parameter is not allowed here.
201	missing '...' definition	The indicated parameter (Page 66) is not defined.
202	more than one definition for '...'	There is more than one definition for the indicated parameter (Page 66).
203	Context has to be one of 'user' or 'system' for Microsoft Visual Studio	Choose the context "system" or "user" for Visual Studio.
204	Context has to be 'realtime' for Eclipse	Choose the context "realtime" for Eclipse.
205	Trace has to be on or off	The "Trace" parameter must have the value "on" or "off" (only for realtime environment).
206	STEP7Prefix must not be longer than 120 characters	The STEP 7 prefix must not exceed 120 characters.
207	HeapSize has to be interval of [4...100000]k	Ensure that the HeapSize parameter is within the value range [4...100000]k.
208	HeapMaxBlockSize has to be interval of [8...<HeapSize>]	Ensure that the HeapMaxBlockSize parameter is within the value range [8...<HeapSize>].
209	SyncCallDataSize must be interval of [1...1024]k	Ensure that the SyncCallDataSize parameter is within the value range [1...1024]k.
210	SyncCallStackSize must be interval of [1...1024]k	Ensure that the SyncCallStackSize parameter is within the value range [1...1024]k.
211	SyncCallParallelCount must be interval of [1...9]	Ensure that the SyncCallParallelCount parameter is within the value range [1...9].

Syntax errors:

Error number	Error message	Possible solution
500	unexpected end-of-file found	Always end the file with a semicolon.
501	'...' should be alpha numeric	The following characters are allowed: a - z, A - Z, 0 - 9, _ Umlauts are not permitted.
502	'...' should be numeric	The following characters are allowed: 0 - 9
503	'...' undefined keyword	Use only the keywords [IN], [OUT] and [INOUT] and the defined data types.
504	... missing before ...	Add the character displayed by the error message.
	missing space	Add a space.
506	'...' undefined type	Use only the defined data types.
507	'...' type not allowed	Observe the syntax rules in section Defining functions a CPU function library (Page 68)
508	'...' type redefinition	The function or parameter name is already assigned. Choose a different name.
509	'...' variable redefinition	The tag name is already assigned. Choose a different name.
510	Structure '...' must not be empty	Fill the structure with a data type.

Error number	Error message	Possible solution
511	'...' no valid name	Observe the syntax rules in section Defining functions a CPU function library (Page 68).
512	unexpected variable order (must be [IN], [OUT], [INOUT] order)	There are three defined InOut identifiers. Use these in the following order: [IN], [OUT], [INOUT]
513	size of ODK_S7STRING could not be bigger than 254	A string can have a maximum length of 254 characters.
514	size of ODK_S7WSTRING could not be bigger than 16382	A Wstring can have a maximum length of 16382 characters.
515	Prefix + Function name '....' exceeds 125 characters	Prefix and function name together are longer than 125 characters.
516	variable name '...' exceeds 128 characters	The tag name is longer than 128 characters.
517	'...' IN_BUFFER + INOUT_BUFFER could not be greater than 1 MB	Altogether, the InOut identifiers [IN] and [INOUT] in a function must not exceed 1 MB.
518	'...' INOUT_BUFFER + OUT_BUFFER could not be greater than 1 MB	Altogether, the InOut identifiers [OUT] and [INOUT] in a function must not exceed 1 MB.
519	'...' needs '...k', but data size (SyncCallDataSize) is limited to '...k'	The amount of data is too high.
520	'...' has an array size of '...', but max. array size is limited to '...'	The maximum Array size is exceeded.
521	no other variable in the same direction for ODK_CLASSIC_DB / ODK_VARIANT type	As soon as the data type ODK_CLASSIC_DB or ODK_VARIANT is used, no other parameter may defined with the same InOut identifier.
522	no array allowed for ODK_CLASSIC_DB / ODK_VARIANT type	No Array may be defined for the data type ODK_CLASSIC_DB or ODK_VARIANT.
523	no [OUT] direction allowed for ODK_CLASSIC_DB type	The InOut identifier [OUT] may not be defined for the ODK_CLASSIC_DB data type.
524	function declarations lead to identical hashes (change name of one parameter): '...', '...'	Change a parameter name.

C.2 Warnings of the code generator

The code generator continues to execute the build process and generates the following warnings:

Warning number	Warning message	Description
4100	built project with ODK 1500S trial mode - '...' day(s) left	Use the test version. The warning shows when the test version runs.

Helper functions for CPU function libraries D

D.1 C++ helper functions

String helper functions for CPU function library for the Windows and realtime environment

The following helper functions provide access to S7 strings:

Helper functions	Description
Convert_S7STRING_to_SZSTR	Convert PLC string types to C/C++ string types ("char" array, null-terminated)
Convert_SZSTR_to_S7STRING	Convert C/C++ string types ("char" array, null-terminated) to PLC string types.
Get_S7STRING_Length	Returns the current length of a PLC string type.
Get_S7STRING_MaxLength	Returns the maximum length of a PLC string type.

String helper functions for CPU function library for the Windows environment

The following helper functions provide access to S7WStrings:

Helper functions	Description
Convert_S7WSTRING_to_SZWSTR	Convert PLC WString types to C/C++ WString types ("wchar_t" array, null-terminated)
Convert_SZWSTR_to_S7WSTRING	Convert C/C++ WString types ("wchar_t" array, null-terminated) to PLC WString types.
Get_S7WSTRING_Length	Returns the current length of a PLC Wstring type.
Get_S7WSTRING_MaxLength	Returns the maximum length of a PLC WString type.

Class "CODK_CpuReadData" (Windows and real-time environment)

The "CODK_CpuReadData" class allows read access to classic DBs / classic data:

Value	Description
CODK_CpuReadData	Class constructor, initializes the input data area and the data size.
SetBuffer	Initializes the input data area and the data size.
ReadS7BOOL	Reads "bool" (1 byte) from the data area.
ReadS7BYTE	Reads a "byte" (1 byte) from the data area.
ReadS7WORD	Reads a "word" (2 bytes) from the data area.
ReadS7DWORD	Reads a "double word" (4 bytes) from the data area.
ReadS7LWORD	Reads a "long word" (8 bytes) from the data area.
ReadS7SINT	Reads a "short integer" (1 byte) from the data area.
ReadS7INT	Reads a "integer" (2 bytes) from the data area.
ReadS7DINT	Reads a "double integer" (4 bytes) from the data area.
ReadS7LINT	Reads "long integer" (8 bytes) from the data area.

Value	Description
ReadS7USINT	Reads a "unsigned short integer" (1 byte) from the data area.
ReadS7UINT	Reads a "unsigned integer" (2 bytes) from the data area.
ReadS7UDINT	Reads a "unsigned double integer" (4 bytes) from the data area.
ReadS7ULINT	Reads "unsigned long integer" (8 bytes) from the data area.
ReadS7REAL	Reads a "real number" (4 bytes) from the data area.
ReadS7LREAL	Reads a "long real number" (8 bytes) from the data area.
ReadS7S5TIME	Reads a 16 bit (2 bytes) from the data area.
ReadS7DATE	Reads a date value (2 bytes) from the data area.
ReadS7TIME	Reads a time value (4 bytes) from the data area.
ReadS7LTIME	Reads a time value (8 bytes) from the data area as nanoseconds.
ReadS7TIME_OF_DAY	Reads the time of day (4 bytes) from the data area.
ReadS7LTIME_OF_DAY	Reads the time of day (8 bytes) from the data area as nanoseconds since midnight.
ReadS7DATE_AND_TIME	Reads a general date and time area.
ReadS7DATE_AND_LTIME	Reads a date and time value (8 bytes) from the data area as nanoseconds since 01/01/1970 00:00.
ReadS7DTL	Reads a date and time information (12 bytes) as a predefined structure from the data area.
ReadS7CHAR	Reads a "char" (1 byte) from the data area.
ReadS7STRING_LEN	Reads the information of the string length for a S7 string in the data area.
ReadS7STRING	Reads an S7 string from the data area and returns it as language dependent string. The string is shortened when there is insufficient space in the target string.
ReadS7WCHAR	Only available for CPU function libraries for the Windows environment. Reads "wide char" (2 bytes) from the data area.
ReadS7WSTRING_LEN	Only available for CPU function libraries for the Windows environment. Reads the information of the string length for a S7W string in the data area.
ReadS7WSTRING	Only available for CPU function libraries for the Windows environment. Reads an S7W string from the data area and returns it as language dependent string. The string is shortened when there is insufficient space in the target string.

Class "CODK_CpuReadWriteData" (Windows and real-time environment)

The "CODK_CpuReadWriteData" class allows the following write accesses in addition to the all read accesses from "CODK_CpuReadData" to classic DBs / classic data:

Value	Description
CODK_CpuReadWriteData	Class constructor, initializes the output data area and the data size.
SetBuffer	Initializes the output data area and the data size.
LastByteChanged	Retrieves the index of the last byte changed in the data area.

Value	Description
FirstByteChanged	Retrieves the index of the first byte changed in the data area.
WriteS7BOOL	Writes a "bool" (1 byte) to the data area.
WriteS7BYTE	Writes a "byte" (1 byte) to the data area.
WriteS7WORD	Writes a "word" (2 bytes) to the data area.
WriteS7DWORD	Writes a "double word" (4 bytes) to the data area.
WriteS7LWORD	Writes a "long word" (8 bytes) to the data area.
WriteS7SINT	Writes a "short integer" (1 byte) to the data area.
WriteS7INT	Writes a "integer" (2 bytes) to the data area.
WriteS7DINT	Writes a "double integer" (4 bytes) to the data area.
WriteS7LINT	Writes a "long integer" (8 bytes) to the data area.
WriteS7USINT	Writes a "unsigned short integer" (1 byte) to the data area.
WriteS7UINT	Writes a "unsigned integer" (2 bytes) to the data area.
WriteS7UDINT	Writes a "unsigned double integer" (4 bytes) to the data area.
WriteS7ULINT	Writes a "unsigned long integer" (2 bytes) to the data area.
WriteS7REAL	Writes a "real number" (4 bytes) to the data area.
WriteS7LREAL	Writes a "long real number" (8 bytes) to the data area.
WriteS7S5TIME	Writes a 16-bit (2 bytes) time value to the data area.
WriteS7DATE	Writes a date value (2 bytes) to the data area.
WriteS7TIME	Writes a time value (4 bytes) to the data area.
WriteS7LTIME	Writes a time value (8 bytes) to the data area as nanoseconds.
WriteS7TIME_OF_DAY	Writes a time of day (4 bytes) to the data area.
WriteS7LTIME_OF_DAY	Writes the time of day (8 bytes) to the data area as nanoseconds since midnight.
WriteS7DATE_AND_TIME	Writes a "System.DateTime" to the data area.
WriteS7DATE_AND_LTIME	Writes a date and time value (8 bytes) to the data area as nanoseconds since 01/01/1970 00:00.
WriteS7DTL	Writes a date and time information (12 bytes) as a predefined structure to the data area.
WriteS7CHAR	Writes a "char" (1 byte) to the data area.
WriteS7STRING	Writes a S7 string to the data area. The string is shortened when there is insufficient space in the target string. If no maximum string length is set in the case of a "[OUT] Variant", the current string length is set as maximum string length.
WriteS7STRING_MAX_LEN	Only available for CPU function libraries for the Windows environment. Writes the maximum string length to an S7 string. Is only required for "[OUT] Variant".
WriteS7WCHAR	Only available for CPU function libraries for the Windows environment. Writes a "char" (2 bytes) to the data area.

Value	Description
WriteS7WSTRING	Only available for CPU function libraries for the Windows environment. Writes an S7W string to the data area. The string is shortened when there is insufficient space in the target string. If no maximum string length is set in the case of a "[OUT] Variant", the current string length is set as maximum string length.
WriteS7WSTRING_MAX_LEN	Only available for CPU function libraries for the Windows environment. Writes the maximum string length to an S7W string. Is only required for "[OUT] Variant".

D.2 C#/VB helper functions

Access to classic data

For the C# and VB programming languages, the following classes are available for reading and writing in a classic data stream:

- OdkReadVariant

  Supports all "ReadS7..." methods.

- OdkReadWriteVariant

  Supports all "ReadS7..." and "WriteS7..." methods.

ReadS7 methods	WriteS7 methods	Description
ReadS7Bool	WriteS7Bool	Writes/writes/reads a "bool" (1 byte) to/to/from the data area.
ReadS7Byte	WriteS7Byte	Writes/writes/reads a "byte" (1 byte) to/from the data area.
ReadS7Word	WriteS7Word	Writes/writes/reads a "word" (2 bytes) to/from the data area.
ReadS7DWord	WriteS7DWord	Writes/writes/reads a "double word" (4 bytes) to/from the data area.
ReadS7LWord	WriteS7LWord	Writes/writes/reads a "long word" (8 bytes) to/from the data area.
ReadS7Sint	WriteS7Sint	Writes/writes/reads a "short integer" (1 byte) to/from the data area.
ReadS7Int	WriteS7Int	Writes/writes/reads a "integer" (2 bytes) to/from the data area.
ReadS7Dint	WriteS7Dint	Writes/writes/reads a "double integer" (4 bytes) to/from the data area.
ReadS7Lint	WriteS7Lint	Writes/writes/reads a "long integer" (8 bytes) to/from the data area.
ReadS7USint	WriteS7USint	Writes/writes/reads a "unsigned short integer" (1 byte) to/from the data area.
ReadS7Uint	WriteS7Uint	Writes/writes/reads a "unsigned integer" (2 bytes) to/from the data area.
ReadS7UDint	WriteS7UDint	Writes/writes/reads a "unsigned double integer" (4 bytes) to/from the data area.
ReadS7ULint	WriteS7ULint	Writes/writes/reads a "unsigned long integer" (8 bytes) to/from the data area.

ReadS7 methods	WriteS7 methods	Description
ReadS7Real	WriteS7Real	Writes/writes/reads a "real number" (4 bytes) to/from the data area.
ReadS7LReal	WriteS7LReal	Writes/writes/reads a "long real number" (8 bytes) to/from the data area.
ReadS7S5Time	WriteS7S5Time	Writes/writes/reads a 16-bit (2 bytes) time value to/from the data area.
ReadS7Time	WriteS7Time	Writes/reads a time value (4 bytes) to/from the data area.
ReadS7LTime	WriteS7LTime	Writes/reads a time value (8 bytes) to/from the data area.
ReadS7Date	WriteS7Date	Writes/reads a date and time value (2 bytes) to/from the data area.
ReadS7TimeOfDay	WriteS7TimeOfDay	Writes/reads the time of day (4 bytes) to/from the data area.
ReadS7LTimeOfDay	WriteS7LTimeOfDay	Writes/reads the time of day (8 bytes) to/from the data area.
ReadS7DateAndTime	WriteS7DateAndTime	Writes/reads a "System.DateTime" to/from the data area.
ReadS7DateAndLTime	WriteS7DateAndLTime	Writes/reads a date and time value (8 bytes) to/from the data area as nanoseconds since 01/01/1970 00:00.
ReadS7Dtl	WriteS7Dtl	Writes/reads a date and time value (12 bytes) as a predefined structure to/from the data area.
ReadS7Char	WriteS7Char	Writes/reads a "char" (1 byte) to/from the data area.
ReadS7String	WriteS7String	Writes/reads an SIMATIC S7 string to/from the data area and returns it as language-dependent string. The string is shortened when there is insufficient space in the target string. If no maximum string length is set in the case of a "[OUT] Variant", the current string length is set as maximum string length.
ReadS7StringCurLen	-	Reads the current string length of a S7 string exception if the current string length is larger than the maximum string length.
ReadS7StringMaxLen	WriteS7StringMaxLen	Writes/reads the maximum string length to/from a S7 string. Is only required for "[OUT] Variant".
ReadS7WChar	WriteS7WChar	Writes/reads a "wide char" (2 bytes) to/from the data area.
ReadS7WString	WriteS7WString	Writes/reads an S7W string to/from the data area and returns it as language dependent string. The string is shortened when there is insufficient space in the target string. If no maximum string length is set in the case of a "[OUT] Variant", the current string length is set as maximum string length.
ReadS7WStringCurLen	-	Reads the current string length of a S7W string exception if the current string length is larger than the maximum string length.
ReadS7WStringMaxLen	WriteS7WStringMaxLen	Writes/reads the maximum string length to/from a S7W string. Only required for "[OUT] variant".

Access to classic DBs

Use in C#

```
using OdkInternal;

public ushort SampleFunction (byte[] myDB)
{
 OdkReadVariant rv = new OdkReadVariant(myDB);
 int i = rv.ReadS7DINT(0);
 // do something with i
 return ODK_SUCSESS;
}
```

Use in VB

```
Imports OdkInternal;

Public Function SampleFunction (ByRef myDB As Byte[]) As UShort
{
 Dim wv As OdkReadWriteVariant = new OdkReadWriteVariant(myDB)
 Dim value As Short = 5    ' calculate the value somehow
 wv.WriteS7INT(8, value)
 return ODK_SUCSESS;
}
```

Instructions for CPU function libraries

E

E.1 "Load" instruction

The "*<STEP7Prefix>*_Load" instruction has different parameters that depending on the development environment:

- Development of a CPU function library for the Windows environment (Page 50)
- Development of a CPU function library for the realtime environment (Page 88)

E.2 "Unload" instruction

The "*<STEP7Prefix>*_Unload" instruction has different parameters that depending on the development environment:

- Development of a CPU function library for the Windows environment (Page 57)
- Development of a CPU function library for the realtime environment (Page 93)

E.3 "GetTrace" instruction

The function block (Page 95) "GetTrace" is included in the default CPPfile "<project>.cpp".

GetTrace	
TraceCount	STATUS

The following table shows the parameters of the "GetTrace" function block:

Section	Declaration	Data type	Description
Output	STATUS	INT	Number of trace entries actually read
Input	TraceCount	INT	Number of trace entries to be read
Output	TraceBuffer	Array [0..255] of String[125]	Trace string array for the user Each trace string consists of: • Date • Time-of-day • OB number • File name • Line number • Trace text (trace implemented by the user)

Index

C

Callback functions
    Realtime, 77
    Windows, 45
Calling functions
    Realtime, 91
    Windows, 54
Certificate of license, 20
Commissioning
    C/C++ Runtime, 111
Context Application, 32, 67
Context Realtime, 67
Context System, 32
Context User, 32
Creating a project
    C/C++ runtime application, 104
    PLCSIM Advanced, 118
    Realtime, 62
    Windows, 24
Customer service, 3

D

Debug (Test), 81
    C/C++ runtime application, 115
Debug (Windows), 59
Defining functions, 33, 68
Defining runtime properties
    PLCSIM Advanced, 121
    Realtime, 66
    Windows, 30
Definitions, 3
Development environments, 14
Development steps, 16
Documentation, 3
Dynamic memory, 79

G

Generating an application
    C/C++ runtime application, 109
    PLCSIM Advanced, 126
    Realtime, 65
    Windows, 30

I

Implementing functions
    Custom functions, 46, 78, 125
    Realtime, 77
    Windows, 44
Installation, 18
    Licensing, 20
Internet Web sites (Siemens), 3

K

Knowledge required, 3

L

License key, 20
Loading functions
    Realtime, 88
    Windows, 50

M

Manuals, 3

P

Post Mortem analysis, 97
Product overview, 11
    Basic procedure, 16
    How it works, 11

S

Siemens contact information, 3
STEP 7 import
    Realtime, 87
    Windows, 49
Support, 3
Syntax rules, 33, 69
System requirements, 17

T

Target group, 3
Technical support, 3
Trace buffer, 95
Transfer to target system
    C/C++ application, 115
    Create connection to the target system, 113
    Realtime, 85
    Windows, 48

U

Uninstalling, 22
Unloading functions
    Realtime, 93
    Windows, 57

W

Web sites (Siemens), 3

SIEMENS

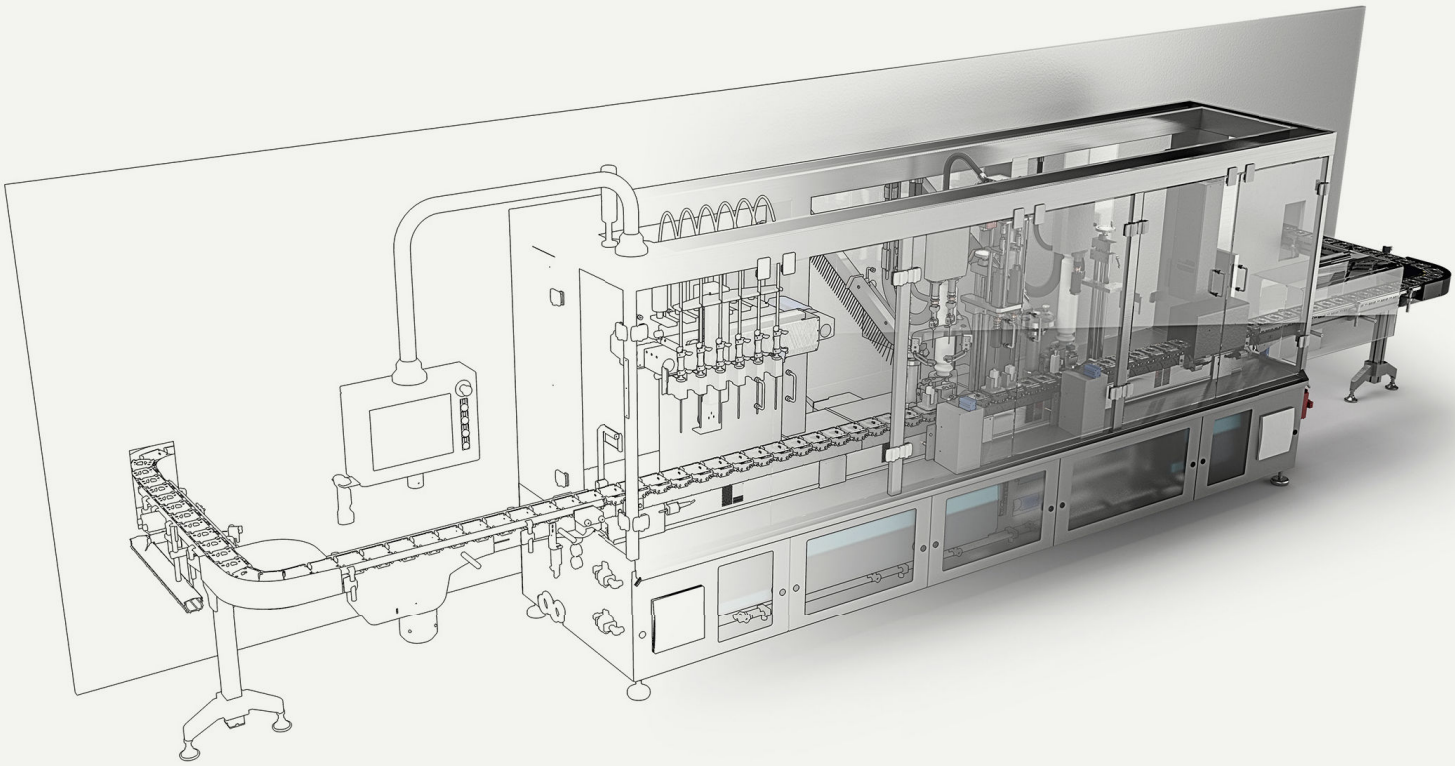

Edition 11/2022

FUNCTION MANUAL

SIMATIC

S7-1500

S7-PLCSIM Advanced

support.industry.siemens.com

SIEMENS

SIMATIC

S7-PLCSIM Advanced

Function Manual

Introduction 1

Safety instructions 2

Product overview 3

Installing 4

Communication paths 5

Simulating 6

Virtual time response 7

User interfaces (API) 8

Restrictions, messages and solution 9

List of abbreviations A

11/2022

A5E37039512-AE

Legal information

Warning notice system

This manual contains notices you have to observe in order to ensure your personal safety, as well as to prevent damage to property. The notices referring to your personal safety are highlighted in the manual by a safety alert symbol, notices referring only to property damage have no safety alert symbol. These notices shown below are graded according to the degree of danger.

⚠ DANGER
indicates that death or severe personal injury **will** result if proper precautions are not taken.

⚠ WARNING
indicates that death or severe personal injury **may** result if proper precautions are not taken.

⚠ CAUTION
indicates that minor personal injury can result if proper precautions are not taken.

NOTICE
indicates that property damage can result if proper precautions are not taken.

If more than one degree of danger is present, the warning notice representing the highest degree of danger will be used. A notice warning of injury to persons with a safety alert symbol may also include a warning relating to property damage.

Qualified Personnel

The product/system described in this documentation may be operated only by **personnel qualified** for the specific task in accordance with the relevant documentation, in particular its warning notices and safety instructions. Qualified personnel are those who, based on their training and experience, are capable of identifying risks and avoiding potential hazards when working with these products/systems.

Proper use of Siemens products

Note the following:

⚠ WARNING
Siemens products may only be used for the applications described in the catalog and in the relevant technical documentation. If products and components from other manufacturers are used, these must be recommended or approved by Siemens. Proper transport, storage, installation, assembly, commissioning, operation and maintenance are required to ensure that the products operate safely and without any problems. The permissible ambient conditions must be complied with. The information in the relevant documentation must be observed.

Trademarks

All names identified by ® are registered trademarks of Siemens AG. The remaining trademarks in this publication may be trademarks whose use by third parties for their own purposes could violate the rights of the owner.

Disclaimer of Liability

We have reviewed the contents of this publication to ensure consistency with the hardware and software described. Since variance cannot be precluded entirely, we cannot guarantee full consistency. However, the information in this publication is reviewed regularly and any necessary corrections are included in subsequent editions.

Siemens AG
Digital Industries
Postfach 48 48
90026 NÜRNBERG
GERMANY

A5E37039512-AE
Ⓟ 10/2022 Subject to change

Copyright © Siemens AG 2016 - 2022.
All rights reserved

Table of contents

1 Introduction 10

1.1 Function Manuals documentation guide 12
1.1.1 Information classes Function Manuals 12
1.1.2 Basic tools 13
1.1.3 SIMATIC Technical Documentation 15

2 Safety instructions 17

2.1 Security information 17

3 Product overview 18

3.1 What is S7-PLCSIM Advanced? 18
3.2 S7-PLCSIM products 19
3.3 Compatibility in case of updates 20
3.4 Security for S7-PLCSIM Advanced 22
3.5 Support simulation 23
3.6 Supported CPUs 24
3.7 Differences between a simulated and a real CPU 25
3.7.1 Restrictions for all supported CPUs 26
3.7.2 Notes 27
3.8 Password to protect confidential configuration data 28

4 Installing 31

4.1 Introduction 31
4.1.1 System requirements 31
4.1.2 Restrictions due to antivirus programs 32
4.1.3 Licenses 34
4.1.4 Trial License 34
4.1.5 Installation log 36
4.2 S7-PLCSIM Advanced 37
4.3 Installing S7-PLCSIM Advanced 37
4.4 Changing S7-PLCSIM Advanced 39
4.5 Repairing S7-PLCSIM Advanced 39
4.6 Uninstalling S7-PLCSIM Advanced 40

5 Communication paths ... 42

5.1 Local communication ... 43

5.2 Communication via TCP / IP ... 44
5.2.1 Communication via TCP/IP in Multi-Adapter Network Mode (non-promiscuous mode) ... 47

5.3 Enable distributed communication ... 54

6 Simulating ... 57

6.1 Simulate CPU ... 57
6.1.1 Basic procedure for the simulation ... 57
6.1.2 Control Panel - User interface ... 58
6.1.2.1 S7-PLCSIM Advanced Symbol ... 58
6.1.2.2 Graphical interface ... 59
6.1.2.3 S7-PLCSIM Advanced Control Panel ... 59
6.1.2.4 Importing instances ... 64
6.1.3 Downloading a STEP 7 project ... 66
6.1.4 Network addresses in the simulation ... 69
6.1.4.1 Siemens PLCSIM Virtual Ethernet Adapter ... 69
6.1.4.2 PLCSIM Advanced instances ... 70
6.1.5 Simulate peripheral I/O ... 72
6.1.6 Simulate communication ... 72
6.1.6.1 Communication services that can be simulated ... 72
6.1.6.2 Communication between instances ... 74
6.1.7 Provide project data offline for simulation ... 74

6.2 Simulate CPU with ODK functionality ... 76
6.2.1 Special features of ODK ... 76
6.2.2 Loading functions ... 79
6.2.3 Calling functions ... 80
6.2.4 Unloading functions ... 80

6.3 Simulating Motion Control ... 81

6.4 Simulating the SIMATIC Drive Controller ... 83

6.5 Simulating a redundant S7-1500R/H system ... 84

7 Virtual time response ... 87

7.1 Speed up and slow down simulation ... 88

7.2 Stop simulation ... 90

7.3 Synchronize simulation partner ... 92
7.3.1 Synchronize simulation partner cycle-controlled ... 92
7.3.2 Synchronize simulation partner time-controlled ... 96

8 User interfaces (API) ... 98

8.1 Introduction ... 98
8.1.1 Access to instances ... 99
8.1.2 Interfaces of the Simulation Runtime ... 100
8.1.3 Overview of user interfaces for native C++ ... 101
8.1.4 Overview of user interfaces for managed code ... 105
8.1.5 Overview of data types for native C++ ... 108
8.1.6 Overview of data types for managed code ... 110

8.2 Initialize API ... 111
8.2.1 Load API library ... 111
8.2.2 Native C++ ... 112
8.2.2.1 InitializeApi() ... 112
8.2.2.2 RuntimeApiEntry_Initialize ... 113
8.2.3 .NET (C#) ... 114
8.2.3.1 Initialize ... 114

8.3 Shut down API ... 115
8.3.1 Native C++ ... 115
8.3.1.1 DestroyInterface() ... 115
8.3.1.2 RuntimeApiEntry_DestroyInterface ... 116
8.3.1.3 FreeApi() ... 116
8.3.1.4 ShutdownAndFreeApi() ... 117
8.3.2 .NET (C#) ... 118
8.3.2.1 Shut down API ... 118

8.4 Global functions (Native C++) ... 118

8.5 API ISimulationRuntimeManager ... 123
8.5.1 Interfaces - Information and settings ... 123
8.5.2 Simulation Runtime instances ... 132
8.5.3 Remote connections ... 138
8.5.3.1 RunAutodiscover() ... 142
8.5.4 Events for ISimulationRuntimeManager ... 143
8.5.4.1 OnSoftwareConfigurationChanged events ... 143
8.5.4.2 OnRuntimeManagerLost events ... 146
8.5.4.3 OnAutodiscoverData events ... 148

8.6 API IInstances ... 149
8.6.1 Interfaces - Information and settings ... 149
8.6.2 Controller - Information and settings ... 153
8.6.3 Operating state ... 163
8.6.4 Tag list ... 172
8.6.5 I/O access ... 177
8.6.5.1 Synchronizing inputs and outputs ... 177
8.6.5.2 I/O access via address - Reading ... 178
8.6.5.3 I/O access via address - Writing ... 183
8.6.5.4 I/O access via tag name - Reading ... 188
8.6.5.5 I/O access via tag name - Writing ... 206
8.6.6 Settings for the virtual time ... 224
8.6.7 Cycle control ... 226
8.6.8 Acyclic services ... 233
8.6.8.1 Overview ... 233
8.6.8.2 ReadRecordDone/WriteRecordDone ... 235
8.6.8.3 AlarmNotification ... 237
8.6.8.4 ProcessEvent ... 239
8.6.8.5 PullOrPlugEvent ... 240
8.6.8.6 StatusEvent ... 241
8.6.8.7 ProfileEvent ... 242
8.6.8.8 UpdateEvent ... 243
8.6.8.9 GetConfiguredProcessEvent ... 244
8.6.8.10 RackOrStationFaultEvent ... 245
8.6.9 Events for IInstances ... 246

8.6.9.1 Events for operating state and cycle control ... 246
8.6.9.2 Events for acyclic services ... 260

8.7 API IRemoteRuntimeManager ... 267
8.7.1 Interfaces - Information and settings ... 267
8.7.2 Simulation Runtime instances ... 272
8.7.2.1 Simulation Runtime instances (remote) ... 272
8.7.3 Events for IRemoteRuntimeManager ... 278
8.7.3.1 OnConnectionLost events ... 278

8.8 Data types ... 280
8.8.1 DLL import functions (Native C++) ... 281
8.8.1.1 ApiEntry_Initialize ... 281
8.8.1.2 ApiEntry_DestroyInterface ... 281
8.8.2 Event callback functions (Native C++) ... 282
8.8.2.1 EventCallback_VOID ... 282
8.8.2.2 EventCallback_SRCC_UINT32_UINT32_INT32 ... 282
8.8.2.3 EventCallback_SRRSI_AD ... 282
8.8.2.4 EventCallback_IRRTM ... 283
8.8.2.5 EventCallback_II_SREC_ST_SROS_SROS ... 283
8.8.2.6 EventCallback_II_SREC_ST_UINT32_INT64_INT64_UINT32 ... 284
8.8.2.7 EventCallback_II_SREC_ST ... 285
8.8.2.8 EventCallback_II_SREC_ST_SRICC_UINT32_UINT32_UINT32_UINT32 ... 285
8.8.2.9 EventCallback_II_SREC_ST_SRLT_SRLM ... 286
8.8.2.10 EventCallback_II_SREC_ST_SDRI ... 286
8.8.2.11 EventCallback_II_SREC_ST_SDRI_BYTE ... 286
8.8.2.12 EventCallback_II_SREC_ST_UINT32_UINT32 ... 287
8.8.2.13 EventCallback_II_SREC_ST_UINT32_UINT32_EPET_UINT32 ... 288
8.8.2.14 EventCallback_II_SREC_ST_UINT32_EPPET_UINT32 ... 288
8.8.2.15 EventCallback_II_SREC_ST_UINT32_ERSFET ... 289
8.8.2.16 EventCallback_II_SREC_ST_UINT32 ... 289
8.8.3 Delegate definitions (managed code) ... 290
8.8.3.1 Delegate_Void ... 290
8.8.3.2 Delegate_SRCC_UINT32_UINT32_INT32 ... 290
8.8.3.3 Delegate_SRRSI_AD ... 291
8.8.3.4 Delegate_II_EREC_DT ... 291
8.8.3.5 Delegate_II_EREC_DT_EOS_EOS ... 291
8.8.3.6 Delegate_II_EREC_DT_ELT_ELM ... 292
8.8.3.7 Delegate_II_EREC_DT_UINT32_INT64_INT64_UINT32 ... 293
8.8.3.8 Delegate_IRRTM ... 293
8.8.3.9 Delegate_II_EREC_DT_SRICC_UINT32_UINT32_UINT32_UINT32 ... 294
8.8.3.10 Delegate_II_EREC_DT_SDRI ... 294
8.8.3.11 Delegate_II_EREC_DT_SDR ... 295
8.8.3.12 Delegate_SREC_ST_UINT32_EPPET_UINT32 ... 295
8.8.3.13 Delegate_SREC_ST_UINT32_UINT32_EPET_UINT32 ... 296
8.8.3.14 Delegate_SREC_ST_UINT32 ... 296
8.8.3.15 Delegate_SREC_ST_UINT32_UINT32 ... 297
8.8.3.16 Delegate_SREC_ST_UINT32_ERSFET ... 297
8.8.4 Definitions and constants ... 298
8.8.5 Unions (Native C++) ... 299
8.8.5.1 UIP ... 299
8.8.5.2 UDataValue ... 299
8.8.6 Structures ... 300

8.8.6.1 SDataValue ... 301
8.8.6.2 SDVBNI ... 302
8.8.6.3 SDataValueByAddress ... 302
8.8.6.4 SDataValueByAddressWithCheck ... 303
8.8.6.5 SDataValueByName ... 304
8.8.6.6 SDataValueByNameWithCheck ... 305
8.8.6.7 SConnectionInfo ... 305
8.8.6.8 SInstanceInfo ... 306
8.8.6.9 SDimension ... 306
8.8.6.10 STagInfo ... 307
8.8.6.11 SIP ... 308
8.8.6.12 SIPSuite4 ... 309
8.8.6.13 SOnSyncPointReachedResult ... 309
8.8.6.14 SDataRecordInfo ... 311
8.8.6.15 SDataRecord ... 312
8.8.6.16 SConfiguredProcessEvents ... 312
8.8.6.17 SDiagExtChannelDescription ... 313
8.8.6.18 SAutodiscoverData ... 314
8.8.6.19 SMAC address ... 315
8.8.6.20 SNetInterfaceInfo ... 315
8.8.7 Enumerations ... 315
8.8.7.1 ERuntimeErrorCode ... 316
8.8.7.2 EArea ... 319
8.8.7.3 EOperatingState ... 319
8.8.7.4 EOperatingMode ... 320
8.8.7.5 ECPUType ... 321
8.8.7.6 ECommunicationInterface ... 323
8.8.7.7 ECommunicationMode ... 323
8.8.7.8 EPLCInterface ... 323
8.8.7.9 ELEDType ... 324
8.8.7.10 ELEDMode ... 324
8.8.7.11 EPrimitiveDataType ... 325
8.8.7.12 EDataType ... 327
8.8.7.13 ETagListDetails ... 329
8.8.7.14 ERuntimeConfigChanged ... 330
8.8.7.15 EInstanceConfigChanged ... 331
8.8.7.16 EPullOrPlugEventType ... 331
8.8.7.17 EProcessEventType ... 332
8.8.7.18 EDirection ... 332
8.8.7.19 EDiagProperty ... 333
8.8.7.20 EDiagSeverity ... 333
8.8.7.21 ERackOrStationFaultType ... 334
8.8.7.22 ECycleTimeMonitoringMode ... 334
8.8.7.23 EAutodiscoverType ... 335

9 Restrictions, messages and solution 336
9.1 Overview 336
9.2 OPC UA server 336
9.3 Web server 337
9.4 Backing up and restoring the configuration of a PLCSIM Advanced instance 337
9.5 Loading project data of an F-CPU to a standard CPU 338
9.6 Update of a TIA Portal project to a new CPU firmware 338
9.7 Restrictions for file paths 338
9.8 Restrictions for storage paths 339
9.9 Restrictions for communications services 339
9.10 Restrictions for instructions 339
9.11 Restrictions to local communication via Softbus 340
9.12 Unknown data records 340
9.13 Messages for communication via TCP/IP 341
9.14 Time synchronization via NTP mode 342
9.15 Restrictions of security with VMware vSphere Hypervisor (ESXi) 342
9.16 Restrictions for Hyper-V 343
9.17 Monitoring overflow 343
9.18 Deviating I/O values in the STEP 7 user program 344
9.19 Multiple simulations and possible collision of IP addresses 344
9.20 Lacking access to an IP address 344
9.21 Simulation in standby mode 344
9.22 Time response of PLCSIM Advanced in connection with I/O systems 345
9.23 Simulation start of SIMIT with S7-PLCSIM Advanced 345
9.24 Known restrictions when operating with a co-simulation (e.g. SIMIT) 345
9.25 ET 200SP CPUs: Use of BusAdapters with fiber-optic interface 346
9.26 Installing SIMATIC NET 346

A List of abbreviations 347

Introduction 1

Purpose of the documentation

This function manual describes the simulation software, SIMATIC S7-PLCSIM Advanced V5.0. You can use this software to simulate and test your SIMATIC STEP 7 programs on a virtual controller. You can also use an API to connect the virtual controller to a system or machine simulation (co-simulation).

Basic knowledge required

The software must only be used by qualified staff.
The following knowledge is required:

- Industrial Automation and Automation Technology
- Programming with STEP 7 (TIA Portal)
- SIMATIC CPUs and CPU programming
- PC-based automation using S7-1500 and WinCC Runtime Advanced
- Knowledge of programming with C++ or C#
- PC technology
- Windows operating system

Conventions

STEP 7: In this documentation, "STEP 7" is used as a synonym for all versions of the configuration and programming software "SIMATIC STEP 7 (TIA Portal)".
We also abbreviate SIMATIC S7-PLCSIM Advanced V5.0 as "PLCSIM Advanced".

Also observe notes marked as follows:

NOTE

A note contains important information on the product described in the documentation, on the handling of the product or on the section of the documentation to which particular attention should be paid.

Scope

This function manual is valid for the following order versions

Article number	Product variants
6ES7823-1FA04-0YA5	SIMATIC S7-PLCSIM Advanced V5.0
6ES7823-1FE04-0YA5	SIMATIC S7-PLCSIM Advanced V5.0 Download

Article number	Product variants
6ES7823-1FA04-0YE5	SIMATIC S7-PLCSIM Advanced V5.0 Upgrade V1.0 -> V5.0
6ES7823-1FE04-0YE5	SIMATIC S7-PLCSIM Advanced V5.0 Upgrade V1.0 -> V5.0 Download
6ES7823-1FE00-0YN5	SIMATIC S7-PLCSIM Advanced Subscription Download

The articles each contain one license, which is valid for two instances.

Special information

NOTE

Readme

You can obtain updates to the function manual as downloads on the Internet (https://support.industry.siemens.com/cs/us/en/view/109773483).

Application examples

You can find the following application examples for S7-PLCSIM Advanced on the Internet:

- SIMATIC S7-PLCSIM Advanced: Co-Simulation via API (1 (https://support.industry.siemens.com/cs/ww/de/view/109739660/en))
- Digitalization with TIA Portal: Virtual commissioning with SIMATIC and Simulink (2 (https://support.industry.siemens.com/cs/ww/en/document/109749187))

Recycling and disposal

For environmentally sustainable recycling and disposal of your old equipment, contact a certified electronic waste disposal service and dispose of the equipment according to the applicable regulations in your country.

Industry Mall

The Industry Mall is the catalog and order system of Siemens AG for automation and drive solutions on the basis of Totally Integrated Automation (TIA) and Totally Integrated Power (TIP).

You can find catalogs for all automation and drive products on the Internet (https://mall.industry.siemens.com).

1.1 Function Manuals documentation guide

1.1.1 Information classes Function Manuals

The documentation for the SIMATIC S7-1500 automation system, for the 1513/1516pro-2 PN, SIMATIC Drive Controller CPUs based on SIMATIC S7-1500 and the SIMATIC ET 200MP, ET 200SP, ET 200AL and ET 200eco PN distributed I/O systems is arranged into three areas.

This arrangement enables you to access the specific content you require.
You can download the documentation free of charge from the Internet (https://support.industry.siemens.com/cs/ww/en/view/109742705).

Basic information

The system manuals and Getting Started describe in detail the configuration, installation, wiring and commissioning of the SIMATIC S7-1500, SIMATIC Drive Controller, ET 200MP, ET 200SP, ET 200AL and ET 200eco PN systems. Use the corresponding operating instructions for 1513/1516pro-2 PN CPUs.

The STEP 7 online help supports you in the configuration and programming.

Examples:

- Getting Started S7-1500
- System manuals
- Operating instructions ET 200pro and 1516pro-2 PN CPU
- Online help TIA Portal

Device information

Equipment manuals contain a compact description of the module-specific information, such as properties, wiring diagrams, characteristics and technical specifications.

Examples:

- Equipment manuals for CPUs
- Equipment manuals for interface modules
- Equipment manuals for digital modules
- Equipment manuals for analog modules
- Equipment manuals for communication modules
- Equipment manuals for technology modules
- Equipment manuals for power supply modules
- Equipment manuals for BaseUnits

General information

The function manuals contain detailed descriptions on general topics relating to the SIMATIC Drive Controller and the S7-1500 automation system.
Examples:

- Function Manual Diagnostics
- Function Manual Communication
- Function Manuals Motion Control
- Function Manual Web Server
- Function Manual Cycle and Response Times
- PROFINET Function Manual
- PROFIBUS Function Manual

Product Information

Changes and supplements to the manuals are documented in a Product Information. The Product Information takes precedence over the device and system manuals.
You will find the latest Product Information on the Internet:

- S7-1500/ET 200MP (https://support.industry.siemens.com/cs/de/en/view/68052815)
- SIMATIC Drive Controller (https://support.industry.siemens.com/cs/de/en/view/109772684/en)
- Motion Control (https://support.industry.siemens.com/cs/de/en/view/109794046/en)
- ET 200SP (https://support.industry.siemens.com/cs/de/en/view/73021864)
- ET 200eco PN (https://support.industry.siemens.com/cs/ww/en/view/109765611)

Manual Collections

The Manual Collections contain the complete documentation of the systems put together in one file.
You will find the Manual Collections on the Internet:

- S7-1500/ET 200MP/SIMATIC Drive Controller (https://support.industry.siemens.com/cs/ww/en/view/86140384)
- ET 200SP (https://support.industry.siemens.com/cs/ww/en/view/84133942)
- ET 200AL (https://support.industry.siemens.com/cs/ww/en/view/95242965)
- ET 200eco PN (https://support.industry.siemens.com/cs/ww/en/view/109781058)

1.1.2 Basic tools

The tools described below support you in all steps: from planning, over commissioning, all the way to analysis of your system.

TIA Selection Tool

The TIA Selection Tool tool supports you in the selection, configuration, and ordering of devices for Totally Integrated Automation (TIA).
As successor of the SIMATIC Selection Tools , the TIA Selection Tool assembles the already known configurators for automation technology into a single tool.

With the TIA Selection Tool , you can generate a complete order list from your product selection or product configuration.
You can find the TIA Selection Tool on the Internet.
(https://support.industry.siemens.com/cs/ww/en/view/109767888)

SIMATIC Automation Tool

You can use the SIMATIC Automation Tool to perform commissioning and maintenance activities on various SIMATIC S7 stations as bulk operations independent of TIA Portal.
The SIMATIC Automation Tool offers a wide range of functions:

- Scanning of a PROFINET/Ethernet system network and identification of all connected CPUs
- Assignment of addresses (IP, subnet, Gateway) and device name (PROFINET device) to a CPU
- Transfer of the date and the programming device/PC time converted to UTC time to the module
- Program download to CPU
- RUN/STOP mode switchover
- CPU localization through LED flashing
- Reading out of CPU error information
- Reading the CPU diagnostic buffer
- Reset to factory settings
- Firmware update of the CPU and connected modules

You can find the SIMATIC Automation Tool on the Internet.
(https://support.industry.siemens.com/cs/ww/en/view/98161300)

PRONETA

SIEMENS PRONETA (PROFINET network analysis) is a commissioning and diagnostic tool for PROFINET networks. PRONETA Basic has two core functions:

- In the network analysis, you get an overview of the PROFINET topology. Compare a real configuration with a reference installation or make simple parameter changes, e.g. to the names and IP addresses of the devices.
- The "IO test" is a simple and rapid test of the wiring and the module configuration of a plant, including documentation of the test results.

You can find SIEMENS PRONETA Basic on the Internet:
(https://support.industry.siemens.com/cs/ww/en/view/67460624)
SIEMENS PRONETA Professional is a licensed product that offers you additional functions. It offers you simple asset management in PROFINET networks and supports operators of automation systems in automatic data collection/acquisition of the components used through various functions:

- The user interface (API) offers an access point to the automation cell to automate the scan functions using MQTT or a command line.
- With PROFIenergy diagnostics, you can quickly detect the current pause mode or the readiness for operation of devices that support PROFIenergy and change these as needed.
- The data record wizard supports PROFINET developers in reading and writing acyclic PROFINET data records quickly and easily without PLC and engineering.

You can find SIEMENS PRONETA Professional on the Internet.
(https://www.siemens.com/proneta-professional)

SINETPLAN

SINETPLAN, the Siemens Network Planner, supports you in planning automation systems and networks based on PROFINET. The tool facilitates professional and predictive dimensioning of your PROFINET installation as early as in the planning stage. In addition, SINETPLAN supports you during network optimization and helps you to exploit network resources optimally and to plan reserves. This helps to prevent problems in commissioning or failures during productive operation even in advance of a planned operation. This increases the availability of the production plant and helps improve operational safety.

The advantages at a glance

- Network optimization thanks to port-specific calculation of the network load
- Increased production availability thanks to online scan and verification of existing systems
- Transparency before commissioning through importing and simulation of existing STEP 7 projects
- Efficiency through securing existing investments in the long term and the optimal use of resources

You can find SINETPLAN on the Internet
(https://new.siemens.com/global/en/products/automation/industrial-communication/profinet/sinetplan.html).

1.1.3 SIMATIC Technical Documentation

Additional SIMATIC documents will complete your information. You can find these documents and their use at the following links and QR codes.

The Industry Online Support gives you the option to get information on all topics. Application examples support you in solving your automation tasks.

Overview of the SIMATIC Technical Documentation

Here you will find an overview of the SIMATIC documentation available in Siemens Industry Online Support:

Industry Online Support International
(https://support.industry.siemens.com/cs/ww/en/view/109742705)

Watch this short video to find out where you can find the overview directly in Siemens Industry Online Support and how to use Siemens Industry Online Support on your mobile device:

Quick introduction to the technical documentation of automation products per video (https://support.industry.siemens.com/cs/us/en/view/109780491)

YouTube video: Siemens Automation Products - Technical Documentation at a Glance (https://youtu.be/TwLSxxRQQsA)

mySupport

With "mySupport" you can get the most out of your Industry Online Support.

Registration	You must register once to use the full functionality of "mySupport". After registration, you can create filters, favorites and tabs in your personal workspace.
Support requests	Your data is already filled out in support requests, and you can get an overview of your current requests at any time.
Documentation	In the Documentation area you can build your personal library.
Favorites	You can use the "Add to mySupport favorites" to flag especially interesting or frequently needed content. Under "Favorites", you will find a list of your flagged entries.
Recently viewed articles	The most recently viewed pages in mySupport are available under "Recently viewed articles".
CAx data	The CAx data area gives you access to the latest product data for your CAx or CAe system. You configure your own download package with a few clicks: • Product images, 2D dimension drawings, 3D models, internal circuit diagrams, EPLAN macro files • Manuals, characteristics, operating manuals, certificates • Product master data

You can find "mySupport" on the Internet. (https://support.industry.siemens.com/My/ww/en)

Application examples

The application examples support you with various tools and examples for solving your automation tasks. Solutions are shown in interplay with multiple components in the system - separated from the focus on individual products.
You can find the application examples on the Internet.
(https://support.industry.siemens.com/cs/ww/en/ps/ae)

Safety instructions 2

2.1 Security information

Siemens provides products and solutions with industrial security functions that support the secure operation of plants, systems, machines and networks.

In order to protect plants, systems, machines and networks against cyber threats, it is necessary to implement – and continuously maintain – a holistic, state-of-the-art industrial security concept. Siemens' products and solutions constitute one element of such a concept.

Customers are responsible for preventing unauthorized access to their plants, systems, machines and networks. Such systems, machines and components should only be connected to an enterprise network or the internet if and to the extent such a connection is necessary and only when appropriate security measures (e.g. firewalls and/or network segmentation) are in place.

For additional information on industrial security measures that may be implemented, please visit (https://www.siemens.com/industrialsecurity).

Siemens' products and solutions undergo continuous development to make them more secure. Siemens strongly recommends that product updates are applied as soon as they are available and that the latest product versions are used. Use of product versions that are no longer supported, and failure to apply the latest updates may increase customers' exposure to cyber threats.

To stay informed about product updates, subscribe to the Siemens Industrial Security RSS Feed visit (https://www.siemens.com/cert).

NOTE

Administrator rights

For normal operation, the standard user rights are sufficient. You need administrator rights only when you install or repair S7-PLCSIM Advanced or change the network configuration.

Product overview 3

3.1 What is S7-PLCSIM Advanced?

You use S7-PLCSIM Advanced to simulate your CPU programs on a virtual controller. You do not need any real controllers for this. You configure your CPU with STEP 7 in TIA Portal, program your application logic and then load the hardware configuration and the program into the virtual controller. From there you run your program logic, monitor the effects of simulated inputs and outputs and adapt your programs.

In addition to communication via Softbus, which limits communication to a local PC or virtual machine, S7-PLCSIM Advanced offers a full Ethernet connection and thus also supports distributed I/O systems.

S7-PLCSIM Advanced enables interaction with native C++/C# programs or simulation software over the **user interface (API)**.

Application areas

Typical application areas of S7-PLCSIM Advanced are:

- Verification of the user program (TIA Portal)
- Automatic testing of the STEP 7 program
- Software in the loop simulation for the virtual commissioning of machine tools/production machines, production cells and production lines in a plant.
- Operator training through the connection of a real HMI

Advantages

The use of S7-PLCSIM Advanced offers numerous advantages:

- Improve the quality of automation projects by early error detection
- Avoid costs for hardware in simulation environments
- Shorten commissioning time
- Reduce risk for commissioning
- Earlier training of operator is possible
- Increase production efficiency by optimizing program components
- Increase efficiency during replacement of machine components
- Increase efficiency during expansion of existing plants

3.2 S7-PLCSIM products

PLCSIM Advanced V5.0, PLCSIM V18 and PLCSIM V5.x

Table 3-1 Comparison of S7-PLCSIM products

Function	PLCSIM Advanced V5.0	PLCSIM V18	PLCSIM V5.x
Runtime	Independent	Programming with STEP 7	Programming with STEP 7
User interface	Control Panel/PLCSIM V18 UI	Innovated user interface	Look&Feel of STEP 7 V5.x
Communication	Softbus [4], TCP/IP	Softbus [4]	Softbus [4]
Supported CPU families	S7-1500 (C, T, F), S7-1500R/H, SIMATIC Drive Controller, ET 200SP, ET 200SP F, ET 200pro, ET 200pro F, SIPLUS CPUs (S7-1500; Standard and F-CPUs, S7-1500R/H and ET 200SP; Standard and F-CPUs)	S7-1200 (F), S7-1500 (C, T, F), 1500R/H, SIMATIC Drive Controller, ET 200SP, ET 200SP F, SIPLUS CPUs (S7-1500; Standard and F-CPUs, S7-1500R/H and ET 200SP; Standard and F-CPUs)	S7-300, S7-300F, S7-400, S7-400F
API for co-simulation[1]	✓	-	-
Web server	✓, via TCP/IP	-	-
ODK	✓	-	-
OPC UA	✓, via TCP/IP	-	-
Process diagnostics	✓	✓	-
S7 communication	✓	Using Softbus	Using Softbus
Open user communication	✓, UDP via TCP/IP	Using Softbus	-
Secure Communication	✓, via TCP/IP	-	-
Traces[2]	✓	-	-
Motion[3]	✓	✓	-
Protected blocks (KHP)	✓	✓, for S7-1500 CPUs only	-
Multiple instances	Up to 16	Up to 2	-
Support of distributed instances	✓, via TCP/IP	-	-
Virtual time	✓	-	-
Connection of real CPUs/HMIs	✓, via TCP/IP	-	-
DHCP/DNS use	✓, via TCP/IP	-	-
Virtual memory card	✓	-	-

1 Via C++ and C# programs and simulation software

2 Can be monitored with PLCSIM V16 and higher in the TIA Portal; can also be monitored with PLCSIM Advanced V3.0 and higher on the Web server.

3 With PLCSIM V16 and higher, the axes are always in simulation mode irrespective of the axis configuration.

4 You can find more information on Softbus in the "Communication" section.

Function	PLCSIM Advanced V5.0	PLCSIM V18	PLCSIM V5.x
Communication between the instances	-	PLCSIM as of V12 and PLCSIM V5.x can be installed and operated on the same PC or the same virtual machine.	
	-	Instances of PLCSIM as of V12 can communicate via Softbus with PLCSIM V5.x.	
	PLCSIM Advanced V3.0 and higher and PLCSIM V15 and higher can be installed and operated on the same PC or the same virtual machine. The communication between the two applications **cannot** be simulated.		-
	PLCSIM V5.4 SP8 is automatically installed with PLCSIM Advanced. The communication between the two applications can be simulated. Instances of PLCSIM Advanced can communicate via Softbus with PLCSIM ≥ V5.4 SP8.		

[1] Via C++ and C# programs and simulation software

[2] Can be monitored with PLCSIM V16 and higher in the TIA Portal; can also be monitored with PLCSIM Advanced V3.0 and higher on the Web server.

[3] With PLCSIM V16 and higher, the axes are always in simulation mode irrespective of the axis configuration.

[4] You can find more information on Softbus in the "Communication" section.

3.3 Compatibility in case of updates

Compatibility of API and Runtime Manager versions

S7-PLCSIM Advanced V5.0 contains the Runtime Manager version V5.0 and the API versions V1.0 (SP1) to V5.0. The task of the Runtime Manager is to establish a connection to S7-PLCSIM Advanced.

When S7-PLCSIM Advanced V5.0 is installed, any existing, earlier version is updated. The Runtime Manager of S7-PLCSIM Advanced V5.0 is compatible with projects that were created with earlier API versions. You can therefore continue to use already created projects.

NOTE

An API with a higher version number (e.g. V5.0) cannot connect to an earlier Runtime Manager version (e.g. V1.0).

Introductory information on the components of the Runtime simulation can be found in the section User interfaces (API) (Page 98).

Compatibility with TIA Portal and with CPU firmware versions

The firmware used in S7-PLCSIM Advanced V5.0 corresponds to that of a CPU S7-15xx V3.0.

The firmware is compatible to the TIA Portal versions V14 to V18.

Table 3-2 Compatibility with CPU firmware versions

S7-PLCSIM Advanced	Supported CPU firmware version
V1.0	V1.8, V2.0.1
V1.0 SP1	V1.8, V2.0.1

S7-PLCSIM Advanced	Supported CPU firmware version
V1.0 SP1 Upd1	V1.8, V2.0.1
V2.0	V1.8 to V2.5.0
V2.0 Upd1	V1.8 to V2.5.2
V2.0 SP1	V1.8 to V2.6.0
V2.0 SP1 Upd1	V1.8 to V2.6.1
V3.0	V1.8 to V2.8.1
V3.0 Upd1	V1.8 to V2.8.1
V3.0 Upd2	V1.8 to V2.8.3
V4.0	V1.8 to V2.9.2
V4.0 SP1	V1.8 to V2.9.4
V5.0	V1.8 to V3.0

The following figure shows the compatibility between the API and the Runtime Manager (RT Manager) using the example of versions V4.0 and V5.0:

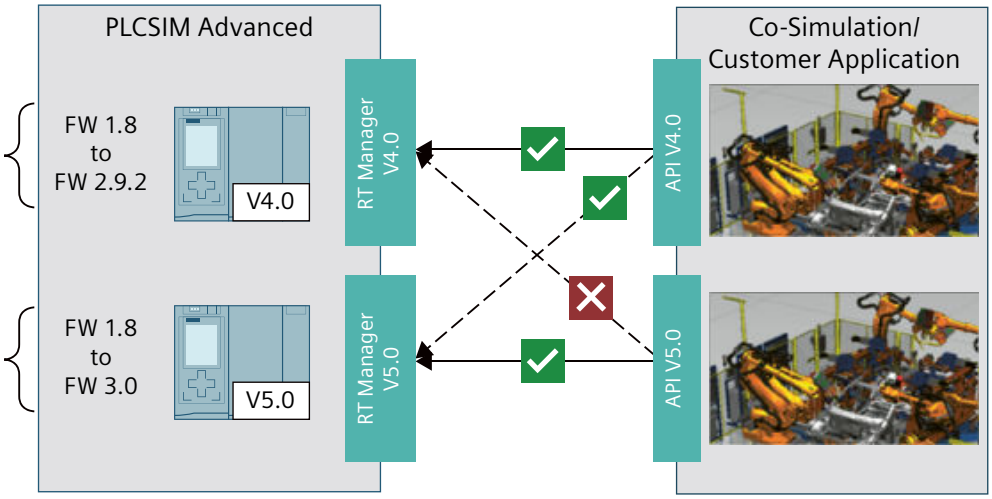

Figure 3-1 Compatibility

NOTE

Password encryption in case of updates

When a TIA Portal project is updated from CPU firmware version < V2.0 to CPU firmware version ≥ V2.0, the following error message is displayed during a download of the project to SIMATIC S7-PLCSIM Advanced ≥ V4.0:

"Loading of hardware configuration failed (0020 -3 2 0). Please check the diagnostic buffer of the target hardware."

To successfully download such a project to SIMATIC S7-PLCSIM Advanced ≥ V4.0, click on the "Update password encryption" button while updating the project.

3.4 Security for S7-PLCSIM Advanced

Restrictions for security

Note the following restrictions when using S7-PLCSIM Advanced:

Authentication

- The user interfaces (API) do not have options for authentication and authorization. There is no protection using user accounts and passwords.
- The Runtime Manager communication is not protected by authentication.

Communication

- The multi-computer simulation communication is not encrypted.
- A TCP/IP port is opened on the PC for cross-network communication.
- The installed Npcap program library provides access to TCP/IP network communication.

NOTE

For cross-computer communication, use a closed simulation network that is not connected to a production network.

Know-how protection

NOTE

Know-how protected blocks

If know-how-protected blocks for the simulation support are enabled, the know-how protection is limited.

NOTE

CPU function libraries for ODK

The SO files (shared object files) for ODK are not know-how-protected. The customer is responsible for the SO files and its know-how protection.

3.5 Support simulation

Requirement for simulation

NOTE
Enable simulation capability
To use a STEP 7 project with simulation, you must select the "Support simulation during block compilation" option in the "Protection" tab in the properties of the project and confirm with OK.

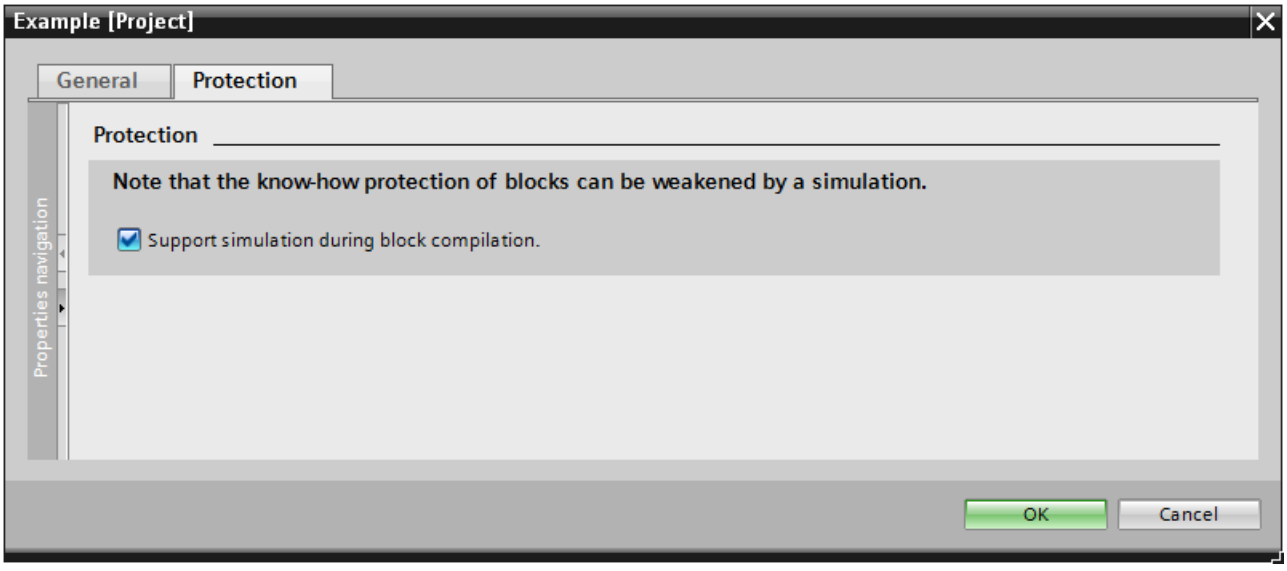

Figure 3-2 Enable simulation capability

Know-how protection

If a know-how-protected block is to be used for the simulation, it must be unlocked by entering a password.
After you have unlocked the know-how-protected block, you can activate the option "Simulability with SIMATIC S7-PLCSIM (Advanced)". You will find the option in the properties of the block in the "General > Compilation" tab.
Additional information can be found on the Internet (https://support.industry.siemens.com/cs/ww/en/view/109754928).

Global libraries

You cannot use know-how protection with global libraries, because the libraries are write-protected.
The "Simulation with SIMATIC S7-PLCSIM Advanced" option must be set when generating the blocks (source of the blocks).

3.6 Supported CPUs

Supported CPUs from the S7-1500 family

S7-PLCSIM Advanced V5.0 supports the simulation of the following CPUs:

Table 3-3 Supported CPUs

Type	Firmware version V1.8 to V3.0	
	Standard	**Fail-safe**
CPUs[1]	CPU 1511-1 PN CPU 1513-1 PN CPU 1515-2 PN CPU 1516-3 PN/DP CPU 1517-3 PN/DP CPU 1518-4 PN/DP CPU 1518-4 PN/DP ODK CPU 1518-4 PN/DP MFP	CPU 1511F-1 PN CPU 1513F-1 PN CPU 1515F-2 PN CPU 1516F-3 PN/DP CPU 1517F-3 PN/DP CPU 1518F-4 PN/DP CPU 1518F-4 PN/DP ODK CPU 1518F-4 PN/DP MFP
Compact CPUs[2]	CPU 1511C-1 PN CPU 1512C-1 PN	-
ET 200SP CPUs[1]	CPU 1510SP-1 PN CPU 1512SP-1 PN CPU 1514SP-2 PN CPU 1514SP T-2 PN	CPU 1510SP F-1 PN CPU 1512SP F-1 PN CPU 1514SP F-2 PN CPU 1514SP TF-2 PN
Technology CPUs	CPU 1511T-1 PN CPU 1515T-2 PN CPU 1516T-3 PN/DP CPU 1517T-3 PN/DP CPU 1518T-4 PN/DP	CPU 1511TF-1 PN CPU 1515TF-2 PN CPU 1516TF-3 PN/DP CPU 1517TF-3 PN/DP CPU 1518TF-4 PN/DP
R/H-CPUs[2]	CPU 1513R-1 PN CPU 1515R-2 PN CPU 1517H-3 PN	CPU 1518HF-4 PN
ET 200pro CPUs	CPU 1513pro-2 PN CPU 1516pro-2 PN	CPU 1513pro F-2 PN CPU 1516pro F-2 PN
SIMATIC Drive Controller	-	CPU 1504D TF CPU 1507D TF

[1] SIPLUS CPUs are supported. They are of the same design as the standard and fail-safe CPUs listed here with their own article numbers. The article numbers of the respective SIPLUS CPUs are part of the API.

[2] The on-board I/O of the CPUs is not simulated. The simulation interface corresponds to the process image.

Unsupported CPUs

S7-PLCSIM Advanced does not support the simulation of the following CPUs:

- ET 200SP Open Controller CPU 1515SP PC and S7-1500 Software Controller
- S7-1200 CPUs
  To simulate CPUs of the S7-1200 product family, use S7-PLCSIM. You can find more information on S7-PLCSIM on the Internet (https://support.industry.siemens.com/cs/ww/en/view/109797780).

If you download a TIA Portal project whose configuration includes an unsupported CPU, the following error message appears:

"Loading of hardware configuration failed (0020 -3 2 0). Please check the diagnostic buffer of the
target hardware."
In this case, use a similar, supported CPU or a supported predecessor version of the relevant CPU.

3.7 Differences between a simulated and a real CPU

The virtual controller cannot fully simulate a real CPU down to the individual details. Even if a program is downloaded without errors to the CPU and running successfully, this does not necessarily mean that the virtual controller in the simulation behaves exactly like a real CPU.

Deterministic

S7-PLCSIM Advanced runs on a PC with the Windows operating system. The scan cycle time and the exact time of actions in S7-PLCSIM Advanced are not the same as when these actions run on physical hardware. This is because several programs share the processing resources on your PC.
To provide the best possible deterministic behavior under these conditions, S7-PLCSIM Advanced as of V2.0 requires one free Core (CPU core) per instance. Information on the minimum requirements for the computer hardware or a virtual machine can be found in the section System Requirements (Page 31).
If your program depends heavily on the time required to execute actions, then make sure that you do not evaluate your program based only on the results of the simulation time.

Know-how protection

Projects with know-how protection for blocks can only be simulated if they are enabled for simulation. You need the block password for this purpose.

Instructions

Instructions are simulated with a few exceptions, see Restrictions for instructions (Page 339).
Programs that are based on the instructions behave differently than real CPUs in the simulation.

Display of the quantity structure

In STEP 7, the maximum quantity structure based on the CPU 1518-4 PN/DP is shown in the project tree under "Program information" for all the CPUs.
The maximum quantity structure of the simulated CPU is displayed under "Online & Diagnostics".

S7-1500R/H

For communication with other devices, you can configure system IP addresses in STEP 7 for a redundant S7-1500R/H system.

3.7.1 Restrictions for all supported CPUs

Fieldbus systems

S7-PLCSIM Advanced does not simulate fieldbus systems (PROFINET IO, PROFIBUS DP).

Intelligent I/O devices (I-devices)

S7-PLCSIM Advanced does not simulate I-Device functionality.

I/O

S7-PLCSIM Advanced simulates the real CPU, but not configured I/O modules and the on-board I/O of the compact CPUs.

Removal and insertion

In contrast to real systems, S7-PLCSIM Advanced allows the removal and insertion of head modules in distributed I/O systems.

Communications modules and communications processors

S7-PLCSIM Advanced does not support CMs and CPs and the related features such as "Access to PLC via communications module".

Diagnostics / diagnostic alarms

With the AlarmNotification() API method, simple diagnostic buffer entries can be simulated in S7-PLCSIM Advanced according to the PROFINET standard.
PROFIBUS-specific diagnostics (e.g. via DS0, DS1) and user-specific text lists are not supported.

Online and diagnostic functions

Certain online and diagnostic functions (e.g. the "Firmware update" function) are not supported.

Copy protection

S7-PLCSIM Advanced does not simulate copy protection.

Limited support

S7-PLCSIM Advanced simulates some functions to a limited extent. You can find an overview in the section Restrictions, messages and solution (Page 336).

3.7.2 Notes

Password applied during CPU swap

Depending on the firmware version of the CPUs affected (the CPU to be replaced and the replacement CPU), you are either offered an update to the latest algorithm or prompted to assign a new password because the replacement CPU cannot use the existing password configuration.

If the CPU to be replaced and the replacement CPU are identical in terms of the algorithm used, no action is required: the password configuration and the other parameter settings are transferred.

S7-PLCSIM Advanced does not support any password encryption for CPU versions with firmware less than V2.0.

In order to use protection levels, the Web server and the access protection of the F-CPU in the simulation, click on the "Update password encryption" button. The button is located in the CPU properties in the "Protection & Security" tab under "Access level".

HMI devices and CPU protection levels

- S7-PLCSIM Advanced supports SIMATIC HMI devices as of version 14. Connections to SIMATIC HMI devices prior to V14 are not supported.
- S7-PLCSIM Advanced supports protection levels if the virtual S7-1500 controller is configured with a firmware version V2.0 or higher.
- It is possible to connect SIMATIC HMI devices as of V14 to virtual S7-1500 controllers that are configured with a firmware version V2.0 or higher, with or without protection levels.
- It is possible to connect SIMATIC HMI devices as of V14 to virtual S7-1500 controllers which are configured with a firmware version lower than V2.0 without protection levels.

Solution

To establish a connection to the SIMATIC HMI device V13 or earlier, you have to update this SIMATIC HMI device to version V14.

To establish a connection from the virtual controller that is configured with a firmware version lower than V2.0 to the SIMATIC HMI device, you have to remove existing protection levels from the project.

Safety system versions

To successfully simulate and test a project with fail-safe input and output modules, you need to use safety system version V1.6, V2.0, V2.1, V2.2, V2.3, V2.4 or V2.5. Simulation of the fail-safe input and output modules does not work correctly with an older version.

Priority for hardware interrupt OB

The hardware interrupts triggered via the S7-PLCSIM Advanced API are transmitted in sequence to the user program.

The priority of the assigned hardware interrupt OB determines the sequence of execution only if events occur simultaneously.

Technology module TM Count - Error message of instruction High_Speed_Counter

When you are using S7-PLCSIM Advanced for the simulation of a high-speed counter in a TM Count technology module, the instruction High_Speed_Counter signals an error 16#80C7.

The instruction High_Speed_Counter expects that the module has set a bit for "Status ready" (STS_READY). Because S7-PLCSIM Advanced does not simulate the module behavior, the instruction signals an error.

The STS_READY bit is located in the input area of the module at offset 13.4. When the input area of your TM Count module starts at %I32, for example, the STS_READY bit is located at %I45.4.

To prevent this error message of the High_Speed_Counter instruction, set the STS_READY bit accordingly.

3.8 Password to protect confidential configuration data

As of STEP 7 V17, you have the option of assigning a password to protect confidential configuration data of the respective CPU as of FW version V2.9. This refers to data such as private keys that are required for the proper functioning of certificate-based protocols.

Assign a password to protect confidential configuration data

You assign the password in STEP 7, in the CPU properties, in the area "Protection & Security > Protection of the PLC configuration data".

You can use the same password for a PLCSIM Advanced instance as for the real CPU. This makes it easier for you to assign it uniquely.

PLCSIM Advanced stores the password encrypted in a file on the virtual memory card. The handling of the password is the same as with the real CPU.

Only the current, active Windows user and no other user is allowed to read the password for the protection of confidential configuration data on the computer.

NOTE

Note that your Windows password protects the password used to protect confidential configuration data. Therefore, you are not allowed to share the Windows password with other, untrustworthy users.

Additional information

Detailed information on the protection of confidential configuration data and on secure communication can be found in the Communication function manual (https://support.industry.siemens.com/cs/ww/en/view/59192925).

Special use cases

Move the virtual SIMATIC memory card to another virtual machine (e.g. SIMIT)

If you have not set a password to protect confidential configuration data, there are no restrictions on move operations.

If you have specified the password to protect confidential configuration data, the following restriction applies:

When you move the virtual memory card from one computer to another, you cannot start the PLCSIM Advanced instance on the new system.

NOTE

To ensure maximum security on your systems, the password for protecting confidential configuration data is not available on a new system. You must reset the password again in the new system.

Solution:

The computer is part of an Active Directory.

The password encryption is linked to the Windows user. When you use the same Active Directory user in your domain on another computer, you can start PLCSIM Advanced instances there.

SIMIT archives the virtual SIMATIC memory card as a ZIP file. and another user/computer is trying to restart this simulation

Solution:

1. Remove the password for protecting confidential configuration data from the STEP 7 project.
2. Load the project to the virtual controller.

You can move the virtual memory card to other computers without any restrictions.

Switching on the PLCSIM Advanced instance without valid password

When you switch on an instance and the password for the protection of confidential configuration data is incorrect, the instance restarts automatically and switches to the STOP operating state. ERROR LED flashes red.

Solution:

1. Enter the password to protect the confidential configuration data in STEP 7 or via the SIMATIC Automation Tool.
2. Restart the instance.

Editing an instance created with PLCSIM Advanced V4.0 and higher using PLCSIM Advanced API V3.0

You have assigned a password to protect confidential configuration data for the real CPU.

NOTE

Editing an instance created with PLCSIM Advanced using PLCSIM Advanced API V3.0 with the functions ArchiveStorage() and RetrieveStorage()

When you edit an instance created with PLCSIM Advanced V4.0 or higher with the API functions ArchiveStorage() and RetrieveStorage() of V3.0, API V3.0 does not save the entire card content of the virtual memory card. The retain.pms and sim_hwdb.ini files are missing.

This means that the password to protect confidential configuration data is not saved and will be lost.

Solution:

You have a variety of solution options:

- Set the password to protect the confidential configuration data before each simulation again using STEP 7, the SIMATIC Automation Tool or TIA Portal Openness.
- Establish a remote connection of the instance via the Runtime Manager even when the instance communicates locally. In this case, the password is saved to the virtual memory card.
- Do not assign a password to protect confidential configuration data.

Installing

4

4.1 Introduction

4.1.1 System requirements

You should preferably install PLCSIM Advanced on a SIMATIC Field PG M5 Advanced or comparable PC.

For PLCSIM Advanced to operate efficiently, the following minimum requirements for computer hardware or for a virtual machine must be met.

Table 4-1 System requirements

	Hardware	Virtual machine
Processor	• At least one core Intel® Core™ i7 6th Generation or one x86 processor from another manufacturer per instance started. • At least one additional core for the operating system • At least one additional core for the additional active applications	• One virtual CPU per started instance has to be assigned to the VM • A corresponding number of processors has to be physically available on the host • At least one additional core for the operating system • At least one additional core for the additional active applications • At least two cores, if STEP 7 (TIA Portal) is installed on the VM
RAM	• 1 GB per started instance • At least 4 GB for the Windows operating system • Additional RAM corresponding to the requirements of the remaining active applications	• 1 GB per started instance • At least 4 GB for the Windows operating system • Additional RAM corresponding to the requirements of the remaining active applications • At least 8 GB, if STEP 7 (TIA Portal) is installed on the VM
Free hard disk space	5 GB	5 GB
Screen resolution	Minimum 1024 x 768	Minimum 1024 x 768

Operating systems (64-bit versions)

PLCSIM Advanced V5.0 supports the following operating systems

- Windows 10 Home Version 2009/20H2
- Windows 10 Professional Version 2009/20H2
- Windows 10 Professional Version 21H1
- Windows 10 Professional Version 21H2
- Windows 10 Enterprise Version 2009/20H2
- Windows 10 Enterprise Version 21H1
- Windows 10 Enterprise Version 21H2
- Windows 10 Enterprise 2016 LTSB

- Windows 10 Enterprise 2019 LTSC
- Windows 10 Enterprise 2021 LTSC
- Windows Server 2016 Standard (full installation)
- Windows Server 2019 Standard (full installation)
- Windows Server 2022 Standard (full installation)
- Windows 11 Home Version 21H2
- Windows 11 Pro Version 21H2
- Windows 11 Enterprise 21H2

For more detailed information on operating systems, refer to the help on Microsoft Windows or the Microsoft homepage.

Some products might also support additional Windows versions. You can find more information in the product-specific requirements or check the compatibility with the compatibility tool. The compatibility tool is available on the Internet (https://support.industry.siemens.com/kompatool/pages/main/index.jsf?).

NOTE

Make sure that the Windows operating system you are using is up to date.

Virtualization platforms

You can install STEP 7 and PLCSIM Advanced on a virtual machine. For this purpose, use one of the following virtualization platforms in the specified version or a newer version:

- VMware vSphere Hypervisor (ESXi) 6.7
- VMware Workstation Pro 15.5.0
- VMware Player 15.5.0
- Microsoft Hyper-V Server 2019

The information that you need to install STEP 7 (TIA Portal) on a virtual machine is available on the Internet (https://support.industry.siemens.com/cs/ww/en/view/78788417).

4.1.2 Restrictions due to antivirus programs

NOTICE
Restrictions due to virus scanners and Advanced Threat Protection software (ATP software) Virus scanners and ATP software that monitor the behavior of processes and communication can have a significant influence on the performance of the runtime and communication of PLCSIM Advanced and even prevent PLCSIM Advanced instances from starting.

Solution

You can decrease restrictions during installation and runtime of PLCSIM Advanced. To do so, define exceptions for the virus scanner for secure files and folders.

Procedure

Add the following folders to the exceptions:

- "C:\Program Files\Common Files\Siemens\PLCSIMADV\Drivers"
- "C:\Program Files (x86)\Common Files\Siemens\PLCSIMADV"
- "C:\Program Files (x86)\SIEMENS\Automation\PLCSIMADV\bin"

If the virus scanner only allows files as exceptions, add all files from the listed folders to the exceptions. The procedure is described in the instructions of the respective manufacturer.

NOTE

Readme

You can obtain updates to the topic as downloads on the Internet (https://support.industry.siemens.com/cs/us/en/view/109773483).

Supported antivirus programs

PLCSIM Advanced supports the following virus scanners:

- Symantec Endpoint Protection 14.3
- McAfee Endpoint Security (ENS) 10.6
- McAfee Endpoint Security (ENS) 10.7
- Trend Micro Office Scan 12.0
- Windows Defender (as part of the Windows operating system)
- Qihoo 360 "Safe Guard 12.1" + "Virus scanner"

Known problems and limitations

CrowdStrike Falcon

This software prevents starting a PLCSIM instance.

Solution:

Define exceptions for this software for secure files and folders.

4.1.3 Licenses

Floating license

PLCSIM Advanced is supplied with a floating type license which is version and/or time-dependent. The license can be stored locally and shared for a network.

NOTE
Validity
A license is valid for two instances within a PLCSIM Advanced installation.
PLCSIM Advanced V5.0 can only be used with a V5.0 license.

Handling of licenses is described in the Help for SIMATIC Automation License Manager (ALM).

4.1.4 Trial License

A license is available for the limited period of 21 days for S7-PLCSIM Advanced V5.0. After this Trial License has elapsed, you can no longer start the instance.

Activating the Trial License

As soon as you start an instance in the Control Panel, the Automation License Manager (ALM) searches the network for a valid license. If a Floating License is available for S7-PLCSIM Advanced, the ALM offers the Trial License for activation.

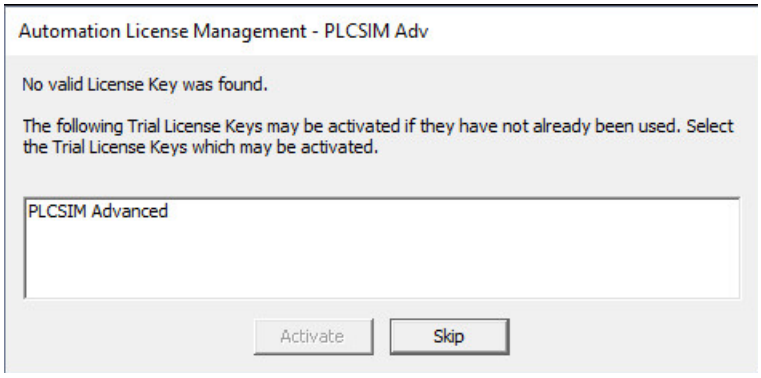

Figure 4-1 Activating the Trial License

A message at the start of an instance shows the remaining number of days.

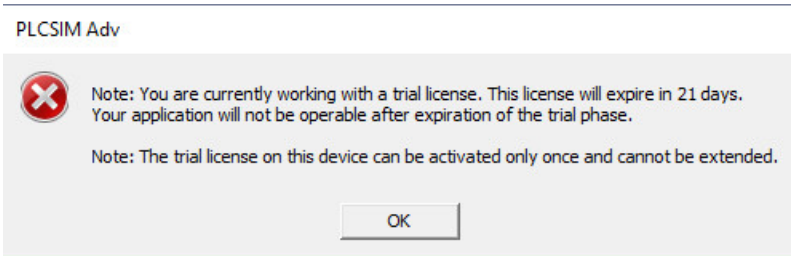

Figure 4-2 Trial License

NOTE

Remote access

With remote access you have to confirm the message on the PC on which the instance was started.

Timeout

If you do not confirm the message for the license in a certain amount of time, the instance is not started and the following message appears:

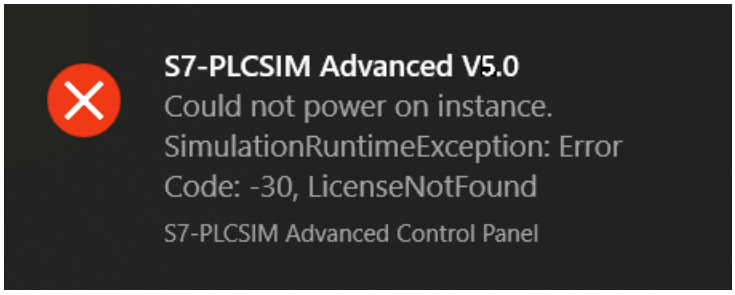

Figure 4-3 Timeout

Solution

Start the instance again and confirm the message for the license.

API functions for licenses

PLCSIM Advanced regularly checks whether a license is available. The following return values provide information about the status (for example, for C++):

- Return values for API function `PowerOn()` and callback function `OnOperatingStateChanged`
  - `SREC_OK` when a floating license is available.
  - `SREC_WARNING_TRIAL_MODE_ACTIVE` when an instance is started with the Trial License.

  - `SREC_WARNING_RUNNING_ON_TIA_PORTAL_TEST_SUITE` when no valid license for PLCSIM Advanced is available, but a "TIA Portal Test Suite" license is available.

    PLCSIM Advanced starts with this license. A download from the TIA Portal is possible, but the instance terminates without feedback if the download was not made from the TIA Portal Test Suite.
  - `SREC_NOT_EMPTY` when no valid license for PLCSIM Advanced is available, but a "TIA Portal Test Suite" license is available.

    If this is the case, power-up from the Virtual SIMATIC Memory Card is not supported.
- Return value for callback function `OnOperatingStateChanged`
  - `SREC_LICENSE_NOT_FOUND` when the instance is automatically shut down after 21 days.

4.1.5 Installation log

The log files contain automatically recorded information on the following installation processes:

- Installation of S7-PLCSIM Advanced
- Change or update of installation of S7-PLCSIM Advanced
- Repair of an existing installation of S7-PLCSIM Advanced
- Uninstallation of S7-PLCSIM Advanced

You can evaluate installation errors and warnings using the log files. You can troubleshoot the installation yourself or contact Siemens Technical Support. Product Support personnel need information from the installation log to analyze the problem. Send the folder with the log files as a ZIP file to Support.

Memory location of the installation log

The memory location of the log file depends on the operating system. To open the folder with the log files, enter the environment variable "%autinstlog%" in the address bar in Windows Explorer. Alternatively, you reach the appropriate folder by entering "cd %autinstlog%" in the command line.

The log files are named as follows:

- "SIA_S7-PLCSIM_Advanced_V05@<DATE_TIME>.log"
- "SIA_S7-PLCSIM_Advanced_V05@<DATE_TIME>_summary.log"

Setup_Report (CAB file)

The installation log and other required files are stored in a log file. This file can be found at "%autinstlog%\Reports\Setup_report.cab".

A separate CAB file with a date ID is saved for each installation.

If you need help during installation, send this CAB file to Siemens Technical Support for troubleshooting.

4.2 S7-PLCSIM Advanced

The S7-PLCSIM Advanced package contains the following software:

- S7-PLCSIM Advanced
- Automation License Manager
- S7-PLCSIM
- .NET Framework
- Npcap

The package is available as a download and on DVD:

- SIMATIC S7-PLCSIM Advanced V5.0 floating license
- Upgrade SIMATIC S7-PLCSIM Advanced V4.0 → V5.0

After installing PLCSIM Advanced, keep the DVD in a secure, easily accessible place.

Setup program

You can use the Setup program to change, repair, or uninstall your installation, if necessary.

4.3 Installing S7-PLCSIM Advanced

Installation requirements

The Setup program starts automatically with a double-click on the download package or when you insert the DVD in the drive. Make sure that the following conditions are met before you begin the installation process:

- The hardware and software of the computer meet the System requirements (Page 31).
- You have administrator rights on the installation computer.
- No other programs are active. This also applies to the Siemens Automation License Manager and other Siemens applications.
- All TIA Portal versions prior or equal to V14 are uninstalled.

NOTE

Security settings

For licensing via the ALM, you must agree during installation that port 4410 for TCP can be entered as an exception in the Windows Firewall (procedure step 5).

NOTE

Use of virus scanners

Note the information provided in section Restrictions due to antivirus programs (Page 32).

Installing S7-PLCSIM Advanced

To install, follow these steps:

1. Double-click the download package or insert the installation medium into the DVD drive of your computer. The setup program starts up automatically, provided you have not disabled the Autostart function on the computer. If the setup program does not start up automatically, start it manually by double-clicking the "Start.exe" file. The "General settings" window is displayed.
2. Click the "Read installation notes" button. After you have read the notes, close the file.
3. Click the "Read product information" button. After you have read the information, close the file.
4. Click "Next". The window with the products to be installed is displayed.
5. Select the products to be installed.
6. Click the "Browse" button if you want to change the default installation path. The installation path must not exceed 89 characters. The path name must not contain any UNICODE characters. If you select a different installation path than the default installation path, the desktop icon may not be displayed correctly.
7. Click "Next". The window with the security settings is displayed. To continue the installation, select the check box at the bottom of the screen to accept changes to the security and permissions settings of your system.
8. Click "Next". The window with the installation settings is displayed. You can save or print a report of the settings by clicking "Save report" or "Print report". Check the settings for correctness. If you want to make any changes, click "Back" until you reach the point in the installation process where you want to make changes. Once you have completed your changes, click "Next".
9. The overview screen shows your installation details. Click the "Install" button. The installation then starts.
10. After completion of the setup program, you must restart your computer. Select "Yes, I want to restart the computer now" to restart the computer immediately or select "No, I will restart computer later" to restart the computer later.
11. Click "Restart". If the computer is not restarted, click "Finish".

Error during installation of S7-PLCSIM Advanced

The installation of S7-PLCSIM Advanced recognizes an already existing installation of S7-PLCSIM Advanced.

A requirement for the installation of S7-PLCSIM Advanced is that no other S7-PLCSIM installation prior or equal to TIA Portal version V14 is located on the same computer.

Even though no installation of S7-PLCSIM is displayed in the "Programs and Features" list, it is still possible that the computer has an existing installation.

Remedy

Run the setup for S7-PLCSIM prior or equal to TIA Portal version V14 and uninstall S7-PLCSIM.

When the setup is not available, download the setup files for S7-PLCSIM via Siemens Mall (https://support.industry.siemens.com/cs/ww/en/view/65601780).

4.4 Changing S7-PLCSIM Advanced

Requirements

The following conditions must be met before you can change the installation:

- The hardware and software of the computer meet the system requirements.
- You have administrator rights on the installation computer.
- No other programs are active.

Procedure

To change your S7-PLCSIM Advanced installation, follow these steps:

1. Double-click the download package or insert the installation medium into the drive. The setup program starts up automatically, provided you have not disabled the Autostart function on the computer. If the setup program does not start up automatically, start it manually by double-clicking the "Start.exe" file.
2. Follow the prompts until you reach the "Configuration" window.
3. Select the "Change upgrade" check box.
4. Follow the remaining prompts to change your installation.
5. Complete the installation operation by restarting your computer.

NOTE
Target directory
You cannot change the target directory because you are changing an existing installation.

4.5 Repairing S7-PLCSIM Advanced

Requirements

The following conditions must be met before you can repair S7-PLCSIM Advanced:

- The hardware and software meet the system requirements.
- You have administrator rights on the installation computer.
- No other programs are active.

Procedure

To repair your installation, follow these steps:

1. Double-click the download package or insert the installation medium into the drive. The setup program starts up automatically, provided you have not disabled the Autostart function on the computer. If the setup program does not start up automatically, start it manually by double-clicking the "Start.exe" file.
2. Follow the prompts until you reach the "Configuration" window. Select the "Repair" check box.

3. Follow the remaining prompts to repair your installation.
4. Complete the repair operation by restarting your computer.

4.6 Uninstalling S7-PLCSIM Advanced

You have two options for uninstalling S7-PLCSIM Advanced:

- Uninstalling the program via the Windows Control Panel
- Uninstalling the entire product via the Setup program.

Uninstalling S7-PLCSIM Advanced using the Windows Control Panel

Proceed as follows:

1. Double-click the "Programs and Features" option in the Windows Control Panel.
2. Right-click on "SIMATIC S7-PLCSIM Advanced V5.0" and select "Uninstall".
3. Follow the prompts for uninstallation.
4. Complete the uninstallation operation by restarting your computer.
   If you do not perform a restart, the Runtime Manager continues running.

If problems occur when uninstalling PLCSIM Advanced using the Windows Control Panel, use the installation medium for uninstalling.

Uninstalling S7-PLCSIM Advanced using the Setup program

Proceed as follows:

1. Double-click the download package or insert the installation medium into the drive. The setup program starts up automatically, provided you have not disabled the Autostart function on the computer. If the setup program does not start up automatically, start it manually by double-clicking the "Start.exe" file.
   If you do not perform a restart, the Runtime Manager continues running.
2. Follow the prompts until you reach the "Configuration" window. Your previous installation is detected. Select the "Uninstall" check box.
3. Follow the prompts for uninstallation.
4. Complete the uninstallation operation by restarting your computer.
   If you do not perform a restart, the Runtime Manager continues running.

Uninstalling additional software

When you uninstall S7-PLCSIM via the setup program, the following software from the S7-PLCSIM Advanced package remains installed:

- Automation License Manager
- S7-PLCSIM
- .NET Framework
- Npcap

If you also want to uninstall this software, use the Windows Control Panel.

NOTE
User data
User data, such as instance data, is not removed by the uninstallation.

Communication paths

5

Local and distributed communication

The following paths are open for communication between STEP 7 V15 or higher and the instances of PLCSIM Advanced user interfaces:

Table 5-1 Local and distributed communication

Communication paths	Local	Local	Distributed
Protocol	Softbus	TCP/IP	TCP/IP
Communication interface in PLCSIM Advanced	PLCSIM	PLCSIM Virtual Ethernet Adapter	PLCSIM Virtual Ethernet Adapter
STEP 7 and instances	On a PC / VM	On a PC / VM	Distributed
Communication...			
Between STEP 7 and instances	Yes	Yes	Yes
Among instances	Yes	Yes	Yes
Via OPC UA server and Web server	No	Yes	Yes
Between an instance and a real hardware CPU	No	No	Yes
Between an instance and a real HMI V14 and higher	No	No	Yes
Between an instance and a simulated HMI V14 and higher	Yes	Yes	Yes
Secure communication...			
Via Secure Open User Communication (secure TCP communication) V17 and higher	No	Yes	Yes
Via OPC UA Server V17 and higher	No	Yes	Yes
Via HTTPS connections to the Web server TIA Portal version V17 and higher	No	Yes	Yes

Softbus

Softbus is a communication path via a virtual software interface.

The communication is limited to a local PC or a virtual machine. The advantage here is that no data can be accidentally downloaded to a hardware CPU or communicate with real hardware.

Selecting a communication interface

You program the communication interface via the user interfaces (API) or select them in the Control Panel under "Online Access". The setting is valid for all generated instances. The default setting is the communication via "PLCSIM" (Softbus).

Additional network settings are necessary for the distributed communication via the "PLCSIM Virtual Ethernet Adapter" (TCP/IP), see Network addresses in the simulation (Page 68).

API functions for selecting the communication interface

The following API functions are available for selecting the communications interface:

- GetCommunicationInterface() (Page 148-149)
- SetCommunicationInterface() (Page 148-149)
- CommunicationInterface { get; set; } (Page 148-149)

5.1 Local communication

Local communication can be performed via the Softbus protocol or TCP/IP.

For local communication, the PLCSIM Advanced instance is on the same PC or on the same virtualization platform such as STEP 7 or another communication partner.

Local communication via Softbus

Local communication is performed via Softbus in PLCSIM Advanced by default.

Local communication via Softbus prevented:

- an accidental download to a hardware CPU
- a communication with real hardware

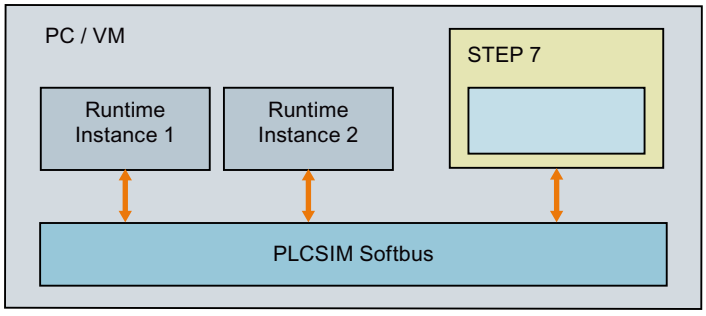

Figure 5-1 Local communication via Softbus

Local communication via TCP/IP

Communication is performed via the PLCSIM Virtual Ethernet Adapter, a virtual network interface that behaves like a real network interface.

NOTE

Local communication via TCP/IP

Make sure that communication is only local and cannot be downloaded to real hardware. For this, there must be no other adapters of your Windows PC configured in the physical network and in the subnet protocol of the PLCSIM Virtual Ethernet adapter. Microsoft KB 175767 provides background.

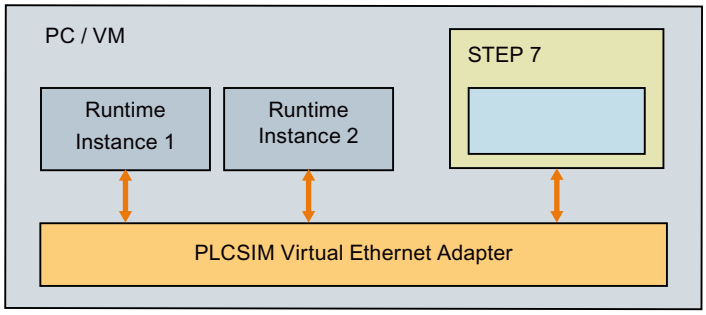

Figure 5-2 Local communication via TCP/IP

Additional information

See error code SREC_COMMUNICATION_INTERFACE_NOT_AVAILABLE for the function `PowerOn()` in the section Operating state (Page 162).

5.2 Communication via TCP / IP

Distributed communication

Distributed communication via TCP/IP means that the PLCSIM Advanced instances communicate with other devices via the S7-PLCSIM Advanced Virtual Switch . Communication is possible with real or simulated CPUs, real or simulated HMIs.

The S7-PLCSIM Advanced Virtual Switch must be activated on the PLCSIM Virtual Ethernet Adapter for instances on the network to be visible.

Each CPU interface can be reached from the PLCSIM Virtual Ethernet Adapter and requires a unique IP address.

The PLCSIM Virtual Ethernet Adapter must be in the same IP number range (subnet mask) as the IP address of the controller.

The IP address of the controller must be unique throughout the entire, accessible network.

Example 1: Distributed communication

In the following example, STEP 7 is on a PC and the PLCSIM Advanced instances are on another PC or a virtual machine. The PCs are connected via their real Ethernet adapter.

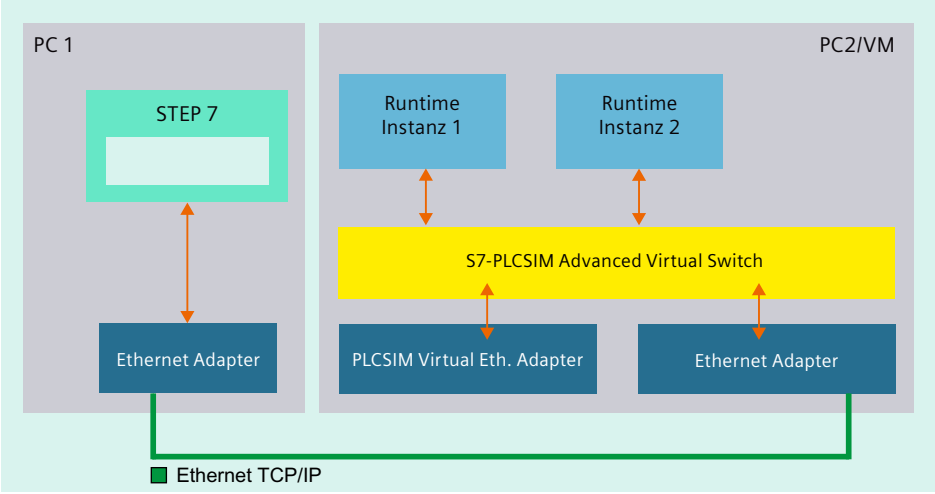

Figure 5-3 Distributed communication via Ethernet

Example 2: Distributed communication on a PC

In the following example, STEP 7 is on a PC and the PLCSIM Advanced instances are on a virtual machine on the same PC. PC and virtual machine are connected via the (virtual) network adapters.

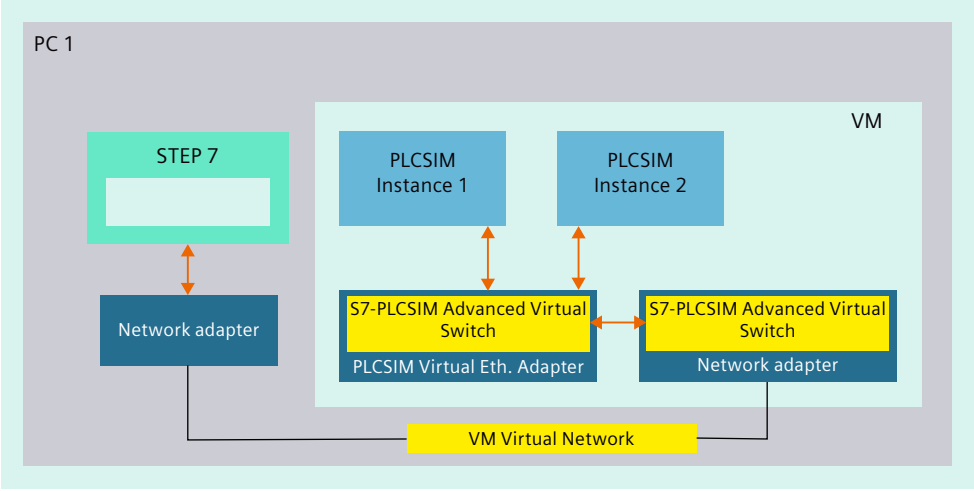

Figure 5-4 Distributed communication via network adapters

Required settings in the "Virtual Machine Settings" dialog using the VMware visualization platform as an example

If you have opened STEP 7 (TIA Portal) and your project within the virtual machine, enable the following options for your online connection as follows:

1. Right-click on the VM and select "Settings" or select the menu "VM > Settings".
2. Open the "Virtual Machine Settings" dialog via the menu command "Player > Manage > Virtual Machine Settings".
3. Then click "Network Adapter" in the "Hardware" tab and activate the following options in the right window:
   - Connected
   - Connect at power on
   - Bridged: Connected directly to the physical network
   - Replicate physical network connection state
4. Click the "Configure Adapters" button and activate your network connection, for example "Intel(R)82574L LM Gigabit Network Connection".
5. Confirm the setting with OK and exit the "Virtual Machine Settings" dialog with OK.

Example 3: Distributed communication

The following example shows a structure with PCs on which distributed STEP 7, PLCSIM Advanced instances and virtual machines with PLCSIM Advanced instances are running.

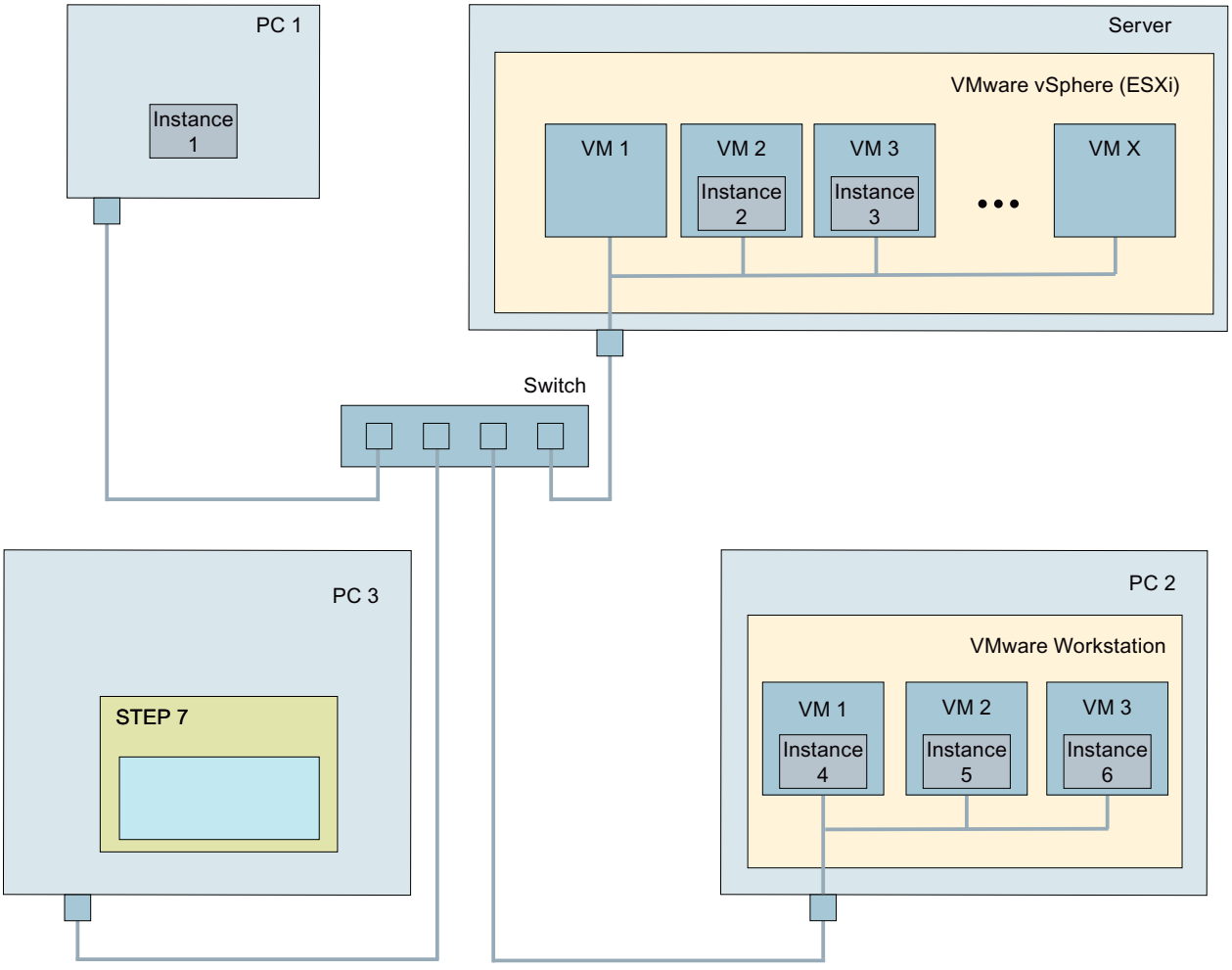

Figure 5-5 Distributed communications with PCs and virtual machines

5.2.1 Communication via TCP/IP in Multi-Adapter Network Mode (non-promiscuous mode)

In Single Adapter Network Mode (promiscuous mode), the network adapter reads all incoming telegrams. The network adapter also reads telegrams that are not intended for the network adapter. The network adapter then forwards the data to the operating system for processing.

In Multi-Adapter Network Mode (non-promiscuous mode), the evaluation of MAC addresses ensures that only data intended for the network adapter reaches the operating system.

In PLCSIM Advanced versions <V5.0, the use of Single Adapter Network Mode (promiscuous mode) was necessary for communication with the "outside world". For example, the mode was necessary for scenarios that met the following 3 conditions:

- You access another virtual machine from one virtualization platform.
- The virtualization platform runs one instance of PLCSIM Advanced.
- TIA Portal is executed on the virtual machine.

However, on virtualization platforms or corporate networks, it is often not permitted to run the network interface of the PC in Single Adapter Network Mode (promiscuous mode) for security reasons.

Overview

The following figure provides an overview of the possibilities and differences between the following communication options:

- Local TCP/IP communication
- Single Adapter Network Mode (promiscuous mode)
- Multi-Adapter Network Mode (non-promiscuous mode)

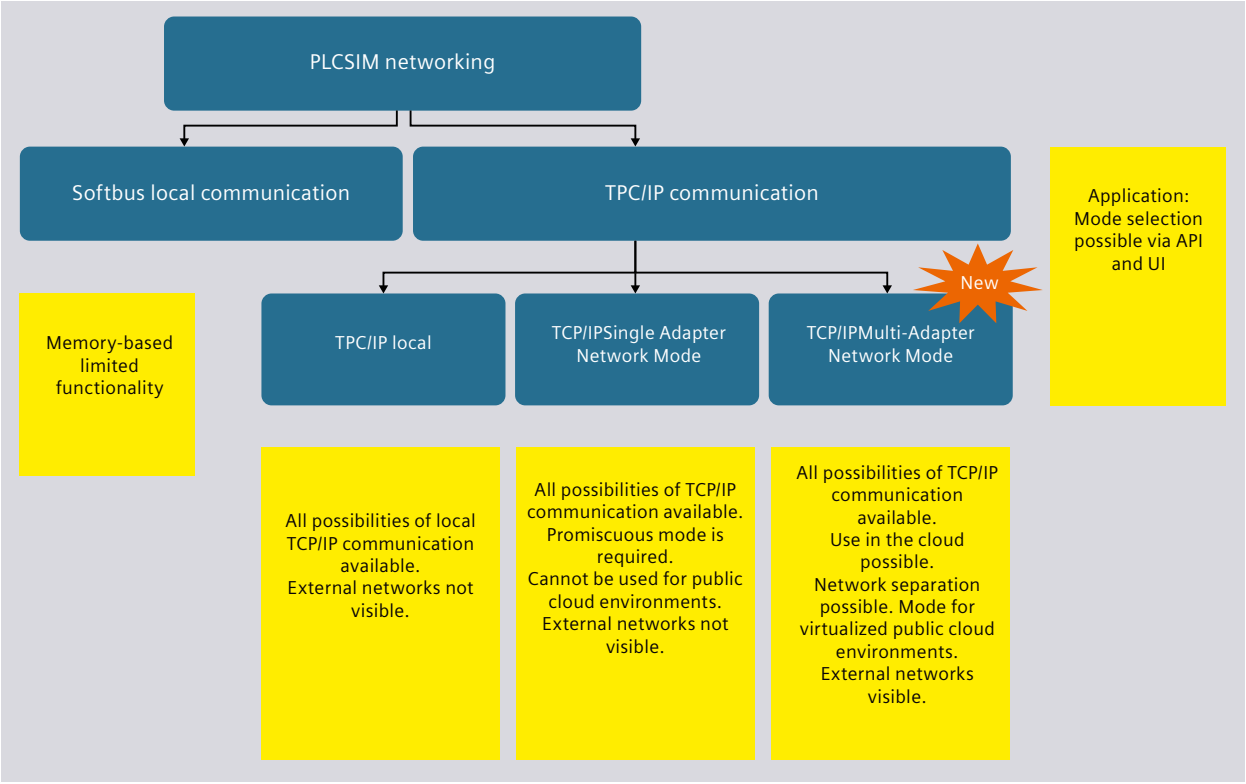

Figure 5-6 PLCSIM networking

Applications

The following applications describe how you can also communicate in Multi-Adapter Network Mode (non-promiscuous mode). You communicate in this mode by performing a one-to-one

mapping of the MAC addresses between the CPU network interfaces and the network adapters of the PC.

The following applications assume that you are working in an environment where security restrictions apply and you have therefore switched to Multi-Adapter Network Mode (non-promiscuous mode).

Application 1:

You start multiple instances. Each CPU interface is assigned to the MAC address of the respective physical or virtual PC adapter.

Precondition: Each interface of a running instance is assigned to its own physical or virtual PC interface (one-to-one mapping).

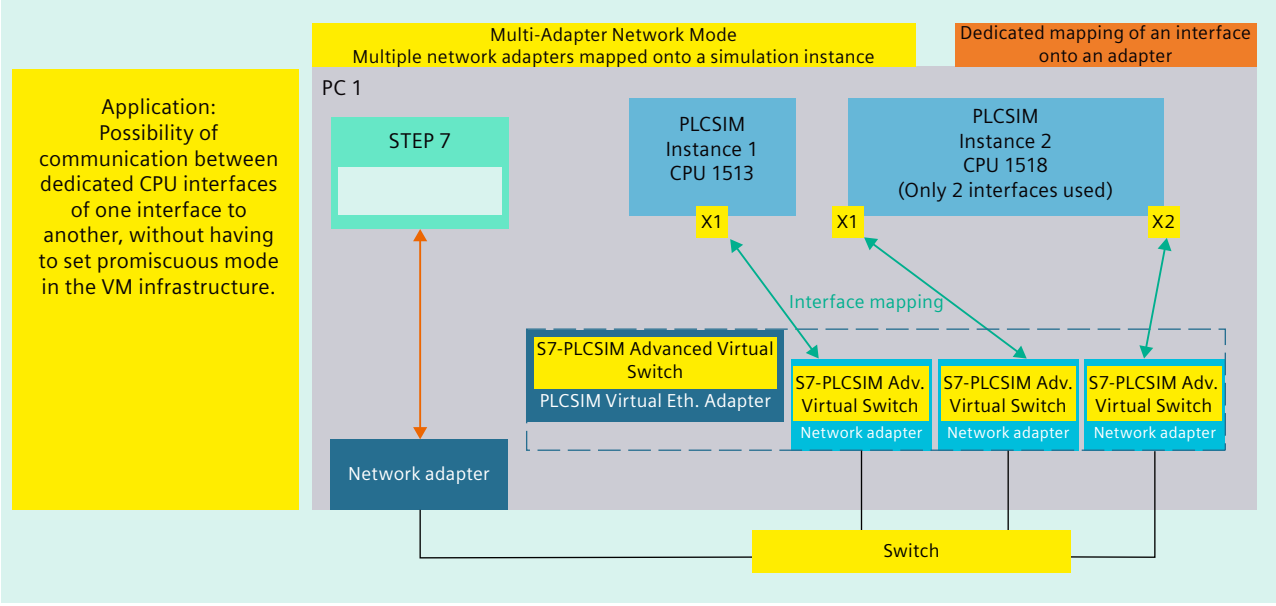

Figure 5-7 Application 1

Application 2:

The following application shows the behavior with multiple instances that have the same MAC addresses. Each CPU interface is assigned to the corresponding physical or virtual PC adapter.

The scenario is only valid if only one instance is running at a time.

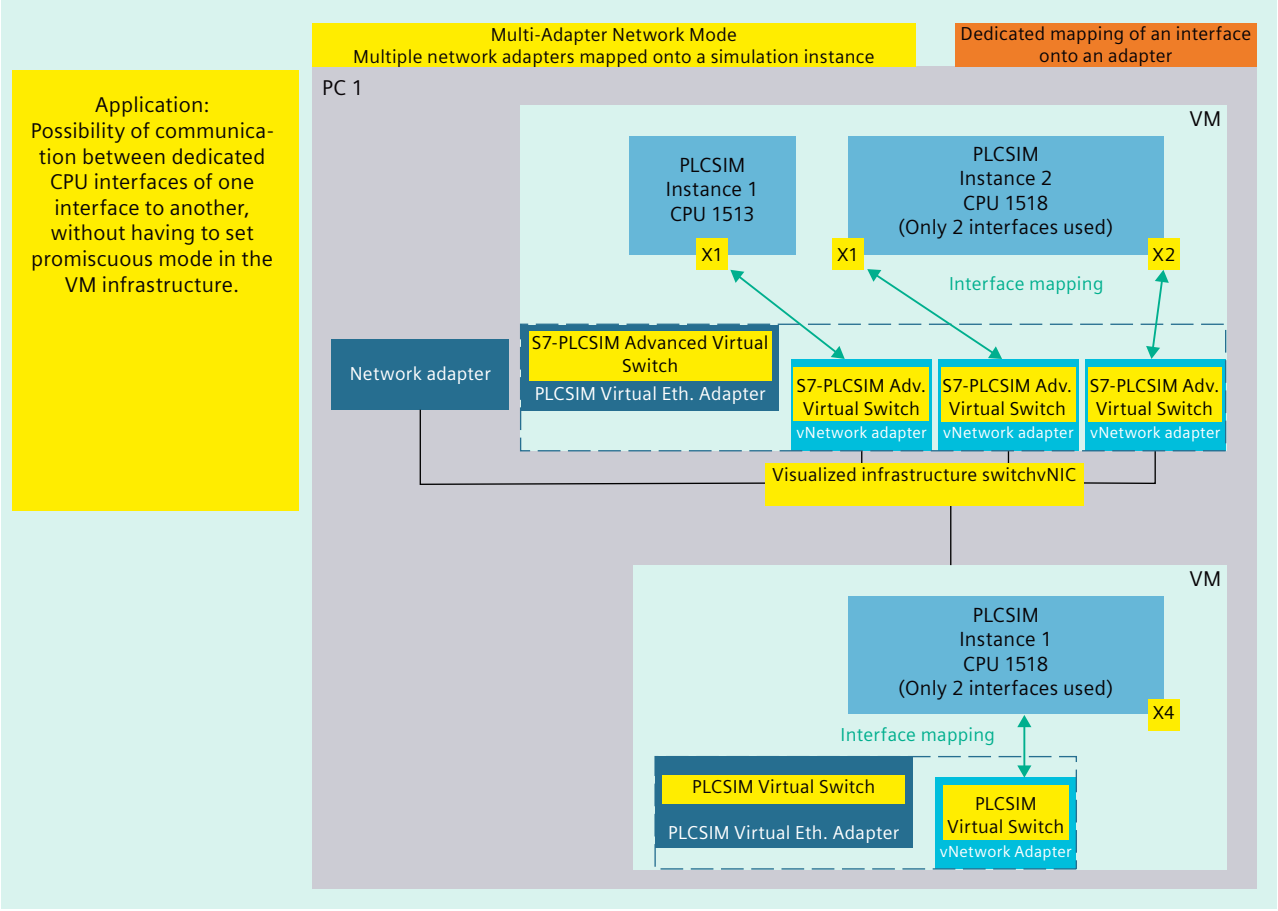

Figure 5-8 Application 2

Procedure

For external communication in Multi-Adapter Network Mode (non-promiscuous mode), the following steps are necessary depending on your application.

1. Use the following instruction to switch to Multi-Adapter Network Mode (non-promiscuous mode):
   `SetNetworkMode(SRCM_VSWITCH_NON_PROMISCUOUS)`
2. To register a new instance, call `RegisterInstance()`.
3. To select which PC interface is assignable to which CPU interface by means of a list of PC interfaces, call `GetNetInterfaces()`.
4. To execute an interface mapping between CPU and PC interface, call `SetNetInterfaceMapping(0, 23)`.
5. To check whether the configuration is correct, call `CheckNetInterfaceMappig()`.
6. To start the instance, call `PowerOn()`.
   Before starting, the instance performs an internal check.

NOTE

Setting a storage path for a new instance

If you use the `SetStoragePath()` function to set a storage path for a new instance, call this function before the MAC address is set. Otherwise, the MAC address is discarded.

This procedure is also valid for the stored CPU type and CPU serial number.

The `CleanupStoragePath()` function deletes not only the storage path but also the assignments of the network interfaces.

Examples in C++

The following examples show possible network configurations in C++.

For scenarios with more than one adapter, make sure to register the instance with a CPU that has the required number of interfaces. In the following examples we use three interfaces. Therefore we register the instance with a CPU with 3 PROFINET interfaces, such as the CPU 1518-4 PN/DP.

Example 1: Simplified settings

```
#include "SimulationRuntimeApi.h"

ISimulationRuntimeManager* rtm = nullptr;
IInstance* instance0 = nullptr;
IInstance* instance1 = nullptr;
ERuntimeErrorCode result = SREC_INVALID_ERROR_CODE;

//init connection
InitializeApi(&rtm);

//set NON-P mode
rtm->SetNetworkMode(ECommunicationMode::VSWITCH_NON_PROMISCUOUS);

rtm->RegisterInstance(ECPUType::SRCT_1518, &instance0);
instance0->SetNetInterfaceMapping(EPLCInterface::IE1, L"Ethernet");
```

```
instance0->SetNetInterfaceMapping(EPLCInterface::IE1, L"Ethernet
2");
instance0->SetNetInterfaceMapping(EPLCInterface::IE1, L"Ethernet
3");
instance0->PowerOn(60000);

rtm->RegisterInstance(ECPUType::SRCT_1518, &instance0);
instance1->SetNetInterfaceMapping(EPLCInterface::IE1, L"Ethernet
4");
instance1->SetNetInterfaceMapping(EPLCInterface::IE1, L"Ethernet
5");
instance1->SetNetInterfaceMapping(EPLCInterface::IE1, L"Ethernet
6");
instance1->PowerOn(60000);

ShutdownAndFreeApi(rtm);
```

Example 2: Complete settings

```
#include <iostream>
#include "SimulationRuntimeApi.h"

ISimulationRuntimeManager* rtm = nullptr;
IInstance* instance0 = nullptr;
IInstance* instance1 = nullptr;
ERuntimeErrorCode result = SREC_INVALID_ERROR_CODE;

//init connection
InitializeApi(&rtm);

//set NON-P mode if mode is not non-promiscuous
ECommunicationMode netMode;
rtm->GetNetworkMode(&netMode);
if (netMode != ECommunicationMode::VSWITCH_NON_PROMISCUOUS)
{
rtm->SetNetworkMode(ECommunicationMode::VSWITCH_NON_PROMISCUOUS);
}

rtm->RegisterInstance(ECPUType::SRCT_1518, &instance0);
rtm->RegisterInstance(ECPUType::SRCT_1518, &instance1);

//gather network interfaces in computer
//get count of network interfaces
UINTcount;
result = rtm->GetNetInterfaces(nullptr, &count);

//get actual network interfaces
std::unique_ptr<SNetInterfaceInfo[]> netInterfaces =
std::make_unique<SNetInterfaceInfo[]>(count);
result = rtm->GetNetInterfaces(netInterfaces.get(), &count);

// map desired interface on instance interface
// each instance interface must have unique or no mapping
```

```
// we can map interface by these three overloads
//
// interfaceIndex
result = instance0->SetNetInterfaceMapping(EPLCInterface::IE1,
netInterfaces.get()[0].interfaceIndex);
// friendly name
result = instance0->SetNetInterfaceMapping(EPLCInterface::IE2,
netInterfaces.get()[1].interfaceName);
// MAC address
result = instance0->SetNetInterfaceMapping(EPLCInterface::IE3,
&netInterfaces.get()[2].MACAddress);

//set mapping on second instance
result = instance1->SetNetInterfaceMapping(EPLCInterface::IE1,
&netInterfaces.get()[3].MACAddress);
result = instance1->SetNetInterfaceMapping(EPLCInterface::IE2,
&netInterfaces.get()[4].MACAddress);
result = instance1->SetNetInterfaceMapping(EPLCInterface::IE3,
&netInterfaces.get()[5].MACAddress);

// we can also check what is mapped on the interface
INT32 mappedInterfaceIndex =
instance0->GetNetInterfaceMapping(EPLCInterface::IE1);
if(mappedInterfaceIndex == 0)
{
std::cout << "No mapping is set";
}

if (mappedInterfaceIndex == netInterfaces.get()[0].interfaceIndex)
{
std::cout << netInterfaces.get()[0].interfaceName << "is mapped on
EPLCInterface::IE1";
}

//set S7-PLCSIM Advanced Virtual Switch according to set mapping
// !! requires elevated (admin) mode !!
rtm->SetNetInterfaceBindings();

//check if setting is valid - optional - CheckNetInterfaceMapping()
function is also called inside PowerOn()
result = instance0->CheckNetInterfaceMapping();
if (result != SREC_OK)
{
returnresult;
}

instance0->PowerOn(60000);
instance1->PowerOn(60000);

ShutdownAndFreeApi(rtm);
```

5.3 Enable distributed communication

The default setting limits the S7-PLCSIM Advanced Virtual Switch to local communication only. For distributed, i.e. cross-computer, communication to be possible, you must activate the S7-PLCSIM Advanced Virtual Switch for a real network adapter.

NOTE

Network adapter

Make sure that the S7-PLCSIM Advanced Virtual Switch is activated for only one network adapter. The Control Panel of PLCSIM Advanced checks the activation and may report an incorrect configuration (error code -50).

Activating the S7-PLCSIM Advanced Virtual Switch

To make the PLCSIM instances visible on the network and to reach other devices, activate the S7-PLCSIM Advanced Virtual Switch in the Control Panel of PLCSIM Advanced or under Windows:

1. To do this, open the "Network and Sharing Center" in the Windows Control Panel.
2. Open the properties of the desired network adapter, for example, for the "Local Area Connection".
3. Select the check box for the "S7-PLCSIM Advanced Virtual Switch" and confirm with OK.

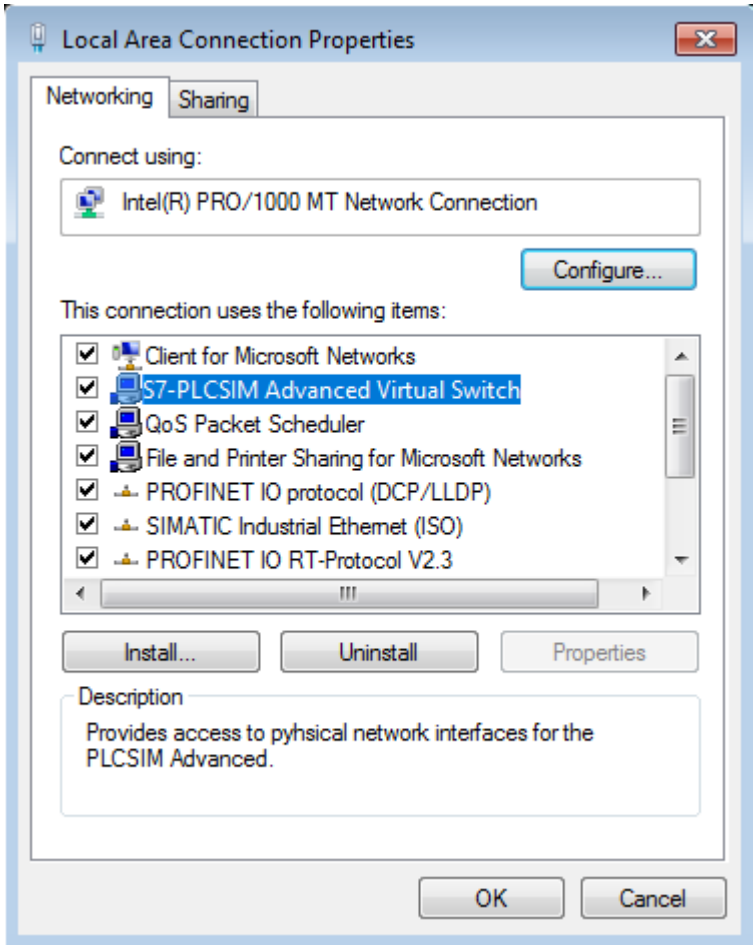

Figure 5-9 Activating the S7-PLCSIM Advanced Virtual Switch

Accessible devices

On the local computer, the PLCSIM Advanced instances are always displayed as accessible devices of the PLCSIM Virtual Ethernet adapter.

The PLCSIM Advanced instances are not visible locally via the configured second adapter, even if the S7-PLCSIM Advanced Virtual Switch is activated.

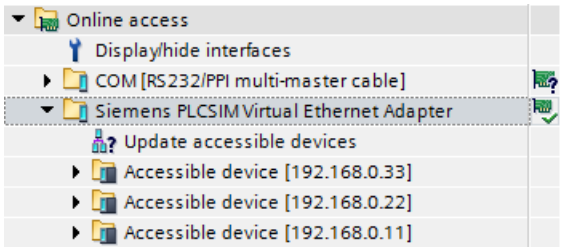

Figure 5-10 Accessible devices on the Virtual Ethernet Adapter

Distributed communication via WLAN

When using distributed communication via WLAN, it may happen that the Npcap program library installed by PLCSIM Advanced does not work with the integrated WLAN adapter of the PC. In this case, no WLAN connection can be established.

Remedy

Use the wired network adapter of the PC/notebook and connect a WLAN adapter upstream.

Simulating

6

6.1 Simulate CPU

6.1.1 Basic procedure for the simulation

The following overview shows the basic steps to perform simulation with an instance of a virtual controller.

Requirements

The following requirements must be met for starting simulation via local communication:

- STEP 7 as of V14 and S7-PLCSIM Advanced V5.0 are installed on the same PC.
- The CPU hardware is configured in STEP 7.

NOTE

Enable simulation support

In the "Protection" tab in the properties of the project in STEP 7, select the check box "Support simulation during block compilation"; see Support simulation (Page 22).

Create and activate an instance via the Control Panel

- Open PLCSIM Advanced Control Panel (see section Control Panel - User interface (Page 57))
- Open the "Start Virtual S7-1500 PLC" options
- Enter a name for an instance
- Selecting the CPU family
- Create an instance using the "Start" button

In STEP 7, perform the download and start the simulation

- Download the program to the virtual controller (see section Downloading a STEP 7 project (Page 65))
- Switch the virtual controller to RUN to start the simulation
- Perform diagnostics

6.1.2 Control Panel - User interface

6.1.2.1 S7-PLCSIM Advanced Symbol

After installing PLCSIM Advanced, the following icons are on the Windows desktop:

Figure 6-1 PLCSIM Advanced Symbol

A double-click on the symbol opens the Control Panel for PLCSIM Advanced. If the Control Panel is in the background, it is moved to the foreground with another double-click.

You can use Windows functions to permanently display the icon in the system tray of the taskbar.

Opening a graphical interface

Right-clicking the icon in the taskbar opens the Control Panel with the quick view. Double-click to start the Control Panel as a window.

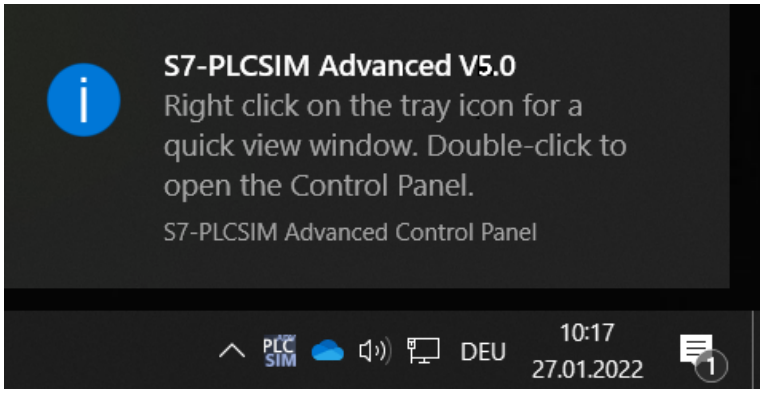

Figure 6-2 Opening a graphical interface

You can use the mouse-over function to display messages about the current status of the instances.

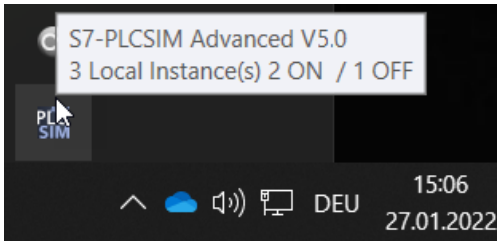

Figure 6-3 Example: Message in the taskbar

6.1.2.2 Graphical interface

The graphical interfaces synchronize by means of API commands. They are optional and are not needed to operate PLCSIM Advanced via the API.

S7-PLCSIM Advanced V5.0 provides the Control Panel with two views.

- **Control Panel as quick view**
  Right-clicking on the icon in the taskbar opens the quick view.
  Clicking on an empty area on the desktop minimizes the quick view. The instances are not affected.
- **Control Panel as window**
  Double-clicking the icon on the desktop or in the taskbar opens the Control Panel as a window.

Control Panel as window

Unlike the quick view, you can operate the Control Panel with the buttons in the title bar. You can close this window without exiting the simulation Runtime process.

① Stores the Control Panel as icon in the taskbar.

② No function. The window size cannot be changed.

③ Closes the Control Panel and stores it in the system tray of the taskbar.
The instances and the simulation Runtime process remain active.
This function therefore differs from the Exit function ⊗.
The Exit function switches off the local instances, logs them off and closes the Control Panel.

④ Pins the Control Panel on the screen so that it remains in the foreground.

Figure 6-4 Control Panel: Title bar

6.1.2.3 S7-PLCSIM Advanced Control Panel

The S7-PLCSIM Advanced Control Panel is only available in English.

Design

The figure below shows the structure of the S7-PLCSIM Advanced Control Panel.

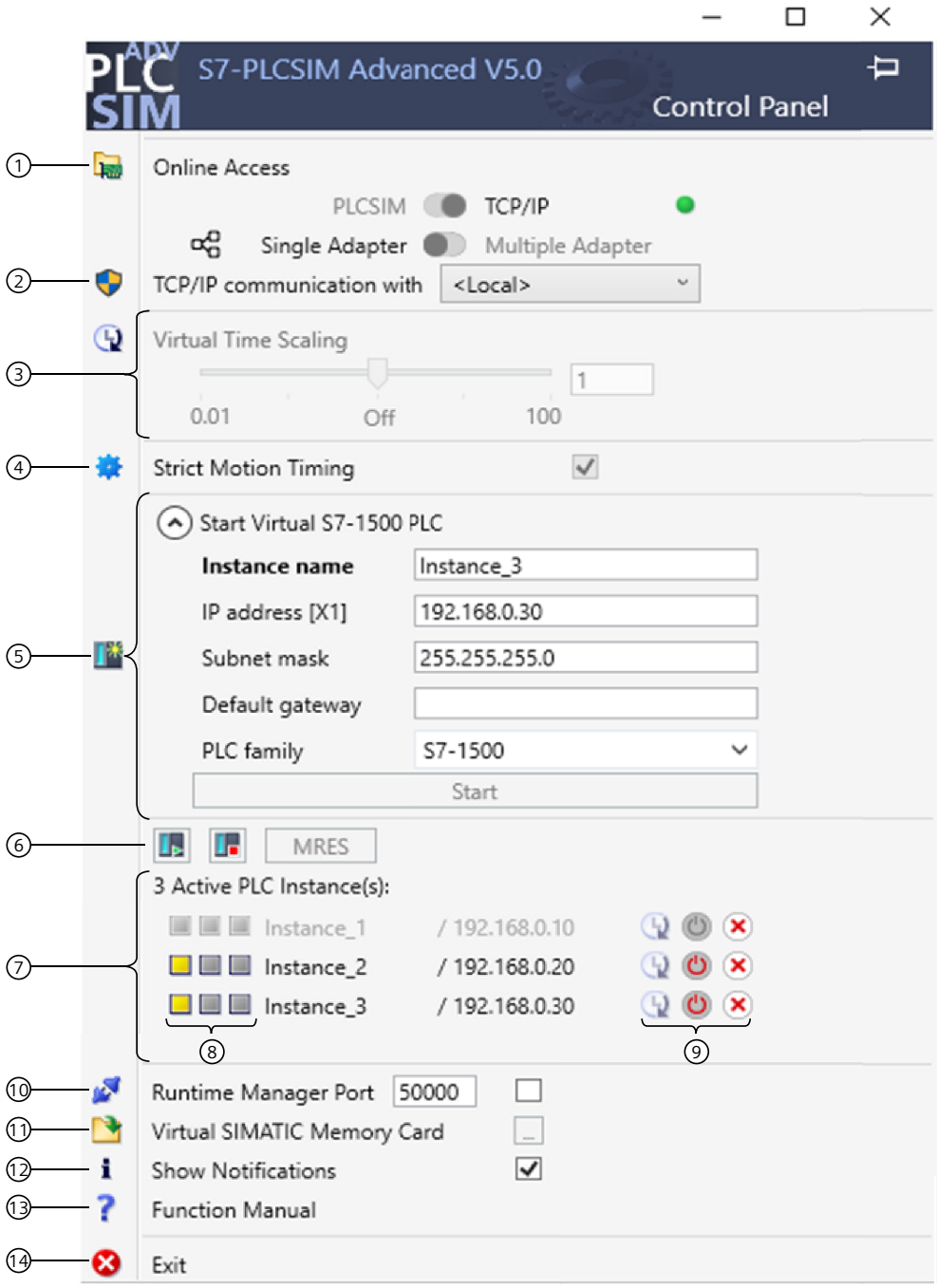

①	Online access	Switch to select the communication interface
②	TCP/IP communication	Selection of network adapter for distributed communication
③	Virtual time	Slider to adjust the scaling factor

④	Strict Motion Timing	Here you disable the overrun detection for Motion Control (OB MC-Servo [OB91]). When the check box is selected (default), overruns are detected. However, you can only change the setting of the overrun detection in the Control Panel for as long as no instance has been registered yet. The set behavior then applies to all subsequent registered instances. You can adapt the behavior for individual instances via the API.
⑤	Start Virtual S7-1500 PLC	Opens and closes the input boxes for creating the instance (virtual controller).
	• Name of the instance	Here you enter a unique name for the instance. Enter a minimum of 3, a maximum of 63 characters. If the name is unique in the network, the button "Start" is enabled.
	• IP address • Subnet mask • Standard gateway	The input boxes are visible when you switch the communication interface to "PLCSIM Virtual Ethernet Adapter". The IP address is entered automatically.
	• CPU family	Here you select the CPU family to be simulated.
	• "Start" button	Create with the button and start the instance.
⑥	Buttons	Buttons for operating the selected instances.
⑦	Instance list	The list shows the available **local** instances. The instances can be resorted using the mouse cursor.
⑧	LED displays	The meaning of the LED is displayed when you move the mouse over it.
⑨	Icons	Icons for operating the instance
⑩	Runtime Manager Port	Here you open a port on the local PC.
⑪	Virtual SIMATIC Memory Card	You open the storage location of the virtual memory card with a double-click to the left of "...". You can change the path to the virtual memory card with a double-click on "...".
⑫	Display messages	Here you disable the PLCSIM Advanced messages in the Windows task bar for the duration of the operation.
⑬	Function manual	This is where you open the S7-PLCSIM Advanced Function Manual in a standard PDF viewer.
⑭	Exit	Exit logs off all instances and closes the Control Panel.

Figure 6-5 Control Panel

Switch for communication interface

Use the switch to select the communication interface for all instances to be created:

- "PLCSIM" corresponds to the local communication via softbus (default).
- "PLCSIM Virtual Ethernet Adapter" corresponds to the communication via TCP/IP.

The setting applies to all other instances. The selected communication interface for starting an instance is maintained until all instances are shut down.

When an instance is already started, it sets "its" communication interface as the default for other instances.

To change the communication interface, switch off all instances and enable the other interface.

TCP/IP communication

You can select a real network adapter from the drop-down list during operation. You thus activate the S7-PLCSIM Advanced Virtual Switch and establish TCP/IP communication between the instances and the real network.
The <Local> setting deactivates the S7-PLCSIM Advanced Virtual Switch and disconnects the instances from the real network. Only local TCP/IP communication over virtual adapter is possible in this case.

Virtual time

You must enable the virtual time for each instance using the icon . Use the slider or the mouse wheel to select the scaling factor for the virtual time.
The selected scaling factor applies to the instances for which the virtual time is enabled.
Clicking on "Off" restores the default (1) again. For more information see Virtual and Real Time (Page 87).

Creating an instance (locally) and starting it

To create an instance, enter a unique name under "Instance Name".
The following rules apply to the creation of an instance name:

- The maximum length of the instance name is < 64 characters.
- The instance name must not start with a dot (.) or a space.
- The instance name must contain at least one of the characters from the following groups:
  - Uppercase letters from A to Z
  - Lowercase letters from a to z
  - Numbers from 0 to 9
  - Special characters: Spaces . _ - + @ ! ; # ~ ' ( ) [ ] { } ^ $ % &

NOTE

If the name already exists in the folder of the Virtual SIMATIC Memory Card, this already existing instance is started.

In the "PLC family" drop-down list, you select a CPU family:

- S7-1500
- S7-1500R/H
- ET 200SP
- ET 200pro

Create the instance with the "Start" button and start this instance.
The instance/virtual controller is initialized with the first download from the TIA Portal.

Instance list

The list contains the instances that are available locally on the PC or virtualization platform. Instances that have already been started on the runtime API are detected and displayed in the list.

Select the operating state of the instance with the "RUN" and "STOP" buttons. Select one or more instances for this purpose. Perform a memory reset with the "MRES" button.

The LED displays show the status of the instance that corresponds to those of the hardware CPU.

RUN and STOP are displayed depending on the current operating state of the instance.

You can "operate" the instance with icons:

- Enable virtual time, apply scaling factor for the virtual time
- Disable virtual time
- Switch on instance ("`PowerOn`")
- Switch off instance ("`PowerOff`")
- Switch off instance and log off from Runtime Manager ("`Unregister`")

Runtime Manager Port

A remote connection can be established to another Runtime Manager via the specified port. The value must be greater than 1024.

If you select the check box, the port remains stored. You can use the remote connection without having to make this setting every time you start the Control Panel. To use this functionality, the Control Panel must be started and running in the background.

Virtual SIMATIC Memory Card

The user program, the hardware configuration and the retentive data is stored on the Virtual SIMATIC Memory Card. Use the buttons to adapt the path to the virtual memory card or open the previously saved path in an Explorer window.

Display messages

Each time the Panel starts, help information and messages relating to the Control Panel are displayed, for example, when changing the IP address or when a license is missing. Disable the display if you do not need the messages.

Exit - Log off all instances

The command switches off all local instances on the PC or the VM and logs them off from the Runtime Manager and closes the Control Panel.

This command closes the Runtime Manager if there are no remote connections to other Runtime Managers.

If the Runtime Manager has remote connections to instances on additional PCs, these instances and the Runtime Manager continue to run.

6.1.2.4 Importing instances

Requirement

This function is only available if you do not start the Control Panel with admin rights.

Importing instances

You can use the drag-and-drop function to import instances from a folder directly into the instance list of the Control Panel.

1. Open a folder with instances, for example, using the "Virtual SIMATIC Memory Card" button.
2. Select one or more instances and drag them into the highlighted area.

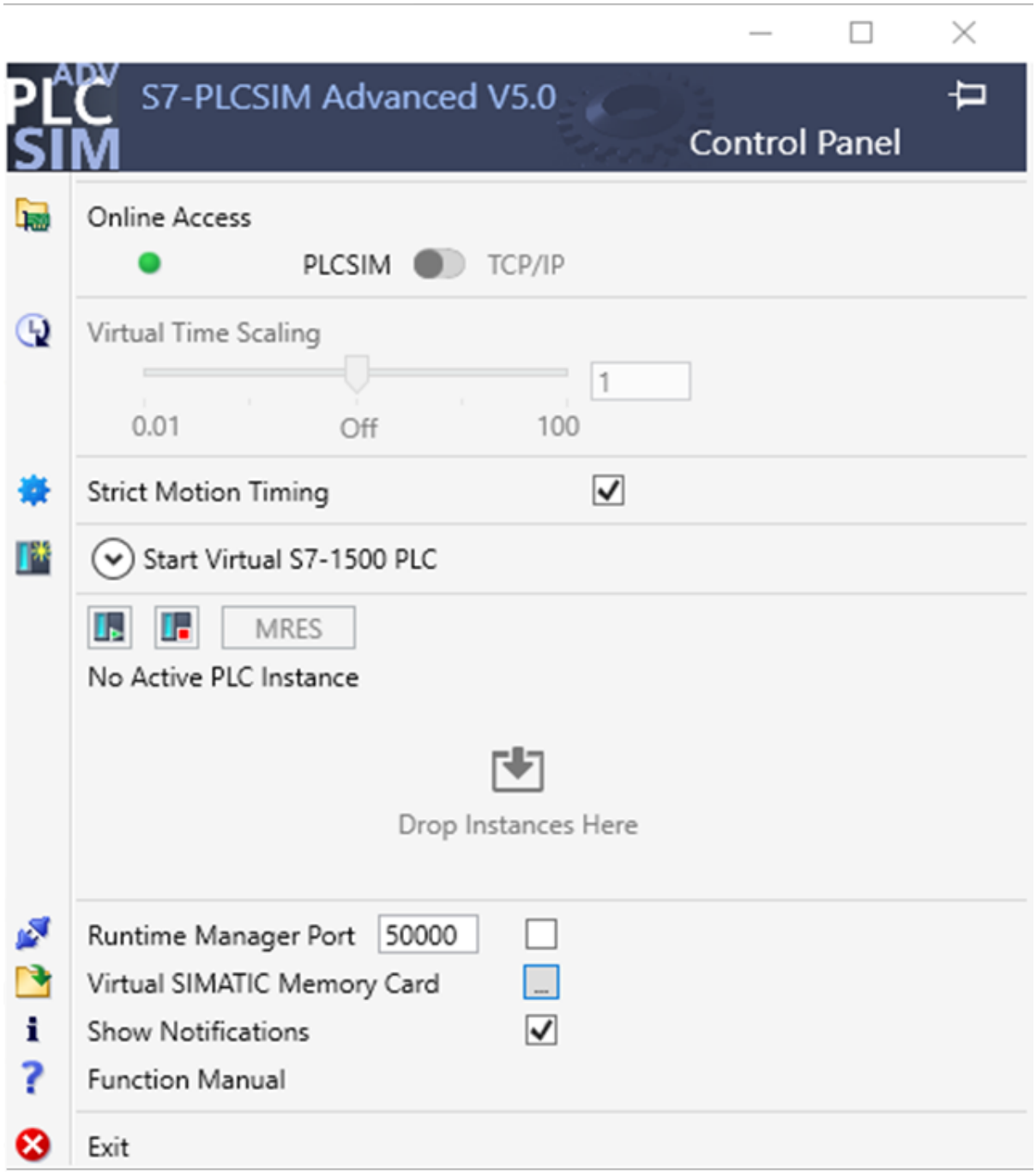

Figure 6-6 Control Panel: Importing instances

6.1.3 Downloading a STEP 7 project

Requirements

You can download the STEP 7 project to the virtual controller when the following conditions are met:

- The instance is created via the Control Panel.
- The check box "Support simulation during block compilation" is selected.

Selecting the communication interface

In the Download dialog box, select the PG/PC interface:

- "PLCSIM" for download via Softbus
- "Siemens PLCSIM Virtual Ethernet Adapter" for download via TCP/IP
- For distributed communication the real adapter that is connected to the network

Display in the download dialog

The dialog in STEP 7 at the first download of the CPU shows the compatible PLCSIM Advanced instances.

If the instance has not yet been configured after the first download only **one** interface is visible and it appears with the device type "CPU-1500 Simulation".

If the instance has been configured, the number of interfaces visible is determined by the number the CPU type has.

The dialog shows the interfaces of an instance with their IP addresses.

Perform download

To download a project to the virtual controller, proceed as follows:

1. Select the PG/PC interface.
2. Click "Download".
   → In the "Load preview" window, STEP 7 shows the message "The downloads are performed on a simulated CPU".
   → After the first download, the PLCSIM Advanced instance displays the CPU type.

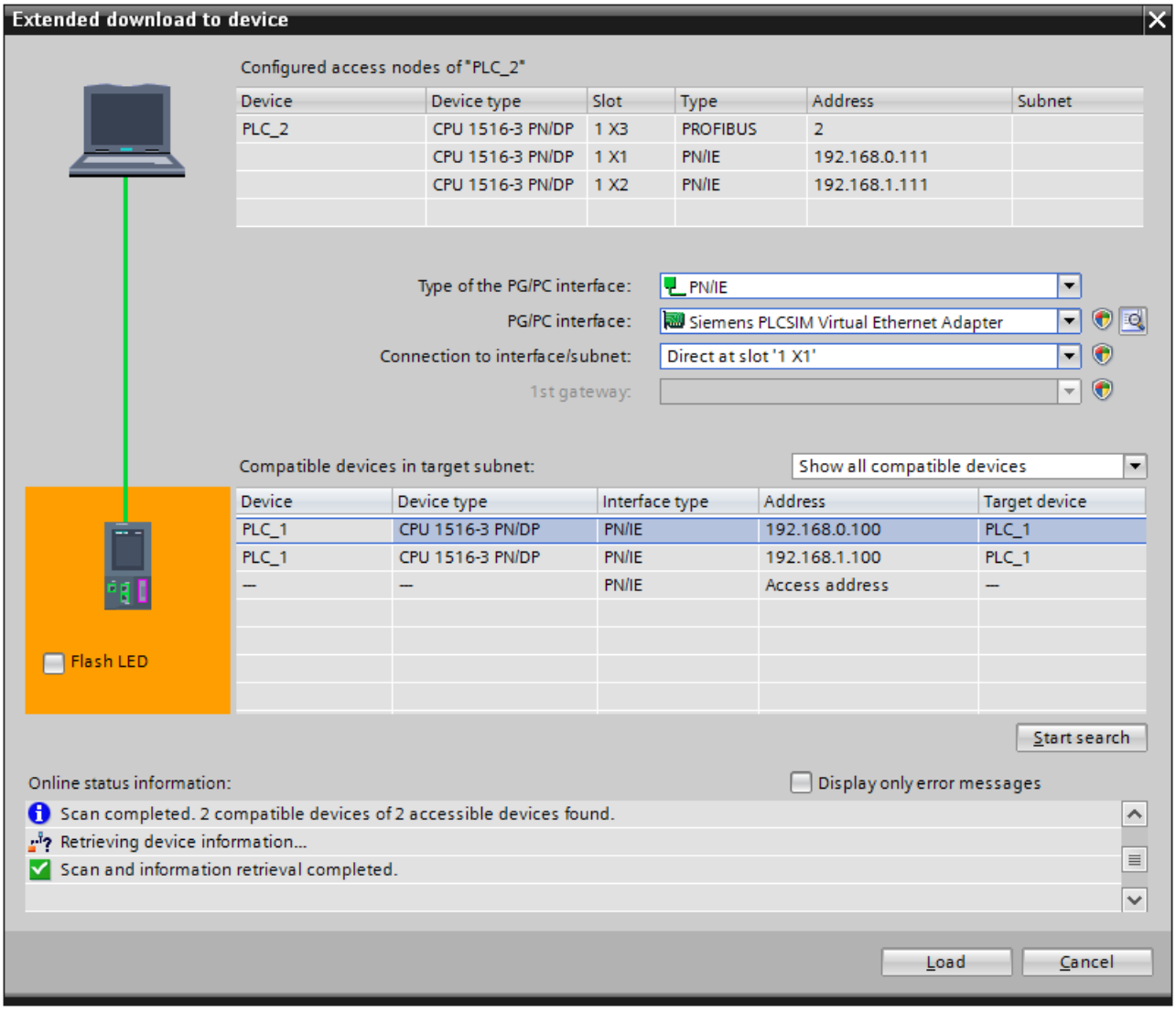

Figure 6-7 Example: Download via the "PLCSIM Virtual Ethernet Adapter" (TCP/IP) after naming

NOTE

Loading an additional CPU to one instance

Example in TIA Portal:

1. You assign an IO device (e.g. IM 153-4 PN) to a CPU (e.g. CPU 1518-4 PN/DP).
2. You add another CPU of the same product family (e.g. CPU 1511-1 PN) to your project.
3. You start the simulation with online access via PLCSIM Virtual Ethernet Adapter.
4. You load the configuration onto the CPU 1518-4 PN/DP with the assigned IO device (IM 153-4 PN) via the interface X1 with TCP/IP.
5. You load the configuration of the other CPU (CPU 1511-1 PN) using the same instance.

   If you go online after this scenario and check the entries in the diagnostic buffer under "Online & Diagnose", the following message appears: "Error: Multi-interface mismatch - Inconsistent parameterization for sending LLDP data)."

Solution:

To avoid this error scenario, use one of the following solutions

- Enable the button "Use IEC V2.2 LLDP mode" for the PROFINET interface [X1] for both CPUs (CPU 1511-1 PN and CPU 1511-1 PN).

  You will find the button in the "General" tab under PROFINET interface [X1] > Advanced options > Interface options.
- After the second download, log out the instance and log it in again.
- Switch the instance off and on again.

NOTE

Note on SingleStep_CP operating mode

Downloading software changes in RUN mode.

If you perform a software download in RUN mode in SingleStep_CP operating mode, the download may not be possible and the simulation may stop. An overload during the download in RUN may be the reason for this.

Solution:

1. Use the "Virtual Time Scaling" function and select a low scaling factor (e.g. scaling factor of 0.25).
2. Provide sufficient resources to increase the runtime performance and the S7-PLCSIM Advanced communication performance.

6.1.4 Network addresses in the simulation

6.1.4.1 Siemens PLCSIM Virtual Ethernet Adapter

IP address

At the PLCSIM Virtual Ethernet Adapter you assign a static IP address or obtain an IP address via DHCP (default).

MAC address

A randomly generated MAC address is assigned to the PLCSIM Virtual Ethernet Adapter during its installation.

PLCSIM Advanced only uses MAC addresses that are designated as "locally administered" (bit 2 in LSB).

The Siemens-specific prefix is: 02-1B-1B

Three bytes follow, which are determined at random.

Storage location

This MAC address is stored in the registry key "PlcsimvminiMacAddress".

You can overwrite this value.

6.1.4.2 PLCSIM Advanced instances

Detect CPUs and instances

If Ethernet interfaces of CPUs and PLCSIM Advanced instances are mixed in a network, the instances are briefly recognizable by the "PLCSIM" suffix of the device type during the search for accessible nodes in STEP 7.

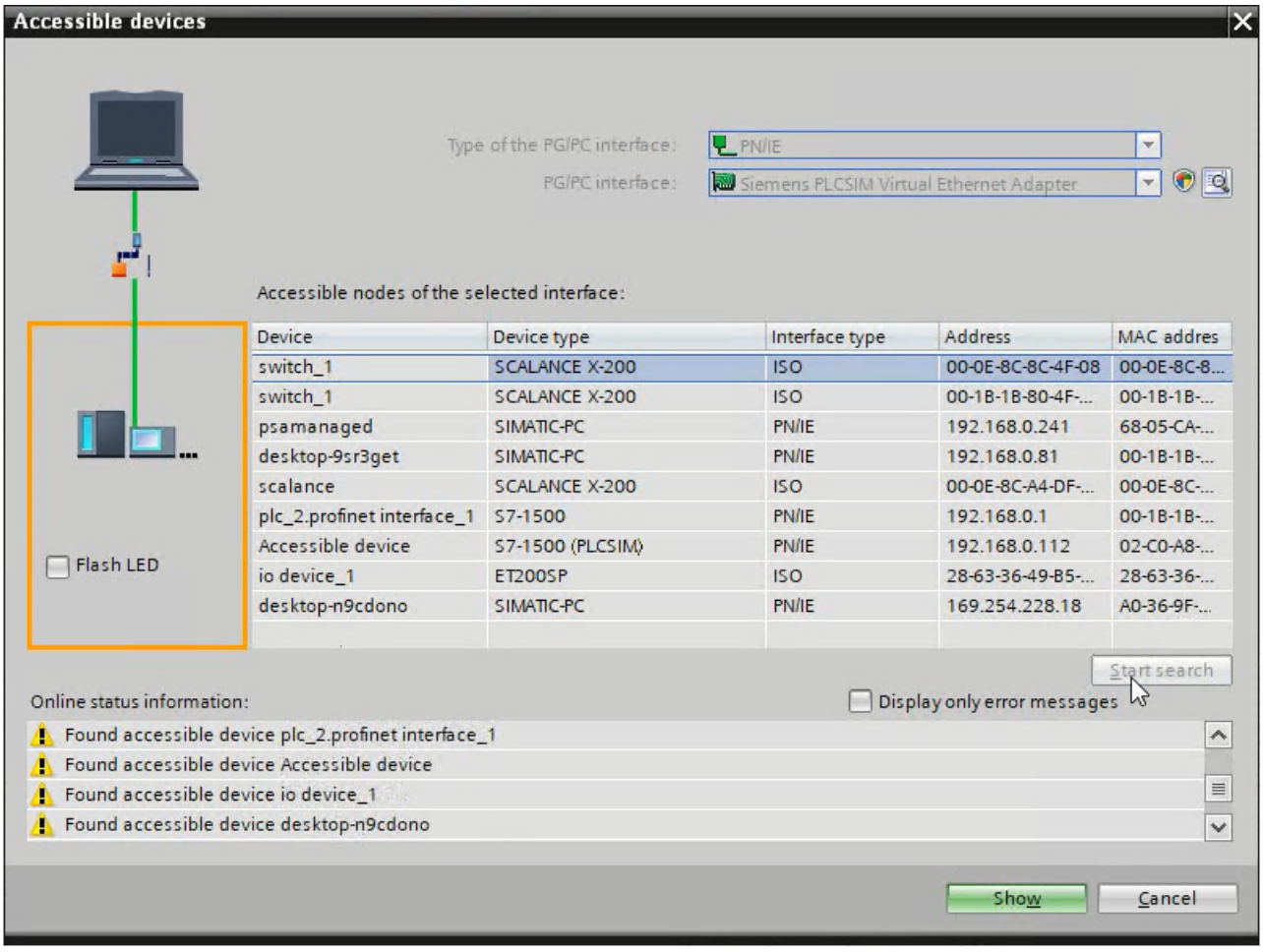

Figure 6-8 Search for the devices that are accessible in STEP 7

Structure of the MAC address for an instance

The following figure shows the structure of the dynamically generated, locally managed MAC address:

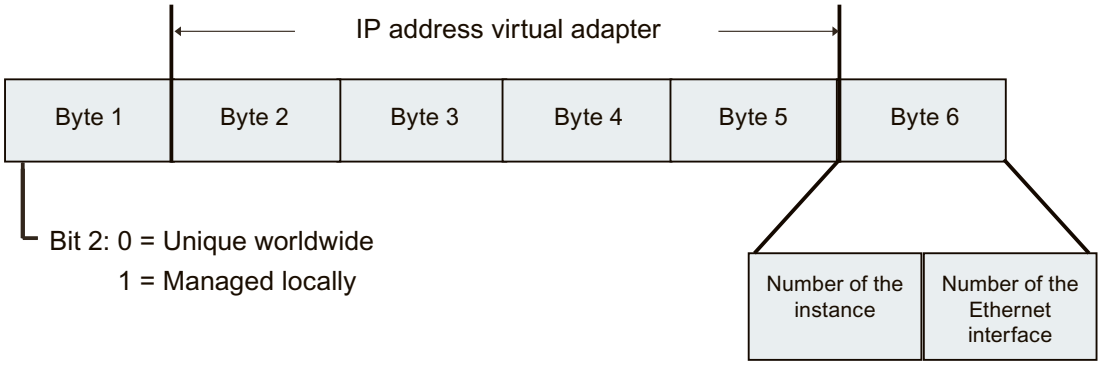

Figure 6-9 Structure of the MAC address for an instance

The MAC address tells you the PC on which a PLCSIM Advanced instance has been started.

Assignment of the Ethernet interfaces

Port configurations of the Ethernet interfaces cannot be simulated in PLCSIM Advanced V5.0. Topological interconnection is not supported. A MAC address for a port is reserved internally for each Ethernet interface.

Table 6-1 Assignment of the Ethernet interfaces, for example, for a CPU 1518-4 PN/DP

Ethernet interface	Last digit of the MAC Address
IE 1 IE 1 / Port 1	0 1
IE 2 IE 2 / Port 1	2 3
IE 3 IE 3 / Port 1	4 5

Example

02-C0-A8-00-83-10 means:

02 → locally managed MAC address of a PLCSIM Advanced instance

C0-A8-00-83 → IP of the Siemens PLCSIM Virtual Ethernet adapter = 192.168.0.131

1 → Instance 1

0 → Ethernet interface IE 1

If no Virtual SIMATIC Memory Card is loaded during startup of PLCSIM Advanced, the interfaces of PLCSIM Advanced display instances with their locally managed MAC address.

6.1.5 Simulate peripheral I/O

The Runtime API writes to and reads from a memory area. This memory is synchronized with the internal process image of the virtual S7-1500 controller at the cycle control point and when calling cyclic and acyclic OBs (process image partitions, interrupts, events). The direct I/O accesses are made to this memory area. Only one process can access this memory at a given time.
The virtual controller must be in RUN mode to apply changes made by the API.

NOTE
Dominance of the API when synchronizing
The API dominates when synchronizing. If the user program writes to the same address range as the API, the changes of the API overwrite those of the virtual controller.

6.1.6 Simulate communication

6.1.6.1 Communication services that can be simulated

PLCSIM Advanced V5.0 supports the following communication options:

Table 6-2 Supported communication options

Communications options	Functionality / instructions
PG communication	On commissioning, testing, diagnostics
Open communication using TCP/IP	• TSEND_C / TRCV_C • TSEND / TRCV • TCON[1] • T_DISCON
Secure Open user communication (secure TCP communication)	• TSEND_C / TRCV_C • TCON
Open communication using ISO-on-TCP	• TSEND_C / TRCV_C • TSEND / TRCV • TCON • T_DISCON
Open communication via UDP[2]	• TUSEND / TURCV • TCON • T_DISCON
Communication via Modbus TCP[3]	• MB_CLIENT • MB_SERVER
E-mail[2, 3]	• TMAIL_C
S7 communication	• PUT / GET • BSEND / BRCV • USEND / URCV
OPC UA server[2, 3]	Secure data exchange with OPC UA clients

Web server[2, 3]	Data exchange via HTTP, HTTPS

[1] When the "PLCSIM" interface (Softbus) is set, communication is performed **internally** via ISO-on-TCP.

[2] Communication is only possible via the communication interface "PLCSIM Virtual Ethernet Adapter" (TCP/IP).

[3] "Access to PLC via communications module" is not supported.

Special conditions apply when communicating with TUSEND/TURCV, see Restrictions for communications services (Page 339).

NOTE

Secure Communication

When simulating communication services, also consider the basics of secure data exchange (Secure Communication). For detailed information on Secure Communication, refer to the Communication (https://support.industry.siemens.com/cs/ww/en/view/59192925) function manual.

Additional information

For more information on the various communication services, please refer to the Communication function manual (https://support.industry.siemens.com/cs/ww/en/view/59192925).

Restrictions for MODBUS communication via Softbus

For communication via Softbus, use the supported Modbus versions shown in the following table or, alternatively, communication via TCP/IP.

Table 6-3 Modbus communication via Softbus

MODBUS TCP Lib	MB_CLIENT	MB_SERVER	SOFTBUS
V6.0	V6.0	V5.3	✓
V5.2	V5.2	V5.2	x
	V5.1	V5.1	x
	V5.0	V5.0	x
V4.2	V4.1	V4.2	x
	V4.1	V4.1	x
	V4.0	V4.0	✓

✓ = Communication possible

x = Communication not possible

TMAIL_C

When the TMAIL_C instruction is used, the mail server might not be located on the same PC as the PLCSIM Advanced instance.

Solution

Make the mail server available via a different PC in the network.

6.1.6.2 Communication between instances

PLCSIM Advanced supports communication between instances. An instance may be a simulation in PLCSIM Advanced V2.0 or a simulation in WinCC Runtime as of V14.

You can run two instances of PLCSIM Advanced, which then communicate with each other. To enable instances to communicate with each other, they must have a unique IP address.

Each simulated CPU requires a unique IP address

If the CPUs have the same IP address, you cannot run multiple simulations. Each simulated CPU requires a unique IP address.

Make sure that the IP addresses in STEP 7 are unique before you start your simulations.

T-block instructions and UDP

PLCSIM Advanced simulates T-block connections for which the UDP protocol is configured only via the communication interface "PLCSIM Virtual Ethernet Adapter" (TCP/IP).

T-block instructions and data segmentation

PLCSIM Advanced implements T-block instructions with a data segmentation of 4 KB. A real CPU has data segmentation of 8192 bytes.

If you send more than 4 KB in a single TSEND instruction and receive data in ad hoc mode with a TRCV instruction, the TRCV instruction generates new data with only 4 KB. You must perform the TRCV instruction several times to receive additional bytes.

6.1.7 Provide project data offline for simulation

Simulations regardless of STEP 7

To perform simulations independent of STEP 7, you can save the user program and the hardware configuration in STEP 7 in a folder.

Saving retentive data securely

The retentive data is automatically saved when the virtual controllers are shut down.

To save the retentive data safely in the virtual SIMATIC Memory Card, the instances must be correctly logged off. Use one of the following functions for this:

- The `PowerOff()` API function
- In the Control Panel the functions
  - "Switch off instance"
  - "Log off instance"
  - or the Exit function "Log off all instances"

Provide project data offline

1. Create a "User-defined Card Reader" for your project data in the "Card Reader/USB storage" folder in the project tree of STEP 7 for the CPU.
2. In the "Load preview" dialog for the target device, select "PLC Simulation Advanced" as an action, click in the selection box for this.
   → The project is saved to the <Virtual Memory Card>\SIMATIC.S7S\OMSSTORE folder.

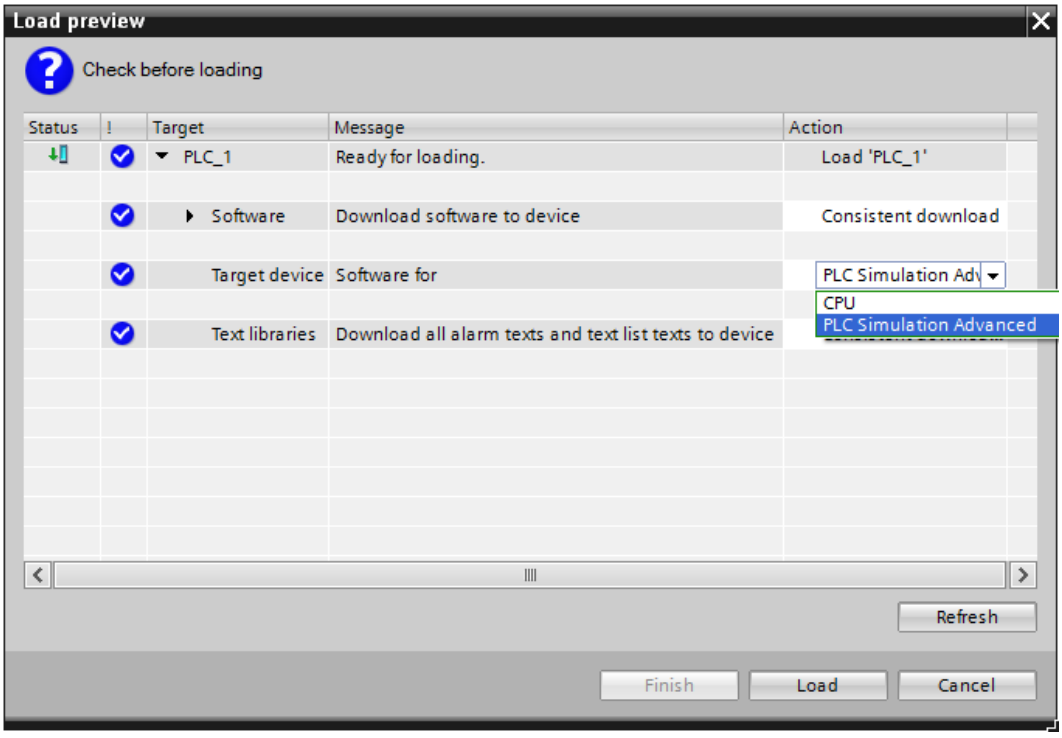

Figure 6-10 Preview of download dialog

3. Save the folder "\SIMATIC.S7S" with the project data to a medium of your choice.

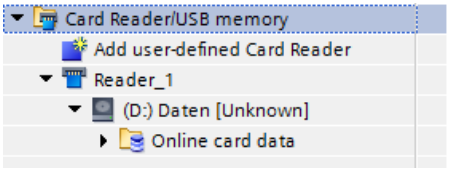

Figure 6-11 Add card reader

Provide project data for simulation

1. On the PC on which PLCSIM Advanced is installed, create the folder "\SIMATIC_MC" in the folder in which the instance saves its data.
2. Move the "\SIMATIC.S7S" folder to the folder you have created.
   → The instances can be started with the project data.

API functions

The project data can be used for an instance via the user interface. Use one of the following functions for this:

API functions

- GetStoragePath() (Page 153)
- StoragePath { get; set; } (Page 153)
- ArchiveStorage() (Page 153)
- RetrieveStorage() (Page 153)

6.2 Simulate CPU with ODK functionality

Introduction

The ODK is an engineering tool that allows the creation of high-level language applications for S7-1500 CPUs. You use it to generate function libraries that are used in the STEP 7 user program.
The ODK for PLCSIM Advanced V5.0 supports the C++ programming language.
You can find the description of the ODK in the Programming and Operating Manual "S7-1500 Open Development Kit 1500S", as of V2.5 Edition 12/2017: SIMATIC STEP 7 (TIA Portal) Options ODK 1500S (https://support.industry.siemens.com/cs/ww/en/ps/13914/man)
Section 6 "Development of a CPU function library for the real-time environment" is relevant for ODK applications under PLCSIM Advanced.

Supported CPUs

PLCSIM Advanced V5.0 supports the ODK functionality of the following controllers:

- CPU 1518(F)-4 PN/DP ODK
- CPU 1518(F)-4 PN/DP MFP

6.2.1 Special features of ODK

Simulating CPU with ODK functionality with PLCSIM Advanced

The simulation of a CPU with ODK functionality requires a special start procedure.
You have the following options:

- Start the instances of a Virtual SIMATIC memory card that contains the project data for the CPU with ODK functionality.
- Before starting the instances, select the CPU type via the API, for example, "CPU1518MFP".

- After the first download, select the functions "Switch off instance" and "Shutdown instance" in the Control Panel.

NOTE

When you perform the first download to a CPU of the "S7-1500" family, for example, via the PLCSIM Advanced Control Panel, no ODK1500S folder is created on the virtual SIMATIC Memory Card. The CPU cannot be switched to RUN. In this case, you will find messages about missing ODK blocks (e.g. SFC 2013) in the diagnostics buffer.

Supported function libraries

PLCSIM Advanced V5.0 supports the following function libraries for the real-time environment:

- CPU function library: Original Shared Object, SO file as for the hardware CPUs
- PLCSIM Advanced function library (Windows Sync):
  - a 32-bit Windows DLL for ODK Runtime
  - a 64-bit Windows DLL for ODK Runtime

NOTE

Do not mix function libraries

When simulating with PLCSIM Advanced, you cannot load 32-bit and 64-bit function libraries simultaneously. If you want to use one function library, first remove the function library of the other type.

If you want to use function libraries with a different binary format, all others must be unloaded first.

NOTE

Limitations for the execution of CPU function libraries (Windows Sync) with an infinite loop in the class constructor

When the CPU function library (DLL file) contains an object of a class in whose constructor an infinite loop is programmed, the corresponding "ODK client" process gets permanently stuck in this loop when instantiating the object.

Even after reaching the timeout, the infinite loop cannot be interrupted automatically. The PLCSIM Advanced instance remains in RUN even though the entry "Time error - CPU changes to STOP mode" is displayed in the diagnostics buffer.

NOTE

Limitations for traces in the execution of CPU function libraries (Windows Sync)

Avoid using traces when developing a CPU function library (DLL file) in the class constructor (call of the "ODK_TRACE()" function) to prevent trace messages with faulty parameter values.

NOTE
Know-how protection
The SO files for ODK are not know-how-protected.

Debugging a PLCSIM Advanced function library (DLL file)

To debug a function library, attach the Visual Studio Debugger to the corresponding ODK client process that has loaded the respective function library.
PLCSIM Advanced V5.0 supports versions ≥ Visual Studio 2017.

Simulation of the ODK with PLCSIM Advanced

If you have loaded the TIA project on the PLCSIM Advanced and the instruction "*<STEP7Prefix>*_Load" was called for the first time, each PLCSIM Advanced instance starts another Windows process ("ODK client") in which the ODK application is executed synchronously with the STEP 7 user program.
Which ODK client is started depends on the function library to be loaded:

- "Siemens.Simatic.PlcSim.Vplc1500.ODKClient.**so**.exe" for an original Shared Object
- "Siemens.Simatic.PlcSim.Vplc1500.ODKClient.**x86**.exe" for a 32-bit application
- "Siemens.Simatic.PlcSim.Vplc1500.ODKClient.**x64**.exe" for a 64-bit application

The executable files of these processes are located in the same folders as those of the PLCSIM Advanced Instances ("Siemens.SIMATIC.Simulation.Runtime.Instance.exe").

NOTE
PLCSIM Advanced does not support asynchronous ODK functions.

Error codes

The same error codes as described in the Programming and Operating Manual "S7-1500 Open Development Kit 1500S" apply to the instructions in the real-time environment. Error codes are also available for PLCSIM Advanced, because the ODK client processes can be closed unexpectedly and therefore an error handling is required.

Restrictions for stack processing

NOTE

Limitations for stack processing in the version of CPU function libraries for real-time-environment

PLCSIM Advanced ignores the stack size for a CPU function library that is adjusted via the parameter <SyncCallStackSize>. PLCSIM Advanced always provides the maximum stack size of 1 MB.

Additional information may be found in the programming and operating manual S7-1500 Open Development Kit 1500S (https://support.industry.siemens.com/cs/ww/en/view/109783714) in the section "Defining process properties of a CPU function library".

PLCSIM Advanced cannot catch any Exceptions of the type "Stack Overflow" while CPU function libraries for the real-time environment (SO files) are being executed.

When developing a CPU function library (SO file), make sure that the maximum stack size of 1 MB is not exceeded. An overflow of the stack leads to an undefined behavior and can lead to the termination of the ODK client process.

NOTE

Limitations for heap processing in the version of CPU function libraries (Windows Sync)

If a heap corruption occurs when executing a C/C++ function from a CPU function library (DLL file), then this program error is first ignored and execution of the function continues. Only after fully processing the function is the corresponding error code returned (0x8090).

When developing a CPU function library (DLL file), make sure to avoid heap corruption. This way you ensure that after fully processing a C/C++ function no error code is returned.

6.2.2 Loading functions

Loading functions - Instruction "*<STEP7Prefix>*_Load"

If you have loaded the TIA project on the PLCSIM Advanced and the instruction "*<STEP7Prefix>*_Load" was called for the first time, each PLCSIM Advanced instance starts another Windows process. The ODK client then attempts to load the function library which is specified in the SCL file. This is in the folder "<storage path of the instance> \SIMATIC_MC\ODK1500S". See `GetStoragePath()`, `SetStoragePath()` in the section Controller - Information and settings (Page 156).

The ODK client process continues until the instruction "*<STEP7Prefix>*_Unload" is called to unload the last loaded function library or until the process of the PLCSIM Advanced instance ends.

The function call is synchronous and returns after completion of the operation. The output parameter provides information on the progress status.

ODK error code for PLCSIM Advanced

The following table lists the error codes that apply in addition to the error codes that apply to the CPU specifically for ODK applications with PLCSIM Advanced:

Table 6-4 ODK: Output parameter - Load functions

DONE	BUSY	ERROR	STATUS	Description
0	0	1	0x80A4 = -32604	• The ODK client process cannot be started. • A connection to the ODK client cannot be established or has been interrupted.
0	0	1	0x8095 = -32619	The ODK client process that is currently running expects a function library with a different binary format.

6.2.3 Calling functions

Call functions - Instruction "*<STEP7Prefix>*SampleFunction"

When calling ODK functions, data is exchanged between the virtual controller and the function library.

The execution of a single function can be interrupted by the execution of higher prioritized OBs.

Technically, the execution of a function is an asynchronous instruction because it is executed in another process. However, the processes are synchronized via the virtual controller. This means that the function call does not return before the function returns or the ODK client process is closed during the execution.

ODK error code for PLCSIM Advanced

The following table lists the error codes that apply in addition to the error codes that apply to the CPU specifically for ODK applications with PLCSIM Advanced:

Table 6-5 ODK: Output parameter - Call functions

DONE	BUSY	ERROR	STATUS	Description
0	0	1	0x80A4 = -32604	The connection to the ODK client was interrupted.

6.2.4 Unloading functions

Unload functions - Instruction "*<STEP7Prefix>*_Unload"

The CPU function library is unloaded by calling the instruction "*<STEP7Prefix>*_Unload". If no other function library is loaded or if the process of the PLCSIM Advanced instance is closed, then the ODK client process is shut down.

The function call is asynchronous, the call returns immediately. The output parameter informs about the progress status.

6.3 Simulating Motion Control

Restrictions

S7-PLCSIM Advanced simulates the real CPU but not configured, connected technology modules or other I/O devices.

It is possible to download a STEP 7 project with technology modules for operation of motion control. However, the built-in logic of the technology modules is not part of the simulation. Therefore, the corresponding motion control instructions are not supported.

In contrast to a real CPU, S7-PLCSIM Advanced does not support isochronous mode for centralized I/O in S7-1500 with local send clock.

OB MC-Servo [OB91] and OB MC-Interpolator [OB 92]

If you convert a motion control project that contains OB 91 and OB 92 from STEP 7 V13, then you cannot load this project to a S7-PLCSIM Advanced.

Solution

Delete OB 91 and OB 92 in the project and recompile the project.

The OBs are then created again with the simulation support required for S7-PLCSIM Advanced.
Compilation resets the properties of the blocks to the default values.
Restore the required settings in the properties.

Diagnostic buffer message "Overflow" for OB MC servo [OB91] of the virtual controller

S7-PLCSIM Advanced provides you with the virtual controller of the S7-1500 hardware CPU. The virtual controller allows you to run the firmware of the S7-1500 under the Windows operating system.

The wide-ranging communication options and the functions of the API offer you integration into existing simulation landscapes or co-simulation with other tools. The virtual controller runs in the Windows environment with the following restrictions. The real hardware CPUs, on the other hand, are designed for the maximum possible performance without the compromises required by a general PC operating system.

If there are overflows of the OB MC-Servo [OB91] in the diagnostic buffer, the time for the application cycle (ms) has been exceeded, because the calculation of this application cycle could not be completed within the required time.

Solution

The overflows of OB MC-Servo [OB91] in the diagnostic buffer decrease:

- When fewer additional Windows processes are executed
  and
- When the computing power of the CPU is higher

Overflow detection is activated for S7-PLCSIM Advanced as of V3.0 for exact simulation of the technology objects. If diagnostic buffer overflows occur on your PC for OB MC-Servo [OB91] and your instance goes into the STOP operating state, the following solutions are available to you:

1. Use the virtual time of S7-PLCSIM Advanced and start with the lowest possible scaling factor for the virtual clock. Increase the value step-by-step until the first overflows occur in the diagnostic buffer. Repeat this procedure until you have determined the maximum scaling factor for which you do not yet get any overflows in the diagnostic buffer.
   Information on the scaling factor can be found in section Speed up and slow down simulation (Page 88).
2. Set a longer application cycle (ms) for the OB MC-Servo [OB91] in STEP 7.

NOTE

Load on a PLCSIM Advanced instance is too high

If the load on a PLCSIM Advanced instance becomes too large, the instance may no longer switch to the STOP operating state despite numerous diagnostic buffer overflows.

In such a case, shut down the PLCSIM Advanced instance and follow the workarounds described above.

Simulation with external simulation software

NOTE

In a virtual S7-1500 controller, the technology objects are connected to the process image. Simulation software can thus access the process image via the user interfaces (API) of PLCSIM Advanced and simulate the behavior of the other connected axes.

Simulation mode in STEP 7

The simulation mode in STEP 7 is a standard function of the technology objects and is independent of PLCSIM Advanced.

If you want to move an axis in simulation mode, select the "Activate simulation" check box in STEP 7 under "Technology Object > Configuration> Basic Parameters > Simulation". No additional setting is required for a virtual axis.

Feedback of the axis position

The speed setpoint of the simulated drive is integrated into the actual position value with a time delay (PT1). The result of this calculation is returned to the technology object as position actual value of the axis.

Reference point approach of the axis

If you selected "Use zero mark via PROFIdrive frame" in STEP 7 for the reference point approach, PLCSIM Advanced responds immediately to any active (mode 2, 3, 8) or passive (mode 4, 5) reference point approach command (MC_Home). The actual position is predefined as the reference point.

More information

You can find information on the technology functions of the CPU in the S7-1500/S7-1500T Motion Control (https://support.industry.siemens.com/cs/ww/en/view/109751049) function manuals.
For more information, refer to the manuals of the supported SIMATIC controllers. (https://support.industry.siemens.com/cs/ww/en/view/109744173)

6.4 Simulating the SIMATIC Drive Controller

Introduction

The SIMATIC Drive Controller is a drive-based controller in the SIMATIC S7-1500 range.
A SIMATIC Drive Controller combines the following functionalities in a SINAMICS S120 Booksize Compact housing:

- Fail-safe SIMATIC S7-1500 technology CPU with integrated technology I/Os
- SINAMICS S120 drive control

Both components are called "CPU" and "SINAMICS Integrated" in the documentation.
The SIMATIC Drive Controller supports PROFINET and PROFIBUS DP communication.

Supported SIMATIC Drive Controllers

S7-PLCSIM Advanced V5.0 supports the SIMATIC Drive Controllers as of firmware version V2.9:

- CPU 1504D TF (6ES7615-4DF10-0AB0)
- CPU 1507D TF (6ES7615-7DF10-0AB0)

Special features

Unlike other SIMATIC S7-1500 technology CPUs, the SIMATIC Drive Controllers also have:

- Integrated inputs/outputs (onboard I/O)
- Integrated drive control SINAMICS Integrated

Restrictions

S7-PLCSIM Advanced only simulates the standard CPU functionality of the SIMATIC Drive Controller.
Not simulated are:

- the technology functions of the onboard I/O
- the SINAMICS Integrated
- PROFINET IO
- PROFIBUS DP

The integrated inputs/outputs of the X122, X132 and X142 interfaces can only be simulated as binary inputs/outputs.

Technological functions are not simulated, for example, Timer DI/DQ, Oversampling DI/DQ. Channel parameter assignments, such as signal inversion, input delay and edge detection are not possible.

The functionality of the SINAMICS Integrated is not simulated – but the SINAMICS Integrated is shown as a valid node.

Simulations are possible as with SINAMICS S120 CU320-2 based on the drive telegrams (e.g. by reading and forcing the telegram addresses).

Coupled isochronous mode

In coupled isochronous mode, the relevant clock systems use a shared system clock, for example, from PROFINET IO or the local send clock of the technology I/Os. The leading clock system provides its own system clock to the other clock systems.

NOTE

Leading clock system

Clock synchronization with technology I/Os X142 (local send clock) as leading clock system is not possible with S7-PLCSIM Advanced. In this case, you configure the PROFINET IO interface X150 as leading clock system.

The information provided in the section Simulation of Motion Control (Page 80) still applies.

Additional information

The SIMATIC Drive Controller system manual (https://support.industry.siemens.com/cs/ww/en/view/109766665) describes in detail the configuration, installation, wiring and commissioning of the SIMATIC Drive Controller. The STEP 7 online help supports you in the configuration and programming.

The SIMATIC Drive Controller equipment manual (https://support.industry.siemens.com/cs/ww/en/view/109766666) contains a compact description of the module-specific information, such as properties, wiring diagrams, characteristics and technical specifications.

6.5 Simulating a redundant S7-1500R/H system

Introduction

In a redundant S7-1500R/H system, the CPUs are duplicated, in other words, redundant. The two CPUs process the same project data and the same user program in parallel. The two CPUs are synchronized over two redundancy connections. If one CPU fails, the other CPU maintains control of the process.

Supported CPUs

PLCSIM Advanced V5.0 supports the R/H CPUs of the redundant S7-1500R/H system as of firmware version V2.9 with the following functional restrictions:

CPU	Article number
CPU 1513R-1 PN	6ES7513-1RL00-0AB0
CPU 1513R-1 PN	6ES7513-1RM03-0AB0
CPU 1515R-2 PN	6ES7515-2RM00-0AB0
CPU 1515R-2 PN	6ES7515-2RN03-0AB0
CPU 1515R-2 PN SIPLUS RAIL	6AG2 515-2RM00-4AB0
CPU 1515R-2 PN SIPLUS	6AG1 515-2RM00-7AB0
CPU 1517H-3 PN	6ES7517-3HP00-0AB0
CPU 1517H-3 PN SIPLUS	6AG1 517-3HP00-4AB0
CPU 1518HF-4 PN	6ES7518-4JP00-0AB0

Supported operating and system states

Like standard S7-1500 CPUs, the S7-1500R/H CPUs have the operating states STOP, STARTUP and RUN. For operation as a redundant system, one of the two CPUs can take on an additional operating state, SYNCUP, for synchronizing the two subsystems. The RUN operating state is divided into the following states for redundant systems:

- RUN
- RUN-Syncup
- RUN-Redundant

The system states of the redundant S7-1500R/H system result from the combination of the operating states of the individual CPUs as follows:

- STOP
- STARTUP
- RUN-Solo
- SYNCUP
- RUN-Redundant

NOTE

RUN-Solo system state is supported by PLCSIM Advanced

The simulation of a redundant S7-1500R/H system is possible in the RUN-Solo system state (RUN operating state of the CPU). In the RUN operating state, the (leading) primary CPU behaves just like an S7-1500 standard CPU. The MAINT LED on the CPU is always yellow (maintenance request) because no partner CPU was found for redundant operation.

No simulation is possible with PLCSIM Advanced in redundant system operation.

Unsupported events

The following event is not supported by the R/H CPUs of the redundant S7-1500R/H system:

RackOrStationFault

NOTE

The occurrence of a RackOrStationFault event does not trigger an OnLedChanged event for R/H CPUs. The ERROR LED is not flashing even though a corresponding device fault message is displayed in the diagnostic buffer.

Supported functions as of firmware version V3.0

As of FW version V3.0, the S7-1500H redundant system supports PROFINET system redundancy R1 with the following devices:

- ET 200SP IM 155-6 PN R1
  (6ES7155-6AU00-0HM0)
- ET 200SP HA IM 155-6 PN HA
  (6DL1155-6AU00-0PM0)
- ET 200iSP IM 152-1 PN
  (6ES7152-1BA00-0AB0)

R1 devices are equipped with two interface modules compared to S2 devices. If one interface module fails, the R1 device can still be reached by the H-CPUs via the second interface module.

The redundant S7-1500H system thus supports the following additional setup variants:

- Configuration of PROFINET rings with R1 devices
- Line topology configuration with R1 devices, S2 devices, switched S1 devices
- Combined topology configuration with R1 devices and S2 devices

You can load projects consisting of R1 and/or S2 devices in PLCSIM Advanced and simulate them. Reading and writing input and output values of simulated R1 and S2 devices via the API works in the same way as for other simulated IO devices. The simulated R1 and S2 devices support simulation of external events, such as failure of a redundancy connection. Note the removal and insertion of R1 devices is not supported by S7-PLCSIM Advanced.

More information

The Redundant system S7-1500R/H System Manual (https://support.industry.siemens.com/cs/ww/en/view/109754833) describes in detail the configuration, installation, wiring and commissioning of the redundant S7-1500R/H system. The STEP 7 online help supports you in the configuration and programming.

The equipment manuals of the R-, H- and HF-CPUs contain a compact description of the module-specific information, such as properties, wiring diagrams, characteristics and technical specifications of the CPUs.

Virtual time response

7

The virtual controller uses two types of internal clocks for the simulation: A virtual clock and a real clock. The virtual clock is always the basis for the user program. It is used by components that are relevant for running the STEP 7 user program, such as cyclic OBs, cycle time monitoring, minimum cycle time, virtual system time and time calculations. Also, the time between two cycle control points is measured in virtual time.

The virtual time can be accelerated or slowed for test purposes.

The real clock always runs unchanged. It is used by components that are not subject to control processes, for example, communication with STEP 7.

Interruption of the process

Since PLCSIM Advanced runs in a Windows environment, Windows might temporarily suspend the virtual controller process. In such a case, both the virtual and the real clock stop in the virtual controller. They only continue to run when Windows resumes processing.

Virtual system time

When you start PLCSIM Advanced, the virtual system time of the virtual controller starts with the system time of Windows.

The virtual system time is based on the virtual clock. If a scaling factor is used, the system time runs correspondingly faster or slower.

All events that the virtual controller sends to the API provides a time stamp based on the system time.

NOTE

Difference between system time and local time

- System time**:** UTC ± 0 with daylight saving / standard time
- Local time: UTC ± time zone with daylight saving time / winter time

---

API functions

- GetSystemTime() (Page 224)
- SetSystemTime() (Page 224)
- SystemTime { get; set; } (Page 225)

Time offset

NOTE

Keep in mind that the time information of virtual system time and real local time differs by the time offset that is formed in addition to the selected scaling factor from the time zone offset and the daylight saving time/standard time offset.

Scaling factor

Using a scaling factor, you can speed up or slow down the virtual clock of the virtual controller for simulations.

To set the required scaling factor, enable the grayed out icon on the control panel to the right of your PLCSIM Advanced instance. The symbol then becomes active and you can use the scaling function.

- The default setting is 1, i.e. the virtual time passes the same as the real time.
- **Fast forward:** A scaling factor greater than 1 accelerates the virtual clock.
  Example: Scaling factor 2.0 → The virtual time is running twice as fast.
- **Slow motion**: A scaling factor less than 1 decelerates the virtual clock.
  Example: Scaling factor 0.5 → The progress of the virtual time slows down to 50%.

API functions

- GetScaleFactor() (Page 225)
- SetScaleFactor() (Page 225-226)
- ScaleFactor { get; set; } (Page 226)

See also

Settings for the virtual time (Page 224)

7.1 Speed up and slow down simulation

Influence of fast forward and slow motion

Simulations can be accelerated and slowed down. Fast forward and slow motion only affect time-based components, for example, cyclic OBs. Compared to the real time, they are performed more frequently with fast forward and less frequently with slow motion.

Fast forward and slow motion do not change the execution speed of the CPU machine codes. For example, the speed at which all operations of an OB1 cycle are executed does not change. The execution speed depends on the processor of the PC on which the virtual controller running. If you change the scaling factor, more or fewer cycle control points are reached in a given period of virtual time.

NOTE

Performance

The performance depends on the size of your project, among other things.

If the scaling factor is too high and the cycle-time monitoring indicates that the PC was incapable of calculating the OB1 or cyclic OBs in the specified time, the virtual controller goes to STOP.

Recommendation: To avoid this, start with a small scaling factor and gradually increase it step-by-step while keeping the virtual controller in RUN.

If an overflow of events occurs, slow down the speed of the simulation. See Monitoring overflow (Page 343) and Cycle control (Page 226).

Fast forward

To speed up the virtual time, select a scaling factor greater than 1 in the Control Panel or in the API.

Slow motion

To slow down the virtual time, select a scaling factor less than 1 in the Control Panel or in the API.

API functions

- GetScaleFactor() (Page 224)
- SetScaleFactor() (Page 224)
- ScaleFactor { get; set; } (Page 224)

7.2 Stop simulation

Freeze state of the virtual controller

To stop a simulation and synchronize simulation partners, you can set a virtual controller to a freeze state via the API. When the virtual controller has reached a synchronization point, the virtual controller sends the event `OnSyncPointReached` to the API clients.

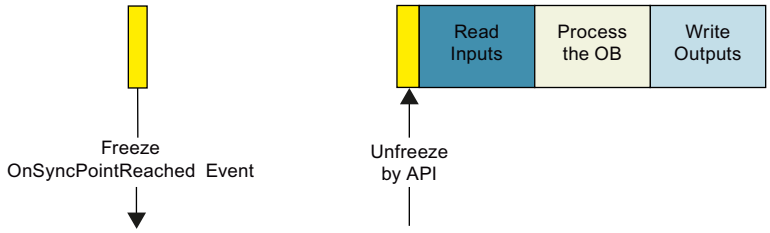

Figure 7-1 Freeze state of the virtual controller

The following occurs in the freeze state:

- The virtual time is stopped.
- The OBs currently being executed are stopped.
  The procedure corresponds to the behavior of a program that has reached a breakpoint.
- The user program is no longer executed.
- The virtual controller is still accessible from the TIA Portal.

NOTE

Freeze state during downloading

To complete a download in freeze state, the virtual controller must pass through a suspended or terminated free state.

NOTE

Freeze-state ≠ operating state

The freeze state is an internal operating state of the virtual controller. It does not correspond to RUN/STOP mode of a CPU. In the freeze state, the virtual controller maintains the last operating state.

- The LED display on the Control Panel and on the Web server accordingly shows RUN or STOP for instance.
- The instance shows the operating state `SROS_FREEZE` / `Freeze`, see EOperatingState (Page 319).

NOTE

Reaction of a PLCSIM Advanced API to a freeze state

If you use a SingleStep operating mode, you must register a callback function for the `OnSyncPointReached` event. Calling the mode-specific `RunToNextSyncPoint` method ensures that the freeze state of the virtual controller is exited again.

Synchronization points

A synchronization point always exists **before** inputs are read in, for example at the cycle control point or at the beginning of a cyclic OB.

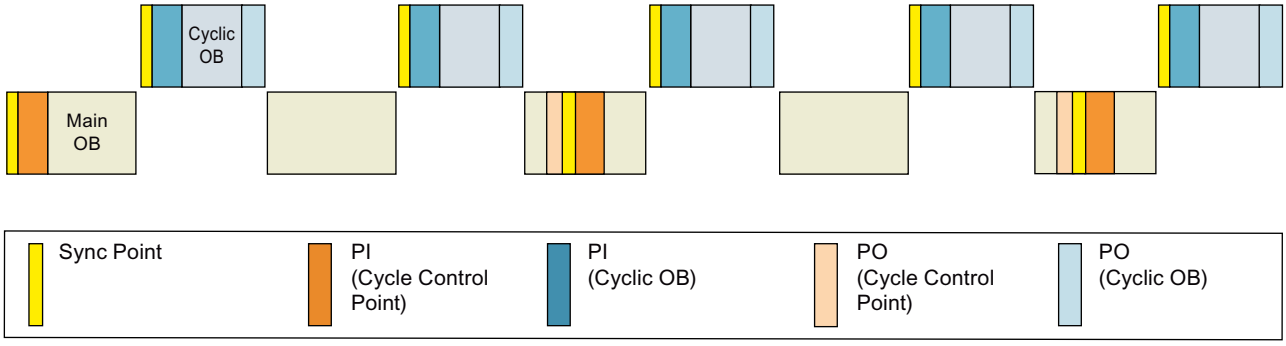

Figure 7-2 Overview of the synchronization points

Trigger freeze state

To trigger the freeze state, following modes are available for the virtual controller:

- SingleStep operating modes
  See Synchronize simulation partner cycle-controlled (Page 91-92).
- TimespanSynchronized operating modes
  See Synchronize simulation partner time-controlled (Page 95).

In Default operating mode, the virtual controller does not change into a freeze state.

API functions

- Settings for the cycle control (Page 226)
- GetOperatingMode() (Page 226)
- SetOperatingMode() (Page 227)
- OperatingMode { get; set; } (Page 227)
- EOperatingMode (Page 320)

7.3 Synchronize simulation partner

7.3.1 Synchronize simulation partner cycle-controlled

SingleStep operating modes

The SingleStep modes of operation of the virtual controller are used to synchronize multiple simulation partners (clients) using synchronization points. The operating modes define the synchronization point at which the virtual controller changes to the freeze state and sends the `OnSyncPointReached` event.

Table 7-1 Cycle-controlled operating modes (SingleStep)

Operating mode[1]	Synchronization point		Minimum cycle time[2]	Send clock "Bus"[3]
	Cycle control point	Before reading in the process image partition		
	"C"	"P"	"T"	
`SingleStep_C`	✓			
`SingleStep_P`		✓		
`SingleStep_CP`	✓	✓		
`SingleStep_CT`	✓		✓	
`SingleStep_CPT`	✓	✓	✓	
`SingleStep_Bus`	✓			✓

[1] A change from one SingleStep operating mode to another during operation would result in the input parameter `TimeSinceSameSyncPoint_ns / TimeSinceAnySyncPoint_ns` being set to 0 in the first SyncPointReached callback event in the new operating mode. We recommend that the SingleStep operating mode not be changed during operation.

[2] In addition, the minimum scan cycle time of OB 1 is overwritten in this operating mode. When you define a minimum cycle time of 200 ms, the minimum distance between two cycle control points is 200 virtual milliseconds. The default setting is 100 ms.

[3] Send clock of the I/O system (PROFIBUS or PROFINET) that is to be used for the cycle-controlled synchronization of the virtual controller. You set the send clock of the respective I/O system in the STEP 7 properties, for example, in the properties of the PROFINET interface of the CPU (Advanced options > Real time settings > I/O communication > Send clock).

API functions / events

- GetOverwrittenMinimalCycleTime_ns() (Page 226)
- SetOverwrittenMinimalCycleTime_ns() (Page 226)
- OverwrittenMinimalCycleTime_ns { get; set; } (Page 226)
- RunToNextSyncPoint() (Page 226)
- OnSyncPointReached (Page 255)
- EventCallback_II_SREC_ST_UINT32_INT64_INT64_UINT32 (Page 284) / Delegate_II_EREC_DT_UINT32_INT64_INT64_UINT32 (Page 292)

Conditions for the `SingleStep_Bus` operating mode:

The following conditions must be met for the `SingleStep_Bus` operating mode:

- You must have configured outputs on the controller.
- To synchronize the process image of the outputs, you must call the SYNC_PO instruction in the isochronous mode interrupt OB.

NOTE

In addition to the send clock of the bus, the cycle control point is also used as a synchronization point. In the cycle control point, the transferred ID has the value 0xFFFF. The in_parameters "in_TimeSinceSameSyncPoint_ns" and "in_TimeSinceAnySyncPoint_ns" have the value 0.

A synchronization of OBs and process image partitions is only possible if the OBs call the instructions "SYNC_PI" and "SYNC_PO". To use process image partition 1 (PIP 1) for an F-runtime group, configure the "Pre/Post processing of the F-runtime group" in the Safety Administration editor.

To configure the preprocessing and postprocessing of the F-runtime group you need new FCs for "SYNC_PI" and "SYNC_PO" with the following properties:

- Name of the FC: SYNC_PI
  #RET_VAL_PI := SYNC_PI(PART := "PIP 1", FLADDR => #FLADDR_PI);
- Name of the FC: SYNC_PO
  #RET_VAL_PO := SYNC_PO(PART := "PIP 1", FLADDR => #FLADDR_PO);

To synchronize the process image partition 1 (PIP 1), add the FCs in the Safety Administration editor under "Pre/Post processing of the F-runtime group".

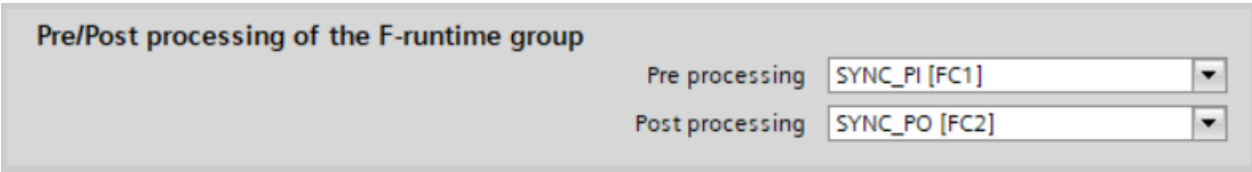

Figure 7-3 Safety Administration Editor

After compiling these changes, process image partition 1 (PIP 1) is also available for the fail-safe organization block (FOB).

Note regarding the `SingleStep_P` and `SingleStep_Bus` operating mode

NOTE

Loss of a `OnSyncPointReached` event when downloading a clock-synchronous OB in RUN mode.

If you are registered for the `OnSyncPointReached` event in the `SingleStep_P` and `SingleStep_Bus` operating modes, the virtual controller does not send this event to the API client when downloading a clock-synchronous OB.

Solution:

1. Use the `OnSoftwareConfigurationChanged` event to determine the start and end of a download
2. Register and log off the `OnSyncPointReached` event, or handle the loss of the `OnSyncPointReached` event accordingly.

Terminating the freeze state

The `RunToNextSyncPoint()` function cancels the freeze state and induces the virtual controller to continue running until the next synchronization point.
Switching to the Default operating mode also terminates the freeze state.

Example

The figure schematically shows the sequence in the `SingleStep_CP` operating mode.
In addition to the `OnSyncPointReached` event the virtual controller also sends the virtual time since the last synchronization point of the same process image partition ID or of any process image partition ID has been reached (`TimeSinceSameSyncPoint_ns` / `TimeSinceAnySyncPoint_ns`).

The `RunToNextSyncPoint()` function cancels the freeze state.

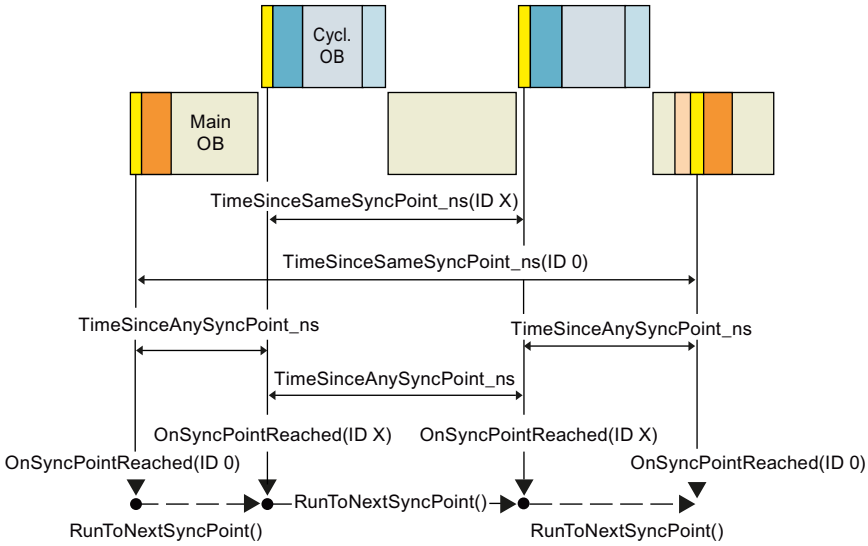

Figure 7-4 Example: Sequence in the SingleStep_CP operating mode

Changing the settings in the watch table

NOTE

Selecting triggers for monitoring of tags in the SingleStep operating modes

In TIA Portal the watch table in basic mode shows the values for outputs and bit memories **before** the processing.

To display the tag values **after** processing, proceed as follows:

1. Select the extended mode for the watch table.
2. In the "Monitor with trigger" column, select "End of cycle, permanent".

7.3.2 Synchronize simulation partner time-controlled

TimespanSynchronized operating modes

Several simulation partners (clients) are synchronized time-controlled with the TimespanSynchronized operating modes of the virtual controller. The operating modes define the synchronization point at which the virtual controller changes to the freeze state and sends the `OnSyncPointReached` event.

Table 7-2 Time-controlled operating modes (TimespanSynchronized)

Operating mode	Synchronization point	
	Cycle control point	Before reading in the process image partition
	"C"	"P"
`TimespanSynchronized_C`	✓	
`TimespanSynchronized_CP`	✓	✓
`TimespanSynchronized_P`		✓

API functions / events

- Settings for cycle control (Page 226)
- StartProcessing() (Page 230)
- OnSyncPointReached (Page 255)

Terminating the freeze state

The `StartProcessing(t)` function cancels the freeze state and induces the virtual controller to continue running at least as long as required (on the basis of the virtual time) before it changes back to the freeze state at the next synchronization point.

Switching to the Default operating mode also terminates the freeze state.

Example

The figure schematically shows the sequence in the `TimespanSynchronized_CP` operating mode.

In addition to the `OnSyncPointReached` event the virtual controller also sends the runtime since the last call of the `StartProcessing`(t) (`TimeSinceSameSyncPoint_ns` / `TimeSinceAnySyncPoint_ns`) function.

The `StartProcessing()` function cancels the freeze state.

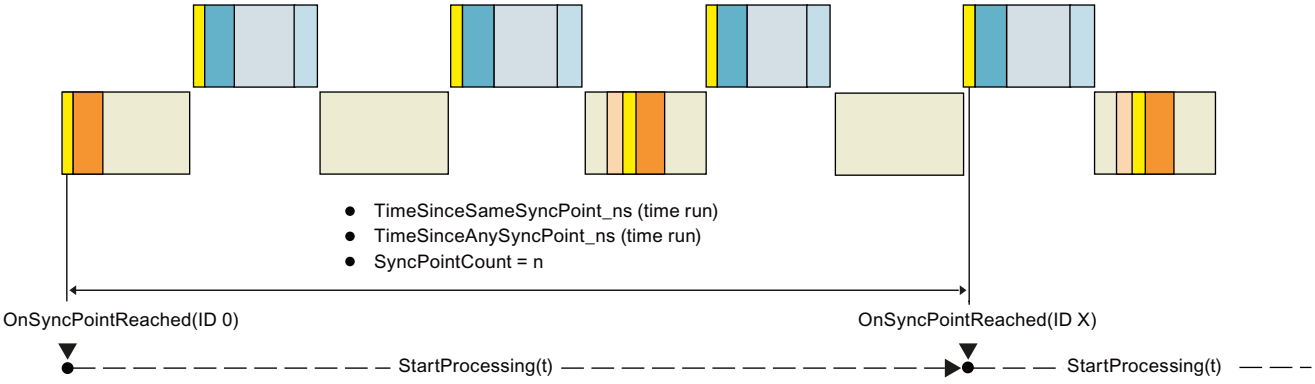

Figure 7-5 Example: Sequence in the TimespanSynchronized_CP operating mode

Description

At least two clients are synchronized on the basis of a virtual period for the time-controlled operating modes. A client can be an instance of a virtual controller or an application that uses the Runtime API (API client). The synchronization must be performed by a synchronization master.

The synchronization master instructs a client to run for a specific period. The time period is specified by the master in nanoseconds. The client then runs for the expected period before the client goes into the freeze state at the next synchronization point. Before switching to the freeze state, the client sends the master the exact amount of time that he currently needed. Thereafter, the master signals the next client to catch up.

API client as master

The API client as master signals each client when it should start. The master receives events from every client when they occur.

An API client can only "time manage" instances of a virtual controller. The API client does not receive events from other API clients. It cannot send messages to other API clients.

User interfaces (API) 8

8.1 Introduction

Components of the Simulation Runtime

The following components are relevant for handling the Simulation Runtime of PLCSIM Advanced:

Table 8-1 Components of the Simulation Runtime

Components	Description
• "Siemens.Simatic.Simulation. Runtime.Manager.exe"	A Windows process that runs in the background. Main component of Runtime that manages all other Runtime components. The process is started automatically as soon as an application attempts to initialize the Runtime API. It is ended automatically as soon as there is no longer any application running that initialized the Runtime API.
• "Siemens.Simatic.Simulation. Runtime.Instance.exe"	The process of the instance that loads a DLL of a virtual controller. Each virtual controller generates its own process.
• "Siemens.Simatic.Simulation. Runtime.Api.x86.dll" • "Siemens.Simatic.Simulation. Runtime.Api.x64.dll"	API libraries that must load an application to use the Simulation Runtime. The libraries contain interfaces for native code and managed code. The "Runtime.Api.x86.dll" is loaded exclusively by 32-bit applications, and the "Runtime.Api.x64.dll" by 64-bit applications.
• "SimulationRuntimeApi.h"	Header file that describes all data types that require a native C++ application to use the API library.
• "Siemens.Simatic.PlcSim.Vplc1500. ODKClient.so.exe"	ODK client process for a CPU function library (original Shared Object)
• "Siemens.Simatic.PlcSim.Vplc1500. ODKClient.x86.exe"	ODK client process for a 32-bit application
• "Siemens.Simatic.PlcSim.Vplc1500. ODKClient.x64.exe"	ODK client process for a 64-bit application

External applications and Simulation Runtime

The following figure schematically presents the access of external applications to Simulation Runtime via the Runtime API. The Simulation Runtime Manager manages the Runtime instances. These load the libraries of the virtual controllers.

An external application can be, for example, another simulation software or a graphical user interface (GUI).

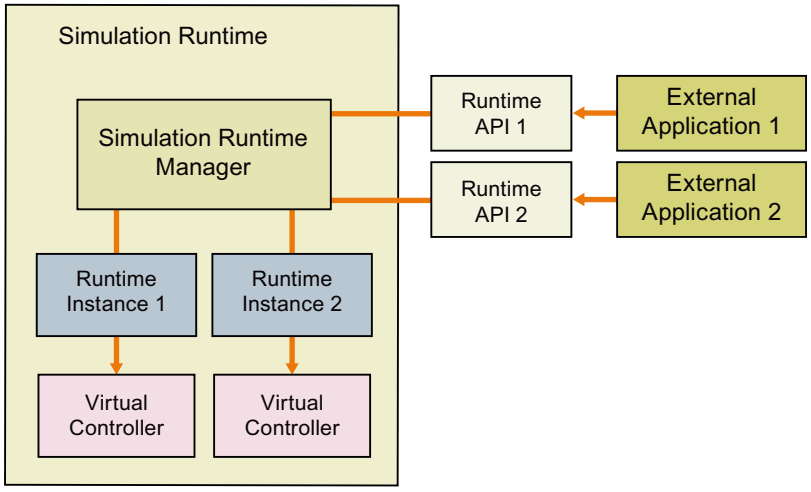

Figure 8-1 External applications and Simulation Runtime

8.1.1 Access to instances

Access via the Control Panel and the API

You can only access a local instance on the PC via the Control Panel. It does not matter on which PC an instance was created and started. With distributed communication, the Runtime API accesses the instance of the other PCs via the Simulation Runtime Manager.

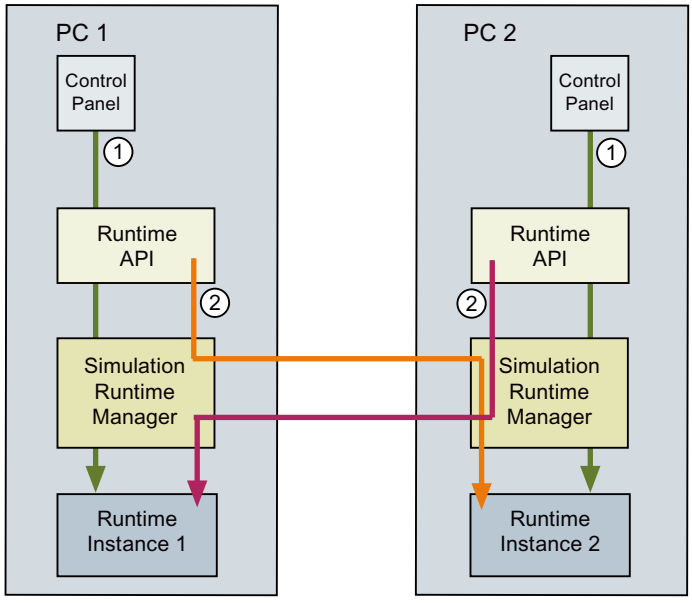

① Access to a local instance via the Control Panel

② Access to a remote instance on the Runtime API

Figure 8-2 Access to instances with distributed communication

API functions

- Overview of IInstances functions - Native C++ (Page 103)
- Overview of IInstances functions - .NET (C#) (Page 106)
- Overview of IRemoteRuntimeManager functions - Native C++ (Page 105)
- Overview of IRemoteRuntimeManager functions - .NET (C#) (Page 108)

See also

Overview of user interfaces for managed code (Page 105)

8.1.2 Interfaces of the Simulation Runtime

The user interfaces of Simulation Runtime include functions you use, for example, to create instances, to change the operating state of a virtual controller, or to exchange I/O data.
Simulation Runtime has the following user interfaces:

- ISimulationRuntimeManager
- IInstances
- IRemoteRuntimeManager

API and external applications

The Runtime API makes the interfaces available to an external application.

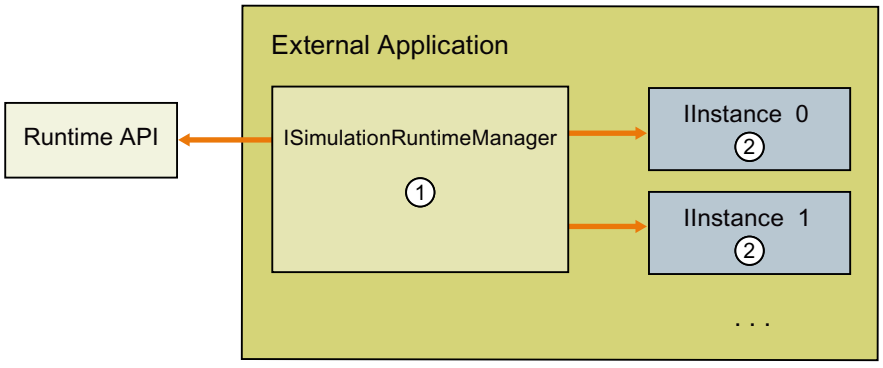

① **ISimulationRuntimeManager**
Interface of the Runtime Manager. It is used to register new Runtime instances, to search through existing Runtime instances, and to receive an interface of a registered instance. Up to 16 instances can be registered in one Runtime Manager.

② **IInstances**
Interface of a Runtime instance. It is used to change the operating state of a virtual controller and to exchange I/O data. Each instance has a unique name and an ID.

Figure 8-3 API and external applications

Access to API functions and data types

Required functions and data types are available for native C++ and .NET (C#).

- Overview of user interfaces for native C++ (Page 101)
- Overview of data types for native C++ (Page 108)
- Overview of user interfaces for managed code (Page 105)
- Overview of data types for managed code (Page 109)

NOTE

The list of tables in this manual gives you direct access to the description of the individual functions and data types.

Transfer parameters for API functions

All API functions that return a value using the function parameters expect a user-allocated memory area as a transfer parameter. Null pointers are not permitted. Exceptions to this are the functions that return an interface of a virtual controller:

- An ISimulationRuntimeManager interface
- An IRemoteRuntimeManager interface
- An IInstance interface

8.1.3 Overview of user interfaces for native C++

Initializing and shutting down API

Table 8-2 Overview of initializing and shutting down API - Native C++

Actions	Functions
Initialize API (Page 111-112)	`InitializeApi` `RuntimeApiEntry_Initialize`
Shut down API (Page 114)	`DestroyInterface` `RuntimeApiEntry_DestroyInterface`
Logging off API library (Page 116)	`FreeApi` `ShutdownAndFreeApi`

Global functions

Table 8-3 Overview of global functions - Native C++

Actions	Functions
Global functions (Page 118)	GetNameOfAreaSection() GetNameOfCPUType() GetNameOfCommunicationInterface() GetNameOfDataType() GetNameOfLEDMode() GetNameOfLEDType() GetNameOfOperatingMode() GetNameOfOperatingState() GetNameOfPrimitiveDataType() GetNameOfTagListDetails() GetNameOfErrorCode() GetNameOfRuntimeConfigChanged() GetNameOfInstanceConfigChanged() GetNameOfDiagSeverity() GetNameOfDirection() GetNameOfRackOrStationFaultType() GetNameOfProcessEventType() GetNameOfPullOrPlugEventType() GetNameOfCycleTimeMonitoringMode() GetNameOfDiagProperty() GetNameOfAutodiscoverType() GetNameOfSoftwareConfigChanged()

API ISimulationRuntimeManager

Table 8-4 Overview of API ISimulationRuntimeManager functions - Native C++

Settings	Functions
Interface (Page 123)	GetVersion() IsInitialized() IsRuntimeManagerAvailable() Shutdown() GetStrictMotionTiming() SetStrictMotionTiming()
Simulation Runtime instances (Page 132)	GetRegisteredInstancesCount() GetRegisteredInstanceInfoAt() RegisterInstance() RegisterCustomInstance() CreateInterface()
Remote connections (Page 137)	OpenPort() ClosePort() GetPort() GetRemoteConnectionsCount() GetRemoteConnectionInfoAt() RemoteConnect() RunAutodiscover()

Table 8-5 Overview of API ISimulationRuntimeManager events - Native C++

Events	Functions
OnSoftwareConfigurationChanged	RegisterOnSoftwareConfigurationChangedCallback() UnregisterOnSoftwareConfigurationChangedCallback() RegisterOnSoftwareConfigurationChangedEvent() UnregisterOnSoftwareConfigurationChangedEvent() WaitForOnSoftwareConfigurationChangedEvent()

Events	Functions

OnRuntimeManagerLost (Page 145)	`RegisterOnRuntimeManagerLostCallback()`
	`UnregisterOnRuntimeManagerLostCallback()`
	`RegisterOnRuntimeManagerLostEvent()`
	`UnregisterOnRuntimeManagerLostEvent()`
	`WaitForOnRuntimeManagerLostEvent()`

OnAutodiscover (Page 147)	`RegisterOnAutodiscoverCallback()` `UnregisterOnAutodiscoverCallback()`

API IInstances

Table 8-6 Overview of IInstances functions - Native C++

Settings	Functions

Interface (Page 148-149)	`GetID()`
	`GetName()`
	`GetCPUType()`
	`SetCPUType()`
	`GetCommunicationInterface()`
	`SetCommunicationInterface()`
	`GetInfo()`
	`UnregisterInstance()`
	`GetStrictMotionTiming()`
	`SetStrictMotionTiming()`

Controller (Page 153)	`GetControllerName()`
	`GetControllerShortDesignation()`
	`GetControllerIPCount()`
	`GetControllerIP()`
	`GetControllerIPSuite4()`
	`SetIPSuite()`
	`GetStoragePath()`
	`SetStoragePath()`
	`ArchiveStorage()`
	`RetrieveStorage()`
	`CleanupStoragePath()`

Operating state (Page 162)	`PowerOn()`
	`PowerOff()`
	`Run()`
	`Stop()`
	`GetOperatingState()`
	`MemoryReset()`

Tag list (Page 172)	`UpdateTagList()`
	`GetTagListStatus()`
	`GetTagInfoCount()`
	`GetTagInfos()`
	`CreateConfigurationFile()`

I/O access via address - Reading (Page 177)	`GetAreaSize()`
	`ReadBit()`
	`ReadByte()`
	`ReadBytes()`
	`ReadSignals()`

I/O access via address - Writing (Page 183)	`WriteBit()`
	`WriteByte()`
	`WriteBytes()`
	`WriteSignals()`

Settings	Functions

I/O access via tag name - Reading (Page 187)	`Read()`
	`ReadBool()`
	`ReadChar(), ReadWChar()`
	`ReadDouble()`
	`ReadFloat()`
	`ReadInt8(), ReadInt16(), ReadInt32(), ReadInt64()`
	`ReadUInt8(), ReadUInt16(), ReadUInt32(), ReadUInt64()`
	`ReadSignals()`
	`ReadString()`
	`ReadWString()`

I/O access via tag name - Writing (Page 206)	`Write()`
	`WriteBool()`
	`WriteChar(), WriteWChar()`
	`WriteDouble()`
	`WriteFloat()`
	`WriteInt8(), WriteInt16(), WriteInt32(), WriteInt64(),`
	`WriteUInt8(), WriteUInt16(), WriteUInt32(), WriteUInt64()`
	`WriteSignals()`
	`WriteString()`
	`WriteWString()`

Virtual time (Page 224)	`GetSystemTime()`
	`SetSystemTime()`
	`GetScaleFactor()`
	`SetScaleFactor()`

Cycle control (Page 226)	`GetOperatingMode()`
	`SetOperatingMode()`
	`SetSendSyncEventInDefaultModeEnabled()`
	`IsSendSyncEventInDefaultModeEnabled`
	`GetOverwrittenMinimalCycleTime_ns()`
	`SetOverwrittenMinimalCycleTime_ns()`
	`RunToNextSyncPoint()`
	`StartProcessing()`
	`SetCycleTimeMonitoringMode()`
	`GetCycleTimeMonitoringMode()`

Acyclic services (Page 233)	

Table 8-7 Overview of IInstances events - Native C++

Events	Functions

OnOperatingStateChanged (Page 247)	`RegisterOnOperatingStateChangedCallback()`
	`UnregisterOnOperatingStateChangedCallback()`
	`RegisterOnOperatingStateChangedEvent()`
	`UnregisterOnOperatingStateChangedEvent()`
	`WaitForOnOperatingStateChangedEvent()`

OnLedChanged (Page 250)	`RegisterOnLedChangedCallback()`
	`UnregisterOnLedChangedCallback()`
	`RegisterOnLedChangedEvent()`
	`UnregisterOnLedChangedEvent()`
	`WaitForOnLedChangedEvent()`

OnSoftwareConfigurationChanged (Page 252)	`RegisterOnSoftwareConfigurationChangedCallback()`
	`UnregisterOnSoftwareConfigurationChangedCallback()`
	`RegisterOnSoftwareConfigurationChangedEvent()`
	`UnregisterOnSoftwareConfigurationChangedEvent()`
	`WaitForOnSoftwareConfigurationChangedEvent()`

OnSyncPointReached (Page 255)	`RegisterOnSyncPointReachedCallback()`
	`UnregisterOnSyncPointReachedCallback()`
	`RegisterOnSyncPointReachedEvent()`
	`UnregisterOnSyncPointReachedEvent()`
	`WaitForOnSyncPointReachedEvent()`

Events	Functions

OnHardwareConfigChanged (Page 258)	`RegisterOnHardwareConfigChangedCallback()`
	`UnregisterOnHardwareConfigChangedCallback()`
	`RegisterOnHardwareConfigChangedEvent()`
	`UnregisterOnHardwareConfigChangedEvent()`
	`WaitForOnHardwareConfigChangedEvent()`

API IRemoteRuntimeManager

Table 8-8 Overview of IRemoteRuntimeManager functions - Native C++

Settings	Functions

Interface (Page 267)	`GetVersion()`
	`GetIP()`
	`GetPort()`
	`GetRemoteComputerName()`
	`Disconnect()`
	`GetStrictMotionTiming()`
	`SetStrictMotionTiming()`

Simulation Runtime instances (Page 272)	`GetRegisteredInstancesCount()`
	`GetRegisteredInstanceInfoAt()`
	`RegisterInstance()`
	`RegisterCustomInstance()`
	`CreateInterface()`

Table 8-9 Overview of IRemoteRuntimeManager events - Native C++

Events	Functions

OnConnectionLost (Page 277-278)	`RegisterOnConnectionLostCallback()`
	`UnregisterOnConnectionLostCallback()`
	`RegisterOnConnectionLostEvent()`
	`UnregisterOnConnectionLostEvent()`
	`WaitForOnConnectionLostEvent()`

8.1.4 Overview of user interfaces for managed code

Initializing and shutting down API

Table 8-10 Overview of initializing and shutting down API - .NET (C#)

Actions	Functions
Initialize API (Page 114)	`Siemens.Simatic.Simulation.Runtime.SimulationRuntimeManager`
Shut down API (Page 118)	

API ISimulationRuntimeManager

Table 8-11 Overview of ISimulationRuntimeManager functions - .NET (C#)

Settings	Functions

Interface (Page 123)	`Version { get; }`
	`IsInitialized { get; }`
	`IsRuntimeManagerAvailable { get; }`
	`Shutdown()`
	`StrictMotionTiming { get; set; }`

Simulation Runtime instances (Page 132)	`RegisterInstanceInfo { get; }`
	`RegisterInstance()`
	`RegisterCustomInstance()`
	`CreateInterface()`

Remote connections (Page 137)	`OpenPort()`
	`ClosePort()`
	`Port { get; }`
	`RemoteConnectionInfo { get; }`
	`RemoteConnect()`
	`RunAutodiscover()`

Table 8-12 Overview of ISimulationRuntimeManager events - .NET (C#)

Events	Functions
OnSoftwareConfigurationChanged (Page 143)	`UnregisterOnSoftwareConfigurationChangedEvent()` `WaitForOnSoftwareConfigurationChangedEvent()`

OnRuntimeManagerLost (Page 145)	`OnRuntimeManagerLost()`
	`RegisterOnRuntimeManagerLostEvent()`
	`UnregisterOnRuntimeManagerLostEvent()`
	`WaitForOnRuntimeManagerLostEvent()`

OnAutodiscover (Page 147)	`OnAutodiscoverData()`

API IInstances

Table 8-13 Overview of IInstances functions - .NET (C#)

Settings	Functions

Interface (Page 148-149)	`Dispose ()`
	`ID { get; }`
	`Name { get; }`
	`CPUType { get; set; }`
	`CommunicationInterface { get; }`
	`Info { get; }`
	`UnregisterInstance()`
	`StrictMotionTiming { get; set; }`

Controller - Information and settings (Page 153)	`ControllerName { get; }`
	`ControllerShortDesignation { get; }`
	`ControllerIPSuite4 { get; }`
	`SetIPSuite()`
	`StoragePath { get; set; }`
	`ArchiveStorage()`
	`RetrieveStorage()`
	`CleanupStoragePath()`

Operating state (Page 162)	`PowerOn()`
	`PowerOff()`
	`Run()`
	`Stop()`
	`OperatingState { get; }`
	`MemoryReset()`

Settings	Functions

Tag list (Page 172)	`UpdateTagList()`
	`GetTagListStatus()`
	`TagInfos { get; }`
	`CreateConfigurationFile()`

I/O access via address - Reading (Page 177)	`InputArea | MarkerArea | OutputArea { get; }`
	`AreaSize { get; }`
	`ReadBit()`
	`ReadByte()`
	`ReadBytes()`
	`ReadSignals()`

I/O access via address - Writing (Page 183)	`WriteBit()`
	`WriteByte()`
	`WriteBytes()`
	`WriteSignals()`

I/O access via tag name - Reading (Page 187)	`Read()`
	`ReadBool()`
	`ReadChar(), ReadWChar()`
	`ReadDouble()`
	`ReadFloat()`
	`ReadInt8(), ReadInt16(), ReadInt32(), ReadInt64()`
	`ReadUInt8(), ReadUInt16(), ReadUInt32(), ReadUInt64()`
	`ReadSignals()`
	`ReadString()`
	`ReadWString()`

I/O access via tag name - Writing (Page 206)	`Write()`
	`WriteBool()`
	`WriteChar(), WriteWChar()`
	`WriteDouble()`
	`WriteFloat()`
	`WriteInt8(), WriteInt16(), WriteInt32(), WriteInt64(),`
	`WriteUInt8(), WriteUInt16(), WriteUInt32(), WriteUInt64()`
	`WriteSignals()`
	`WriteString()`
	`WriteWString()`

Virtual time (Page 224)	`SystemTime { get; set; }` `ScaleFactor { get; set; }`

Cycle control (Page 226)	`OperatingMode { get; set; }`
	`IsSendSyncEventInDefaultModeEnabled { get; set; }`
	`OverwrittenMinimalCycleTime_ns { get; set; }`
	`RunToNextSyncPoint()`
	`StartProcessing()`
	`SetCycleTimeMonitoringMode()`
	`GetCycleTimeMonitoringMode()`

Acyclic services (Page 233)	

Table 8-14 Overview of IInstances events - .NET (C#)

Events	Functions

OnOperatingStateChanged (Page 247)	`OnOperatingStateChanged()`
	`RegisterOnOperatingStateChangedEvent()`
	`UnregisterOnOperatingStateChangedEvent()`
	`WaitForOnOperatingStateChangedEvent()`

OnLedChanged (Page 250)	`OnLedChanged()`
	`RegisterOnLedChangedEvent()`
	`UnregisterOnLedChangedEvent()`
	`WaitForOnLedChangedEvent()`

Events	Functions
OnSoftwareConfigurationChanged (Page 143)	`UnregisterOnSoftwareConfigurationChangedEvent()` `WaitForOnSoftwareConfigurationChangedEvent()`

OnSyncPointReached (Page 255)	`OnSyncPointReached()`
	`RegisterOnSyncPointReachedEvent()`
	`UnregisterOnSyncPointReachedEvent()`
	`WaitForOnSyncPointReachedEvent()`

OnHardwareConfigChanged	`OnHardwareConfigChanged()`
	`RegisterOnHardwareConfigChangedEvent()`
	`UnregisterOnHardwareConfigChangedEvent()`
	`WaitForOnHardwareConfigChangedEvent()`

API IRemoteRuntimeManager

Table 8-15 Overview of IRemoteRuntimeManager functions - .NET (C#)

Settings	Functions

Interface (Page 267)	`Dispose()`
	`Version { get; }`
	`IP { get; }`
	`Port { get; }`
	`RemoteComputerName { get; }`
	`Disconnect()`
	`StrictMotionTiming { get; set; }`

Simulation Runtime instances (Page 132)	`RegisterInstanceInfo { get; }`
	`RegisterInstance()`
	`RegisterCustomInstance()`
	`CreateInterface()`

Table 8-16 Overview IRemoteRuntimeManager events - .NET (C#)

Events	Functions

OnConnectionLost() (Page 277-278)	`OnConnectionLost()`
	`RegisterOnConnectionLostEvent()`
	`UnregisterOnConnectionLostEvent()`
	`WaitForOnConnectionLostEvent()`

8.1.5 Overview of data types for native C++

The following table shows which data types are available for the simulation in Runtime Manager.

Table 8-17 Overview of data types - Native C++

Data type	
DLL import functions (Page 280)	`ApiEntry_Initialize` `ApiEntry_DestroyInterface`

Event callback functions (Page 281)	`EventCallback_VOID`
	`EventCallback_SRCC_UINT32_UINT32_INT32`
	`EventCallback_SRRSI_AD`
	`EventCallback_IRRTM`
	`EventCallback_II_SREC_ST_SROS_SROS`
	`EventCallback_II_SREC_ST_UINT32_INT64_INT64_UINT32`
	`EventCallback_II_SREC_ST`
	`EventCallback_II_SREC_ST_SRICC_UINT32_UINT32_UINT32_UINT32`
	`EventCallback_II_SREC_ST_SRLT_SRLM`
	`EventCallback_II_SREC_ST_SDRI`
	`EventCallback_II_SREC_ST_SDRI_BYTE`

Data type	
	EventCallback_II_SREC_ST_UINT32_UINT32 EventCallback_II_SREC_ST_UINT32_UINT32_EPET_UINT32 EventCallback_II_SREC_ST_UINT32_EPPET_UINT32 EventCallback_II_SREC_ST_UINT32_ERSFET EventCallback_II_SREC_ST_UINT32 EventCallback_II_SSCCP
Definitions and constants (Page 297)	
Unions (Page 298)	UIP UDataValue
Structures (Page 300)	SDataValue SDVBNI SDataValueByAddress SDataValueByName SConnectionInfo SInstanceInfo SDimension STagInfo SIP SIPSuite4 SOnSyncPointReachedResult SDataValueByAddressWithCheck SDataValueByNameWithCheck SDataRecordInfo SDataRecord SConfiguredProcessEvents SDiagExtChannelDescription SAutodiscoverData SOnSoftwareConfigChangedParameter
Enumerations (Page 316)	ERuntimeErrorCode EArea EOperatingState EOperatingMode ECPUType ECommunicationInterface ECommunicationMode EPLCInterface ELEDType ELEDMode EPrimitiveDataTypes EDataType ETagListDetails ERuntimeConfigChanged EInstanceConfigChanged EPullOrPlugEventType EProcessEventType EDirection EDiagProperty EDiagSeverity ERackOrStationFaultType ECycleTimeMonitoringMode EAutodiscoverType

8.1.6 Overview of data types for managed code

The following table shows which data types are available for the simulation in Runtime Manager.

Table 8-18 Overview of data types - .NET (C#)

Data type	
Delegate definitions (Page 290) - Event handler methods	Delegate_Void Delegate_SRCC_UINT32_UINT32_INT32 Delegate_SRRSI_AD Delegate_IRRTM Delegate_II_EREC_DT_EOS_EOS Delegate_II_EREC_DT_UINT32_INT64_INT64_UINT32 Delegate_II_EREC_DT Delegate_II_EREC_DT_SRICC_UINT32_UINT32_UINT32_UINT32 Delegate_II_EREC_DT_ELT_ELM Delegate_II_EREC_DT_SDRI Delegate_II_EREC_DT_SDR Delegate_SREC_ST_UINT32_UINT32 Delegate_SREC_ST_UINT32_UINT32_EPET_UINT32 Delegate_SREC_ST_UINT32_EPPET_UINT32 Delegate_SREC_ST_UINT32_ERSFET Delegate_SREC_ST_UINT32
Definitions and constants (Page 297)	
Structures (Page 300)	SDataValue SDVBNI SDataValueByAddress SDataValueByName SConnectionInfo SInstanceInfo SDimension STagInfo SIP SIPSuite4 SOnSyncPointReachedResult SDataValueByAddressWithCheck SDataValueByNameWithCheck SDataRecordInfo SDataRecord SConfiguredProcessEvents SDiagExtChannelDescription SAutodiscoverData
Enumerations (Page 315)	ERuntimeErrorCode EArea EOperatingState EOperatingMode ECPUType ECommunicationInterface ELEDType ELEDMode EPrimitiveDataTypes EDataType ETagListDetails ERuntimeConfigChanged EInstanceConfigChanged EPullOrPlugEventType EProcessEventType EDirection EDiagProperty EDiagSeverity ERackOrStationFaultType ECycleTimeMonitoringMode EAutodiscoverType

8.2 Initialize API

8.2.1 Load API library

Description

For PLCSIM Advanced, the interfaces of the API V5.0 are not compatible with the interfaces of previous API versions. However, the Runtime Manager of PLCSIM Advanced V5.0 is compatible with the API of previous PLCSIM Advanced versions.
Earlier versions of the API are also installed during the installation of PLCSIM Advanced V5.0.
The default path is:

- C:\Program Files (x86)\Common Files\Siemens\PLCSIMADV\API\1.0
- C:\Program Files (x86)\Common Files\Siemens\PLCSIMADV\API\2.0
- C:\Program Files (x86)\Common Files\Siemens\PLCSIMADV\API\2.1
- C:\Program Files (x86)\Common Files\Siemens\PLCSIMADV\API\3.0
- C:\Program Files (x86)\Common Files\Siemens\PLCSIMADV\API\4.0
- C:\Program Files (x86)\Common Files\Siemens\PLCSIMADV\API\4.1
- C:\Program Files (x86)\Common Files\Siemens\PLCSIMADV\API\5.0

NOTE
API versions
To access and use the latest features and bug fixes, use the latest API version.

The installation path of PLCSIM Advanced is contained in the registry:

- Key: "HKEY_LOCAL_MACHINE\SOFTWARE\Wow6432Node\Siemens\Shared Tools\PLCSIMADV_SimRT"
- Value: "Path"

To maintain the path to the API, add the character string of the following subdirectory at the end: "API\<API version>" (e.g. "API\5.0").
When you use this path the API library (DLL) is loaded directly from the installation directory.

Reference

Additional information can be found in:

- For Native C++ in section InitializeApi() (Page 111-112).
- For .NET via the call of the function "System.Reflection.Assembly.LoadFile(string)" in the online documentation for MSDN.

8.2.2 Native C++

8.2.2.1 InitializeApi()

Description

The `InitializeApi` function loads the API library (DLL) and initializes the API. The function loads the version of the DLL that is compatible with the architecture of your application and with the header file of the API ("SimulationRuntimeApi.h").

To load the DLL, the function `InitializeApi` searches in the following folders one after the other:

- Folder to which the parameter of the function leads (`in_SimulationRuntimeApiDllPath`)
- Folder, which also contains your application that calls this function
- Installation directory of PLCSIM Advanced

If no DLL is available, the function accesses the next folder.

The function returns an interface to the Simulation Runtime Manager. Use this interface to create a new instance of the virtual controller or to obtain access to an existing instance.

Table 8-19 InitializeApi() - Native C++

Syntax	`ERuntimeErrorCode InitializeApi(ISimulationRuntimeManager** out_SimulationRuntimeManagerInterface);` `ERuntimeErrorCode InitializeApi(WCHAR* in_SimulationRuntimeApiDllPath,ISimulationRuntimeManager** inout_SimulationRuntimeManagerInterface);`	
Parameters	• `ISimulationRuntimeManager** out_SimulationRuntimeManagerInterface`: Pointer to a Runtime Manager interface pointer. The pointer must be initialized with `NULL`. The interface is created within the function. See Data types (Page 280). • `WCHAR* in_SimulationRuntimeApiDllPath`: The path to the Runtime API library.	
Return values	Runtime error code	Description
	`SREC_OK`	The function is successful.
	`SREC_WRONG_ARGUMENT`	The pointer to the Runtime Manager interface does not equal `NULL`.
	`SREC_WRONG_VERSION`	• The required version of the interface is incompatible with the version used to compile the API. • The version of the API is not compatible with Runtime. See Compatibility in case of updates (Page 20).
	`SREC_CONNECTION_ERROR`	Unable to establish a connection to the Runtime Manager.
	`SREC_ERROR_LOADING_DLL`	The API library cannot be loaded.
	`SREC_RUNTIME_NOT_AVAILABLE`	No Runtime Manager runs in this Windows user session.
	`SREC_CONFIG_FILE_ERROR`	Operation regarding the configuration file "UserInterfaceConfiguration.xml" has failed, for example, create, read, write.

Example C++	`// Include The Headerfile Of The API`
	`#include "SimulationRuntimeApi.h"`
	
	`// Prepare The Variables`
	`ERuntimeErrorCode result = SREC_INVALID_ERROR_CODE;`
	`ISimulationRuntimeManager* api = NULL;`
	
	`// Initialize The API And Get The RuntimeManager Interface`
	`result =` **InitializeApi**`(&api);`

NOTE

If you no longer require the interface, delete the interface.

See DestroyInterface() (Page 115).

8.2.2.2 RuntimeApiEntry_Initialize

Description

Use the function `RuntimeApiEntry_Initialize` only if the API library (DLL) is to be loaded from a different folder than the folder of your application calling this function.

When the API is initialized, the API library is first loaded and the `Initialize` function is then imported and called.

The function returns an interface to the Simulation Runtime Manager. Use this interface to create a new instance of the virtual controller or to obtain access to an existing instance.

Table 8-20 RuntimeApiEntry_Initialize - Native C++

Syntax	`__declspec(dllexport) ERuntimeErrorCode RuntimeApiEntry_Initialize(ISimulationRuntimeManager** out_SimulationRuntimeManagerInterface,UINT32 in_InterfaceVersion);`	
Parameters	• `ISimulationRuntimeManager** out_SimulationRuntimeManagerInterface:` Pointer to a Runtime Manager interface pointer. The pointer must be initialized with `NULL`. The interface is created within the function. See Data types (Page 280). • `UINT32 in_InterfaceVersion:` Version of the API interface to be downloaded: `DAPI_DLL_INTERFACE_VERSION`.	
Return values	Runtime error code	Description
	`SREC_OK`	The function is successful.
	`SREC_WRONG_ARGUMENT`	The pointer to the Runtime Manager interface does not equal `NULL`.
	`SREC_WRONG_VERSION`	• The required version of the interface is incompatible with the version used to compile the API. • The version of the API is not compatible with Runtime. See Compatibility in case of updates (Page 20).
	`SREC_CONNECTION_ERROR`	Unable to establish a connection to the Runtime Manager.
	`SREC_RUNTIME_NOT_AVAILABLE`	No Runtime Manager runs in this Windows user session.
	`SREC_CONFIG_FILE_ERROR`	Operation regarding the configuration file "UserInterfaceConfiguration.xml" has failed, for example, create, read, write.

Example C++	`// Include The Headerfile Of The API`
	`#include "SimulationRuntimeApi.h"`
	
	`// Prepare The Variables`
	`ERuntimeErrorCode result = SREC_INVALID_ERROR_CODE;`
	`HMODULE dllHandle = NULL;`
	`ApiEntry_Initialize Initialize = NULL;`
	`ISimulationRuntimeManager* api = NULL;`
	
	`// Load The DLL And Import The "Initialize" Function (using the Windows API)`
	`dllHandle = LoadLibrary(DAPI_DLL_NAME_X86);`
	`if (dllHandle != NULL)`
	`{`
	`Initialize = (ApiEntry_Initialize)GetProcAddress(dllHandle, DAPI_ENTRY_INITIALIZE);`
	`}`
	
	`// Initialize The API And Get The RuntimeManager Interface`
	`if ( Initialize != NULL )`
	`{`
	`result = `**Initialize**`(&api, DAPI_DLL_INTERFACE_VERSION);`
	`}`

NOTE

If you no longer require the interface, delete the interface.

SeeDestroyInterface() (Page 115).

8.2.3 .NET (C#)

8.2.3.1 Initialize

Description

The entry point to the API is the static class `Siemens.Simatic.Simulation.Runtime.SimulationRuntimeManager`.
The API is initialized when a function of this class is used for the first time.

Table 8-21 Initialize - .NET (C#)

Exceptions	`Siemens.Simatic.Simulation.Runtime.SimulationInitializationException`	
	Runtime error code	Description
	`ERuntimeErrorCode.ConnectionError`	Unable to establish a connection to the Runtime Manager.
	`ERuntimeErrorCode.WrongVersion`	The version of the API is not compatible with Runtime. See Compatibility during upgrade (Page 20).
	`ERuntimeErrorCode.RuntimeNotAvailable`	No Runtime Manager runs in this Windows user session.
	`ERuntimeErrorCode.ConfigFileError`	Operation regarding the configuration file "UserInterfaceConfiguration.xml" has failed, for example, create, read, write.

8.3 Shut down API

8.3.1 Native C++

Basic procedure for deleting the user interfaces

To delete all user interfaces, generally follow these steps:

1. Delete the interfaces IInstances and IRemoteRuntimeManager.
2. Call the `Shutdown()` function of the ISimulationRuntimeManager interface.
3. Delete the ISimulationRuntimeManager interface.
4. Unload the API library (DLL) with the Window API function `FreeLibrary()`.

Deleting the user interfaces via functions

Deleting the user interfaces is also possible via functions.
If the API was initialized using the `InitializeApi()` function, you delete the user interfaces using the following functions:

- FreeApi() (Page 116)
- ShutdownAndFreeApi() (Page 117)

8.3.1.1 DestroyInterface()

Description

A function pointer to the `RuntimeApiEntry_DestroyInterface` function. The function pointer `DestoyInterface()` is only valid if the `InitializeApi` function has been successfully called.
The function unloads the memory of an ISimulationRuntimeManager, IRemoteRuntimeManager or IInstance interface.

Table 8-22 DestroyInterface() - Native C++

Syntax	`ERuntimeErrorCode DestroyInterface(IBaseInterface* in_Interface);`	
Parameters	• `IBaseInterface* in_Interface:` The interface to be deleted.	
Return values	Runtime error code	Description
	`SREC_OK`	The function is successful.
	`SREC_WRONG_ARGUMENT`	The pointer to the interface is `NULL`.

Example C++	`// Include The Headerfile Of The API`
	`#include "SimulationRuntimeApi.h"`
	
	`// The Interfaces`
	`ERuntimeErrorCode result;`
	`ISimulationRuntimeManager* api = NULL;`
	`IInstance* instance = NULL;`
	
	`// Init the DLL and create an instance`
	`result = InitializeApi(&api);`
	`result = api->RegisterInstance(&instance);`	

	`// Destroy Instance Interfaces`
	`result = DestroyInterface(instance);`
	`instance = NULL;`

8.3.1.2 RuntimeApiEntry_DestroyInterface

Description

Use the `RuntimeApiEntry_DestroyInterface` function only if the API library (DLL) is to be loaded from a different directory than the Startup folder of the application calling this function.

If the API was initialized using the `InitializeApi` function, you select the DestroyInterface() (Page 115) function.

The function unloads the memory of an ISimulationRuntimeManager, IRemoteRuntimeManager or IInstance interface.

Table 8-23 RuntimeApiEntry_DestroyInterface() - Native C++

Syntax	`__declspec(dllexport) ERuntimeErrorCode RuntimeApiEntry_DestroyInterface(IBaseInterface* in_Interface);`	
Parameters	• `IBaseInterface* in_Interface:` The interface to be deleted.	
Return values	Runtime error code	Description
	`SREC_OK`	The function is successful.
	`SREC_WRONG_ARGUMENT`	The pointer to the interface is `NULL`.

Example C++	`// Include The Headerfile Of The API`
	`#include "SimulationRuntimeApi.h"`
	
	`// Prepare The Variables`
	`ERuntimeErrorCode result = SREC_INVALID_ERROR_CODE;`
	`HMODULE dllHandle = NULL;`
	`ApiEntry_DestroyInterface Destroy = NULL;`
	`IInstance* instance = NULL;`
	
	`// Load The DLL And Import The “DestroyInterface” Function (using the Windows API)`
	`dllHandle = LoadLibraryA(DAPI_DLL_NAME_X86);`
	`if ( dllHandle != NULL )`
	`{`
	`Destroy = (ApiEntry_ DestroyInterface)GetProcAddress(dllHandle, DAPI_ENTRY_DESTROY_INTERFACE);`
	`}`
	`…`
	`// Frees the memory of an IInstance interface`
	`result = Destroy(instance);`	

8.3.1.3 FreeApi()

Description

The `FreeApi()` function unloads the library of the Runtime API.

This function can only be called after the successful call of the `InitializeApi` If the `InitializeApi` function was not called, the library must be unloaded using the Windows API function `FreeLibrary()`.

Table 8-24 FreeApi() - Native C++

Syntax	`ERuntimeErrorCode FreeApi();`	
Parameters	None	
Return values	Runtime error code	Description
	`SREC_OK`	The function is successful.
	`SREC_API_NOT_INITIALIZED`	The `InitializeApi` function was not called successfully.

Example C++	`// Include The Headerfile Of The API`
	`#include "SimulationRuntimeApi.h"`
	
	`// The Interfaces`
	`ERuntimeErrorCode result;`
	`ISimulationRuntimeManager* api = NULL;`
	`IInstance* instance = NULL;`
	
	`// Init the API`
	`result = InitializeApi(&api);`
	
	…
	
	`// Shutdown The API`
	`api->Shutdown();`
	`result = DestroyInterface(api);`
	`api = NULL;`
	`result = FreeApi();`	

8.3.1.4 ShutdownAndFreeApi()

Description

The `ShutdownAndFreeApi()` function shuts down the Runtime API, deletes the IRuntimeManager interface and unloads the library of the Runtime API.
This function can only be called after the successful call of the `InitializeApi` If the `InitializeApi` function was not called, the library must be unloaded using the Windows API function `FreeLibrary()`.

Table 8-25 ShutdownAndFreeApi() - Native C++

Syntax	`ERuntimeErrorCode ShutdownAndFreeApi(ISimulationRuntimeManager* in_SimulationRuntimeManagerInterface);`	
Parameters	• `ISimulationRuntimeManager* in_SimulationRuntimeManagerInterface:` The interface of the Runtime Manager to be deleted.	
Return values	Runtime error code	Description
	`SREC_OK`	The function is successful.
	`SREC_API_NOT_INITIALIZED`	The `InitializeApi` function was not called successfully.
	`SREC_WRONG_ARGUMENT`	The pointer to the interface is `NULL`.

Example C++	`// Include The Headerfile Of The API`
	`#include "SimulationRuntimeApi.h"`
	
	`// The Interfaces`
	`ERuntimeErrorCode result;`
	`ISimulationRuntimeManager* api = NULL;`
	`IInstance* instance = NULL;`
	
	`// Init the API`
	`result = InitializeApi(&api);`
	
	…
	
	`// Shutdown The API`
	`result = ShutdownAndFreeApi(api);`
	`api = NULL;`

8.3.2 .NET (C#)

8.3.2.1 Shut down API

You can terminate the .NET components of the API for the IInstance and IRemoteRuntimeManager interfaces by calling the Dispose (Page 149) function.
These interfaces can also be cleared automatically with the .NET Garbage Collector.

Manually clearing the API

To manually clear the API, follow these steps:

1. Delete all interfaces.
   You can find more information at Interfaces - Information and settings (Page 148-149).
2. Call the Shutdown() (Page 123) function of the ISimulationRuntimeManager interface.

8.4 Global functions (Native C++)

The global functions `GetNameOf...` return the name of the enumeration entry (`const WCHAR*`).

GetNameOfAreaSection()

Table 8-26 GetNameOfAreaSection() - Native C++

Syntax	`const WCHAR* GetNameOfAreaSection(EArea in_AreaSection);`
Parameters	`EArea in_AreaSection:` Enumeration entry
Return values	`const WCHAR*:` Name of the enumeration entry

GetNameOfCPUType()

Table 8-27 GetNameOfCPUType() - Native C++

Syntax	`const WCHAR* GetNameOfCPUType(ECPUType in_CPUType);`
Parameters	`ECPUType in_CPUType:` Enumeration entry
Return values	`const WCHAR*:` Name of the enumeration entry

GetNameOfCommunicationInterface()

Table 8-28 GetNameOfCommunicationInterface() - Native C++

Syntax	`const WCHAR* GetNameOfCommunicationInterface(ECommunicationInterface in_CommunicationInterface);`
Parameters	`ECommunicationInterface in_CommunicationInterface:` Enumeration entry
Return values	`const WCHAR*:` Name of the enumeration entry

GetNameOfDataType()

Table 8-29 GetNameOfDataType() - Native C++

Syntax	`const WCHAR* GetNameOfDataType(EDataType in_DataType);`
Parameters	`EDataType in_DataType:` Enumeration entry
Return values	`const WCHAR*:` Name of the enumeration entry

GetNameOfErrorCode()

Table 8-30 GetNameOfErrorCode() - Native C++

Syntax	`const WCHAR* GetNameOfErrorCode(ERuntimeErrorCode in_ErrorCode);`
Parameters	`ERuntimeErrorCode in_ErrorCode:` Enumeration entry
Return values	`const WCHAR*:` Name of the enumeration entry

GetNameOfLEDMode()

Table 8-31 GetNameOfLEDMode() - Native C++

Syntax	`const WCHAR* GetNameOfLEDMode(ELEDMode in_LEDMode);`
Parameters	`ELEDMode in_LEDMode:` Enumeration entry
Return values	`const WCHAR*:` Name of the enumeration entry

GetNameOfLEDType()

Table 8-32 GetNameOfLEDType() - Native C++

Syntax	`const WCHAR* GetNameOfLEDType(ELEDType in_LEDType);`
Parameters	`ELEDType in_LEDType:` Enumeration entry.
Return values	`const WCHAR*:` Name of the enumeration entry

GetNameOfOperatingMode()

Table 8-33 GetNameOfOperatingMode() - Native C++

Syntax	`const WCHAR* GetNameOfOperatingMode(EOperatingMode in_OperatingMode);`
Parameters	`EOperatingMode in_OperatingMode:` Enumeration entry
Return values	`const WCHAR*:` Name of the enumeration entry

GetNameOfErrorCode()

Table 8-34 GetNameOfErrorCode() - Native C++

Syntax	`const WCHAR* GetNameOfErrorCode(ERuntimeErrorCode in_ErrorCode);`
Parameters	`ERuntimeErrorCode in_ErrorCode:` Enumeration entry
Return values	`const WCHAR*:` Name of the enumeration entry

GetNameOfOperatingState

Table 8-35 GetNameOfOperatingState() - Native C++

Syntax	`const WCHAR* GetNameOfOperatingState(EOperatingState in_OperatingState);`
Parameters	`EOperatingState in_OperatingState:` Enumeration entry
Return values	`const WCHAR*:` Name of the enumeration entry

GetNameOfPrimitiveDataType

Table 8-36 GetNameOfPrimitiveDataType() - Native C++

Syntax	`const WCHAR* GetNameOfPrimitiveDataType(EPrimitiveDataType in_DataType);`
Parameters	`EPrimitiveDataType in_DataType:` Enumeration entry
Return values	`const WCHAR*:` Name of the enumeration entry

GetNameOfTagListDetails

Table 8-37 GetNameOfTagListDetails() - Native C++

Syntax	`const WCHAR* GetNameOfTagListDetails(ETagListDetails in_TagListDetails);`
Parameters	`ETagListDetails in_TagListDetails:` Enumeration entry
Return values	`const WCHAR*:` Name of the enumeration entry

GetNameOfRuntimeConfigChanged()

Table 8-38 GetNameOfRuntimeConfigChanged() - Native C++

Syntax	`const WCHAR* GetNameOfRuntimeConfigChanged(ERuntimeConfigChanged in_RuntimeConfigChanged);`
Parameters	`ERuntimeConfigChanged in_RuntimeConfigChanged:` Enumeration entry
Return values	`const WCHAR*:` Name of the enumeration entry

GetNameOfInstanceConfigChanged()

Table 8-39 GetNameOfInstanceConfigChanged() - Native C++

Syntax	`const WCHAR* GetNameOfInstanceConfigChanged(EInstanceConfigChanged in_InstanceConfigChanged);`
Parameters	`EInstanceConfigChanged in_InstanceConfigChanged:` Enumeration entry
Return values	`const WCHAR*:` Name of the enumeration entry

GetNameOfDirection()

Table 8-40 GetNameOfDirection() - Native C++

Syntax	`const WCHAR* GetNameOfDirection(EDirection in_Direction);`
Parameter	`EDirection in_Direction:` Enumeration entry
Return values	`const WCHAR*:` Name of the enumeration entry

GetNameOfDiagSeverity()

Table 8-41 GetNameOfDiagSeverity() - Native C++

Syntax	`const WCHAR* GetNameOfDiagSeverity(EDiagSeverity in_DiagSeverity);`
Parameter	`EDiagSeverity in_DiagSeverity:` Enumeration entry
Return values	`const WCHAR*:` Name of the enumeration entry

GetNameOfRackOrStationFaultType()

Table 8-42 GetNameOfRackOrStationFaultType() - Native C++

Syntax	`const WCHAR* GetNameOfRackOrStationFaultType(ERackOrStationFaultType in_RackOrStationFaultType);`
Parameter	`ERackOrStationFaultType in_RackOrStationFaultType:` Enumeration entry
Return values	`const WCHAR*:` Name of the enumeration entry

GetNameOfProcessEventType()

Table 8-43 GetNameOfProcessEventType() - Native C++

Syntax	`const WCHAR*(GetNameOfProcessEventType(EProcessEventType in_ProcessEventType);`
Parameters	`EProcessEventType in_ProcessEventType:` Enumeration entry
Return values	`const WCHAR*:` Name of the enumeration entry

GetNameOfPullOrPlugEventType()

Table 8-44 GetNameOfPullOrPlugEventType() - Native C++

Syntax	`const WCHAR* GetNameOfPullOrPlugEventType(EPullOrPlugEventType in_PullOrPlugEventType);`
Parameters	`EPullOrPlugEventType in_PullOrPlugEventType:` Enumeration entry
Return values	`const WCHAR*:` Name of the enumeration entry

GetNameOfCycleTimeMonitoringMode()

Table 8-45 GetNameOfCycleTimeMonitoringMode() - Native C++

Syntax	`const WCHAR* GetNameOfCycleTimeMonitoringMode(ECycleTimeMonitoringMode in_CycleTimeMonitoringMode);`
Parameters	`ECycleTimeMonitoringMode in_CycleTimeMonitoringMode:` Enumeration entry
Return values	`const WCHAR*:` Name of the enumeration entry

GetNameOfDiagProperty()

Table 8-46 GetNameOfDiagProperty() - Native C++

Syntax	`const WCHAR* GetNameOfDiagProperty(EDiagProperty in_DiagProperty);`
Parameters	`EDiagProperty in_DiagProperty:` Enumeration entry
Return values	`const WCHAR*:` Name of the enumeration entry

GetNameOfAutodiscoverType()

Table 8-47 GetNameOfAutodiscoverType() - Native C++

Syntax	`const WCHAR* GetNameOfAutodiscoverType(EAutodiscoverType in_AutodiscoverType);`
Parameters	`EAutodiscoverType in_AutodiscoverType:` Enumeration entry
Return values	`const WCHAR*:` Name of the enumeration entry

GetNameOfSoftwareConfigChanged()

Table 8-48 GetNameOfSoftwareConfigChanged() - Native C++

Syntax	`const WCHAR* GetNameOfSoftwareConfigChanged(ESoftwareConfigChanged in_SoftwareConfigChanged);`
Parameters	`ESoftwareConfigChanged in_SoftwareConfigChanged:` Enumeration entry
Return values	`const WCHAR*:` Name of the enumeration entry

8.5 API ISimulationRuntimeManager

8.5.1 Interfaces - Information and settings

GetVersion() / Version { get; }

Returns the version of Runtime Manager. If the function fails, version 0.0 is returned.

Table 8-49 GetVersion() - Native C++

Syntax	`UINT32 GetVersion();`
Parameters	None
Return values	`UINT32:` Runtime Manager Version (`HIWORD` = Major, `LOWORD` = Minor)

Table 8-50 Version { get; } - .NET (C#)

Syntax	`UInt32 Version { get; }`
Parameters	None
Return values	`Uint32:` Runtime Manager Version (`HIWORD` = Major, `LOWORD` = Minor)

IsInitialized() / IsInitialized { get; }

Returns a value that indicates whether the API was successfully initialized.

Table 8-51 IsInitialized() - Native C++

Syntax	`bool IsInitialized();`
Parameters	None
Return values	• `false:` If the API was not initialized. • `true:` If the API was initialized.

Table 8-52 IsInitialized { get; } - .NET (C#)

Syntax	`bool IsInitialized { get; }`
Parameters	None
Return values	• `false`: If the API was not initialized. • `true`: If the API was initialized.

IsRuntimeManagerAvailable() / IsRuntimeManagerAvailable { get; }

The function returns `false` when the connection to Runtime Manager is interrupted. This happens only when the Runtime Manager process is closed.

Subscribe to the `OnRuntimeManagerLost()` event to find out whether the connection is interrupted. See Events (Page 143).

Table 8-53 IsRuntimeManagerAvailable() - Native C++

Syntax	`bool IsRuntimeManagerAvailable();`
Parameters	None
Return values	• `false`: If the connection is interrupted. • `true`: If the connection is active.

Table 8-54 IsRuntimeManagerAvailable { get; } - .NET (C#)

Syntax	`bool IsRuntimeManagerAvailable{ get; }`
Parameters	None
Return values	• `false`: If the connection is interrupted. • `true`: If the connection is active.

Shutdown()

Ends communication with Runtime Manager and clears the interfaces.

Call this function in the following cases:

- Immediately before the API library (DLL) is unregistered (native C++).
- When your application is no longer using Runtime Manager.

Table 8-55 Shutdown() - Native C++

Syntax	`ERuntimeErrorCode Shutdown()`	
Parameters	None	
Return values	Runtime error code	Description
	`SREC_OK`	The function is successful.

Table 8-56 Shutdown() - .NET (C#)

Syntax	`void Shutdown()`
Parameters	None
Return values	None

GetStrictMotionTiming() / StrictMotionTiming { get; }

Returns the current global setting for the "Strict Motion Timing" feature that has an effect on newly created instances. The "Strict Motion Timing" feature is located on the S7-PLCSIM Advanced Control Panel (Page 59).

Table 8-57 GetStrictMotionTiming() - Native C++

Syntax	`ERuntimeErrorCode GetStrictMotionTiming(bool* enabled);`	
Parameters	bool* enabled: Receives the current setting. `true`: Active `false`: Inactive	
Return values	Runtime error code	Description
	`SREC_OK`	The function is successful.
	`SREC_TIMEOUT`	The function does not return on time.
	`SREC_CONFIG_FILE_ERROR`	The setting could not be read from the configuration file UserInterfaceConfiguration.xml.

Table 8-58 StrictMotionTiming { get; } - .NET (C#)

Syntax	`bool StrictMotionTiming { get; }`	
Parameters	None	
Return values	`Siemens.Simatic.Simulation.Runtime.SimulationRuntimeException`	
	Runtime error code	Description
	`ERuntimeErrorCode.Timeout`	The function does not return on time.
	`ERuntimeErrorCode.ConfigFileError`	The setting could not be read from the configuration file UserInterfaceConfiguration.xml.

SetStrictMotionTiming() / StrictMotionTiming { set; }

Sets the global setting for the "Strict Motion Timing" feature that has an effect on newly created instances. The "Strict Motion Timing" feature is located on the S7-PLCSIM Advanced Control Panel (Page 59).

Table 8-59 SetStrictMotionTiming() - Native C++

Syntax	`ERuntimeErrorCode SetStrictMotionTiming(bool enable);`	
Parameters	bool enable: The value to be set. `true`: Active `false`: Inactive	
Return values	Runtime error code	Description
	`SREC_OK`	The function is successful.
	`SREC_ALREADY_EXISTS`	An instance is registered. No instance must be registered to change the setting.
	`SREC_TIMEOUT`	The function does not return on time.
	`SREC_ACCESS_DENIED`	No write rights for the configuration file.
	`SREC_CONFIG_FILE_ERROR`	The setting could not be written to the configuration file UserInterfaceConfiguration.xml.

Table 8-60 StrictMotionTiming { set; } - .NET (C#)

Syntax	`bool StrictMotionTiming { set; }`	
Parameters	None	
Return values	`Siemens.Simatic.Simulation.Runtime.SimulationRuntimeException`	
	Runtime error code	Description
	`ERuntimeErrorCode.AlreadyExists`	An instance is registered. No instance must be registered to change the setting.
	`ERuntimeErrorCode.Timeout`	The function does not return on time.
	`ERuntimeErrorCode.AccessDenied`	No write rights for the configuration file.
	`ERuntimeErrorCode.ConfigFileError`	The setting could not be written to the configuration file UserInterfaceConfiguration.xml.

GetNetworkMode()

Returns the current network mode settings that are used in the network adapter for distributed communication.

Table 8-61 GetNetworkMode() - Native C++

Syntax	`ERuntimeErrorCode ISimulationRuntimeManager::GetNetworkMode(ECommunicationMode* out_Mode);`	
Parameters	`ECommunicationMode* out_Mode:` Receives the network mode as #ECommunicationMode that is currently set in the driver of the S7-PLCSIM Advanced Virtual Switch	
Return values	Runtime error code	Description
	`SREC_OK`	The function is successful.
	`SREC_VIRTUAL_SWITCH_MISCONFIGURED`	The S7-PLCSIM Advanced Virtual Switch is configured incorrectly.

SetNetworkMode()

Sets the network mode as used in the network adapter for distributed communication. Check that the binding on the network interfaces is correct.

Table 8-62 SetNetworkMode() - Native C++

Syntax	`ERuntimeErrorCode ISimulationRuntimeManager::SetNetworkMode(constECommunicationMode in_Mode);`	
Parameters	`ECommunicationMode in_Mode:` Type of network communication mode to be set	
Return values	Runtime error code	Description
	`SREC_OK`	The function is successful.
	`SREC_VIRTUAL_SWITCH_MISCONFIGURED`	The driver of the S7-PLCSIM Advanced Virtual Switch is not running.

NetworkMode { get; set; };

Returns or sets the network mode used on the network adapter for distributed communication.
Check that the binding on the network interfaces is correct.

Table 8-63 NetworkMode { get; set; } - .NET (C#)

Syntax	`ECommunicationMode SimulationRuntimeManager::NetworkMode { get; set; }`	
Return value	`ECommunicationMode:` Type of network communication mode to be set	
Exceptions	Runtime error code	Description
	`ERuntimeErrorCode.` `VirtualSwitchMisconfigured`	The driver of the S7-PLCSIM Advanced Virtual Switch is not running.

GetNetInterfaceMapping()

Returns an interface index of the PC interface to which a specific CPU interface is mapped. Use the `GetNetInterfaces()` function to get a list of PC interfaces with interface index. The value 0 means that no mapping has been set.
Note that GetNetInterfaceMapping() only returns a mapping table and not the actual address while the instance is running.

Table 8-64 GetNetInterfaceMapping() - Native C++ und .NET (C#)

Syntax C++	`INT32 IInstance::GetNetInterfaceMapping(EPLCInterface in_PLCInterfaceID);`	
Syntax .NET (C#)	`int IInstance::GetNetInterfaceMapping(EPLCInterface in_PLCInterfaceID);`	
Parameters	`EPLCInterface in_PLCInterfaceID`: ID of the CPU interface for which you want to get the mapping.	
Return values	Value	Description
	Greater than 0	Index of mapped PC interface
	0	No mapping was defined for the CPU interface.
	-1	The mapping could not be delivered.

SetNetInterfaceMapping()

Sets interface mappings between CPU interface and PC interface. Ethernet packets that a certain PC interface receives are forwarded to the assigned CPU interface. Use the `GetNetInterfaces()` function to get a list of PC interfaces.
Mapping of PLCSIM Virtual Ethernet adapters is not possible.

Table 8-65 SetNetInterfaceMapping() - Native C++

Syntax	ERuntimeErrorCode IInstance::SetNetInterfaceMapping(EPLCInterface in_PLCInterfaceID, DWORD in_PCInterfaceIndex); ERuntimeErrorCode IInstance::SetNetInterfaceMapping(EPLCInterface in_PLCInterfaceID, const WCHAR* in_PCInterfaceName); ERuntimeErrorCode IInstance::SetNetInterfaceMapping(EPLCInterface in_PLCInterfaceID, const SMACAddress* in_MACAddressParam);

Parameters	`EPLCInterface in_PLCInterfaceID:`
	ID of the CPU interface for which a MAC address is to be set (EPLCInterface (Page 323)).
	`DWORD* in_PCInterfaceIndex:`
	Index of the PC interface; if this value is 0, the mapping is deleted.
	`const WCHAR* in_PCInterfaceName:`
	Name of the PC interface
	`const UMACAddress* in_MACAddressParam:`
	Hardware MAC address of the PC interface
	You get these values with the function `GetNetInterfaces()`.	

Return values	Runtime error code	Description
	`SREC_OK`	The function is successful.
	`SREC_WRONG_COMMUNICATION_INTERFACE`	The PC interface does not exist or is not compatible (disabled, not connected, or a PLCSIM Virtual Ethernet Adapter).
	`SREC_ALREADY_EXISTS`	The PC interface has already been assigned to another CPU interface.
	`SREC_CONFIG_FILE_ERROR`	An error occurred when writing the configuration to the file "sim_hwdb.ini".
	`SREC_INTERFACE_REMOVED`	The instance is not registered in Runtime Manager.

Table 8-66 SetNetInterfaceMapping() - .NET (C#)

Syntax	`IInstance::SetNetInterfaceMapping(EPLCInterface in_PLCInterfaceID, uint in_PCInterfaceIndex);`
	`IInstance::SetNetInterfaceMapping(EPLCInterface in_PLCInterfaceID, const String in_PCInterfaceName);`
	`IInstance::SetNetInterfaceMapping(EPLCInterface in_PLCInterfaceID, const SMACAddress in_MACAddressParam);`	

Exceptions	Runtime error code	Description
	`ERuntimeErrorCode.WrongCommunicationInterface`	The PC interface does not exist or is not compatible (disabled, not connected, or a PLCSIM Virtual Ethernet Adapter).
	`ERuntimeErrorCode.AlreadyExists`	The PC interface has already been assigned to another CPU interface.
	`ERuntimeErrorCode.ConfigFileError`	An error occurred when writing the configuration to the file "sim_hwdb.ini".
	`ERuntimeErrorCode.InterfaceRemoved`	The instance is not registered in Runtime Manager.

GetNetInterfaces()

Provides information on the PC interfaces, which you can use for `SetNetInterfaceMapping`.

Table 8-67 GetNetInterfaces() - Native C++

Syntax	`ERuntimeErrorCode ISimulationRuntimeManager::GetNetInterfaces(SNetInterfaceInfo* inout_InterfaceInfo, UINT* inout_InterfaceCount);`

Parameters	`SNetInterfaceInfo* inout_InterfaceInfo:`
	Address of the first item of the SNetInterfaceInfo array, which contains information about PC network adapters. If the value is NULL, only the number of network adapters has been requested.
	`UINT* inout_InterfaceCount:`
	For the input: Number of SNetInterfaceInfo items assigned by the user.
	For the output: Number of network adapters (array items)

Return values	Runtime error code	Description
	SREC_OK	The function is successful.
	SREC_INDEX_OUT_OF_RANGE	The number of array units is lower than the number of network adapters.
	SREC_INTERNAL_ERROR	The system call has caused an internal error.

Example C++	`#include <iostream>`
	`#include "SimulationRuntimeApi.h"`
	
	`ISimulationRuntimeManager* rtm = nullptr;`
	`ERuntimeErrorCode result = SREC_INVALID_ERROR_CODE;`
	
	`//init connection`
	`InitializeApi(&rtm);`
	
	`//get count of network interfaces`
	`UINT count;`
	`result = rtm->GetNetInterfaces(nullptr, &count);`
	
	`//get actual network interfaces`
	`std::unique_ptr<SNetInterfaceInfo[]> netInterfaces =`
	`std::make_unique<SNetInterfaceInfo[]>(count);`
	`result = rtm->GetNetInterfaces(netInterfaces.get(), &count);`
	
	`ShutdownAndFreeApi(rtm);`	

Table 8-68 GetNetInterfaces() - .NET (C#)

Syntax	`SNetInterfaceInfo[] NetInterfaces { get; }`	
Return values	Runtime error code	Description
	SNetInterfaceInfo[]	Information about the PC network interfaces
Exceptions	ERuntimeErrorCode.InternalError	The system call has caused an internal error.

CheckNetInterfaceMapping()

The function checks the validity of the interface mapping to be able to start the instance. All PC instances already running are checked for possible duplicate mappings. The function also checks whether the binding to the PC network interfaces is valid.

Table 8-69 CheckNetInterfaceMapping() - Native C++

Syntax	`ERuntimeErrorCode IInstance::CheckNetInterfaceMapping();`	
Parameters	None	
Return values	Runtime error code	Description
	SREC_OK	The function is successful.
	SREC_INVALID_CONFIGURATION	The configuration is invalid. Examples: • The current instance has a mapped PC network interface that is already in use by another running instance. • A mapped PLCSIM Virtual Ethernet Adapter exists.

Return values	SREC_VIRTUAL_SWITCH_MISCONFIGURED	The binding of an S7-PLCSIM Advanced Virtual Switch on a PC network interface is not correct, or the driver of an S7-PLCSIM Advanced Virtual Switch is not functioning properly. If the binding is not correct, call the SetNetInterfaceBindings() function or set the binding manually before starting the instance.
	SREC_WARNING_NO_EXTERNAL_COMMUNICATION	You have set the Multi-Adapter Network Mode (non-promiscuous mode) without interface mapping or Softbus as communication interface.
	SREC_INTERNAL_ERROR	The system call has caused an internal error.
	SREC_WRONG_COMMUNICATION_INTERFACE	The PC interface does not exist or is not compatible (disabled, not connected, or a PLCSIM Virtual Ethernet Adapter).
	SREC_INTERFACE_REMOVED	The instance is not registered in Runtime Manager.

Table 8-70 CheckNetInterfaceMapping() - .NET (C#)

Syntax	ERuntimeErrorCode IInstance::CheckNetInterfaceMapping()	
Return values	Runtime error code	Description
	ERuntimeErrorCode.OK	The function is successful.
	ERuntimeErrorCode. InvalidConfiguration	The configuration is invalid. Examples: • The current instance has a mapped PC network interface that is already in use by another running instance. • A mapped PLCSIM Virtual Ethernet Adapter exists.
	ERuntimeErrorCode. VirtualSwitchMisconfigured	The binding of an S7-PLCSIM Advanced Virtual Switch on a PC network interface is not correct, or the driver of an S7-PLCSIM Advanced Virtual Switch is not functioning properly. If the binding is not correct, call the SetNetInterfaceBindings() function or set the binding manually before starting the instance.
	ERuntimeErrorCode. WarningNoExternalCommunication	You have set the Multi-Adapter Network Mode (non-promiscuous mode) without interface mapping or Softbus as communication interface.
	ERuntimeErrorCode.InternalError	The system call has caused an internal error.
	ERuntimeErrorCode. WrongCommunicationInterface	The PC interface does not exist or is not compatible (disabled, not connected, or a PLCSIM Virtual Ethernet Adapter)
	ERuntimeErrorCode.InterfaceRemoved	The instance is not registered in Runtime Manager.

SetNetInterfaceBindings()

Sets the binding of an S7-PLCSIM Advanced Virtual Switch to PC interfaces based on the network mode and the mapping configuration of the network interfaces for the instance.

You must call the function from a parent session (administrator mode), otherwise you cannot access it, and the message SREC_ACCESS_DENIED appears.

Table 8-71 SetNetInterfaceBindings() - Native C++

Syntax	`ERuntimeErrorCode ISimulationRuntimeManager::SetNetInterfaceBindings(DWORD in_PCInterfaceIndex = 0);`	
Parameters	`DWORD in_PCInterfaceIndex = 0:` • When Single Adapter Network Mode (promiscuous mode) is set, you can specify the index of the PC interfaces for network communication. To enable only local PC communication, use the value (0). • When Multi-Adapter Network Mode (non-promiscuous mode) is set, this parameter is not used and the binding is set according to the configured mapping of the interfaces.	
Return values	Runtime error code	Description
	`SREC_OK`	The function is successful.
	`SREC_INVALID_CONFIGURATION`	The configuration is invalid because, for example, a non-existent adapter was used.
	`SREC_ACCESS_DENIED`	You do not have authorization to connect to the PC network interfaces.
	`SREC_WRONG_COMMUNICATION_INTERFACE`	The PC interface does not exist.
	`SREC_INTERNAL_ERROR`	The system call has caused an internal error. Enable the traces to obtain detailed information.
	`SREC_NOT_ALLOWED`	In Single Adapter Network Mode (promiscuous mode), it is not permitted to change the binding while an instance is running.
	`SREC_VIRTUAL_SWITCH_MISCONFIGURED`	The configuration of an S7-PLCSIM Advanced Virtual Switch is not correct or the driver is not functioning properly.

Table 8-72 SetNetInterfaceBindings() - .NET (C#)

Syntax	`void ISimulationRuntimeManager::SetNetInterfaceBindings();` `void ISimulationRuntimeManager::SetNetInterfaceBindings(DWORD in_PCInterfaceIndex);`	
Exceptions	Runtime error code	Description
	`ERuntimeErrorCode. InvalidConfiguration`	The configuration is invalid because, for example, a non-existent adapter was used.
	`ERuntimeErrorCode.AccessDenied`	You do not have authorization to connect to the PC network interfaces.
	`ERuntimeErrorCode. WrongCommunicationInterface`	The PC interface does not exist.
	`ERuntimeErrorCode.InternalError`	The system call has caused an internal error. Enable the traces to obtain detailed information.
	`ERuntimeErrorCode.NotAllowed`	In Single Adapter Network Mode (promiscuous mode), it is not permitted to change the binding while an instance is running.
	`ERuntimeErrorCode. VirtualSwitchMisconfigured`	The configuration of an S7-PLCSIM Advanced Virtual Switch is not correct or the driver is not functioning properly.

ResetNetInterfaceBindings()

Deactivates the binding of an S7-PLCSIM Advanced Virtual Switch to PC interfaces. The binding on the Siemens PLCSIM Virtual Ethernet Adapter remains.

You must call the function from a parent session (administrator mode), otherwise you cannot access it, and the message SREC_ACCESS_DENIED appears.

Table 8-73 ResetNetInterfaceBindings() - Native C++

Syntax	`ERuntimeErrorCode ISimulationRuntimeManager::ResetNetInterfaceBindings();`	
Parameters	None	
Return values	Runtime error code	Description
	`SREC_OK`	The function is successful.
	`SREC_ACCESS_DENIED`	You do not have authorization to connect to the PC network interfaces.
	`SREC_NOT_ALLOWED`	In Single Adapter Network Mode (promiscuous mode), it is not permitted to change the binding while an instance is running.
	`SREC_INTERNAL_ERROR`	The system call has caused an internal error. Enable the traces to obtain detailed information.

ResetNetInterfaceBindings() - .NET (C#)

Syntax	`void ISimulationRuntimeManager::ResetNetInterfaceBindings();`	
Exceptions	Runtime error code	Description
	`ERuntimeErrorCode.AccessDenied`	You do not have authorization to connect to the PC network interfaces.
	`ERuntimeErrorCode.InternalError`	The system call has caused an internal error. Enable the traces to obtain detailed information.
	`ERuntimeErrorCode.NotAllowed`	In Single Adapter Network Mode (promiscuous mode), it is not permitted to change the binding while an instance is running.

8.5.2 Simulation Runtime instances

GetRegisteredInstancesCount()

Returns the number of instances that are registered in Runtime Manager. If the function fails, the return value is 0.

Table 8-74 GetRegisteredInstancesCount() - Native C++

Syntax	`UINT32 GetRegisteredInstancesCount();`
Parameters	None
Return values	`UINT32`: Number of available instances.

GetRegisteredInstanceInfoAt()

Returns information about an already registered instance. You can use the ID or name to create an interface of this instance, see `CreateInterface()`.

Table 8-75 GetRegisteredInstanceInfoAt() - Native C++

Syntax	`ERuntimeErrorCode GetRegisteredInstanceInfoAt(UINT32 in_Index, SInstanceInfo* out_InstanceInfo);`	
Parameters	• `UINT32 in_Index:` Index of the created instance from which you want to receive the information. The index must be less than the value you receive when you call `GetRegisteredInstanceCount()`. • `SInstanceInfo* out_InstanceInfo:` The information with name and ID of the instance. See Data types (Page 297).	
Return values	Runtime error code	Description
	`SREC_OK`	The function is successful.
	`SREC_TIMEOUT`	The function does not return on time.
	`SREC_DOES_NOT_EXIST`	There is no instance information for this index.
	`SREC_INDEX OUT_OF_RANGE`	The index is greater than 15.

RegisteredInstanceInfo { get; }

Returns information about all already registered instances. Use the ID or name of this instance to create an interface of this instance; see `CreateInterface()`.

Table 8-76 RegisteredInstanceInfo { get; } - .NET (C#)

Syntax	`SInstanceInfo[] RegisteredInstanceInfo { get; }`	
Parameters	None	
Return values	`SInstanceInfo[]`: An array of information about all registered instances.	
Exceptions	`Siemens.Simatic.Simulation.Runtime.SimulationRuntimeException`	
	Runtime error code	Description
	`ERuntimeErrorCode.Timeout`	The function does not return on time.

RegisterInstance()

Registers a new instance of a virtual controller in Runtime Manager. Creates and returns an interface of this instance.

Table 8-77 RegisterInstance() - Native C++

Syntax	`ERuntimeErrorCode RegisterInstance(IInstance** out_InstanceInterface);`
	`ERuntimeErrorCode RegisterInstance(WCHAR* in_InstanceName, IInstance** out_InstanceInterface);`
	`ERuntimeErrorCode RegisterInstance(ECPUType in_CPUType, IInstance** out_InstanceInterface);`
	`ERuntimeErrorCode RegisterInstance(ECPUType in_CPUType,WCHAR* in_InstanceName, IInstance** out_InstanceInterface);`

Parameters	• `ECPUType in_CPUType:` Defines which CPU type is simulated at the start of the instance. The default setting is `"SRCT_1500_Unspecified"`. When a different CPU type is loaded via STEP 7 or from the Virtual SIMATIC Memory Card, this CPU type applies. • `WCHAR* in_InstanceName:` Name to be assigned to the instance. Every instance must have a unique name. If no name is assigned when registering a new instance, the instance is given the name `"Instance_#"` (# is the ID of the instance). If this name already exists, the name `"Instance_#.#"` is used, in which the second # is a counter that is incremented until the name is unique. The length of the name must be less than `DINSTANCE_NAME_LENGTH`. See Data types (Page 297). • `IInstance** out_InstanceInterface:` Pointer to a Simulation Runtime interface pointer. The pointer must be initialized with `NULL`. The interface is created within the function.	
Return values	Runtime error code	Description
	`SREC_OK`	The function is successful.
	`SREC_TIMEOUT`	The function does not return on time.
	`SREC_WRONG_ARGUMENT`	The name or the IInstance pointer is invalid.
	`SREC_LIMIT_REACHED`	There are already 16 instances registered in Runtime Manager.
	`SREC_ALREADY_EXISTS`	An instance with this name already exists.

Example C++	`ISimulationRuntimeManager * api = NULL;`
	`ERuntimeErrorCode result = InitializeApi(&api);`
	
	`// Example: How To Create And Register An Instance`
	`IInstance* psa = NULL;`
	`if (result == SREC_OK)`
	`{`
	` result = api->RegisterInstance(&psa);`
	`}`	

NOTE
Native C++
If you no longer require the interface, delete the interface (Page 115).

Table 8-78 RegisterInstance() - .NET (C#)

Syntax	`IInstance RegisterInstance();`
	`IInstance RegisterInstance(string in_InstanceName);`
	`IInstance RegisterInstance(ECPUType in_CPUType);`
	`IInstance RegisterInstance(ECPUType in_CPUTypestring in_InstanceName);`

Parameters	• `ECPUType in_CPUType:` Defines which CPU type is simulated at the start of the instance. The default setting is `"ECPUType.Unspecified"`. When a different CPU type is loaded via STEP 7 or from the Virtual SIMATIC Memory Card, this CPU type applies. • `string in_InstanceName:` Name to be assigned to the instance. Every instance must have a unique name. If no name is assigned when registering a new instance, the instance is given the name `"Instance_#"` (# is the ID of the instance). If this name already exists, the name `"Instance_#.#"` is used, in which the second # is a counter that is incremented until the name is unique. The length of the name must be less than `DINSTANCE_NAME_LENGTH`. See Data types (Page 297).
Return values	If the function is successful it returns an interface of a virtual controller; otherwise, the function returns a Null pointer.

Exceptions	`Siemens.Simatic.Simulation.Runtime.SimulationRuntimeException`	
	Runtime error code	Description
	`ERuntimeErrorCode.Timeout`	The function does not return on time.
	`ERuntimeErrorCode.WrongArgument`	The name is invalid.
	`ERuntimeErrorCode.LimitReached`	There are already 16 instances registered in Runtime Manager.
	`ERuntimeErrorCode.AlreadyExists`	An instance with this name already exists.

RegisterCustomInstance()

Registers a new instance of a virtual controller in Runtime Manager. Creates and returns an interface of this instance.

Table 8-79 RegisterCustomInstance() - Native C++

Syntax	`ERuntimeErrorCode RegisterCustomInstance(WCHAR* in_VplcDll, IInstance** out_InstanceInterface);` `ERuntimeErrorCode RegisterCustomInstance(WCHAR* in_VplcDll, WCHAR* in_InstanceName, IInstance** out_InstanceInterface);`	
Parameters	• `WCHAR* in_VplcDll:` The complete path to the DLL of the virtual controller that "Siemens.Simatic.Simulation.Runtime.Instance.exe" loads at PowerOn. • `WCHAR* in_InstanceName:` Name to be assigned to the instance. Every instance must have a unique name. If no name is assigned when registering a new instance, the instance is given the name `"Instance_#"` (# is the ID of the instance). If this name already exists, the name `"Instance_#.#"` is used, in which the second # is a counter that is incremented until the name is unique. The length of the name must be less than `DINSTANCE_NAME_LENGTH`. See Data types (Page 297). • `IInstance** out_InstanceInterface:` Pointer to a Simulation Runtime interface pointer. The pointer must be initialized with `NULL`. The interface is created within the function.	
Return values	Runtime error code	Description
	`SREC_OK`	The function is successful.
	`SREC_TIMEOUT`	The function does not return on time.
	`SREC_WRONG_ARGUMENT`	The DLL name, the instance name or the IInstance pointer is invalid.
	`SREC_LIMIT_REACHED`	There are already 16 instances registered in Runtime Manager.
	`SREC_ALREADY_EXISTS`	An instance with this name already exists.

Example C++	`ISimulationRuntimeManager * api = NULL;`
	`ERuntimeErrorCode result = InitializeApi(&api);`
	
	`// Example: How To Create And Register An Instance`
	`IInstance* psa = NULL;`
	`if (result == SREC_OK)`
	`{`
	` result = api->`**RegisterCustomInstance**`(L"C:\\Temp\\vplc.dll");`
	`}`	

NOTE
Native C++
If you no longer require the interface, delete the interface.
For information on how to delete an interface, see DestroyInterface() (Page 115).

Table 8-80 RegisterCustomInstance() - .NET (C#)

Syntax	`IInstance RegisterCustomInstance(string in_VplcDll);` `IInstance RegisterCustomInstance(string in_VplcDll, string in_InstanceName);`	
Parameters	• `string in_VplcDll:` The complete path to the DLL of the virtual controller that "Siemens.Simatic.Simulation.Runtime.Instance.exe" loads at PowerOn. • `string in_InstanceName:` Name to be assigned to the instance. Every instance must have a unique name. If no name is assigned when registering a new instance, the instance is given the name `"Instance_#"` (# is the ID of the instance). If this name already exists, the name `"Instance_#.#"` is used, in which the second # is a counter that is incremented until the name is unique. The length of the name must be less than `DINSTANCE_NAME_LENGTH`. See Data types (Page 297).	
Return values	If the function is successful it returns an interface of a virtual controller; otherwise, the function returns a Null pointer.	
Exceptions	`Siemens.Simatic.Simulation.Runtime.SimulationRuntimeException`	
	Runtime error code	Description
	`ERuntimeErrorCode.Timeout`	The function does not return on time.
	`ERuntimeErrorCode.WrongArgument`	The name or the ID is invalid.
	`ERuntimeErrorCode.LimitReached`	There are already 16 instances registered in Runtime Manager.
	`ERuntimeErrorCode.AlreadyExists`	An instance with this name already exists.

CreateInterface()

Creates and returns an interface of an already registered instance of a virtual controller.
The instance could have been registered via the application or another application that uses the Simulation Runtime API.

Table 8-81 CreateInterface() - Native C++

Syntax	`ERuntimeErrorCode CreateInterface(WCHAR* in_InstanceName, IInstance** out_InstanceInterface);` `ERuntimeErrorCode CreateInterface(INT32 in_InstanceID, IInstance** out_InstanceInterface);`
Parameters	• `INT32 in_InstanceID:` The ID of the registered instance from which you want to receive the interface. • `WCHAR* in_InstanceName:` The name of the registered instance from which you want to receive the interface. • `IInstance** out_InstanceInterface:` Pointer to a Simulation Runtime interface pointer. The pointer **must** be initialized with `NULL`. The interface is created within the function.

Return values	Runtime error code	Description
	SREC_OK	The function is successful.
	SREC_TIMEOUT	The function does not return on time.
	SREC_WRONG_ARGUMENT	The ID or the IInstance pointer is invalid.
	SREC_DOES_NOT_EXIST	The instance is not registered in Runtime Manager.
	SREC_INDEX_OUT_OF_RANGE	The ID is outside the valid limit. The maximum value is 127.

Example C++	`ISimulationRuntimeManager * api = NULL;`
	`ERuntimeErrorCode result = InitializeApi(&api);`
	
	`IInstance* psa1 = NULL;`
	`IInstance* psa2 = NULL;`
	`if (result == SREC_OK)`
	`{`
	` result = api->`**CreateInterface**`(0, &psa1);`
	`result = api->`**CreateInterface**`(0, &psa2); // psa2 will be the same as psa1`
	`}`	

Example C++	`ISimulationRuntimeManager * api = NULL;`
	`ERuntimeErrorCode result = InitializeApi(&api);`
	
	`IInstance* psa = NULL;`
	`if (result == SREC_OK)`
	`{`
	` result = api->`**CreateInterface**`(L"My SimulationRuntime Instance", &psa);`
	`}`	

NOTE
Native C++
If you no longer require the interface, delete the interface (Page 115).

Table 8-82 CreateInterface() - .NET (C#)

Syntax	`IInstance CreateInterface(string in_InstanceName);` `IInstance CreateInterface(INT32 in_InstanceID);`	
Parameters	• `INT32 in_InstanceID:` The ID of the registered instance from which you want to receive the interface. • `string in_InstanceName:` The name of the registered instance from which you want to receive the interface.	
Return values	If the function is successful it returns an interface of a virtual controller; otherwise, the function returns a Null pointer.	
Exceptions	`Siemens.Simatic.Simulation.Runtime.SimulationRuntimeException`	
	Runtime error code	Description
	`ERuntimeErrorCode.Timeout`	The function does not return on time.
	`ERuntimeErrorCode.WrongArgument`	The ID is invalid.
	`ERuntimeErrorCode.DoesNotExists`	The instance is not registered in Runtime Manager.
	`IndexOutOfRange`	The ID is outside the valid limit. The maximum value is 127.

8.5.3 Remote connections

OpenPort()

Opens a port to which another Runtime Manager can connect.

Table 8-83 OpenPort() - Native C++

Syntax	`ERuntimeErrorCode OpenPort(UINT16 in_Port);`	
Parameters	• `UINT16 in_Port:` The port. The value must be greater than 1024.	
Return values	Runtime error code	Description
	`SREC_OK`	The function is successful.
	`SREC_TIMEOUT`	The function does not return on time.
	`SREC_ALREADY_EXISTS`	A port is already open.
	`SREC_WRONG_ARGUMENT`	The port is invalid.
	`SREC_CONNECTION_ERROR`	The port cannot be opened.

Table 8-84 OpenPort() - .NET (C#)

Syntax	`void OpenPort(UInt16 in_Port);`	
Parameters	• `UInt16 in_Port:` The port. The value must be greater than 1024.	
Return values	None	
Exceptions	`Siemens.Simatic.Simulation.Runtime.SimulationRuntimeException`	
	Runtime error code	Description
	`ERuntimeErrorCode.Timeout`	The function does not return on time.
	`ERuntimeErrorCode.AlreadyExists`	A port is already open.
	`ERuntimeErrorCode.WrongArgument`	The port is invalid.
	`ERuntimeErrorCode.ConnectionError`	The port cannot be opened.

ClosePort()

Closes an open port and all open connections that another Runtime Manager has created to this open port.

Table 8-85 ClosePort() - Native C++

Syntax	`ERuntimeErrorCode ClosePort();`	
Parameters	None	
Exceptions	`Siemens.Simatic.Simulation.Runtime.SimulationRuntimeException`	
	Runtime error code	Description
	`SREC_OK`	The function is successful.
	`SREC_TIMEOUT`	The function does not return on time.
	`SREC_WARNING_INVALID_CALL`	No port is open.

Table 8-86 ClosePort() - .NET (C#)

Syntax	`void ClosePort(UInt16 in_Port);`	
Parameters	None	
Return values	None	
Exceptions	`Siemens.Simatic.Simulation.Runtime.SimulationRuntimeException`	
	Runtime error code	Description
	`ERuntimeErrorCode.Timeout`	The function does not return on time.

GetPort() / Port { get; }

Returns the open port. If no port is open or the function fails, the return value is 0.

Table 8-87 GetPort() - Native C++

Syntax	`UINT16 GetPort();`
Parameters	None
Return values	`UINT16`: The open port. 0, if no port is open.

Table 8-88 Port { get; } - .NET (C#)

Syntax	`UInt16 Port { get; }`
Parameters	None
Return values	`UInt16`: The open port. 0, if no port is open.
Exceptions	None

GetRemoteConnectionsCount()

Supplies the number of open remote connections.

Table 8-89 GetRemoteConnectionsCount() - Native C++

Syntax	`UINT32 GetRemoteConnectionsCount();`
Parameters	None
Return values	`UINT32`: Number of open remote connections.

GetRemoteConnectionInfoAt()

Returns information about an open connection.

Table 8-90 GetRemoteConnectionInfoAt()- Native C++

Syntax	`ERuntimeErrorCode GetRemoteConnectionInfoAt(UINT32 in_Index, SConnectionInfo* out_ConnectionInfo);`
Parameters	• `UINT32 in_Index:` Index of the connection information that is expected. • `SConnectionInfo* out_ConnectionInfo:` The connection information for this index.

Return values	Runtime error code	Description
	`SREC_OK`	The function is successful.
	`SREC_TIMEOUT`	The function does not return on time.
	`SREC_INDEX_OUT_OF_RANGE`	Connection information for this index does not exist.

RemoteConnectionInfo { get; }

Returns an array of information about all open connections.

Table 8-91 RemoteConnectionInfo { get; } - .NET (C#)

Syntax	`SConnectionInfo[] RemoteConnectionInfo { get; }`	
Parameters	None	
Return values	`SConnectionInfo[]`: An array of information about all open connections.	
Exceptions	`Siemens.Simatic.Simulation.Runtime.SimulationRuntimeException`	
	Runtime error code	Description
	`ERuntimeErrorCode.Timeout`	The function does not return on time.

RemoteConnect()

Creates a new connection to a remote Runtime Manager or uses an existing connection to create an IRemoteRuntimeManager interface.

Table 8-92 RemoteConnect() - Native C++

Syntax	`ERuntimeErrorCode RemoteConnect(UINT8 in_IP3, UINT8 in_IP2, UINT8 in_IP1, UINT8 in_IP0, UINT16 in_Port, IRemoteRuntimeManager**out_RemoteRuntimeManagerInterface);` `ERuntimeErrorCode RemoteConnect(UIP in_IP, UINT16 in_Port, IRemoteRuntimeManager** out_RunTimeManagerInterface);`
Parameters	• `UINT8 in_IP3`: First part of the IP address of the remote PC. • `UINT8 in_IP2`: Second part of the IP address of the remote PC. • `UINT8 in_IP1`: Third part of the IP address of the remote PC. `UINT8 in_IP0`: Last part of the IP address of the remote PC. • `UIP in_IP`: IP address of the remote PC. • `UINT16 in_Port`: The port that is open on the remote PC. • `IRemoteRuntimeManager** out_RemoteRuntimeManagerInterface`: Pointer to a remote Runtime Manager interface pointer. The pointer **must** be initialized with `NULL`. The interface is created in the function.

Return values	Runtime error code	Description
	SREC_OK	The function is successful.
	SREC_TIMEOUT	The function does not return on time.
	SREC_CONNECTION_ERROR	The connection to the remote Runtime Manager cannot be established.
	SREC_WRONG_ARGUMENT	IP, port or IInstance pointer is invalid.
	SREC_WRONG_VERSION	The version of the API is not compatible with Runtime. See Compatibility in case of updates (Page 20).

Example C++	`ISimulationRuntimeManager* api = NULL;`
	`ERuntimeErrorCode result = InitializeApi(&api);`
	
	`IRemoteRuntimeManager * client = NULL;`
	
	`if (result == SREC_OK)`
	`{`
	` result = api->`**RemoteConnect**`(192,203,145,144, 4444, &client);`
	`}`	

NOTE
Native C++
If you no longer require the interface, delete the interface.
See DestroyInterface() (Page 115).

Table 8-93 RemoteConnect() - .NET (C#)

Syntax	`IRemoteRuntimeManager RemoteConnect(string in_ConnectionString);`
	`IRemoteRuntimeManager RemoteConnect(SIP in_IP, UInt16 in_Port);`
	`IRemoteRuntimeManager RemoteConnect(Byte in_IP3, Byte in_IP2, Byte in_IP1, Byte in_IP0, UInt16 in_Port);`	

Parameters	• `Byte in_IP3:` First part of the IP address of the remote PC. • `Byte in_IP2:` Second part of the IP address of the remote PC. • `Byte in_IP1:` Third part of the IP address of the remote PC. • `Byte in_IP0:` Last part of the IP address of the remote PC. • `string in_ConnectionString:` A string in the form of "<IP3>.<IP2>.<IP1>.<IP0>:<Port>" Example: "182.203.145.144:4444". • `SIP in_IP:` IP address of the remote PC. • `UInt16 in_Port:` The port that is open on the remote PC.	
Return values	`IRemoteRuntimeManager:` Interface to the remote Runtime Manager.	
Exceptions	`Siemens.Simatic.Simulation.Runtime.SimulationRuntimeException`	
	Runtime error code	Description
	`ERuntimeErrorCode.ConnectionError`	Connection to the remote Runtime Manager cannot be established.
	`ERuntimeErrorCode.Timeout`	The function does not return on time.
	`ERuntimeErrorCode.WrongArgument`	IP or port is invalid.

Exceptions	`ERuntimeErrorCode.WrongVersion`	The version of the API is not compatible with Runtime. See Compatibility in case of updates (Page 20).

8.5.3.1 RunAutodiscover()

Description

This function identifies all Runtime Managers that are on the network and that are ready to establish a remote connection.

NOTE

The function identifies Runtime Managers as of PLCSIM Advanced V5.0.

Requirements

- The Runtime Manager must be running and allowing remote connections.
- The firewall of the remote PC must not block traffic on the selected UDP port.
- Devices in the local network (such as routers, switches, firewalls) must not block multicast packets of the selected class.

RunAutodiscover()

The function starts the identification of the Runtime Manager in the network.

Table 8-94 RunAutodiscover() - Native C++

Syntax	`ERuntimeErrorCode RunAutodiscover(UINT32 in_Timeout = 2000);`	
Parameters	• `UINT32 in_Timeout` A timeout value in milliseconds that defines how long the local Runtime Manager waits for responses from the Remote Manager. A value between 500 ms and 30000 ms is valid. Default: 2000 ms.	
Return values	Runtime error code	Description
	`SREC_OK`	The function is successful.
	`SREC_WRONG_ARGUMENT`	The timeout value is outside the permissible range.
	`SREC_AUTODISCOVER_ALREADY_RUNNING`	A `RunAutodiscover()` call is already running in the background. Wait for the message `SRRSI_DISCOVER_FINISHED` in the callback function. See EAutodiscoverType (Page 334).
	`SREC_TIMEOUT`	Communication errors in the local Runtime Manager.

Table 8-95 RunAutodiscover() - .NET (C#)

Syntax	`void RunAutodiscover(UInt32 in_Timeout = 2000);`	
Parameters	• `UInt32 in_Timeout` A timeout value in milliseconds that defines how long the local Runtime Manager waits for responses from the Remote Manager. A value between 500 ms and 30000 ms is valid. Default: 2000 ms.	
Return values	None	
Exceptions	`Siemens.Simatic.Simulation.Runtime.SimulationRuntimeException`	
	Runtime error code	Description
	`ERuntimeErrorCode.WrongArgument`	The timeout value is outside the permissible range.
	`ERuntimeErrorCode.AutodiscoverAlreadyRunning`	A `RunAutodiscover()` call is already running in the background. Wait for the message `AutodiscoverFinished` in the callback function. See EAutodiscoverType (Page 334).
	`ERuntimeErrorCode.Timeout`	Communication errors in the local Runtime Manager.

8.5.4 Events for ISimulationRuntimeManager

Events for runtime instances and remote connections

The following events are triggered for the ISimulationRuntimeManager interface:

Table 8-96 Events for ISimulationRuntimeManager

Event	Cause
OnSoftwareConfigurationChanged events (Page 143)	The Runtime Manager configuration has changed: • A new instance is registered. • An instance is removed. • A connection to a client is established. The Control Panel uses such an event to update the list of available instances.
OnRuntimeManagerLost (Page 145)	The connection to the Runtime Manager is interrupted.
OnAutodiscoverData events (Page 147)	The network searches for Runtime Managers which are ready to establish a remote connection.

8.5.4.1 OnSoftwareConfigurationChanged events

OnSoftwareConfigurationChanged

Reports software changes in STOP and RUN modes.

Table 8-97 OnSoftwareConfigurationChanged

Syntax	`event Delegate_SRSCC OnSoftwareConfigurationChanged();`
Parameters	IInstance, ERuntimeErrorCode, SYSTEMTIME, ESoftwareConfigChanged

Return values	None
Exceptions	None
Note	The event handler method runs in a separate thread.

RegisterOnSoftwareConfigurationChangedCallback()

When the event occurs, the registered callback function is called. Only one callback function can be registered for the event. The registration of a new callback function causes the previous callback function to be deleted.

Table 8-98 RegisterOnSoftwareConfigurationChangedCallback() - Native C++

Syntax	`void RegisterOnSoftwareConfigurationChangedCallback();`
Parameters	CallbackFunction
Return values	None
Note	The event handler method runs in a separate thread.

RegisterOnSoftwareConfigurationChangedEvent()

When the event occurs, the registered event object is set to the signaled state. Only one event object can be registered for the event. Registration of a new event object causes the previous event object to be deleted.

Table 8-99 RegisterOnSoftwareConfigurationChangedEvent() - Native C++

Syntax	`void RegisterOnSoftwareConfigurationChangedEvent();`
Parameters	• `None` An internal event object is registered. • `HANDLE*` A handle for a user-specific event object. The event object is registered.
Return values	None

UnregisterOnSoftwareConfigurationChangedCallback()

Unregisters the callback function. When the event occurs, no callback function is called.

Table 8-100 UnregisterOnSoftwareConfigurationChangedCallback() - Native C++

Syntax	`void UnregisterOnSoftwareConfigurationChangedCallback();`
Parameters	None
Return values	None

UnregisterOnSoftwareConfigurationChangedEvent()

Unregisters the event object.

Table 8-101 UnregisterOnSoftwareConfigurationChangedEvent() - Native C++

Syntax	`void UnregisterOnSoftwareConfigurationChangedEvent();`
Parameters	None
Return values	None

Table 8-102 UnregisterOnSoftwareConfigurationChangedEvent() - .NET (C#)

Syntax	`void UnregisterOnSoftwareConfigurationChangedEvent();`
Parameters	None
Return values	None

WaitForOnSoftwareConfigurationChangedEvent()

The function blocks the program until the registered event object is set to the signaled state or the timeout interval is exceeded.

Table 8-103 WaitForOnSoftwareConfigurationChangedEvent() - Native C++

Syntax	`void WaitForOnSoftwareConfigurationChangedEvent();`
Parameters	• `None:` The time limit is set to `INFINITE`. • `UINT32 in_Time_ms:` Value for the time limit in milliseconds.
Return values	• `true:` If the event object was set to the signaled state. • `false:` If no event was received during the defined time limit.
Note	The function blocks the CoSimulation program until a software download is set to the signaled state or the timeout interval is exceeded.

Table 8-104 WaitForOnSoftwareConfigurationChangedEvent() - .NET (C#)

Syntax	`void WaitForOnSoftwareConfigurationChangedEvent();`
Parameters	• `None:` The time limit is set to `INFINITE`. • `UINT32 in_Time_ms:` Value for the time limit in milliseconds.
Return values	• `true:` If the event object was set to the signaled state. • `false:` If no event was received during the defined time limit.
Note	The function blocks the CoSimulation program until a software download is set to the signaled state or the timeout interval is exceeded.

8.5.4.2 OnRuntimeManagerLost events

OnRuntimeManagerLost

Registers or unregisters an event handler method.

Table 8-105 OnRuntimeManagerLost - .NET (C#)

Syntax	`event Delegate_Void OnRuntimeManagerLost;`
Parameters	None. See Delegate_Void (Page 290).
Return values	None
Exceptions	None
Note	The event handler method runs in a separate thread.

RegisterOnRuntimeManagerLostCallback()

When the event occurs, the registered callback function is called. Multiple callback functions can be registered for the event.

Table 8-106 RegisterOnRuntimeManagerLostCallback() - Native C++

Syntax	`void RegisterOnRuntimeManagerLostCallback(EventCallback_VOID in_CallbackFunction);`
Parameters	• `EventCallback_VOID in_CallbackFunction:` A callback function that subscribes to the event. See EventCallback_VOID (Page 281-282).
Return values	None
Note	The event handler method runs in a separate thread.

RegisterOnRuntimeManagerLostEvent()

When the event occurs, the registered event object is set to the signaled state. Only one event object can be registered for the event. Registration of a new event object causes the previous event object to be deleted.

Table 8-107 RegisterOnRuntimeManagerLostEvent() - Native C++

Syntax	`void RegisterOnRuntimeManagerLostEvent();` `void RegisterOnRuntimeManagerLostEvent(HANDLE* in_Event);`
Parameters	• `None:` An internal event handle is registered. • `HANDLE* in_Event:` A user-specific event handle is registered.
Return values	None

Table 8-108 RegisterOnRuntimeManagerLostEvent() - .NET (C#)

Syntax	`void RegisterOnRuntimeManagerLostEvent();`
Parameters	None
Return values	None

UnregisterOnRuntimeManagerLostCallback()

Unregisters the callback function. When the event occurs, no callback function is called.

Table 8-109 UnregisterOnRuntimeManagerLostCallback() - Native C++

Syntax	`void UnregisterOnRuntimeManagerLostCallback();`
Parameters	Optional parameter of the same type as for the Register*() function If you use the parameter, it uninstalls the specific function; otherwise, the last registered callback function is unregistered.
Return values	None

UnregisterOnRuntimeManagerLostEvent()

Unregisters the event object.

Table 8-110 UnregisterOnRuntimeManagerLostEvent() - Native C++

Syntax	`void UnregisterOnRuntimeManagerLostEvent();`
Parameters	None
Return values	None

Table 8-111 UnregisterOnRuntimeManagerLostEvent() - .NET (C#)

Syntax	`void UnregisterOnRuntimeManagerLostEvent();`
Parameters	None
Return values	None

WaitForOnRuntimeManagerLostEvent()

The function will block the program until the registered event object is set to the signaled state or the timeout interval is exceeded.

Table 8-112 WaitForOnRuntimeManagerLostEvent() - Native C++

Syntax	`bool WaitForOnRuntimeManagerLostEvent();` `bool WaitForOnRuntimeManagerLostEvent(UINT32 in_Time_ms);`
Parameters	• `None:` The time limit is set to `INFINITE`. • `UINT32 in_Time_ms:` Value for the time limit in milliseconds.
Return values	• `true:` If the event object was set to the signaled state. • `false:` If no event was received during the defined timeout interval.

Table 8-113 WaitForOnRuntimeManagerLostEvent() - .NET (C#)

Syntax	`bool WaitForOnRuntimeManagerLostEvent();` `bool WaitForOnRuntimeManagerLostEvent(UInt32 in_Time_ms);`
Parameters	• `None:` The time limit is set to `INFINITE`. • `UInt32 in_Time_ms:` Value for the time limit in milliseconds.
Return values	• `true:` If the event object was set to the signaled state. • `false:` If no event was received during the defined timeout interval.

8.5.4.3 OnAutodiscoverData events

OnAutodiscoverData

Registers or unregisters an event handler method.

Table 8-114 OnAutodiscoverData - .NET (C#)

Syntax	`event Delegate_SRRSI_AD OnAutodiscoverData`
Parameters	None. See Delegate_SRRSI_AD (Page 290).
Return values	None
Exceptions	None
Note	The event handler method runs in a separate thread.

RegisterOnAutodiscoverCallback()

When the event occurs, the registered callback function is called. Multiple callback functions can be registered for the event.

Table 8-115 RegisterOnAutodiscoverCallback() - Native C++

Syntax	`void RegisterOnAutodiscoverCallback(EventCallback_SRRSI_AD in_CallbackFunction);`
Parameters	• `EventCallback_SRRSI_AD in_CallbackFunction:` Pointer to a user-defined callback function. See EventCallback_SRRSI_AD (Page 282).
Return values	None

UnregisterOnAutodiscoverCallback()

Unregisters the callback function.

Table 8-116 UnregisterOnAutodiscoverCallback() - Native C++

Syntax	`void UnregisterOnAutodiscoverCallback();`
Parameters	Optional parameter of the same type as for the Register*() function If you use the parameter, it uninstalls the specific function; otherwise, the last registered callback function is unregistered.
Return values	None

8.6 API IInstances

8.6.1 Interfaces - Information and settings

Dispose()

Deletes the managed interface and unloads the native components of the user interfaces.

Table 8-117 Dispose() - .NET (C#)

Syntax	`void Dispose()`
Parameters	None
Return values	None

GetID() / ID { get; }

Returns the instance ID. The ID is assigned by Runtime Manager when the instance is registered.

Table 8-118 GetID() - Native C++

Syntax	`INT32 GetID();`
Parameters	None
Return values	`INT32`: Instance ID

Table 8-119 ID { get; } - .NET (C#)

Syntax	`UInt32 ID { get; }`
Parameters	None
Return values	`Uint32`: Instance ID
Exceptions	None

GetName() / Name { get; }

Returns the name of the instance.

Table 8-120 GetName() - Native C++

Syntax	`ERuntimeErrorCode GetName(WCHAR inout_Name[], UINT32 in_ArrayLength);`
Parameters	• `WCHAR inout_Name[]`: A user-allocated storage for the name of the instance. The field length should be at least as long as `DINSTANCE_NAME_MAX_LENGTH`. See Definitions and constants (Page 297). • `UINT32 in_ArrayLength`: Field length (Wide character)

Return values	Runtime error code	Description
	SREC_OK	The function is successful.
	SREC_INTERFACE_REMOVED	The instance is not registered in Runtime Manager.
	SREC_WRONG_ARGUMENT	The name does not fit in the storage.

Example C++	`ISimulationRuntimeManager * api = NULL;`
	`ERuntimeErrorCode result = InitializeApi(&api);`
	`IInstance* psa = NULL;`
	`if (result == SREC_OK)`
	`{`
	`  result = api->RegisterInstance(&psa);`
	`}`
	
	`WCHAR name[DINSTANCE_NAME_MAX_LENGTH];`
	`if (result == SREC_OK)`
	`{`
	`  result = psa->`**GetName**`(name, DINSTANCE_NAME_MAX_LENGTH);`
	`}`	

Table 8-121 Name { get; } - .NET (C#)

Syntax	`string Name { get; }`	
Parameters	None	
Return values	Name of the instance.	
Exceptions	`Siemens.Simatic.Simulation.Runtime.SimulationRuntimeException`	
	Runtime error code	Description
	`ERuntimeErrorCode.InterfaceRemoved`	The instance is not registered in Runtime Manager.

GetCPUType()

Returns the CPU type of the virtual controller.

Table 8-122 GetCPUType() - Native C++

Syntax	`ECPUType GetCPUType();`
Parameters	None
Return values	An enumeration element that defines the CPU type. See ECPUType (Page 320).

SetCPUType()

Sets the CPU type of the virtual controller. A change of CPU type occurs only when the controller is restarted.

Table 8-123 SetCPUType() - Native C++

Syntax	`void SetCPUType(ECPUType in_Value);`
Parameters	• `ECPUType in_Value:` Defines which CPU type is simulated at the start of the instance. When a different CPU type is loaded via STEP 7 or from the Virtual Memory Card, this CPU type applies.
Return values	None

CPUType { get; set; }

Returns or sets the CPU type of the virtual controller. A change of CPU type occurs only when the controller is restarted.

When a different CPU type is loaded via STEP 7 or from the Virtual Memory Card, this CPU type applies.

Table 8-124 CPUType { get; set; } - .NET (C#)

Syntax	`ECPUType CPUType { get; set; }`
Parameters	None
Return values	An enumeration element that defines the CPU type.
Exceptions	None

GetCommunicationInterface()

Returns the communication interface of the virtual controller: Local communication (Softbus) or TCPIP. A change of communication interface occurs only when the controller is restarted. All instances that are started must use the same communication interface.

PowerOn is prevented if a communication interface that is not used by the started instances is selected.

Table 8-125 GetCommunicationInterface() - Native C++

Syntax	`ECommunicationInterface GetCommunicationInterface();`
Parameters	None
Return values	• `SRCI_NONE` Cannot be selected. Is returned if the instance interface is no longer valid. • `SRCI_SOFTBUS` Is returned if the virtual controller uses the Softbus. • `SRCI_TCPIP` Is returned if the virtual controller communicates over the virtual adapter.

SetCommunicationInterface()

Sets the communication interface of the virtual controller: Local communication (Softbus) or TCPIP. A change of communication interface occurs only when the controller is restarted. All instances that are started must use the same communication interface.

PowerOn is prevented if a communication interface that is not used by the started instances is selected.

Table 8-126 SetCommunicationInterface() - Native C++

Syntax	`void SetCommunicationInterface(ECommunicationInterface in_Value);`
Parameters	• `SRCI_NONE` Cannot be selected. • `SRCI_SOFTBUS` Is set to activate communication via Softbus. • `SRCI_TCPIP` Is set to activate communication over the virtual adapter.
Return values	None

CommunicationInterface { get; set; }

Sets or returns the communication interface of the virtual controller: Local communication (Softbus) or TCPIP. A change of communication interface occurs only when the controller is restarted. All instances that are started must use the same communication interface.

PowerOn is prevented if a communication interface that is not used by the started instances is selected.

Table 8-127 CommunicationInterface { get; set; } - .NET (C#)

Syntax	`ECommunicationInterface CommunicationInterface { get; set; }`
Parameters	None
Return values	• `ECommunicationInterface.None` Cannot be selected. Is returned if the instance interface is no longer valid. • `ECommunicationInterface.Softbus` Is returned if the virtual controller uses the Softbus. • `ECommunicationInterface.TCPIP` Is returned if the virtual controller communicates over the virtual adapter.
Exceptions	None

GetInfo() / Info { get; }

Returns a structure that provides information about the instance.

Table 8-128 GetInfo() - Native C++

Syntax	`SInstanceInfo GetInfo();`
Parameters	None
Return values	`SInstanceInfo`: A structure that provides information about the instance. See SInstanceInfo (Page 305).

Table 8-129 Info { get; } - .NET (C#)

Syntax	`SInstanceInfo Info { get; }`
Parameters	None
Return values	`SInstanceInfo`: A structure that provides information about the instance.
Exceptions	None

UnregisterInstance()

Unregisters this instance from Runtime Manager.

NOTE

Loss of the interfaces

Other applications that are connected to this instance will lose their interface to this instance.

Table 8-130 UnregisterInstance() - Native C++

Syntax	`ERuntimeErrorCode UnregisterInstance();`
Parameters	None

Return values	Runtime error code	Description
	SREC_OK	The function is successful.
	SREC_INTERFACE_REMOVED	The instance is not registered in Runtime Manager.
	SREC_TIMEOUT	The function does not return on time.

Table 8-131 UnregisterInstance() - .NET (C#)

Syntax	void UnregisterInstance();	
Parameters	None	
Return values	None	
Exceptions	Siemens.Simatic.Simulation.Runtime.SimulationRuntimeException	
	Runtime error code	Description
	ERuntimeErrorCode.InterfaceRemoved	The instance is not registered in Runtime Manager.
	ERuntimeErrorCode.Timeout	The function does not return on time.

8.6.2 Controller - Information and settings

GetControllerName() / ControllerName { get; }

Returns the downloaded name of the virtual controller.

Table 8-132 GetControllerName() - Native C++

Syntax	ERuntimeErrorCode GetControllerName(WCHAR inout_Name[], UINT32 in_ArrayLength);	
Parameters	• WCHAR inout_Name[]: A user-allocated storage for the name. • UINT32 in_ArrayLength: The length of the storage.	
Return values	Runtime error code	Description
	SREC_OK	The function is successful.
	SREC_INTERFACE_REMOVED	The instance is not registered in Runtime Manager.
	SREC_TIMEOUT	The function does not return on time.
	SREC_INDEX_OUT_OF_RANGE	The name does not fit in the storage.

Table 8-133 ControllerName { get; } - .NET (C#)

Syntax	string ControllerName { get; }	
Parameters	None	
Return values	string: The downloaded name of the virtual controller.	
Exceptions	Siemens.Simatic.Simulation.Runtime.SimulationRuntimeException	
	Runtime error code	Description
	ERuntimeErrorCode.InterfaceRemoved	The instance is not registered in Runtime Manager.
	ERuntimeErrorCode.Timeout	The function does not return on time.

GetControllerShortDesignation() / ControllerShortDesignation { get; }

Returns the downloaded short designation of the virtual controller.

Table 8-134 GetControllerShortDesignation() - Native C++

Syntax	`ERuntimeErrorCode GetControllerShortDesignation(WCHAR inout_ShortDesignation[], UINT32 in_ArrayLength);`	
Parameters	• `WCHAR inout_ShortDesignation[]:` A user-allocated storage for the short designation. • `UINT32 in_ArrayLength:` The length of the storage.	
Return values	Runtime error code	Description
	`SREC_OK`	The function is successful.
	`SREC_INTERFACE_REMOVED`	The instance is not registered in Runtime Manager.
	`SREC_TIMEOUT`	The function does not return on time.
	`SREC_INDEX_OUT_OF_RANGE`	The name does not fit in the storage.

Table 8-135 ControllerShortDesignation { get; } - .NET (C#)

Syntax	`string ControllerShortDesignation { get; }`	
Parameters	None	
Return values	`string:` The downloaded short designation of the virtual controller.	
Exceptions	`Siemens.Simatic.Simulation.Runtime.SimulationRuntimeException`	
	Runtime error code	Description
	`ERuntimeErrorCode.InterfaceRemoved`	The instance is not registered in Runtime Manager.
	`ERuntimeErrorCode.Timeout`	The function does not return on time.

GetControllerIPCount()

Returns the number of configured IP addresses of the virtual controller. If the function fails, the return value is 0.

Table 8-136 GetControllerIPCount() - Native C++

Syntax	`UINT32 GetControllerIPCount();`
Parameters	None
Return values	`INT32:` Number of configured IP addresses of the virtual controller.

GetControllerIP() / ControllerIP { get; }

Returns a configured IP address of the instance.

Table 8-137 GetControllerIP() - Native C++

Syntax	`UIP GetControllerIP();` `UIP GetControllerIP(UINT32 in_Index);`
Parameters	• `WCHAR in_Index:` The index of the IP address you want to receive. The index must be less than the value you receive from `GetControllerIPCount()`. The default setting is 0.

Return values	`UIP`: IP address of the virtual controller. If the function fails, the return value is 0.

Table 8-138 ControllerIP { get; } - .NET (C#)

Syntax	`string[] ControllerIP { get; }`
Parameters	None
Return values	`string`: All downloaded IP addresses of the virtual controller. If the function fails, the field is empty.
Exceptions	None

GetControllerIPSuite4() / ControllerIPSuite4 { get; }

Returns the IP suite instance. If the "Softbus" communication interface is used, the subnet mask and default gateway are 0.

Table 8-139 GetControllerIPSuite4() Native C++

Syntax	`SIPSuite4 GetControllerIPSuite4();` `SIPSuite4 GetControllerIPSuite4(UINT32 in_Index);`
Parameters	• `WCHAR in_Index`: The index of the IP address you want to receive. The index must be less than the value you receive from `GetControllerIPCount()`. The default setting is 0.
Return values	`SIPSuite4`: The IP suite of the virtual controller. If the function fails, the return values are 0.

Table 8-140 ControllerIPSuite4 { get; } - .NET (#)

Syntax	`SIPSuite4[] ControllerIPSuite4 { get; };`
Parameters	None
Return values	`SIPSuite4[]`: All downloaded IP suites of the virtual controller. If the function fails, the field is empty.
Exceptions	None

SetIPSuite()

Sets the IP suite of the network interface of a virtual controller.

Table 8-141 SetIPSuite() - Native C++

Syntax	`ERuntimeErrorCode SetIPSuite(UINT32 in_InterfaceID, SIPSuite4 in_IPSuite, bool in_IsRemanent);`
Parameters	• `UINT32 in_InterfaceID`: The ID of the network interface. • `SIPSuite4 in_IPSuite`: The IP suite that is to be assigned to the network interface. The IP suite contains the IP address, the subnet mask and the standard gateway. If the communication interface is "Softbus", the subnet mask and standard gateway are ignored. • `bool in_IsRemanent`: If `true`, the IP suite is saved after restart of the virtual controller. If the communication interface is "Softbus", this flag is ignored.

Return values	Runtime error code	Description
	`SREC_OK`	The function is successful.
	`SREC_INTERFACE_REMOVED`	The instance is not registered in Runtime Manager.
	`SREC_TIMEOUT`	The function does not return on time.
	`SREC_INSTANCE_NOT_RUNNING`	The process of the virtual controller is not running.
	`SREC_DOES_NOT_EXIST`	There is no network interface with this ID.
	`SREC_INVALID_OPERATING_STATE`	The virtual controller has not yet completed the boot process or is already in the shutdown phase.

Table 8-142 SetIPSuite() - .NET (C#)

Syntax	`void SetIPSuite(UInt32 in_InterfaceID, SIPSuite4 in_IPSuite, bool in_IsRemanent);`	
Parameters	• `UInt32 in_InterfaceID:` The ID of the network interface. • `SIPSuite4 in_IPSuite:` If the communication interface is "Softbus", the subnet mask and standard gateway are ignored. • `bool in_IsRemanent:` If `true`, the IP suite is saved after restart of the virtual controller. If the communication interface is "Softbus", this flag is ignored.	
Return values	None	
Exceptions	`Siemens.Simatic.Simulation.Runtime.SimulationRuntimeException`	
	Runtime error code	Description
	`ERuntimeErrorCode.InterfaceRemoved`	The instance is not registered in Runtime Manager.
	`ERuntimeErrorCode.Timeout`	The function does not return on time.
	`ERuntimeErrorCode.InstanceNotRunning`	The process of the virtual controller is not running.
	`ERuntimeErrorCode.DoesNotExist`	There is no network interface with this ID.
	`ERuntimeErrorCode.InvalidOperatingState`	The virtual controller has not yet completed the boot process or is already in the shutdown phase.

GetStoragePath()

Returns the full path of the folder in which the instance stores its data.

Table 8-143 GetStoragePath() - Native C++

Syntax	`ERuntimeErrorCode GetStoragePath(WCHAR inout_StoragePath[], UINT32 in_ArrayLength);`	
Parameters	• `WCHAR inout_StoragePath[]:` A user-allocated storage for the storage path. The length of the array should be at least as long as `DSTORAGE_PATH_MAX_LENGTH`. See Data types (Page 280). • `UINT32 in_ArrayLength:` Length of the array (Wide character)	
Return values	Runtime error code	Description
	`SREC_OK`	The function is successful.
	`SREC_INTERFACE_REMOVED`	The instance is not registered in Runtime Manager.
	`SREC_TIMEOUT`	The function does not return on time.
	`SREC_INDEX_OUT_OF_RANGE`	The path does not fit in the storage.

SetStoragePath()

Sets the full path of the folder in which the instance stores its data. This can also be a network share.

Set the path before you start the instance. A change to the path takes effect only when the controller is restarted.

If no path is set, the default setting:
<My Documents>\Siemens\Simatic\Simulation\Runtime\Persistence\<Instance Name> is used.

Table 8-144 SetStoragePath() - Native C++

Syntax	`ERuntimeErrorCode SetStoragePath(WCHAR* in_StoragePath);`	
Parameters	• `WCHAR* in_StoragePath:` Full name of the storage path. The length of the name must be less than `DSTORAGE_PATH_MAX_LENGTH`. See Data types (Page 280).	
Return values	Runtime error code	Description
	`SREC_OK`	The function is successful.
	`SREC_INTERFACE_REMOVED`	The instance is not registered in Runtime Manager.
	`SREC_TIMEOUT`	The function does not return on time.
	`SREC_INDEX_OUT_OF_RANGE`	The length of the path exceeds the limit.
	`SREC_WRONG_ARGUMENT`	The path contains invalid characters.

StoragePath { get; set; }

Returns or sets the full path of the folder in which the instance stores its retentive data. This can also be a network share.

Set the path before you start the instance. A change to the path takes effect only when the controller is restarted.

If no path is set, the default setting:
<My Documents>\Siemens\Simatic\Simulation\Runtime\Persistence\<Instance Name> is used.

Table 8-145 StoragePath { get; set; } - .NET (C#)

Syntax	`string StoragePath { get; set; }`	
Parameters	None	
Return values	`string:` The configured storage path.	
Exceptions	`Siemens.Simatic.Simulation.Runtime.SimulationRuntimeException`	
	Runtime error code	Description
	`ERuntimeErrorCode.InterfaceRemoved`	The instance is not registered in Runtime Manager.
	`ERuntimeErrorCode.Timeout`	The function does not return on time.
	`ERuntimeErrorCode.IndexOutOfRange`	The length of the path exceeds the limit.
	`ERuntimeErrorCode.WrongArgument`	The path contains invalid characters.

GetDefaultStoragePath()

Returns the full path of the default folder in which the instance stores its data.

Table 8-146 GetDefaultStoragePath() - Native C++

Syntax	`ERuntimeErrorCode ISimulationRuntimeManager::GetDefaultStoragePath(WCHAR* out_DefaultStoragePath);`	
Parameters	• `WCHAR* out_DefaultStoragePath` Output parameter that is filled with the path of the default folder.	
Return values	Runtime error code	Description
	`SREC_OK`	The function is successful.

SetDefaultStoragePath()

Sets the full path of the default folder in which the instance stores its data.

Table 8-147 SetDefaultStoragePath() - Native C++

Syntax	`ERuntimeErrorCode ISimulationRuntimeManager::SetDefaultStoragePath(const WCHAR* in_DefaultStoragePath);`	
Parameters	• const WCHAR* in_DefaultStoragePath Input parameter that specifies the path of the default folder.	
Return values	Runtime error code	Description
	`SREC_OK`	The function is successful.
	`SREC_WRONG_ARGUMENT`	The path contains invalid characters.
	`SREC_CONFIG_FILE_ERROR`	The configuration file UserInterfaceConfiguration.xml could not be read.

DefaultStoragePath { get; set; }

Returns or sets the full path of the default folder in which the instance stores its data.

Table 8-148 DefaultStoragePath { get; set; } - .NET (C#)

Syntax	`System::String^ SimulationRuntimeManager::DefaultStoragePath { System::String^ get(); void set(System::String^); }`	
Return values	Runtime error code	Description
	`OK`	The function is successful.
	`WrongArgument`	The path contains invalid characters.
	`ConfigFileError`	The configuration file UserInterfaceConfiguration.xml could not be read.

ArchiveStorage()

The user program, the hardware configuration and the retentive data is stored in a file. The Virtual SIMATIC Memory Card. `ArchiveStorage()` stores this file as a ZIP file. The virtual controller must be in OFF operating state for this.

Table 8-149 ArchiveStorage() - Native C++

Syntax	`ERuntimeErrorCode ArchiveStorage(WCHAR* in_FullFileName);`	
Parameters	• `WCHAR in_FullFileName:` The full path to the ZIP file. The path relates to directories of the computer where the API is being called.	
Return values	Runtime error code	Description
	`SREC_OK`	The function is successful.
	`SREC_INTERFACE_REMOVED`	The instance is not registered in Runtime Manager.
	`SREC_TIMEOUT`	The function does not return on time.
	`SREC_INVALID_OPERATING_STATE`	The instance is not in OFF operating state.
	`SREC_INVALID_ARCHIVE_PATH`	The archive path is invalid.
	`SREC_CREATE_DIRECTORIES_FAILED`	The folder for the ZIP file could not be created.
	`SREC_ARCHIVE_STORAGE_FAILED`	The ZIP file could not be created.
	`SREC_STORAGE_TRANSFER_ERROR`	Error during network data transfer. Memory data between client and server computers do not match.
	`SREC_NO_STORAGE_PATH_SET`	No storage path is set. The user has to execute the SetStoragePath() function beforehand.

Table 8-150 ArchiveStorage() - .NET (C#)

Syntax	`void ArchiveStorage(string in_FullFileName);`	
Parameters	• `string in_FullFileName:` The full path to the ZIP file. The path relates to folders of the computer where the API is being called.	
Exceptions	`Siemens.Simatic.Simulation.Runtime.SimulationRuntimeException`	
	Runtime error code	Description
	`ERuntimeErrorCode.InterfaceRemoved`	The instance is not registered in Runtime Manager.
	`ERuntimeErrorCode.Timeout`	The function does not return on time.
	`ERuntimeErrorCode.InvalidOperatingState`	The instance is not in OFF operating state.
	`ERuntimeErrorCode.InvalidArchivePath`	The archive path is invalid.
	`ERuntimeErrorCode.CreateDirectoriesFailed`	The folder for the ZIP file could not be created.
	`ERuntimeErrorCode.ArchiveStorageNotCreated`	The ZIP file could not be created.
	`ERuntimeErrorCode.StorageTransferError`	Error during network data transfer. Memory data between client and server computers do not match.

RetrieveStorage()

`RetrieveStorage()` creates a Virtual SIMATIC Memory Card from the archived ZIP file. The virtual controller must be in OFF operating state for this.

Table 8-151 RetrieveStorage() - Native C++

Syntax	`ERuntimeErrorCode RetrieveStorage(WCHAR* in_FullFileName);`	
Parameters	• `WCHAR* in_FullFileName:` The full path to the ZIP file. The path relates to folders of the computer where the API is being called.	
Return values	Runtime error code	Description
	`SREC_OK`	The function is successful.
	`SREC_INTERFACE_REMOVED`	The instance is not registered in Runtime Manager.
	`SREC_TIMEOUT`	The function does not return on time.
	`SREC_INVALID_OPERATING_STATE`	The instance is not in OFF operating state.
	`SREC_INVALID_ARCHIVE_PATH`	The archive path is invalid.
	`SREC_DELETE_EXISTING_STORAGE_FAILED`	The old storage cannot be deleted.
	`SREC_RETRIEVE_STORAGE_FAILURE`	The ZIP file cannot be unzipped.
	`SREC_STORAGE_TRANSFER_ERROR`	Error during network data transfer. Memory data between client and server computers do not match.
	SREC_NO_STORAGE_PATH_SET	No storage path is set. The user has to execute the SetStoragePath() function beforehand.

Table 8-152 RetrieveStorage() - .NET (C#)

Syntax	`void RetrieveStorage(string in_FullFileName);`	
Parameters	• `string in_FullFileName:` The full path to the ZIP file. The path relates to folders of the computer where the API is being called.	
Exceptions	`Siemens.Simatic.Simulation.Runtime.SimulationRuntimeException`	
	Runtime error code	Description
	`ERuntimeErrorCode.InterfaceRemoved`	The instance is not registered in Runtime Manager.
	`ERuntimeErrorCode.Timeout`	The function does not return on time.
	`ERuntimeErrorCode.InvalidOperatingState`	The instance is not in OFF operating state.
	`ERuntimeErrorCode.InvalidArchivePath`	The archive path is invalid.
	`ERuntimeErrorCode.DeleteExistingStorageFailed`	The old storage cannot be deleted.
	`ERuntimeErrorCode.RetrieveStorageFailure`	The ZIP file cannot be unzipped.
	`ERuntimeErrorCode.StorageTransferError`	Error during network data transfer. Memory data between client and server computers do not match.

CleanupStoragePath()

The function deletes the folder with the Virtual SIMATIC Memory Card of a local instance or a remote instance. To do this, the function checks whether required and invalid files are available. Even if the folder is missing, the function is considered successful.

To make sure that the correct folder is deleted, the function checks whether there are any files that need to be present in the Virtual SIMATIC Memory Card:

- ".\sim_hwdb.ini"
- ".\SIMATIC_MC\SIMATIC.S7S\"
- ".\SIMATIC_MC\RData\"

To permanently delete the folder, only the following folders with files are also allowed:

- ".\CrashDump\"
- ".\Traces\"
- ".\retain.pms"

The instance must be in OFF operating state ("`PowerOff`").

Table 8-153 CleanupStoragePath() - Native C++

Syntax	`ERuntimeErrorCode CleanupStoragePath();`	
Return values	Runtime error code	Description
	`SREC_OK`	The function is successful.
	`SREC_INTERFACE_REMOVED`	The instance is not registered in Runtime Manager.
	`SREC_TIMEOUT`	The function does not return on time.
	`SREC_INVALID_OPERATING_STATE`	The instance is not in OFF operating state.
	`SREC_DELETE_EXISTING_STORAGE_FAILED`	The folder with the memory cannot be deleted.
	`SREC_INVALID_STORAGE`	The memory is invalid. It contains files or folders that are not permitted.

Table 8-154 CleanupStoragePath() - .NET (C#)

Syntax	`void CleanupStoragePath();`	
Return values	None	
Exceptions	`Siemens.Simatic.Simulation.Runtime.SimulationRuntimeException`	
	Runtime error code	Description
	`ERuntimeErrorCode.InterfaceRemoved`	The instance is not registered in Runtime Manager.
	`ERuntimeErrorCode.Timeout`	The function does not return on time.
	`ERuntimeErrorCode.InvalidOperatingState`	The instance is not in OFF operating state.
	`ERuntimeErrorCode.DeleteExistingStorageFailed`	The folder with the memory cannot be deleted.
	`SREC_INVALID_STORAGE`	The memory is invalid. It contains files or folders that are not permitted.

GetStrictMotionTiming() / StrictMotionTiming { get; }

Returns the current instance setting for the "Strict Motion Timing" feature. The "Strict Motion Timing" feature is located on the S7-PLCSIM Advanced Control Panel (Page 59).

Table 8-155 GetStrictMotionTiming() - Native C++

Syntax	`ERuntimeErrorCode GetStrictMotionTiming(bool* enabled);`

Parameters	bool* enabled: Receives the current setting. `true`: Active `false`: Inactive	
Return values	Runtime error code	Description
	`SREC_OK`	The function is successful.
	`SREC_TIMEOUT`	The function does not return on time.

Table 8-156 StrictMotionTiming { get; } - .NET (C#)

Syntax	`bool StrictMotionTiming { get; }`	
Parameters	None	
Return values	`Siemens.Simatic.Simulation.Runtime.SimulationRuntimeException`	
	Runtime error code	Description
	`ERuntimeErrorCode.Timeout`	The function does not return on time.
	`ERuntimeErrorCode.InvalidOperatingState`	The instance is in Power On. The instance must not be in Power On to change the setting.

SetStrictMotionTiming() / StrictMotionTiming { set; }

Sets the instance setting for the "Strict Motion Timing" feature. The "Strict Motion Timing" feature is located on the S7-PLCSIM Advanced Control Panel (Page 59).

Table 8-157 SetStrictMotionTiming() - Native C++

Syntax	`ERuntimeErrorCode GetStrictMotionTiming(bool* enabled);`	
Parameters	bool enabled: The value to be set. `true`: Active `false`: Inactive	
Return values	Runtime error code	Description
	`SREC_OK`	The function is successful.
	`SREC_TIMEOUT`	The function does not return on time.
	`SREC_INVALID_OPERATING_STATE`	The instance is in Power On. The instance must not be in Power On to change the setting.

Table 8-158 StrictMotionTiming { set; } - .NET (C#)

Syntax	`bool StrictMotionTiming { set; }`	
Parameters	None	
Return values	`Siemens.Simatic.Simulation.Runtime.SimulationRuntimeException`	
	Runtime error code	Description
	`ERuntimeErrorCode.Timeout`	The function does not return on time.
	`ERuntimeErrorCode.InvalidOperatingState`	The instance is in Power On. The instance must not be in Power On to change the setting.

8.6.3 Operating state

PowerOn()

The function creates the process for the Simulation Runtime instance and starts the firmware of the virtual controller.

The PowerOn() state is reached without a timeout value:

1. As soon as an instance was created
2. Before the user program has been started on the CPU

Table 8-159 PowerOn() - Native C++

Syntax	`ERuntimeErrorCode PowerOn();` `ERuntimeErrorCode PowerOn(UINT32 in_Timeout_ms);`	
Parameters	• `UInt32 in_Timeout_ms:` A timeout value in milliseconds. – If no timeout value is set, the function returns as soon as an instance is created and before the user program has been started on the CPU. Subscribe to the `OnOperatingStateChanged()` event to find out when the operation has been completed. – If the value is greater than 0 (a timeout value of at least 8500 ms is recommended), the function returns when the operation has been completed or after a timeout. – Expected operating states when this function is successful: { `SROS_STOP` or `SROS_RUN, SROS_FREEZE, SROS_HOLD` }	
Return values	Runtime error code	Description
	`SREC_OK`	The function is successful.
	`SREC_INTERFACE_REMOVED`	The instance is not registered in Runtime Manager.
	`SREC_TIMEOUT`	The expected operating state does not occur on time.
	`SREC_ERROR_LOADING_DLL`	The "Siemens.Simatic.Simulation.Runtime.Instance.exe" cannot load the "Siemens.Simatic.PlcSim.Vplc1500.dll".
	`SREC_STORAGE_PATH_ALREADY_IN_USE`	The selected path for this instance is already being used by another instance.
	`SREC_NO_STORAGE_PATH_SET`	No storage path is set. The user has to execute the SetStoragePath() function beforehand.
	`SREC_WARNING_ALREADY_EXISTS`	Warning: The instance is started.
	`SREC_VIRTUAL_SWITCH_MISCONFIGURED`	• The S7-PLCSIM Advanced Virtual Switch is configured incorrectly. • The binding of an S7-PLCSIM Advanced Virtual Switch on a PC network interface is not correct, or the driver of an S7-PLCSIM Advanced Virtual Switch is not functioning properly. If the binding is not correct, call the `SetNetInterfaceBindings()` function or set the binding manually before starting the instance.
	`SREC_INSTANCE_NOT_RUNNING`	The process of the virtual controller is no longer running.
	`SREC_UNSUPPORTED_PCAP_DRIVER`	The PCAP driver used is not supported. PLCSIM Advanced supports Npcap as of V0.9995. TCP/IP communication is not possible.

Return values	SREC_WARNING_TRIAL_MODE_ACTIVE	Warning: No license available. You can use the instance without restrictions with the Trial License. Afterwards, the instance is shut down.
	SREC_WARNING_RUNNING_ON_TIA_PORTAL_-TEST_SUITE	Warning: No valid license is available, but a "TIA Portal Test Suite" license. PLCSIM Advanced starts with this license. A download from the TIA Portal is possible, but the instance terminates without feedback if the download was not made from the TIA Portal Test Suite.
	SREC_NOT_EMPTY	Warning: No valid license for PLCSIM Advanced is available, but a "TIA Portal Test Suite" license. If this is the case, power-up from the Virtual SIMATIC Memory Card is not supported.
	SREC_COMMUNICATION_INTERFACE_NOT_AVAILABLE	**For local communication via Softbus** PLCSIM Advanced cannot connect to the Softbus. **Solution** • Try again to establish the connection. • Close PLCSIM Advanced and the TIA Portal and restart the applications. • Reboot the PC. • Repair the PLCSIM Advanced installation. **For TCP/IP communication** Another application is connected to the Softbus on your PC. **Solution** • Close all SIMATIC applications, e.g. TIA Portal, WinCC, PLCSIM. • Reboot the PC. • Repair the PLCSIM Advanced installation.
	SREC_ACCESS_DENIED	No write access in the Storage Directory.
	SREC_PCAP_DRIVER_NOT_RUNNING	The Nmap Packet Capture Driver (Npcap) is not active on the system. **Remedy** 1. Start the command line in administrator mode. 2. Execute the command "net start npcap".
	SREC_WRONG_COMMUNICATION_INTERFACE	• You have tried to supply the second instance with the communication interface that is different from the first instance that is already switched on. – **Example:** 1. PowerOn() of the first instance with Softbus is successful. 2. PowerOn() of the second instance with TCP/IP; the error code is returned. • The PC interface does not exist or is not compatible (disabled, not connected, or a PLCSIM Virtual Ethernet Adapter).
	SREC_WARNING_PASSWORD_PROTECTION_ERROR	The password protection prevented the memory from being opened. View the restrictions with activated password protection.

Return values	SREC_INVALID_CONFIGURATION	The configuration is invalid because, for example, the current instance has a mapped PC network interface that is already being used by another running instance.
	SREC_WARNING_NO_EXTERNAL_COMMUNICATION	You have set the Multi-Adapter Network Mode (non-promiscuous mode) without interface mapping or Softbus as communication interface.
	SREC_INTERNAL_ERROR	The system call has caused an internal error.

Table 8-160 PowerOn() - .NET (C#)

Syntax	`ERuntimeErrorCode PowerOn();` `ERuntimeErrorCode PowerOn(UInt32 in_Timeout_ms);`	
Parameters	• `UInt32 in_Timeout_ms:` A timeout value in milliseconds. – If no timeout value is set, the function returns as soon as an instance is created and before the user program has been started on the CPU. Subscribe to the `OnOperatingStateChanged()` event to find out when the operation has been completed. – If the value is greater than 0 (a timeout value of at least 8500 ms is recommended), the function returns when the operation has been completed or after a timeout. – Expected operating states when this function is successful: { `EOperatingState.Run` or `EOperatingState.Stop, EOperatingState.Freeze, EOperatingState.Hold` }	
Return values	Runtime error code	Description
	`ERuntimeErrorCode.OK`	The function is successful.
	`ERuntimeErrorCode.WarningAlreadyExists`	Warning: The instance is started.
	`ERuntimeErrorCode.UnsupportedPcapDriver`	The PCAP driver used is not supported. PLCSIM Advanced supports Npcap as of V0.9995. TCP/IP communication is not possible.
	`ERuntimeErrorCode.WarningTrialModeActive`	Warning: No license available. You can use the instance without restrictions with the Trial License. Afterwards, the instance is shut down.
	`ERuntimeErrorCode.WarningRunningOnTiaPortalTestSuite`	Warning: No valid license is available, but a "TIA Portal Test Suite" license. PLCSIM Advanced starts with this license. A download from the TIA Portal is possible, but the instance terminates without feedback if the download was not made from the TIA Portal Test Suite.
	`ERuntimeErrorCode.NotEmpty`	Warning: No valid license for PLCSIM Advanced is available, but a "TIA Portal Test Suite" license. If this is the case, power-up from the Virtual SIMATIC Memory Card is not supported.
	`ERuntimeErrorCode.CommunicationInterfaceNotAvailable`	**For local communication via Softbus** PLCSIM Advanced cannot connect to the Softbus. **Solution** • Try again to establish the connection. • Close PLCSIM Advanced and the TIA Portal and restart the applications. • Reboot the PC. • Repair the PLCSIM Advanced installation. **For TCP/IP communication**

Return values		Another application is connected to the Softbus on your PC. **Solution** • Close all SIMATIC applications, e.g. TIA Portal, WinCC, PLCSIM. • Reboot the PC. • Repair the PLCSIM Advanced installation.
	`ERuntimeErrorCode.AccessDenied`	No write access in the Storage Directory.
	ERuntimeErrorCode.PCAPDriverNotRunning	The Nmap Packet Capture Driver (Npcap) is not active on the system. **Remedy** 1. Start the command line in administrator mode. 2. Execute the command "net start npcap".
	`ERuntimeErrorCode.WrongCommunicationInterface`	• You have tried to supply the second instance with the communication interface that is different from the first instance that is already switched on. – Example: 1. PowerOn() of the first instance with Softbus is successful. 2. PowerOn() of the second instance with TCP/IP; the error code is returned. • The PC interface does not exist or is not compatible (disabled, not connected, or a PLCSIM Virtual Ethernet Adapter).
	ERuntimeErrorCode.`WarningPasswordForProtectionError`	The password protection prevented the memory from being opened. View the restrictions with activated password protection.
	`ERuntimeErrorCode.WarningNoExternalCommunication`	You have set the Multi-Adapter Network Mode (non-promiscuous mode) without interface mapping or Softbus as communication interface.
Exceptions	`Siemens.Simatic.Simulation.Runtime.SimulationRuntimeException`	
	Runtime error code	Description
	`ERuntimeErrorCode.InterfaceRemoved`	The instance is not registered in Runtime Manager.
	`ERuntimeErrorCode.Timeout`	The expected operating state does not occur on time.
	`ERuntimeErrorCode.ErrorLoadingDll`	The "Siemens.Simatic.Simulation.Runtime.Instance.exe" cannot load the "Siemens.Simatic.PlcSim.Vplc1500.dll".
	`ERuntimeErrorCode.StoragePathAlreadyInUse`	The selected path for this instance is already being used by another instance.
	`ERuntimeErrorCode.NoStoragePathSet`	The path could not be created. The length of the `DSTORAGE_PATH_MAX_LENGTH` characters might be exceeded.
	`ERuntimeErrorCode.VirtualSwitchMisconfigured`	• The S7-PLCSIM Advanced Virtual Switch is configured incorrectly.

Exceptions		• The binding of an S7-PLCSIM Advanced Virtual Switch on a PC network interface is not correct, or the driver of an S7-PLCSIM Advanced Virtual Switch is not functioning properly. If the binding is not correct, call the `SetNetInterfaceBindings()` function or set the binding manually before starting the instance.
	`ERuntimeErrorCode.InstanceNotRunning`	The process of the virtual controller is no longer running.
	`ERuntimeErrorCode.InvalidConfiguration`	The configuration is invalid because, for example, the current instance has a mapped PC network interface that is already being used by another running instance.
	`ERuntimeErrorCode.InternalError`	The system call has caused an internal error.

PowerOff()

Shuts down the Simulation Runtime and closes its process.

Table 8-161 PowerOff() - Native C++

Syntax	`ERuntimeErrorCode PowerOff();` `ERuntimeErrorCode PowerOff(UINT32 in_Timeout_ms);`	
Parameters	• `UINT32 in_Timeout_ms:` A timeout value in milliseconds. – If no timeout value is set, the function returns immediately. Subscribe to the `OnOperatingStateChanged()` event to find out when the operation has been completed. – If the value is greater than 0 (a timeout value of at least 800 ms is recommended), the function returns when the operation has been completed or after a timeout. Expected operating state when this function is successful: `{ SROS_OFF }`	
Return values	Runtime error code	Description
	`SREC_OK`	The function is successful.
	`SREC_INTERFACE_REMOVED`	The instance is not registered in Runtime Manager.
	`SREC_TIMEOUT`	The expected operating state does not occur on time.
	`SREC_INSTANCE_NOT_RUNNING`	The process of the virtual controller is not running.

Table 8-162 PowerOff() - .NET (C#)

Syntax	`void PowerOff();` `void PowerOff(UInt32 in_Timeout_ms);`
Parameters	• `UInt32 in_Timeout_ms:` A timeout value in milliseconds. – If no timeout value is set, the function returns immediately. Subscribe to the `OnOperatingStateChanged()` event to find out when the operation has been completed. – If the value is greater than 0 (a timeout value of at least 800 ms is recommended), the function returns when the operation has been completed or after a timeout. Expected operating state when this function is successful: `{ EOperatingState.Stop }`
Return values	None

Exceptions	`Siemens.Simatic.Simulation.Runtime.SimulationRuntimeException`	
	Runtime error code	Description
	`ERuntimeErrorCode.InterfaceRemoved`	The instance is not registered in Runtime Manager.
	`ERuntimeErrorCode.Timeout`	The expected operating state does not occur on time.
	`ERuntimeErrorCode.InstanceNotRunning`	The process of the virtual controller is not running.

Executing PowerOff()

After its start, the API function `PowerOff()` returns the error code `"-39 InvalidOperatingState"`.

Remedy

Before you execute the API function `PowerOff()`, you must cancel the subscriptions to all events; otherwise, you will receive unexpected exceptions.

Run()

Calls on the virtual controller to change to RUN operating state.

Table 8-163 Run() - Native C++

Syntax	`ERuntimeErrorCode Run();` `ERuntimeErrorCode Run(UINT32 in_Timeout_ms);`	
Parameters	• `UINT32 in_Timeout_ms:` A timeout value in milliseconds. – If no timeout value is set, the function returns immediately. Subscribe to the `OnOperatingStateChanged()` event to find out when the operation has been completed. – If the value is greater than 0 (a timeout value of at least 20 ms is recommended), the function returns when the operation has been completed or after a timeout. Expected operating states if this function is successful: `{ SROS_STOP , SROS_RUN }`	
Return values	Runtime error code	Description
	`SREC_OK`	The function is successful.
	`SREC_INTERFACE_REMOVED`	The instance is not registered in Runtime Manager.
	`SREC_TIMEOUT`	The expected operating state does not occur on time.
	`SREC_INSTANCE_NOT_RUNNING`	The process of the virtual controller is not running.
	`SREC_IS_EMPTY`	One of the following two conditions applies here: **Condition:** After creating and starting an instance, you have tried to switch the virtual controller to the RUN operating state without downloading a STEP 7 project. **Condition:** After creating and enabling an instance with download of a STEP 7 project with enabled password for the protection of confidential configuration data, you have moved the virtual memory card from one system to another. You have tried to start the instance on the new system. The following error code is returned after the start: "SREC_WARNING_PASSWORD_PROTECTION_ERROR" Afterwards, you have tried to switch the virtual controller to the RUN operating state.

Table 8-164 Run() - .NET (C#)

Syntax	`void Run();` `void Run(Uint32 in_Timeout_ms);`	
Parameters	• `UInt32 in_Timeout_ms:` A timeout value in milliseconds. – If no timeout value is set, the function returns immediately. Subscribe to the `OnOperatingStateChanged()` event to find out when the operation has been completed. – If the value is greater than 0 (a timeout value of at least 20 ms is recommended), the function returns when the operation has been completed or after a timeout. Expected operating states when this function is successful: `{ EOperatingState.Run }`	
Return values	Runtime error code	Description
	`SREC_IS_EMPTY`	One of the following two conditions applies here: **Condition:** After creating and starting an instance, you have tried to switch the virtual controller to the RUN operating state without downloading a STEP 7 project. **Condition:** After creating and enabling an instance with download of a STEP 7 project with enabled password for the protection of confidential configuration data, you have moved the virtual memory card from one system to another. You have tried to start the instance on the new system. The following error code is returned after the start: "SREC_WARNING_PASSWORD_PROTECTION_ERROR" Afterwards, you have tried to switch the virtual controller to the RUN operating state.
Exceptions	`Siemens.Simatic.Simulation.Runtime.SimulationRuntimeException`	
	Runtime error code	Description
	`ERuntimeErrorCode.InterfaceRemoved`	The instance is not registered in Runtime Manager.
	`ERuntimeErrorCode.Timeout`	The expected operating state does not occur on time.
	`ERuntimeErrorCode.InstanceNotRunning`	The process of the virtual controller is not running.

RUN operating state after enabling an instance

When you expect the RUN operating state after enabling an instance, check whether the instance is already in RUN by subscribing to the event `OnOperatingStateChanged()`. As an alternative, call `Run()` immediately after enabling the API function to switch the instance to the RUN operating state.

Stop()

Calls on the virtual controller to change to STOP operating state.

Table 8-165 Stop() - Native C++

Syntax	`ERuntimeErrorCode Stop();` `ERuntimeErrorCode Stop(UINT32 in_Timeout_ms);`

Parameters	• `UINT32 in_Timeout_ms:` A timeout value in milliseconds. – If no timeout value is set, the function returns immediately. Subscribe to the `OnOperatingStateChanged()` event to find out when the operation has been completed. – If the value is greater than 0 (a timeout value of at least 200 ms is recommended), the function returns when the operation has been completed or after a timeout. Expected operating state when this function is successful: `{ SROS_STOP }`	
Return values	Runtime error code	Description
	`SREC_OK`	The function is successful.
	`SREC_INTERFACE_REMOVED`	The instance is not registered in Runtime Manager.
	`SREC_TIMEOUT`	The expected operating state does not occur on time.
	`SREC_INSTANCE_NOT_RUNNING`	The process of the virtual controller is not running.

Table 8-166 Stop() - .NET (C#)

Syntax	`void Stop();` `void Stop(UInt32 in_Timeout_ms:);`	
Parameters	• `UInt32 in_Timeout_ms:` A timeout value in milliseconds. – If no timeout value is set, the function returns immediately. Subscribe to the `OnOperatingStateChanged()` event to find out when the operation has been completed. – If the value is greater than 0 (a timeout value of at least 200 ms is recommended), the function returns when the operation has been completed or after a timeout. Expected operating state if this function is successful: `{ EOperatingState.Stop }`	
Return values	None	
Exceptions	`Siemens.Simatic.Simulation.Runtime.SimulationRuntimeException`	
	Runtime error code	Description
	`ERuntimeErrorCode.InterfaceRemoved`	The instance is not registered in Runtime Manager.
	`ERuntimeErrorCode.Timeout`	The expected operating state does not occur on time.
	`ERuntimeErrorCode.InstanceNotRunning`	The process of the virtual controller is not running.

GetOperatingState() / OperatingState { get; }

Returns the operating state of the virtual controller. When the operating state changes, the OnOperatingStateChanged() (Page 247) event is triggered. For details about the operating state, see Data types (Page 319).

Table 8-167 GetOperatingState() - Native C++

Syntax	`EOperatingState GetOperatingState();`
Parameters	None

Return values	• `SROS_INVALID_OPERATING_STATE:` If the function fails. • `SROS_OFF:` If the Simulation Runtime instance is not running. • `SROS_BOOTING:` If `PowerOn()` was called while in this state and the virtual controller is not yet ready to start the user program. • `SROS_STOP:` If the virtual controller is in STOP state. • `SROS_STARTUP:` If the user program is currently changing from STOP to RUN. • `SROS_RUN:` If the user program is running. • `SROS_FREEZE:` If the user program is being stopped (Freeze status). • `SROS_HOLD:` If the user program is set to HOLD when the breakpoint is reached. • `SROS_SHUTTING_DOWN`: If `PowerOff()` was called but the virtual controller is still in the Shutdown phase.

Table 8-168 OperatingState { get; } - .NET (C#)

Syntax	`EOperatingState OperatingState { get; }`
Parameters	None
Return values	• `EOperatingState.InvalidOperatingState:` If the function fails. • `EOperatingState.Off:` If the Simulation Runtime instance is not running. • `EOperatingState.Booting:` If `PowerOn()` was called while in this state and the virtual controller is not yet ready to start the user program. • `EOperatingState.Stop:` If the virtual controller is in STOP state. • `EOperatingState.Startup:` If the user program is currently changing from STOP to RUN. • `EOperatingState.Run:` If the user program is running. • `EOperatingState.Freeze:` If the user program is being stopped (Freeze status). • `EOperatingState.Hold`: If the user program is set to HOLD when the breakpoint is reached. • `EOperatingState.ShuttingDown`: If `PowerOff()` was called but the virtual controller is still in the Shutdown phase.

MemoryReset()

Shuts down the virtual controller, closes its processes and performs a restart.
Closing the processes automatically performs an general reset.

Table 8-169 MemoryReset() - Native C++

Syntax	`ERuntimeErrorCode MemoryReset();` `ERuntimeErrorCode MemoryReset(UINT32 in_Timeout_ms);`

Parameters	• `UINT32 in_Timeout_ms:` A timeout value in milliseconds. – If no timeout value is set, the function returns immediately. Subscribe to the `OnOperatingStateChanged()` event to find out when the operation has been completed. – If the value is greater than 0 (a value of 60000 is recommended), the function returns when the operation has been completed or after a timeout. Expected operating states if this function is successful: `{ SROS_STOP , SROS_RUN }`	
Return values	Runtime error code	Description
	`SREC_OK`	The function is successful.
	`SREC_INTERFACE_REMOVED`	The instance is not registered in Runtime Manager.
	`SREC_TIMEOUT`	The expected operating state does not occur on time.
	`SREC_INSTANCE_NOT_RUNNING`	The process of the virtual controller is not running.

Table 8-170 MemoryReset() - .NET (C#)

Syntax	`void MemoryReset();` `void MemoryReset(UInt32 in_Timeout_ms);`	
Parameters	• `UInt32 in_Timeout_ms:` A timeout value in milliseconds. – If no timeout value is set, the function returns immediately. Subscribe to the `OnOperatingStateChanged()` event to find out when the operation has been completed. – If the value is greater than 0 (a value of 60000 is recommended), the function returns when the operation has been completed or after a timeout. Expected operating states when this function is successful: `{ EOperatingState.Run, EOperatingState.Stop }`	
Return values	None	
Exceptions	`Siemens.Simatic.Simulation.Runtime.SimulationRuntimeException`	
	Runtime error code	Description
	`ERuntimeErrorCode.InterfaceRemoved`	The instance is not registered in Runtime Manager.
	`ERuntimeErrorCode.Timeout`	The expected operating state does not occur on time.
	`ERuntimeErrorCode.InstanceNotRunning`	The process of the virtual controller is not running.

8.6.4 Tag list

NOTE

Elements with data types not known to the API (`EDataType.Unknown`) are not included in the tag list.

UpdateTagList()

The function reads the tags from the virtual controller and writes them to the shared storage arranged by name.

If the tag is an array or a structure, there are multiple entries.
In the case of a structure, there is an entry for the structure itself and an additional entry for each structure element.

Entry_1: "StructName"
Entry_2: "StructName.ElementName_1"
..
Entry_N: "StructName.ElementName_n"

In the case of an array, in this example a two-dimensional array, there is an entry for the array itself and an additional entry for each array element.

Entry_1: "ArrayName"
Entry_2: "ArrayName[a,b]", {a} and {b} correspond to the first index of the respective dimension)
..
Entry_N: "ArrayName[x,y]", {x} and {y} correspond to the last index of the respective dimension)

Memory for up to 500000 entries (not PLC tags) is reserved for the list. If the list becomes too large, the function returns the error/exception "NOT_ENOUGH_MEMORY".
If there are problems with the maximum number of entries and not all tags are needed, two filters can be used when refreshing the tag table.

Table 8-171 UpdateTagList() - Native C++

Syntax	`ERuntimeErrorCode UpdateTagList();`
	`ERuntimeErrorCode UpdateTagList(ETagListDetails in_TagListDetails);`
	`ERuntimeErrorCode UpdateTagList(ETagListDetails in_TagListDetails, bool in_IsHMIVisibleOnly);`
	`ERuntimeErrorCode UpdateTagList(ETagListDetails in_TagListDetails, bool in_IsHMIVisibleOnly, WCHAR* in_DataBlockFilterList);`

Parameters	• `ETagListDetails in_TagListDetails:` Every combination of the following four areas: **IO**: Inputs and Outputs **M**: Bit memory **CT**: Counters and Timers **DB**: Data Blocks The default setting is **IOMCTDB**. **Example: IOM** reads only the tags from the area Inputs / Outputs and Bit memory. • `bool in_IsHMIVisibleOnly:` If `true`, only tags marked with "HMI Visible" are read. The default setting is `true`. • `WCHAR* in_DataBlockFilterList:` A string that includes the name of all data blocks that are supposed to be available in the tag table. The string must be in quotation marks. **Example:** ""\"DB_1\", \"DB_2\" \"DB_3\"|\"DB_4\"\"DB_5\"" All characters within the quotation marks are interpreted as a DB name. If the data block does not exist in the PLC program, it is not added to the tag table memory. No error is triggered in the process. For this list to be taken into consideration, `in_DataBlockFilterList` has to be unequal to NULL and `in_TagListDetails` has to contain "DB".

Return values	Runtime error code	Description
	SREC_OK	The function is successful.
	SREC_INTERFACE_REMOVED	The instance is not registered in Runtime Manager.
	SREC_TIMEOUT	The function does not return on time.
	SREC_INSTANCE_NOT_RUNNING	The process of the virtual controller is not running.
	SREC_NOT_ENOUGH_MEMORY	More than 500000 entries are requested.
	SREC_WARNING_ALREADY_EXISTS	The tag table is current.
	SREC_WRONG_ARGUMENT	The syntax of in_DataBlockFilterList is invalid. The list has to be 3 characters long; the first and last character have to be a quotation mark.
Example C++		

```
ISimulationRuntimeManager * api = NULL;
ERuntimeErrorCode result = InitializeApi(&api);

IInstance* psa = NULL;
if (result == SREC_OK)
{
result = api->RegisterInstance(&psa);
}

if (result == SREC_OK)
{
// Example: How to filter data blocks
// DB Name: TEST_DB, DB Number: 2
result = psa->UpdateTagList(SRTLD_MDB, false, L"\"TEST_DB\"");
}
```

Table 8-172 UpdateTagList() - .NET (C#)

Syntax	
Parameters	

```
void UpdateTagList();
void UpdateTagList(
 ETagListDetails in_TagListDetails
);
void UpdateTagList(
 ETagListDetails in_TagListDetails,
bool in_IsHMIVisibleOnly
);
ERuntimeErrorCode UpdateTagList(
 ETagListDetails in_TagListDetails,
  bool in_IsHMIVisibleOnly,
  string in_DataBlockFilterList
);
```

- `ETagListDetails in_TagListDetails:`
  Every combination of the following four areas:
  IO: Inputs and Outputs
  M: Bit memory
  CT: Counters and Timers
  DB: Data Blocks
  The default setting is **IOMCTDB**.
  Example: IOM reads only the tags from the area Inputs / Outputs and Bit memory.
- `bool in_IsHMIVisibleOnly:`
  If `true`, only tags marked with "HMI Visible" are read. The default setting is `true`.
- `string in_DataBlockFilterList:`
  A string that includes the name of all data blocks that are supposed to be available in the tag table. The string must be in quotation marks.
  Example: ""\"DB_1\", \"DB_2\" \"DB_3\"|\"DB_4\"\"DB_5\""

	All characters within the quotation marks are interpreted as a DB name. If the data block does not exist in the PLC program, it is not added to the tag table memory. No error is triggered in the process. For this list to be taken into consideration, `in_DataBlockFilterList` has to be unequal to NULL and `in_TagListDetails` has to contain "DB".	
Return values	None	
Exceptions	`Siemens.Simatic.Simulation.Runtime.SimulationRuntimeException`	
	Runtime error code	Description
	`ERuntimeErrorCode.InterfaceRemoved`	The instance is not registered in Runtime Manager.
	`ERuntimeErrorCode.Timeout`	The function does not return on time.
	`ERuntimeErrorCode.InstanceNotRunning`	The process of the virtual controller is not running.
	`ERuntimeErrorCode.NotEnoughMemory`	More than 500000 entries are requested.
	`ERuntimeErrorCode.WrongArgument`	The syntax of `in_DataBlockFilterList` is invalid. The list has to be 3 characters long; the first and last character have to be a quotation mark.

GetTagListStatus()

Returns the current update status of the tag list storage.

"`inout_TagListDetails`" is `NONE`, if the list needs to be updated.

Table 8-173 GetTagListStatus() - Native C++

Syntax	`ERuntimeErrorCode GetTagListStatus(ETagListDetails* out_TagListDetails, bool* out_IsHMIVisibleOnly);`	
Parameters	• `ETagListDetails out_TagListDetails:` Status of the tag list details. `SRTLD_NONE` when an update of the list is required. • `bool out_IsHMIVisibleOnly:` If `true`, only tags marked with "HMI Visible" are available in the list.	
Return values	Runtime error code	Description
	`SREC_OK`	The function is successful.
	`SREC_INTERFACE_REMOVED`	The instance is not registered in Runtime Manager.
	`SREC_TIMEOUT`	The function does not return on time.

Table 8-174 GetTagListStatus() - .NET (C#)

Syntax	`void GetTagListStatus(out ETagListDetails out_TagListDetails, out bool out_IsHMIVisibleOnly);`	
Parameters	• `out ETagListDetails out_TagListDetails:` Status of the tag list details. `ETagListDetails.None` when an update of the list is required. • `out bool out_IsHMIVisibleOnly:` If `true`, only tags marked with "HMI Visible" are available in the list.	
Return values	None	
Exceptions	`Siemens.Simatic.Simulation.Runtime.SimulationRuntimeException`	
	Runtime error code	Description
	`ERuntimeErrorCode.InterfaceRemoved`	The instance is not registered in Runtime Manager.
	`ERuntimeErrorCode.Timeout`	The function does not return on time.

GetTagInfoCount()

Returns the number of entries in the tag list storage. If the function fails, the return value is 0.

Table 8-175 GetTagInfoCount() - Native C++

Syntax	`UINT32 GetTagInfoCount();`
Parameters	None
Return values	Number of entries in the tag list storage.

GetTagInfos() / TagInfos { get; }

Returns a list of all tags.

Table 8-176 GetTagInfos() - Native C++

Syntax	`ERuntimeErrorCode GetTagInfos(UINT32 in_BufferLength, STagInfo* inout_TagInfos, UINT32* out_TagCount);`	
Parameters	• `UINT32 in_BufferLength:` The number of elements that the storage can accommodate. • `STagInfo* inout_TagInfos:` The user-allocated storage that accommodates the tags. • `UINT32* out_TagCount:` Returns the number of tags that were written to the storage.	
Return values	Runtime error code	Description
	`SREC_OK`	The function is successful.
	`SREC_INTERFACE_REMOVED`	The instance is not registered in Runtime Manager.
	`SREC_TIMEOUT`	The function does not return on time.
	`SREC_INSTANCE_NOT_RUNNING`	The process of the virtual controller is not running.
	`SREC_INDEX_OUT_OF_RANGE`	The elements do not fit in the storage.

Table 8-177 TagInfos { get; } - .NET (C#)

Syntax	`STagInfo[] TagInfos { get; }`	
Parameters	None	
Return values	An array that contains all available entries of the storage.	
Exceptions	`Siemens.Simatic.Simulation.Runtime.SimulationRuntimeException`	
	Runtime error code	Description
	`ERuntimeErrorCode.InterfaceRemoved`	The instance is not registered in Runtime Manager.
	`ERuntimeErrorCode.Timeout`	The function does not return on time.
	`ERuntimeErrorCode.InstanceNotRunning`	The process of the virtual controller is not running.

CreateConfigurationFile()

Writes all entries from the tag list to an XML file.

Table 8-178 CreateConfigurationFile() - Native C++

Syntax	`ERuntimeErrorCode CreateConfigurationFile(WCHAR* in_FullFileName);`

Parameters	• `WCHAR* in_FullFileName:` Full file name of the XML file: <Path> + <File name> + <File extension>.	
Return values	Runtime error code	Description
	`SREC_OK`	The function is successful.
	`SREC_INTERFACE_REMOVED`	The instance is not registered in Runtime Manager.
	`SREC_TIMEOUT`	The function does not return on time.
	`SREC_WRONG_ARGUMENT`	The file name is invalid.

Table 8-179 CreateConfigurationFile() - .NET (C#)

Syntax	`void CreateConfigurationFile(string in_FullFileName);`	
Parameters	None	
Exceptions	`Siemens.Simatic.Simulation.Runtime.SimulationRuntimeException`	
	Runtime error code	Description
	`ERuntimeErrorCode.InterfaceRemoved`	The instance is not registered in Runtime Manager.
	`ERuntimeErrorCode.Timeout`	The function does not return on time.
	`ERuntimeErrorCode.WrongArgument`	The file name is invalid.

8.6.5 I/O access

8.6.5.1 Synchronizing inputs and outputs

Description

In PLCSIM Advanced the complete scope of the input and output area is used (see GetAreaSize/AreaSize (Page 177)). This is also possible when no I/O module is configured.

Inputs and outputs which are defined via configured I/O modules are synchronized to the defined update of the process image partition (PIP).

Inputs and outputs which are not assigned to an I/O module are synchronized in the cycle control point.

Note the following when synchronizing these inputs and outputs:

- Inputs can only be used as inputs.
  You can write values via the API. However, values that are written via the STEP 7 user program are not visible in the API.
- Outputs can be used as output and as input.
  You can write values via the API and via the CPU / STEP 7 user program. If API and user program write to the same area, the values from the API will overwrite the values from the user program.

8.6.5.2 I/O access via address - Reading

InputArea { get; }, MarkerArea { get; }, OutputArea { get; }

Returns an interface that you use to call the .NET functions in this section.

Table 8-180 InputArea { get; } MarkerArea { get; } OutputArea { get; } - .NET (C#)

Syntax	`IIOArea InputArea { get; }`
	`IIOArea MarkerArea { get; }`
	`IIOArea OutputArea { get; }`

Parameters	None
Return values	`IIOArea:` The interface is used to call the "I/O access via address" functions.

GetAreaSize() / AreaSize { get; }

Returns the size of the area in bytes.

Table 8-181 GetAreaSize() - Native C++

Syntax	`UINT32 GetAreaSize(EArea in_Area);`
Parameters	• `EArea in_Area:` The area whose size you want to receive. Permissible values: `{SRA_INPUT, SRA_MARKER, SRA_OUTPUT}`. See EArea (Page 318).
Return values	`UINT32:` Size of the area in bytes. If the function was successful, the value is not equal to 0.

Table 8-182 AreaSize { get; } - .NET (C#)

Syntax	`UInt32 InputArea.AreaSize { get; }`
	`UInt32 MarkerArea.AreaSize { get; }`
	`UInt32 OutputArea.AreaSize { get; }`

Parameters	None
Return values	`Uint32:` Size of the area in bytes. If the function was successful, the value is not equal to 0.

ReadBit()

Reads an individual bit from the area.

NOTE

The function allows access to the entire storage area of the virtual controller.
Therefore, use access via the tag name (Page 187) and not via the address areas.

Table 8-183 ReadBit() - Native C++

Syntax	`ERuntimeErrorCode ReadBit(EArea in_Area, UINT32 in_Offset, UINT8 in_Bit, bool* out_Value);`

Parameters	• `EArea in_Area:` The area to be read from. Permissible values: `{SRA_INPUT, SRA_MARKER, SRA_OUTPUT}`. See EArea (Page 318). • `UINT32 in_Offset:` The byte offset within the area. The value must be between 0 and the value that `GetAreaSize()` returns. • `UINT8 in_Bit:` The bit offset within the byte. The value must be between 0 and 7. • `bool* out_Value:` Returns the bit value.	
Return values	Runtime error code	Description
	`SREC_OK`	The function is successful.
	`SREC_INTERFACE_REMOVED`	The instance is not registered in Runtime Manager.
	`SREC_TIMEOUT`	The function does not return on time.
	`SREC_INSTANCE_NOT_RUNNING`	The process of the virtual controller is not running.
	`SREC_INDEX_OUT_OF_RANGE`	Offset or bits are invalid.
	`SREC_WRONG_ARGUMENT`	The area is invalid.

Table 8-184 ReadBit() - .NET (C#)

Syntax	`bool InputArea.ReadBit(UInt32 in_Offset, Byte in_Bit);`
	`bool MarkerArea.ReadBit(UInt32 in_Offset, Byte in_Bit);`
	`bool OutputArea.ReadBit(UInt32 in_Offset, Byte in_Bit);`	

Parameters	• `UInt32 in_Offset:` The byte offset within the area. The value must be between 0 and the value that `AreaSize` returns. • `Byte in_Bit:` The bit offset within the byte. The value must be between 0 and 7.	
Return values	`bool:` Bit value	
Exceptions	`Siemens.Simatic.Simulation.Runtime.SimulationRuntimeException`	
	Runtime error code	Description
	`ERuntimeErrorCode.InterfaceRemoved`	The instance is not registered in Runtime Manager.
	`ERuntimeErrorCode.Timeout`	The function does not return on time.
	`ERuntimeErrorCode.InstanceNotRunning`	The process of the virtual controller is not running.
	`ERuntimeErrorCode.IndexOutOfRange`	Offset or bits are invalid.

ReadByte()

Reads an individual bit from the area.

NOTE

The function allows access to the entire storage area of the virtual controller.
Therefore, use access via the tag name and not via the address areas.

Table 8-185 ReadByte() - Native C++

Syntax	`ERuntimeErrorCode ReadByte(EArea in_Area, UINT32 in_Offset, BYTE* out_Value);`

Parameters	• `EArea in_Area:` The area from which you want to read. Permissible values: `{SRA_INPUT, SRA_MARKER, SRA_OUTPUT}`. See EArea (Page 318). • `UINT32 in_Offset:` The byte offset within the area. The value must be between 0 and the value that `GetAreaSize()` returns. • `BYTE* out_Value:` Returns the byte value.	
Return values	Runtime error code	Description
	`SREC_OK`	The function is successful.
	`SREC_INTERFACE_REMOVED`	The instance is not registered in Runtime Manager.
	`SREC_TIMEOUT`	The function does not return on time.
	`SREC_INSTANCE_NOT_RUNNING`	The process of the virtual controller is not running.
	`SREC_INDEX_OUT_OF_RANGE`	Offset is invalid.
	`SREC_WRONG_ARGUMENT`	The area is invalid.

Table 8-186 ReadByte() - .NET (C#)

Syntax	`Byte InputArea.ReadByte(UInt32 in_Offset);`
	`Byte MarkerArea.ReadByte(UInt32 in_Offset);`
	`Byte OutputArea.ReadByte(UInt32 in_Offset);`	

Parameters	• `UInt32 in_Offset:` The byte offset within the area. The value must be between 0 and the value that `AreaSize` returns.	
Return values	`Byte:` Byte value.	
Exceptions	`Siemens.Simatic.Simulation.Runtime.SimulationRuntimeException`	
	Runtime error code	Description
	`ERuntimeErrorCode.InterfaceRemoved`	The instance is not registered in Runtime Manager.
	`ERuntimeErrorCode.Timeout`	The function does not return on time.
	`ERuntimeErrorCode.InstanceNotRunning`	The process of the virtual controller is not running.
	`ERuntimeErrorCode.IndexOutOfRange`	Offset is invalid.

ReadBytes()

Reads a byte array from the area.

NOTE

The function allows access to the entire storage area of the virtual controller.
Therefore, use access via the tag name and not via the address areas.

Table 8-187 ReadByte() - Native C++

Syntax	`ERuntimeErrorCode ReadBytes(EArea in_Area, UINT32 in_Offset, UINT32 in_BytesToRead, UINT32* out_BytesRead, BYTE inout_Values[]);`

Parameters	• `EArea in_Area:` The area from which you want to read. Permissible values: `{SRA_INPUT, SRA_MARKER, SRA_OUTPUT}`. See EArea (Page 318). • `UINT32 in_Offset:` The byte offset within the area. The value must be between 0 and the value that `GetAreaSize()` returns. • `UINT32 in_BytesToRead:` Contains the size of the value storage. • `UINT32* out_BytesRead:` Returns the number of bytes that were just written to the value storage. • `BYTE inout_Values[]:` The storage for the bytes that are read from the area.	
Return values	Runtime error code	Description
	`SREC_OK`	The function is successful.
	`SREC_INTERFACE_REMOVED`	The instance is not registered in Runtime Manager.
	`SREC_TIMEOUT`	The function does not return on time.
	`SREC_INSTANCE_NOT_RUNNING`	The process of the virtual controller is not running.
	`SREC_INDEX_OUT_OF_RANGE`	The offset lies outside the area range. No byte could be read.
	`SREC_WRONG_ARGUMENT`	The area is invalid.

Table 8-188 ReadBytes() - .NET (C#)

Syntax	`Byte[] InputArea.ReadBytes(UInt32 in_Offset, UInt32 in_BytesToRead);`
	`Byte[] MarkerArea.ReadBytes(UInt32 in_Offset,UInt32 in_BytesToRead);`
	`Byte[] OutputArea.ReadBytes(UInt32 in_Offset,UInt32 in_BytesToRead);`	

Parameters	• `UInt32 in_Offset:` The byte offset within the area. The value must be between 0 and the value that `AreaSize` returns. • `UInt32 in_BytesToRead:` The number of bytes to be read.	
Return values	`Byte[]:` The read bytes.	
Exceptions	`Siemens.Simatic.Simulation.Runtime.SimulationRuntimeException`	
	Runtime error code	Description
	`ERuntimeErrorCode.InterfaceRemoved`	The instance is not registered in Runtime Manager.
	`ERuntimeErrorCode.Timeout`	The function does not return on time.
	`ERuntimeErrorCode.InstanceNotRunning`	The process of the virtual controller is not running.
	`ERuntimeErrorCode.IndexOutOfRange`	The offset lies outside the area range. No byte could be read.

ReadSignals()

Structures and fields can be emulated through signal lists and be read by using the `ReadSignals()` function.
The function also takes into consideration the byte order (Endianness).

Only primitive data type signals are supported, but the function is not type-safe.

NOTE

The function allows access to the entire storage area of the virtual controller. Therefore, use access via the tag name (Page 187) and not via the address areas.

Table 8-189 ReadSignals() - Native C++

Syntax	`ERuntimeErrorCode ReadSignals(EArea in_Area, SDataValueByAddress* inout_Signals, UINT32 in_SignalCount);` `ERuntimeErrorCode ReadSignals(EArea in_Area, SDataValueByAddressWithCheck* inout_Signals, UINT32 in_SignalCount, bool* out_SignalsHaveChanged);`	
Parameters	• `EArea in_Area:` The area from which you want to read. Permissible values: `{SRA_INPUT, SRA_MARKER, SRA_OUTPUT}`. See EArea (Page 318). • `SDataValueByAddress* inout_Signals:` The signal list that is read. The result is stored in the structure. • `SDataValueByAddressWithCheck* inout_Signals:` The signal list that is read. The result is stored in the structure. "`ValueHasChanged`" is set to `true` if the value of the signal has changed since the preceding call. • `UINT32 in_SignalCount:` Number of signals in the list. • `bool* out_SignalsHaveChanged:` Returns `true` if the value of at least one signal has changed since the preceding call.	
Signal error	Error code	Description
	`SREC_OK`	The signal operation is successful.
	`SREC_DOES_NOT_EXIST`	The entry does not exist in the stored tag list.
	`SREC_NOT_SUPPORTED`	Access to entire structures or arrays is not supported.
	`SREC_TYPE_MISMATCH`	The expected type does not match the stored type. See Compatible primitive data types (Page 325).
Return values	Runtime error code	Description
	`SREC_OK`	The function is successful.
	`SREC_INTERFACE_REMOVED`	The instance is not registered in Runtime Manager.
	`SREC_TIMEOUT`	The function does not return on time.
	`SREC_INSTANCE_NOT_RUNNING`	The process of the virtual controller is not running.
	`SREC_WRONG_ARGUMENT`	The area is invalid.
	`SREC_SIGNAL_CONFIGURATION_ERROR`	At least one signal error is in the list.

Table 8-190 ReadSignals() - .NET (C#)

Syntax	`void ReadSignals(ref SDataValueByAddress[] inout_Signals);` `void ReadSignals(ref SDataValueByAddressWithCheck[] inout_Signals out bool out_SignalsHaveChanged);`
Parameters	• `ref SDataValueByAddress[] inout_Signals:` The signal list that is read. • `ref SDataValueByAddressWithCheck[] inout_Signals:` The signal list that is read. The result is stored in the structure. "`ValueHasChanged`" is set to `true` if the value of the signal has changed since the preceding call. • `out bool out_SignalsHaveChanged:` Returns `true` if the value of at least one signal has changed since the preceding call.

Signal error	Runtime error code	Description
	`ERuntimeErrorCode.OK`	The signal operation is successful.
	`ERuntimeErrorCode.IndexOutOfRange`	Offset or bits are invalid.
Exceptions	`Siemens.Simatic.Simulation.Runtime.SimulationRuntimeException`	
	Runtime error code	Description
	`ERuntimeErrorCode.InterfaceRemoved`	The instance is not registered in Runtime Manager.
	`ERuntimeErrorCode.Timeout`	The function does not return on time.
	`ERuntimeErrorCode.InstanceNotRunning`	The process of the virtual controller is not running.
	`ERuntimeErrorCode.SignalConfigurationError`	At least one signal error is in the list.

8.6.5.3 I/O access via address - Writing

WriteBit()

Writes an individual bit to the area.

NOTE
Data can be overwritten
The function allows access to the entire storage area of the virtual controller.
Therefore, use access via the tag name (Page 206) and not via the address areas.

Table 8-191 WriteBit() - Native C++

Syntax	`ERuntimeErrorCode WriteBit(EArea in_Area, UINT32 in_Offset, UINT8 in_Bit, bool in_Value);`	
Parameters	• `EArea in_Area:` The area that is to be written. Permissible values: `{SRA_INPUT, SRA_MARKER, SRA_OUTPUT}`. See EArea (Page 318). • `UINT32 in_Offset:` The byte offset within the area. The value must be between 0 and the value that `GetAreaSize()` returns. • `UINT8 in_Bit:` The bit offset within the byte. The value must be between 0 and 7. • `bool in_Value:` Bit value.	
Return values	Runtime error code	Description
	`SREC_OK`	The function is successful.
	`SREC_INTERFACE_REMOVED`	The instance is not registered in Runtime Manager.
	`SREC_TIMEOUT`	The function does not return on time.
	`SREC_INSTANCE_NOT_RUNNING`	The process of the virtual controller is not running.
	`SREC_INDEX_OUT_OF_RANGE`	Offset or bits are invalid.
	`SREC_WRONG_ARGUMENT`	Area is invalid.

Table 8-192 WriteBit() - .NET (C#)

Syntax	`void InputArea WriteBit(UInt32 in_Offset, Byte in_Bit, bool in_Value);`
	`void MarkerArea WriteBit(UInt32 in_Offset, Byte in_Bit, bool in_Value);`
	`void OutputArea WriteBit(UInt32 in_Offset, Byte in_Bit, bool in_Value);`	

Parameters	• `UInt32 in_Offset:` The byte offset within the area. The value must be between 0 and the value that `AreaSize` returns. • `Byte in_Bit:` The bit offset within the byte. The value must be between 0 and 7. • `bool in_Value:` Bit value.	
Return values	None	
Exceptions	`Siemens.Simatic.Simulation.Runtime.SimulationRuntimeException`	
	Runtime error code	Description
	`ERuntimeErrorCode.InterfaceRemoved`	The instance is not registered in Runtime Manager.
	`ERuntimeErrorCode.Timeout`	The function does not return on time.
	`ERuntimeErrorCode.InstanceNotRunning`	The process of the virtual controller is not running.
	`ERuntimeErrorCode.IndexOutOfRange`	Offset or bits are invalid.

WriteByte()

Writes an individual byte to the area.

NOTE
Data can be overwritten
The function allows access to the entire storage area of the virtual controller.
Therefore, use access via the tag name (Page 206) and not via the address areas.

Table 8-193 WriteByte() - Native C++

Syntax	`ERuntimeErrorCode WriteByte(EArea in_Area, UINT32 in_Offset, BYTE in_Value);`	
Parameters	• `EArea in_Area:` The area that is to be written. Permissible values: `{SRA_INPUT, SRA_MARKER, SRA_OUTPUT}`. See EArea (Page 318). • `UINT32 in_Offset:` The byte offset within the area. The value must be between 0 and the value that `GetAreaSize()` returns. • `BYTE in_Value:` Byte value.	
Return values	Runtime error code	Description
	`SREC_OK`	The function is successful.
	`SREC_INTERFACE_REMOVED`	The instance is not registered in Runtime Manager.
	`SREC_TIMEOUT`	The function does not return on time.
	`SREC_INSTANCE_NOT_RUNNING`	The process of the virtual controller is not running.
	`SREC_INDEX_OUT_OF_RANGE`	Offset is invalid.
	`SREC_WRONG_ARGUMENT`	Area is invalid.

Table 8-194 WriteByte() - .NET (C#)

Syntax	`void InputArea.WriteByte(UInt32 in_Offset, Byte in_Value);`
	`void MarkerArea.WriteByte(UInt32 in_Offset, Byte in_Value);`
	`void OutputArea.WriteByte(UInt32 in_Offset, Byte in_Value);`	

Parameters	• `UINT32 in_Offset:` The byte offset within the area. The value must be between 0 and the value that `AreaSize` returns. • `BYTE in_Value:` Byte value.	
Return values	None	
Exceptions	`Siemens.Simatic.Simulation.Runtime.SimulationRuntimeException`	
	Runtime error code	Description
	`ERuntimeErrorCode.InterfaceRemoved`	The instance is not registered in Runtime Manager.
	`ERuntimeErrorCode.Timeout`	The function does not return on time.
	`ERuntimeErrorCode.InstanceNotRunning`	The process of the virtual controller is not running.
	`ERuntimeErrorCode.IndexOutOfRange`	Offset is invalid.

WriteBytes()

Writes a byte array to the area.

NOTE

Data can be overwritten

The function allows access to the entire storage area of the virtual controller.

In particular, do not write to bytes that belong to other applications or contain internal data, for example, qualifier bits for fail-safe I/O modules.

Therefore, use access via the tag name (Page 206) and not via the address areas.

Table 8-195 WriteBytes() - Native C++

Syntax	`ERuntimeErrorCode WriteBytes(EArea in_Area, UINT32 in_Offset, UINT32 in_BytesToWrite, UINT32* out_BytesWritten, BYTE in_Values[]);`
Parameters	• `EArea in_Area:` The area that is to be written. Permissible values: `{SRA_INPUT, SRA_MARKER, SRA_OUTPUT}`. See EArea (Page 318). • `UINT32 in_Offset:` The byte offset within the area. The value must be between 0 and the value that `GetAreaSize()` returns. • `UINT32 in_BytesToWrite:` Contains the size of the array value to be written. • `UINT32* out_BytesWritten:` Contains the number of bytes that were just written. • `BYTE in_Values[]:` Byte array that is to be written to the area.

Return values	Runtime error code	Description
	SREC_OK	The function is successful.
	SREC_INTERFACE_REMOVED	The instance is not registered in Runtime Manager.
	SREC_TIMEOUT	The function does not return on time.
	SREC_INSTANCE_NOT_RUNNING	The process of the virtual controller is not running.
	SREC_INDEX_OUT_OF_RANGE	The offset lies outside the area range. No byte could be written.
	SREC_WRONG_ARGUMENT	The area is invalid.

Table 8-196 WriteBytes() - .NET (C#)

Syntax	`UInt32 InputArea.WriteBytes(UInt32 in_Offset, Byte[] in_Values);`
	`UInt32 InputArea.WriteBytes(UInt32 in_Offset, UInt32 in_BytesToWrite, Byte[] in_Values);`
	`UInt32 MarkerArea.WriteBytes(UInt32 in_Offset, Byte[] in_Values);`
	`UInt32 MarkerArea.WriteBytes(UInt32 in_Offset, UInt32 in_BytesToWrite, Byte[] in_Values);`
	`UInt32 OutputArea.WriteBytes(UInt32 in_Offset, Byte[] in_Values);`
	`UInt32 OutputArea.WriteBytes(UInt32 in_Offset, UInt32 in_BytesToWrite, Byte[] in_Values);`	

Parameters	• `UINT32 in_Offset:` The byte offset within the area. The value must be between 0 and the value that `AreaSize` returns. • `UInt32 in_BytesToWrite:` Contains the number of bytes to be written. The value must be between 1 and the size of the array value. • `BYTE in_Value:` Byte value.	
Return values	`Uint32:` Contains the number of bytes that were just written.	
Exceptions	`Siemens.Simatic.Simulation.Runtime.SimulationRuntimeException`	
	Runtime error code	Description
	`ERuntimeErrorCode.InterfaceRemoved`	The instance is not registered in Runtime Manager.
	`ERuntimeErrorCode.Timeout`	The function does not return on time.
	`ERuntimeErrorCode.InstanceNotRunning`	The process of the virtual controller is not running.
	`ERuntimeErrorCode.IndexOutOfRange`	The offset lies outside the area range. No byte could be written.

WriteSignals()

Writes multiple signals within an API call.
The function also takes into consideration the byte order (Endianness).
The function supports only primitive data type signals, but it is not typical.

NOTE
Data can be overwritten
The function allows access to the entire storage area of the virtual controller.
Therefore, use access via the tag name (Page 206) and not via the address areas.

Table 8-197 WriteSignals() - Native C++

Syntax	`ERuntimeErrorCode WriteSignals(EArea in_Area, SDataValueByAddress* in_Signals, UINT32 in_SignalCount);`	
Parameters	• `EArea in_Area:` The area that is to be written. Permissible values: `{SRA_INPUT, SRA_MARKER, SRA_OUTPUT}`. See EArea (Page 318). • `SDataValueByAddress* inout_Signals:` The signal list to be written. • `UINT32 in_SignalCount:` Number of signals in the list.	
Signal error	Error code	Description
	`SREC_OK`	The signal operation is successful.
	`SREC_INDEX_OUT_OF_RANGE`	Offset or bits are invalid.
Return values	Runtime error code	Description
	`SREC_OK`	The function is successful.
	`SREC_INTERFACE_REMOVED`	The instance is not registered in Runtime Manager.
	`SREC_TIMEOUT`	The function does not return on time.
	`SREC_INSTANCE_NOT_RUNNING`	The process of the virtual controller is not running.
	`SREC_SIGNAL_CONFIGURATION_ERROR`	At least one signal error is in the list.
	`SREC_WRONG_ARGUMENT`	The area is invalid.

Table 8-198 WriteSignals() - .NET (C#)

Syntax	`void InputArea.WriteSignals(SDataValueByAddress[] in_Signals);`
	`void MarkerArea.WriteSignals(SDataValueByAddress[] in_Signals);`
	`void OutputArea.WriteSignals(SDataValueByAddress[] in_Signals);`	

Parameters	• `SDataValueByAddress[] in_Signals:` The signal list to be written.	
Return values	None	
Signal error	Error code	Description
	`ERuntimeErrorCode.OK`	The signal operation is successful.
	`ERuntimeError-Code.IndexOutOfRange`	Offset or bits are invalid.
Exceptions	`Siemens.Simatic.Simulation.Runtime.SimulationRuntimeException`	
	Runtime error code	Description
	`ERuntimeErrorCode.InterfaceRemoved`	The instance is not registered in Runtime Manager.
	`ERuntimeErrorCode.Timeout`	The function does not return on time.
	`ERuntimeErrorCode.InstanceNotRunning`	The process of the virtual controller is not running.
	`ERuntimeErrorCode.SignalConfigurationError`	At least one signal error is in the list.

8.6.5.4 I/O access via tag name - Reading

Individual access to I/O data is used for displaying and writing values which are not refreshed regularly in a graphical user interface (GUI).

NOTE

To simulate a regular exchange of signals, create a signal list for each set of signals. Use this signal list for all further accesses. Create a new list as soon as the set of signals changes.

For the signal lists use the functions `ReadSignals()` and `WriteSignals()`.

Read()

Reads the value of a PLC tag.

Table 8-199 Read() - Native C++

Syntax	`ERuntimeErrorCode Read(WCHAR* in_Tag, SDataValue* inout_Value);`	
Parameters	• `WCHAR* in_Tag:` The name of the PLC tag that is to be read. • `SDataValue* inout_Value:` Contains the value and the expected type of the PLC tag. If the expected type is `UNSPECIFIC`, it is set to the stored type when the function was successful. The `STRUCT` type is not supported. Structures and fields can be emulated through signal lists and be read by using the `ReadSignals()` function.	
Return values	Runtime error code	Description
	`SREC_OK`	The function is successful.
	`SREC_INTERFACE_REMOVED`	The instance is not registered in Runtime Manager.
	`SREC_TIMEOUT`	The function does not return on time.
	`SREC_INSTANCE_NOT_RUNNING`	The process of the virtual controller is not running.
	`SREC_INDEX_OUT_OF_RANGE`	The offset lies outside the area range. No value could be read.
	`SREC_DOES_NOT_EXIST`	The entry does not exist in the stored tag list.
	`SREC_NOT_SUPPORTED`	Access to entire structures or arrays is not supported.
	`SREC_TYPE_MISMATCH`	The expected type does not match the stored type. See Compatible primitive data types (Page 325).
	`SREC_NOT_UP_TO_DATE`	The stored tag list must be updated.

Table 8-200 Read() - .NET (C#)

Syntax	`SDataValue Read(string in_Tag)`
Parameters	• `string in_Tag:` The name of the PLC tag that is to be read.
Return values	`SDataValue:` Contains the value and the type of the PLC tag.

Exceptions	`Siemens.Simatic.Simulation.Runtime.SimulationRuntimeException`	
	Runtime error code	Description
	`ERuntimeErrorCode.InterfaceRemoved`	The instance is not registered in Runtime Manager.
	`ERuntimeErrorCode.Timeout`	The function does not return on time.
	`ERuntimeErrorCode.InstanceNotRunning`	The process of the virtual controller is not running.
	`ERuntimeErrorCode.IndexOutOfRange`	The offset lies outside the area range. No value could be read.
	`ERuntimeErrorCode.DoesNotExist`	The entry does not exist in the stored tag list.
	`ERuntimeErrorCode.NotSupported`	Access to entire structures or arrays is not supported.
	`ERuntimeErrorCode.TypeMismatch`	The expected type does not match the stored type. See Compatible primitive data types (Page 326).
	`ERuntimeErrorCode.NotUpToData`	The stored tag list must be updated.

ReadBool()

Reads the value of a PLC tag.

Table 8-201 ReadBool() - Native C++

Syntax	`ERuntimeErrorCode ReadBool(WCHAR* in_Tag, bool* out_Value);`	
Parameters	• `WCHAR* in_Tag:` The name of the PLC tag that is to be read. • `bool* out_Value:` Contains the value of the PLC tag.	
Return values	Runtime error code	Description
	`SREC_OK`	The function is successful.
	`SREC_INTERFACE_REMOVED`	The instance is not registered in Runtime Manager.
	`SREC_TIMEOUT`	The function does not return on time.
	`SREC_INSTANCE_NOT_RUNNING`	The process of the virtual controller is not running.
	`SREC_INDEX_OUT_OF_RANGE`	The offset lies outside the area range. No value could be read.
	`SREC_DOES_NOT_EXIST`	The entry does not exist in the stored tag list.
	`SREC_NOT_SUPPORTED`	Access to entire structures or arrays is not supported.
	`SREC_TYPE_MISMATCH`	The expected type does not match the stored type. See Compatible primitive data types (Page 325).
	`SREC_NOT_UP_TO_DATE`	The stored tag list must be updated.

Table 8-202 ReadBool() - .NET (C#)

Syntax	`bool ReadBool(string in_Tag)`
Parameters	• `string in_Tag:` The name of the PLC tag that is to be read.
Return values	`bool:` Contains the value of the PLC tag.

Exceptions	`Siemens.Simatic.Simulation.Runtime.SimulationRuntimeException`	
	Runtime error code	Description
	`ERuntimeErrorCode.InterfaceRemoved`	The instance is not registered in Runtime Manager.
	`ERuntimeErrorCode.Timeout`	The function does not return on time.
	`ERuntimeErrorCode.InstanceNotRunning`	The process of the virtual controller is not running.
	`ERuntimeErrorCode.IndexOutOfRange`	The offset lies outside the area range. No value could be read.
	`ERuntimeErrorCode.DoesNotExist`	The entry does not exist in the stored tag list.
	`ERuntimeErrorCode.NotSupported`	Access to entire structures or arrays is not supported.
	`ERuntimeErrorCode.TypeMismatch`	The expected type does not match the stored type. See Compatible primitive data types (Page 325).
	`ERuntimeErrorCode.NotUpToData`	The stored tag list must be updated.

ReadInt8()

Reads the value of a PLC tag.

Table 8-203 ReadInt8() - Native C++

Syntax	`ERuntimeErrorCode ReadInt8(WCHAR* in_Tag, INT8* out_Value);`	
Parameters	• `WCHAR* in_Tag:` The name of the PLC tag that is to be read. • `INT8* out_Value:` Contains the value of the PLC tag.	
Return values	Runtime error code	Description
	`SREC_OK`	The function is successful.
	`SREC_INTERFACE_REMOVED`	The instance is not registered in Runtime Manager.
	`SREC_TIMEOUT`	The function does not return on time.
	`SREC_INSTANCE_NOT_RUNNING`	The process of the virtual controller is not running.
	`SREC_INDEX_OUT_OF_RANGE`	The offset lies outside the area range. No value could be read.
	`SREC_DOES_NOT_EXIST`	The entry does not exist in the stored tag list.
	`SREC_NOT_SUPPORTED`	Access to entire structures or arrays is not supported.
	`SREC_TYPE_MISMATCH`	The expected type does not match the stored type. See Compatible primitive data types (Page 325).
	`SREC_NOT_UP_TO_DATE`	The stored tag list must be updated.

Table 8-204 ReadInt8() - .NET (C#)

Syntax	`Int8 ReadInt8(string in_Tag)`
Parameters	• `string in_Tag:` The name of the PLC tag that is to be read.
Return values	`Int8:` Contains the value and the type of the PLC tag.

Exceptions	`Siemens.Simatic.Simulation.Runtime.SimulationRuntimeException`	
	Runtime error code	Description
	`ERuntimeErrorCode.InterfaceRemoved`	The instance is not registered in Runtime Manager.
	`ERuntimeErrorCode.Timeout`	The function does not return on time.
	`ERuntimeErrorCode.InstanceNotRunning`	The process of the virtual controller is not running.
	`ERuntimeErrorCode.IndexOutOfRange`	The offset lies outside the area range. No value could be read.
	`ERuntimeErrorCode.DoesNotExist`	The entry does not exist in the stored tag list.
	`ERuntimeErrorCode.NotSupported`	Access to entire structures or arrays is not supported.
	`ERuntimeErrorCode.TypeMismatch`	The expected type does not match the stored type. See Compatible primitive data types (Page 325).
	`ERuntimeErrorCode.NotUpToData`	The stored tag list must be updated.

ReadInt16()

Reads the value of a PLC tag.

Table 8-205 ReadInt16() - Native C++

Syntax	`ERuntimeErrorCode ReadInt16(WCHAR* in_Tag, INT16* out_Value);`	
Parameters	• `WCHAR* in_Tag:` The name of the PLC tag that is to be read. • `INT16* out_Value:` Contains the value of the PLC tag.	
Return values	Runtime error code	Description
	`SREC_OK`	The function is successful.
	`SREC_INTERFACE_REMOVED`	The instance is not registered in Runtime Manager.
	`SREC_TIMEOUT`	The function does not return on time.
	`SREC_INSTANCE_NOT_RUNNING`	The process of the virtual controller is not running.
	`SREC_INDEX_OUT_OF_RANGE`	The offset lies outside the area range. No value could be read.
	`SREC_DOES_NOT_EXIST`	The entry does not exist in the stored tag list.
	`SREC_NOT_SUPPORTED`	Access to entire structures or arrays is not supported.
	`SREC_TYPE_MISMATCH`	The expected type does not match the stored type. See Compatible primitive data types (Page 325).
	`SREC_NOT_UP_TO_DATE`	The stored tag list must be updated.

Table 8-206 ReadInt16() - .NET (C#)

Syntax	`Int16 ReadInt16(string in_Tag)`
Parameters	• `string in_Tag:` The name of the PLC tag that is to be read.
Return values	`Int16:` Contains the value and the type of the PLC tag.

Exceptions	`Siemens.Simatic.Simulation.Runtime.SimulationRuntimeException`	
	Runtime error code	Description
	`ERuntimeErrorCode.InterfaceRemoved`	The instance is not registered in Runtime Manager.
	`ERuntimeErrorCode.Timeout`	The function does not return on time.
	`ERuntimeErrorCode.InstanceNotRunning`	The process of the virtual controller is not running.
	`ERuntimeErrorCode.IndexOutOfRange`	The offset lies outside the area range. No value could be read.
	`ERuntimeErrorCode.DoesNotExist`	The entry does not exist in the stored tag list.
	`ERuntimeErrorCode.NotSupported`	Access to entire structures or arrays is not supported.
	`ERuntimeErrorCode.TypeMismatch`	The expected type does not match the stored type. See Compatible primitive data types (Page 325).
	`ERuntimeErrorCode.NotUpToData`	The stored tag list must be updated.

ReadInt32()

Reads the value of a PLC tag.

Table 8-207 ReadInt32() - Native C++

Syntax	`ERuntimeErrorCode ReadInt32(WCHAR* in_Tag, INT32* out_Value);`	
Parameters	• `WCHAR* in_Tag:` The name of the PLC tag that is to be read. • `INT32* out_Value:` Contains the value of the PLC tag.	
Return values	Runtime error code	Description
	`SREC_OK`	The function is successful.
	`SREC_INTERFACE_REMOVED`	The instance is not registered in Runtime Manager.
	`SREC_TIMEOUT`	The function does not return on time.
	`SREC_INSTANCE_NOT_RUNNING`	The process of the virtual controller is not running.
	`SREC_INDEX_OUT_OF_RANGE`	The offset lies outside the area range. No value could be read.
	`SREC_DOES_NOT_EXIST`	The entry does not exist in the stored tag list.
	`SREC_NOT_SUPPORTED`	Access to entire structures or arrays is not supported.
	`SREC_TYPE_MISMATCH`	The expected type does not match the stored type. See Compatible primitive data types (Page 325).
	`SREC_NOT_UP_TO_DATE`	The stored tag list must be updated.

Table 8-208 ReadInt32() - .NET (C#)

Syntax	`Int32 ReadInt32(string in_Tag)`
Parameters	• `string in_Tag:` The name of the PLC tag that is to be read.
Return values	`Int32:` Contains the value and the type of the PLC tag.

Exceptions	`Siemens.Simatic.Simulation.Runtime.SimulationRuntimeException`	
	Runtime error code	Description
	`ERuntimeErrorCode.InterfaceRemoved`	The instance is not registered in Runtime Manager.
	`ERuntimeErrorCode.Timeout`	The function does not return on time.
	`ERuntimeErrorCode.InstanceNotRunning`	The process of the virtual controller is not running.
	`ERuntimeErrorCode.IndexOutOfRange`	The offset lies outside the area range. No value could be read.
	`ERuntimeErrorCode.DoesNotExist`	The entry does not exist in the stored tag list.
	`ERuntimeErrorCode.NotSupported`	Access to entire structures or arrays is not supported.
	`ERuntimeErrorCode.TypeMismatch`	The expected type does not match the stored type. See Compatible primitive data types (Page 325).
	`ERuntimeErrorCode.NotUpToData`	The stored tag list must be updated.

ReadInt64()

Reads the value of a PLC tag.

Table 8-209 ReadInt64() - Native C++

Syntax	`ERuntimeErrorCode ReadInt64(WCHAR* in_Tag, INT64* out_Value);`	
Parameters	• `WCHAR* in_Tag:` The name of the PLC tag that is to be read. • `INT64* out_Value:` Contains the value of the PLC tag.	
Return values	Runtime error code	Description
	`SREC_OK`	The function is successful.
	`SREC_INTERFACE_REMOVED`	The instance is not registered in Runtime Manager.
	`SREC_TIMEOUT`	The function does not return on time.
	`SREC_INSTANCE_NOT_RUNNING`	The process of the virtual controller is not running.
	`SREC_INDEX_OUT_OF_RANGE`	The offset lies outside the area range. No value could be read.
	`SREC_DOES_NOT_EXIST`	The entry does not exist in the stored tag list.
	`ERuntimeErrorCode.NotSupported`	Access to entire structures or arrays is not supported.
	`ERuntimeErrorCode.TypeMismatch`	The expected type does not match the stored type. See Compatible primitive data types (Page 325).
	`SREC_NOT_UP_TO_DATE`	The stored tag list must be updated.

Table 8-210 ReadInt64() - .NET (C#)

Syntax	`Int64 ReadInt64(string in_Tag)`
Parameters	• `string in_Tag:` The name of the PLC tag that is to be read.
Return values	`Int64:` Contains the value and the type of the PLC tag.

Exceptions	`Siemens.Simatic.Simulation.Runtime.SimulationRuntimeException`	
	Runtime error code	Description
	`ERuntimeErrorCode.InterfaceRemoved`	The instance is not registered in Runtime Manager.
	`ERuntimeErrorCode.Timeout`	The function does not return on time.
	`ERuntimeErrorCode.InstanceNotRunning`	The process of the virtual controller is not running.
	`ERuntimeErrorCode.IndexOutOfRange`	The offset lies outside the area range. No value could be read.
	`ERuntimeErrorCode.DoesNotExist`	The entry does not exist in the stored tag list.
	`ERuntimeErrorCode.NotSupported`	Access to entire structures or arrays is not supported.
	`ERuntimeErrorCode.TypeMismatch`	The expected type does not match the stored type. See Compatible primitive data types (Page 325).
	`ERuntimeErrorCode.NotUpToData`	The stored tag list must be updated.

ReadUInt8()

Reads the value of a PLC tag.

Table 8-211 ReadUInt8() - Native C++

Syntax	`ERuntimeErrorCode ReadUInt8(WCHAR* in_Tag, UINT8* out_Value);`	
Parameters	• `WCHAR* in_Tag:` The name of the PLC tag that is to be read. • `UINT8* out_Value:` Contains the value of the PLC tag.	
Return values	Runtime error code	Description
	`SREC_OK`	The function is successful.
	`SREC_INTERFACE_REMOVED`	The instance is not registered in Runtime Manager.
	`SREC_TIMEOUT`	The function does not return on time.
	`SREC_INSTANCE_NOT_RUNNING`	The process of the virtual controller is not running.
	`SREC_INDEX_OUT_OF_RANGE`	The offset lies outside the area range. No value could be read.
	`SREC_DOES_NOT_EXIST`	The entry does not exist in the stored tag list.
	`SREC_NOT_SUPPORTED`	Access to entire structures or arrays is not supported.
	`SREC_TYPE_MISMATCH`	The expected type does not match the stored type. See Compatible primitive data types (Page 325).
	`SREC_NOT_UP_TO_DATE`	The stored tag list must be updated.

Table 8-212 ReadUInt8() - .NET (C#)

Syntax	`UInt8 ReadUInt8(string in_Tag)`
Parameters	• `string in_Tag:` The name of the PLC tag that is to be read.
Return values	`UInt8:` Contains the value and the type of the PLC tag.

Exceptions	`Siemens.Simatic.Simulation.Runtime.SimulationRuntimeException`	
	Runtime error code	Description
	`ERuntimeErrorCode.InterfaceRemoved`	The instance is not registered in Runtime Manager.
	`ERuntimeErrorCode.Timeout`	The function does not return on time.
	`ERuntimeErrorCode.InstanceNotRunning`	The process of the virtual controller is not running.
	`ERuntimeErrorCode.IndexOutOfRange`	The offset lies outside the area range. No value could be read.
	`ERuntimeErrorCode.DoesNotExist`	The entry does not exist in the stored tag list.
	`ERuntimeErrorCode.NotSupported`	Access to entire structures or arrays is not supported.
	`ERuntimeErrorCode.TypeMismatch`	The expected type does not match the stored type. See Compatible primitive data types (Page 325).
	`ERuntimeErrorCode.NotUpToData`	The stored tag list must be updated.

ReadUInt16()

Reads the value of a PLC tag.

Table 8-213 ReadUInt16() - Native C++

Syntax	`ERuntimeErrorCode ReadUInt16(WCHAR* in_Tag, UINT16* out_Value);`	
Parameters	• `WCHAR* in_Tag:` The name of the PLC tag that is to be read. • `UINT16* out_Value:` Contains the value of the PLC tag.	
Return values	Runtime error code	Description
	`SREC_OK`	The function is successful.
	`SREC_INTERFACE_REMOVED`	The instance is not registered in Runtime Manager.
	`SREC_TIMEOUT`	The function does not return on time.
	`SREC_INSTANCE_NOT_RUNNING`	The process of the virtual controller is not running.
	`SREC_INDEX_OUT_OF_RANGE`	The offset lies outside the area range. No value could be read.
	`SREC_DOES_NOT_EXIST`	The entry does not exist in the stored tag list.
	`SREC_NOT_SUPPORTED`	Access to entire structures or arrays is not supported.
	`SREC_TYPE_MISMATCH`	The expected type does not match the stored type. See Compatible primitive data types (Page 325).
	`SREC_NOT_UP_TO_DATE`	The stored tag list must be updated.

Table 8-214 ReadUInt16() - .NET (C#)

Syntax	`UInt16 ReadUInt16(string in_Tag)`
Parameters	• `string in_Tag:` The name of the PLC tag that is to be read.
Return values	`UInt16:` Contains the value and the type of the PLC tag.

Exceptions	`Siemens.Simatic.Simulation.Runtime.SimulationRuntimeException`	
	Runtime error code	Description
	`ERuntimeErrorCode.InterfaceRemoved`	The instance is not registered in Runtime Manager.
	`ERuntimeErrorCode.Timeout`	The function does not return on time.
	`ERuntimeErrorCode.InstanceNotRunning`	The process of the virtual controller is not running.
	`ERuntimeErrorCode.IndexOutOfRange`	The offset lies outside the area range. No value could be read.
	`ERuntimeErrorCode.DoesNotExist`	The entry does not exist in the stored tag list.
	`ERuntimeErrorCode.NotSupported`	Access to entire structures or arrays is not supported.
	`ERuntimeErrorCode.TypeMismatch`	The expected type does not match the stored type. See Compatible primitive data types (Page 325).
	`ERuntimeErrorCode.NotUpToData`	The stored tag list must be updated.

ReadUInt32()

Reads the value of a PLC tag.

Table 8-215 ReadUInt32() - Native C++

Syntax	`ERuntimeErrorCode ReadUInt32(WCHAR* in_Tag, UINT32* out_Value);`	
Parameters	• `WCHAR* in_Tag:` The name of the PLC tag that is to be read. • `UINT32* out_Value:` Contains the value of the PLC tag.	
Return values	Runtime error code	Description
	`SREC_OK`	The function is successful.
	`SREC_INTERFACE_REMOVED`	The instance is not registered in Runtime Manager.
	`SREC_TIMEOUT`	The function does not return on time.
	`SREC_INSTANCE_NOT_RUNNING`	The process of the virtual controller is not running.
	`SREC_INDEX_OUT_OF_RANGE`	The offset lies outside the area range. No value could be read.
	`SREC_DOES_NOT_EXIST`	The entry does not exist in the stored tag list.
	`SREC_NOT_SUPPORTED`	Access to entire structures or arrays is not supported.
	`SREC_TYPE_MISMATCH`	The expected type does not match the stored type. See Compatible primitive data types (Page 325).
	`SREC_NOT_UP_TO_DATE`	The stored tag list must be updated.

Table 8-216 ReadUInt32() - .NET (C#)

Syntax	`UInt32 ReadUInt32(string in_Tag)`
Parameters	• `string in_Tag:` The name of the PLC tag that is to be read.
Return values	`Uint32:` Contains the value and the type of the PLC tag.

Exceptions	`Siemens.Simatic.Simulation.Runtime.SimulationRuntimeException`	
	Runtime error code	Description
	`ERuntimeErrorCode.InterfaceRemoved`	The instance is not registered in Runtime Manager.
	`ERuntimeErrorCode.Timeout`	The function does not return on time.
	`ERuntimeErrorCode.InstanceNotRunning`	The process of the virtual controller is not running.
	`ERuntimeErrorCode.IndexOutOfRange`	The offset lies outside the area range. No value could be read.
	`ERuntimeErrorCode.DoesNotExist`	The entry does not exist in the stored tag list.
	`ERuntimeErrorCode.NotSupported`	Access to entire structures or arrays is not supported.
	`ERuntimeErrorCode.TypeMismatch`	The expected type does not match the stored type. See Compatible primitive data types (Page 325).
	`ERuntimeErrorCode.NotUpToData`	The stored tag list must be updated.

ReadUInt64()

Reads the value of a PLC tag.

Table 8-217 ReadInt64() - Native C++

Syntax	`ERuntimeErrorCode ReadUInt64(WCHAR* in_Tag, UINT64* out_Value);`	
Parameters	• `WCHAR* in_Tag:` The name of the PLC tag that is to be read. • `UINT64* out_Value:` Contains the value of the PLC tag.	
Return values	Runtime error code	Description
	`SREC_OK`	The function is successful.
	`SREC_INTERFACE_REMOVED`	The instance is not registered in Runtime Manager.
	`SREC_TIMEOUT`	The function does not return on time.
	`SREC_INSTANCE_NOT_RUNNING`	The process of the virtual controller is not running.
	`SREC_INDEX_OUT_OF_RANGE`	The offset lies outside the area range. No value could be read.
	`SREC_DOES_NOT_EXIST`	The entry does not exist in the stored tag list.
	`SREC_NOT_SUPPORTED`	Access to entire structures or arrays is not supported.
	`SREC_TYPE_MISMATCH`	The expected type does not match the stored type. See Compatible primitive data types (Page 325).
	`SREC_NOT_UP_TO_DATE`	The stored tag list must be updated.

Table 8-218 ReadUInt64() - .NET (C#)

Syntax	`UInt64 ReadUInt64(string in_Tag)`
Parameters	• `string in_Tag:` The name of the PLC tag that is to be read.
Return values	`UInt64:` Contains the value and the type of the PLC tag.

Exceptions	`Siemens.Simatic.Simulation.Runtime.SimulationRuntimeException`	
	Runtime error code	Description
	`ERuntimeErrorCode.InterfaceRemoved`	The instance is not registered in Runtime Manager.
	`ERuntimeErrorCode.Timeout`	The function does not return on time.
	`ERuntimeErrorCode.InstanceNotRunning`	The process of the virtual controller is not running.
	`ERuntimeErrorCode.IndexOutOfRange`	The offset lies outside the area range. No value could be read.
	`ERuntimeErrorCode.DoesNotExist`	The entry does not exist in the stored tag list.
	`ERuntimeErrorCode.NotSupported`	Access to entire structures or arrays is not supported.
	`ERuntimeErrorCode.TypeMismatch`	The expected type does not match the stored type. See Compatible primitive data types (Page 325).
	`ERuntimeErrorCode.NotUpToData`	The stored tag list must be updated.

ReadFloat()

Reads the value of a PLC tag.

Table 8-219 ReadFloat() - Native C++

Syntax	`ERuntimeErrorCode ReadFloat(WCHAR* in_Tag, float* out_Value);`	
Parameters	• `WCHAR* in_Tag:` The name of the PLC tag that is to be read. • `float* out_Value:` Contains the value of the PLC tag.	
Return values	Runtime error code	Description
	`SREC_OK`	The function is successful.
	`SREC_INTERFACE_REMOVED`	The instance is not registered in Runtime Manager.
	`SREC_TIMEOUT`	The function does not return on time.
	`SREC_INSTANCE_NOT_RUNNING`	The process of the virtual controller is not running.
	`ERuntimeErrorCode.IndexOutOfRange`	The offset lies outside the area range. No value could be read.
	`SREC_DOES_NOT_EXIST`	The entry does not exist in the stored tag list.
	`SREC_NOT_SUPPORTED`	Access to entire structures or arrays is not supported.
	`SREC_TYPE_MISMATCH`	The expected type does not match the stored type. See Compatible primitive data types (Page 325).
	`SREC_NOT_UP_TO_DATE`	The stored tag list must be updated.

Table 8-220 ReadFloat() - .NET (C#)

Syntax	`float ReadFloat(string in_Tag)`
Parameters	• `string in_Tag:` The name of the PLC tag that is to be read.
Return values	`float:` Contains the value and the type of the PLC tag.

Exceptions	`Siemens.Simatic.Simulation.Runtime.SimulationRuntimeException`	
	Runtime error code	Description
	`ERuntimeErrorCode.InterfaceRemoved`	The instance is not registered in Runtime Manager.
	`ERuntimeErrorCode.Timeout`	The function does not return on time.
	`ERuntimeErrorCode.InstanceNotRunning`	The process of the virtual controller is not running.
	`ERuntimeErrorCode.IndexOutOfRange`	The offset lies outside the area range. No value could be read.
	`ERuntimeErrorCode.DoesNotExist`	The entry does not exist in the stored tag list.
	`ERuntimeErrorCode.NotSupported`	Access to entire structures or arrays is not supported.
	`ERuntimeErrorCode.TypeMismatch`	The expected type does not match the stored type. See Compatible primitive data types (Page 325).
	`ERuntimeErrorCode.NotUpToData`	The stored tag list must be updated.

ReadDouble()

Reads the value of a PLC tag.

Table 8-221 ReadDouble() - Native C++

Syntax	`ERuntimeErrorCode ReadDouble(WCHAR* in_Tag, double* out_Value);`	
Parameters	• `WCHAR* in_Tag:` The name of the PLC tag that is to be read. • `double* out_Value:` Contains the value of the PLC tag.	
Return values	Runtime error code	Description
	`SREC_OK`	The function is successful.
	`SREC_INTERFACE_REMOVED`	The instance is not registered in Runtime Manager.
	`SREC_TIMEOUT`	The function does not return on time.
	`SREC_INSTANCE_NOT_RUNNING`	The process of the virtual controller is not running.
	`ERuntimeErrorCode.IndexOutOfRange`	The offset lies outside the area range. No value could be read.
	`SREC_DOES_NOT_EXIST`	The entry does not exist in the stored tag list.
	`SREC_NOT_SUPPORTED`	Access to entire structures or arrays is not supported.
	`SREC_TYPE_MISMATCH`	The expected type does not match the stored type. See Compatible primitive data types (Page 325).
	`SREC_NOT_UP_TO_DATE`	The stored tag list must be updated.

Table 8-222 ReadDouble() - .NET (C#)

Syntax	`double ReadDouble(string in_Tag)`
Parameters	• `string in_Tag:` The name of the PLC tag that is to be read.
Return values	`double:` Contains the value and the type of the PLC tag.

Exceptions	`Siemens.Simatic.Simulation.Runtime.SimulationRuntimeException`	
	Runtime error code	Description
	`ERuntimeErrorCode.InterfaceRemoved`	The instance is not registered in Runtime Manager.
	`ERuntimeErrorCode.Timeout`	The function does not return on time.
	`ERuntimeErrorCode.InstanceNotRunning`	The process of the virtual controller is not running.
	`ERuntimeErrorCode.IndexOutOfRange`	The offset lies outside the area range. No value could be read.
	`ERuntimeErrorCode.DoesNotExist`	The entry does not exist in the stored tag list.
	`ERuntimeErrorCode.NotSupported`	Access to entire structures or arrays is not supported.
	`ERuntimeErrorCode.TypeMismatch`	The expected type does not match the stored type. See Compatible primitive data types (Page 325).
	`ERuntimeErrorCode.NotUpToData`	The stored tag list must be updated.

ReadChar()

Reads the value of a PLC tag.

Table 8-223 ReadChar() - Native C++

Syntax	`ERuntimeErrorCode ReadChar(WCHAR* in_Tag, char* out_Value);`	
Parameters	• `WCHAR* in_Tag:` The name of the PLC tag that is to be read. • `char* out_Value:` Contains the value of the PLC tag.	
Return values	Runtime error code	Description
	`SREC_OK`	The function is successful.
	`SREC_INTERFACE_REMOVED`	The instance is not registered in Runtime Manager.
	`SREC_TIMEOUT`	The function does not return on time.
	`SREC_INSTANCE_NOT_RUNNING`	The process of the virtual controller is not running.
	`ERuntimeErrorCode.IndexOutOfRange`	The offset lies outside the area range. No value could be read.
	`SREC_DOES_NOT_EXIST`	The entry does not exist in the stored tag list.
	`SREC_NOT_SUPPORTED`	Access to entire structures or arrays is not supported.
	`SREC_TYPE_MISMATCH`	The expected type does not match the stored type. See Compatible primitive data types (Page 325).
	`SREC_NOT_UP_TO_DATE`	The stored tag list must be updated.

Table 8-224 ReadChar() - .NET (C#)

Syntax	`sbyte ReadChar(string in_Tag)`
Parameters	• `string in_Tag:` The name of the PLC tag that is to be read.
Return values	`sbyte:` Contains the value and the type of the PLC tag.

Exceptions	`Siemens.Simatic.Simulation.Runtime.SimulationRuntimeException`	
	Runtime error code	Description
	`ERuntimeErrorCode.InterfaceRemoved`	The instance is not registered in Runtime Manager.
	`ERuntimeErrorCode.Timeout`	The function does not return on time.
	`ERuntimeErrorCode.InstanceNotRunning`	The process of the virtual controller is not running.
	`ERuntimeErrorCode.IndexOutOfRange`	The offset lies outside the area range. No value could be read.
	`ERuntimeErrorCode.DoesNotExist`	The entry does not exist in the stored tag list.
	`ERuntimeErrorCode.NotSupported`	Access to entire structures or arrays is not supported.
	`ERuntimeErrorCode.TypeMismatch`	The expected type does not match the stored type. See Compatible primitive data types (Page 325).
	`ERuntimeErrorCode.NotUpToData`	The stored tag list must be updated.

ReadWChar()

Reads the value of a PLC tag.

Table 8-225 ReadWChar() - Native C++

Syntax	`ERuntimeErrorCode ReadWChar(WCHAR* in_Tag, WCHAR* out_Value);`	
Parameters	• `WCHAR* in_Tag:` The name of the PLC tag that is to be read. • `WCHAR* out_Value:` Contains the value of the PLC tag.	
Return values	Runtime error code	Description
	`SREC_OK`	The function is successful.
	`SREC_INTERFACE_REMOVED`	The instance is not registered in Runtime Manager.
	`SREC_TIMEOUT`	The function does not return on time.
	`SREC_INSTANCE_NOT_RUNNING`	The process of the virtual controller is not running.
	`ERuntimeErrorCode.IndexOutOfRange`	The offset lies outside the area range. No value could be read.
	`SREC_DOES_NOT_EXIST`	The entry does not exist in the stored tag list.
	`SREC_NOT_SUPPORTED`	Access to entire structures or arrays is not supported.
	`SREC_TYPE_MISMATCH`	The expected type does not match the stored type. See Compatible primitive data types (Page 325).
	`SREC_NOT_UP_TO_DATE`	The stored tag list must be updated.

Table 8-226 ReadWChar() - .NET (C#)

Syntax	`char ReadWChar(string in_Tag)`
Parameters	• `string in_Tag:` The name of the PLC tag that is to be read.
Return values	`char:` Contains the value and the type of the PLC tag.

Exceptions	`Siemens.Simatic.Simulation.Runtime.SimulationRuntimeException`	
	Runtime error code	Description
	`ERuntimeErrorCode.InterfaceRemoved`	The instance is not registered in Runtime Manager.
	`ERuntimeErrorCode.Timeout`	The function does not return on time.
	`ERuntimeErrorCode.InstanceNotRunning`	The process of the virtual controller is not running.
	`ERuntimeErrorCode.IndexOutOfRange`	The offset lies outside the area range. No value could be read.
	`ERuntimeErrorCode.DoesNotExist`	The entry does not exist in the stored tag list.
	`ERuntimeErrorCode.NotSupported`	Access to entire structures or arrays is not supported.
	`ERuntimeErrorCode.TypeMismatch`	The expected type does not match the stored type. See Compatible primitive data types (Page 325).
	`ERuntimeErrorCode.NotUpToData`	The stored tag list must be updated.

ReadSignals()

Reads multiple signals within an API call.
When the function is called for the first time, it stores internal information in the structures `SDataValueByName*` to improve the performance of the subsequent calls.

NOTE

To simulate a regular exchange of signals, create a signal list for each set of signals. Use this signal list for all further accesses. Create a new list as soon as the set of signals changes.

Table 8-227 ReadSignals() - Native C++

Syntax	`ERuntimeErrorCode ReadSignals(SDataValueByName* inout_Signals, UINT32 in_SignalCount);` `ERuntimeErrorCode ReadSignals(SDataValueByNameWithCheck* inout_Signals, UINT32 in_SignalCount bool* out_SignalsHaveChanged);`
Parameters	• `SDataValueByName* inout_Signals:` Contains the name, the value and the expected type of the PLC tag. If the expected type is `UNSPECIFIC`, it is set to the stored type when the function was successful. The `STRUCT` type is not supported. • `SDataValueByNameWithCheck* inout_Signals:` Contains the name, the value and the expected type of the PLC tag. If the expected type is `UNSPECIFIC`, it is set to the stored type when the function was successful. The `STRUCT` type is not supported. "`ValueHasChanged`" is set to `true` if the value of the signal has changed since the preceding call. • `UINT32 in_SignalCount:` The number of signals to be read. • `bool* out_SignalsHaveChanged:` Returns `true` if the value of at least one signal has changed since the preceding call.

Signal error	Runtime error code	Description
	SREC_OK	The signal operation is successful.
	SREC_DOES_NOT_EXIST	The entry does not exist in the stored tag list.
	SREC_NOT_SUPPORTED	Access to entire structures or arrays is not supported.
	SREC_TYPE_MISMATCH	The expected type does not match the stored type. See Compatible primitive data types (Page 325).
	SREC_INDEX_OUT_OF_RANGE	Offset or bits are invalid.
Return values	Runtime error code	Condition
	SREC_OK	The function is successful.
	SREC_INTERFACE_REMOVED	The instance is not registered in Runtime Manager.
	SREC_TIMEOUT	The function does not return on time.
	SREC_INSTANCE_NOT_RUNNING	The process of the virtual controller is not running.
	SREC_NOT_UP_TO_DATE	The stored tag list must be updated.
	SREC_SIGNAL_CONFIGURATION_ERROR	At least one signal error is in the list.

Table 8-228 ReadSignals() - .NET (C#)

Syntax	`void ReadSignals(ref SDataValueByName[] inout_Signals)` `void ReadSignals(ref SDataValueByNameWithCheck[] inout_Signals out bool out_SignalsHaveChanged);`	
Parameters	• `ref SDataValueByName[] inout_Signals:` Contains the name, the value and the expected type of the PLC tag. If the expected type is `UNSPECIFIC`, it is set to the stored type when the function was successful. The `STRUCT` type is not supported. • `ref SDataValueByNameWithCheck[] inout_Signals:` Contains the name, the value and the expected type of the PLC tag. If the expected type is `UNSPECIFIC`, it is set to the stored type when the function was successful. The `STRUCT` type is not supported. "`ValueHasChanged`" is set to `true` if the value of the signal has changed since the preceding call. • `out bool out_SignalsHaveChanged:` Returns `true` if the value of at least one signal has changed since the preceding call.	
Return values	`SDataValue:` Contains the value and the type of the PLC tag.	
Signal error	Runtime error code	Description
	ERuntimeErrorCode.OK	The signal operation is successful.
	ERuntimeErrorCode.DoesNotExist	The entry does not exist in the stored tag list.
	ERuntimeErrorCode.NotSupported	Access to entire structures or arrays is not supported.
	ERuntimeErrorCode.TypeMismatch	The expected type does not match the stored type. See Compatible primitive data types (Page 325).
	ERuntimeErrorCode.IndexOutOfRange	Offset or bits are invalid.
Exceptions	Siemens.Simatic.Simulation.Runtime.SimulationRuntimeException	
	Runtime error code	Description
	ERuntimeErrorCode.InterfaceRemoved	The instance is not registered in Runtime Manager.
	ERuntimeErrorCode.Timeout	The function does not return on time.
	ERuntimeErrorCode.InstanceNotRunning	The process of the virtual controller is not running.
	ERuntimeErrorCode.NotUpToData	The stored tag list must be updated.

ReadString()

Reads the value of a PLC tag.

Table 8-229 ReadString() - Native C++

Syntax	`ERuntimeErrorCode IInstance::ReadString(`
	`const WCHAR* in_Tag,`
	`CHAR* out_Value,`
	`const UINT32 in_BufferSize,`
	`UINT32* out_CharsRead`
	`);`	

Parameters	• `const WCHAR* in_Tag:` The name of the PLC tag that is to be read. • `CHAR* out_Value:` Contains the value of the PLC tag • `const UINT32 in_BufferSize:` Size of the buffer provided • `UINT32* out_CharsRead:` Number of characters read	
Return values	Runtime error code	Description
	`SREC_OK`	The function is successful.
	`SREC_INTERFACE_REMOVED`	The instance is not registered in Runtime Manager.
	`SREC_TIMEOUT`	The function does not return on time.
	`SREC_INSTANCE_NOT_RUNNING`	The process of the virtual controller is not running.
	`SREC_INDEX_OUT_OF_RANGE`	The offset lies outside the area range. No value could be read.
	`SREC_DOES_NOT_EXIST`	The entry does not exist in the stored tag list.
	`SREC_NOT_SUPPORTED`	Access to entire structures or arrays is not supported.
	`SREC_TYPE_MISMATCH`	The expected type does not match the stored type. See Compatible primitive data types (Page 325).
	`SREC_NOT_UP_TO_DATE`	The stored tag list must be updated.
	`SREC_BUFFER_OVERFLOW`	The buffer provided is too small.

Table 8-230 ReadString() - .NET (C#)

Syntax	`string ReadString(`
	`string in_Tag`
	`);`	

Parameters	• `string in_Tag:` The name of the PLC tag that is to be read.	
Return values	`string`: Contains the value of the PLC tag.	
Exceptions	Runtime error code	Description
	`ERuntimeErrorCode.InterfaceRemoved`	The instance is not registered in Runtime Manager.
	`ERuntimeErrorCode.Timeout`	The function does not return on time.
	`ERuntimeErrorCode.InstanceNotRunning`	The process of the virtual controller is not running.
	`ERuntimeErrorCode.IndexOutOfRange`	The offset lies outside the area range. No value could be read.
	`ERuntimeErrorCode.DoesNotExist`	The entry does not exist in the stored tag list.
	`ERuntimeErrorCode.NotSupported`	Access to entire structures or arrays is not supported.

Exceptions	`ERuntimeErrorCode.TypeMismatch`	The expected type does not match the stored type. See Compatible primitive data types (Page 325).
	`ERuntimeErrorCode.NotUpToDate`	The stored tag list must be updated.
	`ERuntimeErrorCode.BufferOverflow`	The buffer provided is too small.

ReadWString()

Reads the value of a PLC tag.

Table 8-231 ReadWString() - Native C++

Syntax	`ERuntimeErrorCode IInstance::ReadWString(`
	`const WCHAR* in_Tag,`
	`WCHAR* out_Value,`
	`const UINT32 in_BufferSize,`
	`UINT32* out_CharsRead`
	`);`	

Parameters	• `const WCHAR* in_Tag:` The name of the PLC tag that is to be read. • `WCHAR* out_Value:` Contains the value of the PLC tag • `const UINT32 in_BufferSize:` Size of the buffer provided • `UINT32* out_CharsRead:` Number of characters read	
Return values	Runtime error code	Description
	`SREC_OK`	The function is successful.
	`SREC_INTERFACE_REMOVED`	The instance is not registered in Runtime Manager.
	`SREC_TIMEOUT`	The function does not return on time.
	`SREC_INSTANCE_NOT_RUNNING`	The process of the virtual controller is not running.
	`SREC_INDEX_OUT_OF_RANGE`	The offset lies outside the area range. No value could be read.
	`SREC_DOES_NOT_EXIST`	The entry does not exist in the stored tag list.
	`SREC_NOT_SUPPORTED`	Access to entire structures or arrays is not supported.
	`SREC_TYPE_MISMATCH`	The expected type does not match the stored type. See Compatible primitive data types (Page 325).
	`SREC_NOT_UP_TO_DATE`	The stored tag list must be updated.
	`SREC_BUFFER_OVERFLOW`	The buffer provided is too small.

Table 8-232 ReadWString() - .NET (C#)

Syntax	`wstring ReadWString(`
	`wstring in_Tag`
	`);`

Parameters	• `wstring in_Tag:` The name of the PLC tag that is to be read.
Return values	`wstring:` Contains the value of the PLC tag.

Exceptions	Runtime error code	Description
	`ERuntimeErrorCode.InterfaceRemoved`	The instance is not registered in Runtime Manager.
	`ERuntimeErrorCode.Timeout`	The function does not return on time.
	`ERuntimeErrorCode.InstanceNotRunning`	The process of the virtual controller is not running.
	`ERuntimeErrorCode.IndexOutOfRange`	The offset lies outside the area range. No value could be read.
	`ERuntimeErrorCode.DoesNotExist`	The entry does not exist in the stored tag list.
	`ERuntimeErrorCode.NotSupported`	Access to entire structures or arrays is not supported.
	`ERuntimeErrorCode.TypeMismatch`	The expected type does not match the stored type. See Compatible primitive data types (Page 325).
	`ERuntimeErrorCode.NotUpToDate`	The stored tag list must be updated.
	`ERuntimeErrorCode.BufferOverflow`	The buffer provided is too small.

8.6.5.5 I/O access via tag name - Writing

Individual access to I/O data is used for displaying and writing values that are not refreshed regularly in a graphical user interface (GUI).

NOTE

To simulate a regular exchange of signals, create a signal list for each set of signals. Use this signal list for all further accesses. Create a new list as soon as the set of signals changes.

For the signal lists use the functions `ReadSignals()` and `WriteSignals()`.

Write()

Writes the value of a PLC tag.

Table 8-233 Write() - Native C++

Syntax	`ERuntimeErrorCode Write(WCHAR* in_Tag, SDataValue* in_Value);`	
Parameters	• `WCHAR* in_Tag:` The name of the PLC tag that is to be written. • `SDataValue* in_Value:` Contains the value and the expected type of the PLC tag. The `UNSPECIFIC` and `STRUCT` types are not supported. Structures and fields can be emulated through signal lists and then be read by using the `ReadSignals()` function and written by using the `WriteSignals()` function.	
Return values	Runtime error code	Description
	`SREC_OK`	The function is successful.
	`SREC_INTERFACE_REMOVED`	The instance is not registered in Runtime Manager.
	`SREC_TIMEOUT`	The function does not return on time.
	`SREC_INSTANCE_NOT_RUNNING`	The process of the virtual controller is not running.
	`SREC_INDEX_OUT_OF_RANGE`	The offset lies outside the area range. No value could be written.

Return values	SREC_DOES_NOT_EXIST	The entry does not exist in the stored tag list.
	SREC_NOT_SUPPORTED	Access to entire structures or arrays is not supported.
	SREC_TYPE_MISMATCH	The expected type does not match the stored type. See Compatible primitive data types (Page 325).
	SREC_NOT_UP_TO_DATE	The stored tag list must be updated.
	SREC_WRONG_ARGUMENT	The expected type is UNSPECIFIC.

Table 8-234 Write() - .NET (C#)

Syntax	void Write(string in_Tag SDataValue in_Value)	
Parameters	• string in_Tag: The name of the PLC tag that is to be written. • SDataValue in_Value: Contains the value and the expected type of the PLC tag. The UNSPECIFIC and STRUCT types are not supported. Structures and fields can be emulated through signal lists and then be written by using the WriteSignals() function.	
Return values	None	
Exceptions	Siemens.Simatic.Simulation.Runtime.SimulationRuntimeException	
	Runtime error code	Description
	ERuntimeErrorCode.InterfaceRemoved	The instance is not registered in Runtime Manager.
	ERuntimeErrorCode.Timeout	The function does not return on time.
	ERuntimeErrorCode.InstanceNotRunning	The process of the virtual controller is not running.
	ERuntimeErrorCode.IndexOutOfRange	The offset lies outside the area range. No value could be written.
	ERuntimeErrorCode.DoesNotExist	The entry does not exist in the stored tag list.
	ERuntimeErrorCode.NotSupported	Access to entire structures or arrays is not supported.
	ERuntimeErrorCode.TypeMismatch	The expected type does not match the stored type. See Compatible primitive data types (Page 325).
	ERuntimeErrorCode.NotUpToData	The stored tag list must be updated.
	ERuntimeErrorCode.WrongArgument	The expected type is UNSPECIFIC.

WriteBool()

Writes the value of a PLC tag.

Table 8-235 WriteBool() - Native C++

Syntax	ERuntimeErrorCode WriteBool(WCHAR* in_Tag, bool in_Value);
Parameters	• WCHAR* in_Tag: The name of the PLC tag that is to be written. • bool in_Value: Contains the value of the PLC tag.

Return values	Runtime error code	Description
	SREC_OK	The function is successful.
	SREC_INTERFACE_REMOVED	The instance is not registered in Runtime Manager.
	SREC_TIMEOUT	The function does not return on time.
	SREC_INSTANCE_NOT_RUNNING	The process of the virtual controller is not running.
	SREC_INDEX_OUT_OF_RANGE	The offset lies outside the area range. No value could be written.
	SREC_DOES_NOT_EXIST	The entry does not exist in the stored tag list.
	SREC_NOT_SUPPORTED	Access to entire structures or arrays is not supported.
	SREC_TYPE_MISMATCH	The expected type does not match the stored type. See Compatible primitive data types (Page 325).
	SREC_NOT_UP_TO_DATE	The stored tag list must be updated.

Table 8-236 WriteBool() - .NET (C#)

Syntax	`void WriteBool(string in_Tag bool in_Value)`	
Parameters	• `string in_Tag:` The name of the PLC tag that is to be written. • `bool in_Value:` Contains the value of the PLC tag.	
Return values	None	
Exceptions	`Siemens.Simatic.Simulation.Runtime.SimulationRuntimeException`	
	Runtime error code	Description
	`ERuntimeErrorCode.InterfaceRemoved`	The instance is not registered in Runtime Manager.
	`ERuntimeErrorCode.Timeout`	The function does not return on time.
	`ERuntimeErrorCode.InstanceNotRunning`	The process of the virtual controller is not running.
	`ERuntimeErrorCode.IndexOutOfRange`	The offset lies outside the area range. No value could be written.
	`ERuntimeErrorCode.DoesNotExist`	The entry does not exist in the stored tag list.
	`ERuntimeErrorCode.NotSupported`	Access to entire structures or arrays is not supported.
	`ERuntimeErrorCode.TypeMismatch`	The expected type does not match the stored type. See Compatible primitive data types (Page 326).
	`ERuntimeErrorCode.NotUpToData`	The stored tag list must be updated.

WriteInt8()

Writes the value of a PLC tag.

Table 8-237 WriteInt8() - Native C++

Syntax	`ERuntimeErrorCode WriteInt8(WCHAR* in_Tag, INT8 in_Value);`
Parameters	• `WCHAR* in_Tag:` The name of the PLC tag that is to be written. • `INT8 in_Value:` Contains the value of the PLC tag.

Return values	Runtime error code	Description
	SREC_OK	The function is successful.
	SREC_INTERFACE_REMOVED	The instance is not registered in Runtime Manager.
	SREC_TIMEOUT	The function does not return on time.
	SREC_INSTANCE_NOT_RUNNING	The process of the virtual controller is not running.
	SREC_INDEX_OUT_OF_RANGE	The offset lies outside the area range. No value could be written.
	SREC_DOES_NOT_EXIST	The entry does not exist in the stored tag list.
	SREC_NOT_SUPPORTED	Access to entire structures or arrays is not supported.
	SREC_TYPE_MISMATCH	The expected type does not match the stored type. See Compatible primitive data types (Page 325).
	SREC_NOT_UP_TO_DATE	The stored tag list must be updated.

Table 8-238 WriteInt8() - .NET (C#)

Syntax	`void WriteInt8(string in_Tag Int8 in_Value)`	
Parameters	• `string in_Tag:` The name of the PLC tag that is to be written. • `Int8 in_Value:` Contains the value of the PLC tag.	
Return values	None	
Exceptions	`Siemens.Simatic.Simulation.Runtime.SimulationRuntimeException`	
	Runtime error code	Description
	`ERuntimeErrorCode.InterfaceRemoved`	The instance is not registered in Runtime Manager.
	`ERuntimeErrorCode.Timeout`	The function does not return on time.
	`ERuntimeErrorCode.InstanceNotRunning`	The process of the virtual controller is not running.
	`ERuntimeErrorCode.IndexOutOfRange`	The offset lies outside the area range. No value could be written.
	`ERuntimeErrorCode.DoesNotExist`	The entry does not exist in the stored tag list.
	`ERuntimeErrorCode.NotSupported`	Access to entire structures or arrays is not supported.
	`ERuntimeErrorCode.TypeMissmatch`	The expected type does not match the stored type. See Compatible primitive data types (Page 325).
	`ERuntimeErrorCode.NotUpToData`	The stored tag list must be updated.

WriteInt16()

Writes the value of a PLC tag.

Table 8-239 WriteInt16() - Native C++

Syntax	`ERuntimeErrorCode WriteInt16(WCHAR* in_Tag, INT16 in_Value);`
Parameters	• `WCHAR* in_Tag:` The name of the PLC tag that is to be written. • `INT16 in_Value:` Contains the value of the PLC tag.

Return values	Runtime error code	Description
	SREC_OK	The function is successful.
	SREC_INTERFACE_REMOVED	The instance is not registered in Runtime Manager.
	SREC_TIMEOUT	The function does not return on time.
	SREC_INSTANCE_NOT_RUNNING	The process of the virtual controller is not running.
	SREC_INDEX_OUT_OF_RANGE	The offset lies outside the area range. No value could be written.
	SREC_DOES_NOT_EXIST	The entry does not exist in the stored tag list.
	SREC_NOT_SUPPORTED	Access to entire structures or arrays is not supported.
	SREC_TYPE_MISMATCH	The expected type does not match the stored type. See Compatible primitive data types (Page 325).
	SREC_NOT_UP_TO_DATE	The stored tag list must be updated.

Table 8-240 WriteInt16() - .NET (C#)

Syntax	void WriteInt16(string in_Tag Int16 in_Value)	
Parameters	• string in_Tag: The name of the PLC tag that is to be written. • Int16 in_Value: Contains the value of the PLC tag.	
Return values	None	
Exceptions	Siemens.Simatic.Simulation.Runtime.SimulationRuntimeException	
	Runtime error code	Description
	ERuntimeErrorCode.InterfaceRemoved	The instance is not registered in Runtime Manager.
	ERuntimeErrorCode.Timeout	The function does not return on time.
	ERuntimeErrorCode.InstanceNotRunning	The process of the virtual controller is not running.
	ERuntimeErrorCode.IndexOutOfRange	The offset lies outside the area range. No value could be written.
	ERuntimeErrorCode.DoesNotExist	The entry does not exist in the stored tag list.
	ERuntimeErrorCode.NotSupported	Access to entire structures or arrays is not supported.
	ERuntimeErrorCode.TypeMissmatch	The expected type does not match the stored type. See Compatible primitive data types (Page 325).
	ERuntimeErrorCode.NotUpToData	The stored tag list must be updated.

WriteInt32()

Writes the value of a PLC tag.

Table 8-241 WriteInt32() - Native C++

Syntax	ERuntimeErrorCode WriteInt32(WCHAR* in_Tag, INT32 in_Value);
Parameters	• WCHAR* in_Tag: The name of the PLC tag that is to be written. • INT32 in_Value: Contains the value of the PLC tag.

Return values	Runtime error code	Description
	SREC_OK	The function is successful.
	SREC_INTERFACE_REMOVED	The instance is not registered in Runtime Manager.
	SREC_TIMEOUT	The function does not return on time.
	SREC_INSTANCE_NOT_RUNNING	The process of the virtual controller is not running.
	SREC_INDEX_OUT_OF_RANGE	The offset lies outside the area range. No value could be written.
	SREC_DOES_NOT_EXIST	The entry does not exist in the stored tag list.
	SREC_NOT_SUPPORTED	Access to entire structures or arrays is not supported.
	SREC_TYPE_MISMATCH	The expected type does not match the stored type. See Compatible primitive data types (Page 325).
	SREC_NOT_UP_TO_DATE	The stored tag list must be updated.

Table 8-242 WriteInt32() - .NET (C#)

Syntax	`void WriteInt32(string in_Tag Int32 in_Value)`	
Parameters	• `string in_Tag:` The name of the PLC tag that is to be written. • `Int32 in_Value:` Contains the value of the PLC tag.	
Return values	None	
Exceptions	`Siemens.Simatic.Simulation.Runtime.SimulationRuntimeException`	
	Runtime error code	Description
	`ERuntimeErrorCode.InterfaceRemoved`	The instance is not registered in Runtime Manager.
	`ERuntimeErrorCode.Timeout`	The function does not return on time.
	`ERuntimeErrorCode.InstanceNotRunning`	The process of the virtual controller is not running.
	`ERuntimeErrorCode.IndexOutOfRange`	The offset lies outside the area range. No value could be written.
	`ERuntimeErrorCode.DoesNotExist`	The entry does not exist in the stored tag list.
	`ERuntimeErrorCode.NotSupported`	Access to entire structures or arrays is not supported.
	`ERuntimeErrorCode.TypeMissmatch`	The expected type does not match the stored type. See Compatible primitive data types (Page 325).
	`ERuntimeErrorCode.NotUpToData`	The stored tag list must be updated.

WriteInt64()

Writes the value of a PLC tag.

Table 8-243 WriteInt64() - Native C++

Syntax	`ERuntimeErrorCode WriteInt64(WCHAR* in_Tag, INT64 in_Value);`
Parameters	• `WCHAR* in_Tag:` The name of the PLC tag that is to be written. • `INT64 in_Value:` Contains the value of the PLC tag.

Return values	Runtime error code	Description
	SREC_OK	The function is successful.
	SREC_INTERFACE_REMOVED	The instance is not registered in Runtime Manager.
	SREC_TIMEOUT	The function does not return on time.
	SREC_INSTANCE_NOT_RUNNING	The process of the virtual controller is not running.
	SREC_INDEX_OUT_OF_RANGE	The offset lies outside the area range. No value could be written.
	SREC_DOES_NOT_EXIST	The entry does not exist in the stored tag list.
	SREC_NOT_SUPPORTED	Access to entire structures or arrays is not supported.
	SREC_TYPE_MISMATCH	The expected type does not match the stored type. See Compatible primitive data types (Page 325).
	SREC_NOT_UP_TO_DATE	The stored tag list must be updated.

Table 8-244 WriteInt64() - .NET (C#)

Syntax	void WriteInt64(string in_Tag Int64 in_Value)	
Parameters	• string in_Tag: The name of the PLC tag that is to be written. • Int64 in_Value: Contains the value of the PLC tag.	
Return values	None	
Exceptions	Siemens.Simatic.Simulation.Runtime.SimulationRuntimeException	
	Runtime error code	Description
	ERuntimeErrorCode.InterfaceRemoved	The instance is not registered in Runtime Manager.
	ERuntimeErrorCode.Timeout	The function does not return on time.
	ERuntimeErrorCode.InstanceNotRunning	The process of the virtual controller is not running.
	ERuntimeErrorCode.IndexOutOfRange	The offset lies outside the area range. No value could be written.
	ERuntimeErrorCode.DoesNotExist	The entry does not exist in the stored tag list.
	ERuntimeErrorCode.NotSupported	Access to entire structures or arrays is not supported.
	ERuntimeErrorCode.TypeMissmatch	The expected type does not match the stored type. See Compatible primitive data types (Page 325).
	ERuntimeErrorCode.NotUpToData	The stored tag list must be updated.

WriteInt8()

Writes the value of a PLC tag.

Table 8-245 WriteUInt8() - Native C++

Syntax	ERuntimeErrorCode WriteUInt8(WCHAR* in_Tag, UINT8 in_Value);
Parameters	• WCHAR* in_Tag: The name of the PLC tag that is to be written. • UINT8 in_Value: Contains the value of the PLC tag.

Return values	Runtime error code	Description
	SREC_OK	The function is successful.
	SREC_INTERFACE_REMOVED	The instance is not registered in Runtime Manager.
	SREC_TIMEOUT	The function does not return on time.
	SREC_INSTANCE_NOT_RUNNING	The process of the virtual controller is not running.
	SREC_INDEX_OUT_OF_RANGE	The offset lies outside the area range. No value could be written.
	SREC_DOES_NOT_EXIST	The entry does not exist in the stored tag list.
	SREC_NOT_SUPPORTED	Access to entire structures or arrays is not supported.
	SREC_TYPE_MISMATCH	The expected type does not match the stored type. See Compatible primitive data types (Page 325).
	SREC_NOT_UP_TO_DATE	The stored tag list must be updated.

Table 8-246 WriteUInt8() - .NET (C#)

Syntax	`void WriteUInt8(string in_Tag UInt8 in_Value)`	
Parameters	• `string in_Tag:` The name of the PLC tag that is to be written. • `UInt8 in_Value:` Contains the value of the PLC tag.	
Return values	None	
Exceptions	`Siemens.Simatic.Simulation.Runtime.SimulationRuntimeException`	
	Runtime error code	Description
	`ERuntimeErrorCode.InterfaceRemoved`	The instance is not registered in Runtime Manager.
	`ERuntimeErrorCode.Timeout`	The function does not return on time.
	`ERuntimeErrorCode.InstanceNotRunning`	The process of the virtual controller is not running.
	`ERuntimeErrorCode.IndexOutOfRange`	The offset lies outside the area range. No value could be written.
	`ERuntimeErrorCode.DoesNotExist`	The entry does not exist in the stored tag list.
	`ERuntimeErrorCode.NotSupported`	Access to entire structures or arrays is not supported.
	`ERuntimeErrorCode.TypeMissmatch`	The expected type does not match the stored type. See Compatible primitive data types (Page 325).
	`ERuntimeErrorCode.NotUpToData`	The stored tag list must be updated.

WriteUInt16()

Reads the value of a PLC tag.

Table 8-247 WriteUInt16() - Native C++

Syntax	`ERuntimeErrorCode WriteUInt16(WCHAR* in_Tag, UINT16 in_Value);`
Parameters	• `WCHAR* in_Tag:` The name of the PLC tag that is to be written. • `UINT16 in_Value:` Contains the value of the PLC tag.

Return values	Runtime error code	Description
	SREC_OK	The function is successful.
	SREC_INTERFACE_REMOVED	The instance is not registered in Runtime Manager.
	SREC_TIMEOUT	The function does not return on time.
	SREC_INSTANCE_NOT_RUNNING	The process of the virtual controller is not running.
	SREC_INDEX_OUT_OF_RANGE	The offset lies outside the area range. No value could be written.
	SREC_DOES_NOT_EXIST	The entry does not exist in the stored tag list.
	SREC_NOT_SUPPORTED	Access to entire structures or arrays is not supported.
	SREC_TYPE_MISMATCH	The expected type does not match the stored type. See Compatible primitive data types (Page 325).
	SREC_NOT_UP_TO_DATE	The stored tag list must be updated.

Table 8-248 WriteUInt16() - .NET (C#)

Syntax	void WriteUInt16(string in_Tag UInt16 in_Value)	
Parameters	• string in_Tag: The name of the PLC tag that is to be written. • UInt16 in_Value: Contains the value of the PLC tag.	
Return values	None	
Exceptions	Siemens.Simatic.Simulation.Runtime.SimulationRuntimeException	
	Runtime error code	Description
	ERuntimeErrorCode.InterfaceRemoved	The instance is not registered in Runtime Manager.
	ERuntimeErrorCode.Timeout	The function does not return on time.
	ERuntimeErrorCode.InstanceNotRunning	The process of the virtual controller is not running.
	ERuntimeErrorCode.IndexOutOfRange	The offset lies outside the area range. No value could be written.
	ERuntimeErrorCode.DoesNotExist	The entry does not exist in the stored tag list.
	ERuntimeErrorCode.NotSupported	Access to entire structures or arrays is not supported.
	ERuntimeErrorCode.TypeMissmatch	The expected type does not match the stored type. See Compatible primitive data types (Page 325).
	ERuntimeErrorCode.NotUpToData	The stored tag list must be updated.

WriteUInt32()

Writes the value of a PLC tag.

Table 8-249 WriteUInt32() - Native C++

Syntax	ERuntimeErrorCode WriteUInt32(WCHAR* in_Tag, UINT32 in_Value);
Parameters	• WCHAR* in_Tag: The name of the PLC tag that is to be written. • UINT32 in_Value: Contains the value of the PLC tag.

Return values	Runtime error code	Description
	SREC_OK	The function is successful.
	SREC_INTERFACE_REMOVED	The instance is not registered in Runtime Manager.
	SREC_TIMEOUT	The function does not return on time.
	SREC_INSTANCE_NOT_RUNNING	The process of the virtual controller is not running.
	SREC_INDEX_OUT_OF_RANGE	The offset lies outside the area range. No value could be written.
	SREC_DOES_NOT_EXIST	The entry does not exist in the stored tag list.
	SREC_NOT_SUPPORTED	Access to entire structures or arrays is not supported.
	SREC_TYPE_MISMATCH	The expected type does not match the stored type. See Compatible primitive data types (Page 325).
	SREC_NOT_UP_TO_DATE	The stored tag list must be updated.

Table 8-250 WriteUInt32() - .NET (C#)

Syntax	`void WriteUInt32(string in_Tag UInt32 in_Value)`	
Parameters	• `string in_Tag:` The name of the PLC tag that is to be written. • `UInt32 in_Value:` Contains the value of the PLC tag.	
Return values	None	
Exceptions	`Siemens.Simatic.Simulation.Runtime.SimulationRuntimeException`	
	Runtime error code	Description
	`ERuntimeErrorCode.InterfaceRemoved`	The instance is not registered in Runtime Manager.
	`ERuntimeErrorCode.Timeout`	The function does not return on time.
	`ERuntimeErrorCode.InstanceNotRunning`	The process of the virtual controller is not running.
	`ERuntimeErrorCode.IndexOutOfRange`	The offset lies outside the area range. No value could be written.
	`ERuntimeErrorCode.DoesNotExist`	The entry does not exist in the stored tag list.
	`ERuntimeErrorCode.NotSupported`	Access to entire structures or arrays is not supported.
	`ERuntimeErrorCode.TypeMissmatch`	The expected type does not match the stored type. See Compatible primitive data types (Page 325).
	`ERuntimeErrorCode.NotUpToData`	The stored tag list must be updated.

WriteUInt64()

Writes the value of a PLC tag.

Table 8-251 WriteUInt64() - Native C++

Syntax	`ERuntimeErrorCode WriteUInt64(WCHAR* in_Tag, UINT64 in_Value);`
Parameters	• `WCHAR* in_Tag:` The name of the PLC tag that is to be written. • `UINT64 in_Value:` Contains the value of the PLC tag.

Return values	Runtime error code	Description
	SREC_OK	The function is successful.
	SREC_INTERFACE_REMOVED	The instance is not registered in Runtime Manager.
	SREC_TIMEOUT	The function does not return on time.
	SREC_INSTANCE_NOT_RUNNING	The process of the virtual controller is not running.
	SREC_INDEX_OUT_OF_RANGE	The offset lies outside the area range. No value could be written.
	SREC_DOES_NOT_EXIST	The entry does not exist in the stored tag list.
	SREC_NOT_SUPPORTED	Access to entire structures or arrays is not supported.
	SREC_TYPE_MISMATCH	The expected type does not match the stored type. See Compatible primitive data types (Page 325).
	SREC_NOT_UP_TO_DATE	The stored tag list must be updated.

Table 8-252 WriteUInt64() - .NET (C#)

Syntax	void WriteUInt64(string in_Tag UInt64 in_Value)	
Parameters	• string in_Tag: The name of the PLC tag that is to be written. • UInt64 in_Value: Contains the value of the PLC tag.	
Return values	None	
Exceptions	Siemens.Simatic.Simulation.Runtime.SimulationRuntimeException	
	Runtime error code	Description
	ERuntimeErrorCode.InterfaceRemoved	The instance is not registered in Runtime Manager.
	ERuntimeErrorCode.Timeout	The function does not return on time.
	ERuntimeErrorCode.InstanceNotRunning	The process of the virtual controller is not running.
	ERuntimeErrorCode.IndexOutOfRange	The offset lies outside the area range. No value could be written.
	ERuntimeErrorCode.DoesNotExist	The entry does not exist in the stored tag list.
	ERuntimeErrorCode.NotSupported	Access to entire structures or arrays is not supported.
	ERuntimeErrorCode.TypeMissmatch	The expected type does not match the stored type. See Compatible primitive data types (Page 325).
	ERuntimeErrorCode.NotUpToData	The stored tag list must be updated.

WriteFloat()

Writes the value of a PLC tag.

Table 8-253 WriteFloat() - Native C++

Syntax	ERuntimeErrorCode WriteFloat(WCHAR* in_Tag, float in_Value);
Parameters	• WCHAR* in_Tag: The name of the PLC tag that is to be written. • float in_Value: Contains the value of the PLC tag.

Return values	Runtime error code	Description
	SREC_OK	The function is successful.
	SREC_INTERFACE_REMOVED	The instance is not registered in Runtime Manager.
	SREC_TIMEOUT	The function does not return on time.
	SREC_INSTANCE_NOT_RUNNING	The process of the virtual controller is not running.
	SREC_INDEX_OUT_OF_RANGE	The offset lies outside the area range. No value could be written.
	SREC_DOES_NOT_EXIST	The entry does not exist in the stored tag list.
	SREC_NOT_SUPPORTED	Access to entire structures or arrays is not supported.
	SREC_TYPE_MISMATCH	The expected type does not match the stored type. See Compatible primitive data types (Page 325).
	SREC_NOT_UP_TO_DATE	The stored tag list must be updated.

Table 8-254 WriteFloat() - .NET (C#)

Syntax	`void WriteFloat(string in_Tag float in_Value)`	
Parameters	• `string in_Tag:` The name of the PLC tag that is to be written. • `float in_Value:` Contains the value of the PLC tag.	
Return values	None	
Exceptions	`Siemens.Simatic.Simulation.Runtime.SimulationRuntimeException`	
	Runtime error code	Description
	`ERuntimeErrorCode.InterfaceRemoved`	The instance is not registered in Runtime Manager.
	`ERuntimeErrorCode.Timeout`	The function does not return on time.
	`ERuntimeErrorCode.InstanceNotRunning`	The process of the virtual controller is not running.
	`ERuntimeErrorCode.IndexOutOfRange`	The offset lies outside the area range. No value could be written.
	`ERuntimeErrorCode.DoesNotExist`	The entry does not exist in the stored tag list.
	`ERuntimeErrorCode.NotSupported`	Access to entire structures or arrays is not supported.
	`ERuntimeErrorCode.TypeMissmatch`	The expected type does not match the stored type. See Compatible primitive data types (Page 325).
	`ERuntimeErrorCode.NotUpToData`	The stored tag list must be updated.

WriteDouble()

Writes the value of a PLC tag.

Table 8-255 WriteDouble() - Native C++

Syntax	`ERuntimeErrorCode WriteDouble(WCHAR* in_Tag, double in_Value);`
Parameters	• `WCHAR* in_Tag:` The name of the PLC tag that is to be written. • `double in_Value:` Contains the value of the PLC tag.

Return values	Runtime error code	Description
	SREC_OK	The function is successful.
	SREC_INTERFACE_REMOVED	The instance is not registered in Runtime Manager.
	SREC_TIMEOUT	The function does not return on time.
	SREC_INSTANCE_NOT_RUNNING	The process of the virtual controller is not running.
	SREC_INDEX_OUT_OF_RANGE	The offset lies outside the area range. No value could be written.
	SREC_DOES_NOT_EXIST	The entry does not exist in the stored tag list.
	SREC_NOT_SUPPORTED	Access to entire structures or arrays is not supported.
	SREC_TYPE_MISMATCH	The expected type does not match the stored type. See Compatible primitive data types (Page 325).
	SREC_NOT_UP_TO_DATE	The stored tag list must be updated.

Table 8-256 WriteDouble() - .NET (C#)

Syntax	void WriteDouble(string in_Tag double in_Value)	
Parameters	• string in_Tag: The name of the PLC tag that is to be written. • double in_Value: Contains the value of the PLC tag.	
Return values	None	
Exceptions	Siemens.Simatic.Simulation.Runtime.SimulationRuntimeException	
	Runtime error code	Description
	ERuntimeErrorCode.InterfaceRemoved	The instance is not registered in Runtime Manager.
	ERuntimeErrorCode.Timeout	The function does not return on time.
	ERuntimeErrorCode.InstanceNotRunning	The process of the virtual controller is not running.
	ERuntimeErrorCode.IndexOutOfRange	The offset lies outside the area range. No value could be written.
	ERuntimeErrorCode.DoesNotExist	The entry does not exist in the stored tag list.
	ERuntimeErrorCode.NotSupported	Access to entire structures or arrays is not supported.
	ERuntimeErrorCode.TypeMissmatch	The expected type does not match the stored type. See Compatible primitive data types (Page 325).
	ERuntimeErrorCode.NotUpToData	The stored tag list must be updated.

WriteChar()

Writes the value of a PLC tag.

Table 8-257 WriteChar() - Native C++

Syntax	ERuntimeErrorCode WriteChar(WCHAR* in_Tag, char in_Value);
Parameters	• WCHAR* in_Tag: The name of the PLC tag that is to be written. • char in_Value: Contains the value of the PLC tag.

Return values	Runtime error code	Description
	SREC_OK	The function is successful.
	SREC_INTERFACE_REMOVED	The instance is not registered in Runtime Manager.
	SREC_TIMEOUT	The function does not return on time.
	SREC_INSTANCE_NOT_RUNNING	The process of the virtual controller is not running.
	SREC_INDEX_OUT_OF_RANGE	The offset lies outside the area range. No value could be written.
	SREC_DOES_NOT_EXIST	The entry does not exist in the stored tag list.
	SREC_NOT_SUPPORTED	Access to entire structures or arrays is not supported.
	SREC_TYPE_MISMATCH	The expected type does not match the stored type. See Compatible primitive data types (Page 325).
	SREC_NOT_UP_TO_DATE	The stored tag list must be updated.

Table 8-258 WriteChar() - .NET (C#)

Syntax	void WriteChar(string in_Tag sbyte in_Value)	
Parameters	• string in_Tag: The name of the PLC tag that is to be written. • sbyte in_Value: Contains the value of the PLC tag.	
Return values	None	
Exceptions	Siemens.Simatic.Simulation.Runtime.SimulationRuntimeException	
	Runtime error code	Description
	ERuntimeErrorCode.InterfaceRemoved	The instance is not registered in Runtime Manager.
	ERuntimeErrorCode.Timeout	The function does not return on time.
	ERuntimeErrorCode.InstanceNotRunning	The process of the virtual controller is not running.
	ERuntimeErrorCode.IndexOutOfRange	The offset lies outside the area range. No value could be written.
	ERuntimeErrorCode.DoesNotExist	The entry does not exist in the stored tag list.
	ERuntimeErrorCode.NotSupported	Access to entire structures or arrays is not supported.
	ERuntimeErrorCode.TypeMissmatch	The expected type does not match the stored type. See Compatible primitive data types (Page 325).
	ERuntimeErrorCode.NotUpToData	The stored tag list must be updated.

WriteWChar()

Writes the value of a PLC tag.

Table 8-259 WriteWChar() - Native C++

Syntax	ERuntimeErrorCode WriteWChar(WCHAR* in_Tag, WCHAR in_Value);
Parameters	• WCHAR* in_Tag: The name of the PLC tag that is to be written. • WCHAR in_Value: Contains the value of the PLC tag.

Return values	Runtime error code	Description
	SREC_OK	The function is successful.
	SREC_INTERFACE_REMOVED	The instance is not registered in Runtime Manager.
	SREC_TIMEOUT	The function does not return on time.
	SREC_INSTANCE_NOT_RUNNING	The process of the virtual controller is not running.
	SREC_INDEX_OUT_OF_RANGE	The offset lies outside the area range. No value could be written.
	SREC_DOES_NOT_EXIST	The entry does not exist in the stored tag list.
	SREC_NOT_SUPPORTED	Access to entire structures or arrays is not supported.
	SREC_TYPE_MISMATCH	The expected type does not match the stored type. See Compatible primitive data types (Page 325).
	SREC_NOT_UP_TO_DATE	The stored tag list must be updated.

Table 8-260 WriteWChar() - .NET (C#)

Syntax	void WriteWChar(string in_Tag char in_Value)	
Parameters	• string in_Tag: The name of the PLC tag that is to be written. • char in_Value: Contains the value of the PLC tag.	
Return values	None	
Exceptions	Siemens.Simatic.Simulation.Runtime.SimulationRuntimeException	
	Runtime error code	Description
	ERuntimeErrorCode.InterfaceRemoved	The instance is not registered in Runtime Manager.
	ERuntimeErrorCode.Timeout	The function does not return on time.
	ERuntimeErrorCode.InstanceNotRunning	The process of the virtual controller is not running.
	SREC_INDEX_OUT_OF_RANGE	The offset lies outside the area range. No value could be written.
	ERuntimeErrorCode.DoesNotExist	The entry does not exist in the stored tag list.
	ERuntimeErrorCode.NotSupported	Access to entire structures or arrays is not supported.
	ERuntimeErrorCode.TypeMissmatch	The expected type does not match the stored type. See Compatible primitive data types (Page 325).
	ERuntimeErrorCode.NotUpToData	The stored tag list must be updated.

WriteSignals()

Writes multiple signals within an API call.

When the function is called for the first time, it stores internal information in the structures `SDataValueByName*` to improve the performance of the subsequent calls.

NOTE

To simulate a regular exchange of signals, create a signal list for each set of signals. Use this signal list for all further accesses. Create a new list as soon as the set of signals changes.

Table 8-261 WriteSignals() - Native C++

Syntax	`ERuntimeErrorCode WriteSignals(SDataValueByName* inout_Signals, UINT32 in_SignalCount);`	
Parameters	• `SDataValueByName* inout_Signals:` Contains the name, the value and the expected type of the PLC tag. The `UNSPECIFIC` and `STRUCT` types are not supported. • `UINT32 in_SignalCount:` Number of signals.	
Signal error	Error code	Description
	`SREC_INDEX_OUT_OF_RANGE`	Offset or bits are invalid.
Return values	Runtime error code	Condition
	`SREC_OK`	The function is successful.
	`SREC_INTERFACE_REMOVED`	The instance is not registered in Runtime Manager.
	`SREC_TIMEOUT`	The function does not return on time.
	`SREC_INSTANCE_NOT_RUNNING`	The process of the virtual controller is not running.
	`SREC_DOES_NOT_EXIST`	The entry does not exist in the stored tag list.
	`SREC_NOT_SUPPORTED`	Access to entire structures or arrays is not supported.
	`SREC_TYPE_MISMATCH`	The expected type does not match the stored type. See Compatible primitive data types (Page 325).
	`SREC_NOT_UP_TO_DATE`	The stored tag list must be updated.
	`SREC_WRONG_ARGUMENT`	The expected type is `UNSPECIFIC`.

Table 8-262 WriteSignals() - .NET (C#)

Syntax	`void WriteSignals(SDataValueByName[] in_Signals)`	
Parameters	• `SDataValueByName:` Contains the name, the value and the expected type of the PLC tag. The `UNSPECIFIC` and `STRUCT` types are not supported.	
Return values	None	
Signal error	Error code	Description
	`ERuntimeErrorCode.IndexOutOfRange`	Offset or bits are invalid.
Exceptions	`Siemens.Simatic.Simulation.Runtime.SimulationRuntimeException`	
	Runtime error code	Description
	`ERuntimeErrorCode.InterfaceRemoved`	The instance is not registered in Runtime Manager.
	`ERuntimeErrorCode.Timeout`	The function does not return on time.
	`ERuntimeErrorCode.InstanceNotRunning`	The process of the virtual controller is not running.
	`ERuntimeErrorCode.DoesNotExist`	The entry does not exist in the stored tag list.

Exceptions	`ERuntimeErrorCode.NotSupported`	Access to entire structures or arrays is not supported.
	`ERuntimeErrorCode.TypeMismatch`	The expected type does not match the stored type. See Compatible primitive data types (Page 326).
	`ERuntimeErrorCode.NotUpToData`	The stored tag list must be updated.
	`ERuntimeErrorCode.WrongArgument`	The expected type is `UNSPECIFIC`.

WriteString()

Writes the value of a PLC tag.

Table 8-263 WriteString() - Native C++

Syntax	`ERuntimeErrorCode IInstance::WriteString(`
	`const WCHAR* in_Tag,`
	`const CHAR* in_Value,`
	`const UINT32 in_CharsToWrite`
	`);`	

Parameters	• `const WCHAR* in_Tag:` The name of the PLC tag that is to be written. • `CHAR* in_Value:` Contains the value of the PLC tag • `const UINT32 in_CharsToWrite:` Number of characters read	
Return values	Runtime error code	Description
	`SREC_OK`	The function is successful.
	`SREC_INTERFACE_REMOVED`	The instance is not registered in Runtime Manager.
	`SREC_TIMEOUT`	The function does not return on time.
	`SREC_INSTANCE_NOT_RUNNING`	The process of the virtual controller is not running.
	`SREC_INDEX_OUT_OF_RANGE`	The offset lies outside the area range. No value could be written.
	`SREC_DOES_NOT_EXIST`	The entry does not exist in the stored tag list.
	`SREC_NOT_SUPPORTED`	Access to entire structures or arrays is not supported.
	`SREC_TYPE_MISMATCH`	The expected type does not match the stored type. See Compatible primitive data types (Page 325).
	`SREC_NOT_UP_TO_DATE`	The stored tag list must be updated.
	`SREC_BUFFER_OVERFLOW`	The characters to be written are greater than the maximum value of the tag.

Table 8-264 WriteString() - .NET (C#)

Syntax	`void WriteString(`
	`string in_Tag,`
	`string in_Value`
	`);`

Parameters	• `string in_Tag:` The name of the PLC tag that is to be written. • `string in_Value:` The value to be written to the PLC tag.
Return values	None

Exceptions	Runtime error code	Description
	`ERuntimeErrorCode.InterfaceRemoved`	The instance is not registered in Runtime Manager.
	`ERuntimeErrorCode.Timeout`	The function does not return on time.
	`ERuntimeErrorCode.InstanceNotRunning`	The process of the virtual controller is not running.
	`ERuntimeErrorCode.IndexOutOfRange`	The offset lies outside the area range. No value could be written.
	`ERuntimeErrorCode.DoesNotExist`	The entry does not exist in the stored tag list.
	`ERuntimeErrorCode.NotSupported`	Access to entire structures or arrays is not supported.
	`ERuntimeErrorCode.TypeMismatch`	The expected type does not match the stored type. See Compatible primitive data types (Page 325).
	`ERuntimeErrorCode.NotUpToDate`	The stored tag list must be updated.
	`ERuntimeErrorCode.BufferOverflow`	The characters to be written are greater than the maximum value of the tag.

WriteWString()

Writes the value of a PLC tag.

Table 8-265 WriteWString() - Native C++

Syntax	`ERuntimeErrorCode IInstance::WriteWString(`
	`const WCHAR* in_Tag,`
	`const WCHAR* in_Value,`
	`const UINT32 in_CharsToWrite,`
	`);`	

Parameters	• `const WCHAR* in_Tag:` The name of the PLC tag that is to be written. • `const WCHAR* in_Value:` Contains the value of the PLC tag • `const UINT32 in_CharsToWrite:` Number of characters that are to be written.	
Return values	Runtime error code	Description
	`SREC_OK`	The function is successful.
	`SREC_INTERFACE_REMOVED`	The instance is not registered in Runtime Manager.
	`SREC_TIMEOUT`	The function does not return on time.
	`SREC_INSTANCE_NOT_RUNNING`	The process of the virtual controller is not running.
	`SREC_INDEX_OUT_OF_RANGE`	The offset lies outside the area range. No value could be written.
	`SREC_DOES_NOT_EXIST`	The entry does not exist in the stored tag list.
	`SREC_NOT_SUPPORTED`	Access to entire structures or arrays is not supported.
	`SREC_TYPE_MISMATCH`	The expected type does not match the stored type. See Compatible primitive data types (Page 325).
	`SREC_NOT_UP_TO_DATE`	The stored tag list must be updated.
	`SREC_BUFFER_OVERFLOW`	The characters to be written are greater than the maximum value of the tag.

Table 8-266 WriteWString() - .NET (C#)

Syntax	`void WriteWString(`
	`wstring in_Tag,`
	`wstring in_Value`
	`);`	

Parameters	• `wstring in_Tag:` The name of the PLC tag that is to be written. • `wstring in_Value:` The value to be written to the PLC tag.	
Return values	None	
Exceptions	Runtime error code	Description
	`ERuntimeErrorCode.InterfaceRemoved`	The instance is not registered in Runtime Manager.
	`ERuntimeErrorCode.Timeout`	The function does not return on time.
	`ERuntimeErrorCode.InstanceNotRunning`	The process of the virtual controller is not running.
	`ERuntimeErrorCode.IndexOutOfRange`	The offset lies outside the area range. No value could be written.
	`ERuntimeErrorCode.DoesNotExist`	The entry does not exist in the stored tag list.
	`ERuntimeErrorCode.NotSupported`	Access to entire structures or arrays is not supported.
	`ERuntimeErrorCode.TypeMismatch`	The expected type does not match the stored type. See Compatible primitive data types (Page 325).
	`ERuntimeErrorCode.NotUpToDate`	The stored tag list must be updated.
	`ERuntimeErrorCode.BufferOverflow`	The characters to be written are greater than the maximum value of the tag.

8.6.6 Settings for the virtual time

GetSystemTime()

Returns the virtual system time of the virtual controller. Returns an empty structure when the function fails.

Table 8-267 GetSystemTime() - Native C++

Syntax	`SYSTEMTIME GetSystemTime();`
Parameters	None
Return values	`SYSTEMTIME:` System time of the virtual controller.

SetSystemTime()

Sets the virtual system time of the virtual controller. A system time between "Jan 1 1970 00:00:00:000" and "Dec 31 2200 23:59:59:999" is valid.

Table 8-268 SetSystemTime() - Native C++

Syntax	`ERuntimeErrorCode SetSystemTime(SYSTEMTIME in_SystemTime);`

Parameters	• `SYSTEMTIME in_SystemTime:` System time that is to be set for the virtual controller.	
Return values	Runtime error code	Condition
	`SREC_OK`	The function is successful.
	`SREC_INTERFACE_REMOVED`	The instance is not registered in Runtime Manager.
	`SREC_TIMEOUT`	The function does not return on time.
	`SREC_WRONG_ARGUMENT`	The value is outside the limits.

SystemTime { get; set; }

Sets or returns the virtual system time of the virtual controller. A system time between "Jan 1 1970 00:00:00:000" and "Dec 31 2200 23:59:59:999" is valid.

Table 8-269 SystemTime { get; set; } - .NET (C#)

Syntax	`DateTime SystemTime { get; set; }`	
Parameters	None	
Return values	`Siemens.Simatic.Simulation.Runtime.SimulationRuntimeException`	
	Runtime error code	Condition
	`ERuntimeErrorCode.InterfaceRemoved`	The instance is not registered in Runtime Manager.
	`ERuntimeErrorCode.Timeout`	The function does not return on time.
	`ERuntimeErrorCode.WrongArgument`	The value is outside the limits.

GetScaleFactor()

Returns the scaling factor with which the virtual time advances.

Table 8-270 GetScaleFactor() - Native C++

Syntax	`double GetScaleFactor();`
Parameters	None
Return values	`double:` Scaling factor of the virtual time.

SetScaleFactor()

Sets the scaling factor with which the virtual time advances.

We recommend that you start with a small scaling factor and gradually work your way up to a scaling factor where the virtual controller remains in RUN.

A value between 0.01 and 100 is valid. The default setting is 1.

- If the value is less than 1, the virtual time of the virtual controller runs X-times slower than the real time.
- If the value is greater than 1, the virtual time of the virtual controller runs X-times faster than the real time.

A change in the value during runtime only takes effect at the cycle control point.

Table 8-271 SetScaleFactor() - Native C++

Syntax	`ERuntimeErrorCode SetScaleFactor (double in_Value);`	
Parameters	• `double in_Value:` Scaling factor of the virtual time.	
Return values	Runtime error code	Condition
	`SREC_OK`	The function is successful.
	`SREC_INTERFACE_REMOVED`	The instance is not registered in Runtime Manager.
	`SREC_TIMEOUT`	The function does not return on time.
	`SREC_WRONG_ARGUMENT`	The value is outside the limits.

ScaleFactor { get; set; }

Sets or returns the scaling factor with which the virtual time advances.

Start with a small scaling factor and incrementally approach a scaling factor at which the virtual controller remains in RUN.

A value between 0.01 and 100 is valid. The default setting is 1.

- If the value is less than 1, the virtual time of the virtual controller runs X-times slower than the real time.
- If the value is greater than 1, the virtual time of the virtual controller runs X-times faster than the real time.

A change in the value during runtime only takes effect at the cycle control point.

Table 8-272 ScaleFactor { get; set; } - .NET (C#)

Syntax	`double ScaleFactor { get; set; }`	
Parameters	None	
Return values	`double:` Scaling factor of the virtual time.	
Exceptions	`Siemens.Simatic.Simulation.Runtime.SimulationRuntimeException`	
	Runtime error code	Condition
	`ERuntimeErrorCode.InterfaceRemoved`	The instance is not registered in Runtime Manager.
	`ERuntimeErrorCode.Timeout`	The function does not return on time.
	`ERuntimeErrorCode.WrongArgument`	The value is outside the limits.

8.6.7 Cycle control

GetOperatingMode()

Returns the operating mode (Page 320) of the virtual controller.

Table 8-273 GetOperatingMode() - Native C++

Syntax	`EOperatingMode GetOperatingMode();`
Parameters	None

Return values	`EOperatingMode`: Operating mode of the virtual controller

SetOperatingMode()

Sets the operating mode of the virtual controller.
A change in the value during runtime only takes effect at the synchronization point.

Table 8-274 SetOperatingMode() - Native C++

Syntax	`void SetOperatingMode(EOperatingMode in_OperatingMode);`
Parameters	• `EOperatingMode in_OperatingMode`: Operating mode of the virtual controller

OperatingMode { get; set; }

Returns or sets the operating mode of the virtual controller.
A change in the value during runtime only takes effect at the synchronization point.

Table 8-275 OperatingMode { get; set; } - .NET (C#)

Syntax	`EOperatingMode OperatingMode { get; set; }`	
Parameters	None	
Return values	`EOperatingMode`: Operating mode of the virtual controller	
Exceptions	`Siemens.Simatic.Simulation.Runtime.SimulationRuntimeException`	
	Runtime error code	Description
	`ERuntimeErrorCode.InterfaceRemoved`	The instance is not registered in Runtime Manager.
	`ERuntimeErrorCode.Timeout`	The function does not return on time.

SetSendSyncEventInDefaultModeEnabled()

Sets the `SendSyncEventInDefault` mode. In this mode the `OnSyncPointReached` event is triggered after each cycle end in the Default operating mode. See OnSyncPointReached (Page 255).

Table 8-276 SetSendSyncEventInDefaultModeEnabled() - Native C++

Syntax	`ERuntimeErrorCode SetSendSyncEventInDefaultModeEnabled(bool in_Enable);`	
Parameters	• `bool in_Enable`: If `true`, the `OnSyncPointReached` event is triggered after each cycle in the Default operating mode.	
Return values	Runtime error code	Description
	`SREC_OK`	The function is successful.
	`SREC_INTERFACE_REMOVED`	The instance is not registered in Runtime Manager.
	`SREC_TIMEOUT`	The function does not return on time.

IsSendSyncEventInDefaultModeEnabled()

Returns the `SendSyncEventInDefaultMode` mode. When the function fails, the return value is `false`.

Table 8-277 IsSendSyncEventInDefaultModeEnabled() - Native C++

Syntax	`bool IsSendSyncEventInDefaultModeEnabled();`
Parameters	None
Return values	• `false`: The event is not triggered (unless the Sync-Freeze mode is active). • `true`: The event is triggered after every cycle.

IsSendSyncEventInDefaultModeEnabled { get; set; }

Returns or sets the `SendSyncEventInDefaultMode` mode. In this mode the `OnSyncPointReached` event is triggered after each cycle end for every operating mode. If the event is also to be received in the Default operating mode, set the return value to `true`. See OnSyncPointReached (Page 255).

Table 8-278 IsSendSyncEventInDefaultModeEnabled { get; set; } - .NET (C#)

Syntax	`bool IsSendSyncEventInDefaultModeEnabled { get; set;}`	
Parameters	None	
Return values	• `false`: The event is not triggered (unless the Sync-Freeze mode is active). • `true`: The event is triggered after every cycle.	
Exceptions	`Siemens.Simatic.Simulation.Runtime.SimulationRuntimeException`	
	Runtime error code	Description
	`ERuntimeErrorCode.InterfaceRemoved`	The instance is not registered in Runtime Manager.
	`ERuntimeErrorCode.Timeout`	The function does not return on time.

GetOverwrittenMinimalCycleTime_ns()

Returns the overwritten minimum cycle time (in nanoseconds) that is used in the `SingleStep_CT` and `SingleStep_CPT` operating modes.

Table 8-279 GetOverwrittenMinimalCycleTime_ns() - Native C++

Syntax	`INT64 GetOverwrittenMinimalCycleTime_ns();`
Parameters	None
Return values	`INT64`: The overwritten minimum cycle time in nanoseconds.

SetOverwrittenMinimalCycleTime_ns()

Sets the overwritten minimum cycle time (in nanoseconds) that is used in the `SingleStep_CT` and `SingleStep_CPT` operating modes.
A value between 0 and 6000000000 is valid. The default setting is 100 ms.

A change in the value during runtime only takes effect at the cycle control point.

Table 8-280 SetOverwrittenMinimalCycleTime_ns() - Native C++

Syntax	`ERuntimeErrorCode SetOverwrittenMinimalCycleTime_ns(INT64 in_CycleTime_ns);`	
Parameters	• `INT64 in_CycleTime_ns:` The overwritten minimum cycle time in nanoseconds.	
Return values	Runtime error code	Description
	`SREC_OK`	The function is successful.
	`SREC_INTERFACE_REMOVED`	The instance is not registered in Runtime Manager.
	`SREC_TIMEOUT`	The function does not return on time.
	`SREC_WRONG_ARGUMENT`	The value is outside the limits.

OverwrittenMinimalCycleTime_ns { get; set; }

Returns or sets the overwritten minimum cycle time in nanoseconds that is used in the `SingleStep_CT` and `SingleStep_CPT` operating modes.
A value between 0 and 6000000000 is valid. The default setting is 100 ms.
A change in the value during runtime only takes effect at the cycle control point.

Table 8-281 OverwrittenMinimalCycleTime_ns { get; set; } - .NET (C#)

Syntax	`Int64 OverwrittenMinimalCycleTime_ns { get; set; }`	
Parameters	None	
Return values	`Int64:` The overwritten minimum cycle time in nanoseconds.	
Exceptions	`Siemens.Simatic.Simulation.Runtime.SimulationRuntimeException`	
	Runtime error code	Description
	`ERuntimeErrorCode.InterfaceRemoved`	The instance is not registered in Runtime Manager.
	`ERuntimeErrorCode.Timeout`	The function does not return on time.
	`ERuntimeErrorCode.WrongArgument`	The value is outside the limits.

RunToNextSyncPoint()

If the virtual controller is running in a SingleStep operating mode, it is stopped at the synchronization point (Freeze state). The `RunToNextSyncPoint()` function cancels the freeze state. The virtual controller continues to run until the next synchronization point.

Table 8-282 RunToNextSyncPoint() - Native C++

Syntax	`ERuntimeErrorCode RunToNextSyncPoint();` `ERuntimeErrorCode RunToNextSyncPoint(UINT32 in_IoSystemId, UINT64 in_BusTimeStamp_ns);`
Parameters	The call with parameters is only valid for the `SingleStep_Bus` operating mode. • `UINT32 in_IoSystemId:` Number of the I/O system (PROFIBUS 1..32, PROFINET 100..115) that is to be used for the cycle-controlled synchronization of the virtual controller. • `UINT64 in_BusTimeStamp_ns:` Time stamp in nanoseconds of the respective I/O system at the start of each cycle.

Return values	Runtime error code	Description
	SREC_OK	The function is successful.
	SREC_INTERFACE_REMOVED	The instance is not registered in Runtime Manager.
	SREC_TIMEOUT	The function does not return on time.
	SREC_INVALID_OPERATING_STATE	The instance is in an invalid operating state for processing the call (BOOTING, SHUTTING_DOWN, OFF)
	SREC_INSTANCE_NOT_RUNNING	The process of the virtual controller is not running.
	SREC_WRONG_ARGUMENT	For the SingleStep_Bus operating mode: The ID of the I/O system is invalid. For all other operating modes: The function call with parameters is invalid.

Table 8-283 RunToNextSyncPoint() - .NET (C#)

Syntax	`void RunToNextSyncPoint();` `void RunToNextSyncPoint(UINT32 in_IoSystemId, UINT64 in_BusTimeStamp_ns);`	
Parameters	The call with parameters is only valid for the SingleStep_Bus operating mode. • UINT32 in_IoSystemId: Number of the I/O system (PROFIBUS 1..32, PROFINET 100..115) that is to be used for the cycle-controlled synchronization of the virtual controller. • UINT64 in_BusTimeStamp_ns: Time stamp in nanoseconds of the respective I/O system at the start of each cycle.	
Return values	None	
Exceptions	Siemens.Simatic.Simulation.Runtime.SimulationRuntimeException	
	Runtime error code	Description
	ERuntimeErrorCode.InterfaceRemoved	The instance is not registered in Runtime Manager.
	ERuntimeErrorCode.Timeout	The function does not return on time.
	ERuntimeErrorCode.InvalidOperatingState	The instance is in an invalid operating state for processing the call (BOOTING, SHUTTING_DOWN, OFF)
	ERuntimeErrorCode.InstanceNotRunning	The process of the virtual controller is not running.
	ERuntimeErrorCode.WrongArgument	For the SingleStep_Bus operating mode: The ID of the I/O system is invalid. For all other operating modes: The function call with parameters is invalid.

StartProcessing()

If the virtual controller is running in a TimespanSynchronized operating mode, it is stopped at the synchronization point (Freeze state). The StartProcessing() function cancels the freeze state. The virtual controller will now run for at least the requested time before it changes to Freeze state at the next synchronization point.

Table 8-284 StartProcessing() - Native C++

Syntax	`ERuntimeErrorCode StartProcessing(INT64 in_MinimalTimeToRun_ns);`
Parameters	• INT64 in_MinimalTimeToRun_ns: The minimum virtual time (in nanoseconds) that the virtual controller runs before it changes to Freeze state.

Return values	Runtime error code	Description
	`SREC_OK`	The function is successful.
	`SREC_INTERFACE_REMOVED`	The instance is not registered in Runtime Manager.
	`SREC_TIMEOUT`	The function does not return on time.
	`SREC_INSTANCE_NOT_RUNNING`	The process of the virtual controller is not running.
	`SREC_WRONG_ARGUMENT`	The value is less than 0.

Table 8-285 StartProcessing() - .NET (C#)

Syntax	`void StartProcessing(Int64 in_MinimalTimeToRun_ns);`	
Parameters	• `Int64 in_MinimalTimeToRun_ns:` The minimum virtual time (in nanoseconds) that the virtual controller runs before it changes to Freeze state.	
Return values	None	
Exceptions	`Siemens.Simatic.Simulation.Runtime.SimulationRuntimeException`	
	Runtime error code	Description
	`ERuntimeErrorCode.InterfaceRemoved`	The instance is not registered in Runtime Manager.
	`ERuntimeErrorCode.Timeout`	The function does not return on time.
	`ERuntimeErrorCode.InstanceNotRunning`	The process of the virtual controller is not running.
	`ERuntimeErrorCode.WrongArgument`	The value is less than 0.

More information

For more information, see sections Virtual time response (Page 87), Stop simulation (Page 89).

SetCycleTimeMonitoringMode()

With this function the source of the timer for the maximum cycle time monitoring can be changed.

Table 8-286 SetCycleTimeMonitoringMode() - Native C++

Syntax	`ERuntimeErrorCode SetCycleTimeMonitoringMode(ECycleTimeMonitoringMode in_CycleTimeMonitoringMode)` `ERuntimeErrorCode SetCycleTimeMonitoringMode(ECycleTimeMonitoringMode in_CycleTimeMonitoringMode, INT64 in_MaxCycleTime_ns)`
Parameters	• `ECycleTimeMonitoringMode in_CycleTimeMonitoringMode:` Select one of the following options for the maximum cycle time monitoring: – `SRCTMM_DOWNLOADED:` The maximum cycle time from the project that was downloaded from STEP 7 is used as maximum cycle time monitoring. – `SRCTMM_IGNORED` **(default)**: A timer value of one minute is used as maximum cycle time monitoring to prevent a potential error in case of an overflow of cyclic events. See Monitoring overflow (Page 343). – `SRCTMM_SPECIFIED:` A value that is specified with the `in_MaxCycleTime_ns` parameter is used as maximum cycle time monitoring. Default: 150 ms.

	• `INT64 in_MaxCycleTime_ns:` The user-specific value for the maximum cycle time monitoring. A value between 1000000 and 60000000000 ns (1 millisecond to 1 minute) is valid. If no value is specified in the API, the default value of 150 ms applies.	
Return values	Runtime error code	Description
	`SREC_OK`	The function is successful.
	`SREC_INTERFACE_REMOVED`	The instance is not registered in Runtime Manager.
	`SREC_TIMEOUT`	The function does not return on time.
	`SREC_WRONG_ARGUMENT`	The cycle time monitoring mode is invalid.
	`SREC_INDEX_OUT_OF_RANGE`	The user-specific value for the maximum cycle time monitoring is outside the limits.

Table 8-287 SetCycleTimeMonitoringMode() - .NET (C#)

Syntax	`void SetCycleTimeMonitoringMode(ECycleTimeMonitoringMode in_CycleTimeMonitoringMode)` `void SetCycleTimeMonitoringMode(ECycleTimeMonitoringMode in_CycleTimeMonitoringMode, Int64 in_MaxCycleTime_ns)`	
Parameters	• `ECycleTimeMonitoringMode in_CycleTimeMonitoringMode:` Select one of the following options for the maximum cycle time monitoring: – `ECycleTimeMonitoringMode.Downloaded:` The maximum cycle time from the project that was downloaded from STEP 7 is used as maximum cycle time monitoring. – `ECycleTimeMonitoringMode.Ignored` **(default)**: A timer value of one minute is used as maximum cycle time monitoring to prevent a potential error in case of an overflow of cyclic events. See Monitoring overflow (Page 343). – `ECycleTimeMonitoringMode.Specified:` A value that is specified with the `in_MaxCycleTime_ns` parameter is used as maximum cycle time monitoring. Default: 150 ms. • `Int64 in_MaxCycleTime_ns:` The user-specific value for the maximum cycle time monitoring. A value between 1000000 and 60000000000 ns (1 millisecond to 1 minute) is valid. If no value is specified in the API, the default value of 150 ms applies.	
Return values	None	
Exceptions	`Siemens.Simatic.Simulation.Runtime.SimulationRuntimeException`	
	Runtime error code	Description
	`ERuntimeErrorCode.InterfaceRemoved`	The instance is not registered in Runtime Manager.
	`ERuntimeErrorCode.Timeout`	The function does not return on time.
	`ERuntimeErrorCode.WrongArgument`	The cycle time monitoring mode is invalid.
	`ERuntimeErrorCode.IndexOutOfRange`	The user-specific value for the maximum cycle time monitoring is outside the limits.

GetCycleTimeMonitoringMode()

This function returns information on the source of the timer for the maximum cycle time monitoring.

Table 8-288 GetCycleTimeMonitoringMode() - Native C++

Syntax	`ERuntimeErrorCode GetCycleTimeMonitoringMode(ECycleTimeMonitoringMode* out_CycleTimeMonitoringMode, INT64* out_MaxCycleTime_ns)`	
Parameters	• `ECycleTimeMonitoringMode* out_CycleTimeMonitoringMode:` The configured mode for cycle time monitoring. The default setting is `SRCTM_IGNORED`. • `INT64 in_MaxCycleTime_ns:` The user-specific value for the maximum cycle time monitoring. If no value is specified in the API, the default value of 150 ms is returned.	
Return values	Runtime error code	Description
	`SREC_OK`	The function is successful.
	`SREC_INTERFACE_REMOVED`	The instance is not registered in Runtime Manager.
	`SREC_TIMEOUT`	The function does not return on time.

Table 8-289 GetCycleTimeMonitoringMode() - .NET (C#)

Syntax	`void GetCycleTimeMonitoringMode(out ECycleTimeMonitoringMode out_CycleTimeMonitoringMode, out Int64 out_MaxCycleTime_ns)`	
Parameters	• `ECycleTimeMonitoringMode out_CycleTimeMonitoringMode:` The configured mode for cycle time monitoring. The default setting is `ECycleTimeMonitoringMode.Ignored`. • `Int64 in_MaxCycleTime_ns:` The user-specific value for the maximum cycle time monitoring. If no value is specified in the API, the default value of 150 ms is returned.	
Return values	None	
Exceptions	`Siemens.Simatic.Simulation.Runtime.SimulationRuntimeException`	
	Runtime error code	Description
	`ERuntimeErrorCode.InterfaceRemoved`	The instance is not registered in Runtime Manager.
	`ERuntimeErrorCode.Timeout`	The function does not return on time.

8.6.8 Acyclic services

8.6.8.1 Overview

The acyclic services of PLCSIM Advanced include:

- Read and write processes of parameter and status data from the user program of the PLC to the I/O modules
- Interrupt and event information which the I/O modules send to the CPU.

Read and write operations

Events triggered by the STEP 7 user program that have logged on for the notification:

Table 8-290 Events: Read and write operations

SFB	Name	API method (alarm)	API event for triggering the SFB
52	RDREC	ReadRecordDone (Page 235)	OnDataRecordRead (Page 260)
53	WRREC	WriteRecordDone (Page 235)	OnDataRecordWrite (Page 260)

Flowchart

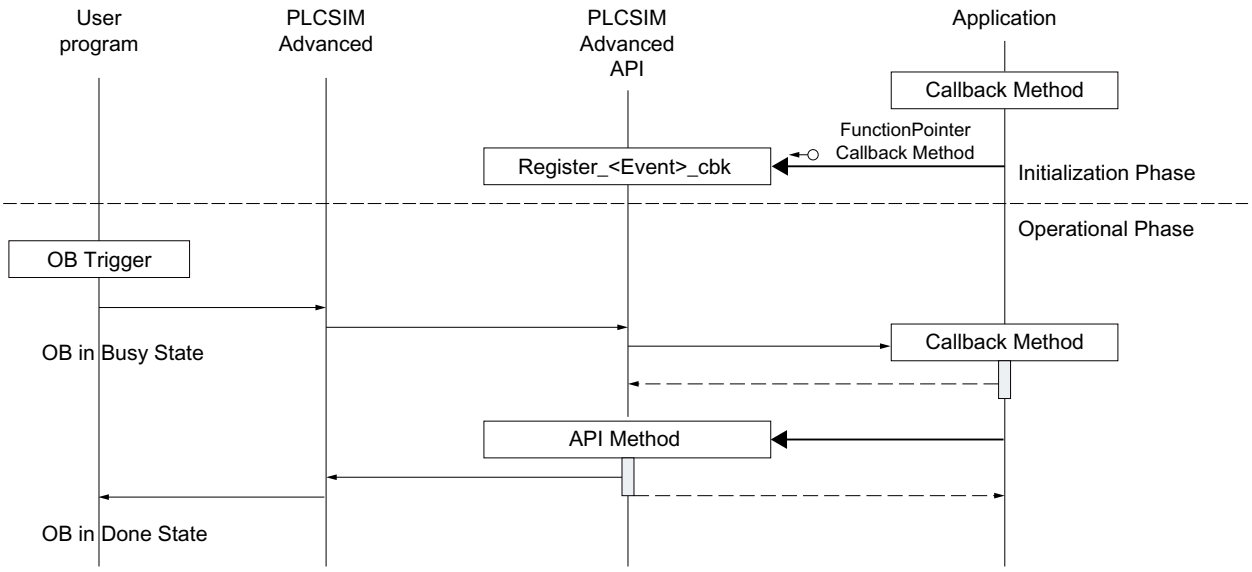

Figure 8-4 Read and write operations flowchart

API methods and associated events

Events which are triggered by the I/O modules and associated API methods:

Table 8-291 API methods and associated events

OB	Name	API methods for triggering the OB (query)	API event after OB execution (alarm)
82	Diagnostic error Interrupt	AlarmNotification (Page 237)	OnAlarmNotificationDone (Page 261)
4x	Hardware Interrupt	ProcessEvent (Page 239)	OnProcessEventDone (Page 262)
83	Pull or Plug of module	PullOrPlugEvent (Page 240)	OnPullOrPlugEventDone (Page 263)
55	Status	StatusEvent (Page 241)	OnStatusEventDone (Page 264)
57	Profile	ProfileEvent (Page 242)	OnProfileEventDone (Page 264)
56	Update	UpdateEvent (Page 243)	OnUpdateEventDone (Page 265)
86	Rack or station failure	RackOrStationFaultEvent (Page 245)	OnRackOrStationFaultEventDone (Page 266)

Flowchart

Flowchart for the simulation of events which are triggered by the I/O modules.

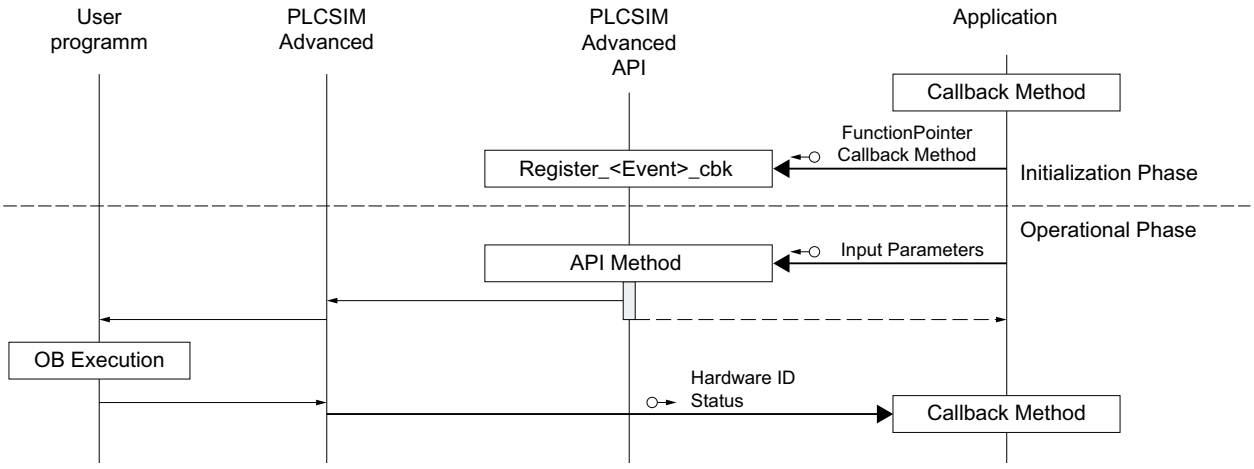

Figure 8-5 Flowchart for the simulation of events

8.6.8.2 ReadRecordDone/WriteRecordDone

ReadRecordDone()

With this API method, the simulation of an I/O module signals to the CPU that the asynchronous reading of a data record has been completed. The simulation hereby makes the read information available.

Table 8-292 ReadRecordDone() - Native C++

Syntax	`ERuntimeErrorCode ReadRecordDone(SDataRecordInfo in_RecordInfo, BYTE* in_Data, UINT32 in_Status);`	
Parameters	• `SDataRecordInfo in_RecordInfo:` Structure which contains the data record information. See SDataRecordInfo (Page 311). • `BYTE* in_Data:` Byte array of the read data record with the length defined by `DataSize` in the structure `SDataRecordInfo`. • `UINT32 in_Status:` Status of the job execution	
Return values	Runtime error code	Description
	`SREC_OK`	The function is successful.
	`SREC_INTERFACE_REMOVED`	The instance is not registered in Runtime Manager.
	`SREC_DOES_NOT_EXIST`	No hardware identifier of the module.
	`SREC_INDEX_OUT_OF_RANGE`	The byte array of the read data record exceeds the length `DDATARECORD_MAX_SIZE` = 64000.
	`SREC_TIMEOUT`	The function does not return on time.

Table 8-293 ReadRecordDone() - .NET (C#)

Syntax	`void ReadRecordDone(SDataRecordInfo in_RecordInfo, BYTE[] in_Data, UInt32 in_Status);`	
Parameters	• `SDataRecordInfo in_RecordInfo:` Structure which contains the data record information. See SDataRecordInfo (Page 311). • `BYTE[] in_Data:` Byte array of the read data record with the length defined by `DataSize` in the structure `SDataRecordInfo`. • `UInt32 in_Status:` Status of the job execution	
Return values	None	
Exceptions	`Siemens.Simatic.Simulation.Runtime.SimulationRuntimeException`	
	Runtime error code	Description
	`ERuntimeErrorCode.InterfaceRemoved`	The instance is not registered in Runtime Manager.
	`ERuntimeErrorCode.DoesNotExist`	No hardware identifier of the module.
	`ERuntimeErrorCode.IndexOutOfRange`	The byte array of the read data record exceeds the length `DataRecordMaxSize` = 64000.
	`ERuntimeErrorCode.Timeout`	The function does not return on time.

WriteRecordDone()

With this API method, the simulation of an I/O module signals to the CPU that the asynchronous writing of a data record has been completed.

Table 8-294 WriteRecordDone() - Native C++

Syntax	`ERuntimeErrorCode WriteRecordDone(SDataRecordInfo in_RecordInfo, UINT32 in_Status);`	
Parameters	• `SDataRecordInfo in_RecordInfo:` Structure which contains the data record information. See SDataRecordInfo (Page 311). • `UINT32 in_Status:` Status of the job execution	
Return values	Runtime error code	Description
	`SREC_OK`	The function is successful.
	`SREC_INTERFACE_REMOVED`	The instance is not registered in Runtime Manager.
	`SREC_DOES_NOT_EXIST`	No hardware identifier of the module.
	`SREC_TIMEOUT`	The function does not return on time.

Table 8-295 WriteRecordDone() - .NET (C#)

Syntax	`void WriteRecordDone(SDataRecordInfo in_RecordInfo, UInt32 in_Status);`
Parameters	• `SDataRecordInfo in_RecordInfo:` Structure which contains the data record information. See SDataRecordInfo (Page 311). • `UInt32 in_Status:` Status of the job execution
Return values	None

Exceptions	`Siemens.Simatic.Simulation.Runtime.SimulationRuntimeException`	
	Runtime error code	Description
	`ERuntimeErrorCode.InterfaceRemoved`	The instance is not registered in Runtime Manager.
	`ERuntimeErrorCode.DoesNotExist`	No hardware identifier of the module.
	`ERuntimeErrorCode.Timeout`	The function does not return on time.

NOTE
Return values of a written data record
The return values of the status of a written data record in S7-PLCSIM Advanced can differ from the return values of a real hardware CPU.

8.6.8.3 AlarmNotification

AlarmNotification()

This function triggers diagnostic alarms according to the PROFINET standard.
Each call of this function calls the diagnostic interrupt OB (OB 82) once, regardless of the number and the severity level of the transferred diagnostic entries.

Table 8-296 AlarmNotification() - Native C++

Syntax	`ERuntimeErrorCode AlarmNotification(UINT16 in_HardwareIdentifier, UINT16 in_ModuleState, UINT16 in_NumberOfDiagnosisEvents, SDiagExtChannelDescription* in_ArrayOfDiagnosisEvents, UINT16* out_SequenceNumber);`
Parameters	• `UINT16 in_HardwareIdentifier:` The hardware identifier of the module or submodule which sends the diagnostics entry. The identifier must belong to a hardware component in the currently loaded project. • `UINT16 in_ModuleState:` Module status. The following statuses are valid: DMODULE_STATE_OK = 0, DMODULE_STATE_ERROR = 1, DMODULE_STATE_MAINT_DEMANDED = 2, DMODULE_STATE_MAINT_REQUIRED = 4 The `in_ModuleState` parameter is derived from the sum (ORed) of the severity level in the `SDiagExtChannelDescription` field. If a diagnostic interrupt should be generated for both "Maintenance demanded" as well as "Maintenance required", select "6" as the module status. • `UINT16 in_NumberOfDiagnosisEvents:` Multiple diagnostic entries can be sent to the CPU with a single API call. Valid range: 0 to 16. 0 means that no diagnostics entry should appear for the submodule or the channel. • `SDiagExtChannelDescription* in_ArrayOfDiagnosisEvents:` Pointer to a field with diagnostic entries. The field must match the number of diagnostic entries. It can also be a null pointer. For definitions, see SDiagExtChannelDescription (Page 312). • `UINT16* out_SequenceNumber:` PLCSIM Advanced assigns a unique consecutive number to each interrupt event. According to PROFINET standard the sequence number is 10 bits wide (1 to $7FF_H$). When the highest number is reached the numbering starts again at 1.

Return values	Runtime error code	Description
	SREC_OK	The function is successful.
	SREC_INTERFACE_REMOVED	The instance is not registered in Runtime Manager.
	SREC_WRONG_MODULE_STATE	The module is currently unplugged.
	SREC_DOES_NOT_EXIST	No hardware identifier of the module.
	SREC_WRONG_MODULE_TYPE	The channel number does not exist for the module.
	SREC_WRONG_ARGUMENT	The value for the module status is invalid.
	SREC_TIMEOUT	The function does not return on time.

Table 8-297 AlarmNotification() - .NET (C#)

Syntax	`void AlarmNotification(ushort in_HardwareIdentifier, ushort in_ModuleState, ushort in_NumberOfDiagnosisEvents, SDiagExtChannelDescription [] in_ArrayOfDiagnosisEvents, Out ushort out_SequenceNumber);`	
Parameters	• `ushort in_HardwareIdentifier:` The hardware identifier of the module or submodule which sends the diagnostics entry. The identifier must belong to a hardware component in the currently loaded project. • `ushort in_ModuleState:` Module status. The following statuses are valid: ModuleState.Ok = 0, ModuleState.Error = 1, ModuleState.MaintenanceDemanded = 2, ModuleState.MaintenanceRequired = 4 The `in_ModuleState` parameter is derived from the sum (ORed) of the severity level in the `SDiagExtChannelDescription` field. If a diagnostic interrupt should be generated for both "Maintenance demanded" as well as "Maintenance required", select "6" as the module status. • `ushort in_NumberOfDiagnosisEvents` Multiple diagnostic entries can be sent to the CPU with a single API call. Valid range: 0 to 16. 0 means that no diagnostics entry should appear for the submodule or the channel. • `SDiagExtChannelDescription [] in_ArrayOfDiagnosisEvents:` Pointer to a field with diagnostic entries. The field must match the number of diagnostic entries. It can also be a null pointer. For definitions, see SDiagExtChannelDescription (Page 312). • `Out ushort out_SequenceNumber:` PLCSIM Advanced assigns a unique consecutive number to each alarm event. According to PROFINET standard the sequence number is 10 bits wide (1 to $7FF_H$). When the highest number is reached the numbering starts again at 1.	
Exceptions	`Siemens.Simatic.Simulation.Runtime.SimulationRuntimeException`	
	Runtime error code	Description
	`ERuntimeErrorCode.InterfaceRemoved`	The instance is not registered in Runtime Manager.
	`ERuntimeErrorCode.WrongModuleState`	The module is currently unplugged.
	`ERuntimeErrorCode.DoesNotExist`	No hardware identifier of the module.
	`ERuntimeErrorCode.WrongArgument`	The value for the module status is invalid.
	`ERuntimeErrorCode.WrongModuleType`	The channel number does not exist for the module.
	`ERuntimeErrorCode.Timeout`	The function does not return on time.

Example	`ushort seqNumber;`
	`  var In_ArrayOfDiagnosisEvent = new SDiagExtChannelDescription[] {`
	`  new SDiagExtChannelDescription() {ChannelNumber = 0x8000, ErrorType = 0x0001, ExtErrorType = 0, Direction = EDiagProperty.Appear,Severity =EDiagSeverity.MaintDemanded},`
	
	`  new SDiagExtChannelDescription() {ChannelNumber = 0x8000, ErrorType = 0x0002, ExtErrorType = 0, Direction = EDiagProperty.Appear,Severity =EDiagSeverity.Failure},`
	
	`  new SDiagExtChannelDescription() {ChannelNumber = 0x8000, ErrorType = 0x0003, ExtErrorType = 0, Direction = EDiagProperty.Appear,Severity =EDiagSeverity.MaintRequired},`
	
	`Instance.AlarmNotification(269, 7, 3, In_ArrayOfDiagnosisEvent, out seqNumber);`
	`//ModuleState parameter is sum of the severities in the SDiagExtChannelDescription array above: 4+2+1`

8.6.8.4 ProcessEvent

ProcessEvent()

Process events from central and distributed input modules can be simulated with this function.

Table 8-298 ProcessEvent() - Native C++

Syntax	`ERuntimeErrorCode ProcessEvent(UINT16 in_HardwareIdentifier, UINT16 in_Channel, EProcessEventType in_ProcessEventType, UINT16* out_SequenceNumber);`	
Parameters	• `UINT16 in_HardwareIdentifier:` The hardware identifier of the module or submodule which sends the process event. The identifier must belong to a hardware component in the currently loaded project. • `UINT16 in_Channel:` The channel of the I/O module which sends the process event. • `EProcessEventType in_ProcessEventType:` A value from the list of predefined types of events for S7 modules, see EProcessEventType (Page 331). • `UINT16* out_SequenceNumber:` PLCSIM Advanced assigns a unique consecutive number to each interrupt event. According to PROFINET standard the sequence number is 10 bits wide (1 to $7FF_H$). When the highest number is reached the numbering starts again at 1.	
Return values	Runtime error code	Description
	`SREC_OK`	The function is successful.
	`SREC_INTERFACE_REMOVED`	The instance is not registered in Runtime Manager.
	`SREC_WRONG_MODULE_STATE`	The module is currently unplugged.
	`SREC_DOES_NOT_EXIST`	No hardware identifier of the module.
	`SREC_NOT_SUPPORTED_BY_MODULE`	The module is not supported by this user action.
	`SREC_TIMEOUT`	The function does not return on time.

Table 8-299 ProcessEvent() - .NET (C#)

Syntax	`void ProcessEvent(ushort in_HardwareIdentifier, ushort in_Channel, EProcessEventType in_ProcessEventType, Out ushort out_SequenceNumber);`	
Parameters	• `ushort in_HardwareIdentifier:` The hardware identifier of the module or submodule which generates the process event. The identifier must belong to a hardware component in the currently loaded project. • `ushort in_Channel:` The channel of the I/O module which generates the process event. • `EProcessEventType in_ProcessEventType:` A value from the list of predefined types of events for S7 modules, see EProcessEventType (Page 331). • `Out ushort out_SequenceNumber:` PLCSIM Advanced assigns a unique consecutive number to each interrupt event. According to PROFINET standard the sequence number is 10 bits wide (1 to $7FF_H$). When the highest number is reached the numbering starts again at 1.	
Return values	None	
Exceptions	`Siemens.Simatic.Simulation.Runtime.SimulationRuntimeException`	
	Runtime error code	Description
	`ERuntimeErrorCode.InterfaceRemoved`	The instance is not registered in Runtime Manager.
	`ERuntimeErrorCode.WrongModuleState`	The module is currently unplugged.
	`ERuntimeErrorCode.DoesNotExist`	No hardware identifier of the module.
	`ERuntimeErrorCode.NotSupportedByModule`	The module is not supported by this user action.
	`ERuntimeErrorCode.Timeout`	The function does not return on time.

8.6.8.5 PullOrPlugEvent

PullOrPlugEvent()

This function triggers pull/plug events. The interrupt OB (OB 83) "Pull or plug of modules" is executed for these events.

NOTE

Removing and inserting head modules of distributed I/O systems

In contrast to real systems, S7-PLCSIM Advanced allows the removal and insertion of head modules in distributed I/O systems.

Table 8-300 PullOrPlugEvent() - Native C++

Syntax	`ERuntimeErrorCode PullOrPlugEvent(UINT16 in_HardwareIdentifier, EPullOrPlugEventType in_PullOrPlugEventType, UINT16* out_SequenceNumber);`
Parameters	• `UINT16 in_HardwareIdentifier:` The hardware identifier of the module or submodule which generates the pull/plug event. The identifier must belong to a hardware component in the currently loaded project. • `EPullOrPlugEventType in_PullOrPlugEventType:` A value from the list of predefined types of pull/plug events, see EPullOrPlugEventType (Page 331). • `UINT16* out_SequenceNumber:` PLCSIM Advanced assigns a unique consecutive number to each interrupt event. According to PROFINET standard the sequence number is 10 bits wide (1 to $7FF_H$). When the highest number is reached the numbering starts again at 1.

Return values	Runtime error code	Description
	SREC_OK	The function is successful.
	SREC_INTERFACE_REMOVED	The instance is not registered in Runtime Manager.
	SREC_WRONG_MODULE_STATE	The module is currently unplugged.
	SREC_WRONG_MODULE_TYPE	The wrong module type was selected, e.g. if an onboard I/O of a compact CPU is to be pulled.
	SREC_NOT_SUPPORTED_BY_MODULE	The module is not supported by this user action.
	SREC_DOES_NOT_EXIST	No hardware identifier of the module.
	SREC_TIMEOUT	The function does not return on time.

Table 8-301 PullOrPlugEvent() - .NET (C#)

Syntax	`void PullOrPlugEvent(ushort in_HardwareIdentifier, EPullOrPlugEventType in_PullOrPlugEventType, Out ushort out_SequenceNumber);`	
Parameters	• `ushort in_HardwareIdentifier:` The hardware identifier of the module or submodule which generates the pull/plug event. The identifier must belong to a hardware component in the currently loaded project. • `EPullOrPlugEventType in_PullOrPlugEventType:` A value from the list of predefined types of pull/plug events, see EPullOrPlugEventType (Page 331). • `Out ushort out_SequenceNumber` PLCSIM Advanced assigns a unique consecutive number to each interrupt event. According to PROFINET standard the sequence number is 10 bits wide (1 to $7FF_H$). When the highest number is reached the numbering starts again at 1.	
Return values	None	
Exceptions	`Siemens.Simatic.Simulation.Runtime.SimulationRuntimeException`	
	Runtime error code	Description
	`ERuntimeErrorCode.InterfaceRemoved`	The instance is not registered in Runtime Manager.
	`ERuntimeErrorCode.WrongModuleState`	The module is currently unplugged.
	`ERuntimeErrorCode.WrongModuleType`	The wrong module type was selected, e.g. if an onboard I/O of a compact CPU is to be pulled.
	`ERuntimeErrorCode.DoesNotExist`	No hardware identifier of the module.
	`ERuntimeErrorCode.NotSupportedByModule`	The module is not supported by this user action.
	`ERuntimeErrorCode.Timeout`	The function does not return on time.

8.6.8.6 StatusEvent

StatusEvent()

This function is used to trigger the status event OB (OB 55). Status events are only supported for modules in a distributed I/O system.

Table 8-302 StatusEvent() - Native C++

Syntax	`ERuntimeErrorCode StatusEvent(UINT16 in_HardwareIdentifier, UINT16 in_Specifier);`

Parameters	• `UINT16 in_HardwareIdentifier:` The hardware identifier of the module that generates the status event. The identifier must belong to a hardware component in the currently loaded project. • `UINT16 in_Specifier:` The parameter is transferred to the interrupt frame as interrupt specifier. It is available as input parameter of the OB 55 call.	
Return values	Runtime error code	Description
	`SREC_OK`	The function is successful.
	`SREC_INTERFACE_REMOVED`	The instance is not registered in Runtime Manager.
	`SREC_WRONG_MODULE_STATE`	The module is currently unplugged.
	`SREC_NOT_SUPPORTED_BY_MODULE`	The module is not supported by this user action.
	`SREC_DOES_NOT_EXIST`	No hardware identifier of the module.
	`SREC_TIMEOUT`	The function does not return on time.

Table 8-303 StatusEvent() - .NET (C#)

Syntax	`void StatusEvent(ushort in_HardwareIdentifier, ushort in_Specifier);`	
Parameters	• `ushort in_HardwareIdentifier:` The hardware identifier of the module that generates the status event. The identifier must belong to a hardware component in the currently loaded project. • `ushort in_Specifier:` The parameter is transferred to the interrupt frame as interrupt specifier. It is available as input parameter of the OB 55 call.	
Return values	None	
Exceptions	`Siemens.Simatic.Simulation.Runtime.SimulationRuntimeException`	
	Runtime error code	Description
	`ERuntimeErrorCode.InterfaceRemoved`	The instance is not registered in Runtime Manager.
	`ERuntimeErrorCode.WrongModuleState`	The module is currently unplugged.
	`ERuntimeErrorCode.DoesNotExist`	No hardware identifier of the module.
	`ERuntimeErrorCode.NotSupportedByModule`	The module is not supported by this user action.
	`ERuntimeErrorCode.Timeout`	The function does not return on time.

8.6.8.7 ProfileEvent

ProfileEvent()

This function is used to trigger the Profile event OB (OB 57). Profile events are only supported for modules in a distributed I/O system.

Table 8-304 ProfileEvent() - Native C++

Syntax	`ERuntimeErrorCode ProfileEvent(UINT16 in_HardwareIdentifier, UINT16 in_Specifier);`

Parameters	• `UINT16 in_HardwareIdentifier:` The hardware identifier of the module that generates the profile event. The identifier must belong to a hardware component in the currently loaded project. • `UINT16 in_Specifier:` The parameter is transferred to the interrupt frame as interrupt specifier. It is available as input parameter of the OB 57 call.	
Return values	Runtime error code	Description
	`SREC_OK`	The function is successful.
	`SREC_INTERFACE_REMOVED`	The instance is not registered in Runtime Manager.
	`SREC_WRONG_MODULE_STATE`	The module is currently unplugged.
	`SREC_NOT_SUPPORTED_BY_MODULE`	The module is not supported by this user action.
	`SREC_DOES_NOT_EXIST`	No hardware identifier of the module.
	`SREC_TIMEOUT`	The function does not return on time.

Table 8-305 ProfileEvent() - .NET (C#)

Syntax	`void ProfileEvent(ushort in_HardwareIdentifier, ushort in_Specifier);`	
Parameters	• `ushort in_HardwareIdentifier:` The hardware identifier of the module that generates the profile event. The identifier must belong to a hardware component in the currently loaded project. • `ushort in_Specifier:` The parameter is transferred to the interrupt frame as interrupt specifier. It is available as input parameter of the OB 57 call.	
Return values	None	
Exceptions	`Siemens.Simatic.Simulation.Runtime.SimulationRuntimeException`	
	Runtime error code	Description
	`ERuntimeErrorCode.InterfaceRemoved`	The instance is not registered in Runtime Manager.
	`ERuntimeErrorCode.WrongModuleState`	The module is currently unplugged.
	`ERuntimeErrorCode.DoesNotExist`	No hardware identifier of the module.
	`ERuntimeErrorCode.NotSupportedByModule`	The module is not supported by this user action.
	`ERuntimeErrorCode.Timeout`	The function does not return on time.

8.6.8.8 UpdateEvent

UpdateEvent()

This function is used to trigger the Update event OB (OB 56). Update events are only supported for modules in a distributed I/O system.

Table 8-306 UpdateEvent() - Native C++

Syntax	`ERuntimeErrorCode UpdateEvent(UINT16 in_HardwareIdentifier, UINT16 in_Specifier);`

Parameters	• `UINT16 in_HardwareIdentifier:` The hardware identifier of the module that triggers the update event. The identifier must belong to a hardware component in the currently loaded project. • `UINT16 in_Specifier:` The parameter is transferred to the interrupt frame as interrupt specifier. It is available as input parameter of the OB 56 call.	
Return values	Runtime error code	Description
	`SREC_OK`	The function is successful.
	`SREC_INTERFACE_REMOVED`	The instance is not registered in Runtime Manager.
	`SREC_WRONG_MODULE_STATE`	The module is currently unplugged.
	`SREC_NOT_SUPPORTED_BY_MODULE`	The module is not supported by this user action.
	`SREC_DOES_NOT_EXIST`	No hardware identifier of the module.
	`SREC_TIMEOUT`	The function does not return on time.

Table 8-307 UpdateEvent() - .NET (C#)

Syntax	`void UpdateEvent(ushort in_HardwareIdentifier, ushort in_Specifier);`	
Parameters	• `ushort in_HardwareIdentifier:` The hardware identifier of the module that triggers the update event. The identifier must belong to a hardware component in the currently loaded project. • `ushort in_Specifier:` The parameter is transferred to the interrupt frame as interrupt specifier. It is available as input parameter of the OB 56 call.	
Return values	None	
Exceptions	`Siemens.Simatic.Simulation.Runtime.SimulationRuntimeException`	
	Runtime error code	Description
	`ERuntimeErrorCode.InterfaceRemoved`	The instance is not registered in Runtime Manager.
	`ERuntimeErrorCode.WrongModuleState`	The module is currently unplugged.
	`ERuntimeErrorCode.DoesNotExist`	No hardware identifier of the module.
	`ERuntimeErrorCode.NotSupportedByModule`	The module is not supported by this user action.
	`ERuntimeErrorCode.Timeout`	The function does not return on time.

8.6.8.9 GetConfiguredProcessEvent

GetConfiguredProcessEvents()

With this API method, the process events configured in the TIA Portal can be read out during runtime.

If no process events are present, `SREC_OK` is returned. The value for `EventsCount` is then 0.

Table 8-308 GetConfiguredProcessEvents() - Native C++

Syntax	`ERuntimeErrorCode GetConfiguredProcessEvents(UINT16* out_EventsCount,);`

Parameters	• `SConfiguredProcessEvents* inout_ProcessEvents:` Pointer or reference to a user-defined memory which contains the field with the downloaded configured process events. The structure SConfiguredProcessEvents (Page 312) contains information about these process events. • `UINT16* out_EventsCount:` Pointer or reference to a tag which contains the number of configured process events.	
Return values	Runtime error code	Description
	`SREC_OK`	The function is successful.
	`SREC_INTERFACE_REMOVED`	The instance is not registered in Runtime Manager.
	`SREC_TIMEOUT`	The function does not return on time.

Table 8-309 GetConfiguredProcessEvents() - .NET (C#)

Syntax	`SConfiguredProcessEvents [] GetConfiguredProcessEvents();`	
Parameters	None	
Return values	Field with configured process events and field size provide the number of configured process events.	
Exceptions	`Siemens.Simatic.Simulation.Runtime.SimulationRuntimeException`	
	Runtime error code	Description
	`ERuntimeErrorCode.InterfaceRemoved`	The instance is not registered in Runtime Manager.
	`ERuntimeErrorCode.Timeout`	The function does not return on time.

8.6.8.10 RackOrStationFaultEvent

Description

This function is used to trigger the RackOrStationFault event OB (OB 86). These events are only supported for distributed devices.

Table 8-310 RackOrStationFaultEvent() - Native C++

Syntax	`ERuntimeErrorCode RackOrStationFaultEvent(UINT16 in_HardwareIdentifier, ERackOrStationFaultType in_EventType);`	
Parameter	• `UINT16 in_HardwareIdentifier:` The hardware identifier of the device that sends the event. Use the hardware identifier of the Hw_Device type. • `ERackOrStationFaultType in_EventType:` A value from the list of predefined types of events, see ERackOrStationFaultType (Page 333).	
Return values	Runtime error code	Description
	`SREC_OK`	The function is successful.
	`SREC_INTERFACE_REMOVED`	The instance is not registered in Runtime Manager.
	`SREC_WRONG_MODULE_TYPE`	The specified HW identifier is not that of a distributed device.
	`SREC_WRONG_MODULE_STATE`	The device with the specified HW identifier already reports the status Fault/Return.
	`SREC_DOES_NOT_EXIST`	The specified HW identifier of the device does not exist.
	`SREC_TIMEOUT`	The function does not return on time.

Table 8-311 RackOrStationFaultEvent() - .NET (C#)

Syntax	`void RackOrStationFaultEvent(ushort in_HardwareIdentifier, ERackOrStationFaultType in_EventType);`	
Parameter	• `ushort in_HardwareIdentifier:` The hardware identifier of the device that sends the event. Use the hardware identifier of the Hw_Device type. • `ERackOrStationFaultType in_EventType:` A value from the list of predefined types of events, see ERackOrStationFaultType (Page 333).	
Exceptions	`Siemens.Simatic.Simulation.Runtime.SimulationRuntimeException`	
	Runtime error code	Description
	`ERuntimeErrorCode.InterfaceRemoved`	The instance is not registered in Runtime Manager.
	`ERuntimeErrorCode.DoesNotExist`	The specified HW identifier of the device does not exist.
	`ERuntimeErrorCode.WrongModuleType`	The specified HW identifier is not that of a distributed device.
	`ERuntimeErrorCode.WrongModuleState`	The device with the specified HW identifier already reports the status Fault/Return.
	`ERuntimeErrorCode.Timeout`	The function does not return on time.

More information

You can find more information on the HW identifier in the STEP 7 online help.

8.6.9 Events for IInstances

8.6.9.1 Events for operating state and cycle control

The following events are triggered for the IInstances interface:

Table 8-312 Events for IInstances

Event	Cause
OnOperatingStateChanged (Page 247)	The operating state of the virtual controller has changed.
OnLedChanged (Page 250)	The LED display of the virtual controller has changed.
OnSoftwareConfigurationChanged (Page 252)	The configuration of the virtual controller changes: • During power up from the Virtual SIMATIC Memory Card • At the start of a download When this event is triggered, the stored tag list is reset.
	The configuration of the virtual controller has changed: • After power up from the Virtual SIMATIC Memory Card • At the end of a download • When the IP address changes
OnSyncPointReached (Page 255)	The virtual controller has reached a synchronization point. If the virtual controller is being operated in `Default` mode, the `SendSyncEventInDefaultMode` flag must be set to receive the event. See SendSyncEventInDefaultMode (Page 226).

Event	Cause
OnHardwareConfigChanged (Page 258)	When the hardware configuration of the virtual controller has changed, the event is triggered at the following times: • After power up from the Virtual SIMATIC Memory Card • During the Hardware Config download

OnOperatingStateChanged

Registers or unregisters an event handler method.

Table 8-313 OnOperatingStateChanged - .NET (C#)

Syntax	`event Delegate_II_EREC_DT_EOS_EOS OnOperatingStateChanged;`
Parameters	None. See Delegate_II_EREC_DT_EOS_EOS (Page 291).
Return values	None
Exceptions	None
Note	The event handler method runs in a separate thread.

RegisterOnOperatingStateChangedCallback()

When the event occurs, the registered callback function is called. Multiple callback functions can be registered for the event.

Table 8-314 RegisterOnOperatingStateChangedCallback() - Native C++

Syntax	`void RegisterOnOperatingStateChangedCallback (EventCallback_II_SREC_ST_SROS_SROS in_CallbackFunction);`
Parameters	• `EventCallback_II_SREC_ST_SROS_SROS in_CallbackFunction:` A callback function that subscribes to the event. See EventCallback_II_SREC_ST_SROS_SROS (Page 283).
Return values	None
Note	The callback function runs in a separate thread.

RegisterOnOperatingStateChangedEvent()

When the event occurs, the registered event object is set to the signaled state. Only one event object can be registered for the event. Registering a new event object causes the previous event object to be deleted.

Table 8-315 RegisterOnOperatingStateChangedEvent() - Native C++

Syntax	`void RegisterOnOperatingStateChangedEvent();` `void RegisterOnOperatingStateChangedEvent(HANDLE* in_Event);`
Parameters	• `None:` An internal event object is registered. • `HANDLE* in_Event:` A handle for a user-specific event object. The event object is registered.
Return values	None

Example C++	`// Thread 1 ----------`
	`ISimulationRuntimeManager * api = NULL;`
	`ERuntimeErrorCode result = InitializeApi(&api);`
	
	`IInstance* psa = NULL;`
	`if (result == SREC_OK)`
	`{`
	` result = api->RegisterInstance(&psa);`
	`}`
	
	`// Register the internal event object`
	`psa->`**`RegisterOnOperatingStateChangedEvent`**`();`
	
	`// Thread 2 ----------`
	`while (condition)`
	`{`
	`// Wait for the event to be set (timeout after 10s)`
	`bool isEventSet = psa->WaitForOnOperatingStateChangedEvent(10000);`
	`if (isEventSet)`
	`{`
	`// Do Something`
	`…`
	`}`
	`}`

Example C++	`// Thread 1 ----------`
	`ISimulationRuntimeManager * api = NULL;`
	`ERuntimeErrorCode result = InitializeApi(&api);`
	
	`IInstance* psa = NULL;`
	`if (result == SREC_OK)`
	`{`
	` result = api->RegisterInstance(&psa);`
	`}`
	
	`// Create an event object`
	`HANDLE eventHandle = CreateEvent(NULL, FALSE, FALSE, NULL);`
	
	`// Register the user created event object`
	`psa->`**`RegisterOnOperatingStateChangedEvent`**`(&eventHandle);`
	
	`// Do Something`
	`…`
	`// Clean up the handle`
	`CloseHandle(eventHandle);`
	
	`// Thread 2 ----------`
	`while (condition)`
	`{`
	`// Wait for the event to be set //OR:`
	`WaitForSingleObject(eventHandle, INFINITE); //psa-`
	`>WaitForOnOperatingStateChangedEvent();`
	
	`// Do Something`
	`…`
	`}`

Table 8-316 RegisterOnOperatingStateChangedEvent() – .NET (C#)

Syntax	`void RegisterOnOperatingStateChangedEvent();`
Parameters	None
Return values	None

UnregisterOnOperatingStateChangedCallback()

Unregisters the callback function.

Table 8-317 UnregisterOnOperatingStateChangedCallback() - Native C++

Syntax	`void UnregisterOnOperatingStateChangedCallback (EventCallback_II_SREC_ST_SROS_SROS in_CallbackFunction = nullptr);`
Parameters	Optional parameter of the same type as for the Register*() function If you use the parameter, it uninstalls the specific function; otherwise, the last registered callback function is unregistered.
Return values	None

UnregisterOnOperatingStateChangedEvent()

Unregisters the event object.

Table 8-318 UnregisterOnOperatingStateChangedEvent() - Native C++

Syntax	`void UnregisterOnOperatingStateChangedEvent();`
Parameters	None
Return values	None

Table 8-319 UnregisterOnOperatingStateChangedEvent() - .NET (C#)

Syntax	`void UnregisterOnOperatingStateChangedEvent();`
Parameters	None
Return values	None

WaitForOnOperatingStateChangedEvent()

The function blocks the program until the registered event object is in the signaled state or the timeout interval is exceeded.

Table 8-320 WaitForOnOperatingStateChangedEvent() - Native C++

Syntax	`bool WaitForOnOperatingStateChangedEvent();` `bool WaitForOnOperatingStateChangedEvent(UINT32 in_Time_ms);`
Parameters	• `None:` The time limit is set to `INFINITE`. • `UINT32 in_Time_ms:` Value for the time limit in milliseconds.
Return values	• `true:` If the event object was set to the signaled state. • `false:` If no event was received during the defined time limit.

Table 8-321 WaitForOnOperatingStateChangedEvent() - .NET (C#)

Syntax	`bool WaitForOnOperatingStateChangedEvent();` `bool WaitForOnOperatingStateChangedEvent(UInt32 in_Time_ms);`
Parameters	• `None:` The time limit is set to `INFINITE`. • `UInt32 in_Time_ms:` Value for the time limit in milliseconds.

Return values	• `true`: If the event object was set to the signaled state. • `false`: If no event was received during the defined time limit.

OnLedChanged

Registers or unregisters an event handler method.

Table 8-322 OnLedChanged - .NET (C#)

Syntax	`event Delegate_II_EREC_DT_ELT_ELM OnLedChanged;`
Parameters	None. See Delegate_II_EREC_DT_ELT_ELM (Page 292).
Return values	None
Exceptions	None
Note	The event handler method runs in a separate thread.

RegisterOnLedChangedCallback()

When the event occurs, the registered callback function is called. Multiple callback functions can be registered for the event.

Table 8-323 RegisterOnLedChangedCallback() - Native C++

Syntax	`void RegisterOnLedChangedCallback(EventCallback_II_SREC_ST_SRLT_SRLM in_CallbackFunction);`
Parameters	• `EventCallback_II_SREC_ST_SRLT_SRLM in_CallbackFunction:` A callback function that subscribes to an event. See EventCallback_II_SREC_ST_SRLT_SRLM (Page 285).
Return values	None
Note	The callback function runs in a separate thread.

RegisterOnLedChangedEvent()

When the event occurs, the registered event object is set to the signaled state. Only one event object can be registered for the event. Registering a new event object causes the previous event object to be deleted.

Table 8-324 RegisterOnLedChangedEvent() - Native C++

Syntax	`void RegisterOnLedChangedEvent();` `void RegisterOnLedChangedEvent(HANDLE* in_Event);`
Parameters	• `None:` An internal event object is registered. • `HANDLE* in_Event:` A handle for a user-specific event object. The event object is registered.
Return values	None

Table 8-325 RegisterOnLedChangedEvent() – .NET (C#)

Syntax	`void RegisterOnLedChangedEvent();`
Parameters	None

Return values	None

UnregisterOnLedChangedCallback()

Unregisters the callback function.

Table 8-326 UnregisterOnLedChangedCallback() - Native C++

Syntax	`void UnregisterOnLedChangedCallback();`
Parameters	Optional parameter of the same type as for the Register*() function If you use the parameter, it uninstalls the specific function; otherwise, the last registered callback function is unregistered.
Return values	None

UnregisterOnLedChangedEvent()

Unregisters the event object.

Table 8-327 UnregisterOnLedChangedEvent() - Native C++

Syntax	`void UnregisterOnLedChangedEvent();`
Parameters	None
Return values	None

Table 8-328 UnregisterOnLedChangedEvent() - .NET (C#)

Syntax	`void UnregisterOnLedChangedEvent();`
Parameters	None
Return values	None

WaitForOnLedChangedEvent()

The function blocks the program until the registered event object is in the signaled state or the timeout interval is exceeded.

Table 8-329 WaitForOnLedChangedEvent() - Native C++

Syntax	`bool WaitForOnLedChangedEvent();` `bool WaitForOnLedChangedEvent(UINT32 in_Time_ms);`
Parameters	• `None:` The time limit is set to `INFINITE`. • `UINT32 in_Time_ms:` Value for the time limit in milliseconds.
Return values	• `true:` If the event object was set to the signaled state. • `false:` If no event was received during the defined time limit.

Table 8-330 WaitForOnLedChangedEvent() - .NET (C#)

Syntax	`bool WaitForOnLedChangedEvent();` `bool WaitForOnLedChangedEvent(UInt32 in_Time_ms);`

Parameters	• `None:` The time limit is set to `INFINITE`. • `UInt32 in_Time_ms:` Value for the time limit in milliseconds.
Return values	• `true:` If the event object was set to the signaled state. • `false:` If no event was received during the defined time limit.

OnSoftwareConfigurationChanged()

Reports software changes in STOP and RUN modes.

Table 8-331 OnSoftwareConfigurationChanged

Syntax	`event Delegate_SRSCC OnSoftwareConfigurationChanged();`
Parameters	IInstance, ERuntimeErrorCode, SYSTEMTIME, ESoftwareConfigChanged
Return values	None
Exceptions	None
Note	The event handler method runs in a separate thread.

RegisterOnSoftwareConfigurationChangedCallback()

When the event occurs, the registered callback function is called. Only one callback function can be registered for the event. The registration of a new callback function causes the previous callback function to be deleted.

Table 8-332 RegisterOnSoftwareConfigurationChangedCallback() - Native C++

Syntax	`void RegisterOnSoftwareConfigurationChangedCallback();`
Parameters	CallbackFunction
Return values	None
Note	The event handler method runs in a separate thread.

RegisterOnSoftwareConfigurationChangedEvent()

When the event occurs, the registered event object is set to the signaled state. Only one event object can be registered for the event. Registration of a new event object causes the previous event object to be deleted.

Table 8-333 RegisterOnSoftwareConfigurationChangedEvent() - Native C++

Syntax	`void RegisterOnSoftwareConfigurationChangedEvent();`
Parameters	• `None` An internal event object is registered. • `HANDLE*` A handle for a user-specific event object. The event object is registered.
Return values	None

UnregisterOnSoftwareConfigurationChangedCallback()

Unregisters the callback function. When the event occurs, no callback function is called.

Table 8-334 UnregisterOnSoftwareConfigurationChangedCallback() - Native C++

Syntax	`void UnregisterOnSoftwareConfigurationChangedCallback();`
Parameters	None
Return values	None

UnregisterOnConfigurationChangedEvent()

Unregisters the event object.

Table 8-335 UnregisterOnConfigurationChangedEvent() - Native C++

Syntax	`void UnregisterOnSoftwareConfigurationChangedEvent();`
Parameters	None
Return values	None

Table 8-336 UnregisterOnConfigurationChangedEvent() - .NET (C#)

Syntax	`void UnregisterOnSoftwareConfigurationChangedEvent();`
Parameters	None
Return values	None

WaitForOnConfigurationChangedEvent()

The function blocks the program until the registered event object is set to the signaled state or the timeout interval is exceeded.

Table 8-337 WaitForOnSoftwareConfigurationChangedEvent() - Native C++

Syntax	`void WaitForOnSoftwareConfigurationChangedEvent();`
Parameters	• `None:` The time limit is set to `INFINITE`. • `UINT32 in_Time_ms:` Value for the time limit in milliseconds.
Return values	• `true:` If the event object was set to the signaled state. • `false:` If no event was received during the defined time limit.
Note	The function blocks the CoSimulation program until a software download is set to the signaled state or the timeout interval is exceeded.

Table 8-338 WaitForOnSoftwareConfigurationChangedEvent() - .NET (C#)

Syntax	`void WaitForOnSoftwareConfigurationChangedEvent();`
Parameters	• `None:` The time limit is set to `INFINITE`. • `UINT32 in_Time_ms:` Value for the time limit in milliseconds.
Return values	• `true:` If the event object was set to the signaled state. • `false:` If no event was received during the defined time limit.

Note	The function blocks the CoSimulation program until a software download is set to the signaled state or the timeout interval is exceeded.

RegisterOnIPAddressChangedCallback()

Register function for receiving callback functions when an IP address has changed.

Table 8-339 RegisterOnIPAddressChangedCallback() - Native C++

Syntax	`RegisterOnIPAddressChangedCallback();`
Parameters `in_CallbackFunction`	• `IInstance* in_Sender` Instance object • `ERuntimeErrorCode in_ErrorCode` Result of operation • `SYSTEMTIME in_SystemTime` CPU system time of the event • `UINT8 in_InterfaceId` ID of the CPU interface involved • `const SIPSuite4& in_SIP` Reference of the SIPSuite4 structure
Return values	None
Note	The event handler method runs in a separate thread.

UnregisterOnIPAddressChangedCallback()

Unregister function for receiving callback functions when an IP address has changed.

Table 8-340 UnregisterOnIPAddressChangedCallback() - Native C++

Syntax	`void UnregisterOnIPAddressChangedCallback();`
Parameters `in_CallbackFunction`	Address of the specific function or nullptr for removing the last registered callback function
Return values	None

RegisterOnIPAddressChangedEvent()

Register function for receiving events when an IP address has changed.

Table 8-341 RegisterOnIPAddressChangedEvent() - Native C++

Syntax	`void IInstance::RegisterOnIPAddressChangedEvent()` `void IInstance::RegisterOnIPAddressChangedEvent(HANDLE* in_Event);`
Parameters `in_Event`	HANDLE* (a user-specific event object is registered)
Return values	None

UnregisterOnIPAddressChangedEvent()

Unregister function for receiving events when an IP address has changed.

Table 8-342 UnregisterOnIPAddressChangedEvent() - Native C++

Syntax	`void IInstance::UnregisterOnIPAddressChangedEvent();`
Parameters	None

Return values	None

OnIPAddressChanged()

The event is called when the IP configuration of the CPU interface has changed.

Table 8-343 OnIPAddressChanged() - .NET (C#)

Syntax	`void IInstance::OnIPAddressChanged();`
Parameters	• `IInstance in_Sender` Instance object • `ERuntimeErrorCode in_ErrorCode` Result of operation • `DateTime in_SystemTime` CPU system time of the event • `UINT8 in_InterfaceId` ID of the CPU interface involved • `SIPSuite4 in_SIP` IP address of the interface
Return values	None
Note	The event handler method runs in a separate thread.

WaitForOnIPAddressChangedEvent()

Blocking function up to the change of the IP address.

Table 8-344 WaitForOnIPAddressChangedEvent() - Native C++

Syntax	`bool IInstance::WaitForOnIPAddressChangedEvent();` `bool IInstance::WaitForOnIPAddressChangedEvent(UINT32 in_Time_ms)`
Parameters `in_Time_ms`	Time in milliseconds
Return values	Returns `True` if the change was made within a set period, otherwise `False`
Note	None

Table 8-345 WaitForOnIPAddressChangedEvent() - .NET (C#)

Syntax	`bool IInstance::WaitForOnIPAddressChangedEvent();` `bool IInstance::WaitForOnIPAddressChangedEvent(uint in_Time_ms);`
Parameters `in_Time_ms`	Time in milliseconds
Return values	Returns `True` if the change was made within a set period, otherwise `False`
Note	The event handler method runs in a separate thread.

OnSyncPointReached

Registers or unregisters an event handler method.

Table 8-346 OnSyncPointReached - .NET (C#)

Syntax	`event Delegate_II_EREC_DT_UINT32_INT64_INT64_UINT32 OnSyncPointReached;`
Parameters	None. See Delegate_II_EREC_DT_UINT32_INT64_INT64_UINT32 (Page 292).

Return values	None
Exceptions	None
Note	The event handler method runs in a separate thread.

RegisterOnSyncPointReachedCallback()

When the event occurs, the registered callback function is called. Multiple callback functions can be registered for the event.

Table 8-347 RegisterOnSyncPointReachedCallback() - Native C++

Syntax	`void RegisterOnSyncPointReachedCallback (EventCallback_II_SREC_ST_UINT32_INT64_INT64_UINT32 in_CallbackFunction);`
Parameters	• `EventCallback_II_SREC_ST_UINT32_INT64_INT64_UINT32 in_CallbackFunction:` A callback function that subscribes to an event. See EventCallback_II_SREC_ST_UINT32_INT64_INT64_UINT32 (Page 284).
Return values	None
Note	The callback function runs in a separate thread.

RegisterOnSyncPointReachedEvent()

When the event occurs, the registered event object is set to the signaled state. Only one event object can be registered for the event. Registering a new event object causes the previous event object to be deleted.

Table 8-348 RegisterOnSyncPointReachedEvent() - Native C++

Syntax	`void RegisterOnSyncPointReachedEvent();` `void RegisterOnSyncPointReachedEvent(HANDLE* in_Event);`
Parameters	• `None:` An internal event object is registered. • `HANDLE* in_Event:` A handle for a user-specific event object. The event object is registered.
Return values	None

Table 8-349 RegisterOnSyncPointReachedEvent() – .NET (C#)

Syntax	`RegisterOnSyncPointReachedEvent() – .NET (C#)`
Parameters	None
Return values	None

UnregisterOnSyncPointReachedCallback()

Unregisters the callback function.

Table 8-350 UnregisterOnSyncPointReachedCallback() - Native C++

Syntax	`void UnregisterOnSyncPointReachedCallback();`
Parameters	Optional parameter of the same type as for the Register*() function If you use the parameter, it uninstalls the specific function; otherwise, the last registered callback function is unregistered.
Return values	None

UnregisterOnSyncPointReachedEvent()

Unregisters the event object.

Table 8-351 UnregisterOnSyncPointReachedEvent() - Native C++

Syntax	`void UnregisterOnSyncPointReachedEvent();`
Parameters	None
Return values	None

Table 8-352 UnregisterOnSyncPointReachedEvent() - .NET (C#)

Syntax	`void UnregisterOnSyncPointReachedEvent();`
Parameters	None
Return values	None

WaitForOnSyncPointReachedEvent()

The function blocks the program until the registered event object is in the signaled state or the timeout interval is exceeded.

Table 8-353 WaitForOnSyncPointReachedEvent() - Native C++

Syntax	`SOnSyncPointReachedResult WaitForOnSyncPointReachedEvent();` `SOnSyncPointReachedResult WaitForOnSyncPointReachedEvent(UINT32 in_Time_ms);`
Parameters	• `None:` The time limit is set to `INFINITE`. • `UINT32 in_Time_ms:` Value for the time limit in milliseconds.
Return values	• `SOnSyncPointReachedResult:` A structure that supplies information about the event. See SOnSyncPointReachedResult (Page 309).

Table 8-354 WaitForOnSyncPointReachedEvent() - .NET (C#)

Syntax	`SOnSyncPointReachedResult WaitForOnSyncPointReachedEvent();` `SOnSyncPointReachedResult WaitForOnSyncPointReachedEvent(UInt32 in_Time_ms);`
Parameters	• `None:` The time limit is set to `INFINITE`. • `UInt32 in_Time_ms:` Value for the time limit in milliseconds.

Return values	• `SOnSyncPointReachedResult`: A structure that supplies information about the event. See SOnSyncPointReachedResult (Page 309).

OnHardwareConfigChanged

Registers or unregisters an event handler method.

Table 8-355 OnHardwareConfigChanged - .NET (C#)

Syntax	`event Delegate_II_EREC_DT OnHardwareConfigChanged;`
Parameters	None; see Delegate_II_EREC_DT
Return values	None
Exceptions	None
Note	The event handler method runs in a separate thread.

RegisterOnHardwareConfigChangedCallback()

When the event occurs, the registered callback function is called. Multiple callback functions can be registered for the event.

Table 8-356 Table: RegisterOnHardwareConfigChangedCallback() – Native C++

Syntax	`void RegisterOnHardwareConfigChangedCallback(EventCallback_II_SREC_ST in_CallbackFunction);`
Parameters	`EventCallback_II_SREC_ST in_CallbackFunction` A callback function that subscribes to an event; see EventCallback_II_SREC_ST()
Return values	None
Note	The callback function runs in a separate thread.

RegisterOnHardwareConfigChangedEvent()

When the event occurs, the registered event object is set to the signaled state. Only one event object can be registered for the event. Registration of a new event object causes the previous event object to be deleted.

Table 8-357 RegisterOnHardwareConfigChangedEvent() – Native C++

Syntax	`void RegisterOnHardwareConfigChangedEvent();` `void RegisterOnHardwareConfigChangedEvent(Handle* in_Event);`
Parameters	• `None`: An internal event object is registered. • `Handle* in_Event` A handle for a user-specific event object. The event object is registered.
Return values	None

Table 8-358 RegisterOnHardwareConfigChangedEvent() – .NET (C#)

Syntax	`void RegisterOnHardwareConfigChangedEvent();`
Parameters	None

Return values	None

UnregisterOnHardwareConfigChangedCallback()

UnregisterOnHardwareConfigChangedCallback()Unregisters the callback function.

Table 8-359 UnregisterOnHardwareConfigChangedCallback() – Native C++

Syntax	`void UnregisterOnHardwareConfigChangedCallback();`
Parameters	Optional parameter of the same type as for the Register*() function If you use the parameter, it uninstalls the specific function; otherwise, the last registered callback function is unregistered.
Return values	None

UnregisterOnHardwareConfigChangedEvent()

Unregisters the event object.

Table 8-360 UnregisterOnHardwareConfigurationChangedEvent() – Native C++

Syntax	`void UnregisterOnHardwareConfigChangedEvent();`
Parameters	None
Return values	None

Table 8-361 UnregisterOnHardwareConfigurationChangedEvent() – .NET (C#)

Syntax	`void UnregisterOnHardwareConfigChangedEvent();`
Parameters	None
Return values	None

WaitForOnHardwareConfigurationChangedEvent()

The function blocks the program until the registered event object is in the signaled state or the timeout interval is exceeded.

Table 8-362 WaitForOnHardwareConfigChangedEvent() – Native C++

Syntax	`bool WaitForOnHardwareConfigChangedEvent();` `bool WaitForOnHardwareConfigChangedEvent (in_Time_ms);`
Parameters	• `None:` The time limit is set to INFINITE. • `UINT32 in_Time_ms:` Value for the time limit in milliseconds.
Return values	• `true:` If the event object was set to the signaled state. • `false:` If no event was received during the defined time limit.

Table 8-363 WaitForOnHardwareConfigChangedEvent() – .NET (C#)

Syntax	`bool WaitForOnHardwareConfigChangedEvent();` `bool WaitForOnHardwareConfigChangedEvent (UINT32 in_Time_ms);`

Parameters	• `None:` The time limit is set to `INFINITE`. • `UINT32 in_Time_ms:` Value for the time limit in milliseconds.
Return values	• `true:` If the event object was set to the signaled state. • `false:` If no event was received during the defined time limit.

8.6.9.2 Events for acyclic services

OnDataRecordRead

Registers or unregisters an event handler method.

Table 8-364 OnDataRecordRead - .NET (C#)

Syntax	`event Delegate_II_EREC_DT_SDRI OnDataRecordRead;`
Parameter	None. See Delegate_II_EREC_DT_SDRI (Page 294).
Return values	None
Exceptions	None
Note	The Event-Handler Methode runs in a separate thread.

OnDataRecordWrite

Registers or unregisters an event handler method.

Table 8-365 OnDataRecordWrite - .NET (C#)

Syntax	`event Delegate_II_EREC_DT_SDR OnDataRecordWrite;`
Parameter	None. See Delegate_II_EREC_DT_SDR (Page 294).
Return values	None
Exceptions	None
Note	The event handler method runs in a separate thread.

RegisterOnDataRecordReadCallback()

When the event occurs, the registered callback function is called. Multiple callback functions can be registered for the event.

Table 8-366 RegisterOnDataRecordReadCallback() - Native C++

Syntax	`void RegisterOnDataRecordReadCallback (Event Callback_II_SREC_ST_SDRI in_CallbackFunction);`
Parameters	• `EventCallback_II_SREC_ST_SDRI in_CallbackFunction:` A callback function that subscribes to the event. See EventCallback_II_SREC_ST_SDRI.
Return values	None
Note	The callback function runs in a separate thread.

UnregisterOnDataRecordReadCallback()

Unregisters the callback function.

Table 8-367 UnregisterOnDataRecordReadCallback() - Native C++

Syntax	`void UnregisterOnDataRecordReadCallback();`
Parameters	Optional parameter of the same type as for the Register*() function If you use the parameter, it uninstalls the specific function; otherwise, the last registered callback function is unregistered.
Return values	None

RegisterOnDataRecordWriteCallback()

When the event occurs, the registered callback function is called. Multiple callback functions can be registered for the event.

Table 8-368 RegisterOnDataRecordWriteCallback() - Native C++

Syntax	`void RegisterOnDataRecordWriteCallback (EventCallback_II_SREC_ST_SDRI_BYTE in_CallbackFunction);`
Parameters	• `EventCallback_II_SREC_ST_SDRI_BYTE in_CallbackFunction:` A callback function that subscribes to the event. See EventCallback_II_SREC_ST_SDRI_BYTE.
Return values	None
Note	The callback function runs in a separate thread.

UnregisterOnDataRecordWriteCallback()

Unregisters the callback function. When the event occurs, no callback function is called.

Table 8-369 UnregisterOnDataRecordWriteCallback() - Native C++

Syntax	`void UnregisterOnDataRecordWriteCallback();`
Parameters	Optional parameter of the same type as for the Register*() function If you use the parameter, it uninstalls the specific function; otherwise, the last registered callback function is unregistered.
Return values	None

OnAlarmNotificationDone()

Registers or unregisters an event handler method.

Table 8-370 OnAlarmNotificationDone() - .NET (C#)

Syntax	`event Delegate_SREC_ST_UINT32_UINT32 OnAlarmNotificationDone;`
Parameters	None. See Delegate_SREC_ST_UINT32_UINT32 (Page 296).
Return values	None
Exceptions	None

Note	The event handler method runs in a separate thread.

RegisterOnAlarmNotificationDoneCallback()

When the event occurs, the registered callback function is called. Multiple callback functions can be registered for the event.

Table 8-371 RegisterOnAlarmNotificationDoneCallback() - Native C++

Syntax	`void RegisterOnAlarmNotificationDoneCallback (Event Callback_II_SREC_ST_SDRI in_CallbackFunction);`
Parameters	• `EventCallback_II_SREC_ST_UINT32_UINT32 in_CallbackFunction:` A callback function that subscribes to the event. See EventCallback_II_SREC_ST_UINT32_UINT32 (Page 287).
Return values	None
Note	The callback function runs in a separate thread.

UnregisterOnAlarmNotificationDoneCallback()

Unregisters the callback function.

Table 8-372 UnregisterOnAlarmNotificationDoneCallback() - Native C++

Syntax	`void UnregisterOnAlarmNotificationDoneCallback ();`
Parameters	Optional parameter of the same type as for the Register*() function If you use the parameter, it uninstalls the specific function; otherwise, the last registered callback function is unregistered.
Return values	None

OnProcessEventDone()

Registers or unregisters an event handler method.

Table 8-373 OnProcessEventDone() - .NET (C#)

Syntax	`event Delegate_SREC_ST_UINT32_UINT32_EPET_UINT32 OnProcessEventDone;`
Parameters	None. See Delegate_SREC_ST_UINT32_UINT32_EPET_UINT32. (Page 295)
Return values	None
Exceptions	None
Note	The event handler method runs in a separate thread.

RegisterOnProcessEventDoneCallback()

When the event occurs, the registered callback function is called. Multiple callback functions can be registered for the event.

Table 8-374 RegisterOnProcessEventDoneCallback() - Native C++

Syntax	`void RegisterOnProcessEventDoneCallback (EventCallback_II_SREC_ST_UINT32_UINT32_EPET_UINT32 in_CallbackFunction);`

Parameters	`EventCallback_II_SREC_ST_UINT32_UINT32_EPET_UINT32 in_CallbackFunction:` A callback function that subscribes to the event. See EventCallback_II_SREC_ST_UINT32_UINT32_EPET_UINT32 (Page 287)
Return values	None
Note	The callback function runs in a separate thread.

UnregisterOnProcessEventDoneCallback()

Unregisters the callback function.

Table 8-375 UnregisterOnProcessEventDoneCallback() - Native C++

Syntax	`void UnregisterOnProcessEventDoneCallback ();`
Parameters	Optional parameter of the same type as for the Register*() function If you use the parameter, it uninstalls the specific function; otherwise, the last registered callback function is unregistered.
Return values	None

OnPullOrPlugEventDone()

Registers or unregisters an event handler method.

Table 8-376 OnPullOrPlugEventDone() - .NET (C#)

Syntax	`event Delegate_SREC_ST_UINT32_EPPET_UINT32 OnPullOrPlugEventDone;`
Parameters	None. See Delegate_SREC_ST_UINT32_EPPET_UINT32 (Page 295).
Return values	None
Exceptions	None
Note	The event handler method runs in a separate thread.

RegisterOnPullOrPlugEventDoneCallback()

When the event occurs, the registered callback function is called. Multiple callback functions can be registered for the event.

Table 8-377 RegisterOnPullOrPlugEventDoneCallback() - Native C++

Syntax	`void RegisterOnPullOrPlugEventDoneCallback` `(EventCallback_II_SREC_ST_UINT32_EPPET_UINT32 in_CallbackFunction);`
Parameters	`EventCallback_II_SREC_ST_UINT32_EPPET_UINT32 in_CallbackFunction:` A callback function that subscribes to the event. See EventCallback_II_SREC_ST_UINT32_EPPET_UINT32 (Page 288).
Return values	None
Note	The callback function runs in a separate thread.

UnregisterOnPullOrPlugEventDoneCallback()

Unregisters the callback function.

Table 8-378 UnregisterOnPullOrPlugEventDoneCallback() - Native C++

Syntax	`void UnregisterOnPullOrPlugEventDoneCallback ();`
Parameters	Optional parameter of the same type as for the Register*() function If you use the parameter, it uninstalls the specific function; otherwise, the last registered callback function is unregistered.
Return values	None

OnStatusEventDone()

Registers or unregisters an event handler method.

Table 8-379 OnStatusEventDone() - .NET (C#)

Syntax	`event Delegate_SREC_ST_UINT32 OnStatusEventDone;`
Parameters	None. See Delegate_SREC_ST_UINT32 (Page 296).
Return values	None
Exceptions	None
Note	The event handler method runs in a separate thread.

RegisterOnStatusEventDoneCallback()

When the event occurs, the registered callback function is called. Multiple callback functions can be registered for the event.

Table 8-380 RegisterOnStatusEventDoneCallback() - Native C++

Syntax	`void RegisterOnStatusEventDoneCallback (EventCallback_II_SREC_ST_UINT32 in_CallbackFunction);`
Parameters	`EventCallback_II_SREC_ST_UINT32 in_CallbackFunction:` A callback function that subscribes to the event. See EventCallback_II_SREC_ST_UINT32 (Page 289).
Return values	None
Note	The callback function runs in a separate thread.

UnregisterOnStatusEventDoneCallback()

Unregisters the callback function.

Table 8-381 UnregisterOnStatusEventDoneCallback() - Native C++

Syntax	`void UnregisterOnStatusEventDoneCallback ();`
Parameters	Optional parameter of the same type as for the Register*()function. If you use the parameter, it uninstalls the specific function; otherwise, the last registered callback function is unregistered.
Return values	None

OnProfileEventDone()

Registers or unregisters an event handler method.

Table 8-382 OnProfileEventDone() - .NET (C#)

Syntax	`event Delegate_SREC_ST_UINT32 OnProfileEventDone;`
Parameters	None. See Delegate_SREC_ST_UINT32 (Page 296).
Return values	None
Exceptions	None
Note	The event handler method runs in a separate thread.

RegisterOnProfileEventDoneCallback()

When the event occurs, the registered callback function is called. Multiple callback functions can be registered for the event.

Table 8-383 RegisterOnProfileEventDoneCallback() - Native C++

Syntax	`void RegisterOnProfileEventDoneCallback (EventCallback_II_SREC_ST_UINT32 in_CallbackFunction);`
Parameters	`EventCallback_II_SREC_ST_UINT32 in_CallbackFunction:` A callback function that subscribes to the event. See EventCallback_II_SREC_ST_UINT32 (Page 289).
Return values	None
Note	The callback function runs in a separate thread.

UnregisterOnProfileEventDoneCallback()

Unregisters the callback function. When the event occurs, no callback function is called.

Table 8-384 UnregisterOnProfileEventDoneCallback() - Native C++

Syntax	`void UnregisterOnProfileEventDoneCallback ();`
Parameters	Optional parameter of the same type as for the Register*() function If you use the parameter, it uninstalls the specific function; otherwise, the last registered callback function is unregistered.
Return values	None

OnUpdateEventDone()

Registers or unregisters an event handler method.

Table 8-385 OnUpdateEventDone() - .NET (C#)

Syntax	`event Delegate_SREC_ST_UINT32 OnUpdateEventDone;`
Parameters	None. See Delegate_SREC_ST_UINT32 (Page 296).
Return values	None
Exceptions	None
Note	The event handler method runs in a separate thread.

RegisterOnUpdateEventDoneCallback()

When the event occurs, the registered callback function is called. Multiple callback functions can be registered for the event.

Table 8-386 RegisterOnUpdateEventDoneCallback() - Native C++

Syntax	`void RegisterOnUpdateEventDoneCallback (EventCallback_II_SREC_ST_UINT32 in_CallbackFunction);`
Parameters	`EventCallback_II_SREC_ST_UINT32 in_CallbackFunction:` A callback function that subscribes to the event. See EventCallback_II_SREC_ST_UINT32 (Page 289).
Return values	None
Note	The callback function runs in a separate thread.

UnregisterOnUpdateEventDoneCallback()

Unregisters the callback function.

Table 8-387 UnregisterOnUpdateEventDoneCallback() - Native C++

Syntax	`void UnregisterOnUpdateEventDoneCallback ();`
Parameters	Optional parameter of the same type as for the Register*() function If you use the parameter, it uninstalls the specific function; otherwise, the last registered callback function is unregistered.
Return values	None

OnRackOrStationFaultEvent

Registers or unregisters an event handler method.

Table 8-388 OnRackOrStationFaultEvent - .NET (C#)

Syntax	`event Delegate_SREC_ST_UINT32_ERSFET OnRackOrStationFault;`
Parameter	None. See Delegate_SREC_ST_UINT32_ERSFET (Page 297).
Return values	None
Exceptions	None
Note	The event handler method runs in a separate thread.

RegisterOnRackOrStationFaultEventCallback()

When the event occurs, the registered callback function is called. Multiple callback functions can be registered for the event.

Table 8-389 RegisterOnRackOrStationFaultEventCallback() - Native C++

Syntax	`void RegisterOnRackOrStationFaultEventCallback ( EventCallback_II_SREC_ST_UINT32_ERSFET in_CallbackFunction );`
Parameter	`EventCallback_II_ SREC_ST_UINT32_ERSFET in_CallbackFunction.` A callback function that subscribes to the event. See EventCallback_II_SREC_ST_UINT32_ERSFET (Page 289)
Return values	None

Note	The callback function runs in a separate thread.

UnregisterOnRackOrStationFaultEventCallback()

Unregisters the callback function.

Table 8-390 UnregisterOnRackOrStationFaultEventCallback() - Native C++

Syntax	`void UnregisterOnRackOrStationFaultEventCallback ();`
Parameter	Optional parameter of the same type as for the Register*() function If you use the parameter, it uninstalls the specific function; otherwise, the last registered callback function is unregistered.
Return values	None

8.7 API IRemoteRuntimeManager

8.7.1 Interfaces - Information and settings

Dispose()

Deletes the managed interface and unloads the native components of the user interfaces.

NOTE

When the interface of the Remote Runtime Manager is deleted, no IInstance interface which was generated by the IRemoteRuntimeManager interface can be used.

The .NET Garbage Collector clears its IRemoteRuntimeManager interface when no active references are present.

Table 8-391 Dispose() - .NET (C#)

Syntax	`void Dispose()`
Parameters	None
Return values	None

GetVersion()

Returns the version of the remote Runtime Manager. If the function fails, version 0.0 is returned.

Table 8-392 GetVersion() - Native C++

Syntax	`UINT32 GetVersion();`
Parameters	None
Return values	`UINT32`: Remote Runtime Manager Version (`HIWORD` = Major, `LOWORD` = Minor)

Table 8-393 Version { get; } - .NET (C#)

Syntax	`UInt32 Version { get; }`
Parameters	None
Return values	`Uint32`: Remote Runtime Manager Version (`HIWORD` = Major, `LOWORD` = Minor)

GetIP() / IP { get; }

Returns the IP address of the PC on which the remote Runtime Manager is running. If the function fails, the return value is 0.

Table 8-394 GetIP() - Native C++

Syntax	`UIP GetIP();`
Parameters	None
Return values	`UIP`: Returns the IP address of the PC on which the Runtime Manager is running.

Table 8-395 IP { get; } - .NET (C#)

Syntax	`SIP IP { get; }`
Parameters	None
Return values	`SIP`: Returns the IP address of the PC on which the Runtime Manager is running.

GetPort() / Port { get; }

Returns the open port of the PC on which the remote Runtime Manager is running. If the function fails, the return value is 0.

Table 8-396 GetPort() - Native C++

Syntax	`UINT16 GetPort();`
Parameters	None
Return values	`UINT16`: Open port of the PC on which the remote Runtime Manager is running.

Table 8-397 Port { get; } - .NET (C#)

Syntax	`UInt16 Port { get; }`
Parameters	None
Return values	`UInt16`: Open port of the PC on which the remote Runtime Manager is running.

GetRemoteComputerName() / RemoteComputerName { get; }

Returns the name of the PC on which the remote Runtime Manager is running.

When the name of the PC on which the remote Runtime Manager is running cannot be identified on the local PC, the IP address is returned.

Table 8-398 GetRemoteComputerName() - Native C++

Syntax	`ERuntimeErrorCode GetRemoteComputerName(WCHAR* inout_Name,UINT32 in_ArrayLength);`

Parameters	• `WCHAR* inout_Name:` A user-allocated array for the computer name. • `UINT32 in_ArrayLength:` The array length. The array should be longer than `MAX_COMPUTERNAME_LENGTH`.	
Return values	Runtime error code	Description
	`SREC_OK`	The function is successful.
	`SREC_INTERFACE_REMOVED`	The interface is disconnected from the remote Runtime Manager.
	`SREC_INDEX_OUT_OF_RANGE`	The array is too small to accommodate the computer name.

Table 8-399 RemoteComputerName { get; } - .NET (C#)

Syntax	`string RemoteComputerName { get; }`	
Parameters	None	
Return values	`string:` Name of the PC on which the remote Runtime Manager is running.	
Exceptions	`Siemens.Simatic.Simulation.Runtime.SimulationRuntimeException`	
	Runtime error code	Description
	`ERuntimeErrorCode.InterfaceRemoved`	The interface is disconnected from the remote Runtime Manager.
	`ERuntimeErrorCode.IndexOutOfRange`	The array is too small to accommodate the computer name.

Disconnect()

Closes the connection to the remote Runtime Manager.

NOTE

All applications that are connected to the remote Runtime Manager lose this connection.

Table 8-400 Disconnect() - Native C++

Syntax	`ERuntimeErrorCode Disconnect();`	
Parameters	None	
Return values	Runtime error code	Description
	`SREC_OK`	The function is successful.
	`SREC_INTERFACE_REMOVED`	The interface is disconnected from the remote Runtime Manager.
	`SREC_TIMEOUT`	The function does not return on time.

Table 8-401 Disconnect() - .NET (C#)

Syntax	`void Disconnect();`
Parameters	None
Return values	None

Exceptions	`Siemens.Simatic.Simulation.Runtime.SimulationRuntimeException`	
	Runtime error code	Description
	`ERuntimeErrorCode.InterfaceRemoved`	The interface is disconnected from the remote Runtime Manager.
	`ERuntimeErrorCode.Timeout`	The function does not return on time.

GetStrictMotionTiming() / StrictMotionTiming { get; }

Returns the current global setting for the "Strict Motion Timing" feature that has an effect on newly created instances. The "Strict Motion Timing" feature is located on the S7-PLCSIM Advanced Control Panel (Page 59).

Table 8-402 GetStrictMotionTiming() - Native C++

Syntax	`ERuntimeErrorCode GetStrictMotionTiming(bool* enabled);`	
Parameters	bool* enabled: Receives the current setting. `true`: Active `false`: Inactive	
Return values	Runtime error code	Description
	`SREC_OK`	The function is successful.
	`SREC_TIMEOUT`	The function does not return on time.
	`SREC_CONFIG_FILE_ERROR`	The setting could not be read from the configuration file UserInterfaceConfiguration.xml.

Table 8-403 StrictMotionTiming { get; } - .NET (C#)

Syntax	`bool StrictMotionTiming { get; }`	
Parameters	None	
Return values	`Siemens.Simatic.Simulation.Runtime.SimulationRuntimeException`	
	Runtime error code	Description
	`ERuntimeErrorCode.Timeout`	The function does not return on time.
	`ERuntimeErrorCode.ConfigFileError`	The setting could not be read from the configuration file UserInterfaceConfiguration.xml.

SetStrictMotionTiming() / StrictMotionTiming { set; }

Sets the global setting for the "Strict Motion Timing" feature that has an effect on newly created instances. The "Strict Motion Timing" feature is located on the S7-PLCSIM Advanced Control Panel (Page 59).

Table 8-404 SetStrictMotionTiming() - Native C++

Syntax	`ERuntimeErrorCode SetStrictMotionTiming(bool enable);`
Parameters	bool enable: The value to be set. `true`: Active `false`: Inactive

Return values	Runtime error code	Description
	SREC_OK	The function is successful.
	SREC_ALREADY_EXISTS	An instance is registered. No instance must be registered to change the setting.
	SREC_TIMEOUT	The function does not return on time.
	SREC_ACCESS_DENIED	No write rights for the configuration file.
	SREC_CONFIG_FILE_ERROR	The setting could not be written to the configuration file UserInterfaceConfiguration.xml.

Table 8-405 StrictMotionTiming { set; } - .NET (C#)

Syntax	bool StrictMotionTiming { set; }	
Parameters	None	
Return values	Siemens.Simatic.Simulation.Runtime.SimulationRuntimeException	
	Runtime error code	Description
	ERuntimeErrorCode.AlreadyExists	An instance is registered. No instance must be registered to change the setting.
	ERuntimeErrorCode.Timeout	The function does not return on time.
	ERuntimeErrorCode.AccessDenied	No write rights for the configuration file.
	ERuntimeErrorCode.ConfigFileError	The setting could not be written to the configuration file UserInterfaceConfiguration.xml.

GetNetworkMode()

Returns the current settings of the network mode, which are used in the network adapter for distributed communication.

Table 8-406 GetNetworkMode() - Native C++

Syntax	ERuntimeErrorCode IRemoteRuntimeManager::GetNetworkMode(ECommunicationMode* out_Mode);	
Parameters	ECommunicationMode* out_Mode: Receives the network mode as #ECommunicationMode that is currently set in the driver of the S7-PLCSIM Advanced Virtual Switch	
Return values	Runtime error code	Description
	SREC_OK	The function is successful.
	SREC_VIRTUAL_SWITCH_MISCONFIGURED	The S7-PLCSIM Advanced Virtual Switch is configured incorrectly.

SetNetworkMode()

Sets the network mode as used in the network adapter for distributed communication.
Check that the binding on the network interfaces is correct.

Table 8-407 SetNetworkMode() - Native C++

Syntax	ERuntimeErrorCode IRemoteRuntimeManager::SetNetworkMode(const ECommunicationMode in_Mode);

Parameters	`ECommunicationMode in_Mode:` Type of communication mode to be set in the network	
Return values	Runtime error code	Description
	`SREC_OK`	The function is successful.
	`SREC_VIRTUAL_SWITCH_MISCONFIGURED`	The driver of the S7-PLCSIM Advanced Virtual Switch is not running.

NetworkMode { get; set; };

Returns or sets the network mode used on the network adapter for distributed communication.
Check that the binding on the network interfaces is correct.

Table 8-408 NetworkMode { get; set; } - .NET (C#)

Syntax	`ECommunicationMode IRemoteRuntimeManager::NetworkMode { get; set; }`	
Return value	`ECommunicationMode:` Type of communication mode to be set in the network	
Exceptions	Runtime error code	Description
	`ERuntimeErrorCode.VirtualSwitchMisconfigured`	The driver of the S7-PLCSIM Advanced Virtual Switch is not running.

8.7.2 Simulation Runtime instances

8.7.2.1 Simulation Runtime instances (remote)

GetRegisteredInstancesCount()

Returns the number of instances that are registered in Runtime Manager. If the function fails, the return value is 0.

Table 8-409 GetRegisteredInstancesCount() - Native C++

Syntax	`UINT32 GetRegisteredInstancesCount();`
Parameters	None
Return values	`UINT32`: Number of available instances.

GetRegisteredInstanceInfoAt()

Returns information about an already registered instance.
You can use the ID or name to create an interface of this instance (see `CreateInterface()`).

Table 8-410 GetRegisteredInstanceInfoAt() - Native C++

Syntax	`ERuntimeErrorCode GetRegisteredInstanceInfoAt(UINT32 in_Index, SInstanceInfo* out_InstanceInfo);`

Parameters	• `UINT32 in_Index:` Index of the created instance from which you want to receive the information. The index must be less than the value you receive when you call `GetRegisteredInstanceCount()`. • `SInstanceInfo* out_InstanceInfo:` The information with name and ID of the instance. See SInstanceInfo (Page 305).	
Return values	Runtime error code	Description
	`SREC_OK`	The function is successful.
	`SREC_INTERFACE_REMOVED`	The interface is disconnected from the remote Runtime Manager.
	`SREC_TIMEOUT`	The function does not return on time.
	`SREC_INDEX OUT_OF_RANGE`	There is no instance information for this index.

RegisteredInstanceInfo { get; }

Returns information about an already registered instance. You can use the ID or name of this instance to create an interface of this instance, see `CreateInterface()`.

Table 8-411 RegisterInstanceInfo { get; } - .NET (C#)

Syntax	`SInstanceInfo[] RegisteredInstanceInfo { get; }`	
Parameters	None	
Return values	None	
Exceptions	`Siemens.Simatic.Simulation.Runtime.SimulationRuntimeException`	
	Runtime error code	Description
	`ERuntimeErrorCode.InterfaceRemoved`	The interface is disconnected from the remote Runtime Manager.
	`ERuntimeErrorCode.Timeout`	The function does not return on time.

RegisterInstance()

Registers a new instance of a virtual controller in Runtime Manager. Creates and returns an interface of this instance.

Table 8-412 RegisterInstance() - Native C++

Syntax	`ERuntimeErrorCode RegisterInstance(IInstance** out_InstanceInterface);`
	`ERuntimeErrorCode RegisterInstance(WCHAR* in_InstanceName, IInstance** out_InstanceInterface);`
	`ERuntimeErrorCode RegisterInstance(ECPUType in_CPUType, IInstance** out_InstanceInterface);`
	`ERuntimeErrorCode RegisterInstance(ECPUType in_CPUType, WCHAR* in_InstanceName, IInstance** out_InstanceInterface);`

Parameters	• `ECPUType in_CPUType:` Defines which CPU type is simulated at the start of the instance. The default setting is `"SRCT_1500_Unspecified"`. When a different CPU type is loaded via STEP 7 or from the Virtual SIMATIC Memory Card, this CPU type applies. • `WCHAR* in_InstanceName:` Name to be assigned to the instance. Every instance must have a unique name. If no name is assigned when registering a new instance, the instance is given the name `"Instance_#"` (# is the ID of the instance). If this name already exists, the name `"Instance_#.#"` is used, in which

	the second # is a counter that is incremented until the name is unique. The length of the name must be less than `DINSTANCE_NAME_LENGTH`. See Data types (Page 297). • `IInstance** out_InstanceInterface:` Pointer to a Simulation Runtime interface pointer. The pointer **must** be initialized with `NULL`. The interface is created within the function.	
Return values	Runtime error code	Description
	`SREC_OK`	The function is successful.
	`SREC_INTERFACE_REMOVED`	The interface is disconnected from the remote Runtime Manager.
	`SREC_TIMEOUT`	The function does not return on time.
	`SREC_WRONG_ARGUMENT`	The name or the IInstance pointer is invalid.
	`SREC_LIMIT_REACHED`	There are already 16 instances registered in Runtime Manager.
	`SREC_ALREADY_EXISTS`	An instance with this name already exists.

Example C++	`ISimulationRuntimeManager * api = NULL;`
	`ERuntimeErrorCode result = InitializeApi(&api);`
	
	`// Example: How To Create And Register An Instance`
	`// And To Get An Interface Of The Instance The Same Time`
	`IInstance* psa = NULL;`
	`if (result == SREC_OK)`
	`{`
	` result = api->RegisterInstance(&psa);`
	`}`	

NOTE
Native C++
If you no longer require the interface, delete the interface.
See DestroyInterface() (Page 115).

Table 8-413 RegisterInstance() - .NET (C#)

Syntax	`IInstance RegisterInstance();`
	`IInstance RegisterInstance(string in_InstanceName);`
	`IInstance RegisterInstance(ECPUType in_CPUType);`
	`IInstance RegisterInstance(ECPUType in_CPUType string in_InstanceName);`

Parameters	• `ECPUType in_CPUType:` Defines which CPU type is simulated at the start of the instance. The default setting is `"ECPUType.Unspecified"`. When a different CPU type is loaded via STEP 7 or from the Virtual SIMATIC Memory Card, this CPU type applies. • `string in_InstanceName:` Name to be assigned to the instance. Every instance must have a unique name. If no name is assigned when registering a new instance, the instance is given the name `"Instance_#"` (# is the ID of the instance). If this name already exists, the name `"Instance_#.#"` is used, in which the second # is a counter that is incremented until the name is unique. The length of the name must be less than `DINSTANCE_NAME_LENGTH`. See Data types (Page 297).
Return values	If the function is successful, an interface of a virtual controller. Otherwise, a Null pointer.

Exceptions	`Siemens.Simatic.Simulation.Runtime.SimulationRuntimeException`	
	Runtime error code	Description
	`ERuntimeErrorCode.InterfaceRemoved`	The interface is disconnected from the remote Runtime Manager.
	`ERuntimeErrorCode.Timeout`	The function does not return on time.
	`ERuntimeErrorCode.WrongArgument`	The name is invalid.
	`ERuntimeErrorCode.LimitReached`	There are already 16 instances registered in Runtime Manager.
	`ERuntimeErrorCode.AlreadyExists`	An instance with this name already exists.

RegisterCustomInstance()

Registers a new instance of a virtual controller in Runtime Manager. Creates and returns an interface of this instance.

Table 8-414 RegisterCustomInstance() - Native C++

Syntax	`ERuntimeErrorCode RegisterCustomInstance(WCHAR* in_VplcDll, IInstance** out_InstanceInterface);` `ERuntimeErrorCode RegisterCustomInstance(WCHAR* in_VplcDll, WCHAR* in_InstanceName, IInstance** out_InstanceInterface);`	
Parameters	• `WCHAR* in_VplcDll:` The complete path to the DLL of the virtual controller that Siemens.Simatic.Simulation.Runtime.Instance.exe loads at PowerOn. • `WCHAR* in_InstanceName:` Name to be assigned to the instance. Every instance must have a unique name. If no name is assigned when registering a new instance, the instance is given the name "`Instance_#`" (# is the ID of the instance). If this name already exists, the name "`Instance_#.#`" is used, in which the second # is a counter that is incremented until the name is unique. The length of the name must be less than `DINSTANCE_NAME_LENGTH`. See Data types (Page 297). • `IInstance** out_InstanceInterface:` Pointer to a Simulation Runtime interface pointer. The pointer must be initialized with `NULL`. The interface is created within the function.	
Return values	Runtime error code	Description
	`SREC_OK`	The function is successful.
	`SREC_INTERFACE_REMOVED`	The interface is disconnected from the remote Runtime Manager.
	`SREC_TIMEOUT`	The function does not return on time.
	`SREC_WRONG_ARGUMENT`	The DLL name, the instance name or the IInstance pointer is invalid.
	`SREC_LIMIT_REACHED`	There are already 16 instances registered in Runtime Manager.
	`SREC_ALREADY_EXISTS`	An instance with this name already exists.

Example C++	`ISimulationRuntimeManager * api = NULL;`
	`ERuntimeErrorCode result = InitializeApi(&api);`
	
	`// Example: How To Create And Register An Instance`
	`// And To Get An Interface Of The Instance The Same Time`
	`IInstance* psa = NULL;`
	`if (result == SREC_OK)`
	`{`
	` result = api->`**RegisterCustomInstance**`(L"C:\\Temp\\vplc.dll", &psa);`	

	`}`

NOTE
Native C++
If you no longer require the interface, delete the interface.
See DestroyInterface() (Page 115).

Table 8-415 RegisterCustomInstance() - .NET (C#)

Syntax	`IInstance RegisterCustomInstance(string in_VplcDll);` `IInstance RegisterCustomInstance(string in_VplcDll, string in_InstanceName);`	
Parameters	• `string in_VplcDll:` The complete path to the DLL of the virtual controller that Siemens.Simatic.Simulation.Runtime.Instance.exe loads at PowerOn. • `string in_InstanceName:` Name to be assigned to the instance. Every instance must have a unique name. If no name is assigned when registering a new instance, the instance is given the name `"Instance_#"` (# is the ID of the instance). If this name already exists, the name `"Instance_#.#"` is used, in which the second # is a counter that is incremented until the name is unique. The length of the name must be less than `DINSTANCE_NAME_LENGTH`. See Data types (Page 297).	
Return values	If the function is successful, an interface of a virtual controller; otherwise, a Null pointer.	
Exceptions	`Siemens.Simatic.Simulation.Runtime.SimulationRuntimeException`	
	Runtime error code	Description
	`ERuntimeErrorCode.InterfaceRemoved`	The interface is disconnected from the remote Runtime Manager.
	`ERuntimeErrorCode.Timeout`	The function does not return on time.
	`ERuntimeErrorCode.WrongArgument`	The name or the ID is invalid.
	`ERuntimeErrorCode.LimitReached`	There are already 16 instances registered in Runtime Manager.
	`ERuntimeErrorCode.AlreadyExists`	An instance with this name already exists.

CreateInterface()

Creates and returns an interface of an already registered instance of a virtual controller. The instance could have been registered via the application or another application that uses the Simulation Runtime API.

Table 8-416 CreateInterface() - Native C++

Syntax	`ERuntimeErrorCode CreateInterface(WCHAR* in_InstanceName, IInstance** out_InstanceInterface);` `ERuntimeErrorCode CreateInterface(INT32 in_InstanceID, IInstance** out_InstanceInterface);`
Parameters	• `INT32 in_InstanceID:` The ID of the registered instance from which you want to receive the interface. • `WCHAR* in_InstanceName:` The name of the registered instance from which you want to receive the interface. • `IInstance** out_InstanceInterface:` Pointer to a Simulation Runtime interface pointer. The pointer must be initialized with `NULL`. The interface is created within the function.

Return values	Runtime error code	Description
	SREC_OK	The function is successful.
	SREC_INTERFACE_REMOVED	The interface is disconnected from the remote Runtime Manager.
	SREC_TIMEOUT	The function does not return on time.
	SREC_WRONG_ARGUMENT	The name, the ID or the IInstance- pointer is invalid.
	SREC_DOES_NOT_EXIST	The instance is not registered in Runtime Manager.

Example C++	`ISimulationRuntimeManager * api = NULL;`
	`ERuntimeErrorCode result = InitializeApi(&api);`
	
	`IInstance* psa1 = NULL;`
	`IInstance* psa2 = NULL;`
	`if (result == SREC_OK)`
	`{`
	` result = api->`**CreateInterface**`(0, &psa1);`
	`result = api->`**CreateInterface**`(0, &psa2); // psa2 will be the same as psa1`
	`}`	

Example C++	`ISimulationRuntimeManager * api = NULL;`
	`ERuntimeErrorCode result = InitializeApi(&api);`
	
	`IInstance* psa = NULL;`
	`if (result == SREC_OK)`
	`{`
	` result = api->`**CreateInterface**`(L"My SimulationRuntime Instance", &psa);`
	`}`	

NOTE
Native C++
If you no longer require the interface, delete the interface.
See DestroyInterface() (Page 115)

Table 8-417 CreateInterface() - .NET (C#)

Syntax	`IInstance CreateInterface(string in_InstanceName);` `IInstance CreateInterface(INT32 in_InstanceID);`	
Parameters	• `INT32 in_InstanceID:` The ID of the registered instance from which you want to receive the interface. • `string in_InstanceName:` The name of the registered instance from which you want to receive the interface.	
Return values	If the function is successful, an interface of a virtual controller; otherwise, a Null pointer.	
Exceptions	`Siemens.Simatic.Simulation.Runtime.SimulationRuntimeException`	
	Runtime error code	Description
	`ERuntimeErrorCode.InterfaceRemoved`	The interface is disconnected from the remote Runtime Manager.
	`ERuntimeErrorCode.Timeout`	The function does not return on time.
	`ERuntimeErrorCode.WrongArgument`	The name or the ID is invalid.
	`ERuntimeErrorCode.DoesNotExists`	The instance is not registered in Runtime Manager.

8.7.3 Events for IRemoteRuntimeManager

8.7.3.1 OnConnectionLost events

Description

The event is triggered when the connection to the Remote Runtime Manager has been terminated.

OnConnectionLost

Registers or unregisters an event handler method.

Table 8-418 OnConnectionLost - .NET (C#)

Syntax	`event Delegate_IRRTM OnConnectionLost;`
Parameters	None. See Delegate_IRRTM (Page 293)
Return values	None
Exceptions	None
Note	The event handler method runs in a separate thread.

RegisterOnConnectionLostCallback()

When the event occurs, the registered callback function is called. Multiple callback functions can be registered for the event.

Table 8-419 RegisterOnConnectionLostCallback() - Native C++

Syntax	`void RegisterOnConnectionLostCallback(EventCallback_IRRTM in_CallbackFunction);`
Parameters	`EventCallback_IRRTM in_CallbackFunction:` A callback function that subscribes to an event. See EventCallback_IRRTM (Page 283).
Return values	None
Note	The callback function runs in a separate thread.

RegisterOnConnectionLostEvent()

When the event occurs, the registered event object is set to the signaled state. Only one event object can be registered for the event. Registration of a new event object causes the previous event object to be deleted.

Table 8-420 RegisterOnConnectionLostEvent() - Native C++

Syntax	`void RegisterOnConnectionLostEvent();` `void RegisterOnConnectionLostEvent(HANDLE* in_Event);`
Parameters	• `None:` An internal event object is registered. • `HANDLE* in_Event:` A handle for a user-specific event object. The event object is registered.

Return values	None

Table 8-421 RegisterOnConnectionLostEvent() - .NET (C#)

Syntax	`void RegisterOnConnectionLostEvent();`
Parameters	None
Return values	None

UnregisterOnConnectionLostCallback()

Unregisters the callback function. When the event occurs, no callback function is called.

Table 8-422 UnregisterOnConnectionLostCallback() - Native C++

Syntax	`void UnregisterOnConnectionLostCallback();`
Parameters	Optional parameter of the same type as for the Register*() function If you use the parameter, it uninstalls the specific function; otherwise, the last registered callback function is unregistered.
Return values	None

UnregisterOnConnectionLostEvent()

Unregisters the event object.

Table 8-423 UnregisterOnConnectionLostEvent() - Native C++

Syntax	`void UnregisterOnConnectionLostEvent();`
Parameters	None
Return values	None

Table 8-424 UnregisterOnConnectionLostEvent() - .NET (C#)

Syntax	`void UnregisterOnConnectionLostEvent();`
Parameters	None
Return values	None

WaitForOnConnectionLostEvent()

The function blocks the program until the registered event object is in the signaled state or the timeout interval is exceeded.

Table 8-425 WaitForOnConnectionLostEvent() - Native C++

Syntax	`bool WaitForOnConnectionLostEvent();` `bool WaitForOnConnectionLostEvent(UINT32 in_Time_ms);`
Parameters	• `None:` The time limit is set to `INFINITE`. • `UINT32 in_Time_ms:` Value for the time limit in milliseconds.
Return values	• `true:` If the event object was set to the signaled state. • `false:` If no event was received during the defined time limit.

Table 8-426 WaitForOnConnectionLostEvent() - .NET (C#)

Syntax	`bool WaitForOnConnectionLostEvent();` `bool WaitForOnConnectionLostEvent(UInt32 in_Time_ms);`
Parameters	• `None:` The time limit is set to `INFINITE`. • `UInt32 in_Time_ms:` Value for the time limit in milliseconds.
Return values	• `true:` If the event object was set to the signaled state. • `false:` If no event was received during the defined time limit.

8.8 Data types

Supported data types

In PLCSIM Advanced V5.0, the Runtime API supports the data types of the S7-1500 CPUs.

Converting data types

When writing, data types are not transferred BCD-coded but mapped onto primitive data types.
The data types Counter, Date and Time must be transferred to the API BCD-coded so that the values are written to the counter and no incorrect values are returned when reading.
For these data types, you must perform a BCD conversion before writing and a BCD back-conversion after reading.

Example:
If the value 999 is transferred to the API as 2457_H, then `Write` modifies the value 2457_H to 999. Without BCD conversion, there is no `UInt16` value and `Write` writes no value at all.

Additional information

For information on data types and conversion, refer to section "Data types" in the SIMATIC STEP 7 Basic/Professional (https://support.industry.siemens.com/cs/ww/en/view/109755202) System Manual.

8.8.1 DLL import functions (Native C++)

8.8.1.1 ApiEntry_Initialize

Description

Type of the central entry point for the API library (DLL).

Table 8-427 ApiEntry_Initialize - Native C++

Syntax	`typedef ERuntimeErrorCode(*ApiEntry_Initialize)(ISimulationRuntimeManager** out_RuntimeManagerInterface);`	
Parameters	• `ISimulationRuntimeManager** out_SimulationRuntimeManagerInterface:` Pointer to a Runtime Manager interface pointer. The pointer must be initialized with NULL. The interface is created within the function. • `UINT32 in_InterfaceVersion:` Version of the API interface to be downloaded: `API_DLL_INTERFACE_VERSION`.	
Return values	Runtime error code	Condition
	`SREC_OK`	The function is successful.
	`SREC_WRONG_ARGUMENT`	The pointer to the Runtime Manager interface is NULL.
	`SREC_WRONG_VERSION`	The version of the interface in use does not match the version of the API library (DLL).
	`SREC_CONNECTION_ERROR`	Unable to establish a connection to the Runtime Manager.
	`SREC_CONFIG_FILE_ERROR`	Operation regarding the configuration file "User-InterfaceConfiguration.xml" has failed, for example, create, read, write.

8.8.1.2 ApiEntry_DestroyInterface

Description

Type of the entry point for DestroyInterface (Page 115).

Table 8-428 ApiEntry_DestroyInterface - Native C++

Syntax	`typedef ERuntimeErrorCode(*ApiEntry_DestroyInterface)(IBaseInterface* in_Interface);`	
Parameters	`IBaseInterface* in_Interface:` The interface to be deleted.	
Return values	Runtime error code	Condition
	`SREC_OK`	The function is successful.
	`SREC_WRONG_ARGUMENT`	The pointer to the interface is NULL.

8.8.2 Event callback functions (Native C++)

8.8.2.1 EventCallback_VOID

Description

Table 8-429 EventCallback_VOID - Native C++

Syntax	`typedef void (*EventCallback_VOID)();`
Parameters	None
Return values	None

8.8.2.2 EventCallback_SRCC_UINT32_UINT32_INT32

Description

Table 8-430 EventCallback_SRCC_UINT32_UINT32_INT32 - Native C++

Syntax	`ERuntimeConfigChanged in_RuntimeConfigChanged, UINT32 in_Param1, UINT32 in_Param2, INT32 in_Param3);`			
Parameters	`ERuntimeConfigChanged in_RuntimeConfigChanged`	`UInt32 in_Param1`	`UInt32 in_Param2`	`Int32 in_Param3`
	`SRCC_INSTANCE_REGISTERED`	–	–	ID of the registered instance
	`SRCC_INSTANCE_UNREGISTERED`	–	–	ID of the unregistered instance
	`SRCC_CONNECTION_OPENED`	IP of the remote Runtime Manager	Port of the remote Runtime Manager	–
	`SRCC_CONNECTION_CLOSED`	IP of the remote Runtime Manager	Port of the remote Runtime Manager	–
	`SRCC_PORT_OPENED`	The open port	–	–
	`SRCC_PORT_CLOSED`	–	–	–
Return values	None			

8.8.2.3 EventCallback_SRRSI_AD

Description

Table 8-431 EventCallback_SRRSI_AD - Native C++

Syntax	`typedef void (*EventCallback_SRRSI_AD)(EAutodiscoverType in_AutodiscoverMsg, SAutodiscoverData in_AutodiscoverData);`

Parameters	• `in_AutodiscoverMsg`: A value from the list of predefined types of events, see EAutodiscoverType (Page 314). – `SRRSI_DISCOVER_STARTED`, if the identification process was started by successfully calling the function `RunAutodisover()`. – `SRRSI_DISCOVER_DATA`, if a Runtime Manager in the network was determined by the identification process. For detailed information about the found Runtime Manager, see parameter `in_AutodiscoverData`. – `SRRSI_DISCOVER_FINISHED`, if the identification process was completed after the time defined by the "in_Timeout" parameter had elapsed. – `SRRSI_DISCOVER_STARTED` and `SRRSI_DISCOVER_FINISHED` are always triggered, even if no data is received. • `in_AutodiscoverData`: Data from the Remote Runtime Manager. The parameter contains valid data only if `in_AutodiscoverMsg` = `SRRSI_DISCOVER_DATA`. Otherwise it is initialized with 0. See SAutodiscoverData (Page 334).
Return values	None

8.8.2.4 EventCallback_IRRTM

Description

Table 8-432 EventCallback_IRRTM - Native C++

Syntax	`typedef void (*EventCallback_IRRTM)(IRemoteRuntimeManager* in_Sender);`
Parameters	• `IRemoteRuntimeManager* in_Sender`: An interface of the remote Runtime Manager that receives this event.
Return values	None

8.8.2.5 EventCallback_II_SREC_ST_SROS_SROS

Description

Table 8-433 EventCallback_II_SREC_ST_SROS_SROS - Native C++

Syntax	`typedef void (*EventCallback_II_SREC_ST_SROS_SROS)(IInstance* in_Sender, ERuntimeErrorCode in_ErrorCode, SYSTEMTIME in_SystemTime, EOperatingState in_PrevState, EOperatingState in_OperatingState);`
Parameters	• `IInstance* in_Sender`: An interface of the instance that receives this event. • `ERuntimeErrorCode in_ErrorCode`: A possible error code. • `SYSTEMTIME in_SystemTime`: The virtual system time of the virtual controller at the time when this event was triggered. • `EOperatingState in_PrevState`: The operating state before the change. • `EOperatingState in_OperatingState`: The current operating state.
Return values	None

Error codes	Runtime error code	Condition
	SREC_OK	The function is successful.
	SREC_WARNING_TRIAL_MODE_ACTIVE	No license available. You can use the instance without restrictions with the Trial License. Afterwards, the instance is shut down.
	SREC_LICENSE_NOT_FOUND	Test mode has expired.
	SREC_COMMUNICATION_INTERFACE_NOT_AVAILABLE	A problem has occurred with the selected communication interface. Check your settings.

8.8.2.6 EventCallback_II_SREC_ST_UINT32_INT64_INT64_UINT32

Description

Table 8-434 EventCallback_II_SREC_ST_UINT32_INT64_INT64_UINT32 - Native C++

Syntax	`typedef void (*EventCallback_II_SREC_ST_UINT32_INT64_INT64_UINT32)(IInstance* in_Sender, ERuntimeErrorCode in_ErrorCode, SYSTEMTIME in_SystemTime, UINT32 in_Id, INT64 in_TimeSinceSameSyncPoint_ns, INT64 in_TimeSinceAnySyncPoint_ns, UINT32 in_SyncPointCount);`
Parameters	• `IInstance* in_Sender:` An interface of the instance that receives this event. • `ERuntimeErrorCode in_ErrorCode:` A possible error code. • `SYSTEMTIME in_SystemTime:` The virtual system time of the virtual controller at the time when this event was triggered. • `UINT32 in_Id:` For the `SingleStep_Bus` operating mode: The ID of the I/O system that is used for cycle-controlled synchronization of the virtual controller. For all other operating modes: The ID of the process image partition (PIP) that triggers this event. 0 for the cycle control point (End of cycle). • `INT64 in_TimeSinceSameSyncPoint_ns:` The virtual time (in nanoseconds) since the last synchronization point of the same process image partition ID was reached. For the time-controlled operating modes: The runtime since the last call of the `StartProcessing()` function. • `INT64 in_TimeSinceAnySyncPoint_ns:` The virtual time (in nanoseconds) since the last synchronization point of any process image partition ID was reached. For the time-controlled operating modes: The runtime since the last call of the `StartProcessing()` function. • `UINT32 in_SyncPointCount:` The number of synchronization points since the last event. If the events are triggered faster than they are received, multiple events are combined into one event. In this case, this value contains the number of cycles since the last event was received.
Return values	None

8.8.2.7 EventCallback_II_SREC_ST

Description

Table 8-435 EventCallback_II_SREC_ST - Native C++

Syntax	`typedef void (*EventCallback_II_SREC_ST)(IInstance* in_Sender, ERuntimeErrorCode in_ErrorCode, SYSTEMTIME in_SystemTime);`
Parameters	• `IInstance* in_Sender:` An interface of the instance that receives this event. • `ERuntimeErrorCode in_ErrorCode:` A possible error code. • `SYSTEMTIME in_SystemTime:` The virtual system time of the virtual controller at the time when this event was triggered.
Return values	None

8.8.2.8 EventCallback_II_SREC_ST_SRICC_UINT32_UINT32_UINT32_UINT32

Description

Table 8-436 EventCallback_II_SREC_ST_SRICC_UINT32_UINT32_UINT32_UINT32 - Native C++

Syntax	`typedef void (*EventCallback_II_SREC_ST_SRICC_UINT32_UINT32_UINT32_UINT32)(IInstance* in_Sender, ERuntimeErrorCode in_ErrorCode, SYSTEMTIME in_SystemTime, EInstanceConfigChanged in_InstanceConfigChanged, UINT32 in_Param1, UINT32 in_Param2, UINT32 in_Param3, UINT32 in_Param4);`				
Parameters	• `IInstance in_Sender:` An interface of the instance that receives this event. • `ERuntimeErrorCode in_ErrorCode:` A possible error code. • `SYSTEMTIME in_SystemTime:` The virtual system time of the virtual controller at the time when this event was triggered.				
	`EInstanceConfigChanged in_InstanceConfigChanged`	`UINT32 in_Param1`	`UINT32 in_Param2`	`UINT32 in_Param3`	`UINT32 in_Param4`
	`SRICC_HARDWARE_SOFTWARE_CHANGED`	–	–	–	–
	`SRICC_IP_CHANGED`	The ID of the interface	The new IP	The new subnet mask	The new standard gateway
Return values	None				

8.8.2.9 EventCallback_II_SREC_ST_SRLT_SRLM

Description

Table 8-437 EventCallback_II_SREC_ST_SRLT_SRLM - Native C++

Syntax	`typedef void (*EventCallback_II_SREC_ST_SRLT_SRLM)(IInstance* in_Sender, ERuntimeErrorCode in_ErrorCode, SYSTEMTIME in_SystemTime, ELEDType in_LEDType, ELEDMode in_LEDMode);`
Parameters	• `IInstance* in_Sender:` An interface of the instance that receives this event. • `ERuntimeErrorCode in_ErrorCode:` A possible error code. • `SYSTEMTIME in_SystemTime:` The virtual system time of the virtual controller at the time when this event was triggered. • `ELEDType in_LEDType:` The LED type that changed its state. • `ELEDMode in_LEDMode:` The new state of the LED display.
Return values	None

8.8.2.10 EventCallback_II_SREC_ST_SDRI

Description

Table 8-438 EventCallback_II_SREC_ST_SDRI - Native C++

Syntax	`typedef void (*EventCallback_II_SREC_ST_SDRI)(IInstance* in_Sender, ERuntimeErrorCode in_ErrorCode, SYSTEMTIME in_SystemTime, SDataRecordInfo in_DataRecordInfo);`
Parameters	• `IInstance* in_Sender:` An interface of the instance that receives this event. • `ERuntimeErrorCode in_ErrorCode:` A possible error code. • `SYSTEMTIME in_SystemTime:` The virtual system time of the virtual controller at the time when this event was triggered. • `SDataRecordInfo in_DataRecordInfo:` The structure `SDataRecordInfo` contains the following information: – The HW identifier from which the CPU wants to read the data record – The index of the collected data record – The maximum size of the data record which the IO device can transfer.
Return values	None

8.8.2.11 EventCallback_II_SREC_ST_SDRI_BYTE

Description

Table 8-439 EventCallback_II_SREC_ST_SDRI_BYTE - Native C++

Syntax	`typedef void (*EventCallback_II_SREC_ST_SDRI_BYTE)(IInstance* in_Sender, ERuntimeErrorCode in_ErrorCode, SYSTEMTIME in_SystemTime, SDataRecordInfo in_DataRecordInfoconst BYTE* in_Data);`

Parameters	• `IInstance* in_Sender:` An interface of the instance that receives this event. • `ERuntimeErrorCode in_ErrorCode:` A possible error code. • `SYSTEMTIME in_SystemTime:` The virtual system time of the virtual controller at the time when this event was triggered. • `SDataRecordInfo in_DataRecordInfo:` The structure `SDataRecordInfo` contains the following information: – The HW identifier to which the CPU wants to write the data record – The index of the supplied data record – Size of data record • `const BYTE* in_Data:` The data record. This pointer becomes invalid after the callback function has returned.
Return values	None

8.8.2.12 EventCallback_II_SREC_ST_UINT32_UINT32

Description

Table 8-440 EventCallback_II_SREC_ST_UINT32_UINT32 - Native C++

Syntax	`typedef void (*EventCallback_II_SREC_ST_UINT32_UINT32)(IInstance* in_Sender, ERuntimeErrorCode in_ErrorCode, SYSTEMTIME in_SystemTime, UINT32 in_HardwareIdentifier), UINT32 in_SequenceNumber);`
Parameters	• `IInstance* in_Sender:` An interface of the instance that receives this event. • `ERuntimeErrorCode in_ErrorCode:` A possible error code. • `SYSTEMTIME in_SYSTEMTIME:` The virtual system time of the virtual controller at the time when this event was triggered. • `UINT32 in_HardwareIdentifier:` The hardware identifier of the module or submodule which sends the diagnostics event. • `UINT32 in_SequenceNumber:` PLCSIM Advanced assigns a unique consecutive number to each interrupt event. According to PROFINET standard the sequence number is 10 bits wide (1 to $7FF_H$). When the highest number is reached the numbering starts again at 1. **Note** In a real hardware system the IO controller uses the sequence number to check if it has lost a hardware interrupt. During the simulation, the sequence number creates the relation between interrupt request and the associated acyclic alarm.
Return values	None

8.8.2.13 EventCallback_II_SREC_ST_UINT32_UINT32_EPET_UINT32

Description

Table 8-441 EventCallback_II_SREC_ST_UINT32_UINT32_EPET_UINT32 - Native C++

Syntax	`typedef void (*EventCallback_II_SREC_ST_UINT32_UINT32_EPET_UINT32)(IInstance* in_Sender, ERuntimeErrorCode in_ErrorCode, SYSTEMTIME in_SystemTime, UINT32 in_HardwareIdentifier, UINT32 in_Channel, EProcessEventType in_ProcessEventType, UINT32 in_SequenceNumber);`
Parameters	• `IInstance* in_Sender:` An interface of the instance that receives this event. • `ERuntimeErrorCode in_ErrorCode:` A possible error code. • `SYSTEMTIME in_SystemTime:` The virtual system time of the virtual controller at the time when this event was triggered. • `UINT32 in_HardwareIdentifier:` The hardware identifier of the I/O module that sends the process event. • `UINT32 in_Channel:` The channel of the I/O module which sends the process event. • `EProcessEventType in_ProcessEventType:` A value from the list of predefined types of events for S7 modules, see EProcessEventType (Page 331). • `UINT32 in_SequenceNumber:` PLCSIM Advanced assigns a unique consecutive number to each interrupt event. According to PROFINET standard the sequence number is 10 bits wide (1 to $7FF_H$). When the highest number is reached the numbering starts again at 1. **Note** In a real hardware system the I/O controller uses the sequence number to check if it has lost a hardware interrupt. During the simulation, the sequence number creates the relation between interrupt request and the associated acyclic alarm.
Return values	None

8.8.2.14 EventCallback_II_SREC_ST_UINT32_EPPET_UINT32

Description

Table 8-442 EventCallback_II_SREC_ST_UINT32_EPPET_UINT32 - Native C++

Syntax	`typedef void (*EventCallback_II_SREC_ST_UINT32_EPPET_UINT32)(IInstance* in_Sender, ERuntimeErrorCode in_ErrorCode, SYSTEMTIME in_SYSTEMTIME, UINT32 in_HardwareIdentifier, EPullOrPlugEventType in_PullOrPlugEventType, UINT32 in_SequenceNumber);`
Parameters	• `IInstance* in_Sender:` An interface of the instance that receives this event. • `ERuntimeErrorCode in_ErrorCode:` A possible error code. • `SYSTEMTIME in_SYSTEMTIME:` The virtual system time of the virtual controller at the time when this event was triggered. • `UINT32 in_HardwareIdentifier:` The hardware identifier of the module or submodule which sends the pull/plug event. • `EPullOrPlugEventType in_PullOrPlugEventType:` A value from the list of predefined types of events for S7 modules, see EPullOrPlugEventType (Page 331).

	• `UINT32 in_SequenceNumber:` PLCSIM Advanced assigns a unique consecutive number to each interrupt event. According to PROFINET standard the sequence number is 10 bits wide (1 to $7FF_H$). When the highest number is reached the numbering starts again at 1. **Note** In a real hardware system the IO controller uses the sequence number to check if it has lost a hardware interrupt. During the simulation, the sequence number creates the relation between interrupt request and the associated acyclic alarm.
Return values	None

8.8.2.15 EventCallback_II_SREC_ST_UINT32_ERSFET

Description

Table 8-443 EventCallback_II_SREC_ST_UINT32_ERSFET - Native C++

Syntax	`typedef void (*EventCallback_II_SREC_ST_UINT32_ERSFET)(IInstance* in_Sender, ERuntimeErrorCode in_ErrorCode, SYSTEMTIME in_SystemTime, UINT32 in_HardwareIdentifier, ERackOrStationFaultType in_EventType);`
Parameters	• `IInstance* in_Sender:` An interface of the instance that receives this event. • `ERuntimeErrorCode in_ErrorCode:` A possible error code. • `SYSTEMTIME in_SYSTEMTIME:` The virtual system time of the virtual controller at the time when this event was triggered. • `UINT32 in_HardwareIdentifier:` The hardware identifier of the module or submodule which sends the diagnostics event. • `ERackOrStationFaultType in_EventType:` A value from the list of predefined RackOrStationFault event types. See ERackOrStationFaultType (Page 333).
Return values	None

8.8.2.16 EventCallback_II_SREC_ST_UINT32

Description

Table 8-444 EventCallback_II_SREC_ST_UINT32 - Native C++

Syntax	`typedef void (*EventCallback_II_SREC_ST_UINT32)(IInstance* in_Sender, ERuntimeErrorCode in_ErrorCode, SYSTEMTIME in_SystemTime, UINT32 in_HardwareIdentifier);`
Parameters	• `IInstance* in_Sender:` An interface of the instance that receives this event. • `ERuntimeErrorCode in_ErrorCode:` A possible error code. • `SYSTEMTIME in_SYSTEMTIME:` The virtual system time of the virtual controller at the time when this event was triggered. • `UINT32 in_HardwareIdentifier:` The hardware identifier of the module or submodule which generates the status, update or Profile event. The identifier must belong to a hardware component in the currently loaded project.

Return values	None

8.8.3 Delegate definitions (managed code)

8.8.3.1 Delegate_Void

Description

Table 8-445 Delegate_Void - .NET (C#)

Syntax	`delegate void Delegate_Void();`
Parameters	None
Return values	None

8.8.3.2 Delegate_SRCC_UINT32_UINT32_INT32

Description

Table 8-446 Delegate_SRCC_UINT32_UINT32_INT32 - .NET (C#)

Syntax	`delegate void Delegate_SRCC_UINT32_UINT32_INT32(ERuntimeConfigChanged in_RuntimeConfigChanged, UInt32 in_Param1, UInt32 in_Param2, Int32 in_Param3);`			
Parameters	`ERuntimeConfigChanged in_RuntimeConfigChanged`	`UInt32 in_Param1`	`UInt32 in_Param2`	`Int32 in_Param3`
	`InstanceRegistered`	–	–	ID of the registered instance
	`InstanceUnregistered`	–	–	ID of the unregistered instance
	`ConnectionOpened`	IP of the Remote Runtime Manager	Port of the remote Runtime Manager	–
	`ConnectionClosed`	IP of the Remote Runtime Manager	Port of the remote Runtime Manager	–
	`PortOpened`	The open port	–	–
	`PortClosed`	–	–	–
Return values	None			

8.8.3.3 Delegate_SRRSI_AD

Description

Table 8-447 Delegate_SRRSI_AD - .NET (C#)

Syntax	`delegate void Delegate_SRRSI_AD(EAutodiscoverType in_AutodiscoverType, SAutodiscoverData in_AutodiscoverData);`
Parameters	• `in_AutodiscoverType` A value from the list of predefined types of events, see EAutodiscoverType (Page 334). – `AutodiscoverStarted`, if the identification process was started by successfully calling the function `RunAutodisover()`. – `AutodiscoverData`, if a Runtime Manager in the network was determined by the identification process. For detailed information about the found Runtime Manager, see parameter `in_AutodiscoverData`. – `AutodiscoverFinished`, if the identification process is completed after the time defined by the parameter "in_Timeout" has elapsed. – `AutodiscoverStarted` and `AutodiscoverFinished` are always triggered, even if no data is received. • `in_AutodiscoverData` Data from the Remote Runtime Manager. The parameter contains valid data only if `in_AutodiscoverType` = `AutodiscoverData`. Otherwise it is initialized with 0. See SAutodiscoverData (Page 314).
Return values	None

8.8.3.4 Delegate_II_EREC_DT

Description

Table 8-448 Delegate_II_EREC_DT - .NET (C#)

Syntax	`delegate void Delegate_II_EREC_DT (IInstance in_Sender, ERuntimeErrorCode in_ErrorCode, DateTime in_DateTime);`
Parameters	• `IInstance in_Sender:` An interface of the instance that receives this event. • `ERuntimeErrorCode in_ErrorCode:` A possible error code. • `DateTime in_DateTime:` The virtual system time of the virtual controller at the time when this event was triggered.
Return values	None

8.8.3.5 Delegate_II_EREC_DT_EOS_EOS

Description

Table 8-449 Delegate_II_EREC_DT_EOS_EOS - .NET (C#)

Syntax	`delegate void Delegate_II_EREC_DT_EOS_EOS(IInstance in_Sender, ERuntimeErrorCode in_ErrorCode, DateTime in_DateTime, EOperatingState in_PrevState, EOperatingState in_OperatingState);`

Parameters	• `IInstance in_Sender:` An interface of the instance that receives this event. • `ERuntimeErrorCode in_ErrorCode:` A possible error code. • `DateTime in_DateTime:` The virtual system time of the virtual controller at the time when this event was triggered. • `EOperatingState in_PrevState:` The operating state before the change. • `EOperatingState in_OperatingState:` The current operating state.	
Return values	None	
Error codes	Runtime error code	Condition
	`ERuntimeErrorCode.OK`	The function is successful.
	`ERuntimeErrorCode.WarningTrialModeActive`	No license available. You can use the instance without restrictions with the Trial License. Afterwards, the instance is shut down.
	`ERuntimeErrorCode.LicenseNotFound`	Test mode has expired.
	`ERuntimeErrorCode.CommunicationInterfaceNotAvailable`	A problem has occurred with the selected communication interface. Check your settings.

8.8.3.6 Delegate_II_EREC_DT_ELT_ELM

Description

Table 8-450 Delegate_II_EREC_DT_ELT_ELM - .NET (C#)

Syntax	`delegate void Delegate_II_EREC_DT_ELT_ELM(IInstance in_Sender, ERuntimeErrorCode in_ErrorCode, DateTime in_DateTime, ELEDType in_LEDType, ELEDMode in_LEDMode);`
Parameters	• `IInstance in_Sender:` An interface of the instance that receives this event. • `ERuntimeErrorCode in_ErrorCode:` A possible error code. • `DateTime in_DateTime:` The virtual system time of the virtual controller at the time when this event was triggered. • `ELEDType in_LEDType:` The LED type that changed its state. • `ELEDMode in_LEDMode:` The new state of the LED display.
Return values	None

8.8.3.7 Delegate_II_EREC_DT_UINT32_INT64_INT64_UINT32

Description

Table 8-451 Delegate_II_EREC_DT_UINT32_INT64_INT64_UINT32 - .NET (C#)

Syntax	`delegate void Delegate_II_EREC_DT_UINT32_INT64_INT64_UINT32 (IInstance in_Sender, ERuntimeErrorCode in_ErrorCode, DateTime in_DateTime, UInt32 in_Id, Int64 in_TimeSinceSameSyncPoint_ns, Int64 in_TimeSinceAnySyncPoint_ns, UInt32 in_SyncPointCount);`
Parameters	• `IInstance in_Sender:` An interface of the instance that receives this event. • `ERuntimeErrorCode in_ErrorCode:` A possible error code. • `DateTime in_DateTime:` The virtual system time of the virtual controller at the time when this event was triggered. • `UInt32 in_Id:` For the `SingleStep_Bus` operating mode: The ID of the I/O system that is used for cycle-controlled synchronization of the virtual controller. For all other operating modes: The ID of the process image partition (PIP) that triggers this event. 0 for the cycle control point (End of cycle). Note: In the SingleStep operating modes, the transferred ID "in_Id" for the cycle control point has the value 0xFFFF. In this case, the time values are set to 0. • `Int64 in_TimeSinceSameSyncPoint_ns:` The virtual time (in nanoseconds) since the last synchronization point of the same process image partition ID was reached. Or the process time for the time-controlled operating modes. • `Int64 in_TimeSinceAnySyncPoint_ns:` The virtual time (in nanoseconds) since the last synchronization point of any process image partition ID was reached. Or the process time for the time-controlled operating modes. • `UInt32 in_SyncPointCount:` The number of synchronization points since the last event. If the events are triggered faster than they are received, multiple events are combined into one event. In this case, this value contains the number of cycles since the last event was received.
Return values	None

8.8.3.8 Delegate_IRRTM

Description

Table 8-452 Delegate_IRRTM - .NET (C#)

Syntax	`delegate void Delegate_IRRTM(IRemoteRuntimeManager in_Sender);`
Parameters	• `IRemoteRuntimeManager in_Sender:` An interface of the remote Runtime Manager that receives this event.
Return values	None

8.8.3.9 Delegate_II_EREC_DT_SRICC_UINT32_UINT32_UINT32_UINT32

Description

Table 8-453 Delegate_II_EREC_DT_SRICC_UINT32_UINT32_UINT32_UINT32 - .NET (C#)

Syntax	`delegate void Delegate_II_EREC_DT_SRICC_UINT32_UINT32_UINT32_UINT32(IInstance in_Sender, ERuntimeErrorCode in_ErrorCode, DateTime in_DateTime, EInstanceConfigChanged in_InstanceConfigChanged, UInt32 in_Param1, UInt32 in_Param2, UInt32 in_Param3, UInt32 in_Param4);`				
Parameters	• `IInstance in_Sender:` An interface of the instance that receives this event. • `ERuntimeErrorCode in_ErrorCode:` A possible error code. • `DateTime in_DateTime:` The virtual system time of the virtual controller at the time when this event was triggered.				
	`EInstanceConfigChanged in_InstanceConfigChanged`	`UInt32 in_Param1`	`UInt32 in_Param2`	`UInt32 in_Param3`	`UInt32 in_Param4`
	`HardwareSoftwareChanged`	–	–	–	–
	`IPChanged`	The ID of the interface	The new IP	The new subnet mask	The new standard gateway
Return values	None				

8.8.3.10 Delegate_II_EREC_DT_SDRI

Description

Table 8-454 Delegate_II_EREC_DT_SDRI - .NET (C#)

Syntax	`delegate void Delegate_II_EREC_DT_SDRI (IInstance in_Sender, ERuntimeErrorCode in_ErrorCode, DateTime in_DateTime, SDataRecordInfo in_DataRecordInfo);`
Parameters	• `IInstance in_Sender:` An interface of the instance that receives this event. • `ERuntimeErrorCode in_ErrorCode:` A possible error code. • `DateTime in_DateTime:` The virtual system time of the virtual controller at the time when this event was triggered. • `SDataRecordInfo in_DataRecordInfo:` The structure `SDataRecordInfo` contains the following information: – The HW identifier to which the CPU wants to write the data record – The index of the supplied data record – Size of data record – The data record
Return values	None

8.8.3.11 Delegate_II_EREC_DT_SDR

Description

Table 8-455 Delegate_II_EREC_DT_SDR - .NET (C#)

Syntax	`delegate void Delegate_II_EREC_DT_SDR (IInstance in_Sender, ERuntimeErrorCode in_ErrorCode, DateTime in_DateTime, SDataRecord in_DataRecord);`
Parameters	• `IInstance in_Sender:` An interface of the instance that receives this event. • `ERuntimeErrorCode in_ErrorCode:` A possible error code. • `DateTime in_DateTime:` The virtual system time of the virtual controller at the time when this event was triggered. • `SDataRecord in_DataRecord:` The structure `SDataRecord` contains the following information: – The HW identifier to which the CPU wants to write the data record – The index of the supplied data record – Size of data record – The data record
Return values	None

8.8.3.12 Delegate_SREC_ST_UINT32_EPPET_UINT32

Description

Table 8-456 Delegate_SREC_ST_UINT32_EPPET_UINT32 - .NET (C#)

Syntax	`delegate void Delegate_SREC_ST_UINT32 (IInstance in_Sender, ERuntimeErrorCode in_ErrorCode, DateTime in_DateTime, UInt32 in_HardwareIdentifier, EPullOrPlugEventType in_PullOrPlugEventType, UInt32 in_SequenceNumber);`
Parameters	• `IInstance in_Sender:` An interface of the instance that receives this event. • `ERuntimeErrorCode in_ErrorCode:` A possible error code. • `DateTime in_DateTime:` The virtual system time of the virtual controller at the time when this event was triggered. • `UInt32 in_HardwareIdentifier:` The hardware identifier of the module or submodule which sends the pull/plug event. • `EPullOrPlugEventType in_PullOrPlugEventType:` A value from the list of predefined types of events for S7 modules, see EPullOrPlugEventType (Page 331). • `UInt32 in_SequenceNumber:` PLCSIM Advanced assigns a unique consecutive number to each interrupt event. According to the PROFINET standard, the sequence number is only 10 bits wide, from 1 to 0x7FF. When the highest number is reached the numbering starts again at 1. **Note** In a real hardware system the IO controller uses the sequence number to check if it has lost a hardware interrupt. During the simulation, the sequence number creates the relation between interrupt request and the associated acyclic alarm.
Return values	None

8.8.3.13 Delegate_SREC_ST_UINT32_UINT32_EPET_UINT32

Description

Table 8-457 Delegate_SREC_ST_UINT32_UINT32_EPET_UINT32 - Native C++

Syntax	`delegate void Delegate_SREC_ST_UINT32_UINT32_EPET_UINT32(IInstance in_Sender, ERuntimeErrorCode in_ErrorCode, DateTime in_DateTime, UInt32 in_HardwareIdentifier, UInt32 in_Channel, EProcessEventType in_ProcessEventType, UInt32 in_SequenceNumber);`
Parameters	• `IInstance in_Sender:` An interface of the instance that receives this event. • `ERuntimeErrorCode in_ErrorCode:` A possible error code. • `DateTime in_DateTime:` The virtual system time of the virtual controller at the time when this event was triggered. • `UInt32 in_HardwareIdentifier:` The hardware identifier of the module or submodule which sends the process event. • `UInt32 in_Channel:` The channel of the I/O module which sends the process event. • `EProcessEventType in_ProcessEventType:` A value from the list of predefined types of events for S7 modules, see EProcessEventType (Page 331). • `UInt32 in_SequenceNumber:` PLCSIM Advanced assigns a unique consecutive number to each interrupt event. According to PROFINET standard the sequence number is 10 bits wide (1 to $7FF_H$). When the highest number is reached the numbering starts again at 1. **Note** In a real hardware system the I/O controller uses the sequence number to check if it has lost a hardware interrupt. During the simulation, the sequence number creates the relation between interrupt request and the associated acyclic alarm.
Return values	None

8.8.3.14 Delegate_SREC_ST_UINT32

Description

Table 8-458 Delegate_SREC_ST_UINT32 - .NET (C#)

Syntax	`delegate void Delegate_SREC_ST_UINT32 (IInstance in_Sender, ERuntimeErrorCode in_ErrorCode, DateTime in_DateTime, UInt32 in_HardwareIdentifier);`
Parameters	• `IInstance in_Sender:` An interface of the instance that receives this event. • `ERuntimeErrorCode in_ErrorCode:` A possible error code. • `DateTime in_DateTime:` The virtual system time of the virtual controller at the time when this event was triggered. • `UInt32 in_HardwareIdentifier:` The ID of the module which generates the status event, update event or profile event.
Return values	None

8.8.3.15 Delegate_SREC_ST_UINT32_UINT32

Description

Table 8-459 Delegate_SREC_ST_UINT32_UINT32 - .NET (C#)

Syntax	`delegate void Delegate_SREC_ST_UINT32 (IInstance in_Sender, ERuntimeErrorCode in_ErrorCode, DateTime in_DateTime, UInt32 in_HardwareIdentifier, UInt32 in_SequenceNumber);`
Parameters	• `IInstance in_Sender:` An interface of the instance that receives this event. • `ERuntimeErrorCode in_ErrorCode:` A possible error code. • `DateTime in_DateTime:` The virtual system time of the virtual controller at the time when this event was triggered. • `UInt32 in_HardwareIdentifier:` The hardware identifier of the module or submodule which sends the diagnostics entry. • `UInt32 in_SequenceNumber:` PLCSIM Advanced assigns a unique consecutive number to each interrupt event. According to PROFINET standard the sequence number is 10 bits wide (1 to $7FF_H$). When the highest number is reached the numbering starts again at 1. **Note** In a real hardware system the IO controller uses the sequence number to check if it has lost a hardware interrupt. During the simulation, the sequence number creates the relation between interrupt request and the associated acyclic alarm.
Return values	None

8.8.3.16 Delegate_SREC_ST_UINT32_ERSFET

Description

Table 8-460 Delegate_SREC_ST_UINT32_ERSFET - .NET (C#)

Syntax	`delegate void Delegate_SREC_ST_UINT32_ERSFET(IInstance in_Sender, ERuntimeErrorCode in_ErrorCode, DateTime in_DateTime, UInt32 in_HardwareIdentifier, ERackOrStationFaultType in_EventType);`
Parameters	• `IInstance in_Sender:` An interface of the instance that receives this event. • `ERuntimeErrorCode in_ErrorCode:` A possible error code. • `DateTime in_DateTime:` The virtual system time of the virtual controller at the time when this event was triggered. • `UInt32 in_HardwareIdentifier:` The hardware identifier of the module or submodule which sends the diagnostics entry. • `ERackOrStationFaultType in_EventType:` A value from the list of predefined RackOrStationFault event types. See ERackOrStationFaultType (Page 333).
Return values	None

8.8.4 Definitions and constants

The following identifiers are used in the API:

Table 8-461 Definitions - Native C++

Identifier	Value	Description
DINSTANCE_NAME_MAX_LENGTH	64	The unique name of an instance must be less than this value.
DSTORAGE_PATH_MAX_LENGTH	130	The maximum path length to the virtual memory card. Including NULL termination.
DTAG_NAME_MAX_LENGTH	300	The maximum length of the name of a PLC tag. Including NULL termination.
DTAG_ARRAY_DIMENSION	6	The maximum number of dimension for a multi-dimensional field.
DCONTROLLER_NAME_MAX_LENGTH	128	The maximum length of the controller name. Including NULL termination.
DCONTROLLER_SHORT_DESIGNATION_MAX_L-ENGTH	32	The maximum length of the abbreviation of the controller (CPU type). Including NULL termination.
DALARM_NOTIFICATION_MAX_DIAG_EVENTS	100	The maximum number of diagnostic events that are sent in a diagnostic alarm.
DPROCESS_EVENT_NAME_MAX_LENGTH	123	The maximum length of the name for the process event. Including NULL termination.
DPROCESS_EVENTS_MAX_ITEMS	256	The maximum number of configurable process events.
DMODULE_STATE_OK	0	AlarmNotification: Module status OK
DMODULE_STATE_ERROR	1	AlarmNotification: Module status faulty
DMODULE_STATE_MAINT_DEMANDED	2	AlarmNotification: Maintenance demanded
DMODULE_STATE_MAINT_REQUIRED	4	AlarmNotification: Maintenance required

Table 8-462 Constants - .NET (C#)

Identifier	Value	Description
RuntimeConstants.InstanceNameLength	64	The unique name of an instance must be less than this value.
RuntimeConstants. StoragePathMaxLength	130	The maximum path length to the virtual memory card. Including NULL termination.
RuntimeConstants.TagNameMaxLength	300	The maximum length of the name of a PLC tag. Including NULL termination.
RuntimeConstants.TagArrayDimension	6	The maximum number of dimension for a multi-dimensional field.
RuntimeConstants. ControllerNameMaxLength	128	The maximum length of the controller name. Including NULL termination.
RuntimeConstants. ControllerShortDesignationMaxLength	32	The maximum length of the abbreviation of the controller (CPU type). Including NULL termination.
ModuleState.Ok	0	AlarmNotification: Module status OK
ModuleState.Error	1	AlarmNotification: Module status faulty
ModuleState. MaintenanceDemanded	2	AlarmNotification: Maintenance demanded
ModuleState. MaintenanceRequired	4	AlarmNotification: Maintenance required

8.8.5 Unions (Native C++)

8.8.5.1 UIP

Description

Contains an IPv4 address.

Table 8-463 UIP - Native C++

Syntax	`union UIP`
	`{`
	`DWORD IP;`
	`BYTE IPs[4];`
	`};`

Member	• `DWORD IP:` The IP address in a single DWORD • `BYTE IPs[4]:` The four elements of IP in descending order
Example	Example for an IP address: 192.168.0.1 UIP.IP = 0xC0A80001 UIP.IPs[3] = 192, UIP.IPs[2] = 168, UIP.IPs[1] = 0, UIP.IPs[0] = 1

8.8.5.2 UDataValue

Description

Contains the value of a PLC tag.

Table 8-464 UDataValue - Native C++

Syntax	`union UDataValue`
	`{`
	`bool Bool;`
	`INT8 Int8;`
	`INT16 Int16;`
	`INT32 Int32;`
	`INT64 Int64;`
	`UINT8 UInt8;`
	`UINT16 UInt16;`
	`UINT32 UInt32;`
	`UINT64 UInt64;`
	`float Float;`
	`double Double;`
	`CHAR Char;`
	`WCHAR WChar;`
	`};`

Member	• `bool Bool:` 1 byte boolean value • `INT8 Int8:` 1 byte integer with sign • `INT16 Int16:` 2 byte integer with sign • `INT32 Int32:` 4 byte integer with sign • `INT64 Int64:` 8 byte integer with sign

	• `UINT8 UInt8:` 1 byte integer without sign • `UINT16 UInt16:` 2 byte integer without sign • `UINT32 UInt32:` 4 byte integer without sign • `UINT64 UInt64:` 8 byte integer without sign • `float Float:` 4 byte floating-point value • `double Double:` 8 byte floating-point value • `CHAR Char:` 1 byte value character • `WCHAR WChar:` 2 byte value character

8.8.6 Structures

The following structures are available:

- SDataValue (Page 300)
- SDVBNI (Page 302)
- SDataValueByAddress (Page 302)
- SDataValueByAddressWithCheck (Page 303)
- SDataValueByName (Page 304)
- SDataValueByNameWithCheck (Page 304)
- SConnectionInfo (Page 305)
- SInstanceInfo (Page 305)
- SDimension (Page 306)
- STagInfo (Page 306)
- SIP (Page 308)
- SIPSuite4 (Page 308)
- SOnSyncPointReachedResult (Page 309)
- SDataRecordInfo (Page 311)
- SDataRecord (Page 311)
- SConfiguredProcessEvents (Page 312)
- SDiagExtChannelDescription (Page 312)
- SAutodiscoverData (Page 314)

8.8.6.1 SDataValue

Description

The structure contains the value and type of a PLC tag.

Table 8-465 SDataValue - Native C++

Syntax	`struct SDataValue`
	`{`
	`UDataValue Value;`
	`EPrimitiveDataType Type;`
	`};`

Member	• `UDataValue Value:` The value of the PLC tags • `EPrimitiveDataType Type:` Type of PLC tag

Table 8-466 SDataValue - .NET (C#)

Syntax	`struct SDataValue`
	`{`
	`bool Bool { get; set; }`
	`Int8 Int8 { get; set; }`
	`Int16 Int16 { get; set; }`
	`Int32 Int32 { get; set; }`
	`Int64 Int64 { get; set; }`
	`UInt8 UInt8 { get; set; }`
	`UInt16 UInt16 { get; set; }`
	`UInt32 UInt32 { get; set; }`
	`UInt64 UInt64 { get; set; }`
	`float Float { get; set; }`
	`double Double { get; set; }`
	`sbyte Char { get; set; }`
	`char WChar { get; set; }`
	`EPrimitiveDataType Type { get; set; }`
	`}`

Member	• `bool Bool:` 1 byte boolean value • `Int8 Int8:` 1 byte integer with sign • `Int16 Int16:` 2 byte integer with sign • `Int32 Int32:` 4 byte integer with sign • `Int64 Int64:` 8 byte integer with sign • `UntT8 UInt8:` 1 byte integer without sign • `UInt16 UInt16:` 2 byte integer without sign • `UInt32 UInt32:` 4 byte integer without sign • `UInt64 UInt64:` 8 byte integer without sign • `float Float:` 4 byte floating-point value • `double Double:` 8 byte floating-point value • `sbyte Char:` 1 byte value character

	• `char WChar:` 2 byte value character • `EPrimitiveDataType Type:` Type of PLC tag

8.8.6.2 SDVBNI

Description

This structure is for internal use only. Do not change this structure.

Table 8-467 SDVBNI - Native C++

Syntax	`struct SDVBNI`

Table 8-468 SDVBNI - .NET (C#)

Syntax	`struct SDVBNI`

8.8.6.3 SDataValueByAddress

Description

This structure represents a PLC tag that is accessed via its address.

Table 8-469 SDataValueByAddress - Native C++

Syntax	`struct SDataValueByAddress`
	`{`
	`UINT32 Offset;`
	`UINT8 Bit;`
	`SDataValue DataValue;`
	`ERuntimeErrorCode ErrorCode;`
	`}`

Member	• `UINT32 Offset` The byte offset of the tag if it is not located in a data block. • `UINT8 Bit` The bit offset of the tag if it is not located in a data block. • `SDataValue DataValue` The value of the PLC tags • `ERuntimeErrorCode ErrorCode` – `SREC_TIMEOUT` if no event was triggered during the defined time interval. – `SREC_WARNING_INVALID_CALL` if no function RegisterOnSyncPointReachedEvent was called before, see `ERuntimeErrorCode`.

Table 8-470 SDataValueByAddress - .NET (C#)

Syntax	`struct SDataValueByAddress`
	`{`
	`UInt32 Offset;`
	`UInt8 Bit;`
	`SDataValue DataValue;`
	`ERuntimeErrorCode ErrorCode;`
	`}`

Member	• `UINT32 Offset` The byte offset of the tag if it is not located in a data block. • `UINT8 Bit` The bit offset of the tag if it is not located in a data block. • `SDataValue DataValue` The value of the PLC tags • `ERuntimeErrorCode ErrorCode` – `SREC_TIMEOUT` if no event was triggered during the defined time interval. – `SREC_WARNING_INVALID_CALL` if no function RegisterOnSyncPointReachedEvent was called before, see `ERuntimeErrorCode`.

8.8.6.4 SDataValueByAddressWithCheck

Description

This structure represents a PLC tag that is accessed via its address.

Table 8-471 SDataValueByAddressWithCheck - Native C++

Syntax	`struct SDataValueByAddressWithCheck`
	`{`
	`UINT32 Offset;`
	`UINT8 Bit;`
	`SDataValue DataValue;`
	`ERuntimeErrorCode ErrorCode;`
	`bool ValueHasChanged;`
	`}`

Member	• `UINT32 Offset` The byte offset of the tag if it is not located in a data block. • `UINT8 Bit` The bit offset of the tag if it is not located in a data block. • `SDataValue DataValue` The value of the PLC tags • `ERuntimeErrorCode ErrorCode` – `SREC_TIMEOUT` if no event was triggered during the defined time interval. – `SREC_WARNING_INVALID_CALL` if no function RegisterOnSyncPointReachedEvent was called before, see `ERuntimeErrorCode`. • `bool ValueHasChanged` _____

Table 8-472 SDataValueByAddressWithCheck - .NET (C#)

Syntax	`struct SDataValueByAddressWithCheck`
	`{`
	`UInt32 Offset;`
	`UInt8 Bit;`
	`SDataValue DataValue;`
	`ERuntimeErrorCode ErrorCode;`
	`bool ValueHasChanged;`
	`}`

Member	• `UINT32 Offset` The byte offset of the tag if it is not located in a data block. • `UINT8 Bit` The bit offset of the tag if it is not located in a data block. • `SDataValue DataValue` The value of the PLC tags

	• `ERuntimeErrorCode ErrorCode` – `SREC_TIMEOUT` if no event was triggered during the defined time interval. – `SREC_WARNING_INVALID_CALL` if no function RegisterOnSyncPointReachedEvent was called before, see `ERuntimeErrorCode`. • `bool ValueHasChanged` _____

8.8.6.5 SDataValueByName

Description

This structure represents a PLC tag that is called by its name.

Table 8-473 SDataValueByName - Native C++

Syntax	`struct SDataValueByName`
	`{`
	`WCHAR Name[DTAG_NAME_MAX_LENGTH];`
	`SDataValue DataValue;`
	`ERuntimeErrorCode ErrorCode;`
	`SDVBNI Internal;`
	`}`

Member	• `WCHAR Name[DTAG_NAME_MAX_LENGTH]` The name of the tag • `SDataValue DataValue` The value of the PLC tags • `ERuntimeErrorCode ErrorCode` – `SREC_TIMEOUT` if no event was triggered during the defined time interval. – `SREC_WARNING_INVALID_CALL` if no function RegisterOnSyncPointReachedEvent was called before, see `ERuntimeErrorCode`. • `SDVBNI Internal` _____

Table 8-474 SDataValueByName - .NET (C#)

Syntax	`struct SDataValueByName`
	`{`
	`String Name;`
	`SDataValue DataValue;`
	`ERuntimeErrorCode ErrorCode;`
	`SDVBNI Internal;`
	`}`

Member	• `String Name` The name of the tag • `SDataValue DataValue` The value of the PLC tags • `ERuntimeErrorCode ErrorCode` – `SREC_TIMEOUT` if no event was triggered during the defined time interval. – `SREC_WARNING_INVALID_CALL` if no function RegisterOnSyncPointReachedEvent was called before, see `ERuntimeErrorCode`. • `SDVBNI Internal` _____

8.8.6.6 SDataValueByNameWithCheck

Description

This structure represents a PLC tag that is called by its name.

Table 8-475 SDataValueByNameWithCheck - Native C++

Syntax	`struct SDataValueByNameWithCheck`
	`{`
	`WCHAR Name[DTAG_NAME_MAX_LENGTH];`
	`SDataValue DataValue;`
	`ERuntimeErrorCode ErrorCode;`
	`SDVBNI Internal;`
	`bool ValueHasChanged;`
	`};`

Table 8-476 SDataValueByNameWithCheck - .NET (C#)

Syntax	`struct SDataValueByNameWithCheck`
	`{`
	`String Name;`
	`SDataValue DataValue;`
	`ERuntimeErrorCode ErrorCode;`
	`SDVBNI Internal;`
	`bool ValueHasChanged;`
	`}`

8.8.6.7 SConnectionInfo

Description

This structure contains the IP address and port of a TCP/IP connection.

Table 8-477 SConnectionInfo - Native C++

Syntax	`struct SConnectionInfo`
	`{`
	`UIP IP;`
	`UINT16 Port;`
	`};`

Table 8-478 SConnectionInfo - .NET (C#)

Syntax	`struct SConnectionInfo`
	`{`
	`SIP IP;`
	`UInt16 Port;`
	`}`

8.8.6.8 SInstanceInfo

Description

This structure contains an IPv4 address.

Table 8-479 SInstanceInfo - Native C++

Syntax	`struct SInstanceInfo`
	`{`
	`INT32 ID;`
	`WCHAR Name[DINSTANCE_NAME_MAX_LENGTH];`
	`};`

Member	• `INT32 ID:` The ID of the instance • `WCHAR Name[DINSTANCE_NAME_MAX_LENGTH]:` The name of the instance

Table 8-480 SInstanceInfo - .NET (C#)

Syntax	`struct SInstanceInfo`
	`{`
	`Int32 ID;`
	`String Name;`
	`}`

Member	• `Int32 ID:` The ID of the instance • `String name:` The name of the instance

8.8.6.9 SDimension

Description

This structure contains information about the dimension of a field.

Table 8-481 SDimension - Native C++

Syntax	`struct SDimension`
	`{`
	`INT32 StartIndex;`
	`UINT32 Count;`
	`};`

Table 8-482 SDimension - .NET (C#)

Syntax	`struct SDimension`
	`{`
	`Int32 StartIndex;`
	`UInt32 Count;`
	`}`

8.8.6.10 STagInfo

Description

This structure contains information about a PLC tag.

Table 8-483 STagInfo - Native C++

Syntax	`struct STagInfo`
	`{`
	`WCHAR Name[DTAG_NAME_MAX_LENGTH];`
	`EArea Area;`
	`EDataType DataType;`
	`EPrimitiveDataType PrimitiveDataType;`
	`UINT16 Size;`
	`UINT32 Offset;`
	`UINT8 Bit;`
	`UINT8 DimensionCount;`
	`UINT32 Index;`
	`UINT32 ParentIndex;`
	`SDimension Dimension[DTAG_ARRAY_DIMENSION];`
	`};`

Member	• `WCHAR Name[DTAG_NAME_MAX_LENGTH]:` The name of the tag • `EArea area:` The CPU area where the tag is located. • `EDataType DataType:` The CPU data type of the tag • `EPrimitiveDataType PrimitiveDataType:` The primitive data type of the tag • `UINT16 size:` The size of the tag in bytes • `UINT32 offset:` The byte offset of the tag if it is not located in a data block. • `UINT8 bit:` The bit offset of the tag if it is not located in a data block. • `UINT8 DimensionCount:` The number of dimensions of the array. 0 if the tag is not a field. • `UINT32 index:` The index of the tag • `UINT32 ParentIndex:` If this tag is embedded in another tag (for example, an element of a structure), this value then displays the index of the parent tag. The value is 0 if the tag has no parent tag. • `SDimension Dimension[DTAG_ARRAY_DIMENSION]:` Information about each dimension of the field

Table 8-484 STagInfo - .NET (C#)

Syntax	`public struct STagInfo`
	`{`
	`String Name;`
	`EArea Area;`
	`EDataType DataType;`
	`EPrimitiveDataType PrimitiveDataType;`
	`UInt16 Size;`
	`UInt32 Offset;`
	`UInt8 Bit;`
	`UInt32 Index;`
	`UInt32 ParentIndex;`
	`SDimension[] Dimension;`
	`}`

Member	• `String name:` The name of the tag • `EArea area:` The CPU area where the tag is located. • `EDataType DataType:` The CPU data type of the tag • `EPrimitiveDataType PrimitiveDataType:` The primitive data type of the tag • `UInt16 size:` The size of the tag in bytes. • `UInt32 offset:` The byte offset of the tag if it is not located in a data block. • `UInt8 bit:` The bit offset of the tag if it is not located in a data block. • `UInt32 index:` The index of the tag • `UInt32 ParentIndex:` If this tag is embedded in another tag (for example, an element of a structure), this value then displays the index of the parent tag. The value is 0 if the tag has no parent tag. • `SDimension[] Dimension:` Information about each dimension of the field. Empty, if the tag is not an array.

8.8.6.11 SIP

Description

This structure contains an IPv4 address.

Table 8-485 SIP - .NET (C#)

Syntax	`struct SIP`
	`{`
	`byte[] IPArray { get; set; }`
	`UInt32 IPDWord { get; set; }`
	`string IPString { get; set; }`
	`}`

Member	• `UInt32 IPDWord:` The IP address in a single DWORD • `byte[] IPArray:` The four elements of IP in descending order • `string IPString:` The IPv4 address as a string
Example	Example for an IP address: 192.168.0.1 SIP.IPDWord = 0xC0A80001 SIP.IPArray[3] = 192, SIP.IPArray[2] = 168, SIP.IPArray[1] = 0, SIP.IPArray[0] = 1 SIP.IPString = "192.168.0.1"

8.8.6.12 SIPSuite4

Description

This structure contains an IPv4 suite.

Table 8-486 SIPSuite4 - Native C++

Syntax	`struct SIPSuite4`
	`{`
	`UIP IPAddress;`
	`UIP SubnetMask;`
	`UIP DefaultGateway;`
	`};`

Member	• `UIP IPAddress:` The IP address • `UIP SubnetMask:` The subnet mask • `UIP DefaultGateway:` The standard gateway

Table 8-487 SIPSuite4 - .NET (C#)

Syntax	`struct SIPSuite4`
	`{`
	`SIP IPAddress;`
	`SIP SubnetMask;`
	`SIP DefaultGateway;`
	`}`

Member	• `SIP IPAddress:` The IP address • `SIP SubnetMask:` The subnet mask • `SIP DefaultGateway:` The standard gateway

8.8.6.13 SOnSyncPointReachedResult

Description

This structure contains the results of the OnSyncPointReached event.

Table 8-488 SOnSyncPointReachedResult - Native C++

Syntax	`struct SOnSyncPointReachedResult`
	`{`
	`ERuntimeErrorCode ErrorCode;`
	`SYSTEMTIME SystemTime;`
	`UINT32 Id;`
	`INT64 TimeSinceSameSyncPoint_ns;`
	`INT64 TimeSinceAnySyncPoint_ns;`
	`UINT32 SyncPointCount;`
	`};`

Member	• `ERuntimeErrorCode ErrorCode:` – `SREC_TIMEOUT` if no event was triggered during the defined time interval. In such a case, the struct values are not used. – `SREC_WARNING_INVALID_CALL`, if no function `RegisterOnSyncPointReachedEvent` was called before. See ERuntimeErrorCode. • `SYSTEMTIME SystemTime:` The virtual system time of the virtual controller at the time when this event was triggered. • `UINT32 Id:` For the `SingleStep_Bus` operating mode: The ID of the I/O system that is used for cycle-controlled synchronization of the virtual controller. For all other operating modes: The ID of the process image partition (PIP) that triggers this event. 0 for the cycle control point (End of cycle). Note: In the SingleStep operating modes, the transferred ID for the cycle control point has the value 0xFFFF. In this case, the time values are set to 0. • `INT64 TimeSinceSameSyncPoint_ns:` The virtual time (in nanoseconds) since the last synchronization point of the same process image partition ID was reached. For the time-controlled operating modes: The runtime since the last call of the `StartProcessing()` function. • `INT64 TimeSinceAnySyncPoint_ns:` The virtual time (in nanoseconds) since the last synchronization point of any process image partition ID was reached. For the time-controlled operating modes: The runtime since the last call of the `StartProcessing()` function. • `UINT32 SyncPointCount:` The number of synchronization points since the last event. If the events are triggered faster than they are received, multiple events are combined into one event. In this case, this value contains the number of cycles since the last event was received.

Table 8-489 SOnSyncPointReachedResult - .NET (C#)

Syntax	`struct SOnSyncPointReachedResult`
	`{`
	`ERuntimeErrorCode ErrorCode;`
	`DateTime SystemTime;`
	`UInt32 Id;`
	`Int64 TimeSinceSameSyncPoint_ns;`
	`Int64 TimeSinceAnySyncPoint_ns;`
	`UInt32 SyncPointCount;`
	`}`

Member	• `ERuntimeErrorCode ErrorCode:` – `ERuntimeErrorCode.Timeout`, if no event was triggered during the defined time interval. – `WarningInvalidCall`, if no function `RegisterOnSyncPointReachedEvent` was called before. See ERuntimeErrorCode. • `DateTime DateTime:` The virtual system time of the virtual controller at the time when this event was triggered. • `UInt32 Id:` For the `SingleStep_Bus` operating mode: The ID of the I/O system that is used for cycle-controlled synchronization of the virtual controller. For all other operating modes: The ID of the process image partition (PIP) that triggers this event. 0 for the cycle control point (End of cycle).

	• `Int64 TimeSinceSameSyncPoint_ns:` The virtual time (in nanoseconds) since the last synchronization point of the same process image partition ID was reached. For the time-controlled operating modes: The runtime since the last call of the `StartProcessing()` function. • `Int64 TimeSinceAnySyncPoint_ns:` The virtual time (in nanoseconds) since the last synchronization point of any process image partition ID was reached. For the time-controlled operating modes: The runtime since the last call of the `StartProcessing()` function. • `UInt32 SyncPointCount:` The number of synchronization points since the last event. If the events are triggered faster than they are received, multiple events are combined into one event. In this case, this value contains the number of cycles since the last event was received.

8.8.6.14 SDataRecordInfo

Description

This structure contains read/write data record information.

Table 8-490 SDataRecordInfo - Native C++

Syntax	`struct SDataRecordInfo`
	`{`
	`UINT32 HardwareId;`
	`UINT32 RecordIdx;`
	`UINT32 DataSize;`
	`};`

Member	• `UINT32 HardwareId:` The ID of the hardware module (hardware identifier) • `UINT32 RecordIdx:` The data record number • `UINT32 DataSize:` The data record size

Table 8-491 SDataRecordInfo - .NET (C#)

Syntax	`struct SDataRecordInfo`
	`{`
	`UInt32 HardwareId;`
	`UInt32 RecordIdx;`
	`UInt32 DataSize;`
	`}`

Member	• `UInt32 ID:` The ID of the hardware module • `UInt32 RecordIdx:` The data record number • `UInt32 DataSize:` The data record size

8.8.6.15 SDataRecord

Description

This structure contains read/write data record information and data records.

Table 8-492 SDataRecord - .NET (C#)

Syntax	`struct SDataRecord`
	`{`
	`UInt32 HardwareId;`
	`byte[] Data`
	`}`

Member	• `SDataRecordInfo Info:` The data record information, see SDataRecordInfo (Page 311) • `byte[] Data:` The array length

8.8.6.16 SConfiguredProcessEvents

Description

This structure contains information about the configured process events.

Table 8-493 SConfiguredProcessEvents - Native C++

Syntax	`struct SConfiguredProcessEvents`
	`{`
	`UINT16 HardwareIdentifier;`
	`UINT16 Channel;`
	`EProcessEventType ProcessEventType;`
	`WCHAR Name[DPROCESS_EVENT_NAME_MAX_LENGTH];`
	`};`

Member	• `UINT16 HardwareIdentifier:` The HW identifier • `UINT16 Channel:` The channel of the I/O module which generates the process event. • `EProcessEventType ProcessEventType:` The type of the configured process event • `WCHAR Name[DPROCESS_EVENT_NAME_MAX_LENGTH]:` The name of the process event

Table 8-494 SConfiguredProcessEvents - .NET (C#)

Syntax	`public struct SConfiguredProcessEvents`
	`{`
	`ushort HardwareIdentifier;`
	`ushort Channel;`
	`EProcessEventType ProcessEventType;`
	`string Name;`
	`}`

Member	• `ushort HardwareIdentifier:` The HW identifier • `ushort Channel:` The channel of the I/O module which generates the process event. • `EProcessEventType ProcessEventType:` The type of the configured process event • `String name:` The name of the process event

8.8.6.17 SDiagExtChannelDescription

Description

This structure contains read/write data record information and data records.

Table 8-495 SDiagExtChannelDescription - Native C++

Syntax	`struct SDiagExtChannelDescription`
	`{`
	`UINT16 ChannelNumber;`
	`UINT16 ErrorType;`
	`UINT16 ExtErrorType;`
	`EDiagSeverity Severity;`
	`EDiagProperty Direction;`
	`};`

Member	• `UINT16 ChannelNumber:` If the interrupt relates to a specific channel of the IO device (e.g. short circuit), this parameter must contain the number of the faulty channel. If the interrupt was generated by a module or submodule, the number of the channel must be set to 0x8000. • `UINT16 ErrorType:` The parameter defines error types according to PROFINET standard, see "Error types" section. • `EDiagSeverity Severity:` The value of the severity for the diagnostics, see EDiagSeverity (Page 333). • `EDiagProperty Direction:` The value for the incoming/outgoing information, see EDiagProperty (Page 332). • `UINT16 ExtErrorType:` This parameter provides the option of defining more details for the diagnostic interrupt. This is helpful in combination with PDEV error types which are generated for CPU-internal modules. Should be 0 by default.

Table 8-496 SDiagExtChannelDescription - .NET (C#)

Syntax	`struct SDiagExtChannelDescription`
	`{`
	`UInt16 ChannelNumber;`
	`UInt16 ErrorType;`
	`UInt16 ExtErrorType;`
	`EDiagSeverity Severity;`
	`EDiagProperty Direction;`
	`};`

Member	• `UInt16 ChannelNumber:` If the interrupt relates to a specific channel of the IO device (e.g. short circuit), this parameter must contain the number of the faulty channel. If the interrupt was generated by a module or submodule, the number of the channel must be set to 0x8000. • `UInt16 ErrorType:` The parameter defines error types according to PROFINET standard, see "Error types" section. • `EDiagSeverity Severity:` The value of the severity for the diagnostics, see EDiagSeverity (Page 333). • `EDiagProperty Direction:` The value for the incoming/outgoing information, see EDiagProperty (Page 332). • `UInt16 ExtErrorType:` This parameter provides the option of defining more details for the diagnostic interrupt. This is helpful in combination with PDEV error types which are generated for CPU-internal modules. Should be 0 by default.

Error types

The following table contains important error types (`ErrorType`) according to PROFINET standard:

Table 8-497 Error types according to PROFINET standard

Value	Meaning
0x0000	Reserved / unknown error
0x0001	Short-circuit
0x0002	Undervoltage
0x0003	Overvoltage
0x0004	Overload
0x0005	Overtemperature
0x0006	Wire break
0x0007	High limit violated
0x0008:	Low limit violated
0x0009	Error

The following table contains error types `ExtChannelErrorType` for `ChannelErrorType` "Remote mismatch":

Table 8-498 ExtChannelErrType error types

Value	Meaning	Use
0x0000	Reserved	-
0x0001 to 0x7FFF	Manufacturer ID	Interrupt/diagnostics
0x8000	Peer name of station mismatch	Interrupt/diagnostics
0x8001	Peer name of port mismatch	Interrupt/diagnostics
0x8002	Peer RT_CLASS_3 mismatch	Interrupt/diagnostics
0x8003	Peer MAU Type mismatch	Interrupt/diagnostics

8.8.6.18 SAutodiscoverData

Description

This structure contains the IP address, the port, the Runtime version, and the name of the computer that has a Runtime Manager ready to make a remote connection.

Table 8-499 SAutodiscoverData - Native C++

Syntax	`public struct SAutodiscoverData`
	`{`
	`UIP IP;`
	`UINT16 Port;`
	`DWORD RuntimeVersion;`
	`WCHAR ComputerName[MAX_COMPUTERNAME_LENGTH + 1];`
	`};`

Table 8-500 SAutodiscoverData - .NET (C#)

Syntax	`public struct SAutodiscoverData`
	`{`
	`public SIP IP;`
	`public ushort Port;`
	`public uint RuntimeVersion;`
	`public string ComputerName;`
	`}`

8.8.6.19 SMAC address

Description

Defines the structure of a MAC address.

Table 8-501 SMACAddress - Native C++

Syntax	`#define DMAC_ADDRESS_LEN 6`
	
	`struct SMACAddress`
	`{`
	`BYTE Octets[DMAC_ADDRESS_LEN];`
	`};`

8.8.6.20 SNetInterfaceInfo

Description

Describes the structure of a network interface.

Table 8-502 SNetInterfaceInfo - Native C++

Syntax	`struct SNetInterfaceInfo`
	`{`
	`DWORD interfaceIndex;`
	`UMACAddress MACAddress;`
	`WCHAR interfaceName[64];`
	`WCHAR interfaceDescription[64];`
	`};`

8.8.7 Enumerations

The following enumerations are available:

- ERuntimeErrorCode (Page 316)
- EArea (Page 318)
- EOperatingState (Page 319)
- EOperatingMode (Page 320)
- ECPUType (Page 320)
- ECommunicationInterface (Page 322)
- ECommunicationMode (Page 323)
- EPLCInterface (Page 323)

- ELEDType (Page 323)
- ELEDMode (Page 324)
- EPrimitiveDataType (Page 325)
- EDataType (Page 326)
- ETagListDetails (Page 329)
- ERuntimeConfigChanged (Page 330)
- EInstanceConfigChanged (Page 330)
- EPullOrPlugEventType (Page 331)
- EProcessEventType (Page 331)
- EDirection (Page 332)
- EDiagProperty (Page 332)
- EDiagSeverity (Page 333)
- ERackOrStationFaultType (Page 333)
- ECycleTimeMonitoringMode (Page 334)
- EAutodiscoverType (Page 334)

8.8.7.1 ERuntimeErrorCode

Description

This enumeration contains all error codes that are used by the Simulation Runtime API. Most API functions return one of these error codes. If the function is successful, the return value is always `SREC_OK` / `OK`. Errors are returned with negative values, warnings with positive values.

Table 8-503 ERuntimeErrorCode - Native C++

Syntax	`enum ERuntimeErrorCode`
	`{`
	`SREC_OK = 0,`
	`SREC_INVALID_ERROR_CODE = -1,`
	`SREC_NOT_IMPLEMENTED = -2,`
	`SREC_INDEX_OUT_OF_RANGE = -3,`
	`SREC_DOES_NOT_EXIST = -4,`
	`SREC_ALREADY_EXISTS = -5,`
	`SREC_UNKNOWN_MESSAGE_TYPE = -6,`
	`SREC_INVALID_MESSAGE_ID = -7,`
	`SREC_WRONG_ARGUMENT = -8,`
	`SREC_WRONG_PIPE = -9,`
	`SREC_CONNECTION_ERROR = -10,`
	`SREC_TIMEOUT = -11,`
	`SREC_MESSAGE_CORRUPT = -12,`
	`SREC_WRONG_VERSION = -13,`
	`SREC_INSTANCE_NOT_RUNNING = -14,`
	`SREC_INTERFACE_REMOVED = -15,`
	`SREC_SHARED_MEMORY_NOT_INITIALIZED = -16,`
	`SREC_API_NOT_INITIALIZED = -17,`
	`SREC_WARNING_ALREADY_EXISTS = 18,`
	`SREC_NOT_SUPPORTED = -19,`
	`SREC_WARNING_INVALID_CALL = 20,`
	`SREC_ERROR_LOADING_DLL = -21,`
	`SREC_SIGNAL_NAME_DOES_NOT_EXIST = -22,`
	`SREC_SIGNAL_TYPE_MISMATCH = -23,`
	`SREC_SIGNAL_CONFIGURATION_ERROR = -24,`
	`SREC_NO_SIGNAL_CONFIGURATION_LOADED = -25,`
	`SREC_CONFIGURED_CONNECTION_NOT_FOUND = -26,`

```
SREC_CONFIGURED_DEVICE_NOT_FOUND = -27,
SREC_INVALID_CONFIGURATION = -28,
SREC_TYPE_MISMATCH = -29,
SREC_LICENSE_NOT_FOUND = -30,
SREC_NO_LICENSE_AVAILABLE = -31,
SREC_WRONG_COMMUNICATION_INTERFACE = -32,
SREC_LIMIT_REACHED = -33,
SREC_NO_STORAGE_PATH_SET = -34,
SREC_STORAGE_PATH_ALREADY_IN_USE = -35,
SREC_MESSAGE_INCOMPLETE = -36,
SREC_ARCHIVE_STORAGE_NOT_CREATED = -37,
SREC_RETRIEVE_STORAGE_FAILURE = -38,
SREC_INVALID_OPERATING_STATE = -39,
SREC_INVALID_ARCHIVE_PATH = -40,
SREC_DELETE_EXISTING_STORAGE_FAILED = -41,
SREC_CREATE_DIRECTORIES_FAILED = -42,
SREC_NOT_ENOUGH_MEMORY = -43,
SREC_WARNING_TRIAL_MODE_ACTIVE = 44,
SREC_NOT_RUNNING = -45,
SREC_NOT_EMPTY = -46,
SREC_NOT_UP_TO_DATE = -47,
SREC_COMMUNICATION_INTERFACE_NOT_AVAILABLE = -48,
SREC_WARNING_NOT_COMPLETE = 49,
SREC_VIRTUAL_SWITCH_MISCONFIGURED = -50,
SREC_RUNTIME_NOT_AVAILABLE = -51,
SREC_IS_EMPTY = -52,
SREC_WRONG_MODULE_STATE = -53,
SREC_WRONG_MODULE_TYPE = -54,
SREC_NOT_SUPPORTED_BY_MODULE = -55,
SREC_INTERNAL_ERROR = -56,
SREC_STORAGE_TRANSFER_ERROR = -57,
SREC_ANOTHER_VARIANT_OF_PLCSIM_RUNNING = -58,
SREC_ACCESS_DENIED = -59,
SREC_NOT_ALLOWED_DURING_DOWNLOAD = -60,
SREC_AUTODISCOVER_ALREADY_RUNNING = -61,
SREC_INVALID_STORAGE = -62,
SREC_WARNING_UNSUPPORTED_PCAP_DRIVER = 63, //
(Deprecated since V4)
SREC_WARNING_RUNNING_ON_TIA_PORTAL_TEST_SUITE = 64,
SREC_PCAP_DRIVER_NOT_RUNNING = -65,
SREC_UNSUPPORTED_PCAP_DRIVER = -66,
SREC_CONFIG_FILE_ERROR = -67,
SREC_WARNING_PASSWORD_PROTECTION_ERROR = 68,
SREC_BUFFER_OVERFLOW = -69,
SREC_NOT_ALLOWED = -70,
SREC_WARNING_NO_EXTERNAL_COMMUNICATION = 71
};
```

Table 8-504 ERuntimeErrorCode - .NET (C#)

Syntax

```
enum ERuntimeErrorCode
{
OK = 0,
InvalidErrorCode = -1,
NotImplemented = -2,
IndexOutOfRange = -3,
DoesNotExist = -4,
AlreadyExists = -5,
UnknownMessageType = -6,
InvalidMessageId = -7,
WrongArgument = -8,
WrongPipe = -9,
ConnectionError = -10,
Timeout = -11,
MessageCorrupt = -12,
WrongVersion = -13,
InstanceNotRunning = -14,
InterfaceRemoved = -15,
SharedMemoryNotInitialized = -16,
```

	```ApiNotInitialized = -17, WarningAlreadyExists = 18, NotSupported = -19, WarningInvalidCall = 20, ErrorLoadingDll = -21, SignalNameDoesNotExist = -22, SignalTypeMismatch = -23, SignalConfigurationError = -24, NoSignalConfigurationLoaded = -25, ConfiguredConnectionNotFound = -26, ConfiguredDeviceNotFound = -27, InvalidConfiguration = -28, TypeMismatch = -29, LicenseNotFound = -30, NoLicenseAvailable = -31, WrongCommunicationInterface = -32, LimitReached = -33, NoStartupPathSet = -34, StartupPathAlreadyInUse = -35, MessageIncomplete = -36, ArchiveStorageNotCreated = -37, RetrieveStorageFailure = -38, InvalidOperatingState = -39, InvalidArchivePath = -40, DeleteExistingStorageFailed = -41, CreateDirectoriesFailed = -42, NotEnoughMemory = -43, WarningTrialModeActive = 44, NotRunning = -45, NotEmpty = -46, NotUpToDate = -47, CommunicationInterfaceNotAvailable = -48, WarningNotComplete = 49, VirtualSwitchMisconfigured = -50, RuntimeNotAvailable = -51, IsEmpty = -52, WrongModuleState = -53, WrongModuleType = -54, NotSupportedByModule = -55, InternalError = -56, StorageTransferError = -57, AnotherVariantOfPlcsimRunning = -58, AccessDenied = -59, NotAllowedDuringDownload = -60, AutodiscoverAlreadyRunning = -61, InvalidStorage = -62, WarningUnsupportedPcapDriver = 63, // (Deprecated since V4) WarningRunningOnTiaPortalTestSuite = 64, PCAPDriverNotRunning = -65, UnsupportedPcapDriver = -66, ConfigFileError = -67, WarningPasswordForProtectionError = 68, BufferOverflow = - 69, NotAllowed = -70, WarningNoExternalCommunication = 71 }```

8.8.7.2 EArea

Description

This enumeration contains all PLC areas that contain the available PLC tags.

Table 8-505 EArea - Native C++

Syntax	`enum EArea`
	`{`
	`SRA_INVALID_AREA = 0,`
	`SRA_INPUT = 1,`
	`SRA_MARKER = 2,`
	`SRA_OUTPUT = 3,`
	`SRA_COUNTER = 4,`
	`SRA_TIMER = 5,`
	`SRA_DATABLOCK = 6,`
	`SRA_ENUMERATION_SIZE = 7`
	`};`

Table 8-506 EArea - .NET (C#)

Syntax	`public enum EArea`
	`{`
	`InvalidArea = 0,`
	`Input = 1,`
	`Marker = 2,`
	`Output = 3,`
	`Counter = 4,`
	`Timer = 5,`
	`DataBlock = 6,`
	`}`

8.8.7.3 EOperatingState

Description

This enumeration contains all the operating states of a virtual controller.

Table 8-507 EOperatingState - Native C++

Syntax	`enum EOperatingState`
	`{`
	`SROS_INVALID_OPERATING_STATE = 0,`
	`SROS_OFF = 1,`
	`SROS_BOOTING = 2,`
	`SROS_STOP = 3,`
	`SROS_STARTUP = 4,`
	`SROS_RUN = 5,`
	`SROS_FREEZE = 6,`
	`SROS_SHUTTING_DOWN = 7,`
	`SROS_HOLD = 8,`
	
	`SROS_ENUMERATION_SIZE = 9`
	`};`

Table 8-508 EOperatingState - .NET (C#)

Syntax	`enum EOperatingState`
	`{`
	`InvalidOperatingState = 0,`
	`Off = 1,`
	`Booting = 2,`
	`Stop = 3,`
	`Startup = 4,`
	`Run = 5,`
	`Freeze = 6,`
	`ShuttingDown = 7,`
	`Hold = 8`
	`}`

8.8.7.4 EOperatingMode

Description

This enumeration contains all the operating modes of a virtual controller.

Table 8-509 EOperatingMode - Native C++

Syntax	`enum EOperatingMode`
	`{`
	`SROM_DEFAULT = 0,`
	`SROM_SINGLE_STEP_C = 1,`
	`SROM_SINGLE_STEP_CT = 2,`
	`SROM_TIMESPAN_SYNCHNRONIZED_C = 3,`
	`SROM_SINGLE_STEP_P = 4,`
	`SROM_TIMESPAN_SYNCHNRONIZED_P = 5,`
	`SROM_SINGLE_STEP_CP = 6,`
	`SROM_SINGLE_STEP_CPT = 7,`
	`SROM_TIMESPAN_SYNCHNRONIZED_CP = 8`
	`SROM_SINGLE_STEP_BUS = 9`
	`};`

Table 8-510 EOperatingMode - .NET (C#)

Syntax	`public enum EOperatingMode`
	`{`
	`Default = 0,`
	`SingleStep_C = 1,`
	`SingleStep_CT = 2,`
	`TimespanSynchronized_C = 3,`
	`SingleStep_P = 4,`
	`TimespanSynchronized_P = 5,`
	`SingleStep_CP = 6,`
	`SingleStep_CPT = 7,`
	`TimespanSynchronized_CP = 8`
	`SingleStep_BUS = 9`
	`}`

8.8.7.5 ECPUType

Description

This enumeration contains all CPU types that can be loaded in a virtual controller.

Table 8-511 ECPUType - Native C++

Syntax	enum ECPUType
	{
	SRCT_1500_Unspecified = 0x000005DC,
	SRCT_1511 = 0x000005E7,
	SRCT_1513 = 0x000005E9,
	SRCT_1515 = 0x000005EB,
	SRCT_1516 = 0x000005EC,
	SRCT_1517 = 0x000005ED,
	SRCT_1518 = 0x000005EE,
	SRCT_1511C = 0x000405E7,
	SRCT_1512C = 0x000405E8,
	SRCT_1511F = 0x000105E7,
	SRCT_1513F = 0x000105E9,
	SRCT_1515F = 0x000105EB,
	SRCT_1516F = 0x000105EC,
	SRCT_1517F = 0x000105ED,
	SRCT_1518F = 0x000105EE,
	SRCT_1511T = 0x000805E7,
	SRCT_1515T = 0x000805EB,
	SRCT_1516T = 0x000805EC,
	SRCT_1517T = 0x000805ED,
	SRCT_1511TF = 0x000905E7,
	SRCT_1515TF = 0x000905EB,
	SRCT_1516TF = 0x000905EC,
	SRCT_1517TF = 0x000905ED,
	SRCT_1518ODK = 0x001005EE,
	SRCT_1518FODK = 0x001105EE,
	SRCT_1518MFP = 0x004005EE,
	SRCT_1518FMFP = 0x004105EE,
	SRCT_1518T = 0x000805EE,
	SRCT_1518TF = 0x000905EE,
	SRCT_1504DTF = 0x000905E0,
	SRCT_1507DTF = 0x000905E3,
	SRCT_ET200SP_Unspecified = 0x000205DC,
	SRCT_1510SP = 0x000205E6,
	SRCT_1512SP = 0x000205E8,
	SRCT_1510SPF = 0x000305E6,
	SRCT_1512SPF = 0x000305E8,
	SRCT_1514SP = 0x000205E7,
	SRCT_1514SPT = 0x000205E9,
	SRCT_1514SPF = 0x000305E7,
	SRCT_1514SPTF = 0x000305E9,
	SRCT_1500_RH_Unspecified = 0x008005DC,
	SRCT_1513R = 0x008005E9,
	SRCT_1515R = 0x008005EB,
	SRCT_1517H = 0x008005ED,
	SRCT_1518HF = 0x008105EE,
	SRCT_ET200PRO_Unspecified = 0x002005DC,
	SRCT_1513PRO = 0x002005E9,
	SRCT_1513PROF = 0x002105E9,
	SRCT_1516PRO = 0x002005EC,
	SRCT_1516PROF = 0x002105EC
	}

Table 8-512 ECPUType - .NET (C#)

Syntax	enum ECPUType
	{
	CPU1500_Unspecified = 0x000005DC,
	CPU1511 = 0x000005E7,
	CPU1513 = 0x000005E9,
	CPU1515 = 0x000005EB,
	CPU1516 = 0x000005EC,
	CPU1517 = 0x000005ED,
	CPU1518 = 0x000005EE,
	CPU1511C = 0x000405E7,
	CPU1512C = 0x000405E8,
	CPU1511F = 0x000105E7,
	CPU1513F = 0x000105E9,
	CPU1515F = 0x000105EB,
	CPU1516F = 0x000105EC,
	CPU1517F = 0x000105ED,
	CPU1518F = 0x000105EE,
	CPU1511T = 0x000805E7,
	CPU1515T = 0x000805EB,
	CPU1516T = 0x000805EC,
	CPU1517T = 0x000805ED,
	CPU1511TF = 0x000905E7,
	CPU1515TF = 0x000905EB,
	CPU1516TF = 0x000905EC,
	CPU1517TF = 0x000905ED,
	CPU1518ODK = 0x001005EE,
	CPU1518FODK = 0x001105EE,
	CPU1518MFP = 0x004005EE,
	CPU1518FMFP = 0x004105EE,
	CPU1518T = 0x000805EE,
	CPU1518TF = 0x000905EE,
	CPU1504DTF = 0x000905E0,
	CPU1507DTF = 0x000905E3,
	CPUET200SP_Unspecified = 0x000205DC,
	CPU1510SP = 0x000205E6,
	CPU1512SP = 0x000205E8,
	CPU1510SPF = 0x000305E6,
	CPU1512SPF = 0x000305E8,
	CPU1514SP = 0x000205E7,
	CPU1514SPT = 0x000205E9,
	CPU1514SPF = 0x000305E7,
	CPU1514SPTF = 0x000305E9,
	CPU1500_RH_Unspecified = 0x008005DC,
	CPU1513R = 0x008005E9,
	CPU1515R = 0x008005EB,
	CPU1517H = 0x008005ED,
	CPU1518HF = 0x008105EE,
	CPUET200PRO_Unspecified = 0x002005DC,
	CPU1513PRO = 0x002005E9,
	CPU1513PROF = 0x002105E9,
	CPU1516PRO = 0x002005EC,
	CPU1516PROF = 0x002105EC
	}

8.8.7.6 ECommunicationInterface

Description

This enumeration contains the available communication interfaces of a virtual controller.

Table 8-513 ECommunicationInterface - Native C++

Syntax	`enum ECommunicationInterface`
	`{`
	`SRCI_NONE = 0,`
	`SRCI_SOFTBUS = 1,`
	`SRCI_TCPIP = 2,`
	`SRCI_ENUMERATION_SIZE = 3`
	`};`

Table 8-514 ECommunicationInterface - .NET (C#)

Syntax	`enum ECommunicationInterface`
	`{`
	`None = 0,`
	`Softbus = 1,`
	`TCPIP = 2,`
	`}`

8.8.7.7 ECommunicationMode

Description

This enumeration contains all the communication modes of a virtual controller.

Table 8-515 ECommunicationMode - Native C++

Syntax	`enum class ECommunicationMode`
	`{`
	`VSWITCH_STATE_UNKNOWN = -1,`
	`VSWITCH_NON_PROMISCUOUS = 0,`
	`VSWITCH_PROMISCUOUS = 1`
	`};`

8.8.7.8 EPLCInterface

Description

This enumeration includes the available interfaces of a virtual controller.

Table 8-516 EPLCInterface - Native C++

Syntax	`enum class EPLCInterface`
	`{`
	`IE1 = 0,`
	`IE2,`
	`IE3`
	`};`

8.8.7.9 ELEDType

Description

This list includes all types of LEDs of a virtual controller.

Table 8-517 ELEDType - Native C++

Syntax	`enum ELEDType`
	`{`
	`SRLT_STOP = 0,`
	`SRLT_RUN = 1,`
	`SRLT_ERROR = 2,`
	`SRLT_MAINT = 3,`
	`SRLT_REDUND = 4,`
	`SRLT_FORCE = 5,`
	`SRLT_BUSF1 = 6,`
	`SRLT_BUSF2 = 7,`
	`SRLT_BUSF3 = 8,`
	` SRLT_BUSF4 = 9,`
	`SRLT_ENUMERATION_SIZE = 10`
	`};`

Table 8-518 ELEDType - .NET (C#)

Syntax	`enum ELEDType`
	`{`
	`Stop = 0,`
	`Run = 1,`
	`Error = 2`
	`Maint = 3,`
	`Redund = 4,`
	`Force = 5,`
	`Busf1 = 6,`
	`Busf2 = 7,`
	`Busf3 = 8,`
	`Busf4 = 9`
	`}`

8.8.7.10 ELEDMode

Description

This list contains all the LED states of a virtual controller.

Table 8-519 ELEDMode - Native C++

Syntax	`enum ELEDMode`
	`{`
	`SRLM_OFF = 0,`
	`SRLM_ON = 1,`
	`SRLM_FLASH_FAST = 2,`
	`SRLM_FLASH_SLOW = 3,`
	`SRLM_INVALID = 4`
	`};`

Table 8-520 ELEDMode - .NET (C#)

Syntax	`enum ELEDMode`
	`{`
	`Off = 0,`
	`On = 1,`
	`FlashFast = 2,`
	`FlashSlow = 3,`
	`Invalid = 4`
	`}`

8.8.7.11 EPrimitiveDataType

Description

This list contains all the primitive data types that are used by the I/O access functions.

Table 8-521 EPrimitiveDataType - Native C++

Syntax	`enum EPrimitiveDataType`
	`{`
	`SRPDT_UNSPECIFIC = 0,`
	`SRPDT_STRUCT = 1,`
	`SRPDT_BOOL = 2,`
	`SRPDT_INT8 = 3,`
	`SRPDT_INT16 = 4,`
	`SRPDT_INT32 = 5,`
	`SRPDT_INT64 = 6,`
	`SRPDT_UINT8 = 7,`
	`SRPDT_UINT16 = 8,`
	`SRPDT_UINT32 = 9,`
	`SRPDT_UINT64 = 10,`
	`SRPDT_FLOAT = 11,`
	`SRPDT_DOUBLE = 12,`
	`SRPDT_CHAR = 13,`
	`SRPDT_WCHAR = 14`
	`};`

Table 8-522 EPrimitiveDataType - .NET (C#)

Syntax	`enum EPrimitiveDataType`
	`{`
	`Unspecific = 0,`
	`Struct = 1,`
	`Bool = 2,`
	`Int8 = 3,`
	`Int16 = 4,`
	`Int32 = 5,`
	`Int64 = 6,`
	`UInt8 = 7,`
	`UInt16 = 8,`
	`UInt32 = 9,`
	`UInt64 = 10,`
	`Float = 11,`
	`Double = 12,`
	`Char = 13,`
	`WChar = 14`
	`}`

Compatible primitive data types

The following tables shows the primitive data types of the user interface (API) and the data types of the PLCSIM Advanced instance that are configured in the stored tag list. The compatible data types are marked with "X".

Table 8-523 Compatible primitive data types - Reading

API	PLCSIM Advanced instance												
	Bool	INT				UINT				Float	Double	Char	WChar
		8	16	32	64	8	16	32	64				
Bool	X												
INT8		X											
INT16		X	X			X							
INT32		X	X	X		X	X						
INT64		X	X	X	X	X	X	X					
UINT8						X							
UINT16						X	X						
UINT32						X	X	X					
UINT64						X	X	X	X				
Float										X			
Double											X		
Char												X	
WChar													X

Table 8-524 Compatible primitive data types - Write

API	PLCSIM Advanced instance												
	Bool	INT				UINT				Float	Double	Char	WChar
		8	16	32	64	8	16	32	64				
Bool	X												
INT8		X	X	X	X								
INT16			X	X	X								
INT32				X	X								
INT64					X								
UINT8			X	X	X	X	X	X	X				
UINT16				X	X		X	X	X				
UINT32					X			X	X				
UINT64									X				
Float										X			
Double											X		
Char												X	
WChar													X

8.8.7.12 EDataType

Description

This enumeration contains all the PLC data types (STEP 7).

Table 8-525 EDataType - Native C++

Syntax	`enum EDataType`
	`{`
	`SRDT_UNKNOWN = 0,`
	`SRDT_BOOL = 1,`
	`SRDT_BYTE = 2,`
	`SRDT_CHAR = 3,`
	`SRDT_WORD = 4,`
	`SRDT_INT = 5,`
	`SRDT_DWORD = 6,`
	`SRDT_DINT = 7,`
	`SRDT_REAL = 8,`
	`SRDT_DATE = 9,`
	`SRDT_TIME_OF_DAY = 10,`
	`SRDT_TIME = 11,`
	`SRDT_S5TIME = 12,`
	`SRDT_DATE_AND_TIME = 14,`
	`SRDT_STRUCT = 17,`
	`SRDT_STRING = 19,`
	`SRDT_COUNTER = 28,`
	`SRDT_TIMER = 29,`
	`SRDT_IEC_Counter = 30,`
	`SRDT_IEC_Timer = 31,`
	`SRDT_LREAL = 48,`
	`SRDT_ULINT = 49,`
	`SRDT_LINT = 50,`
	`SRDT_LWORD = 51,`
	`SRDT_USINT = 52,`
	`SRDT_UINT = 53,`
	`SRDT_UDINT = 54,`
	`SRDT_SINT = 55,`
	`SRDT_WCHAR = 61,`
	`SRDT_WSTRING = 62,`
	`SRDT_LTIME = 64,`
	`SRDT_LTIME_OF_DAY = 65,`
	`SRDT_LDT = 66,`
	`SRDT_DTL = 67,`
	`SRDT_IEC_LTimer = 68,`
	`SRDT_IEC_SCounter = 69,`
	`SRDT_IEC_DCounter = 70,`
	`SRDT_IEC_LCounter = 71,`
	`SRDT_IEC_UCounter = 72,`
	`SRDT_IEC_USCounter = 73,`
	`SRDT_IEC_UDCounter = 74,`
	`SRDT_IEC_ULCounter = 75,`
	`SRDT_ERROR_STRUCT = 97,`
	`SRDT_NREF = 98,`
	`SRDT_CREF = 101,`
	`SRDT_AOM_IDENT = 128,`
	`SRDT_EVENT_ANY = 129,`
	`SRDT_EVENT_ATT = 130,`
	`SRDT_EVENT_HWINT = 131,`
	`SRDT_HW_ANY = 144,`
	`SRDT_HW_IOSYSTEM = 145,`
	`SRDT_HW_DPMASTER = 146,`
	`SRDT_HW_DEVICE = 147,`
	`SRDT_HW_DPSLAVE = 148,`
	`SRDT_HW_IO = 149,`
	`SRDT_HW_MODULE = 150,`
	`SRDT_HW_SUBMODULE = 151,`
	`SRDT_HW_HSC = 152,`

	SRDT_HW_PWM = 153, SRDT_HW_PTO = 154, SRDT_HW_INTERFACE = 155, SRDT_HW_IEPORT = 156, SRDT_OB_ANY = 160, SRDT_OB_DELAY = 161, SRDT_OB_TOD = 162, SRDT_OB_CYCLIC = 163, SRDT_OB_ATT = 164, SRDT_CONN_ANY = 168, SRDT_CONN_PRG = 169, SRDT_CONN_OUC = 170, SRDT_CONN_R_ID = 171, SRDT_PORT = 173, SRDT_RTM = 174, SRDT_PIP = 175, SRDT_OB_PCYCLE = 192, SRDT_OB_HWINT = 193, SRDT_OB_DIAG = 195, SRDT_OB_TIMEERROR = 196, SRDT_OB_STARTUP = 197, SRDT_DB_ANY = 208, SRDT_DB_WWW = 209, SRDT_DB_DYN = 210, SRDT_DB = 257 };

Table 8-526 EDataType - .NET (C#)

Syntax	public enum EDataType { Unknown = 0, Bool = 1, Byte = 2, Char = 3, Word = 4, Int = 5, DWord = 6, DInt = 7, Real = 8, Date = 9, TimeOfDay = 10, Time = 11, S5Time = 12, DateAndTime = 14, Struct = 17, String = 19, Counter = 28, Timer = 29, IEC_Counter = 30, IEC_Timer = 31, LReal = 48, ULInt = 49, LInt = 50, LWord = 51, USInt = 52, UInt = 53, UDInt = 54, SInt = 55, WChar = 61, WString = 62, LTime = 64, LTimeOfDay = 65, LDT = 66, DTL = 67, IEC_LTimer = 68, IEC_SCounter = 69, IEC_DCounter = 70, IEC_LCounter = 71,

	IEC_UCounter = 72, IEC_USCounter = 73, IEC_UDCounte = 74, IEC_ULCounter = 75, ErrorStruct = 97, NREF = 98, CREF = 101, Aom_Ident = 128, Event_Any = 129, Event_Att = 130, Event_HwInt = 131, Hw_Any = 144, Hw_IoSystem = 145, Hw_DpMaster = 146, Hw_Device = 147, Hw_DpSlave = 148, Hw_Io = 149, Hw_Module = 150, Hw_SubModule = 151, Hw_Hsc = 152, Hw_Pwm = 153, Hw_Pto = 154, Hw_Interface = 155, Hw_IEPort = 156, OB_Any = 160, OB_Delay = 161, OB_Tod = 162, OB_Cyclic = 163, OB_Att = 164, Conn_Any = 168, Conn_Prg = 169, Conn_Ouc = 170, Conn_R_ID = 171, Port = 173, Rtm = 174, Pip = 175, OB_PCycle = 192, OB_HwInt = 193, OB_Diag = 195, OB_TimeError = 196, OB_Startup = 197, DB_Any = 208, DB_WWW = 209, DB_Dyn = 210, DB = 257 }

8.8.7.13 ETagListDetails

Description

This list contains all PLC areas that can be used as a filter to update the tag table.

Table 8-527 ETagListDetails - Native C++

Syntax	enum ETagListDetails { SRTLD_NONE = 0, SRTLD_IO = 1, SRTLD_M = 2, SRTLD_IOM = 3, SRTLD_CT = 4, SRTLD_IOCT = 5, SRTLD_MCT = 6, SRTLD_IOMCT = 7,

	SRTLD_DB = 8, SRTLD_IODB = 9, SRTLD_MDB = 10, SRTLD_IOMDB = 11, SRTLD_CTDB = 12, SRTLD_IOCTDB = 13, SRTLD_MCTDB = 14, SRTLD_IOMCTDB = 15 };

Table 8-528 ETagListDetails - .NET (C#)

Syntax	enum ETagListDetails
	{
	None = 0,
	IO = 1,
	M = 2,
	IOM = 3,
	CT = 4,
	IOCT = 5,
	MCT = 6,
	IOMCT = 7,
	DB = 8,
	IODB = 9,
	MDB = 10,
	IOMDB = 11,
	CTDB = 12,
	IOCTDB = 13,
	MCTDB = 14,
	IOMCTDB = 15
	}

8.8.7.14 ERuntimeConfigChanged

Description

This list contains all possible causes of an OnSoftwareConfigurationChanged event that the Runtime Manager sends.

Table 8-529 ERuntimeConfigChanged - Native C++

Syntax	enum ERuntimeConfigChanged
	{
	SRCC_INSTANCE_REGISTERED = 0,
	SRCC_INSTANCE_UNREGISTERED = 1
	SRCC_CONNECTION_OPENED = 2,
	SRCC_CONNECTION_CLOSED = 3,
	SRCC_PORT_OPENED = 4,
	SRCC_PORT_CLOSED = 5
	};

Table 8-530 ERuntimeConfigChanged - .NET (C#)

Syntax	enum ERuntimeConfigChanged
	{
	InstanceRegistered = 0,
	InstanceUnregistered = 1,
	ConnectionOpened = 2,
	ConnectionClosed = 3,
	PortOpened = 4,
	PortClosed = 5
	}

8.8.7.15 EInstanceConfigChanged

Description

This list contains all possible causes for an OnSoftwareConfigurationChang event that the virtual controller sends.

Table 8-531 EInstanceConfigChanged - Native C++

Syntax	`enum EInstanceConfigChanged`
	`{`
	`SRICC_HARDWARE_SOFTWARE_CHANGED = 0,`
	`SRICC_IP_CHANGED = 1`
	`};`

Table 8-532 EInstanceConfigChanged - .NET (C#)

Syntax	`enum EInstanceConfigChanged`
	`{`
	`HardwareSoftwareChanged = 0,`
	`IPChanged = 1`
	`}`

8.8.7.16 EPullOrPlugEventType

Description

This enumeration contains predefined types of pull/plug events for S7 modules.

Table 8-533 EPullOrPlugEventType - Native C++

Syntax	`enum EPullOrPlugEventType`
	`{`
	`SR_PPE_UNDEFINED = 0,`
	`SR_PPE_PULL_EVENT = 1,`
	`SR_PPE_PLUG_EVENT = 2,`
	`SR_PPE_PLUG_EVENT_ERROR_REMAINS = 3,`
	`SR_PPE_PLUG_WRONG_MODULE_EVENT = 4`
	`};`

Table 8-534 EPullOrPlugEventType - .NET (C#)

Syntax	`enum EPullOrPlugEventType`
	`{`
	`Undefined = 0,`
	`Pull = 1,`
	`Plug = 2,`
	`PlugErrorRemains = 3,`
	`PlugWrongModule = 4`
	`}`

8.8.7.17 EProcessEventType

Description

This enumeration contains predefined types of process events for S7 modules.

Table 8-535 EProcessEventType - Native C++

Syntax	`enum EProcessEventType`
	`{`
	`SR_PET_UNDEFINED = 0,`
	`SR_PET_RISING_EDGE = 1,`
	`SR_PET_FALLING_EDGE = 2,`
	`SR_PET_LIMIT1_UNDERRUN = 3,`
	`SR_PET_LIMIT1_OVERRUN = 4,`
	`SR_PET_LIMIT2_UNDERRUN = 5,`
	`SR_PET_LIMIT2_OVERRUN = 6`
	`};`

Table 8-536 EProcessEventType - .NET (C#)

Syntax	`enum EProcessEventType`
	`{`
	`Undefined = 0,`
	`RisingEdge = 1,`
	`FallingEdge = 2,`
	`Limit_1_Underrun = 3,`
	`Limit_1_Overrun = 4,`
	`Limit_2_Underrun = 5,`
	`Limit_2_Overrun = 6`
	`}`

8.8.7.18 EDirection

Description

This enumeration contains properties of the diagnostic alarm.

Table 8-537 EDirection - Native C++

Syntax	`enum EDirection`
	`{`
	`SRD_DIRECTION_INPUT = 0,`
	`SRD_DIRECTION_OUTPUT = 1`
	`};`

Table 8-538 EDirection - .NET (C#)

Syntax	`enum EDirection`
	`{`
	`Input = 0,`
	`Output = 1`
	`}`

8.8.7.19 EDiagProperty

Description

This enumeration contains the incoming/outgoing information of the diagnostic alarm.

Table 8-539 EDiagProperty - Native C++

Syntax	`enum EDiagProperty`
	`{`
	`SRP_DIAG_APPEAR = 1,`
	`SRP_DIAG_DISAPPEAR = 2`
	`};`

Table 8-540 EDiagProperty - .NET (C#)

Syntax	`enum EDiagProperty`
	`{`
	`Appear = 1,`
	`Disappear = 2`
	`}`

8.8.7.20 EDiagSeverity

Description

This enumeration contains the severity of the diagnostic alarm (error, maintenance demanded, maintenance required).

Table 8-541 EDiagSeverity - Native C++

Syntax	`enum EDiagSeverity`
	`{`
	`SRDS_SEVERITY_FAILURE = 0,`
	`SRDS_SEVERITY_MAINTENANCE_DEMANDED = 1,`
	`SRDS_SEVERITY_MAINTENANCE_REQUIRED = 2`
	`};`

Table 8-542 EDiagSeverity - .NET (C#)

Syntax	`enum EDiagSeverity`
	`{`
	`Failure = 0,`
	`MaintDemanded = 1,`
	`MaintRequired = 2`
	`}`

8.8.7.21 ERackOrStationFaultType

Description

This enumeration contains the types of the RackOrStationFault event.

Table 8-543 ERackOrStationFaultType - Native C++

Syntax	`enum ERackOrStationFaultType`
	`{`
	`SR_RSF_FAULT = 0,`
	`SR_RSF_RETURN = 1`
	`};`

Table 8-544 ERackOrStationFaultType - .NET (C#)

Syntax	`enum ERackOrStationFaultType`
	`{`
	`Fault = 0,`
	`Return = 1`
	`}`

8.8.7.22 ECycleTimeMonitoringMode

Description

This enumeration contains the sources of the timer for the maximum cycle time monitoring.

Table 8-545 ECycleTimeMonitoringMode - Native C++

Syntax	`enum ECycleTimeMonitoringMode`
	`{`
	`SRCTMM_DOWNLOADED = 0,`
	`SRCTMM_IGNORED = 1,`
	`SRCTMM_SPECIFIED = 2`
	`};`

Table 8-546 ECycleTimeMonitoringMode - .NET (C#)

Syntax	`enum ECycleTimeMonitoringMode`
	`{`
	`Downloaded = 0,`
	`Ignored = 1,`
	`Specified = 2`
	`}`

8.8.7.23 EAutodiscoverType

Description

This enumeration is used in the Autodiscover Callback function.

Table 8-547 EAutodiscoverType - Native C++

Syntax	`enum EAutodiscoverType`
	`{`
	`SRRSI_DISCOVER_STARTED = 0,`
	`SRRSI_DISCOVER_DATA = 1,`
	`SRRSI_DISCOVER_FINISHED = 2`
	`};`

Table 8-548 EAutodiscoverType - .NET (C#)

Syntax	`public enum EAutodiscoverType`
	`{`
	`AutodiscoverStarted = 0,`
	`AutodiscoverData = 1,`
	`AutodiscoverFinished = 2`
	`}`

Restrictions, messages and solution 9

9.1 Overview

Certain actions or events can lead to behavior in PLCSIM Advanced or in STEP 7 which deviates from that of a hardware CPU. Messages and possible solutions can be found in the following sections:

- OPC UA server (Page 336)
- Web server (Page 336)
- Backing up and restoring the configuration of a PLCSIM Advanced instance (Page 337)
- Restrictions for file paths (Page 338)
- Restrictions for communications services (Page 339)
- Restrictions for instructions (Page 339)
- Restrictions to local communication via Softbus (Page 339)
- Messages for communication via TCP/IP (Page 340)
- Restrictions of security with VMware vSphere Hypervisor (ESXi) (Page 342)
- Restrictions for Hyper-V (Page 343)
- Monitoring overflow (Page 343)
- Deviating I/O values in the STEP 7 user program (Page 344)
- Multiple simulations and possible collision of IP addresses (Page 344)
- Lacking access to an IP address (Page 344)
- Simulation in standby mode (Page 344)
- ET 200SP CPUs: Use of BusAdapters with fiber-optic interface (Page 346)
- Installing SIMATIC NET (Page 346)

9.2 OPC UA server

With OPC UA, data exchange is performed through an open, standardized and manufacturer-independent communication protocol. The CPU as OPC UA server can communicate with OPC UA clients, for example, with HMI panels and SCADA systems.

Configuring an OPC UA server

Start the instances via the communication interface "PLCSIM Virtual Ethernet Adapter" (TCP/IP) to use the OPC UA server.

The OPC UA server functionality is not available if communication takes place via the Softbus.

User authorization for OPC UA

The PLCSIM Advanced license also contains the user authorization for OPC UA.

The user authorization applies for two instances.

9.3 Web server

The web server integrated in a CPU enables authorized users to monitor and manage the CPU via a network. This permits evaluation and diagnostics over long distances.

Each PLCSIM Advanced instance can simulate its own Web server.

The simulation of the Web server is restricted under S7-PLCSIM Advanced V5.0. The freeze state of a virtual controller is not shown as an internal operating state.

Configuring the Web server

S7-PLCSIM Advanced

Start the instances via the communication interface "PLCSIM Virtual Ethernet Adapter" (TCP/IP) to use the Web server.

The Web server functionality is not available if the communication is performed via the Softbus.

STEP 7

Configure the Web server in STEP 7 in the CPU properties.

Restricted Web server functionality

- The information may not be fully displayed on some websites due to different data handling.
- There is no topology information.
- FW updates are not supported.

9.4 Backing up and restoring the configuration of a PLCSIM Advanced instance

Backing up and restoring the configuration

You can backup and restore a PLCSIM Advanced instance.

You can create as many backups as you want and store a variety of configurations for a PLCSIM Advanced instance.

You perform the backup and restore in the TIA Portal as you would in a real CPU.

PLCSIM Advanced supports backup and restore via web servers.

A backup that was created with PLCSIM Advanced can only be used with PLCSIM Advanced.

It is not possible to restore the configuration of a real CPU with a backup from PLCSIM Advanced.

Requirements

- The configuration of a PLCSIM Advanced instance is backed up and restored over the TCP/IP protocol. Softbus is not supported.
- It is only possible to restore the configuration of a PLCSIM Advanced instance with the corresponding backup from PLCSIM Advanced.

9.5 Loading project data of an F-CPU to a standard CPU

You have created an instance using the Control Panel. You have not assigned a password to protect confidential configuration data in STEP 7.

In addition to a standard CPU, you also want to load an F-CPU via Softbus or TCP/IP to an instance.

When you load project data of an F-CPU to a standard CPU, a window is displayed in the "Load preview" dialog with the query of a password for access to the CPU.

NOTE

Loading the project data of an F-CPU to a standard CPU

Loading project data of an F-CPU to a standard CPU is not possible.

To download project data to an F-CPU, you have the following options:

- Select an unspecified CPU as a new device.
- Start a new instance with an F-CPU.

9.6 Update of a TIA Portal project to a new CPU firmware

NOTE

Password encryption in case of updates

When a TIA Portal project is updated from CPU firmware version < V2.0 to CPU firmware version ≥ V2.0, the following error message is displayed during a download of the project to SIMATIC S7-PLCSIM Advanced ≥ V4.0:

"Loading of hardware configuration failed (0020 -3 2 0). Please check the diagnostic buffer of the target hardware."

To successfully download such a project to SIMATIC S7-PLCSIM Advanced ≥ V4.0, click on the "Update password encryption" button while updating the project.

9.7 Restrictions for file paths

The following restrictions apply for user interfaces which expect a path or a complete file name as the transfer parameter:

Restrictions for local paths	Write permissions to system-critical folders such as the Windows folder (%Windows%) or the program folders (%Program Files%, %Program Files (x86)%) are not allowed. In this case the C++ user interface returns the error code `SREC_WRONG_ARGUMENT`. In this case the managed user interface returns an exception with the error code `RuntimeErrorCode.WrongArgument`.
Restrictions for network paths	In order to be able to use network paths, you must incorporate them as a network drive. Otherwise, the C++ user interface returns the error code `SREC_WRONG_ARGUMENT`. The managed user interface returns an exception with the error code `RuntimeErrorCode.WrongArgument`.

9.8 Restrictions for storage paths

Synchronization of the storage path in cloud memory

If the Persistence folder (<...\Persistence\<Instance Name>) is in a path that is synchronized to a cloud storage, this can lead to the following undesirable behavior:

- Instability or disconnection of active TIA Portal online connections
- Problems with TIA Portal downloads

To prevent this behavior from occurring, you have the following options:

- Do not place the folder of the Virtual SIMATIC Memory Card in a path that is synchronized to a memory on the cloud.
- Turn off the synchronization of such a folder

9.9 Restrictions for communications services

TUSEND / TURCV

When you run the UDP blocks TUSEND and TURCV via the "PLCSIM" communication interface (Softbus), you get error code 0x80C4 at the transmission end and receiving end:

Temporary communications error. The specified connection is temporarily down.

Solution

Set "PLCSIM Virtual Ethernet Adapter" (TCP/IP) as the communication interface in PLCSIM Advanced.

9.10 Restrictions for instructions

PLCSIM Advanced simulates instructions for CPUs S7-1500 and ET 200SP as close to reality as possible. PLCSIM Advanced checks the input parameters for validity and returns outputs that are valid but do not necessarily correspond to those that a real CPU with physical inputs/outputs would return.

Instructions not supported

Unsupported instructions are treated as non-operational. The value of unsupported instructions is always "OK". PLCSIM Advanced does not support the following instructions:

- DP_TOPOL
- PORT_CFG

T_CONFIG instruction

The instruction T_CONFIG works in S7-PLCSIM Advanced via TCP/IP, but not via Softbus.

9.11 Restrictions to local communication via Softbus

Identical IP addresses for instances

If the "PLCSIM" communication interface (Softbus) is set, then identical IP addresses are created automatically for all instances when creating the instances through the Control Panel. In STEP 7, therefore, only one instance is displayed in the dialog.

Solution

Use the API function `SetIPSuite()` to assign a unique address for each instance, then all instances are displayed in STEP 7 with their IP addresses.

API function

SetIPSuite() (Page 153)

Working with multiple instances

When you are working with instances **without unique IP addresses**, note the following procedure for downloading from TIA Portal via "PLCSIM" (Softbus):

1. Start **only one** instance with the symbol in the Control Panel.
2. In TIA Portal, download the program to this instance.
3. Repeat the steps until you have created all instances and downloaded all projects.

Online and diagnostics

If the "PLCSIM" (Softbus) communication interface is set, no details are displayed for the "Online and Diagnostics" function under the PROFINET interface (IP address, MAC address, etc.).

9.12 Unknown data records

Support of unknown data records

The S7-1500 hardware CPUs return an error code in case of an unknown data record. The behavior of PLCSIM Advanced differs from the behavior of an S7-1500 hardware CPU. To enable simulation of the program flow, PLCSIM Advanced does not return an error code for an unknown data record (e.g. ID 0x9999), but acknowledges the unknown data record with "OK".

9.13 Messages for communication via TCP/IP

Error codes

If an error occurs, an ID with error designation appears in the taskbar. You will find an overview of possible error messages and their associated error codes in section ERuntimeErrorCode (Page 316).

Figure 9-1 Example: Error code -66

Messages and remedy

The settings for TCP/IP communication are checked in the S7-PLCSIM Advanced Control Panel. The messages and the corresponding remedies are listed below:

Message

"Siemens PLCSIM Virtual Ethernet Adapter was not found. Please reinstall PLCSIM Advanced."

Remedy

The PLCSIM Virtual Ethernet Adapter cannot be found on the system.
Run PLCSIM Advanced Setup again:

1. Double-click the download package or insert the installation medium into the drive. The setup program starts up automatically, provided you have not disabled the Autostart function on the computer. If the setup program does not start up automatically, start it manually by double-clicking the "Start.exe" file.
2. Follow the prompts until you reach the "Configuration" window. Select the "Repair" check box.
3. Follow the remaining prompts to repair your installation.
4. Complete the repair operation by restarting your computer.

Message

"Siemens PLCSIM Virtual Ethernet Adapter is disabled. Please enable it."

Remedy

The PLCSIM Virtual Ethernet Adapter is deactivated on the system. In the Control Panel, under "Network and Sharing Center" > "Change Adapter Settings" and activate the network adapter.

Message

"Npcap service is not running. When installed start it from elevated command prompt with 'net start npcap'."

Remedy

The Npcap is not active on the system. Open a command line in administrator mode and enter the command "net start npcap".

Message

"You have to set a valid IP address for the Siemens PLCSIM Virtual Ethernet Adapter."

Remedy

Assign a static IP address to the Siemens PLCSIM Virtual Ethernet Adapter or obtain an IP address via DHCP (default setting).

9.14 Time synchronization via NTP mode

Time synchronization via NTP mode with PLCSIM Advanced

You can simulate time synchronization using NTP methods.

9.15 Restrictions of security with VMware vSphere Hypervisor (ESXi)

The following information is only important if you want to communicate with the "outside world". This means when you access a VM on which the TIA Portal is running from another virtualization platform on which an instance is running. The following changes are only necessary if you are not using TCP/IP on the local PC.

- When you use the virtualization platform VMware vSphere Hypervisor (ESXi), you must change the policy exception to communicate over TCP/IP.
- Accept the "Promiscuous mode" and "Forged transmit" options for the Virtual Switch of the ESXi.

Promiscuous mode

In promiscuous mode, the network adapter reads all incoming telegrams, including those that are not intended for the network adapter, and forwards the data to the operating system for processing.

The promiscuous mode is necessary for the simulation with PLCSIM Advanced so that telegrams can be forwarded by the Ethernet adapter to the PC or the VM for processing, for example, data for additional PLCSIM Advanced instances in the network.

NOTICE
Restrictions of security For security reasons, Promiscuous mode is disabled by default. If you accept the Promiscuous mode, the real Ethernet adapter even receives telegrams that are not addressed to it.

The following figure shows the "Security" category for selecting the security settings for the virtual switch in VMware vSphere Hypervisor (ESXi).

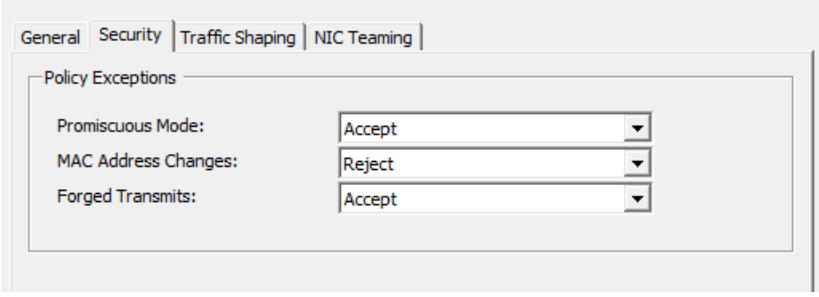

Figure 9-2 Policy exceptions for VMware vSphere Hypervisor (ESXi)

9.16 Restrictions for Hyper-V

The following information is only important if you want to communicate with the "outside world". Communication with the "outside world" means that you access another VM running TIA Portal from a virtualization platform running an instance. When you are using TCP/IP on the local PC, the following settings are not necessary.

When you use the virtualization platform Hyper-V, you must change the following setting to be able to use the communication over TCP/IP.

1. In the Hyper-V Manager, select the Hyper-V server.
2. Select the VM and its settings via "Settings...".
3. In the "Extended Functions", select "MAC Address Spoofing".

This setting is necessary for the simulation with PLCSIM Advanced so that telegrams can be forwarded by the Ethernet adapter to the PC or the VM for processing, for example, data for additional PLCSIM Advanced instances in the network.

NOTICE
Restrictions of security For security reasons, Promiscuous mode is disabled by default. If you accept the Promiscuous mode, the real Ethernet adapter even receives telegrams that are not addressed to it.

9.17 Monitoring overflow

Monitoring of main cycle

The maximum cycle time monitoring for PLCSIM Advanced is one minute.

If you want to use the values that are configured in the TIA Portal, set them using the following API function: `SetCycleTimeMonitoringMode()`. You can find more information at Cycle control (Page 226).

Monitoring of cyclical events

If your simulation contains cyclic interrupts, the queue of PLCSIM Advanced may overflow for cyclic events. Due to the runtime speed of PLCSIM Advanced compared to real hardware, the time needed to create the diagnostic buffer entry may be longer than the time until the next cyclic interrupt.
In this case, an additional entry is placed in the queue, causing another overflow. In the event of an overflow, PLCSIM Advanced provides visual information in the form of diagnostics buffer messages and a red error icon in the project tree.

9.18 Deviating I/O values in the STEP 7 user program

Updated values

Each value that a STEP 7 user program changes in the I/O address ranges receives the updated value in the cycle control point that was written via the API functions `Write... ()`. The API functions `Read...()` only return this updated value and not the value from STEP 7 **for the input range**.

Non-updated values

If the value was not updated via the API functions `Write...()`, the API functions `Read...()` return the value from STEP 7 **for the output range**.

9.19 Multiple simulations and possible collision of IP addresses

You can simultaneously simulate multiple CPUs, but each simulated CPU interface requires a unique IP address.
Make sure your CPUs have different IP addresses before starting the simulation.

9.20 Lacking access to an IP address

Special feature of distributed communication

If you use multiple network nodes on the same subnet through different virtual or real adapters, the operating system may search for the node on the wrong adapter.

Remedy

Repeat your requests or enter "arp -d <IP address>" in the command line editor of Windows.

9.21 Simulation in standby mode

When your computer or programming device goes into standby or sleep mode, the simulation may stop. In this case, communication between STEP 7 and PLCSIM Advanced is stopped. When your computer or programming device starts up again, the communication may need to be reestablished. In some cases, it may also be necessary to open the simulation project again.

To prevent this situation, disable the standby mode on your computer or programming device.

9.22 Time response of PLCSIM Advanced in connection with I/O systems

The SingleStep_P operating mode triggers a `SyncPointReached` event for each imported process image partition and I/O system.

Example:

If you have defined a process image partition consisting of input addresses of a centralized and distributed I/O system, the firmware reads the process image partition of the inputs for each I/O system and sends a `SyncPointReached` event each time.

The number of `SyncPointReached` events sent for a process image partition thus depends on how many different I/O systems the process image partition contains.

9.23 Simulation start of SIMIT with S7-PLCSIM Advanced

Error message during simulation start of SIMIT with S7-PLCSIM Advanced

You have configured a S7-PLCSIM Advanced connection in SIMIT. When starting the simulation, SIMIT aborts and the following error message is returned: `"-14 InstanceNotRunning"`

When the error has occurred, you can also no longer open the S7-PLCSIM Advanced instance using the virtual Ethernet adapter.

Solution

You have the following solution options:

- Repair your S7-PLCSIM Advanced installation.
- Install S7-PLCSIM Advanced once again.

The procedures are described in the section Installing (Page 31).

A repair or new installation will install the Npcap program library once again. This solves the problem.

9.24 Known restrictions when operating with a co-simulation (e.g. SIMIT).

1. In case of a simulation in PLCSIM Advanced in connection with SIMIT, a TIA Portal download in RUN may result in an MC error (MC message 431: Communication to the device under logical address [...] is disturbed. Sign of life of drive faulty).

   This error can occur with the following project settings:

   – Bus-synchronous operating mode in SIMIT or event-synchronous operating mode to MC servo process image partition (PIP)
   – the PLCSIM Advanced feature "Strict Motion Timing" = true

   The error causes the activated axes to be switched off. You can acknowledge the error via an MC_Reset or via the TIA Portal. After that, the axis can be switched on again.

9.25 ET 200SP CPUs: Use of BusAdapters with fiber-optic interface

ET 200SP CPUs: Use of BusAdapters with fiber-optic interface

If you use BusAdapters with fiber-optic interface for connecting fiber-optic cables (e.g. BA 2xLC), then download via TCP/IP is not possible.

Remedy

Use the communication interface "PLCSIM" (Softbus) in PLCSIM Advanced.

9.26 Installing SIMATIC NET

Problems after installing SIMATIC NET PC software products

If you are using one of the following operating systems with S7 PLCSIM Advanced on your PC, problems may arise with the PLCSIM Advanced instances via TCP/IP if you have installed SIMATIC NET PC software products on your PC:

- Windows 10 Pro, Version 1809
- Windows Server 2019

After installing the SIMATIC NET PC software products, you may no longer be able to start the PLCSIM Advanced instances via TCP/IP.

Remedy

Update the operating system on your PC:

- Windows 10, Version ≥ 1903 or
- Windows Server version > 2019

List of abbreviations

A

Abbreviation	Term
ALM	Automation License Manager Tool for managing license keys in STEP 7
API	Application Programming Interface user interface
arp	Address resolution protocol
BCD	Binary Coded Decimal
CPU	Central Processing Unit (Synonym for PLC)
DLL	Dynamic Link Library
HMI	Human Machine Interface user interface
I-device	Intelligent IO device
IE	Industrial Ethernet
GUI	Graphical User Interface
LAN	Local Area Network Computer network that is limited to a local area.
MFP	Multifunctional platform
OB	Organization Block
ODK	Open Development Kit
OPC UA	Open Platform Communications Unified Architecture
PA	Process image output (PIQ)
PE	Process image input (PII)
PG	Programming device
PLC	Programmable Logic Controller
PN	PROFINET
RAM	Random Access Memory
RT	Runtime
SO	Shared Object
TCP/IP	Transmission Control Protocol/Internet Protocol
TIA	Totally Integrated Automation
PIP	Process Image Partition
UTC	Coordinated Universal Time
VM	Virtual Machine
VPLC	Virtual Programmable Logic Controller
WinCC	Windows Control Center

Edition 11/2022

FUNCTION MANUAL

SIMATIC

S7-1500, ET 200MP, ET 200SP, ET 200AL, ET 200pro

Diagnostics

support.industry.siemens.com

SIEMENS

SIMATIC

S7-1500, ET 200MP, ET 200SP, ET 200AL, ET 200pro S7-1500, ET 200MP, ET 200SP, ET 200AL, ET 200pro Diagnostics

Function Manual

Introduction 1

Safety instructions 2

Overview of system diagnostics 3

Quick start 4

Setting and determining system diagnostics 5

System diagnostics by means of the user program 6

Alarms 7

Diagnostics of the S7-1500R/H redundant system 8

11/2022

A5E03735838-AG

Legal information

Warning notice system

This manual contains notices you have to observe in order to ensure your personal safety, as well as to prevent damage to property. The notices referring to your personal safety are highlighted in the manual by a safety alert symbol, notices referring only to property damage have no safety alert symbol. These notices shown below are graded according to the degree of danger.

⚠ DANGER
indicates that death or severe personal injury **will** result if proper precautions are not taken.

⚠ WARNING
indicates that death or severe personal injury **may** result if proper precautions are not taken.

⚠ CAUTION
indicates that minor personal injury can result if proper precautions are not taken.

NOTICE
indicates that property damage can result if proper precautions are not taken.

If more than one degree of danger is present, the warning notice representing the highest degree of danger will be used. A notice warning of injury to persons with a safety alert symbol may also include a warning relating to property damage.

Qualified Personnel

The product/system described in this documentation may be operated only by **personnel qualified** for the specific task in accordance with the relevant documentation, in particular its warning notices and safety instructions. Qualified personnel are those who, based on their training and experience, are capable of identifying risks and avoiding potential hazards when working with these products/systems.

Proper use of Siemens products

Note the following:

⚠ WARNING
Siemens products may only be used for the applications described in the catalog and in the relevant technical documentation. If products and components from other manufacturers are used, these must be recommended or approved by Siemens. Proper transport, storage, installation, assembly, commissioning, operation and maintenance are required to ensure that the products operate safely and without any problems. The permissible ambient conditions must be complied with. The information in the relevant documentation must be observed.

Trademarks

All names identified by ® are registered trademarks of Siemens AG. The remaining trademarks in this publication may be trademarks whose use by third parties for their own purposes could violate the rights of the owner.

Disclaimer of Liability

We have reviewed the contents of this publication to ensure consistency with the hardware and software described. Since variance cannot be precluded entirely, we cannot guarantee full consistency. However, the information in this publication is reviewed regularly and any necessary corrections are included in subsequent editions.

Siemens AG
Digital Industries
Postfach 48 48
90026 NÜRNBERG
GERMANY

A5E03735838-AG
Ⓟ 09/2022 Subject to change

Copyright © Siemens AG 2013 - 2022.
All rights reserved

Table of contents

1 Introduction ... 6

1.1 Function Manuals documentation guide ... 8
1.1.1 Information classes Function Manuals ... 8
1.1.2 Basic tools ... 10
1.1.3 SIMATIC Technical Documentation ... 12

2 Safety instructions ... 14

2.1 Security information ... 14

3 Overview of system diagnostics ... 15

3.1 Properties of system diagnostics ... 15

3.2 Benefits of innovative system diagnostics ... 16

4 Quick start ... 18

4.1 Using the display of the CPU ... 18

4.2 Using STEP 7 ... 19

5 Setting and determining system diagnostics ... 25

5.1 Configuring alarms for system diagnostics ... 25

5.2 Options for displaying system diagnostics ... 27
5.2.1 Diagnostics information at the devices ... 28
5.2.1.1 LEDs ... 28
5.2.1.2 Display of the CPU ... 29
5.2.2 Diagnostics information in STEP 7 ... 30
5.2.2.1 Explanation of diagnostics symbols ... 30
5.2.2.2 Accessible devices (without project) ... 32
5.2.2.3 Devices & networks ... 34
5.2.2.4 Online & diagnostics ... 36
5.2.2.5 "Diagnostics" tab in the Inspector window ... 39
5.2.2.6 CPU diagnostics buffer ... 41
5.2.2.7 "Online tools" task card ... 44
5.2.2.8 Configuring the settings for I/O modules in STEP 7 ... 47
5.2.3 Diagnostics information using the web server ... 48
5.2.4 Diagnostics information using the HMI diagnostics view ... 57
5.2.4.1 Configuring system diagnostics ... 58
5.2.4.2 Different views of the HMI diagnostics view ... 60
5.2.4.3 Inserting system diagnostics indicator ... 62
5.2.4.4 Configuring button as system diagnostics indicator ... 65

6 System diagnostics by means of the user program ... 67

6.1 Options of system diagnostics in the user program ... 67

6.2 System diagnostics using process image inputs ... 69

7 Alarms ... 72

7.1 Creating alarms with the "Program_Alarm" instruction ... 72

7.2 Editing alarms in the alarm editor ... 74

7.3 Display of program alarms ... 77

7.4 Output of the alarm state with the "Get_AlarmState" instruction ... 78

7.5 Example program for program alarms ... 79

7.5.1 Task ... 79

7.5.2 Example 1: Program alarm without associated values ... 79

7.5.3 Example 2: Program alarm with associated value ... 84

7.5.4 Displaying the alarm ... 90

8 Diagnostics of the S7-1500R/H redundant system ... 92

8.1 Online and Diagnostics view ... 93

8.2 "Online Tools" task card ... 96

8.3 Diagnostics view in the project tree and in the device view and network view ... 99

8.4 Diagnostics in the RUN-Redundant system state ... 108

8.5 Restrictions in the RUN-Solo system state ... 113

8.6 System diagnostics by means of the user program ... 115

Glossary ... 116

Index ... 120

Introduction 1

Purpose of the documentation

This function manual provides an overview of the diagnostics options for the automation system SIMATIC S7-1500, for the CPUs 1513pro-2 PN and 1516pro-2 PN based on SIMATIC S7-1500, and for the distributed I/O systems SIMATIC ET 200MP, ET 200SP and ET 200AL.

The documentation covers the following:

- Illustration of the uniformity and consistency of system diagnostics
- Overview of the options for establishing system diagnostics information

Basic knowledge required

The following knowledge is required in order to understand the function manual:

- General knowledge in the field of automation technology
- Knowledge of the industrial automation system SIMATIC
- Knowledge of working with STEP 7 and WinCC
- Knowledge about the use of Microsoft Windows operating systems

Scope of the documentation

This documentation is the basic documentation for all products of the S7-1500, ET 200MP, ET 200SP and ET 200AL systems, as well as for the CPUs 1513pro-2 PN und 1516pro-2 PN. The product documentation is based on this documentation.

What's new in the Diagnostics Function Manual, Edition 11/2022 compared with Edition 11/2019

What's new?		What are the customer benefits?	Where can I find the information?
Changed contents	Addition to section "Diagnostics of the S7-1500R/H redundant system"	You receive information on diagnostics of R1 devices. An example shows you how to perform diagnostics for a faulty connection.	Section Diagnostics of the S7-1500R/H redundant system (Page 92)

What's new in the Diagnostics function manual, Edition 11/2019 compared to Edition 10/2018

What's new?		What are the customer benefits?	Where can I find the information?
Changed contents	Updated restrictions for the S7-1500R/H redundant system	Functions with which you are familiar from the SIMATIC S7-1500 automation system are implemented for the S7-1500R/H redundant system.	Section Diagnostics of the S7-1500R/H redundant system (Page 92)

What's new in the Diagnostics function manual, Edition 10/2018 compared to Edition 09/2016

What's new?		What are the customer benefits?	Where can I find the information?
New contents	Description of the diagnostics of the S7-1500R/H redundant system	You obtain information in compact form on the special features of the diagnostics in the S7-1500R/H redundant systems.	Section Diagnostics of the S7-1500R/H redundant system (Page 92)
Changed contents	Scope of the function manual expanded to include the S7-1500R/H redundant system	Functions with which you are familiar from the SIMATIC S7-1500 automation system are implemented for the S7-1500R/H redundant system.	Redundant System S7-1500R/H System Manual (https://support.industry.siemens.com/cs/ww/en/view/109754833)

What's new in the Diagnostics function manual, Edition 09/2016 compared to Edition 06/2014

What's new?		What are the customer benefits?	Where can I find the information?
New contents	Extended functionality of the Web server	• You obtain information about: – Know-how protection or copy protection of the PLC program – Program/communication load and cycle time – F-collective signatures, cycle times and runtimes of the F-runtime group(s) (with an F-CPU) • You can monitor statuses, errors, technology alarms and the current values of technology objects (TOs) with the Web server. • You can read, view and save trace recordings via the Web server and thus obtain plant and project information for diagnostics and maintenance without STEP 7. • You can set four additional languages for the Web server interface.	Section Diagnostics information using the web server (Page 48), Web server (http://support.automation.siemens.com/WW/view/en/59193560) function manual, Using the trace and logic analyzer function (https://support.industry.siemens.com/cs/ww/en/view/64897128) function manual
	Assignment of different project languages extended	You can assign up to three different project languages for comments and alarm texts to the user interface languages of display devices.	Section Editing alarms in the alarm editor (Page 74)
Changed contents	Scope of the function manual expanded to include CPU 1516pro-2 PN	Functions that you will be familiar with from the SIMATIC S7-1500 CPUs are implemented in the CPU 1516pro-2 PN (degree of protection IP65, IP66 and IP67).	Operating instructions CPU 1516pro-2 PN (https://support.industry.siemens.com/cs/ww/en/view/109482416)
	Security events added	You know which types of events are registered as security events in the diagnostics buffer and can configure group alarms for them.	Section CPU diagnostics buffer (Page 41)
	Influence of the value status explained	You know which factors influence the bit in the value status and can take this into account during configuration.	Section System diagnostics using process image inputs (Page 68)

What's new?		What are the customer benefits?	Where can I find the information?
Changed contents	Note added on the maximum configuration limits of program alarms.		Section Creating alarms with the "Program_Alarm" instruction (Page 72).

Conventions

STEP 7: We refer to "STEP 7" in this documentation as a synonym for the configuration and programming software "STEP 7 as of V12 (TIA Portal)" and subsequent versions.
This document contains illustrations of the described devices. The illustrations may differ slightly from the device supplied.
You should also pay particular attention to notes such as the one shown below:

NOTE

A note contains important information on the product, on the handling of the product or on the section of the documentation to which particular attention should be paid.

Industry Mall

The Industry Mall is the catalog and order system of Siemens AG for automation and drive solutions on the basis of Totally Integrated Automation (TIA) and Totally Integrated Power (TIP).
You can find catalogs for all automation and drive products on the Internet (https://mall.industry.siemens.com).

1.1 Function Manuals documentation guide

1.1.1 Information classes Function Manuals

The documentation for the SIMATIC S7-1500 automation system, for the 1513/1516pro-2 PN, SIMATIC Drive Controller CPUs based on SIMATIC S7-1500 and the SIMATIC ET 200MP, ET 200SP, ET 200AL and ET 200eco PN distributed I/O systems is arranged into three areas.
This arrangement enables you to access the specific content you require.
You can download the documentation free of charge from the Internet (https://support.industry.siemens.com/cs/ww/en/view/109742705).

Basic information

The system manuals and Getting Started describe in detail the configuration, installation, wiring and commissioning of the SIMATIC S7-1500, SIMATIC Drive Controller, ET 200MP, ET 200SP, ET 200AL and ET 200eco PN systems. Use the corresponding operating instructions for 1513/1516pro-2 PN CPUs.
The STEP 7 online help supports you in the configuration and programming.
Examples:

- Getting Started S7-1500
- System manuals
- Operating instructions ET 200pro and 1516pro-2 PN CPU
- Online help TIA Portal

Device information

Equipment manuals contain a compact description of the module-specific information, such as properties, wiring diagrams, characteristics and technical specifications.
Examples:

- Equipment manuals for CPUs
- Equipment manuals for interface modules
- Equipment manuals for digital modules
- Equipment manuals for analog modules
- Equipment manuals for communication modules
- Equipment manuals for technology modules
- Equipment manuals for power supply modules
- Equipment manuals for BaseUnits

General information

The function manuals contain detailed descriptions on general topics relating to the SIMATIC Drive Controller and the S7-1500 automation system.
Examples:

- Function Manual Diagnostics
- Function Manual Communication
- Function Manuals Motion Control
- Function Manual Web Server
- Function Manual Cycle and Response Times
- PROFINET Function Manual
- PROFIBUS Function Manual

Product Information

Changes and supplements to the manuals are documented in a Product Information. The Product Information takes precedence over the device and system manuals.

You will find the latest Product Information on the Internet:

- S7-1500/ET 200MP (https://support.industry.siemens.com/cs/de/en/view/68052815)
- SIMATIC Drive Controller (https://support.industry.siemens.com/cs/de/en/view/109772684/en)
- Motion Control (https://support.industry.siemens.com/cs/de/en/view/109794046/en)
- ET 200SP (https://support.industry.siemens.com/cs/de/en/view/73021864)
- ET 200eco PN (https://support.industry.siemens.com/cs/ww/en/view/109765611)

Manual Collections

The Manual Collections contain the complete documentation of the systems put together in one file.

You will find the Manual Collections on the Internet:

- S7-1500/ET 200MP/SIMATIC Drive Controller (https://support.industry.siemens.com/cs/ww/en/view/86140384)
- ET 200SP (https://support.industry.siemens.com/cs/ww/en/view/84133942)
- ET 200AL (https://support.industry.siemens.com/cs/ww/en/view/95242965)
- ET 200eco PN (https://support.industry.siemens.com/cs/ww/en/view/109781058)

1.1.2 Basic tools

The tools described below support you in all steps: from planning, over commissioning, all the way to analysis of your system.

TIA Selection Tool

The TIA Selection Tool tool supports you in the selection, configuration, and ordering of devices for Totally Integrated Automation (TIA).

As successor of the SIMATIC Selection Tools , it assembles the configuration editors for automation technology already familiar into a single tool.

With the TIA Selection Tool , you can generate a complete order list from your product selection or product configuration.
You can find the TIA Selection Tool on the Internet.
(https://support.industry.siemens.com/cs/ww/en/view/109767888)

SIMATIC Automation Tool

You can use the SIMATIC Automation Tool to perform commissioning and maintenance activities on various SIMATIC S7 stations as bulk operations independent of TIA Portal.

The SIMATIC Automation Tool offers a wide range of functions:

- Scanning of a PROFINET/Ethernet system network and identification of all connected CPUs
- Assignment of addresses (IP, subnet, Gateway) and device name (PROFINET device) to a CPU
- Transfer of the date and the programming device/PC time converted to UTC time to the module
- Program download to CPU
- RUN/STOP mode switchover

- CPU localization through LED flashing
- Reading out of CPU error information
- Reading the CPU diagnostic buffer
- Reset to factory settings
- Firmware update of the CPU and connected modules

You can find the SIMATIC Automation Tool on the Internet.
(https://support.industry.siemens.com/cs/ww/en/view/98161300)

PRONETA

SIEMENS PRONETA (PROFINET network analysis) is a commissioning and diagnostic tool for PROFINET networks. PRONETA Basic has two core functions:

- The "Network analysis" offers a quick overview of the PROFINET topology. It is possible to make simple parameter changes (for example, to the names and IP addresses of the devices). In addition, a quick and convenient comparison of the real configuration with a reference system is also possible.
- The "IO test" is a simple and rapid test of the wiring and the module configuration of a plant, including documentation of the test results.

You can find SIEMENS PRONETA Basic on the Internet:
(https://support.industry.siemens.com/cs/ww/en/view/67460624)

SIEMENS PRONETA Professional is a licensed product that offers you additional functions. It offers you simple asset management in PROFINET networks and supports operators of automation systems in automatic data collection/acquisition of the components used through various functions:

- The user interface (API) offers an access point to the automation cell to automate the scan functions using MQTT or a command line.
- With PROFIenergy diagnostics, you can quickly detect the current pause mode or the readiness for operation of devices that support PROFIenergy and change these as needed.
- The data record wizard supports PROFINET developers in reading and writing acyclic PROFINET data records quickly and easily without PLC and engineering.

You can find SIEMENS PRONETA Professional on the Internet.
(https://www.siemens.com/proneta-professional)

SINETPLAN

SINETPLAN, the Siemens Network Planner, supports you in planning automation systems and networks based on PROFINET. The tool facilitates professional and predictive dimensioning of your PROFINET installation as early as in the planning stage. In addition, SINETPLAN supports you during network optimization and helps you to exploit network resources optimally and to plan reserves. This helps to prevent problems in commissioning or failures during productive operation even in advance of a planned operation. This increases the availability of the production plant and helps improve operational safety.

The advantages at a glance

- Network optimization thanks to port-specific calculation of the network load
- Increased production availability thanks to online scan and verification of existing systems
- Transparency before commissioning through importing and simulation of existing STEP 7 projects
- Efficiency through securing existing investments in the long term and the optimal use of resources

You can find SINETPLAN on the Internet (https://new.siemens.com/global/en/products/automation/industrial-communication/profinet/sinetplan.html).

1.1.3 SIMATIC Technical Documentation

Additional SIMATIC documents will complete your information. You can find these documents and their use at the following links and QR codes.

The Industry Online Support gives you the option to get information on all topics. Application examples support you in solving your automation tasks.

Overview of the SIMATIC Technical Documentation

Here you will find an overview of the SIMATIC documentation available in Siemens Industry Online Support:

Industry Online Support International (https://support.industry.siemens.com/cs/ww/en/view/109742705)

Watch this short video to find out where you can find the overview directly in Siemens Industry Online Support and how to use Siemens Industry Online Support on your mobile device:

Quick introduction to the technical documentation of automation products per video (https://support.industry.siemens.com/cs/us/en/view/109780491)

YouTube video: Siemens Automation Products - Technical Documentation at a Glance (https://youtu.be/TwLSxxRQQsA)

mySupport

With "mySupport" you can get the most out of your Industry Online Support.

Registration	You must register once to use the full functionality of "mySupport". After registration, you can create filters, favorites and tabs in your personal workspace.
Support requests	Your data is already filled out in support requests, and you can get an overview of your current requests at any time.

Documentation	In the Documentation area you can build your personal library.
Favorites	You can use the "Add to mySupport favorites" to flag especially interesting or frequently needed content. Under "Favorites", you will find a list of your flagged entries.
Recently viewed articles	The most recently viewed pages in mySupport are available under "Recently viewed articles".
CAx data	The CAx data area gives you access to the latest product data for your CAx or CAe system. You configure your own download package with a few clicks: • Product images, 2D dimension drawings, 3D models, internal circuit diagrams, EPLAN macro files • Manuals, characteristics, operating manuals, certificates • Product master data

You can find "mySupport" on the Internet. (https://support.industry.siemens.com/My/ww/en)

Application examples

The application examples support you with various tools and examples for solving your automation tasks. Solutions are shown in interplay with multiple components in the system - separated from the focus on individual products.
You can find the application examples on the Internet.
(https://support.industry.siemens.com/cs/ww/en/ps/ae)

Safety instructions 2

2.1 Security information

Siemens provides products and solutions with industrial security functions that support the secure operation of plants, systems, machines and networks.

In order to protect plants, systems, machines and networks against cyber threats, it is necessary to implement – and continuously maintain – a holistic, state-of-the-art industrial security concept. Siemens' products and solutions constitute one element of such a concept.

Customers are responsible for preventing unauthorized access to their plants, systems, machines and networks. Such systems, machines and components should only be connected to an enterprise network or the internet if and to the extent such a connection is necessary and only when appropriate security measures (e.g. firewalls and/or network segmentation) are in place.

For additional information on industrial security measures that may be implemented, please visit (https://www.siemens.com/industrialsecurity).

Siemens' products and solutions undergo continuous development to make them more secure. Siemens strongly recommends that product updates are applied as soon as they are available and that the latest product versions are used. Use of product versions that are no longer supported, and failure to apply the latest updates may increase customers' exposure to cyber threats.

To stay informed about product updates, subscribe to the Siemens Industrial Security RSS Feed visit (https://www.siemens.com/cert).

Overview of system diagnostics 3

3.1 Properties of system diagnostics

Introduction

In the SIMATIC environment, the term "system diagnostics" refers to diagnostics of devices and modules.

All SIMATIC products have integrated diagnostic functions that you can use to detect and remedy faults. The components automatically flag a potential fault in the operation and provide detailed information. You can minimize unscheduled standstill times with plant-wide diagnostics.

The SIMATIC automation system monitors the following states in the running plant:

- Device failure/recovery
- Insert/remove event
- Module fault
- I/O access error
- Channel fault
- Parameter assignment error
- Failure of the external auxiliary voltage

Properties ofSIMATIC system diagnostics

- Integrated as standard in the hardware
- System-wide across bus limits
- Automatic localization of the error source
- Automatic output of the cause of the error in plain text
- Plant-wide diagnostics of all components
- Archiving and logging of alarms
- Configurability of alarms

Consistent diagnostics from the field level all the way to the management level

The various diagnostics media give you a uniform view of maintenance-related information of every automation component in the plant: System status (module and network status, alarms for system errors) are available plant-wide in a uniform display.

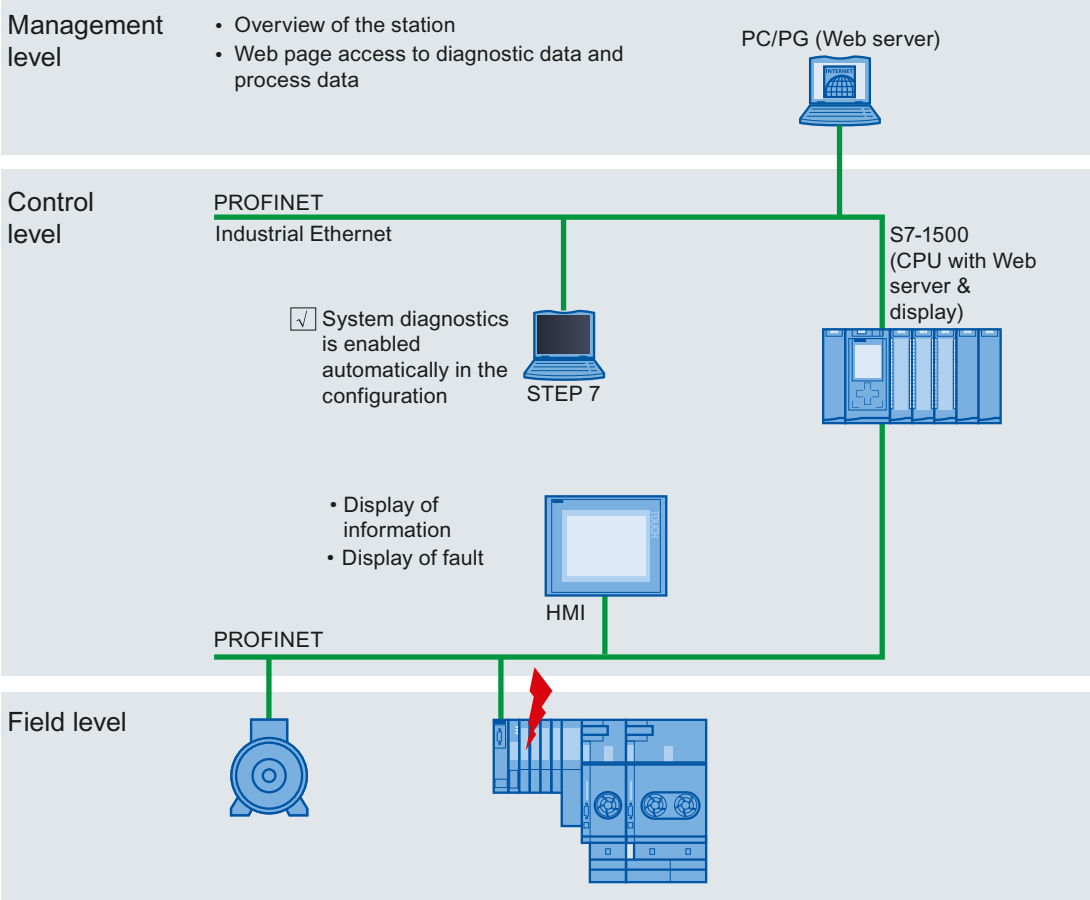

Figure 3-1 Overview of system diagnostics in a plant

3.2 Benefits of innovative system diagnostics

System diagnostics is also possible in STOP

The system diagnostics is integrated in the firmware of the CPU and works independently of the cyclic user program. This means it is also available in the STOP CPU operating mode. Faults are detected immediately and signaled to the higher-level HMI devices, the Web server and the display of the SIMATIC S7-1500 CPU, even in STOP mode. This makes system diagnostics consistent with the actual plant state at all times.

Uniform display concept

All clients of a system are provided with diagnostics information by a uniform mechanism. The same system diagnostics information is used regardless of the display medium.

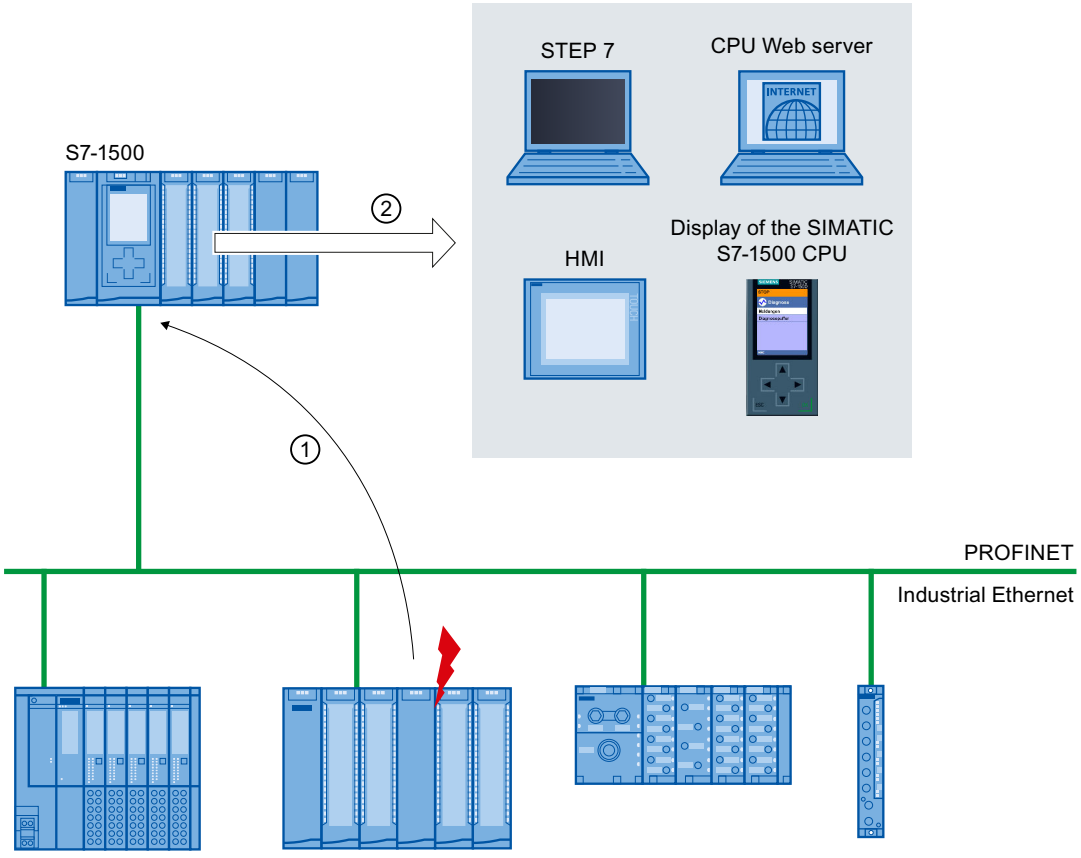

Step	Description
①	The device detects an error and sends diagnostics data to the assigned CPU.
②	The CPU informs the connected display media. The display of the system diagnostics is updated.

Figure 3-2 Sequence of the system diagnostics

Quick start

4

Introduction

The following chapters of this documentation describe the different options for establishing system diagnostics. All described options can be used independently of one another.
This chapter gives you an overview of the basic procedure to get initial diagnostics information fast.

NOTE

System diagnostics is generally available for the devices of the SIMATIC series.

4.1 Using the display of the CPU

The display of the SIMATIC S7-1500 CPU offers a fast and direct option to get diagnostics information. You can call up status information in different menus on the display.

Requirements

- A project has been created.
- The project has been downloaded to the CPU.

Determining diagnostics information using the display of the SIMATIC S7-1500 CPU

To determine diagnostics information using the display, follow these steps:

1. Select the "Diagnostics" menu on the display.
2. Select the "Diagnostics buffer" command from the "Diagnostics" menu.

Figure 4-1 Display of SIMATIC S7-1500 CPU

Result

The diagnostics events are displayed in the diagnostics buffer in the sequence in which they occur.

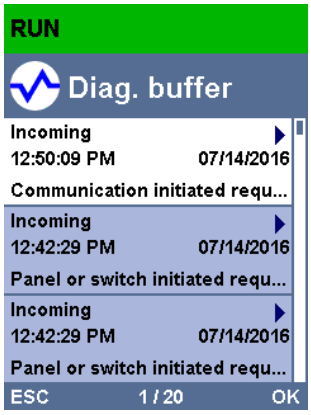

Figure 4-2 Display of the diagnostics buffer in the display of the SIMATIC S7-1500 CPU

NOTE

Automatic updating of diagnostics information

You set automatic updating of the diagnostics information under: "Display" > "DiagnosticRefresh".

Additional information

You can find information about the configuration of alarms in the section Configuring alarms for system diagnostics (Page 25).

4.2 Using STEP 7

Getting started with STEP 7 gives you fast access to detailed diagnostics information.

Requirements

- A project has been created.
- The project has been downloaded to the CPU.
- An error has occurred.
- The programming device must be able to establish a connection to the CPU via an interface.

Determining diagnostics information using STEP 7

To determine diagnostics information using STEP 7, follow these steps:

1. Open the respective project in STEP 7.
2. Open the portal view of STEP 7.

3. Select the "Online & Diagnostics" portal.
4. Select the "Online status" action.
   The "Select device" dialog opens. The dialog is an image of the configured devices in the project.

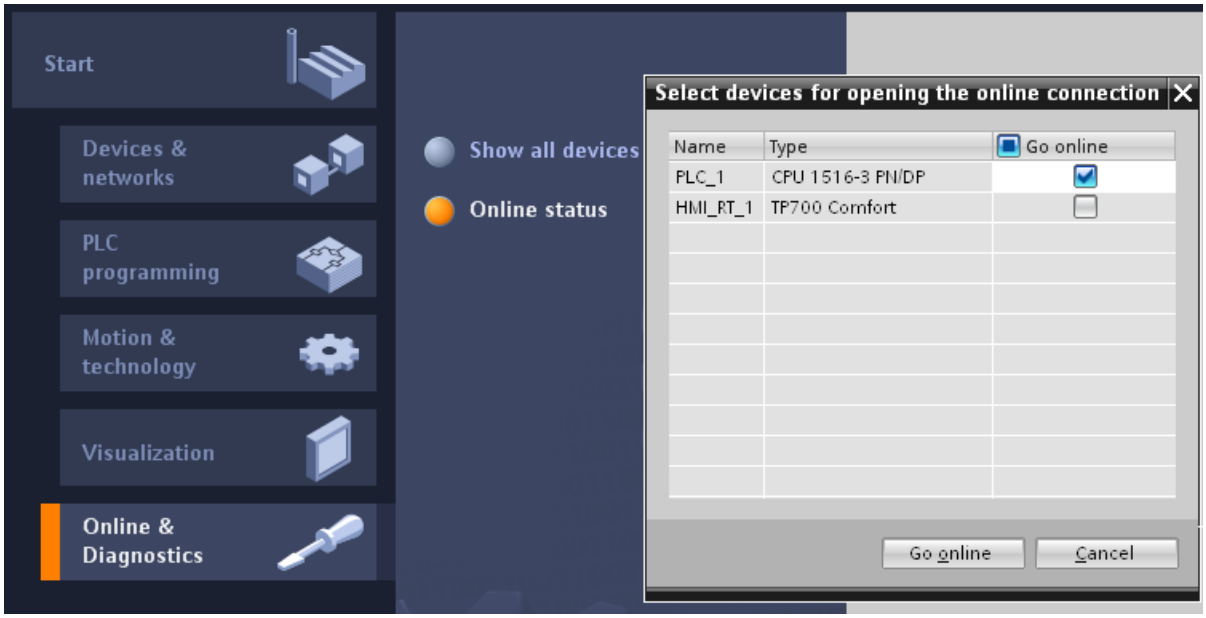

Figure 4-3 Device selection for online connection in the portal view

5. Activate the "Go online" option button for the device that you want to use to establish an online connection.
6. Click on the "Go online" button.

7. The "Go online" dialog opens.

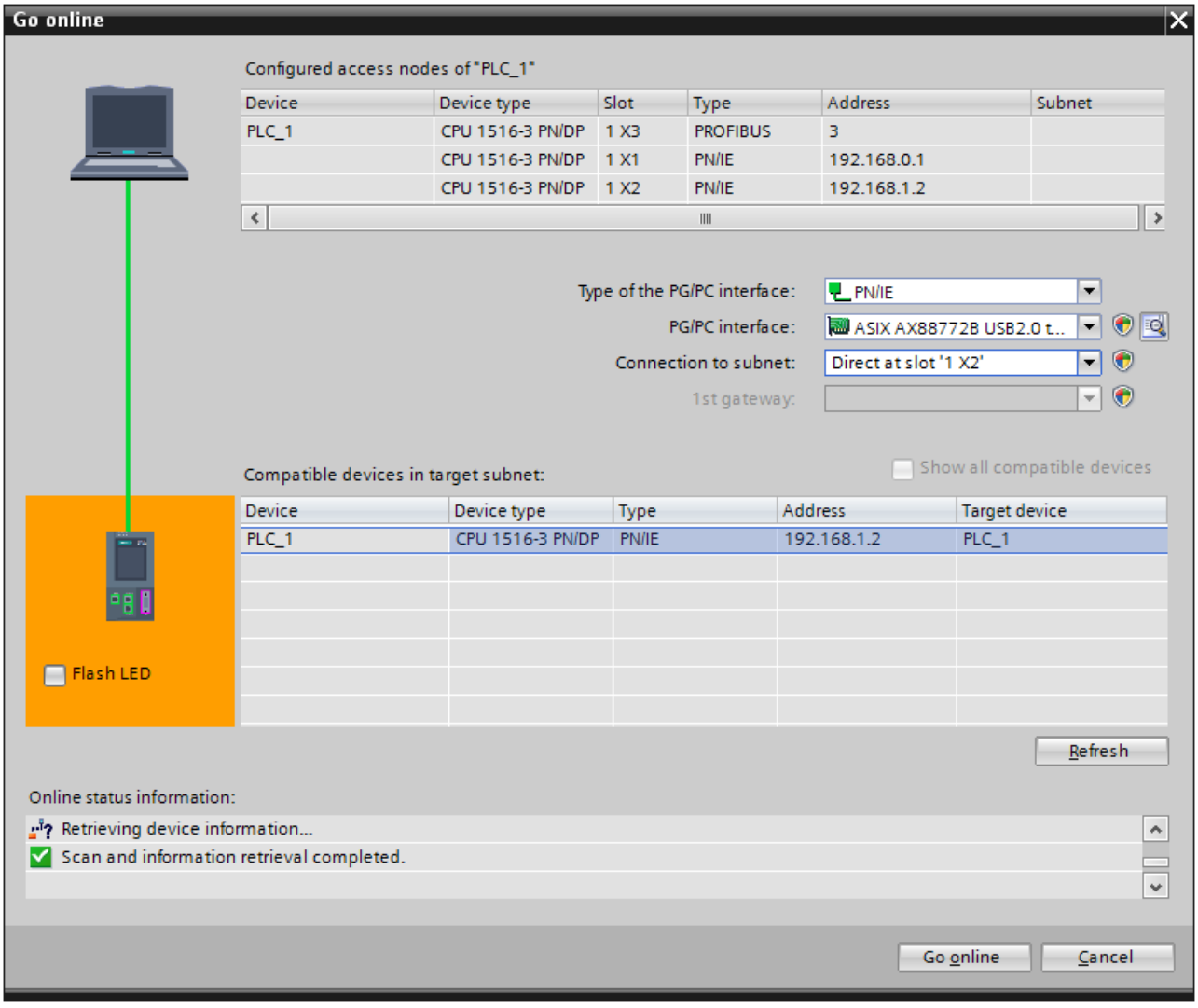

Figure 4-4 Establishing an online connection

8. Make the settings for the interface.

9. Click on the "Go online" button.
   The project view of STEP 7 opens. The network view is opened in the work area.
   The symbols in the project tree provide initial information about the faulty modules.

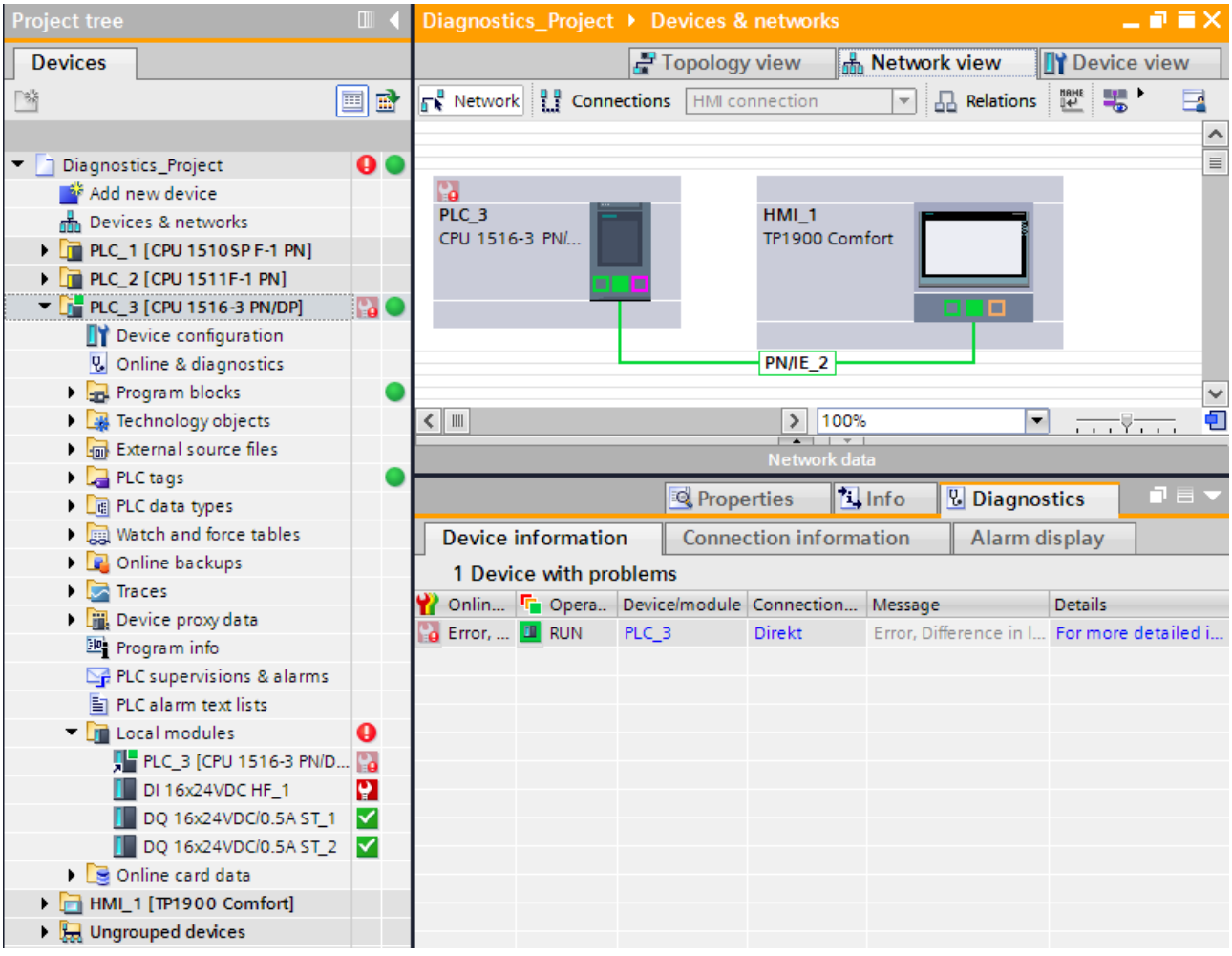

Figure 4-5 Display of the fault in the network view

10. Double-click the device which displays an alarm message to access the faulty module directly. This is the CPU in the example.
    The device view of the CPU is opened in the work area. In this view you can see directly in which module the error has occurred.

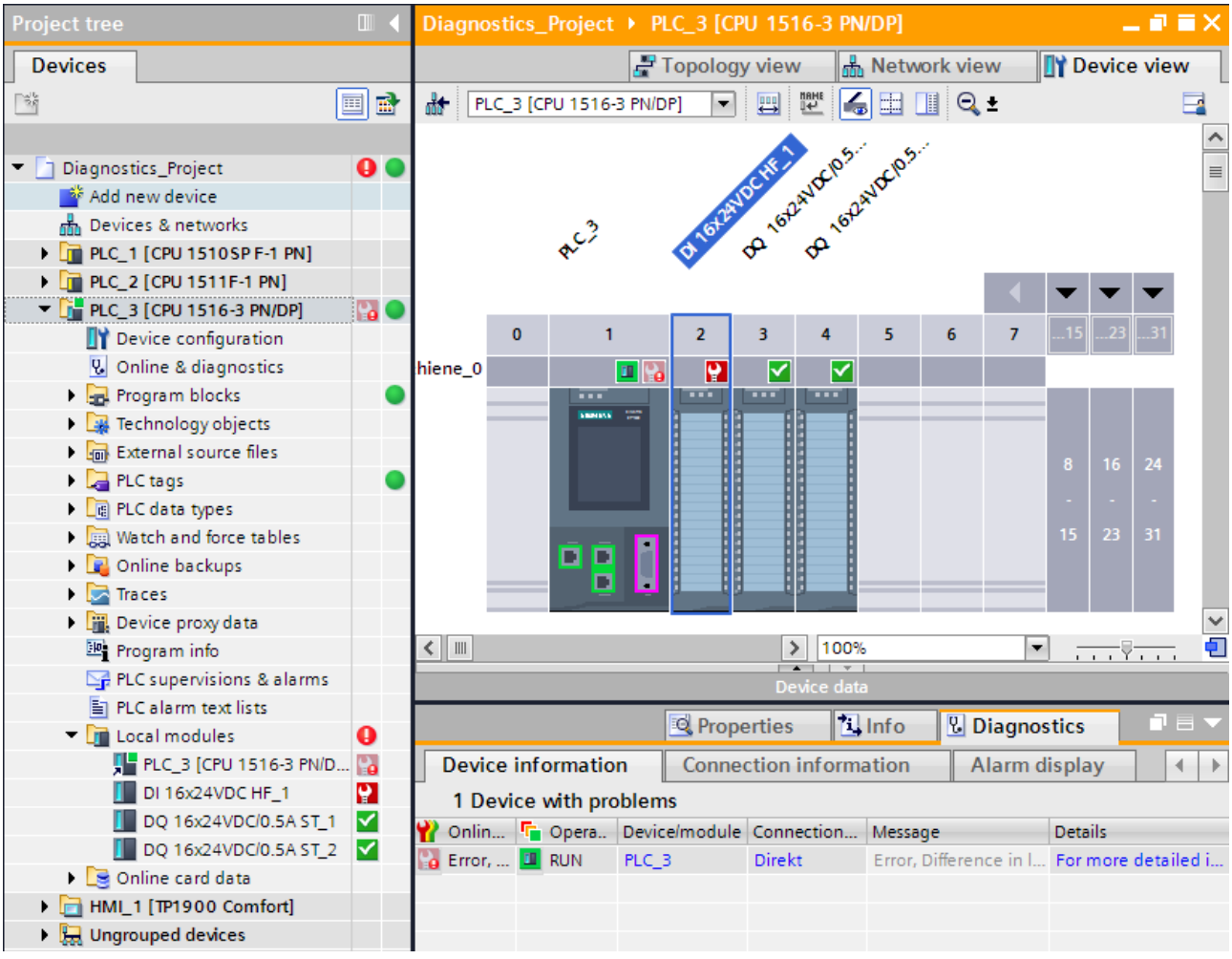

Figure 4-6 Display of the faulty module in the device view

11. Open the "Diagnostics" tab and the subordinate "Device information" tab in the Inspector window for a more detailed error description.

Result

The link in the "Details" table column takes you to the online and diagnostics view of the device and to the diagnostics buffer there, for example. This includes more information on all diagnostics events in the order in which they occurred.

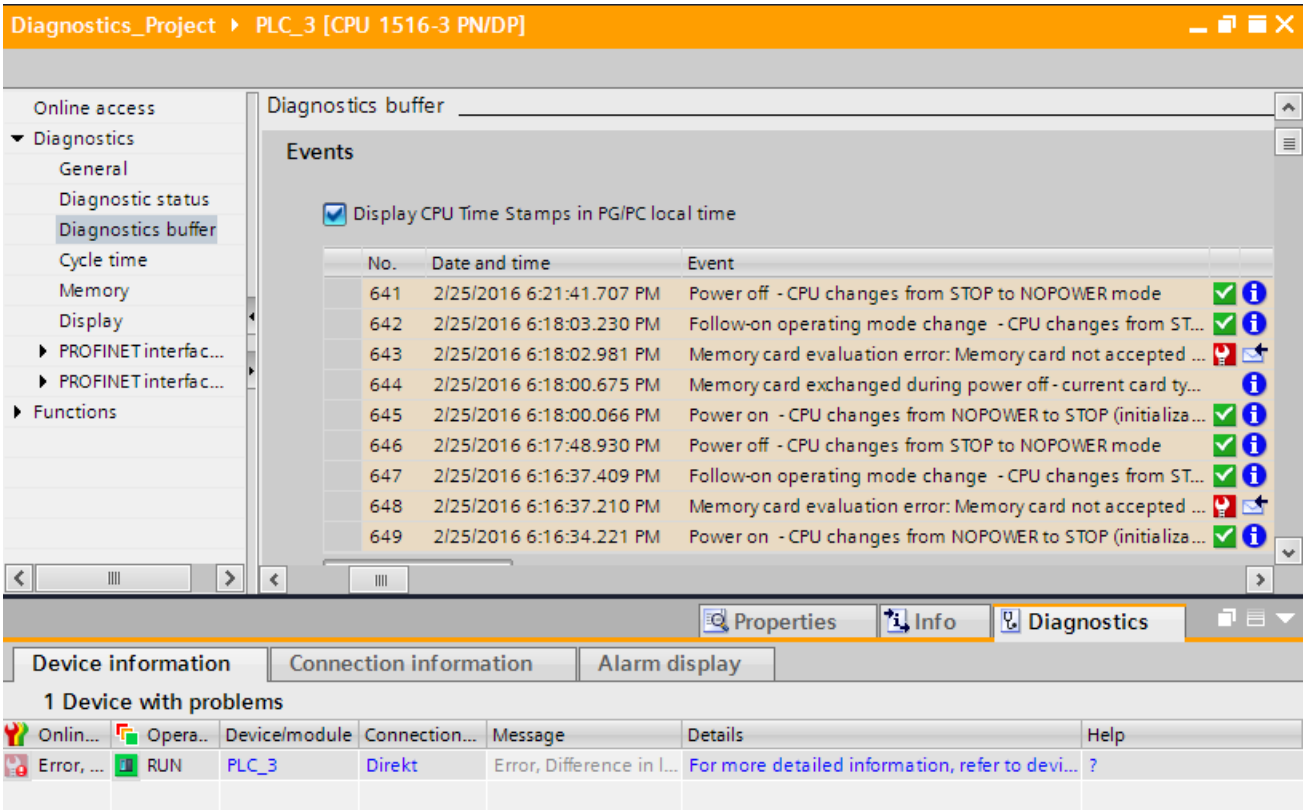

Figure 4-7 Diagnostics buffer with detailed error description

NOTE

Symbols and their meaning

You can find a legend with the meaning of each symbol in Explanation of diagnostics symbols (Page 30) and in the online help for STEP 7.

Setting and determining system diagnostics 5

Introduction

System diagnostics is generally available for the devices of the SIMATIC series.

In the properties of each individual CPU, you can specify if you want to receive alarms for system diagnostics on your display device. Alarms are provided on the display of the SIMATIC S7-1500 CPU, the CPU Web server and the HMI device. Alarms are enabled by default. If you do not want to receive alarms for system diagnostics on your display devices, you can disable the sending of alarms.

5.1 Configuring alarms for system diagnostics

Predefined alarm texts are available for establishing the system diagnostics.

Requirements

- STEP 7 is open.
- A project is open.

Procedure

To make alarm settings for system diagnostics of the project in STEP 7, follow these steps:

1. Open the "Common data" folder in the project tree.

2. Double-click the "System diagnostics settings" entry.
   You now have access to the alarm settings. System diagnostics is enabled by default. System diagnostics cannot be disabled for the use of a CPU from the SIMATIC S7-1500 product series.

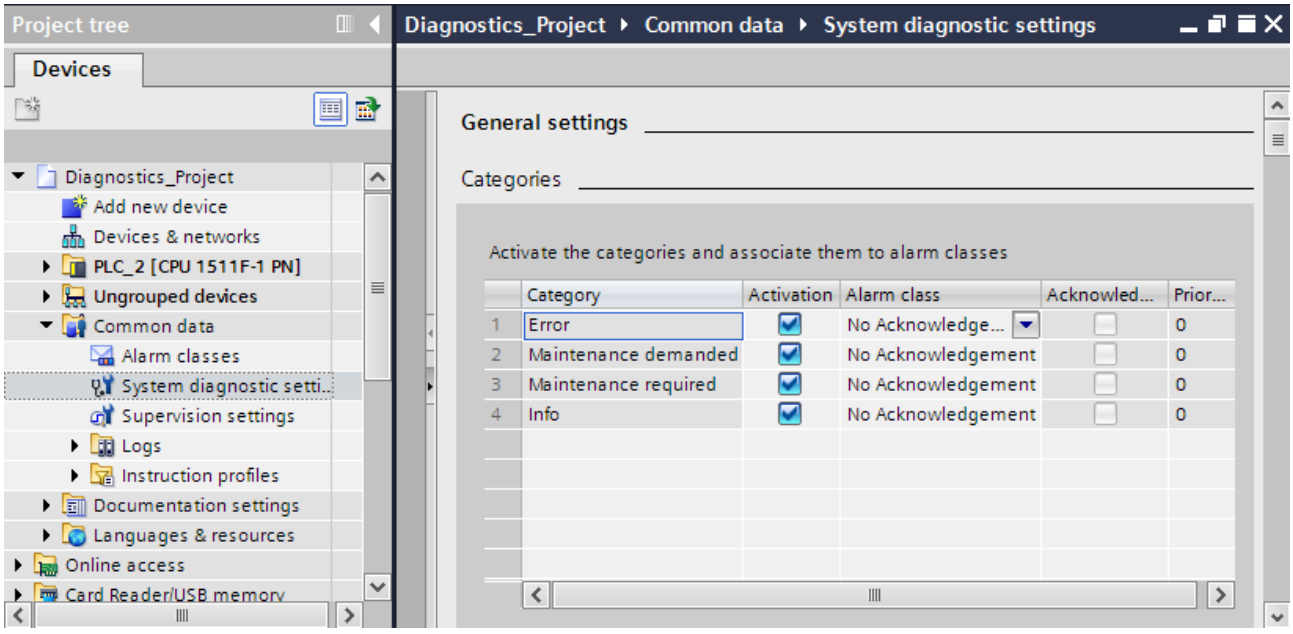

Figure 5-1 Properties of system diagnostics and alarm settings

3. In the settings, specify the alarm category that is to be displayed and if it needs to be acknowledged.
   The check boxes in the "Activation" column are enabled by default. When you disable all check boxes, the status of the HMI system diagnostics view is still updated with the "Info Report" functionality.

Result

You have configured the alarms for system diagnostics of the project in STEP 7.
The settings are saved with the project and become effective after the compiling and downloading of the hardware configuration to the involved components.
Maintenance events (maintenance demanded, maintenance required) are entered in the alarm buffer of the CPU just like any other event.

5.2 Options for displaying system diagnostics

Example

This section includes a diagnostics example to show how system diagnostics is established with the help of different display options. The example includes a CPU from the SIMATIC S7-1500 product series that is connected to an ET 200S distributed I/O system and an HMI Comfort Panel via PROFINET.

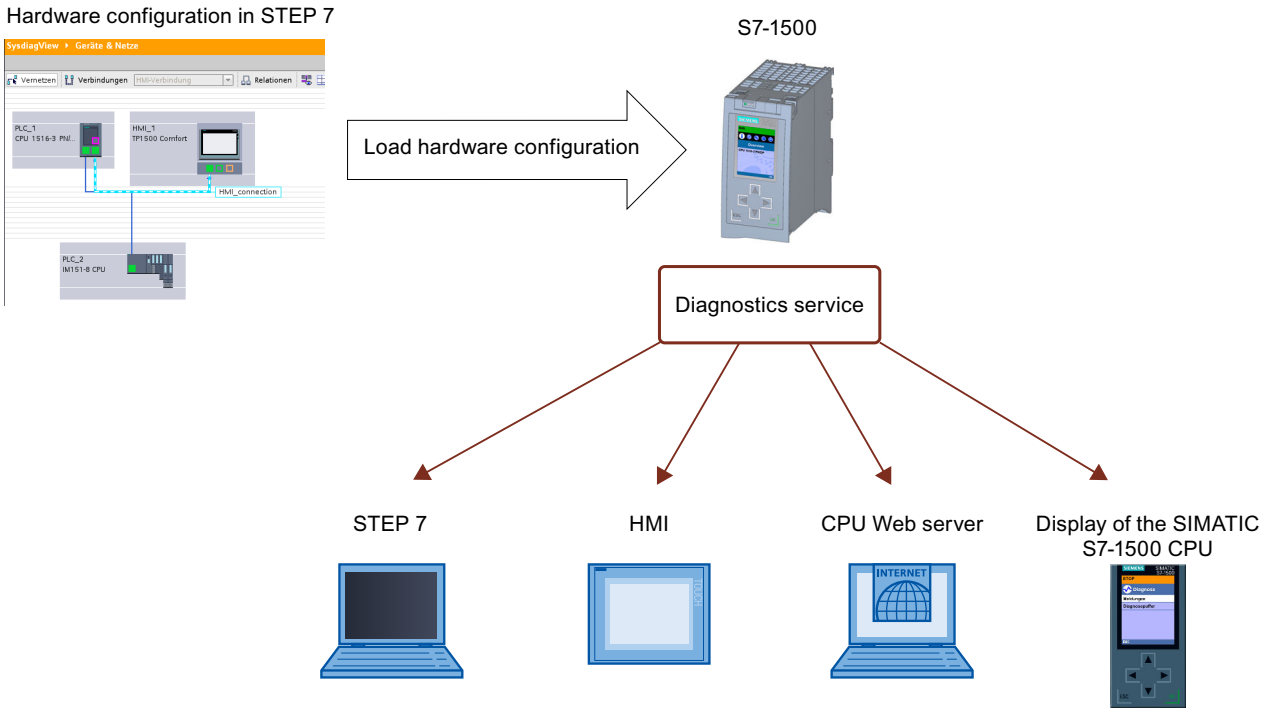

Figure 5-2 System diagnostics display options

The following sections include figures that illustrate how diagnostics information is displayed with the help of different display options.

- Using the LEDs on the hardware (Page 27-28)
- Local error analysis via the display of the CPU (Page 29)
- Using STEP 7 as of V12 (Page 30)
- Remote diagnostics using the Web server (Page 48)
- Stationary system diagnostics using the HMI diagnostics view (Page 57)

5.2.1 Diagnostics information at the devices

5.2.1.1 LEDs

Overview

All hardware components, such as CPUs, interface modules and modules, provide information about their operating mode as well as internal and external errors through their LEDs. Diagnostics by means of LEDs is an initial tool for error localization.

The graphics below include examples for the arrangement of LEDs on some modules.

Table 5-1 LED displays on the modules

	CPU 1516-3 PN/DP	IM 155-5 PN ST	DI 32x24VDC HF	PS 25W 24VDC
	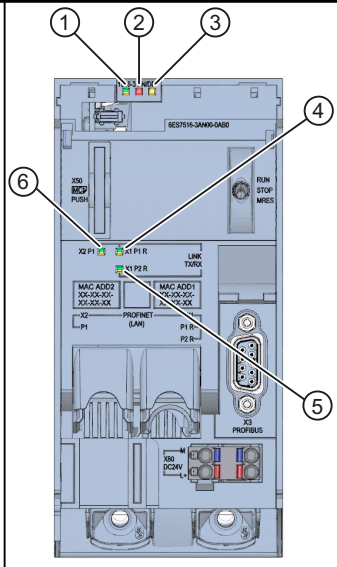	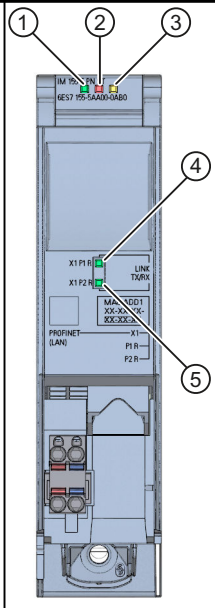	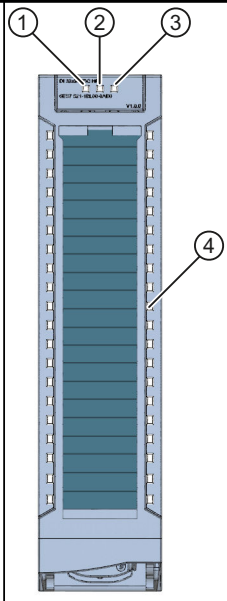	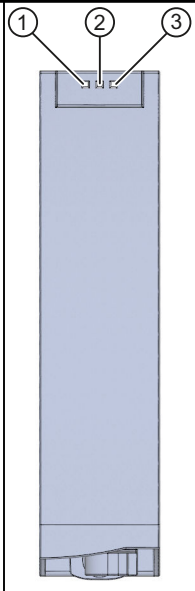
①	RUN/STOP LED (two-colored LED: green/yellow)	RUN LED (two-colored LED: green/yellow)	RUN LED (single-colored LED: green)	RUN LED (single-colored LED: green)
②	ERROR LED (single-colored LED: red)	ERROR LED (single-colored LED: red)	ERROR LED (single-colored LED: red)	ERROR LED (single-colored LED: red)
③	MAINT LED (single-colored LED: yellow)	MAINT LED (single-colored LED: yellow)	without function	MAINT LED (single-colored LED: yellow)
④	X1 P1 (two-colored LED: green/yellow)	X1 P1 (single-colored LED: green)	LED CHx (two-colored LED: green/red)	
⑤	X1 P2 (two-colored LED: green/yellow)	X1 P2 (single-colored LED: green)		
⑥	X2 P1 (two-colored LED: green/yellow)			

Additional information

The meaning of the individual LED displays, their different combinations and the remedial measures resulting from them in case of errors are device-specific. The explanation can be found in the manuals of the modules.

5.2.1.2 Display of the CPU

Introduction

Each CPU in the S7-1500 automation system has a front cover with a display and operating keys. You can display status information in various menus on the display of the CPU. You use the operating keys to navigate through the menus.

Figure 5-3 Display - diagnostics screen

Display options

The display of the SIMATIC S7-1500 CPU shows the following diagnostics information:

- CPU operating state

"Diagnostics" menu

- Error and alarm texts (system diagnostics alarms)
- Information entered in the diagnostics buffer
- Watch tables
- Information on the cycle times of the user program
- Utilization of the CPU memory

"Modules" menu

- Information on modules and the network
- Detailed device view with diagnostics symbols
- Order number, CPU version and central I/O modules
- Module status for central and distributed modules
- Information about the currently installed firmware

Additional information

For additional information on the topic "Functions and operation of the display of the SIMATIC S7-1500 CPU", see the documentation for the S7-1500 automation system (http://support.automation.siemens.com/WW/view/en/59191792).
You can find detailed information on the individual options, a training course and a simulation of the available menu commands of the display for the CPU in the SIMATIC S7-1500 Display Simulator (http://www.automation.siemens.com/salesmaterial-as/interactive-manuals/getting-started_simatic-s7-1500/disp_tool/start_en.html).

5.2.2 Diagnostics information in STEP 7

5.2.2.1 Explanation of diagnostics symbols

Diagnostics symbols for modules and devices

When the online connection to a device is established in STEP 7, the diagnostics status of the device and its lower-level components and, if applicable, the device operating mode are also determined. The following table shows the possible symbols and their meaning.

Table 5-2 Diagnostics symbols for modules and devices

Symbol	Meaning
	The connection with a CPU is being established.
	The CPU is not reachable at the set address.
	The configured CPU and the CPU actually present are of incompatible types. Example: An existing CPU 315-2 DP is incompatible with a configured CPU 1516-3 PN/DP.
	On establishment of the online connection to a protected CPU, the password dialog was terminated without specification of the correct password.
	No fault
	Maintenance required
	Maintenance demanded
	Error
	The module or device is deactivated.
	The module or the device cannot be reached from the CPU (valid for modules and devices below a CPU).

Symbol	Meaning
	Diagnostics data is not available because the current online configuration data differ from the offline configuration data.
	The configured module or device and the module or device actually present are incompatible (valid for modules or devices under a CPU).
	The configured module does not support display of the diagnostics status (valid for modules under a CPU).
	The connection is established, but the module status has not yet been determined or is unknown.
	Hardware error in lower-level component: A hardware fault has occurred in at least one lower-level hardware component (occurs as a separate symbol only in the project tree).

Symbols for the comparison status

The diagnostics symbols can be combined at the bottom right with additional smaller symbols that indicate the result of the online/offline comparison. The following table shows the possible comparison symbols and their meaning.

Table 5-3 Symbols for the comparison status

Symbol	Meaning
	Hardware error in lower-level component: The online and offline versions differ (only in the project tree) in at least one lower-level hardware component.
	Software error in lower-level component: The online and offline versions differ (only in the project tree) in at least one lower-level software component.
	Online and offline versions of the object are different
	Object only exists online
	Object only exists offline
	Online and offline versions of the object are the same

Operating mode symbols for CPUs and CPs

The following table shows the possible symbols and their respective operating states.

Table 5-4 Operating mode symbols for CPUs and CPs

Symbol	Operating mode
	RUN
	STOP
	STARTUP
	DEFECTIVE
	Unknown operating mode
	The configured module does not support display of the operating mode.

Event table

The following information is displayed in the table for each diagnostics event:

- Sequential number of the entry
  The first entry contains the latest event.
- Date and time of the diagnostics event
  If no date and time are shown, the module has no integrated clock.
- Short designation of the event and, if applicable, the reaction of the CPU
- Symbol for information on incoming/outgoing status

The following table shows the possible symbols and their meaning.

Table 5-5 Symbols in the event table

Symbol	Meaning
	Incoming event
	Outgoing event
	Incoming event for which there is no independent outgoing event
	User-defined diagnostics event

Additional information

For additional information on the individual symbols, please refer to the online help for STEP 7.

5.2.2.2 Accessible devices (without project)

Accessible devices

Accessible devices are all devices that are connected to a PG/PC either directly by an interface or by means of a subnet and that are switched on. These devices can display diagnostic information even without an offline project.

Requirements

- STEP 7 is open.
- The portal view or project view is open.

Procedure

To display diagnostic information for specific devices even without an offline project, follow these steps:

1. Establish a connection to the respective CPU.
2. Select the command "Accessible devices" from the "Online" menu.
   The "Accessible devices" dialog opens.

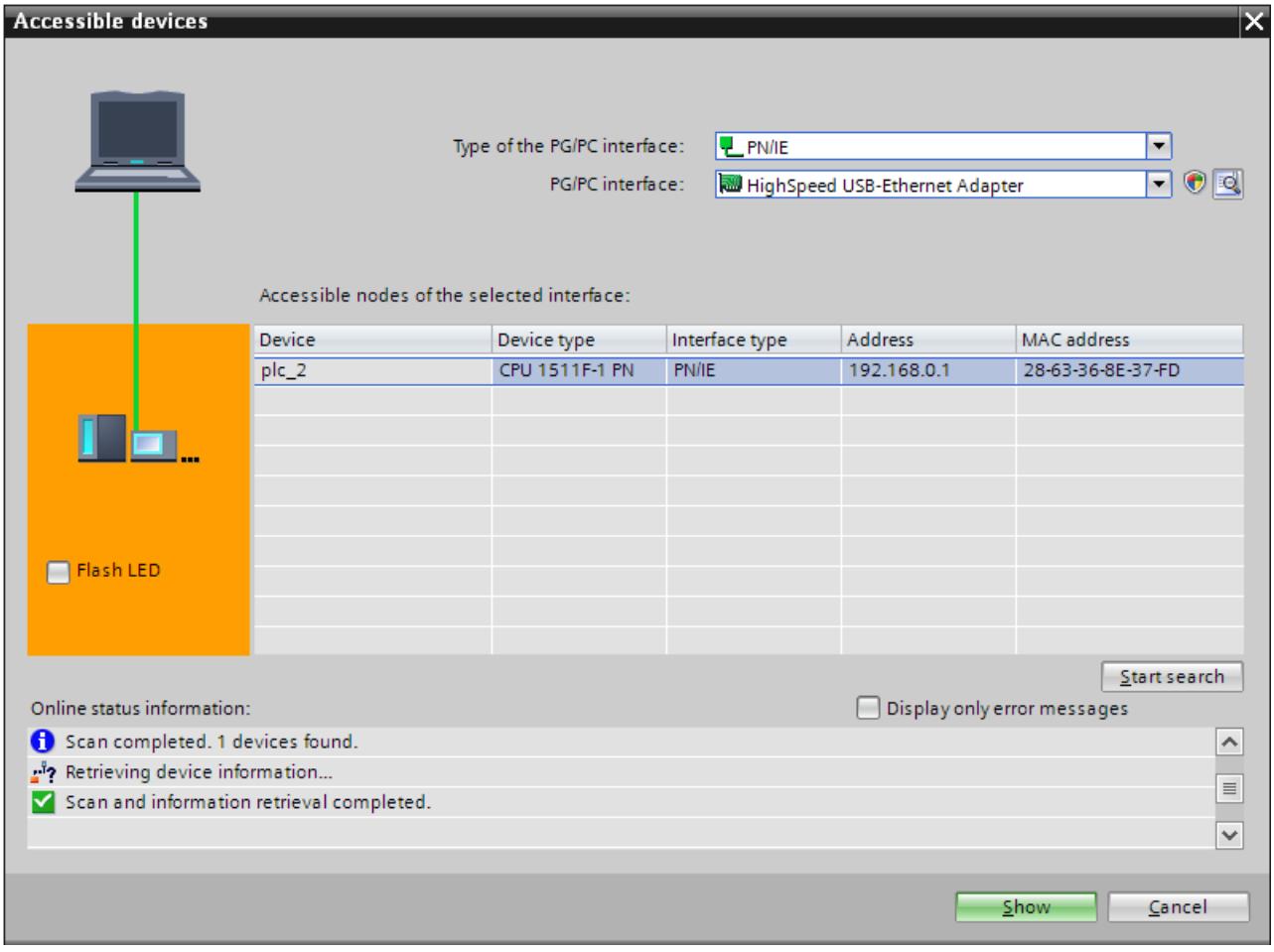

Figure 5-4 "Accessible devices" dialog

3. Make the settings for the interface.
4. Select the respective device under "Accessible nodes of the selected interface".
5. Confirm the dialog with the "Display" button.

Result

The device is displayed in the project tree. You open the diagnostic information in the work area with a double-click on "Online & Diagnostics".

Information is available on the diagnostic status, cycle times, memory usage and the diagnostics buffer.

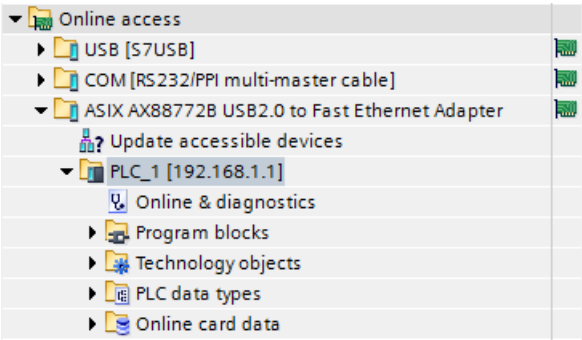

Figure 5-5 Device in the project tree

5.2.2.3 Devices & networks

Devices & networks - Go online

You can get an overview of the current state of your automation system in the device view or network view.

You implement the following tasks in the device view:

- Device configuration and parameter assignment
- Module configuration and parameter assignment

You implement the following tasks in the network view:

- Device configuration and parameter assignment
- Networking devices

Requirements

- STEP 7 is open.
- A project is open.
- The project view is open.

Procedure

To get an overview of the current state of your automation system, follow these steps:

1. Open the "Network view" in the working area.
2. Select the CPU.

3. Click the "Go online" Go online button in the toolbar.
   The "Go online" dialog opens.

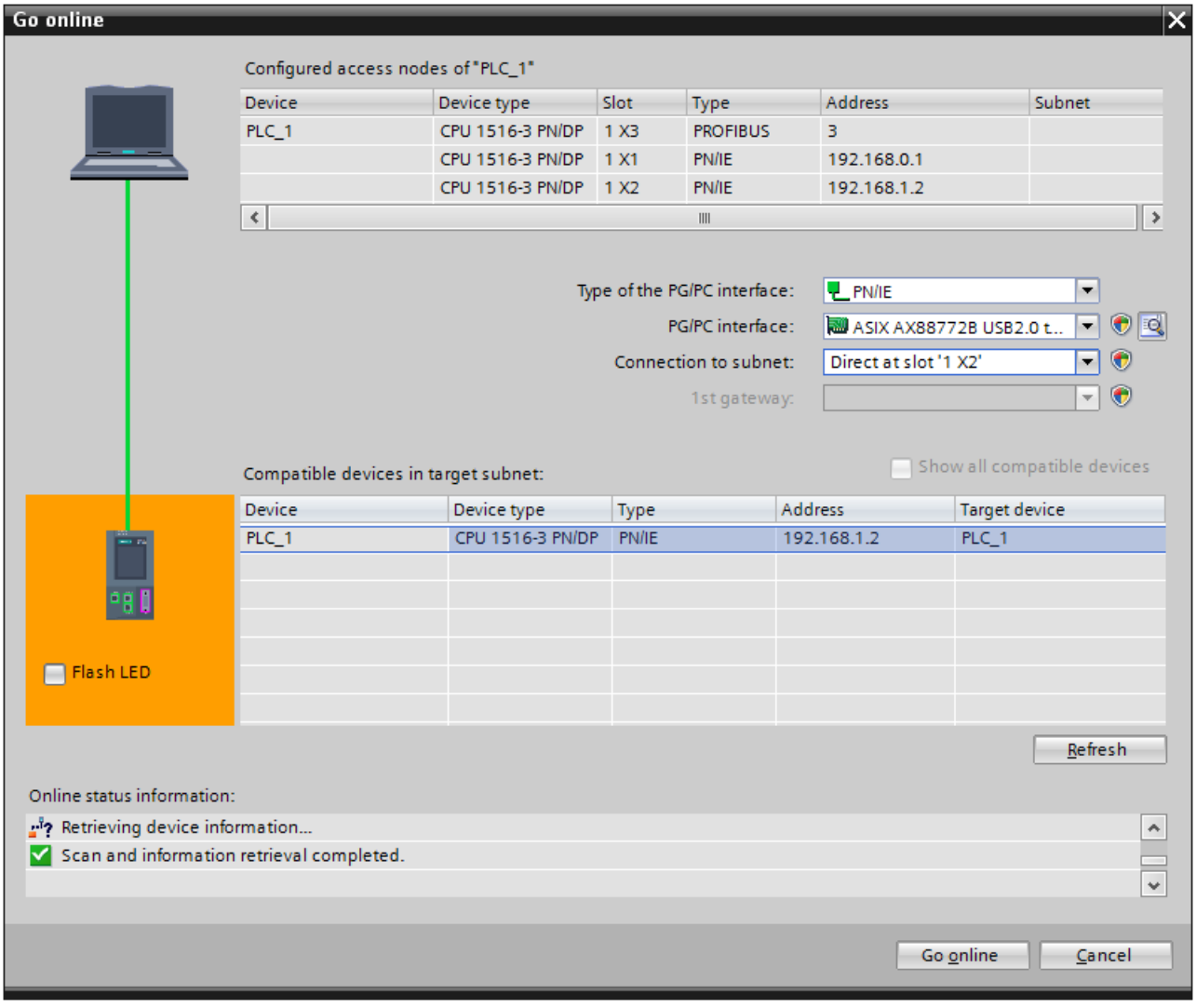

Figure 5-6 Go online

4. Make the settings for the interface.
5. Select the respective device under "Compatible devices in the target subnet".
6. Confirm the dialog with the "Connect" button.
   The online mode is started.

Result

The connected devices are now displayed with diagnostic information in the network view in the working area. Here you get an overview of the current state of your automation device.

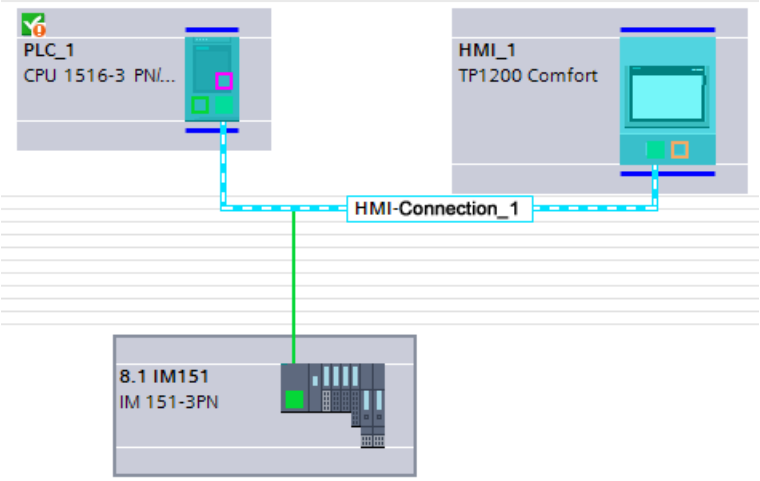

Figure 5-7 CPU with diagnostic information

You get to the "Device view" with a double-click on the device. The diagnostic information for the individual modules is displayed in this view.

NOTE

Symbols and their meaning

You will find a legend with the meaning of each symbol in Explanation of diagnostics symbols (Page 30) and in the online help for STEP 7.

5.2.2.4 Online & diagnostics

Online mode

In online mode there is an online connection between your PG/PC and one or several devices. Depending on the properties of a device, you are offered specific diagnostics options and certain functions in online mode.

- Diagnostics
  - General module information
  - Diagnostics status
  - Cycle time
  - Memory
  - Diagnostics buffer
  - Display
  - Interface information (e.g. IP parameter, port information)

- Functions
  - Assign IP address
  - Set time and date of the CPU
  - Firmware update (e.g. for PLC, display)
  - Assign device name
  - Reset to factory settings
  - Format memory card
  - Save service data

To establish an online connection at least one PG/PC interface must be installed that is physically connected with a device, for example, with an Ethernet cable. The current online status of a device is indicated by a symbol to the right of the device in the project tree.

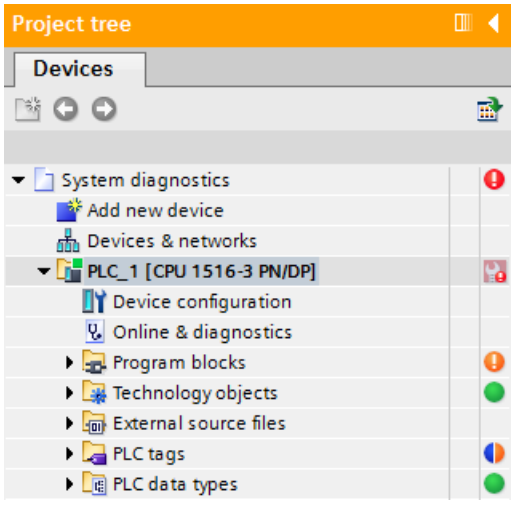

Figure 5-8 Partial view of network view

Requirements

- STEP 7 is open.
- A project is open.
- The project view is open.

Procedure

To display an overview of the faulty devices, follow these steps:

1. Select the affected device folder in the project tree.

2. Select the shortcut menu command "Online & Diagnostics".
   The online and diagnostics view of the module to be diagnosed is started.

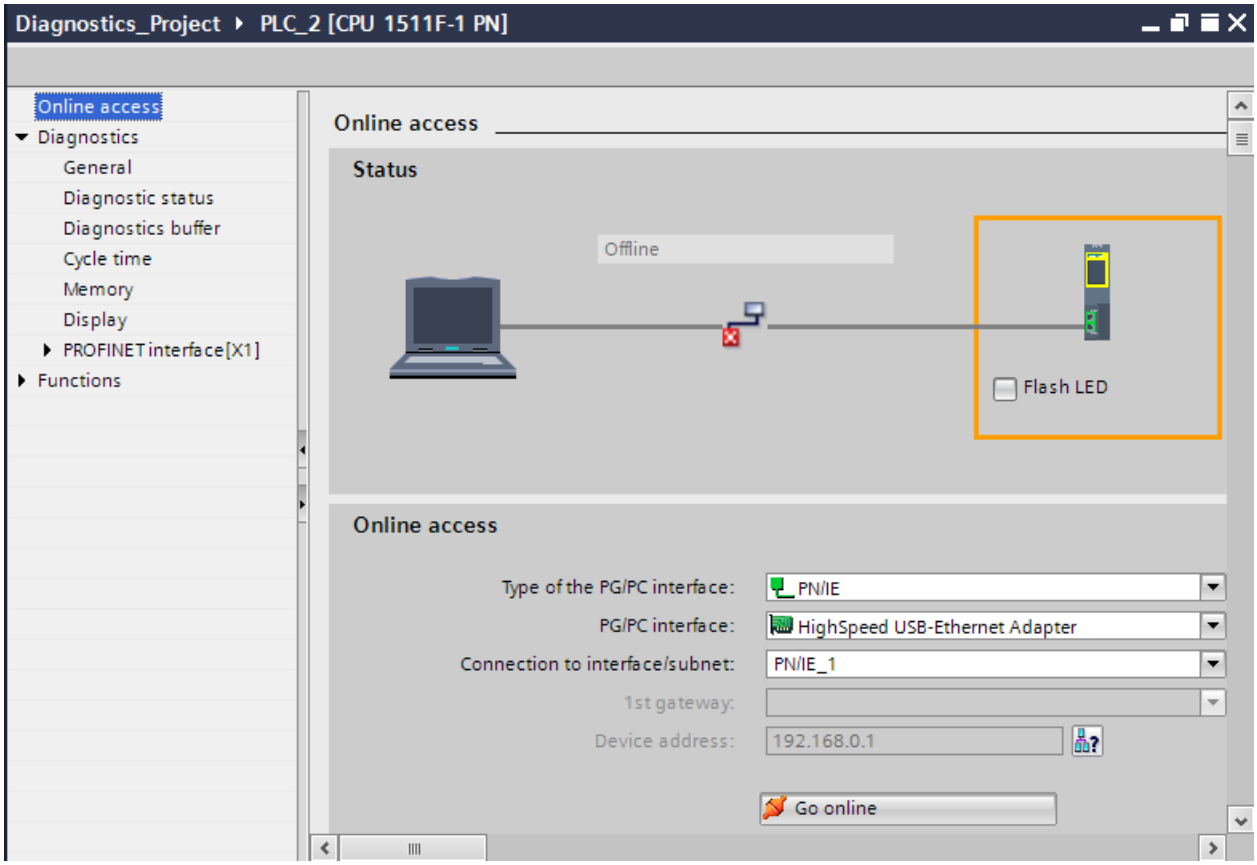

Figure 5-9 Setting online access

3. Make the settings for the interface.
   Here you can change an interface access that has already been set for an online connection that was successfully established previously.
4. Click on the "Go online" button.
   The online connection is established.

Result

You can find detailed diagnostics information on each device in the Inspector window, in the "Diagnostics" section of the area navigation on the "Properties" tab.

5.2.2.5 "Diagnostics" tab in the Inspector window

"Diagnostics" tab in the Inspector window

The "Diagnostics" tab of the Inspector window includes information on diagnostics events and configured alarm events.

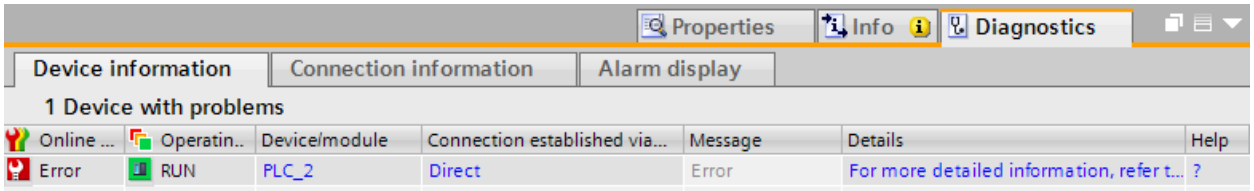

Figure 5-10 Diagnostics in the Inspector window, "Device information" tab

NOTE

Symbols and their meaning

You can find a legend with the meaning of each symbol in Explanation of diagnostics symbols (Page 30) and in the online help for STEP 7.

Subordinate "Device information" tab

This tab gives you an overview of faulty devices to which an online connection exists or has existed. The table provides the following diagnostics information on the faulty devices:

- Online status: Includes the online status as diagnostics symbol and in words
- Operating mode: Includes the operating mode as symbol and in words
- Device/module: Name of the affected device or the affected module
- Connection established via ...: Specifies the path used to establish the connection to the failed device.
- Alarm: This explains the entry in the previous columns and displays an alarm, if necessary
- Details: The link opens the online and diagnostics view associated with the device or puts it in the foreground.
  If the device cannot be reached, the link opens the "Go online" dialog.
- Help: The link provides additional information on the fault.

NOTE

Communication and access errors

Errors that occur in the user program (e.g., communication errors, access errors) are not reported in the "Diagnostics" tab of the device information. You must read out the diagnostics buffer of the CPU in the online and diagnostics view to get this information. The link in the "Details" column opens the diagnostics buffer.

Subordinate "Connection information" tab

The "Connection information" tab displays detailed diagnostics information for connections.

There will only be information on the "Connection information" tab if there is an active online connection to at least one end point of the relevant connection.
If a connection has been selected (connection table), the tab contains the following groups:

- Connection details
- Address details of the connection

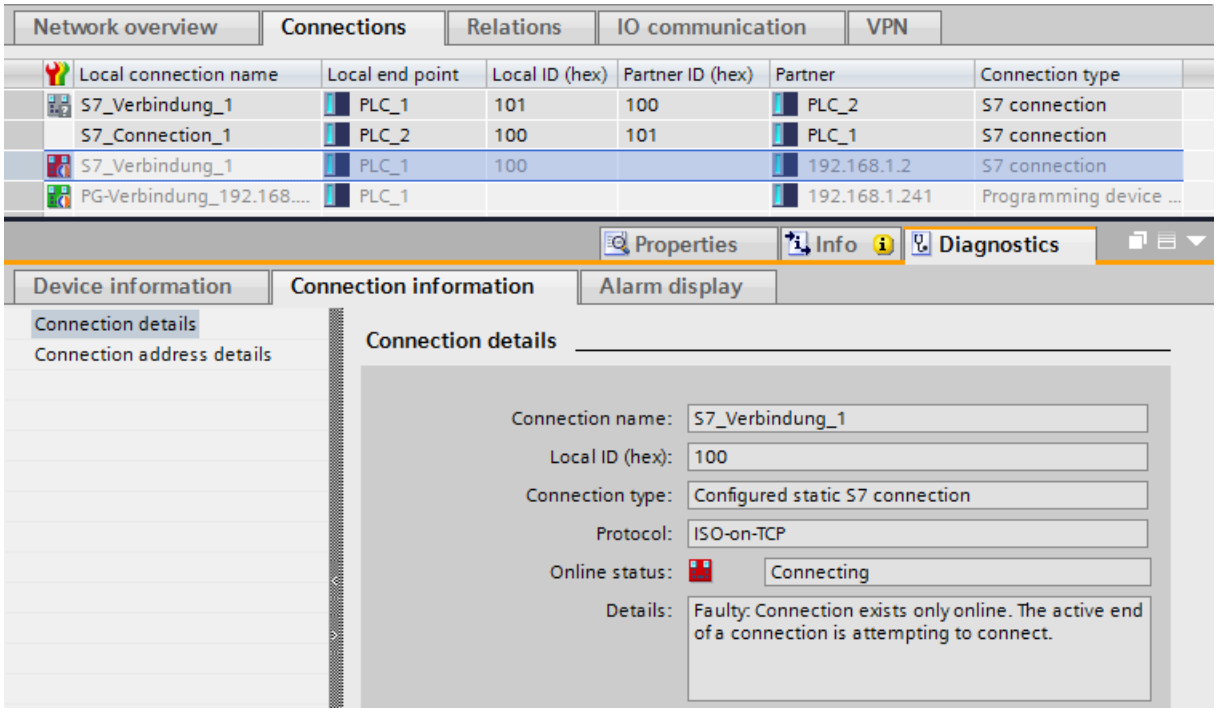

Figure 5-11 "Connection information" tab and open connection overview

If a module has been selected (network view), the tab contains the following group:

- Connection resources

Subordinate "Alarm display" tab

System diagnostics alarms are output in the "Alarm display" tab.

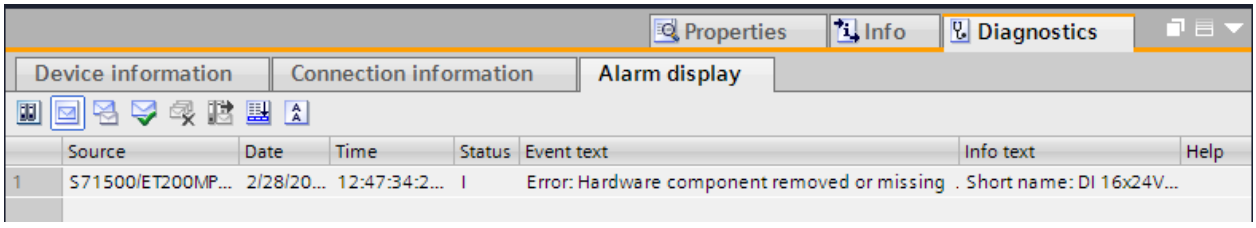

Figure 5-12 "Alarm display" tab

To receive alarms in STEP 7, follow these steps:

1. Open the project view.
2. Select the required CPU in the project tree.

3. To connect online with the respective CPU, select the shortcut menu command "Go online".
4. Select the required CPU once again in the project tree and select the shortcut menu command "Receive alarms".

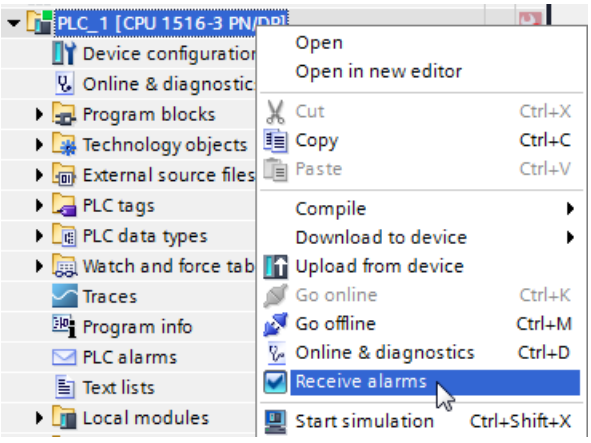

Figure 5-13 Receive alarms

5. Alarms are now displayed in the alarm display. "Archive view" is enabled by default.
6. To display the latest alarms, click the "Active alarms" icon .

5.2.2.6 CPU diagnostics buffer

Definition

Each CPU and some other modules have their own diagnostics buffer, in which detailed information on all diagnostic events is entered in the order in which they occurred.

The CPU diagnostics buffer can be displayed on all display media (STEP 7, SIMATIC HMI devices, SIMATIC S7-1500 Web server and display of the CPU).

Diagnostic events

The entries available in the diagnostics buffer include:

- Internal and external errors on a module
- System errors in the CPU
- Operating mode transitions (e.g., from RUN to STOP)
- Errors in the user program
- Removal/insertion of modules
- Security events

The contents of the diagnostics buffer are stored in the retentive memory in case of a memory reset of the CPU. Errors or events can be evaluated even after a longer period of time thanks to the diagnostics buffer to determine the cause of a STOP or to trace the occurrence of a single diagnostic event and to be able to assign it.

Procedure

To display the diagnostics buffer of a CPU in STEP 7, follow these steps:

1. Select the respective CPU.
2. Select the shortcut menu command "Online & Diagnostics".
   The "Online access" view is opened in the work area.

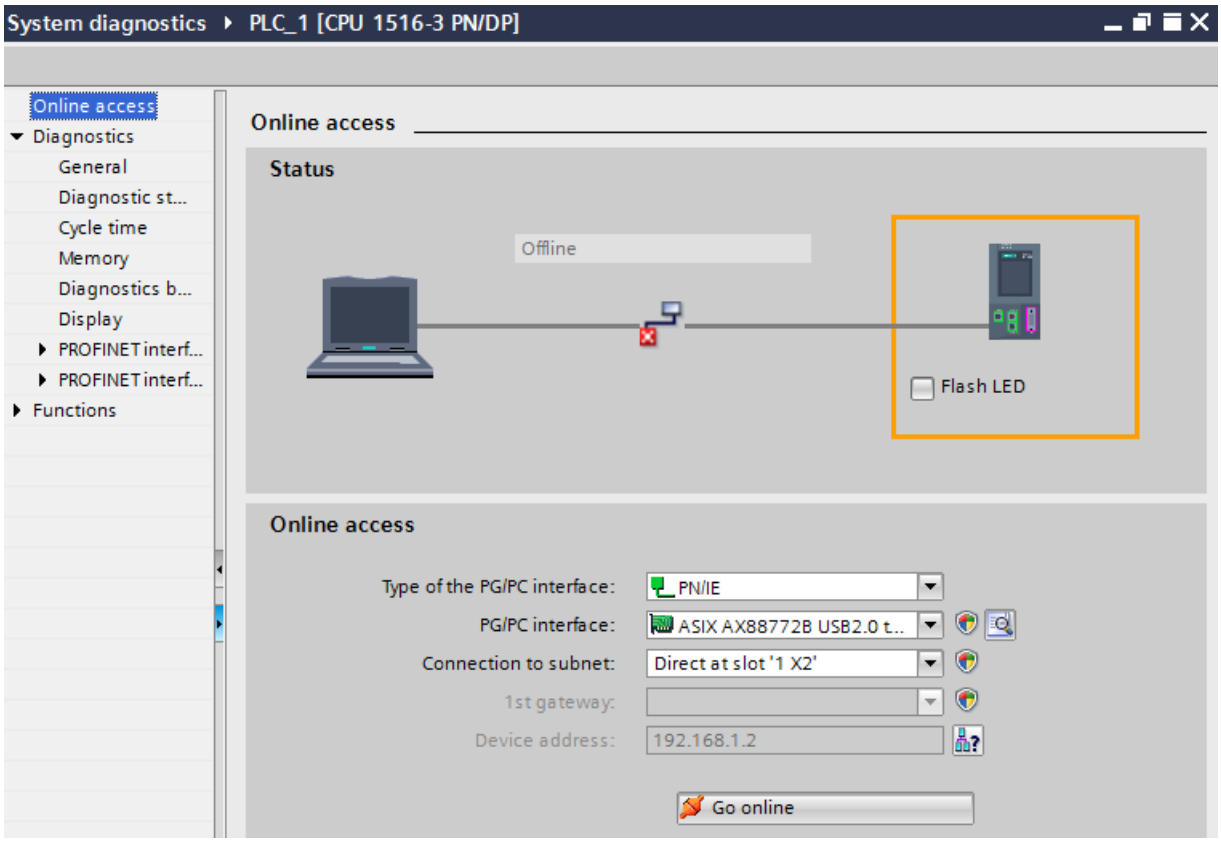

Figure 5-14 Setting up online access

3. Set the interface.
4. Click Go online.
5. Select the area "Diagnostics buffer".

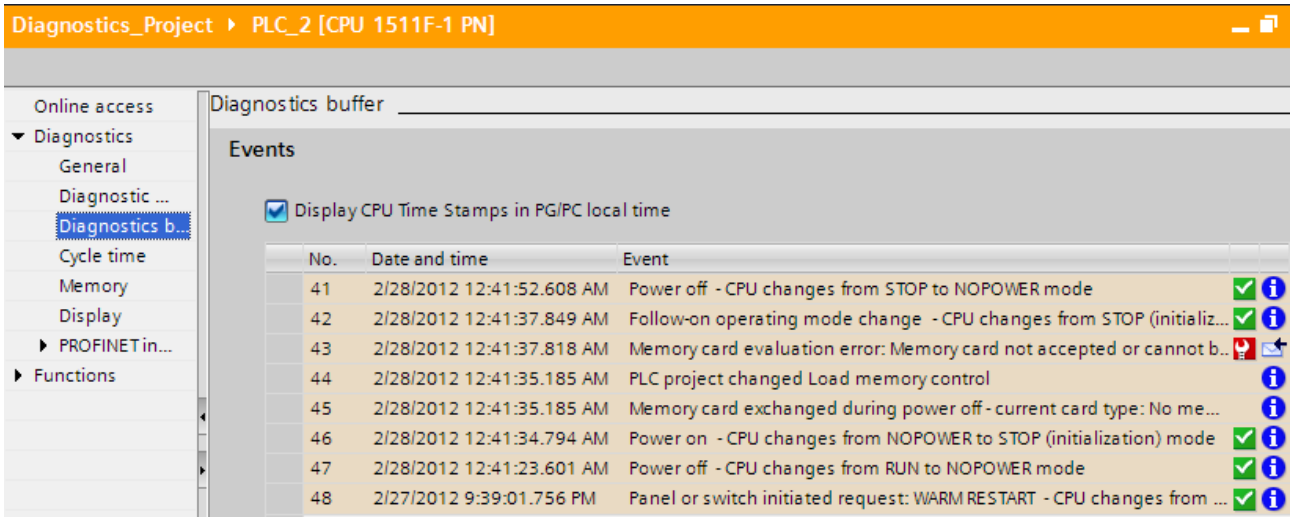

Figure 5-15 Diagnostics buffer in STEP 7

NOTE

Filtering events

You can filter the entries in the diagnostics buffer in the settings of the "Diagnostics buffer" area to only display specific types of events. This means that specific events, such as "CPU and configuration-internal events" or "Connection diagnostics events", can be displayed separately.

Security events

The following security events (event types) result in an entry in the diagnostics buffer.

- Going online with the correct or incorrect password
- Manipulated communications data detected
- Manipulated data detected on memory card
- Manipulated firmware update file detected
- Changed protection level (access protection) downloaded to the CPU
- Password legitimization restricted or enabled (by instruction or CPU display)
- Online access denied due to the possible number of simultaneous access attempts being exceeded
- Timeout when an existing online connection is inactive
- Logging on to the Web server with the correct or incorrect password
- Creating a backup of the CPU
- Restoring the CPU configuration (Restore)

To prevent the diagnostics buffer being "swamped" by large numbers of identical security events, you can set parameters so that these events are entered in the diagnostics buffer as a

group alarm. For every interval (monitoring time), the CPU then only generates one group alarm per event type.

Configuring a group alarm for security events

To configure group alarms for security events, follow these steps:

1. Click on the CPU icon in the network view.
   The properties of the CPU are displayed in the Inspector window.
2. Navigate to the "Protection" > "Security event" area.
3. Click "Security event".
4. Select the option "Summarize security events in case of high message volume" to enable group alarms for security events.
5. Set the duration of an interval (monitoring period); the default is 20 seconds.

5.2.2.7 "Online tools" task card

Online view in the "Online tools" task card

The following requirements must be met to display the online view of the "Online tools" task card in STEP 7:

- An online connection to the CPU is available.
- You have selected the CPU in the topology view, network view or device view.

The "Online tools" task card provides an overview of the CPU state, the cycle time and the memory usage.

- The "CPU operator panel" pane displays the current state of some LEDs and the mode selector of a CPU.
- The "Cycle time" pane displays the cycle time diagram and below it the measured cycle times as absolute values.
- The "Memory" pane contains the current memory usage of the associated CPU. The free memory is shown both as a bar graph and as a numerical value (percentage).
  The display for "Load memory" contains, in addition to the online project data (program code, data blocks, hardware configuration etc.), all other data that may be on the SIMATIC memory card, such as recipes, data logs, HMI backups or non-SIMATIC files that have been copied to the memory card via the Web server of the CPU or offline in Explorer (for example, PDF files).

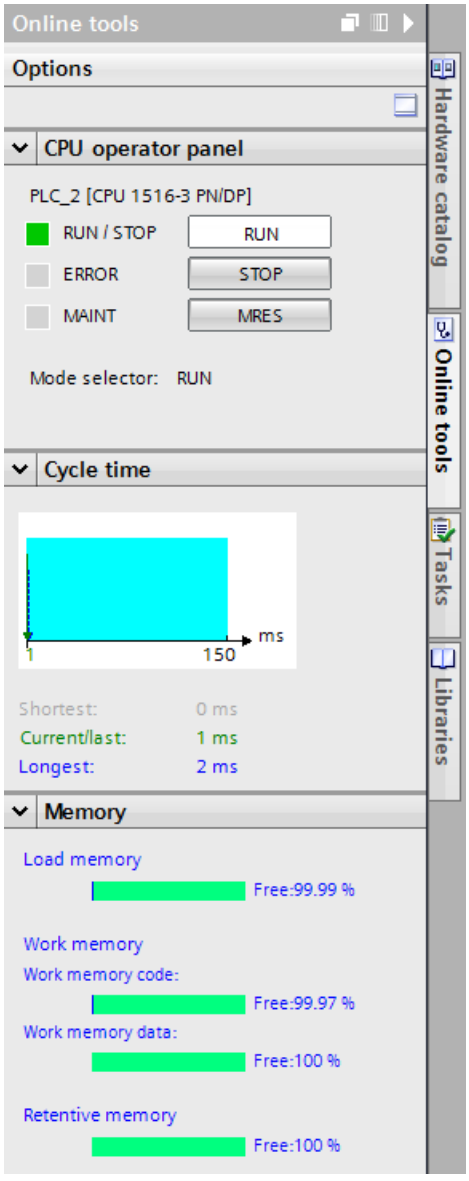

Figure 5-16 "Online tools" task card

5.2.2.8 Configuring the settings for I/O modules in STEP 7

You can also make settings for system diagnostics in STEP 7 for I/O modules. The parameters you have to configure depend on the I/O module.
The settings are optional.

Requirements

- STEP 7 is open.
- A project is open.
- The project view is open.
- A design with I/O modules has been configured.

Procedure

To make settings for system diagnostics of I/O modules in STEP 7, follow these steps:

1. Select the respective I/O module in the device view.
2. Open the "Properties" tab in the Inspector window.
3. Select the area "Inputs", for example.
   You have access to the settings for system diagnostics of the I/O module. If you select "Wire break", for example, a possible wire break for the channel is signaled during operation.

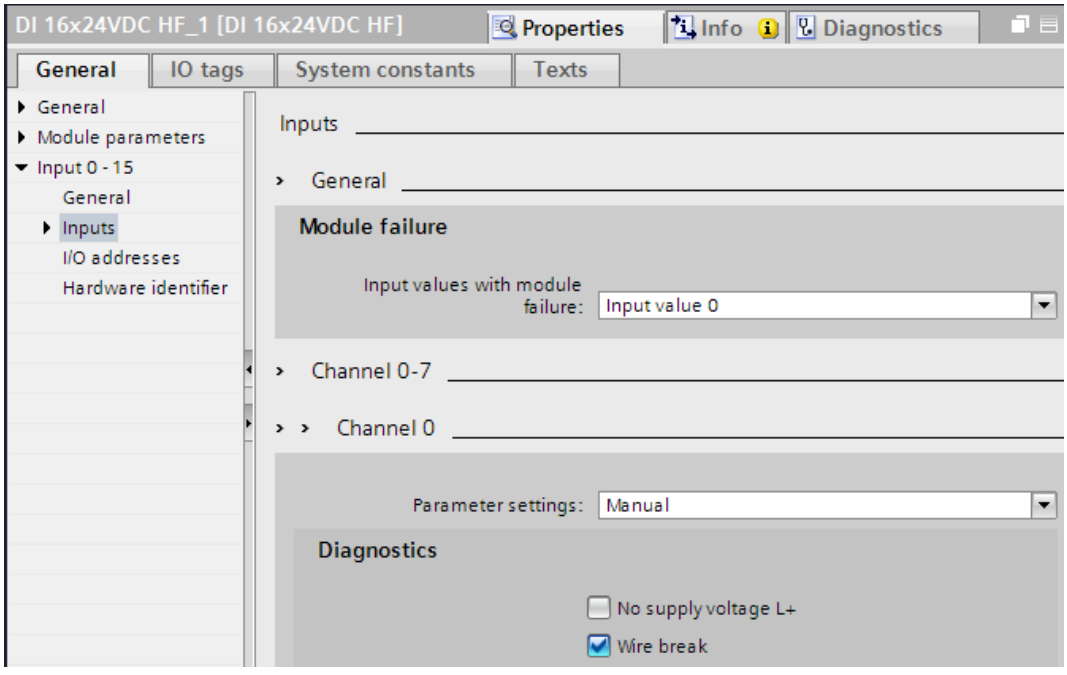

Figure 5-17 I/O setting with a digital input module

4. Save the hardware configuration.
5. Download the new hardware configuration to the CPU.

Additional information

The documentation for the respective module includes additional information on parameter assignment of I/O modules.

5.2.3 Diagnostics information using the web server

System diagnostics using the CPU Web server

The CPUs of the SIMATIC series have an integrated Web server and let you display the system diagnostics information by means of PROFINET. Any terminal devices, such as PCs or smartphones, can thus access module data, user program data and diagnostics data of a CPU by using an Internet browser. This means access to CPUs is possible without installed STEP 7.

In addition to normal websites, the Web server provides so-called basic websites with reduced content that are adapted to the requirements of small screens with low resolution.

Using CPU 1516-3 PN/DP as an example, the following figure shows the start page of the Web server:

Figure 5-18 Web server, Start page

The following diagnostics options are available with the integrated Web server:

- Start page with general CPU information
- Information on diagnostics
- Contents of the diagnostics buffer
- Module information
- Alarms
- Information about communication
- PROFINET topology
- Motion Control diagnostics
- Trace

Configuring the Web server in STEP 7

Proceed as follows to activate the Web server:

Requirements

- You have opened STEP 7.
- You have added a CPU to the project.
- You have opened the project view.

Procedure

1. Open the network view.
2. Select the CPU.
3. Open the "Properties" tab in the Inspector window.
4. Select the entry "Web server" in the "General" area navigation.

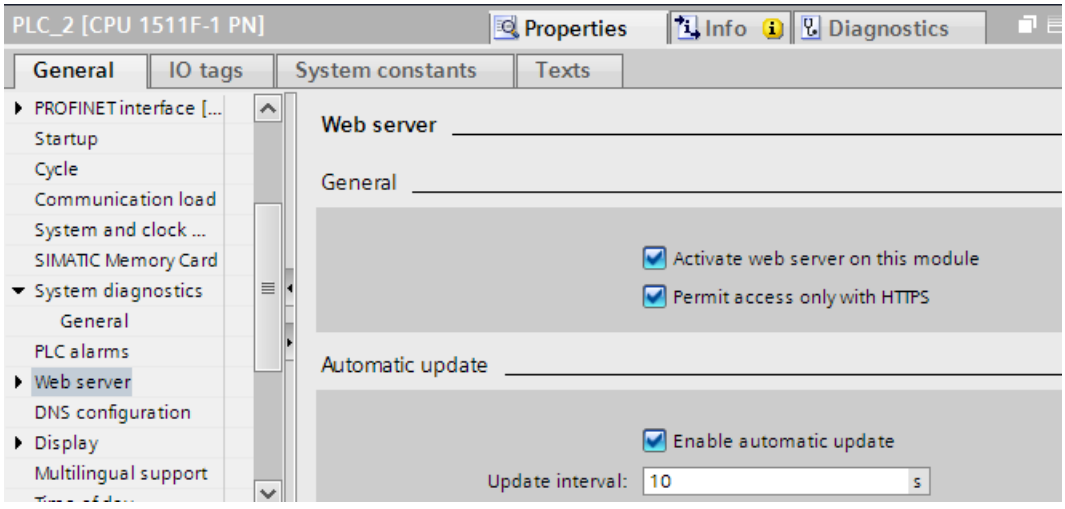

Figure 5-19 Activate the Web server

5. Select the "Activate web server on this module" check box.

6. "Permit access only with HTTPS": The activation of the Web server using the secure transmission protocol "HTTPS" requires a valid Web server certificate in the CPU.

NOTICE
Utilizing the full functionality of the Web server A valid CA-signed Web server certificate in the CPU is a requirement for: – User management with password-protected users – Saving and downloading diagnostic information in csv files – Using the following safety-related functions: – Backing up and restoring the CPU configuration To use the full functionality of the Web server, we recommend that you create a CA-signed server certificate and assign it to the CPU. To create a CA-signed Web server certificate, you must enable the Certificate Manager in the global security settings of STEP 7 and assign a CA-signed server certificate to the Web server in the properties of the CPU. You can find additional information on handling Web server certificates in the "Configuring the Web server" section of the Web server function manual (http://support.automation.siemens.com/WW/view/en/59193560). Detailed information on Certification Authority (CA) certificates, device certificates (End Entity certificate), "Public Key Infrastructure" (PKI) and certificate management can be found in the Communication function manual (https://support.industry.siemens.com/cs/ww/en/view/59192925) and in the online help for STEP 7, keyword "Secure communication".

7. Automatic updating is activated in the default setting of a configured CPU.
8. Activate the Web server also for each interface via which you want to access the Web server.
   To do this, open the "Properties" tab in the Inspector window and select the "Web server" entry in the "General" area navigation. In the "Overview of interfaces" area, select the "Enabled web server access" check box for the corresponding interface.
9. Compile and load the configuration into the CPU.

Accessing the Web server

To access the Web server, proceed as follows:

1. Connect the display device (PG/PC, HMI, mobile terminal device) with the CPU or a communication module using a PROFINET interface.
   If you are working with WLAN, activate the WLAN on the display device and establish a connection to the access point (e.g. SCALANCE W788-1RR or SCALANCE W784-1), which is in turn connected to the CPU.
2. Open the web browser on the display device.

3. Enter the IP address of the interface of the CPU which is connected to the client in the "Address" field of the web browser in the following format: http://a.b.c.d or https://a.b.c.d (example input: https://192.168.3.141).
   The intro page of the CPU opens.
4. You need to perform the installation of the CA certificate again for each display device you want to use. A valid CA certificate is available for download from the "Intro" web page under "Download certificate". You can find instructions for installing the certificate in the help system of your Web browser and in the FAQ with the entry ID 103528224 at the Service&Support (https://support.industry.siemens.com/cs/ww/en/view/103528224) website.
5. Click the NEXT link to go to the Web server pages.

NOTE

Managing access rights

In STEP 7, you can create users, define access rights and assign passwords under "Web server > User management". Users only have access to the options that are permanently linked to the access rights.

You can find additional information on managing access rights in the "Configuring the Web server" section of the Web server function manual (http://support.automation.siemens.com/WW/view/en/59193560).

"Diagnostics" option

The "Diagnostics" web page provides more information about the tabs:

- Identification
  This tab contains the characteristics of the CPU (serial number, article number, hardware and firmware version, etc.).
- Program protection
  This tab provides information on whether the PLC program contains know-how protection or copy protection.
- Memory
  This tab contains current values on the memory currently in use.
- Runtime information
  Current information on program/communication load and cycle time can be found in this tab.
- Fail-safe (only with an F CPU)
  The safety program of an F-CPU consists of one or two F-runtime groups. You can find their cycle time (F-monitoring time) and runtime in this tab.

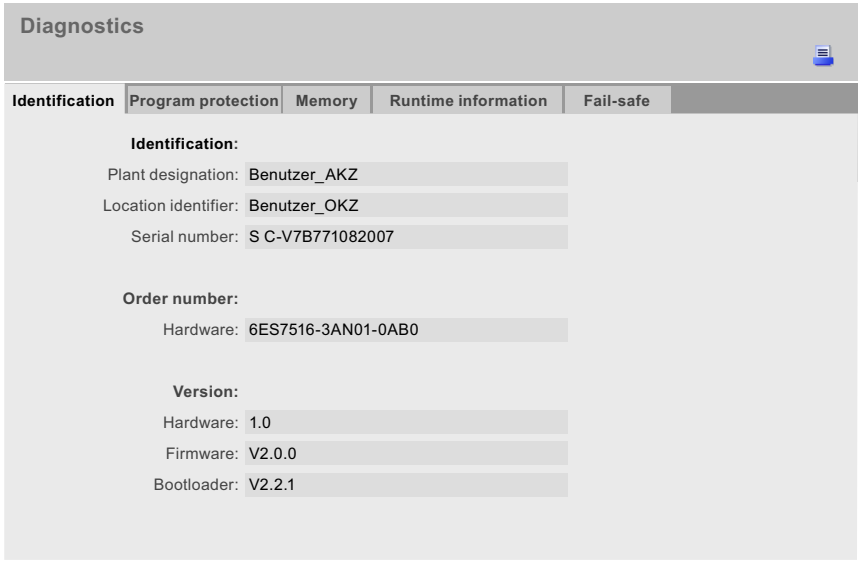

Figure 5-20 Web server, "Diagnostics" Web page

Diagnostics option "Diagnostics buffer"

The browser displays the content of the diagnostics buffer on the "Diagnostics buffer" Web page.

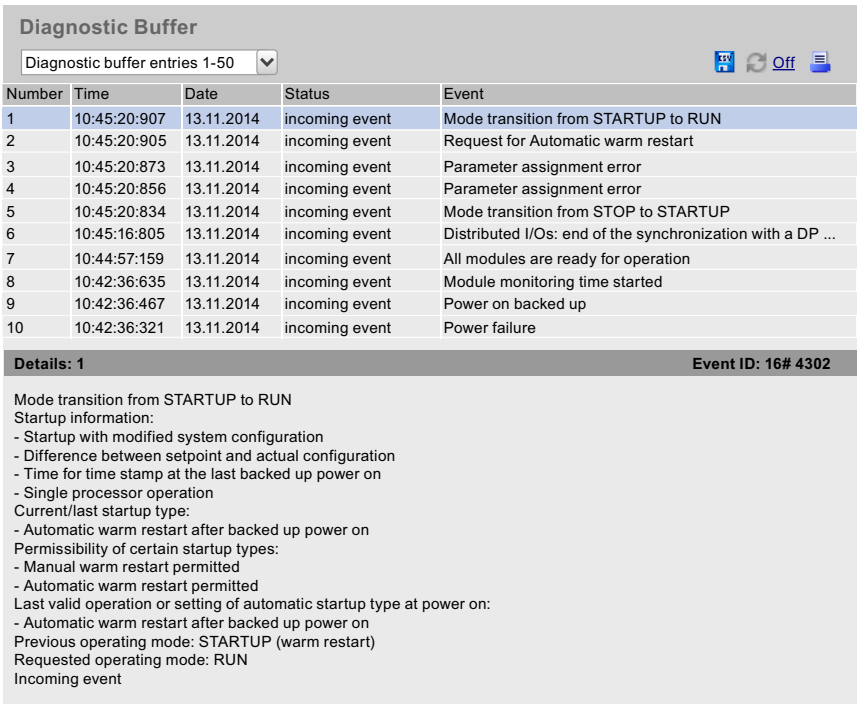

Number	Time	Date	Status	Event
1	10:45:20:907	13.11.2014	incoming event	Mode transition from STARTUP to RUN
2	10:45:20:905	13.11.2014	incoming event	Request for Automatic warm restart
3	10:45:20:873	13.11.2014	incoming event	Parameter assignment error
4	10:45:20:856	13.11.2014	incoming event	Parameter assignment error
5	10:45:20:834	13.11.2014	incoming event	Mode transition from STOP to STARTUP
6	10:45:16:805	13.11.2014	incoming event	Distributed I/Os: end of the synchronization with a DP ...
7	10:44:57:159	13.11.2014	incoming event	All modules are ready for operation
8	10:42:36:635	13.11.2014	incoming event	Module monitoring time started
9	10:42:36:467	13.11.2014	incoming event	Power on backed up
10	10:42:36:321	13.11.2014	incoming event	Power failure

Figure 5-21 Web server, "Diagnostics buffer" Web page

Diagnostics option "Module information"

The status of a device is indicated by the Web browser with symbols and comments on the "Module information" Web page.
Modules are displayed on the "Module information" Web page in the "Name" column with a link. You can thus get to the faulty module in hierarchical order.

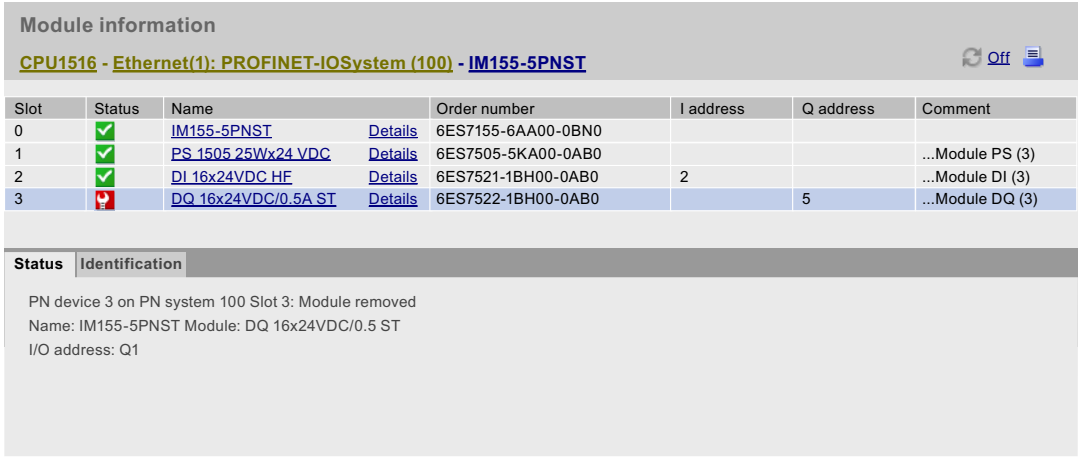

Figure 5-22 Web server, "Module information" Web page

Diagnostics option "Messages"

The Web browser displays the content of the message buffer on the "Messages" Web page.
The messages can be acknowledged via the Web server if you have the appropriate user rights.

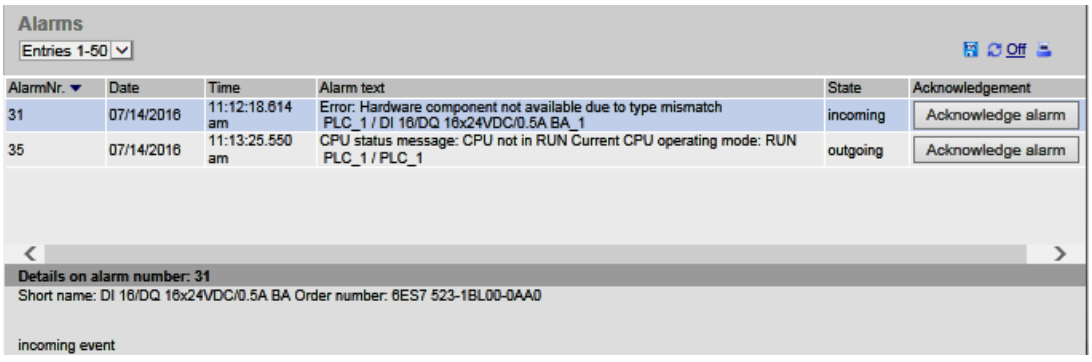

Figure 5-23 Web server, "Messages" Web page

Diagnostics option "Communication"

The "Communication" web page provides detailed information about the following tabs:

- Parameter
  A summary of the information on the PROFINET and Ethernet interfaces of the selected CPU is available in this tab.
- Statistics
  You will find information on data transmission in this tab.
- Resources
  Information about the resource consumption of the connections is available in this tab.
- Connections
  Information about the status of the communication connections is available in this tab.

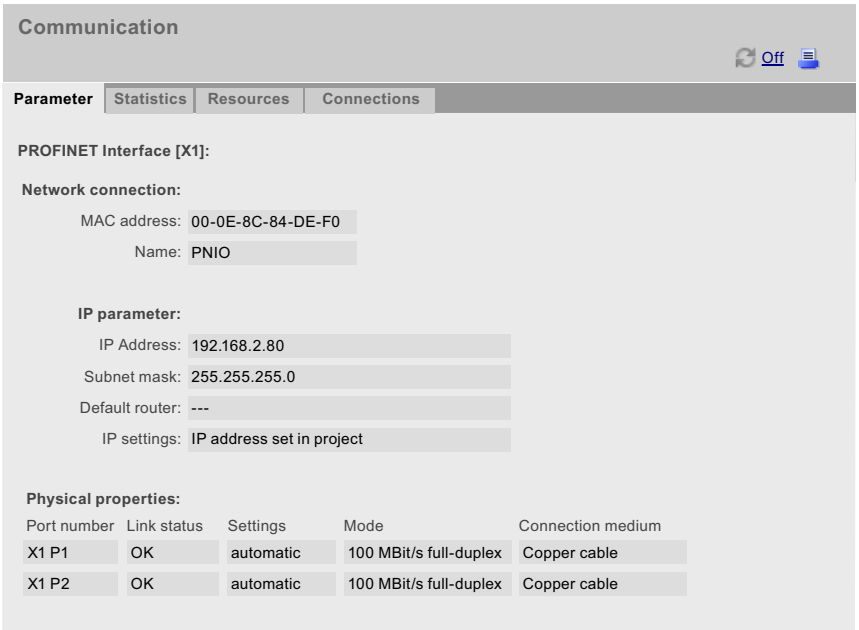

Figure 5-24 Web server, "Communication" Web page

"Topology" diagnostics option

The "Topology" Web page provides information on the topological configuration and status of the PROFINET devices in your PROFINET IO system.

Topology

PLC 1 [X1]

Off

Graphic view | Table view | Status overview

Port				Partner port	
Status	Name	Module type	Port	Name	Port
	CPU 1516-3PN/DP	CPU 1516-3PN/DP			
			port-001	SCALANCE-X-204IRT	port-001
	IM155-6PN-2	IM 155-6PN ST			
	IM155-5PN	IM 155-5PN ST			
			port-001	SCALANCE-X-204IRT	port-004
			port-002	cpux6-7-1xet200mp	port-002
	SCALANCE-X-204IRT	SCALANCE-X-204IRT			
			port-001	CPU1516-3PN/DP	port-001
			port-002		
			port-003		
			port-004	IM155-5PN	port-001
	SCALANCE-X-208	SCALANCE-X-208			
	cpux6-7-1xet200mp				
			port-002	IM155-5PN	port-002

Figure 5-25 Web server, "Topology" Web page

"Motion Control Diagnostics" diagnostic option

The Web server displays statuses, errors, technology alarms and the current values of the configured technology objects (TOs).

The "Motion Control Diagnostics" web page provides detailed information on the configured technology objects in the following views:

- Diagnostics
  This view provides an overview list of configured technology objects, the status and error messages of a selected technology object, as well as values and limits of the movement status for a selected axis.
- Service overview
  This view contains diagnostic information for multiple technology objects and a filter option for selecting the displayed technology objects.

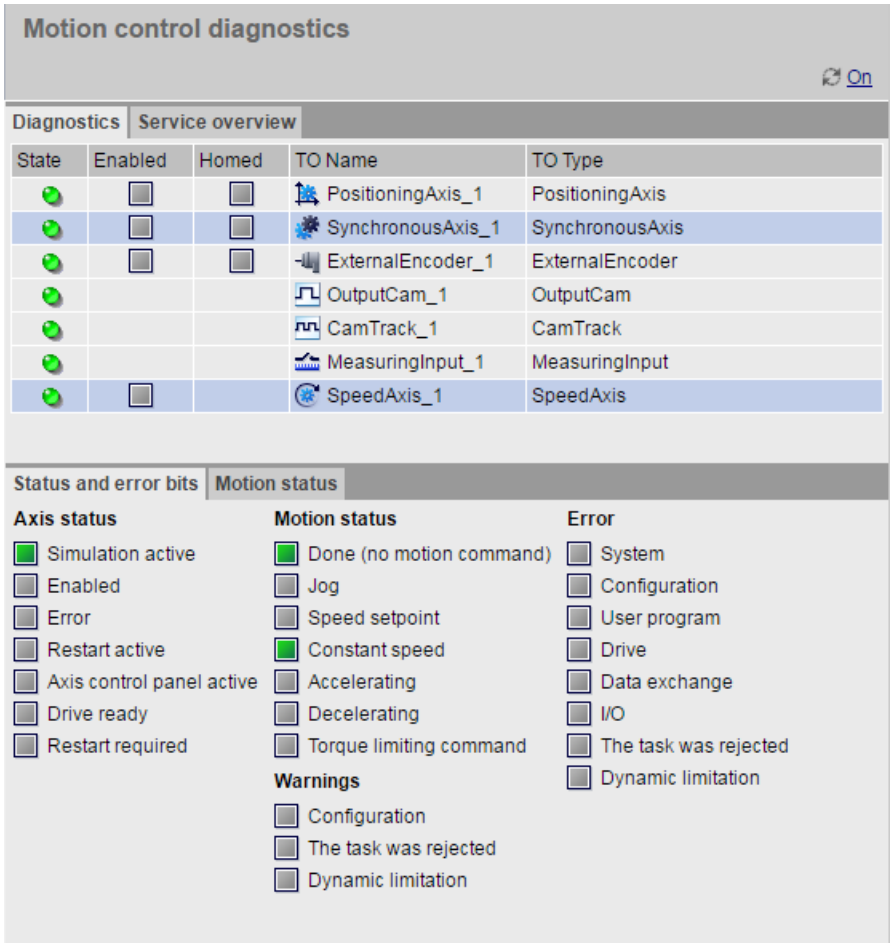

Figure 5-26 Web server, "Motion Control diagnostics" webpage

"Trace" diagnostic options

You can read, view and save the trace recordings via the Web server and thus obtain plant and project information for diagnostics and maintenance.

The web page of the trace and logic analyzer function consists of several areas. The example in the figure below shows how the Web server user interface is divided when the "Trace" web page is first called.

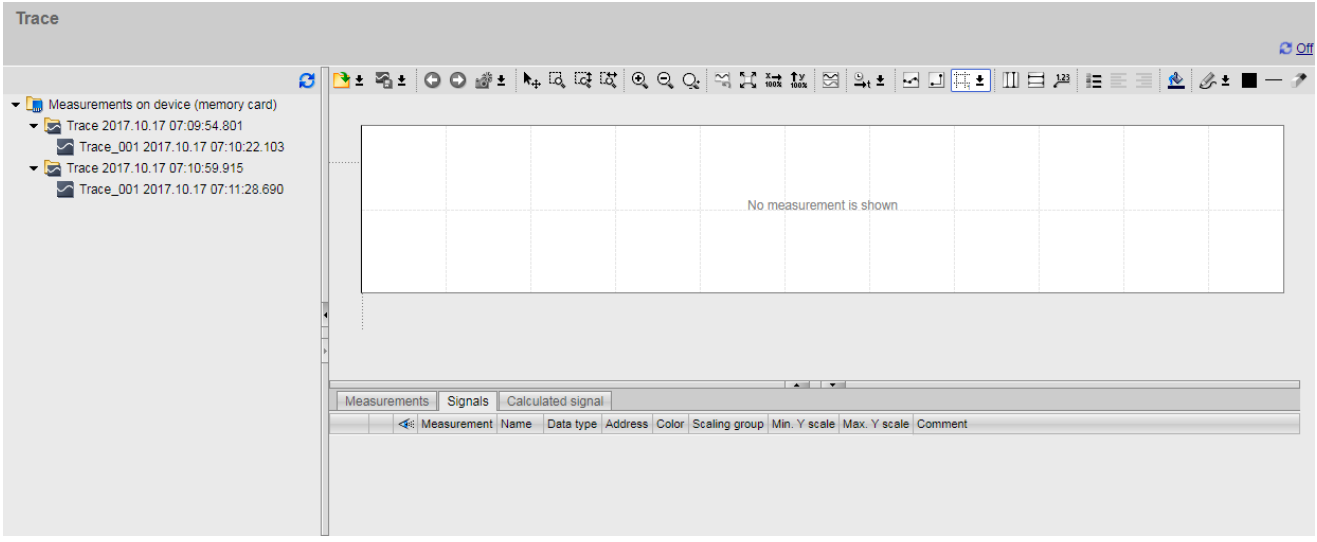

Figure 5-27 Web server, "Trace" home page (without measurement)

Additional information

Additional information on the topic is available in the Web server function manual (http://support.automation.siemens.com/WW/view/en/59193560).
You can find additional information on the trace function in the Using the trace and logic analyzer function (https://support.industry.siemens.com/cs/ww/en/view/64897128) function manual.

5.2.4 Diagnostics information using the HMI diagnostics view

Objects for system diagnostics

The full functionality of the HIM diagnostics view is only available with Comfort Panels and WinCC RT Advanced . Basic Panels do not support the complete range of system diagnostics functions.
Two objects are available for system diagnostics on an HMI device.

System diagnostics view

The system diagnostics view reflects the current status of all accessible devices in your plant. You navigate directly to the cause of the error and the associated device. You have access to all diagnostics-capable devices that you have configured in the STEP 7 hardware and network editor.

System diagnostics window

The system diagnostics window is an operating element and display object.
The functions of the system diagnostics window are the same as for the system diagnostics view. Because the system diagnostics window is configured in the "Global screen", you can also specify, for example, if the object can be closed in WinCC Runtime.

NOTE

Compatibility with Basic Panels

Only the "System diagnostics view" object is available with Basic Panels.

Basic Panels do not support the "System diagnostics window" object or the graphic symbol "System diagnostics indicator".

5.2.4.1 Configuring system diagnostics

Introduction

You add a system diagnostics view or a system diagnostics window to your project to get an overview of all devices available in your plant.
The system diagnostics window behaves like the system diagnostics view but is only available in the global screen.

Requirements

- At least one CPU has been set up in the project.
- An HMI device (e.g., Comfort Panel) has been set up in the project.
- CPU and the HMI device are connected with each other by an HMI connection.
- You have created a screen (for the system diagnostics view).
- The global screen is open (for the system diagnostics window).
- The Inspector window is open.

Procedure

Proceed as follows to configure the system diagnostics:

1. Double-click the "System diagnostics view" object in the "Tools" task card. The object is added to the screen.

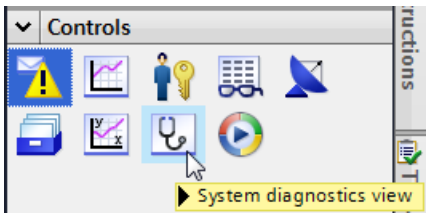

Figure 5-28 Adding a system diagnostics view

2. Select the "Properties" tab in the Inspector window.

3. Select the area "Columns".
4. Enable the columns that you require in the device view for WinCC Runtime, for example:
   - Status
   - Name
   - Operating mode
   - Slot
   - Address
5. Enable the columns that you require in the detail view for WinCC Runtime, for example:
   - Status
   - Name
   - Operating mode
   - Plant designation
   - Address
6. You can change the column headers in the "Columns" area, if necessary.
7. Select the "Display" area.
8. Enable "Column settings > Columns moveable" to move the columns in WinCC Runtime.
9. To close the system diagnostics window in WinCC Runtime, select "Properties > Window > Closable" in the "Properties" tab of the Inspector window.

Result

The system diagnostics view has been added to the screen. The diagnostics status of the entire plant is displayed in the system diagnostics view in WinCC Runtime.

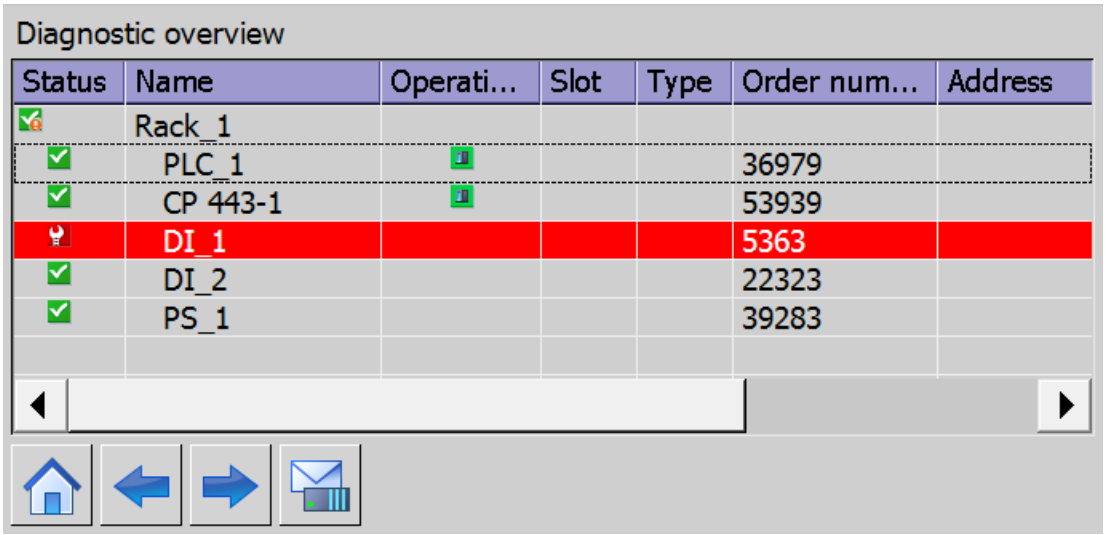

Figure 5-29 System diagnostics view in the screen

The system diagnostics window has been added to the global screen. If there is an error message in the plant, the system diagnostics window responds and displays the affected device.

5.2.4.2 Different views of the HMI diagnostics view

Introduction

There are three different views available in the system diagnostics view and the system diagnostics window.

- Device view
- Details view
- Distributed I/O view (only for PROFIBUS and PROFINET systems)

Device view

The device view shows all the available devices of a layer in a table. Double-clicking on a device opens either the lower-level devices or the detail view. Symbols in the first column provide information about the current state of the device.

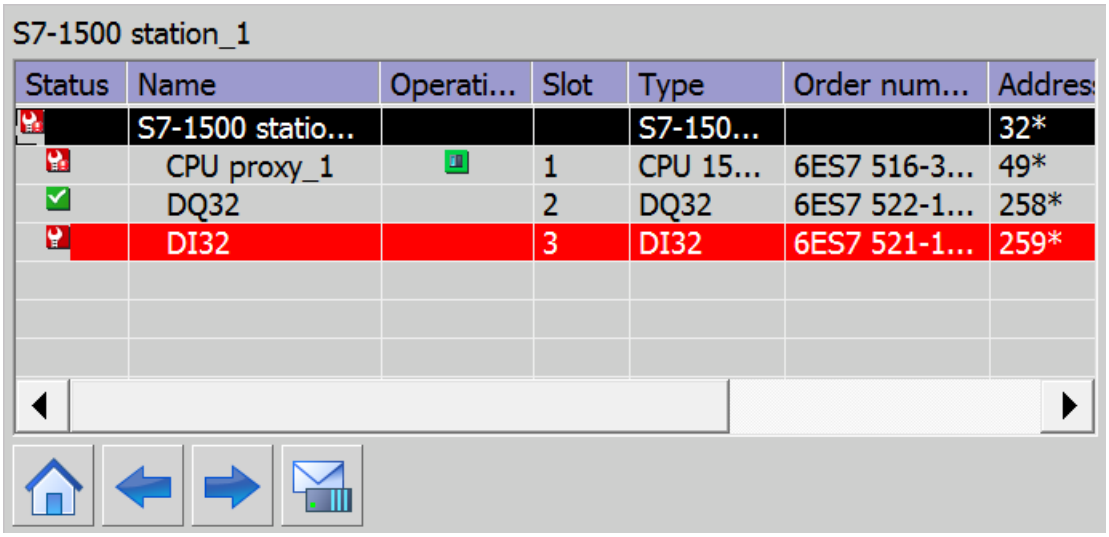

Figure 5-30 Device view

Details view

The detail view gives detailed information about the selected device and any pending errors. Check whether the data is correct in the detail view.

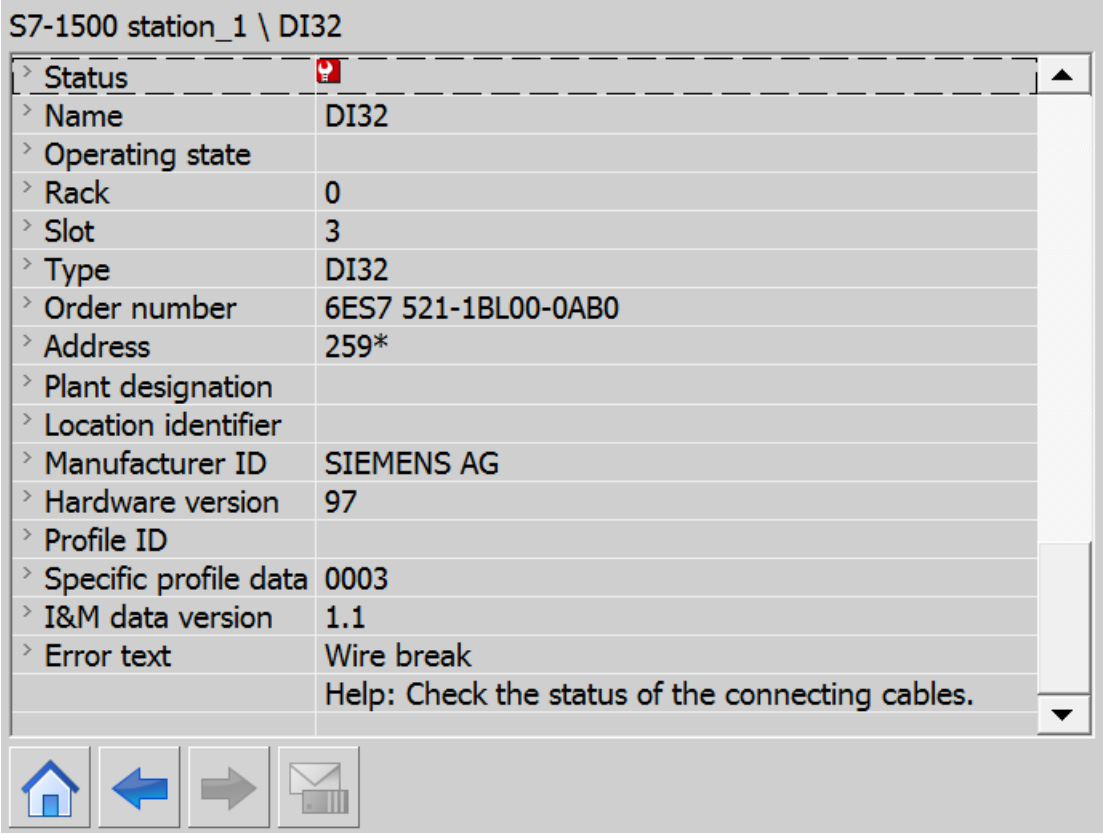

Figure 5-31 Details view

Distributed I/O view

The distributed I/O view is only available for distributed I/O systems. The distributed I/O view shows the status of the devices of the PROFIBUS/PROFINET subnet.

Each element in the view shows the device name, the device type and the IP address or the PROFIBUS address.

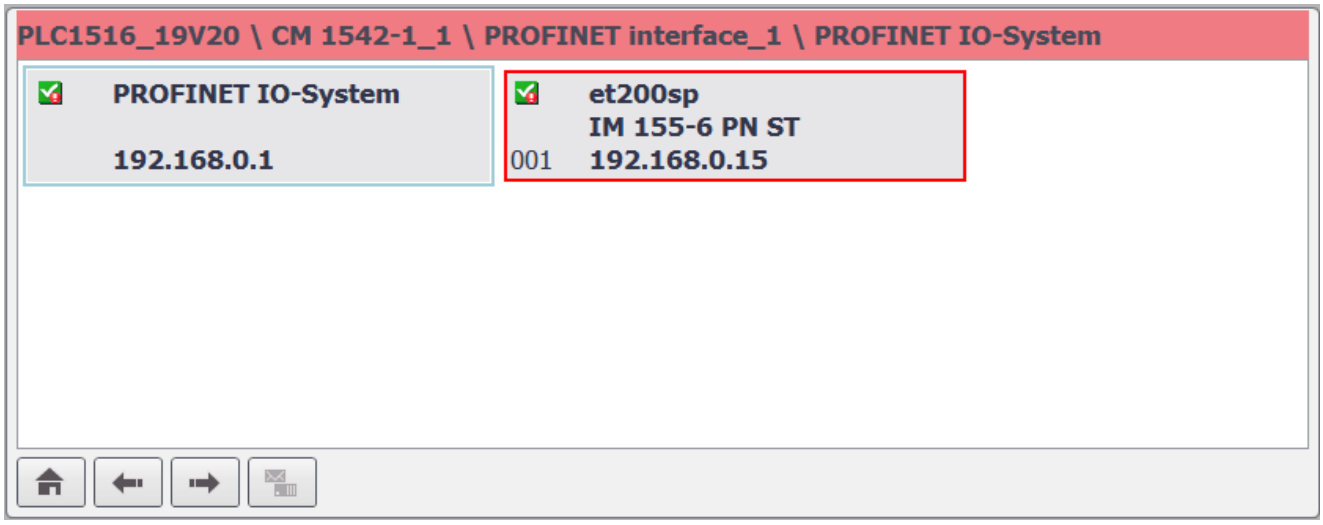

Figure 5-32 Distributed I/O view

Navigation buttons

Button	Function
	Opens the lower-level devices or the detail view if there are no lower-level devices.
	Opens the higher-level device or the device view if there is no higher-level device.
	Opens the device view.

5.2.4.3 Inserting system diagnostics indicator

Introduction

The system diagnostics indicator is a predefined graphic symbol of the library which alerts you to errors in your plant.
The library object shows two different states:

- No error
- Error

Requirements

- An HMI device (e.g., Comfort Panel) has been set up in the project.
- The "Libraries" task card is opened.
- The global library "Buttons and Switches > DiagnosticsButtons" is open.
- A screen is open.
- The system diagnostics window has been set up in the global screen.

Procedure

1. Select the "DiagnosticsIndicator" object in the library.

2. Drag-and-drop the library object to the position in the work area where you want to insert the object.
   The library object is added.

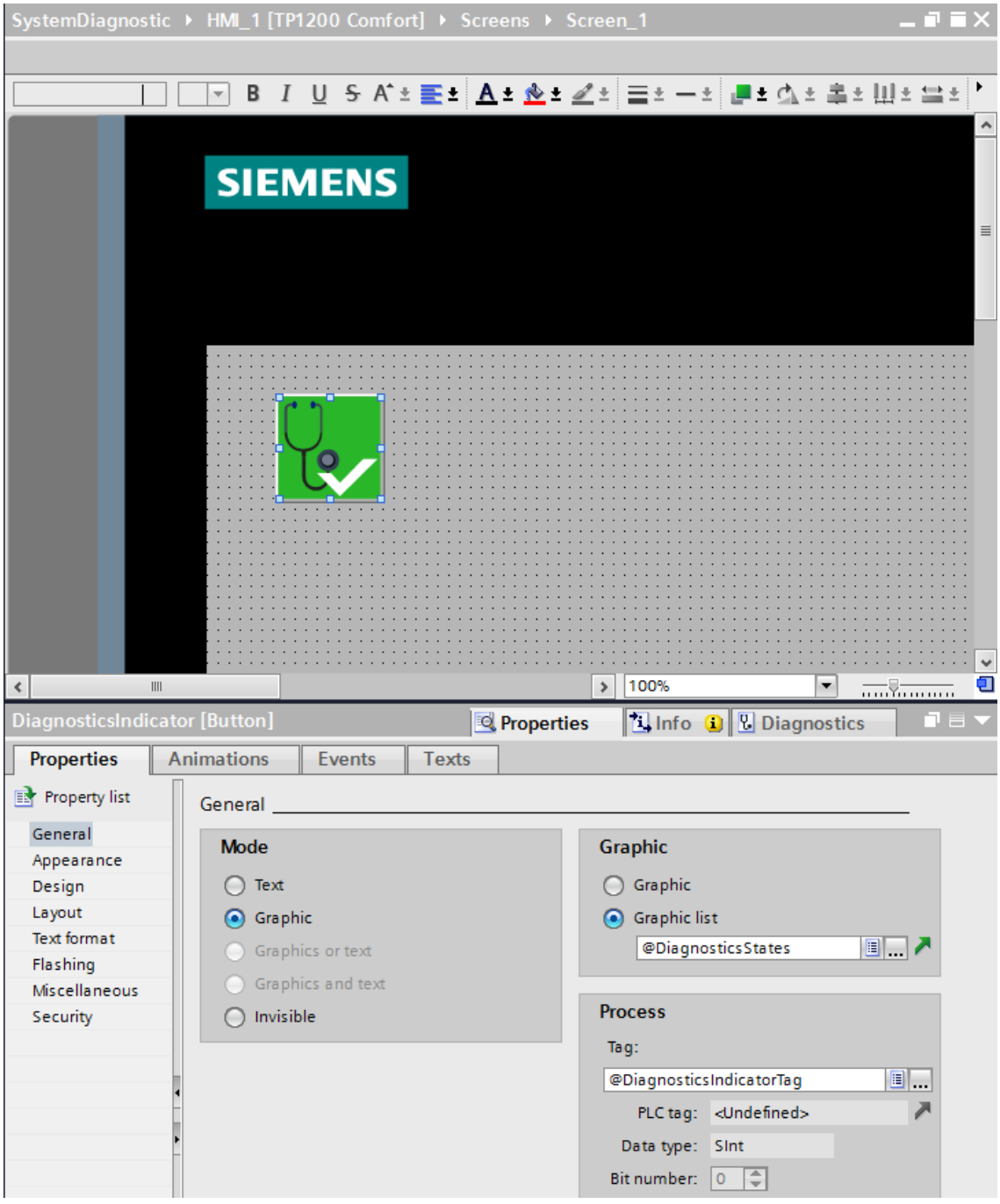

Figure 5-33 Inserting library object in the work area

3. Select the library object.
4. Open the "Events" tab in the Inspector window.
   The "ShowSystemDiagnosticsWindow" is preset for the event "Click".

Result

The system diagnostics indicator has been added to the project and connected with the system diagnostics window.
The system diagnostics indicator changes its appearance if an error message is output in WinCC Runtime. The system diagnostics window opens when you click on the system diagnostics indicator. The system diagnostics window shows the detail view of the affected device.

Configuring access protection for the system diagnostics window

Configure access protection for the system diagnostics indicator to prevent unauthorized access to the system diagnostics windows.

1. Select the "DiagnosticsIndicator" object in the screen.
2. Open the "Properties" tab in the Inspector window.
3. Select an authorization in the "Security in Runtime" area.

A logon dialog opens when you click on the system diagnostics indicator in WinCC Runtime. The system diagnostics window does not open unless you have the required authorization.

5.2.4.4 Configuring button as system diagnostics indicator

Introduction

Instead of using the object "DiagnosticsIndicator" from the library, you can, for example, configure a button in "Graphic" mode to indicate errors in your plant.

Requirements

- At least one CPU has been created.
- An HMI device (e.g., Comfort Panel) has been set up in the project.
- The "Tools" task card is open.
- A bit graphics list has been created with two different graphics for the states.
- A screen is open.
- You have created a system diagnostics view.

Procedure

Follow these steps to configure a button as system diagnostics indicator:

1. Double-click the "Button" object in the "Tools" task card. A button is added to the screen.
2. Enable the "Properties" tab in the Inspector window and the "Graphic" mode in the "General" area.
3. Select the bit graphics list as graphics list.
4. Select the "Properties" tab in the Inspector window and select the tag @DiagnosticsIndicatorTag under "Tag" in the "General" area.
5. To assign a function to the button, select the "Events" tab in the Inspector window.

6. Select the "Click" event.
7. Click on "Add function" in the table.
8. Select "EnableSystemDiagnosticsView".
9. Select the system diagnostics view.

Result

You have configured an interface that reacts to error events from the CPU. The button changes when an error event occurs in Runtime.

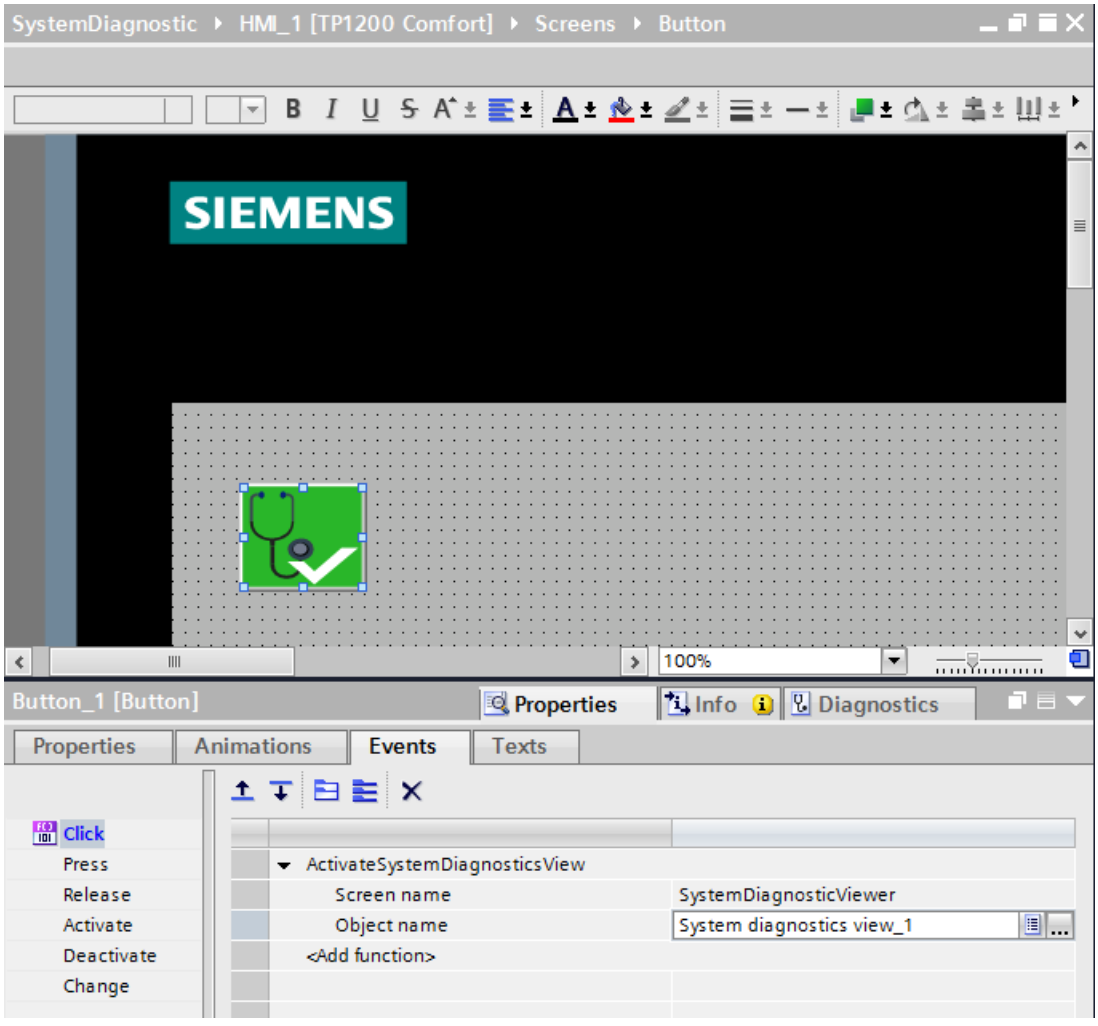

Figure 5-34 Configured button

The button has two states.

- Error
  The system diagnostics view opens when you click on the button. The system diagnostics view shows the detail view of the affected device.
- No error
  The system diagnostics view opens when you click on the button. The system diagnostics view shows the device view.

System diagnostics by means of the user program 6

6.1 Options of system diagnostics in the user program

Introduction

You can configure responses to diagnostics alarms in the user program. You can, for example, specify that your plant is stopped in case of specific diagnostics alarms.

Instructions

A vendor-independent structure of data records with diagnostics information applies. The following instructions are available for determining the system diagnostics of a device:

Table 6-1 Instructions for determining the system diagnostics

Instruction	Description
RDREC	• Reads data records of a component (module or submodule) of a DP slave/IO device that may contain error information • Works asynchronously, which means processing takes place across several calls
DPNRM_DG	• Reads the current diagnostics data of a DP slave (DP standard diagnostics) • Works asynchronously, which means processing takes place across several calls
T_DIAG	• Provides diagnostic and status information on a connection • Works asynchronously, which means processing takes place across several calls
Get_IM_Data	• Reads the identification and maintenance data of the CPU • Works asynchronously, which means processing takes place across several calls
GetStationInfo	• Reads address information of a PROFINET IO device • IO device may also be located in a lower-level IO system (connection via CP/CM) (except in S7-1500R/H systems). • Works asynchronously, which means processing takes place across several calls
GetChecksum	• Reads the checksum of a group of objects • Works asynchronously, which means processing takes place across several calls
GetSMCinfo	• Reads information about the inserted SIMATIC Memory Card • Works asynchronously, which means processing takes place across several calls
RALRM	• Reads the start information of the OB when calling the diagnostics interrupt OB (OB 82) • Provides information on cause and location of error
GEN_DIAG	• Generates diagnostics information • To generate diagnostics information, the module or submodule is identified with its logical address
Gen_UsrMsg	• Generates an alarm that is entered in the diagnostics buffer
GET_DIAG	• Provides diagnostics information • To provide diagnostics information, the module or submodule is selected
GET_Name	• Reads the name of an IO device

Instruction	Description
RD_SINFO	• Reads the start information of the OB called last that has not been processed completely and the startup OB started last • Provides general error information
LED	• Reads the status of the module LED
DeviceStates	• Outputs the state of all devices of an IO system
ModuleStates	• Outputs the state of all modules of a device
RT_INFO	• Provides statistics on the runtime of certain organization blocks of the communication or the user program
GetClockStatus	• Reads information about the internal CPU clock

Additional information

Online help

In the online help for STEP 7, you can find:

- Additional information on instructions for system diagnostics
- Information about further options for evaluating diagnostic information in the user program (e.g. with the "RDREC", "RALRM", "GET_DIAG" instructions)
- Information on SIMATIC ProDiag. This functionality enables targeted and fast machine and plant diagnostics for SIMATIC S7-1500 and SIMATIC HMI:
  - Standardized diagnostics concept for different SIMATIC components
  - No additional configuration work for diagnostics functionality
  - Reduces the load on PLC memory and program run time

  You can find details in the online help under "Supervising machinery and plants with ProDiag".

Manuals

You can find additional information about evaluating diagnostic information in the user program in the following manuals:

- PROFINET function manual (http://support.automation.siemens.com/WW/view/en/49948856)
- From PROFIBUS DP to PROFINET IO (https://support.industry.siemens.com/cs/ww/en/view/19289930) programming manual
- Manual for the respective module

Application examples

You can find detailed application examples with further documentation and example projects on the Service&Support Website:

- Diagnostic overview for SIMATIC S7-1200 and S7-1500 (https://support.industry.siemens.com/cs/ww/en/view/109752283)

FAQ

For more information about how to realize channel diagnostics in the user program of the SIMATIC S7-1500, refer to the FAQ with entry ID 109480387 on the Service&Support Website (https://support.industry.siemens.com/cs/ww/en/view/109480387).

6.2 System diagnostics using process image inputs

Introduction

In addition to event-driven system diagnostics, the input and output modules of the SIMATIC series provide diagnostics information using the process image input.
The system diagnostics described in the preceding sections is made available asynchronously to the program processing. To ensure the correct processing of the input and output data in the case of faults while reading the input and output data, some modules offer the so-called value status (QI = Quality Information) for evaluation.

Requirement for evaluation of the value status

The diagnostics information about the process image input is transmitted synchronized with the user data. Select the "Value status" check box in the properties of the I/O module in STEP 7 if you want to evaluate the value status of the channel.

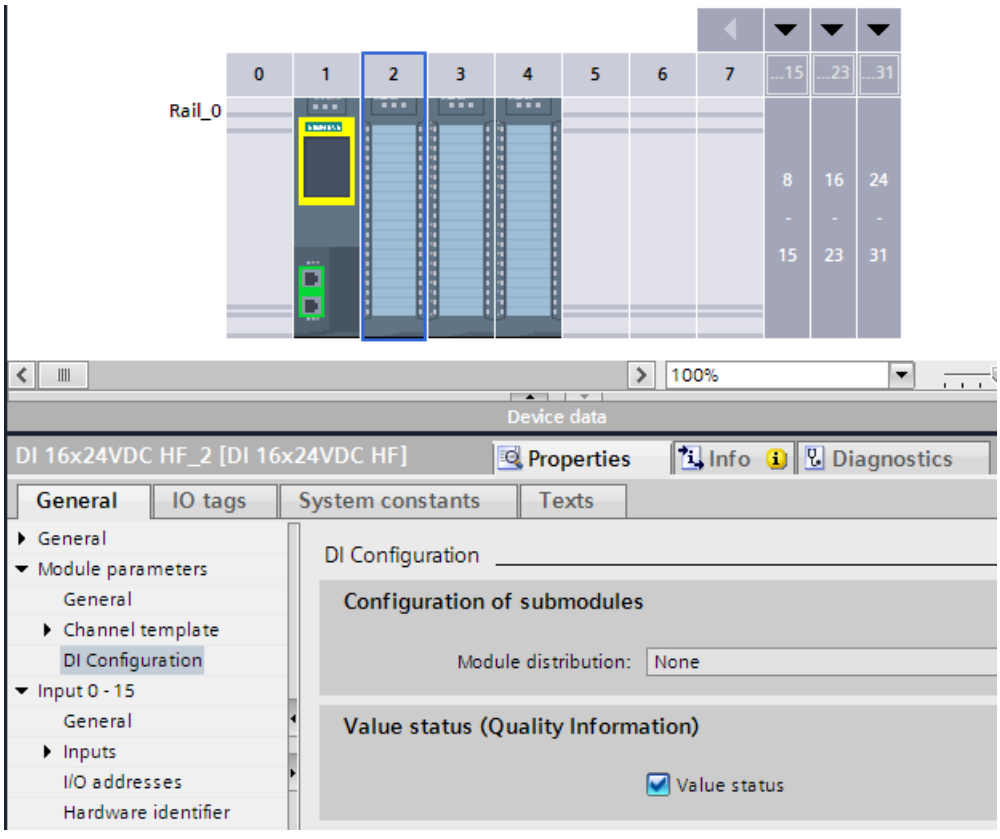

Figure 6-1 Enable value status

Evaluation of the value status

If you have enabled the value status for an I/O module, this module provides additional information on the value status in addition to the user data. This information is available directly in the process image input and can be retrieved with simple binary operations

without having the evaluate the module diagnostics. Configured diagnostics in STEP 7 is not necessary for output of the value status.

Each channel is uniquely assigned one bit in the value status. The bit in the value status indicates the validity of the read-in value in the user data.

Table 6-2 Example for evaluation of the user datum in case of a wire break for a digital input module

	Bit in user datum	Bit in value status	Value in user datum
Faulty channel	Logical 0	0	Invalid
Fault-free channel	Logical 0 (actual value)	1	Valid

Influence of the value status

The value status of an active channel is "Invalid" when any **one** of the following factors is given:

- Channel diagnostics pending (regardless of whether diagnostics, for example wire break, is configured for this channel)
- For output channels: "Reaction to CPU STOP" feature is active (due to CPU STOP, interrupted connection)
- For output channels of the digital on-board I/O of compact CPUs: If a channel is used for technology functions, it returns the value status 0 ("Invalid"). It does not matter in this context whether the output value is incorrect or not.
- PROFIenergy is active, i.e. hibernation is enabled (except in "Continue working mode")

When working with non-fail-safe modules, note that an invalid active channel also sets the value status of all other active channels to "Invalid". We therefore recommend that you disable all unconnected or unused channels.

Example - Evaluation of the value status for the input channel of an analog input module

The example below shows the basic evaluation of the value status for the input channel of an analog input module in the user program. The diameter of a cylinder is measured by means of a channel and its circumference is calculated.

- If the value status indicates the channel is error-free, the circumference is to be calculated.
- If the value status indicates the channel is defective, the value "0" is to be output as substitute value for the circumference.

The figure below shows the evaluation of the value status in the user program.

Perimeter

	Name	Data type	Default value	Comment
1	Input			
2	Diameter	Real	0.0	Tag for analog input channel
3	QualityInformation	Bool	false	Tag for QI of analog input channel
4	Output			
5	Perimeter	Real	0.0	Tag for result of calculation
6	InOut			
7	Static			
8	Temp			
9	Constant			
10	PI	Real	3.14	Constant for pi
11	SubstituteValue	Real	0.0	Constant for substitute value

IF... CASE... OF... FOR... TO DO... WHILE... DO... (*...*)

```
1 IF #QualityInformation = true                //Validity check of diameter
2
3     THEN                                     //Program run, if quality information is positive
4         #Perimeter := #Diameter * #PI;       //Calculation of perimeter
5
6     ELSE                                     //Program run, if quality information is negative
7         #Perimeter := #SubstituteValue;      //Substitute value assigned to perimeter
```

Figure 6-2 Example - Evaluation of the value status in the user program

Additional information

Depending on the I/O module, the value status reserves different addresses in the process image input. The manual for the module used includes specific information on the assignment and arrangement.

Alarms 7

Introduction

Alarms allow you to display events from processing in the automation system and to quickly detect errors, to precisely localize them and to remove them. Downtimes are significantly reduced in a plant.

Before alarms can be output, they need to be configured.

You can create, edit and compile event-dependent alarms along with their alarm texts and alarm attributes and display them on display devices.

In STEP 7, you create program alarms in the user program with the "Program_Alarm" instruction. You edit the attributes and alarm texts in the alarm editor in STEP 7.

You can output the alarm status with the "Get_AlarmState" instruction.

Advantages of program alarms

Compared to other alarm methods, such as HMI discrete alarms, program alarms offer the following advantages:

- Central engineering in STEP 7: You only configure a program alarm once for the CPU. The program alarm is automatically transferred from the CPU to all registered HMI devices.
- System-supported acknowledgment: The acknowledgment of a program alarm on an HMI device is automatically updated on other HMI devices by the CPU.
- Time stamping close to the event in the CPU
- Identical time stamps of the alarms on multiple HMI devices without time synchronization

7.1 Creating alarms with the "Program_Alarm" instruction

"Program_Alarm" instruction

You create a program alarm in STEP 7 with the "Program_Alarm" instruction.

The figure below shows the "Program_Alarm" instruction with the most important input tags.

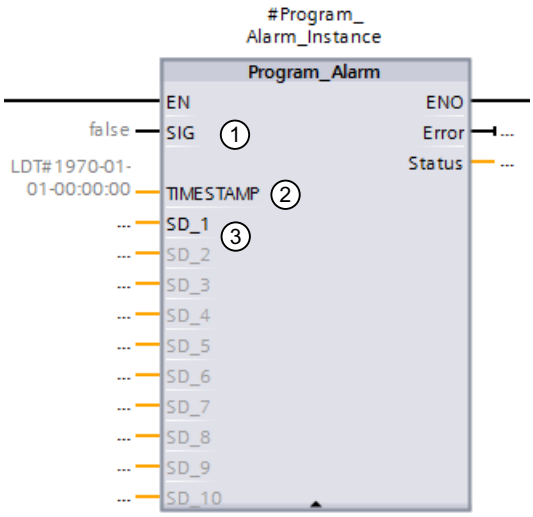

① The "Program_Alarm" instruction monitors the signal at the SIG block input and generates a program alarm in case of a signal change at the SIG parameter. The instruction generates an incoming alarm when the signal changes from 0 to 1 and an outgoing program alarm if the signal changes from 1 to 0. The program alarm is triggered synchronously to program execution.

② The time stamp is automatically created when the alarm event occurs in the automation system and is passed along with the alarm.

③ You can append up to ten associated values to the program alarm at the parameters SD_i (1 ≤ i ≤10). The associated values are acquired at the time of the signal change at the SIG parameter and assigned to the program alarm.
Associated values are used to display dynamic contents in alarms.
Example: The temperature in the tank <associated value 1> is <associated value 2> °C.
You can find more information on associated values in the STEP 7 online help.

Figure 7-1 "Program_Alarm" instruction

NOTE

The "Program_Alarm" instruction can only be called in a function block.

A program alarm can be up to 256 bytes long in total (with associated values and texts from the text list).

The associated values can be a maximum of 512 bytes in length. Text lists are not affected by this.

The CPUs of the SIMATIC S7-1500 product series have the following memory for text lists:

- CPU 1510-x to CPU 1513-x: 4.5 MB
- CPU 1515-x to CPU 1516-x: 6.5 MB
- CPU 1517-x to CPU 1518-x: 7.5 MB

The number of configurable program alarms depends on the CPU used. With a CPU 1515-2 PN, for example, a maximum of 10,000 program alarms are possible. You can find this information in the device manual for the respective CPU under "Number of configurable alarms".

The number of simultaneously active "Program_Alarms" depends on the CPU used. With a CPU 1515-2 PN, for example, a maximum of 1,000 program alarms are possible. You can find this information in the device manual for the respective CPU under "Number of reserved user interrupts".

Sometimes, it is not possible for all program alarms that are active at the same time to be output within one cycle. Query the status of each "Program_Alarm" and activate the instruction again, if necessary. The cycle time is increased for a short time by simultaneously activating/sending multiple "Program_Alarms".

A maximum of 40,000 program alarms should be configured in a STEP 7 project on a 64-bit operating system.

Additional information

You can find more information on creating program alarms in the STEP 7 online help under "Creating and editing alarms".

7.2 Editing alarms in the alarm editor

Introduction

You can edit the created alarms in STEP 7 either in the program editor or in the alarm editor.

You can find additional information on editing alarms in the program editor in the STEP 7 online help under "Creating and editing alarms".

Editing alarms in the alarm editor

You can edit alarm texts in the alarm editor and specify attributes such as alarm class or priority for the alarms.

1. Double-click "PLC supervisions & alarms" in the project tree. Select the "Alarms" tab. The alarm editor opens.
2. Enter the required texts and attributes in the appropriate columns.

The figure below shows the layout of the alarm editor.

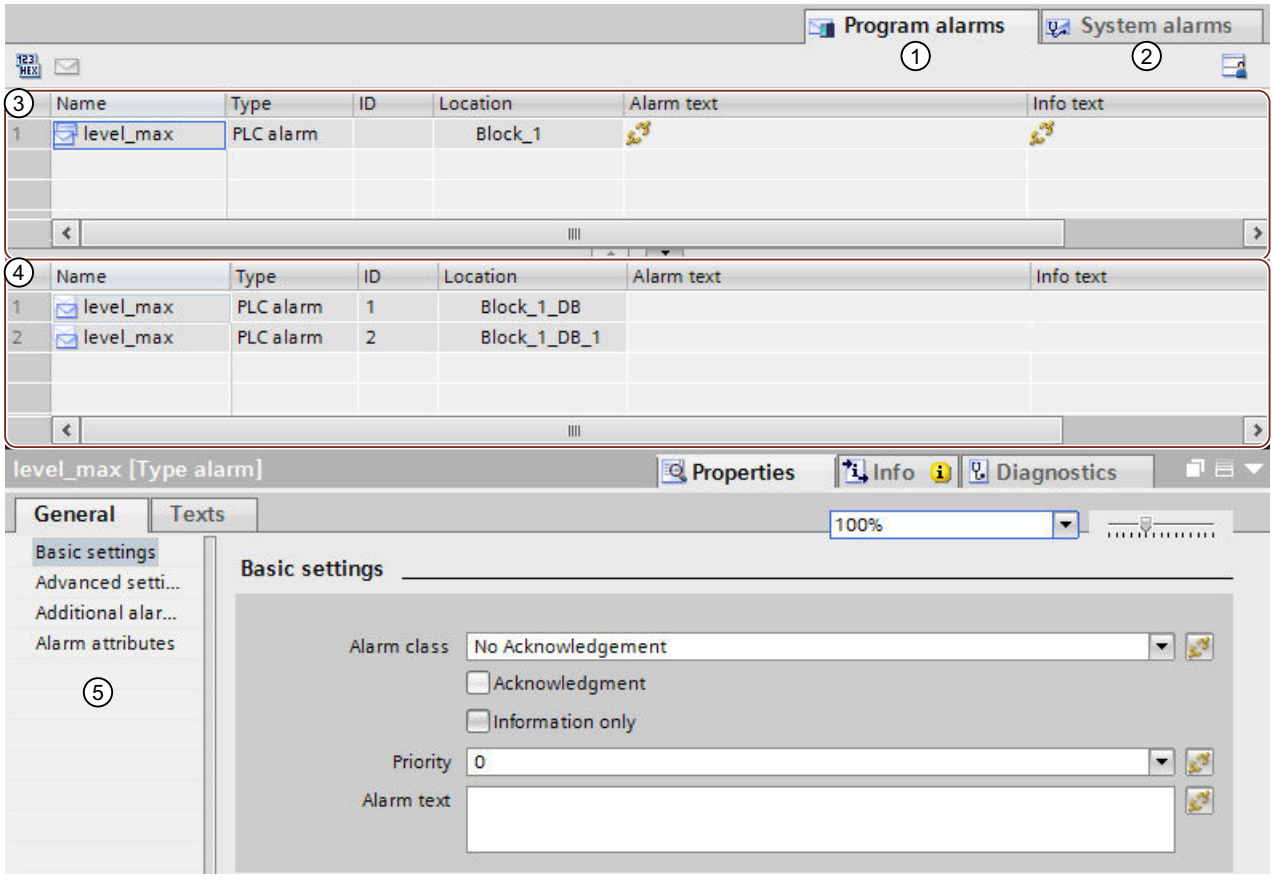

① "Program alarms" tab: You can edit program alarms here.

② "System alarms" tab: System alarms can only be viewed but not edited. To edit these alarms, you must navigate to the device view ("Go to device" menu command), where you can modify the system diagnostics alarms in the Inspector window.

③ "Type alarms" area:
This is where the type alarms created in a function block with the "Program_Alarm" instruction are displayed. Type alarms serves as templates for instance alarms (④).
All the inputs you make for the type alarm are automatically included in the instance alarms derived from it.
You can find more information on type alarms in the STEP 7 online help under "Alarm types and alarms".

④ "Instance alarms" area:
When you assign an instance DB to the message block (for example, call in an OB, FB, FC), instance alarms are automatically generated based on the template of the type alarm and alarm numbers are assigned.
You can modify the instance alarms for specific instances.
You can find more information on instance alarms in the STEP 7 online help under "Alarm types and alarms".

⑤ Properties of the selected type and instance alarm in the Inspector window

Figure 7-2 Layout of the alarm editor

You can enter or modify the necessary parameters, texts and attributes in the table or in the Inspector window.

Multilingual alarms

You can have program alarms displayed in multiple languages by assigning different project languages to the interface languages of the display devices.

NOTE

The project languages you want to assign must be activated and the corresponding texts (translations) must be available in the project. The project language selection can be found in the project tree under "Languages & Resources".

To create the texts of the program alarm as multilingual, follow these steps:

1. In the Inspector window of the alarm editor, open the "Properties" tab and the lower-level "Texts" tab.
2. Enter the text in the desired project language.
3. Open the "Properties" tab in the Inspector window of the CPU and select the "Display" command in the "General" area navigation. Under "Multilingual", assign one of the activated project languages to each interface language of the display devices. Overall, you can assign up to three different project languages to the user interface languages. All assigned project languages are loaded into the CPU.

Additional information

You can find additional information on texts and attributes in the STEP 7 online help under "Texts and attributes".
You can find more information on text lists in the STEP 7 online help under "Text lists for alarms".

7.3 Display of program alarms

Program alarms you create with the "Program_Alarm" instruction are automatically made available to the display devices.
You have the following options to display the alarms:

- STEP 7
- HMI
- Web server of the CPU
- Display of the CPU

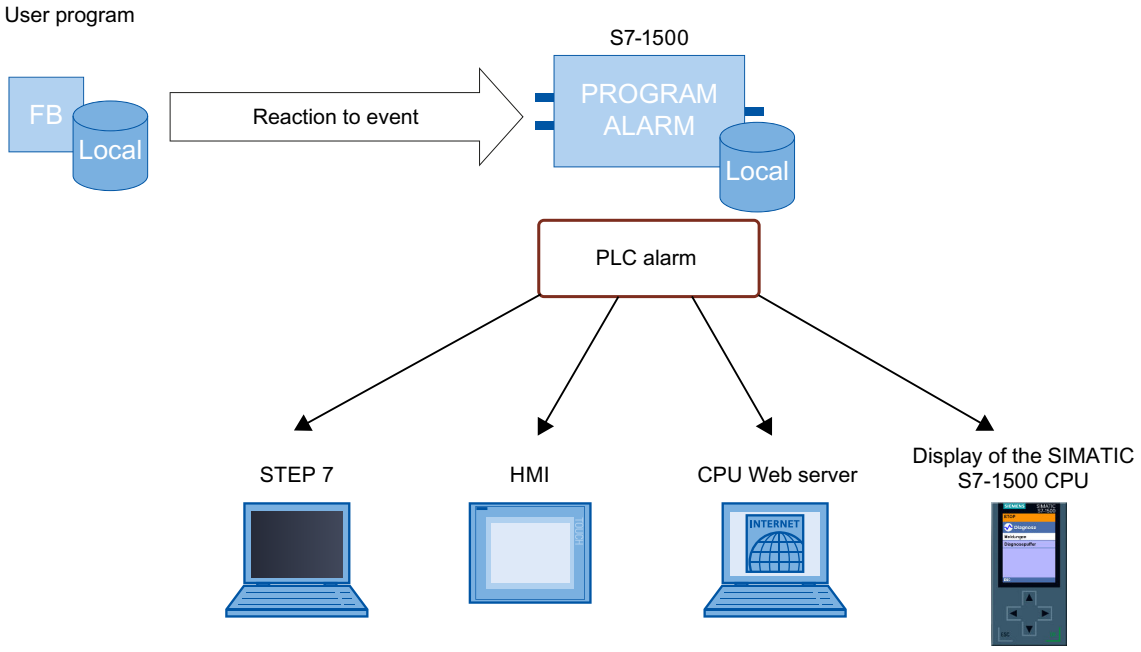

Figure 7-3 Display of program alarms

Multilingual alarms

You can have program alarms displayed in multiple languages by assigning different project languages to the interface languages. See section Editing alarms in the alarm editor (Page 74).

7.4 Output of the alarm state with the "Get_AlarmState" instruction

"Get_AlarmState" instruction

The "Get_AlarmState" instruction outputs the alarm state of a program alarm. The output of the alarm state always refers to a program alarm that was created using the "Program_Alarm" instruction.

The program alarm is selected with the "Alarm" input parameter. Specify the instance DB of the "Program_Alarm" instruction at the "Alarm" parameter.

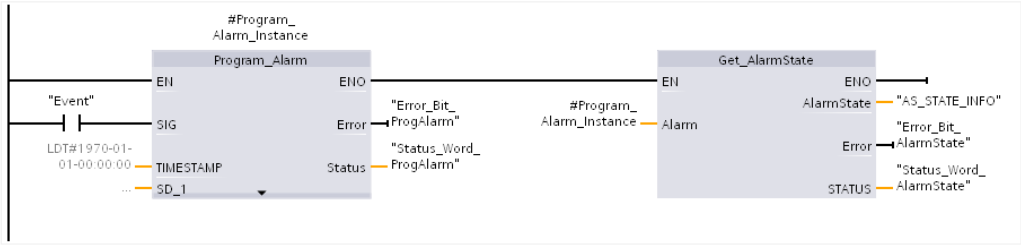

Figure 7-4 Call - Get_AlarmState

Additional information

You can find additional information on evaluation of the "Get_AlarmState" instruction in the STEP 7 online help.

7.5 Example program for program alarms

7.5.1 Task

Introduction

This section describes the basic configuration of program alarms with the "Program_Alarm" instruction based on two examples. The two examples solve the same problem but use a different approach. Example 1 does not use associated values. In example 2, an associated value is assigned to the program alarm to reference a text list.

Example - Minimum/maximum fill level of a tank

A tank is filled with a liquid. The fill level is monitored by two sensors.
If the liquid in the tank drops below a minimum fill level, an alarm is output for low fill level.
If the liquid in the tank exceeds a maximum fill level, an alarm is output for high fill level.

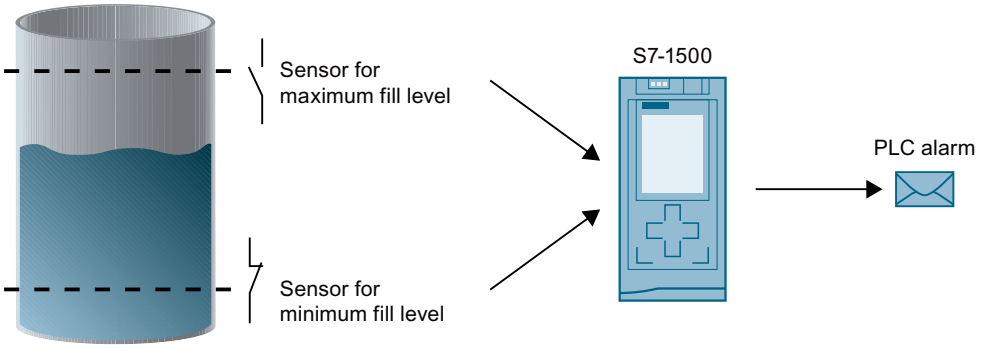

Figure 7-5 Example for fill level alarms

7.5.2 Example 1: Program alarm without associated values

Introduction

In this example, you create a program alarm for the maximum and the minimum fill level.

How the example works

When the maximum fill level is exceeded in the tank, a program alarm with the alarm text for the excessive fill level is output.

When the minimum fill level is undershot in the tank, a program alarm with the alarm text indicating that the fill level is too low is output.

Steps

The following steps are necessary for this example:

1. Define tags for signal acquisition
2. Create function block
3. Create program alarms
4. Call function block
5. Edit alarm text

Define tags for signal acquisition

The following table shows the tags that are used in this example. Define these tags in the standard tag table. The standard tag table is available in the project tree under "PLC tags".

Table 7-1 Tags for fill level alarms

Name	Data type	Description
max	BOOL	Tag for maximum fill level If "max" = 1, the maximum fill level is exceeded.
min	BOOL	Tag for minimum fill level If "min" = 1, the minimum fill level is undershot.

The figure below shows the standard tag table with the defined tags "max" and "min".

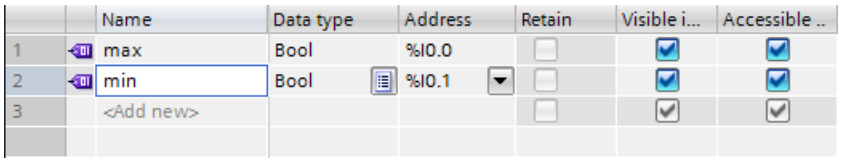

Figure 7-6 Define tags

Create function block

To create a function block, follow these steps:

1. Open the "Program blocks" folder in the project tree.
2. Double-click "Add new block".
   The "Add new block" dialog opens.

3. Select the button "Function block".

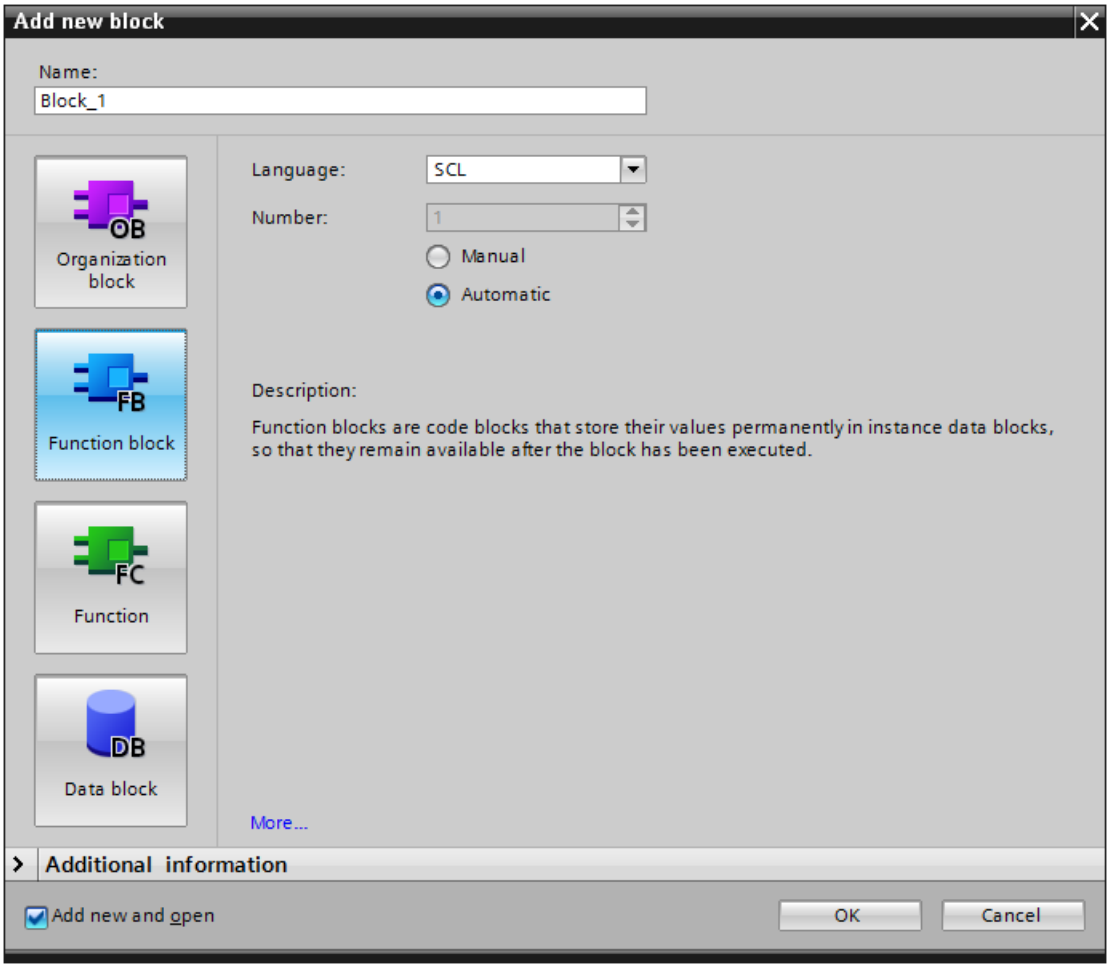

Figure 7-7 Create FB

4. Enter a name for the new block.
5. Select the language SCL.
6. Click on "OK" to confirm your input.

Result: You have created a function block.

Create program alarms

To create the program alarm for the example program, follow these steps:

1. Select the created function block (FB) in the "Program blocks" folder in the project tree and double-click the function block to open it.

2. Insert the call of the "Program_Alarm" instruction in the instruction part of the function block. The "Program_Alarm" instruction is available in the "Instructions" task card under "Extended instructions" > "Alarms".
   The "Call options" window opens.

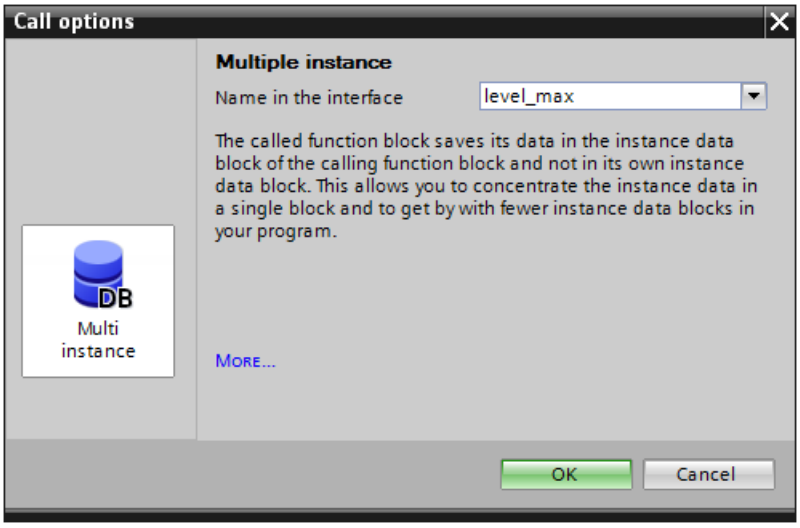

Figure 7-8 Call Program_Alarm

3. Enter "level_max" as the name and confirm the call options by clicking "OK".
   Result: The input tags of the "Program_Alarm" instruction are displayed in the instruction part.
4. Supply the SIG input tag of the "Program_Alarm" instruction with the tags for the maximum fill level.
   `#level_max(SIG:="max");`
   SIG: If a signal change occurs at the SIG input tag, the "Program_Alarm" instruction generates a program alarm.
5. Insert another call of the "Program_Alarm" instruction.
   The "Call options" window opens.
6. Enter "level_min" as the name and confirm the call options by clicking "OK".
   Result: The input tags of the "Program_Alarm" instruction are displayed in the instruction part.
7. Supply the SIG input tag of the "Program_Alarm" instruction with the tags for the minimum fill level.
   `#level_min(SIG:="min");`

Result: You have created two type alarms.

Call function block

To call the function block in the user program, follow these steps:

1. In the "Program blocks" folder, select the cycle OB (e.g., OB1) in which you want to call the function block and open the cycle OB with a double-click.
2. Select the function block you want to call in the "Program blocks" folder.
3. Drag the function block into the instruction part of the cycle OB.
   The "Call options" window opens.

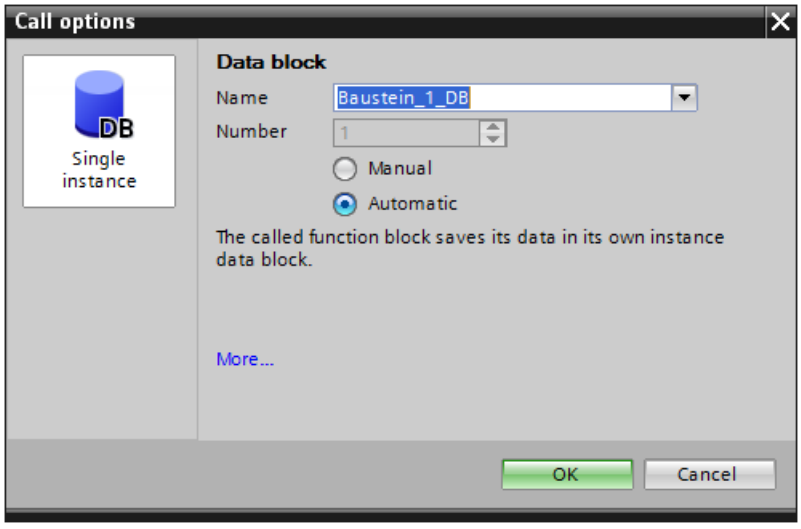

Figure 7-9 Call function block

4. Confirm the call options by clicking "OK".

Result: You have called the alarm block in the user program and created an instance alarm.

Edit alarm text

To edit the alarm text, follow these steps:

1. Double-click "PLC supervisions & alarms" in the project tree. Select the "Alarms" tab. The alarm editor opens.
2. Select the type alarm for the maximum fill level.
3. Enter the alarm text for the maximum fill level in the "Alarm text" column.
4. Select the type alarm for the minimum fill level.
5. Enter the alarm text for the minimum fill level in the "Alarm text" column.

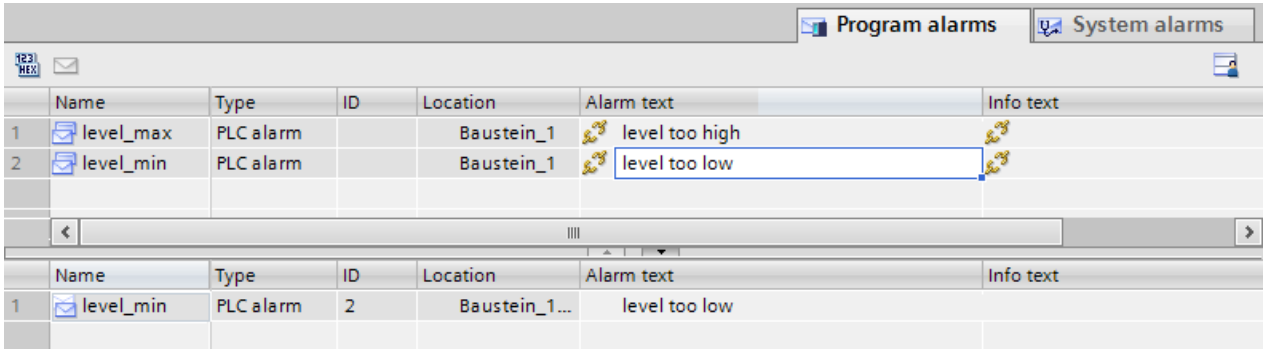

Figure 7-10 Edit alarm text

Result: You have created the alarm texts for both type alarms.

Additional information

You can learn how to create multilingual texts under "Multilingual alarms" in the section Editing alarms in the alarm editor (Page 74).

7.5.3 Example 2: Program alarm with associated value

Introduction

In this example, you create a shared program alarm for the maximum and the minimum fill level. The program alarm is given an associated value. The program alarm uses the associated value to access a text list entry and outputs a separate alarm text for the minimum and the maximum fill level.

How the example works

The program alarm is output if either the minimum fill level is undershot or the maximum fill level is exceeded.

The associated value 1 of the "Program_Alarm" instruction is assigned the tag for the maximum fill level. The associated value references a text list with the entries "0" and "1".

The following scenarios are possible for output of the alarm text:

- Associated value is "0": The entry "0" of the text list with the alarm text for the undershot fill level is output.
- Associated value is "1": The entry "1" of the text list with the alarm text for the excessive fill level is output.

Steps

The following steps are necessary for this example:

1. Define tags for signal acquisition
2. Create function block
3. Create program alarm
4. Call function block
5. Create a text list
6. Edit alarm text

Define tags for signal acquisition

The following table shows the tags that are used in this example. Define these tags in the standard tag table. The standard tag table is available in the project tree under "PLC tags".

Table 7-2 Tags for fill level alarms

Name	Data type	Description
max	BOOL	Tag for maximum fill level If "max" = 1, the maximum fill level is exceeded.
min	BOOL	Tag for minimum fill level If "min" = 1, the minimum fill level is undershot.

The figure below shows the standard tag table with the defined tags "max" and "min".

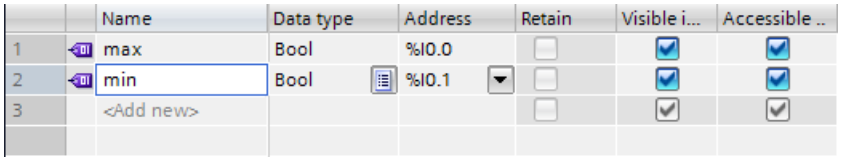

Figure 7-11 Define tags

Create function block

To create a function block, follow these steps:

1. Open the "Program blocks" folder in the project tree.
2. Double-click "Add new block".
   The "Add new block" dialog opens.

3. Select the button "Function block".

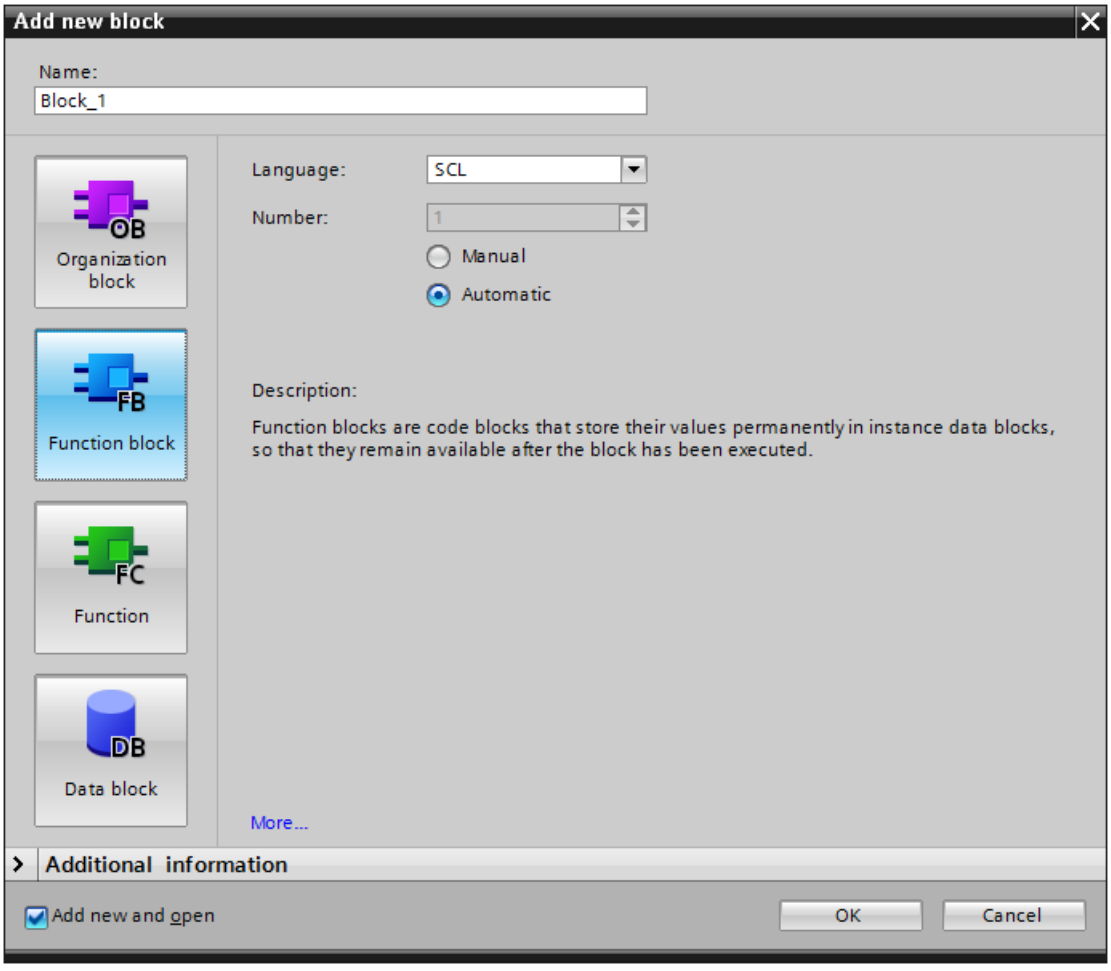

Figure 7-12 Create FB

4. Enter a name for the new block.
5. Select the language SCL.
6. Click on "OK" to confirm your input.

Result: You have created a function block.

Create program alarm

To create the program alarm for the example program, follow these steps:

1. Select the created function block (FB) in the "Program blocks" folder in the project tree.
2. Insert the call of the "Program_Alarm" instruction in the instruction part of the function block. The "Program_Alarm" instruction is available in the "Instructions" task card under "Extended instructions" > "Alarms".
   The "Call options" window opens.

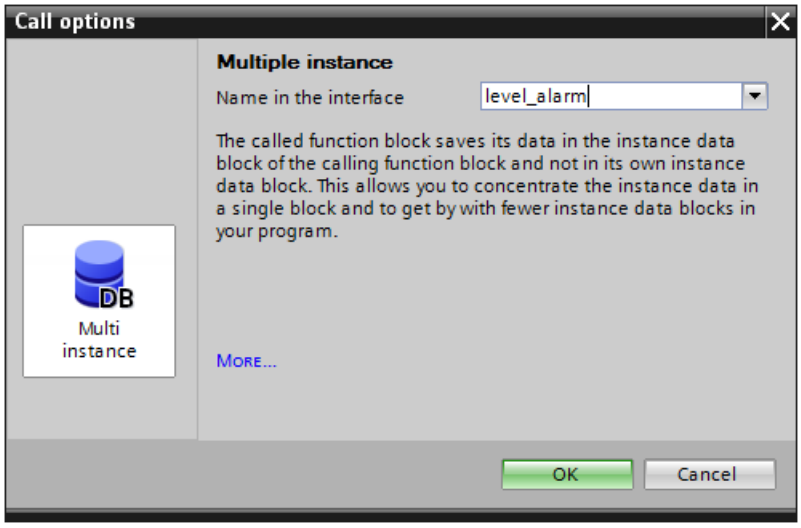

Figure 7-13 Call Program_Alarm

3. Enter "level_alarm" as the name and confirm the call options by clicking "OK".
   Result: The input tags of the "Program_Alarm" instruction are displayed in the instruction part.
4. Supply the SIG input tag of the "Program_Alarm" instruction with the XOR logic operation of the tags for minimum and maximum fill level and the input tag SD_1 with the tag for the maximum fill level.
   `#level_alarm(SIG:="min"XOR"max",SD_1:="max");`
   SIG: If a signal change occurs at the SIG input tag, the "Program_Alarm" instruction generates a program alarm.
   SD_1: The associated value is acquired at the time of the signal change at the input tag and assigned to the program alarm.

Result: You have created a type alarm.

Call function block

To call the function block in the user program, follow these steps:

1. In the "Program blocks" folder, select the cycle OB (e.g., OB1) in which you want to call the function block and open the cycle OB with a double-click.
2. Select the function block you want to call in the "Program blocks" folder.
3. Drag the function block into the instruction part of the cycle OB.
   The "Call options" window opens.

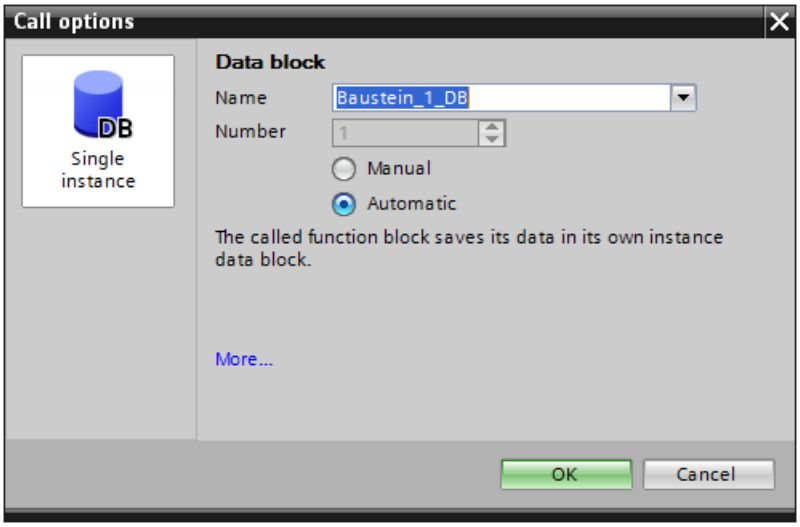

Figure 7-14 Call function block

4. Confirm the call options by clicking "OK".

Result: You have called the alarm block in the user program and created an instance alarm.

Creating a text list

To create the text list for the example program, follow these steps:

1. Double-click on the "Text lists" command in the program tree.
   The text list editor opens.
2. Double-click "<Add>" in the Text lists area.
   A new text list is added.
3. Name the text list "level_textlist".
4. Double-click "<Add>" in the Text list entries area of level_textlist.
   A new text list entry is added in the level_textlist text list.
5. Enter the alarm text for the maximum fill level in the "Entry" column.
6. Add another entry in the text list.
7. Enter the alarm text for the minimum fill level in the "Entry" column.

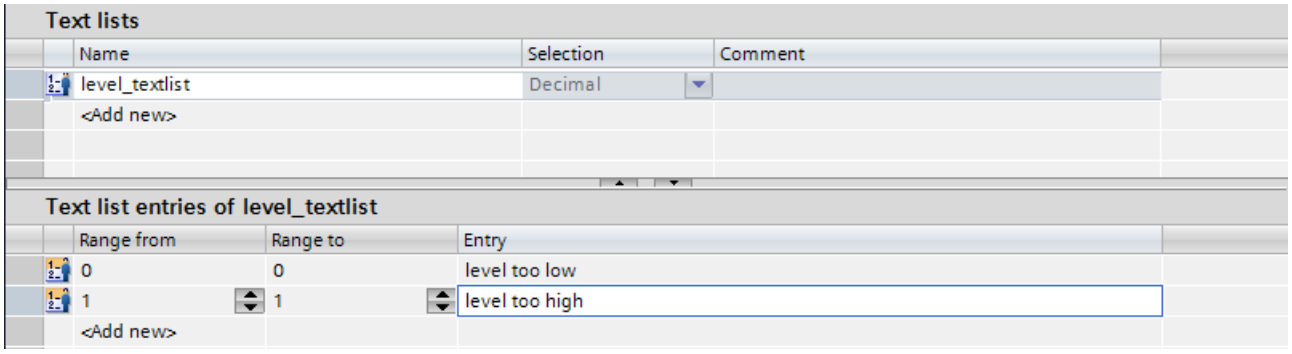

Figure 7-15 Creating a text list

Result: You have created the text list for the alarm text.

Edit alarm text

To edit the alarm text for the example program, follow these steps:

1. Double-click "PLC supervisions & alarms" in the project tree. Select the "Alarms" tab. The alarm editor opens.
2. Select the type alarm created for the example.
3. Click in the "Alarm text" column.
4. Open the shortcut menu and select the command "Insert a dynamic parameter (text list)".

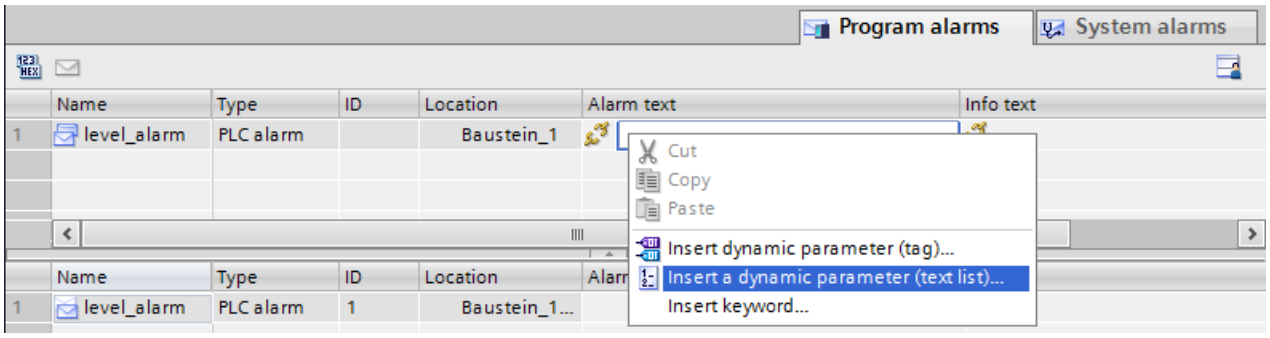

Figure 7-16 Edit alarm text

The window below opens.

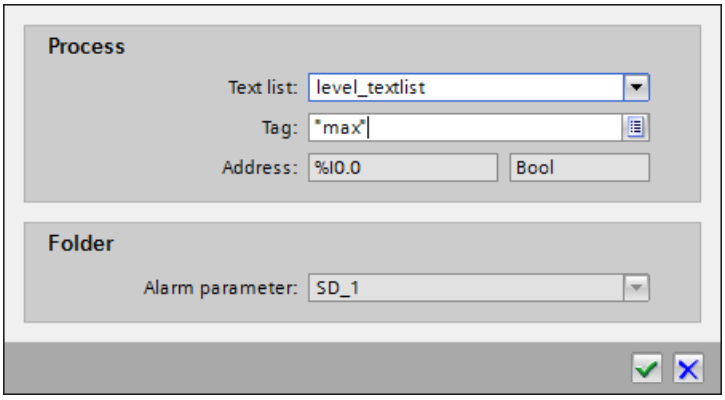

Figure 7-17 Insert a dynamic parameter (text list)

5. Select the text list "level_textlist" and the tag "max". Confirm your selection by clicking "OK".

Result: You have created the alarm text for the type alarms.
If the tag "max" (associated value 1) is 0, the alarm text "level too low" is output.
If the tag "max" (associated value 1) is 1, the alarm text "level too high" is output.

Additional information

You can learn how to create multilingual texts under "Multilingual alarms" in the section Editing alarms in the alarm editor (Page 74).

7.5.4 Displaying the alarm

Displaying the alarm in the Web server

The figure below shows the display of the alarm in the Web server for both examples.

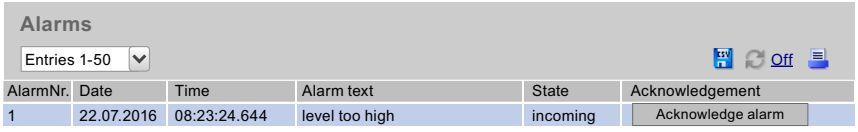

Figure 7-18 Displaying the alarm in the Web server

Displaying the alarm in STEP 7

NOTE

Displaying alarms in STEP 7

To display alarms in STEP 7, enable the option "Receive alarms" in the shortcut menu of the CPU.

The figure below shows the display of the alarm in STEP 7 for both examples.

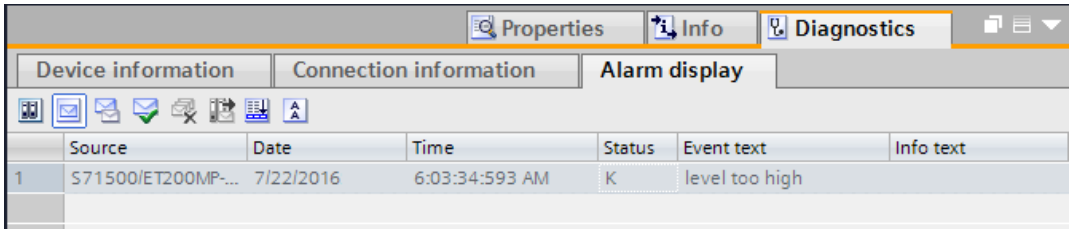

Figure 7-19 Display in STEP 7

Diagnostics of the S7-1500R/H redundant system 8

S7-1500R/H diagnostics

Diagnostics for a S7-1500R/H redundant system is basically the same as a standard S7-1500. You have the following display options:

- Via STEP 7
- Via HMI devices
- Via the display of the CPUs

The CPUs provide information about their operating states as well as internal and external errors through their LEDs.

The special features of the diagnostics of S7-1500R/H redundant systems are described below. In addition, the information of the current function manual and the STEP 7 online help also apply to S7-1500R/H redundant systems.

Diagnostics information in STEP 7

Hardware diagnostics can be performed as follows:

- Via the Online and Diagnostics view
- Via the "Online Tools" task card
- Via the "Diagnostics > Device Information" area of the Inspector window
- Via diagnostics icons, for example, in the device view and in the project tree

Diagnostics view in STEP 7 in dependence on the online connection and system states

The diagnostics view for S7-1500R/H redundant systems is partly dependent on:

- Which of the two CPUs the programming device / PC currently has a connection to
- The current system state in the redundant system

The table below provides an overview. The following sections illustrate the diagnostics view for S7-1500R/H using examples.

Table 8-1 Diagnostics view in dependence on the online connection and system states

Diagnostics view in STEP 7	An online connection is available to the	System state	Examples in section
Online data and diagnostics of the redundant system	Primary CPU or backup CPU	RUN-Redundant	Online and Diagnostics view (Page 93)
Online data and diagnostics of the primary CPU The following are not displayed: • Online data and diagnostics from the backup CPU	Primary CPU	RUN-Solo or STOP	Online and Diagnostics view (Page 93) and Restrictions in the RUN-Solo system state (Page 113)
Online data and diagnostics of the backup CPU The following are not displayed: • Online data and diagnostics from the primary CPU • Online data and diagnostics of the distributed I/O	Backup CPU	RUN-Solo or STOP	

Diagnostics view in STEP 7	An online connection is available to the	System state	Examples in section
Display of the 3 operator panels in the "Online Tools" task card	Primary CPU or backup CPU	Not relevant	"Online Tools" task card (Page 96)
Cycle time of the primary CPU (of the system) and memory of the primary CPU in "Online Tools" task card	Primary CPU or backup CPU	RUN-Redundant	
Cycle time and memory of the primary CPU in the "Online Tools" task card	Primary CPU	RUN-Solo or STOP	
Cycle time and memory of the backup CPU in the "Online Tools" task card	Backup CPU	RUN-Solo or STOP	
Memory reset of the primary CPU via "Online Tools" task card	Primary CPU	STOP	
Memory reset of the backup CPU via "Online Tools" task card	Backup CPU	RUN-Solo or STOP	
"Alarm display" tab: Alarms from the primary CPU	Primary CPU	Not relevant	Diagnostics view in the project tree and in the device view and network view (Page 99)
"Alarm display" tab: Alarms from the backup CPU	Backup CPU	Not relevant	
Diagnostics of the distributed I/O	Primary CPU or backup CPU	RUN-Redundant	Diagnostics in the RUN-Redundant system state (Page 108)
Diagnostics of the distributed I/O	Primary CPU	RUN-Solo	Restrictions in the RUN-Solo system state (Page 113)

Accessible devices

As for standard S7-1500 systems, the following can be displayed in STEP 7:

- All devices accessible from programming device/PC
- The diagnostics information of devices of a redundant system, for example, from the R/H CPUs

The procedure is described in the section Accessible devices (without project) (Page 32).

8.1 Online and Diagnostics view

Introduction

You open the Online and Diagnostics view for the redundant system or for each CPU of the redundant system.

Online & diagnostics for the redundant system

"Online access":

For the S7-1500R/H redundant system, it is displayed whether an online connection exists between the programming device/PC and a CPU. The additional note "Online (via Primary CPU)" or "Online (via Backup CPU)" indicates which role the "Online" connected CPU has.

If you enable "Receive alarms", you receive asynchronous alarms of diagnostics events from the CPU with online connection. The display corresponds to the representation for standard CPUs.

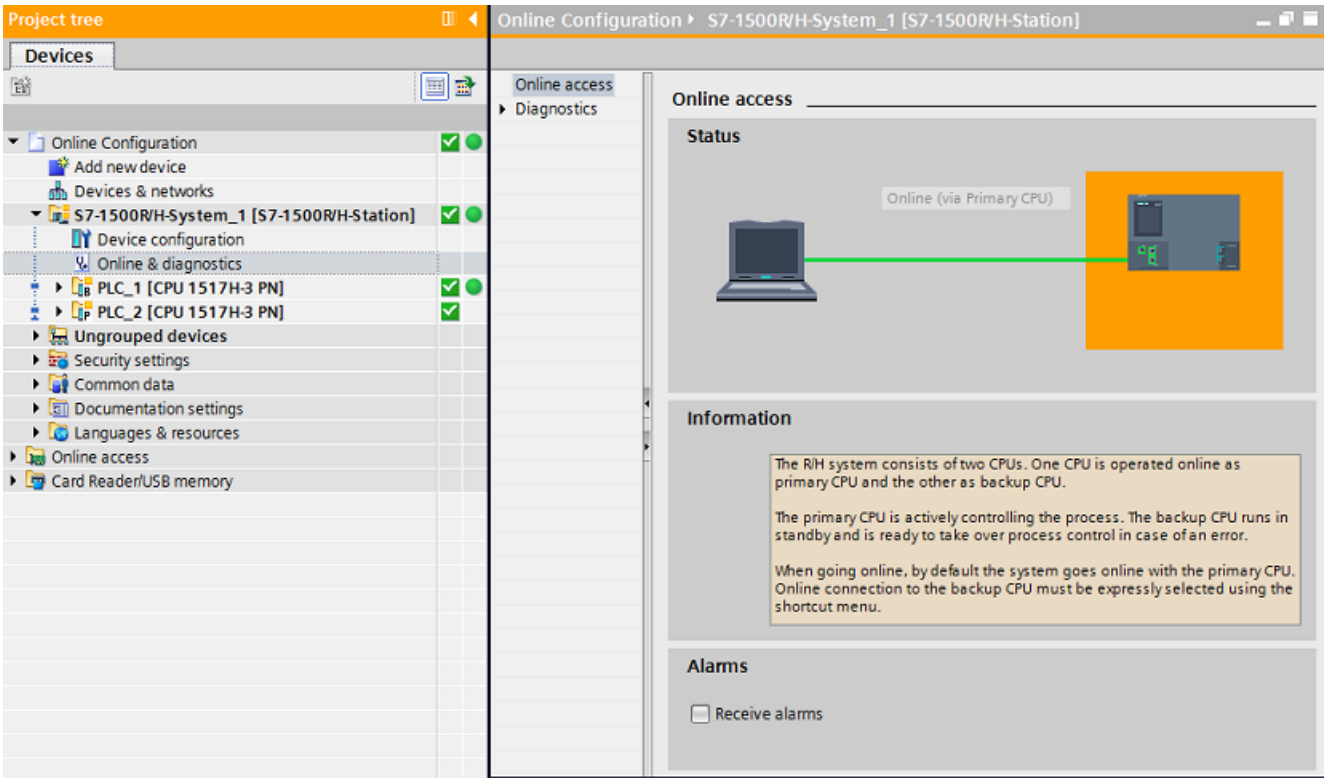

Figure 8-1 Online and Diagnostics view: Redundant system S7-1500R/H

"Diagnostics":

"Diagnostics" provides an overview for the redundant system about the:

- System state
- Pairing state
- Operating states of the CPU
- Status of which CPU is the primary CPU and which CPU is the backup CPU

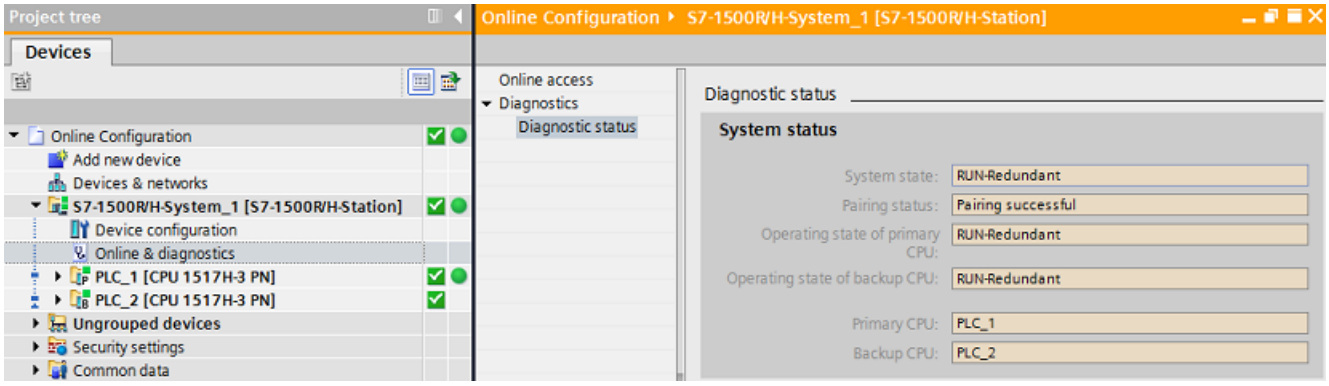

Figure 8-2 Online and Diagnostics view: Diagnostics status of the S7-1500R/H system

Online & diagnostics for the primary CPU or backup CPU

The Online and Diagnostics view for the CPUs of the redundant system match the display for standard CPUs.

In the RUN-Redundant system state, the primary and backup CPUs display the online data of the redundant system irrespective of which of the two CPUs has the online connection.

In non-redundant mode, the programming device/PC displays the data of the CPU that has an online connection.

You select the CPU for display of the online data in the project tree.

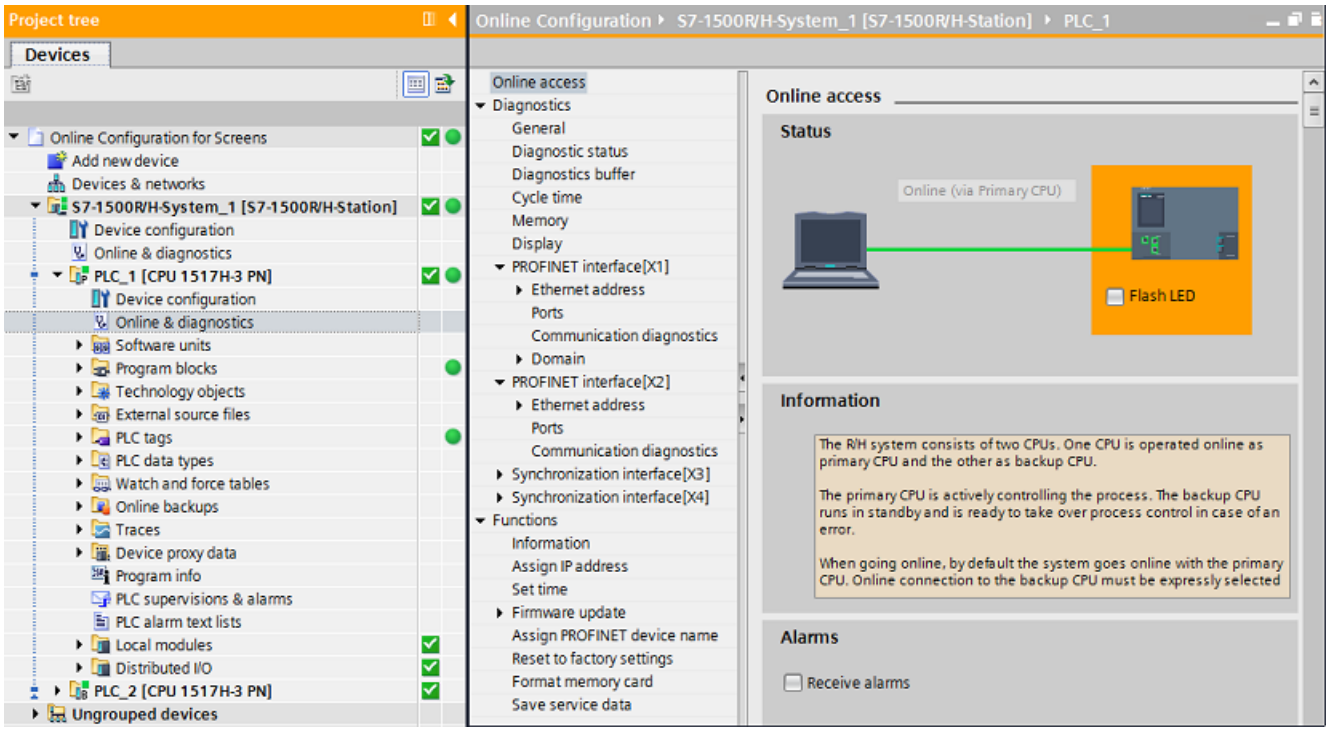

Figure 8-3 Online and Diagnostics view: CPU (RUN-Redundant system state)

Reference

You can find information on the operating and system states in the Redundant System S7-1500R/H System Manual (https://support.industry.siemens.com/cs/ww/en/view/109754833).

Online & diagnostics for IO devices in a line topology in the S7-1500H system

As of STEP 7 V18, you have the option to configure R1 devices. You assign each interface module of an R1 device to one of the two H-CPUs.
In the device view of the IO device, open the "Online & diagnostics" window. You will find the "Redundancy" dialog in the "Diagnostics" menu. It is divided as follows:

- "Module" column: The interface modules of the IO device.
- "Controller" column: The CPU assigned in each case.
- "Connection status" column: The current status of the connection between the interface module and assigned CPU and which interface module is currently being used.

The "Online & diagnostics" function for IO devices is independent of the configuration variant of the redundant S7-1500H system. You can use the "Online & diagnostics" function for ring or line topologies or a combination topology.

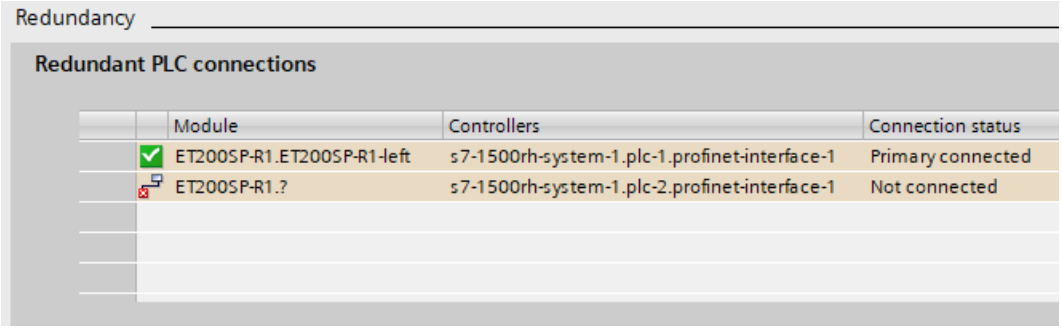

Figure 8-4 View of the "Redundancy" dialog window

NOTE

View of the interface module of an S2 device

In contrast to an R1 device, an S2 device has only one interface module. For this reason, the "Interface module" column shows only one interface modules for an S2 device.
The interface module is assigned to both H-CPUs.

8.2 "Online Tools" task card

Introduction

If an online connection exists to a CPU of the redundant system, the "Online Tools" task card displays online information for the redundant system.

For a S7-1500R/H redundant system, "Online Tools" displays:

- 3 panes operator panel
- Cycle time
- Memory

R/H system operator panel

For the redundant system, the "R/H system operator panel" pane shows the:

- Current states of the LEDs of the primary CPU
- System state
- Status of which CPU is the primary CPU and which CPU is the backup CPU with their current operating states

The "STOP R/H-System" button can be used to switch the S7-1500R/H system to the system state STOP.

NOTE

Reaching RUN-Redundant system state

Note that you cannot switch the S7-1500R/H to RUN-Redundant system state using the R/H-System operator panel. You reach the RUN-Redundant system state only by switching the operating state for each CPU to RUN in your CPU operator panel.

CPU operator panel

The two "CPU operator panel" panes show for the respective CPU of the redundant system:

- The role of the CPU, primary CPU or backup CPU
- The current states of the LEDs
- The operating state of the CPU

Use the "RUN / STOP" button to change the operating state for the respective CPU.

Use the "MRES" button to perform a memory rest for the CPU, under the following conditions:

- Online connection to this CPU is available
- The CPU is in STOP operating state.

The switch position at the real CPU is displayed under "Mode selector".

Example

The following figure shows an example of the "Online Tools" task card for the RUN-Solo system state. The primary CPU is in RUN operating state, the backup CPU in STOP operating state.

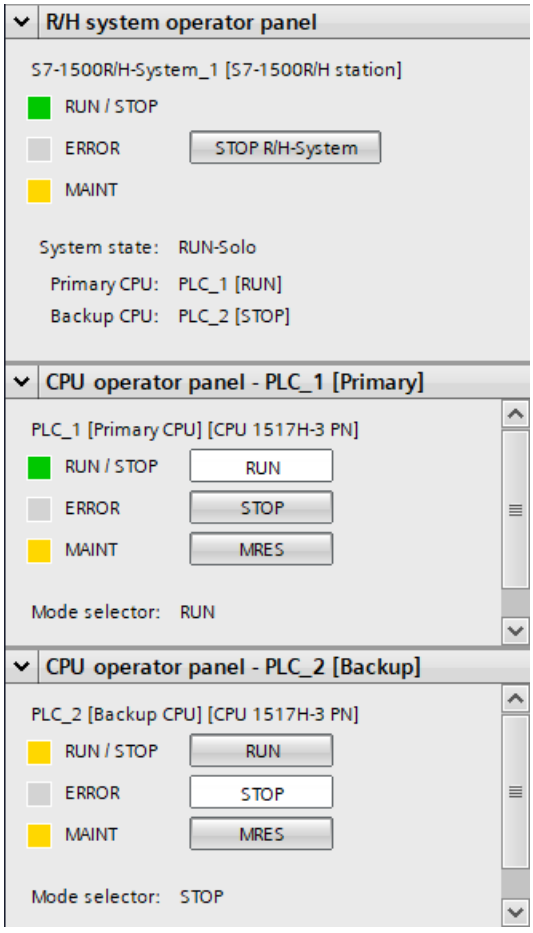

Figure 8-5 "Online Tools" task card: Operator panel (RUN-Solo system state)

Cycle time and memory

In the RUN-Redundant system state, the "Cycle time" and "Memory" panes show the current values of the primary CPU. In redundant mode, the cycle time of the primary CPU matches the cycle time of the system.

In the RUN-Solo system state, the panes show the current values for the CPU for which there is an online connection.

The display corresponds to the representation for standard CPUs.

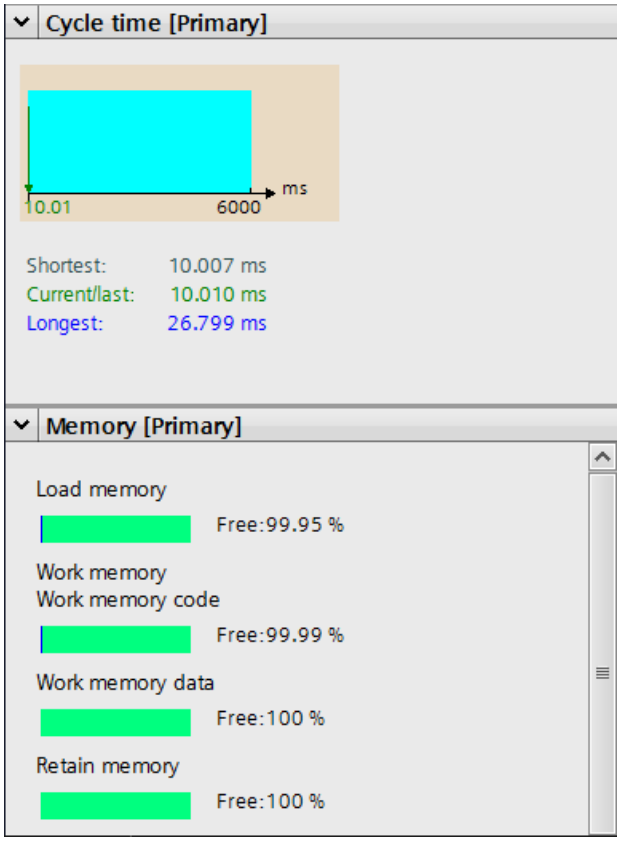

Figure 8-6 "Online Tools" task card: Cycle time and memory of the primary CPU

Reference

You can find information on the operating and system states in the Redundant System S7-1500R/H System Manual (https://support.industry.siemens.com/cs/ww/en/view/109754833).

8.3 Diagnostics view in the project tree and in the device view and network view

Additional icons for redundant systems in the project tree

Table 8-2 Icons for redundant systems in the project tree of STEP 7

Icon in the project tree	Meaning
	Identifier of the folder S7-1500R/H-System: RUN-Redundant system state

Icon in the project tree	Meaning
	Identifier of the folder S7-1500R/H-System: RUN-Solo system state
	Identifier of the folder S7-1500R/H-System: STARTUP system state
	Identifier of the folder S7-1500R/H-System: STOP system state
	Identifier of the folder for the primary CPU: RUN operating state
	Identifier of the folder for the backup CPU: RUN operating state
	Identifier of the folder for the primary CPU: STARTUP operating state
	Identifier of the folder for the backup CPU: SYNCUP operating state
	Identifier of the folder for the primary CPU: STOP operating state
	Identifier of the folder for the backup CPU: STOP operating state
	Identifier of the folder of a CPU of the redundant system: "Online via partner": The other CPU of the redundant system is connected online to the programming device / PC.

Example: Diagnostics view in the project tree and in the device view and network view

An example of the diagnostics view for a S7-1500R/H system is shown below.
The example configuration consists of two CPUs S7-1517H-3 PN and one interface module IM 155-6 PN HF as PROFINET IO device. PLC_1 is the primary CPU (in RUN operating state). PLC_2 is the backup CPU (in STOP operating state). The hardware configuration and the user program were loaded in the primary CPU.
The system is connected online via PLC_1 (primary CPU) and is in RUN-Solo system state.

View of the system in the project tree

The system is in RUN-Solo system state . PLC_1 is in RUN operating state , PLC_2 is in STOP operating state .
Because the system is in RUN-Solo system state, the following is displayed:

- For the system, maintenance demanded with problem in lower-level component
- For PLC_1, maintenance demanded

For PLC_2, online connection via partner is displayed, as the programming device/PC is connected online to PLC_1.

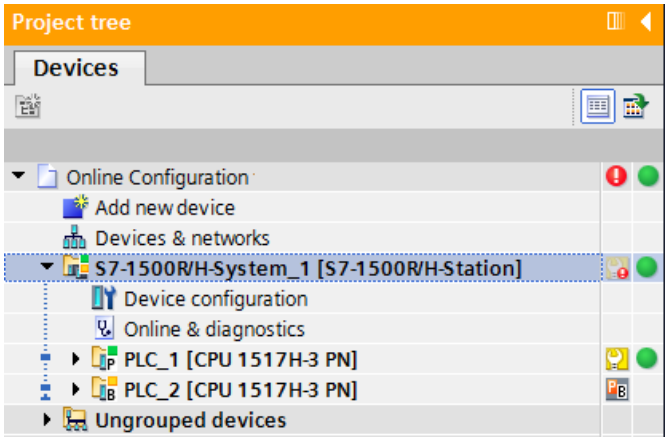

Figure 8-7 Diagnostics example: Redundant system project tree (RUN-Solo)

Network view of the system

The network view shows no faults for the H-CPUs or the IO device.

Maintenance demanded in lower-level component indicated for the system, since the system is not in the RUN-Redundant system state.

No operating states and system states of the redundant system are displayed in the network view.

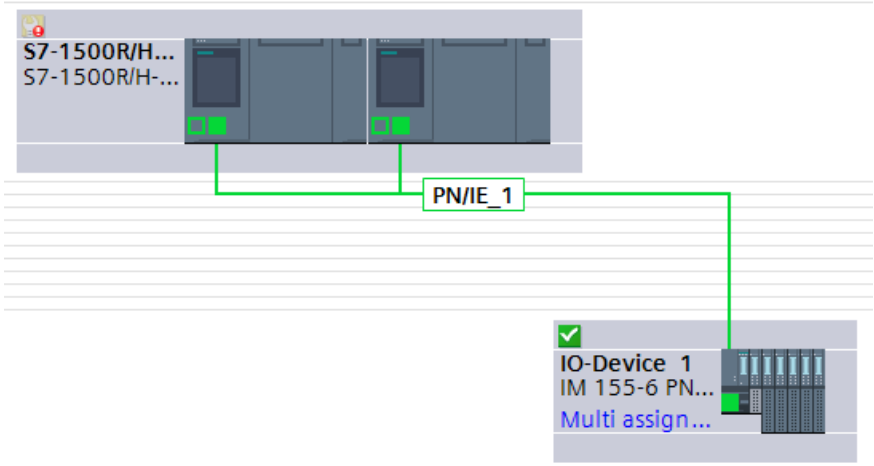

Figure 8-8 Diagnostics example: Network view of redundant system (RUN-Solo)

Doubling-clicking on the system gives you access to the device view of both CPUs.

Device view of the system

The device view shows you the operating states of the CPUs based on the icons next to PLC_1:

- Green icon: PLC_1 is in the RUN operating state.
- Yellow icon (wrench) for maintenance demanded: PLC_2 is in the STOP operating state.

The icon next to PLC_2 indicates that the online connection exists via the partner (PLC_1). You can find more detailed information on the system faults in the "Diagnostics" tab, in "Device information". The device information indicates maintenance demanded and RUN operating state for PLC_1.

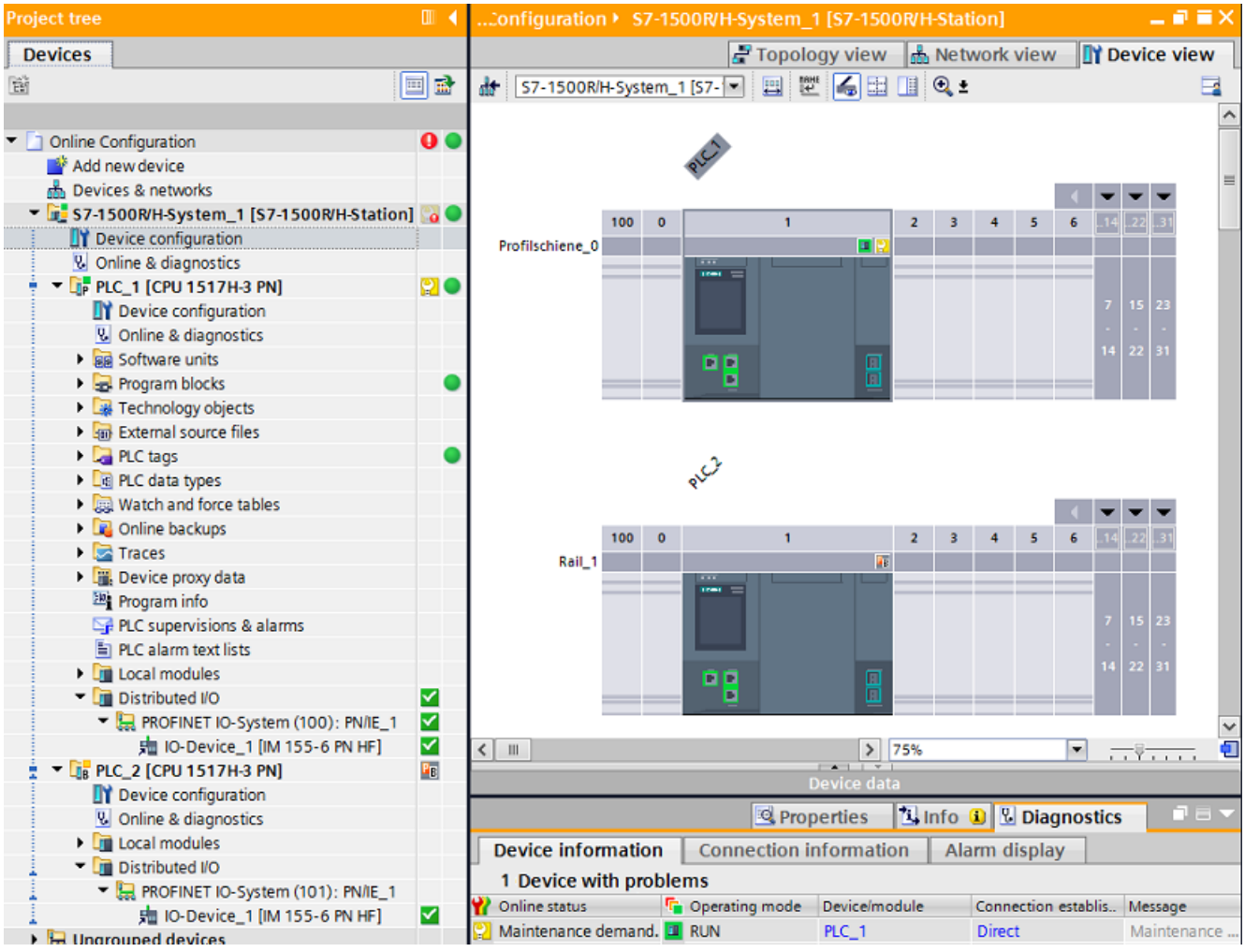

Figure 8-9 Diagnostics example: Device view of redundant system (RUN-Solo)

Alarm display of the system

As in the RUN-Solo system state, the alarms of the CPU for which there is an online connection are displayed via the "Alarm display" tab (in the example from PLC_1).

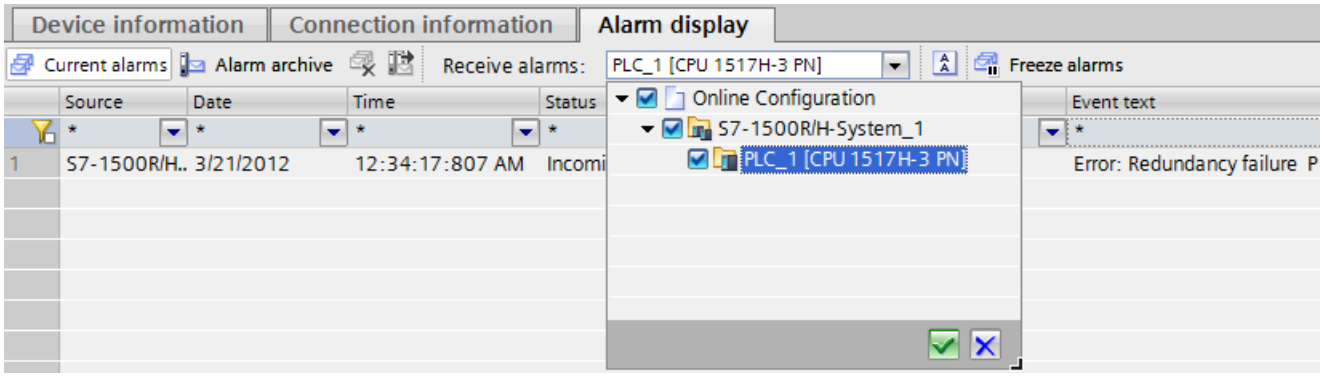

Figure 8-10 Diagnostics example: Alarm display of redundant system (RUN-Solo)

Device view of the IO device

The IO device is an interface module IM 155-6 PN HF with two I/O modules and one server module. The device view shows that there is no faults in the modules.

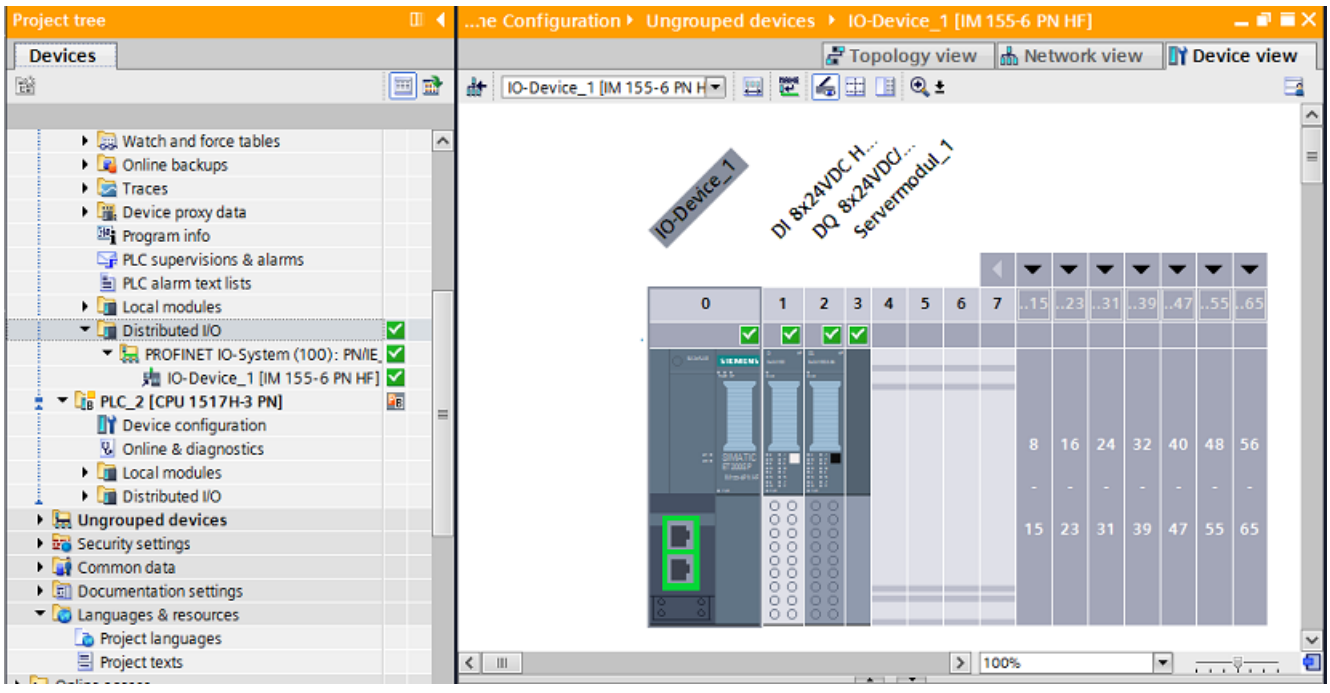

Figure 8-11 Diagnostics example: Device view of IO device

Diagnostics display for IO devices in the S7-1500H system

With the diagnostics display, you identify the following error scenarios, for example, based on the diagnostics icons:

- The PROFINET connection to an IO device is interrupted.
- An I/O module of an S2 device has been removed or is faulty.
- The PROFINET connection to an R1 device is interrupted.
- An interface module of an R1 device has been removed or is faulty.

The first two error scenarios are comparable to the diagnostics display of standard S7-1500 systems. The diagnostics of R1 devices is described in the next section.

Example: Diagnostics display of a faulty R1 device

An example of the diagnostics display for IO devices in the redundant S7-1500H system is shown below. The example configuration consists of the following components:

- 2 CPUs S7-1517H-3 PN
- R1 device: Interface module ET 200SP IM 155-6 PN R1
- S2 device: Interface module ET 200SP IM 155-6 PN HF

Requirements:

- You have an online connection to the redundant S7-1500H system.
- All connected IO devices are accessible via all interface modules.

In the project tree, you see the diagnostics display of the IO devices as follows:

- In the device folder of a CPU under "Distributed I/O > PROFINET IO system", you see the status of the assigned interface modules in each case.
- In the "Ungrouped devices" folder, you see the overall status of the IO devices. If you open the folder of an IO device, you also see the status of the interface modules.

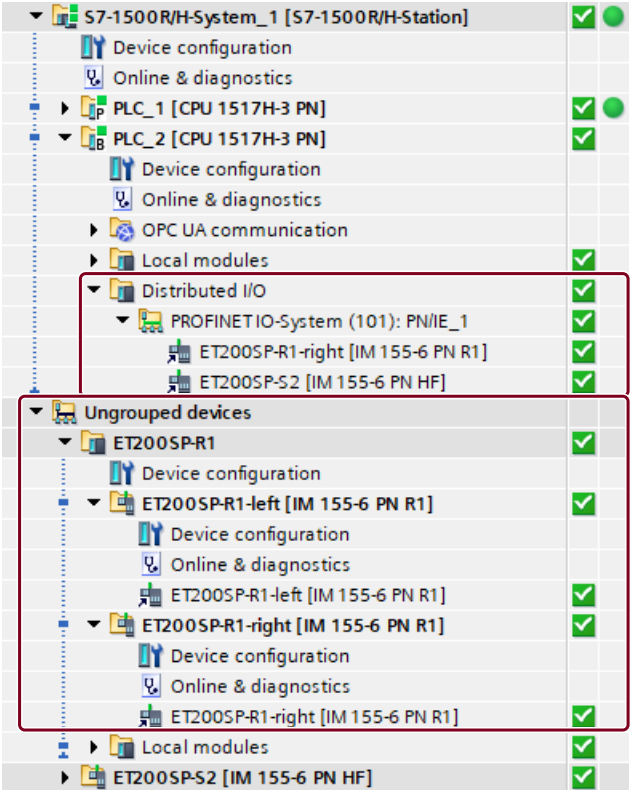

Figure 8-12 Diagnostics display of an R1 device in the project tree

The right interface module of the R1 device is removed or is faulty.

In the project tree, you see to the right of the device folder of the CPU the diagnostic information "Maintenance demanded, error in lower-level component" .

In the network view, the CPU and the R1 device also display the error through "Maintenance demanded, error in lower-level component" .

To display the diagnostics of the assigned interface modules, proceed as follows:

1. Open the device folder of the CPU.
2. Open the "Distributed I/O > PROFINET IO system" folder.
3. Displayed to the right of the interface modules is a corresponding diagnostics icon.

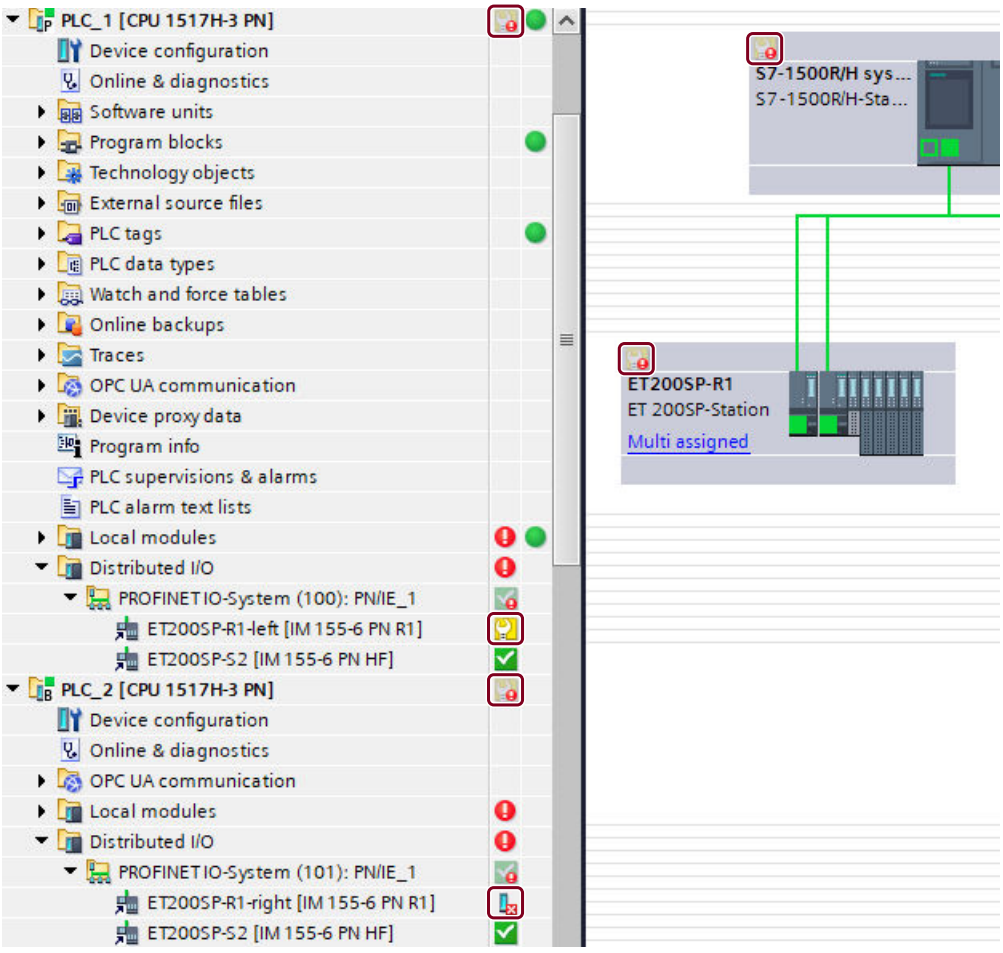

Figure 8-13 Project tree and network view of a faulty R1 device.

In the device view of the faulty IO device, you see the status of the individual interface modules.

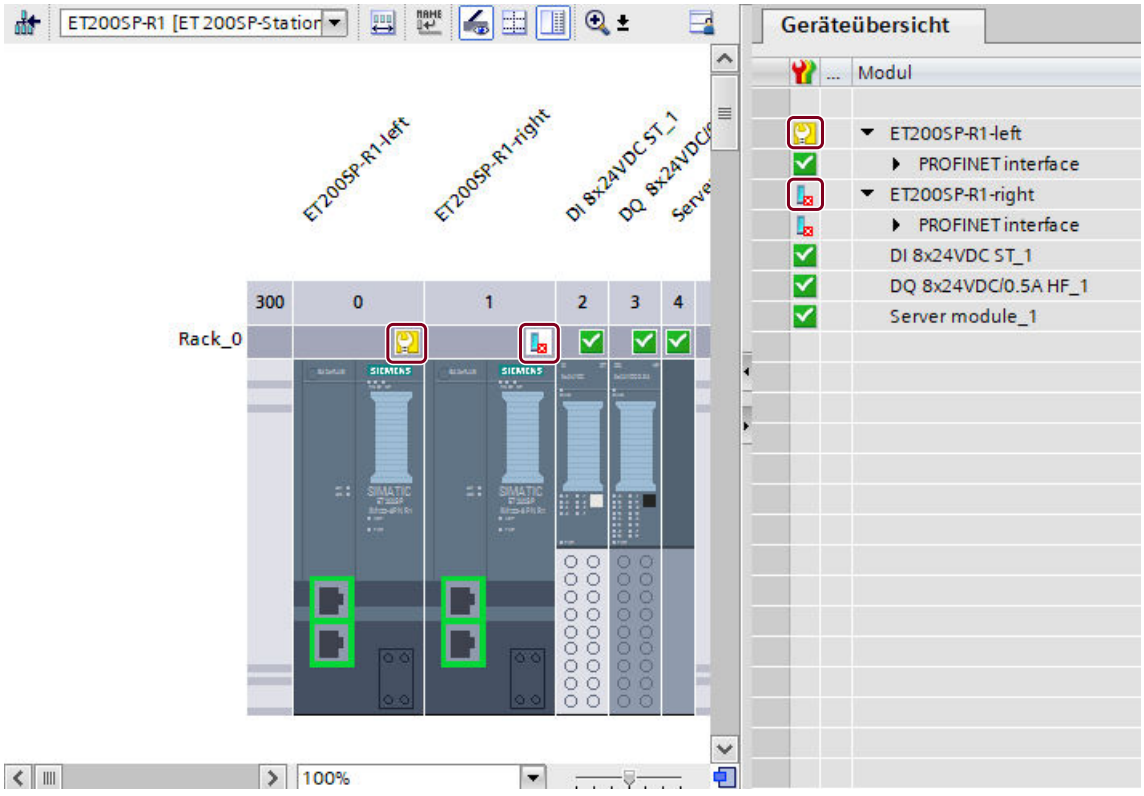

Figure 8-14 Diagnostics display of a faulty R1 device in the device view

To display extended diagnostics of the interface modules, proceed as follows:

1. Right-click the faulty interface module to open the shortcut menu.
2. Click the "Online and diagnostics" function.
3. Open the "Diagnostics" menu of the "Online and diagnostics" function and click "Redundancy".

In the "Redundancy" dialog window, you see the following information:

- "Icon" column: The diagnostics display of the interface module
- "Module" column: The interface modules of the IO device.
- "Controller" column: The CPU assigned in each case.
- "Connection status" column: The current status of the connection between the interface module and assigned CPU and which interface module is currently being used.

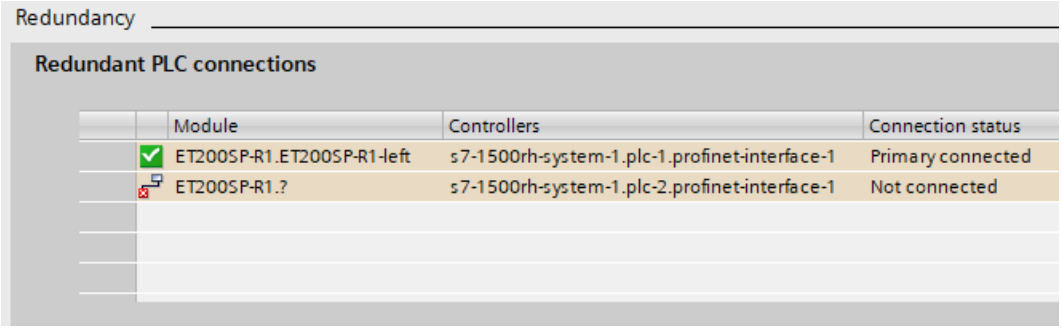

Figure 8-15 View of the "Redundancy" dialog window

NOTE

Deviating diagnostics display

If you remove an interface module of an R1 device, the other interface module signals this error with a red flashing ERROR LED. The LED error display has no effect on the process because the second interface module of the R1 device takes over.

In the STEP 7 online diagnostics, the R1 device is shown only as "Maintenance demanded, error in lower-level component". The reason for this is the different diagnostics views of the R1 device and H-CPU.

The IO device has only a local view and signals a missing module. The H-CPU, on the other hand, has a higher-level view of the redundancy of the two interface modules. The redundancy then results in the understated diagnostic information.

Therefore, when evaluating diagnostic information, pay attention not only to the LED error display on the devices. For a complete evaluation of diagnostic information, you must also look at the STEP 7 online diagnostics and evaluate the diagnostics buffer.

8.4 Diagnostics in the RUN-Redundant system state

Diagnostics view in redundant mode

Primary CPU and backup CPU are each in the RUN-Redundant operating state.

In the RUN-Redundant system state, the primary and backup CPUs display the online data of the redundant system irrespective of which of the two CPUs has the online connection.

The diagnostics between the two CPUs is synchronized (diagnostics entries, diagnostics events).

The "Alarm display" tab shows the alarms of the redundant system.

You can find more information in the Diagnostics view in the project tree and in the device view and network view (Page 99).

No error in RUN-Redundant system state

If no error is detected in the RUN-Redundant system state, all diagnostics icons in the project tree and in the network view show "No fault" ✅.

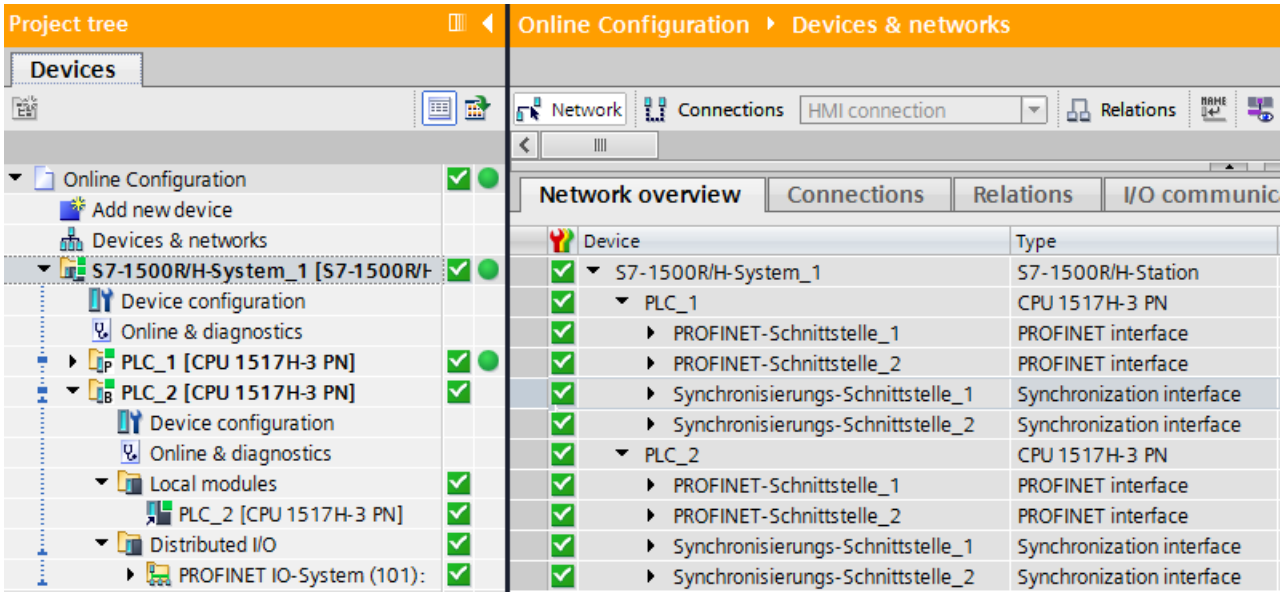

Figure 8-16 Diagnostics example: No fault in the RUN-Redundant project tree

Error in the RUN-Redundant system state

Most errors in the redundant system do not result in a loss of redundancy. The RUN-Redundant system state is retained, for example, if a module in an IO device fails. The diagnostics view is similar to the standard S7-1500 systems.

In the RUN-Redundant system state the redundancy of the system can be restricted, e.g. during the interruption of one of the two redundancy connections in S7-1500H. You can find information on the redundancy scenarios in the Redundant System S7-1500R/H System Manual (https://support.industry.siemens.com/cs/ww/en/view/109754833).

Special examples of a redundant system S7-1500H are shown below:

S7-1500H Example 1:

The PROFINET ring between the CPU of the redundant S7-1500H system and an IO device was interrupted.

Requirements:

- No topology has been configured in the project.
- Both CPUs are in the same PROFINET ring.

Evaluate diagnostics via LINK TX/RX LEDs on the CPU

TX/RX X1 P1 LED is not illuminated. This means:

- No Ethernet connection between the P1 port of the respective PROFINET interface and the communication partner

Diagnostics in STEP 7

The diagnostics buffer of the CPU that was "MRP Manager' at this time indicates that the PROFINET ring is open.

The diagnostics in the project tree shows:

- Maintenance demanded in lower-level component in the S7-1500H system
- Maintenance demanded in lower-level components of PLC_1 and PLC_2
- Maintenance demanded in lower-level components of local modules of PLC_2

The diagnostics in the network view indicates errors at the affected port of the PROFINET interfaces of PLC_2.

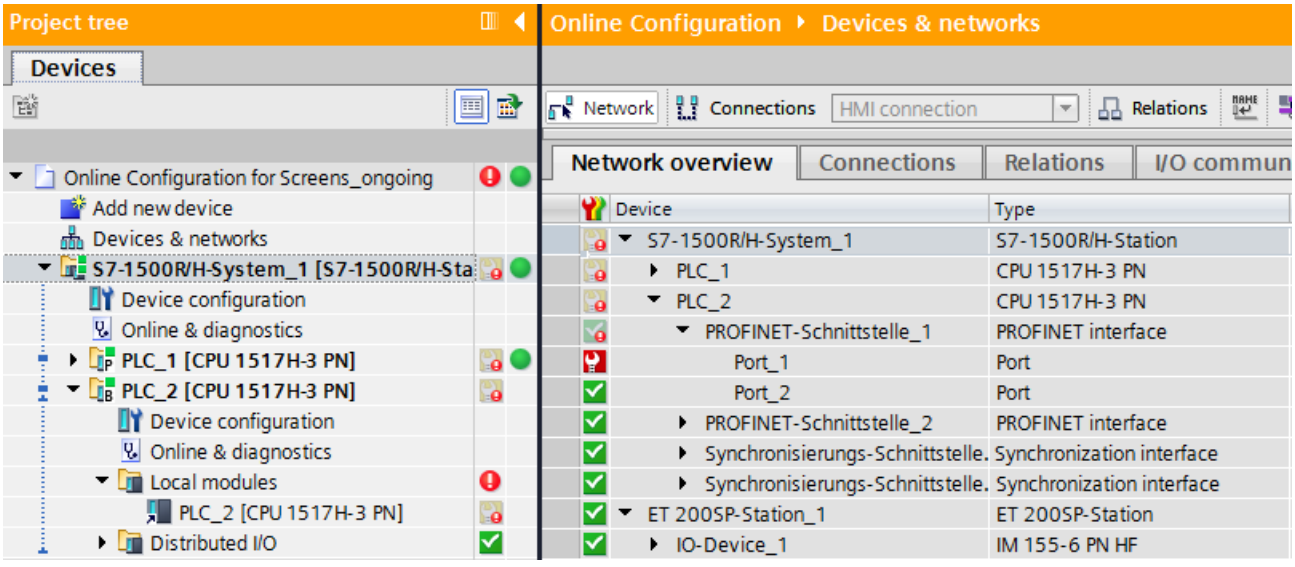

Figure 8-17 Diagnostics example: RUN-Redundant system state, open PROFINET ring

You can evaluate the diagnostics using the displays of the CPUs via the "Diagnostics" menu as with standard CPUs. You can find additional information in the section Display of the CPU (Page 29).

S7-1500H Example 2:

A synchronization module has been removed from a CPU of the redundant S7-1500H system.

Evaluating diagnostics via X3 and X4 LEDs on the CPU

The X3 LED on PLC_2 CPU is not illuminated. This means:

- The redundancy connection on the synchronization module was interrupted at the H-Sync interface X3.

  or
- There is no synchronization module at the H-Sync interface X3.

Diagnostics in STEP 7

The diagnostics buffer of the CPU displays:

- that there is only one redundancy connection
- which synchronization module has failed on which CPU

The diagnostics in the project tree shows:

- Maintenance demanded in lower-level component in the S7-1500H system
- Maintenance demanded in lower-level components of PLC_1 and PLC_2
- Maintenance demanded in lower-level components of local modules of PLC_1 and PLC_2

The diagnostics in the network view displays:

- Errors for the Synchronisationsmodul_1 of the Synchronisationsschnittstelle_2 of PLC_1
- Synchronisationsmodul_1 of Synchronisationsschnittstelle_1 of PLC_2 not reachable

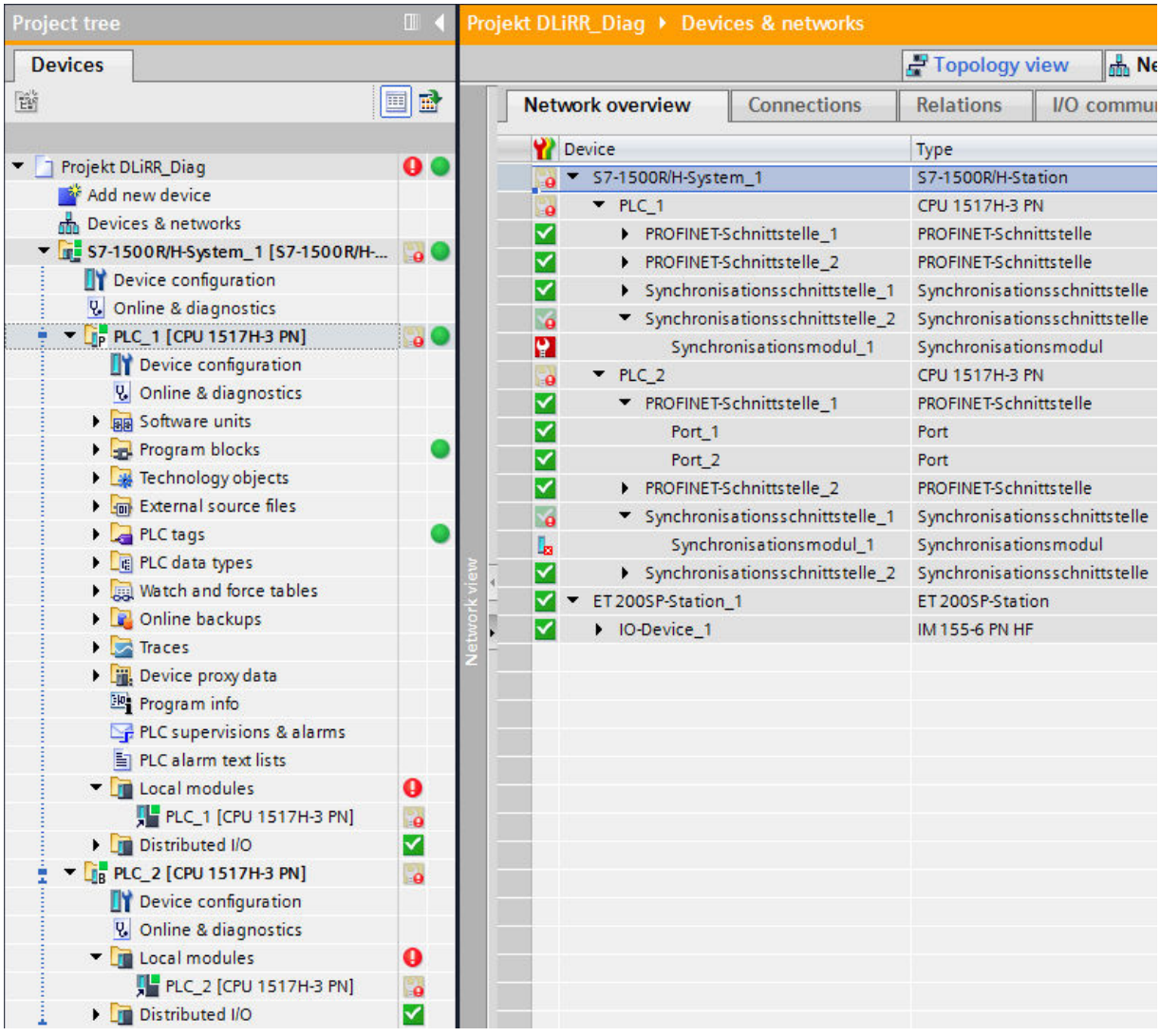

Figure 8-18 Diagnostics example: RUN-Redundant system state, a synchronization module fails

Evaluate diagnostics on the display

For example 2, display of the PLC_2 CPU shows:

- In the "Overview" menu command: A message is available in the next lower level page.
- In the "Diagnostics" menu command: A message is available in the next lower level page.
- In the Module menu command: An error has occurred.

To evaluate the display, proceed as follows:

1. Navigate to "Pairing state" via the menu commands "Overview" > "Redundancy".
2. This is displayed as the pairing state: Single paired (X4).
   This means that the redundancy connection is available at the H-Sync interface X4, but not at the X3.
3. Navigate to "Alarms" via the "Diagnostics" menu command.
4. View the details of the alarm (evaluate diagnostics buffer).

S7-1500H Example 3:

A redundancy connection in S7-1500H is interrupted.

Evaluating diagnostics via X3 and X4 LEDs on the CPU

The LED X4 on CPU PLC_1 does not light up. This means:

- The redundancy connection on the synchronization module was interrupted at the H-Sync interface X4.
  or
- There is no synchronization module at the H-Sync interface X4.

Diagnostics in STEP 7

The diagnostics buffer of the CPU displays:

- that there is only one redundancy connection
- Fiber-optic error with specification of the CPU and the synchronization module

The diagnostics in the project tree shows:

- Maintenance demanded in lower-level component in the S7-1500H system
- Maintenance demanded in lower-level components of PLC_1 and PLC_2
- Maintenance demanded in lower-level components of local modules of PLC_1 and PLC_2

The diagnostics in the network view displays:

- Errors for the Synchronisationsmodul_1 of the Synchronisationsschnittstelle_2 of PLC_1
- Errors for the Synchronisationsmodul_1 of the Synchronisationsschnittstelle_1 of PLC_2

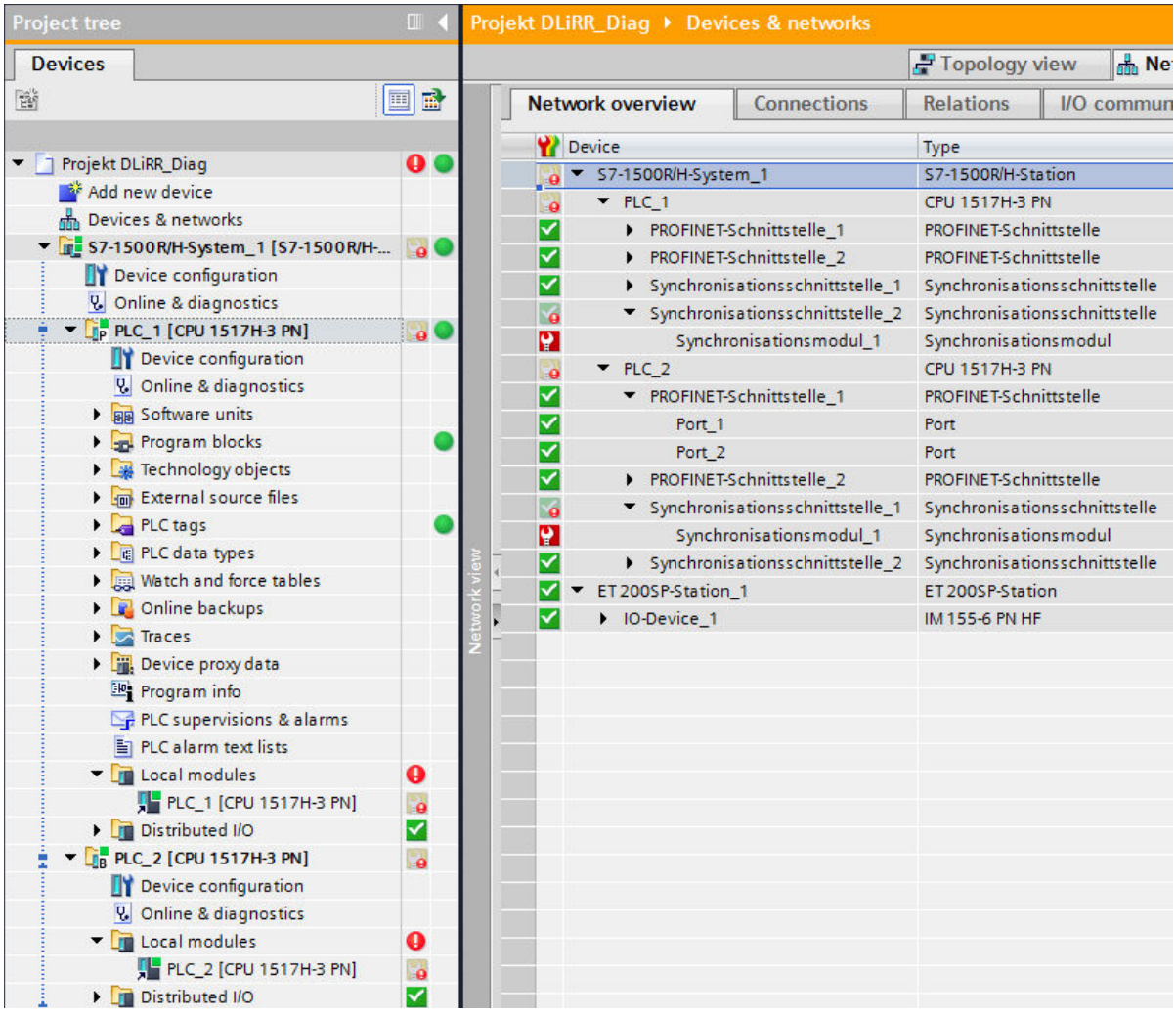

Figure 8-19 Diagnostics example: RUN-Redundant system state, a redundancy connection has failed

Evaluate diagnostics on the display

Perform the analysis of the display of PLC_2 CPU exactly as for example 2.

8.5 Restrictions in the RUN-Solo system state

The primary CPU is in RUN operating state. The Backup CPU is in STOP operating state, is switched off, defective, or not available.

Restrictions in the RUN-Solo system state

The primary CPU records the diagnostics states of the distributed I/O.

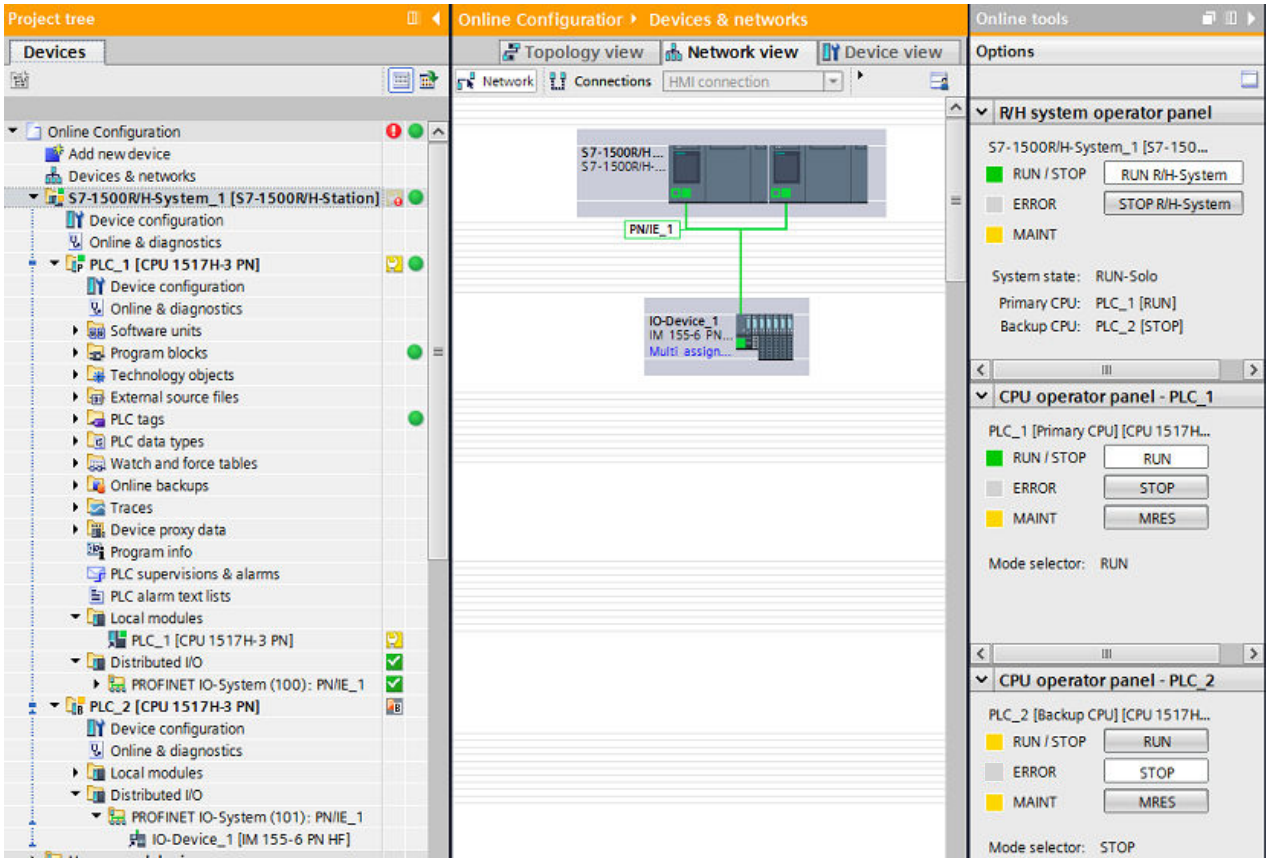

Figure 8-20 Diagnostics of the primary CPU and backup CPU in RUN-Solo system state

Diagnostics of the backup CPU

The following restrictions apply to the backup CPU:

- Diagnostics information from the backup CPU is only available when there is an online connection to the backup CPU.
- A memory reset can only be performed with the backup CPU operator panel when an online connection to the backup CPU is available.

Reference

You can evaluate the diagnostics using the displays of the CPUs via the "Diagnostics" menu as with standard CPUs. You can find additional information in the section Display of the CPU (Page 29).

8.6 System diagnostics by means of the user program

Instructions

Instructions for determining the system diagnostics are listed in the section System diagnostics options in the user program (Page 67).
The following instruction for diagnostics cannot be used for S7-1500R/H redundant systems:

- DPNRM_DG: Read diagnostics data from a DP slave

Organization blocks

You can find the description of the applicable OBs for S7-1500R/H in the S7-1500R/H redundant system (https://support.industry.siemens.com/cs/ww/en/view/109754833) system manual.

Glossary

Alarm

An message sent to the operator due to events or states of the system.

Backup CPU

Role of a CPU in the S7-1500R/H redundant system. If the R/H system is in RUN-Redundant system state, the primary CPU controls the process. The backup CPU processes the user program synchronously and can take over the process control if the primary CPU fails.

Button (WinCC)

Object in WinCC that points out faults in the plant

Channel fault

Channel-related error of an individual channel - an I/O with inputs, for example, wire break or short circuit

Device

Modules with a network connection are referred to as device. Devices are installed on racks where they can be interconnected with other modules.

Diagnostics buffer

A buffered memory area in the CPU; it stores diagnostics events in the order of their occurrence

Firmware of the CPU

In SIMATIC, a distinction is made between the firmware of the CPU and user programs.

The firmware is a software embedded in electronic devices, which means it is permanently connected with the hardware functionally. It is usually saved in a flash memory, such as EPROM, EEPROM or ROM, and cannot be replaced by the user or only with special means or functions.

User program: see glossary entry "User program"

Global screen (WinCC)

A screen that is opened in the system diagnostics window is a global screen.

HMI device

Human **M**achine **I**nterface, device for visualization and control of automation processes.

HMI diagnostics view (WinCC)

The HMI diagnostics view is an object in WinCC. The HMI diagnostics view can only be used with Comfort Panels and WinCC Advanced RT.

I/O module

Device of the distributed I/O that is used as interface between the controller and the process.

Industrial Ethernet

Guideline for setting up Ethernet in an industrial environment. The main difference to the standard Ethernet is the mechanical current carrying capacity and interference immunity of the individual components.

Memory reset

Procedure to set the memories of the CPU to a defined initial state.

Operating states

Operating states describe the behavior of a single CPU at a specific time.
The CPUs of the SIMATIC standard systems feature the STOP, STARTUP and RUN operating states.
The primary CPU of the S7-1500R/H features the STOP, STARTUP, RUN, RUN-Syncup and RUN-Redundant operating states. The backup CPU features the STOP, SYNCUP and RUN-Redundant operating states.

PLC

Programmable **L**ogic **C**ontroller: Component of the CNC by which the machine manufacturer coordinates the interaction between the NC requirements (part program), the inputs of the machine operator and the current machine state.

Primary CPU

Role of a CPU in the S7-1500R/H redundant system. If the R/H system is in RUN-Redundant system state, the primary CPU controls the process. The backup CPU processes the user program synchronously and can take over the process control if the primary CPU fails.

PROFIBUS

Standard for fieldbus communication in automation technology.

PROFINET

PROcess FIeld NETwork, open industrial Ethernet standard which further develops PROFIBUS and industrial Ethernet. A cross-manufacturer communication, automation, and engineering model defined by PROFIBUS International e.V., as an automation standard.

Redundant systems

Redundant systems are identified by the fact that important automation components are available in multiple units (redundant). Process control is maintained if a redundant component fails.

Subnet

Part of a network whose parameters must be synchronized with the devices (e.g., with PROFINET). It includes the bus components and all connected stations. Subnets can be linked by means of gateways, for example, to form a network.

Synchronization module

The synchronization module is used to provide a redundant connection between the CPUs of the S7-1500H redundant system. You require two synchronization modules per CPU, which you connect using a fiber-optic cable.

System diagnostics

In the SIMATIC environment, the term "system diagnostics" refers to diagnostics of devices and modules. System diagnostics is used, for example, to monitor the states of the following components in the system: Power supply, device, I/O.

System diagnostics indicator (WinCC)

The system diagnostics indicator is a predefined graphic symbol of the library which alerts you to errors in your plant and displays two states: No error, error

System states

The system states of the S7-1500R/H redundant system result from the operating states of the primary and backup CPU. The term 'system state' is used as simple expression that identifies the operating states of the two CPUs that occur at the same time. The S7-1500R/H redundant system features the system states STOP, STARTUP, RUN-Solo, SYNCUP and RUN-Redundant.

Topology

Structure of a network. Common structures include:

- Linear bus topology
- Ring topology
- Star topology
- Tree topology

User program

In SIMATIC, a distinction is made between user programs and the firmware of the CPU.
The user program contains all instructions, declarations and data by which a plant or process can be controlled. It is assigned to a programmable module (for example, CPU, FM) and can be structured in smaller units.
Firmware: see glossary entry "Firmware of the CPU"

Value status

The value status describes a specific signal state. The value status is constantly updated and cyclically transmitted by the field device as quality statement together with the measured value.

Web server

Software/ communication service for data exchange using Ethernet. The web server provides the documents by means of standardized transmission protocols (HTTP, HTTPS) to a web browser. Documents can be static or dynamic upon request by the web browser composed from different sources by the web server.

WinCC

Windows **C**ontrol **C**enter: a PC-based process visualization system

WinCC Runtime

Component of the basic software WinCC

Index

"

"Diagnostics" tab
- Alarm display, 39
- Connection information, 39
- Device information, 39
- Inspector window, 39

A

Accessible devices
- Diagnostics status, 32
- Offline project, 32
- S7-1500R/H, 93

Alarm display
- Archive view, 40
- Active alarms, 40

Alarms
- Editing in the alarm editor, 75
- Multilingual, 77

Application examples
- Diagnostic overview for SIMATIC S7-1200 and S7-1500, 68

B

Backup CPU, 95, 114

D

Device information
- Online status, 39
- Operating mode, 39

Devices & networks
- Current state, 34
- Go online, 34

Diagnostics buffer
- Diagnostic events, 41
- Retentive memory, 41

Display of the CPU
- Status information, 29
- Input options, 29
- Display options, 29

dynamize
- Object appearance, 65

F

FAQs
- Download certificate, 51
- Implementing channel diagnostics in the user program, 68

H

HMI
- System diagnostics window, 57
- System diagnostics view, 57

HMI diagnostics view
- Comfort Panels, 57
- WinCC Advanced RT, 57
- Details view, 60
- Device view, 60
- Views, 60
- Distributed I/O view, 60

I

I/O module
- Settings, 47
- Inputs, 47

L

LED arrangement, 28

Library
- System diagnostics indicator, 62

O

Online & diagnostics
Online access, 36
Activities, 36
Information, 36
Online mode, 36
S7-1500R/H, 94
Online tools
Task card, 44
Online view, 44
CPU operator panel, 44
Cycle time, 44
Memory, 44
Memory usage, 44
S7-1500R/H, 96

P

Primary CPU, 95, 114
Process image inputs, 69
Quality Information, 69
Value status, 69
User datum, 69

Q

Quick start, 18
Using display, 18
Using STEP 7, 19

R

Redundancy connection, 112
Redundant mode
Diagnostics, 108
Redundant system, 94
RUN-Redundant system state
Diagnostics, 108
RUN-Solo system state
Diagnostics, 114

S

S7-1500H, 110
S7-1500R/H
Diagnostics, 92
Instructions, 115
Organization blocks, 115
Security events, 43
Setting options, 25
Symbol
For hardware diagnostics, 30
For comparison, 31
For software diagnostics, 31
For operating mode, 31
Synchronization module, 110
System diagnostics
Properties, 15
Advantages, 16
Display concept, 17
Alarm settings, 25
Button, 65
System diagnostics indicator
Inserting, 62
System diagnostics window, 62
Button as system diagnostics indicator, 65
System diagnostics view, 58
Configuring, 58
System diagnostics indicator, 62
System diagnostics window, 57
Global screen, 58
Configuring, 58

U

User program
Instructions, 67
Response to diagnostics alarms, 67

W

Web server
Web pages, 48
Browser, 48
Integrated Web server, 48
Activating, 49
Configuring, 49
HTTPS, 49
Certificate, 49
Access to, 50
Diagnostics, 51
Diagnostics buffer, 52
Module information, 53
Alarms, 53
Topology, 55
Motion Control diagnostics, 55
Trace, 56

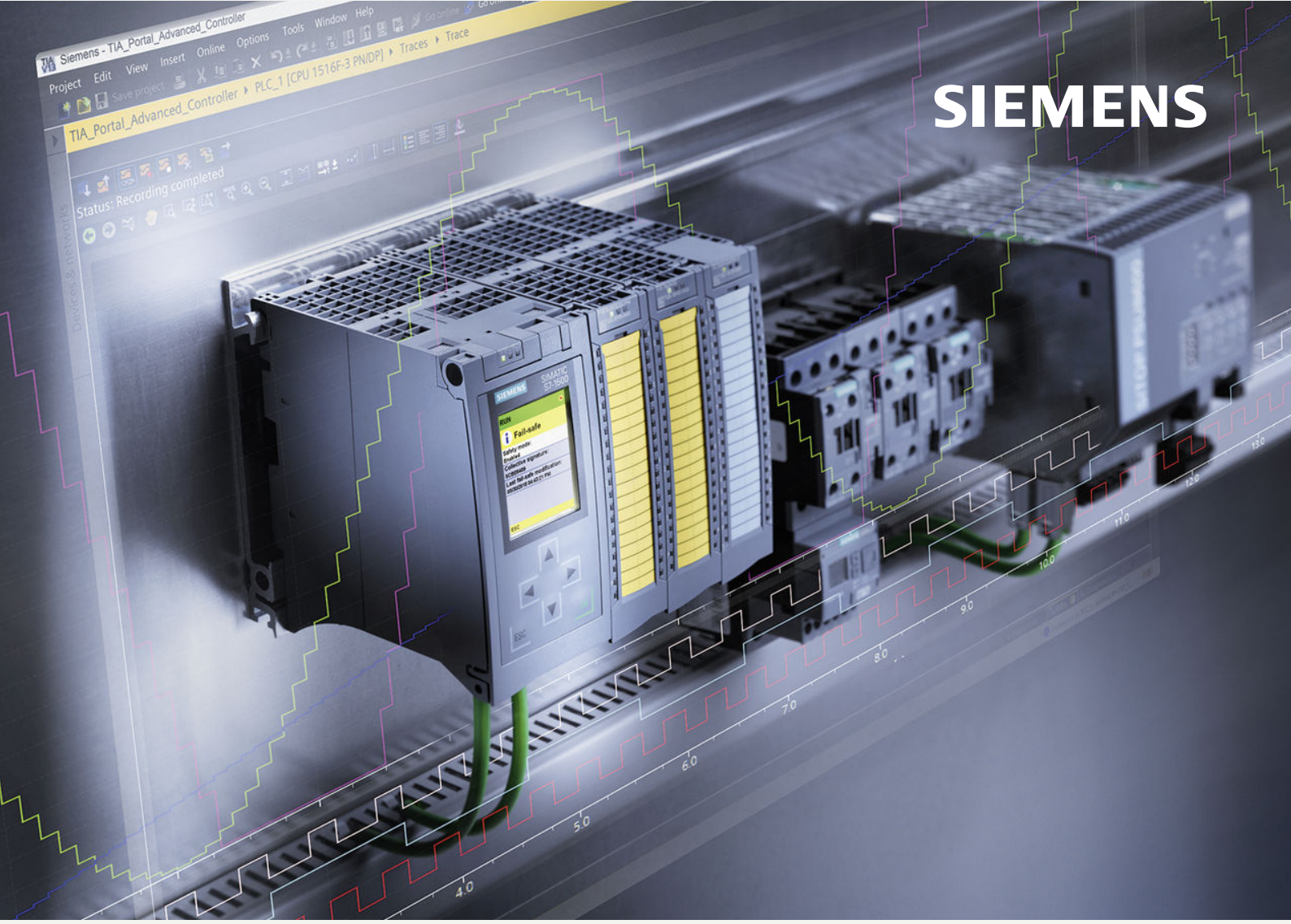

Edition 11/2022

FUNCTION MANUAL

SIMATIC / SINAMICS

S7-1500, S7-1200 / SINAMICS

Using the trace and logic analyzer function

support.industry.siemens.com

SIEMENS

SIMATIC / SINAMICS

S7-1500, S7-1200 / SINAMICS Using the trace and logic analyzer function

Function Manual

Introduction 1

Safety instructions 2

Description 3

Trace software user interface 4

Project trace software user interface 5

Operation 6

Devices 7

11/2022

A5E31277292-AF

Legal information

Warning notice system

This manual contains notices you have to observe in order to ensure your personal safety, as well as to prevent damage to property. The notices referring to your personal safety are highlighted in the manual by a safety alert symbol, notices referring only to property damage have no safety alert symbol. These notices shown below are graded according to the degree of danger.

⚠ DANGER
indicates that death or severe personal injury **will** result if proper precautions are not taken.

⚠ WARNING
indicates that death or severe personal injury **may** result if proper precautions are not taken.

⚠ CAUTION
indicates that minor personal injury can result if proper precautions are not taken.

NOTICE
indicates that property damage can result if proper precautions are not taken.

If more than one degree of danger is present, the warning notice representing the highest degree of danger will be used. A notice warning of injury to persons with a safety alert symbol may also include a warning relating to property damage.

Qualified Personnel

The product/system described in this documentation may be operated only by **personnel qualified** for the specific task in accordance with the relevant documentation, in particular its warning notices and safety instructions. Qualified personnel are those who, based on their training and experience, are capable of identifying risks and avoiding potential hazards when working with these products/systems.

Proper use of Siemens products

Note the following:

⚠ WARNING
Siemens products may only be used for the applications described in the catalog and in the relevant technical documentation. If products and components from other manufacturers are used, these must be recommended or approved by Siemens. Proper transport, storage, installation, assembly, commissioning, operation and maintenance are required to ensure that the products operate safely and without any problems. The permissible ambient conditions must be complied with. The information in the relevant documentation must be observed.

Trademarks

All names identified by ® are registered trademarks of Siemens AG. The remaining trademarks in this publication may be trademarks whose use by third parties for their own purposes could violate the rights of the owner.

Disclaimer of Liability

We have reviewed the contents of this publication to ensure consistency with the hardware and software described. Since variance cannot be precluded entirely, we cannot guarantee full consistency. However, the information in this publication is reviewed regularly and any necessary corrections are included in subsequent editions.

Siemens AG
Digital Industries
Postfach 48 48
90026 NÜRNBERG
GERMANY

A5E31277292-AF
Ⓟ 10/2022 Subject to change

Copyright © Siemens AG 2012 - 2022.
All rights reserved

Table of contents

1 Introduction 7

1.1 Function Manuals documentation guide 8
1.1.1 Information classes Function Manuals 8
1.1.2 Basic tools 10
1.1.3 SIMATIC Technical Documentation 12

2 Safety instructions 14

2.1 Security information 14

3 Description 15

3.1 Supported hardware 15
3.2 Recording of measured values with the trace function 15
3.3 Trace configuration, recording, installed trace and measurement 16
3.4 Data storage 18
3.5 Long-term trace 19
3.6 Project trace 21
3.6.1 General 21
3.6.2 Time synchronization 21

4 Trace software user interface 23

4.1 Project tree 24
4.1.1 User interface - “Traces” project tree folder 24
4.1.2 User interface - “Measurements” project tree folder 25
4.1.3 User interface - “Installed measurements (memory card)” project tree folder 26
4.1.4 User interface - “Overlay measurements” project tree folder 28
4.1.5 User interface - "Long-term traces" project tree folder 29
4.2 Working area 30
4.2.1 User interface - trace toolbar 30
4.2.2 User interface - Configuration tab 32
4.2.2.1 User interface - Configuration 32
4.2.3 User interface - Time diagram tab 32
4.2.3.1 User interface - curve diagram 32
4.2.3.2 User interface - signal table 38
4.2.3.3 Interface - Formula editor 41
4.2.3.4 User interface - Measurements (overlay measurements) 45
4.2.4 User interface - FFT diagram tab 47
4.2.4.1 User interface - curve diagram 47
4.2.4.2 User interface - signal table 52
4.2.4.3 Interface - Formula editor 52
4.2.5 User interface - Bode diagram tab 52

4.2.5.1 User interface - curve diagram ... 52
4.2.5.2 User interface - signal table ... 56
4.2.5.3 Interface - Formula editor ... 56
4.2.6 User interface - Signal selection tab (overlay measurements) ... 56
4.2.6.1 User interface - Signal selection (overlay measurements) ... 56

4.3 Inspector window ... 57
4.3.1 Interface - Inspector window ... 57

4.4 Trace task card ... 58
4.4.1 User interface - Measurement cursor pane ... 58
4.4.2 User interface - Snapshots pane ... 60

5 Project trace software user interface ... 62

5.1 Structure of the user interface ... 62

5.2 Project tree ... 63
5.2.1 User interface - Project tree folder "Cross-device functions" - "Project traces" ... 63

5.3 Working area ... 64
5.3.1 User interface - Project trace toolbar ... 64
5.3.2 User interface - status overview of the participating devices ... 65
5.3.3 User interface - Configuration tab ... 66
5.3.3.1 User interface - Configuration ... 66
5.3.4 User interface - Time diagram tab ... 67

5.4 Inspector window ... 67
5.4.1 Interface - Inspector window ... 67

5.5 Trace task card ... 68

6 Operation ... 69

6.1 Quick start ... 69
6.1.1 Trace quick start ... 69
6.1.2 Quick Start for long-term trace ... 73
6.1.3 Project trace quick start ... 78

6.2 Recording ... 80
6.2.1 Activating/deactivating an installed trace ... 80
6.2.2 Transferring the trace configuration from the device to the project ... 81
6.2.3 Saving measurements in the project ... 82
6.2.4 Automatic repetition of measurements ... 82

6.3 Analyzing ... 83
6.3.1 Analyzing a specific time range of an ongoing recording ... 83
6.3.2 Use of the curve diagram ... 83
6.3.3 Use of the signal table ... 85
6.3.4 Using the signal group in the signal table ... 86
6.3.5 Comparing recordings (combined measurement) ... 87
6.3.5.1 Apply overlay measurement ... 87
6.3.5.2 Comparing recordings ... 87
6.3.5.3 Aligning measurements with measurement cursor ... 89
6.3.6 Printing a recording ... 89

7 Devices **90**

7.1 S7-1200/1500 CPUs 90
7.1.1 Recordable variables 90
7.1.2 Lifetime of the installed trace configuration and recorded values 91
7.1.3 Recording levels 92
7.1.4 Time synchronization with Motion Control 92
7.1.5 Quantity structure 93
7.1.6 Long-term trace recording 94
7.1.7 CPU load through trace recording 96
7.1.8 Project trace 97
7.1.9 Software user interface of the configuration 97
7.1.9.1 Layout of the trace user interface 97
7.1.9.2 Layout of the long-term trace user interface 98
7.1.9.3 Layout of the project trace user interface 98
7.1.9.4 User interface - Signals 99
7.1.9.5 Recording conditions 100
7.1.10 Configuration 108
7.1.10.1 Trace configuration - overview 108
7.1.10.2 Long-term trace configuration – overview 109
7.1.10.3 Selecting signals 110
7.1.10.4 Configuring the recording cycle and duration 110
7.1.10.5 Configuring the trigger conditions 111
7.1.10.6 Configure installed measurements (memory card) 111
7.1.10.7 Configuring the recording cycle and target path for long-term trace 112

Glossary **113**

Index **115**

Introduction

1

Purpose of the documentation

The diagnostics options available with the trace and logic analyzer function are described in this documentation. Depending on the device used, the recording options can vary.

Required basic knowledge

In order to understand this documentation, the following knowledge is required:

- General knowledge in the field of automation
- Knowledge about the use of Windows-based computers
- S7-1200/1500 CPUs, ET 200SP, ET 200Pro
  - Knowledge of the SIMATIC industrial automation system
  - Knowledge of working with STEP 7
- SINAMICS Drives
  - Knowledge of working with the drive
- SIRIUS SIMOCODE pro, SIRIUS Soft Starter 3RW
  - Proficiency in using these systems

Validity of the documentation

This documentation applies to all products of the product series S7-1200, S7-1500, S7-1500 Software Controller, S7-1500 Drive Controller, ET 200SP, ET 200SP Open Controller, CPU 1513(F)pro-2 PN, CPU 1516(F)pro-2 PN, SINAMICS drives, SIRIUS SIMOCODE pro and SIRIUS Soft Starter 3RW as of TIA Portal V16.

Conventions

This documentation contains pictures of the devices described. The pictures may differ slightly from the devices supplied.
Please also observe notes marked as follows:

NOTE

A note contains important information on the product described in the documentation, on the handling of the product and on the section of the documentation to which particular attention should be paid.

"mySupport"

With "mySupport", your personal working area, you make the most of your Industry Online Support.
In "mySupport" you can store filters, favorites and tags, request CAx data and put together your personal library in the Documentation area. Furthermore, your data is automatically filled into support requests and you always have an overview of your current requests.
You need to register once to use the full functionality of "mySupport".
You can find "mySupport" on the Internet (https://support.industry.siemens.com/My/ww/en/).

"mySupport" - Documentation

In the Documentation area of "mySupport", you have the possibility to combine complete manuals or parts of them to make your own manual.
You can export the manual in PDF format or in an editable format.
You can find "mySupport" - Documentation on the Internet (http://support.industry.siemens.com/My/ww/en/documentation).

Further support

- The range of technical documentation for the individual SIMATIC products and automation systems can be found on the Internet (http://www.siemens.com/simatic-tech-doku-portal).
- The online catalog and the online ordering system is available on the Internet (https://mall.industry.siemens.com).

1.1 Function Manuals documentation guide

1.1.1 Information classes Function Manuals

The documentation for the SIMATIC S7-1500 automation system, for the 1513/1516pro-2 PN, SIMATIC Drive Controller CPUs based on SIMATIC S7-1500 and the SIMATIC ET 200MP, ET 200SP, ET 200AL and ET 200eco PN distributed I/O systems is arranged into three areas.
This arrangement enables you to access the specific content you require.
You can download the documentation free of charge from the Internet (https://support.industry.siemens.com/cs/ww/en/view/109742705).

Basic information

The system manuals and Getting Started describe in detail the configuration, installation, wiring and commissioning of the SIMATIC S7-1500, SIMATIC Drive Controller, ET 200MP, ET 200SP, ET 200AL and ET 200eco PN systems. Use the corresponding operating instructions for 1513/1516pro-2 PN CPUs.
The STEP 7 online help supports you in the configuration and programming.
Examples:

- Getting Started S7-1500
- System manuals
- Operating instructions ET 200pro and 1516pro-2 PN CPU
- Online help TIA Portal

Device information

Equipment manuals contain a compact description of the module-specific information, such as properties, wiring diagrams, characteristics and technical specifications.
Examples:

- Equipment manuals for CPUs
- Equipment manuals for interface modules
- Equipment manuals for digital modules
- Equipment manuals for analog modules
- Equipment manuals for communication modules
- Equipment manuals for technology modules
- Equipment manuals for power supply modules
- Equipment manuals for BaseUnits

General information

The function manuals contain detailed descriptions on general topics relating to the SIMATIC Drive Controller and the S7-1500 automation system.
Examples:

- Function Manual Diagnostics
- Function Manual Communication
- Function Manuals Motion Control
- Function Manual Web Server
- Function Manual Cycle and Response Times
- PROFINET Function Manual
- PROFIBUS Function Manual

Product Information

Changes and supplements to the manuals are documented in a Product Information. The Product Information takes precedence over the device and system manuals.

You will find the latest Product Information on the Internet:

- S7-1500/ET 200MP (https://support.industry.siemens.com/cs/de/en/view/68052815)
- SIMATIC Drive Controller (https://support.industry.siemens.com/cs/de/en/view/109772684/en)
- Motion Control (https://support.industry.siemens.com/cs/de/en/view/109794046/en)
- ET 200SP (https://support.industry.siemens.com/cs/de/en/view/73021864)
- ET 200eco PN (https://support.industry.siemens.com/cs/ww/en/view/109765611)

Manual Collections

The Manual Collections contain the complete documentation of the systems put together in one file.

You will find the Manual Collections on the Internet:

- S7-1500/ET 200MP/SIMATIC Drive Controller (https://support.industry.siemens.com/cs/ww/en/view/86140384)
- ET 200SP (https://support.industry.siemens.com/cs/ww/en/view/84133942)
- ET 200AL (https://support.industry.siemens.com/cs/ww/en/view/95242965)
- ET 200eco PN (https://support.industry.siemens.com/cs/ww/en/view/109781058)

1.1.2 Basic tools

The tools described below support you in all steps: from planning, over commissioning, all the way to analysis of your system.

TIA Selection Tool

The TIA Selection Tool tool supports you in the selection, configuration, and ordering of devices for Totally Integrated Automation (TIA).

As successor of the SIMATIC Selection Tools , it assembles the configuration editors for automation technology already familiar into a single tool.

With the TIA Selection Tool , you can generate a complete order list from your product selection or product configuration.
You can find the TIA Selection Tool on the Internet.
(https://support.industry.siemens.com/cs/ww/en/view/109767888)

SIMATIC Automation Tool

You can use the SIMATIC Automation Tool to perform commissioning and maintenance activities on various SIMATIC S7 stations as bulk operations independent of TIA Portal.

The SIMATIC Automation Tool offers a wide range of functions:

- Scanning of a PROFINET/Ethernet system network and identification of all connected CPUs
- Assignment of addresses (IP, subnet, Gateway) and device name (PROFINET device) to a CPU
- Transfer of the date and the programming device/PC time converted to UTC time to the module
- Program download to CPU
- RUN/STOP mode switchover

- CPU localization through LED flashing
- Reading out of CPU error information
- Reading the CPU diagnostic buffer
- Reset to factory settings
- Firmware update of the CPU and connected modules

You can find the SIMATIC Automation Tool on the Internet.
(https://support.industry.siemens.com/cs/ww/en/view/98161300)

PRONETA

SIEMENS PRONETA (PROFINET network analysis) is a commissioning and diagnostic tool for PROFINET networks. PRONETA Basic has two core functions:

- The "Network analysis" offers a quick overview of the PROFINET topology. It is possible to make simple parameter changes (for example, to the names and IP addresses of the devices). In addition, a quick and convenient comparison of the real configuration with a reference system is also possible.
- The "IO test" is a simple and rapid test of the wiring and the module configuration of a plant, including documentation of the test results.

You can find SIEMENS PRONETA Basic on the Internet:
(https://support.industry.siemens.com/cs/ww/en/view/67460624)

SIEMENS PRONETA Professional is a licensed product that offers you additional functions. It offers you simple asset management in PROFINET networks and supports operators of automation systems in automatic data collection/acquisition of the components used through various functions:

- The user interface (API) offers an access point to the automation cell to automate the scan functions using MQTT or a command line.
- With PROFIenergy diagnostics, you can quickly detect the current pause mode or the readiness for operation of devices that support PROFIenergy and change these as needed.
- The data record wizard supports PROFINET developers in reading and writing acyclic PROFINET data records quickly and easily without PLC and engineering.

You can find SIEMENS PRONETA Professional on the Internet.
(https://www.siemens.com/proneta-professional)

SINETPLAN

SINETPLAN, the Siemens Network Planner, supports you in planning automation systems and networks based on PROFINET. The tool facilitates professional and predictive dimensioning of your PROFINET installation as early as in the planning stage. In addition, SINETPLAN supports you during network optimization and helps you to exploit network resources optimally and to plan reserves. This helps to prevent problems in commissioning or failures during productive operation even in advance of a planned operation. This increases the availability of the production plant and helps improve operational safety.

The advantages at a glance

- Network optimization thanks to port-specific calculation of the network load
- Increased production availability thanks to online scan and verification of existing systems
- Transparency before commissioning through importing and simulation of existing STEP 7 projects
- Efficiency through securing existing investments in the long term and the optimal use of resources

You can find SINETPLAN on the Internet (https://new.siemens.com/global/en/products/automation/industrial-communication/profinet/sinetplan.html).

1.1.3 SIMATIC Technical Documentation

Additional SIMATIC documents will complete your information. You can find these documents and their use at the following links and QR codes.

The Industry Online Support gives you the option to get information on all topics. Application examples support you in solving your automation tasks.

Overview of the SIMATIC Technical Documentation

Here you will find an overview of the SIMATIC documentation available in Siemens Industry Online Support:

Industry Online Support International (https://support.industry.siemens.com/cs/ww/en/view/109742705)

Watch this short video to find out where you can find the overview directly in Siemens Industry Online Support and how to use Siemens Industry Online Support on your mobile device:

Quick introduction to the technical documentation of automation products per video (https://support.industry.siemens.com/cs/us/en/view/109780491)

YouTube video: Siemens Automation Products - Technical Documentation at a Glance (https://youtu.be/TwLSxxRQQsA)

mySupport

With "mySupport" you can get the most out of your Industry Online Support.

Registration	You must register once to use the full functionality of "mySupport". After registration, you can create filters, favorites and tabs in your personal workspace.
Support requests	Your data is already filled out in support requests, and you can get an overview of your current requests at any time.

Documentation	In the Documentation area you can build your personal library.
Favorites	You can use the "Add to mySupport favorites" to flag especially interesting or frequently needed content. Under "Favorites", you will find a list of your flagged entries.
Recently viewed articles	The most recently viewed pages in mySupport are available under "Recently viewed articles".
CAx data	The CAx data area gives you access to the latest product data for your CAx or CAe system. You configure your own download package with a few clicks: • Product images, 2D dimension drawings, 3D models, internal circuit diagrams, EPLAN macro files • Manuals, characteristics, operating manuals, certificates • Product master data

You can find "mySupport" on the Internet. (https://support.industry.siemens.com/My/ww/en)

Application examples

The application examples support you with various tools and examples for solving your automation tasks. Solutions are shown in interplay with multiple components in the system - separated from the focus on individual products.
You can find the application examples on the Internet.
(https://support.industry.siemens.com/cs/ww/en/ps/ae)

Safety instructions 2

2.1 Security information

Siemens provides products and solutions with industrial security functions that support the secure operation of plants, systems, machines and networks.

In order to protect plants, systems, machines and networks against cyber threats, it is necessary to implement – and continuously maintain – a holistic, state-of-the-art industrial security concept. Siemens' products and solutions constitute one element of such a concept.

Customers are responsible for preventing unauthorized access to their plants, systems, machines and networks. Such systems, machines and components should only be connected to an enterprise network or the internet if and to the extent such a connection is necessary and only when appropriate security measures (e.g. firewalls and/or network segmentation) are in place.

For additional information on industrial security measures that may be implemented, please visit (https://www.siemens.com/industrialsecurity).

Siemens' products and solutions undergo continuous development to make them more secure. Siemens strongly recommends that product updates are applied as soon as they are available and that the latest product versions are used. Use of product versions that are no longer supported, and failure to apply the latest updates may increase customers' exposure to cyber threats.

To stay informed about product updates, subscribe to the Siemens Industrial Security RSS Feed visit (https://www.siemens.com/cert).

Description 3

3.1 Supported hardware

If a device supports the trace and logic analyzer function, "Traces" is offered for selection in the project tree below the device.

The following devices support the trace and logic analyzer function:

- SIMATIC S7-1200 CPUs (as of firmware version V4.0)
- SIMATIC S7-1500, ET 200SP, CPU 1513pro-2 PN and CPU 1516pro-2 PN CPUs
- SIMATIC S7-1500 Software Controller
- SIMATIC Drive Controller
- ET 200SP Open Controller
- SINAMICS drives that are supported in Startdrive
- SINAMICS V90 (with HSP 0185)
- SIRIUS SIMOCODE pro (with Simocode ES)
- SIRIUS Soft Starter 3RW (with Soft Starter ES)

3.2 Recording of measured values with the trace function

Introduction

The trace and logic analyzer function can be called in the project tree (Page 23) by double-clicking an entry in the "Traces" system folder. The measurements on the memory card can also be read and displayed via the diagnostic interface of the Web server.

You record device tags and evaluate the recordings with the trace and logic analyzer function. Tags are, for example, drive parameters or system and user tags of a CPU. The number of installed traces is hardware-dependent. You can use the project trace to record tags from multiple devices across devices.

The recordings are saved on the device and, when required, can be read out with the engineering system (ES) and saved permanently. The trace and logic analyzer function is therefore suitable for monitoring highly dynamic processes. The recorded values are overwritten when the recording is activated again.

The trace and logic analyzer functions are also used in the commissioning editors of technology objects (for example, axle control panels). Active recordings from the axis control panel are displayed in the "Traces" system folder as installed traces. Recordings can be added to the measurements in the curve diagram of the axis control panel or the PID via a shortcut menu command.

Depending on the device used, the recording options can vary.

A quick start (Page 69) for working with the trace and logic analyzer function can be found in the Operation section.

The following figure shows the mode of operation of the trace:

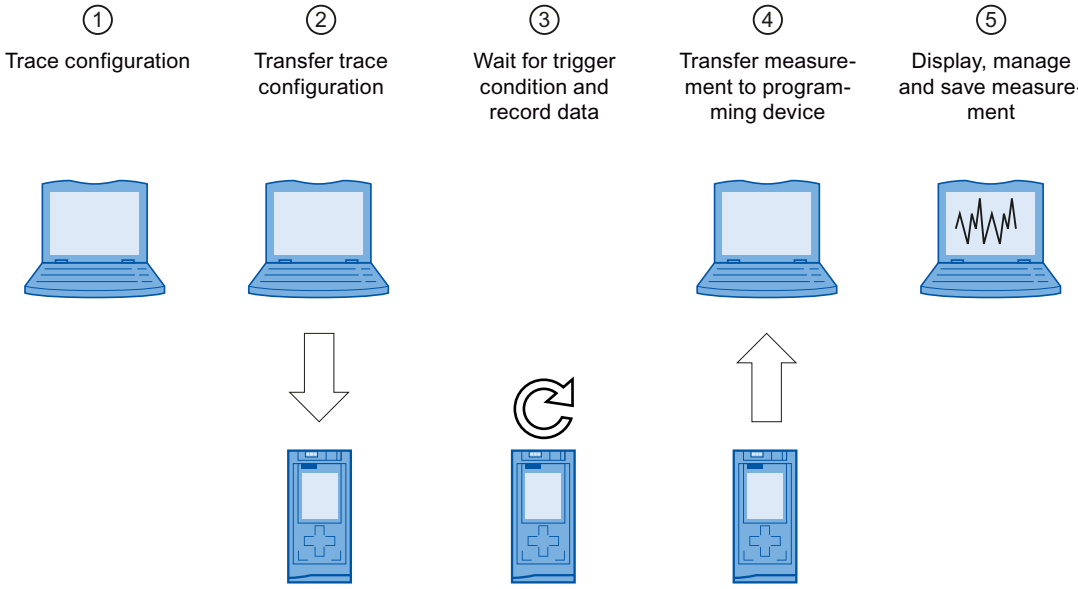

Trace configuration on the programming device (PG) in the TIA Portal①

You can specify the signals to be recorded, the duration of the recording and the trigger condition in the trace configuration. The trace configuration depends on the device and is described at the respective device.

Transferring the trace configuration from the PG to the device②

You can transfer the complete trace configuration to the device when an online connection is established.

Waiting for the recording③

If the installed trace configuration is activated (Page 80), then the recording is performed independently of the PG. The recording is started as soon as the trigger condition is satisfied.

Transferring the measurement from the device to the PG④

The saving of the measurement in the project (Page 81) stores the measurement in the opened project of the TIA Portal. The measurement can be saved at any time after completing the recording, irrespective of the time of the measurement.

Evaluating, managing and saving the measurement⑤

Numerous options are available for the evaluation of the measurement in the curve diagram and in the signal table. Various display types are possible, for example, a bit representation for binary signals.
Signal waves from different measurements can be put together as an combined measurement and compared with each other.
Measurements can also be exported and imported as a file.
With the saving of the project (Page 81) in the TIA Portal, the measurements transferred to the project are also saved.

3.3 Trace configuration, recording, installed trace and measurement

This section explains the meaning and relationships of the terms: trace configuration, recording, installed trace and measurement.

Trace configuration

Implement the following settings in the trace configuration:

- Signals to be recorded with display options
- Recording conditions
  - Sampling
  - Trigger
  - Measurements on device (memory card)

Trace configurations can be copied to the "Traces" folder by drag-and-drop operation or by means of the clipboard. The application of a configuration depends on the device type. The following sources are possible:

- Trace configuration
- Measurement
- Measurements on device (memory card)
- Combined measurement (selection of a measurement contained in it)

Recording

A recording is performed in the device. There is only one recording for each installed trace configuration. When a new recording is started, the old recording is overwritten.
An installed recording is not retentive (it is lost when the device is switched off/on) but can be saved permanently in the project as a measurement.

Installed trace

An installed trace consists of a trace configuration and optionally a recording. The maximum number of installed traces depends on the device.
The trace configuration is stored retentively on the device. The retentivity of the trace configuration may also be configurable depending on the device, e.g. with the S120.
The configuration data is displayed write-protected.

Measurement

A measurement consists of a trace configuration and a recording, provided that recorded data is present. Each installed trace can be saved as a measurement in the project.
The recording of a measurement can be viewed offline.
The configuration data is displayed write-protected.

Measurements on device (memory card)

The "Measurements on device (memory card)" folder contains measurements that are saved on the device (for example, on the memory card). These measurements are retentive and can only be deleted by the user.
The installed measurements can be transferred to the "Measurements" folder using drag & drop and are then saved as measurements in the project.

Trace configuration with an installed trace of the same name

Usually, there is a trace configuration in the project with the same name for an installed trace. When there is an online connection, this trace is displayed with the icon in the project tree.
See also User interface - “Traces” project tree folder (Page 24).

Combined measurement

The combined measurement allows a comparison and analysis of signals from different measurements with each other.
Measurements can be synchronized with each other and displayed overlaid.
Changes to the settings for measurements within the combined measurement have no impact on the original measurements. The original measurements remain unchanged.

3.4 Data storage

The trace toolbar and the curve diagram also enable the transfer of the trace configuration and the viewing of the recording.

The following figure is a schematic diagram of the data storage:

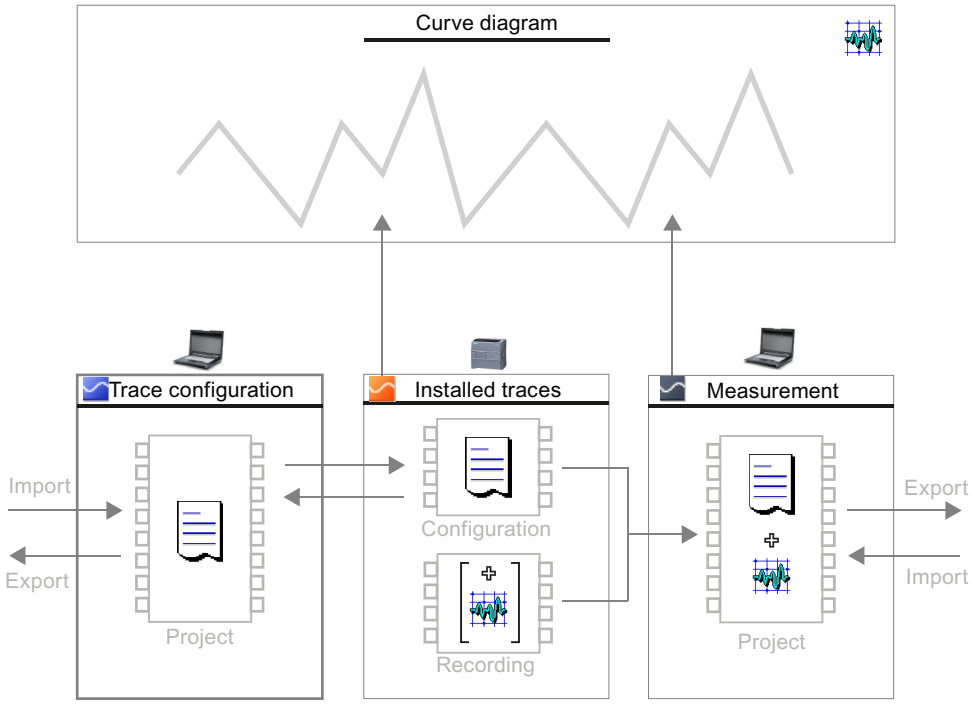

NOTE

Saving the trace configuration and measurement

You save the trace configuration and measurement with the project in the TIA Portal.

If you close the project without saving, the trace configurations and the measurements transferred to the project are discarded. The trace editor can be closed and reopened without loss of data until the project is closed.

3.5 Long-term trace

A long-term trace records signals.

In contrast to trace, long-term trace has the following special features:

- In the long-term trace configuration, you define a target path in the PG. The long-term trace recording is saved as a .csv file and as an .lttcd file in the configured target path on the PG.
- You cannot configure a recording duration or a trigger.
- No support of measurements in the device (memory card)
- No support for FFT/Bode formulas or FFT diagrams/Bode diagram

A description of which devices support the long-term trace is provided at the respective devices.

Long-term trace workflow

A Quick Start (Page 73) for working with long-term traces can be found in the Operation section.

The following figure shows how the long-term trace works:

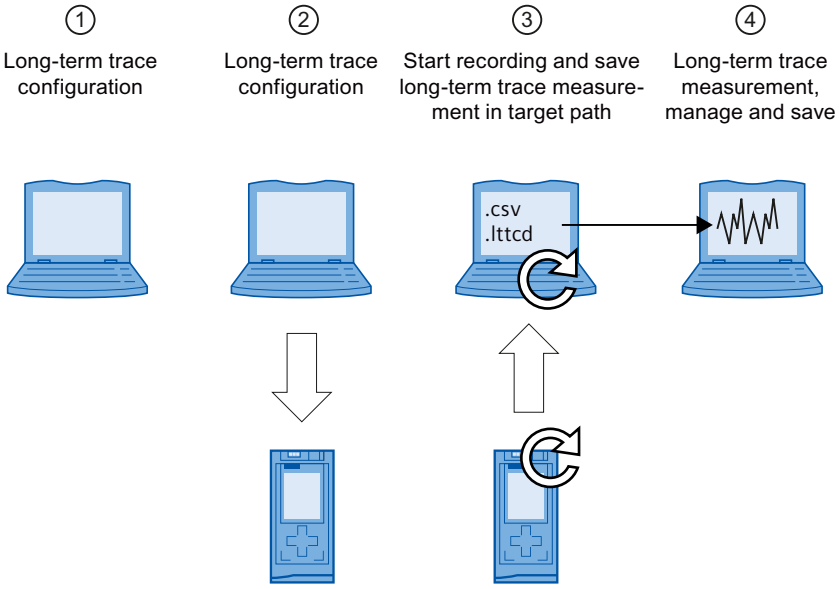

Long-term trace configuration on the programming device (PG) in the TIA Portal①

You can define the signals to be recorded and the target path for the long-term trace measurements in the long-term trace configuration. The long-term trace configuration depends on the device and is described for the respective devices.

Transferring the long-term trace configuration from the PG to the device②

You can transfer the complete long-term trace configuration to the device when an online connection is established.

Starting the long-term trace recording and saving the long-term trace measurement in the target path③

Start the recording by activating the trace configuration. The long-term trace recording is saved as a .csv file and as an .lttcd file in the configured target path on the PG.

NOTE

Note that problems with online access between the PG and the CPU can result in errors or even failure of the recording.

If possible, connect the PG directly to the CPU.

You can find additional information about long-term trace recording as a csv file in the section Long-term trace recording (Page 94).

Displaying, managing, and evaluating the long-term trace measurement④

As soon as the recording has been deactivated, the long-term trace measurement is displayed in the time diagram.

The saving of the measurement in the project (Page 81) stores the measurement in the opened project of the TIA Portal.

The measurements saved in the project are stored in the "Long-term trace" measurements folder. You can also import the .lttcd files from the target path as long-term trace measurements.

Numerous options are available for the evaluation of the measurement in the curve diagram and in the signal table. Various display types are possible, for example, a bit representation for binary signals.

When the project is saved in the TIA Portal, the measurements transferred to the project are also saved.

3.6 Project trace

3.6.1 General

A project trace includes trace configurations of multiple devices and records the signals across devices.

Each device can trigger the recording on all participating devices. After receiving the global trigger, the devices with valid project trace configuration start the recording.

Each of the respective devices describes whether the project trace function is supported.

Requirements

The following requirements must be fulfilled for recording with project trace:

- PROFINET RT or IRT communication
- All devices are located in a PROFINET subnet (no routing)
- An online connection from the TIA Portal to all devices to transfer the project trace to the devices.
- The "Record immediately" trigger mode may be configured for a maximum of one device.
- A trigger must be configured for at least one device.

3.6.2 Time synchronization

The accuracy of the time synchronization depends on how the trace sample event is determined. Isochronous communication provides the highest accuracy, because the IRT cycle is used. In all other cases, the clock time of the device is used.

A project trace can contain devices with RT and IRT communication.

For a synchronous display of the signals, the X axis must be set in "Time (relative)" mode. In this representation, the measurements are arranged in time so that their trigger events are at 0 ms.

To facilitate the evaluation with absolute time, synchronize the clock times of the devices.

Information on the trace sample event can be found in the device-specific descriptions, e.g. for S7-1200/1500 CPU under "Recording levels".

Trigger time for RT communication

Devices which receive the trigger from another device, have a time-delayed trigger event. For RT communication, the time of a trigger event is derived from the transfer time and the recording time. The trigger event is first detected at the end of the recording OB and uses this

time as the trigger time. The time delay between the original trigger time and the evaluation in the OB cannot be determined for RT communication. This means the signal trends of devices which receive the trigger from another device appear moved forward. After saving the measurements, you can manually correct these signals with a time offset.

Example of a recording with project trace

The figure below shows a recording with project trace and the correction of the representation with an offset.

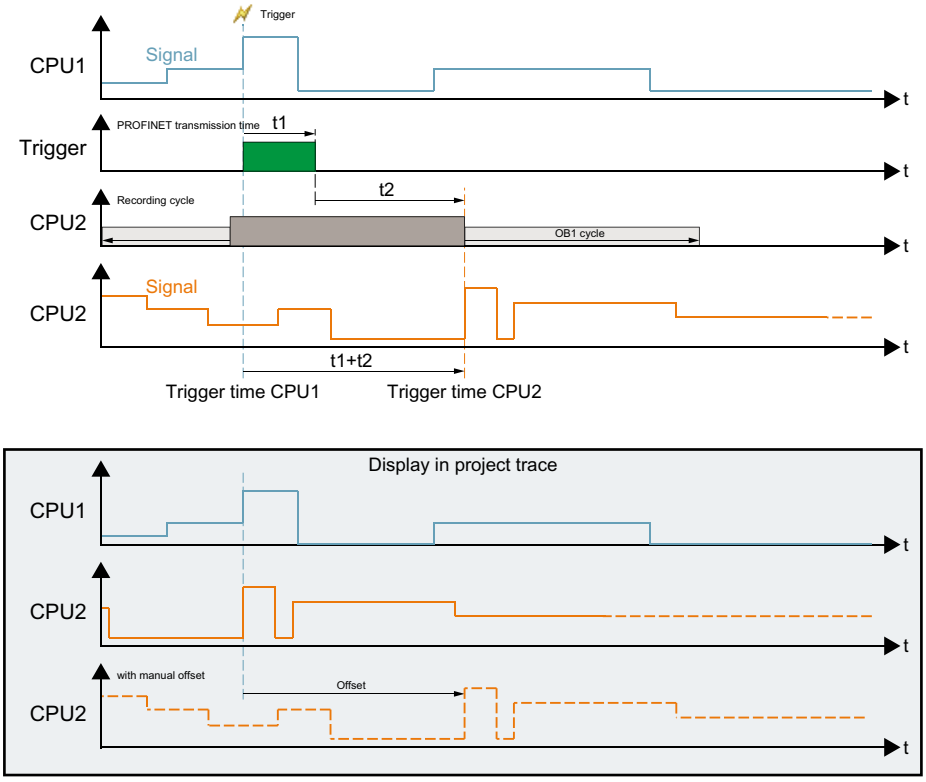

Trace software user interface

4

The user interface of the trace and logic analyzer function consists of several areas. The layout of the user interface in the TIA Portal is described here.
The figure below shows an example of the distribution of the surface:

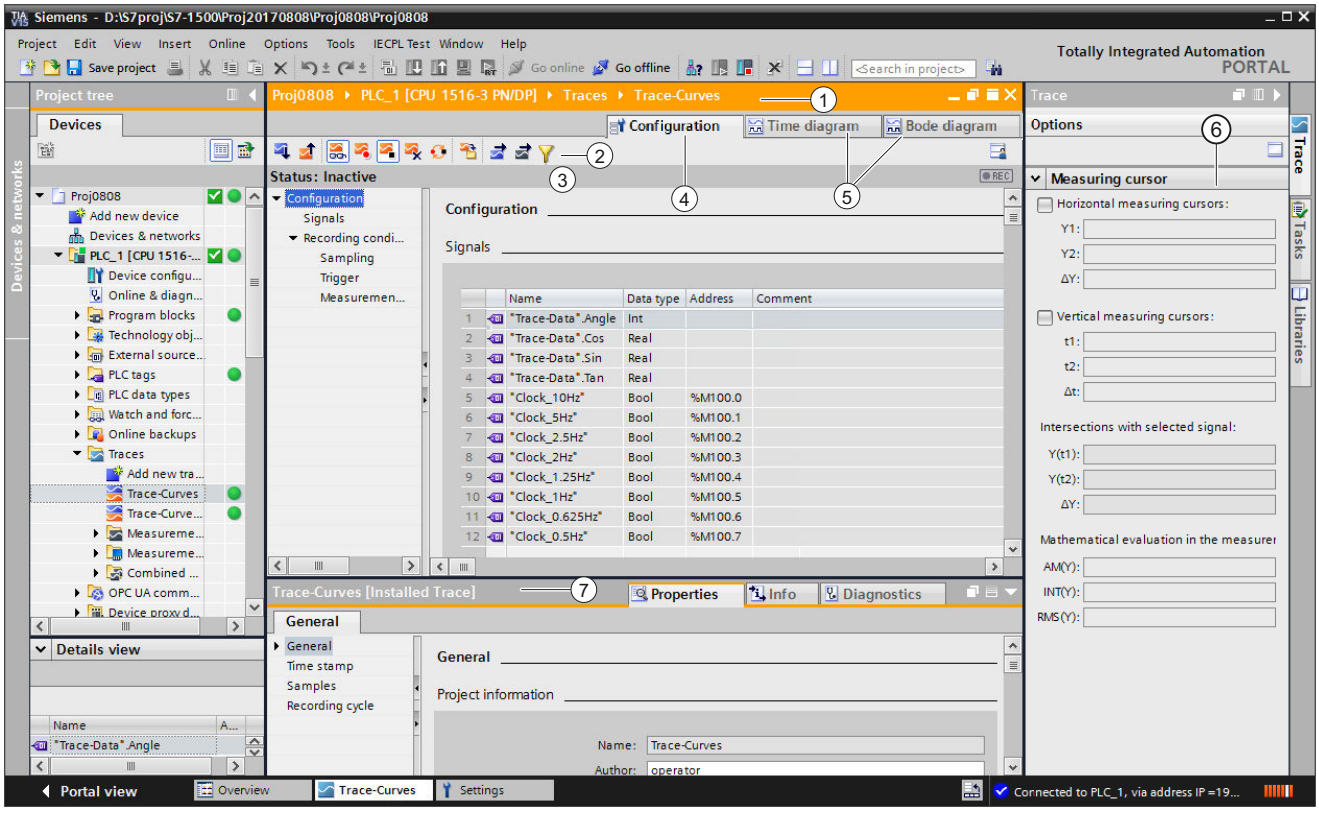

Project tree Management and creation of the trace and measurements directly in the project tree and via context menu commands.	
Working area	
	① Title bar of the working area Shows the device to which the current display belongs.
	② Trace toolbar Buttons for managing the trace in the project and device: • Activation/deactivation of installed traces • Deletion of installed traces • Transfer of trace configurations and measurements between the device and the project • Export of trace configurations and measurements • Switchover between offline and online display

	③ Status display of the trace Display of the current status of the recording.
	④ Configuration tab Device-specific configuration of the recording duration, trigger condition and signal selection. Configuring the devices for project trace. See Device-specific descriptions.
	⑤ Time diagram / FFT diagram / Bode diagram tab Display of the recorded values as a curve diagram, FFT diagram or Bode diagram, and the signals from the displayed measurement. Specification of the display options.
	Signal selection tab Display of all signals that are contained in the combined measurements.
"Trace" task card Display of the measurement cursor data with mathematical evaluation ⑥ and snapshots.	
Inspector window⑦ Display of general information about the trace configuration	

4.1 Project tree

4.1.1 User interface - “Traces” project tree folder

Trace configurations and installed traces are displayed in the "Traces" folder.
More information about the "Traces" sub-folder is provided in the following sections.
Double-click a trace to open the corresponding "Configuration" or "Time diagram" tab in the working area.

Icons in the "Traces" folder

The following table explains the icons in the "Traces" folder:

Icon	Description
	Add trace configuration Double-click the icon to add a new trace configuration.
	Trace configuration (offline) Double-click the icon to open the "Configuration" tab.
	Installed trace (online) The icon is only displayed when there is no offline trace configuration of the same name for the installed trace. Double-click the icon to open the "Time diagram" tab.
	Trace configuration with an installed trace of the same name If the button is deactivated, the trace configuration from the project is displayed. The trace corresponds to a trace configuration. If the button is activated, the trace configuration from the device is displayed. The trace corresponds to an installed trace. Double-click on the symbol to open the "Time diagram" tab of the installed trace.

Status

When there is an online connection, the status is displayed in the right-hand column of the project tree. The status is also displayed as tooltip above the respective icon.
The following table shows the meaning of the icons:

Icon	Description
	Online and offline configuration are identical
	Online and offline configuration are different
	Configuration only exists online

Shortcut menu commands

The following table shows the shortcut menu commands for the "Traces" system folder:

Shortcut menu command	Description
"Add new group"	Inserts a new folder.
"Add new trace"	Inserts a new trace configuration and opens the configuration tab.
"Import trace configuration"	Imports a trace configuration from a file.

The following table shows the shortcut menu commands for trace configurations and installed traces / :

Shortcut menu command	Trace configuration	Installed trace	Description
"Copy"	x	-	Copies the trace configuration or trace to the clipboard.
"Paste"	x	-	Inserts a trace configuration or measurement from the clipboard.
"Delete"	x	x	Deletes the selected objects from the project tree or from the device.
"Rename"	x	-	Switches the selected object to the editing mode.
"Export trace configuration"	x	-	Export a trace configuration as a file with the file extension "* .ttcfgx" or a trace in the device with the file extension "* .ttrecx". For reasons of compatibility with TIA Portal V12, the "* .ttcfg" and "* .ttrec" file extensions are supported, although they do not contain any information about the device family.

The trace configuration can also be copied across devices within the same device family.

4.1.2 User interface - “Measurements” project tree folder

The “Measurements" folder shows the saved measurements.

Icons in the “Measurements" folder

The following table explains the icons in the “Measurements" folder:

Icon	Description
	Measurement (offline) Double-click the icon to open the "Time diagram" tab. The configuration for a measurement can be transferred to the “Traces” folder using drag & drop.

Shortcut menu commands

The following table shows the shortcut menu commands for the "Measurements" system folder:

Shortcut menu command	Description
“Add new group”	Inserts a new folder.
"Import measurement"	Imports a measurement from a file with the "*.ttrecx" file extension. The import is device-independent. For reasons of compatibility, the "*.ttrec" file extension is supported in V12, although it does not contain any information about the device family.

The following table shows the shortcut menu commands for measurements:

Shortcut menu command	Description
"Copy"	Copies the trace configuration of the selected objects to the clipboard.
"Paste"	Inserts a measurement from the clipboard.
"Delete"	Deletes the selected objects from the project tree or from the device.
"Rename"	Switches the selected object to the editing mode.
“Generate new overlay measurement”	Generates a new overlay measurement with the selected measurements.
"Export measurement"	Exports a measurement with the last saved standard view The measurement is saved with the extension "*.ttrecx" or "*.csv". For reasons of compatibility, the "*.ttrec" file extension is supported in V12, although it does not contain any information about the device family.

The measurements can also be copied independent of the device family.

4.1.3 User interface - “Installed measurements (memory card)” project tree folder

The "Measurements on device (memory card)" folder shows all measurements present on the memory card. The folder is only displayed when there is an online connection to the device.

Drag folders or measurements contained here to the "Measurements" system folder using drag & drop. This transfers the measurements to the project.

NOTE

Transferring numerous and large trace measurements from the device (memory card)

Transferring trace measurements from the device to the project increases the memory requirement.

Avoid copying a large number of measurements with large amounts of data at the same time because this can lead to high memory consumption and extended periods needed for copying.

Icons in the "Traces" folder

The following table explains the icons in the system folder :

Icon	Description
	Folders generated automatically with information on the recording activation time: The name of the folder cannot be changed.
	Installed measurement Double-click the icon to open the "Time diagram" tab. The time stamp in the name shows the occurrence of the trigger event.

Shortcut menu commands

The following table shows the shortcut menu commands for the group folder :

Shortcut menu command	Description
"Copy"	Copies the selected objects to the clipboard.
"Delete"	Deletes the selected objects from the project tree and from the device.

The following table shows the shortcut menu commands for measurements :

Shortcut menu command	Description
"Open"	Opens the measurement in the "Time diagram" tab.
"Copy"	Copies the selected objects to the clipboard.
"Delete"	Deletes the selected objects from the project tree and from the device.
"Export measure-ment"	Exports a measurement as a file with the extension "*.ttrecx" or "*.csv". For reasons of compatibility, the "*.ttrec" file extension is supported in V12, although it does not contain any information about the device family.
"Properties"	Displays the general properties of the measurement (Page 57).

4.1.4 User interface - “Overlay measurements” project tree folder

The system folder "Combined measurements" shows the configured combined measurements.

Icons in the "Combined measurements" folder

The following table explains the icons in the system folder "Combined measurements":

Icon	Description
	Add new combined measurements Double-click the icon to add a new combined measurement and open the "Time diagram" tab.
	Combined measurement Double-click the icon to open the "Time diagram" tab.

Shortcut menu commands

The following table shows the shortcut menu commands for the system folder "Combined measurements" or for a group folder contained within this:

Shortcut menu command	Description
"Add new group"	Inserts a new folder.
"Add new combined measurement"	Inserts a new combined measurement and opens the "Time diagram" tab.
"Import combined measurement"	Imports an combined measurement from a file with the file extension "*.ttcbmx"

The following table shows the shortcut menu commands for combined measurements:

Shortcut menu command	Description
"Open"	Opens the selected combined measurements in the working area.
"Import measurement"	Imports a measurement from a file with the file extension "*.ttrecx" For reasons of compatibility with V12, the "*.ttrec" file extension is supported, although it does not contain any information about the device family.
"Export combined measurement"	Exports an combined measurement The combined measurement is saved with the extension "*.ttcbmx" or "*.csv". The "*.ttcbmx" format can also be imported again.
"Copy"	Copies the selected objects to the clipboard.
"Paste"	Pastes measurements, measurements from traces in the device or from an combined measurement from the clipboard. Multiple objects can be inserted from the clipboard if they are all of the same type.
"Delete"	Deletes the selected objects from the project tree or from the device.
"Rename"	Switches the selected object to the editing mode.
"Properties"	Displays the general properties for the combined measurements.

The combined measurements can also be copied device-wide.

4.1.5 User interface - "Long-term traces" project tree folder

Long-term trace configurations and installed long-term traces are displayed in the "Long-term traces" folder.
Double-click a long-term trace to open the corresponding "Configuration" or "Time diagram" tab in the working area.

Icons in the "Long-term traces" folder

The following table explains the icons in the "Long-term traces" folder:

Icon	Description
	Add new long-term trace Double-click the icon to add a new long-term trace configuration.
	Long-term trace configuration (offline) Double-click the icon to open the "Configuration" tab.
	Installed long-term trace (online) The icon is only displayed when there is no offline long-term trace configuration of the same name for the installed trace. Double-click the icon to open the "Time diagram" tab.
	Long-term trace configuration with installed long-term trace of the same name If the button is deactivated, the trace configuration from the project is displayed. The trace corresponds to a trace configuration. If the button is activated, the trace configuration from the device is displayed. The trace corresponds to an installed trace. Double-click on the icon to open the "Time diagram" tab of the installed trace.
	"Measurements" folder The "Measurements" folder displays long-term trace measurements . The "Measurements" folder in the "Long-term traces" folder behaves like the "Measurements" folder in the "Traces" folder. User interface - “Measurements” project tree folder (Page 25)

Status

When there is an online connection, the status is displayed in the right-hand column of the project tree. The status is also displayed as tooltip above the respective icon.
The following table shows the meaning of the icons:

Icon	Description
	Online and offline configuration are identical
	Online and offline configuration are different
	Configuration only exists online

Shortcut menu commands

The following table shows the shortcut menu commands for the "Long-term traces" folder:

Shortcut menu command	Description
"Add new group"	Adds a new folder.
"Add new long-term trace"	Adds a new long-term trace configuration and opens the Configuration tab.

The following table shows the shortcut menu commands for long-term trace configurations and installed long-term traces / :

Shortcut menu command	Long-term trace configuration	Installed long-term trace	Description
"Copy"	x	-	Copies the long-term trace configuration or installed long-term trace to the clipboard.
"Paste"	x	-	Inserts a long-term trace configuration or measurement from the clipboard.
"Delete"	x	x	Deletes the selected objects from the project tree or from the device.
"Rename"	x	-	Switches the selected object to the editing mode.

The long-term trace configuration can also be copied across devices within the same device family.

4.2 Working area

4.2.1 User interface - trace toolbar

Tools are available for handling the trace via buttons.
The following table shows the functions of the buttons:

Icon	Description
	Transfer the selected trace configuration to the device The selected trace configuration is transferred to the device.
	Transfer the selected trace configuration from the device The selected configuration is applied as new trace configuration to the "Traces" system folder. The current display options are included in the new trace configuration. A trace configuration of the same name is overwritten in the system folder.
	Observe on/off Change of the display between online and offline. Monitoring is not possible in the Bode diagram. **Note** Once monitor and automatic scaling are activated at the same time, no more actions can be undone using the "Undo" button. **Note**

Icon	Description
	When an installed trace is first started the display in the curve diagram is set to automatic scaling by default. Make sure when the recording is restarted that any changes to the scaling settings are retained. Reactivate automatic scaling manually if necessary in order to monitor the recording.
	Activate recording If the recording of an installed trace is repeated, then the settings relevant for the display (curve diagram and signal table) are also retained for the new recording. **Note** When a recording is restarted, the previously recorded values are lost. To save the recorded values, save the measurement in the project (Page 81) before you activate the recording again.
	Deactivate recording
	Delete installed trace Deletes the selected trace from the device.
	Automatically repeat recording After a recording, the recording is automatically activated again. The display of the curve diagram is refreshed when the recording is completed. This type of refresh is particularly suitable for monitoring fast signals (Page 82).
	Transfer the selected measurement from the device to the project The measurement is added to the "Measurements" system folder. **Note** Only the data loaded from the device is saved. This data is displayed in the curve diagram. If necessary, wait until the display is updated.
	With long-term trace measurements The measurement is added to the "Long-term trace measurements" system folder. **Note** Only the data loaded from the device is saved. The data is only displayed in the time diagram after recording has stopped.
	Export trace configuration Exports a trace configuration as a file with the file extension "*.ttcfgx". For reasons of compatibility with V12, the "*.ttcfg" file extension is supported, although it does not contain any information about the device family.
	Generate a trace configuration Generates a new trace configuration from the measurement.
	Export measurement with the settings from the current view Exports a measurement as a file with the file extension "*.ttrecx" or "*.csv". For reasons of compatibility with V12, the "*.ttrec" file extension is supported, although it does not contain any information about the device family.
	Signal filter Filters the signal table by the signals matching the diagram type. If you are in the Bode diagramtab, for example, only calculated Bode signals are displayed in the signal table when the signal filter is set. **Note** The signal filter does not hide a signal when an invalid value is listed in the "Formula" column of the signal table.
	Import measurement (only with combined measurements) Imports a measurement from a file with the file extension "*.ttrecx". For reasons of compatibility with V12, the "*.ttrec" file extension is supported, although it does not contain any information about the device family.

Icon	Description
	Export combined measurement (only with combined measurements) The combined measurement is saved with the extension "*.ttcbmx" or "*.csv". The "*.ttcbmx" format can be imported via the shortcut menu in the project tree.
	Select a measurement (only with combined measurements) The drop down list box contains the imported measurements. Select the desired measurement to display the configuration.

4.2.2 User interface - Configuration tab

4.2.2.1 User interface - Configuration

The trace configuration depends on the device and is described at the respective device.

4.2.3 User interface - Time diagram tab

4.2.3.1 User interface - curve diagram

The curve diagram displays the selected signals of a recording. Analog signals are displayed in the upper curve diagram. Binary signals are displayed as bit track in the lower diagram. You can adjust the display of the signals in the signal table (Page 37) and with the toolbar of the curve diagram.
With project trace, the curve diagram displays a finished or canceled recording. Under the device you can monitor any recording.

Setting options and displays in the curve diagram

The following figure shows an example of the display:

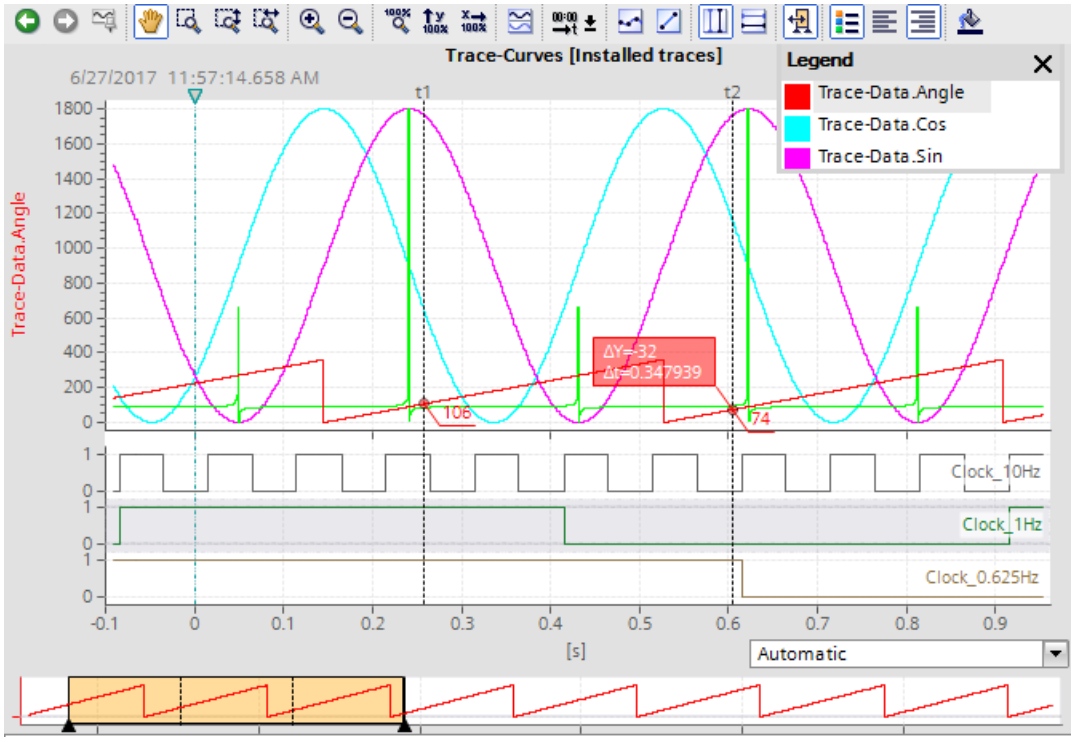

The scale in the diagram applies to the selected (highlighted in gray) signal in the legend. The legend can be moved and its size can be adjusted with the mouse.

The ▽ icon shows the device trigger time with a vertical line.

A drop-down list for selecting the unit is available below the curve for the "Time (relative)" setting for the time axis. The "Automatic" setting automatically adjusts the unit based on the displayed time range.

NOTE

Non-interpretable data types

Some data types require a defined format, e.g. the S7 data type `LTime_of_Day`. If this format is not available, the data type is interpreted as INT.

Functions using the mouse wheel

The following table shows which functions are possible in the curve diagram using the mouse wheel:

Function of the mouse wheel	Description
Move the curve diagram vertically	Turning the mouse wheel moves the display in the upper curve diagram up or down. If the signals are arranged in traces, the display of the group is shifted below the cursor. The mouse pointer must be positioned above the curve with the analog signals.
Move the curve diagram horizontally	Turning the mouse wheel with the <Shift> button pressed down moves the display in the curve diagram to the left or the right. The cursor must be positioned above the curve diagram.
Zoom in and zoom out	Turning the mouse wheel with the <Ctrl> button pressed down zooms in or out of the display in the curve diagram. The cursor position is the starting point for zooming in or out. The value axis of the lower curve diagram (bit tracks) is not affected. The cursor must be positioned above the curve diagram.

Functions using the keyboard

The following table shows which keyboard commands are possible with a focus on the curve diagram:

Shortcut key	Description
Selecting a measurement cursor	
<Ctrl+Shift+1>	The vertical measurement cursor t1 is selected or deselected.
<Ctrl+Shift+2>	The vertical measurement cursor t2 is selected or deselected.
<Ctrl+Shift+3>	The horizontal measurement cursor Y1 is selected or deselected.
<Ctrl+Shift+4>	The horizontal measurement cursor Y2 is selected or deselected.
<Tab>	The next measurement cursor is selected.
Positioning a vertical measurement cursor	
<Left>, <Right>	With the unit "Samples", the selected measurement cursor is moved by one sample by the signal in the foreground. With the unit "Time (relative)", the measurement cursor is moved by one pixel.
<Shift+Left>, <Shift+Right>	With the unit "Samples", the selected measurement cursor is moved by 10 samples by the signal in the foreground. With the unit "Time (relative)", the measurement cursor is moved by 10 pixels.
Positioning a horizontal measurement cursor	
<Up>, <Down>	The selected measurement cursor is moved by one pixel along the value axis.
<Shift+Up>, <Shift+Down>	The selected measurement cursor is moved by 10 pixels along the value axis.

Shortcut key	Description
Display of vertical measurement cursors	
<Ctrl+Space>	The vertical measurement cursors are shown or hidden.
<Ctrl+Shift+Space>	The vertical measurement cursors are shown and centered for the current view.
Changing the view	
<Space>	Move view
<Ctrl+0>	Set 100% view in open editor
<Ctrl++>	Apply zoom in with 10%
<Ctrl+->	Apply zoom out with 10%

Shortcut menu commands

The following table shows the shortcut menu commands in the curve diagram:

Shortcut menu command	Description
"Save diagram as image"	Exports the current display in graphic format, e.g. as a bitmap.
"Copy image to clipboard"	Copies the current display to the clipboard.
"Center measurement cursors"	Positions the activated measurement cursors at a central point in the current display.
"Add to measurements" (only axis control panel and PID)	Adds the displayed recording to the "Measurements" system folder.
"Automatic bit track height"	Automatically adjusts the height of the bit tracks and thereby determines the size of the lower curve diagram. The setting is automatically deactivated once you change the space allocation between the curve diagrams manually. **Note** You can change the vertical space allocation between the upper and lower curve diagram. To do this drag the time axis of the upper curve diagram up or down with the mouse.

Toolbar of the curve diagram

Tools are available for adapting the display via buttons.
The following table shows the functions of the buttons:

Icon	Function	Description
	Undo zoom	Undoes the zoom function executed last. If several zoom functions have been executed, they can be undone step-by-step.
	Redo zoom	Redoes the last undone zoom function. If several zoom functions have been undone, they can be redone step-by-step.

Icon	Function	Description
	Standard view	Uses the current view as standard for this recording. If the trace recording is shown again later, the standard view is restored.
	Move view	Moves the display with the mouse button pressed.
	Zoom selection	Selection of an arbitrary range with the mouse button pressed. The display is scaled to the range selection.
	Vertical zoom selection	Selection of a vertical range with the mouse button pressed. The display is scaled to the range selection.
	Horizontal zoom selection	Selection of a horizontal range with the mouse button pressed. The display is scaled to the range selection.
	Zoom in	Enlargement of the display. The ranges of the time axis and value axis are reduced every time the button is clicked. The curves are displayed larger.
	Zoom out	Reduction of the display. The ranges of the time axis and value axis are increased every time the button is clicked. The curves are displayed smaller.
	Display all	Scales the display of the available data so that the entire time range and all values are displayed.
	Automatic scaling of the value axis	Scaling of the display so that all values are displayed for the currently displayed time range. The relative scaling ratio between the signals may change. **Note** The automatic scaling of the value axis is stopped when the zoom function is activated for the value axis. This button reactivates the automatic adjustments to the minimum/maximum values.
	Show the overall time range	Scaling of the display so that the values in the value range currently displayed are displayed for the overall time range. The value range displayed only then changes if "Display all values" is activated. **Note** The automatic scaling of the time axis is stopped when a zoom function is activated for the time axis. This button reactivates the automatic adjustments for the time range.
	Arrange in tracks	Activate or deactivate the trace arrangement. When the trace arrangement is activated the signals are arranged among themselves with the relevant value axes. Scaling groups are displayed in the same trace. This setting does not affect the display for the bit tracks.
	Unit changeover of the time axis	Switching the unit of the time axis The following units are adjustable: • "Samples" • "Time (relative)" Relative time related to the trigger time • "Time stamp of the samples"

Icon	Function	Description
	Display samples	The samples are displayed as small circles on the curves.
	Interpolated representation	Linear interpolation between two consecutive measuring points for floating point numbers If linear interpolation is not enabled (default), the connection between the measuring points is drawn in steps.
	Display vertical measurement cursors	Display of the vertical measurement cursors. The vertical position of the two measurement cursors can be moved with the mouse. The associated measured values and the difference of the measurement cursors corresponding to the position are shown in the signal table. Display the "Measurement cursor" pane (Page 58) in the Trace task card in order to display further information. Also use the cursor keys. The following actions are possible for vertical measurement cursors with the cursor keys: • Select • Positioning • Show or hide measurement cursor • Center measurement cursors
	Display horizontal measurement cursors	Display of the horizontal measurement cursors. The horizontal position of the two measurement cursors can be moved with the mouse. Display the "Measurement cursor" pane (Page 58) in the Trace task card in order to display the values or to reposition the measurement cursor through entering the position. Also use the cursor keys. The following actions are possible for horizontal measurement cursors with the cursor keys: • Select • Positioning
	Show/hide time range display	Show or hide the time range display below the curve The time range display shows the area in the curve in yellow based on a selected signal. The yellow area can be moved with the mouse and the borders can be changed horizontally. 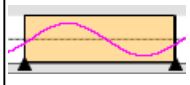
	Show/hide chart legend	Showing or hiding of the legend in the curve diagram and the bit track labels.
	Align the chart legend to the left	Display of the legend and the bit track labels on the left side of the curve diagram.
	Align the chart legend to the right	Display of the legend and the bit track labels on the right side of the curve diagram.
	Change background color	Changeover between various background colors.

4.2.3.2 User interface - signal table

The signal table lists the signals of the selected measurement and provides setting options for some properties.
Trace settings can be changed on the device in online mode. The changes of the display options can be applied to the project using the button. Otherwise the changes are discarded during the switch to offline mode.
If the installed trace is added to the measurements, the current settings of the signal table are saved in the measurement.
The signals can be sorted using drag-and-drop. The bits of a signal can be resorted within a signal.

Setting options and displays in the signal table

The following figure shows an example of the display:

			Si...	Name	Data type	Display format	Address	Formula		Color	Scaling gro...	Min. Y scale	Max. Y scale	Y(t1)	Y(t2)	Delt...	Unit	Comment
1			$0	"Trace-Data"....	Int	Dec +/-					Temp	0	1800	106	74	-32		
2			$1	"Trace-Data".C...	Real	Floating point					Temp	0	1800	-27....	27....	55....		
3			$2	"Trace-Data".Sir	Real	Floating point						-99.99971	99.99997	96....	96....	-0.0...		

The following table shows the settings and displays of the recorded signals:

Column	Description
"Status" (Only project trace in online mode)	Status display
	No online connection
	Configuration only exists offline
	Online and offline configuration are different
	No access right
	Online and offline configuration are identical
Signal or error symbol	
	Signal
	Failsafe signal
	Signal from a data block
	Signal from a failsafe data block
	Calculated signal (formula)
	Error in the formula of the calculated signal
	Selection for display in the curve diagram - a maximum of 16 signals can be selected. The point indicates that at least one bit has been selected for display as bit track for the signal in the bit selection.
"Signal reference" (only trace)	Automatically generated number of the signal The signal are accessed via the signal reference in the formulas.
"Device" (project trace only)	Display of the device name

Column	Description
"Name"	Display of the signal name A click on the name of a displayed signal updates the scale in the curve diagram. You can enter a name for a calculated signal in the last line without a signal symbol. The calculated signal is entered with its name.
"Measurement" (Only combined measurements)	Display of the measurement Shows the name of the measurement to which the signal belongs.
	Open bit selection Individual bits can also be selected for the following data types for display as a bit track in the lower curve diagram: • Byte, Word, DWord, LWord • SInt, USInt, Int, UInt, DInt, UDInt, LInt, ULInt Example of an opened bit selection for the DWORD data type: $0 "Tag_1" Byte Dez %MB10 $1 "Tag_2" DWord Dez %MD20 $1.x0 Bool Bin %M23.0 $1.x1 Bool Bin %M23.1 $1.x2 Bool Bin %M23.2 Select or deselect the relevant bit for display by clicking the icon.
Bode	Automatically generated Bode signals Bode signals are automatically generated for amplitude and phase after entering a Bode formula for a signal. Click on the arrow to display the Bode signals.
"Data type"	Display of the data type
"Display format"	Display format of the signal The display formats supported for the signal are offered for selection. A display format suitable for the data type is set with "Default".
"Address"	Display of the address of the signal The field remains empty with optimized / type correct tags.
"Formula" (only trace)	Display or entry of a formula A formula can contain mathematical functions with numbers and signals. Use the formula editor to conveniently create formulas.
	Call of the formula editor for calculated signals Click on the icon to open the formula editor.
"Color"	Display and setting option for the color of the signal
"Scaling group"	Display or input of the scaling group name for one scaling group The Y-scales are scaled identically for all signals of one scaling group. Enter an identical scaling group name for those signals that are to be scaled identically. Remove signals from the scaling group by deleting the scaling group name. The scaling groups are saved via the function "Use current view as standard" (button). **Notes** You cannot group binary signal events. In hex display format, group only the signals with a format compatible to the sign for the display. This setting is not available for the Bode diagram.

Column		Description
	Gray field for chain icon	Move the cursor over the gray field or the chain icon (or) to add the signal to a scaling group or delete the signal from the scaling group. Clicking the chain icon adds the signal to a scaling group or creates a new scaling group. Clicking the chain icon removes the signal from the scaling group. For a selected signal with scaling group, the chain icon displays all signals of the same scaling group.
	Input field	The input field displays the scaling group name. As an alternative to the chain icon, you can assign or delete a group name via text input in this field.
"Min. Y-scale"		Display or input of the minimum value for the scaling of the signal
"Max. Y-scale"		Display or input of the maximum value for the scaling of the signal
"Y(t1)"		Display of the value at the position of the first measurement cursor
"Y(t2)"		Display of the value at the position of the second measurement cursor
"ΔY"		Display of the value difference between the first and the second measurement cursor
		Selection of the automatic scaling of the value axis for the signal When the check box is selected, the minimum and maximum values for scaling the signal are adjusted so that all values are displayed for the currently displayed time range. The button on the toolbar of the curve diagram activates automatic scaling for all scalable signals.
"Unit"		Display of the unit For example, for unit-based values from technology objects
"Comment"		Display and input option for a comment about the signal

Shortcut menu commands

The following table shows the shortcut menu commands of the signal table:

Shortcut menu command	Description
"Insert calculated signal"	Inserts a re-calculated signal at the top in the table
"Edit formula"	Opens the formula editor for the calculated signal
"Cut"	Cannot be selected
"Copy"	Copies the contents of the selected lines to the clipboard.
"Paste"	Cannot be selected
"Delete"	Cannot be selected
"Rename"	Cannot be selected
"Display format"	Allows you to switch the display format The display formats supported for the signal are offered for selection.
"Display signal(s)"	Displays the selected signals in the curve diagram.
"Hide signal(s)"	Hides the selected signals in the curve diagram.

See also

Use of the signal table (Page 85)
Using the signal group in the signal table (Page 85)

4.2.3.3 Interface - Formula editor

The formula editor provides various mathematical functions for analyzing signals. Open the editor in the signal table by clicking .

Configuration options and displays in the formula editor

The following figure shows an example of the display:

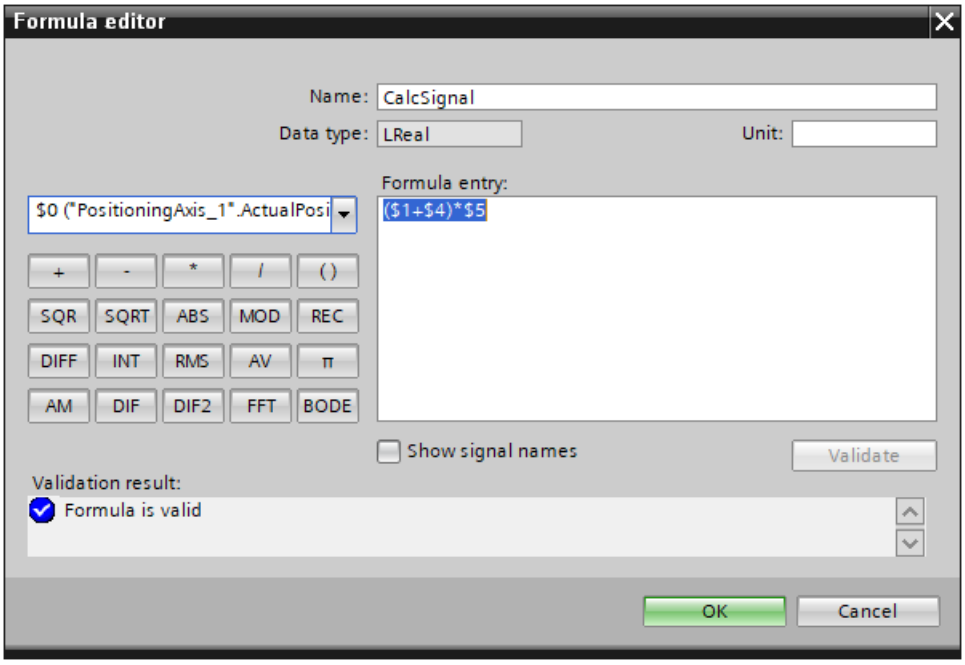

Figure 4-1 Formula editor

The following table shows the configuration options and displays of the formula editor:

Field/Button	Description
"Name"	Display and input of the name for the created formula The name must be unique and only contain characters that are allowed in Windows file names.
"Data type"	Display of formula data type The data type is pre-assigned with a floating-point number of LREAL type and cannot be changed.
"Unit"	Display and input of a unit Freely specified user-defined unit.

1) The constant

Field/Button		Description
Drop-down list with signals		Selection of the signals The drop-down list contains the signals from the signal table and inserts a selected signal into the formula.
"Formula entry"		Text field to display and enter the formula Create a formula by typing into this text box or by using the buttons for the mathematical functions. Signals can be referenced in the text box using the signal reference with a prefixed $ character or the name in double quotes in the formula. Mixed input is possible. Restrictions: • Bits from a bit selection (e.g. below the INT data type) are not allowed in the formula. • Do not use any signal references to a tag in the formula that start with "$", for example, `$0("$0")`.
Mathematical functions		
	+	Addition
	-	Subtraction
	*	Multiplication
	/	Division
	()	Brackets Grouping expressions
	SQR	Square
	SQRT	Square root
	ABS	Absolute value Calculates the size of a number. **Examples** `ABS(5)` → 5 `ABS(-3)` → 3 `ABS(-3.14)` → 3.14
	MOD	Modulo Calculates the residual value of a division **Examples** `MOD(5,3)` → 2 `MOD(3.14,3)` → 0.14
	REC	Reciprocal value (1/x)
	DIFF [1)]	Numerical differentiation **Examples** Formula: `DIFF($0,SAMPLETIME)`
	INT [1)]	Numerical integration **Examples** Formula: `INT($0,SAMPLETIME)`
	RMS [1)]	Quadratic mean The squares of all measured values are totaled and then divided by the number of measured values. The quadratic mean is the square root of this value. **Examples** Formula: `RMS($0,SAMPLETIME)`

[1)] The constant

Field/Button		Description
	AV	Mean value filter from 1st to 5th order If the specification of an order is missing, the mean filter of the 1st order is used. **Examples** `AV($0,1)` → Mean filter 1st order `AV($0,5)` → Mean filter 5th order
	π	Mathematical constant Pi
	AM	Arithmetic mean The arithmetic mean is a moving average over five samples.
	DIF	Simple subtraction with mean filter from 1st to 5th order If the specification of an order is missing, simple subtraction is performed with a 1st order filter. **Examples** `DIF($0,1)` → Single subtraction with 1st order filter `DIF($0,5)` → Single subtraction with 5th order filter `DIF($0)` → Single subtraction with 1st order filter **Example: Calculate an acceleration curve from a velocity signal** `$0`: Velocity signal in meters per second Cycle time of the constant cycle velocity recording: 1 ms Formula: `DIF($0,1)/0.001` Unit: m/s^2
	DIF2	Double subtraction with mean filter from 1st to 5th order If the specification of an order is missing, then double subtraction is executed with a 1st order filter. **Examples** `DIF2($0,1)` → Double subtraction with 1st order filter `DIF2($0,5)` → Double subtraction with 5th order filter `DIF2($0)` → Double subtraction with 1st order filter **Example: Calculate an acceleration curve from a position sequence** `$0`: Position sequence in meters Cycle time of the constant cycle position recording: 1 ms Formula: `DIF2($0,1)/SQR(0.001)` Unit: m/s^2
	FFT	Fast Fourier transform A calculated signal as input parameter or calculations for the parameters are not permitted. Additional calculations with the FFT function are not permitted. **Mandatory parameters** An analog signal must be specified for the input parameter. Permitted data types: SINT, INT, DINT, LINT, USINT, UINT, UDINT, ULINT, REAL, LREAL, BYTE, WORD, DWORD, LWORD **Optional parameters**

Field/Button		Description

		The following parameters can be optionally specified:
		• RemoveDirectCurrent
		Remove direct current component
		Data type Bool
		If the parameter is not set, "true" is assumed as the default (Remove direct current component).
		• RangeStart
		Index of the first sample to be displayed.
		The index of the samples is displayed on the X axis in the FFT diagram.
		If the parameter is not set, the first sample of the measurement is assumed as the default.
		• RangeEnd (RangeStart required)
		Index of the last sample to be displayed.
		The index of the samples is displayed on the X axis in the FFT diagram.
		If the parameter is not set, the last sample of the measurement is assumed as the default.
		Valid examples
		$0=Input signal
		`FFT($0,true)`
		`FFT($0,0,1000)`
		`FFT($0,false,0,1000)`
		Invalid examples
		`FFT($0,20)`
		`FFT($0,0)`
		`FFT($0,1000,0)`
		`FFT($0)+10`
		`FFT($0)+SQRT($5)`

	BODE	Bode diagramwith amplitude and phase
		Calculated signals as parameter or calculations for the parameters are not permitted.
		Additional calculations with the Bode function are not permitted.
		Mandatory parameters
		Analog signals must be specified for the parameters of the input and output signal.
		Permitted data types for the parameters:
		SINT, INT, DINT, LINT, USINT, UINT, UDINT, ULINT, REAL, LREAL, BYTE, WORD, DWORD, LWORD
		Optional parameters
		The following parameters can be optionally specified:
		• RangeStart
		Index of the first sample to be displayed.
		The index of the samples is displayed on the X axis in the Bode diagram.
		If the parameter is not set, the first sample of the measurement is assumed as the default.
		• RangeEnd (RangeStart required)
		Index of the last sample to be displayed.
		The index of the samples is displayed on the X axis in the Bode diagram.
		If the parameter is not set, the last sample of the measurement is assumed as the default.
		Valid examples
		$0=input signal, $1=output signal
		`BODE($0,$1)`
		`BODE($0,$1,0,1000)`
		Invalid examples
		`BODE($0,20)`
		`BODE($0,$1,0)`

Field/Button		Description
		BODE($0,$1,1000) BODE($0+1,0) BODE($0,$1)+10 BODE($0,$1)+SQRT($5)
"Show signal name"		Display of the signal names If the check box is selected, the signal names in the formula are displayed instead of the signal references.
"Validate"		Check the validity of the formula
"Result of validation"		Result of validation Displays the result of the validation and indicates errors and error locations.
"OK"		Transfer the entries in the formula editor
"Cancel"		Discard the entries in the formula editor

1) The constant

NOTE

The functions DIF, DIF2, DIFF, AM, RMS, AV and INT can only process one recorded signal as argument. Not all invalid formulas are marked as errors.

4.2.3.4 User interface - Measurements (overlay measurements)

The Measurements tab displays the individual measurements and among other things provides the setting options for synchronization.

Setting options and displays in the Measurements tab

The following figure shows an example of the display:

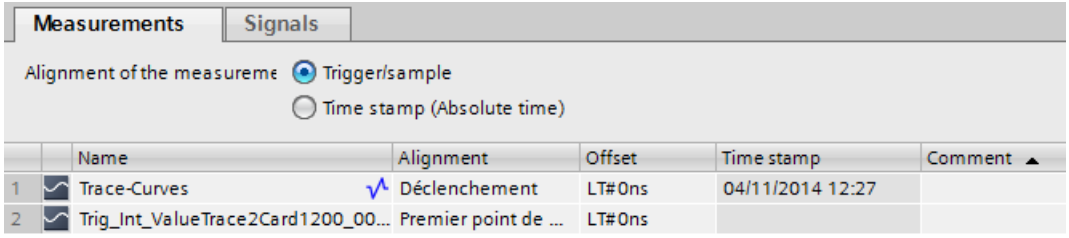

The following table shows the settings and displays for the measurements:

Column		Description
Alignment of the measurements (not available for the Bode diagram)		
	"Trigger/measurement point"	Alignment of the measurements in accordance with the trigger or measurement point The individual zero point for the measurement is predefined in the table under the "Alignment" column.
	"Time stamp (absolute time)"	Alignment of the measurements in accordance with their time stamp The signals are aligned in accordance with the time from the absolute time stamp.

Column	Description
Table columns	
	Static display of the measurement icon
"Name"	Display and change options for the measurement name The name must be a unique one and can be changed.
"Alignment"	Alignment of the measurement (only adjustable with the "Trigger/measurement point" check box activated) Determines the individual zero point for a measurement. All signals for the measurement are displayed in relation to this zero point. The following settings are possible: • Trigger • First sample after the trigger event • First sample • Last measurement point This setting is not available for the Bode diagram.
"Offset"	Offset related to the time axis Moves the measurement left or right by the offset stated on the time axis. The offset can also be transferred via the clipboard to the cell from the ΔX value of the measurement cursor. See Aligning measurements with measurement cursor (Page 89). This setting is not available for the Bode diagram.
"Time stamp"	Display of the trigger time
"Comment"	Display and input option for a comment about the signal

Shortcut menu commands

The following table shows the shortcut menu commands of the signal table:

Shortcut menu command	Description
"Cut"	Cannot be selected
"Copy"	Copies the contents of the selected lines to the clipboard.
"Paste"	Cannot be selected
"Delete"	Cannot be selected
"Rename"	Switches the selected cell to the editing mode.
"Import measurement"	Imports a measurement from a file, e.g. with the "*.ttrecx" file extension. The import is device-independent and also suitable, for example, for comparing measurements of a PLC with the measurements of a drive device. For reasons of compatibility, the "*.ttrec" file extension is supported in V12, although it does not contain any information about the device family.
"Export measurement"	Exports a measurement as a file with the extension "*.ttrecx" or "*.csv". For reasons of compatibility, the "*.ttrec" file extension is supported in V12, although it does not contain any information about the device family.

4.2.4 User interface - FFT diagram tab

4.2.4.1 User interface - curve diagram

The FFT diagram shows the frequency spectra of measured signals calculated with the FFT formula.

The Y axis shows the amplitude. The display of values on the Y axis is linear.

The X axis represents the frequency in Hertz. You can set the display of values on the X axis as linear or logarithmic.

Setting options and displays in the curve diagram

The following figure shows an example of the display:

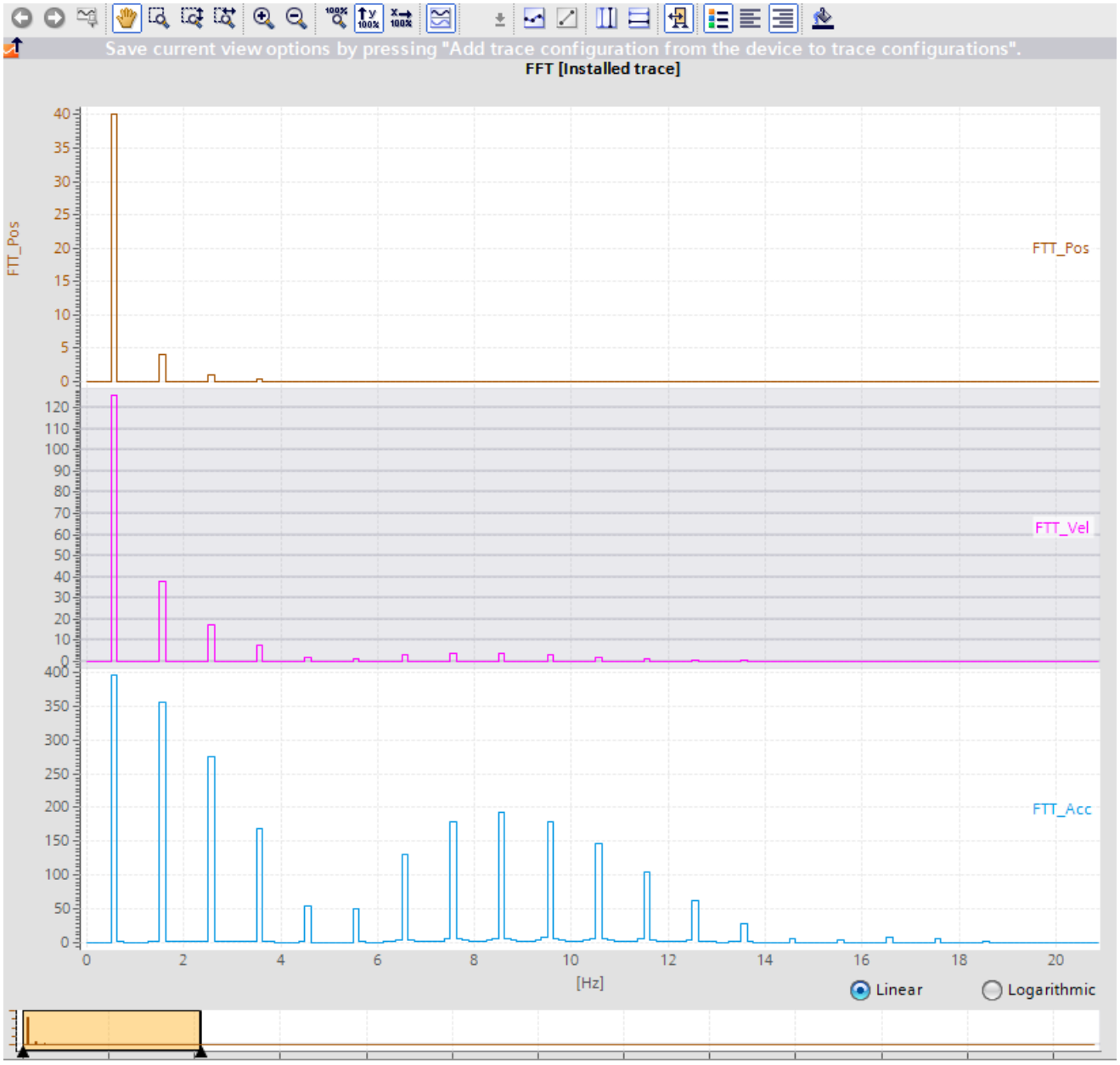

Below the curve diagram, you can change the partitioning of the X axis with the options "Linear" and "Logarithmic".

Functions using the mouse wheel

The following table shows which functions are possible in the curve diagram using the mouse wheel:

Function of the mouse wheel	Description
Move the curve diagram vertically	Turning the mouse wheel moves the display in the upper curve diagram up or down. If the signals are arranged in traces, the display of the group is shifted below the cursor. The mouse pointer must be positioned above the curve diagram with the analog signals.
Move the curve diagram horizontally	Turning the mouse wheel with the <Shift> button pressed down moves the display in the curve diagram to the left or the right. The cursor must be positioned above the curve diagram.
Zoom in and zoom out	Turning the mouse wheel with the <Ctrl> button pressed down zooms in or out of the display in the curve diagram. The cursor position is the starting point for zooming in or out. The value axis of the lower curve diagram (bit tracks) is not affected. The cursor must be positioned above the curve diagram.

Functions using the keyboard

The following table shows which keyboard commands are possible with a focus on the curve diagram:

Shortcut key	Description
Selecting a measurement cursor	
<Ctrl+Shift+1>	The vertical measurement cursor t1 is selected or deselected.
<Ctrl+Shift+2>	The vertical measurement cursor t2 is selected or deselected.
<Ctrl+Shift+3>	The horizontal measurement cursor Y1 is selected or deselected.
<Ctrl+Shift+4>	The horizontal measurement cursor Y2 is selected or deselected.
<Tab>	The next measurement cursor is selected.
Positioning a vertical measurement cursor	
<Left>, <Right>	With the unit "Samples", the selected measurement cursor is moved by one sample by the signal in the foreground.
<Shift+Left>, <Shift+Right>	With the unit "Samples", the selected measurement cursor is moved by 10 samples by the signal in the foreground.
Positioning a horizontal measurement cursor	
<Up>, <Down>	The selected measurement cursor is moved by one pixel along the Y axis.
<Shift+Up>, <Shift+Down>	The selected measurement cursor is moved by 10 pixels along the value axis.
Display of vertical measurement cursors	
<Ctrl+Space>	The vertical measurement cursors are shown or hidden.

Shortcut key	Description
<Ctrl+Shift+Space>	The vertical measurement cursors are shown and centered for the current view.
Changing the view	
<Space>	Move view
<Ctrl+0>	Set 100% view in open editor
<Ctrl++>	Apply zoom in with 10%
<Ctrl+->	Apply zoom out with 10%

Shortcut menu commands

The following table shows the shortcut menu commands in the curve diagram:

Shortcut menu command	Description
"Center measurement cursors"	Positions the activated measurement cursors at a central point in the current display.

Toolbar of the curve diagram

Tools are available for adapting the display via buttons.
The following table shows the functions of the buttons:

Icon	Function	Description
	Undo zoom	Not used
	Redo zoom	Not used
	Standard view	Not used
	Move view	Moves the display with the mouse button pressed.
	Zoom selection	Selection of an arbitrary range with the mouse button pressed. The display is scaled to the range selection.
	Vertical zoom selection	Selection of a vertical range with the mouse button pressed. The display is scaled to the range selection. Depending on the mouse position, the selection influences either the amplitude response or the phase response.
	Horizontal zoom selection	Selection of a horizontal range with the mouse button pressed. The display is scaled to the range selection.
	Zoom in	Enlargement of the display. The ranges of the time axis and value axis are reduced every time the button is clicked. The curves are displayed larger.
	Zoom out	Reduction of the display. The ranges of the time axis and value axis are increased every time the button is clicked. The curves are displayed smaller.

Icon	Function	Description
	Display all	Scales the display of the available data so that the entire time range and all values are displayed.
	Automatic scaling of the value axis	Scaling of the display so that the entire value range is displayed for the set time range.
	Show the overall time range	Scaling of the display so that the values in the value range currently displayed are displayed for the overall time range. The value range displayed only then changes if "Display all values" is activated. **Note** The automatic scaling of the time axis is stopped when a zoom function is activated for the time axis. This button reactivates the automatic adjustments for the time range.
	-	Not used
	Display samples	The samples are displayed as small circles on the curves.
	-	Not used
	Display vertical measurement cursors	Display of the vertical measurement cursors. The vertical position of the two measurement cursors can be moved with the mouse. The associated measured values and the difference of the measurement cursors corresponding to the position are shown in the signal table. Display the "Measurement cursor" pane in the Trace task card in order to display further information. Also use the cursor keys. The following actions are possible for vertical measurement cursors with the cursor keys: • Select • Positioning • Show or hide measurement cursor • Center measurement cursors
	Display horizontal measurement cursors	Display of the horizontal measurement cursors. The horizontal position of the two measurement cursors can be moved with the mouse. Display the "Measurement cursor" pane in the Trace task card in order to display the values or to reposition the measurement cursor through entering the position. Also use the cursor keys. The following actions are possible for horizontal measurement cursors with the cursor keys: • Select • Positioning
	Show/hide time range display	Show or hide the time range display below the curve diagram The time range display shows the area in the curve diagram in yellow based on a selected signal. In the Bode diagram, the time range display has an effect on the frequency. The yellow area can be moved with the mouse and the borders can be changed horizontally.

Icon	Function	Description
	Show/hide chart legend	Showing or hiding of the legend in the curve diagram.
	Align the chart legend to the left	Display of the legend on the left side of the curve diagram.
	Align the chart legend to the right	Display of the legend on the right side of the curve diagram.
	Change background color	Changeover between various background colors.

4.2.4.2 User interface - signal table

See User interface - signal table (Page 37) in the section User interface - Time diagram tab.

4.2.4.3 Interface - Formula editor

See Interface - Formula editor (Page 41) in the section User interface - Time diagram tab.

4.2.5 User interface - Bode diagram tab

4.2.5.1 User interface - curve diagram

The Bode diagram shows the amplitude and phase of the transfer function as a function of the frequency. The X axis represents the frequency in Hertz.
The Y axis shows the following values:

- Amplitude response in the top curve diagram, values linear in decibels
- Phase response in the bottom curve diagram, values linear in degrees

The following requirements must be met for the calculation and display of the Bode diagram:

- The recording cycle must be constant.
- The input signal must contain at least three samples.

The curve diagram is calculated using two measured signals with the Bode formula in the formula editor and displayed.

Setting options and displays in the curve diagram

The following figure shows an example of the display:

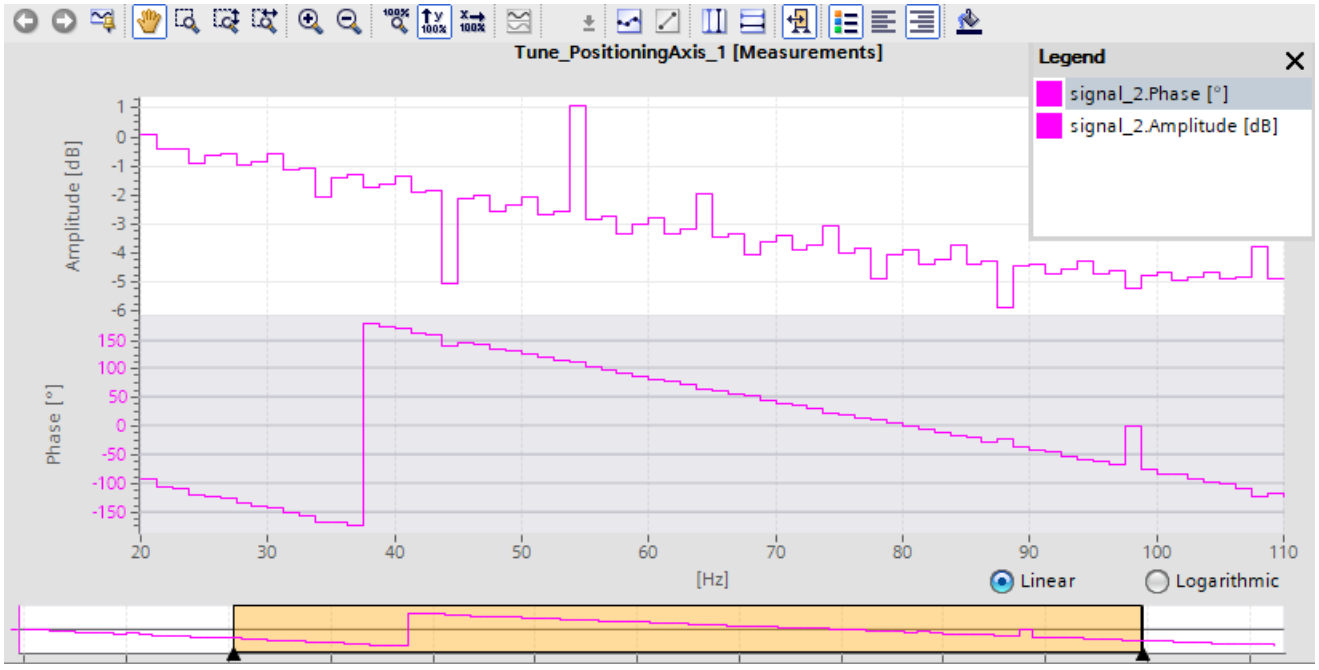

Below the curve diagram, you can change the partitioning of the X axis with the options "Linear" and "Logarithmic".

Functions using the mouse wheel

The following table shows which functions are possible in the curve diagram using the mouse wheel:

Function of the mouse wheel	Description
Move the curve diagram vertically	Turning the mouse wheel moves the display in the upper curve diagram up or down. If the signals are arranged in traces, the display of the group is shifted below the cursor. The mouse pointer must be positioned above the curve with the analog signals.
Move the curve diagram horizontally	Turning the mouse wheel with the <Shift> button pressed down moves the display in the curve diagram to the left or the right. The cursor must be positioned above the curve diagram.
Zoom in and zoom out	Turning the mouse wheel with the <Ctrl> button pressed down zooms in or out of the display in the curve diagram. The cursor position is the starting point for zooming in or out. The value axis of the lower curve diagram (bit tracks) is not affected. The cursor must be positioned above the curve diagram.

Functions using the keyboard

The following table shows which keyboard commands are possible with a focus on the curve diagram:

Shortcut key	Description
Selecting a measurement cursor	
<Ctrl+Shift+1>	The vertical measurement cursor t1 is selected or deselected.
<Ctrl+Shift+2>	The vertical measurement cursor t2 is selected or deselected.
<Ctrl+Shift+3>	The horizontal measurement cursor Y1 is selected or deselected.
<Ctrl+Shift+4>	The horizontal measurement cursor Y2 is selected or deselected.
<Tab>	The next measurement cursor is selected.
Positioning a vertical measurement cursor	
<Left>, <Right>	With the unit "Samples", the selected measurement cursor is moved by one sample by the signal in the foreground.
<Shift+Left>, <Shift+Right>	With the unit "Samples", the selected measurement cursor is moved by 10 samples by the signal in the foreground.
Positioning a horizontal measurement cursor	
<Up>, <Down>	The selected measurement cursor is moved by one pixel along the Y axis.
<Shift+Up>, <Shift+Down>	The selected measurement cursor is moved by 10 pixels along the value axis.
Display of vertical measurement cursors	
<Ctrl+Space>	The vertical measurement cursors are shown or hidden.
<Ctrl+Shift+Space>	The vertical measurement cursors are shown and centered for the current view.
Changing the view	
<Space>	Move view
<Ctrl+0>	Set 100% view in open editor
<Ctrl++>	Apply zoom in with 10%
<Ctrl+->	Apply zoom out with 10%

Shortcut menu commands

The following table shows the shortcut menu commands in the curve diagram:

Shortcut menu command	Description
"Center measurement cursors"	Positions the activated measurement cursors at a central point in the current display.

Toolbar of the curve diagram

Tools are available for adapting the display via buttons.

The following table shows the functions of the buttons:

Icon	Function	Description
	Undo zoom	Not used
	Redo zoom	Not used
	Standard view	Not used
	Move view	Moves the display with the mouse button pressed.
	Zoom selection	Selection of an arbitrary range with the mouse button pressed. The display is scaled to the range selection.
	Vertical zoom selection	Selection of a vertical range with the mouse button pressed. The display is scaled to the range selection. Depending on the mouse position, the selection influences either the amplitude response or the phase response.
	Horizontal zoom selection	Selection of a horizontal range with the mouse button pressed. The display is scaled to the range selection.
	Zoom in	Enlargement of the display. The ranges of the time axis and value axis are reduced every time the button is clicked. The curves are displayed larger.
	Zoom out	Reduction of the display. The ranges of the time axis and value axis are increased every time the button is clicked. The curves are displayed smaller.
	Display all	Scales the display of the available data so that the entire time range and all values are displayed.
	Automatic scaling of the value axis	Scaling of the display so that the entire value range is displayed for the set time range.
	Show the overall time range	Scaling of the display so that the values in the value range currently displayed are displayed for the overall time range. The value range displayed only then changes if "Display all values" is activated. **Note** The automatic scaling of the time axis is stopped when a zoom function is activated for the time axis. This button reactivates the automatic adjustments for the time range.
	-	Not used
	Display samples	The samples are displayed as small circles on the curves.
	-	Not used
	Display vertical measurement cursors	Display of the vertical measurement cursors. The vertical position of the two measurement cursors can be moved with the mouse. The associated measured values and the difference of the measurement cursors corresponding to the position are shown in the signal table. Display the "Measurement cursor" pane in the Trace task card in order to display further information.

Icon	Function	Description
		Also use the cursor keys. The following actions are possible for vertical measurement cursors with the cursor keys: • Select • Positioning • Show or hide measurement cursor • Center measurement cursors
	Display horizontal measurement cursors	Display of the horizontal measurement cursors. The horizontal position of the two measurement cursors can be moved with the mouse. Display the "Measurement cursor" pane in the Trace task card in order to display the values or to reposition the measurement cursor through entering the position. Also use the cursor keys. The following actions are possible for horizontal measurement cursors with the cursor keys: • Select • Positioning
	Show/hide time range display	Show or hide the time range display below the curve The time range display shows the area in the curve in yellow based on a selected signal. In the Bode diagram, the time range display has an effect on the frequency. The yellow area can be moved with the mouse and the borders can be changed horizontally.
	Show/hide chart legend	Showing or hiding of the legend in the curve diagram.
	Align the chart legend to the left	Display of the legend on the left side of the curve diagram.
	Align the chart legend to the right	Display of the legend on the right side of the curve diagram.
	Change background color	Changeover between various background colors.

4.2.5.2 User interface - signal table

See User interface - signal table (Page 37) in the section User interface - Time diagram tab.

4.2.5.3 Interface - Formula editor

See Interface - Formula editor (Page 41) in the section User interface - Time diagram tab.

4.2.6 User interface - Signal selection tab (overlay measurements)

4.2.6.1 User interface - Signal selection (overlay measurements)

The Signal selection tab shows the signals for all measurements and allows signals that are presented in the signal table of the diagram to be preselected.

Setting options and displays in the Signal selection tab.

The following figure shows an example of the display:

		Availa...	Measurement	Name	Data type	Address	Comment
1		☑	Trace-Curves	"Trace-Data".Angle	Int		
2		☑	Trace-Curves	"Trace-Data".Cos	Real		
3		☑	Trace-Curves	"Trace-Data".Sin	Real		
4		☐	Trace-Curves	"Trace-Data".Tan	Real		
5		☑	Trace-Curves	"Clock_10Hz"	Bool	%M100.0	
6		☑	Trace-Curves	"Clock_5Hz"	Bool	%M100.1	

The following table shows the settings and displays for the table:

Column	Description
	Static display of the signal icon
"Available in the diagram"	Selection for the display in the curve diagram When the selection is activated the signal is transferred to the signal table for the curve diagram.
“Measurement”	Display of the measurement to which the signal belongs
“Name”	Display of the signal name
“Data type “	Display of the data type
"Address"	Display of the address (not for symbolic tags)
"Scaling group"	Display of the scaling group name
"Comment"	Display of a comment on the signal

You will find further information on the specific settings in User interface - signal table (Page 37).

Shortcut menu commands

The following table shows the shortcut menu commands for the signal selection:

Shortcut menu command	Description
"Copy"	Copies the content of the selected lines to the clipboard.
“Display selection in the signal table”	The selected signals are displayed in the signal table and are available in the diagram.
“Remove selection from the signal table”	The removed signals are not available in the diagram.

Several objects can be selected.

4.3 Inspector window

4.3.1 Interface - Inspector window

The Inspector window displays general information about the trace.

Additional information is available for measurements:

- Time stamp range
  The availability of the time stamps depends on the configured recording conditions.
- Measuring point range
- Cycle time range
  For equidistant cycle recordings, the time duration between two measurement points is displayed.
  This time, for example, can be used in the formula editor.

Sample time stamp

The following figure shows the time stamps for a measurement:

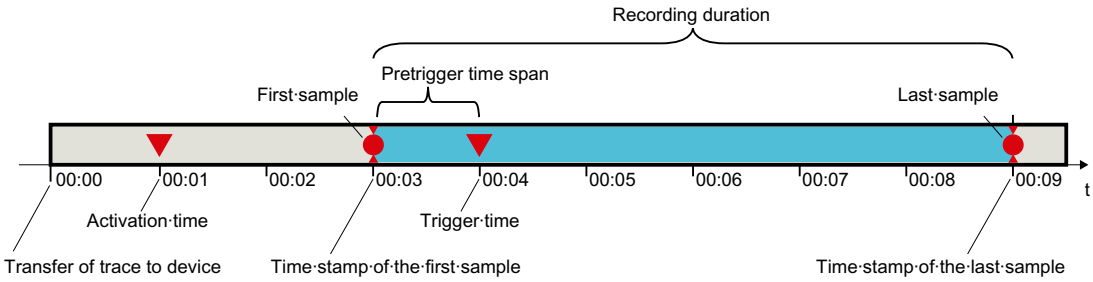

NOTE

Analysis of measurements with sporadically occurring recording condition

When evaluating your measurements, keep in mind that the recording condition between the activation time and the trigger time may not have been fulfilled.

4.4 Trace task card

4.4.1 User interface - Measurement cursor pane

The "Measurement cursor" pane shows the position of the measurement cursor in the curve diagram and the values at the intersection points.

Setting options and displays of the "Measurement cursor" pane

The figure below shows the "Measurement cursor" pane:

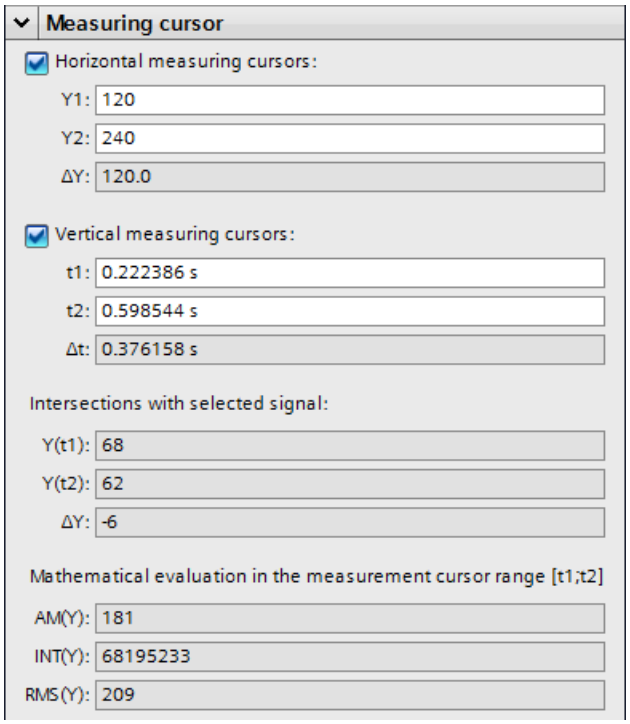

The following table describes the settings and displays:

Setting/display		Description
Horizontal measurement cursor		
	Y1	Position of first measurement cursor The value states the position in relation to the scale of the signal currently selected. You also have the option of specifying a new position for the measurement cursor in this entry field for moving with the mouse.
	Y2	Position of the second measurement cursor The value states the position in relation to the scale of the signal currently selected. You also have the option of specifying a new position for the measurement cursor in this entry field for moving with the mouse.
	ΔY	Display of the position difference between the first and the second measurement cursor
Vertical measurement cursor		
	t1	Position of first measurement cursor You also have the option of specifying a new position for the measurement cursor in this entry field for moving with the mouse.
	t2	Position of the second measurement cursor You also have the option of specifying a new position for the measurement cursor in this entry field for moving with the mouse.

Setting/display		Description
	Δt	Display of the position difference between the first and the second measurement cursor
Intersection points with selected signal		
	Y(t1)	Display of the value at the position of the first measurement cursor
	Y(t2)	Display of the value at the position of the second measurement cursor
	ΔY	Display of the value difference between the first and the second measurement cursor
Mathematical analysis in the range of the measurement cursor·[t1;t2] for the selected signal (not for Bode diagram)		
	AM(Y)	Mean The arithmetic mean is calculated for the range between the vertical measurement cursors.
	INT(Y)	Integral The integral is calculated for the range between the vertical measurement cursors.
	RMS(Y)	RMS value The root-mean square (RMS value) is calculated for the range between the vertical measurement cursors.

See also

User interface - curve diagram (Page 32)

4.4.2 User interface - Snapshots pane

The "Snapshots" pane allows the user to save and restore different views for a measurement. A snapshot is taken of the current view in the "Timing diagram" or "Bode diagram" tab. The snapshots are saved in the measurement with the project.

Setting options and displays of the "Snapshots" pane

The figure below shows the "Snapshots" pane:

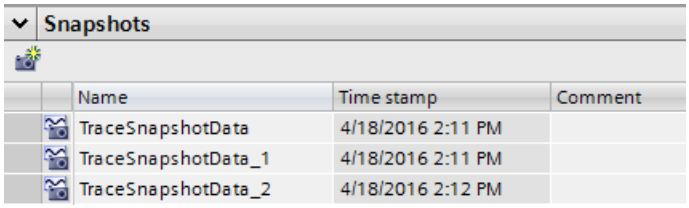

The following table shows the functions of the buttons:

Icon	Description
	Generate snapshot of the current view Saves the current view as a snapshot in the "Timing diagram" or "Bode diagram" tab.

The following table shows the settings and displays:

Column	Description
	Static display of the snapshot symbol
"Name"	Display and change options for the name
"Time stamp"	Display of the snapshot generation time
"Comment"	Display and input option for a comment

Several rows can be selected and deleted.

Double-clicking on a row opens the measurement with the saved view in the "Time diagram" or "Bode diagram" tab.

Shortcut menu commands

The following table shows the shortcut menu commands of the table:

Shortcut menu command	Description
"Restore snapshot"	Shows the measurement with the saved view in the "Time diagram" or "Bode diagram" tab.
"Delete"	Deletes the snapshot
"Rename"	Switches the cell to the editing mode

Several rows can be selected and deleted.

Project trace software user interface

5

5.1 Structure of the user interface

The user interface of the project trace consists of several combined areas.
The figure below shows an example of the layout of the user interface:

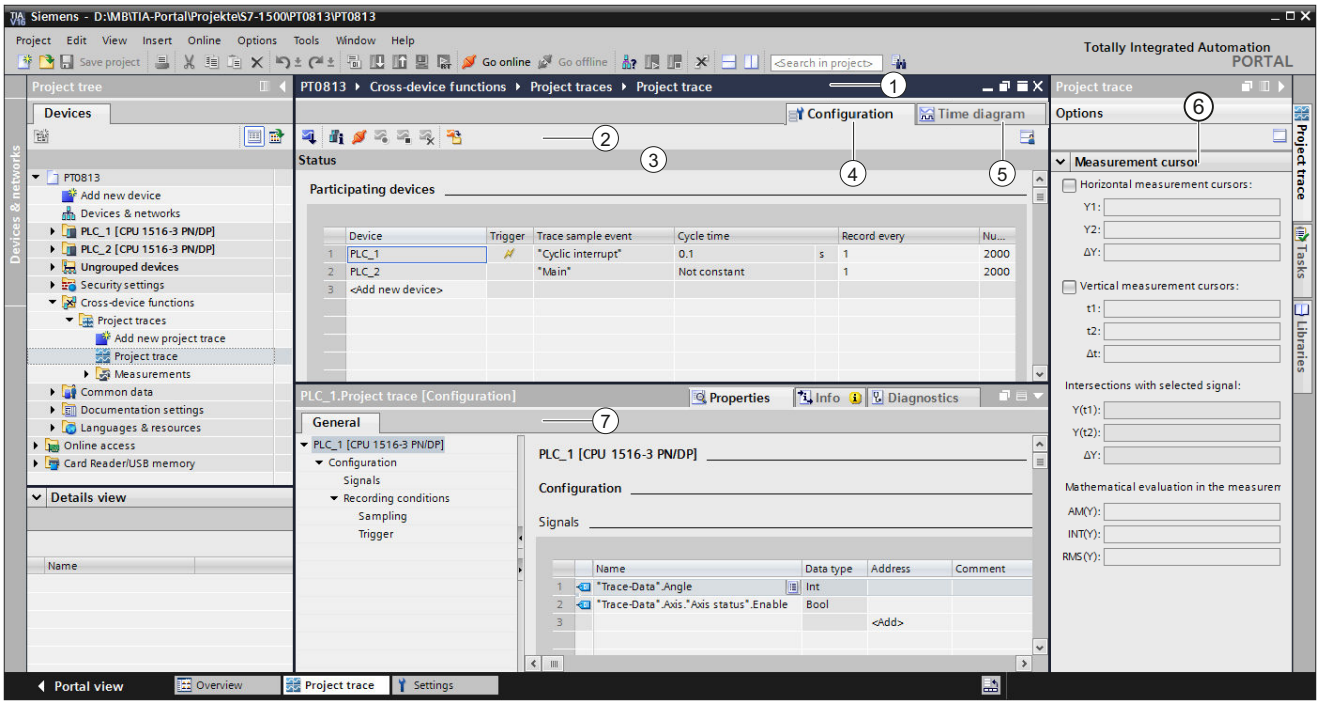

Project tree Manage and create project traces and measurements directly in the project tree and via shortcut-menu commands.	
Working area	
	① Title bar of the working area Displays the name of the project trace.
	② Project trace toolbar Buttons to manage the project traces: • Transfer trace configurations to the devices • Display status overview of participating devices • Establish online connection to participating devices • Activating/deactivating project traces • Deleting project traces • Transferring measurements from the devices to the project
	③ Status display of the project trace Display of the current status of the recording.

	④ Configuration tab Configuration of the participating devices and signals for the project trace.
	⑤ Time diagram tab Display of the recorded values as a curve diagram and the signals from the displayed measurement. Specification of the display options.
"Trace" task card⑥ Display of the measurement cursor data with mathematical evaluation ⑥ and snapshots.	
Inspector window⑦ Device-specific configuration of the recording duration, trigger condition and signal selection. Display of general information about the project trace.	

5.2 Project tree

5.2.1 User interface - Project tree folder "Cross-device functions" - "Project traces"

Project trace configurations and measurements are shown in the system folder "Project traces".
Double-click a project trace to open the corresponding "Configuration" or "Time diagram" tab in the working area.

Symbols in the "Project traces" folder

The following table explains the symbols in the folder "Project traces":

Icon	Description
	Adding a project trace configuration Double-click the symbol to add a new project trace configuration and open the "Configuration" tab.
	Project trace configuration Double-click the icon to open the "Configuration" or "Time diagram" tab.
	"Measurements" folder The folder contains combined measurements that were added using the button. The measurements are compatible with the combined measurements within the devices. The configurations of the individual measurements are displayed when the combined measurement is copied or moved to the corresponding folder of a device.
	Measurement Double-click the icon to open the "Time diagram" tab.

Shortcut menu commands

The following table shows the shortcut-menu commands for the system folder "Project traces":

Shortcut menu command	Description
"Add new project trace"	Adds a new project trace and opens the "Configuration" tab.

The following table shows the shortcut-menu commands for the project trace configuration :

Shortcut menu command	Description
"Delete"	Deletes the selected objects from the project tree or from the device.
"Rename"	Switches the selected object to the editing mode.

NOTE

Shortcut menu commands for the "Measurements" system folder

The shortcut commands are described in User interface - “Overlay measurements” project tree folder (Page 27).

You can export measurements of the project trace as combined measurement and import them again under a device. For the import, use the shortcut menu of the system folder "Combined measurements" under the device.

5.3 Working area

5.3.1 User interface - Project trace toolbar

Buttons provide tools for handling the project trace.
The following table shows the functions of the buttons:

Icon	Description
	Transferring the trace configurations to the devices The trace configurations are transferred to the participating devices.
	Display of the status overview Shows the status overview of the participating devices (Page 65).
	Establishing an online connection The online connection to the participating devices is established.
	Activate recording If the recording of an installed trace is repeated, then the settings relevant for the display (curve diagram and signal table) are also retained for the new recording. You cannot redo an interrupted recording. **Note**

Icon	Description
	When a recording is restarted, the previously recorded values are lost. To save the recorded values, save the measurement in the project before you activate the recording again.
	Deactivate recording Deactivates the traces in all devices that can be reached online.
	Delete traces from devices Deletes the traces from the participating devices that can be reached online.
	Transferring measurements from the devices to the project The measurements are added to the system folder "Measurements". **Note** Only the data loaded from the devices is saved. This data is displayed in the curve diagram. If necessary, wait until the display is updated.

5.3.2 User interface - status overview of the participating devices

The dialog shows status information about the participating devices.

For participating devices with status without error, you can apply trace configurations to the devices.

Display in the status overview table

The following table shows the displays of the status overview:

Column	Description
-	Display of whether there is an error for the project trace in the participating device or whether the trace configuration is faulty. A tooltip above the symbol displays information about the cause of the error.
	Meaning in offline mode • Configured trace is faulty **Meaning in online mode** • Configured trace is faulty • Recording was interrupted • Connection error
Device	Display of the device name
Device status	Status display of the online connection
	Offline
	Connect or disconnect
	Online
Trace status	Status display of the devices If there is an existing online connection, a symbol indicates the status of the trace configuration for the corresponding device. In addition, the trace status for the device is displayed, for example, "Monitoring". **Note** If only one device in the project trace shows the "Monitoring" trace status, the project trace is not working correctly; there is no time synchronization between the devices.

Column	Description
	Online and offline configuration are identical
	Online and offline configuration are different
	Configuration only exists offline

Remedy for errors

The following list shows possible sources of error and the remedy.

- Firmware
  With the devices it is described if and from which firmware a device supports the project trace.
- Trace configuration
  Check the settings for the respective device in the "Properties" tab of the Inspector window.
- Canceled recording
  You can restart an interrupted recording by transferring the trace configurations again.
- Project trace requirements
  Check that the general requirements for the project trace (Page 21) are met.

5.3.3 User interface - Configuration tab

5.3.3.1 User interface - Configuration

The "Configuration" tab is used to define the participating devices for the project trace. You configure the device-dependent trace configuration and the properties of the project trace in the Inspector window (Page 67).
The displayed trace configuration is always the offline configuration, even with an existing online connection. Transfer changes of the trace configurations to the devices using the button.

Setting options and displays in the overview of the participating devices

The figure below shows an example of the display of the overviews table:

Participating devices

	Device	Trigger	Trace sample event	Cycle time		Record every	Number of samples	Recording duration		Error
1	PLC_1		"Cyclic interrupt"	0.1	s	1	2000	200	s	
2	PLC_2		"Main"	Not constant		1	2000	Variable		
3	<Add new device>									

The following table shows the settings and displays of the participating devices:

Column	Description
Device	Input of the device name

Column	Description
	Button to open the device selection table The button is displayed when the table line is selected. Clicking the symbol opens a table which offers possible devices for selection. The selected device is displayed in the input field.
Trigger	The symbol indicates which devices can activate a trigger. Configure this device-dependent setting in the "Properties" tab of the Inspector window.
Trace sample event	Display of the trace sample event In the "Properties" tab of the Inspector window, configure in which cycle (OB with a SIMATIC CPU) the recording should take place.
Cycle time	Display of the time cycle resulting from the selection of the trace sample event
Record every	Input of the reduction ratio
Number of samples	Input of the number of samples to be recorded The recording duration is adjusted according to the input.
Recording duration	Input of the recording duration The number of samples is adjusted according to the input.
Errors	Display of an error in the trace configuration
	A tooltip above the symbol displays information about the cause of the error. Configured traces with the Error status cannot be transferred to the device.

5.3.4 User interface - Time diagram tab

The "Time diagram" tab of the project trace behaves in the same way as the trace and is described in the section User interface - Time diagram tab (Page 32).

5.4 Inspector window

5.4.1 Interface - Inspector window

The display in the "Properties" tab of the Inspector window depends on the current selection in the working area.

If no table row with a device is selected in the working area, general information about the project trace is displayed. If a table row with a device is selected, the device-dependent trace configuration is displayed, which is described for the respective device.

General information in the "Properties" tab.

The following figure shows an example of the display:

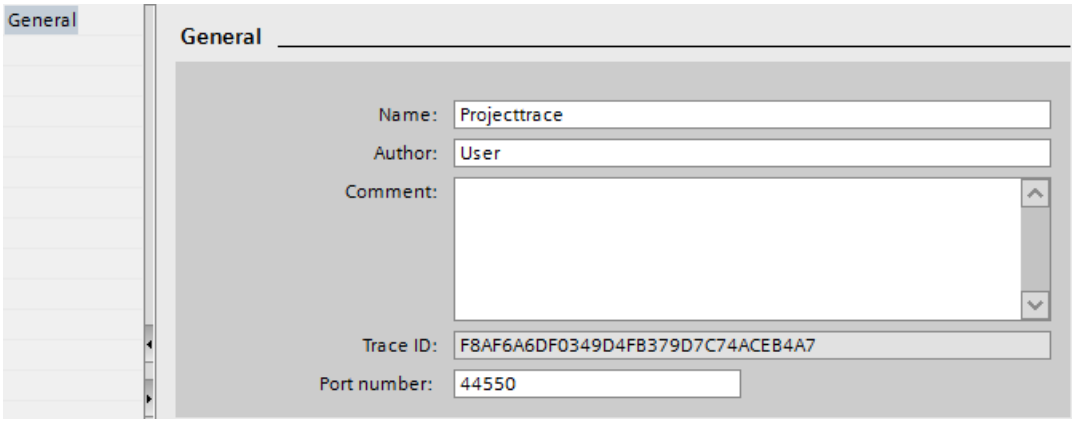

The following table shows the settings and displays of the recorded signals:

Field	Description
Name	Input field for the name of the project trace
Author	Input field for the name of the author
Comment	Input field for a comment.
Trace ID	Display of the Trace ID Using this ID, you can distinguish, for example, between several active project traces.
Port number	Input field for the port number of the connection The devices participating in the project trace communicate via this port. The numbers must be identical and unique on all devices. Observe also the instructions for assigning port numbers in the TIA Portal information system.

5.5 Trace task card

The displayed panes are described in the section "Trace task card (Page 58)".

Operation

6

6.1 Quick start

6.1.1 Trace quick start

This description shows the steps for a recording of the S7-1500 CPU as an example. The displayed settings can differ depending on the device.

Requirement

A device is configured that supports the trace and logic analyzer function.

Creating a trace

The following figure shows the project tree with the "Traces" system folder below the device:

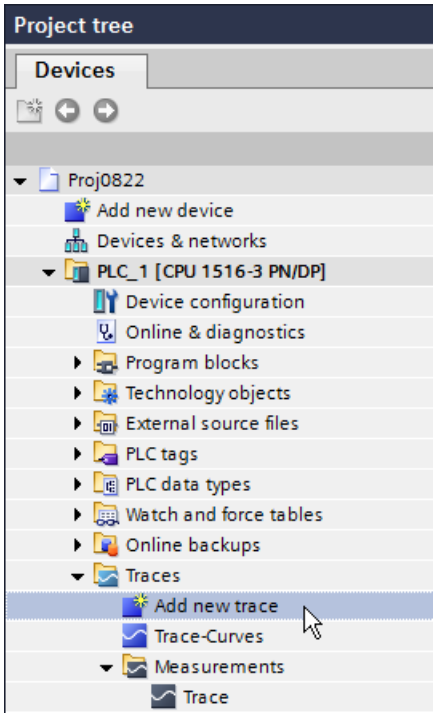

Procedure:

1. Double-click the "Add new trace" entry.
   A new trace configuration is created and the "Configuration" tab opens in the working area.
2. Adapt the name of the trace configuration by clicking the text.

Selecting signals

The following figure shows the configuration of the signals:

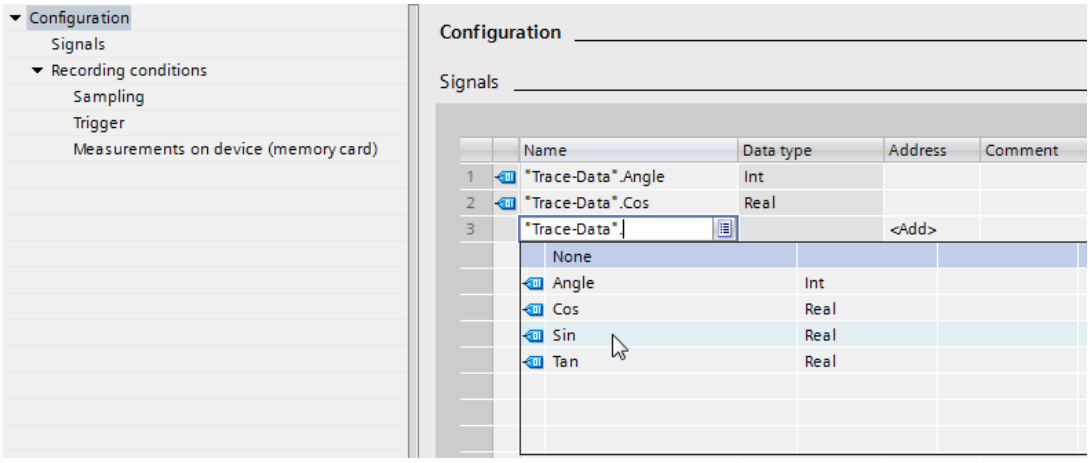

Procedure:

1. Select the signals to be recorded in the "Signals" area.
   Or:
2. Drag one or more signals, e.g. from a tag table, and drop them in the signal table.

Configuring the recording cycle

The following figure shows the configuration of the sampling:

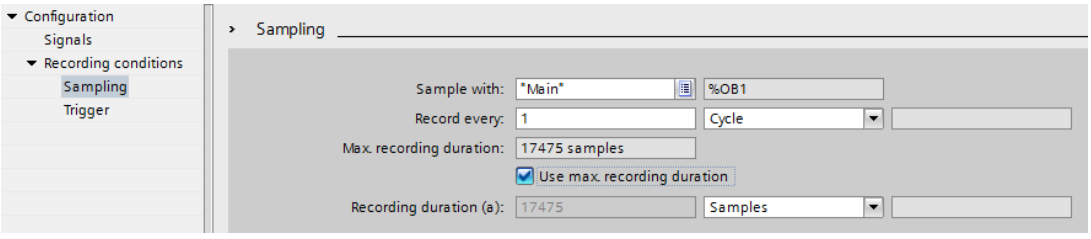

Procedure:

1. Under "Sampling", configure the recording conditions for the measurement.

Configuring the trigger

The following figure shows the configuration of the trigger:

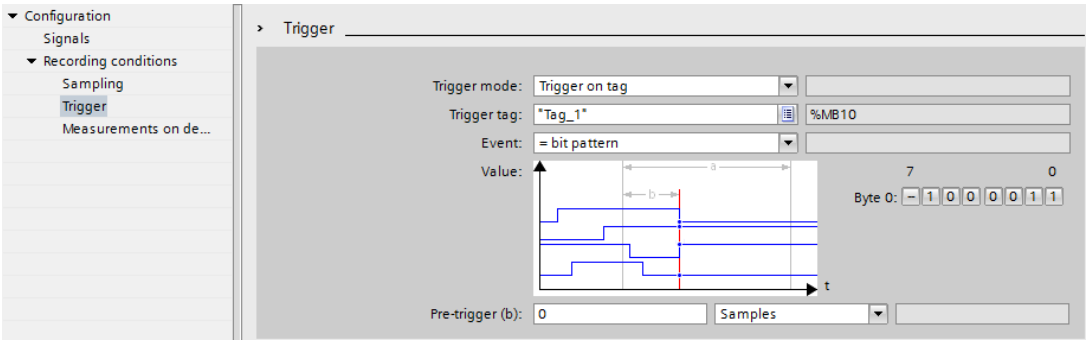

Procedure:

1. Configure the trigger mode and the condition for the selected trigger.

Configuring display options (optional)

The following figure shows the configuration of the display options:

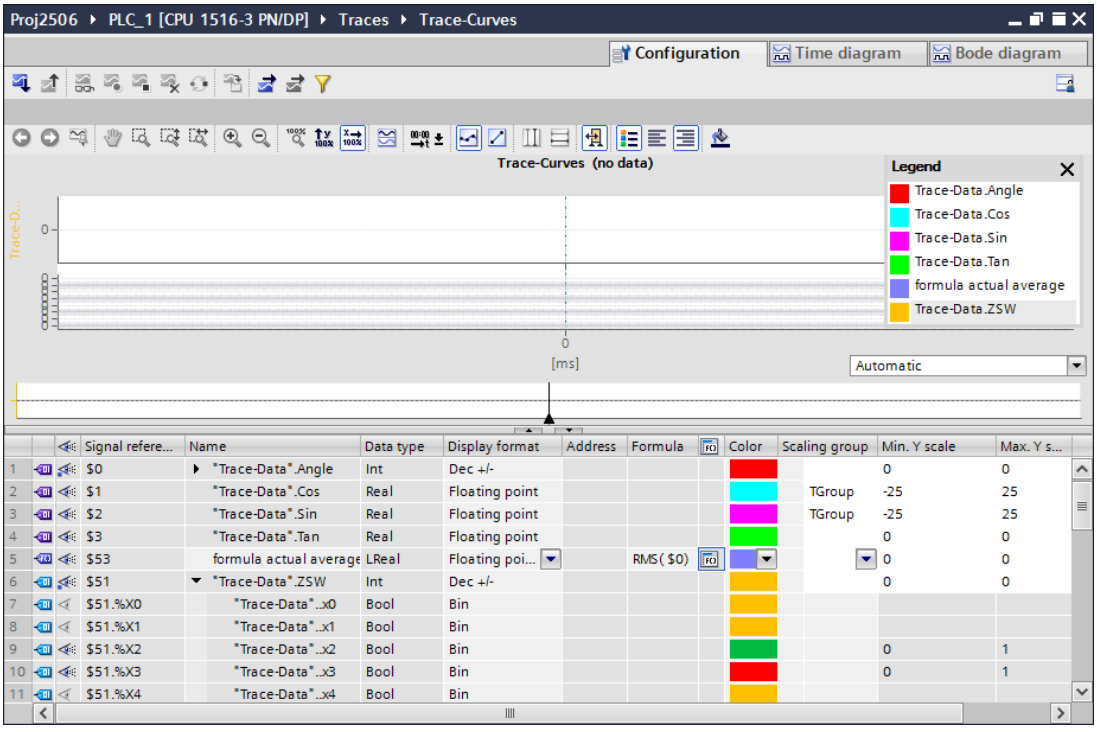

Procedure:

1. Switch to the "Time diagram" tab.
2. Set the desired display options in the curve diagram and in the signal table.

Transferring the trace configuration to the device

Procedure:

1. Transfer the trace configuration to the device with the button.
   The following functions are executed:
   – An online connection is established to the device.
   – The trace configuration is transferred to the device.
   – The monitoring is activated.
   – The display switches to the "Time diagram" tab.

Activating a recording

Procedure:

1. Click .

Displaying the recording

The following figure shows the curve diagram with a recording:

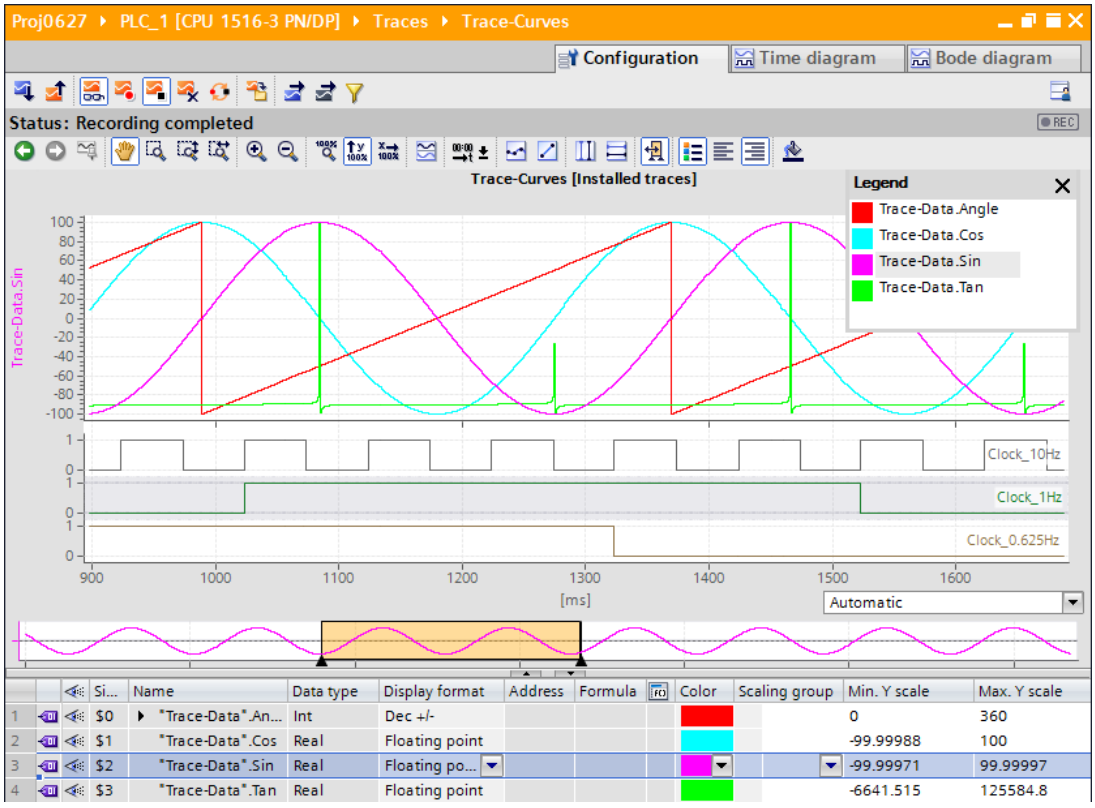

Procedure:

1. Wait until the "Recording" or "Recording completed" status is displayed in the status display of the trace.
2. Switch to the "Time diagram" tab.
3. Click the icon of a signal in the signal table.
   The individual bits of the signal are offered for display as a bit track.
4. In the signal table, select or deselect the individual signals and bits for display with the icon.

Saving the measurement in the project

Procedure:

1. Transfer the measurement to the project with the button.
   The measurement is displayed in the project tree under the "Measurements" system folder.

See also

User interface - trace toolbar (Page 30)

6.1.2 Quick Start for long-term trace

This description shows the steps for a long-term trace recording of the S7-1500 CPU as an example. The displayed settings can differ depending on the device.

Requirement

A device that supports the long-term trace function is created in the TIA Portal project.

Creating a long-term trace

The following figure shows the project tree with the "Traces" system folder below the device:

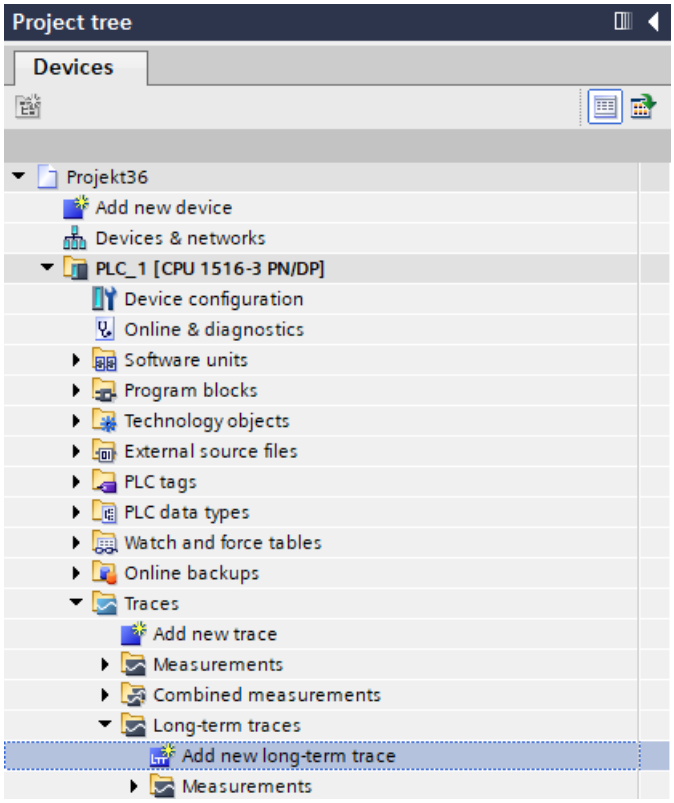

Procedure:

1. Double-click the "Add new long-term trace" entry.
   A new long-term trace configuration is created and the "Configuration" tab opens in the working area.
2. Adapt the name of the trace configuration by clicking the text.

Selecting signals

The following figure shows the configuration of the signals:

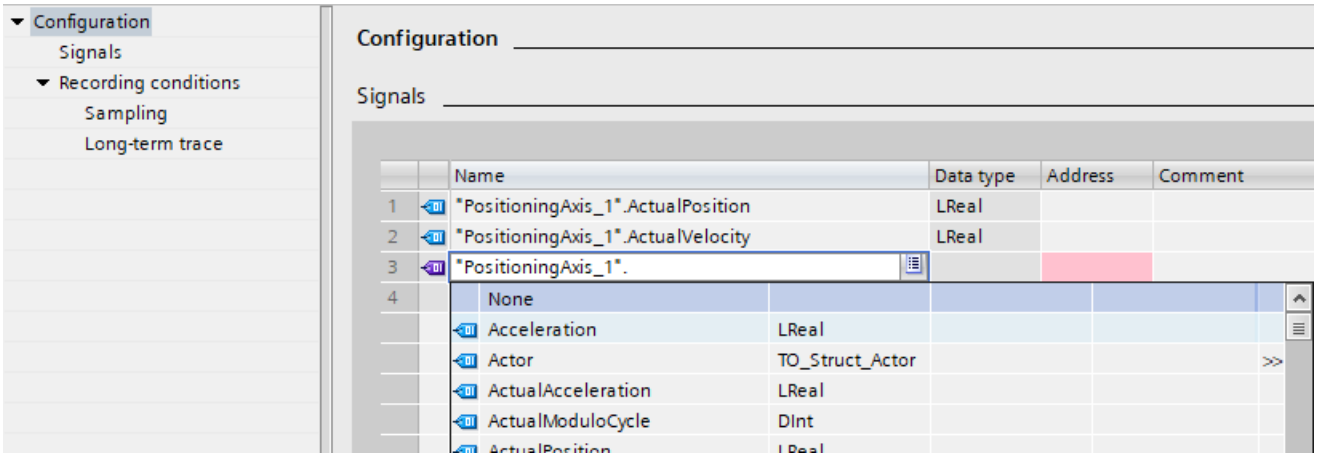

Configuring the recording cycle

The following figure shows the configuration of the sampling:

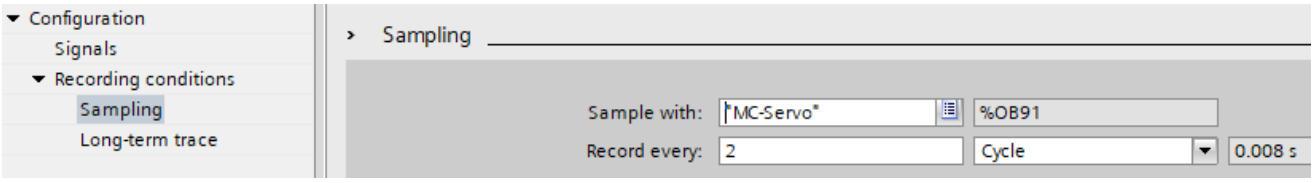

Procedure:

1. Under "Sampling", configure the recording conditions for the measurement.

Configuring the target path

The default target path is the folder of the STEP 7 project.
The following figure shows the configuration of the target path:

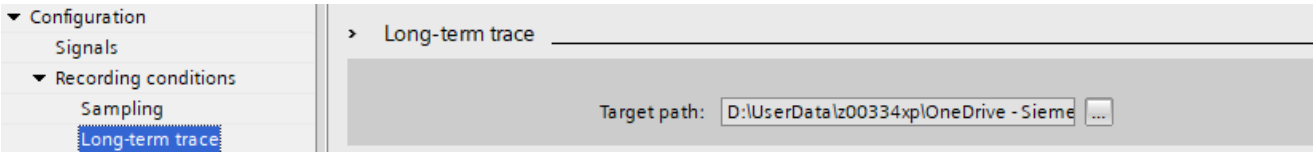

Transferring the trace configuration to the device

Procedure:

1. Transfer the trace configuration to the device with the button.
   The following functions are executed:
   – An online connection is established to the device.
   – The trace configuration is transferred to the device.
   – The monitoring is activated.
   – The display switches to the "Time diagram" tab.

The trace configuration is saved in the target path as an .lttcd file.

Activating recording

Procedure:

1. Click the button.

The "Recording in progress" status is displayed.
The recording is saved in the target path as a .csv file.

NOTE

Note that problems with online access between the PG and the CPU can result in errors or even failure of the recording.

If possible, connect the PG directly to the CPU.

You can also find additional information about long-term trace recording as a csv file in the sectionLong-term trace recording (Page 94).

Deactivating recording

Procedure:

1. Click .

The "Stopped" status is displayed.

Displaying the recording

In contrast to the standard trace, the recording of the long-term trace is only shown in the time diagram once you have deactivated the recording.

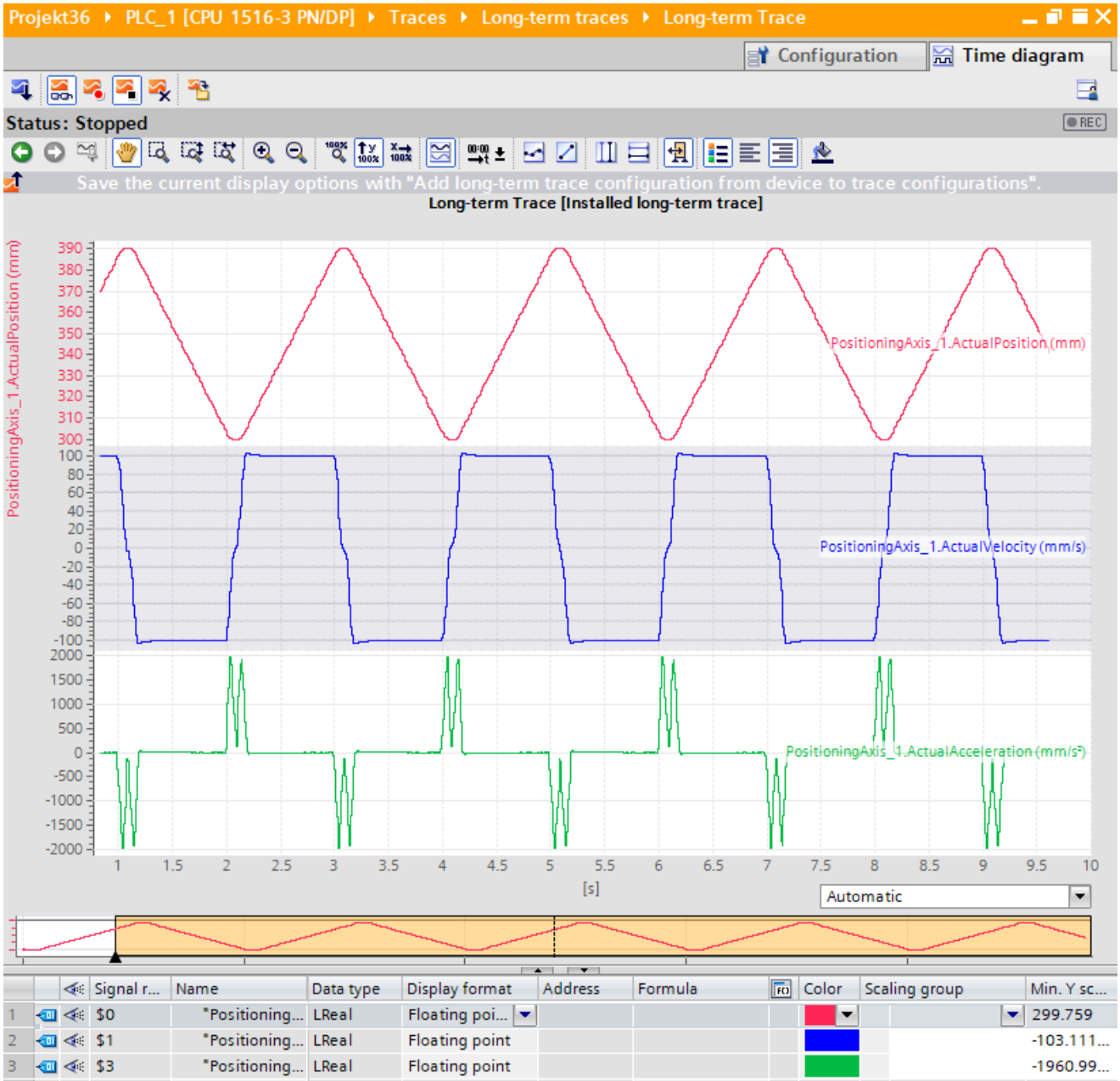

Saving the long-term trace measurement in the project

Procedure:

1. Transfer the measurement to the project with the button.

The long-term trace measurement is displayed in the project tree under the "Measurements" system folder.

6.1.3 Project trace quick start

This description shows an example of the steps for a recording with project trace for two S7-1500 CPUs. The displayed settings can differ depending on the device.

Requirements

- Two S7-1500 CPUs with firmware version V2.8 or higher are configured.
- The general requirements for the project trace (Page 21) are fulfilled.

Add project trace

The following figure shows the project tree with the "Project traces" system folder below the cross-device functions:

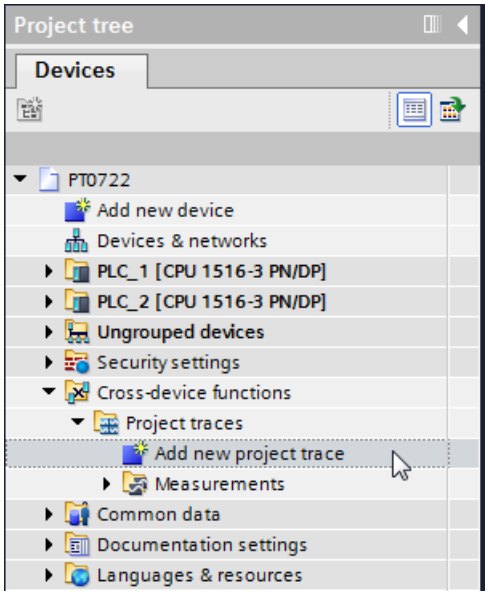

Procedure:

1. Double-click the "Add new project trace" entry.
   A new project trace configuration is created and the "Configuration" tab opens in the working area.
2. Adapt the name of the project trace configuration by clicking the text.

Adding devices

The following figure shows the adding of the devices.

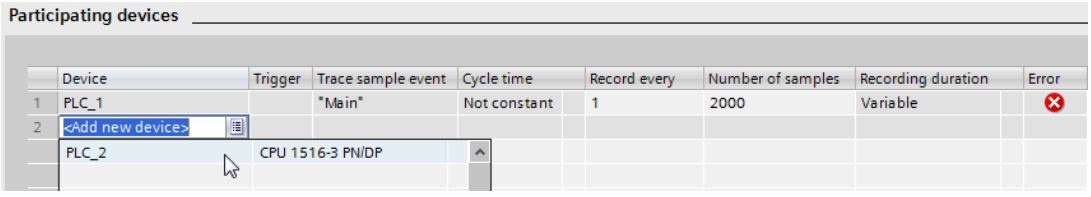

Procedure:

1. Select the devices in the "Participating devices" area.

Configuring signals and recording conditions of devices

The following figure shows two participating devices and the configuration of "PLC_1".

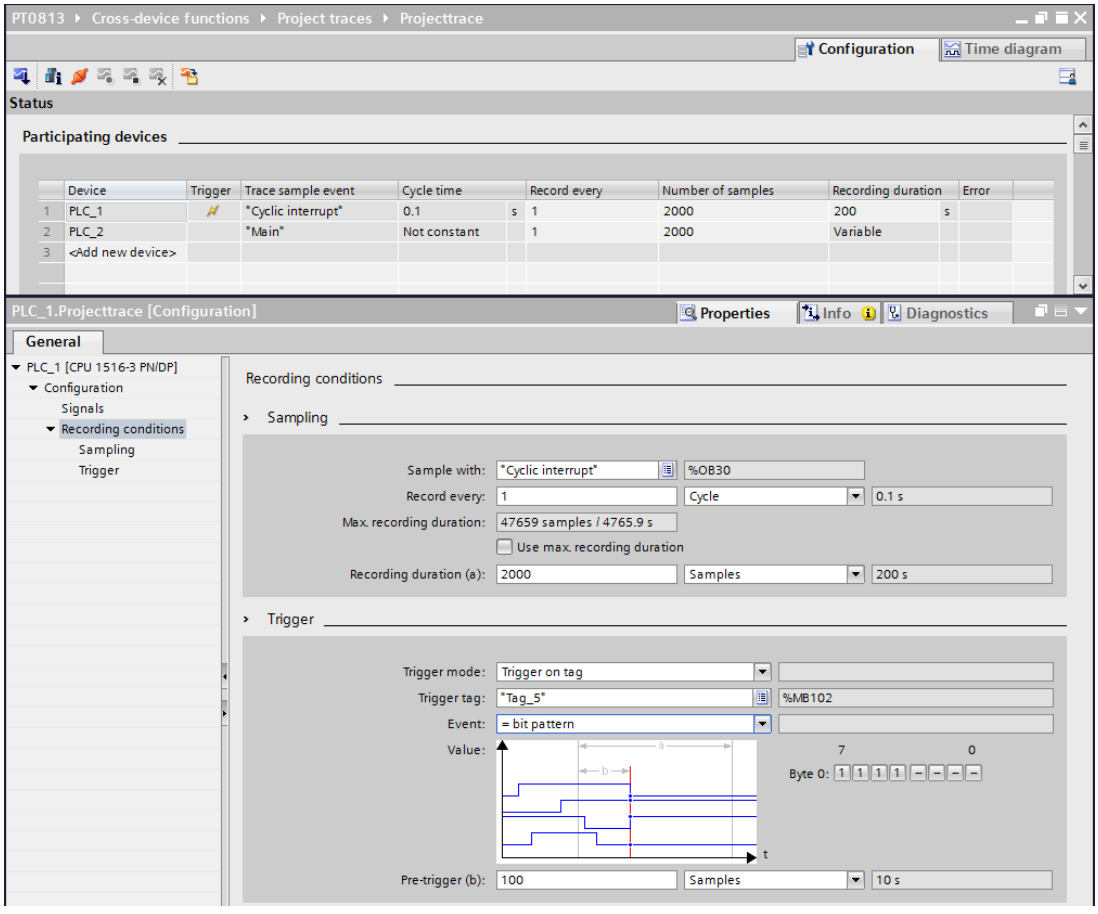

Procedure:

1. Select a device in the "Participating devices" area.
2. Select the "Properties" tab in the Inspector window.
3. Select the signals to be recorded in the "Signals" area.
   Or:
4. Drag one or more signals, e.g. from a tag table, and drop them in the signal table.
5. Configure the sampling.
6. Configure the trigger mode and the condition for the selected trigger.
7. Redo the configuration from step 1 for each participating device.

For "PLC_2", "Trigger from another Device" is configured as trigger mode in the example shown here.

Apply trace configurations to the devices

Procedure:

1. Open the status overview of the participating devices using the button.
2. Transferring the trace configurations to the devices using the button.
3. Check the status in Status overview (Page 65) and correct any errors that have occurred.

Activate recording

Procedure:

1. Click .

Displaying recordings

Procedure:

1. In the status overview of the participating devices, check whether the required recordings have already been completed.
2. Switch to the "Time diagram" tab.

Saving measurements in the project

Procedure:

1. Transfer the measurements to the project using the button.
   The measurements are displayed in the project tree under the system folder "Measurements".

6.2 Recording

6.2.1 Activating/deactivating an installed trace

Requirement

- There is an online connection to the device.
- There is a trace in the device.
- The trace in the device is displayed in the working area.
- The button is activated for viewing the displayed trace.

Activating an installed trace

To activate the recording for an installed trace, proceed as follows:

1. Click .
   The installed trace is activated and starts the recording according to the configured trigger condition. The trigger condition is device-specific and described in Section "Configuration" below the respective device.
   The current status of the recording is displayed in the status display of the trace.

   NOTE

   When a recording is restarted, the previously recorded values are lost.

   To save the recorded values, save the measurement in the project (Page 81) before you activate the recording again.

Deactivating an installed trace

To deactivate an activated installed trace, proceed as follows:

1. Click .
   The installed trace is deactivated.
   The status display of the trace changes to "Inactive".

6.2.2 Transferring the trace configuration from the device to the project

Requirement

- There is an online connection to the device.
- There is a trace in the device.

Procedure

To transfer a trace configuration to the project, proceed as follows:

1. Open a trace in the device.
2. If required, activate the button for viewing.
3. Click to transfer the trace configuration from the device.

Result

The configuration is taken over as new trace configuration in the "Traces" system folder.
The current display options are included in the new trace configuration.
A trace configuration of the same name is overwritten in the system folder.

6.2.3 Saving measurements in the project

Requirement

- There is an online connection to the device.
- There is a trace with recording in the device.
- The installed trace data must have been displayed at least once in the curve diagram. The recording data is loaded from the device for the display.

Procedure

To save a recording in the project, proceed as follows:

1. Open the trace in the device with the recorded data.
2. If required, make sure that the current data is loaded from the device by activating the button.
3. After activating the button wait until all data has been loaded and displayed.
4. Click .
   The measurement is added to the "Measurements" system folder.
5. Save the project in the TIA Portal.

6.2.4 Automatic repetition of measurements

The recording is automatically re-activated at the end of each recording. The display in the curve is similar to the display of an oscilloscope.

Requirements

- There is an online connection to the device.
- There is a trace in the device.

Procedure

To monitor the progress of a fast signal, proceed as follows:

1. Select a trace in the device.
2. Double-click the selected trace.
3. Click for monitoring.
4. Click to automatically repeat the recording.

6.3 Analyzing

6.3.1 Analyzing a specific time range of an ongoing recording

A measurement of a trace in the device can be generated at any time.
Use this functionality, for example, to save the data recorded up until this point in a recording and to analyze it as a static measurement.

Requirements

- An ongoing recording is displayed in the "Time diagram" tab.

Procedure

To analyze a certain time range for an ongoing recording, follow these steps:

1. Click .
   The data recorded up to now is added to the measurements.
   The current recording is not affected by this and continues running uninterrupted.

6.3.2 Use of the curve diagram

The curve diagram shows the signals of a recording selected in the signal table.
The display area can be zoomed as required. Measurement cursors can be used to select individual values for display in the signal table.
The following operating instructions describe the use of the curve diagram and of the measurement cursors as examples.

Requirements

- An installed trace or a measurement has been selected for display.
- The button is activated to monitor an installed trace.
- The "Time diagram" tab is open in the working area.

Monitor an ongoing recording.

To display all of the data in an ongoing recording, proceed as follows:

1. Activate "Display all" via the button.

The entire time range and all values for the ongoing recording are displayed.

To display a consistent time window in an ongoing recording, proceed as follows:

1. Activate "Display all" via the button.
2. Select the desired time range via the button.

The trend view is updated while the scaling of the time range remains the same.

NOTE

A measurement of a trace in the device can be generated at any time. In this way, you can analyze the data recorded until that point as static measurement.

Evaluation of a certain instant of a recording

To display the values for a specific sample, proceed as follows:

1. Display the vertical measurement cursors via the button.
2. Move a measurement cursor with the mouse to the required position in the recording.
   The values of the signals are displayed in the signal table and in the "Measurement cursor" pane of the "Trace" task card.

Evaluation of the difference between two samples

To display the difference, proceed as follows:

1. Display the vertical measurement cursors via the button.
2. Move both measurement cursors with the mouse to the required samples in the recording.
   The values of the signals and the difference are displayed in the signal table and in the "Measurement cursor" pane of the "Trace" task card.

Using horizontal measurement cursors

To check whether a certain value has been reached, proceed as follows:

1. Display the horizontal measurement cursors via the button.
2. Move a measurement cursor with the mouse to the required value of the recording.
   The values of the measurement cursors for the selected signal are displayed in the "Measurement cursor" pane of the "Trace" task card.

Moving the time range displayed

Proceed as follows to move the time range displayed:

1. Select a time range via the button.
2. Move the curve to the desired time range by turning the mouse wheel with the <Shift> key pressed down.

Bringing a signal into the foreground

1. Display the legend via the button.
2. Click a signal in the legend.

Or:

1. Click a signal in the curve diagram.

The signal is displayed in the foreground and is highlighted/selected in the signal table. The value axis is updated for the selected signal.

See also

User interface - curve diagram (Page 32)
User interface - signal table (Page 37)

6.3.3 Use of the signal table

The signal table shows the signals of an installed trace or a measurement. The preselected signals in the signal selection are displayed with a combined measurement. You can show or hide individual signals for the display in the table and adapt the properties for the display. Individual bits can be selected for some data types and displayed as a bit track.
The following operating instructions describe the operation of the signal table.

Requirements

- An installed trace or a measurement has been opened in the "Time diagram" tab.
- The button is activated to monitor an installed trace.
- For the display of individual bits as a bit track:
  at least one recorded signal supports the display as a bit track.

Display or hide individual signals and change the color

To adapt the display to suit your requirements, proceed as follows:

1. Click the icon of the respective signal in the column to select or deselect it for the display.
2. Click in the "Color" column for the respective signal and select a color.
   The default color for the signal changes.

Bringing a signal into the foreground

1. In the signal table, select the line of the signal.
   The Y-scale of the signal is displayed.
   The signal curve is brought into the foreground in the curve diagram.

Selecting individual bits for display as a bit track

To display individual bits as a bit track in the lower curve diagram, proceed as follows:

1. Click the icon of a signal in the signal table.
2. Click the icon in the open bit selection of the signal.
   The bits are selected or deselected for display.

6.3.4 Using the signal group in the signal table

Individual signals can be scaled identically in a scaling group, which makes it easier to compare the curve characteristics.
Binary signals cannot be grouped.
The following operating instructions describe how to work with the scaling group.

NOTE
Saving scaling groups
The scaling groups can be saved individually for each measurement via the "Use current view as standard" function (button).
If the scaling groups and the project are not saved, then the scaling groups created will be lost when the "Time diagram" tab is closed.

Requirements

- An installed trace or a measurement is displayed.
- The button is activated to monitor an installed trace.
- The "Time diagram" tab is open in the working area.
- There are at least two signals in the signal table that are not of the BOOL type.

Assigning signals to a scaling group

To apply a scaling group and assign signals to this group, proceed as follows:

1. In the signal table, select the line or cell of the required signal.
2. Click the gray field in the "Scaling group" column.
   The sequence icon is displayed in the gray field and the name of the scaling group is pre-assigned: Group
3. Click the gray fields of further signals that are to be assigned to this scaling group.

Or:

1. Click in the text field of the "Scaling group" column for a signal to be grouped.
2. Enter a name for the group.
3. Enter the same group name in the respective text fields for further signals or select the group name via the drop-down list.

The Y-scales of the grouped signals are scaled with the values of the signal that was selected first. Changes to a scale value always affect the entire group.

Removing signals from a scaling group

To delete the assignment of a signal to a scaling group, proceed as follows:

1. Click the sequence icon for the required signal in the "Scaling group" column.

Or:

1. Click the text field for the required signal in the "Scaling group" column.
2. Press the <Del> key.

Or:

1. Select the respective text field in the "Scaling group" column for several signals using the <Shift> and <Ctrl> keys.
2. Press the <Del> key.

The signals are removed from the scaling group or the scaling group is deleted.

6.3.5 Comparing recordings (combined measurement)

6.3.5.1 Apply overlay measurement

Combined measurements can be applied in the project tree with a comparison function for different measurements.
The following instructions describe how you can create a combined measurement under the "Combined measurements" system folder

Requirement

A device is configured that supports the trace and logic analyzer function.

Procedure

To apply an combined measurement, proceed as follows:

1. Select one or more measurements in the "Measurements" system folder.
2. Drag the measurements to the "Combined measurements" system folder.

A new combined measurement is created. This contains copies of the selected measurements.

6.3.5.2 Comparing recordings

Requirement

- An combined measurement is created or is created implicitly by dragging the measurements to the system folder "Combined measurements".
  See also Apply overlay measurement (Page 87).

Adding measurements for comparison

To compare measurements, insert the measurements to be compared to the combined measurements. Proceed as follows for this:

1. In the project tree drag one or more measurements from the system folder "Measurements" to the icon for the combined measurement .

Or:

1. Import saved measurements via the "Import measurement" shortcut menu command.

A copy of the measurements is added to the combined measurement.

Select signals of the measurements for the signal table

Proceed as follows to select the signals for the signal table in the "Time diagram" tab:

1. Double-click on the icon for the combined measurement in the project tree.
   The tabs for the combined measurement will be displayed in the working area.
2. Click the "Signal selection" tab in the working area.
   The signals for all measurements are displayed in the table.
3. Activate or deactivate the signal check box for those signals that should be visible or should not be visible in the signal table.

The activated signals are displayed in the signal table of the "Time diagram" tab.

Use of the signal table

Proceed as follows to open and use the signal tables:

1. Click the "Time diagram" tab in the working area.
2. Click on the "Signals" tab within the "Time diagram" tab.
3. Use the signal tables as described under Use of the signal table (Page 85).

Align measurements

Proceed as follows to align the time axis for the measurements for the comparison:

1. Click on the "Measurements" tab within the "Time diagram" tab.
2. Select the alignment for the measurements via the check box.
3. Adjust the alignment and if necessary set an offset for the alignment of the individual measurements.

The measurements are aligned with each other accordingly on the time axis.
(The alignment of measurements with the measurement cursor is described in Aligning measurements with measurement cursor (Page 89).)

Use of the curve diagram

Proceed as follows to open and use the curve diagram:

1. Click the "Time diagram" tab in the working area.
2. Use the curve diagram as described under Use of the curve diagram (Page 83).

6.3.5.3 Aligning measurements with measurement cursor

Requirement

- An combined measurement is applied.
- Measurements for comparison are added to the combined measurement.
- Signals of the measurements for the signal table are selected.
- The "Time diagram" tab for the combined measurement opens in the working area.

Aligning measurements to measured position difference Δt

Proceed as follows to align the time axis of two measurements:

1. Display the vertical measurement cursors via the button.
2. Zoom into the time range, e.g. with the button until you are able to position the first measurement cursor precisely on the desired reference point for the first measurement.
3. Move the first measurement cursor with the mouse to the required position.
4. Search for the reference point for the second measurement, e.g. by switching to "Display all" with the button.
5. Zoom into the time range, e.g. with the button until you are able to position the second measurement cursor precisely on the desired reference point for the second measurement.
6. Move the second measurement cursor with the mouse to the required position.
7. Open the "Trace" task card.
8. In the "Measurement cursor" pane, select the position difference value Δt.
9. Copy the value to the clipboard.
10. Insert the value from the clipboard into the Offset cell of the first or second measurement.

The two measurements are aligned with each other.

NOTE

When inserting the position difference as the offset make sure that you also adjust the leading character as necessary.

6.3.6 Printing a recording

The curve diagram supports the saving of the display as a graphic and the copying of the display to the clipboard. Also use these functions (Page 32) for printing.

Devices 7

7.1 S7-1200/1500 CPUs

7.1.1 Recordable variables

Device-dependent recording of tags

The following list shows the operand areas from which tags can be recorded:

- Process image input
- Process image output
- Bit memory
- Data blocks
- I/O devices

Data types

A selection of elementary and composite data types can be recorded. The availability of the individual data types depends on the device used:

For more information, see the help under "Overview of valid data types".

The following table lists the supported data types:

Data types	Note
Binary numbers	
BOOL	-
Bit strings	
BYTE	-
WORD	-
DWORD	-
LWORD [1)]	Symbolic name required
Integers	
SINT	-
USINT	-
INT	-
UINT	-
DINT	-
UDINT	-

1) Not supported by S7-1200.

Data types	Note
LINT [1]	Symbolic name required
ULINT [1]	Symbolic name required
Floating-point numbers	
REAL	-
LREAL	Symbolic name required
Timers	
TIME	-
LTIME [1]	-
Date and time	
DATE	-
TOD	-
LTOD [1]	-
LDT [1]	-

1) Not supported by S7-1200.

7.1.2 Lifetime of the installed trace configuration and recorded values

Installed trace configurations are retained after POWER OFF. The recording is activated again after the restart of the CPU.

Recorded values are lost during the restart.

NOTE

Downloading a configuration to the device in the "STOP" operating state

Note that after downloading a configuration in the "STOP" operating state, you must check the installed traces and, if required, reactivate them or transfer them again.

NOTE

If trigger tags that affect the address are changed, the trace configuration must also be transferred to the device again.

This is the case for example, when a data block is shortened or extended or the data type is changed.

7.1.3 Recording levels

All runtime levels can be used for the recording cycle. The cyclic execution levels are offered for selection via the button . In non-periodic recording levels, the recording time is undefined.

NOTE

The measured values are recorded at the end of the OB after the processing of the user program.

NOTE

Trace sample event with Motion Control

The time reference for the measured values is determined differently if a Motion Control organization block is configured as trace sample event and the device is time synchronized via IRT. This behavior is described in Time synchronization with Motion Control (Page 92).

See also

Time synchronization of SIMATIC S7 CPUs
(https://support.industry.siemens.com/cs/ww/en/view/82203451)

7.1.4 Time synchronization with Motion Control

With Motion Control, a time reference to the cycle limits of the application cycle is required for the analysis. For this reason, the time reference for the measured values in the configuration of Motion Control organization blocks is determined differently than trace sample event. The synchronized (absolute) time from the start of the current application cycle is always stored as the time for the measured value. The tags of the technology objects are always consistently related to cycle limits.

The described behavior applies to the following Motion Control organization blocks:

- MC-Servo [OB91]
- MC-PreServo [OB67]
- MC-PostServo [OB95]
- MC-Interpolator [OB92]
- MC PreInterpolator [OB68]

The devices must communicate via IRT.

The following figure shows the stored times of the measured values with an application cycle of 3 and MC interpolator as configured trace sample event:

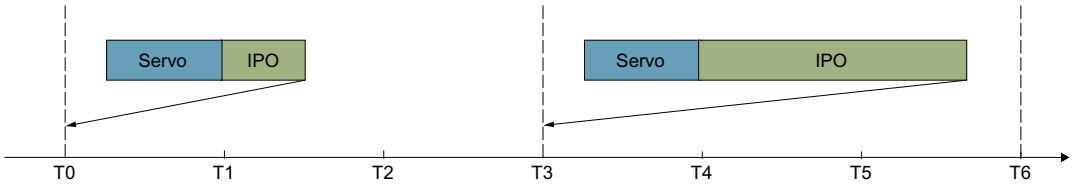

T0 to T6	IRT cycle
T0	Start of application cycle n
T3	Start of application cycle n+1
T6	Start of application cycle n+2

NOTE

OB61-OB63 as trace sample event

With these OBs as configured trace sample event, the system time is used independently of the communication. The recording behavior is the same as for devices without IRT communication.

To facilitate the evaluation with absolute time, synchronize the clock times of the devices.

NOTE

Measured values with identical timers

An overflow of the recording level (such as MC-Interpolator OB in the example above) can result in measured values with identical time stamp.

7.1.5 Quantity structure

The following table shows the maximum quantity structure that you can record using the trace and logic analyzer function:

Device	Maximum number of installed traces	Maximum number of signals per trace configuration
(as of firmware version V4.0)S7-1200	2[1]	16
S7-1500, ET 200SP, CPU 1513pro-2 PN, CPU 1516pro-2 PN, S7-1500 Software Controller, S7-1500 Drive Controller, ET 200SP Open Controller	Minimum 4[2] (depending on the CPU type)	16

1) The S7-1200 does not support long-term trace

2) In Step 7 V18, the S7-1500 supports maximum 2 long-term traces

Device	Maximum number of installed traces	Maximum number of signals per trace configuration
S7-1500, ET 200SP, CPU 1513pro-2 PN, CPU 1516pro-2 PN, S7-1500 Software Controller, S7-1500 Drive Controller, ET 200SP Open Controller (as of firmware version V3.0)	Minimum 4[2] (depending on the CPU type)	64

[1] The S7-1200 does not support long-term trace

[2] In Step 7 V18, the S7-1500 supports maximum 2 long-term traces

NOTE

Maximum number of signals per trace configuration exceeded

Signals that exceed the maximum number of signals in the trace are marked in the configuration.

You cannot load a trace configuration with more than the maximum number of signals into the device.

The maximum number of signals is exceeded during the following actions:

- Copy: A trace configuration with more than 16 signals is copied into a device that only supports 16 signals per trace configuration.
- Device replacement: A device in which a trace configuration with more than 16 signals is created is replaced with a device that supports a maximum of 16 signals per trace configuration.

To load the trace configuration into the device, delete the excess, selected signals.

The same quantity structures apply for the project trace as for the devices.

Example CPU 1516-3 PN/DP

- Maximum of 7281 samples for 16 signals from PLC tags of the DWORD data type
- Maximum of 21844 samples for 16 signals from PLC tags of the BOOL data type
- Maximum of 58250 samples for 1 signal from a PLC tag of the BOOL data type

You can also find additional information in the form of FAQs under the ID 102781176 (http://support.automation.siemens.com/WW/view/en/102781176).

7.1.6 Long-term trace recording

Requirement

You need at least 4 GB free space on your hard disk for recording a long-term trace.

Starting the recording

The csv file is saved in the target path with the following name:

<name of the CPU>_<name of the long-term trace>_<time stamp>_<running serial number>.csv

Structure of the time stamp:

<YYYYMMDD>_<HHMMSS>_<ms(3 places)>

Example
PLC_1_Long-term Trace_20220721_120422_356_0001.csv

Behavior during operation

As soon as the recording of the long-term trace in a csv file has reached a file size of 2 GB, a new csv file is created. The new csv file has the same time stamp as the file that has overflowed and the running serial number is incremented by 1. The recording is continued without any break.

You can use the "Monitoring on/off" button to interrupt the recording. If you click the "Monitoring on/off" button again, a new csv file is created. The new csv file has the same time stamp as the csv file of the interrupted recording and the running serial number is incremented by 1. The recording is continued.

Example
Overflowed/Canceled recording
PLC_1_Long-term Trace_20220721_120422_356_0001.csv
Continued recording:
PLC_1_Long-term Trace_20220721_120422_356_0002.csv

CAUTION

Inconsistent data when opening the .csv file during the recording

Opening the csv file during the recording, for example, with Excel, can result in inconsistent data. The csv file can become unusable.

Do not open the csv file during the recording.

Canceling the recording

After a recording has been canceled, a new csv file is created with the current time stamp when a new recording is started.

Example
Interrupted recording
PLC_1_Long-term Trace_20220721_120422_356_0001.csv
New recording
PLC_1_Long-term Trace_20220721_121212_999_0001.csv

Output formats of the data types in the csv file

NOTE

Displaying the values in Excel

If you open the csv file directly with a double-click, Excel can show the values wrongly formatted.

To display the values correctly, always import the data from the csv file.

The table below provides an overview of the data formats in which the data types in the csv file are output:

Data type	Output format		Example	
Bool	True = 1 False = 0		1	
Int	Full decimal number		-12	
Int			-123	
DInt			-1234	
LInt			-123456	
USInt			12	
UInt			123	
UDInt			1234	
ULInt			123456	
Real	Scientific notation	Hexadecimal for Infinite/Denormal/NaN	3.713193E+29	16#7F80_0000
LReal				
Byte	Full decimal number		12	
Word			123	
DWord			1234	
Lword			12345	
Date	YYYY-MM-DD		1970-01-01	
Time	Seconds without measurement unit		62.78	
LTime			0.00307	
Time Of Day	HH:MM:SS.ms (ms up to 3 places)		00:00:54.078	
Long Time Of Day	HH:MM:SS.ms (ms up to 9 places)		00:00:00.000033566	
Long Date Time	YYYY-MM-DD-HH:MM:SS.ms (ms up to 9 places)		1970-01-01-00:00:00.000033566	

Unsupported data types

The following data types are not supported by the csv file:

- Date_And_Time
- Date_And_LTime
- Char
- WChar
- String
- S5Count
- S5Time

7.1.7 CPU load through trace recording

An activated trace recording increases the runtime of the respective recording level that can result in an execution level overflow with high utilization of the CPU.

Remedy for execution level overflow:

- **Change the trace configuration**
  1) Configure fewer tags and signals.
  2) Then increase the number of tags and signals up to the maximum number of signals step-by-step without an execution level overflow.
- **Select a slower recording level**

7.1.8 Project trace

Observe the required firmware version of the devices for support of project trace.
The following table lists the devices supported by the project trace.

Device	Support as of firmware
SIMATIC S7-1500, ET 200SP, CPU 1513pro-2 PN and CPU 1516pro-2 PN CPUs	V2.8
SIMATIC S7-1500 Software Controller	V2.8
SIMATIC Drive Controller	V2.8
ET 200SP Open Controller	V20.8

7.1.9 Software user interface of the configuration

7.1.9.1 Layout of the trace user interface

The settings options differ depending on the configured device.

Display in the "Configuration" tab of the working area

The following figure shows an example of the display:

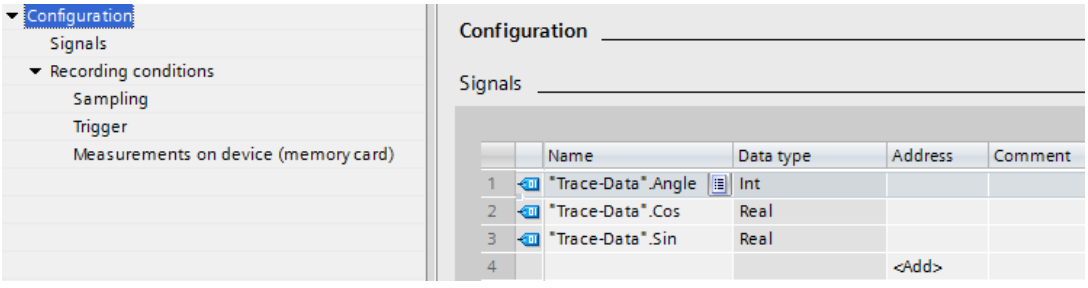

The area navigation provides the following entries for selection:

- Configuration
  - Signals (Page 99)
  - Recording conditions (Page 100)

Displaying and changing properties of a trace configuration

A trace is selected in the project tree and displayed in the "Configuration" tab.
You change the trace configuration offline. Online, the trace configuration is displayed ready-only.

7.1.9.2 Layout of the long-term trace user interface

The settings options differ depending on the configured device.

Display in the "Configuration" tab of the working area

The following figure shows an example of the display:

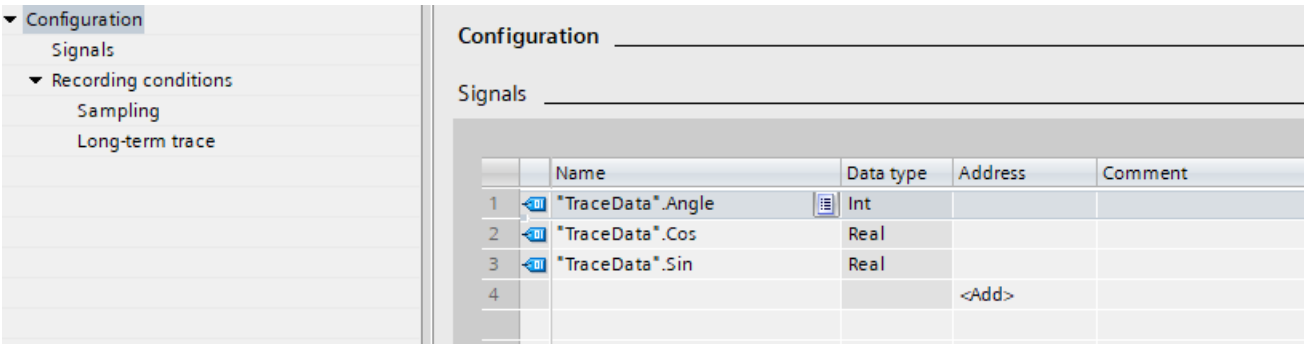

The area navigation provides the following entries for selection:

- Configuration
  - Signals (Page 99)
  - Recording conditions (Page 99)

Displaying and changing properties of a long-term trace configuration

A long-term trace is selected in the project tree and displayed in the "Configuration" tab.
You can change the long-term trace configuration offline. Online, the trace configuration is displayed ready-only.

See also

Recording conditions (Page 100)

7.1.9.3 Layout of the project trace user interface

The device-dependent trace configuration is displayed in the Inspector window when a device is selected in the configuration tab of the "Participating devices" table.

Configuration in the "Properties" tab of the Inspector window

The following figure shows an example of the display for a selected device:

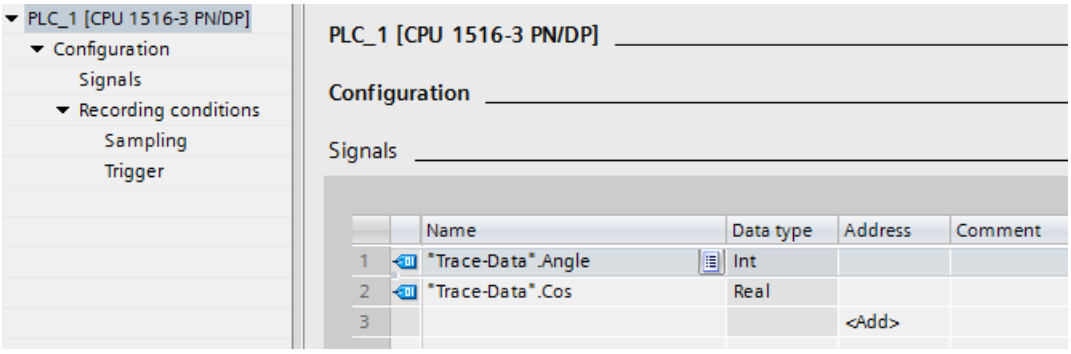

The area navigation provides the following entries for selection:

- Configuration
  - Signals (Page 99)
  - Recording conditions (Page 100)

7.1.9.4 User interface - Signals

The "Signals" area shows a table in which the signals to be recorded are configured for the selected trace configuration.
Signals can also be inserted in the table using drag-and-drop.
The signals can be sorted using drag-and-drop.

Setting options and displays in "Signals"

The following figure shows an example of the display:

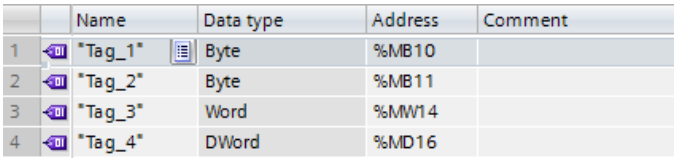

The following table shows the settings and displays:

Column	Icon	Description
-		Display of the signal icon for a selected signal.
"Name"	-	Input field for the name or address of the signal. **Examples:** • "Data_block_1".pressure • M0.0 • DB1.DBW3
-		Button to open the signal selection table. The button is displayed when the table line is selected. Clicking the icon opens a table which offers possible signals for selection. The selected signal is displayed in the input field.

Column	Icon	Description
"Data type"	-	Text field with display of the data type for the signal.
"Address"	-	Input field for the address of the signal. The field remains empty with optimized / type correct tags.
"Comment"	-	Input field for a comment on the signal.

Shortcut menu commands

The following table shows the shortcut menu commands of the table:

Shortcut menu command	Description
"Cut"	Cannot be selected
"Copy"	Copies the contents of the selected lines to the clipboard.
"Paste"	Pastes the contents of the clipboard to the selected line. The existing contents are overwritten.
"Delete"	Deletes the selected lines from the table or deletes the content of the selected cell.
"Rename"	Switches the selected cell to the editing mode.

7.1.9.5 Recording conditions

The "Recording conditions" area shows the trigger condition for the selected trace configuration and in which cycle, how fast and how long the recording is made.

Sampling

The following figure shows an example of the settings for the sampling:

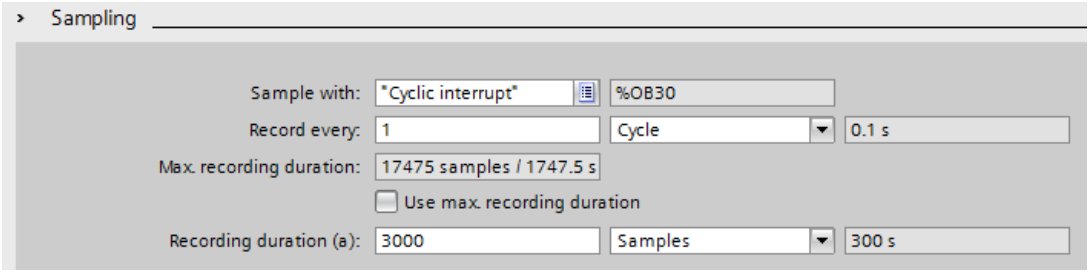

The following table explains the settings and displays:

Setting/display		Description
"Recording time"		
	Recording level entry field	Selection of the recording time. See Recording levels (Page 91)
	Address of the OB text field	Detailed information on the selected recording time.
"Record every"		

Setting/display		Description
	Reduction entry field	Input of the reduction in relation to the reduction ratio and the unit.
	Reduction ratio drop-down list	Selection of the reduction ratio unit The following settings are possible: • "Cycle" • "s" for seconds The setting depends on the recording level selected in "Trace sample event".
	Sampling time text field	Display of the sampling time, taking into account the configured reduction and the selected unit (only for constant bus cycle time OBs).
"Max. recording duration"		
	Max. recording duration text field	Displays the calculated maximum recording duration. The "Max. recording duration" depends on how many signals are recorded and the data type of these signals.
	"Use max. recording duration"	Set the recording duration to the maximum value. When the checkbox is activated, the recording duration is set to the maximum possible recording duration. The set reduction in the "Record every" input field is taken into account. If more signals are added, the recording duration will be adjusted. Further information can also be found in the form of FAQs under the ID 102781176 (http://support.automation.siemens.com/WW/view/en/102781176).
"Recording duration"		
	Recording duration entry field	Input of the recording duration in relation to the selected unit. If the "Recording duration = max. recording duration" checkbox is activated, entries are overwritten by the value displayed in "Max. recording duration".
	Unit drop-down list	Selection of the unit for the recording duration. The following settings are possible: • "Samples" The maximum number of samples recorded is the number for which parameters are assigned under recording duration. • "s" for seconds The setting depends on the recording level selected in "Trace sample event".
	Calculated recording duration text field	Display of the calculated recording duration (only for constant bus cycle time OBs)

Trigger

The following figure shows an example of the settings for the trigger:

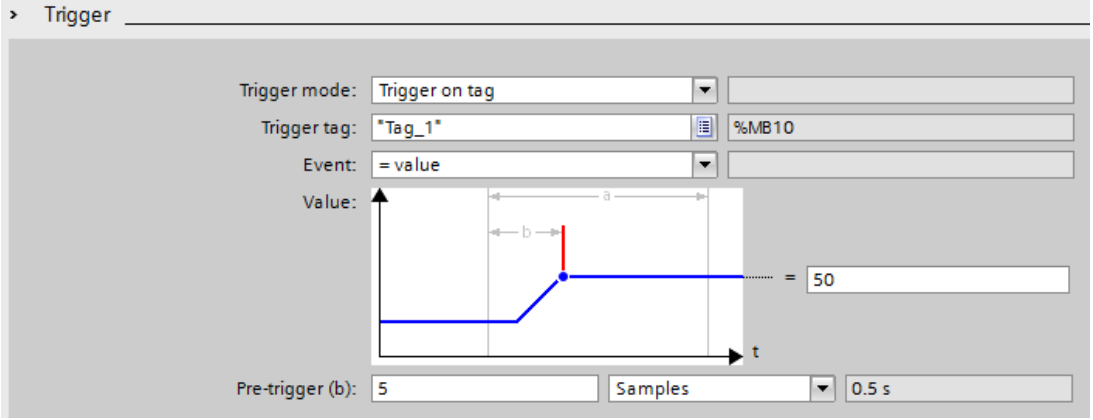

The following table explains the settings and displays:

Setting/display		Description
"Trigger mode"		Selection of the trigger mode.
	Trigger mode drop-down list	The following settings are possible: • "Record immediately" Recording is started immediately after the activation in the device. The global trigger is triggered immediately, regardless of the operating state of the device. • "Trigger on tag" The recording is made as soon as the installed trace is activated and the configured trigger condition is fulfilled. • "Monitor without trigger" (traces) The recording takes place as soon as the installed trace is activated and is not automatically terminated. After termination by the user, there are a maximum of as many measured values in the device as were configured under recording duration. This trigger mode is particularly suitable for monitoring slow signals and is only available for traces. • "Trigger from another device" (project trace) The global trigger for the start of the trace is triggered by another device. This trigger mode is only available for a project trace.
	Text field	-
"Trigger tag"		The "Trigger tag" specifies a signal that triggers the recording.
	Trigger tag entry field	Enter a signal. **Examples:** • "DataBlock_1".Temperature • M0.0 • DB1.DBW3 See also Data types for trigger tags (Page 105).
		Opens the signal selection table. Clicking the symbol opens a table offering possible signals for selection as trigger tag. The selected signal is displayed in the input field.

Setting/display		Description
	Trigger tag address text field	Display of the trigger tag address. With purely symbolic signals the field remains empty.
"Event"		The events that can be used on this trigger tag are offered for selection according to the data type of the trigger tag. The event can be configured provided a valid signal is entered as trigger tag.
	Trigger events drop-down list	Event selection for which the trigger tag is checked. The entries in the drop-down list are described in Section Trigger event (Page 106).
	Text field	-
"Value"		Configuration of the selected event. The configuration options differ depending on the format of the trigger tag and the selected event. See Trigger event (Page 106).
"Pre-trigger"		"Pre-trigger" defines the number of samples that are already recorded before the actual trigger condition is fulfilled. If the trigger event occurs immediately or shortly after the recording has been activated, this may result in a shorter recording duration. Examples of "Recording duration (a)" = 20 samples and "Pre-trigger (b)" = 5 samples: • Case 1: Trigger event occurs 50 samples after activation of the recording Actual recording duration (a) = 20 samples • Case 2: Trigger event occurs 2 samples after activation of the recording Actual recording duration (a) = 17 samples
	Duration entry field	Input of the duration in relation to the selection in the drop-down list.
	Unit drop-down list	Selection of the unit The following settings are possible: • "Samples" • "s" for seconds The setting depends on the recording level selected in "Trace sample event".
	Resulting pre-trigger duration text field	Display of the calculated "Pre-trigger" duration. The duration is displayed when recording in constant bus cycle time OBs.

Measurements on device (memory card)

The following figure shows an example of the settings for the saving of installed measurements:

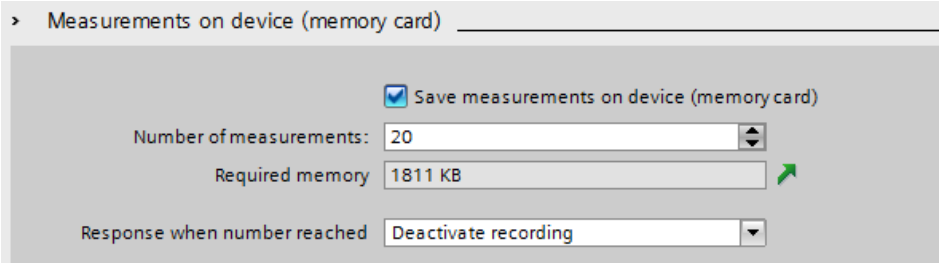

Saving measurements on device (memory card) is not possible with project traces.

NOTE

Deleting measurements on device (memory card) (S7-1200)

Do not delete any measurements on the device as long as a trace in the device still generates new measurements on the memory card.

NOTE

Available memory in the device (memory card)

The memory in the device (memory card) is partly used by system-relevant functions or reserved for that purpose.

Thus it is not possible for the entire memory to be used for saving measurements.

For further information please refer to the Function Manual Structure and Use of the CPU Memory (https://support.industry.siemens.com/cs/us/en/view/59193101).

NOTE

Memory requirements upon restart

Following a device reboot the maximum number of measurements saved in the device is the number configured under "Number of measurements".

With repeated restarts note that the measurements already saved are not overwritten and the "Number of measurements" configured in the device is saved once again.

The following table explains the settings and displays:

Setting/display	Description
"Saving of installed measurements (memory card)"	Repeat measurement automatically and store in the device retentively This setting is only possible with "Trigger on tag" trigger mode. The measurements are stored on the "primary" memory card. For traces which have been saved in the device (memory card), the function for automatically repeating the recording is not available. **Note** Only completed measurements are stored in the device. Any recording deactivated by the user is not saved on the device.

Setting/display	Description
	This function is available with the following firmware versions: • S7-1200 as of V4.2 • S7-1500 as of V2.0 The function is not supported by CPU S7-1500 R/H.
"Number of measurements"	Input of the number of measurements to be saved on the card.
"Memory requirements"	Display of the expected memory requirement for all measurements
	Displaying memory usage Shows the tab with the memory usage
"Behavior if number reached"	Selection for the behavior once "Number of measurements" is reached The following settings are possible: • "Deactivating a recording" The measurements are repeated until the "Number of measurements on the card" is reached. • "Overwrite oldest recording" The measurements are saved in a ring buffer and repeated until the user deactivates the recording. Once the number of measurements exceeds the "Number of measurements on the card" the oldest measurement on the card is overwritten in each case. **Note** Note that write processes that are repeated frequently may damage the card.

Long-term trace

The following figure shows an example of the settings for the saving of installed measurements:

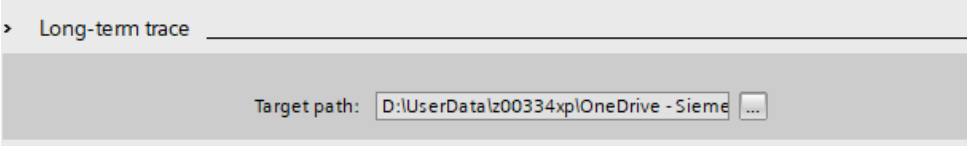

The following table explains the settings and displays:

Setting/display	Description
"Target path"	Display of the folder used for recording the long-term traces. Configuring the recording cycle and target path for long-term trace (Page 112) Long-term trace recording (Page 94)

The following table shows the supported data types for the trigger tag:

Memory requirement and format of the number	Data type
1 byte	BOOL
8-bit integers	SINT, USINT, BYTE
16-bit integers	INT, UINT, WORD, DATE

1) Not supported by S7-1200.

Memory requirement and format of the number	Data type
32-bit integers	DINT, UDINT, DWORD, TIME, TOD
64-bit integers [1)]	LINT, ULINT, LWORD, LTIME, LTOD, LDT
32-bit floating-point numbers	REAL
64-bit floating-point numbers	LREAL

1) Not supported by S7-1200.

Depending on the selection in the drop-down list, the further settings differ for the "event". The individual events are described below.

"=TRUE"

Supported data types: Bit (Page 105)
The recording starts when the state of the trigger is TRUE.

"=FALSE"

Supported data types: Bit (Page 105)
The recording starts when the state of the trigger is FALSE.

"Rising edge"

Supported data types: Bit (Page 105)
The recording is started when the trigger state changes from FALSE to TRUE.
After activation of the installed trace, at least two cycles are required to identify the edge.

"Rising signal"

Supported data types: Integers and floating-point numbers (Page 105) (no times, date and time of day)
The recording is started when the rising value of the trigger reaches or exceeds the value configured for this event.
After activation of the installed trace, at least two cycles are required to identify the edge.

"Falling edge"

Supported data types: Bit (Page 105)
The recording is started when the trigger state changes from TRUE to FALSE.
After activation of the installed trace, at least two cycles are required to identify the edge.

"Falling signal"

Supported data types: Integers and floating-point numbers (Page 105) (no times, date and time of day)

The recording is started when the falling value of the trigger reaches or falls below the value configured for this event.
After activation of the installed trace, at least two cycles are required to identify the edge.

"In the range"

Supported data types: Integers and floating-point numbers (Page 105)
The recording starts as soon as the value of the trigger is in the value range configured for this event.

"Outside of the range"

Supported data types: Integers and floating-point numbers (Page 105)
The recording starts as soon as the value of the trigger is outside the value range configured for this event.

"Value change"

All data types are supported.
The value is checked for change when the recording is activated. The recording starts when the value of the trigger changes.
This trigger event is supported as of V13 SP1. Older versions of the TIA Portal cannot interpret the trigger. Note that no explicit information is output in this case. This can occur, for example, when the trace is transferred from a CPU to TIA Portal V13 SP1 or lower or a trace configuration is imported.

"= value"

Supported data types: Integers (Page 105)
The recording starts when the value of the trigger is equal to the value configured for this event.

"<> value"

Supported data types: Integers (Page 105)
The recording starts when the value of the trigger is not equal to the value configured for this event.

"= bit pattern"

Supported data types: Integers and floating-point numbers (Page 105) (no times, date and time of day)
The recording starts when the value of the trigger matches the bit pattern configured for this event.

The following figure shows the setting options for a "bit pattern":

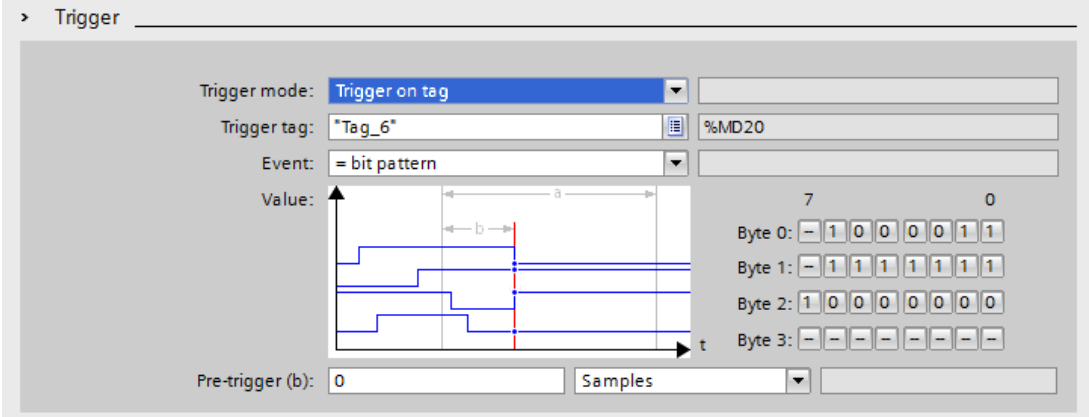

It is possible to switch between the icons by clicking the respective button.
The following table shows the icons:

Icon	Description
–	Bit is not evaluated
0	Bit is checked for FALSE
1	Bit is checked for TRUE

"<> bit pattern"

Supported data types: Integers and floating-point numbers (Page 105) (no times, date and time of day)
The recording starts when the value of the trigger does not match the bit pattern configured for this event.

See also

Configuring the trigger conditions (Page 110)
Recordable variables (Page 90)

7.1.10 Configuration

7.1.10.1 Trace configuration - overview

The configuration of the recording conditions and the signals to be recorded is device-specific.

Requirement

A trace configuration has been created and opened in the working area of the "Configuration" tab.

Procedure

The following table shows the procedure for configuring.

Step	Description
1	Documentation of the configuration (optional) Enter a comment and an author for the configuration in the Inspector window.
2	Selecting signals (Page 109) Select the signals to be recorded in the "Signals" area.
3	Configuring the recording cycle and duration (Page 110) Select a recording time, a cycle and the duration in the "Recording conditions" area.
4	Configuring the trigger conditions (Page 110) In the "Recording conditions" area, select whether the recording is to be performed immediately or depending on a trigger condition.
5	Configure installed measurements (memory card) (Page 111) In the "Recording conditions" area, select whether the recording is to be saved on the device (memory card).

7.1.10.2 Long-term trace configuration – overview

The configuration of the recording conditions and the signals to be recorded is device-specific.

Requirement

A long-term trace configuration has been created and opened in the working area of the "Configuration" tab.

Procedure

The following table shows the procedure for configuring.

Step	Description
1	Selecting signals (Page 109) Select the signals to be recorded in the "Signals" area.
2	Configuring the recording cycle and target path for long-term trace (Page 112) In the "Recording conditions" tab, define the recording cycle and change the target path, if necessary.

See also

Configuring the recording cycle and duration (Page 110)

7.1.10.3 Selecting signals

Requirement

- A trace configuration or a long-term trace configuration has been created and opened.
- The "Signals" area is open in the "Configuration" tab.

Procedure

To configure the signals to be recorded, proceed as follows:

1. Select a signal. The following options are available:
   - In the "Name" column, click the button and select a tag.
   - Enter the symbolic tag name in the cell in the "Name" column.
   - Enter the address directly in the "Address" column.
   - Drag a signal to the table using drag-and-drop.
2. Click in the "Comment" column and enter a comment for the signal.
3. Repeat the procedure from step 1 until all the signals to be recorded have been entered in the table.

7.1.10.4 Configuring the recording cycle and duration

Requirement

- A trace configuration has been created and opened.
- The "Recording conditions" area is open in the "Configuration" tab.

Procedure

To configure the cycle and the duration of a recording, proceed as follows:

1. Click for the recording time.
2. Select an OB for the recording time (Page 91).
3. Select a unit for the reduction factor in the drop-down list for "Record every".
4. Enter the factor for the reduction in the input field for "Record every".
5. Select a unit in the drop-down list for "Recording duration".
6. Specify the recording duration.
   The following options are available:
   - Enter a value for the duration in the input field for "Recording duration".
   - Activate the "Use max. recording duration" checkbox.

7.1.10.5 Configuring the trigger conditions

Requirement

- A trace configuration has been created and opened.
- The "Recording conditions" area is open in the "Configuration" tab.

"Record immediately" trigger condition

To start the recording immediately, proceed as follows:

1. Select the "Record immediately" entry in the drop-down list for "Trigger mode".
   The input fields for the trigger tag are hidden.

"Trigger on tag" trigger condition

To start the recording depending on a condition, proceed as follows:

1. Select the "Trigger on tag" entry in the drop-down list for "Trigger mode".
2. Select a trigger tag. The following options are available:
   – Click for the trigger tag and select a tag.
   – Enter the address or the symbolic name of the tag directly in the input field for the trigger tag.

   A drop-down list with events and input fields is displayed. The display depends on the data type of the tag.
3. Configure the event.
4. Select a unit for the pre-trigger in the drop-down list for "Pre-trigger".
5. In order to record a period before the trigger event, enter a value greater than 0 in the input field for the pre-trigger.

NOTE

Cyclic test of the trigger condition

The trigger condition is checked in every cycle irrespective of the setting in "Record every". To reliably identify the trigger, the trigger signal must be present for at least one full cycle.

7.1.10.6 Configure installed measurements (memory card)

Requirement

- A trace configuration has been created and opened.
- The "Recording conditions" area is open in the "Configuration" tab.
- The "Trigger on tag" trigger mode is set.
- The firmware on the device supports the recording of an installed measurement.

Procedure

Proceed as follows to save the installed measurement (on the memory card):

1. Select the "Save measurements on device (memory card)" check box.
2. Enter the number of measurements that ought to be saved on the card in the "Number of measurements" entry field.
3. Set the desired behavior once the "Number of measurements" has been reached in the “Behavior if number reached" drop-down list.

NOTE

No evaluation of the trigger during saving

No new trigger can be evaluated as long as the recording is saved.

7.1.10.7 Configuring the recording cycle and target path for long-term trace

Requirement

- A long-term trace configuration has been created and opened.
- The "Recording conditions" area is open in the "Configuration" tab.

Procedure

To configure the cycle of a recording, proceed as follows:

1. Click the button for the time of recording.
2. Select an OB for the time of recording.
3. Enter the factor for the reduction in the import field for "Record every".
4. Select a unit for the reduction factor in the drop-down list for "Record every".

The default target path is the folder of the STEP 7 project.

To change the target path, follow these steps:

1. Click the button for the target path.
   The "Select folder" window opens.
2. In the folder structure, navigate to the target folder or enter the target path under "Folder".
3. Click "Select folder".

Glossary

Curve diagram

Displays the selected signals of a recording.

Global trigger

If a project trace is triggered by a participating device to start recording synchronously in all participating devices.

Installed trace

Consists of a trace configuration and optionally a recording.

Measurement

Consists of a trace configuration with an associated recording.

Overlay measurement

Permits a comparison and analysis of signals from different measurements.

Pre-trigger

Defines the interval in which the signals are already recorded before the actual trigger condition is fulfilled.

Project trace

Contains all the information to record signals from multiple devices with a global trigger.

Recording

Is performed in the device. There is only one recording for each installed trace configuration.

Recording condition

Sampling and trigger for a trace configuration.

Recording duration

Factor in number of samples. The factor of 100 means, for example, that 100 samples are recorded.

Reduction

Factor in number of cycles. A factor of 2 means, for example, that a recording is made every second cycle.

Sampling

Setting, in which cycle, how fast and how long the recording is to be made.

Signal table

Lists the signals of the selected measurement and provides setting options for some properties.

Snapshot

Contains the settings for the view for a measurement.

Trace configuration

Contains all the information required to record signals in a device.

Trigger

Specifies the trigger mode and the condition for the "Trigger on tag" mode.

Trigger mode

Specifies whether the recording should be started immediately or based on a trigger tag.

Trigger tag

Signal to trigger the recording.

Trigger time

The meaning of the measurement trigger time depends on the device.
e.g. SIMATIC S7-1200/1500 CPUs: Specifies the absolute time of the control system at the start of recording.

Index

A

Align combined measurements, 89
Analyze an ongoing recording, 83
Apply combined measurement, 87
Automatically repeat measurement, 82

B

Bit track, 32
Bode diagram, 52

C

Combined measurement, 18
  Project tree, 28
Comparing recordings, 88
Configuring the recording cycle, 110
Configuring the recording duration, 110
Configuring the trace, 109, 109
Configuring the trigger conditions, 111
CPU load, 96
Curve diagram, 32
  Bit track, 32
  Trigger time, 33
  Mouse wheel, 34
  Keyboard operation, 34
  Mouse wheel, 49
  Keyboard operation, 49
  Mouse wheel, 53
  Keyboard operation, 54

D

Data storage
  Trace configuration, 18
  Measurement, 18
Display options, 38, 71

E

Enable/disable trace, 81

F

FFT diagram, 48

I

Inspector window, 57
Installed trace, 17

L

Lifetime of the values, 91

M

Mathematical functions, 41
Measurement, 17, 18
Measurement cursor, 58
Measurements
  Project tree, 25
Measurements on device (memory card), 17
  Project tree, 26

P

Pre-trigger, 103
Print, 89
Project trace, 21
  Time synchronization, 21
  Trigger time, 21
  Supported devices, 97
Project trace inspector window, 67
Project trace project tree, 63
Project trace quick start, 78
Project trace recording conditions, 100
Project trace supported devices, 97

Project trace user interface, 62, 98
Project tree, 24, 29

Q

Quantity structure, 93
Quick Start for trace, 73

R

Recordable variables, 90
Recording, 17
Recording conditions, 105, 106
Recording cycle, 70, 75
Recording levels, 92
Reduction, 101

S

Sampling, 70, 75
Save measurements on device, 104, 112
Saving the measurement in the project, 82
Selecting signals, 110
Signals, 99
Signal table, 38
  Display options, 38
Snapshots, 60
Status, 25, 29
Supported devices, 15

T

Target path, 112
Time stamp, 57
Time synchronization, 92
Trace configuration, 17, 18
Trace quick start, 69
Trace recording conditions, 100
Trace S7-1200/1500, 90
Transferring the trace configuration from the device, 81
Trigger mode, 102
Trigger tag, 102, 105
Trigger time, 33

U

Use curve diagram, 83
Use measurement cursor, 83
User interface, 23, 97, 98
Using the scaling group, 86
Using the signal table, 85

SIEMENS

Edition 11/2022

FUNCTION MANUAL

SIMATIC

S7-1500, ET 200MP, ET 200SP, ET 200AL, ET 200pro

Communication

support.industry.siemens.com

SIEMENS

SIMATIC

S7-1500, ET 200MP, ET 200SP, ET 200AL, ET 200pro, ET 200eco PN Communication

Function Manual

Introduction 1

Safety instructions 2

Product overview 3

Communications services 4

PG communication 5

HMI communication 6

Open User Communication 7

S7 communication 8

Point-to-point link 9

OPC UA communication 10

Addressing via DHCP 11

Routing 12

Connection resources 13

Diagnostics and fault correction 14

Communication with the redundant system S7-1500R/H 15

Continued on next page

11/2022
A5E03735815-AK

S7-1500, ET 200MP, ET 200SP, ET 200AL, ET 200pro, ET 200eco PN Communication

Function Manual

Legal information

Warning notice system

This manual contains notices you have to observe in order to ensure your personal safety, as well as to prevent damage to property. The notices referring to your personal safety are highlighted in the manual by a safety alert symbol, notices referring only to property damage have no safety alert symbol. These notices shown below are graded according to the degree of danger.

⚠ DANGER
indicates that death or severe personal injury **will** result if proper precautions are not taken.

⚠ WARNING
indicates that death or severe personal injury **may** result if proper precautions are not taken.

⚠ CAUTION
indicates that minor personal injury can result if proper precautions are not taken.

NOTICE
indicates that property damage can result if proper precautions are not taken.

If more than one degree of danger is present, the warning notice representing the highest degree of danger will be used. A notice warning of injury to persons with a safety alert symbol may also include a warning relating to property damage.

Qualified Personnel

The product/system described in this documentation may be operated only by **personnel qualified** for the specific task in accordance with the relevant documentation, in particular its warning notices and safety instructions. Qualified personnel are those who, based on their training and experience, are capable of identifying risks and avoiding potential hazards when working with these products/systems.

Proper use of Siemens products

Note the following:

⚠ WARNING
Siemens products may only be used for the applications described in the catalog and in the relevant technical documentation. If products and components from other manufacturers are used, these must be recommended or approved by Siemens. Proper transport, storage, installation, assembly, commissioning, operation and maintenance are required to ensure that the products operate safely and without any problems. The permissible ambient conditions must be complied with. The information in the relevant documentation must be observed.

Trademarks

All names identified by ® are registered trademarks of Siemens AG. The remaining trademarks in this publication may be trademarks whose use by third parties for their own purposes could violate the rights of the owner.

Disclaimer of Liability

We have reviewed the contents of this publication to ensure consistency with the hardware and software described. Since variance cannot be precluded entirely, we cannot guarantee full consistency. However, the information in this publication is reviewed regularly and any necessary corrections are included in subsequent editions.

Siemens AG
Digital Industries
Postfach 48 48
90026 NÜRNBERG
GERMANY

A5E03735815-AK
Ⓟ 10/2022 Subject to change

Copyright © Siemens AG 2013 - 2022.
All rights reserved

Table of contents

1 Introduction ... 11

1.1 Function Manuals documentation guide ... 16
1.1.1 Information classes Function Manuals ... 16
1.1.2 Basic tools ... 17
1.1.3 S7 Port Configuration Tool (S7-PCT) ... 19
1.1.4 S7 Failsafe Configuration Tool (S7-FCT) ... 19
1.1.5 MultiFieldbus Configuration Tool (MFCT) ... 20
1.1.6 SIMATIC Technical Documentation ... 20

2 Safety instructions ... 22

2.1 Security information ... 22

3 Product overview ... 23

4 Communications services ... 28

4.1 Overview of communication options ... 28
4.2 Communications protocols and port numbers used for Ethernet communication ... 30
4.3 Overview of connection resources ... 36
4.4 Setting up a connection ... 37
4.5 Data consistency ... 40
4.6 Secure Communication ... 43
4.6.1 Basics of Secure Communication ... 43
4.6.1.1 Useful information on Secure Communication ... 43
4.6.1.2 Device-dependent security features ... 47
4.6.1.3 Confidentiality through encryption ... 48
4.6.1.4 Authenticity and integrity through signatures ... 50
4.6.2 Managing certificates ... 54
4.6.2.1 What you should know about the certificate management ... 54
4.6.2.2 Certificate management with TIA Portal ... 54
4.6.2.3 Examples for the management of certificates ... 58
4.6.2.4 How communication with certificates works: HTTP over TLS ... 62
4.6.3 Requirements for secure communication ... 65
4.6.3.1 Protection of confidential configuration data ... 65
4.6.3.2 Useful information for the protection of confidential PLC configuration data ... 67
4.6.3.3 Changing your password ... 68
4.6.3.4 Resetting the password ... 70
4.6.3.5 Assign password via SIMATIC Memory Card ... 71
4.6.3.6 Special features when backing up and restoring a CPU ... 73
4.6.3.7 Tips for error avoidance and error handling ... 74
4.6.3.8 Rules for the replacement parts scenario ... 75

4.6.4 Secure Open User Communication ... 76
4.6.4.1 Secure OUC of an S7-1500 CPU as TLS client to an external PLC (TLS server) ... 76
4.6.4.2 Secure OUC of an S7-1500 CPU as TLS server to an external PLC (TLS client) ... 78
4.6.4.3 Secure OUC between two S7-1500 CPUs ... 80
4.6.4.4 Secure OUC via CP interface ... 83
4.6.4.5 Secure OUC with Modbus TCP ... 88
4.6.4.6 Secure OUC via e-mail ... 90
4.6.5 Secure PG/HMI communication ... 93
4.6.5.1 PG/HMI communication based on standardized security mechanisms ... 93
4.6.5.2 Additional settings for the secure PG/HMI communication ... 94
4.6.5.3 Tip for certificate-based communication between PG and CPU ... 95
4.6.5.4 CPU behavior from loading to operational readiness ... 97
4.6.5.5 Using secure HMI communication ... 99
4.6.5.6 Using Legacy PG/PC communication for TIA Portal ... 101
4.6.5.7 Information about compatibility ... 102

4.7 SNMP ... 103
4.7.1 Activating and deactivating SNMP ... 103
4.7.2 Activating/deactivating SNMP by data record transfer: Example for a CPU 1516-3 PN/DP ... 106
4.7.3 Activating/deactivating SNMP by data record transfer with S7-1500R/H CPUs ... 107

5 PG communication ... 111

6 HMI communication ... 113

7 Open User Communication ... 115

7.1 Overview of Open User Communication ... 115

7.2 Protocols for Open User Communication ... 116

7.3 Instructions for Open User Communication ... 118

7.4 Open User Communication with addressing via domain names ... 121

7.5 Setting up Open User Communication via TCP, ISO-on-TCP, UDP and ISO ... 124

7.6 Setting up communication over FDL ... 128

7.7 Setting up communication with Modbus TCP ... 130

7.8 Setting up communication via e-mail ... 133

7.9 Setting up communication via FTP ... 134

7.10 Establishment and termination of communications relations ... 137

8 S7 communication ... 138

9 Point-to-point link ... 146

10 OPC UA communication ... 151

10.1 What you need to know about OPC UA ... 151
10.1.1 OPC UA and Industrie 4.0 ... 151
10.1.2 General features of OPC UA ... 151
10.1.3 OPC UA for S7-1200/S7-1500 CPUs ... 154
10.1.4 Access to OPC UA applications ... 156
10.1.5 Addressing nodes ... 159

10.1.6 What you need to know about OPC UA clients ... 163
10.1.7 Mapping of data types ... 166

10.2 Security at OPC UA ... 169
10.2.1 Security settings ... 169
10.2.2 Certificates pursuant to ITU X.509 ... 170
10.2.3 Certificates with OPC UA ... 173
10.2.4 Creating self-signed certificates ... 174
10.2.5 Generating PKI key pairs and certificates yourself ... 175
10.2.6 Secure transfer of messages ... 177
10.2.7 Certificate management via Global Discovery Server (GDS) ... 180
10.2.7.1 Automated certificate management with GDS ... 180
10.2.7.2 Configuration limits for Push function ... 183
10.2.7.3 Setting and loading GDS parameters ... 184
10.2.7.4 GDS commissioning ... 186
10.2.7.5 Address model for the push certificate management ... 190
10.2.7.6 CertificateGroups in the address model ... 194

10.3 Using the S7-1500 as an OPC UA server ... 197
10.3.1 Interesting information about the OPC UA server of the S7-1500 CPUs ... 197
10.3.1.1 The OPC UA server of the S7-1500 CPUs ... 197
10.3.1.2 End points of the OPC UA server ... 199
10.3.1.3 Runtime behavior of the OPC UA server ... 201
10.3.2 Accessing OPC UA server data ... 203
10.3.2.1 Client accesses and local accesses to the OPC UA server ... 203
10.3.2.2 Managing write and read rights ... 207
10.3.2.3 Managing write and read rights for a complete DB ... 209
10.3.2.4 Coordinating write and read rights for CPU tags ... 210
10.3.2.5 Consistency of CPU tags ... 212
10.3.2.6 Write accesses to OPC UA variables from S7-1500 Motion Control ... 213
10.3.2.7 Accessing OPC UA server data ... 214
10.3.2.8 MinimumSamplingInterval attribute ... 215
10.3.2.9 Export OPC UA XML file ... 215
10.3.3 Configuring the OPC UA server ... 216
10.3.3.1 Enabling the OPC UA server ... 216
10.3.3.2 Access to the OPC UA server ... 218
10.3.3.3 General settings of the OPC UA server ... 220
10.3.3.4 Settings of the server for subscriptions ... 222
10.3.3.5 Handling client and server certificates ... 224
10.3.3.6 Generating server certificates with STEP 7 ... 229
10.3.3.7 User authentication ... 232
10.3.3.8 Users and roles with OPC UA function rights ... 233
10.3.3.9 Diagnostic settings of the server ... 235
10.3.3.10 License for OPC UA ... 236
10.3.4 OPC UA server interface configuration ... 236
10.3.4.1 What is a server interface? ... 236
10.3.4.2 Using OPC UA companion specifications ... 238
10.3.4.3 Creating a server interface for companion specification ... 245
10.3.4.4 Creating a user-defined server interface ... 249
10.3.4.5 Data types for companion specifications ... 255
10.3.4.6 LocalizedText and ByteString support for the OPC UA server ... 256
10.3.4.7 Using additional OPC UA basic data types for companion specifications ... 258
10.3.4.8 Rules for OPC UA XML files ... 260

10.3.4.9 Creating a server interface for reference namespace ... 261
10.3.4.10 Generating OPC UA nodes based on local data mappings of FB types and UDTs ... 263
10.3.4.11 Notes on configuration limits when using server interfaces ... 267
10.3.5 Providing methods on the OPC UA server ... 268
10.3.5.1 Useful information about server methods ... 268
10.3.5.2 Boundary conditions for using server methods ... 271
10.3.6 Providing alarms on the OPC UA server ... 272
10.3.6.1 Useful information on alarms ... 272
10.3.6.2 OPC UA Events ... 276
10.3.6.3 OPC UA conditions and OPC UA alarms ... 279
10.3.6.4 Activating Alarms and Conditions ... 281
10.3.6.5 Subscribing to events of an OPC UA server ... 282
10.3.6.6 Processing associated values of alarms ... 284
10.3.6.7 Methods for OPC UA Alarms and Conditions ... 286
10.3.6.8 Handling memory limits for OPC UA Alarms and Conditions ... 290
10.3.7 Using diagnostics options ... 293
10.3.7.1 Diagnostics of the OPC UA server ... 293
10.3.7.2 Running diagnostics for OPC UA servers in the program ... 294
10.3.7.3 Server state transition diagnostics ... 295
10.3.7.4 Session state transition diagnostics ... 296
10.3.7.5 Check for security events ... 297
10.3.7.6 Request of a remote client failed ... 298
10.3.7.7 Subscription diagnostics ... 299
10.3.7.8 Summarizing diagnostics ... 302

10.4 Using the S7-1500 CPU as an OPC UA client ... 304
10.4.1 Overview and requirements ... 304
10.4.2 Useful information about the client instructions ... 305
10.4.3 Number of client instructions that can be used simultaneously ... 307
10.4.4 Example configuration for OPC UA ... 308
10.4.5 Creating client interfaces ... 309
10.4.6 Determine server interface online ... 316
10.4.7 Using multilingual texts ... 320
10.4.8 Rules for the access to structures ... 322
10.4.9 Using connection parameter assignment ... 323
10.4.9.1 Creating and configuring connections ... 323
10.4.9.2 Handling of the client certificates of the S7-1500 CPU ... 327
10.4.9.3 User authentication ... 329
10.4.9.4 Using a configured connection ... 330

10.5 Tips and recommendations ... 336
10.5.1 Rules for subscriptions ... 336
10.5.2 Rules for the user program ... 337
10.5.3 Master copies for OPC UA communication ... 338

11 Addressing via DHCP ... 340
11.1 Principle of address assignment via DHCP ... 342
11.2 DHCP with DNS ... 343
11.3 Activate DHCP ... 347
11.4 Configuring the client ID ... 348
11.5 Get addresses of the DNS servers via DHCP ... 349
11.6 Get addresses of the NTP servers via DHCP ... 350
11.7 Obtain host and domain name via DHCP ... 350

12 Routing ... 352
12.1 Overview of the routing mechanisms of S7-1500 CPUs ... 352
12.2 S7 routing ... 352
12.3 IP forwarding ... 357
12.4 Data record routing ... 364
12.5 Virtual interface for IP-based applications ... 365

13 Connection resources ... 370
13.1 Connection resources of a station ... 370
13.2 Allocation of connection resources ... 373
13.3 Display of the connection resources ... 377

14 Diagnostics and fault correction ... 380
14.1 Connection diagnostics ... 380
14.2 Emergency address ... 383

15 Communication with the redundant system S7-1500R/H ... 384
15.1 System IP addresses ... 385
15.2 Response to Snycup ... 390
15.3 Response to primary-backup switchover ... 391
15.4 Connection resources of the redundant system S7-1500R/H ... 391
15.5 HMI communication with the redundant system S7-1500R/H ... 392
15.5.1 HMI connection via the system IP address ... 392
15.6 Open User Communication with the redundant system S7-1500R/H ... 395
15.6.1 Setting up the connection of the Open User Communication with the redundant S7-1500R/H system ... 395

16 Industrial Ethernet Security with CP 1543-1 400
16.1 Firewall 401
16.2 Logging 401
16.3 NTP client 402
16.4 SNMP 402
16.5 VPN 403
Glossary 404
Index 415

Introduction

1

Purpose of the documentation

This function manual provides you with an overview of the communication options, the CPUs, communication modules and processors and PC systems of the systems SIMATIC S7-1500, ET 200MP, ET 200SP, ET 200AL, ET 200pro and SIMATIC Drive Controller. This function manual describes the connection-oriented, asynchronous communication.

The documentation covers the following:

- Overview of the communication services
- Properties of the communication services
- Overview of the user activities for setting up the communication services

Basic knowledge required

The following knowledge is required in order to understand the Function manual:

- General knowledge of automation technology
- Knowledge of the industrial automation system SIMATIC
- Knowledge about how to use STEP 7 (TIA Portal)

Scope of the documentation

This documentation is the basic documentation for all products of the SIMATIC S7-1500, ET 200MP, ET 200SP, ET 200AL and ET 200pro systems. The product documentation is based on this documentation.

What's new in the Communication Function Manual, Edition 11/2022 as compared to Edition 05/2021?

What's new?	What are the customer benefits?	Where can I find the information?
Revision of the tables for communication protocols and port numbers used in Ethernet communication	Updated information on protocols and ports used. You can see at first glance which default settings apply. This allows you to specifically adjust only those settings that are relevant to your application.	Communications protocols and port numbers used for Ethernet communication (Page 30)
Activate / Deactivate the SNMP	Depending on the FW version of the S7-1500 CPUs, the SNMP is activated or deactivated in the default settings. You can change the default settings as required.	SNMP (Page 103)
Revision of the virtual interface for IP-based applications	With a CP 1543-1 with firmware version V3.0 or higher, the internal CP firewall is available. This is used to secure data traffic via the virtual interface.	Virtual interface for IP-based applications (Page 365)

What's new?	What are the customer benefits?	Where can I find the information?
OPC UA server: Reading the diagnostics status of the own address space	By using the OPC UA instruction for reading ("OPC_UA_ReadList"), the own namespace of the OPC UA Server can be accessed. This makes it possible to read out the status of the own OPC UA server as well as the connections of OPC UA clients, the session as well as the subscriptions and to react to them in the user program. This allows connection problems to be quickly detected, for example, and plant availability to be increased.	Running diagnostics for OPC UA servers in the program (Page 294)
OPC UA server: Time stamping of the source time of nodes	By using the OPC UA instruction for writing ("OPC_UA_WriteList"), it is possible to change the "SourceTimestamp" as well as the status code of an OPC UA variable (node). This makes it possible to distinguish between the "Source" and "Server" time as of V18.	Client accesses and local accesses to the OPC UA server (Page 203)
OPC UA GDS mechanism: Now also usable for Web server certificates	The Web server certificate for HTTPS communication can now also be managed via the OPC UA GDS mechanism, without separate download of the hardware configuration.	What you should know about the certificate management (Page 54) Automated certificate management with GDS (Page 180)

What's new in the Communication Function Manual, Edition 05/2021 as compared to Edition 11/2019?

What's new?	What are the customer benefits?	Where can I find the information?
Improved security for SIMATIC PG/HMI communication	• Allows unique identification of each PLC based on individual certificates • Provides additional confidentiality protection through encrypted communication • Protection of the configuration data through individual passwords	Secure PG/HMI communication (Page 93)
Security wizard for new PLC security mechanisms	• Quick and easy configuration of the new security mechanisms of the PLC in one operation • Supporting information to select suitable settings for own application	Protection of confidential configuration data (Page 65)
Certificate management via OPC UA Global Discovery Server (GDS)	• Certificate update during runtime • Support of CRLs • Access protection for certificate management	Certificate management via Global Discovery Server (GDS) (Page 180)
Transferring CPU alarms to OPC UA clients	• Subscriptions allow clients to subscribe to CPU alarms as "Alarms and Conditions" from the OPC UA server of the CPU. • Program messages including associated values are made available by the OPC UA server • Alarms requiring acknowledgement can be acknowledged by the OPC UA client (can be disabled) • An alarm burst is displayed as "overload" and clients can be reloaded with the refresh method	Providing alarms on the OPC UA server (Page 272)

What's new?	What are the customer benefits?	Where can I find the information?
Dynamic assignment of the network configuration with DHCP	Deployment of the CPU in IT managed networks using the following functions: • Connection of the CPU to an existing network without additional manual configuration of the network interface • Request for network parameters for the CPU according to RFC 2131 from a DHCPv4 server (IP address and subnet mask, default IP router address and further optional network parameters such as DNS and NTP server addresses)	Addressing via DHCP (Page 340)
Name-based addressing with DNS	• DNS server addresses can be obtained from the CPU via DHCP • The CPU can obtain host and domain names from a DHCP server for applications that are implemented with OPC UA or (Secure) OUC. • The CPU may transfer configured host or domain names to DHCP servers coupled with DNS servers for dynamic matching (Dynamic DNS). • The NTP client of the CPU can address NTP servers with names • Network parameters can be written with the new "CommConfig" instruction, for example, IP address parameters, DNS server, host and domain name	DHCP with DNS (Page 343)

What's new in the Communication Function Manual, Edition 11/2019 as compared to Edition 10/2018?

What's new?	What are the customer benefits?	Where can I find the information?
IP forwarding	Simple access from the control level to the field level for configuration and parameter assignment of devices, e.g. via PDM or Web browser.	IP forwarding (Page 356)
OPC UA server expansion	For S7-1500 CPUs as of firmware V2.8 and TIA Portal version 16, with a corresponding Runtime license, you can benefit from the following expansions of the integrated OPC UA server: • Improved diagnostics: The OPC UA user receives information on the status of the OPC UA server via alarms in the diagnostics buffer, an OPC UA category in the Online & Diagnostics area of TIA Portal as well as an improved connection resources display. • Download behavior: In RUN mode, the OPC UA server only performs a restart during download from the TIA Portal when the newly downloaded data has an effect on the data management of the OPC UA server. • Server interface modeling: It is now possible in the TIA Portal to model server interfaces or import OPC UA Companion Specifications and map them to the PLC data management.	Section OPC UA communication (Page 151)

What's new in the Communication Function Manual, Edition 10/2018 as compared to Edition 12/2017?

What's new?	What are the customer benefits?	Where can I find the information?
Description of communication with the S7-1500R/H redundant system	You receive information on the particularities of communication with the S7-1500R/H redundant system	Section Communication with the redundant system S7-1500R/H (Page 384)
Scope of the function manual expanded to include the S7-1500R/H redundant system	Functions with which you are familiar from the SIMATIC S7-1500 automation system are implemented for the S7-1500R/H redundant system.	S7-1500R/H redundant system System Manual (https://support.industry.siemens.com/cs/ww/en/view/109754833)

What's new in the Communication Function Manual, Edition 12/2017 compared to Edition 09/2016

What's new?	What are the customer benefits?	Where can I find the information?
OPC UA Companion Specification	Through OPC UA Companion Specification, methods can be specified in a uniform and manufacturer-neutral way. Using these specified methods, you can easily integrate devices from various manufacturers into the plant and the production processes.	Section OPC UA server interface configuration (Page 236)
Setting up a secure connection to a mail server over the CPU interface	You can set up a secure connection to a mail server without additional hardware.	Section Secure OUC via e-mail (Page 89)
Secure communication over Modbus TCP	You can establish secure TCP connections between a Modbus TCP client and a Modbus TCP server.	Section Secure OUC with Modbus TCP (Page 88)

What's new in the Communication Function Manual, Edition 09/2016 compared to Edition 12/2014

What's new?	What are the customer benefits?	Where can I find the information?
OPC UA server	OPC UA is a uniform standard for data communication and is independent of any particular operating system platforms. OPC UA uses integrated safety mechanisms on various automation systems, for example with data exchange, at application level, for the legitimation of the user. The OPC UA server provides a large amount of data: • Values of PLC tags that clients can access • Data types of these PLC tags • Information about the OPC UA server itself and the CPU In this way, clients can gain an overview of the tag management and can read and write values.	Section OPC UA communication (Page 151)
Secure Open User Communication	Secure data exchange with other devices.	Section Secure Open User Communication (Page 75)

What's new?	What are the customer benefits?	Where can I find the information?
Certificate handling in STEP 7	You can manage certificates for the following applications in STEP 7: • OPC UA server • Secure Open User Communication • Web server of the CPU	Section Certificate management with TIA Portal (Page 54)
Deactivating SNMP for the CPU	You can deactivate SNMP for the CPU. This can make sense under certain conditions, for example if the security guidelines in your network do not permit SNMP.	Section SNMP (Page 103)

Conventions

STEP 7: We refer to "STEP 7" in this documentation as a synonym for the configuration and programming software "STEP 7 as of V12 (TIA Portal)".

"S7-1500 CPUs" also refers to the CPU variants S7 1500F, S7 1500T, S7 1500TF, S7 1500C, S7-1500R/H, S7 1500pro, ET200S, S7 1500 Software Controller as well as SIMATIC Drive Controller.

This documentation contains pictures of the devices described. The figures may differ slightly from the device supplied.

You should also pay particular attention to notes such as the one shown below:

NOTE

A note contains important information on the product, on handling of the product and on the section of the documentation to which you should pay particular attention.

Industry Mall

The Industry Mall is the catalog and order system of Siemens AG for automation and drive solutions on the basis of Totally Integrated Automation (TIA) and Totally Integrated Power (TIP).

You can find catalogs for all automation and drive products on the Internet (https://mall.industry.siemens.com).

1.1 Function Manuals documentation guide

1.1.1 Information classes Function Manuals

The documentation for the SIMATIC S7-1500 automation system, for the 1513/1516pro-2 PN, SIMATIC Drive Controller CPUs based on SIMATIC S7-1500 and the SIMATIC ET 200MP, ET 200SP, ET 200AL and ET 200eco PN distributed I/O systems is arranged into three areas.

This arrangement enables you to access the specific content you require.
You can download the documentation free of charge from the Internet (https://support.industry.siemens.com/cs/ww/en/view/109742705).

Basic information

The system manuals and Getting Started describe in detail the configuration, installation, wiring and commissioning of the SIMATIC S7-1500, SIMATIC Drive Controller, ET 200MP, ET 200SP, ET 200AL and ET 200eco PN systems. Use the corresponding operating instructions for 1513/1516pro-2 PN CPUs.

The STEP 7 online help supports you in the configuration and programming.

Examples:

- Getting Started S7-1500
- System manuals
- Operating instructions ET 200pro and 1516pro-2 PN CPU
- Online help TIA Portal

Device information

Equipment manuals contain a compact description of the module-specific information, such as properties, wiring diagrams, characteristics and technical specifications.

Examples:

- Equipment manuals for CPUs
- Equipment manuals for interface modules
- Equipment manuals for digital modules
- Equipment manuals for analog modules
- Equipment manuals for communication modules
- Equipment manuals for technology modules
- Equipment manuals for power supply modules
- Equipment manuals for BaseUnits

General information

The function manuals contain detailed descriptions on general topics relating to the SIMATIC Drive Controller and the S7-1500 automation system.
Examples:

- Function Manual Diagnostics
- Function Manual Communication
- Function Manuals Motion Control
- Function Manual Web Server
- Function Manual Cycle and Response Times
- PROFINET Function Manual
- PROFIBUS Function Manual

Product Information

Changes and supplements to the manuals are documented in a Product Information. The Product Information takes precedence over the device and system manuals.
You will find the latest Product Information on the Internet:

- S7-1500/ET 200MP (https://support.industry.siemens.com/cs/de/en/view/68052815)
- SIMATIC Drive Controller (https://support.industry.siemens.com/cs/de/en/view/109772684/en)
- Motion Control (https://support.industry.siemens.com/cs/de/en/view/109794046/en)
- ET 200SP (https://support.industry.siemens.com/cs/de/en/view/73021864)
- ET 200eco PN (https://support.industry.siemens.com/cs/ww/en/view/109765611)

Manual Collections

The Manual Collections contain the complete documentation of the systems put together in one file.
You will find the Manual Collections on the Internet:

- S7-1500/ET 200MP/SIMATIC Drive Controller (https://support.industry.siemens.com/cs/ww/en/view/86140384)
- ET 200SP (https://support.industry.siemens.com/cs/ww/en/view/84133942)
- ET 200AL (https://support.industry.siemens.com/cs/ww/en/view/95242965)
- ET 200eco PN (https://support.industry.siemens.com/cs/ww/en/view/109781058)

1.1.2 Basic tools

The tools described below support you in all steps: from planning, over commissioning, all the way to analysis of your system.

TIA Selection Tool

The TIA Selection Tool tool supports you in the selection, configuration, and ordering of devices for Totally Integrated Automation (TIA).
As successor of the SIMATIC Selection Tools , it assembles the configuration editors for automation technology already familiar into a single tool.

With the TIA Selection Tool , you can generate a complete order list from your product selection or product configuration.
You can find the TIA Selection Tool on the Internet.
(https://support.industry.siemens.com/cs/ww/en/view/109767888)

SIMATIC Automation Tool

You can use the SIMATIC Automation Tool to perform commissioning and maintenance activities on various SIMATIC S7 stations as bulk operations independent of TIA Portal.

The SIMATIC Automation Tool offers a wide range of functions:

- Scanning of a PROFINET/Ethernet system network and identification of all connected CPUs
- Assignment of addresses (IP, subnet, Gateway) and device name (PROFINET device) to a CPU
- Transfer of the date and the programming device/PC time converted to UTC time to the module
- Program download to CPU
- RUN/STOP mode switchover
- CPU localization through LED flashing
- Reading out of CPU error information
- Reading the CPU diagnostic buffer
- Reset to factory settings
- Firmware update of the CPU and connected modules

You can find the SIMATIC Automation Tool on the Internet.
(https://support.industry.siemens.com/cs/ww/en/view/98161300)

PRONETA

SIEMENS PRONETA (PROFINET network analysis) is a commissioning and diagnostic tool for PROFINET networks. PRONETA Basic has two core functions:

- The "Network analysis" offers a quick overview of the PROFINET topology. It is possible to make simple parameter changes (for example, to the names and IP addresses of the devices). In addition, a quick and convenient comparison of the real configuration with a reference system is also possible.
- The "IO test" is a simple and rapid test of the wiring and the module configuration of a plant, including documentation of the test results.

You can find SIEMENS PRONETA Basic on the Internet:
(https://support.industry.siemens.com/cs/ww/en/view/67460624)

SIEMENS PRONETA Professional is a licensed product that offers you additional functions. It offers you simple asset management in PROFINET networks and supports operators of automation systems in automatic data collection/acquisition of the components used through various functions:

- The user interface (API) offers an access point to the automation cell to automate the scan functions using MQTT or a command line.
- With PROFIenergy diagnostics, you can quickly detect the current pause mode or the readiness for operation of devices that support PROFIenergy and change these as needed.
- The data record wizard supports PROFINET developers in reading and writing acyclic PROFINET data records quickly and easily without PLC and engineering.

You can find SIEMENS PRONETA Professional on the Internet.
(https://www.siemens.com/proneta-professional)

SINETPLAN

SINETPLAN, the Siemens Network Planner, supports you in planning automation systems and networks based on PROFINET. The tool facilitates professional and predictive dimensioning of your PROFINET installation as early as in the planning stage. In addition, SINETPLAN supports you during network optimization and helps you to exploit network resources optimally and to plan reserves. This helps to prevent problems in commissioning or failures during productive operation even in advance of a planned operation. This increases the availability of the production plant and helps improve operational safety.
The advantages at a glance

- Network optimization thanks to port-specific calculation of the network load
- Increased production availability thanks to online scan and verification of existing systems
- Transparency before commissioning through importing and simulation of existing STEP 7 projects
- Efficiency through securing existing investments in the long term and the optimal use of resources

You can find SINETPLAN on the Internet (https://new.siemens.com/global/en/products/automation/industrial-communication/profinet/sinetplan.html).

1.1.3 S7 Port Configuration Tool (S7-PCT)

SIMATIC S7-PCT

The Port Configuration Tool (PCT) is a PC-based software for the parameter assignment of Siemens IO-Link Master modules and IO-Link devices from any manufacturer.
You integrate IO-devices using the standardized device description "IODD", which you get from the respective device manufacturer. S7-PCT supports version 1.0 and V1.1 of the IODD.
S7-PCT is called via the hardware configuration of the IO-Link Master from STEP 7. When STEP 7 is not used or the IO-Link Master is not operated on a SIMATIC controller, "standalone"-operation is also possible.
You can find additional information on IO-Link on the Internet (https://new.siemens.com/global/en/products/automation/industrial-communication/io-link.html).

1.1.4 S7 Failsafe Configuration Tool (S7-FCT)

SIMATIC S7-FCT

Failsafe Configuration Tool (FCT) enables you to GSD configure the following devices in third-party engineering systems:

- Selected, functionally fail-safe SIMATIC I/O devices
- Functionally fail-safe SIRIUS ACT PROFINET interfaces

The engineering system must meet the following requirements for this:

- Support of the CPD system integration acc. to "PROFIsafe - Profile for Safety Technology on PROFIBUS DP and PROFINET IO"
- TCI implementation to Conformance Class C3

Additional information on S7-FCT can be found on the Internet (https://support.industry.siemens.com/cs/ww/en/view/109762827).

1.1.5 MultiFieldbus Configuration Tool (MFCT)

MultiFieldbus Configuration Tool

The MultiFieldbus Configuration Tool (MFCT) is a PC-based software for the configuration of Siemens MultiFeldbus devices.

With Siemens MF devices, you download the GSDML file of the MultiFeldbus device to the MFCT for configuring.

Four steps are required for configuring:

1. Assigning the IP address
2. Configuring and parameter assignment
3. Transfer the configuration to the MF device
4. Configuring MF devices in the Engineering System

To do this, the MFCT provides the necessary project files in EDS format (Electronic Data Sheet).

The MFCT runs under Windows and does not require installation or administrator rights.
You can find additional information on MFCT on the Internet.
(https://support.industry.siemens.com/cs/de/en/view/109773881)

1.1.6 SIMATIC Technical Documentation

Additional SIMATIC documents will complete your information. You can find these documents and their use at the following links and QR codes.

The Industry Online Support gives you the option to get information on all topics. Application examples support you in solving your automation tasks.

Overview of the SIMATIC Technical Documentation

Here you will find an overview of the SIMATIC documentation available in Siemens Industry Online Support:

Industry Online Support International
(https://support.industry.siemens.com/cs/ww/en/view/109742705)

Watch this short video to find out where you can find the overview directly in Siemens Industry Online Support and how to use Siemens Industry Online Support on your mobile device:

Quick introduction to the technical documentation of automation products per video (https://support.industry.siemens.com/cs/us/en/view/109780491)

YouTube video: Siemens Automation Products - Technical Documentation at a Glance (https://youtu.be/TwLSxxRQQsA)

mySupport

With "mySupport" you can get the most out of your Industry Online Support.

Registration	You must register once to use the full functionality of "mySupport". After registration, you can create filters, favorites and tabs in your personal workspace.
Support requests	Your data is already filled out in support requests, and you can get an overview of your current requests at any time.
Documentation	In the Documentation area you can build your personal library.
Favorites	You can use the "Add to mySupport favorites" to flag especially interesting or frequently needed content. Under "Favorites", you will find a list of your flagged entries.
Recently viewed articles	The most recently viewed pages in mySupport are available under "Recently viewed articles".
CAx data	The CAx data area gives you access to the latest product data for your CAx or CAe system. You configure your own download package with a few clicks: • Product images, 2D dimension drawings, 3D models, internal circuit diagrams, EPLAN macro files • Manuals, characteristics, operating manuals, certificates • Product master data

You can find "mySupport" on the Internet. (https://support.industry.siemens.com/My/ww/en)

Application examples

The application examples support you with various tools and examples for solving your automation tasks. Solutions are shown in interplay with multiple components in the system - separated from the focus on individual products.
You can find the application examples on the Internet.
(https://support.industry.siemens.com/cs/ww/en/ps/ae)

Safety instructions 2

2.1 Security information

Siemens provides products and solutions with industrial security functions that support the secure operation of plants, systems, machines and networks.

In order to protect plants, systems, machines and networks against cyber threats, it is necessary to implement – and continuously maintain – a holistic, state-of-the-art industrial security concept. Siemens' products and solutions constitute one element of such a concept.

Customers are responsible for preventing unauthorized access to their plants, systems, machines and networks. Such systems, machines and components should only be connected to an enterprise network or the internet if and to the extent such a connection is necessary and only when appropriate security measures (e.g. firewalls and/or network segmentation) are in place.

For additional information on industrial security measures that may be implemented, please visit (https://www.siemens.com/industrialsecurity).

Siemens' products and solutions undergo continuous development to make them more secure. Siemens strongly recommends that product updates are applied as soon as they are available and that the latest product versions are used. Use of product versions that are no longer supported, and failure to apply the latest updates may increase customers' exposure to cyber threats.

To stay informed about product updates, subscribe to the Siemens Industrial Security RSS Feed visit (https://www.siemens.com/cert).

Product overview

3

CPUs, communications modules and processors, and PC systems of the S7-1500, , ET 200MPET 200SPET 200pro and ET 200AL systems provide you with interfaces for communication via PROFINET, PROFIBUS and point-to-point connections.

CPUs, communications modules and communications processors

PROFINET and PROFIBUS DP interfaces are integrated in the S7-1500 CPUs. The CPU 1516-3 PN/DP for example has 2 PROFINET interfaces and 1 PROFIBUS DP interface. Other PROFINET and PROFIBUS DP interfaces are available by using communications modules (CM) and communications processors (CP).

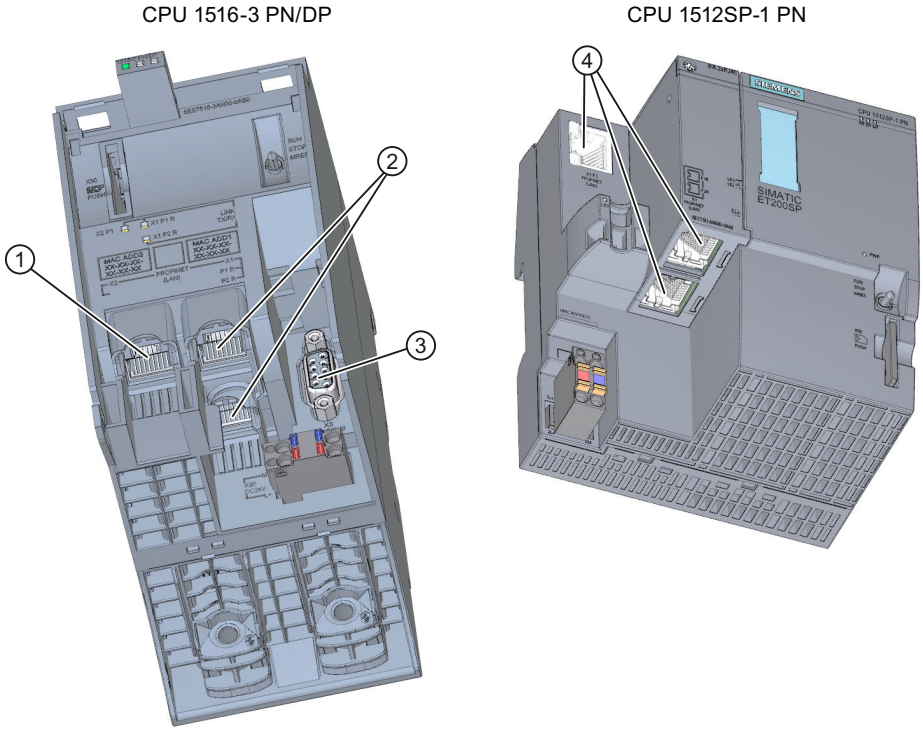

① PROFINET interface (X2) with 1 port

② PROFINET interface (X1) with 2-port switch

③ PROFIBUS DP interface (X3)

④ PROFINET interface (X1) with 3-port switch

Figure 3-1 Interfaces of the CPU 1516-3 PN/DP and CPU 1512SP-1 PN

Interfaces of communications modules

Interfaces of communications modules (CMs) extend the interfaces of CPUs (for example, the communication module CM 1542-5 adds a PROFIBUS interface to S7-1500 automation system).

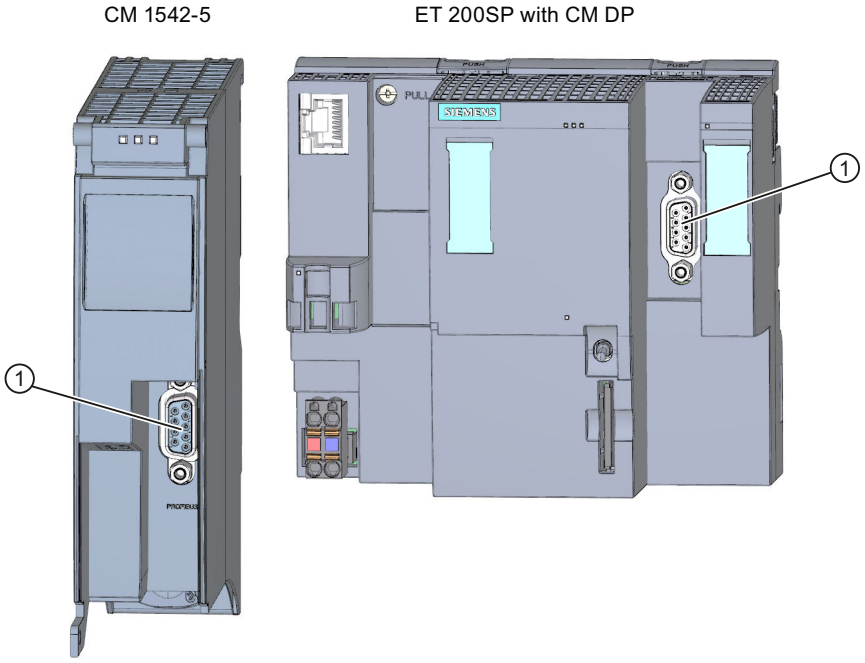

① PROFIBUS DP interface

Figure 3-2 PROFIBUS DP interface of the CM 1542-5 and CM DP (to an ET 200SP CPU)

Interfaces of communications processors

Interfaces of communication processors (CP) offer additional functionality to what is provided by the integrated interfaces of the CPUs. CPs allow special applications, for example the CP 1543-1 provides security functions for protecting Industrial Ethernet networks via its Industrial Ethernet interface.

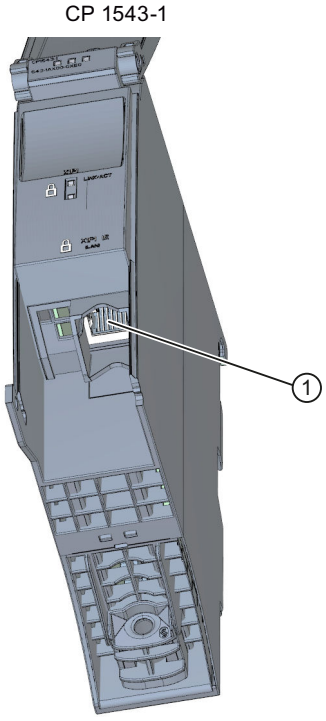

① Industrial Ethernet interface

Figure 3-3 Industrial Ethernet interface of the CP 1543-1

Interfaces of communications modules for point-to-point connections

The communication modules for point-to-point connections provide communication via their RS 232-, RS 422- and RS 485 interfaces, for example, Freeport or Modbus communication.

CM PtP RS422/485 BA

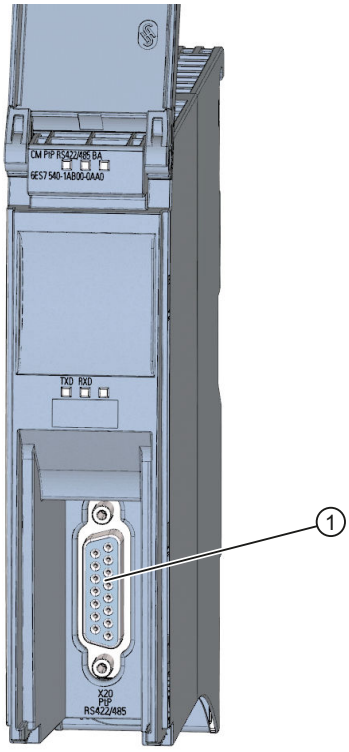

① Interface for point-to-point connections

Figure 3-4 Example of interface for point-to-point connection at the CM PtP RS422/485 BA

Interfaces of interface modules

PROFINET and PROFIBUS DP interfaces of the interface modules (IM) in ET 200MP, ET 200SP and ET 200AL are used to connect the distributed I/O ET 200MP, ET 200SP and ET 200AL to PROFINET or PROFIBUS of the higher-level IO controller or DP master.

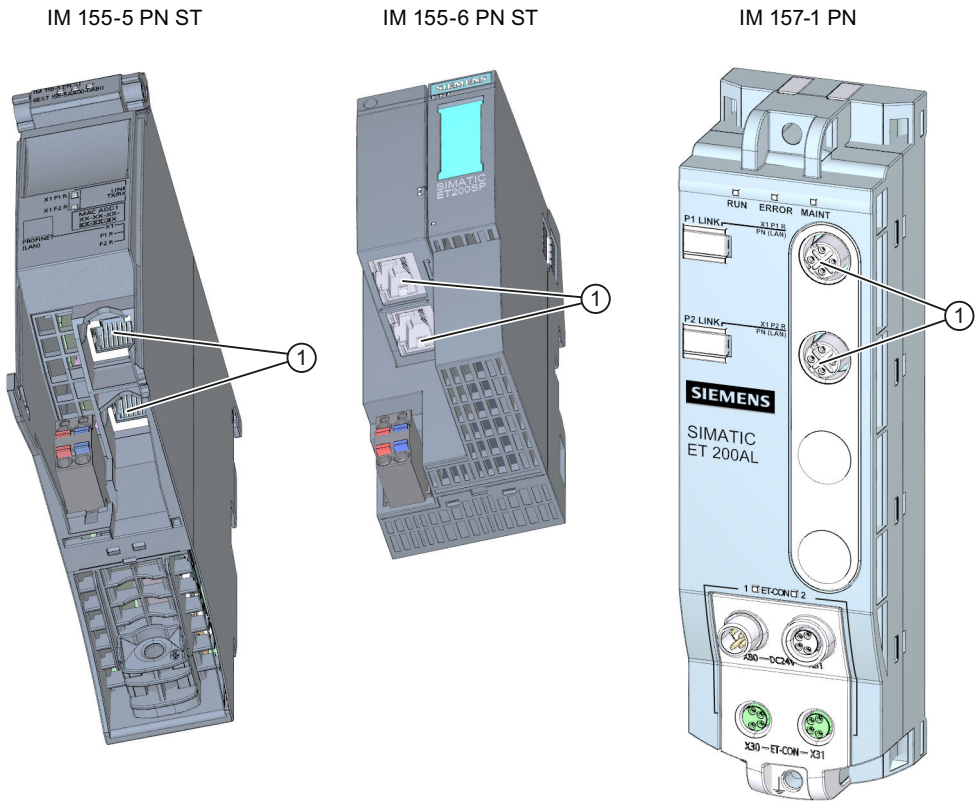

① PROFINET interface with 2-port switch

Figure 3-5 PROFINET interfaces IM 155-5 PN ST (ET 200MP), IM 155-6 PN ST (ET 200SP), and IM 157-1 PN (ET 200AL)

Communications services

The communications services described below use the interfaces and communication mechanisms provided by the system via CPUs, communication modules and processors.

Communications services

4

4.1 Overview of communication options

Overview of communications options

The following communications options are available for your automation task.

Table 4-1 Communications options

Communications options	Functionality	Via interface:		
		PN/IE[1]	DP	serial
PG communication[2]	On commissioning, testing, diagnostics	X	X	-
HMI communication[2]	On operator control and monitoring	X	X	-
Open communication via TCP/IP[2]	Data exchange via PROFINET/Industrial Ethernet with TCP/IP Instructions: • TSEND_C/TRCV_C • TSEND/TRCV • TCON • T_DISCON	X	-	-
Open communication using ISO-on-TCP[2]	Data exchange via PROFINET/Industrial Ethernet with ISO-on-TCP Instructions: • TSEND_C/TRCV_C • TSEND/TRCV • TCON • T_DISCON	X	-	-
Open communication via UDP[2]	Data exchange via PROFINET/Industrial Ethernet with UDP Instructions: • TSEND_C/TRCV_C • TUSEND/TURCV • TCON • T_DISCON	X	-	-
Open communication via ISO (only CPs with PROFINET/Industrial Ethernet interface)	Data exchange via PROFINET/Industrial Ethernet with the ISO protocol Instructions: • TSEND_C/TRCV_C • TSEND/TRCV • TCON • T_DISCON	X	-	-

1 IE - Industrial Ethernet

2 Observe the special characteristics for S7-1500R/H

3 Only via internal PROFINET interface of the CPU and via Ethernet interface CP 1543 1 with activated "Access to PLC via communication module" function

Communications options	Functionality	Via interface:		
		PN/IE[1]	DP	serial
Open communication with FDL (only CM 1542-5 as of firmware V2.0)	Data exchange via PROFIBUS with the FDL protocol Instructions: • TSEND_C/TRCV_C • TSEND/TRCV • TUSEND/TURCV • TCON • T_DISCON	-	X	-
OPC UA server[3]	Data exchange with OPC UA clients	X	-	-
Communication via Modbus TCP	Data exchange via PROFINET with Modbus TCP protocol Instructions: • MB_CLIENT • MB_SERVER	X	-	-
Email	Sending process alarms via email Instruction: • TMAIL_C	X	-	-
FTP (only CPs with PROFINET/Industrial Ethernet interface)	File management and file access via FTP (File Transfer Protocol); CP can be FTP client and FTP server Instruction: • FTP_CMD	X	-	-
Fetch/Write (only CPs with PROFINET/Industrial Ethernet interface)	Server services via TCP/IP, ISO-on-TCP and ISO Via special instructions for Fetch/Write	X	-	-
S7 communication	Data exchange via PROFINET/PROFIBUS with the S7 protocol. Instructions: • PUT/GET • BSEND/BRCV • USEND/URCV	X	X	-
Serial point-to-point connection	Data exchange via point-to-point with Freeport, 3964(R), USS or Modbus protocol Via special instructions for PtP, USS or Modbus RTU	-	-	X
Web server	Data exchange via HTTP(S), for example for diagnostics	X	-	-
SNMP (Simple Network Management Protocol)	For monitoring and error recognition of IP networks, possibly parameterization of the IP network components via standard SNMP protocol	X	-	-
Time-of-day synchronization	Via PN/IE interface: CPU is NTP client (Network Time Protocol)	X	-	-
	Via DP interface: CPU/CM/CP is time-of-day master or time slave	-	X	-

1 IE - Industrial Ethernet

2 Observe the special characteristics for S7-1500R/H

3 Only via internal PROFINET interface of the CPU and via Ethernet interface CP 1543 1 with activated "Access to PLC via communication module" function

Information on S7-1500R/H

You can find information on the communication possibilities with the S7-1500R/H redundant system in the section Communication with the redundant system S7-1500R/H (Page 384).

More information

- An application example for the configuration of the TLS-based PG/HMI communication and protection of confidential configuration data of the CPU can be found in this Application example (https://support.industry.siemens.com/cs/ww/en/view/109798583).
- A general application example for CPU-CPU communication with SIMATIC controllers (compendium) can be found in this application example (https://support.industry.siemens.com/cs/ww/en/view/20982954).
- A TIA library "LOpcUa", which provides you with function blocks for the implementation of OPC UA PubSub for SIMATIC S7-1500, can be found in this Application example (https://support.industry.siemens.com/cs/ww/en/view/109782455).

- This FAQ (https://support.industry.siemens.com/cs/ww/en/view/102420020) describes how to configure fetch/write communication via CP1543-1 with S7-1500.
- More information about the Fetch/Write services is available in the STEP 7 online help.

- You can find more information on the PtP connection in the function manual CM PtP - Configurations for Point-to-Point Connections (https://support.industry.siemens.com/cs/us/en/view/59057093).
- You will find the description of the web server functionality in the function manual Web server (https://support.industry.siemens.com/cs/us/en/view/59193560).

- You can find general information about the standard protocol SNMP on the Service & Support pages on the Internet (https://support.industry.siemens.com/cs/us/en/view/15166742). Answers to the question of which SNMP requests support S7-1500 CPUs and S7-1200 CPUs can be found in this FAQ (https://support.industry.siemens.com/cs/at/en/view/79993228).
- You will find information about time-of-day synchronization in this FAQ (https://support.industry.siemens.com/cs/ww/en/view/86535497).

4.2 Communications protocols and port numbers used for Ethernet communication

This section provides an overview of the supported protocols and port numbers used for communication over PN/IE interfaces. For each protocol the address parameters, the respective communications layer as well as the communications role and the communications direction are specified.

This information makes it possible to match the security measures for protection of the automation system to the used protocols (for example firewall). Because the security measures are limited to Ethernet or PROFINET networks, the tables do not include PROFIBUS protocols.

NOTE

Port numbers used

The specified port numbers are the standard port numbers used by the S7-1500 CPU. Many communication protocols and implementations enable you to use other port numbers.

The following tables show the different layers and protocols used in the S7-1500 CPUs and S7 1500 communication modules.

Layers and protocols of the S7-1500 CPUs and software controllers (via PROFINET interface of the CPU)

The following table shows the protocols supported by S7-1500 CPUs, ET 200SP CPUs and the 1513/1516pro 2 PN CPUs. The S7-1500 software controllers also support the protocols listed in the following table for the Ethernet interfaces that are assigned to the software controller.

Table 4-2 Layers and protocols of the S7-1500 CPUs and software controllers (via PROFINET interface of the CPU)

Protocol / Role	Port number	(2) Link layer (4) Transport layer	Description / function	Default setting / notes
PROFINET protocols				
DCP	Not relevant	(2) Ethertype 0x8892 (PROFINET)	PROFINET Discovery and Basic Configuration Protocol. DCP determines PROFINET devices and enables the basic settings.	Default: Activated. Function can be deactivated in the CPU properties by Boundary "End of detection of accessible nodes" of the interface.
DHCP Client	68	(4) UDP	Dynamic Host Configuration Protocol. The IP address suite is obtained from a DHCP server during the startup of the PROFINET interface.	Default: Deactivated. Can be changed in the CPU properties (as of FW version 2.9).
LLDP	Not relevant	(2) Ethertype 0x88CC (LLDP)	PROFINET Link Layer Discovery Protocol. LLDP determines and manages neighborhood relations between PROFINET devices.	Default: Activated. Send function can be deactivated by Boundary "End of topology discovery" in the CPU properties; readiness to receive remains active. LLDP uses the special multicast MAC address: 01-80-C2-00-00-0E.
MRP	Not relevant	(2) Ethertype 0x88E3 (IEC 62493-2-2010)	Media Redundancy Protocol. MRP enables control of redundant transmission paths in a ring topology.	Default: "Manager (Auto)". Can be changed in the CPU properties. If you configure the CPU and connect the PN interface with a subnet, the default setting in the TIA Portal is "Not device in the ring". MRP uses standard-compliant Multicast MAC addresses.

[1] Note: OUC (open communication) provides direct access to the UDP and TCP protocols. You must take into consideration the IANA (Internet Assigned Numbers Authority) port restrictions and definitions.

[2] Do not use ports for OUC, which are already used by other protocols.

Protocol / Role	Port number	(2) Link layer (4) Transport layer	Description / function	Default setting / notes
PTCP	Not relevant	(2) Ethertype 0x8892 (PROFINET)	PROFINET Precision Transparent Clock Protocol, based on IEEE 1588. PTCP provides a time delay measurement between RJ45 ports and thus the send clock synchronization and time synchronization.	Default: Deactivated. Can be enabled by the following configurations: • IRT with a sync domain. • Port interconnection with a specified cable length. Function can be deactivated in the CPU properties by Boundary "End of sync domain" of the interface. PTCP uses standard-compliant Multicast MAC addresses.
PROFINET IO data	Not relevant	(2) Ethertype 0x8892 (PROFINET)	PROFINET Cyclic IO Data Transfer With PROFINET IO telegrams, IO data is transferred cyclically between the PROFINET IO controller and IO devices via Ethernet.	Default: Deactivated. The protocol is only activated for PROFINET IO data traffic.
PROFINET Context Manager	34964	(4) UDP	PROFINET connection without RPC. Management of application and communication relationships between IO controller and IO devices.	Default: Enabled (UDP port open). This function cannot be deactivated.
Connection-oriented communications protocols				
SMTP Client	25	(4) TCP	Simple Mail Transfer Protocol. SMTP is used for sending emails	Default: Deactivated. Can be enabled via TMAIL_C instruction in the user program.
SMTPS (SMTP over TLS) Client	465	(4) TCP	Simple Mail Transfer Protocol Secure. SMTP is used for sending emails over secure connections.	Default: Deactivated. Can be enabled via TMAIL_C instruction in the user program.
SMTP with STARTTLS Client	25 587	(4) TCP	Simple Mail Transfer Protocol with the SMTP command "STARTTLS" SMTP is used for sending emails.	Default: Deactivated. Can be enabled via TMAIL_C instruction in the user program.
HTTP Server	80	(4) TCP	Hypertext Transfer Protocol. HTTP is used for communication with the CPU-internal web server.	Default: Deactivated. Can be enabled in the CPU properties. Requirement: Web server in the CPU properties is enabled.
HTTPS Server	443	(4) TCP	Hypertext Transfer Protocol Secure. HTTPS is used for communication with the CPU-internal Web server via Secure Socket Layer (SSL).	Default: Deactivated. Can be enabled in the CPU properties. Requirement: Web server in the CPU properties is enabled.
ISO-on-TCP Server	102	(4) TCP	ISO-on-TCP protocol (according to RFC 1006). The S7 protocol uses ISO-on-TCP according to RFC 1006 for PG/HMI communication with the engineering system (TIA Portal).	Default: Activated. This function cannot be deactivated.

[1] Note: OUC (open communication) provides direct access to the UDP and TCP protocols. You must take into consideration the IANA (Internet Assigned Numbers Authority) port restrictions and definitions.

[2] Do not use ports for OUC, which are already used by other protocols.

Protocol / Role	Port number	(2) Link layer (4) Transport layer	Description / function	Default setting / notes
NTP Client	123	(4) UDP	Network Time Protocol. NTP is used for synchronization of the CPU system time with the time of an NTP server.	Default: Deactivated. Can be enabled in the CPU properties.
SNMP Agent	161 162 (trap)	(4) UDP	Simple Network Management Protocol. SNMP is used for reading and setting of network management data (SNMP managed objects) by the SNMP Manager.	Default: Activated up to FW version V2.9, deactivated as of FW version V3.0. Can be enabled via data record in the user program. Can be enabled in the CPU properties as of FW version V3.0.
MODBUS TCP Server / Client	502	(4) TCP	MODBUS Transmission Control Protocol. MODBUS/TCP is used by MB_CLIENT/MB_SERVER instructions in the user program.	Default: Deactivated. Can be activated via Modbus instructions in the user program.
OPC UA Server / Client	4840	(4) TCP	Open Platform Communications Unified Architecture (based on TCP/IP protocol). A communication standard ranging from the enterprise level to the field level.	Default: Deactivated. Server and client function can be enabled in the CPU properties. Client access can be configured in the user program.
OUC[1] Secure OUC Server / Client	1 ... 1999 can be used to limited extent[2] 2000 ... 5000 Recommended	(4) TCP (4) UDP (4) ISO-on-TCP (Port: 102)	Open User Communication (TCP/UDP). Secure Open User Communication (TLS). OUC instructions enable connection establishment, connection termination and data transfer via the user program.	Default: Deactivated. You activate the respective protocol with the corresponding Open User Communication instruction in the user program or with the configuration of connections in the network view.

1 Note: OUC (open communication) provides direct access to the UDP and TCP protocols. You must take into consideration the IANA (Internet Assigned Numbers Authority) port restrictions and definitions.

2 Do not use ports for OUC, which are already used by other protocols.

Protocol / Role	Port number	(2) Link layer (4) Transport layer	Description / function	Default setting / notes
OUC[1] Secure OUC Server / Client	As of FW version V3.0, the following applies to programmed and configured connections: 5001 ... 65535 can be used to limited extent[2]	(4) TCP (4) UDP (4) ISO-on-TCP (Port: 102)	Open User Communication (TCP/UDP). Secure Open User Communication (TLS). OUC instructions enable connection establishment, connection termination and data transfer via the user program.	The following applies to FW versions lower than V3.0: • Programmed connections: 5001 ... 49152 • Configured connections: 5001 ... 65535
IGMPv2	Not relevant	(3) Network layer	Internet Group Management Protocol. IGMPv2 is a network protocol for the organization of multicast groups (UDP multicast only).	IGMPv2 is a functionality of the IP stack. This system function is activated by the multicast function.
Reserved	49152 ... 65535	(4) TCP (4) UDP	If an application does not address a local port, then the CPU uses this port range for the active connection point.	-

1 Note: OUC (open communication) provides direct access to the UDP and TCP protocols. You must take into consideration the IANA (Internet Assigned Numbers Authority) port restrictions and definitions.

2 Do not use ports for OUC, which are already used by other protocols.

Layers and logs of the S7-1500 Software Controller (via Ethernet interface on the Windows side)

The following table shows the protocols that are supported by the S7-1500 software controller via the Ethernet interfaces assigned to Windows.

Table 4-3 Layers and logs of the S7-1500 Software Controller (via Ethernet interface on the Windows side)

Protocol / Role	Port number	(2) Link layer (4) Transport layer	Description / function	Notes / default setting
PROFINET protocols				
DCP	Not relevant	(2) Ethertype 0x8892 (PROFINET)	PROFINET Discovery and Basic Configuration Protocol. DCP determines PROFINET devices and enables the basic settings.	Default: Activated. Function can be disabled with Boundary "End of detection of accessible nodes" in the CPU properties.

1 Default setting for Windows assigned interfaces: 81

2 Note: OUC (open communication) provides direct access to the UDP and TCP protocols. You must take into consideration the IANA (Internet Assigned Numbers Authority) port restrictions and definitions.

3 Do not use ports for OUC, which are already used by other protocols.

4 Do not use ports for OUC, which are already used by other Windows applications.

Protocol / Role	Port number	(2) Link layer (4) Transport layer	Description / function	Notes / default setting
DHCP Client	68	(4) UDP	Dynamic Host Configuration Protocol. The IP address suite is obtained from a DHCP server during the startup of the PROFINET interface.	Default: Deactivated. Can be changed in the CPU properties (as of FW version 2.9).
Connection-oriented communications protocols				
SMTP Client	25	(4) TCP	Simple Mail Transfer Protocol. SMTP is used for sending emails.	Default: Deactivated. Can be activated by calling the block in the user program or as of version V3.0 via CPU settings.
HTTP Server	Adjustable [1]	(4) TCP	Hypertext Transfer Protocol. HTTP is used for communication with the CPU-internal web server.	Default: Deactivated. Can be changed in the CPU properties. Adapt the port number to avoid conflicts with other web servers under Windows. If you use the Web server access of the S7-1500 software controller, you must enable the assigned port in the Windows firewall.
ISO-on-TCP Server	102	(4) TCP	ISO-on-TCP protocol (according to RFC 1006). The S7 protocol uses ISO-on-TCP according to RFC 1006 for PG/HMI communication with the engineering system (TIA Portal).	Default: Deactivated.
OUC[2] and Secure OUC	1 ... 1999 can be used to limited extent[3, 4] 2000 ... 5000 recommended[4] 5001 ... 49151 can be used to limited extent[3, 4]	(4) TCP (4) UDP (4) ISO-on-TCP (Port: 102)	Open User Communication (TCP/UDP). Secure Open User Communication (TLS). OUC instructions enable connection establishment, connection termination and data transfer based on the socket layer.	Default: Deactivated. Can be enabled via data record in the user program. If you want to use OUC, you must activate the ports in the Windows Firewall.
IGMPv2	Not relevant	(3) Network layer	Internet Group Management Protocol. IGMPv2 is a network protocol for the organization of multicast groups (UDP multicast only).	IGMPv2 is a functionality of the IP stack. This system function is activated by the multicast function.

1 Default setting for Windows assigned interfaces: 81

2 Note: OUC (open communication) provides direct access to the UDP and TCP protocols. You must take into consideration the IANA (Internet Assigned Numbers Authority) port restrictions and definitions.

3 Do not use ports for OUC, which are already used by other protocols.

4 Do not use ports for OUC, which are already used by other Windows applications.

Protocol / Role	Port number	(2) Link layer (4) Transport layer	Description / function	Notes / default setting
Reserved	49152 ... 65535	(4) TCP (4) UDP	If the application does not specify the local port number, this dynamic port range is used for the active connection end point.	If you want to use this communication, you must activate the ports in the Windows Firewall.

[1] Default setting for Windows assigned interfaces: 81

[2] Note: OUC (open communication) provides direct access to the UDP and TCP protocols. You must take into consideration the IANA (Internet Assigned Numbers Authority) port restrictions and definitions.

[3] Do not use ports for OUC, which are already used by other protocols.

[4] Do not use ports for OUC, which are already used by other Windows applications.

Layers and protocols of S7-1500 communications modules

The documentation for the protocols of S7-1500 communications modules (e.g. CP 1543-1) can be found here (https://support.industry.siemens.com/cs/ww/en/view/67700710).

4.3 Overview of connection resources

Connection resources

Some communications services require connections. Connections allocate resources on the CPUs, CPs and CMs involved (for example memory areas in the CPU operating system). In most cases one resource per CPU/CP/CM is allocated for a connection. In HMI communication, up to 3 connection resources are required per HMI connection.

The connection resources available depend on the CPU being used, the CPs and CMs and must not exceed a defined high limit for the automation system.

Available connection resources in a station

The maximum number of resources of a station is determined by the CPU.

Each CPU has reserved connection resources for PG, HMI and web server communication. In addition, there are available resources for other communication services, e.g. for SNMP, e-mail connections, HMI and S7 communication as well as for open communication.

When are connection resources allocated?

The time for allocation of connection resources depends on how the connection is set up, automatic, programmed or configured (see section Setting up a connection (Page 37)).

Additional information

You will find more detailed information on the allocation of connection resources and the display of connection resources in STEP 7 in the section Connection resources (Page 370).

4.4 Setting up a connection

Automatic connection

STEP 7 sets up a connection automatically (for example PG or HMI connection) if you have connected the PG/PC interface to an interface of the CPU physically and have made the interface assignment in STEP 7 in the "Go online" dialog.

Setting up a programmed connection

You set up the programmed connection in the program editor of STEP 7 in the context of a CPU by assigning instructions for communication, for example TSEND_C.

When specifying the connection parameters (in the Inspector window, in the properties of the instruction), you are supported by the easy-to-use user interface.

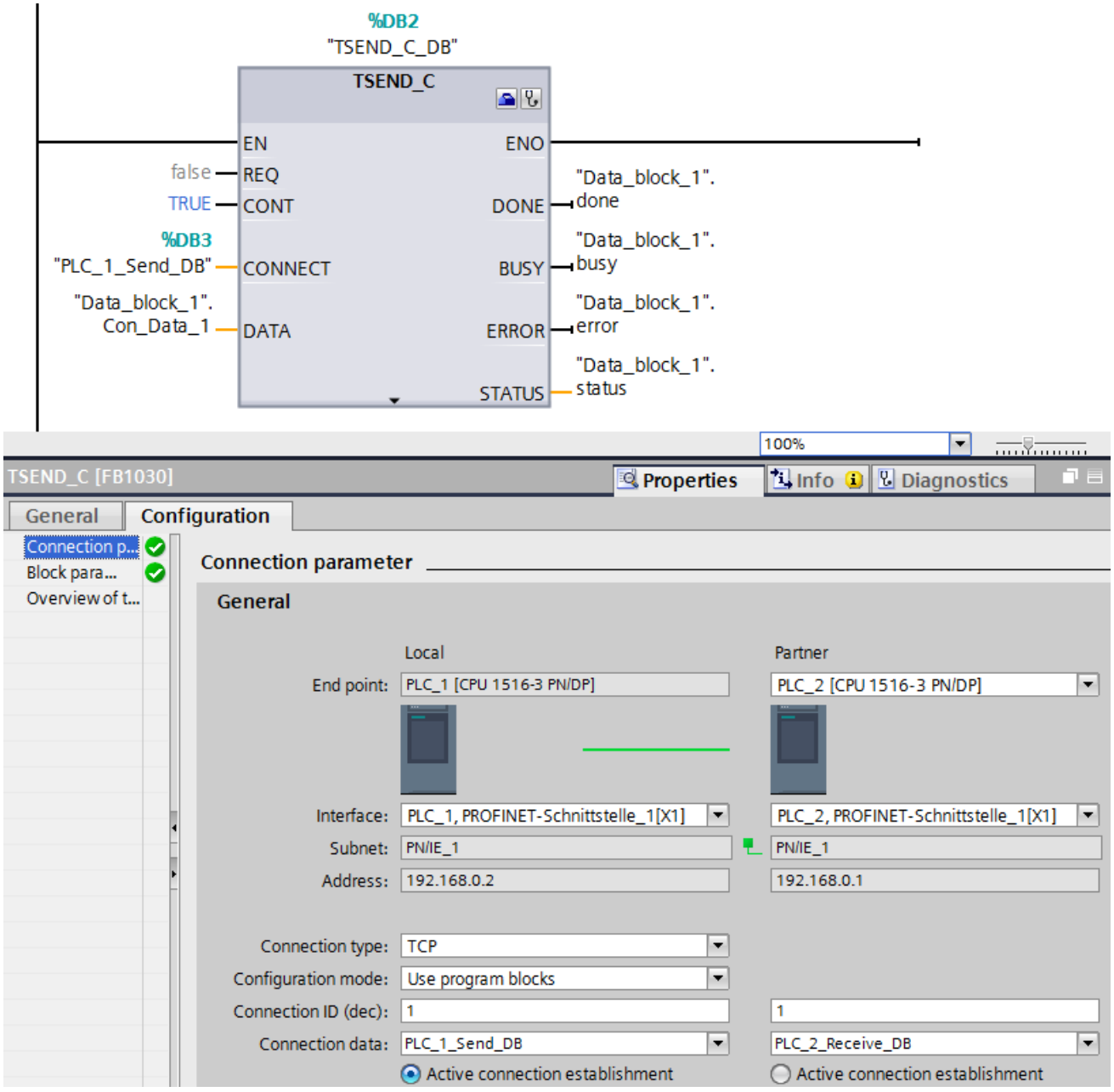

Figure 4-1 Programmed setup

Setting up a configured connection

You set up the configured connection in the network view of the Devices & networks editor of STEP 7 in the context of a CPU or a software controller.

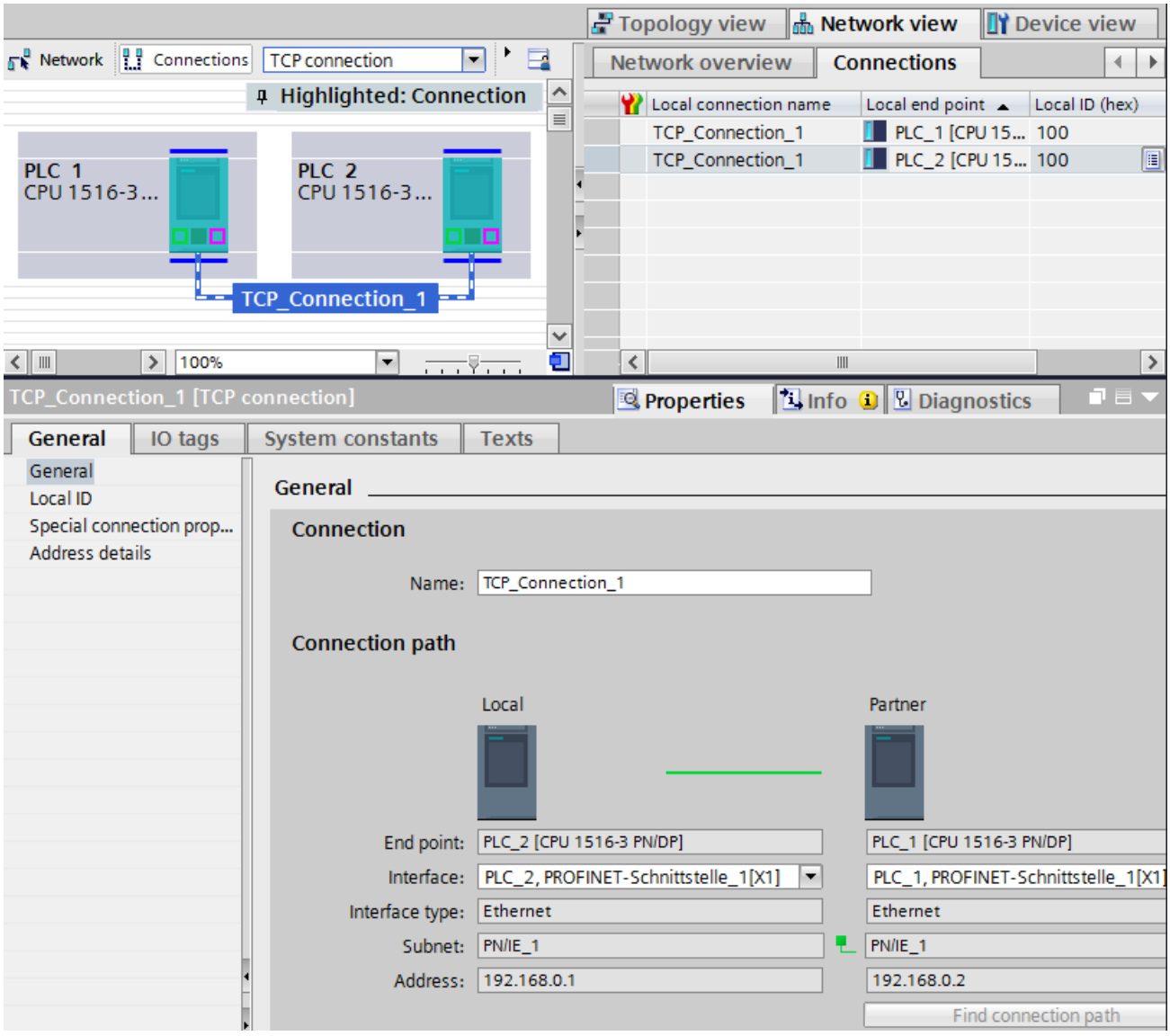

Figure 4-2 Configured setup

Effects on the connection resources of the CPU

You can often choose between a configured or a programmed connection. Programmed connection setup allows connection resources to be released following data transfer. Like routed connections, programmed connections are not guaranteed, meaning that they are only established when resources are available. With configured connection setup, the resource is available after download of the configuration until the configuration changes again. Corresponding resources are therefore reserved for connection establishment via

configured connections. The "Connection resources" table in the Inspector window of the CPU displays an overview of connection resources already used and those still available.

How do I set up a connection?

Table 4-4 Setting up the connection

Connection	Automatically	Programmed setup	Configured setup
Programming device connection	X	-	-
HMI connection	X	-	X
Web communication	X	-	-
OPC UA server communication	X	-	-
OPC UA client communication	-	X	-
Open communication via TCP/IP connection	-	X	X
Open communication via ISO-on-TCP connection	-	X	X
Open communication via UDP connection	-	X	X
Open communication via ISO connection	-	X	X
Open communication via FDL connection	-	X	X
Communication via Modbus TCP connection	-	X	-
E-mail connection	-	X	-
FTP connection	-	X	-
S7 connection*	-	-	X

* Note that for an S7-1500 CPU you must enable the use of PUT/GET communication in the properties of the CPU. You can find more information on this topic in the STEP 7 online help.

Additional information

You will find further information on the allocation of connection resources and the display of connection resources in STEP 7 in the section Connection resources (Page 370).

4.5 Data consistency

Definition

Data consistency is important for data transfer and you need to take this into account when configuring the communication task. Otherwise, malfunctions may occur.

A data area which cannot be modified by concurrent processes is called a consistent data area. This means that a data area which belongs together and which is larger than the

maximum size of the consistent data area can consist in part of new and of old data at the same time.

An inconsistency can occur when an instruction for communication is interrupted, for example by a hardware interrupt OB with higher priority. This interrupts the transfer of the data area. If the user program in this OB now changes the data that has not yet been processed by the communication instruction, the transferred data originates from different times:

The following figure shows a data area that is smaller than the maximum size of the consistent data area. In this case, when transferring the data area, it is ensured that there is no interruption by the user program during data access so that the data is not changed.

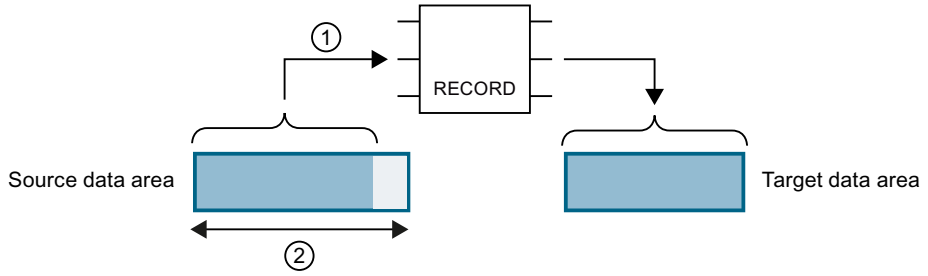

① The source data area is smaller than the maximum size of the consistent data area (②). The instruction transfers the data together to the destination data area.

② Maximum size of the consistent data area

Figure 4-3 Consistent transfer of data

The following figure shows a data area that is larger than the maximum size of the consistent data area. In this case, the data can be changed during an interruption of the data transfer. An interruption also occurs if, for example, the data area needs to be transferred in several parts. If the data is changed during the interruption, the transferred data originates from different times.

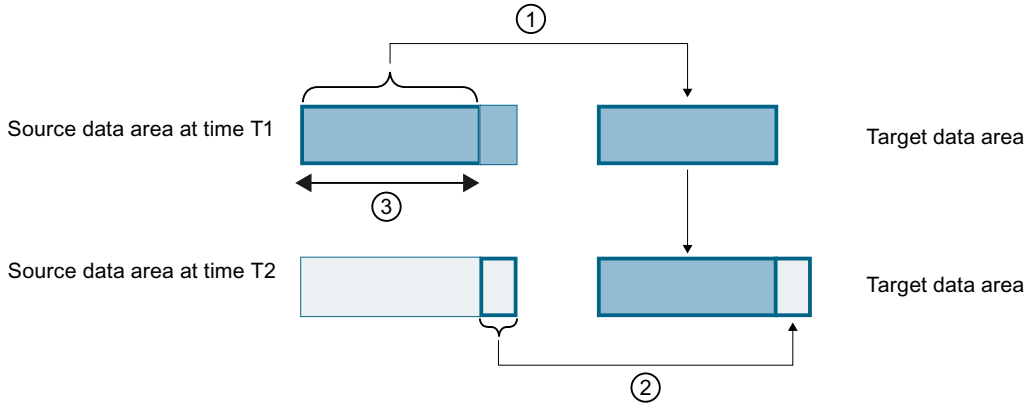

① The source data area is larger than the maximum size of the consistent data area (③). At time T1, the instruction only transfers as much data from the source data area into the destination data area as fits in the consistent data area.

② At time T2, the instruction transfers the rest of the source data area to the destination data area. After the transfer, data from different points in time exist in the destination data area. If the data in the source data area has changed in the meantime, an inconsistency may result.

③ Maximum size of the consistent data area

Figure 4-4 Transfer of data larger than the maximum consistency area

Example of an inconsistency

The figure below shows an example of changing data during the transfer. The destination data area contains data from different points in time.

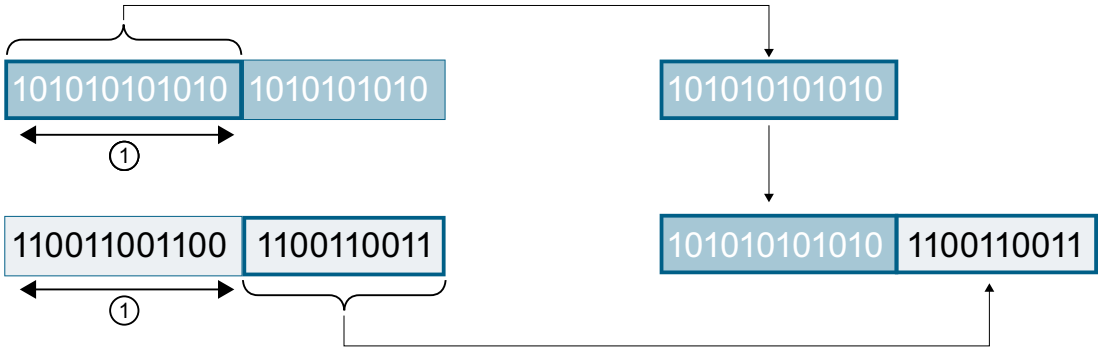

① Maximum size of the consistent data area

Figure 4-5 Example: Changing data during the transfer

System-specific maximum data consistency for S7-1500:

No inconsistency occurs if the system-specific maximum size of the consistent data is kept to. With an S7-1500, communication data is copied consistently into or out of the user memory in blocks of up to 512 bytes during the program cycle. Data consistency is not ensured for larger data areas. Where defined data consistency is required, the length of communication data in the user program of the CPU must not exceed 512 bytes. You can then access these data areas consistently, for example from an HMI device by reading/writing tags.

If more data than the system-specific maximum size needs to be transferred consistently, you yourself must ensure the data consistency with suitable measures in the user program.

Ensuring data consistency

Use of instructions for access to common data:

If the user program contains instructions for communication that access common data, for example TSEND/TRCV, you can coordinate access to this data area yourself, for example using the "DONE" parameter. The data consistency of the data areas that are transferred with an instruction for communication can therefore be ensured in the user program.

NOTE

Measures in the user program

To achieve data consistency, you can copy transferred data to a separate data area (for example, global data block). While the user program continues to work with the original data, you can transfer the data saved in the separate data area consistently with the communication instruction.

For the copying, use uninterruptible instructions such as UMOVE_BLK or UFILL_BLK. These instructions ensure data consistency up to 16 KB.

Use of PUT/GET instructions or Write/Read via HMI communication:

In S7 communication with the PUT/GET instructions or Write/Read via HMI communication, you need to take into account the size of the consistent data areas during programming or configuration. In the user program of an S7-1500 as server, there is no instruction available that can coordinate the data transfer in the user program. The data exchanged using PUT/GET instructions updates the S7-1500 while the user program is running. There is no point in time within the processing of the cyclic user program at which the data is exchanged consistently. The length of the data area to be transferred should be smaller than 512 bytes.

Additional information

- You will also find the maximum amount of consistent data in the device manuals of the communications modules in the Technical Specifications.
- You will find further information on data consistency in the description of the instructions in the STEP 7 online help.

4.6 Secure Communication

4.6.1 Basics of Secure Communication

4.6.1.1 Useful information on Secure Communication

For STEP 7 (TIA Portal) as of V14 and for S7-1500 CPUs as of firmware V2.0, the options for secure communication have been broadened considerably.
"S7-1500 CPUs" also refers to CPU versions S7-1500F, S7-1500T, S7-1500C as well as S7-1500pro CPUs and ET200SP CPUs.
In subsequent versions, additional components will support Secure Communication (e.g. secure OUC), see next section.
As of firmware version V4.4, S7-1200 CPUs also support Secure Communication.

Requirement

- CPUs that support connection description DBs with the structure of the SDT TCON_IP_V4_SEC or SDT TCON_QDN_SEC. These are the following CPUs:
  - S7-1200 as of firmware V4.4
  - S7-1500 as of firmware V2.0
- Also optional via the following CPs:
  - CP 1243-1 as of firmware V3.2
  - CP 1243-8 IRC as of firmware V3.2
  - CP 1543-1 as of firmware V2.0
  - CP 1545-1
  - CP 1543SP-1

  Secure Communication via CP 1242-7 GPRS V2 is not possible.

Public Key Infrastructure (PKI)

The attribute "secure" is used for the identification of communication mechanisms that are based on a Public Key Infrastructure (PKI) (for example RFC 5280 for Internet X.509 Public Key Infrastructure Certificate and Certificate Revocation List Profile). A Public Key Infrastructure (PKI) is a system that can issue, distribute and check digital certificates. The digital certificates issued are used in the PKI to secure computer-based communication. If a PKI uses asymmetric key cryptography, the messages in a network can be digitally signed and encrypted.

Components that you have configured in STEP 7 (TIA Portal) for secure communication use an asymmetric key encryption scheme with a public key (Public Key) and a private key (Private Key). TLS (Transport Layer Security) is used as the encryption protocol. TLS is the successor for the SSL (Secure Sockets Layer) protocol.

Objectives of secure communication

Secure communication is used to achieve the following objectives:

- Confidentiality
  i.e. the data are secret / cannot by read by eavesdroppers.
- Integrity
  i.e. the message that reaches the recipient is the same message, unchanged, that the sender sent. The message has not been altered on the way.
- End point authentication
  i.e. the end point communication partner is exactly who it claims to be and the party who is to be reached. The identity of the partner has been checked.

These objectives were in the past primarily relevant to IT and networked computers. Now, industrial machinery and control systems with sensitive data are at equally high risk, as they are also networked, and consequently pose strict security requirements for data exchange.

Protection of the automation cell by means of the cell protection concept through firewall, or via connection through VPN, for example with the security module, was common in the past and remains so.

However, it is becoming increasingly necessary to also transfer data to external computers in encrypted form via Intranet or public networks.

Common principles of secure communication

Independent of the context, secure communication is based on the concept of the Public Key Infrastructure (PKI) and contains the following components:

- An asymmetric encryption scheme that allows:
  - Encryption or decryption of messages using public or private keys.
  - The verification of signatures in messages and certificates.
    The messages/certificates are signed by the sender/certificate subject with their private key. The recipient/verifier checks the signature with the public key of the sender/certificate subject.

- Transport and storage of the public key using X.509 certificates:
  - X.509 certificates are digitally signed data that allow public key authentication in terms of the bound identity.
  - X.509 certificates can contain information that describes in more detail or restricts use of the public key. For example the date as of which a public key in a certificate is valid and when it expires.
  - X.509 certificates contain information about the issuer of the certificate in secure form.

The following paragraphs give an overview of these basic concepts, which are required for managing certificates in STEP 7 (TIA Portal), for example, and for programming communication instructions for secure Open User Communication (sOUC).

Secure communication with STEP 7

STEP 7 as of V14 provides the required PKI for the configuration and operation of secure communication.
Examples:

- The Hypertext Transfer Protokoll (HTTP) turns into Hypertext Transfer Protokoll Secure (HTTPS) with the help of the TLS (Transport Layer Security) protocol. Since HTTPS is a combination of HTTP and TLS, it is called "HTTP over TLS" in the corresponding RFC. You can see in the browser that HTTPS is being used; this is indicated by the URL "https://" instead of "http://" in the address bar of the browser. Most browsers highlight such secure connections.
- Open User Communication turns into secure Open User Communication. The underlying protocol is also TLS.
- Email providers also offer access over the "Secure SMTP over TLS" protocol to increase the security of email communication.

The figure below shows the TLS protocol in the context of communication layers.

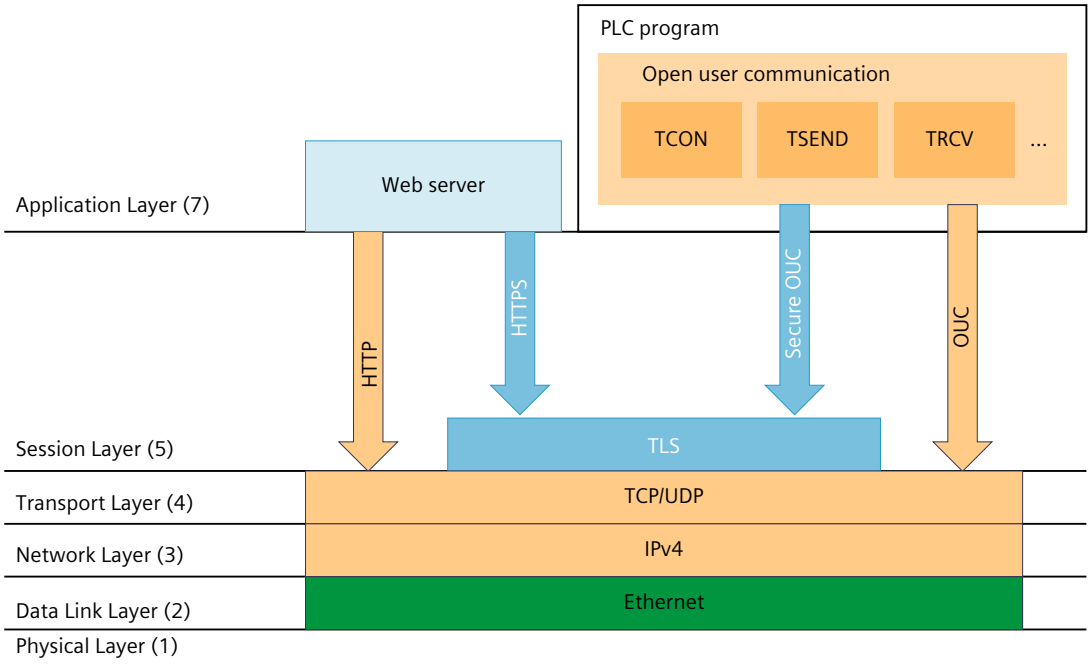

Figure 4-6 TLS protocol in the context of communication layers

Secure communication with OPC UA

An OPC UA server is implemented in S7-1500 CPUs as of firmware V2.0. OPC UA Security also covers authentication, encryption and data integrity with digital X.509 certificates and also uses a Public Key Infrastructure (PKI). Depending on the requirements placed by the application, you can select different security levels for the end point security. The description of the OPC UA server functionality is covered in a separate section.

Secure communication for PG/HMI communication

With the central components of the TIA Portal, STEP 7 and WinCC, an innovative and standardized Secure PG/PC and HMI Communication - PG/HMI communication for short - is implemented starting with version V17 together with the latest controllers and latest HMI devices.

More information

You can find more information on OPC UA in the section Using the S7-1500 as an OPC UA server (Page 196).

For more information on secure programming device/HMI communication, refer to the section Secure PG/HMI communication (Page 93).

4.6.1.2 Device-dependent security features

Transport Layer Security (TLS) is a widespread security protocol that improves the data security for communications. For the S7-1500 automation system, TLS is used for secure communication for the following certificate-based applications:

- Web server (HTTPS protocol variant)
- Secure Open User Communication (OUC) including secure email (TMAIL_C instruction)
- Secure PG/HMI communication

TLS takes care of the authenticity, confidentiality and integrity of the communication between client and server for the listed applications, for example, between the web server of CPU and web browsers, which, for example, have to display a diagnostics web page of the CPU.

The OPC UA server and OPC UA client applications do not actually directly use TLS, but the cryptographical processes used are comparable.

TLS is continuously being further developed, resulting in various TLS versions, which are distinct with regard to the cipher suites (standardized collection of cryptographic methods) supported and the performance.

The Internet Engineering Task Force (IETF) is responsible for the description of the TLS protocol. The following correlation applies:

- TLS 1.3 corresponds to RFC 8446
- TLS 1.2 corresponds to RFC 5246

In addition, not every device supports all the cryptographic methods defined in the RFCs. Therefore, after establishing the connection, the client and server negotiate a method that both support (Handshake) as well as the parameters to be used.

Supported TLS versions S7-1500

The following table shows, which TLS versions are supported in a given CPU firmware version.

CPU firmware version	Supported TLS version
V3.0	TLS 1.2, TLS 1.3
V2.9	TLS 1.2, TLS 1.3
V2.8 ... V2.0	TLS 1.2

Supported encryption methods and parameters for creating certificates

To generate the public key for a new certificate, in the TIA Portal, set the encryption method and encryption parameters. These certificate parameters are device-dependent and dependent on the application used

One possibility: In the CPU properties, go to "Protection & Security > Certificate manager" and generate a new device certificate. You can find settings for the encryption method and the encryption parameters under "Certificate Parameters" in the "Generate Certificates" dialog.

Example: RSA 2048 stands for asymmetric RSA encryption method with cryptographic key length 2048 bits.

The following table shows the supported encryption methods and encryption parameters depending on the CPU application or services.

Encryption method/parameters S7-1500 (firmware V3.0)	Web server (HTTPS) Secure PG/HMI communication Secure OUC	OPC UA
EC prime256v1	yes	no
EC secp384r1	yes	no
EC secp256k1	no	no
RSA 1024	yes	yes
RSA 2048	yes	yes
RSA 4096	yes	yes
RSA 8192	no	no

4.6.1.3 Confidentiality through encryption

Message encryption is an important element of data security. When encrypted messages are intercepted by third parties during communication, these potential eavesdroppers cannot access the information they contain.
There is a wide range of mathematical processes (algorithms) for encrypting messages.
All algorithms process a "key" parameter to encrypt and decrypt messages.

- Algorithm + key + message => encrypted message
- Encrypted message + key + algorithm => (decrypted) message

Symmetric encryption

The central aspect of symmetric encryption is that both communication partners use the same key for message encryption and decryption, as shown in the figure below. Bob uses the same key for encryption as Alice uses for decryption. In general, we also say that the two sides share the secret key with which they encrypt or decrypt a message as a secret.

① Bob encrypts his message with the symmetric key

② Alice decrypts the encrypted message with the symmetric key

Figure 4-7 Symmetric encryption

The process can be compared to a briefcase to which the sender and recipient have the same key, which both locks and opens the case.

- Advantage: Symmetric encryption algorithms (such as AES, Advanced Encryption Algorithm) are fast.
- Disadvantages: How can the key be sent to a recipient without getting into the wrong hands? This is a key distribution problem. If enough messages are intercepted, the key can also be worked out and must therefore be changed regularly.

If there are a large number of communication partners, there is also a large number of keys to distribute.

Asymmetric encryption

Asymmetric encryption works with a pair of keys consisting of one public key and one private key. Used with a PKI, it is also known as Public Key cryptography or simply PKI cryptography. A communication partner, Alice in the figure below, has a private key and a public key. The public key is provided to the public, in other words any potential communication partner. Anyone with the public key can encrypt messages for Alice. In the figure below, this is Bob. Alice's private key, which she must not disclose, is used by Alice to decrypt an encrypted message addressed to her.

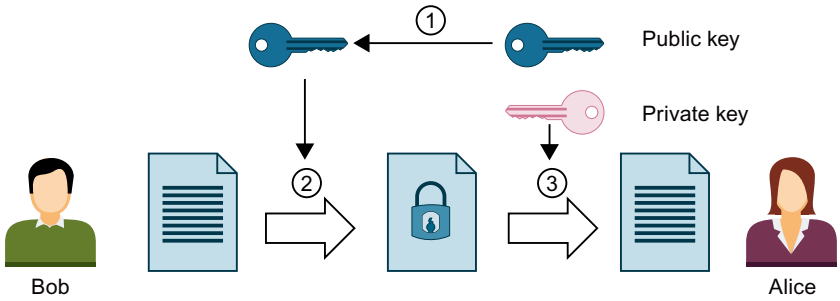

① Alice provides Bob with her public key. No precautionary measures are required to this purpose: Anyone can use the public key for messages to Alice if they are sure that it is actually Alice's public key.

② Bob encrypts his message with Alice's public key.

③ Alice decrypts the encrypted message from Bob with her private key. As only Alice has the private key and never discloses it, only she can decrypt the message. With her private key, she can decrypt any message encrypted with her public key - not only messages from Bob.

Figure 4-8 Asymmetric encryption

The system can be compared to a mailbox into which anyone can put a message, but from which only the person with the key can remove messages.

- Advantages: A message encrypted with a public key can only be decrypted by the owner of the private key. As another (private) key is required for decryption, it is also much harder to work out the decryption key on the basis of large numbers of encrypted messages. This means that the public key does not have to be kept strictly confidential, unlike with symmetric keys.

  Another advantage is easier distribution of public keys. No specially secured channel is required in asymmetric cryptography to transfer the public key from the recipient to the sender encrypting the messages. Less work is thus required in managing the keys than would be the case in symmetric encryption procedures.

- Disadvantages: Complex algorithm (e.g. RSA, named after the three mathematicians Rivest, Shamir and Adleman), and therefore poorer performance than with symmetric encryption.

Encryption processes in practice

In practice, for example with a CPU Web server and Secure Open User Communication, the TLS protocol is used below the relevant application layer. Application layers are HTTP or SMTP, for example, as detailed above.

TLS (Transport Layer Security) uses a combination of asymmetric encryption and symmetric encryption (hybrid encryption) for secure data transfer, for example, over the Internet, and uses the following subprotocols:

- TLS Handshake Protocol, responsible for authentication of communication partners and negotiation of the algorithms and keys to be used for subsequent data transfer on the basis of asymmetric encryption.
- TLS Record Protocol, responsible for encryption of user data with symmetric encryption and data exchange.

Both asymmetric and symmetric encryption are considered secure encryption schemes - there is basically no difference in security between the two procedures. The degree of security depends on parameters such as the selected key length.

Abuse of encryption

You cannot tell what identity is assigned to a public key from the bit string. A fraud could provide their public key and claim to be someone else. If a third party then uses this key thinking that they are addressing their required communication partner, confidential information could end up with the fraud. The fraud then uses their private key to decrypt the message that was not intended for them, and sensitive information falls into the wrong hands.

To prevent this type of abuse, the communication partners must be confident that they are dealing with the right communication partner. This trust is established by using digital certificates in a PKI.

4.6.1.4 Authenticity and integrity through signatures

Attacks from programs that intercept communication between the server and client and act as if they themselves were client or server, are called man-in-the-middle attacks. If the false identity of these programs is not detected, they can obtain important information about the S7 program, for example, or set values in the CPU and attack a machine or plants. Digital certificates are used to avoid such attacks.

Secure communication uses digital certificates that meet the X.509 standard of the International Telecommunication Union (ITU). This allows the identity of a program, a computer or an organization to be checked (authenticated).

How certificates establish trust

The main role of X.509 certificates is to bind an identity with the data of a certificate subject (for example, e-mail address or computer name) to the public key of the identity. Identities can be people, computers or machines.

Certificates are issued by certificate authorities (Certificate Authority, CA) or by the subject of a certificate itself. PKI systems specify how users can trust the certificate authorities and the certificates that they issue.

The certificate process:

1. Anyone wishing to own a certificate submits a certificate application to a registration authority linked to the certificate authority.
2. The certificate authority assesses the application and applicant on the basis of set criteria.
3. If the identity of the applicant can be clearly established, the certificate authority confirms that identity by issuing a signed certificate. The applicant has now become the certificate subject.

The figure below is a simplified overview of the process. It does not show how Alice can check the digital signature.

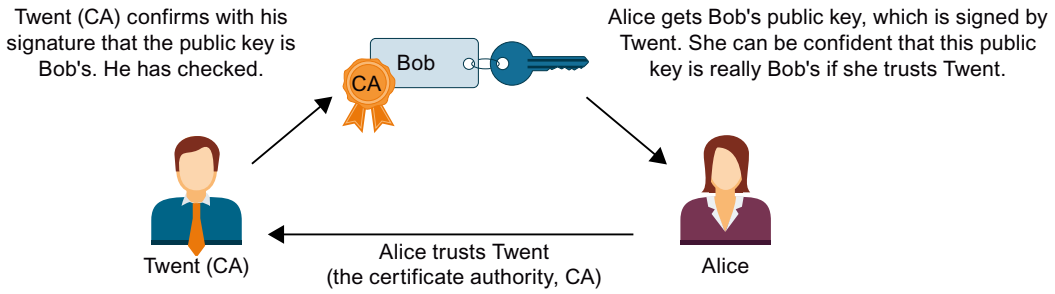

Figure 4-9 Signing of a certificate by a certificate authority

Self-signed certificates

Self-signed certificates are certificates whose signature comes from the certificate subject and not from an independent certificate authority.

Examples:

- You can create and sign a certificate yourself, for example, to encrypt messages to a communication partner. In the example above, Bob (instead of Twent) could himself sign his certificate with his private key. Using Bob's public key, Alice can check that the signature and public key from Bob match. This procedure is sufficient for simple internal plant communication that is to be encrypted.
- A root certificate is, for example, a self-signed certificate, signed by the certificate authority (CA), that contains the public key of the certificate authority.

Features of self-signed certificates

The "CN" (Common Name of Subject) for the certificate subject and "Issuer" attributes of self-signed certificates are identical: You have signed your certificate yourself. The field "CA" (Certificate Autority) must be set to "False"; the self-signed certificate should not be used to sign other certificates.

Self-signed certificates are not embedded in a PKI hierarchy.

Certificate content

A certificate to the X.509 V3 standard, the standard that is also used by STEP 7 and the S7-1500 CPUs, consists primarily of the following elements:

- Public key
- Details of the certificate subject (i.e. the holder of the key), for example, the Common Name (CN) of Subject .
- Attributes such as serial number and validity period
- Digital signature from the certificate authority (CA) confirming that the information is correct.

There are also extensions, for example:

- Specification of what the public key may be used for (Key Usage), for example, signing or key encryption.
  When you create a new certificate with STEP 7, for example in the context of Secure Open User Communication, select the correct entry from the list of possible usages, e.g. "TLS".
- Specification of a Subject Alternative Name (SAN), which is used in secure communication with Web servers (HTTP over TLS), for example, to ensure that the certificate in the address bar of the Web browser also belongs to the Web server specified in the URL.

How signatures are generated and verified

Asymmetric key usage ensures that certificates can be verified: The example of the "MyCert" certificate illustrates the "Sign" and "Verify signature" processes.

Generating a signature:

1. The issuer of the "MyCert" certificate generates a hash value from the certificate data using a specific hash function (for example SHA-1, Secure Hash Algorithm).
   The hash value is a bit string of a constant length. The advantage of the constant length of the hash value is that it always takes the same amount of time to sign.
2. Using the hash value generated in this way and the private key, the issuer of the certificate then generates a digital signature. The RSA signature scheme is often used.
3. The digital signature is saved in the certificate. The certificate is now signed.

Verifying a signature:

1. The authenticator of the "MyCert" certificate obtains the certificate of the issuer and thus the public key.
2. A new hash value is formed from the certificate data with the same hash algorithm that was used for signing (for example SHA-1).
3. This hash value is then compared with the hash value that is determined by means of the public key of the certificate issuer and the signature algorithm for checking the signature.
4. If the signature check produces a positive result, both the identity of the certificate subject as well as the integrity, meaning authenticity and genuineness, of the certificate content are proven. Anyone who has the public key, i.e. the certificate from the certificate authority, can check the signature and thus recognize that the certificate was actually signed by the certificate authority.

The figure below shows how Alice uses the public key in the certificate from Twent (who represents the certificate authority, CA) to verify the signature on Bob's public key. All that is required for verification is therefore the availability of the certificate from the certificate authority at the moment of checking. The validation itself is executed automatically in the TLS session.

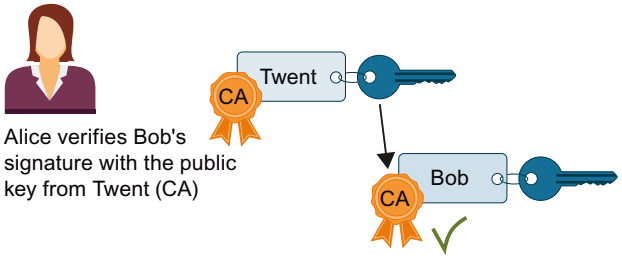

Figure 4-10 Verification of a certificate with the public key of the certificate of a certificate authority

Signing messages

The method described above for signing and verifying certificates also uses the TLS session for signing and verifying messages:

If a hash value is generated by a message and this hash value is encrypted with the private key of the sender and attached to the original message, the receiver of the message is able to check the integrity of the message. The recipient decrypts the hash value with the public key of the sender, puts together the hash value from the message received and compares the two values. If the values are not the same, the message or the encrypted hash value has been tampered with on the way.

Chain of certificates to root certificate

The certificates of a PKI are often organized hierarchically: The top of the hierarchy is formed by root certificates. Root certificates are certificates that are not signed by a higher-level certificate authority. The certificate subject and certificate issuer of root certificates are identical. Root certificates enjoy absolute trust. They form the "anchor" of trust and must therefore be known to the receiver as trusted certificates. They are stored in an area provided for trusted certificates.

Depending on the PKI, the function of root certificates is, for example, to sign certificates from lower-level certificate authorities, so-called intermediate certificates. This transfers the trust from the root certificate to the intermediate certificate. An intermediate certificate can sign a certificate just like a root certificate; both are therefore referred to as "CA certificates".

This hierarchy can be continued over multiple intermediate certificates until the end-entity certificate. The end-entity certificate is the certificate of the user who is to be identified.

The validation process runs through the hierarchy in the opposite direction: As described above, the certificate issuer is established and the signature checked with the issuer's public key, then the certificate of the higher-level certificate issuer is established along the entire chain of trust to the root certificate.

Conclusion: The chain of intermediate certificates to the root certificate, the certificate path, must be available in every device that is to validate an end-entity certificate of the communication partner, irrespective of the type of secure communication that you configure.

4.6.2 Managing certificates

4.6.2.1 What you should know about the certificate management

This section shows the available certificate management options of an S7-1500 CPU depending on the service (CPU application) used and on the versions of the TIA Portal / the CPU firmware.

Overview of certificate management options

Since TIA Portal version V14 and CPU firmware version V2.0, it has been possible to manage certificates for secure communications for different services of S7-1500 CPU in the TIA Portal and load them in the CPU.

TIA Portal as of version V17, along with the S7-1500 CPUs as of version V2.9 support another option of certificate management: With GDS push methods, you can transfer or renew certificates in the CPU at runtime without having to reload the CPU.

Using the same route, as of TIA Portal version V18, you can also transfer web server certificates for a S7-1500 CPU (as of firmware V3.0).

The following table provides an overview of the certificate management options depending on the service used and the TIA Portal firmware version or CPU firmware version.

Service	Certificate management with TIA Portal (TIA Portal version / S7-1500 CPU-FW version)	Certificate management with OPC UA GDS push methods (TIA Portal version / S7-1500 CPU-FW version)
Web server	as of V14 / as of V2.0	as of V18 / as of V3.0
Secure OUC communication	as of V14 / as of V2.0	-
OPC UA server	as of V14 / as of V2.0	as of V17 / as of V2.9
OPC UA client	as of V15.1 / as of V2.6	-
Secure PG/HMI Communication	as of V17 / as of V2.9	-

More information

Click here for a description of the certificate management with GDS-push methods: Certificate management via Global Discovery Server (GDS) (Page 180)

4.6.2.2 Certificate management with TIA Portal

STEP 7 as of version V14 together with the S7-1500 CPUs as of firmware version 2.0 support the Internet PKI (RFC 5280) in as far as an S7-1500 CPU is able to communicate with devices that also support the Internet PKI.

The usage of X.509 certificates for verifying certificates as described in the preceding sections, for example, is a result of this.

STEP 7 as of V14 uses a PKI similar to Internet PKI. Certificate Revocation Lists (CRLs), for example, are not supported.

Creating or assigning certificates in the TIA Portal

You create certificates for various applications in STEP 7 for devices with security properties, such as an S7-1500 CPU as of firmware V2.0.

The following areas in the Inspector window of the CPU allow the creation of new certificates or the selection of existing ones:

- "Web server > Security" - for the generation and assignment of Web server certificates.
- "Protection & Security > Connection mechanisms" - for the generation or assignment of PLC communication certificates (Secure PG/HMI communication, as of TIA Portal V17).
- "Protection & Security > Certificate manager" - for the generation and assignment of all types of certificates. TLS certificates for Secure Open User Communication are preset for the generation of certificates.
- "OPC UA > Server > Security" - for the generation or assignment of OPC UA server certificates.

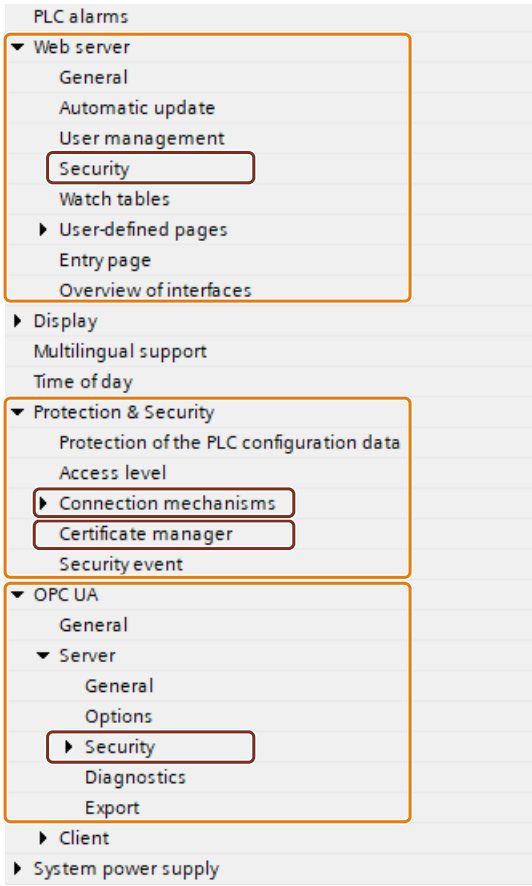

Figure 4-11 Security settings for an S7-1500 CPU in STEP 7

Special features of the section "Protection & Security > Certificate manager"

Only in this section of the Inspector window do you switch between the global, i.e. project-wide, and the local, i.e. device-specific, certificate manager (option "Use global security settings for certificate manager"). The option decides whether you have access to all the certificates in the project or not.

- If you do **not** use the certificate manager in the global security settings, you only have access to the local certificate memory of the CPU. You do not have access, for example, to imported certificates or root certificates. Without these certificates only a restricted functionality is available. You can, for example, only generate self-signed certificates.
- If you use the certificate manager in the global security settings and you are logged on as an administrator, you have access to the global, project-wide certificate memory. You can, for example, assign imported certificates to the CPU, or create certificates that are issued and signed by the project CA (certificate authority of the project).

The figure below shows how the "Global security settings" are shown in the project tree after the "Use global security settings for certificate manager" option has been activated in the Inspector window of the CPU.

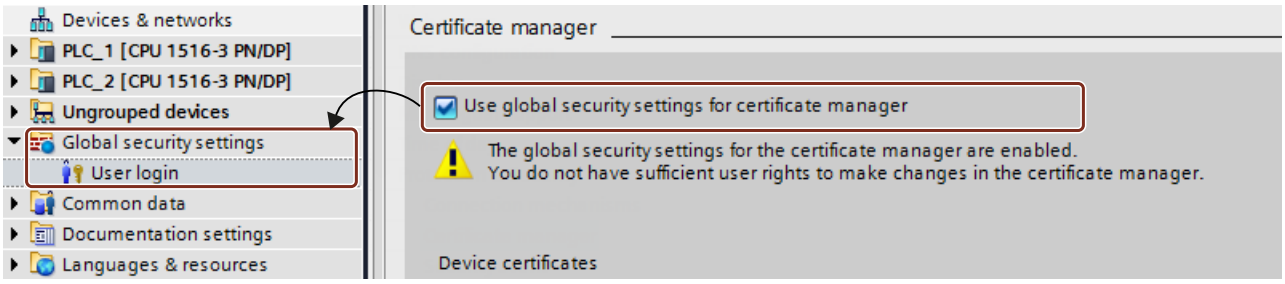

When you double-click "User login" in the project tree below the global security settings and log in, a line called "Certificate manager" is displayed, among other data.

When you double-click the "Certificate manager" line, you obtain access to all the certificates in the project, divided into the tabs "CA" (certificate authorities), "Device certificates" and "Trusted certificates and root certificate authorities".

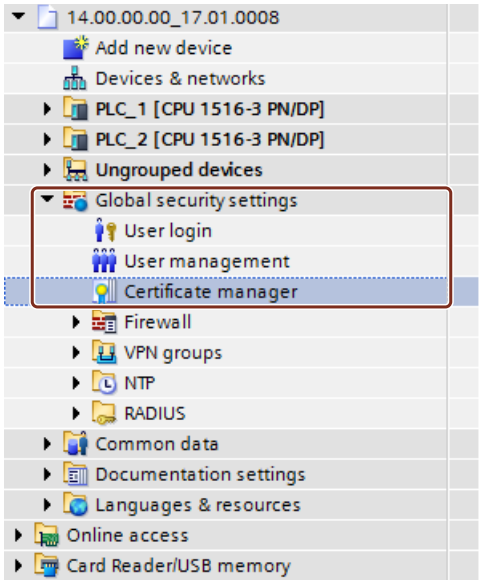

Private keys

STEP 7 generates private keys while generating device certificates and server certificates (end-entity certificates). The location where the private key is stored encrypted depends on the use of the global security settings for the certificate manager:

- If you use global security settings, the private key is stored encrypted in the global (project-wide) certificate memory.
- If you do not use global security settings, the private key is stored encrypted in the local (CPU-specific) certificate memory.

The existence of the private key, which is required to decrypt data, for example, is displayed in the "Private key" column of the "Device certificates" tab of the certificate manager in the global security settings.

When the hardware configuration is loaded, the device certificate, the public key as well as the private key are loaded into the CPU.

NOTICE
Enabling the "Use global security settings for certificate manager" option - Consequences The "Use global security settings for certificate manager" option influences the previously used private key: If you have already created certificates without using the certificate manager in the global security settings and then change the option for using the certificate manager, the private keys are lost and the certificate ID can change. A warning draws your attention to this fact. Therefore specify at the beginning of the project configuration which option is required for the certificate manager.

4.6.2.3 Examples for the management of certificates.

As explained in the preceding sections, certificates are required for every type of secure communication. The following section shows as an example how you handle the certificates with STEP 7 so that the requirements for Secure Open User Communication are fulfilled.

The devices which are involved at the respective communication partners are differentiated below. The respective steps for supplying the required certificates to the communications participants are described. An S7-1500 CPU or an S7-1500 Software Controller as of firmware version 2.0 is always required.

The general rule is:

While a secure connection is being established (handshake"), the communication partners as a rule only communicate their end-entity certificates (device certificates).

Therefore the CA certificates required to verify the transmitted device certificate must be located in the certificate memory of the respective communication partner.

NOTE

The current date/time must be set in the CPU.

When using secure communication (for example, HTTPS, secure OUC, OPC UA), make sure that the corresponding modules have the current time of day and the current date. Otherwise, the modules will evaluate the certificates used as invalid and secure communication will not work.

Secure Open User Communication between 2 S7-1500 CPUs

Two S7-1500 CPUs PLC_1 and PLC_2 are to exchange data with each other via Secure Open User Communication.

You generate the required device certificates with STEP 7 and assign them to the CPUs as described below.

STEP 7 project certificate authorities (CA of the project) are used to sign the device certificates.

The certificates are to be referenced by their certificate ID in the user program (TCON communication instruction in combination with the associated system data type, for example TCON_IPV4_SEC). STEP 7 assigns the certificate ID automatically during the generation or creation of certificates.

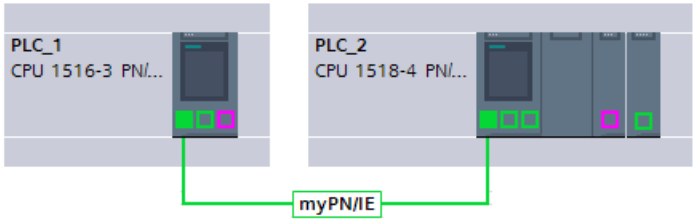

Procedure

STEP 7 automatically loads the required CA certificates together with the hardware configuration to the participating CPUs so that the requirements for certificate verification

exist for both CPUs. You therefore only have to generate the device certificates for the respective CPU; STEP 7 does the rest for you.

1. Mark PLC_1 and activate the "Use global security settings for certificate manager" option in the "Protection & Security" section.
2. Log in as a user in the project tree in the "Global security settings" section. For a new project, the "Administrator" role is planned for the first login.
3. Return to the PLC-1 in the "Protection & Security" section. Click in an empty line in the "Certificate subject" column in the "Device certificates" table to add a new certificate.
4. In the drop-down list for selecting a certificate click the "Add" button.
   The "Create Certificate" dialog opens.
5. Leave the default settings in this dialog. They are tailored to the usage of Secure Open User Communication (usage: TLS).
   Tip: Supplement the default name of the certificate subject, in this case the CPU name. In order to differentiate you better leave the default CPU name in case you have to manage a large number of device certificates.
   Example: PLC_1/TLS becomes PLC_1-SecOUC-Chassis17FactoryState.
6. Compile the configuration.
   The device certificate and the CA certificate are part of the configuration.
7. Repeat the steps described above for PLC_2.

In the next step you have to create the user programs for the data exchange and load the configurations together with the program.

Using self-signed certificates instead of CA certificates

When creating device certificates you can select the "Self-signed" option. You can create self-signed certificates without being logged in for the global security settings. This procedure is not recommended because the resulting certificates do not exist in the global certificate memory and can therefore not be assigned directly to a partner CPU.

As described above, you should select the name of the certificate subject with care so that the right certificate can be assigned to a device without any doubt.

Verification with the CA certificates of the STEP 7 project is not possible for self-signed certificates. To ensure that self-signed certificates can be verified you have to include the self-signed certificates of the communication partner into the list of trusted partner devices for each CPU. To this purpose you must have activated the "Use global security settings for certificate manager" option and be logged in as a user in the global security settings.

Proceed as follows to add the self-signed certificate of the communication partner of the CPU:

1. Mark PLC_1 and navigate to the "Certificates of partner devices" table in the "Protection & Security" section.
2. Click in an empty line in the "Certificate subject" column in the "Device certificates" table to add a new certificate.
3. Select the self-signed certificate of the communication partner from the drop-down list and confirm the selection.

In the next step you have to create the user programs for the data exchange and load the configurations together with the program.

Secure Open User Communication between S7-1500 CPU as a TLS client and an external device as a TLS server

Two devices are to exchange data with each other via TLS connection or TLS session, for example, exchanging recipes, production data or quality data:

- An S7-1500-CPU (PLC_1) as TLS client; the CPU uses Secure Open User Communication
- An external device (for example a Manufacturing Execution System (MES)) as TLS server

The S7-1500 CPU establishes the TLS connection / session to the MES system as TLS client.

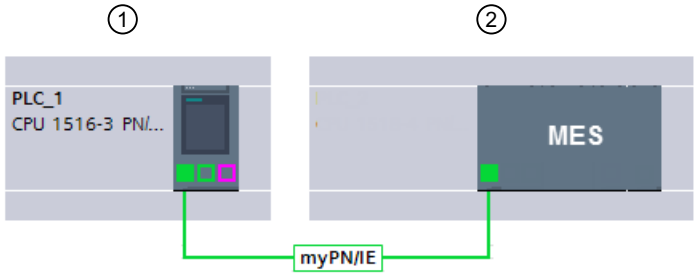

① TLS client

② TLS server

The S7-1500 CPU requires the CA certificates of the MES system to authenticate the TLS server: The root certificate and, if appropriate, the intermediate certificates for verifying the certificate path.

You have to import these certificates into the global certificate memory of the S7-1500 CPU.

Proceed as follows to import certificates of the communication partner:

1. Open the certificate manager in the global security settings in the project tree.
2. Select the appropriate table (trusted certificates and root certificate authorities) for the certificate to be imported.
3. Right-click in the table to open the shortcut menu. Click "Import" and import the required certificate or the required CA certificates.
   Through the import the certificate has a certificate ID assigned to it and can be assigned to a module in the next step.
4. Mark PLC_1 and navigate to the "Certificates of partner devices" table in the "Protection & Security" section.
5. Click in an empty line in the "Certificate subject" column to add the imported certificates.
6. Select the required CA certificates of the communication partner from the drop-down list and confirm the selection.

Optionally the MES system can also request a device certificate of the CPU to authenticate the CPU (i.e., the TLS client). In this case, the CA certificates of the CPU must be made available to the MES system. The prerequisite for importing the certificates into the MES system is a preceding export of the CA certificates from the STEP 7 project of the CPU. Follow these steps:

1. Open the certificate manager in the global security settings in the project tree.
2. Select the matching table (CA certificate) for the certificate to be exported.
3. Right-click the selected certificate to open the shortcut menu.
4. Click "Export".
5. Select the export format of the certificate.

In the next step you have to create the user programs for the data exchange and load the configurations together with the program.

Secure Open User Communication between an S7-1500 CPU as TLS server and an external device as TLS client

If the S7-1500 CPU acts as TLS server and the external device, for example an ERP system (Enterprise Resource Planning System) establishes the TLS connection / session, you require the following certificates:

- For the S7-1500 CPU, you generate a device certificate (server certificate) with a private key and download it with the hardware configuration into the S7-1500 CPU. You use the "Signed by certificate authority" option when generating the server certificate.
  The private key is required for the key exchange as explained in the figure for the example "HTTP over TLS".
- You have to export the CA certificate of the STEP 7 project for the ERP system and import / load it into the ERP system. With the CA certificate the ERP system verifies the server certificate of the S7-1500 that was transferred from the CPU to the ERP system during the establishment of the TLS connection / session.

① TLS server

② TLS client

Figure 4-12 Secure OUC between an S7-1500 CPU and ERP system

The required steps are described in the preceding sections.

Secure Open User Communication to a mail server (SMTP over TLS)

An S7-1500 CPU can establish a secure connection to an e-mail server with the communication instruction TMAIL-C.
The system data types TMail_V4_SEC and TMail_QDN_SEC allow you to determine the partner port of the e-mail server and thus to reach the e-mail server via "SMTP over TLS".

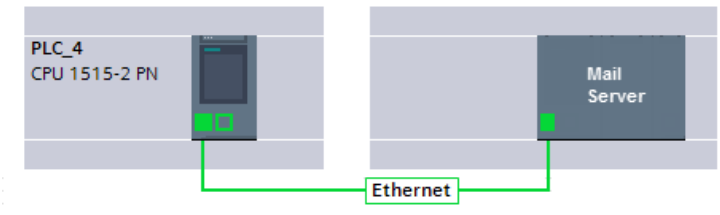

Figure 4-13 Secure OUC between a S7-1500 CPU and a mail server

Requirement for secure email connection is the importing of the root certificate and the intermediate certificates of the mail server (provider) into the global certificate memory of the S7-1500 CPU. By means of these certificates the CPU can check the server certificate that is sent by the mail server during the establishment of the TLS connection / session.

Proceed as follows to import certificates of the mail server:

1. Open the certificate manager in the global security settings in the project tree.
2. Select the appropriate table (trusted certificates and root certificate authorities) for the certificate to be imported.
3. Right-click in the table to open the shortcut menu. Click "Import" and import the required certificate or the required CA certificates.
   As a result of the import, the certificate has a certificate ID assigned to it and can be assigned to a module in the next step.
4. Mark PLC_1 and navigate to the "Certificates of partner devices" table in the "Protection & Security" section.
5. Click in an empty line in the "Certificate subject" column to add the imported certificates.
6. Select the required CA certificates of the communication partner from the drop-down list and confirm the selection.

In the next step you have to create the user programs for the email client function of the CPU and load the configurations together with the program.

4.6.2.4 How communication with certificates works: HTTP over TLS

The following paragraphs show how the mechanisms described are used to establish a secure communication between a Web browser and the Web server of an S7-1500 CPU.

Initially the changes for the "Permit access only with HTTPS" option in STEP 7 are described. As of STEP 7 V14 you have the possibility to influence the server certificate of the Web server of an S7-1500 CPU as of firmware V2.0: The server certificate is generated as of these versions with STEP 7.

In addition it illustrates the processes that are executed when a website of the CPU Web server is called with a Web browser of a PC through an encrypted HTTPS connection.

Using Web server certificates for S7-1500 CPUs, FW V2.0 or higher

For S7-1500 CPUs with a firmware version before V2.0, you were able to set "Permit access only with HTTPS" when setting the Web server properties, without specific requirements applying.

You did not have to handle certificates for these CPUs; the CPU automatically generates the certificates required for the Web server.

For S7-1500 CPUs as of firmware V2.0, STEP 7 generates the server certificate (end-entity certificate) for the CPU. You assign a server certificate to the Web server in the properties of the CPU (Web server > Security).

Because a server certificate name is always preset, there is no change to the easy configuration of the Web server: You activate the Web server. The "Permit access only with HTTPS" option is enabled by default - STEP 7 generates a server certificate with the default name during compiling.

Irrespective of whether you use the certificate manager in the global security settings or not: STEP 7 has all the information required to generate the server certificate.

In addition, you have the possibility to determine the properties of the server certificate, for example, the name or the validity period.

NOTE

The current date/time must be set in the CPU.

When using secure communication (for example, HTTPS, secure OUC, OPC UA), make sure that the corresponding modules have the current time of day and the current date. Otherwise, the modules will evaluate the certificates used as invalid and secure communication will not work.

Loading the Web server certificate

The server certificate generated by STEP 7 is then automatically also loaded to the CPU when the hardware configuration is loaded.

- If you use the certificate manager in the global security settings, the certificate authority of the project (CA certificate) signs the server certificate of the Web server: During loading the CA certificate of the project is loaded as well automatically.
- If you do not use the certificate manager in the global security settings, STEP 7 generates the server certificate as a self-signed certificate.

When you address the Web server of the CPU over the IP address of the CPU, a new server certificate (end-entity certificate) must be generated and loaded with each change in the IP address of an Ethernet interface of the CPU. This is necessary because the identity of the CPU changes with the IP address – and the identity requires a signature in accordance with the PKI rules.

You can avoid this problem by addressing the CPU with a domain name instead of its IP address, for example "myconveyer-cpu.room13.myfactory.com". For this purpose, you have to manage the domain names of the CPU via a DNS server.

Supplying a Web browser with a CA certificate of the Web server

In the Web browser the user who accesses the websites of the CPU through HTTPS should install the CA certificate of the CPU. If no certificate is installed, a warning is output recommending that you do not use the page. To view this page, you must explicitly "Add an exception".

The user receives the valid root certificate for download from the "Intro" Web page of the CPU Web server under "Download certificate".

STEP 7 offers a different possibility: Export the CA certificate of the project with the certificate manager into the global security settings in STEP 7. Subsequently import the CA certificate into the browser.

Course of the secure communication

The figure below shows, in simplified terms, how communication is established ("handshake") focusing on the negotiation of keys used for data exchange (here with HTTP over TLS).

However, the course can be applied to all communication options that are based on the usage of TLS, i.e. also for Secure Open User Communication (see Basics for secure communication).

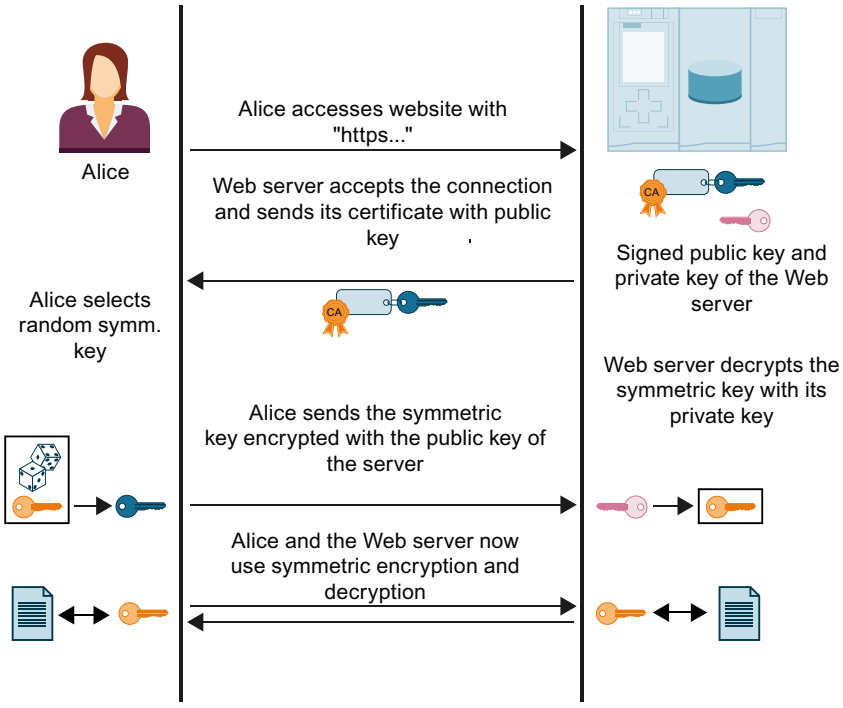

Figure 4-14 Handshake with https

The figure does not show the measures taken at Alice's end (browser) to verify the certificate sent by the Web server. Whether Alice can trust the Web server certificate received and therefore the identity of the Web server, and can accept the exchange of data, depends on positive verification.

The steps for verifying the authenticity of the Web server:

1. Alice must know the public keys of all relevant certificate authorities, which means she requires the complete certificate chain to verify the Web server certificate (i.e. the end-entity certificate of the Web server):

   Alice will generally have the required root certificate in her certificate memory. When a Web browser is installed, a range of trusted root certificates is also installed. If she does not have the root certificate, she must download it from the certificate authority and install it in the certificate authority of the browser. The certificate authority can also be the device on which the Web server is located.

   You have the following options for obtaining the intermediate certificates:

   – The server itself sends the required intermediate certificates to Alice along with its end-entity certificate – in the form of a signed message so that Alice can verify the integrity of the certificate chain.
   – The certificates often contain the URLs of the certificate issuer. Alice can load the required intermediate certificates from these URLs.

   When you work with certificates in STEP 7 it is always assumed that you have imported the intermediate certificates and the root certificate into the project and assigned them to the module.

2. Alice validates the signatures in the certificate chain with the public keys of the certificates.

3. The symmetric key must be generated and transferred to the Web server.
4. If the Web server is addressed by its domain name, Alice also verifies the identity of the Web server in accordance with the Internet PKI rules defined in RFC 2818. She is able to do this because the URL of the Web server, in this case the "Fully Qualified Domain Name" (FQDN), is saved in the end-entity certificate of the Web server. If the certificate entry in the "Subject Alternative Name" field corresponds to the entry in the address bar of the browser, everything is fine.

The process continues with the exchange of data with the symmetric key, as shown in the figure above.

4.6.3 Requirements for secure communication

4.6.3.1 Protection of confidential configuration data

As described in the basic information on secure communication, the proper functioning of certificate-based protocols requires private keys that must be protected as best as possible.
As of STEP 7 V17, you can use a password to protect these keys and other data worth protecting: The password to protect confidential PLC configuration data.
It is possible to do without the password if you have implemented measures to prevent unauthorized access to the TIA Portal project and the configuration of the CPU.
independently of whether you assign a password or not: The TIA Portal generates a key information that provides for the protection of the confidential PLC configuration data. This password has no influence on the secure communication process. However, the complexity of the password for the protection of confidential PLC configuration data determines how well the private keys, for example, are protected.
The presence of key information is a prerequisite for secure communication such as TLS-based secure PG/HMI communication: The CPU can handle certificates which are required for Secure Communication only if this key information is available.
The following figure shows the described contexts.

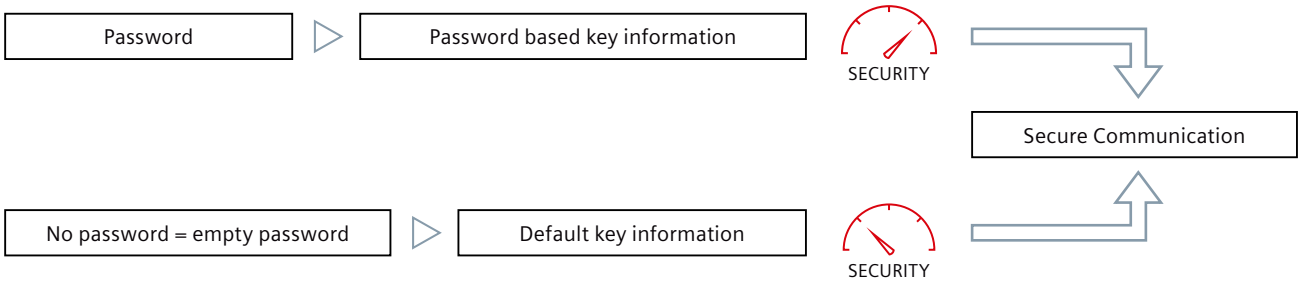

Figure 4-15 Contexts for protecting confidential configuration data

Security settings wizard

When you add a CPU to the project that supports secure PG/HMI communication in the TIA Portal from the hardware catalog, a wizard starts for the security settings of the CPU.

The wizard guides you step by step through the following CPU settings:

- Password to protect confidential PLC configuration data
- PG/PC and HMI communication mode
- Access level

Each of these settings is explained in detail in the wizard. At the end, all settings are once again summarized in an overview.

The wizard also starts, for example, when you replace a module in the network view of the TIA Portal and the new CPU, unlike the replaced CPU, supports secure PG/HMI communication.

All settings in the wizard are applied in the Inspector window (CPU properties).

You can start the wizard at any time using a Start button in the "Protection & Security" area of the CPU properties.

Requirement

- TIA Portal as of version V17
- CPU supports secure PG/HMI communication (for S7-1500 CPUs as of firmware version 2.9)
- The CPU is not yet loaded or the CPU is reset to factory settings with the option "Delete password for protection of confidential PLC configuration data"

Procedure

1. Open the CPU properties in the network view or in the device view.
2. Navigate to the area "Protection & Security > Protection of the PLC configuration data".
   Result: The "Protect confidential PLC configuration data" option is enabled first and the empty field for password entry is highlighted in red.
3. Configure the password (recommended) via the "Set" button or disable the "Protect confidential PLC configuration data" option.
4. Complete the configuration and create the user program.
5. Load the CPU.
   When loading the hardware configuration, you will be asked once to re-enter the password.
   Background: The configured password is used in the TIA Portal to generate the key information to protect confidential configuration data and thus to protect this data. For security reasons, however, neither the password nor the key information is saved in the project. In order for the key information to reach the CPU, it is re-generated when the hardware configuration is loaded, so that the password must be entered once at this point.

Certificate-based communication also between PG/HMI and CPU

Because, as of TIA Portal version V17 and CPU firmware version V2.9 (S7-1500) or V4.5 (S7-1200), the PG/HMI communication is also certificate-based, you will be prompted to accept the server certificate in the course of the commissioning.

Tips and rules for password management

- Manage your passwords in a password manager.
- To check the newly entered passwords for compliance and, for example, prevent trivial passwords, use the settings for checking the password policies in the TIA Portal:
  - In the project tree, navigate to the area "<Project name> > Security settings > Settings" area and select the "Password policies" area.
  - Specify, for example, the minimum number of characters the password must have or the minimum number of special characters.
- You do not have to assign different passwords for each CPU in a system or machine. If the requirements are met, you can also define the same password for a group of CPUs. This strategy also has advantages in the replacement parts scenario: If the group password is also assigned to the replacement CPU, the workload of replacing the CPU is reduced.

  Note here the risk that if the password of one of these CPUs is compromised, all CPUs with the same password are vulnerable.
- The definition of passwords also has an impact on the replacement part case, as the password for confidential PLC configuration data must be transferred to the new (replacement) CPU in addition to the configuration (see Rules for the replacement parts scenario (Page 75)).
- With **S7-1500R/H CPUs**, the password for confidential PLC configuration data is only loaded onto one of the two CPUs during loading. In order that the sync-up process works and that the partner CPU also works properly, the password must be transferred to the partner CPU before the sync-up, using the Online and Diagnostics editor:
  - In the Online and diagnostics view, you specify the area "Password to protect confidential PLC configuration data".
  - Enter the required password and click the "Set" button.

    If the correct password has been entered, the partner CPU can use the protected PLC configuration data and start the sync-up process.

4.6.3.2 Useful information for the protection of confidential PLC configuration data

The concept for Secure Communication protected by security standards comprises the following components:

- A password-based key information that is used for protecting confidential configuration data (e.g. private keys for certificates, passwords).
- A standardized log (TLS) that ensures communication between the participants (e.g. programming device and CPU).

"Protection of confidential configuration data" principle

The following figure shows in a simplified way how confidential configuration data, for example of a standard S7-1500 CPU, is protected: The two components project and key information are placed in different memory areas when loaded for the first time. The project in the load memory (memory card), the key information in a memory area in the CPU.

For other target systems (e.g. S7-1200 CPU, software controller) with different storage concepts, the implementation is adapted to the corresponding storage concepts, but the principle is the same.

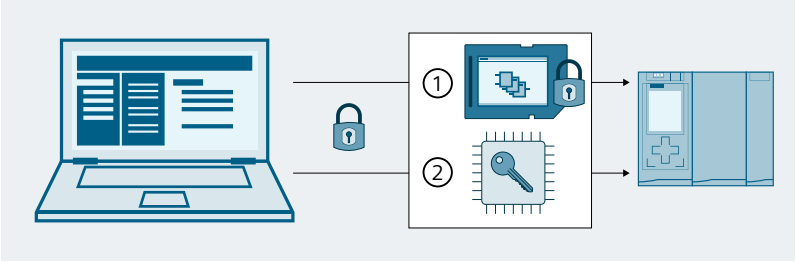

① Project with password-protected confidential configuration data (here: in load memory = memory card)

② Key information (generated from password) to use the protected confidential configuration data (here: in the memory area in the CPU)

Figure 4-16 Principle for protection of confidential configuration data

Two memory areas for more security

The charged components are related to each other like two matching puzzle pieces: The project is bound to the loaded key information, the loaded key information is bound to the password that was assigned during configuration.

Project and key information must match, otherwise the CPU will not start.

The principle of two separate memory areas also applies to the S7-1200 CPUs and S7-1500 CPU versions without a memory card, e.g. for the SW controller or PLCSim/ PLCSim Advanced. In the versions without memory card, two separate partitions are used so that the two items of information can be managed independently of one another.

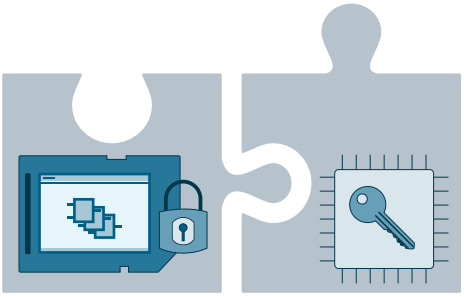

Figure 4-17 Principle of two separate memory areas

4.6.3.3 Changing your password

It makes a difference whether the CPU has already been loaded or not. If the CPU has already been loaded, it has the key information with which the password-protected PLC configuration data can be used.

Change password - configuration not yet loaded

As long as you have not yet loaded a configuration into the CPU, you can change an entered password or you can revoke the activation of the password protection.

Requirement

- The CPU is not yet loaded

Procedure

1. Open the CPU properties in the network view or in the device view.
2. Navigate to the area "Protection & Security > Protection of the PLC configuration data".
3. Click the "Change" button or deactivate the option "Protect confidential PLC configuration data".
4. Enter the previously valid password in the dialog. In case of a password change, also enter the new password and confirm the new password.

As long as you have not yet loaded a configuration into the CPU, the CPU is in a provisioning phase (see CPU behavior from loading to operational readiness (Page 97)) and you can load any valid configuration with your configured password.

Change password - configuration is already loaded

If the CPU has already been loaded with a configuration and the configuration is protected with a password for confidential PLC configuration data, you must first either reset the CPU to the factory settings and delete the password for confidential PLC configuration data in the CPU or delete it directly online and then set it.

Requirements

- You have write access to the CPU
- The CPU must be in STOP mode.

Procedure

1. Select the CPU in the network view.
2. Select the "Online & Diagnostics" command from the shortcut menu.
3. If you also change the project on the memory card, i.e. then want to reload the configuration:
   - Select the "Reset to factory settings" area in the opened online and diagnostics view.
   - Activate the option "Delete password to protect confidential PLC configuration data". To avoid a repeated start-up of the CPU, also select the "Format memory card" option.
   - Then load the project with the changed configuration and the desired password.
4. If you do not have to change the project on the memory card, i.e. only the wrong password is set:
   - In the Online and diagnostics view, you specify the area "Password for the protection of confidential PLC configuration data".
   - Click the "Delete" button. If the "Delete" button is not available, no password has been set in the CPU yet.
   - Enter the required password and click the "Set" button.

   If the correct password has been entered, the CPU can use the protected PLC configuration data.

No write access to the CPU

If you do not have write access to the load memory (read access level), remove the memory card from the CPU or delete the memory card externally, e.g. in your computer, before you reset to factory settings with the option "Delete password to protect confidential PLC configuration data".

NOTE

Reset to factory settings with mode selector of the CPU

Restoring the factory settings of the CPU via the mode selector also deletes the IP address of the CPU, but not the password for protecting confidential PLC configuration data.

More information

Information on how to proceed in case of a spare part can be found in section Rules for the replacement parts scenario (Page 75).

4.6.3.4 Resetting the password

The protection of the confidential PLC configuration data can be reset. This may be necessary, for example, if you want to change the password but no longer know the current password.

Password lost - configuration not yet loaded

Since you have to enter the password when loading the CPU via TIA Portal for the first time, the CPU configuration for this CPU can no longer be used. To change the password in the CPU properties, you must also enter the previously valid password. If you forget your password, do the following:

Requirement

- The CPU is not yet loaded

Procedure

1. Open the CPU properties in the network view or in the device view.
2. Navigate to the area "Protection & Security > Protection of the PLC configuration data".
3. Click "Reset".
   Please note that the certificates of the CPU (e.g. certificates for web server, for OPC UA server, for PG/PC communication and HMI communication) may no longer be used after the reset and may have to be created again and reassigned.
   - If you use the global security settings for the certificate manager, you must reassign the certificates from the certificate manager.
   - If you do not use the global security settings for the certificate manager, you must recreate and reassign the certificates.
4. Confirm the reset of the password.

The option for the protection of confidential PLC configuration data is still activated.

Delete password – Configuration is already loaded

If the CPU has already been loaded with a configuration and the configuration is protected with a password for confidential PLC configuration data, you can, for loading a new project, delete the password for confidential PLC configuration data online and then specify a new password.

Requirements

- You have write access to the CPU
- The CPU must be in STOP mode.

Procedure

1. Select the CPU in the network view.
2. Select the "Online & Diagnostics" command from the shortcut menu.
3. In the area "Password to protect confidential PLC configuration data", click the "delete" button.
   If the "Delete" button is not available, no password has been set in the CPU yet.

NOTICE
Deleting the password for confidential configuration data If the password is deleted and a loaded project requires a corresponding password, this project may no longer work without password.

4. If required, now enter a new password via the "Set" button.
5. Perform a restart of the CPU.

More information

Information on changing the password can be found in section Changing your password (Page 68).

4.6.3.5 Assign password via SIMATIC Memory Card

If you want to transfer the password to protect confidential PLC configuration data to a CPU without using TIA Portal, you can also use a SIMATIC memory card for this function.

The use of a SIMATIC memory card is suitable for the following purposes:

- Preparing a new CPU
  If a CPU is set up again, it should be configured with a password to protect the confidential PLC configuration data. After this configuration is completed, it is possible to use another SIMATIC memory card with the desired project.
  (S7-1200 CPU: A "transfer" card with transfer job can also be used to install the program on the CPU).
- CPU has a password to protect confidential PLC configuration data, but the password does not match the project
  If the passwords are not identical, you can set the correct password with the memory card in the CPU.
  (S7-1200 CPU: equipped either with SIMATIC "transfer" card or with SIMATIC "Program" card).
- reset the password for the protection of confidential PLC configuration data in the CPU
  As preparation for a disposal of the CPU or as preparation for a new project for the CPU.

Requirement

- TIA Portal as of version V17

Basic procedure

1. Creating a SIMATIC memory card with "SET PASSWORD" job
   This action creates a folder and file structure following a special pattern and writes a password for the protection of the confidential PLC configuration data as plain text to a special file on the SIMATIC memory card. See description below.
2. Insertion of a prepared SIMATIC memory card in the CPU and switch on the CPU.
   The PLC reads the password, processes it and stores the result in the internal memory. Any existing entry is overwritten.
3. Remove the SIMATIC memory card and restart the CPU.
   Results (S7-1500): While the CPU is reading the SIMATIC memory card, the LED shows the same behavior as with a firmware update. The RUN/STOP LED flashes while the CPU is setting the password. After the process has been completed successfully, the RUN/STOP LED lights up yellow and the MAINT LED flashes yellow.

The result of the operation is displayed in the diagnostics buffer as success or error message. If the password could not be set, the error LED flashes together with the other LEDs.

Creating a SIMATIC memory card with "SET PASSWORD" job

1. Create a folder in the root directory named "SET_PWD.S7S".
2. Create a text file named "PWD.TXT" with the password as text-only in the folder just created on the memory card.
3. Create a text file named "S7_JOB.S7S" in the root directory of the memory card with the content "SET_PWD".
   This file is the "Job file" for assigning a password for the protection of the confidential PLC configuration data of the PLC.

4. The file structure on the SIMATIC memory card then looks as follows:

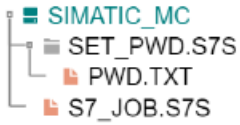

NOTE
Safe storage of the SIMATIC memory card
Store the SIMATIC memory card in a safe location to which only authorized persons have access.

Rules and recommendations

- Setting the password must be done in a secure environment.
- The content of the text file "PWD.TXT" defines the password for the protection of confidential PLC configuration data. It must match the password that you have also assigned in the CPU configuration.
- To reset an existing password of a PLC, the text file "PWD.TXT" must be empty, i.e. the file size is 0 bytes.
- Use any text editor to create the text file. The recommended text format is "UTF-8".
- The folder and file names are not case-sensitive. However, the password itself is case-sensitive.
- Do not enter a CR/LF character at the end (PWD.TXT or S7_JOB.S7S).

4.6.3.6 Special features when backing up and restoring a CPU

You can back up a functional configuration of a CPU in the TIA Portal and access it at a later time; this means you can then restore the originally backed-up configuration. This allows you to load a modified configuration, for example, to test product enhancements, to change programs for troubleshooting in the system or you can replace components on a test basis. You can then restore the originally backed-up configuration of the CPU.

Backing up the configuration

In backing up a CPU ("Online" menu, "Load backup from online device” in TIA Portal), the password for the protection of confidential PLC configuration data is backed up as well.

Restoring the backup

When restore the backup of a CPU (menu "Online", command “Download to device” with marked backup in TIA Portal) the CPU can only communicate with a PG/PC or HMI if the following condition is fulfilled:

- After the restoration of a configuration protected with a password to protect confidential PLC configuration data, exactly this password must be present in the CPU.
  Otherwise the CPU cannot access the configuration data and therefore does not start.

Remedy

If the above error occurs, that is, the password for protecting confidential PLC configuration data does not match the backup, you must delete the password to protect confidential PLC configuration data in the CPU and then set the correct password. After a restart the CPU, the backup is functional.

4.6.3.7 Tips for error avoidance and error handling

The following description lists some use cases that may result in CPU error messages.

Diagnostic buffer provides information

The CPU detects when the password protecting confidential configuration data and the loaded configuration do not match. A message in the diagnostic buffer indicates possible causes and remedies and usually leads to a solution of the problem.

Typical "pitfalls"

You should pay attention to the following circumstances in order to avoid or correct errors:

- Configuration loaded?
  Regardless of whether you protect your confidential configuration data with a password or not: without a loaded configuration, the CPU does not leave the provisioning phase.
- You are trying to load the CPU with a configured password and the CPU has already received another password.
  Example: CPU is exchanged for another CPU from the stock. The replacement CPU was not completely reset (reset to factory settings with option "Delete password for protection of confidential PLC configuration data").
  Remedy:
  - Always prepare replacement CPUs with the appropriate option (password deleted).
  - For the configuration to be loaded, use the same password that was already used for the configuration already loaded.
  - It is also possible that the wrong project / CPU configuration was loaded. Check whether the correct CPU configuration is available.
  - Use the online function "Set password to protect confidential PLC configuration data" to delete the password or to set the same password as in the CPU configuration. Then, restart the device.

- The same error occurs if your CPU configuration does not use a password and the already loaded configuration requires a user-defined password.
  Remedy:
  – Use the online function "Set password to protect confidential PLC configuration data" to delete the password or to set the same password as in the CPU configuration. Then, restart the device.

4.6.3.8 Rules for the replacement parts scenario

The assignment of passwords to protect confidential PLC configuration data also has an impact on the replacement parts scenario.

Rules for the replacement parts scenario

Observe the following rules for the replacement parts scenario:

Configuration of the replacement CPU via TIA Portal

- A CPU as replacement for an existing CPU should not have a configuration or a configured password to protect confidential PLC configuration data.
  Advantage: You can load the project into the replacement CPU without any further preparation - regardless of whether a password is configured or not.
- If the replacement CPU has already been configured, you must reset the CPU to the factory settings with the following options set:
  – "Delete password for protection of confidential PLC configuration data"
  – "Format memory card"

Replacement CPU is supplied with configuration data via memory card

- If you have **not** assigned a password to a CPU in your project to protect confidential PLC configuration data, you can insert the memory card of the CPU to be replaced into a brand-new, unused CPU without any further action needed.
  If the replacement CPU has already been configured with a password to protect confidential PLC configuration data, you must first reset this CPU to the factory settings using the option "Delete password for protection of confidential PLC configuration data".
- If you have assigned the same password to a group of CPUs, you can also assign the group password to the replacement CPU via the TIA Portal or via an appropriately prepared memory card (see Protection of confidential configuration data (Page 65)).
  In this case you can, for example, insert a memory card with the current project into the CPU and put it into operation without any further password handling.
- If you assign different passwords to each CPU in your project, you must first set the password valid for the respective CPU with the online and diagnostics editor when using the replacement CPU (area "Set password for protection of confidential PLC configuration data", see Changing your password (Page 68)).

More information

In section Assign password via SIMATIC Memory Card (Page 71) you can read how to use the SIMATIC Memory Card to assign the password to protect confidential PLC configuration data.

4.6.4 Secure Open User Communication

4.6.4.1 Secure OUC of an S7-1500 CPU as TLS client to an external PLC (TLS server)

The following section describes how you can set up Open User Communication via TCP from an S7-1500 CPU as TLS client to a TLS server.

Setting up a secure TCP connection from an S7-1500 CPU as TLS client to a TLS server

S7-1500 CPUs as of firmware version V2.0 support secure communication with addressing via a Domain Name System (DNS).

For secure TCP communication over the domain name you need to create a data block with the TCON_QDN_SEC system data type yourself, assign parameters and call it directly at one of the instructions TSEND_C, TRCV_C or TCON.

Requirements:

- Current date and time are set in the CPU.
- Your network includes at least one DNS server.
- You have configured at least one DNS server for the S7-1500 CPU.
- TLS client and TLS server have all the required certificates.

To set up a secure TCP connection to a TLS server, follow these steps:

1. Create a global data block in the project tree.
2. Define a tag of the data type TCON_QDN_SEC in the global data block.
   The example below shows the global data block "Data_block_1" in which the tag "DNS ConnectionSEC" of the data type TCON_QDN_SEC is defined.

Data_block_1

	Name	Data type	Start value	Comment
1	Static			
2	DNS Connection SEC	TCON_QDN_SEC		
3	ConnPara	TCON_QDN		parameter of the TCP connection
4	InterfaceId	HW_ANY	0	not relevant
5	ID	CONN_OUC	5	connection reference / identifier
6	ConnectionType	Byte	11	type of connection: 16#0B=11=TCP/IP, 16#13
7	ActiveEstablished	Bool	true	active/passive connection establishment
8	RemoteQDN	String[254]	'plc_1.factory127.'	fully or partially qualified domain name of rem
9	RemotePort	UInt	4000	remote UDP / TCP port number
10	LocalPort	UInt	0	local UDP / TCP port number
11	ActivateSecureConn	Bool	true	activate the security functionality of that conn
12	TLSServerReqClientCert	Bool	false	Just for server side: The TLS server requests a
13	ExtTLSCapabilities	Word	16#0	Bit 0: Just for client side: validate given IPv4 a
14	TLSServerCertRef	UDInt	7	for Server side: Reference to own X.509 V3 se
15	TLSClientCertRef	UDInt	0	for Client side: add id of own X.509 V3 client c

Figure 4-18 Data type TCON_QDN_SEC

3. Set the connection parameters of the TCP connection in the "Start value" column. Enter the fully qualified domain name (FQDN) of the TLS server, for example, for "RemoteQDN".

4. Set the parameters for secure communication in the "Start value" column.
   - "ActivateSecureConn": Activation of secure communication for this connection. If this parameter has the value FALSE, the subsequent security parameters are irrelevant. You can set up a non-secure TCP or UDP connection in this case.
   - "ExtTLSCapabilities": If you enter the value 1, the client validates the subjectAlternateName in the X.509-V3 certificate of the server to verify the identity of the server. This validation is executed in the context of the instruction.
   - "TLSServerCertRef": ID of the X.509-V3 certificate (usually a CA certificate) that is used by the TLS client to validate the TLS server authentication. If this parameter is 0, the TLS client uses all (CA) certificates currently loaded in the client certificate store to validate the server authentication.

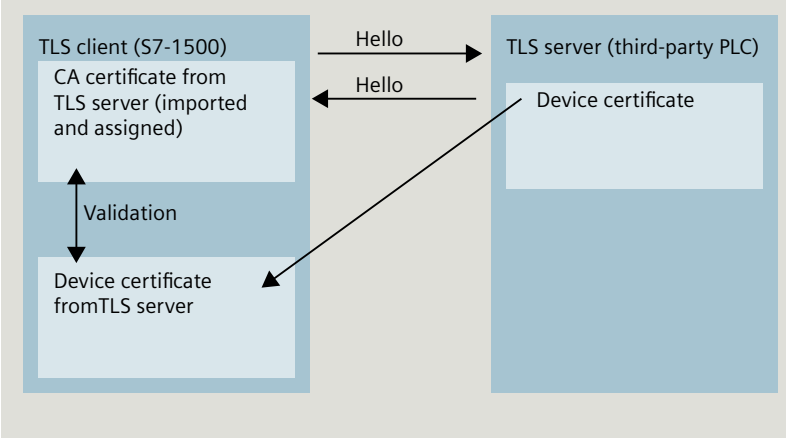

Figure 4-19 Certificate handling from the perspective of the S7-1500 as a TLS client

   - "TLSClientCertRef": ID of the own X.509-V3 certificate.
5. Create one of the instructions TSEND_C, TRCV_C or TCON in the program editor.
6. Interconnect the CONNECT parameter of one of the instructions TSEND_C, TRCV_C or TCON with the tags of the data type TCON_QDN_SEC.
   In the example below, the CONNECT parameter of the TCON instruction is interconnected with the tag "DNS connectionSEC" (data type TCON_QDN_SEC).

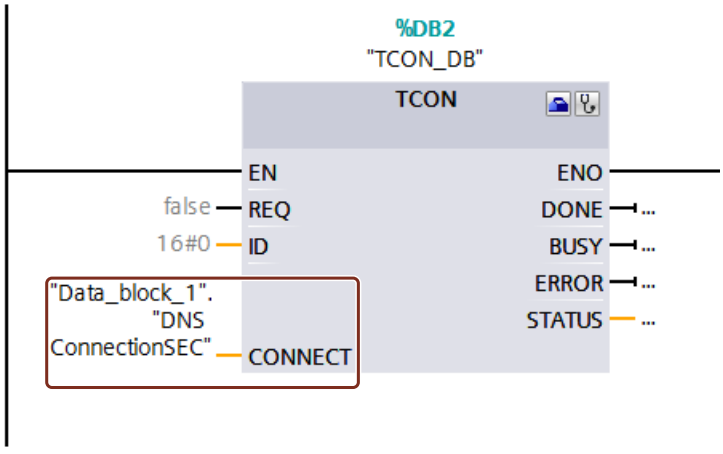

Figure 4-20 TCON instruction

Additional information

You can find more information on the TCON_QDN_SEC system data type in the STEP 7 online help.
For additional information on secure communication, refer to the section Secure Communication (Page 43).

4.6.4.2 Secure OUC of an S7-1500 CPU as TLS server to an external PLC (TLS client)

The following section describes how you can set up Open User Communication via TCP from an S7-1500 CPU as TLS server to a TLS client.

Setting up a secure TCP connection via the domain name of the communication partner

S7-1500 CPUs as of firmware version V2.0 support secure communication with addressing via a Domain Name System (DNS).
For secure TCP communication over the domain name you need to create a data block with the TCON_QDN_SEC system data type yourself, assign parameters and call it directly at one of the instructions TSEND_C, TRCV_C or TCON.
Requirements:

- Current date and time are set in the CPU.
- Your network includes at least one DNS server.
- You have configured at least one DNS server for the S7-1500 CPU.
- TLS client and TLS server have all the required certificates.

To set up a secure TCP connection to a TLS client, follow these steps:

1. Create a global data block in the project tree.
2. Define a tag of the data type TCON_QDN_SEC in the global data block.
   The example below shows the global data block "Data_block_1" in which the tag "DNS ConnectionSEC" of the data type TCON_QDN_SEC is defined.

Data_block_1

	Name	Data type	Start value	Comment
1	Static			
2	DNS Connection SEC2	TCON_QDN_SEC		
3	ConnPara	TCON_QDN		parameter of the TCP connection
4	InterfaceId	HW_ANY	0	not relevant
5	ID	CONN_OUC	8	connection reference / identifier
6	ConnectionType	Byte	11	type of connection: 16#0B=11=TCP/IP, 16#13
7	ActiveEstablished	Bool	false	active/passive connection establishment
8	RemoteQDN	String[254]	''	fully or partially qualified domain name of rem
9	RemotePort	UInt	0	remote UDP / TCP port number
10	LocalPort	UInt	2010	local UDP / TCP port number
11	ActivateSecureConn	Bool	true	activate the security functionality of that conn
12	TLSServerReqClientCert	Bool	false	Just for server side: The TLS server requests a
13	ExtTLSCapabilities	Word	16#0	Bit 0: Just for client side: validate given IPv4 a
14	TLSServerCertRef	UDInt	5	for Server side: Reference to own X.509 V3 se
15	TLSClientCertRef	UDInt	0	for Client side: add id of own X.509 V3 client c

Figure 4-21 TCON_QDN_SEC_Server

3. Set the connection parameters of the TCP connection in the "Start value" column. Enter, for example, the local ID of the TCP connection for "ID".

4. Set the parameters for secure communication in the "Start value" column.
   - "ActivateSecureConn": Activation of secure communication for this connection. If this parameter has the value FALSE, the subsequent security parameters are irrelevant. You can set up a non-secure TCP or UDP connection in this case.
   - "TLSServerReqClientCert": Request for an X.509-V3 certificate from the TLS client.
   - "TLSServerCertRef": ID of the own X.509-V3 certificate.

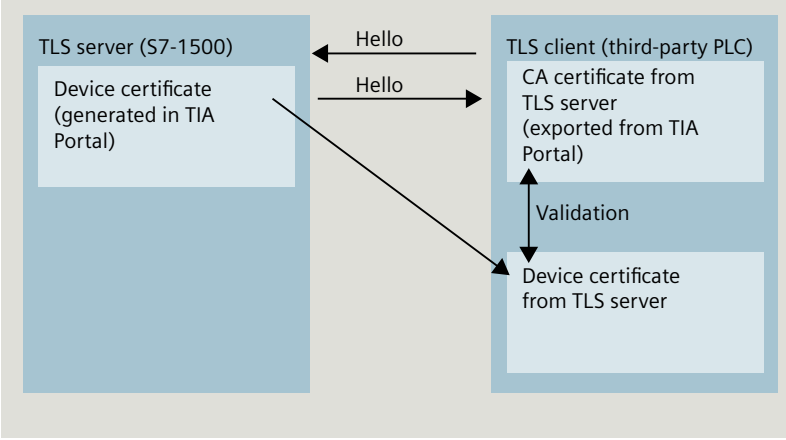

Figure 4-22 Certificate handling from the perspective of the S7-1500 as TLS server

   - "TLSClientCertRef": ID of the X.509-V3 certificate (or a group of X.509-V3 certificates) that is used by the TLS server to validate TLS client authentication. If this parameter is 0, the TLS server uses all (CA) certificates currently loaded in the server certificate store to validate the client authentication.
5. Create one of the instructions TSEND_C, TRCV_C or TCON in the program editor.
6. Interconnect the CONNECT parameter of one of the instructions TSEND_C, TRCV_C or TCON with the tags of the data type TCON_QDN_SEC.
   In the example below, the CONNECT parameter of the TCON instruction is interconnected with the tag "DNS connectionSEC" (data type TCON_QDN_SEC).

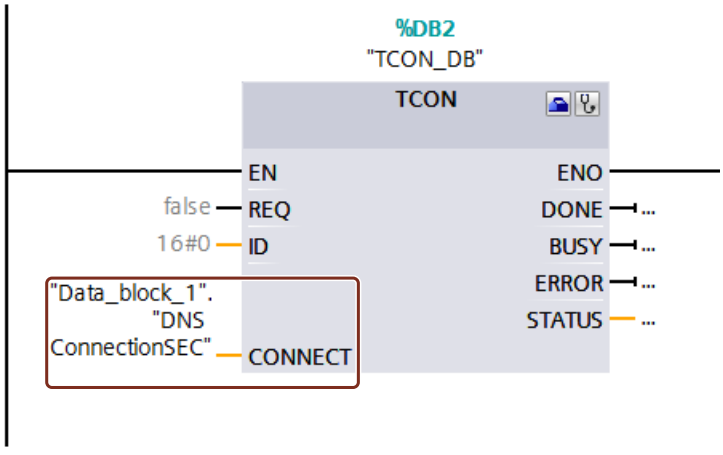

Figure 4-23 TCON instruction

More information

You can find more information about the system data types TCON_QDN_SEC in the STEP 7 online help.
For more information on secure communication, refer to the section Secure Communication (Page 43).

4.6.4.3 Secure OUC between two S7-1500 CPUs

The following section describes how you can set Secure Open User Communication via TCP between two S7-1500 CPUs. In the process one S7-1500 CPU acts as TLS client (active establishing of the connection) and the other S7-1500 CPU as TLS server (passive establishing of the connection).

Setting up a secure TCP connection between two S7-1500 CPUs

For secure TCP communication between two S7-1500 CPUs you need to create a data block with the TCON_IP_V4_SEC system data type yourself in every CPU, assign parameters and call it directly at one of the instructions TSEND_C, TRCV_C or TCON.
Requirements:

- Current date and time are set in the CPU.
- Both S7-1500 CPUs have at least firmware version V2.0
- TLS client and TLS server have all the required certificates.

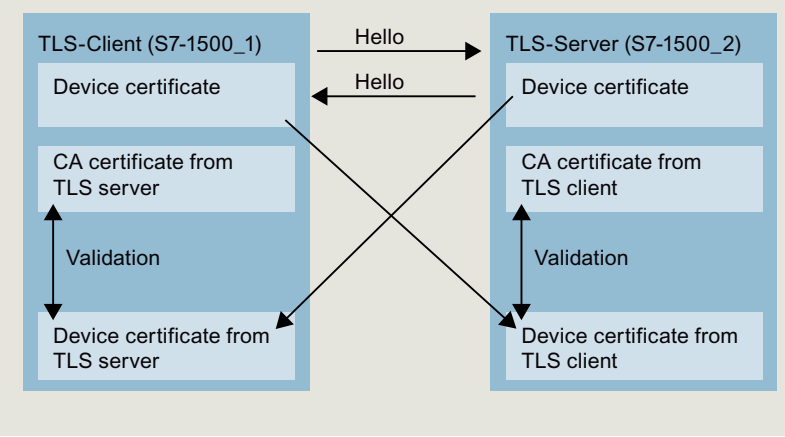

Figure 4-24 Certificate handling for Secure OUC between two S7-1500 CPUs

Settings at the TLS client

To set up a secure TCP connection in the TLS client, follow these steps:

1. Create a global data block in the project tree.

2. Define a tag of the data type TCON_IP_V4_SEC in the global data block.
   The example below shows the global data block "Data_block_1" in which the tag "SEC connection 1 TLS-Client" of the data type TCON_IP_V4_SEC is defined.

Data_block_1

	Name	Data type	Start value	Comment
1	Static			
2	SEC connection 1 TLS-Client	TCON_IP_V4_SEC		
3	ConnPara	TCON_IP_v4		parameter of the TCP connection
4	InterfaceId	HW_ANY	72	HW-identifier of IE-interface submodule
5	ID	CONN_OUC	10	connection reference / identifier
6	ConnectionType	Byte	11	type of connetion: 11=TCP/IP, 19=UDP (17=TCP/IP)
7	ActiveEstablished	Bool	true	active/passive connection establishment
8	RemoteAddress	IP_V4		remote IP address (IPv4)
9	ADDR	Array[1..4] of Byte		IPv4 address
10	ADDR[1]	Byte	192	IPv4 address
11	ADDR[2]	Byte	168	IPv4 address
12	ADDR[3]	Byte	1	IPv4 address
13	ADDR[4]	Byte	100	IPv4 address
14	RemotePort	UInt	4711	remote UDP/TCP port number
15	LocalPort	UInt	4711	local UDP/TCP port number
16	ActivateSecureConn	Bool	true	activate the security functionality of that connection in general
17	TLSServerReqClientCert	Bool	false	Just for server side: The TLS server requests a client certificate
18	ExtTLSCapabilities	Word	16#0	Bit 0: Just for client side: validate given IPv4 address against th
19	TLSServerCertRef	UDInt	1	for Server side: Reference to own X.509 V3 server certificate; fo
20	TLSClientCertRef	UDInt	5	for Client side: add id of own X.509 V3 client certificate; for Serv

Figure 4-25 IP_V4_SEC_Client

3. Set the connection parameters of the TCP connection in the "Start value" column. For example, enter the IPv4 address of the TLS server for "RemoteAddress".

NOTE

Connection parameter Interface ID

Note that you can enter the value "**0**" for the interface ID in the data type TCON_IP_V4_SEC. In this case, the CPU itself searches for a suitable local CPU interface.

---

4. Set the parameters for secure communication in the "Start value" column.
   - "ActivateSecureConn": Activation of secure communication for this connection. If this parameter has the value FALSE, the subsequent security parameters are irrelevant. You can set up a non-secure TCP or UDP connection in this case.
   - "TLSServerCertRef": Enter the value 2 (reference to the CA certificate of the TIA Portal project (SHA256) or the value 1 (reference to the CA certificate of the TIA Portal project (SHA1)). If you use a different CA certificate, enter the corresponding ID from the certificate manager of the global security settings.
   - "TLSClientCertRef": ID of the own X.509-V3 certificate.
5. Create one of the instructions TSEND_C, TRCV_C or TCON in the program editor.
6. Interconnect the CONNECT parameter of one of the instructions TSEND_C, TRCV_C or TCON with the tags of the data type TCON_IP_V4_SEC.

Settings at the TLS server

To set up a secure TCP connection in the TLS server, follow these steps:

1. Create a global data block in the project tree.
2. Define a tag of the data type TCON_IP_4_SEC in the global data block.
   The example below shows the global data block "Data_block_1" in which the tag "SEC connection 1 TLS-Server" of the data type TCON_IP_V4_SEC is defined.

Data_block_1

	Name	Data type	Start value	Comment
1	Static			
2	SEC connection 1 TLS-Server	TCON_IP_V4_SEC		
3	ConnPara	TCON_IP_v4		parameter of the TCP connection
4	InterfaceId	HW_ANY	120	HW-identifier of IE-interface submodule
5	ID	CONN_OUC	10	connection reference / identifier
6	ConnectionType	Byte	11	type of connetion: 11=TCP/IP, 19=UDP (17=TCP/IP)
7	ActiveEstablished	Bool	false	active/passive connection establishment
8	RemoteAddress	IP_V4		remote IP address (IPv4)
9	ADDR	Array[1..4] of Byte		IPv4 address
10	ADDR[1]	Byte	192	IPv4 address
11	ADDR[2]	Byte	168	IPv4 address
12	ADDR[3]	Byte	1	IPv4 address
13	ADDR[4]	Byte	10	IPv4 address
14	RemotePort	UInt	4711	remote UDP/TCP port number
15	LocalPort	UInt	4711	local UDP/TCP port number
16	ActivateSecureConn	Bool	true	activate the security functionality of that connection in general
17	TLSServerReqClientCert	Bool	true	Just for server side: The TLS server requests a client certificate
18	ExtTLSCapabilities	Word	16#0	Bit 0: Just for client side: validate given IPv4 address against the
19	TLSServerCertRef	UDInt	6	for Server side: Reference to own X.509 V3 server certificate; fo
20	TLSClientCertRef	UDInt	1	for Client side: add id of own X.509 V3 client certificate; for Serv

Figure 4-26 IP_V4_SEC_Server

3. Set the connection parameters of the TCP connection in the "Start value" column. For example, enter the IPv4 address of the TLS client for "RemoteAddress".
4. Set the parameters for secure communication in the "Start value" column.
   - "ActivateSecureConn": Activation of secure communication for this connection. If this parameter has the value FALSE, the subsequent security parameters are irrelevant. You can set up a non-secure TCP or UDP connection in this case.
   - "TLSServerReqClientCert ": Request for an X.509-V3 certificate from the TLS client. Enter the value "true".
   - "TLSServerCertRef": ID of the own X.509-V3 certificate.
   - "TLSClientCertRef": Enter the value 2 (reference to the CA certificate of the TIA Portal project (SHA256) or the value 1 (reference to the CA certificate of the TIA Portal project (SHA1)). If you use a different CA certificate, enter the corresponding ID from the certificate manager of the global security settings.
5. Create one of the instructions TSEND_C, TRCV_C or TCON in the program editor.

6. Interconnect the CONNECT parameter of one of the instructions TSEND_C, TRCV_C or TCON with the tags of the data type TCON_IP_V4_SEC.
   In the example below, the CONNECT parameter of the TSEND_C instruction is interconnected with the "SEC connection 1 TLS client" tags (data type TCON_IP_4_SEC).

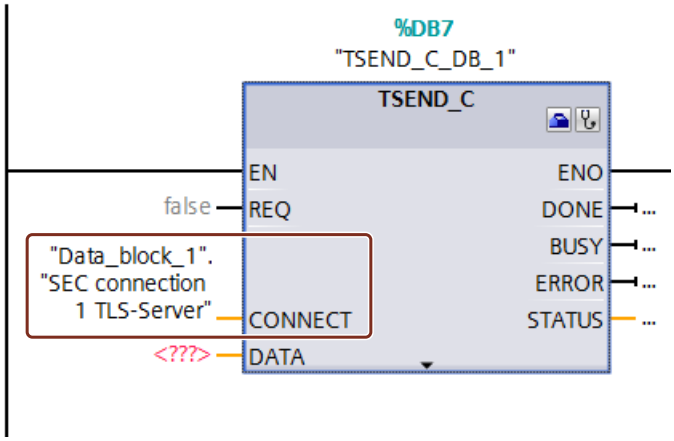

Figure 4-27 TSEND_C

Additional information

You can find more information about the system data types TCON_IP_4_SEC in the STEP 7 online help.
For additional information on secure communication, refer to the section Secure Communication (Page 43).

4.6.4.4 Secure OUC via CP interface

The following sections describes the particular points to be taken into consideration in the case of Secure Open User Communication via a CP interface. At least one station is an S7-1500 station with the following modules:

- S7-1500 CPU as of firmware version V2.0 (with the exception of S7-1500 Software Controller)
- CP 1543-1 as of firmware version V2.0 or CP 1543SP-1 as firmware version V1.0

The CP acts in an S7-1500 station as a TLS client (active connection establishment) or a TLS server (passive connection establishment).
The fundamental procedure and the concept for using secure communication via a CP interface is similar to that of secure communication via the interfaces of the S7-1500 CPUs. Essentially, you have to assign the certificates to the CPU in the role of a TLS server or TLS client and not to the CPU. Other rules and procedures therefore apply. These are described below.

Handling certificates for CPs

The following applies in general: You have to be logged on at the certificate manager in the global security settings. The generation of self-signed certificates also requires logon for the

global security settings. You have to have sufficient rights as a user (administrator or user with the "Standard" role with the right to "Configure security").

The starting point for the generation or assignment of certificates at the CP is the section "Security > Security properties". In this section, you log on for the global security settings.

Procedure:

1. In the network view of STEP 7, mark the CP and select the section "Security > Security properties" in the Inspector window.
2. Click on the "User logon" button.
3. Log on using your user name and password.
4. Enable the "Activate security functions" option.
   The security properties are initialized.
5. Click in the first line of the "Device certificates" table to generate a new certificate or select an existing device certificate.
6. If the communication partner is also an S7-1500 station, you also have to assign a device certificate to the communication partner with STEP 7 as described here or for the S7-1500 CPU.

Example: Setting up a secure TCP connection between two S7-1500 CPUs via CP interfaces

For secure TCP communication between two S7-1500 CPs you need to create a data block with the TCON_IP_V4_SEC system data type yourself in every CPU, assign parameters and call it directly at one of the instructions TSEND_C, TRCV_C or TCON.

Requirements:

- Both S7 1500 CPUs have at least firmware version V2.0. If you use the CP 1543SP-1: Firmware version as of V1.0.
- Both CPs (for example CP 1543-1) must have at least firmware version V2.0
- TLS client and TLS server have all the required certificates.
  - A device certificate (end-entity certificate) for the CP must be generated and be located in the certificate memory of the CP. If a communication partner is an external device (for example an MES or ERP system), a device certificate also has to exist for this device.
  - The root certificate (CA certificate) with which the device certificate of the communication partner is signed must also be located in the certificate memory of the CP or in the certificate memory of the external device. If you use intermediate certificates, you have to ensure that the complete certificate path exists in the validating device. A device uses these certificates to validate the device certificate of the communication partner.
- The communication partner must always be addressed via its IPv4 address, not via its domain name.

The following figure shows the different certificates in the devices for the case that both communication partners communicate via a CP 1543-1. In addition, the figure shows the transfer of the device certificates during establishment of the connection ("Hello").

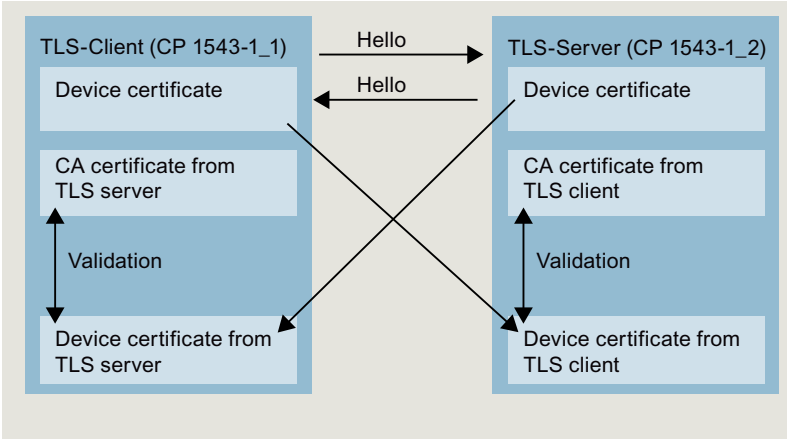

Figure 4-28 Certificate handling in secure OUC between two S7-1500 CPUs via CP interfaces.

Settings at the TLS client

To set up a secure TCP connection in the TLS client, follow these steps:

1. Create a global data block in the project tree.

2. Define a tag of the data type TCON_IP_4_SEC in the global data block. To do so, enter the string "TCON_IP_V4_SEC" in the "Data type" field.
   The example below shows the global data block "Data_block_1" in which the tag "SEC connection 1 TLS-Client" of the data type TCON_IP_V4_SEC is defined.
   The Interface ID has the value of the HW identifier of the IE interface of the local CP (TLS client).

Data_block_1

	Name	Data type	Start value	Comment
1	Static			
2	SEC connection 1 TLS-Client	TCON_IP_V4_SEC		
3	ConnPara	TCON_IP_v4		parameter of the TCP connection
4	InterfaceId	HW_ANY	258	HW-identifier of IE-interface submodule
5	ID	CONN_OUC	10	connection reference / identifier
6	ConnectionType	Byte	11	type of connetion: 11=TCP/IP, 19=UDP (17=TCP/IP)
7	ActiveEstablished	Bool	true	active/passive connection establishment
8	RemoteAddress	IP_V4		remote IP address (IPv4)
9	ADDR	Array[1..4] of Byte		IPv4 address
10	ADDR[1]	Byte	192	IPv4 address
11	ADDR[2]	Byte	168	IPv4 address
12	ADDR[3]	Byte	1	IPv4 address
13	ADDR[4]	Byte	100	IPv4 address
14	RemotePort	UInt	4711	remote UDP/TCP port number
15	LocalPort	UInt	4711	local UDP/TCP port number
16	ActivateSecureConn	Bool	true	activate the security functionality of that connection in general
17	TLSServerReqClientCert	Bool	false	Just for server side: The TLS server requests a client certificate
18	ExtTLSCapabilities	Word	16#0	Bit 0: Just for client side: validate given IPv4 address against th
19	TLSServerCertRef	UDInt	1	for Server side: Reference to own X.509 V3 server certificate; fo
20	TLSClientCertRef	UDInt	5	for Client side: add id of own X.509 V3 client certificate; for Serv

Figure 4-29 IP_V4_SEC_Client

3. Set the connection parameters of the TCP connection in the "Start value" column. For example, enter the IPv4 address of the TLS server for "RemoteAddress".
4. Set the parameters for secure communication in the "Start value" column.
   – "ActivateSecureConn": Activation of secure communication for this connection. If this parameter has the value FALSE, the subsequent security parameters are irrelevant. You can set up a non-secure TCP or UDP connection in this case.
   – "TLSServerCertRef": Enter the value 2 (reference to the CA certificate of the TIA Portal project (SHA256) or the value 1 (reference to the CA certificate of the TIA Portal project (SHA1)). If you use a different CA certificate, enter the corresponding ID from the certificate manager of the global security settings.
   – "TLSClientCertRef": ID of the own X.509-V3 certificate.
5. Create one of the instructions TSEND_C, TRCV_C or TCON in the program editor.
6. Interconnect the CONNECT parameter of one of the instructions TSEND_C, TRCV_C or TCON with the tags of the data type TCON_IP_V4_SEC.

Settings at the TLS server

To set up a secure TCP connection in the TLS server, follow these steps:

1. Create a global data block in the project tree.
2. Define a tag of the data type TCON_IP_4_SEC in the global data block.
   The example below shows the global data block "Data_block_1" in which the tag "SEC connection 1 TLS-Server" of the data type TCON_IP_V4_SEC is defined.
   The interface ID has the value of the HW identifier of the IE interface of the local CP (TLS server).

Data_block_1

	Name	Data type	Start value	Comment
1	Static			
2	SEC connection 1 TLS-Server	TCON_IP_V4_SEC		
3	ConnPara	TCON_IP_v4		parameter of the TCP connection
4	InterfaceId	HW_ANY	260	HW-identifier of IE-interface submodule
5	ID	CONN_OUC	10	connection reference / identifier
6	ConnectionType	Byte	11	type of connetion: 11=TCP/IP, 19=UDP (17=TCP/IP)
7	ActiveEstablished	Bool	false	active/passive connection establishment
8	RemoteAddress	IP_V4		remote IP address (IPv4)
9	ADDR	Array[1..4] of Byte		IPv4 address
10	ADDR[1]	Byte	192	IPv4 address
11	ADDR[2]	Byte	168	IPv4 address
12	ADDR[3]	Byte	1	IPv4 address
13	ADDR[4]	Byte	10	IPv4 address
14	RemotePort	UInt	4711	remote UDP/TCP port number
15	LocalPort	UInt	4711	local UDP/TCP port number
16	ActivateSecureConn	Bool	true	activate the security functionality of that connection in general
17	TLSServerReqClientCert	Bool	true	Just for server side: The TLS server requests a client certificate
18	ExtTLSCapabilities	Word	16#0	Bit 0: Just for client side: validate given IPv4 address against the
19	TLSServerCertRef	UDInt	6	for Server side: Reference to own X.509 V3 server certificate; fo
20	TLSClientCertRef	UDInt	1	for Client side: add id of own X.509 V3 client certificate; for Serv

Figure 4-30 IP_V4_SEC_Server

3. Set the connection parameters of the TCP connection in the "Start value" column. For example, enter the IPv4 address of the TLS client for "RemoteAddress".
4. Set the parameters for secure communication in the "Start value" column.
   - "ActivateSecureConn": Activation of secure communication for this connection. If this parameter has the value FALSE, the subsequent security parameters are irrelevant. You can set up a non-secure TCP or UDP connection in this case.
   - "TLSServerReqClientCert ": Request for an X.509-V3 certificate from the TLS client. Enter the value "true".
   - "TLSServerCertRef": ID of the own X.509-V3 certificate.
   - "TLSClientCertRef": Enter the value 2 (reference to the CA certificate of the TIA Portal project (SHA256) or the value 1 (reference to the CA certificate of the TIA Portal project (SHA1)). If you use a different CA certificate, enter the corresponding ID from the certificate manager of the global security settings.
5. Create one of the instructions TSEND_C, TRCV_C or TCON in the program editor.
6. Interconnect the CONNECT parameter of the instruction TSEND_C, TRCV_C or TCON with the tags of the data type TCON_IP_V4_SEC.

Upload device as new station

When you upload a configuration with certificates and configured secure Open User Communication as a new station into your STEP 7 project, the certificates of the CP are not uploaded, in contrast to the certificates of the CPU. After the device has been loaded as a new station, no more certificates are contained in the corresponding tables of the CPs for the device certificates.

You have to perform configuration of certificates again after the upload. Otherwise, renewed loading of the configuration results in the certificates that originally exist in the CP being deleted so that secure communication does not function.

Secure OUC connections via CPU and CP interfaces - similarities

- Connection resources:
  No differences between OUC and secure OUC. A programmed secure OUC connection uses a connection resource just like an OUC connection, irrespective of which IE/PROFINET interface communicates with the station.
- Connection diagnostics:
  No differences between OUC and secure OUC connection diagnostics.
- Loading of projects with secure OUC connections into the CPU:
  Only possible in STOP of the CPU, if certificates are loaded as well.
  Recommendation: Load to device > Hardware and software. Reason: Ensuring the consistency between the program with secure OUC, hardware configuration and certificates.
  Certificates are loaded with the hardware configuration - therefore loading requires a stop of the CPU. The reloading of blocks that utilize further secure OUC connections is only possible in RUN if the certificates required for this purpose are already located on the module.

4.6.4.5 Secure OUC with Modbus TCP

For secure Modbus TCP connection you need to create a data block with one of the system data types TCON_IP_V4_SEC or TCON_QDN_SEC yourself, assign parameters and call it directly at the MB_Server or MB_CLIENT instruction.

Requirements:

- S7-1500 CPU CPU firmware version V2.5 or higher
- The Modbus client (TLS client) can reach the Modbus server (TLS server) over IP communication in the network.
- TLS client and TLS server have all the required certificates.

Example of setting up a secure Modbus TCP connection to a Modbus TCP server

The following section describes how you can set up a Secure Open User Communication over Modbus TCP from a Modbus TCP client to a Modbus TCP server.

To set up a secure connection from a Modus TCP client (TLS client) to a Modbus TCP server (TLS server) and set up the IPv4 address of the mail server, follow these steps:

1. Create a global data block in the project tree.
2. Define a tag of the data type TCON_IP_V4 SEC in the global data block.

Data_block_1

	Name	Data type	Start value	Comment
1	Static			
2	SEC_ModbusTCP_1	TCON_IP_V4...		
3	ConnPara	TCON_IP_v4		parameter of the TCP connection
4	InterfaceId	HW_ANY	64	HW-identifier of IE-interface submodule
5	ID	CONN_OUC	15	connection reference / identifier
6	ConnectionType	Byte	11	type of connection: 11=TCP/IP, 19=UDP (17=TCP/IP)
7	ActiveEstablished	Bool	true	active/passive connection establishment
8	RemoteAddress	IP_V4		remote IP address (IPv4)
9	ADDR	Array[1..4] of B...		IPv4 address
10	ADDR[1]	Byte	192	IPv4 address
11	ADDR[2]	Byte	168	IPv4 address
12	ADDR[3]	Byte	10	IPv4 address
13	ADDR[4]	Byte	100	IPv4 address
14	RemotePort	UInt	502	remote UDP/TCP port number
15	LocalPort	UInt	502	local UDP/TCP port number
16	ActivateSecureConn	Bool	true	activate the security functionality of that connection in general
17	TLSServerReqClientCert	Bool	false	Just for server side: The TLS server requests a client certificate
18	ExtTLSCapabilities	Word	0	Bit 0: Just for client side: validate given IPv4 address against the subjectAlt
19	TLSServerCertRef	UDInt	2	for Server side: Reference to own X.509 V3 server certificate; for Client side:
20	TLSClientCertRef	UDInt	7	for Client side: add id of own X.509 V3 client certificate; for Server side: add

Figure 4-31 TCON_IP_V4_SEC

3. Set the connection parameters of the TCP connection in the "Start value" column. Enter the IPv4 address of the mail server, for example, for the "MailServerAddress".
4. Set the parameters for secure communication in the "Start value" column. Enter the certificate ID of the CA certificate of the communication partner, for example, for "TLSServerCertRef".
   - "ActivateSecureConn": Activation of secure communication for this connection. If this parameter has the value FALSE, the subsequent security parameters are irrelevant. In this case you can set up an unsecured Modbus TCP connection.
   - "TLSServerCertRef": Reference to the X.509 V3 (CA) certificate of the Modbus TCP server, which is used by the TLS client to validate the authentication of the Modbus TCP server.
5. Create an MB_CLIENT instruction in the program editor.
6. Interconnect the CONNECT parameter of the MB_Client instruction with the tags of the data type TCON_IP_4_SEC.

4.6.4.6 Secure OUC via e-mail

Setting up a secure connection to a mail server over the CPU interface

For secure communication to a mail server you need to create a data block with one of the system data types TMAIL_V4_SEC, TMAIL_QDN_SEC yourself, assign parameters and call it directly at the TMAIL_C instruction.

Requirements:

- TMAIL_C instruction version V5.0 or higher
- STEP 7 V15 and higher
- S7-1500 CPU V2.5 and higher
- You have assigned all the CA certificates of the mail server (TLS server) to the CPU (TLS client) and have downloaded the configuration to the CPU.
- Current date and time are set in the CPU.

Process for establishing a secure connection to the mail server

You can choose between two processes for establishing the secure connection to the mail server:

- SMTPS: The client attempts to immediately establish a TLS connection to the mail server ("handshake" process). If the mail server does not support TLS, then no connection is established.
- STARTTLS: Client establishes a TCP connection to the mail server. The client sends a request to "upgrade" the existing connection to a secure TLC connection over the TCP connection. If the mail server supports TLS, the client sends the command to establish a secure connection. The mail server uses the SMTP command "STARTTLS" to do this. The client then establishes a secure connection to the mail server. Advantage: If the mail server does not support TLS, client and mail server can communicate unsecured with each other.

You use the "Remote Port" setting in the data types at the block parameter "MAIL_ADDR_PARAM" to define which process is used for the communication.

Table 4-5 Port numbers for the SMTPS and STARTTLS processes

Process	Port
SMTPS:	465[1]
STARTTLS	Any (≠465)[2]

[1] The instruction TMAIL_C uses SMTPS only for Port 465. For all other ports STARTTLS is used.

[2] According to RFC, mail servers use Ports 25 and 587 for secure connections with STARTTLS. The use of other port numbers for SMTP is not RFC-compliant, successful communication with such a mail server is not guaranteed.

Example: Setting up a secure connection to a mail server over IPv4

The following section describes how to set up a secure connection to an IPv4 mail server with the TMAIL_C communication instruction.

To set up a secure connection via the IP4 address of the mail server, follow these steps:

1. Create a global data block in the project tree.
2. Define a tag of the data type TMAIL_V4_SEC in the global data block.
   The example below shows the global data block "MailConnDB" in which the tag "MailConnectionSEC" of the data type TMAIL_V4_SEC is defined.

MailConnDB

Name	Datentyp	Startwert	Kommentar
Static			
MailConnectionSEC	TMail_V4_SEC		
InterfaceId	HW_ANY	"Local~CP_1543-1_1~Ethernet-Schnittstelle_1"	Use HW-identifier of the IE-interface to specify th
ID	CONN_OUC	100	connection reference / identifier
ConnectionType	Byte	16#20	type of connection 16#20=32=TMail_V4 or TMai
ActiveEstablished	Bool	true	active / passive connection establishment
WatchDogTime	Time	T#5000ms	watchdog time to monitor SMTP server associat
MailServerAddress	IP_V4		IPv4 address of mail server
ADDR	Array[1..4] of Byte		IPv4 address
ADDR[1]	Byte	144	IPv4 address
ADDR[2]	Byte	145	IPv4 address
ADDR[3]	Byte	2	IPv4 address
ADDR[4]	Byte	20	IPv4 address
UserName	String[254]	'myName'	user name which is necessary to login into the
PassWord	String[254]	'myPW'	user password which is necessary to login into
From	EMAIL_ADDR		source mail address
LocalPartPlusAt...	String[64]	'Mustermann@'	local part of e-mail address plus "@" sign
FullQualifiedD...	String[254]	'siemens.com'	full qualified domain name part of e-mail addre
RemotePort	UInt	587	remote TCP port number
ActivateSecureConn	Bool	TRUE	activate the security functionality of that conne
ExtTLSCapabilities	Byte	16#0	for further capability extensions of the TLS hand
TLSServerCertRef	UDInt	7	Reference to the X.509 V3 (CA-) certificate of the

Figure 4-32 Data type TMAIL_V4_SEC

3. Set the connection parameters of the TCP connection in the "Start value" column. Enter the IPv4 address of the mail server, for example, for the "MailServerAddress".

NOTE

Connection parameter Interface ID

Note that as of instruction version V5.0 of TMAIL_C instruction in the TMAIL_V4_SEC data type, you need to enter the value "**0**" for the Interface ID. In this case, the CPU itself searches for a suitable local CPU interface.

---

4. Set the parameters for secure communication in the "Start value" column. Enter the certificate ID of the CA certificate of the communication partner, for example, for "TLSServerCertRef".
   - "ActivateSecureConn": Activation of secure communication for this connection. If this parameter has the value FALSE, the subsequent security parameters are irrelevant. You can set up a non-secure TCP or UDP connection in this case.
   - "TLSServerCertRef": Reference to the X.509 V3 (CA) certificate of the mail server, which is used by the TLS client to validate the authentication of the mail server.

5. Create a TMAIL_C instruction in the program editor.
6. Interconnect the MAIL_ADDR_PARAM parameter of the TMAIL_C instruction with the tag of the data type TMAIL_V4_SEC.
   In the following example the MAIL_ADDR_PARAM parameter of the TMAIL_C instruction is interconnected with the tag "MailConnectionSEC" (data type TMAIL_V4_SEC).

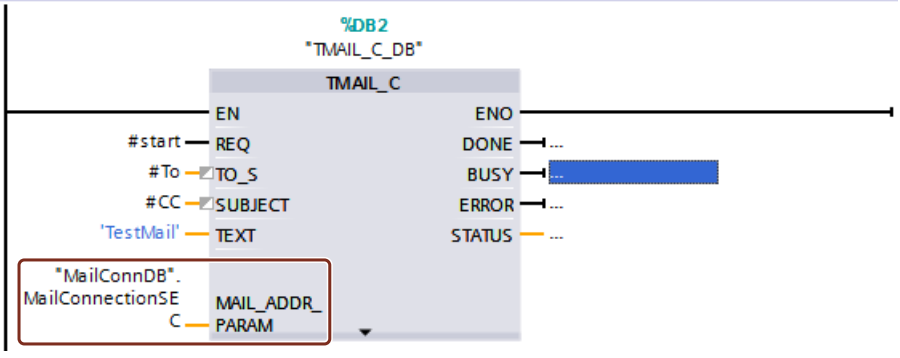

Figure 4-33 TMAIL_C instruction

Setting up a secure connection to a mail server over the interface of a communication module

For secure communication to a mail server over a communication module, you need to create a data block with one of the system data types TMAIL_V4_SEC, TMAIL_QDN_SEC or TMAIL_V6_SEC yourself, assign parameters and call it directly at the TMAIL_C instruction.

Requirements:

- TMAIL_C instruction with version **V4.0**
- S7-1500 CPU as of firmware version V2.0 with communication module CP 1543-1 as of firmware version V2.0
- ET 200SP CPU as of firmware version V2.0 with communication module CP 1542SP-1 (IRC) as of firmware version V1.0
- You have assigned all the CA certificates of the mail server (TLS server) to the CP (TLS client) and have downloaded the configuration to the CPU.
- Current date and time are set in the CPU.

The STEP 7 online help describes how to set up a secure connection to a mail server over the interface of a communication module.

Application example

This application example (https://support.industry.siemens.com/cs/ww/en/view/46817803) show how you can use the CP of an S7-1500 or S7-1200 station to set up a secure connection to an email server and send an email with the default application "TMAIL_C" from the S7 CPU.

Additional information

You can find more information about the system data types TMail_V4_SEC and TMAIL_QDN_SEC in the STEP 7 online help.

For additional information on secure communication, refer to the section Secure Communication (Page 43).

4.6.5 Secure PG/HMI communication

4.6.5.1 PG/HMI communication based on standardized security mechanisms

With the central components of the TIA Portal, STEP 7 and WinCC, an innovative and standardized Secure PG/PC and HMI Communication - PG/HMI communication for short - is implemented starting with version V17 together with the latest controllers and latest HMI devices.

The following CPU families are referred to in detail:

- S7-1500 controller family as of firmware version V2.9
- S7-1200 controller family as of firmware version V4.5
- Software controllers as of firmware version V21.9
- SIMATIC Drive controllers as of firmware version V2.9
- PLCSim and PLCSim Advanced Version V4.0

HMI components have also been updated to support Secure PG/HMI Communication:

- Panels or PCs configured with WinCC Basic, Comfort and Advanced
- PCs with WinCC RT Professional
- WinCC Unified PCs and Comfort Panels

Also updated are SINAMICS RT SW as of version V6.1 and STARTDRIVE as of version V17.

Properties of PG/HMI communication

One characteristic of PG communication and HMI communication above all is their simplicity: Establishing an online connection from a programming device with installed TIA Portal to a CPU, for example, to load a program, requires little effort. This online connection also meets criteria such as confidentiality and integrity - based on a proven SIMATIC communication standard.

In the course of integrating machines and systems into an open IT environment, however, it must be ensured that the communication between the programming device / HMI device and the CPU is not only secure in the sense of maintaining integrity and confidentiality for sensitive data but also that this security meets generally accepted standards and is thus ready for the challenges of the future.

With TIA Portal version V14, the "Open User Communication" procedure for communication based on user programs has already been extended by the "**Secure** Open User Communication" variant. Other certificate-based communication mechanisms have become established (HTTPS, Secure SMTP over TLS or OPC UA). As of TIA Portal Version V17, PG/HMI communication has also been upgraded: Here, too, the TLS (Transport Layer Security) protocol is used to secure PG/HMI communication using standardized security mechanisms.

What has changed

Additional optional password for more security

The most noticeable change in the frame of the configuring of the above devices is the ability to assign a password to protect sensitive configuration data of the respective CPU. This refers to data such as private keys that are required for the proper functioning of certificate-based protocols (Secure Communication) - as of TIA Portal V17 also for the PG/HMI communication. You can use a policy setting to check the assigned passwords as they are entered into the TIA Portal. This will ensure that your company complies with prescribed password policies.

If your machine or system does not require this protection based on the Siemens Industrial Defense-in-Depth concept, you can dispense with password assignment, for example, because another equivalent protection is present. It is possible to do without the password if you have implemented measures to prevent unauthorized access to the TIA Portal project and the configuration of the CPU.

⚠ WARNING

Without password, weak protection of private keys

Note that without a password to protect trusted configuration data, the private keys for certificates required for secure communication are only weakly protected.

Certificate-based communication between PG/HMI and CPU

Because PG/HMI communication is certificate-based, you will be asked to accept the server certificate during commissioning.

Additional parameter assignment options allow you to determine the behavior of the CPU during operation: For example, you can specify that the CPU also allows connection to devices that do not support Secure PG/HMI communication.

Maintenance / replacement parts scenario

For the problem-free exchange of the CPU in replacement parts scenario, you must observe specific rules (see Rules for the replacement parts scenario (Page 75)).

More information

An overview of how to protect confidential configuration data can be found in section Protection of confidential configuration data (Page 65).

4.6.5.2 Additional settings for the secure PG/HMI communication

In addition to the assignment of a password to protect confidential PLC configuration data, you have further setting options for the behavior of the CPU during operation.

PG/PC and HMI communication mode

You can set how the CPU can communicate with programming devices and HMI devices:

- Only via secure PG/HMI communication
- Both via Secure PG/HMI communication and via the previously used PG/HMI communication, "Legacy PG/HMI communication" for short.

Procedure

1. In the CPU properties, navigate to the area "Protection & Security > Connection mechanisms".
2. Select the option you want to use.

Select certificate or generate a new certificate

If you select the connection mechanism for PG/HMI communication, you can select a PLC communication certificate for the protection of the connection in the same context or have it generated by the TIA Portal. If you have assigned a password or if you have deactivated the option to protect confidential PLC configuration data (i.e. no password has been set), then a certificate with suitable settings and a valid default name is already preset in the "Protection & Security > Connection mechanisms" area.

Procedure

If you want to have a new certificate generated by the TIA Portal or if you want to select another existing certificate:

1. In the "PLC communication certificate" field, click the three points to expand the field.
2. Select the certificate you want or click the "Add" button.
3. When adding a certificate, a dialog appears with setting options for the certificate.
   The purpose is set to "TLS server", you can change other parameters (such as name, hash algorithm).

The general rules for certificate management apply. For example, if you want to generate a CA certificate, the option "Global settings for the certificate manager" must be selected. You also have the option of generating a self-signed PLC certificate.

More information

Basic information on the subject of certificate management can be found in section Certificate management with TIA Portal (Page 54).

4.6.5.3 Tip for certificate-based communication between PG and CPU

The certificate-based PG/PC communication (Secure PG/PC communication) means that the communication partner of the CPU – the programming device with installed TIA Portal – must trust the device certificate of the CPU so that a connection can be loaded.

To put it simply, from the TIA Portal perspective you have the following options to trust the certificate of a CPU:

- The PG with TIA Portal is in possession of the device certificate of the CPU because it was, for example, created or imported in the project. In this case, the certificate check runs automatically and without prompting.
- The PG with TIA Portal is not in possession of the device certificate of the CPU, because the CPU was determined via "Accessible stations", for example, and is not available in the project. In this case, the TIA Portal asks the TIA Portal user whether the certificate can be trusted. This may be possible only with great effort because the CPU is not in sight, for example, and the authenticity can therefore not be checked immediately.
- The PG with TIA Portal is in possession of the CA certificate (certification authority) and all CPUs that can be reached in the network from the TIA Portal have device certificates issued by this CA certificate.

  Advantage of this solution: TIA Portal can check device certificates automatically, even if the device certificates of the communication partners are not available in TIA Portal.

The solution with a CA certificate (certification authority) is explained in more detail below.

Requirement

You can use the certification authority of the TIA Portal to create device certificates for a CPU and use the existing CA certificates to sign the device certificates. However, you can also import another certification authority into TIA Portal and use it.

Enabling the global security policies for the certificate manager is a requirement. Only with this setting you can generate CA-signed certificates.

See also here: Certificate management with TIA Portal (Page 54)

Exporting CA certificate for programming devices

To export the corresponding CA certificate after creating and assigning a certificate, follow these steps:

1. Open the certificate manager in the global security settings in the project tree.
2. Select the table "CA certificates" for the certificate to be exported.
3. Right-click to open the shortcut menu of the selected certificate.
4. Click "Export".
5. Select the export format of the certificate and the storage location.

Store CA certificate in the TIA Portal

To make the exported certificate known to a PG with TIA Portal and thus enable automatic certificate checking, follow these steps:

1. Copy the CA certificate exported in the previous step to the following directory:
   C:\ProgramData\Siemens\Automation\Certstore\Trusted
2. Start TIA Portal.

   In the "Info" tab of the Inspector window, a message appears for each CA certificate which provides information on whether the CA certificate could be successfully transferred to the CA store of TIA Portal.

   However, no detailed causes are output in case of failure.

Adding device certificates to the TIA Portal certificate revocation list (CRL)

You have the option to add individual device certificates to a certificate revocation list (CRL), for example, because the associated key is no longer considered secure.

When the TIA Portal establishes a connection to a CPU whose device certificate is in the certificate revocation list, a dialog appears in the TIA Portal asking whether you still want to trust the certificate. If you decline, the connection will not be established.

To add a device certificate to the certificate revocation list, follow these steps:

1. Copy the device certificate to the following directory:
   C:\ProgramData\Siemens\Automation\Certstore\CRL
2. Start TIA Portal.
   In the "Info" tab of the Inspector window, a message appears for each certificate which provides information about whether the certificate could be successfully transferred to the CRL store of TIA Portal.
   However, no detailed causes are output in case of failure.

4.6.5.4 CPU behavior from loading to operational readiness

To ensure that communication between the CPU and a programming device or HMI device is secure, it must first have a certificate. However, the certificate for productive operation is only issued when the project is loaded into the CPU.

To ensure that the initial loading is also secured, the CPU first creates a self-signed certificate. The following description explains the different phases of establishing a connection.

Requirement for the initial establishment of connection to load the CPU

- No password for confidential PLC configuration data available in the CPU.
  If the CPU has already been loaded and therefore already has a password for confidential PLC configuration data, this password must then match the project that is to be loaded.
- Project with CPU configuration (including password for confidential PLC configuration data) and user program is available.
- The CPU is in STOP mode.
- Programming device and CPU are directly connected to each other and are located in a protected environment; i.e. you can identify the CPU to be loaded and control the connection between CPU and programming device.

Initial establishment of connection to the CPU - provisioning phase

The first connection establishment for loading the CPU is secured by the TLS procedure in terms of Secure PG/HMI Communication.

However, the CPU uses its manufacturer device certificate (if available) or a self-signed certificate to establish this connection. The CPU can only be used to a limited extent in this phase. In this phase, the CPU waits for the provision of the password-based key information - or more simply stated, it is expecting the password for confidential PLC configuration data. This phase is referred to below as the provisioning phase. A message in the diagnostic buffer indicates that the CPU is in the provisioning phase.

When a project is loaded into the CPU, the CPU receives the project data:

- Hardware configuration including configured certificates for secure communication (OPC UA, HTTPS, Secure OUC, Secure PG/HMI Communication)
- User program

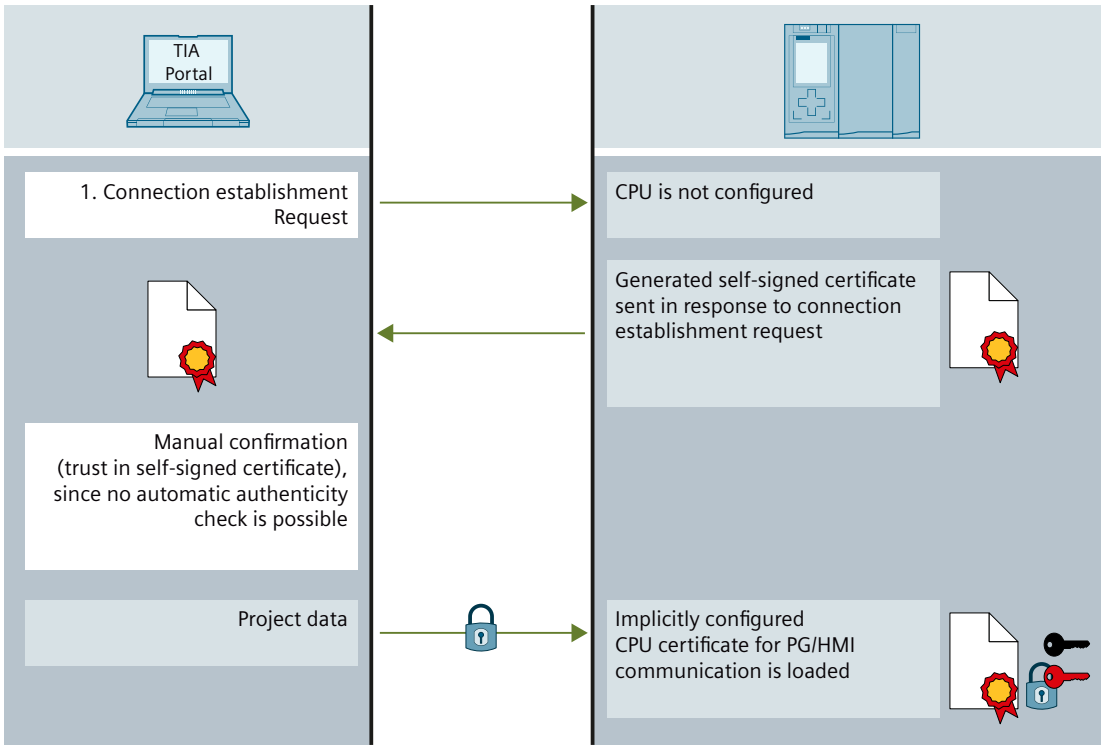

Figure 4-34 Connection establishment, provisioning phase

WARNING

Potential security risks during commissioning

During commissioning, the CPU provides a manufacturer device certificate (if available) or a self-signed certificate that you must trust in order to establish a connection. Only trust this certificate if the programming device and the CPU are in a protected network and are directly connected to each other. In an unprotected environment, these certificates can be manipulated and allow attackers to access the communication between the programming device/HMI and CPU (e.g. through man-in-the-middle attacks).

Ending the provisioning phase

TIA Portal does not store the password for confidential PLC configuration data itself or the key information generated from the password in the project.

Therefore, the password is requested in a dialog when loading the project for the first time or when loading a new project and transferred to the CPU as key information. Only after this step the CPU is able to use the protected PLC configuration data - this completes the provisioning phase and the CPU can start operating.

If you do not protect the confidential PLC configuration data with a password, there is no need to enter the password when loading the CPU for the first time. This has no influence on the flow of the PG/HMI communication but you have to consider that the confidential PLC configuration data (e.g. private keys) offer almost no protection against unauthorized access in this case.

Startup of PG/HMI communication

When the CPU is loaded and has received the CPU certificate for Secure PG/HMI Communication, the programming device connects again - this time based on the loaded CA certificate.

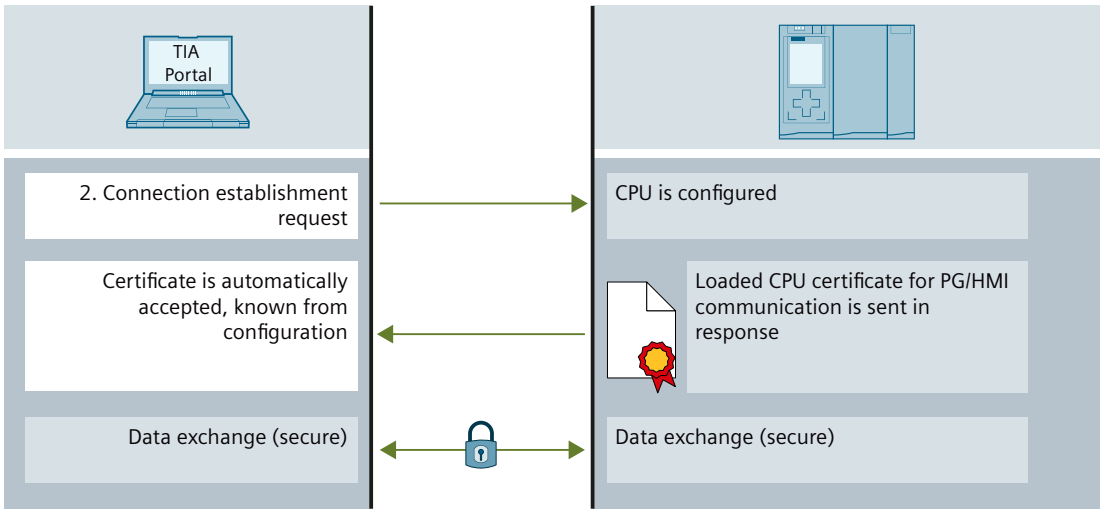

Figure 4-35 Startup of PG/HMI communication

4.6.5.5 Using secure HMI communication

As of TIA Portal version V17, the CPU and the HMI device communicate via secure HMI communication if both devices meet the requirements for this type of communication.
The basis of secure HMI communication is that the HMI device can verify the authenticity of the CPU, using the PLC communication certificate that the CPU sends when establishing communication, and considers the CPU to be "trustworthy". Secure HMI communication is only possible when this turns out to be the case.
This section describes the measures you must take for the various HMI devices to manually label the PLC communication certificate as "trustworthy".

Requirement

- CPU and HMI device support secure HMI communication.
- A current project is available on the CPU (TIA Portal V17 and higher).

Configuring secure HMI communication

1. Configure the HMI device with an alarm view.

   NOTE

   Without an alarm view you cannot identify the errors during connection establishment.

2. Configure the CPU with the required security settings. Select a PLC communication certificate to protect the HMI connection or have the TIA Portal generate a PLC communication certificate.
3. Configure the HMI connection between the CPU and the HMI device.
4. Download the project to the CPU and the HMI device. During the project transfer, the PLC communication certificate and, if necessary, a CA (Certificate Authority) certificate is transferred to the CPU and the HMI device.

Trusting the PLC communication certificate

During connection setup, the CPU transfers the PLC communication certificate to the HMI device.

- When the PLC communication certificate is already available on the HMI device with the "trustworthy" status, a secure HMI communication is automatically set up between the CPU and the HMI device.
- When the PLC communication certificate is not available in the "trustworthy" status on the HMI device, you will see a message in the alarm view of the HMI device informing you that the CPU is not trusted along with an error code.

  In this case, you must label the PLC communication certificate on the HMI device as "trustworthy".

Depending on the type of your HMI device, follow these steps.

Basic Panels 2nd Generation

1. In the Start Center, select "Settings > Internet Settings > Certificate store".
2. In the "Available certificates in Device" list, select the PLC communication certificate of the CPU.
3. Press "Trust".
4. Restart the HMI runtime software.

Unified Comfort Panels

1. Open the Control Panel.
2. Select "Security > Certificates".
3. In the "Certificate store" selection list, select the entry "Other Certificates".
4. In the "Other certificates" list, select the PLC communication certificate of the CPU.
5. Press "Trust".
6. Restart the HMI runtime software.

Comfort Panels, Mobile Panels 2nd Generation

1. Open the file manager via the Windows CE desktop icon "My Device".
2. Navigate to the directory "\flash\simatic\SystemRoot\OMS\Untrusted". There you will find the PLC communication certificate of the CPU.
3. Copy the PLC communication certificate of the CPU to the directory "\flash\simatic\SystemRoot\OMS\Trusted".
4. Restart the HMI runtime software.

When the PLC communication certificate is already available on the HMI device with the "trustworthy" status, secure HMI communication can be set up. You can find more information in the operating instructions of the HMI device.

4.6.5.6 Using Legacy PG/PC communication for TIA Portal

As of TIA Portal version V17, the TIA Portal and the S7-1200/S7-1500 CPU as of firmware version V4.5/V2.9 automatically communicate "securely" - the connection partners set their connection mechanisms automatically to the highest possible security method.

Only special circumstances (see Information about compatibility (Page 101)) cause a fallback to the old PG/PC communication, called "Legacy PG/PC communication".

There may be some cases in which the higher security is not desirable because it can impact the transmission rate of CPUs with weak communication performance.

Requirement

- There may be no online connections to the CPUs.
- For CPUs that are to be reached online, the option "Only permit secure PG/PC and HMI communication" must be disabled (CPU parameters in the area "Connection mechanisms").
- The communication partners are in a protected environment, for example, during the commissioning phase.

Setting the Legacy PG/PC communication

1. In the "Online" menu, select the command "Use only Legacy PG/PC communication".
2. Select the check box in front of the menu command.

Result: All online connections are set up as for TIA Portal versions < V17.

The setting remains active for the duration of the session. When you open a project, the option "Use only legacy PG/PC communication" is not set.

Behavior with enabled option "Use only Legacy PG/PC communication"

- A password to protect confidential PLC configuration data cannot be specified, modified or deleted online for CPUs. These functions require disabling the "Use only Legacy PG/PC communication" option.
- A CPU that is set to only permit secure PG/PC and HMI communication can no longer be reached online.

4.6.5.7 Information about compatibility

The following description provides information about the interaction between different TIA Portal versions with different CPU firmware versions and the effects on the type of PG/HMI connection.

Projects created with TIA Portal < V17

For example, if you have created a project with TIA Portal version V16 for an S7-1500 CPU (e.g. version V2.8), then the corresponding configuration with TIA Portal V17 can also be loaded into an S7-1500 CPU V2.9, e.g. in a spare part scenario - with the same behavior as a configuration on an S7-1500 CPU V2.8.

Even projects created with TIA Portal < V17 and transferred to a memory card work without problems in an S7-1500 CPU V2.9.

However, the concept of protecting confidential PLC configuration data applies as soon as you open the project with TIA Portal ≥ V17, update the firmware version of the CPU via a device replacement and thus save it as a CPU with a firmware version ≥ V2.9 (see Useful information for the protection of confidential PLC configuration data (Page 67)). The project can no longer be edited with previous versions of TIA Portal V17.

PG/HMI and CPU connected differently

As explained in the previous sections, the secure PG/HMI connection as of V17 between the PG/HMI device and CPU (current version) is characterized by the employed standardized communication procedure, TLS (Transport Layer Security).

You have the option of connecting a V2.9 CPU to a current programming device with TIA Portal V17 or higher and additionally, for example, to an HMI device with a runtime from the previous version: The devices automatically adjust their connection mechanisms accordingly. In order to be able to better differentiate between the two connection mechanisms, we call the previous procedure, which is based on a variant of S7 communication, "Legacy procedure".

In summary ("PG" here stands for a programming device with TIA Portal):

- PG/HMI and CPU come with the V17 (or subsequent version): TLS procedure is used.
- PG/HMI comes from a predecessor version (< V17): Legacy procedure is used - provided that you have deactivated the option "Only allow secure PG/PC and HMI communication" in the CPU properties.
- CPU comes with V17 (or higher), several PGs/HMIs are connected and come from both V17 (or higher) and previous versions: TLS + legacy procedures are used - provided that you have deactivated the option "Only allow secure PG/PC and HMI communication" in the CPU properties.

When the CPU state changes

The diagnostics buffer provides you with information if its status changes due to events in connection with the Secure PG/HMI Communication.

Examples:

- After successfully loading a configuration with a configured password, the diagnostics buffer reports that the CPU is changing from the provisioning phase to Secure Mode (TLS procedure).
- You have connected a PG with TIA Portal V17 to a CPU V2.9. If "Use only Legacy PG/PC communication" is deactivated in the Online menu, the Secure PG/HMI Communication (TLS procedure) is established automatically.

More information

Information on device or firmware-specific features such as the TLS version used can be found in section Device-dependent security features (Page 46).

4.7 SNMP

4.7.1 Activating and deactivating SNMP

The network management protocol SNMP (Simple Network Management Protocol) is used for performing monitoring and diagnostics of the network topology. SNMP uses the transport protocol UDP and knows two roles: the SNMP manager (client) and SNMP agent (server).

- The SNMP manager monitors the network nodes:
- The SNMP agents collect the various network-specific information in the individual network nodes and store it in a structured form in the MIB (Management Information Base). Various services and tools (as SNMP manager) can run detailed network diagnostics with the help of these data.

SNMP is also used in a PROFINET IO system for managing the network infrastructure and the IO controller/IO devices.

NOTE

If SNMP is deactivated for a device, various options for diagnostics of the network topology (for example, using the PRONETAtool) are no longer available to you.

Example: For the topology comparison Online-Offline, the TIA Portal determines which ports are actually connected and uses SNMP for this function.

Default settings depending on the firmware version

S7-1500 CPUs have an integrated SNMP agent. Depending on the firmware version, different defaults apply to SNMP (SNMP activated or deactivated).

With S7-1500 CPUs with a FW version < V3.0, the SNMP agent is **activated** by default and can only be deactivated via a data record in the user program.

Under certain conditions, it may be useful to deactivate SNMP. Examples:

- The security guidelines in your network do not allow the use of SNMP.
- You use your own SNMP solution, e.g. with your own communications instructions.

With S7-1500 CPUs as of FW version V3.0, the SNMP agent is **deactivated** by default. The default setting "disabled" is also in effect if no configuration has been loaded or if no memory card is plugged in. STEP 7 V18 offers the following options for changing the SNMP settings for S7-1500 CPUs as of FW version V3.0:

- Configure SNMP in the CPU properties of TIA Portal.
- Activate/deactivate SNMP in the use program by transferring a data record to a PROFINET interface.

NOTE

Replacement part scenario

For compatibility reasons, an S7-1500 CPU as of firmware version V3.0 with a loaded predecessor project (CPU firmware < V3.0) behaves like the CPU in the predecessor project:

SNMP is activated and "public" and "private" community strings are in effect.

Configuring SNMP

As of CPU firmware version V3.0 and TIA Portal version V18, you have the possibility to change the following settings for SNMP in the CPU properties:

- Activate SNMP (default: deactivated)
- Read-only community string (default: "public")
- Read-write community string (default: "private")

You can find the settings in the "Advanced configuration > SNMP" area.

Meaning and properties of community strings

An SNMP community string, also referred to as a "community name", is like an ID or a password, which allows access to information/statistics of a device such as a router.
In this respect, to increase the security, you should change the default community strings in the CPU properties. An SNMP manager authenticates itself with the SNMP agent by transferring the community strings when there is a request.
The community strings are transferred as plain text.

- The default community string for SNMP read-only operations (GET) is "public".
- The default community string for SNMP read-write operations (SET) is "private".

Number of characters for the community string: 1-240.

You can use the following characters for the community string:

- a-z
- A-Z
- 0-9
- -
- .

Activating/deactivating SNMP in the user program

In addition to the configuration in the CPU properties, you can also activate or deactivate SNMP in the user program. To do this, transfer a data record 0xB071 to a PROFINET interface of the CPU. In this record it is encoded whether SNMP is to be activated/deactivated. No matter to which PROFINET interface you transfer the data record, the data record applies to all interfaces of the CPU.

One way to transfer the 0xB071 data record: Define the data set structure in a data block and transfer it in the program cycle OB (e.g. OB1) with the instruction "WRREC" (write data record) to a PROFINET interface of the CPU.

To do this, follow these steps:

1. In STEP 7, create a data block that contains the structure of data record 0xB071.
   The following table shows the structure of the data record 0xB071.

Byte	Element	Code	Explanation
0-1	BlockID	0xF003	Header The data record length is counted starting at byte 4 "Version".
2-3	BlockLength	8	
4	Version	0x01	
5	Subversion	0x00	
6-7	Reserved	-	-
8-11	SNMP controller	0.1	0: Deactivate SNMP. 1: Activate SNMP.

2. Transfer the data record 0xB071, for example, in the program cycle OB (OB1) to the CPU with the "WRREC" instruction (write data record). Use an integrated PROFINET interface of the CPU as the hardware ID.

Interplay of SNMP configuration and user program

- The SNMP setting "activated/deactivated" via the user program is not stored permanently in the CPU. The configured setting is effective again, for example, after each POWER OFF/POWER ON transition, loading of a new hardware configuration, or resetting to factory settings.
- When loading the configuration from the CPU ("Upload device as new station"), the configured SNMP setting (activated/deactivated) is taken into consideration. An SNMP setting previously set by data record in the user program is ignored.
- The community strings can only be changed in the configuration; the community strings cannot be set through a data record in the user program.
  However, you can activate the configured community strings by data record.
  Example:
  You have set SNMP to deactivated in the configuration of an S7-1500 CPU. You change the default community strings in the CPU properties and then load the configuration into the CPU.
  Then, you activate SNMP via data record transfer.
  Result: The changed community strings take effect.
- For S7-1500 CPUs with a firmware version < V3.0, the preset community strings ("public" and "private") are always in effect when SNMP is activated.

4.7.2 Activating/deactivating SNMP by data record transfer: Example for a CPU 1516-3 PN/DP

Introduction

You need to activate the SNMP for a CPU 1516-3 PN/DP to manage your network infrastructure, CPUs and IO devices with SNMP. The example below shows the 0xB071 data record being transferred to a PROFINET interface for this purpose.

Requirement

- CPU 1516-3 PN/DP as of FW version V2.0
- STEP 7 version V14 or higher

Solution

Transfer the data record 0xB071 to a PROFINET interface of the CPU. As a result, SNMP is enabled in all PROFINET interfaces of the CPU.

The following example shows how you can create the data record in a global data block and transfer it in a program cycle OB (for example, OB1) to the PROFINET interface (Local~PROFINET_interface_1).

To activate SNMP for the addressed PROFINET interface of the CPU 1516-3 PN/DP, follow these steps:

1. Create a global data block.
2. Assign a name, for example, "ActivateSnmp".
3. Under "Static", create the structure of the 0xB071 data record (in the figure: "snmpRecord") and other variables for transferring the data record. The following figure shows the data block structure "ActivateSnmp".

ActivateSnmp

	Name	Data type	Start value	Re...	Ac...	Wr...	Vis...	Comment
1	Static							
2	snmpWrite	Bool	TRUE		✓	✓	✓	Start writing Data record 16#B071
3	snmpRecord	Struct			✓	✓	✓	Data record 16#B071
4	blockID	UInt	16#F003		✓	✓	✓	Data record ID
5	blockLength	UInt	8		✓	✓	✓	Length of block
6	version	USInt	1		✓	✓	✓	Byte 1 of blockversion
7	subversion	USInt	0		✓	✓	✓	Byte 2 of blockversion
8	reserved	UInt	0		✓	✓	✓	Reserverd for future usage
9	snmpControl	UDInt	1		✓	✓	✓	0: deactivate SNMP, 1: activate SNMP
10	snmpWrDone	Bool	false		✓	✓	✓	writing done
11	snmpWrError	Bool	false		✓	✓	✓	error while writing
12	snmpWrStatus	DWord	16#0		✓	✓	✓	status of writing

Figure 4-36 Structure of the global data block "ActivateSnmp"

4. Transfer the 0xB071 data record in an OB program cycle (for example, OB1), with the "WRREC" (write data record) instruction to the CPU 1516-3 PN/DP. You can find an example program in the next section.

Programming example for the data record transfer in the OB1

The data record 0xB071 is transferred in the following program code:

```
//-----------------------------------------
// Start writing SNMP settings
//-----------------------------------------
IF "ActivateSnmp".snmpWrite THEN
 IF (NOT "ActivateSnmp".snmpWriteDone)
 AND (NOT "ActivateSnmp".snmpWriteError) THEN
 "instWrrec_1"(REQ := "ActivateSnmp".snmpWrite,
 ID := "Local~PROFINET-Schnittstelle_1",
 INDEX := 16#B071,
 DONE => "ActivateSnmp".snmpWriteDone,
 ERROR => "ActivateSnmp".snmpWriteError,
 STATUS => "ActivateSnmp".snmpWriteStatus,
 RECORD := "ActivateSnmp".snmpRecord);
 END_IF;
 IF "ActivateSnmp".snmpWriteError THEN
 ; // add error handling
 END_IF;
 IF "ActivateSnmp".snmpWriteDone THEN
 "ActivateSnmp".snmpWrite := FALSE;
 END_IF;
END_IF;
```

Deactivating SNMP again

You can use the program code used above, with small changes, to deactivate SNMP. Assign the value "0" to the tag "ActivateSnmp".snmpRecord.snmpControl in the user program:

```
"ActivateSnmp".snmpRecord.snmpControl := 0;
```

The next time the "WRREC" instruction is called, SNMP will be deactivated again.

4.7.3 Activating/deactivating SNMP by data record transfer with S7-1500R/H CPUs

In S7-1500R/H systems, activate/deactivate SNMP in the user program as with standard CPUs. However, the PROFINET interfaces (X1, X2,...) of both CPUs have different hardware IDs. The PROFINET interface X1 of the left CPU, for example, has a different hardware ID as the PROFINET interface X1 of the right CPU. The S7-1500R/H system does not automatically synchronize the SNMP status (activated/deactivated) for both CPUs. An SNMP status (activated/deactivated) set by the "WRREC" instruction only affects the CPU whose PROFINET interface addresses the "WRREC" instruction.

Example:

The S7-1500R/H system is in the "RUN redundant" system state. If a PROFINET interface of the left CPU is addressed with the "WRREC" instruction, for example, the SNMP status of the left CPU is changed. The SNMP status of the right CPU remains unchanged. If the left CPU fails or is replaced, the unchanged SNMP status is in place after the SYNCUP.

Solution:

Call the "WRREC" instruction 2 times. In the first call of "WRREC", address the hardware ID of a PROFINET interface of the left CPU. Call the "WRREC" instruction again. This time, address the hardware ID of a PROFINET interface of the right CPU.

Hardware IDs for PROFINET interface X1:

- The PROFINET interface X1 of the left CPU has the hardware ID 65164 (default name: Local1~PROFINET-interface_1).
- The PROFINET interface X1 of the right CPU has the hardware ID 65364 (default name: Local2~PROFINET-interface_1).

The addressing by means of the respective hardware IDs of the PROFINET interfaces X1 is also used in the following example for calling the "WRREC" instruction for both R/H CPUs.

NOTE

Transferring the data record to the backup CPU

Transfer the data record to the addressed PROFINET interface of the backup CPU only after the S7-1500R/H system has reached the "Run REDUNDANT" system state. Otherwise, the data record cannot be transferred to the addressed PROFINET interface of the backup CPU.

When the S7-1500R/H system has reached the system state "Run REDUNDANT", the CPU redundancy error OB (OB72) is started. The "Fault_ID" tag of the OB72 contains the error code "B#16#03" or "B#16#06".

Example: WRREC calls for both R/H CPUs

To activate/deactivate SNMP for the addressed PROFINET interface of both the CPUs by transferring data records, proceed as follows:

1. Create a global data block.
2. Assign a name, for example, "ActivateSnmp".
3. Under "Static", create the structure of the 0xB071 data record (in the figure: "snmpRecord") and other tags for transferring the data record. The following figure shows the structure of the data block "ActivateSnmp".

ActivateSnmp

	Name	Data type	Start value	Re...	Ac...	Wr...	Vis...	Comment
1	Static							
2	snmpWrite	Bool	TRUE		✓	✓	✓	Start writing Data record 16#B071
3	snmpRecord	Struct			✓	✓	✓	Data record 16#B071
4	blockID	UInt	16#F003		✓	✓	✓	Data record ID
5	blockLength	UInt	8		✓	✓	✓	Length of block
6	version	USInt	1		✓	✓	✓	Byte 1 of blockversion
7	subversion	USInt	0		✓	✓	✓	Byte 2 of blockversion
8	reserved	UInt	0		✓	✓	✓	Reserverd for future usage
9	snmpControl	UDInt	1		✓	✓	✓	0: deactivate SNMP, 1: activate SNMP
10	plcLeft	Struct			✓	✓	✓	Writing status of left plc
11	snmpWrDone	Bool	false		✓	✓	✓	writing done
12	snmpWrError	Bool	false		✓	✓	✓	error while writing
13	snmpWrStatus	DWord	16#0		✓	✓	✓	status of writing
14	plcRight	Struct			✓	✓	✓	Writing status of right plc
15	snmpWrDone	Bool	false		✓	✓	✓	writing done
16	snmpWrError	Bool	false		✓	✓	✓	error while writing
17	snmpWrStatus	DWord	16#0		✓	✓	✓	status of writing

Figure 4-37 Structure of the global data block "ActivateSnmp"

4. Add the organization block "CPU redundancy error" (OB72) to your user program. You can find an example program for the OB72 in the next section.

5. Open the program cycle OB (OB1).
6. In the OB1, carry out two "WRREC" instructions for transferring the data record to the respective addressed PROFINET interface of both the CPUs. You can find an example program for the OB1 in the next section.
   Result: The 0xB071 data record was transferred to the PROFINET interface of both the CPUs addressed in each case.

Programming examples for the OB72 and OB1 organization blocks

Open the OB72 that has been added. With the following program code, determine whether the R/H system has assumed the "Run REDUNDANT" state and set the starting command for the "WRREC" instructions:

```
//---------------------------------------------
// Check redundancy state and set "snmpWrite"
//---------------------------------------------
IF #Fault_ID = B#16#03 OR #Fault_ID = B#16#06 THEN
 "ActivateSnmp".snmpWrite := TRUE;
END_IF;
```

Open the program cycle OB (OB1). With the following program code, you can run 2 "WRREC" instructions for transferring the data record to the respective addressed PROFINET interface of both the CPUs:

```
//----------------------------------------
// Start writing SNMP settings
//----------------------------------------
IF "ActivateSnmp".snmpWrite THEN
 IF (NOT "ActivateSnmp".plcLeft.snmpWrDone)
 AND (NOT "ActivateSnmp".plcLeft.snmpWrError) THEN
 // write SNMP settings for the left PLC
 "instWrrec_1"(REQ := "ActivateSnmp".snmpWrite,
 ID := "Local1~PROFINET_interface_1",
 INDEX := 16#B071,
 DONE => "ActivateSnmp".plcLeft.snmpWrDone,
 ERROR => "ActivateSnmp".plcLeft.snmpWrError,
 STATUS => "ActivateSnmp".plcLeft.snmpWrStatus,
 RECORD := "ActivateSnmp".snmpRecord);
 END_IF;
 IF "ActivateSnmp".plcLeft.snmpWrError THEN
 ; // add error handling for left plc
 END_IF;
 IF (NOT "ActivateSnmp".plcRight.snmpWrDone)
 AND (NOT "ActivateSnmp".plcRight.snmpWrError) THEN
 // write SNMP settings for the right PLC
 "instWrrec_2"(REQ := "ActivateSnmp".snmpWrite,
 ID := "Local2~PROFINET_interface_1",
 INDEX := 16#B071,
 DONE => "ActivateSnmp".plcRight.snmpWrDone,
 ERROR => "ActivateSnmp".plcRight.snmpWrError,
 STATUS =>
 "ActivateSnmp".plcRight.snmpWrStatus,
 RECORD := "ActivateSnmp".snmpRecord);
 END_IF;
 IF "ActivateSnmp".plcRight.snmpWrError THEN
 ; // add error handling for right plc
 END_IF;
 IF "ActivateSnmp".plcLeft.snmpWrDone
```

```
 AND "ActivateSnmp".plcRight.snmpWrDone THEN
 "ActivateSnmp".snmpWrite := FALSE;
 END_IF;
END_IF;
```

Deactivating SNMP again

You can use the program code used above, with small changes, to deactivate SNMP. Assign the value "0" to the tag "ActivateSnmp".snmpRecord.snmpControl in the user program:

```
"ActivateSnmp".snmpRecord.snmpControl := 0;
```

The next time the "WRREC" instructions are called, SNMP will be deactivated again.

PG communication

5

Properties

Using PG communication, the CPU or another module capable of communication exchanges data with an engineering station (for example PG, PC). The data exchange is possible via PROFIBUS and PROFINET subnets. The gateway between S7 subnets is also supported.

PG communication provides functions needed to load programs and configuration data, run tests, and evaluate diagnostic information. These functions are integrated in the operating system of the module capable of communication.

NOTE

As of TIA Portal version V17, the TLS (Transport Layer Security) protocol is supported for programming device/HMI communication to secure the data exchange between programming device/PC and CPU using standardized security mechanisms.

For more information, refer to the following sections:

- Requirements for secure communication (Page 65)
- Secure PG/HMI communication (Page 93)

Requirements

- The PG/PC is physically connected to the communication-capable module.
- If the communication-capable module is to be reached via S7 routing, the hardware configuration has to be loaded in the participating stations (S7 router and end point).

Procedure for connecting online

You must establish an online connection to the CPU for the programming device communication:

1. Select the CPU in the project tree in STEP 7.
2. Select the "Online > Go online" menu command.
3. In the "Go online" dialog, make the following settings for your online connection:
   - Select interface type (e.g. PN/IE) in the "Type of PG/PC interface" drop-down list.
   - In the "PG/PC interface" drop-down list, select the PG/PC interface (e.g. Ind. Ethernet card) you want to use to establish the online connection.
   - Select the interface or the S7 subnet with which the programming device/PC is physically connected from the "Connection to interface/subnet" drop-down list.
   - If the communication-capable module can be reached via an S7 router (gateway), select the S7 router that connects the subnets in question from the "1st gateway" drop-down list.

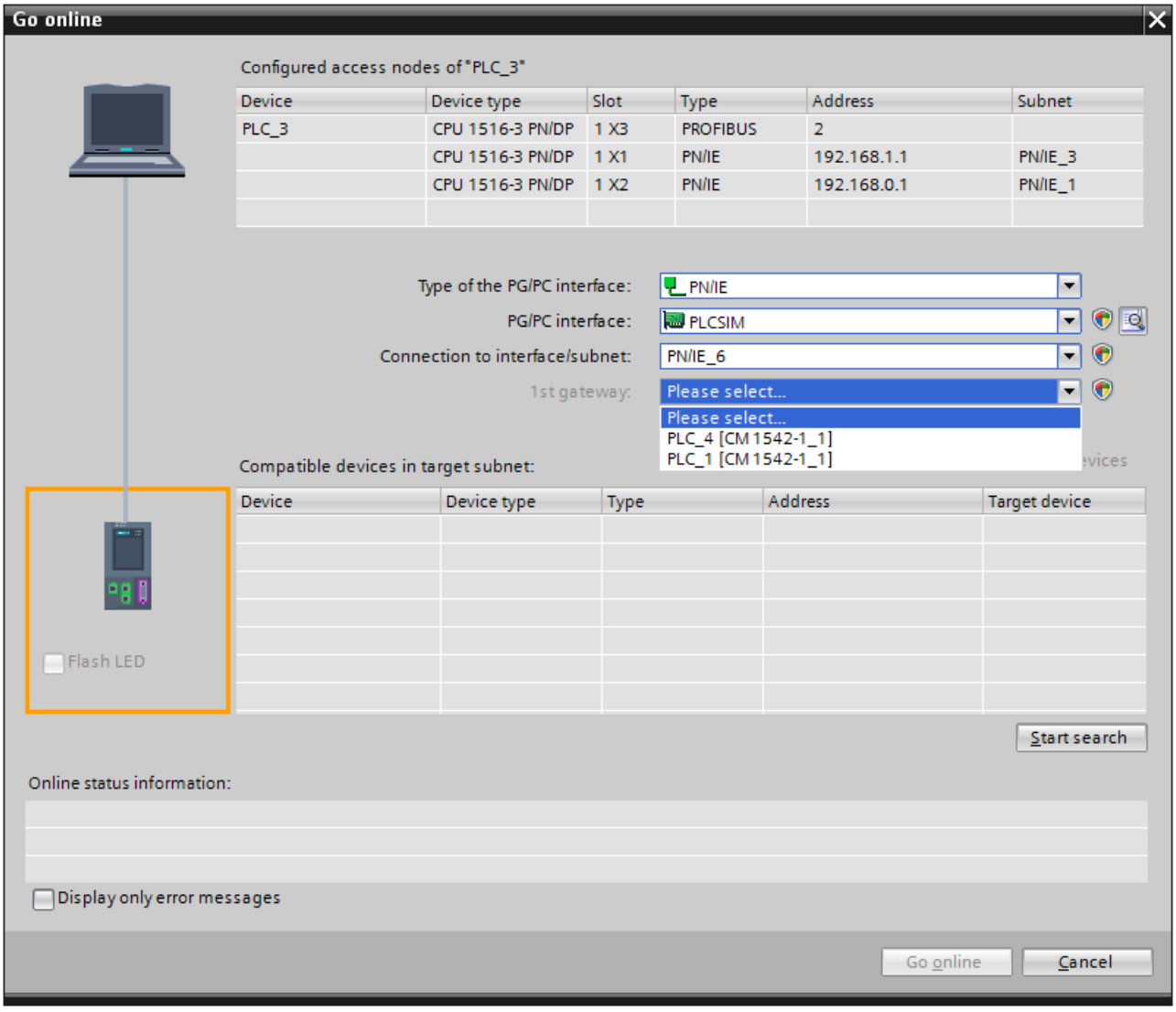

Figure 5-1 Setting up PG communication

4. Click "Start search".
   All devices that you can address with PG communication appear shortly thereafter in the table "Compatible devices in target subnet".
5. In the "Compatible devices in target subnet" table, select the relevant CPU and confirm with "Go online".

More information

You can find more information on "Go online" in the STEP 7 online help.

HMI communication

6

Properties

Using HMI communication, one or more HMI devices (for example HMI Basic/Comfort/Mobile Panel) exchanges data with a CPU for operator control and monitoring with via the PROFINET or PROFIBUS DP interface. The data exchange is via HMI connections.

If you want to set up several HMI connections to a CPU, use for example:

- The PROFINET and PROFIBUS DP interfaces of the CPU
- CPs and CMs with the relevant interfaces

NOTE

As of TIA Portal version V17, the TLS (Transport Layer Security) protocol is supported for programming device/HMI communication to secure the data exchange between programming device/PC and CPU using standardized security mechanisms.

For more information, refer to the following sections:

- Requirements for secure communication (Page 65)
- Secure PG/HMI communication (Page 93)

Procedure for setting up HMI communication

As soon as you drag-and-drop a tag, for example a tag from a global data block into an HMI screen or into the HMI tag table, STEP 7 automatically sets up an HMI connection. Alternatively, you can also set up the HMI connection yourself.

To set up an HMI connection, follow these steps.

1. Configure the HMI device in an existing configuration with a CPU in the network view of the Devices & networks editor of STEP 7.
2. Select the "Connections" button and then "HMI connection" from the drop-down list.
3. Drag-and-drop a line between the end points of the connection (HMI device and CPU). The end points are highlighted in color. If the required S7 subnet does not yet exist, it is created automatically.

4. In the "Connections" tab, select the row of the HMI connection.
   In the "General" area of the "Properties" tab, you see the properties of the HMI connection, some of which you can change.

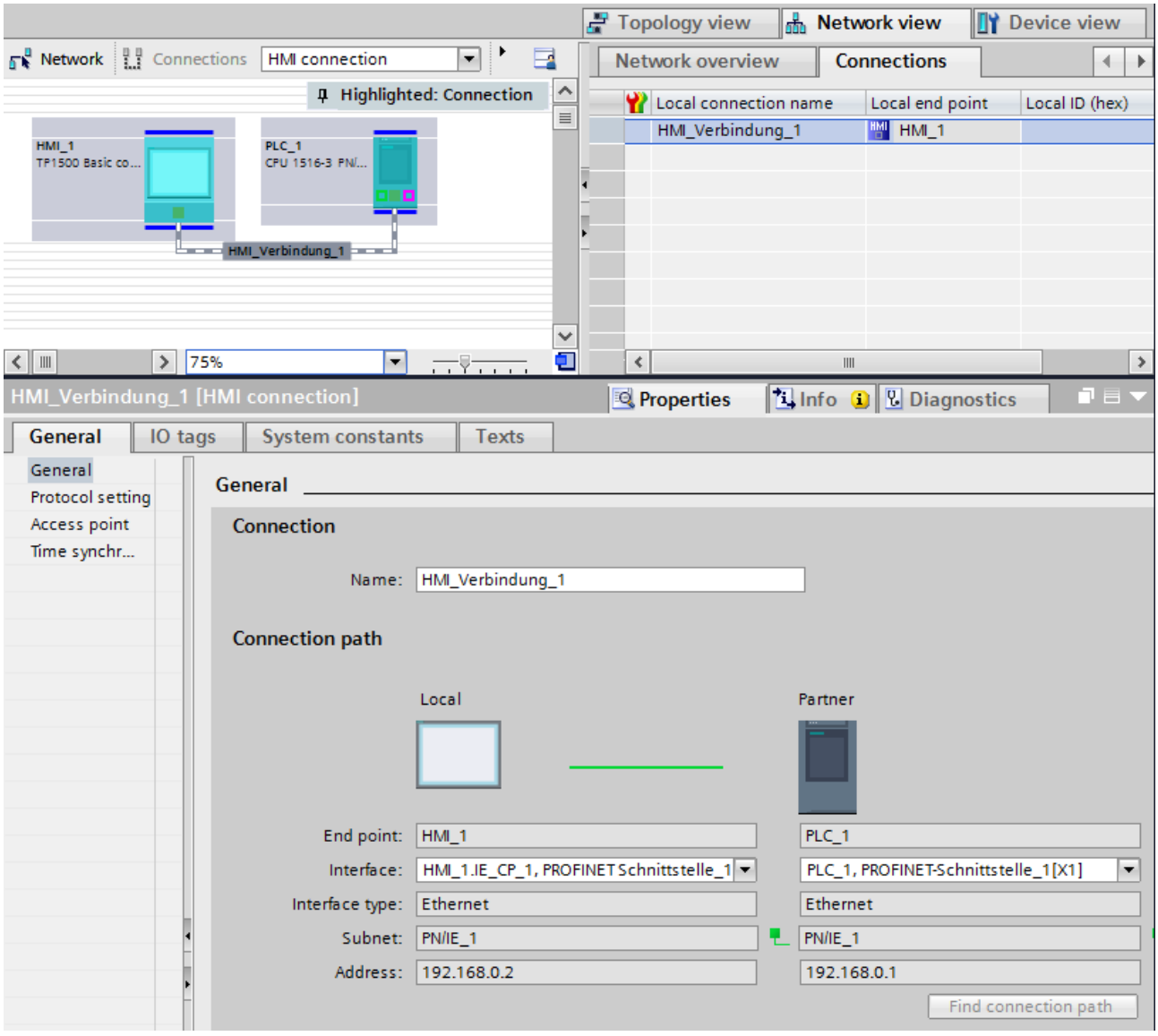

Figure 6-1 Setting up HMI communication

5. Download the hardware configuration to the CPU.
6. Download the hardware configuration to the HMI device.

More information

You can find information on S7 routing for HMI connections in the section S7 Routing (Page 352).
You can find more information on setting up HMI connections in the STEP 7 online help.

Open User Communication 7

7.1 Overview of Open User Communication

Features of Open User Communication

Through Open User Communication, also called "open communication", the CPU exchanges data with another device capable of communication. Open User Communication has the following features and characteristics:

- Open standard (communication partners can be two SIMATIC CPUs or a SIMATIC CPU and a suitable third-party device).
- Communication via various protocols (in STEP 7 known as "Connection types")
- High degree of flexibility in terms of the data structures transferred; this allows open data exchange with any communications devices as long as these support the connection types available.
- Secure Communication: To protect your automation system, you can exchange data securely over Open User Communication. With Secure Open User Communication, the data is sent signed and encrypted, see also Secure Open User Communication (Page 75).
- Open User Communication is possible in various automation systems, see technical specifications of the respective manuals.
  Examples:
  - Integrated PROFINET / Ind. Ethernet interfaces of CPUs (S7-1500, ET 200SP CPU, S7-1500 Software Controller, CPUs 1513/1516pro 2 PN)
  - PROFINET / Ind. Ethernet interfaces of communications modules (for example CP 1543-1, CM 1542-1, CP 1543SP-1)

Information on Secure Open User Communication is available in the section Secure Communication (Page 43).

Information on S7-1500R/H

You can find information on Open User Communication with the S7-1500R/H redundant system in section Communication with the redundant system S7-1500R/H (Page 384).

7.2 Protocols for Open User Communication

Protocols for Open User Communication

The following protocols are available for open communication:

Table 7-1 Transport protocols for open communication

Transport protocol	Via interface
TCP according to RFC 793	PROFINET/Industrial Ethernet
ISO-on-TCP according to RFC 1006 (Class 4)	PROFINET/Industrial Ethernet
ISO according to ISO/IEC 8073	Industrial Ethernet (only CP 1543-1)
UDP according to RFC 768	PROFINET/Industrial Ethernet
FDL	PROFIBUS

Table 7-2 Application protocols for open communication

Application protocol	Used transport protocol
Modbus TCP	**TCP** according to RFC 793
E-mail	**TCP** according to RFC 793
FTP	**TCP** according to RFC 793

TCP, ISO-on-TCP, ISO, UDP

Prior to data transfer, these protocols (except UDP) establish a transport connection to the communications partner. Connection-oriented protocols are used when potential loss of data needs to be avoided.

The following is possible with UDP:

- Unicast to one device or broadcast to all devices on PROFINET via the PROFINET interface of the CPU or the Industrial Ethernet interface of the CP 1543-1
- Multicast to all recipients of a multicast group via the PROFINET interface of the CPU* or the PROFINET / Industrial Ethernet interface of the CP 1543-1

* As of firmware version V2.0, the PROFINET interface of the CPU supports a maximum of 5 multicast groups

Maximum user data length: You can find the maximum user data lengths supported in the technical specifications of the respective device manuals.

Protocol for communication via PROFIBUS: FDL

Data transfer via an FDL connection (Fieldbus Data Link) is suitable for the transfer of related blocks of data to a communications partner on PROFIBUS that supports the sending and receiving of data according to the FDL service SDA (Send Data with Acknowledge) according to EN 50170, Vol 2. Both partners have the same rights; in other words, each partner can initiate sending and receiving event-driven.

In keeping with the FDL service SDN (Send Data with No Acknowledge) according to EN 50170, Vol 2, the following is possible with FDL:

- Broadcast to all devices on PROFIBUS via the PROFIBUS interface of the CM 1542-5
- Multicast to all recipients of a multicast group via the PROFIBUS interface of the CM 1542-5

Modbus TCP

The Modbus protocol is a communication protocol with linear topology based on a master/slave architecture. In the Modbus TCP (Transmission Control Protocol), the data is transmitted as TCP/IP packets.

Communication is controlled solely by suitable instructions in the user program.

E-mail and FTP

You can use email to send for example, data block contents (e.g. process data) as an attachment.

You can use the FTP connection (FTP = File Transfer Protocol) to transmit files to and from S7 devices.

The communication is controlled by instructions in the user program at the client end.

Application example: MQTT Publisher for the SIMATIC S7-1500 CPU

The "Message Queue Telemetry Transport" (MQTT) is a simple protocol on the TCP/IP level. It is suitable for the exchange of messages between devices with lower functionality and for the transfer via unreliable networks.

The application example provides a function block with which you can implement the MQTT protocol into the SIMATIC S7-1500.

You can find the application example on the Internet (https://support.industry.siemens.com/cs/ww/en/view/109772284).

Block library for SYSLOG messages

Syslog is a simply structured binary profile on UDP/IP level. It enables applications to send messages, warnings or error states to a Syslog server. Syslog is typically used for computer system management and security monitoring, and has established itself as a standard in the field of protocols.

The "LSyslog" library offers you a solution to implement the Syslog protocol in an S7-1500. In addition to the library, an application example is provided that shows you how to generate Syslog messages in your controller and send them to the Syslog server.

You can find the block library "LSyslog" and the associated application example on the Internet (https://support.industry.siemens.com/cs/ww/en/view/51929235).

7.3 Instructions for Open User Communication

Introduction

You set up Open User Communication via the corresponding connection (for example, TCP connection) as follows:

- By programming in the user programs of the communications partners or
- By configuring the connection in STEP 7 in the hardware and network editor

Regardless of whether you set up the connection by programming or configuring, instructions are always required in the user programs of both communications partners for sending and receiving the data.

Setting up the connection via the user program

If the connection is set up by programming, the connection establishment and termination is implemented using instructions in the user program.

In certain application areas, it is advantageous not to set up the communication connections statically via hardware configuration, but via the user program instead. You can set up the connections via a specific application program-controlled and therefore when necessary. Programmed connection setup also allows connection resources to be released following data transfer.

A data structure is necessary for each communications connection that contains the parameters for establishing the connection (for example system data type "TCON_IP_v4" for TCP).

The system data types (SDT) are provided by the system and have a predefined structure that cannot be changed.

The various protocols have their own data structures (see table below). The parameters are stored in a data block ("connection description DB") for example of the system data type TCON_IP_v4.

There are two ways in which you can specify the DB with the data structure:

- Recommendation: Have the data block created automatically in the properties in the program editor during parameter assignment of the connection for the TSEND_C, TRCV_C and TCON instructions.
- Create the data block manually, assign parameters to it and write it directly to the instruction
  Necessary for:
  - Secure OUC
  - Connection over DNS
  - E-mail
  - FTP

You can modify the connection parameters in the "connection description DB".

This FAQ (https://support.industry.siemens.com/cs/ww/en/view/58875807) describes how to program the TCON instruction to set up a connection for Open User Communication between two S7-1500 CPUs.

Protocols, system data types and employable instructions for programmed setup

The following table shows the protocols of the Open User Communication and the matching system data types and instructions.

Table 7-3 Instructions for programmed setup of the connection

Protocol	System data type	Instructions
TCP	• TCON_QDN • TCON_IP_v4	Establish connection and send/receive data via: • TSEND_C/TRCV_C or • TCON, TSEND/TRCV or • TCON, TUSEND/TURCV (connection can be terminated via TDISCON)
ISO-on-TCP	• TCON_IP_RFC	
ISO according to ISO/IEC 8073 (Class 4)	• TCON_ISOnative[1] • TCON_Configured	
UDP	• TCON_IP_v4 • TADDR_Param • TADDR_SEND_QDN • TADDR_RCV_IP	Establish connection and send/receive data via: • TSEND_C/TRCV_C • TUSEND/TURCV/TRCV (connection can be terminated via TDISCON)
FDL[1]	• TCON_FDL	Establish connection and send/receive data via: • TSEND_C/TRCV_C or • TCON, TSEND/TRCV or • TCON, TUSEND/TURCV (connection can be terminated via TDISCON)
Modbus TCP	• TCON_IP_v4 • TCON_QDN • TCON_Configured	• MB_CLIENT • MB_SERVER
Email	• TMAIL_v4 • TMAIL_v6 • TMAIL_FQDN	• TMAIL_C
FTP[2]	• FTP_CONNECT_IPV4[3] • FTP_CONNECT_IPV6[3] • FTP_CONNECT_NAME[3]	• FTP_CMD

[1] This protocol can only be used with the CM 1542-5

[2] This protocol can only be used with the CP 1543-1

[3] User-defined data type

The following table shows you the different connections of the Secure Open User Communication and the matching system data types and instructions.

Secure OUC connection	System data type	Instructions
Secure TCP connection from an S7-1500 CPU as TLS client to a third-party PLC (TLS server) Secure TCP connection from an S7-1500 CPU as TLS server to a third-party PLC (TLS client)	• TCON_QDN_SEC	• TSEND_C/TRCV_C • TCON, TSEND/TRCV
Secure TCP connection between two S7-1500 stations	• TCON_IP_V4_SEC[1]	
Secure connection to a mail server[2]	• TMAIL_V4_SEC • TMAIL_QDN_SEC	• TMAIL_C (V5.0 or higher)
Secure Modbus TCP connection	• TCON_IP_V4_SEC[1]	• MB_Client • MB_Server
	• TCON_QDN_SEC	

[1] Also possible for CP 1543-1

[2] Secure connection to a mail server also possible with CP1543-1 und TMAIL_C (V4.0)

Setting up the connection with connection configuration

When setting up through the configuration of the connection, the address parameters of the connection are specified in the hardware and network editor of STEP 7.
To send and receive the data, use the same instructions as when the connections are set up by programming:

Table 7-4 Instructions for sending/receiving with configured connections

Protocol	Send/receive with configured connections
Supported instructions:	
TCP	Send/receive data via: • TSEND_C/TRCV_C or • TSEND/TRCV or • TUSEND/TURCV
ISO-on-TCP	
ISO according to ISO/IEC 8073 (Class 4)	
UDP	Send/receive data via: • TSEND_C/TRCV_C or • TUSEND/TURCV
FDL	Send/receive data via: • TSEND_C/TRCV_C or • TSEND/TRCV or • TUSEND/TURCV
Modbus TCP	Not supported
Email	Not supported
FTP	Not supported

Additional instructions for open communication

You can use the following instructions for connections set up in the user program as well as for configured connections:

- T_RESET: Terminating and establishing a connection
- T_DIAG: Check the connection

Basic examples for Open User Communication

The Siemens Online Support offers you function blocks (FBs) that facilitate the handling of the instructions of the Open User Communication. You can find the function block with corresponding examples on the Internet (https://support.industry.siemens.com/cs/ww/en/view/109747710).

More information

The STEP 7 online help describes:

- The user and system data types
- The instructions for open communication
- The connection parameters

You will find information about the allocation and release of connection resources in the section Allocation of connection resources (Page 372).

Information about the Secure Open User Communication is available in the section Secure Open User Communication (Page 75).

7.4 Open User Communication with addressing via domain names

As of firmware version V2.0, S7-1500 CPUs, ET 200SP CPUs and the CPUs 1513/1516pro-2 PN support Open User Communication with addressing via Domain Name System (DNS). A DNS client is integrated in the CPU. In the case of communication via DNS, you use domain names as an alias for IP addresses to address communication partners. Addressing of the communication partners via domain names is possible for open communication via TCP and UDP.

At least one DNS server must be located in your network as a requirement for communication via DNS.

The S7-1500 software controller supports communication via DNS for all interfaces that are assigned to the software controller.

Setting up communication via DNS

The DNS client of the CPU must know the IPv4 address of at least one DNS server so that a CPU can establish a connection to a communication partner via its domain name. The CPU supports up to 4 different DNS servers.

To set up communication via domain names for an S7-1500 CPU, follow these steps:

1. Select the CPU in the network view of STEP 7.
2. In the Inspector window, navigate to "Properties" > "General" > "Advanced configuration" > "DNS configuration".
3. Enter the IPv4 address of a DNS server in the "DNS server addresses" column of the "Server list" table.
   You can enter up to 4 IPv4 addresses of DNS servers.

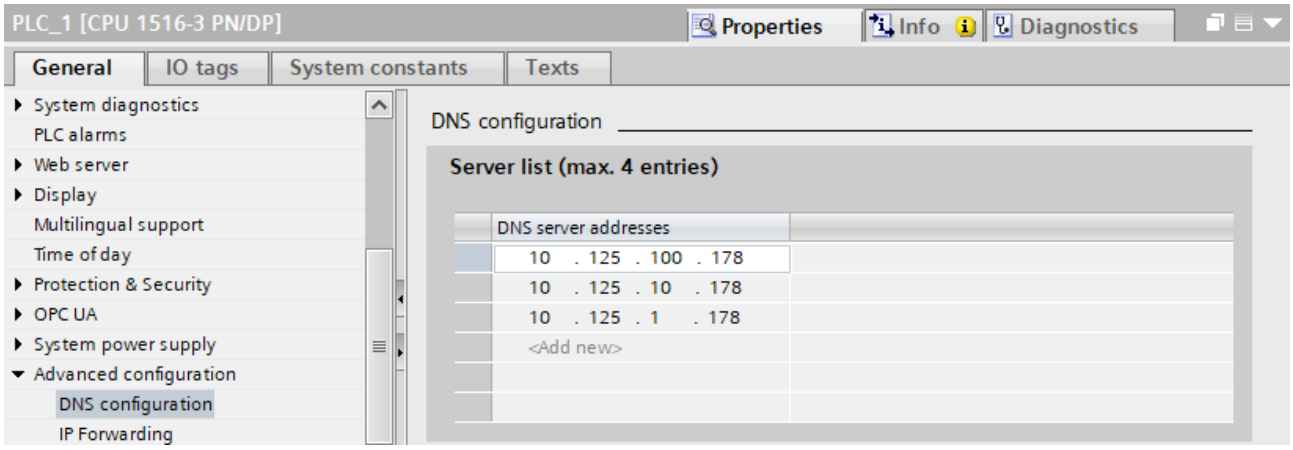

Figure 7-1 Entering DNS server addresses using a CPU 1516-3 PN/DP as an example

Setting up a TCP connection via the domain name of the communication partner

For TCP communication via the domain name you need to create a data block with the TCON_QDN system data type yourself, assign parameters and call it directly at the instruction. The TCON, TSEND_C and TRCV_C instructions support the system data type TCON_QDN:
To set up a TCP connection via the domain name of the communication partner, follow these steps:

1. Create a global data block in the project tree.
2. Define a tag of the data type TCON_QDN in the global data block.
   The example below shows the global data block "Data_block_1" in which the tag "DNS Connection1" of data type TCON_QDN is defined.

Data_block_1

		Name	Datentyp	Startwert	Kommentar
1		Static			
2		DNS Connection1	TCON_QDN		
3		InterfaceId	HW_ANY	0	not relevant
4		ID	CONN_OUC	16#0	connection reference / identifier
5		ConnectionType	Byte	16#0B	type of connection: 16#0B=11=TCP/IP, 16#13=19=UDP
6		ActiveEstablished	Bool	false	active/passive connection establishment
7		RemoteQDN	String[254]	''	fully or partially qualified domain name of remote partner
8		RemotePort	UInt	0	remote UDP / TCP port number
9		LocalPort	UInt	0	local UDP / TCP port number

Figure 7-2 Data type TCON_QDN

3. Program the parameters of the TCP connection (for example the fully qualified domain name (FQDN)) in the tag of data type TCON_QDN.

4. Create a TCON instruction in the program editor.
5. Interconnect the CONNECT parameter of the TCON instruction with the tag of the data type TCON_QDN.
   In the example below, the CONNECT parameter of the TCON instruction is interconnected with the tag "DNS connection1" (data type TCON_QDN).

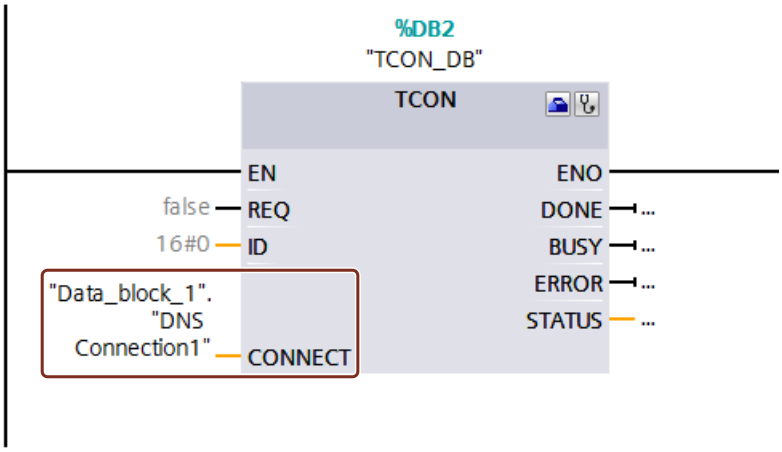

Figure 7-3 TCON instruction

Addressing a UDP connection via the domain name of the communication partner

For S7-1500 CPUs as of firmware version V2.0, you can address the recipient with its fully qualified domain name (FQDN) when sending data via UDP. With the instruction TUSEND at the parameter ADDR, you hereby reference a structure of the type TADDR_SEND_QDN.
The receiver can return an IPv4 or an IPv6 address. With the TURCV instruction at the ADDR parameter, you therefore reference a structure of the TADDR_RCV_IP type. Only this structure can include both IP address types.

NOTE

Network load

In contrast to the TCP the UDP protocol does not work connection-oriented. For every edge at the block parameter REQ, the TUSEND or TURCV command performs queries of the DNS server. This can lead to high network load or load on the DNS server.

Additional information

You can find more information about the system data types TCON_QDN, TADDR_SEND_QDN and TADDR_RCV_IP in the STEP 7 online help.
How to set up a secure TCP connection via the domain name of the communication partner is described in the section Secure Open User Communication (Page 75).

7.5 Setting up Open User Communication via TCP, ISO-on-TCP, UDP and ISO

Configuring a connection for the TSEND_C, TRCV_C or TCON instructions

Requirement: A TSEND_C, TRCV_C or TCON instruction is created in the programming editor.

1. Select a TCON, TSEND_C or TRCV_C block of Open User Communication in the program editor.
2. Open the "Properties > Configuration" tab in the inspector window.
3. Select the "Connection parameters" group. Until you select a connection partner, only the empty drop-down list for the partner end point is enabled. All other input options are disabled.

   The connection parameters already known are displayed:

   – Name of the local end point
   – Interface of the local end point

– IPv4 address of the local end point

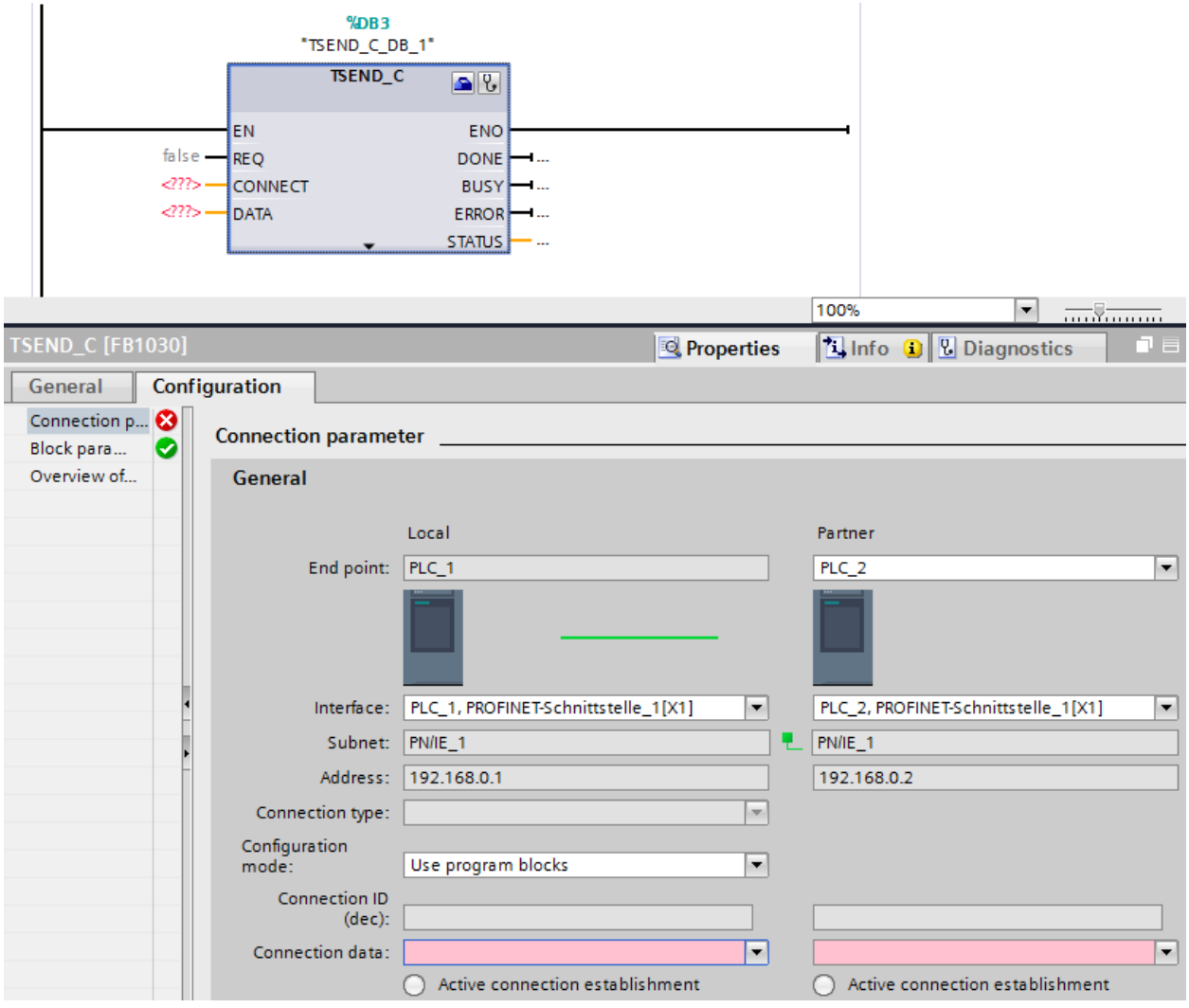

Figure 7-4 Connection parameters for TSEND_C

4. In the drop-down list box of the partner end point, select a connection partner. You can select an unspecified device or a CPU in the project as the communication partner. Certain connection parameters are then entered automatically.
   The following parameters are set:
   – Name of the partner end point
   – Interface of the partner end point
   – IPv4 address of the partner end point
   If the connection partners are networked, the name of the subnet is displayed.
5. In the "Configuration type" drop-down list, select between using program blocks or configured connections.

6. Select an existing connection description DB in the "Connection data" drop-down list or for configured connections select an existing connection under "Connection name". You can also create a new connection description DB or a new configured connection. Later, you can still select other connection description DBs or configured connections or change the names of the connection description DBs in order to create new data blocks:
   - You can also see the selected data block at the interconnection of the CONNECT input parameter of the selected TCON, TSEND_C or TRCV_C instruction.
   - If you have already specified a connection description DB for the connection partner using the CONNECT parameter of the TCON, TSEND_C or TRCV_C instruction, you can either use this DB or create a new DB.
   - If you edit the name of the displayed data block in the drop-down list, a new data block with the changed name but with the same structure and content is generated and used for the connection.
   - Changed names of a data block must be unique in the context of the communication partner.
   - A connection description DB must have the structure TCON_Param, TCON_IP_v4 or TCON_IP_RFC, depending on CPU type and connection.
   - A data block cannot be selected for an unspecified partner.

   Additional values are determined and entered after the selection or creation of the connection description DB or configured connection.
   The following is valid for specified connection partners:
   - ISO-on-TCP connection type
   - Connection ID with default of 1
   - Active connection establishment by local partner
   - TSAP ID
     for S7-1200/1500: E0.01.49.53.4F.6F.6E.54.43.50.2D.31

   The following is valid for unspecified connection partners:
   - TCP connection type
   - Partner port 2000

   The following applies for a configured connection with a specified connection partner:
   - TCP connection type
   - Connection ID with default of 257
   - Active connection establishment by local partner
   - Partner port 2000

   The following applies for a configured connection with an unspecified connection partner:
   - TCP connection type
   - Local port 2000
7. Enter a connection ID as needed for the connection partner. No connection ID can be assigned to an unspecified partner.

NOTE

You must enter a unique value for the connection ID at a known connection partner. The uniqueness of the connection ID is not checked by the connection parameter settings and there is no default value entered for the connection ID when you create a new connection.

8. Select the desired connection type in the relevant drop-down list. Default values are set for the address details depending on the connection type. You can choose between the following:
   - TCP
   - ISO-on-TCP
   - UDP
   - ISO (only with Configuration mode "Use configured connection")

   You can edit the input boxes in the address details. Depending on the selected protocol, you can edit the ports (for TCP and UDP) or the TSAPs (for ISO-on-TCP and ISO).
9. Use the "Active connection establishment" check box to set the connection establishment characteristics for TCP, ISO and ISO-on-TCP. You can decide which communication partner establishes the connection actively.

Changed values are checked immediately for input errors by the connection configuration and entered in the data block for the connection description.

NOTE

Open User Communication between two communication partners can only work when the program section for the partner end point has been downloaded to the hardware. To achieve fully functional communication, make sure that you load not only the connection description of the local CPU on the device but also that of the partner CPU as well.

Configuring connections, e.g. for TSEND/TRCV

If you want to use the instructions for TSEND/TRCV for open communication, for example, you first need to configure a connection (e.g. TCP connection).

To configure a TCP connection, follow these steps:

1. Configure the communications partners in the network view of the Devices & networks editor of STEP 7.
2. Click the "Connections" button and select the "TCP connection" connection type from the drop-down list.
3. Using drag-and-drop, connect the communication partner with each other (via an interface or local end point). If the required S7 subnet does not yet exist, it is created automatically.

   You can also set up a connection to unspecified partners.
4. Select the created connection in the network view.
5. Set the properties of the connection in the "Properties" tab in the "General" area, for example the name of the connection and the interfaces of the communications partner that will be used.

   For connections to an unspecified partner, set the address of the partner.
   You can find the local ID (reference of the connection in the user program) in the "Local ID" area.
6. In the Project tree, select the "Program blocks" folder for one of the CPUs and open OB1 in the folder by double-clicking on it. The program editor opens.
7. Select the required instruction from the "Instructions" task card, "Communication" area, "Open user communication", for example TSEND and drag it to a network of OB1.
8. At the ID parameter of the instruction, assign the local ID of the configured connection to be used for the transmission of data.

9. Interconnect the "DATA" parameter of the TSEND instruction with the user data, for example in a data block.
10. Download the hardware configuration and user program to the CPU.

Based on the procedure described above, set up the connection on the partner CPU with the instruction for receiving, TRCV, and download it to the CPU.

Point to note with ISO connections with CP 1543-1

If you use the "ISO connection" connection type, you will need to select the "Use ISO protocol" check box in the properties of the CP so that addressing using MAC addresses will work.

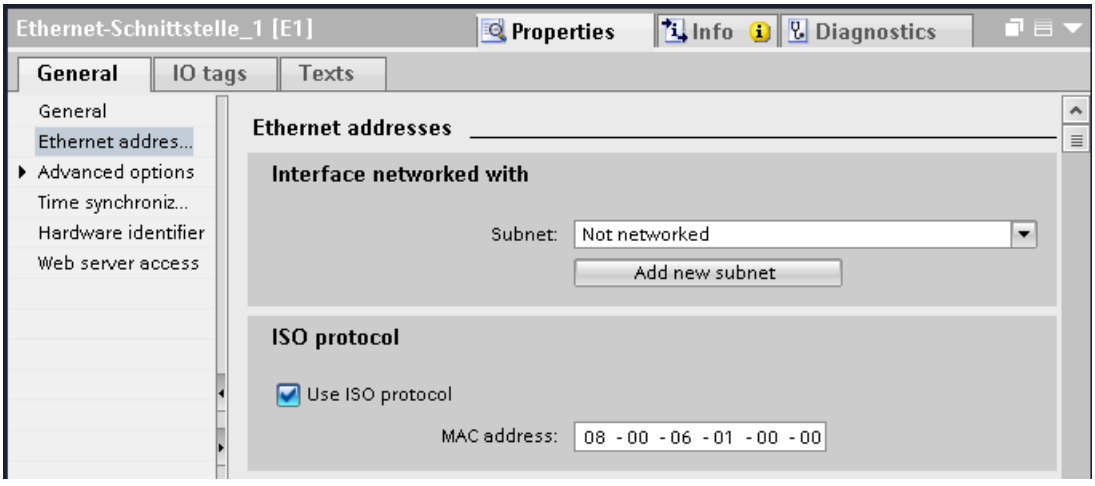

Figure 7-5 Select CP 1543-1 ISO protocol

Additional information

The STEP 7 online help describes:

- The instructions for open communication
- The connection parameters

This FAQ (https://support.industry.siemens.com/cs/ww/en/view/109479564) describes how the instructions TSEND_C and TRCV_C behave in the S7-1500.

7.6 Setting up communication over FDL

Requirements

- Configuration software: STEP 7 Professional V14
- End point of the connection: CPU S7-1500 firmware version V2.0 or higher with communication module CM 1542-5 with firmware version V2.0

Setting up a configured FDL connection

Proceed as follows to set up a configured FDL connection in STEP 7:

1. Create a TSEND_C instruction in the program editor.
2. Select the TSEND_C instruction and go to "Properties" > "General" > "Connection parameters" in the Inspector window.
3. Under End point, select the partner end point. Use one of the two partner end points below:
   - CPU S7-1500 with CM 1542-5
   - Unspecified
4. Under Configuration type, select "Use configured connection".
5. Under Connection type, select "FDL".
6. Under Interface, select the following interfaces:
   - Local: PROFIBUS interface of CM 1542-5
   - Specified partner: PROFIBUS interface of CM 1542-5
7. Under Connection data, select the setting <new>.

The figure below shows a fully configured FDL connection in STEP 7.

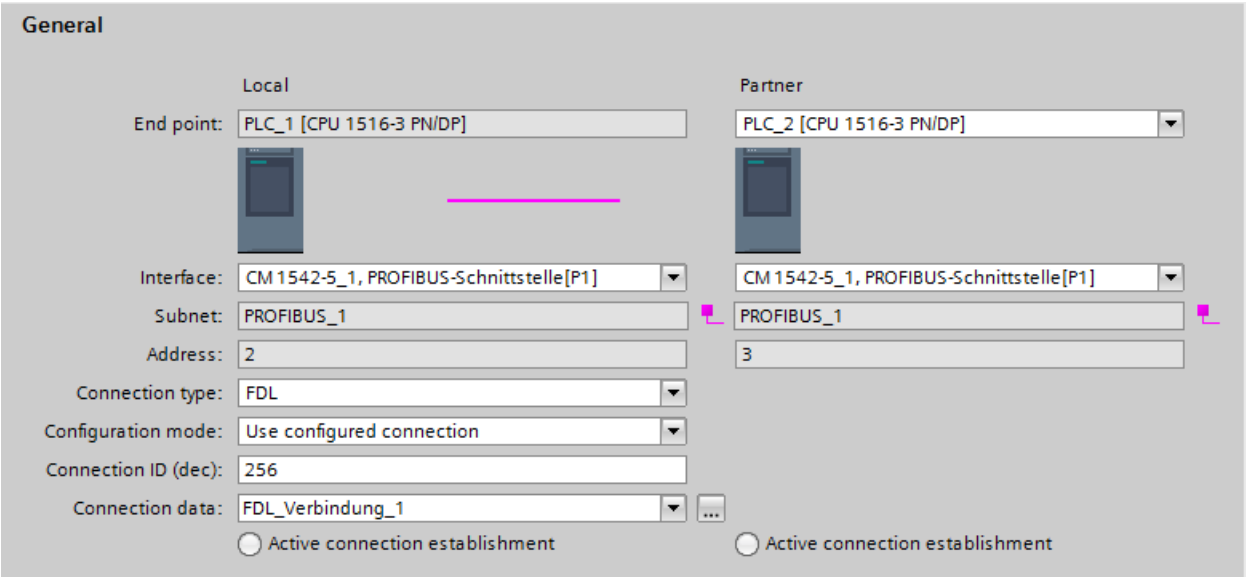

Figure 7-6 Configuring the FDL connection

Setting up an FDL connection in the user program

For communication via FDL, you need to create the data block of the TCON_FDL system data type yourself in each case, assign parameters and call it directly at the instruction. Follow these steps:

1. Create a global data block in the project tree.

2. In the global data block, define a tag of the data type TCON_FDL.
   The example below shows the global data block "FDL_connection" in which the tag "FDL_connection" of the data type TCON_FDL is defined.

FDL_connection

	Name	Data type	Start val...	R...	A...	...	V...	S...	Super...	Comment
1	Static									
2	FDL_connection	TCON_FDL			☑	☑	☑			
3	InterfaceId	HW_ANY	0		☑	☑	☑			HW identifier of PB interface submodule
4	ID	CONN_OUC	16#0		☑	☑	☑			connection reference / identifier
5	ConnectionType	Byte	16#15		☑	☑	☑			type of connection: 21= FDL connection
6	ActiveEstablished	Bool	false		☑	☑	☑			active/passive connection establishment
7	ServiceId	Byte	16#0		☑	☑	☑			service id: 0 – default, 1 – SDA, 2 – SDN
8	RemotePBAddress	Byte	16#0		☑	☑	☑			remote ProfiBus partner address
9	LocalPBAddress	Byte	16#0		☑	☑	☑			local ProfiBus partner address
10	RemoteLSAP	Byte	16#0		☑	☑	☑			remote PB link-layer service access point
11	LocalLSAP	Byte	16#0		☑	☑	☑			local PB link-layer service access point

Figure 7-7 Programming an FDL connection

3. Program the parameters of the FDL connection (e.g. the PROFIBUS addresses) in the tag of the data type TCON_FDL.
4. Create a TCON instruction in the program editor.
5. Interconnect the CONNECT parameter of the TCON instruction with the tag of the data type TCON_FDL.
   In the example below, the CONNECT parameter of the TCON instruction is interconnected with the tag "FDL_Connection" (data type TCON_FDL).

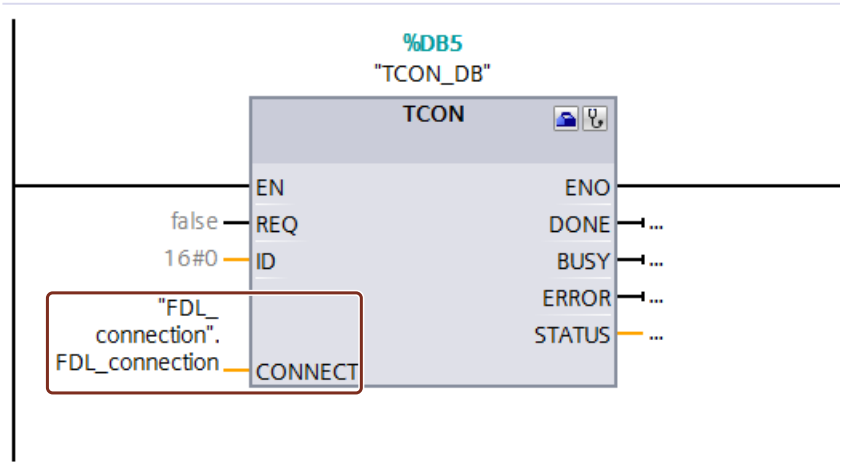

Figure 7-8 Example: TCON Instruction for FDL connection

7.7 Setting up communication with Modbus TCP

Setting up a connection for Modbus TCP via the user program

The parameter assignment takes place in the program editor at the instruction MB_CLIENT or MB_SERVER.

Procedure for setting up communication using Modbus TCP

The MB_CLIENT instruction communicates as a Modbus TCP client via the TCP connection. You establish a connection between the client and the server with the instruction, send Modbus requests to the server and receive the corresponding Modbus responses. You also control the setup of the TCP connection with this instruction.

The MB_SERVER instruction communicates as a Modbus TCP server via the TCP connection. The instruction processes connection requests of a Modbus client, receives and processes Modbus requests and sends responses. You also control the setup of the TCP connection.

Requirement: The client can reach the server via IP communication in the network.

1. Configure an S7-1500 automation system with CPU in the network view of the Devices & networks editor of STEP 7.
2. In the Project tree, select the "Program blocks" folder and open OB1 in the folder by double-clicking on it. The program editor opens.
3. Select the required instruction, for example MB_CLIENT, from the "Instructions" task card, "Communication" area, "Other", "MODBUS TCP" and drag it to a network of OB1.
4. Assign the parameters of the MB_CLIENT or MB_SERVER instruction. Observe the following rules:

   An IPv4 server address must be specified for each MB_CLIENT connection.

   Each MB_CLIENT or MB_SERVER connection must use a unique instance DB with one of the data structures TCON_IP_v4, TCON_QDN or TCON_Configured.

   Each connection requires a unique connection ID. The connection ID and instance DB belong together in pairs and must be unique for each connection.

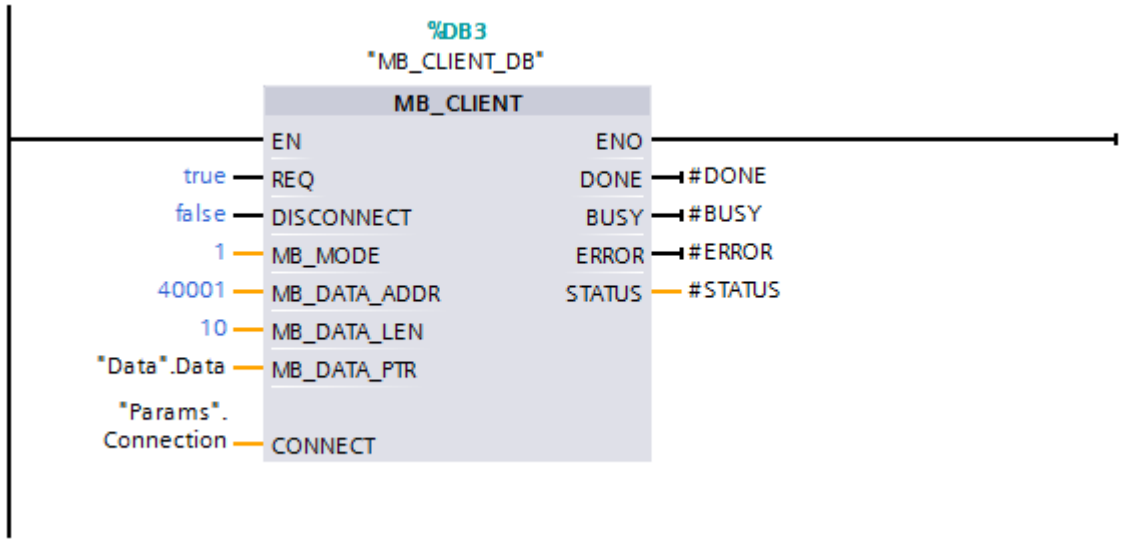

Figure 7-9 MB_CLIENT

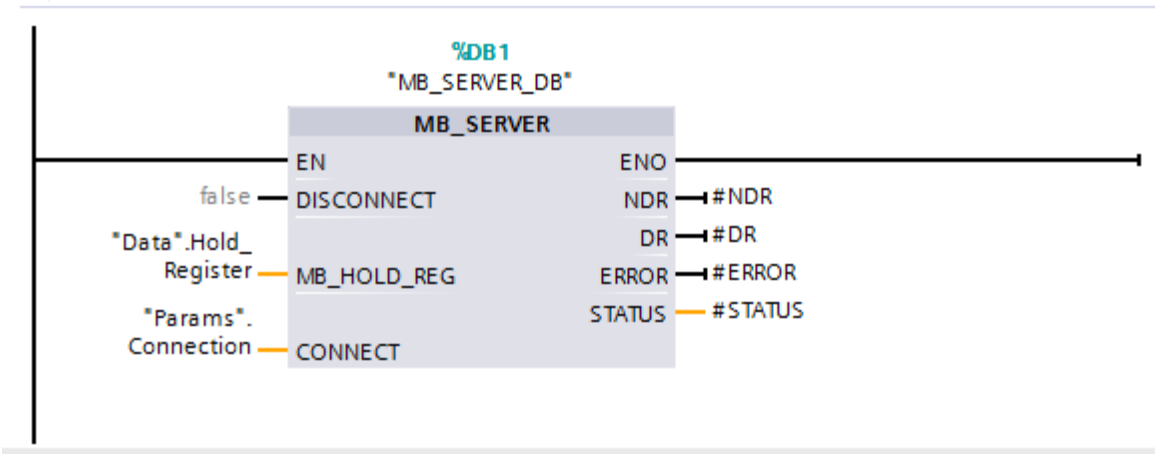

Figure 7-10 MB_SERVER

5. Download the hardware configuration and user program to the CPU.

Redundant communication over Modbus TCP

Assign parameters for redundant communication via Modbus TCP using the MB_RED_CLIENT or MB_RED_SERVER instructions:

Instruction MB_RED_CLIENT You use the instruction "MB_RED_CLIENT" to establish a redundant connection between the client and the server, send Modbus requests, receive responses and control connection termination of the Modbus TCP client.

Instruction MB_RED_SERVER The "MB_RED_SERVER" instruction processes connection requests of a Modbus TCP client, receives and processes Modbus requests and sends responses. The CPUs can:

- processing multiple server connections and
- accepting multiple connections from different clients simultaneously at one server port.

For more information on the MB_RED_CLIENT or MB_RED_SERVER instructions, refer to the STEP 7 online help.

Modbus TCP server as gateway to Modbus RTU

If you use a Modbus TCP server as a gateway to a Modbus RTU protocol, address the slave device in the serial network using the static parameter, MB_UNIT_ID. The MB_UNIT_ID parameter corresponds to the field of the slave address in the Modbus RTU protocol. The MB_UNIT_ID parameter in this case would forward the request to the correct Modbus RTU slave address.

You do not have to program the gateway function yourself.

You can find the MB_UNIT_ID parameter in the instance data block associated with MB_CLIENT instruction.

You can find more information on the MB_UNIT_ID parameter in the STEP 7 online help.

Reference

- This FAQ (https://support.industry.siemens.com/cs/ww/en/view/94766380) describes how to program and configure the Modbus TCP communication between two S7-1500 CPUs.
- This FAQ (https://support.industry.siemens.com/cs/ww/en/view/102020340) describes how to program and configure Modbus TCP communication between an S7-1500 CPU and an S7-1200 CPU.

7.8 Setting up communication via e-mail

Setting up a connection for e-mail via the user program

For communication using e-mail, you need to create the data block of the relevant system data type yourself, assign parameters and call the instruction directly. This procedure is introduced below.

Procedure for setting up communication using e-mail

A CPU can send e-mails. To send e-mails from the user program of the CPU, use the TMAIL_C instruction.

Requirement: The SMTP server can be reached via the IPv4 network.

1. Configure an S7-1500 automation system with CPU in the network view of the Devices & networks editor of STEP 7.
2. Assign parameters to the instruction TMAIL_C, for example enter the subject of the e-mail in Subject.
3. In a global data block create a variable of the type TMAIL_v4, TMAIL_v6 (only CP 1543-1) or TMAIL_FQDN (only CP 1543-1).
4. Set the connecting parameters of the TCP connection in the variable in the "Start value" column. Enter the IPv4 address of the mail server, for example, for the "MailServerAddress" (for TMAIL_v4)

   NOTE

   Connection parameter Interface ID

   Note that you can enter the value "**0**" for the interface ID with instruction version V5.0 or higher of the instruction TMAIL_C in the data type TMAIL_V4_SEC. In this case, the CPU itself searches for a suitable local CPU interface.

   Interconnect the variable to the MAIL_ADDR_PARAM parameter of the TMAIL_C instruction.
5. Download the hardware configuration and user program to the CPU.

Additional information

The STEP 7 online help describes:

- The system data types
- The instructions for open communication
- The connection parameters

7.9 Setting up communication via FTP

Setting up a connection for FTP via the user program

For communication via FTP, you need to create the data block of the relevant system data type yourself, assign parameters and call the instruction directly. This procedure is introduced below.

FTP client and server functionality

Files can be sent by a CPU to an FTP server and can be received from the FTP server. Communication with FTP is only possible for the S7-1500 using the CP 1543-1. The CP can be an FTP server, FTP client or both. FTP clients can also be third-party systems/PCs.

For the FTP server functionality, configure the CP accordingly in STEP 7.

You can use the FTP client functionality to implement, for example, the establishment and termination of an FTP connection, the transfer and deletion of files on the server. For the FTP client functionality, use the FTP_CMD instruction.

Procedure for setting up FTP server functionality

Requirement: The FTP server can be reached via the IPv4 network**.**

1. Configure an S7-1500 automation system with CPU and CP 1543-1 in the device view of the Devices & networks editor of STEP 7.
   At the same time, you need to select the option "Permit access with PUT/GET communication from remote partner (PLC, HMI, OPC, ...)" in the HW configuration of the S7-1500 CPU under the "Protection" area navigation in the section "Connection mechanisms".
2. Make the following settings in the properties of the CP under "FTP configuration":
   – Select the "Use FTP server for S7 CPU data" check box.
   – Assign the CPU, a data block and a file name under which the DB for FTP will be stored.

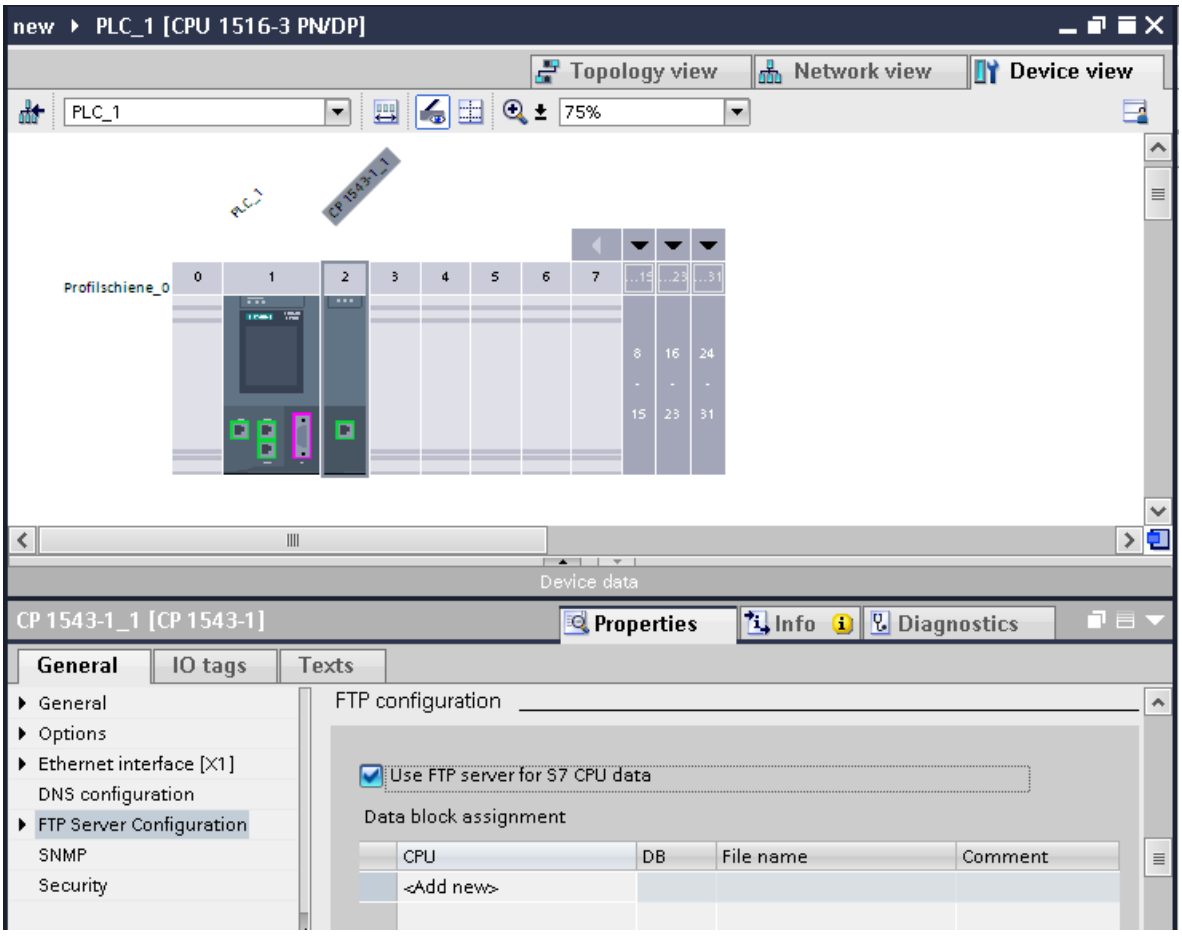

Figure 7-11 Setting up the FTP configuration

3. Download the hardware configuration to the CPU.

Procedure for setting up FTP client functionality

Requirement: The FTP server can be reached via the IPv4 network**.**

1. Configure an S7-1500 automation system with CPU and CP 1543-1 in the device view of the Devices & networks editor of STEP 7.
   At the same time, you need to select the check box "Permit access with PUT/GET communication from remote partner (PLC, HMI, OPC, ...)" in the HW configuration of the S7-1500 CPU under the "Protection" area navigation in the section "Connection mechanisms".
2. Call the FTP_CMD instruction in the user program of the CPU.
3. Set the connection parameters for the FTP server in the FTP_CMD instruction.
4. Create a global DB and within this DB a tag of the type FTP_CONNECT_IPV4, FTP_CONNECT_IPV6 or FTP_CONNECT_NAME.
5. Interconnect the tag within the data block with the FTP_CMD instruction.
6. For the connection to the FTP server, specify the following in the DB:
   – The user name, the password and the IP address for the FTP access in the relevant data type (FTP_CONNECT_IPV4, FTP_CONNECT_IPV6 or FTP_CONNECT_NAME)
7. Download the hardware configuration and user program to the CPU.

Application examples

- Application example: FTP communication with S7-1500 and CP 1543-1
  You can find the application example on the Internet (https://support.industry.siemens.com/cs/ww/en/view/103550797).
- Application example: FTP client communication with S7-1200/1500
  You can find the application example on the Internet (https://support.industry.siemens.com/cs/ww/en/view/81367009).

Additional information

The STEP 7 online help describes:

- The system data types
- The instructions for open communication
- The connection parameters

7.10 Establishment and termination of communications relations

Establishment and termination of communications

The table below shows the establishment and termination of communications as part of open communication.

Table 7-5 Establishment and termination of communications

Setting up the connection	Establishing communication	Terminating communication
With the user program	After downloading the user program to the CPUs: The passive communications partner sets up the local connection access by calling TSEND_C/TRCV_C or TCON. Calling TSEND_C/TRCV_C or TCON on the active partner starts connection establishment. If the connection could be established, there is positive feedback to the instructions in the user program. After you have terminated a connection using the instruction T_RESET, the connection is reestablished. If the connection aborts, the active partner attempts to re-establish the connection. This applies only if the connection was successfully established beforehand with TCON.	• Using the TSEND_C/TRCV_C, TDISCON and T_RESET instructions • When the CPU changes from RUN to STOP mode • With POWER OFF/POWER ON on a CPU
By configuring a connection	After downloading the connection configuration and the user program to the CPUs.	By deleting the connection configuration in STEP 7 and downloading the changed configuration to the CPU.

S7 communication

8

Characteristics of S7 communication

S7 communication as homogeneous SIMATIC communication is characterized by vendor-specific communication between SIMATIC CPUs (not an open standard). S7 communication is used for migration and for connecting to existing systems (S7-300, S7-400).

For data transfer between two S7-1500 automation systems, we recommend that you use open communication (see section Open User Communication (Page 115)).

Properties of S7 communication

Using S7 communication, the CPU exchanges data with another CPU. Once the user has received the data at the receiver end, the reception data is automatically acknowledged to the sending CPU.

The data is exchanged via configured S7 connections. S7 connections can be configured at one end or at both ends.

S7 communication is possible via:

- Integrated PROFINET or PROFIBUS DP interface of a CPU
- Interface of a CP/CM

S7 connections configured at one end

For an S7 connection configured at one end, the configuration for this connection takes place in only one communication partner and is only downloaded to it.

A one-sided S7 connection can be configured to a CPU that is only a server of an S7 connection (e.g. CPU 315-2 DP). The CPU is configured and the address parameters and interfaces are thus known.

In addition, a one-sided S7 connection can be configured to a partner who is not in the project and whose address parameters and interface and therefore are not known. You need to enter the address; it is not checked by STEP 7. The partner is initially unspecified (no partner address is registered when you create the S7 connection). Once you enter the address, it is "unknown" (i.e. it is named, but the project is unknown).

This makes it possible to use S7 connections beyond the boundaries of a project. The communication partner is unknown to the local project (unspecified) and is configured in another STEP 7 or third-party project.

S7 connections configured at both ends

When an S7 connection is configured at both ends, the configuration and download of the configured S7 connection parameters takes place in both communication partners.

Instructions for S7 communication

For S7 communication with S7-1500, the following instructions can be used:

- PUT/GET

  You write data to a remote CPU with the PUT instruction. You can use the GET instruction to read data from a remote CPU. The PUT and GET instructions and are one-sided instructions, i.e. you need only an instruction in one communication partner. You can can easily set up the PUT and GET instructions via the connection configuration.

  NOTE

  Data blocks for PUT/GET instructions

  When using the PUT/GET instructions, you can only use data blocks with absolute addressing. Symbolic addressing of data blocks is not possible.

  You must also enable this service for protection in the CPU configuration in the "Protection" area.

  This FAQ (https://support.industry.siemens.com/cs/ww/en/view/82212115) provides information about how to configure and program an S7 instruction and the GET and PUT communication instructions for data exchange between two S7-1500 CPUs.

- BSEND/BRCV

  The BSEND instruction sends data to a remote partner instruction of the type BRCV. The BRCV instruction receives data from a remote partner instruction of the type BSEND. You use the S7 communication via the BSEND/BRCV instruction pair for secure transmission of data.

- USEND/URCV

  The USEND instruction sends data to a remote partner instruction of the type URCV. The URCV instruction receives data from a remote partner instruction of the type USEND. You use the S7 communication via the USEND/URCV instruction pair for fast, non-secure transmission of data regardless of the timing of the processing by the communications partner; for example for operating and maintenance messages.

S7 communication via PROFIBUS DP interface in slave mode

You can find the "Test, commissioning, routing" check box in STEP 7 in the properties of the PROFIBUS DP interface of communications modules (e.g. CM 1542-5). Using this check box, you decide whether the PROFIBUS DP interface of the DP slave is an active or passive device on PROFIBUS.

- Check box selected: The slave is an active device on PROFIBUS.
- Check box cleared: The DP slave is a passive device on PROFIBUS. You can only set up S7 connections configured at one end for this DP slave.

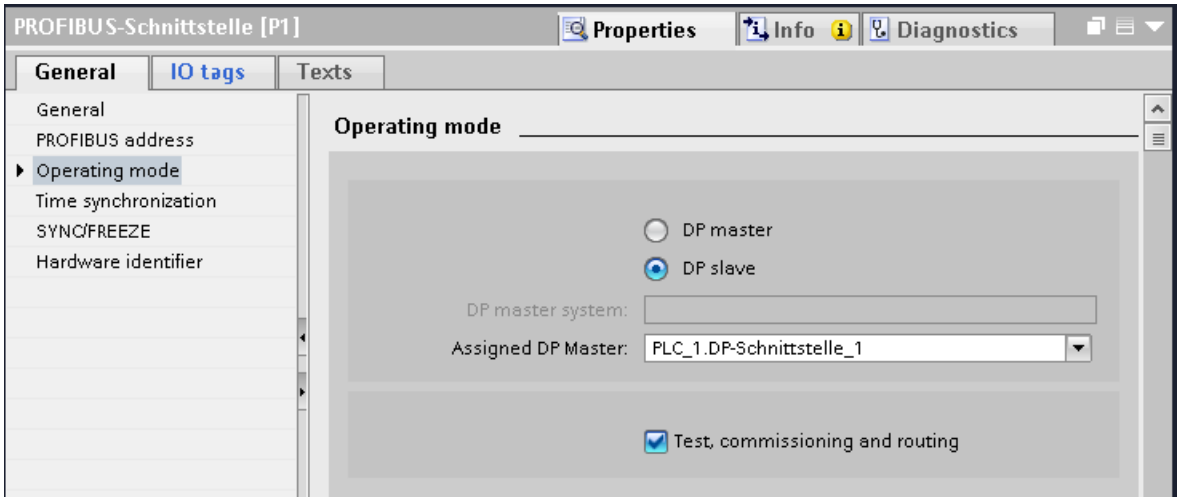

Figure 8-1 "Test, commissioning, routing" check box

Configuring S7 connections for PUT/GET instructions

You can create S7 connections and assign the parameters for these in the connection parameter assignment of the PUT/GET instructions. Changed values are checked immediately by the connection parameter assignment for input errors.

Requirement: A PUT or GET instruction is created in the programming editor.

To configure an S7 connection using PUT/GET instructions, follow these steps:

1. In the program editor, select the call of the PUT or GET instruction.
2. Open the "Properties > Configuration" tab in the inspector window.
3. Select the "Connection parameters" group. Until you select a connection partner, only the empty drop-down list for the partner end point is enabled. All other input options are disabled.

   The connection parameters already known are displayed:

   – Name of the local end point
   – Interface of the local end point

– IPv4 address of the local end point

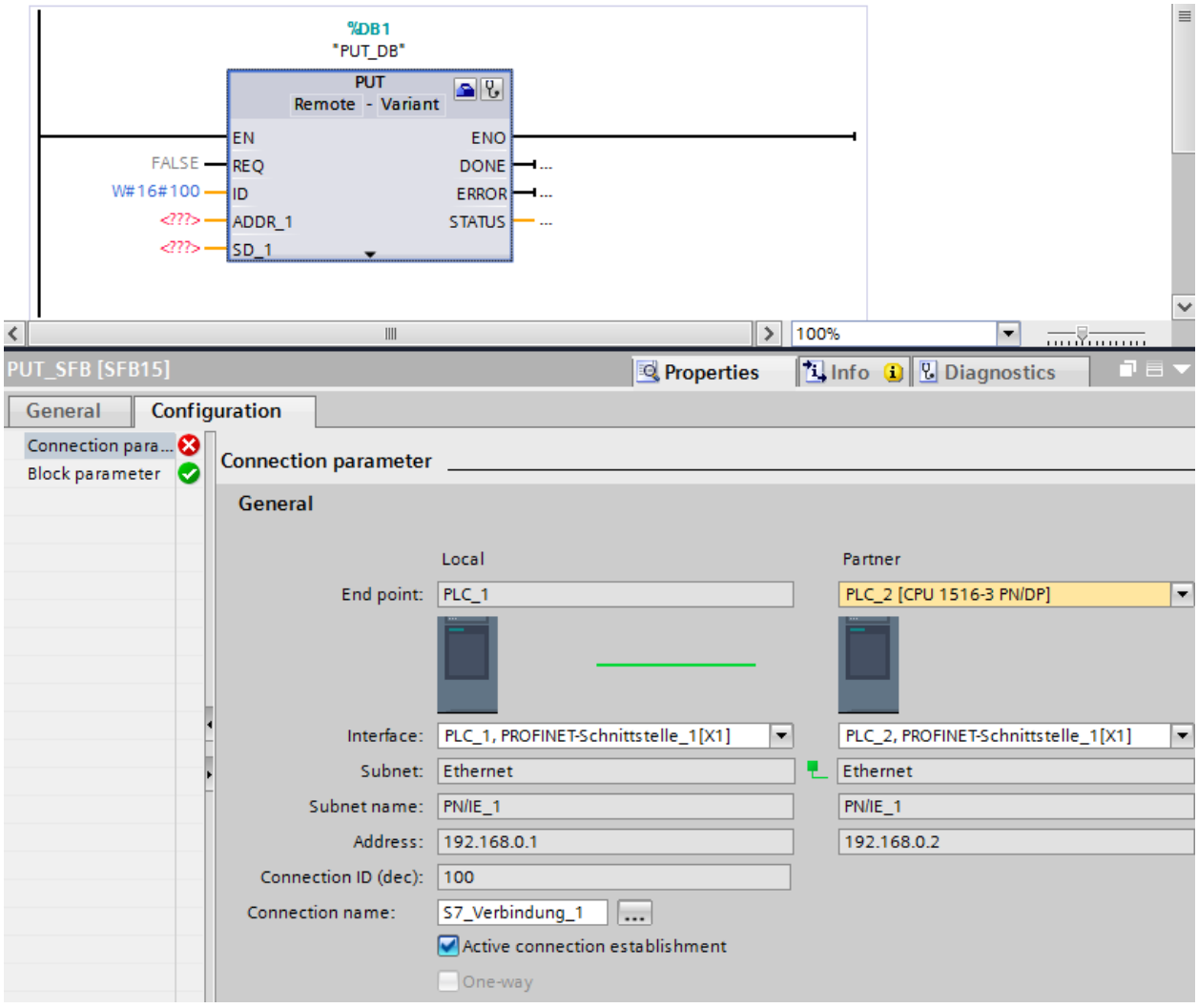

Figure 8-2 Connection configuration for PUT instruction

4. In the drop-down list box of the partner end point, select a connection partner. You can select an unspecified device or a CPU in the project as the communication partner.
   The following parameters are automatically entered as soon as you have selected the connection partner:
   – Name of the partner end point
   – Interface of the partner end point. If several interfaces are available, you can change the interface as required.
   – Interface type of the partner end point
   – Subnet name of both end points
   – IPv4 address of the partner end point
   – Name of the connection which is used for the communication.

5. If required, change the connection name in the "Connection name" input box. If you want to create a new connection or edit an existing connection, click on the "Select connection" button on the right side next to the input box for the connection name.

NOTE

The PUT and GET instructions between two communication partners can only run if both the hardware configuration and the program part for the partner end point have been loaded into the hardware. To achieve fully functional communication, make sure that you load not only the connection description of the local CPU on the device but also that of the partner CPU as well.

Configuring S7 connections for e.g. BSEND/BRCV

If you want to use the instructions for BSEND/BRCV for S7 communication, for example, you first need to configure an S7 connection.

To configure a S7 connection, follow these steps:

1. Configure the communications partners in the network view of the Devices & networks editor of STEP 7.
2. Select the "Connections" button and the "S7 connection" entry from the drop-down list.
3. Using drag-and-drop, connect the communication partner with each other (via an interface or local end point). If the required S7 subnet does not yet exist, it is created automatically.
   You can also set up a connection to unspecified partners.
4. In the "Connections" tab, select the row of the S7 connection.
5. Set the properties of the S7 connection in the "Properties" tab in the "General" area, for example the name of the connection and the interfaces of the communications partner that will be used.
   For S7 connections to an unspecified partner, set the address of the partner.
   You can find the local ID (reference of the S7 connection in the user program) in the "Local ID" area.
6. In the Project tree, select the "Program blocks" folder for one of the CPUs and open OB1 in the folder by double-clicking on it. The program editor opens.
7. In the program editor, call the relevant instructions for S7 communication in the user program of the communication partner (configured at one end) or in the user programs of the communication partners (configured at both ends). Select the BSEND and BRCV instructions from the "Communication" area of the "Instructions" task card, for example, and drag them to a network of OB1.
8. At the ID parameter of the instruction, assign the local ID of the configured connection to be used for the transmission of data.
9. Assign the parameters for the instructions indicating which data will be written to where and which data will be read from where.
10. Download the hardware configuration and user program to the CPU(s).

S7 communication via CP 1543-1

If you set up S7 communication via the Industrial Ethernet interface of the CP 1543-1, you can select the transport protocol for data transfer in the properties of the S7 connection under "General":

- "TCP/IP" check box selected (default): ISO-on-TCP (RFC 1006): for S7 communication between S7-1500 CPUs
- "TCP/IP" check box cleared: ISO protocol (ISO/IEC 8073): Addressing using MAC addresses

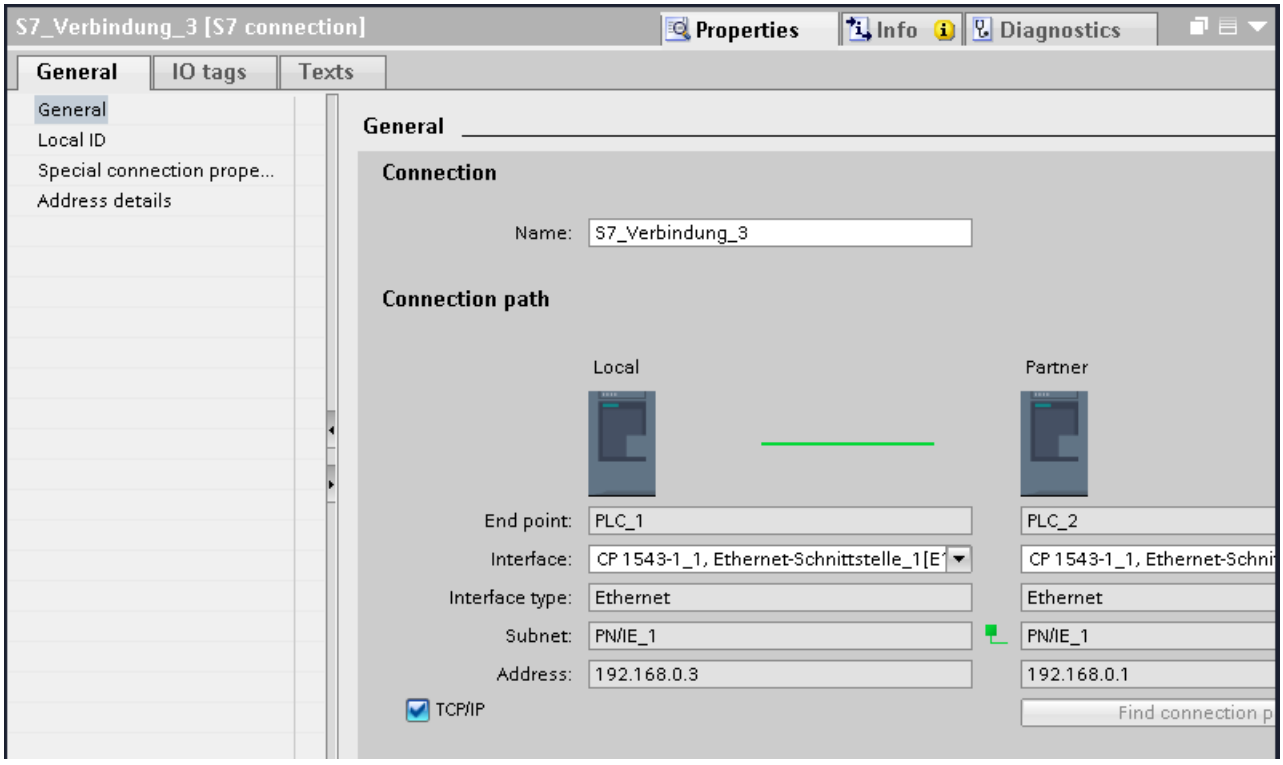

Figure 8-3 Selecting the CP 1543-1 transport protocol

Procedure for setting up an S7 connection via different S7 subnets

You have the option of using an S7 connection over multiple S7 subnets (PROFIBUS, PROFINET/Industrial Ethernet) (S7 routing (Page 352)).

1. Configure the communications partners in the network view of the Devices & networks editor of STEP 7.
2. Select the "Network" button.
3. Connect the relevant interfaces with the S7 subnets (PROFIBUS, PROFINET/Industrial Ethernet) using drag-and-drop.
4. Select the "Connections" button and the "S7 connection" entry from the drop-down list.

5. Using drag-and-drop in our example, connect PLC_1 in the left S7 subnet (PROFIBUS) to PLC_3 in the right S7 subnet (PROFINET).
   The S7 connection between CPU 1 and CPU 3 is configured.

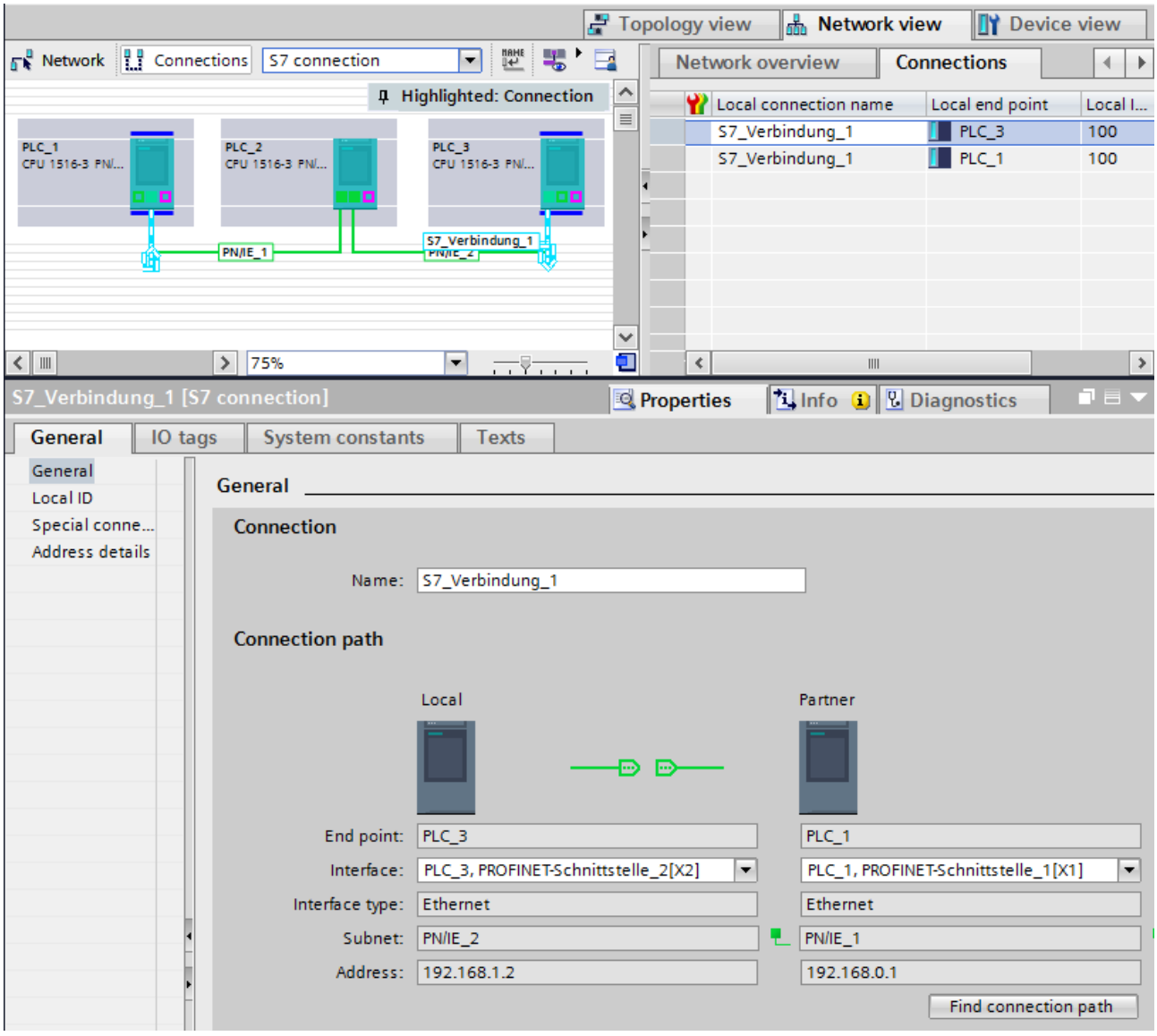

Figure 8-4 S7 connections via different subnets

ET 200SP Open Controller as router for S7 connections

If you assign the "PROFINET onboard [X2]" interface to the CPU 1515SP PC (F) of the SIMATIC PC station, the CPU 1515SP PC (F) can be used as a router for S7 connections. If you use the CP interface for "None, or a different Windows setting", you cannot use the Open Controller as a router for routed S7 connections.

An existing S7 connection routed by the CPU 1515SP PC (F) becomes invalid if the assignment of the interface of the CPU 1515SP PC (F) is changed from "SIMATIC PC station" to "None, or a different Windows setting". Since the PLC now no longer handles routing

functions for this connection, when the CPU 1515SP PC (F) is compiled, no message relating to the invalid connection is displayed. The invalid routed S7 connection is displayed only when the end points of the connection are compiled.

The interfaces required for routed S7 connections must remain explicitly assigned on the CPU 1515SP PC (F) . You can edit the assignment of the interface of the CPU 1515SP PC (F) in the properties under "PROFINET onboard [X2] > Interface assignment".

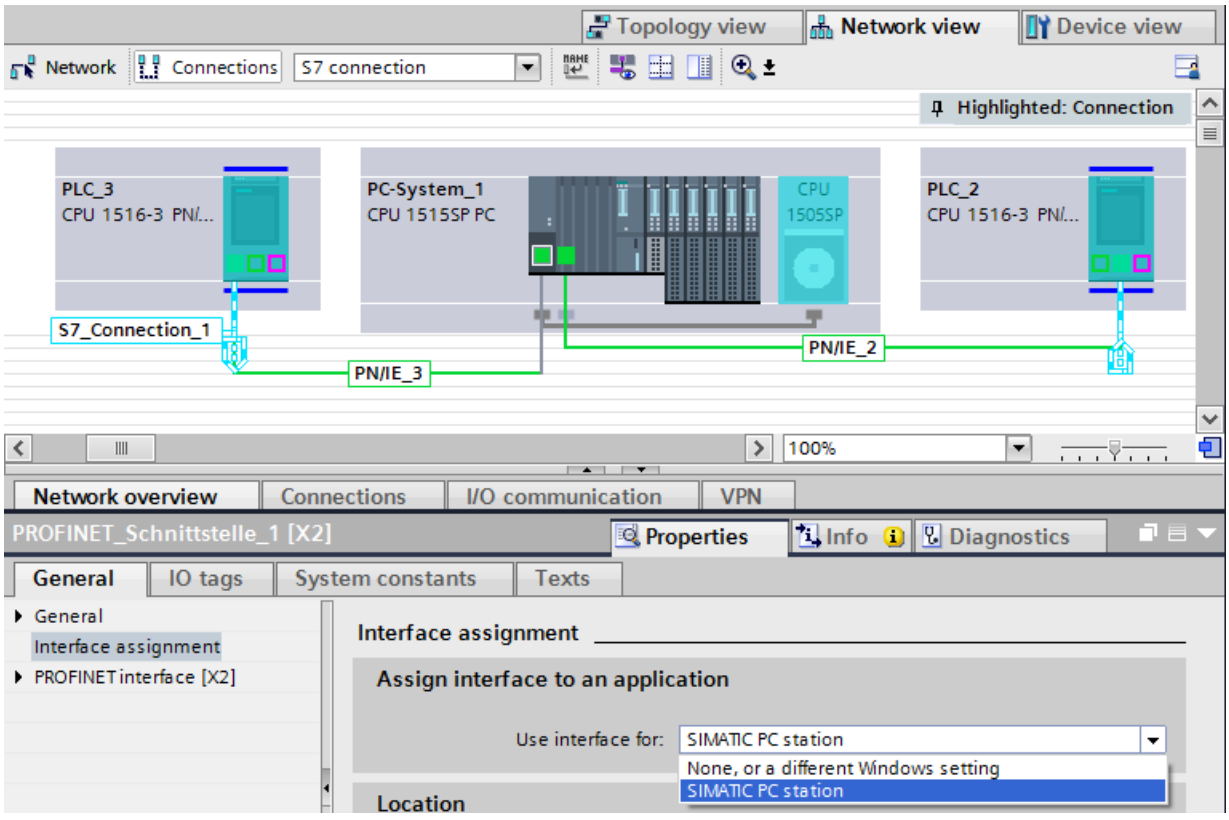

Figure 8-5 S7 routing PC station

Additional information

You can find detailed information on configuring S7 connections and how to use the instructions for S7 communication in the user program in the STEP 7 online help.

Point-to-point link

9

Functionality

A point-to-point connection for S7-1500, ET 200MP and ET 200SP is established via communications modules (CMs) with serial interfaces (RS232, RS422 or RS485):

- S7-1500/ET 200MP:
  - CM PtP RS232 BA
  - CM PtP RS422/485 BA
  - CM PtP RS232 HF
  - CM PtP RS422/485 HF
- ET 200SP:
  - CM PtP

The bidirectional data exchange via a point-to-point connection works between communications modules or third-party systems or devices capable of communication. At least 2 communication partners are required for communication ("point-to-point"). With RS422 and RS485, more than two communications partners are possible.

Protocols for communication via a point-to-point connection

- Freeport protocol (also called ASCII protocol)
- Procedure 3964(R)
- Modbus protocol in RTU format (RTU: Remote Terminal Unit)
- USS protocol (universal serial interface protocol)

The protocols use different layers according to the ISO/OSI reference model:

- Freeport: Uses layer 1 (physical layer)
- 3964 (R), USS and Modbus: Use layer 1 and 2 (physical layer and data link layer; therefore greater transmission reliability than with Freeport). USS and Modbus use additionally layer 4.

Properties of the Freeport protocol

- The recipient recognizes the end of the data transfer by means of a selectable end criterion (e.g. character delay time elapsed, receipt of end character, receipt of a fixed amount of data).
- The sender cannot recognize whether the sent data arrived free of errors at the recipient.

Properties of procedure 3964 (R)

- When the data is sent, control characters are added (start, end and block check characters). Make sure that these control characters are not included as data in the frame.
- Connection establishment and termination makes use of control characters.
- If transfer errors occur, data transfer is automatically repeated.

Data exchange using Freeport or 3964 (R) communication

The data to be sent is stored in the user program of the corresponding CPU in data blocks (send buffer). A receive buffer is available on the communications module for the received data. Check the properties of the receive buffer and adapt them if necessary. You must create a data block for receiving in the CPU.

In the user program of the CPU, the "Send_P2P" and "Receive_P2P" instructions handle the data transfer between the CPU and CM.

Procedure for setting up Freeport or 3964 (R) communication

1. Configure an S7-1500 configuration with CPU and CM in the device view of the hardware and network editor of STEP 7.
2. Select the interface of the CM in the device view of STEP 7.
3. Assign the parameters of the interface (for example connection communication, configuration of message sending) in the Inspector window of STEP 7 under "Properties" > "General".
4. Select the "Send_P2P" or "Receive_P2P" instruction in the "Instructions" task card under "Communication" > "Communications processor" and drag-and-drop the instruction into the user program (for example into a FB).
5. Assign the parameters for the instructions according to your configuration.
6. Download the hardware configuration and user program to the CPU.

Otherwise: Dynamic parameter assignment of the communications module

In certain types of application it is an advantage to set up communication dynamically; in other words, program-controlled by a specific application.

Typical applications for this, could be, for example manufacturers of serial machines. To make the user interfaces as convenient as possible for their customers, these manufacturers adapt the communications services to the particular operator entries.

Instructions for Freeport communication

There are 3 instructions available for the dynamic configuration in the user program for Freeport communication. The following applies to all 3 instructions: the previously valid configuration data is overwritten but not stored permanently in the target system.

- The "Port_Config" instruction is used for the program-controlled configuration of the relevant port of the communications module.
- The "Send_Config" instruction is used for the dynamic configuration, for example of time intervals and breaks in transmission (serial transmission parameters) for the relevant port.
- The "Receive_Config" instruction is used for dynamic configuration, for example of conditions for the start and end of a message to be transferred (serial receive parameters) for the relevant port.

Instructions for 3964 (R) communication

There are 2 instructions available for dynamic configuration in the user program for 3964 (R) communication. The following applies to the instructions: the previously valid configuration data is overwritten but not stored permanently in the target system.

- The "Port_Config" instruction is used for the program-controlled configuration of the relevant port of the communications module.
- The "P3964_Config" instruction is used for the dynamic configuration of protocol parameters.

Properties of the USS protocol

- Simple, serial data transfer protocol with cyclic message frame traffic in half duplex mode that is tailored to the requirements of drive technology.
- Data transfer works according to the master-slave principle.
  - The master has access to the functions of the drive and can, among other things, control the drive, read status values and read and write the drive parameters.

Data exchange using USS communication

The communications module is the master. The master continuously sends frames (job frames) to the up to 16 drives and expects a response frame from each addressed drive.

A drive sends a response frame under the following conditions:

- When a frame is received without errors
- When the drive is addressed in this frame

A drive must not send if these conditions are not met or the drive was addressed in the broadcast.

The connection to the relevant drives exists for the master once it receives a response frame from the drive after a specified processing time (response delay time).

Procedure for setting up USS communication

1. Configure an S7-1500 configuration with CPU and CM in the device view of the hardware and network editor of STEP 7.
2. In the Project tree, select the "Program blocks" folder and open OB1 in the folder by double-clicking on it. The program editor opens.
3. Select the instructions for USS communication according to your task in the "Communication" area, "Communications processor" folder of the "Instructions" task card and drag them to a network of OB1:
   - The "USS_Port_Scan" instruction allows you to communicate via the USS network.
   - The "USS_Drive_Control" instruction prepares send data for the drive and evaluates the response data of the drive.
   - The "USS_Read_Param" instruction is used to read out parameters from the drive.
   - The "USS_Write_Param" instruction is used to change parameters on the drive.
4. Assign the parameters for the instructions according to your configuration.
5. Download the hardware configuration and user program to the CPU.

Properties of the Modbus protocol (RTU)

- Communication takes the form of serial, asynchronous transfer with a transmission speed of up to 115.2 kbps, half duplex.
- Data transfer works according to the master-slave principle.
- The Modbus master can send jobs for reading and writing operands to the Modbus slave:
  - Reading inputs, timers, counters, outputs, memory bits, data blocks
  - Writing outputs, memory bits, data blocks
- Broadcast to all slaves is possible.

Data exchange using Modbus communication (RTU)

The communications module can be a Modbus master or Modbus slave. A Modbus master can communicate with one or more Modbus slaves (the number depends on the physical interface). Only the Modbus slave explicitly addressed by the Modbus master is permitted to return data to the Modbus master. The slave detects the end of the data transfer and acknowledges it. If an error occurs, it provides an error code to the master.

Procedure for setting up Modbus communication (RTU)

1. Configure an S7-1500 configuration with CPU and CM in the device view of the hardware and network editor of STEP 7.
2. In the Project tree, select the "Program blocks" folder and open OB1 in the folder by double-clicking on it. The program editor opens.

3. Select the instructions for Modbus communication according to your task in the "Communication" area, "Communications processor" folder of the "Instructions" task card and drag them to a network of OB1:
   - The "Modbus_Comm_Load" instruction configures the port of the CM for Modbus communication.
   - The "Modbus_Master" instruction is used for Modbus master functionality.
   - The "Modbus_Slave" instruction is used for Modbus slave functionality.
4. Assign the parameters for the instructions according to your configuration.
5. Download the hardware configuration and user program to the CPU.

Additional information

- You can find more detailed information on communication via point-to-point connections and basics of serial data transmission in the function manual CM PtP communication module - Configurations for point-to-point connections (https://support.industry.siemens.com/cs/us/en/view/59057093).
- You can find a description of how to use the instructions for point-to-point connections in the user program in the STEP 7 online help.
- You can find information about the communications modules with a serial interface in the manual of the particular communications module.

OPC UA communication 10

10.1 What you need to know about OPC UA

10.1.1 OPC UA and Industrie 4.0

Uniform standard for information and data exchange

Industry 4.0 stands for the intensive utilization, evaluation and analysis of the large volumes of data from production in IT systems at the enterprise level. With Industry 4.0, data exchange between the production and enterprise levels is rapidly increasing. However, a prerequisite for success is a uniform standard for the information and data exchange.

Classic OPC only runs on Windows operating systems. To get around this restriction, the OPC Foundation developed the OPC UA (OPC Unified Architecture) standard.

The OPC UA standard is particularly suitable for data exchange across different levels thanks to its independence from specific operating systems, its secure transfer procedures and the semantic description of data. Machine data (controlled variables, measured values or parameters) can also be transferred in this way.

An important component of this concept is that OPC UA communication can take place in parallel with real-time communication for time-critical, machine-level data transfer.

OPC UA is highly scalable so that a consistent information exchange between sensors, controllers and MES or ERP systems is possible.

OPC UA makes available not only data but also information about the data (data types), at the same time making possible machine-interpretable access to the data.

OPC UA topic page

For an overview of the most important articles and links on the subject of OPC UA, refer to the SIEMENS Industry Online Support.
OPC UA topic page (https://support.industry.siemens.com/cs/ww/en/view/109770435)

10.1.2 General features of OPC UA

OPC UA and PROFINET

OPC UA and PROFINET can be used together. The two protocols use the same network infrastructure.

Independence from the operating system

The OPC UA standard is platform-independent and uses an optimized TCP-based binary protocol for high-performance applications.

OPC UA can be used, for example, under Windows, Linux, Mac OS X, a realtime operating system or a mobile operating system (Android or iOS).

Independence of a specific transport layer

OPC UA currently supports the following transport mechanisms and protocols:

- The transfer of messages as a binary stream directly via TCP/IP
- The transfer of messages with XML via TCP/IP and HTTP. This transport mechanism allows only a slow transfer and is therefore almost never used. S7-1500 CPUs do not support this transport mechanism.

Binary data exchange is supported by all OPC UA applications (required in OPC UA specification).

Simple client-server principle

An OPC UA server provides a great deal of information within a network, e.g. relating to the CPU, the OPC UA server itself, the data and the data types. An OPC UA client accesses this information.

Implementation in different programming languages

The OPC Foundation has implemented the OPC UA standard in several programming languages: Stacks for .NET, ANSI C and Java are available, although maintenance has been discontinued for the stacks for ANSI C and Java.

The OPC Foundation offers the .NET stack as well as example programs as open source software. See Github (https://github.com/opcfoundation).

A number of companies offer Software Development Kits (SDK). These development packages contain the stacks of the OPC Foundation and other functionalities that facilitate the development of solutions.

Advantages of using SDKs:

- Support from the supplier
- Tested software
- Detailed documentation
- Clear license conditions (important for selling of solutions)

Scalability

OPC UA can be used for devices of different performance classes:

- Sensors
- Embedded systems
- Controllers
- PC systems
- Smartphones
- Servers running MES or ERP applications.

The performance class of the devices is differentiated by profiles. Different OPC UA profiles offer the possibility to scale OPC UA for very small and simple devices as well as for very high-performance devices.

An OPC UA profile describes functions and services that must be supported by the server and client. In addition, other functionalities/services that are not required by the profile can be optionally provided.

OPC UA profiles differ from PROFINET profiles; the latter define additional cross-vendor properties and behavior for installations and systems in the sense of a vendor-neutral software interface.

Nano Embedded Device 2017 Server Profile

For the smallest devices with severely limited functionality, there is the "Nano Embedded Device 2017 Server Profile" of the OPC Foundation. This profile is functionally equivalent to the core server facet and defines the OPC UA TCP binary protocol as the required transport profile. The profile allows for connections without UA Security and does not allow subscriptions or method calls. Support for diagnostic objects and variables is optional for this profile.

Additional profiles build on the "Nano Embedded Device 2017 Server Profile", requiring more resources and offering more functionality.

Micro Embedded Device 2017 Server Profile

This profile provides limited functionality; it requires at least two parallel connections. Additionally, it allows subscriptions/data monitoring, but no UA Security and no method calls.

- S7-1200 Basic Controllers support the "Micro Embedded Device 2017 Server Profile". The S7-1200 additionally supports UA Security.

Embedded 2017 UA Server Profile

This profile has been developed for devices with more than 50 MB RAM and a more high-performance processor. It is based on the Micro Embedded Device Server profile. In addition, it requires UA security and method calls.

In addition, the servers must make their used type model (data types, reference types, variable types, etc.) available.

- S7-1500 Advanced Controllers support the "Embedded 2017 UA Server Profile".

Standard and global discovery profiles

The "OPC UA Specification Part 7" defines additional profiles:

- The "Standard 2017 UA Server Profile", which is suitable for PC-based OPC UA servers
- 2 global profiles, "Global Discovery Server 2017 Profile" and "Global Discovery and Certificate Management 2017 Server Profile", that cover the required service and information models of a Global Discovery Server

Type-instance concept

OPC UA offers a fully networked (full-meshed network), object-oriented information model for namespaces, including metadata for the object description. Any object structures can be generated via referencing of the instances among each other and their types. Because servers disclose their instance and type systems, clients can navigate through this network and obtain all the information they need. Both instances and their type definitions are available in runtime.

Procedures or concepts on how to handle references to types are optimized over time. These optimizations lead to new versions of the OPC UA Specification (e.g. V1.03 => V1.04).

PLC tag mapping

The information of the OPC UA server (for example the PLC tags) is modeled as nodes connected to one another via references. The semantics are displayed by the server in the address space and can be acquired by clients (while navigating). This makes it possible to browse from node to node with an OPC UA client and find out what content can be read, monitored or written.

Integrated security mechanisms

OPC UA uses security mechanisms at various levels:

- A secure connection can only be established between an OPC UA server and an OPC UA client if the client and server can register with X.509-v3 certificates and accept each other's certificates (security at the application level). Various security policies are possible, including an unsecured connection between server and client (Security Policy: "No security").
- A server can always request the following information from the user for authorized access (authentication):
  - A user certificate (not configurable in STEP 7)
  - User name and password
  - No user authorization

The security mechanisms are optional and configurable.

More information

You can find more information on the website of the OPC Foundation (https://opcfoundation.org).

10.1.3 OPC UA for S7-1200/S7-1500 CPUs

In OPC UA, one system operates as a server and provides data the existing information to other systems (clients).

OPC UA clients, for example, have read and write access to data on an OPC UA server. OPC UA clients call methods on the OPC UA server.

You can access this data online with a client, including e.g. information on performance and diagnostics. In OPC UA terminology, this function is called "Browsen". The "Subscription"

function eliminates regular reading of a tag; with this function, the server informs a client about value changes.
A system can be both a client and a server at the same time.

OPC UA server of the S7-1500 CPU

As of firmware version 2.0, an S7-1500 CPU is equipped with an OPC UA server.
The following sections describe how you configure the OPC UA server of the S7-1500 CPU to make data and methods available for OPC UA clients so that clients have read or write access to PLC tags on the CPU and can call server methods.
The following sections also set out how to integrate companion specifications into the address space of the OPC UA server.

OPC UA server of the S7-1200 CPU

As of firmware V4.4, an S7-1200 CPU is equipped with an OPC UA server.
The OPC UA server is generally configured as it is for an S7-1500 CPU; the scope of functions and the quantity limits are limited according to the supported "Micro Embedded Device 2017 Server Profile". Unlike for an S7-1500 CPU, the functions "Registered Read" and "Registered Write" are **not** available.
As of firmware V4.5, S7-1200 CPUs support server methods as well as structured data types (structures and arrays).
You can find additional information in the STEP 7 online help.

OPC UA client of the S7-1500 CPU

As of firmware version V2.6, an S7-1500 CPU is additionally equipped with an OPC UA client.
The following sections show how to use standardized instructions (PLCopen function blocks) to create a user program that, as an OPC UA client, provides the following functions:

- Reading data from an OPC UA server
- Writing data to an OPC UA server
- Calling methods of an OPC UA server

STEP 7 (TIA Portal) assists you in creating user programs by providing an editor for client interfaces and a parameter assignment for OPC UA connections.
The OPC UA instructions for an S7-1500 CPU as client are described in detail in the help to the instructions (Instructions > Communication > OPC UA).

OPC UA client for test purposes

The following description uses various different OPC UA clients to illustrate the use of OPC UA clients:

- "UaExpert" of Unified Automation. An extensive client that can be used free of charge:
  Link for downloading UaExpert (https://www.unified-automation.com/downloads/opc-ua-clients.html)
- "UA Sample Client" of the OPC Foundation. This client is available free of charge for users who are registered with the OPC Foundation :
  Link for downloading the example client of the OPC Foundation (https://opcfoundation.org)

Application example in Industry online support

Siemens Industry Online Support provides a free application example with a client API for various applications. You use the functions of this interface to create your own OPC UA clients that match your application. To simplify handling the API, we offer a higher-level .NET helper class.

The client API is based on the .NET OPC UA stack of the OPC Foundation.

The application example shows how to establish connections between servers and clients, for example. It also demonstrates the reading and writing of PLC tags.

Link to download: OPC UA .NET client for the SIMATIC S7-1500 OPC UA Server (https://support.industry.siemens.com/cs/us/en/view/109737901)

10.1.4 Access to OPC UA applications

The access possibilities that an S7-1500 CPU with an OPC UA application (client or server) has via a CP in the same station are described below. In addition, an approach for combining these access possibilities with the "IP Forwarding" function to allow access to devices of another IP subnet via an S7-1500 station is presented.

All the settings for this can be found in the CPU properties, "Advanced configuration" area in the Inspector window.

The possibility of accessing the OPC UA application in the CPU via CP interface is subject to the following requirements:

- S7-1500 CPU (except S7-1500 R/H) as of firmware version V2.8
- CP 1543-1 firmware version V2.2 or higher

Recommendation: Use a CP 1543-1 with firmware V3.0 or higher. As of this version, the security functions (firewall) are also available for the virtual interface and no additional firewall needs to be installed between the station and an insecure network.

Principle: Interface for access via communication module

For a CPU application, such as OPC UA, to be accessed via CP interface, you must configure a virtual interface (W1). IP-based applications can then be accessed via the IP address parameters of this virtual interface.

The schematic is shown in the following figure.

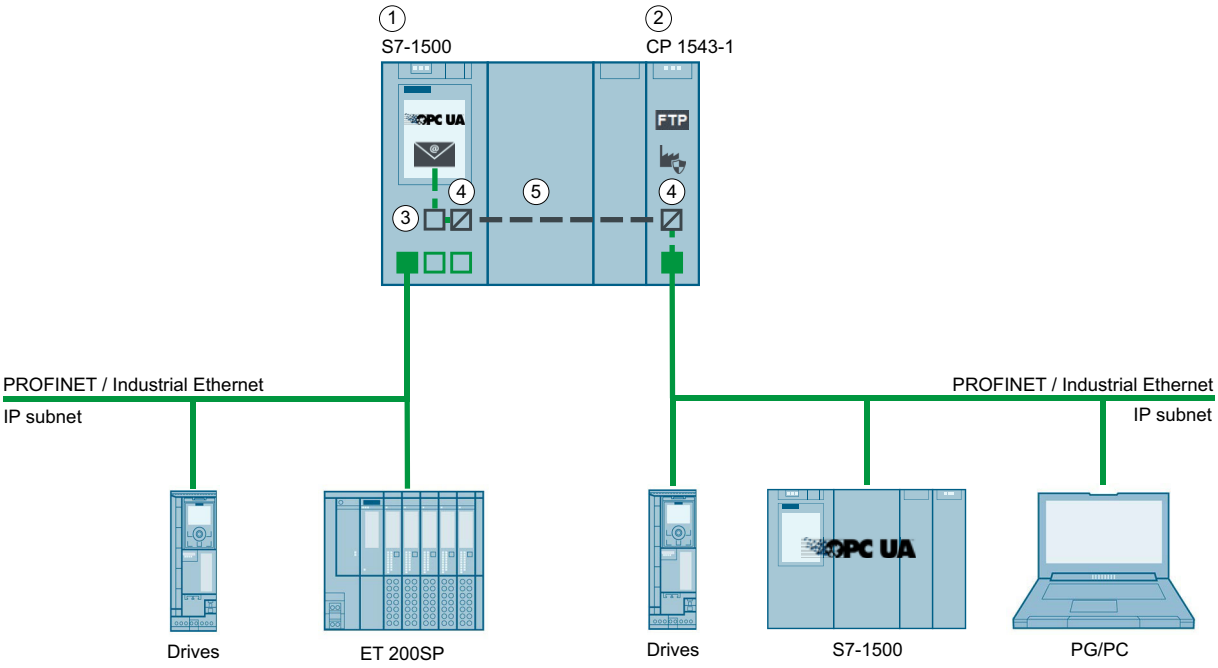

① CPU S7-1500 FW V2.8 or higher (e.g. CPU 1515-2 PN)

② CP 1543-1 (FW V2.2 or higher)

③ Virtual interface (W1)

④ Protocol conversion PROFINET / Industrial Ethernet on backplane bus or backplane bus on PROFINET / Industrial Ethernet

⑤ Backplane bus

Figure 10-1 Principle: Interface for access via communication module

Example: Access of OPC UA clients to the OPC UA server of the CPU

For access of an OPC UA client to the OPC UA server of the CPU, the following interfaces of the S7-1500 station are available:

- The local PROFINET interfaces of the S7-1500 CPU
- The Ethernet interface of a CP 1543-1 (firmware version V2.2 and higher)

The following figure shows an example of a possible configuration: The CPU could also have the role OPC UA client and the device on the subnet of the CP could have the role OPC UA server.

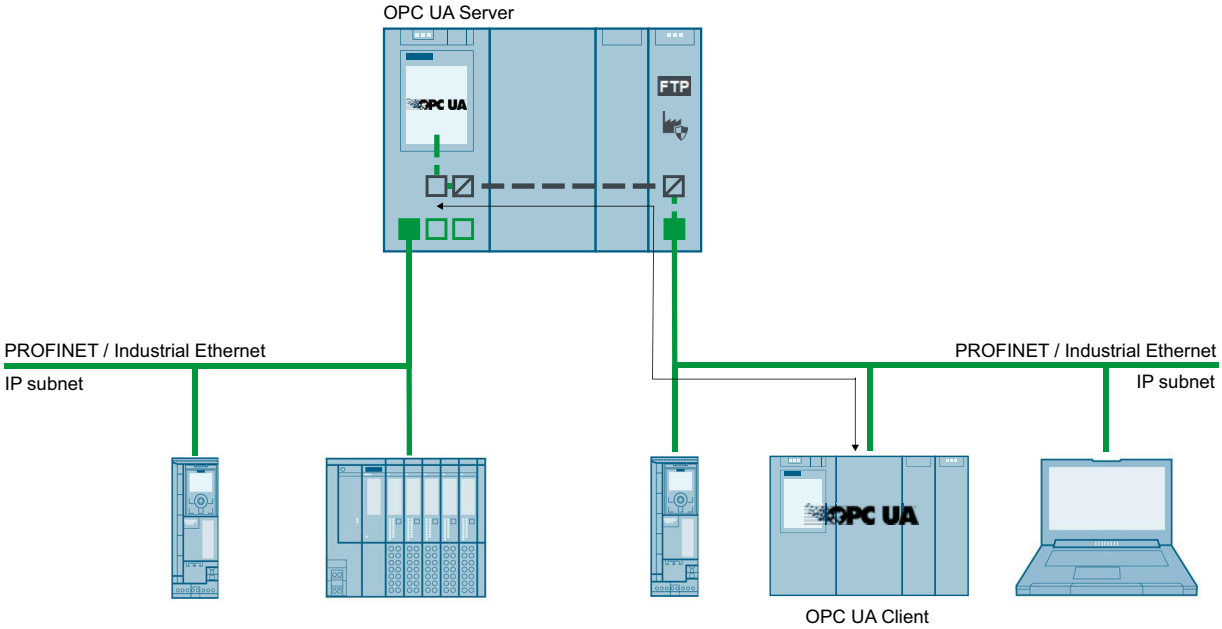

Figure 10-2 Example: Access of OPC UA clients to the OPC UA server of the CPU

Example: Access of OPC UA clients to OPC UA servers via S7-1500 CPU with activated IP Forwarding

OPC UA client and OPC UA server can also be connected to one another via an S7-1500 CPU, in which case the S7-1500 CPU operates as an IP Forwarder. This configuration option allows for flexible expansion of existing systems.

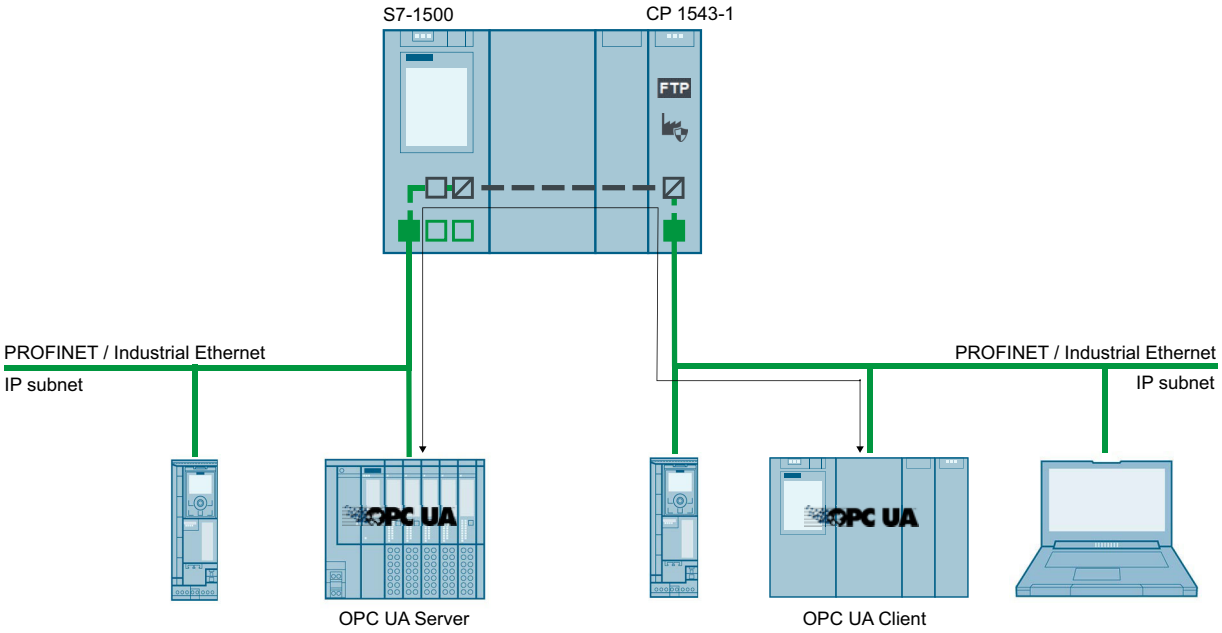

Figure 10-3 Example: Access of OPC UA clients to OPC UA servers via S7-1500 CPU with activated IP Forwarding

More information

More information on access options via the virtual interface and via IP forwarding can be found in the following sections:

- IP forwarding (Page 356)
- Virtual interface for IP-based applications (Page 365)

10.1.5 Addressing nodes

Nodes are the basic elements of OPC UA, they are comparable with objects from object-oriented programming. Nodes are used, for example, for user data (tags) or other metadata. Nodes are used to model an OPC UA address space that also contains a type model with type definitions.

Node ID (NodeId)

Nodes in the OPC UA address space are uniquely identified by a NodeId (Node Identifier).

The NodeId consists of an identifier, identifier type and a namespace index. Namespaces are used to avoid naming conflicts.
The OPC Foundation has defined a wide range of nodes that provide information about the given OPC UA server. These nodes can be found in the namespace of the OPC Foundation and have the index 0.
The OPC Foundation also defines data types and tag types.

Namespace (Namespace)

In addition to the above-described namespace of the OPC Foundation, the namespace for accessing CPU data is of interest: All the tags or methods of an S7-1500 OPC UA server are contained in the namespace (Namespace) of the standard server interface "http://www.siemens.com/simatic-s7-opcua".
By default this namespace has the Index 3. The index may change later if additional namespaces are inserted into the server or if existing ones are deleted. It is therefore necessary for an OPC UA client to request the current index of the namespace (e.g. "http://www.siemens.com/simatic-s7-opcua") from the server before reading or writing its values.
The following figure shows an example of the result of such a request.

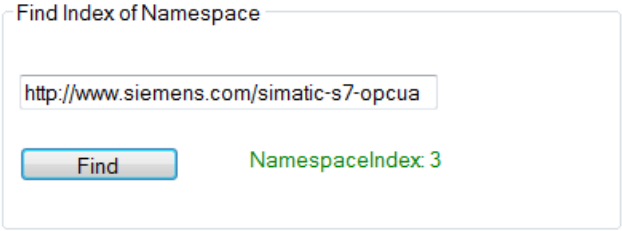

Identifier

The Identifier corresponds to the name of the PLC tag in quotation marks. The quotation mark is the only sign that is not permitted as part of a name in STEP 7. Quotation marks avoid naming conflicts.
The following example reads the value of the "StartTimer" tag:

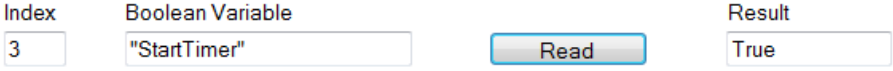

The Identifier can consist of several components. The individual components are then separated by a dot.

The following example reads the "MyDB" array data block completely. This data block contains an array with ten integer values. All ten values should be read in one pass. Therefore, "0:9" is entered at the array range.

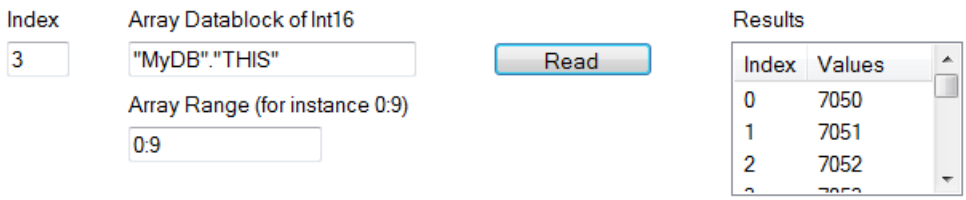

Example of NodeIds, identifiers and namespaces

The following figure illustrates the relation between NodeIds, identifiers and namespaces: It is no problem if two nodes have the same identifiers but belong to different namespaces. STEP 7 (TIA Portal) allows you to easily import namespaces via a server interface.

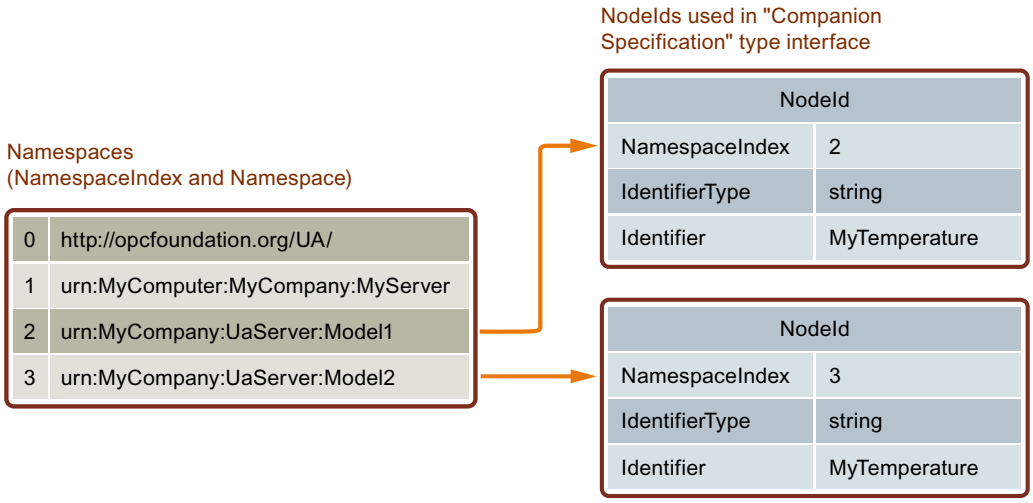

PLC tags in the address space of the OPC UA server

The figure below shows where the PLC tags in the example are located in the address space of the OPC UA server (excerpt from UA client):

The "MyDB" data block is a global data block. The data block is therefore located below the node "DataBlocksGlobal". "StartTimer" is a memory tag and is therefore stored below the "Memory" node.

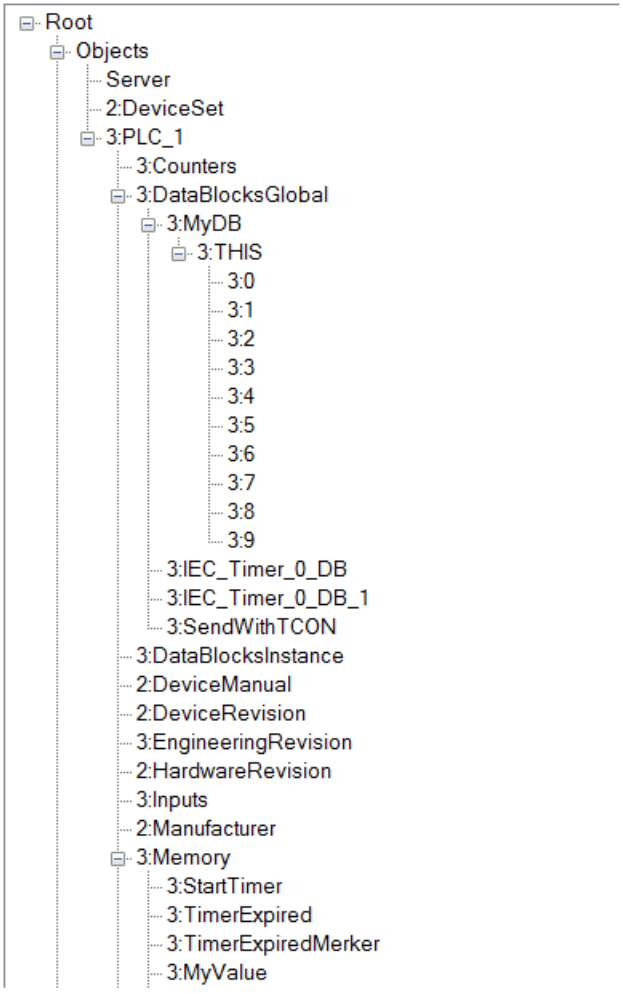

Figure 10-4 PLC tags in the address space of the OPC UA server

Methods in the address space of the OPC UA server

If you implement a method via your user program, it takes the following form in the address space of the OPC UA Server

(see Providing methods on the OPC UA server (Page 267)):

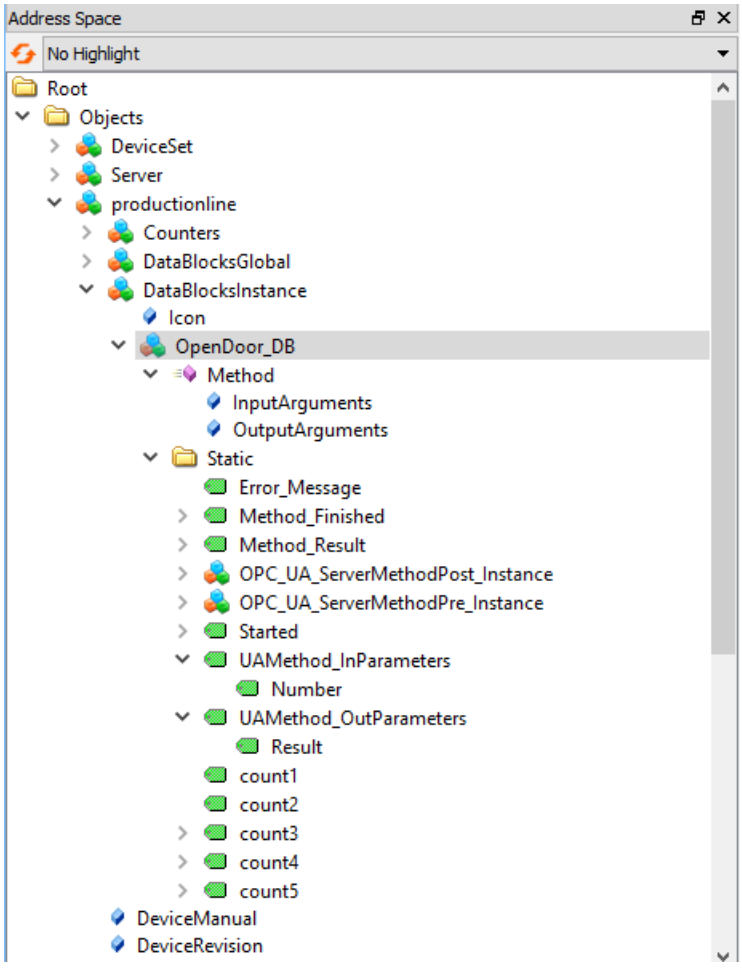

Figure 10-5 Methods in the address space of the OPC UA server

10.1.6 What you need to know about OPC UA clients

Basics of OPC UA clients

OPC UA clients are programs that do the following:

- Access the information from an OPC UA server (for example an S7-1500 CPU): read/browse access, write access, subscriptions
- Execute methods through the OPC UA server

However, OPC US clients can only access data that is enabled for this purpose (see "Managing write and read rights (Page 207)").

You need the endpoint of the server to establish a connection to an OPC UA server (see "Endpoints of the OPC UA servers (Page 198)").

Reading out information from the OPC UA server

When a connection to an end point of the server exists, you can use the navigation function of the client: You navigate starting from a defined starting point (from the "root" node) through the address space of the server.

The following information is provided in the process:

- Enabled PLC tags, data blocks and data block components
- Namespace index and identifiers of these PLC tags, data blocks and DB components
- Data types of the PLC tags and DB components
- Number of components in arrays (required for reading and writing arrays)

In addition, you receive information about the OPC UA server itself as well as information about the S7-1500 based on the "OPC UA for Devices" standard of the OPC Foundation (for example, serial number, firmware version).

Reading data from the server and writing to the server

You now know the namespace, identifier and data type of PLC tags. This means that you can now specifically read individual PLC tags and DB components as well as complete arrays and structures.

You can find examples of the reading of Boolean tags and array data blocks in Addressing nodes (Page 159).

Rules for access to structures are available here (Page 322).

With the information that you obtain while navigating through the address space of the server (index, identifier and data type), you can also transfer values to the S7-1500 with the OPC UA client. The following example overwrites the first three values in the array data block "MyDB".

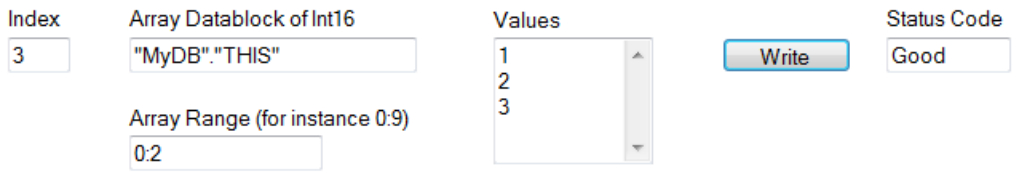

For "Array Range" you specify which components of the array you want to overwrite. The "Good" status code indicates that the values were transferred successfully. However, you can only write the values to the S7-1500 but not the time stamps of these values. The time stamps can only be read.

Faster access through registration

Registered Read/Write lends itself to repeated, optimized access to data – with maximum performance. When tag nodes are registered, the OPC UA server creates a numerical Identifier (numerical NodeId) that directly references the registered node. For read or write jobs of the client to this numerical Identifier, the server does not have to resolve any strings as Identifier and can access the requested tag in an optimized manner.

This Identifier applies solely to the current session and has to be queried again when the session connection is terminated/lost.

In the following example, the "StartTimer" tag is first registered on the server. Afterwards, the rapid function "RegisteredWrite" is used for setting the value.

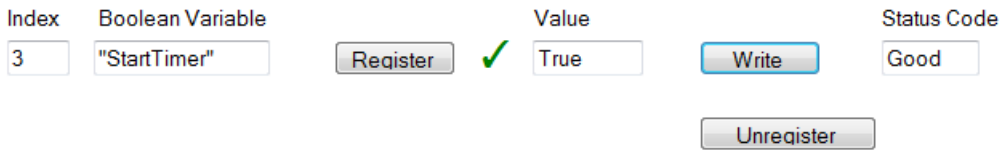

In accordance with the same scheme, the "RegisteredRead" function can also be used, which is particularly useful for recurring data readouts. Take into account, however, that depending on the application it may be advisable to use a Subscription instead.

Recommendation: It is best to place registrations in the startup program of the OPC UA client, since the registration takes up time.

Please note that you can set the maximum number of registered nodes in the properties of the S7-1500 CPU and that the Clients have to respect this number, see General settings of the OPC UA server (Page 220).

Subscription

The term "Subscription" is used for a function in which only those tags for which an OPC UA client has registered at the OPC UA server are transferred. The OPC UA server only sends a message to the OPC UA client for these registered tags (monitored Items) when a value has changed. The monitoring of these tags makes constant sampling by the OPC UA client (Polling)superfluous, which reduces the network load.

You have to create a Subscription to use this function. For this purpose, you specify the "Publishing Interval" at the UA client and click the "Create" button. The publishing interval is the time interval in which the server sends new values to the client in a notification (data change notification).

In the following example a subscription has been created: The client receives a message with the new values (publishing interval 50 ms) every 50 milliseconds here.

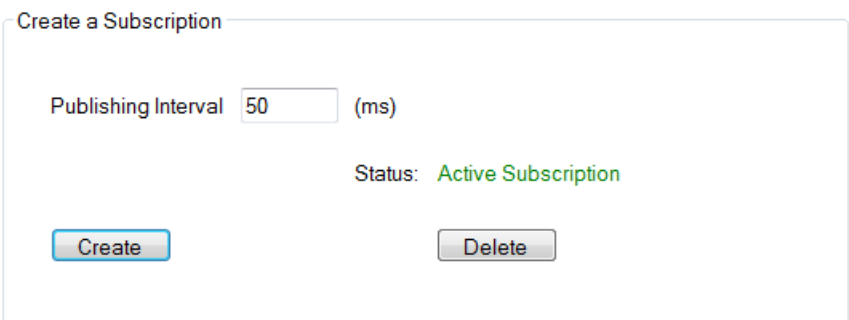

Preventing server overload

You can set the OPC UA server of the S7-1500 CPU by means of the "Minimum publishing interval" so that it does not serve extremely short send intervals requested by the client, see Settings of the server for subscriptions (Page 222).

Example: A client wants to be operated at a publishing interval of 50 ms as detailed above. Such a short publishing interval would, however, result in a high network and server load. You should therefore set 1000 ms as the "Minimum publishing interval" for the server. Clients

whose subscription requires shorter publishing intervals are "slowed" to 1000 ms and the server is protected from overload.

Sampling and transmission (Sampling & Publishing) within the scope of a subscription are communication processes which, like other communication processes (TCP/UDP/Web server communication...), are processed by the CPU with priority 15. OBs with higher priority interrupt the communication. If you set the sampling and transmission intervals too short, this setting causes a high communication load. Therefore, select intervals as large as possible, which are still sufficient for the application.

For information about the consistency of tags, refer to Consistency of CPU tags (Page 212).

Monitoring of PLC tags

When the Subscription has been created, you inform the server which tags are to be monitored with it. In the following example, the "Voltage" tag was added to the subscription.

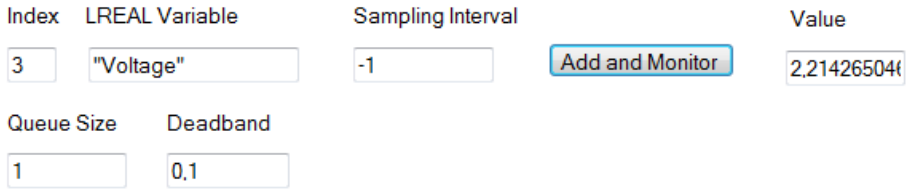

The "Voltage" tag contains the value of a voltage that is detected by an S7-1500 CPU.

The sampling interval ("Sampling Interval") contains a negative value (-1). This determines that the default setting of the OPC UA server is used for the sampling interval. The default setting is defined by the transmission interval ("Publishing Interval") of the subscription. If you want to set the smallest possible sampling interval, select the value "0".

In this example, the length of the queue is set to "1": Only one value is read from the CPU at an interval of 50 milliseconds and subsequently sent to the OPC UA client when the value has changed.

The "Deadband" parameter in this example is "0.1": Changes in value have to amount to 0.1 Volt; only then does the sender send the new value to the client. The server does not send smaller changes in value. You can use this parameter, for example, to disable signal noise: Slight changes in a process variable which do not have a real meaning.

10.1.7 Mapping of data types

SIMATIC and OPC UA data types

SIMATIC data types do not always correspond with OPC UA data types.

S7-1500 CPUs provide SIMATIC tags (with SIMATIC data types) to their own OPC UA server as OPC UA data types. OPC UA clients can then access these tags with OPC UA data types via the server interface.

A client can read the attribute "DataType" from such a tag and reconstruct the original data type in SIMATIC.

Example

A tag has the SIMATIC data type "COUNTER". You read COUNTER → UInt16 in the table. You now know that you do not need to convert; the COUNTER value is sent over the line as a UInt16 data type.

The client detects from the attribute "DataType" that the tag is actually the SIMATIC data type "COUNTER". With this knowledge, the client reconstructs the data type.

Table 10-1 SIMATIC and OPC UA data types

SIMATIC data type	OPC UA data type
BOOL	Boolean
BYTE	BYTE → Byte
WORD	WORD → UInt16
DWORD	DWORD → UInt32
LWORD	LWORD → UInt64
SINT	SByte
INT	Int16
DINT	Int32
LINT	Int64
USINT	Byte
UINT	UInt16
UDINT	UInt32
ULINT	UInt64
REAL	Float
LREAL	Double
S5TIME	S5TIME → UInt16
TIME	TIME → Int32
LTIME	LTIME → Int64
DATE	DATE → UInt16
TIME_OF_DAY (TOD)	TOD → UInt32
LTIME_OF_DAY (LTOD)	LTOD → UInt64
DATE_AND_TIME (DT)	DT → Byte[8]
LDT	DateTime

SIMATIC data type	OPC UA data type
DTL Special note: You can only describe the structure completely with an OPC UA client. You have read-only access individual elements of this structure (e.g. "YEAR")	mapped as structure
CHAR	CHAR → Byte
WCHAR	WCHAR → UInt16
STRING (Code page 1252 or Windows-1252)	STRING → String
WSTRING (UCS-2; Universal Coded Character Set)	String
TIMER	TIMER → UInt16
COUNTER	COUNTER → UInt16

Arrays

A read or write job with OPC UA is always an array access, which means that it always has an index and length. A single tag is a special case of an array (index 0 and length 1). The data type is simply sent repeatedly on the line. For the tags, the "DataType" attribute indicates the basic data type. The attributes "ValueRank" and "ArrayDimensions" show whether or not you are dealing with an array and how large the array is.

Data types based on arrays

There are SIMATIC data types for which an OPC UA value is mapped to an array of bytes. An array of these data types is then mapped to a two-dimensional array.

Example: The SIMATIC data type DATE_AND_TIME (DT) is mapped on the OPC UA side to an 8-byte array (Byte[8]), see table above. When you define an array of the SIMATIC data type DATE_AND_TIME (DT), then it is considered as two-dimensional array.

This fact affects the use of system data types such as OPC_UA_NodeAdditionalInfo and OPC_UA_NodeAdditionalInfoExt, for example:

For the data types described above, you must use the system data type OPC_UA_NodeAdditionalInfoExt for multidimensional arrays instead of OPC_UA_NodeAdditionalInfo.

Structures

Structures are transferred as ExtensionObject. The S7-1500 server uses binary representation for transmission of the ExtensionObjects over the line; the individual structure elements come one after the other. At the front is the NodeId of the data type; this is used by the client to establish the structure.

For OPC UA Specification <= V1.03, a client has to read, decode and interpret the complete DataTypeDictionary for this (unless it has already learned this library offline through an XML import).

Starting in OPC UA V1.04, the DataTypeDescription attribute is also available for this, which can be read and interpreted more quickly and easily. A client only determines the setup of the structure once, before or during the first access, and then uses this information for the duration of the session.

Special SIMATIC data types

SIMATIC data types that are not in the table above and cannot be defined as elements of a structure or PLC data type are not supported by the OPC UA client.

These are, for example, "ANY" or "POINTER" pointers, function block "Block_FB", function "Block_FC" or hardware data type "REMOTE".

The selection of an unsupported data type leads to an error message.

Additional information

More details on mapping of basic data types, arrays and structures can be found in the OPC UA Specification Part 6, "Mappings" (see OPC UA BINARY there).

What must be considered with arrays and data types DTL and LDT in the OPC UA server of a SIMATIC S7-1500? FAQ (https://support.industry.siemens.com/cs/ww/en/view/109766726)

10.2 Security at OPC UA

10.2.1 Security settings

Addressing risks

OPC UA allows the exchange of data between different systems, both within the process and production levels and to systems at the control and enterprise level.

This possibility also entails security risks. That is why OPC UA provides a range of security mechanisms:

- Verification of the identity of OPC UA server and clients.
- Checking of the identity of the users.
- Signed/encrypted data exchange between OPC UA server and clients.

These security policies should only be bypassed in cases where it is absolutely necessary:

- During commissioning
- In stand-alone projects without external Ethernet connection

If you have selected the endpoint "None" for "UA Sample Client" of the OPC Foundation, for example, the program issues a clear warning:

Warning: Selected Endpoint has no security.

When STEP 7 compiles your project it also checks whether you have considered the setting options for the protection and warns you of possible risks. This also includes an OPC UA security policy with the setting "no security", which corresponds to the end point "None".

NOTE

Disabling security policies you do not want

If you have enabled all security policies in the secure channel settings of the S7-1500 OPC UA server – thus, also the end point "None" (no security) – unsecured data traffic (neither signed nor encrypted) between the server and client is also possible. The OPC UA server of the S7-1500 CPU also sends its public certificate to the client at "None" (No security). And some clients check this certificate. However, the client is not forced to send a certificate to the server. The identity of the client may possibly remain unknown. Each OPC UA client can then connect to the server irrespective of any subsequent security settings.

When configuring the OPC UA server, make sure that only security policies that are compatible with the security concept of your machine or plant are selected. All other security policies should be disabled.

Recommendation: Use the setting "Basic256Sha256 - Sign and Encrypt", which means that the server only accepts Sha256 certificates. The security policies "Basic128Rsa15" and "Basic256" are deactivated by default and should not be used as an end point. Select end points with a higher security policy.

Additional security rules

- Only use the end point "None" in exceptional cases.
- Only use the "guest authentication" of the user in exceptional cases.
- Only allow access to PLC tags and DB components via OPC UA if it is genuinely necessary.
- Use the list of trusted clients in the settings of the S7-1500 OPC UA client to allow access to certain clients only.

10.2.2 Certificates pursuant to ITU X.509

Security mechanisms are integrated in several layers in OPC UA. Digital certificates have an important role here. An OPC UA client can only establish a secure connection to an OPC UA server when the server accepts the digital certificate of the client and classifies it as trusted.

See section Handling client and server certificates (Page 224).

The client must also check and trust the certificate of the server. The server and client must show their identities and prove that they are what they claim to be: They must prove their identity. Mutual authentication of client and server, for example, prevents man-in-the-middle attacks.

Man-in-the-middle attacks

A "man-in-the-middle" could have positioned itself between server and client. A man-in-the-middle is a program that intercepts communication between server and client and claims to be a client or server, and is thus able to obtain information about the S7 program or to set values in the CPU and attack a machine or plant.

OPC UA uses digital certificates that meet standard X.509 of the International Telecommunication Union (ITU).

This allows the identity of a program, a computer or an organization to be proven (authenticated).

X.509 certificates

An X.509 certificate includes the following information:

- Version number of the certificate
- Serial number of the certificate
- Information on the algorithm used by the certificate authority to sign the certificate.
- Name of the certificate authority
- Start and end of the validity period of the certificate
- Name of the program, person or organization for which/whom the certificate has been signed by the certificate authority.
- The public key of the program, person or organization.

An X509 certificate thus links an identity (name of a program, person or an organization) to the public key of the program, person or organization.

Check during connection establishment

When a connection is being established between the client and server, the devices check all information from the certificate that is required to determine its integrity, such as signature, period of validity, application name (URN) and, in case of firmware version V2.5 only, also the IP address of the client in the client certificate.

NOTE

The validity period stored in the certificate is also checked. The CPU clock must therefore be set and date/time must be within the validity period, otherwise no communication takes place.

Signing and encryption

To allow you to check whether a certificate has been manipulated, certificates are signed.

There are various possible procedures here:

- Within the TIA Portal you have the possibility to generate and sign certificates. If you have protected your project and are logged in as a user with the function right to make security settings, you can use the global security settings. The global security settings allow access to the certificate manager and therefore to the certificate authority (CA) of the TIA Portal.
- Additional options are available for creating and signing certificates. In the TIA Portal, you can import certificates into the global certificate manager.
  - You contact a certificate authority (CA) and have your certificate signed.
    In this case, the certificate authority checks your identity and signs your certificate with the private key of the certificate authority. For this purpose you send a CSR (Certificate Signing Request) to the certificate authority.
  - You yourself create a certificate and sign it.
    To this purpose you use, for example, the "Opc.Ua.CertificateGenerator" program of the OPC Foundation. Alternatively, you use OpenSSL.
    You can find more information in Generating PKI key pairs and certificates yourself (Page 175).

Useful information: Certificate types

- Self-signed certificate:
  Each device generates and signs its own certificate. Application examples: Static configuration with limited number of communication nodes.
  No new certificates can be derived from a self-signed certificate. However, you need to load all self-signed certificates from partner devices to the CPU (STOP required).
- CA certificate:
  All certificates are generated and signed by a certificate authority. Application examples: Dynamically growing plants.
  You only need to download the certificate from the certificate authority to the CPU. The certificate authority can generate new certificates (partner devices can be added without CPU STOP).

Signing

The signature makes it possible to prove the integrity and source of a message as detailed below.

Signing starts with the sender creating a hash value from the plain text (plain text message). The sender then encrypts the hash value with its private key and subsequently transfers the plain text together with the encrypted hash value to the recipient. To verify the signature, the recipient needs the public key of the sender (this is contained in the X509 certificate of the sender). The recipient uses the sender's public key to decrypt the hash value received. The recipient then forms the hash value themselves from the plain text received (the hash process is contained in the sender's certificate). The recipient compares the two hash values:

- If the two hash values are identical, the plain text message has reached the receiver unchanged and has not been manipulated.
- If the two hash values do not match, the plain text message has not reached the receiver unchanged. The plain text message has been manipulated or has been distorted during transfer.

Encryption

Encrypting data prevents unauthorized parties from reading the content. X509 certificates are not encrypted; they are public and can be viewed by anyone.
Encryption involves the sender encrypting the plain text message with the public key of the recipient. To do so, the sender requires the recipient's X509 certificate, as it contains the public key of the recipient. The recipient decrypts the message with their private key. Only the recipient can decrypt the message: They alone hold the private key. The private key must therefore never be disclosed.

Secure channel

OPC UA uses the private and public key of client and server to establish a secure connection, the secure channel. Once the secure connection has been established, the client and server generate an internal key only known to them which they both use for signing and encrypting messages. This symmetric process (a shared key) is much faster than asymmetric processes (private and public key).

More information

An application example for the use of certificates with the TIA Portal can be found here: Using certificates with TIA Portal
(https://support.industry.siemens.com/cs/ww/en/view/109769068).

10.2.3 Certificates with OPC UA

Usage of X509 certificates with OPC UA

OPC UA uses various types of X.509 certificates for establishing a connection from client to server:

- OPC UA application certificates
  Such X.509 certificates identify the software instance, the installation of client or server software. For the "Organization name" attribute, you enter the name of the company that uses the software.

  NOTE

  The OPC UA server of the S7-1500 uses application certificates even for the security setting "None" (no security). This ensures compatibility to OPC UA V1.1 and earlier versions.

- OPC UA software certificates
  This X-509 certificate identifies a specific version of the client or server software. These certificates contain attributes that describe which tests this version of the software has passed during certification by the OPC Foundation (or recognized test laboratories). For the "Organization name" attribute, you enter the name of the company that has developed or markets the software.

  NOTE
  Software certificates are not supported in STEP 7.

- OPC UA user certificates
  This X.509 certificate identifies the specific user who, for example, retrieves process data from the OPC UA server. This certificate is not required if the user can authenticate itself with a password, or if anonymous access is configured.

  NOTE
  User certificates are not supported in STEP 7.

The described certificates are end-entity certificates: They identify, for example, a person, an organization, a company or an instance (installation) of a software.

10.2.4 Creating self-signed certificates

Using the client's certificate generator

Many OPC UA client applications or SDKs are integrated in a sample application that allows you to generate certificates for the client from this application.
The description for certificate generation can generally be found in the context for describing the OPC UA client application.

Example client from the online support
The OPC UA .NET client for the SIMATIC S7-1500 OPC UA server (https://support.industry.siemens.com/cs/ww/en/view/109737901) creates a self-signed software certificate of the client application in the Windows Certificate Store during the first program start. The documentation for this example describes the procedure for handling these certificates.

Using the certificate generator of the TIA Portal

If you use an OPC UA client that does not generate a client certificate, you can create self-signed certificates with STEP 7.
To do this, follow these steps:

1. In the properties of the CPU, double-click "<Add new>" under "Protection & Security > Certificate manager > Device certificates".
2. Click "Add".
3. In the "Create a new certificate" dialog, select the "OPC UA client" option for "Usage".
4. Click "OK".

In the field "Subject Alternative Name" STEP 7 automatically enters the URI for the generated certificate. In the program-specific certificate generation by means of the .NET stack of the OPC Foundation, the field is called, for example, "ApplicationUri" - it can have a different name in other tools for certificate generation.

More information

For more information on handling client certificates, refer to the section Handling of the client certificates of the S7-1500 CPU (Page 327).

10.2.5 Generating PKI key pairs and certificates yourself

This section is only relevant if you want to use an OPC UA client that cannot itself create a PKI key pair and a client certificate. In this case, you generate a private and a public key using OpenSSL, generate an X.509 certificate, and sign the certificate yourself.

Using OpenSSL

OpenSSL is a tool for Transport Layer Security that you can use to create certificates. You can also use other tools, for example XCA, a type of key management software with a graphical user interface for an improved overview of certificates issued.

To work with OpenSSL under Windows, follow these steps:

1. Install OpenSSL under Windows. If you are using a 64-bit version of the operating system, install OpenSSL in the "C:\OpenSSL-Win64" directory, for example. You can obtain OpenSSL-Win64 as a download from various providers for open source software.
2. Create a directory, for example "C:\demo".
3. Open the command prompt. To do so, click "Start" and enter "cmd" or "command prompt" in the search field. Right-click "cmd.exe" in the results list and run the program as an administrator. Windows opens the command prompt.
4. Change to the "C:\demo" directory. To do this, enter the following command: "cd C:\demo".
5. Set the following network variables:
   - set RANDFILE=c:\demo\.rnd
   - set OPENSSL_CONF=C:\OpenSSL-Win64\bin\openssl.cfg

   The figure below shows the command line with the following commands:

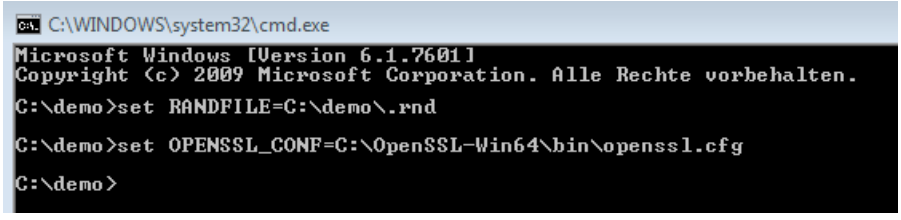

6. Now start OpenSSL. If OpenSSL has been installed in the C:\OpenSSL-Win64 directory, enter the following: C:\OpenSSL-Win64\bin\openssl.exe The figure below shows the command line with the following command:

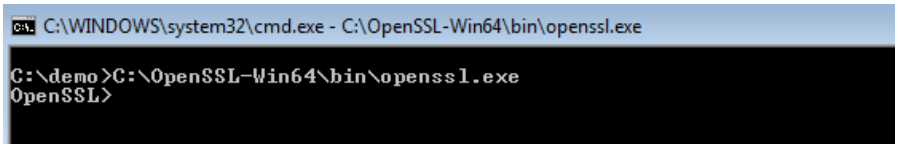

7. Generate a private key. Save the key to the "myKey.key" file. The key in this example is 1024 bits long; for greater RSA security, use 2048 bits in practice. Enter the following command: "genrsa -out myKey.key 2048" ("genrsa -out myKey.key 1024" in the example). The figure below shows the command line with the command and the output of OpenSSL:

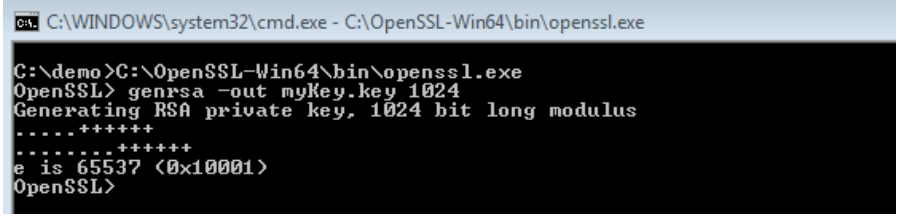

8. Generate a CSR (Certificate Signing Request). To do this, enter the following command: "req -new -key myKey.key -out myRequest.csr". During execution of this command, OpenSSL queries information about your certificate:
   - Country name: for example "DE" for Germany, "FR" for France
   - State or province name: for example "Bavaria".
   - Location Name: for example "Augsburg".
   - Organization Name: Enter the name of your company.
   - Organizational Unit Name: for example "IT"
   - Common Name: for example "OPC UA client of machine A"
   - Email Address:

NOTE

Note for S7-1500 CPU as server with firmware version V2.5

The IP address of the client program has to be stored in the "Subject Alternative Name" field of the created certificate for S7-1500 CPUs version V2.5 (only for this version); otherwise, the CPU will not accept the certificate.

The information you enter is added to the certificate. The figure below shows the command line with the command and the output of OpenSSL:

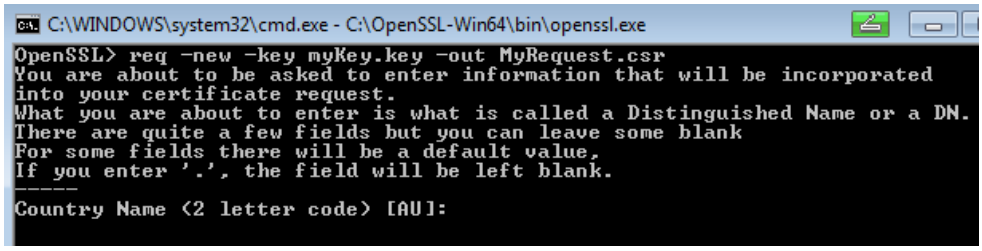

The command creates a file in the C:\demo directory containing the Certificate Signing Request (CSR); in the example, this is "myRequest.csr".

Using the CSR

There are two ways to use a CSR:

- You send the CSR to a certificate authority (CA): Read the information of the respective certification authority. The certificate authority (CA) checks your information and identity (authentication) and signs the certificate with the private key of the certificate authority. You receive the signed X.509 certificate and use this certificate for OPC UA, HTTPS or Secure OUC (secure open user communication), for example. Your communication partners use the public key of the certificate authority to check whether your certificate was really issued and signed by that CA (i.e. that the certificate authority has confirmed your information).
- You sign the CSR yourself: Using your private key. This option is shown in the next step.

Signing the certificate yourself

Enter the following command so that you can generate and sign your certificate (self-signed certificate) yourself: "x509 -req -days 365 -in myRequest.csr -signkey myKey.key -out myCertificate.crt".

The figure below shows the command line with the command and OpenSSL:

The command generates an X.509 certificate with the attributes that you transfer with the CSR (in the example "myRequest.csr"), for example with a validity of one year (-days 365). The command also signs the certificate with your private key ("myKey.key" in the example). Your communication partners can use your public key (contained in your certificate) to check that you are in possession of the private key that belongs to this public key. This also prevents your public key from being misused by an attacker.

With self-signed certificates, you yourself confirm that the information in your certificate is correct. There is no independent body that checks your information.

More information

You will find information about the handling of client certificates of the S7-1500 CPU in the section Handling of the client certificates of the S7-1500 CPU (Page 327).

10.2.6 Secure transfer of messages

Establishing secure connections with OPC UA

OPC UA uses secure connections between client and server. OPC UA checks the identity of the communication partners. OPC UA uses certificates in accordance with X.509-V3 from the ITU

(International Telecommunication Union) for client and server authentication. Exception: A secure connection is not established with the "No security" security policy.

Message security mode

OPC UA uses the following security policies to protect messages:

- No security
  All messages are unsecured. In order to use this security policy, establish a connection to a None end point of a server.
- Signing
  All message are signed. This allows the integrity of the messages received to be checked. Manipulations are detected. In order to use this security policy, establish a connection to a Sign end point of a server.
- Sign & Encrypt
  All messages are signed and encrypted. This allows the integrity of the messages received to be checked. Manipulations are detected. What is more, no attacker can read the content of the message (protection of confidentiality). In order to use this security policy, establish a connection to a "SignAndEncrypt" end point of a server.

The security policies are also named according to the algorithms used. Example: "Basic256Sha256 - Sign & Encrypt" means: Secure endpoint, supports a series of algorithms for 256-bit hashing and 256-bit encryption.

Layers required

The figure below shows the three layers that are always required for establishing a connection: the transport layer, the secure channel and the session.

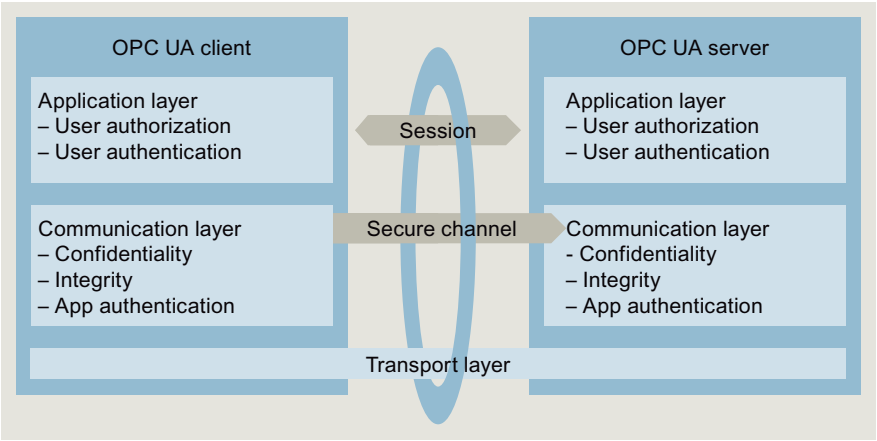

Figure 10-6 Necessary layers: transport layer, secure channel and session

- Transport layer:
  This layer sends and receives messages. OPC UA uses an optimized TCP-based binary protocol here. The transport layer is the basis for the subsequent secure channel.

- Secure channel
  The secure channel receives the data received from the transport layer, and forwards that data to the session. The secure channel forwards data of the session that is to be sent to the transport layer.
  In "Sign" security mode, the secure channel signs the data (messages) that is sent. When a message is received, the secure channel checks the signature to detect any manipulations.
  With a "SignAndEncrypt" security policy, the secure channel signs and encrypts the send data. Data received is decrypted by the secure channel, and the secure channel then checks the signature.
  With the "No security" security policy, the message packages pass the secure channel unchanged (the messages are received and sent in plain text).
- Session
  The session forwards the messages from the secure channel to the application, or receives from the application the messages that are to be sent. The application uses the process values or provides the values.

Establishing the secure channel

The secure channel is established as follows:

1. The server starts establishing the secure channel when it receives a request to this effect from the client. This request is signed or signed and encrypted, or the message is sent in plain text (security mode of the selected server end point). With "Sign" and "Sign & Encrypt", the client sends a "secret" (random number) with the request.
2. The server validates the client certificate (contained in the request, unencrypted) and checks the identity of the client. If the server trusts the client certificate,
   - it decrypts the message and checks the signature ("Sign & Encrypt"),
   - checks the signature only ("Sign"),
   - or leaves the message unchanged ("No security")
3. The server then sends a response to the client (same level of security as the request). The server secret is contained in the response. The client and server calculate a symmetric key from the client and server secret. The secure channel is now established.

The symmetric key (instead of the private and public key of client and server) is now used for signing and encrypting messages.

Establishment of the session

The session is executed as follows:

1. The client starts establishing the session by sending a CreateSessionRequest to the server. This message contains a Nonce, a random number that is only used once. The server must sign this random number (Nonce) to prove that it is the owner of the private key. The private key belongs to the certificate that the server uses to establish the secure channel. This message (and all subsequent messages) is secured in line with the security policies of the selected server endpoint (selected security policies).
2. The server responds with the CreateSession Response. This message contains the public key of the server and the signed Nonce. The client checks the signed Nonce.

3. If the server passes the test, the client sends a SessionActivateRequest to the server. This message contains the information that is required for user authentication:
   – User name and password, or
   – X.509 certificate of the user (not supported in STEP 7), or
   – No data (if anonymous access is configured).
4. If the user has the necessary rights, the server returns a message to the client (ActivateSessionResponse). This activates the session.

The secure connection between the OPC UA client and server has been established.

Establishing a connection to PLCopen function block

The PLCopen specification defines a range of IEC 61131 function blocks for OPC UA clients. The instruction UA_Connect initiates both a secure channel and a session following the pattern described above.

10.2.7 Certificate management via Global Discovery Server (GDS)

10.2.7.1 Automated certificate management with GDS

As of TIA Portal V17 and S7-1500 CPU firmware version V2.9, you can use the certificate management services of the OPC UA server to transfer OPC UA server certificates during runtime.

OPC UA certificates, trust lists and certificate revocation lists (CRLs) for the OPC UA server of the S7-1500 CPU can be updated automatically using GDS push management functions. The automation of the certificate management eliminates any manual work required for reconfiguring the CPU, for example, after the period of validity of a certificate has expired, and a fresh download of the CPU. You can also use the GDS push management functions to transfer updated certificates and lists in the STOP and RUN operating states of the CPU.

The certificate management information model is specified in OPC UA Part 12 (OPC 10000-12: OPC Unified Architecture, Part 12: Discovery and Global Services).

As of TIA Portal version V18 and S7-1500 CPU firmware version V3.0, you can also use the GDS push management function for web server certificates. The sequence of, for example, certificate updates via GDS push-management functions is identical here in principle to the certificate update of OPC UA server certificates. Instead of OPC UA server certificates, you transfer web server certificates to the CPU at runtime or during operation. The differences or restrictions are explained in the following description at the corresponding places.

The following sections provide a general overview of Global Discovery Services and the function of an automated certificate update supported as of TIA Portal V17 / CPU firmware version V2.9.

Discovery server

To connect to an OPC UA server, an OPC UA client requires information about its endpoint such as the endpoint URL and the security policy. When a large number of possible servers are available in the network, a discovery server can take over the search and management of this server information.

- OPC UA servers register with the discovery server.
- OPC UA clients request a list of accessible servers from the discovery server and then connect to the desired OPC UA server.

Global Discovery Server (GDS)

The OPC UA GDS concept allows the configuration of cross-subnet discovery services on the one hand and provides interfaces for central certificate management on the other hand.

A Global Discovery Server (GDS) makes mechanisms available for the central management of the following components:

- CA-signed certificates and self-signed certificates
- Trusted Lists and Certificate Revocation Lists (CRL)

A GDS thus provides an access point to central certificate management and takes over the task of a security server within an OPC UA network.

The main application of GDS is the management of CA-signed certificates with the corresponding CRLs:

- Initial creation of an OPC UA application certificate
- Regular update of the trust list and the CRLs
- Renovation of an application certificate

Certificate management

Certificate management has the task of automating the administration and distribution of certificates and trust lists for different services or UA applications.

In this context, a distinction is made between the following roles:

- Certificate manager - an OPC UA application that provides certificate management functions
- Certificate recipient – an OPC UA application that receives certificates, trust lists and CRLs from the certificate manager.

There are two models for certificate management: Pull and push management.

- With pull management, the OPC UA application acts as a client of the GDS server and uses certificate management methods to request certificate updates and trust list updates.
- With push management, the OPC UA application acts as a server and provides methods for an OPC UA GDS as OPC UA client. The GDS in the role of certificate manager uses these methods to transfer ("push") certificates and trusted list updates, see explanation of the concept for automated certificate update below.

As of firmware version V2.9, the S7-1500 CPU currently only supports push management for the OPC UA server of the CPU.

System configuration with GDS

The figure below shows an example of the tasks of the devices involved in combination with a GDS that provides certificate management functions.

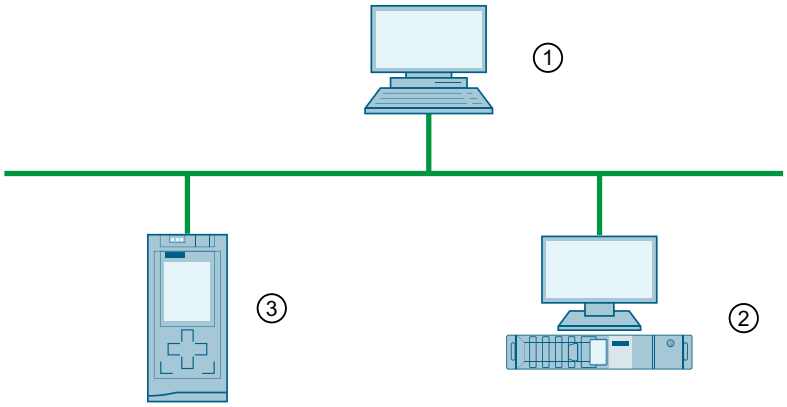

① Root CA - device that issues certificates for the system (these certificates can also be transmitted in other ways, for example, by email)

② OPC UA GDS with certificate manager creates or signs device certificates, manages trust lists and certificate revocation lists (CRLs), and writes certificates and lists to the devices (push function). This device requires OPC UA client functionality for the push function.

③ Device with OPC UA application receives "pushed" certificates and lists

Concept for automated certificate update for STEP 7 version V17 and higher

GDS and certificate manager are usually combined into one application; however, in the figure below, they are two separate components.

Devices such as "normal" OPC UA clients are also suitable as certificate managers, but they need to support the Bytestring data type that is required to transfer certificates, for example, an S7-1500 CPU firmware V2.9 and higher as OPC UA client or the UA Expert tool (Unified Automation) with GDS plugin.

The OPC UA server of the S7-1500 CPU as certificate receiver provides the standardized methods and attributes that the OPC UA client certificates need to read and write trust lists and CRLs.

The focus in the context of the OPC UA server of the S7-1500 CPU is the description of the push function in contrast to the usual manner in which certificates are provided to the CPU: By loading the hardware configuration.

The figure below shows how to transfer certificates and lists for OPC UA in an S7-1500 CPU FW V2.9 or higher:

- Either by loading the hardware configuration in STOP of the CPU; the certificates are part of the hardware configuration.
- Or via GDS push methods in RUN or in STOP mode of the CPU.

It is not possible to use both transmission paths in parallel. If, for example, you have opted for transfer of OPC UA server certificates with GDS push functions at runtime, you must also transmit all the other certificate types to the CPU via this route.

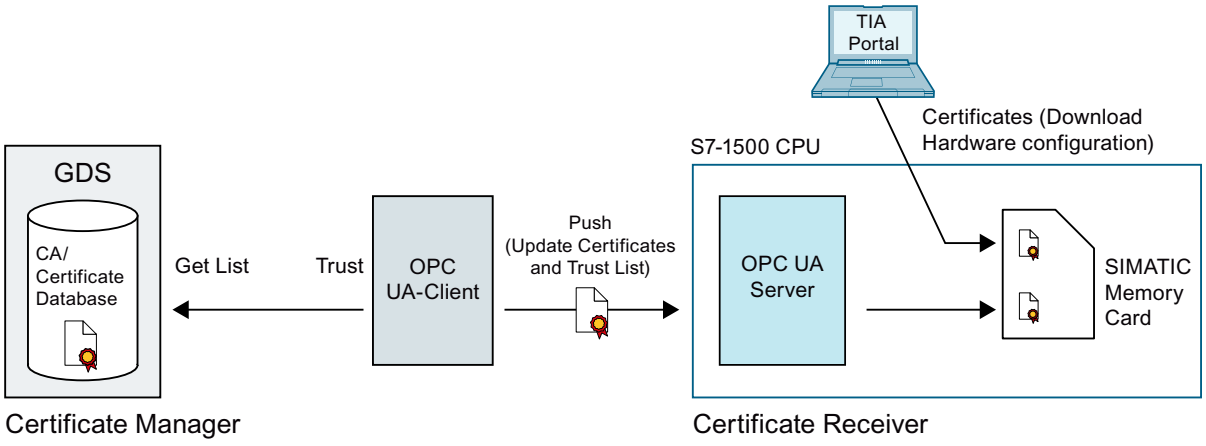

More information

You can find more information on the certificates for OPC UA in the section Certificates with OPC UA (Page 173).

10.2.7.2 Configuration limits for Push function

Number of certificates for Push function

For the OPC UA Push function, an S7-1500 CPU, regardless of the type, has a configuration limit of 62 trust list entries as of firmware version V2.9.

- Each activated certificate-based service (CPU application) "consumes" one entry each for a certificate and an entry for the private key.
- A Certificate Revocation List entry (CRL) counts just as an entry in the list of trusted certificates.
- A certificate that is used by different services (CPU applications) counts as a single trust list entry.

Size of elements for Push function (e.g. certificates)

Max. 4096 bytes

Example

You want to grant access to the OPC UA server for up to 62 OPC UA clients and fill the trusted list accordingly.

When you add a Certificate Revocation List entry in the trusted list, you can only trust up to 61 client certificates.

Additional OPC UA certificates can **not** be transferred by loading the hardware configuration to the CPU.

Tip

To keep the number of required certificates low, we recommend having the OPC UA client certificates signed by the same CA.
In this case, the CPU as OPC UA server only needs the corresponding CA certificate and CRLs. With these elements, the OPC UA server can then verify all client certificates signed by the CA. This means you do not have to add the individual client certificates to the trusted list.

10.2.7.3 Setting and loading GDS parameters

The following describes the settings required for the certificate update.

Requirement

- Depending on the application certificate, the corresponding STEP 7/TIA Portal version and S7-1500 CPU firmware version is required.
  See also here: What you should know about the certificate management (Page 54)
  - For OPC UA server certificates, for example, TIA Portal from V17 onwards, CPU firmware version V2.9
  - For web server certificates, for example, from TIA Portal V18, CPU firmware version V3.0
- Timet/date of the CPU is set (generally applies to certificate-based communication)
- The OPC UA server is enabled.
- The service that the GDS push management uses must be enabled. For example, the web server must be enabled for the transfer of web server certificates.
- At least one endpoint with the "Sign & Encrypt" security policy must be configured. The partner must use this endpoint.
- An authenticated user with sufficient function rights is configured
  The user must have a role that has the function right "Manage certificates".
  This function right, in turn, has the following requirements:
  - **Project protection** must be enabled in the project tree: Project tree: "Security settings > Settings > Project protection".
  - In the "OPC UA > General" area of the CPU settings, the following general user management setting must be enabled: "Enable additional user management via project security settings"

The Users and roles with OPC UA function rights (Page 232) section describes how to set the function rights.

Activating GDS

When the requirements listed above are met, you must still enable the GDS:

1. In the Inspector window (CPU parameters), go to the "OPC UA > Server > General" area.
2. Enable the "Enable Global Discovery Services (Push)" option.

Determining the certificate store used

Certificates that are managed using GDS, are in a different memory area than the certificates that are downloaded via the TIA Portal (STEP 7).

When GDS push certificate management is enabled, the services (applications) of the CPU also use certificates from the certificate store whose certificates are managed at runtime.

1. In the CPU settings, navigate to the area "Protection & Security > Certificate management".
2. Select the "Use certificates provided by the certificate management at runtime" option.
   The other option (use certificates configured and downloaded using TIA Portal) uses the certificates that are downloaded to the CPU from the TIA Portal with the configuration in CPU STOP. Certificates or trust lists cannot be updated in this certificate store during runtime.

Enabling the diagnostics for the lapsing of certificates

If you wish to be informed in advance about the lapsing of a certificate, select the "Enable system diagnostics event for the certificate lapsing" option in the area "Protection & Security > Certificate management".

In the input field "Show event at remaining certificate validity period of:" enter a percent value.

Effect of these settings:

- At the instant when this value is reached by a certificate, a corresponding system diagnostics message appears till the certificate lapses or is refreshed.
- If the end of the validity period of a certificate has been reached, the CPU generates a corresponding system diagnostics message as well as an entry in the diagnostics buffer and the maintenance LED lights up.

Example:
The certificate transferred via GDS on June 01, 2022 has a validity from June 01, 2022 to June 30, 2022 (30 days). You have input a percent value of 10 for the diagnostics event. On June 27, 2022, when 90% of the period of validity lapses, a corresponding message will appear stating that the certificate that had been transferred will lapse on June 30, 2022. Regardless of the configured percentage value, upon lapsing of the period of validity of a certificate, a corresponding message is displayed in any case, an entry is made in the diagnostics buffer, and the maintenance LED lights up.

Download to CPU

When downloading the configuration to the CPU, you can delete the certificates that are managed via GDS before the download. When you confirm the deletion, the download is followed by a provisioning phase (see section on commissioning).

When you download the memory card outside of the CPU (card reader), this certificate store is always deleted.

When Global Discovery Services (Push) is activated and no pushed certificates are available, then no separate certificate, trust list or CRL is available for the OPC UA server.

10.2.7.4 GDS commissioning

Part 12 of the OPC UA specification distinguishes between a provisioning phase and a run time phase during certificate management.

In the provisioning phase, a GDS or OPC UA client provides initial trust lists and CRLs for clients of the OPC UA server. In this phase, the OPC UA server of the CPU accepts all client certificates and lists it is offered – similar to the "Trusted clients" setting for the OPC UA server that all client certificates are accepted during runtime. This is the only way in which a connection to clients not known to the server is possible. For example, clients that the server cannot authenticate using existing certificates or trust lists until it has received the corresponding client certificate or the corresponding trust list.

The provisioning phase is characterized by lower security; therefore, the provisioning phase is indicated by a lit Maintenance LED and a corresponding diagnostics buffer entry (Maintenance demanded).

During the runtime phase, the existing CRLs are updated, for example, and the certificates and trust lists are renewed. Communication is secure in this phase.

Requirement

Only authorized users with sufficient function rights can set up a connection in the provisioning phase. The users must have a role with the function right "Manage certificates".

See also Setting and loading GDS parameters (Page 184).

Rules for the provisioning phase

In the provisioning phase, the OPC UA server of the CPU cannot authenticate the OPC UA clients that initiate connection establishment. Therefore, the following rules must be observed:

- Provide a secure environment, for example, access to the CPU is limited to commissioning personnel. Check that the right devices are communicating with one another.
- Limit the time for this phase.

The CPU signals that it is in the provisioning phase by the lit Maintenance LED as well as a corresponding diagnostics buffer entry (Maintenance demanded).

Sequence of the provisioning phase

The following provides an outline of the process of the provisioning phase for OPC UA server certificates and
trust lists.

The process of the provisioning phase for web server certificates is comparable. In contrast to OPC UA, the GDS client only pushes web server certificates but not trust lists into the corresponding certificate store.

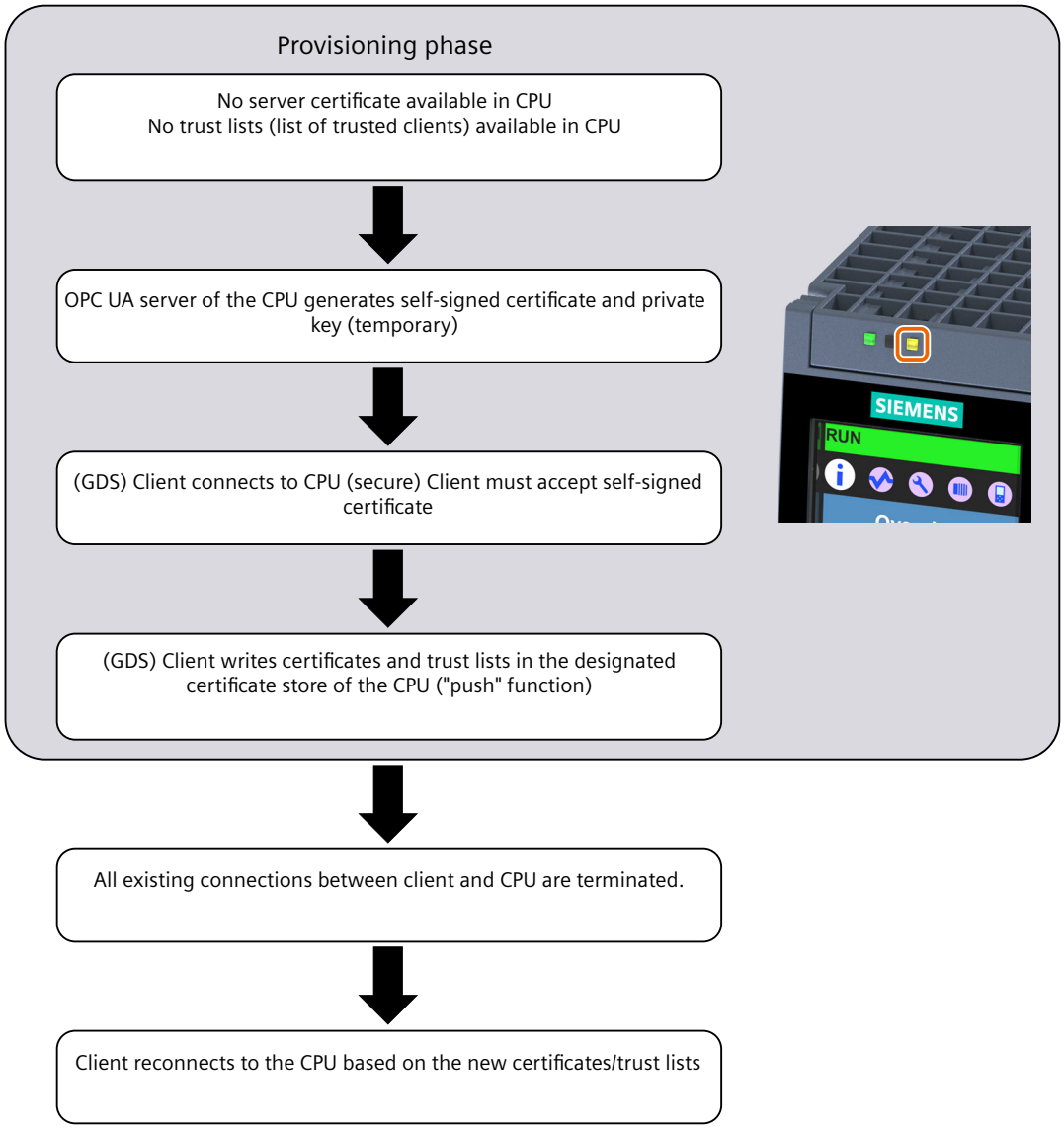

Entering the provisioning phase

After startup of the OPC UA server, the CPU automatically enters the provisioning phase when one of the following conditions is met:

- The OPC UA server certificate is the initial self-signed certificate generated by the CPU and has not yet been replaced by a valid server certificate.
- The trust list (list of trustworthy clients) is empty.

The OPC UA server certificate generated by the CPU contains the most important parameters of the OPC UA server and is re-generated, including the private key, after each startup of the

OPC UA server following POWER ON - until the valid server certificate is present. For this reason, the OPC UA server may take longer to start up after a POWER ON.

After the hardware configuration is downloaded, the certificate store for certificates that can be updated during runtime is deleted on download or the certificates are retained, depending on the setting. This means that if GDS is activated and the certificate store has been deleted, the CPU is in the provisioning stage after the hardware configuration has be loaded.

Provisioning phase diagnostics

In addition to the lit Maintenance LED, the GDS address model has two nodes that provide information on whether the OPC UA server of the CPU is in the provisioning phase:

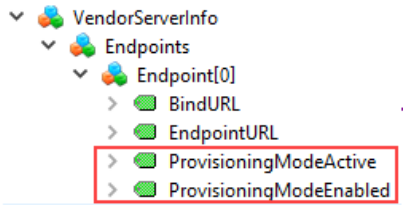

You can only use the two nodes as marked in the figure for diagnostics if the requirements for GDS are met (endpoint security signed & encrypted plus administrator function rights available).

ProvisioningModeEnabled: Indicates that a provisioning phase is supported

ProvisioningModeActive: Indicates that the OPC UA server of the CPU is in the provisioning phase.

End of the provisioning phase

The CPU ends the provisioning phase automatically when the following conditions are met:

- The certificate generated and self-signed by the CPU for the provisioning phase has been overwritten by a valid server certificate. This valid server certificate can be a self-signed certificate or a CA-signed certificate.
- The trust list in the CPU is not empty, i.e. client certificates of the OPC UA clients to be trusted or CA certificates for checking the client certificates are available.

If the OPC UA client transfers a CA-signed certificate and also adds the CA certificate to the trust list, the OPC UA server of the CPU can automatically accept all other certificates from OPC UA clients that were signed by the same CA.

Request of a valid server certificate

As of TIA Portal version V18 / S7-1500 CPU version V3.0, in addition to OPC UA server certificates, certificates for other services can also be transferred to the CPU, for example, for the web server.

The corresponding service, for example, the OPC UA server of the CPU, receives a valid certificate in the following steps:

1. A GDS client (OPC UA client) calls the method "CreateSigningRequest" to request a server certificate: with a Certificate Signing Request (CSR).
2. This CSR must be signed by a Certificate Authority (CA).
3. The signed CSR must then be transferred back to the OPC UA server of the CPU as a certificate.

The OPC UA server of the CPU makes this method available if the client has the required function right "Manage certificates".

The "CreateSigningRequest" method allows for the following variants:

- Certificate update without creating a new key pair (internal CPU keys that are already available are used)
- Certificate update with creation of a new key pair (CPU-internal)

There is also the possibility to generate certificates with externally created key pairs.

NOTICE
Recommended procedure to generate certificates Transport of private keys should be avoided; a private key should not leave a device. We, therefore, recommend the generation of a certificate without creating a new key pair or with the creation of a key pair inside the CPU.

Create certificate without key pair

- The "CreateSigningRequest" method returns a Certificate Signing Request (CSR), that is, a file (*.csr) with specific information on the server or on the service, for example, application name and URL.
- Outside of the CPU, this CSR must be validated and signed by a Certificate Authority (CA) and the certificate must be returned.
- The certificate must then be transferred to the CPU ("pushed") using the "UpdateCertificate" method.

The key does not leave the CPU in this scenario.

Create certificate with internally created key pair

The procedure is similar to the method explained in the previous section; the only difference is that a key pair is generated in addition to the CSR. You specify in the parameter of the "CreateSigningRequest" method that it is to generate a key pair.

The private key does not leave the CPU in this procedure either.

The generation of a new key pair creates a very heavy load on the CPU. The CPU processes this request over a longer period of time with lower priority in the reserved area for the communication load. The duration of this time period depends on the performance of the CPU.

Because the share of the set communication load is fully utilized during key generation over a longer period of time, set the "Cycle load due to communication" share so that the maximum cycle time is not exceeded and sufficient reserves are available. For this, use the web server page "Diagnostics > Runtime information" of the CPU. This page shows information about the current program/communication load and cycle time of your user program. Via a controller, you can get help on the effects of a changed communication load on the cycle time.

Create certificate with externally created key pair

The certificate is generated with the help of tools, for example, that can generate additional keys.

Certificate and keys are transferred to the CPU using the "UpdateCertificate" method.

Due to low security, this procedure is not recommended.

NOTICE
Different keys for different target systems Always use newly generated keys for a production system. If you simulate and test your project, e.g. with PLCSIM Advanced on your PC, do not under any circumstances use the keys used for the simulation also for a productive system. Restrict the access to PC-based controllers by setting up appropriate permissions.

10.2.7.5 Address model for the push certificate management

The OPC UA specification Part 12 (OPC 10000-12: Discovery, Global Services) defines methods and attributes for OPC UA servers, for example, that enable GDS or OPC UA clients to update certificates and trust lists on the server ("Push certificate management"). These methods and attributes are also included in the address model of the OPC UA server.

The relevant section in the address model of the OPC UA server of the S7-1500 CPU is explained below.

Requirement

The following requirements must be met for the relevant methods and attributes to become visible for the GDS push functionality:

- GDS is activated.
- The set security policy supports the integrity and confidentiality of the data through signature and encryption (Sign & Encrypt).
- Access with runtime function right "Manage certificates"

Address model for the GDS push functionality

The address model for the GDS push functionality corresponds to the "Information Model for Push Certificate Management" of the OPC UA specification OPC 10000-12: Discovery, Global Services.

You will find the following structure below the "ServerConfiguration" node:

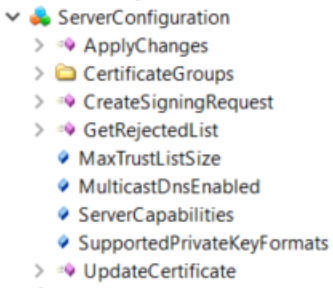

Methods and attributes for access to the address model

The methods and attributes are briefly described below with special features and restrictions of the specific address model of the S7-1500 CPU. The OPC UA specification listed above contains the general description.
You can find a detailed description of the individual methods below this overview table.

Method / Attribute (Variable)	Description
CreateSigningRequest	Method for generating a PKCS#10-encoded certificate request signed with the private key of the service (for example, OPC UA server).
UpdateCertificate	Method for updating the server certificate, for example, for the OPC UA server.
ApplyChanges	Method for applying a security-relevant change if the "ApplyChangesRequired" attribute was set when executing a previously executed method. **Note** If, as a result of "ApplyChanges", a certificate is changed, the CPU interrupts the connections/sessions that are secured via this certificate. Background: The basis for the secured connections - the certificate - is no longer valid.
GetRejectedList	Method that returns a list of certificates that were rejected by the OPC UA server. Rejected certificates are currently not stored by the OPC UA server of the S7-1500 CPUs. The method returns an empty array (RejectedList).
ServerCapabilities	Variable is not supported by the OPC UA server of the S7-1500 CPU.
SupportedPrivateKeyFormats	Variable that specifies permitted formats of the private key. For S7-1500 CPUs only "PEM" (String Array)
MaxTrustListSize	Variable that specifies the maximum size of the trust list.
MulticastDnsEnabled	Variable that specifies whether multicast DNS is supported. For S7-1500 CPUs, the value is "False".

Method / Attribute (Variable)	Description
CertificateGroups	Object (folder) that organizes all certificate groups supported by the OPC UA server. The certificate groups contain the objects that can be updated dynamically during runtime: For example, one trust list each and one or multiple certificates that are assigned to a service (for example, OPC UA application). Details on the structure of the CertificateGroups object and the methods and attributes that are available in the object are described in the next section.

CreateSigningRequest

The method has the following parameters:

Parameter	Data type	Description
[in] certificateGroupId	NodeId	NodeId of the CertificateGroup object.
[in] certificateTypeId	NodeId	Requested certificate type. List of permitted certificate types is specified by the "CertificateTypes" variable of the certificate group. For the OPC UA server for example, certificate type "RsaSha256ApplicationCertificateType", for the web server the certificate type "HttpsCertificateType"
[in] subjectName	String	Subject Name that is requested in the Certificate Request. If not specified, the current Subject Name of the certificate is used.
[in] regeneratePrivateKey	Boolean	True: Server generates a new private key. This key is saves until the UpdateCertificate methods with the matching signed certificate is called. False: Server uses the available private key.
[in] nonce	ByteString	Additional nonce for generating the new private key (see regeneratePrivateKey). Must be at least 32 bytes long.
[out] certificateRequest	ByteString	PKCS #10 - DER coded Certificate Request.

Method Result Codes

Result Code	Description
Bad_InvalidArgument	certificateTypeId, certificateGroupId or subjectName is invalid.
Bad_UserAccessDenied	The current user does not have the required function rights.

UpdateCertificate

Applications:

- Generation of certificate with CreateSigningRequest. No private key is available.
- New private key and new certificate were generated outside of the server. Both are updated with UpdateCertificate.
- Certificate generated and signed with the private key of the existing certificate. No private key is available.

Parameter	Data type	Description
[in] certificateGroupId	NodeId	NodeId of the CertificateGroup object.
[in] certificateTypeId	NodeId	Requested certificate type. List of permitted certificate types is specified by the "CertificateTypes" variable of the certificate group.
[in] certificate	ByteString	DER-coded certificate that replaces the existing certificate.
[in] issuerCertificates	ByteString	Issuer certificates
[in] privateKeyFormat	String	Format of the private key. Currently only PEM is supported. If the privateKey is not specified: zero or empty string.
[in] privateKey	ByteString	Privater key coded as specified in privateKey-Format.
[out] applyChangesRequired	Boolean	Indicates that the "ApplyChanges" method must be called before you use the new certificate.

Method Result Codes

Result Code	Description
Bad_InvalidArgument	certificateTypeId or certificateGroupId is invalid.
Bad_CertificateInvalid	The certificate is invalid or the format is not supported.
Bad_NotSupported	The private key is invalid or the format is not supported.
Bad_UserAccessDenied	The current user does not have the required function rights.
Bad_SecurityChecksFailed	Error occurred when verifying the integrity of the certificate.

Apply Changes

The method has no parameters.

Method Result Codes

Result Code	Description
Bad_UserAccessDenied	The current user does not have the required function rights.

GetRejectedList

The method has the following parameters:

Parameter	Data type	Description
[out] certificates	ByteStrings	DER-coded list of rejected certificates. The method currently returns an empty list (empty array), because rejected certificates are not stored.

Method Result Codes

Result Code	Description
Bad_UserAccessDenied	The current user does not have the required function rights.

10.2.7.6 CertificateGroups in the address model

Certificates and trust lists for services or applications of the CPU (for example, OPC UA servers) that can be updated during runtime are located in the address model in the "CertificateGroups" object - there is one certificate group each for the various services of the S7-1500 CPU. For the OPC UA server certificate, the certificate group has the name "OPC UA server".

CertificateGroup in the address model

The following figure shows the structure of the "CertificateGroups" object below the "ServerConfiguration" node.

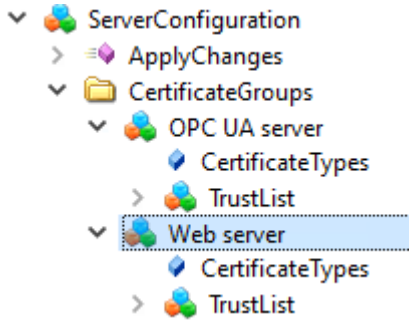

You can change the Display Name of the CertificateGroups (e.g. of the "OPC UA server") in STEP 7 (TIA Portal):

1. In the Inspector window (CPU properties), navigate to the area "Protection & Security > Certificate management".
2. Enable the option "Use certificates provided by certificate management during runtime" option.
3. Change the group name (DisplayName) of the certificate group in the table below. 1-64 characters in 7-bit ASCII format are permitted.
   The first column contains the activated service for which certificates can be transferred at runtime and the "ID" column contains a fixed numeric identifier that is used CPU-internally for referencing the certificate.

Here is an example for the display in the area "Certificate management":

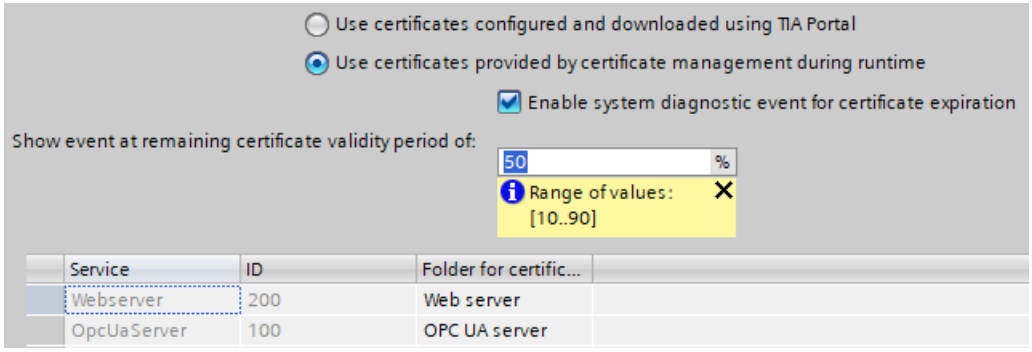

Figure 10-7 Certificate management settings

"CertificateTypes" node

The "CertificateTypes" variable specifies the NodeIds of the certificate types that are assigned to the server application.

For the OPC UA server service, for example, the "RsaSha256ApplicationCertificateType" CertificateType is supported, for the web server, it is the "HttpsCertificateType CertificateType".

"TrustList" node

The node for the trust list object (TrustList file) defines an OPC UA file type (Binary encoded stream) that contains information on the certificates and CRLs that can be read and updated in the "pki store\trusted\issuer" directory of the Memory Card. This node provides methods and attributes that make reading and updating possible.

The node is an instance of the OPC UA data type "TrustListDataType" with the following structure:

Parameter	Data type	Description
specifiedLists	TrustListsMasks	Bit mask that shows which lists contain information.
trustedCertificates	ByteStrings	List of the application certificates and CA certificates that can be trusted.

Parameter	Data type	Description
trustedCrls	ByteStrings	CRLs for the certificates in the "trustedCertificates" list.
issuerCertificates	ByteStrings	List of the CA certificates that are required for validating the CA signed certificates.
issuerCrls	ByteStrings	CRLs of the CA certificates in the "issuerCertificates" list.

Structure of the "TrustList" node

The "TrustList" node has the following structure:

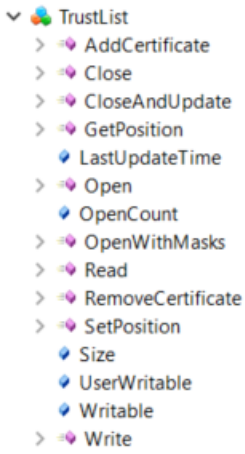

Methods and attributes for the "TrustList" node

Below is a description of the nodes under "TrustList" that supplement the methods of the Object Type "FileType". The TrustList Type is derived from FileType (see OPC 10000-5: OPC Unified Architecture, Part 5: Information Model).

Method / Attribute (Variable)	Description
LastUpdateTime	Variable that shows the time of the last update.
OpenWithMasks	Method that permits a client to only read a part of the TrustList.
CloseAndUpdate	Method for closing the TrustList file and applying the changes.
AddCertificate	Method for adding a single certificate to the TrustList.
RemoveCertificate	Method for removing a single certificate from the TrustList.

Description of the methods

The description of the methods with their result codes, attributes and types of the TrustList object is available in the OPC UA specification Part 12, Discovery and Global Services.

10.3 Using the S7-1500 as an OPC UA server

10.3.1 Interesting information about the OPC UA server of the S7-1500 CPUs

10.3.1.1 The OPC UA server of the S7-1500 CPUs

The S7-1500 CPUs as of firmware V2.0 are equipped with an OPC UA server. Apart from the Standard-S7-1500 CPUs this applies to the variants S7-1500F, S7-1500T, S7-1500C, S7-1500pro CPUs, ET 200SP CPUs, SIMATIC S7-1500 SW controllers and PLCSIM Advanced.
Convention: "S7-1500 CPUs" also includes the above-mentioned CPU variants.

S7-1500 CPU OPC UA server basics

Access to the OPC UA server of the CPU is possible via all integrated Ethernet interfaces of the S7-1500 CPU.
Direct access to the OPC UA server of the CPU over the backplane bus of the automation system is not possible via CPs under the following conditions:

- Configuration with TIA Portal Version V16 or higher
- S7-1500 CPU firmware version 2.8 or higher and CP 1543-1 firmware version V2.2 or higher

For configuration, see Access to OPC UA applications (Page 156).
Direct access to the OPC UA server of the CPU over the backplane bus of the automation system is not possible via CMs.
For access by clients, the server saves the enabled PLC tags and other information in the form of nodes (see Accessing OPC UA server data (Page 203)). These nodes are interconnected and form a network. OPC UA defines access points to this network (well-known nodes) that enable navigation to subordinate nodes.
With an OPC UA client you can read, observe or write values of tags of the PLC program as well as call methods that are available to the server. As of firmware version 2.5 you can implement methods, see Useful information about server methods (Page 268).

Node classes

OPC UA servers provide information in the form of nodes. A node can be, for example, an object, a tag, a method or a property.

The example below shows the address space of the OPC UA server of an S7-1500 CPU (extract from the OPC UA client "UaExpert" from Unified Automation).

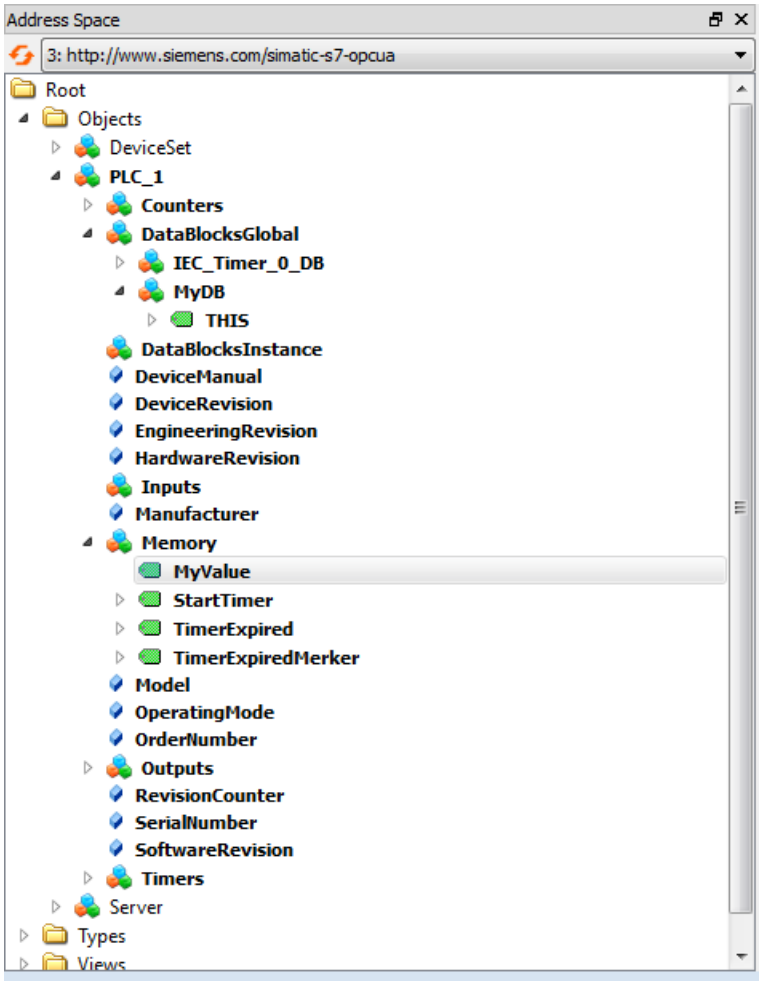

Figure 10-8 Example of the address space of the OPC UA server of an S7-1500 CPU

In the figure above, the "MyValue" tag is selected (highlighted in gray).
This tag is located below the "Memory" node, which has the node class "Object".
"Memory" is below the "PLC_1" node (also an Object).

Address space

The nodes are linked over references, for example, the reference "HasComponent, which represents a hierarchical relationship between a node and its subordinate nodes. With their references, the nodes form a network that can, for example, take the form of a tree.
A network of nodes is also called an address space. Starting from the root, all nodes can be reached in the address space.

10.3.1.2 End points of the OPC UA server

The end points of the OPC UA server define the security level for a connection. Depending on the purpose of use or desired security level, you have to carry out the corresponding settings for the connection at the end point.

Different security settings

Before establishing a secure connection, OPC UA clients ask the server with which security settings connections are possible. The server returns a list with all the security settings (endpoints) that the server offers.

Structure of end points

End points consist of the following components:

- Identifier for OPC: "opc.tcp"
- IP address: 192.168.178.151 (in the example)
- Port number for OPC UA: 4840 (standard port)
  The port number can be configured.
- Security setting for messages (Message Security Mode): None, Sign, SignAndEncrypt.
- Encryption and hash procedures (Security Policy): None, Basic128Rsa15, Basic256, Basic256Sha256 (in the example).

The following figure shows the "UA Sample Client" of the OPC Foundation.

The client has established a secure connection to the OPC UA server of an S7-1500 CPU to the end point "opc.tcp://192.168.178.151:4840 - [SignAndEncrypt: Basic256Sha256:Binary]". The security settings "SignAndEncrypt:Basic256Sha256" are contained in the end point.

NOTE

Select an endpoint with as strict as possible a security policy

Select an application-appropriate security policy for the end point and disable the less strict security policy at the OPC UA server.

A Sha256 certificate is required for the most secure end points (Basic256Sha256) of the S7-1500 CPU OPC UA server.

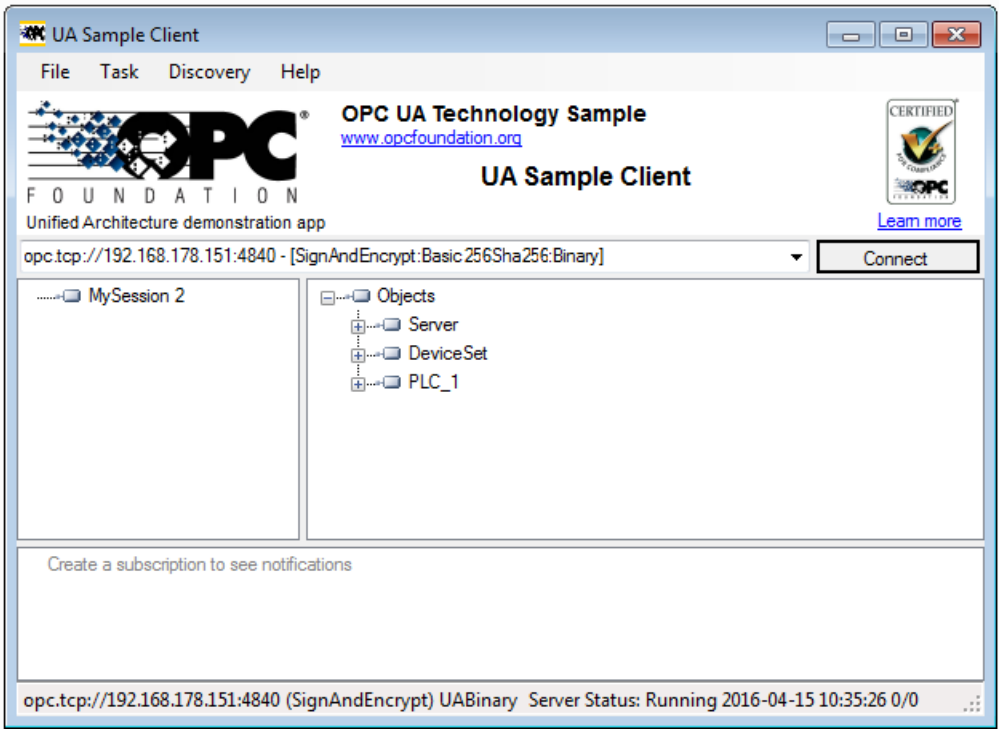

Figure 10-9 "UA Sample Client" program of the OPC Foundation

A connection to a server end point is only established if the OPC UA client complies with the security policies of that end point.

Through the information provided by the OPC UA server

OPC UA servers provide a wide range of information:

- The values of PLC tabs and DB components which clients may access.
- The data types of these PLC tags and DB components.
- Information on the OPC UA server itself and on the CPU.

This gives clients an overview and allows them to read out specific information. Previous knowledge of the PLC program and the CPU data is not required. You do not need to ask the developer of the PLC program when PLC tags are to be read. All necessary information is stored on the server itself (for example, the data types of the PLC tags).

Display of the information of the OPC UA server

You have the following options:

- Online: You have all the available information displayed during the runtime of the OPC UA server. To do so, navigate (browse) the address space of the server.
- Offline: You export an XML file that is based on the XML schemes of the OPC Foundation.
  Server methods created by the user (FB instance that can be called by an OPC UA client) are not exported as of STEP 7 V15.1), see Providing methods on the OPC UA server (Page 267).
- Offline with the Openness API: In your program, you use the API (Application Programming Interface) of the TIA Portal to access the function for exporting all PLC tags that can be read by OPC UA. This requires .NET Framework 4.0; see TIA Portal Openness, Automating SIMATIC projects with scripts (https://support.industry.siemens.com/cs/ww/en/view/109477163).
- If you already know the syntax and the PLC program, you can access the OPC UA server without first researching the information.

10.3.1.3 Runtime behavior of the OPC UA server

OPC UA server in operation

The OPC UA server of the S7-1500 CPU starts when you activate the server and download the project to the CPU.
How to activate the OPC UA server is described here.

Behavior in the operating state STOP of the CPU

An activated OPC UA server remains in operation even if the CPU switches to "STOP". The OPC UA server continues to respond to requests from OPC UA clients.
Server response in detail:

- If you request the values of PLC tags, you will get what were the latest values before the CPU switched to or was set to "STOP".
- If you write values to the OPC UA server, the OPC UA server will accept those values.
  However, the CPU will not process the values because the user program is not executed in "STOP" mode.
  An OPC UA client can nonetheless read the values written at STOP from the OPC UA server of the CPU.
  During restart, the CPU overwrites the values written at STOP with the start of the PLC tags.
- If you call a server method, the error message 16#00AF_0000 (BadInvalidState) is output because the server method (user program) is not running.
- Connections to the OPC UA server remain active during an operating mode transition (STOP > RUN or RUN > STOP). Exception: OPC UA-relevant data is loaded, see next section.

Download to the CPU may affect OPC UA server

If you load a CPU with running OPC UA server, you may need to stop and restart the server depending on the loaded objects. In this case, active connections are interrupted and must be re-established once the server restarts.

The duration of the restart depends mainly on the following parameters:

- The scope of the data structure
- The number of variables visible in the OPC UA address space
- The setting for downward compatible data type definition according to OPC UA specification to V1.03 (TypeDictionary enabled)
- Settings for the communication load and minimum cycle time, you can find additional information here (Page 336)

With CPU FW versions older than V2.8, the OPC UA server was stopped at each download to the CPU and then restarted.

As of FW version V2.8, the behavior of the OPC UA server has been optimized as follows:

- When objects are downloaded in STOP operating state of the CPU, the OPC UA server still always stops and then restarts. STEP 7 does not show a warning in this case.
- When objects are downloaded in RUN operating state of the CPU, the OPC UA server only stops if the downloaded objects are, or could be, OPC UA-relevant. The OPC UA server restarts after re-initialization due to the modified OPC UA data.

  Before OPC-UA-relevant objects are loaded into the CPU and stop the OPC UA server, STEP 7 displays a warning in the preview dialog for loading. You can then decide whether a server restart is compatible for the running process or whether you want to cancel the download. These warnings are only displayed when the OPC UA server is running. If the OPC UA server is not enabled, modified OPC UA data have no influence on the download process.

Examples

- You only want to add another code module to the program.
  Neither data blocks nor inputs, outputs, flags, times or counters are affected.
  Reaction during loading: A running OPC UA server is not interrupted.
- You want to load a new data module and you have flagged the data module as non-OPC-UA-relevant:
  Reaction during loading: A running OPC UA server is not interrupted.
- You want to overwrite a data module.
  Reaction during loading: A warning appears that the server will be restarted.
  Background: STEP 7 cannot determine whether the changes refer to OPC-UA-relevant data or not.

Reading CPU operating mode over OPC UA server

The OPC UA server allows you to read out the CPU mode, see figure below:

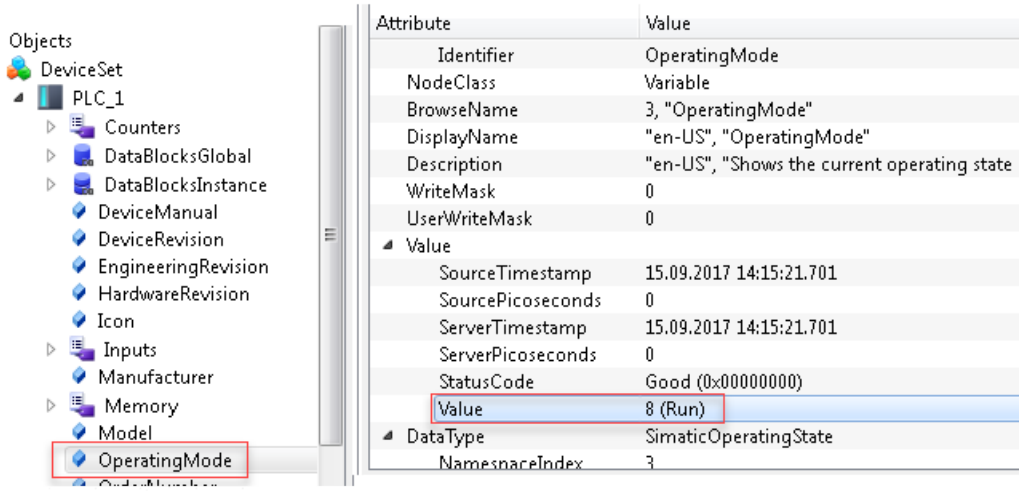

Figure 10-10 Reading CPU operating mode over OPC UA server

In addition to the operating mode of the CPU you can, for example, read out information in the manual (DeviceManual) or firmware version (HardwareRevision).

10.3.2 Accessing OPC UA server data

10.3.2.1 Client accesses and local accesses to the OPC UA server

An OPC UA server provides a lot of information for OPC UA clients within a network. The following section describes the options for making CPU variables (PLC variables and DB elements) available in the address space of your own OPC UA server.

Provide CPU variables via server interfaces in the OPC UA address space

The easiest way to transfer CPU variables automatically into the address space of the OPC UA server:

- Activate the standard SIMATIC server interface in the OPC UA properties of the CPU.
  All CPU variables released for OPC UA are then automatically also available in the OPC UA address space under the name of the CPU.

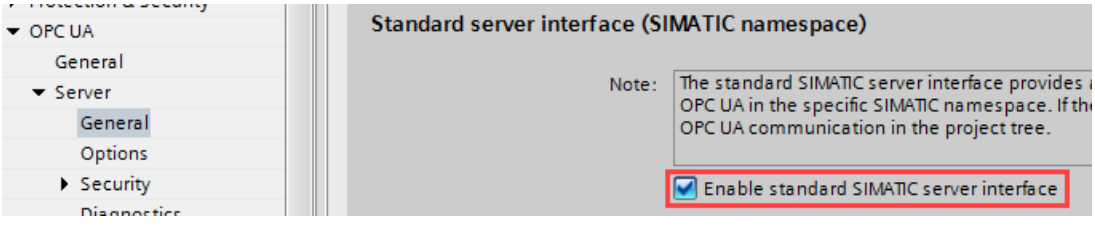

Figure 10-11 Standard SIMATIC server interface of the OPC UA server

The use of OPC UA server interfaces is more flexible and clearer; you configure the server interfaces in the project tree (below the CPU, "OPC UA Communication folder"). User-defined OPC UA server interfaces allow you to easily map OPC UA tags and CPU variables (local data).

OPC UA server interface

Browse name	Node type	Access level	Local data
myServerInterface	Interface	---	
myOPC_UA_Variable	BOOL	RD	"myDataBlock"."myVarBool"
myOPC_UA_Variable2	Word	RD/WR	"myDataBlock"."myVarWord"

Figure 10-12 Creating a user-defined server interface with mapped CPU tags

The data exchange between OPC UA client and OPC UA server is clearly illustrated in the following example of two S7-1500 CPUs.
Here, an S7-1500 CPU as client writes values to an OPC UA tag of the OPC UA server. The mapping between CPU variable and OPC UA tag makes it look as though the OPC UA client writes a value directly into the CPU variable. For an S7-1500 client CPU, use the "OPC_UA_WriteList" instruction in connection with additionally required instructions for the data exchange.

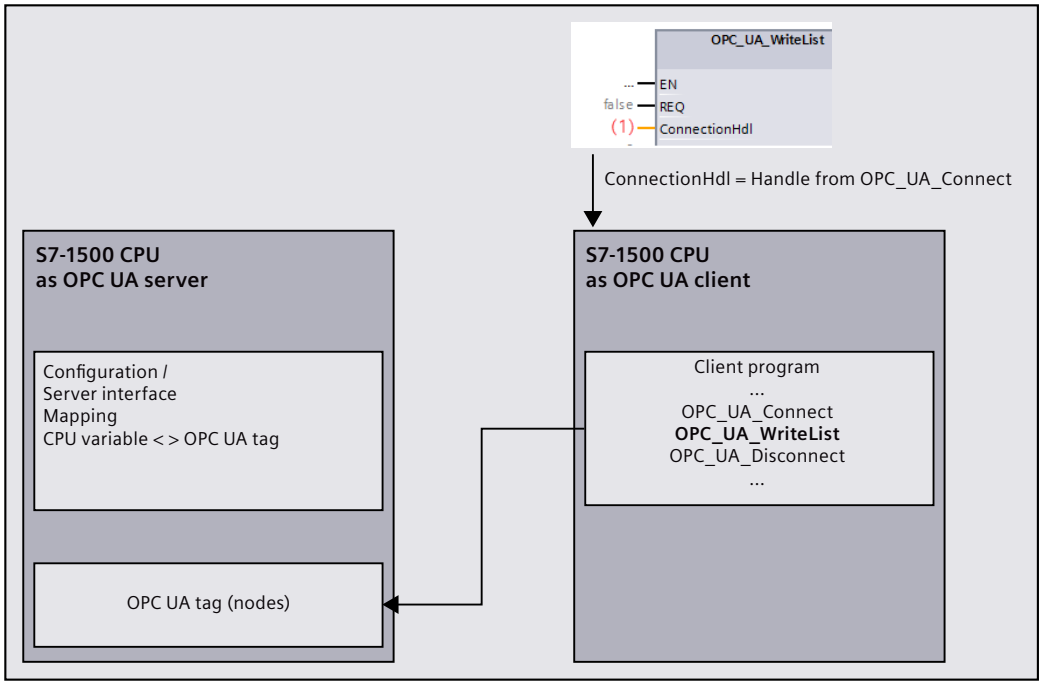

Figure 10-13 Client access to the server's OPC UA tag

Write CPU variable values directly into OPC UA tag (set OPC UA DataValue)

As of firmware version V3.0, S7-1500 CPUs offer, in addition to mapping tags, the possibility to write values directly into local OPC UA tag nodes of the server via the "OPC_UA_WriteList" instruction. Normally, the "OPC_UA_WriteList" instruction in the client program of the CPU is used to write values into OPC UA tags of a remote OPC UA server.

Advantage of using "OPC_UA_WriteList" in the server: In addition to the value, you can provide the OPC UA tag node with the following additional information:

- SourceTimestamp
- StatusCode

OPC UA provides a built-in "DataValue" data type. DataValue is a structure that holds the value (Value) as well as SourceTimestamp and StatusCode as more information to the value. The DataValue structure is only used by OPC UA services and you cannot write directly in the program of the CPU to the elements of this structure. Write access is only possible via a special use of the "OPC_UA_WriteList" instruction.

Application options

CPU variables cannot record a time stamp indicating when a value was last written to the CPU variable. If you map CPU tags and OPC UA tags via server interfaces, the OPC UA server does not therefore set the SourceTimestamp to the time when the CPU tag changed, but to the time when the value was "collected" in the server; e.g. by a read service or by sampling in the context of a subscription.

If you write DataValue directly with "OPC_UA_WriteList" into an OPC UA tag node, for example, you can provide a time stamp determined in the program as SourceTimestamp for the value.

How the OPC_UA_WriteList instruction works in principle for setting DataValues

The DataValue structure is, for example, modeled as UDT and a tag of this data type is transferred to the "OPC_UA_WriteList" instruction. The instruction then consistently transfers the elements of the tag to the OPC UA tag node.

The value of the "ConnectionHdl" instruction parameter defines the how the "OPC_UA_WriteList" works: "Normal" client instruction or instruction to write to local OPC UA tag nodes. OPC UA clients can read the value with more information in the latter case and evaluate it accordingly.

The principle is shown in the following figures, once with any client and once with an S7-1500 CPU as OPC UA client. In the case of the S7-1500 CPU client, the assignment of the DataValue elements to the corresponding instruction parameters of the OPC_UA_ReadList instruction is shown. You have full access to all elements of the DataValue structure.

The value of "ConnectionHdl" (-42) of the "OPC_UA_WriteList" instruction causes the server to write to local OPC UA tag nodes.

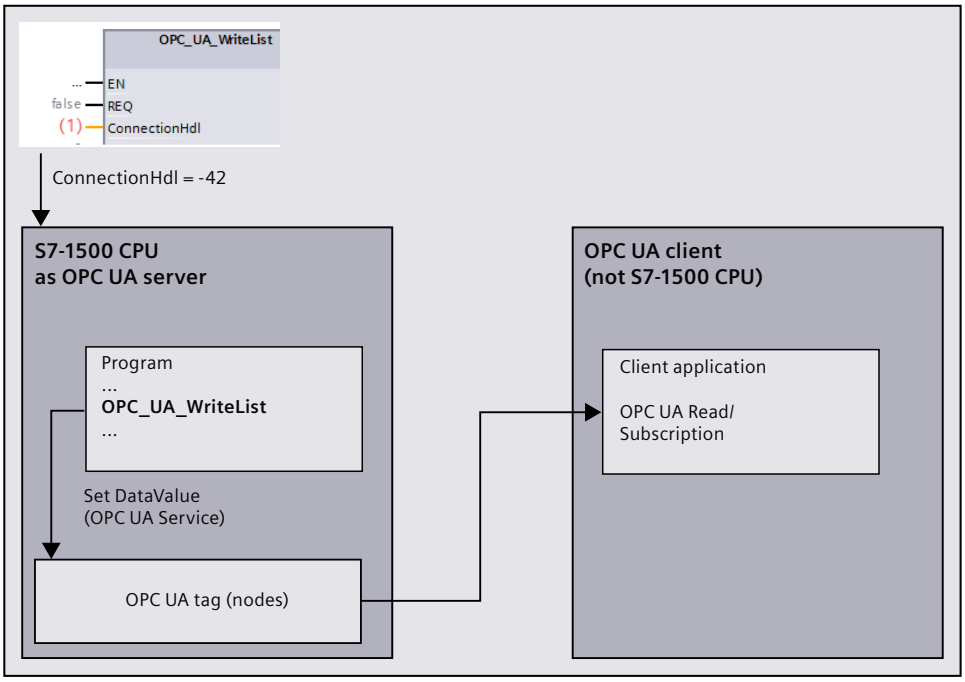

Figure 10-14 Set data value on local OPC UA tag of the server

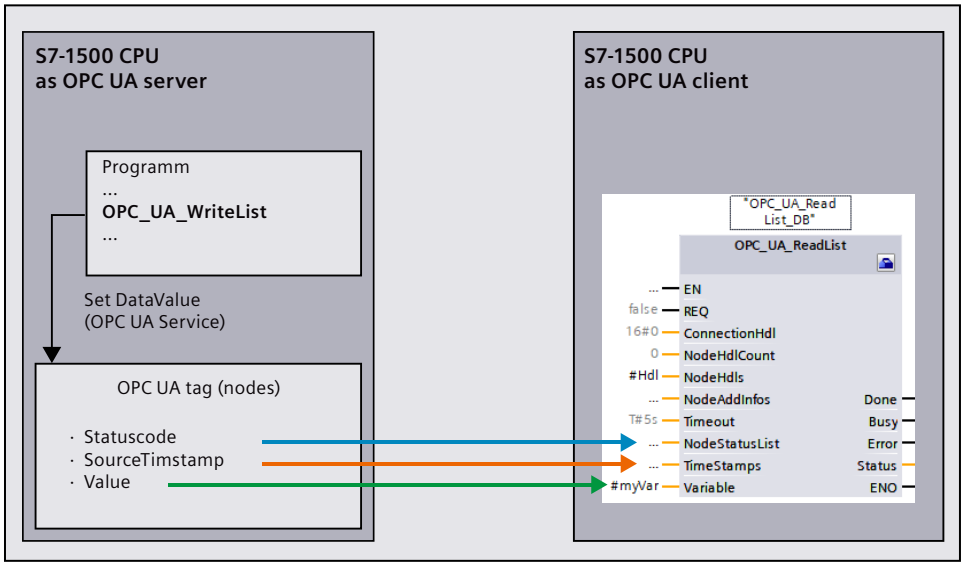

Figure 10-15 Client reads data value (OPC UA tag of the server of the S7-1500 CPU)

Other application options

If OPC UA clients register with an S7-1500 CPU for value changes (monitored items) in the context of a subscription and you supply the corresponding DataValue with both the value and the more information mentioned above, then changes to the more information can also trigger a notification.

Example: A binary value changes so fast that it falls back to its original value in the sampling interval (fast change TRUE > FALSE > TRUE). A change of the value is not detected. But the change of the time stamp is detected. Similarly, a notification can be triggered when the StatusCode changes - even without the value changing.

Constraints

- OPC UA clients are only allowed to read the OPC UA tag; the "AccessLevel" attribute for read/write permissions must be set accordingly for the OPC UA tag.
- Only OPC UA tags of the user-defined server interfaces can be set locally.
- In the user-defined server interface, there must be no mapping to CPU variables for the directly written OPC UA tags.

OPC UA server interface

Browse name	Node type	Access level	Local data
myServerInterface	Interface	---	
myOPC_UA_Variable	Bool	RD	

Figure 10-16 User-defined server interface

Details about the usage of the "OPC_UA_WriteList" instruction in the "Set OPC UA-DataValue" context can be found in the corresponding section of the communication instruction help.

10.3.2.2 Managing write and read rights

Enabling PLC tags and DB tags for OPC UA

OPC UA clients can have read and write access to PLC tags and DB tags if the tags are enabled for OPC UA (default setting). For an enabled tag the check box "Accessible from HMI/OPC UA" is activated.

You can change the default setting in the settings of the TIA Portal: Command "Settings > PLC programming > General" in "Options" menu. You will find the corresponding options in the "Block interface/data block elements" area.

The following example shows an array data block:

MyDB

Name	Data type	Accessible from HMI/OPC UA	Writable from HMI/OPC UA	Visible in HMI engineering
MyDB	Array[0..9] o...	☑	☑	☑
MyDB[0]	Int	☑	☑	☑
MyDB[1]	Int	☑	☑	☑
MyDB[2]	Int	☑	☑	☑
MyDB[3]	Int	☑	☑	☑
MyDB[4]	Int	☑	☑	☑
MyDB[5]	Int	☑	☑	☑
MyDB[6]	Int	☑	☑	☑
MyDB[7]	Int	☑	☑	☑
MyDB[8]	Int	☑	☑	☑
MyDB[9]	Int	☑	☑	☑

Figure 10-17 Enabling PLC tags and DB tags for OPC UA tags

This array can be read completely in one pass by OPC UA clients (see Addressing nodes (Page 159)). The check boxes at "Accessible from HMI/OPC UA" and "Writable from HMI/OPC UA" are activated for all the components of the array.

Result: OPC UA clients can both read and write these components.

Removing write rights

If you want to write-protect a tag, deselect the "Writable from HMI/OPC UA" option for that tag. This removes the write right for the OPC UA clients and HMI devices.

Result: Only read access by OPC UA clients and HMI devices is possible. OPC UA clients cannot assign values to this tag and therefore cannot influence execution of the S7 program.

Removing write and read rights

To write-protect and read-protect a tag, disable the "Accessible from HMI/OPC UA" option for that tag (checkbox not selected). This makes the OPC UA server remove the tag from its address space. OPC UA clients can no longer see that CPU tag.

Result: OPC UA clients and HMI devices can neither read nor write the tag.

Write and read rights of structures

If you remove the read or write right for the component of a structure, the structure or the data block cannot be written or read as a whole.

If you remove read and write rights for individual components of a PLC data type (UDT), the rights will also be removed from any data block based on that data type!

Visible in HMI engineering

The option "Visible in HMI Engineering" applies to Siemens engineering tools. If you disable the option "Visible in HMI Engineering" (check mark not set), you can no longer configure the tag in WinCC (TIA Portal).

The option does not have any effect on OPC UA.

Rules

- Only allow read access to PLC tags and tags of data blocks in STEP 7 if this is necessary for communication with other systems (controllers, embedded systems or MES).
  You should not enable other PLC tags.
- Only allow write access over OPC UA if write rights are genuinely necessary for specific PLC tags and tags of data blocks.
- If you have reset the "Accessible from HMI/OPC UA" option for all elements of a data block, the data block for an OPC UA client is no longer visible in the address space of the OPC UA server of the S7-1500 CPU.
- You can also prevent access to an entire data block centrally (see Managing write and read rights for a complete DB (Page 209)). This setting "overrules" the settings for the components in the DB editor.

More information

For information on how to coordinate write and read rights for CPU tags, refer to the section Coordinating write and read rights for CPU tags (Page 210).

10.3.2.3 Managing write and read rights for a complete DB

Hiding DBs or DB contents for OPC UA clients

You can easily prevent access to a complete data block by an OPC UA client.

With this option, the data of the corresponding DB, including instance DBs of function blocks, remains hidden for OPC UA clients.

In the default setting, data blocks can be read and written from OPC UA clients. You can change this default setting in the settings of the TIA Portal: Command "Settings > PLC programming > General" in "Options" menu. You will find the corresponding option in the "Default settings for new blocks" area.

Procedure

Proceed as follows to completely hide a data block for OPC UA clients or to protect a data block from write access from OPC UA clients:

1. Select the data block to be protected in the project tree.
2. Select the "Properties" shortcut menu.
3. Select the "Attributes" area.
4. Select/clear the "DB accessible from OPC UA" checkbox as required.

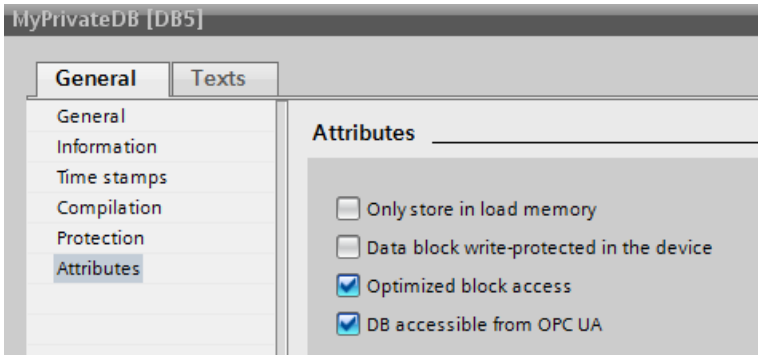

Figure 10-18 Hiding DBs or DB contents for OPC UA clients

NOTE

Effect on settings in the DB editor

If you hide a DB using the DB attribute described here, the settings for the components in the DB editor are no longer relevant; individual components can no longer be accessed or written.

Tip: Using the overview of all program blocks

If you are using multiple data blocks, it is appropriate to use the detailed overview of the "Program blocks" folder for selective activation or deactivation of the OPC UA accessibility.
Follow these steps:

1. Select the "Program blocks" folder in the project tree.
2. Select the "Overview" command in the "View" menu.
3. Select the "Details" tab.
   An overview of the blocks with their attributes is displayed.
4. Ensure that the "Data block accessible via OPC UA" column is selected.
5. Select only the data blocks that are to be accessible via OPC UA.

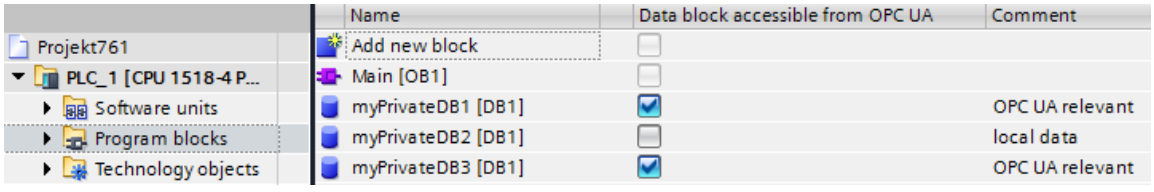

Figure 10-19 Overview of the program blocks

10.3.2.4 Coordinating write and read rights for CPU tags

Definition of write and read rights in the information model (OPC UA XML)

In the OPC UA information model, the attribute "AccessLevel" regulates access to tags.
AccessLevel is defined bit by bit:
Bit 0 = CurrentRead and Bit 1 = CurrentWrite. The meaning of the bit combinations is as follows:

- AccessLevel = 0: no access
- AccessLevel = 1: read only
- AccessLevel = 2: write only
- AccessLevel = 3: read+write

Example of the assignment of write and read rights (read+write)

```
<UAVariable NodeId="ns=3;s=&quot;Data_block_2&quot;.&quot;Static_1&quot;"
BrowseName="3:Static_1"
ParentNodeId="ns=3;s=&quot;Data_block_2&quot;"
DataType="INT"
AccessLevel="3">
    <DisplayName>Static_1</DisplayName>
```

Definition of write and read rights in STEP 7

When you define tags, you specify the access rights using the properties "Accessible from HMI/OPC UA" and "Writable from HMI/OPC UA".

Example of the assignment of write and read rights

Name	Data type	Accessible from HMI/OPC UA	Writable from HMI/OPC UA
Static_1	Int	☑	☑
<Add new>		☑	☑

Figure 10-20 Example of the assignment of write and read rights

Interaction between write and read rights

If you have imported an OPC UA server interface and AccessLevel attributes are set in this OPC UA XML file, the write and read rights are defined by the following rule: The least extensive access rights for each setting apply.

Example

- AccessLevel = 1 (read only) in the OPC UA server interface
- Both "Accessible from HMI/OPC UA" and "Writable from HMI/OPC UA" are selected in the PLC tag table

Result: This tag can only be read.

Rules

If write rights are required:

- AccessLevel = 2 oder 3
- "Writable from HMI/OPC UA" enabled

If read rights are required:

- AccessLevel = 1 (AccessLevel 3 is also possible, but misleading. The settings suggests that an OPC UA client has write and read rights)
- "Accessible from HMI/OPC UA" enabled, "Writable from HMI/OPC UA" disabled

If neither read nor write rights are to be granted (no access):

- AccessLevel = 0
- "Accessible from HMI/OPC UA" disabled

  Only one of the two conditions needs to be met to block all access. In this case, review whether the tag in the OPC UA server interface is actually necessary at all.

Access table

"Accessible from HMI/OPC UA" must be set if access over OPC UA is to be possible at all.
"Writable from HMI/OPC UA" must be set to allow an OPC UA client to write a tag / DB element.
Please see the table for the resulting access right.

Table 10-2 Access table

OPC UA XML	**STEP 7 (TIA Portal), for example tag table**		
AccessLevel	**Accessible from HMI/OPC UA**	**Writable from HMI/OPC UA**	**Resulting access right**
0	x	x	No access
x	0	x	No access

OPC UA XML	STEP 7 (TIA Portal), for example tag table		
AccessLevel	**Accessible from HMI/OPC UA**	**Writable from HMI/OPC UA**	**Resulting access right**
1	Enabled	x	Read only
2	Enabled	Disabled	No access
3	Enabled	Disabled	Read only
2	Enabled	Enabled	Write only
3	Enabled	Enabled	Read+write

(x = don't care)

10.3.2.5 Consistency of CPU tags

"AccessLevelEx" attribute extends access properties

As of firmware version V2.6, the OPC UA server of the S7-1500 CPU supports not only the attribute "AccessLevel" (see Coordinating write and read rights for CPU tags (Page 210)) but also the attribute "AccessLevelEx" which, in addition to the already explained bits for read access and write access, provides information on the consistency of a OPC UA tag. The new attribute was introduced with version V1.04 of the OPC UA specification (Part 3, Address Space Model).

Reading consistency properties

In the OPC UA information model of the OPC UA server, the attribute "AccessLevel" defines the access.

AccessLevelEx is defined bit by bit; in this case the relevant bits are:

- Bit 0 = CurrentRead
- Bit 1 = CurrentWrite
- Bits 2 to 7 are not relevant for the OPC UA server of an S7-1500 CPU

The meaning of the bit combinations is explained in the section on read and write rights.

The following bits for consistency are also added:

- Bit 8 = NonatomicRead; the bit is set if the tag cannot be read consistently. For read consistency of tags, bit 8=0.
- Bit 9 = NonatomicWrite; is set if the tag cannot be written consistently. For write consistency of tags, or if no write access is granted, bit 9=0.

Examples

An OPC UA tag (structure) is readable and writable; but inconsistent for reading and writing access.

Consequently: Bits 0, 1, 8 and 9 are set: AccessLevelEx = "771" (1+2+256+512).

Another structure is read-only.

Consequently: Bits 0 and 8 are set, bit 1 and bit 9 are not set: AccessLevelEx = "257" (1+0+256+0).

Handling of the attribute in the server

The "AccessLevelEx" attribute is only available in the OPC UA server. The attribute is not present in a node set file (XML export file).
However, the attribute "AccessLevel", which is exported, includes the information from "AccessLevelEx", see next section.

Export
During XML export of the standard SIMATIC server interface, the server sets the "AccessLevel" attribute, which was expanded to 32 bits in V1.04 compared to V1.03, to the value of the "AccessLevelEx" attribute.

Import
When importing a node set file (e.g. from an export of a server interface), the S7-1500 CPU sets the attribute "AccessLevelEx" according to its own estimate of the consistency of the imported data type, see next section. The imported value is ignored.

Consistency of data types at the server interface

The consistency of tags ("atomicity" in the language usage of OPC UA) within a program cycle of an S7-1500 CPU is ensured at the nodes of the server interface for the following data types:

- BOOL, BYTE, WORD, DWORD, LWORD
- SINT, INT, LINT, DINT, USINT, UINT, ULINT, UDINT
- REAL, LREAL
- DATE, LDT, TIME, LTIME, TIME_OF_DAY, LTIME_OF_DAY, S5TIME
- CHAR, WCHAR
- System data types and hardware data types that are based on the above-mentioned data types are also consistent.
  Example: HW_ANY, derived from UINT (UInt16).

Tip: If you browse in the address space of the S7-1500 CPU (e.g. with the OPC UA Client UaExpert), you can find the consistent data types under Types > BaseDataType > Enumeration/Number/String.

Tags of the following data types are **not** consistent (in the language usage of OPC UA: "nonatomic"):

- SIMATIC structures are generally not consistent. This means that all tags which, for example, have unknown structures or a UDT data type are not consistent.
- System data types such as DTL, IEC_Counter, IEC_TIMER, etc. are data types that are derived from structures.
- Strings (Array of Char) are not consistent.

Tip: If you browse in the address space of the S7-1500 CPU (e.g. with the OPC UA Client UaExpert), you can find data types based on structures under Types > BaseDataType > Structure.

10.3.2.6 Write accesses to OPC UA variables from S7-1500 Motion Control.

In addition to the consistency of the data types, the CPU examines the variables of the technology objects for plausibility and validity.

If an OPC UA client writes an invalid or implausible value to a variable, the original value is retained in the variable of the technology object.

Despite an unsuccessful write access, the status "Good" is output.

Example 1

Interpolation type of the cyclic cam

The variable "Cam_1".InterpolationSettings.InterpolationMode is of type INT, but may only assume the values 1...2.

If you want to change the variable using OPC UA to an invalid value, for example, 3, then the status code "Good" is output, but the variable is not changed.

Example 2

Position the software limit switch at a positioning axis

The position of the positive HW limit switch must be more positive than the position of the negative SW limit switch.

"PosAxis_1".PositionLimits_SW.MaxPosition > "PosAxis_1".PositionLimits_SW.MinPosition

If you want to change the variable using OPC UA to a value that does not meet this condition, then the status code "Good" is output, but the variable is not changed.

Which values are valid for variables of the technology objects can be looked up in the documentation of the technology objects (https://support.industry.siemens.com/cs/ww/en/view/109751049).

10.3.2.7 Accessing OPC UA server data

High performance in line with application

OPC UA is designed for the transfer of a high volume of data within a short period of time. You can increase the performance significantly if you do not access individual PLC tags, but rather read and write arrays and structures as a whole.

It is fastest to access arrays. Therefore, you should combine the data for OPC UA clients into arrays.

Recommendations for access to the OPC UA server by the OPC UA client

- For one-off or infrequent data access, use standard read/write access.
- For cyclic access to small amounts of data (up to ca. every 5 seconds), use subscriptions. Optimize the settings for the smallest publishing interval and the smallest sampling interval at the OPC UA server.
- If you access specific tags regularly (recurring access), you should use the functions "RegisteredRead" and "RegisteredWrite".

Allow a greater communication load for the PLC by increasing the value for "Cycle load due to communication". Make sure that your application still works properly with the changed settings.

Procedure for creating an array DB

You can create arrays for example in global data blocks, in the instance data block of a function block or as an array DB . The following sections describe how to create an Array-DB.

To create a data block with an array (array data block), follow these steps:

1. Select the CPU with the OPC UA server in the project tree.
2. Double-click "Program blocks".
3. Double-click "Add new block".
4. Click "Data block".
5. Select a unique name for the data block and accept the name that is already entered.
6. Select the "Array DB" entry from the drop-down list for "Type".
7. Select the data type for the individual components of the array from the drop-down list for "Array data type".
8. Enter the high limit of the array for "Array limit".
9. Click "OK".

10.3.2.8 MinimumSamplingInterval attribute

MinimumSamplingInterval attribute of tags

In addition to "Value", "DataType" and "AccessLevel", you can also set the "MinimumSamplingInterval" attribute for a tag in the XML file that represents the server address space.

The attribute specifies how fast the server can sample the tag value.

The OPC UA server of the S7-1500 CPU handles the values for MinimumSamplingInterval as follows:

- Negative values and values greater than 4294967 are set to -1; this means: The minimum sampling rate is indeterminate. The server does not specify how fast the tag value can be sampled.
- Decimal numbers are rounded to three decimal places.

10.3.2.9 Export OPC UA XML file

Generating an OPC UA export file

The OPC Foundation has specified a standard XML-based format for describing information models. It allows the information model of an OPC UA server to be provided to a client in advance, or information models can be downloaded to an OPC UA server. A file in this format is called a node set file because it describes an information model as a set of nodes.

With STEP 7 (TIA Portal), you can easily export the standard SIMATIC information model of the S7-1500 CPU as a server to an OPC UA XML file (node set file); including the following elements that you have enabled for OPC UA:

- CPU variables (PLC tags and DB elements)
- Function blocks with their inputs/outputs

Elements that exist in the CPU but are not used in the program do not appear in the OPC UA XML file after the export. Examples of such unused elements are:

- UDTs that are not mapped to a data block
- Function blocks with inputs/outputs without assigning inputs/outputs to CPU tags

You use the OPC UA XML file for the offline configuration of an OPC UA client; it is structured according to the OPC UA specification and acts as a standard SIMATIC server interface.
To create and export the OPC UA XML file, follow these steps:

1. Select the CPU. Click on the CPU symbol (for example in the network view).
2. Click "General > OPC UA > Server > Export" in the properties of the CPU.
3. Click "Export OPC UA XML file".
4. Select the directory in which you want to save the export file.
5. Select a new name for the file or keep the name that is already entered.
6. Click "Save".

NOTE

As of STEP 7 (TIA Portal) V15.1, server methods are contained in the OPC UA export file (node set) together with their input and output parameters.

Exporting all array elements separately

If the "Export all array elements as separate nodes" option is selected in the CPU properties under "OPC UA > Server > Export", the OPC UA XML file contains all elements of arrays as individual XML elements. In addition, the arrays themselves are each described in an XML element in the XML file.
If an array contains many array elements, the XML file can be very large.

Tip

The following FAQ contains a converter with which you can convert the export file into CSV format. You then obtain a list of the tags of the CPU that can be accessed by OPC UA.
You can find the FAQ on the Internet (https://support.industry.siemens.com/cs/ww/en/view/109742903).

10.3.3 Configuring the OPC UA server

10.3.3.1 Enabling the OPC UA server

Requirement

- If you use **certificates** for secured communication, e.g. HTTPS, Secure OUC, OPC UA, make sure that the modules involved have the **current time of day and the current date**. Otherwise, the modules evaluate the used certificates as invalid and secure communication does not work.
- You have acquired a runtime license for the operation of the OPC UA functions, see License for OPC UA (Page 235).

Commissioning an OPC UA server

By default, the OPC UA server of the CPU is not enabled for reasons of security: OPC UA clients have neither write nor read access to the S7-1500 CPU.

Follow these steps to activate the OPC UA server of the CPU:

1. Select the CPU. Click on the CPU symbol (for example in the network view).
2. Click "OPC UA > Server" in the properties of the CPU.
3. Activate the OPC UA server of the CPU.
4. Confirm the security notes.
5. Go to the CPU properties, select "Runtime licenses" and set the runtime license acquired for the OPC UA server.
6. Compile the project.
7. Download the project to the CPU.
   The OPC UA server of CPU now starts.

Settings remain stored

If you have already enabled the server and made settings, those settings are not lost if the server is disabled. The settings are saved as before and are available when you enable the server again.

Application name

The application name is the name of the OPC UA application and applies to the server and the client. The name is displayed under "OPC UA > General":

- The default for the application name is: "SIMATIC.S7-1500.OPC-UA.Application:PLC_1".
- The default consists of "SIMATIC.S7-1500.OPC-UA.Application:" and the name of the CPU selected under "General > Product information > Name", in this case "PLC_1".
- The OPC UA server uses this application name to identify itself to a communication partner (OPC UA client), for example, when an OPC UA client uses the discovery service to detect accessible servers.
- The displayed application name uses the OPC UA client of the CPU when connecting to an OPC UA Server. This means that the CPU enters this application name automatically as "ApplicationName" for the instruction "OPC_UA_Connect" (tag of type "OPC_UA_SessionConnectInfo" at the parameter "SessionConnectInfo" of the instruction "OPC_UA_Connect").
  When you program the instruction "OPC_UA_Connect" you must therefore assign an empty string to the "ApplicationName". You can use the application name, for example, to identify the client and its sessions (SessionNames) for diagnostic purposes.

If you have activated the server, you can also use a different name that is meaningful in your project and that fulfills the requirements of your project, e.g. for worldwide uniqueness.

The example below originates from UaExpert:

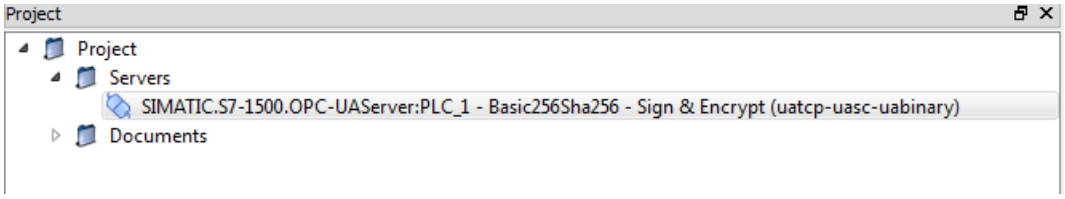

Changing the application name

To change the application name, follow these steps:

1. Select the CPU. Click on the CPU symbol (for example in the network view).
2. Click "OPC UA > General" in the properties of the CPU.
3. Enter a meaningful name.

Please note that the application name is also entered on the certificate (Subject Alternative Name) and you may have to generate an existing certificate again after changing the application name.

10.3.3.2 Access to the OPC UA server

Server addresses

The OPC UA server of the S7-1500 CPU can be reached over all integrated PROFINET interfaces of the CPU (firmware V2.0 and higher).

Direct access to the OPC UA server of the CPU over the backplane bus of the automation system is not possible via CPs under the following conditions:

- Configuration with TIA Portal Version V16 or higher, S7-1500 CPU firmware version 2.8 or higher and CP 1543-1 firmware version V2.2 or higher.
  For configuration, see Access to OPC UA applications (Page 156).

Direct access to the OPC UA server of the CPU over the backplane bus of the automation system is not possible via CMs.

With SIMATIC S7 1500 SW controllers, access to the OPC UA server is possible via PROFINET interfaces that are assigned to the software PLC.

Additional access options of SW controllers are described in the following application example: Internal and external OPC UA connection via the virtual Ethernet interface of the software controller V2.5 or higher
(https://support.industry.siemens.com/cs/ww/en/view/109760541).

Example for URLs (Uniform Resource Locator) that can be used to set up connections to the OPC UA server of the CPU:

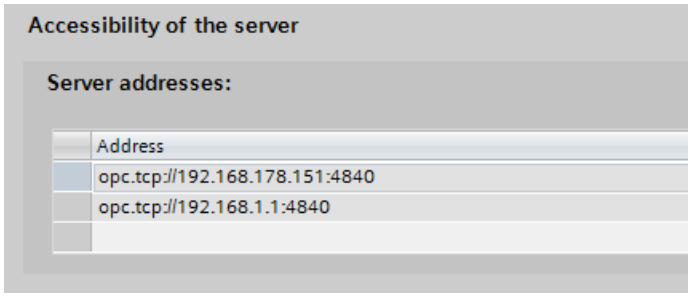

Figure 10-21 Display of the server addresses

The URLs are structured as follows:

- Protocol identifier "opc.tcp://"
- IP address
  - 192.168.178.151
    The IP address at which the OPC UA server can be accessed from the Ethernet subnet 192.168.178.
  - 192.168.1.1
    The IP address at which the OPC UA server can be accessed from the Ethernet subnet 192.168.1.
- TCP Port number
  - Default: 4840 (standard port)
    The port number can be changed under "OPC > UA > Server > Port".

Dynamic IP addresses

In the example below, the IP address for the PROFINET interface [X2] has not yet been specified.

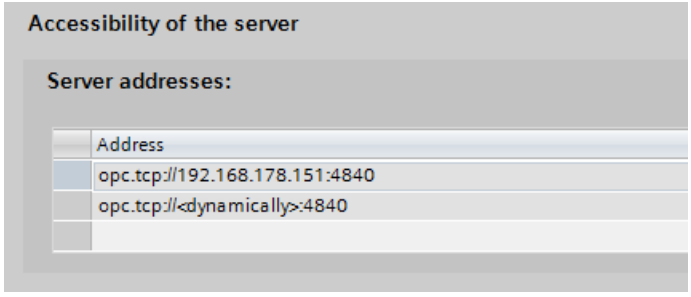

Figure 10-22 Display of the server addresses with dynamic IP address

The placeholder "<dynamically>" appears in the table.
The IP address of this PROFINET interface is set later on the device, e.g. via the display of the CPU.

Activating the standard SIMATIC Server interface

If the "Enable standard SIMATIC server interface" option is selected, the OPC UA server of the CPU provides the enabled PLC tags and server methods to the clients, as was specified by SIEMENS in the self-defined namespace.

This option is selected in the default setting.

Leave the option selected so that OPC UA clients can automatically connect to the OPC UA server of the CPU and exchange data.

If you do not select this option, you must add the server interface by entering the "OPC UA communication" entry in the project tree. This interface is then used as OPC UA server interface, see OPC UA server interface configuration (Page 236).

NOTE

General device information is readable even with deactivated standard SIMATIC server interface

Even if you disable the standard SIMATIC server interface, OPC UA clients can read general device information about the OPC UA server of the CPU.

Examples of such device information: DeviceManual, DeviceRevision, OrderNumber. In this case, however, all objects of the application program remain invisible to clients.

If you want to prevent that this device information is not visible, you have to disable the OPC UA server of the CPU.

10.3.3.3 General settings of the OPC UA server

TCP port for OPC UA

By default, OPC UA uses TCP port 4840. You can, however, select a different port. Entries from 1024 to 49151 are possible. You must, however, make sure that there are no conflicts with other applications. OPC UA clients must use the selected port when establishing a connection.

In the example below, port 48400 is selected:

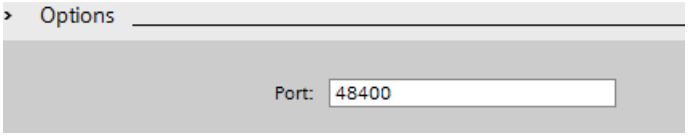

Figure 10-23 TCP port for OPC UA

An overview of the supported protocols and the port numbers used by the S7-1500 CPUs can be found in section Communications protocols and port numbers used for Ethernet communication (Page 30).

Settings for sessions

- Maximum timeout for sessions
  In this field, you specify the maximum time period before the OPC UA server closes a session without data exchange.
  Possible values between 1 and 600000 seconds.
- Maximum number of OPC UA sessions
  In this field, you specify the maximum number of sessions the OPC UA server starts and simultaneously operates.
  The maximum number of sessions is dependent on the performance capability of the CPU. Each session ties up resources.

Maximum number of registered nodes

In this field, you specify the maximum number of nodes the OPC UA server registers.

The maximum number of registered nodes depends on the capacity of the CPU and is displayed when you configure the field content (place cursor in field). Each registration ties up resources.

NOTE

No error message following attempt to register more than the configured maximum number of registrable nodes

If a client tries to register more nodes during runtime than the configured maximum number, the server of the S7-1500 CPU only registers the configured maximum number. Starting from the configured maximum number of registrable nodes, the server returns the regular string node IDs unchanged to the client so that the speed advantage gained by registration for these nodes is lost. The client does not receive an error message.

When configuring, make sure you have a sufficient reserve by taking into account the maximum number of nodes that can be registered (for example, using the technical data of the CPU).

Additional information

Details on which ports are used by the various services for data transfer via TCP and UDP, and what are the points to note when using routers and firewalls can be found in the FAQ (https://support.industry.siemens.com/cs/ww/en/view/8970169).

Backward compatible data type definitions according to OPC UA specification ≤ V1.03

The OPC UA specification (<= V1.03) defines mechanisms in order to read out data type definitions, for example for user-defined structures (UDTs), from a server by means of the TypeDictionaries.

In the OPC UA server properties of the CPU, you can set whether the CPU generates these backward compatible data type definitions according to the OPC UA specification ≤ V1.03 for the standard SIMATIC server interface or not.

Because TypeDictionaries are complex and result in large OPC UA XML files (server interfaces) which the client has to interpret, a simpler solution was introduced with OPC UA Specification

V1.04 (attribute "DataTypeDefinition" at the data type node). If your client supports the OPC UA specification V1.04 or higher, then disable the option.

Advantages of the data type definitions according to OPC UA specification as of V1.04:

- The server starts faster
- The memory is used more efficiently
- The "Browse" function is faster

10.3.3.4 Settings of the server for subscriptions

Subscription instead of cyclic queries

An alternative to cyclic queries for a PLC tag (polling) is to monitor this value. Use a Subscription: The server informs the client if the value of PLC tags changes. See "The OPC UA client".

One server usually monitors a large number of PLC values. For this reason, the server sends notifications to the client at regular intervals containing the new values of the PLC tags.

Advantages of subscriptions:

- The server starts faster
- The memory is used efficiently

How frequently does the server send notifications?

When a Subscription is set up, the OPC UA client specifies the intervals at which it wants to be sent the new values in the event of changes. To limit the communication load through OPC UA, set a minimum interval for the messages. For this purpose, use the parameters for the minimum publishing interval and the minimum sampling interval.

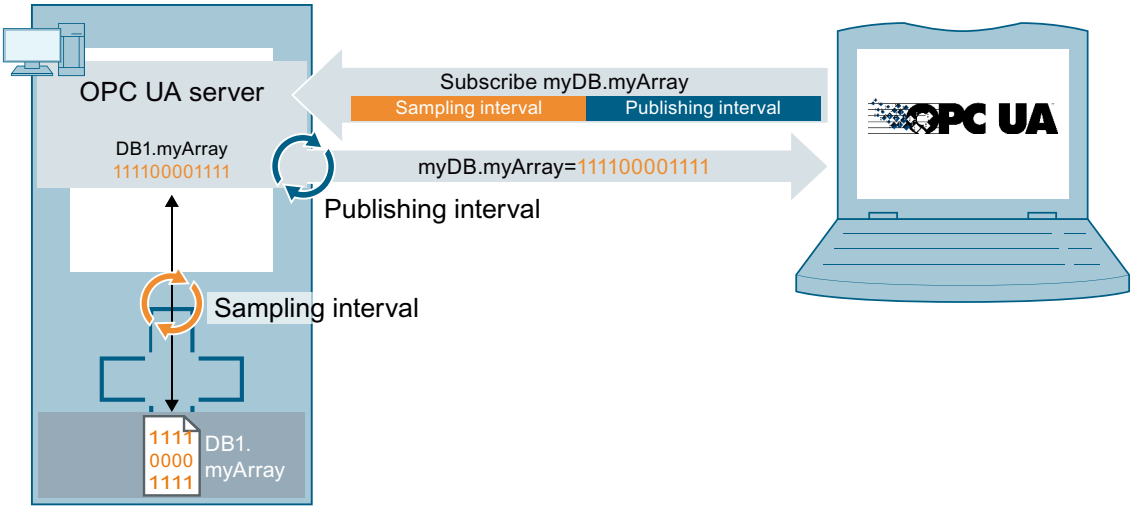

Figure 10-24 Principle of a subscription

Minimum publishing interval

With "Minimum publishing interval", you set the time intervals at which the server sends a message to the client with the new values in the event of changes.

250 ms is used as the "Minimum sampling interval" in the figure below. The value 200 ms is entered as the "Minimum publishing interval".

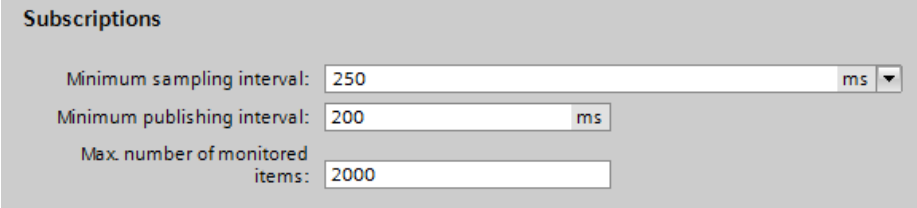

Figure 10-25 Subscription settings

In the example, following a value change the OPC UA server will send a new message every 200 ms if the OPC UA client requests an update.
If the OPC UA client requests an update every 1000 ms, the OPC UA server will only send a message with the new values once every 1000 ms (one second).
If the OPC UA client requests an update every 100 ms, the server will still only send a message every 200 ms (minimum publishing interval).

Minimum sampling interval

With "Minimum sampling interval", you set the time intervals at which the OPC UA server records the value of a CPU tag and compares it with the previous value to detect any changes.
If the sampling interval is selected smaller than the publishing interval and an OPC UA client requests a high sampling rate for certain PLC tags, two or more values may be measured during each publishing interval.
In this case, the OPC UA server writes the value changes into the queue and sends all value changes to the client after the completion of the publishing interval. If more value changes occur in the publishing interval than fit in the queue, the OPC UA server overwrites the oldest values (depending on the set "Discard Policy" of the client subscribing to the data, the option "Discard Oldest" has to be activated in this case). The most recent values are sent to the client.

Maximum number of monitored elements (monitored items)

In this field, you specify the maximum number of elements that the OPC UA server of the CPU simultaneously monitors for a value change.
The monitoring ties up resources. The maximum number of monitored elements is dependent on the utilized CPU.

More information

Information about the system limits of the OPC UA server of the S7-1500 CPUs (firmware V2.0 and V2.1) regarding subscriptions, sampling intervals and publishing intervals can be found in the following FAQ
(https://support.industry.siemens.com/cs/ww/en/view/109755846).
When using subscriptions, certain status codes of errors provide information on the error that occurred. For information on causes and remedies for status codes of OPC UA client that

appear, see the list of error codes in the online help of STEP 7 (TIA Portal) or in the following FAQ (https://support.industry.siemens.com/cs/ww/en/view/109755860).
The rules for subscriptions are available in section Rules for subscriptions (Page 336).
You will find information about the diagnostics of subscriptions in the section Subscription diagnostics (Page 299).

10.3.3.5 Handling client and server certificates

A secure connection between the OPC UA server and an OPC UA client is only established when the server can prove its identity to the client. This is done with the server certificate.

Certificate of the OPC UA server

When you have activated the OPC UA server and have confirmed the security prompts, STEP 7 automatically generates the certificate for the server and saves it in the local certificate directory of the CPU. You can view and manage this directory with the local certificate manager of the CPU (exporting or deleting certificates).
The figure below shows the local certificate manager of the CPU with the automatically generated certificate for the OPC UA server:

Figure 10-26 Local certificate manager of the CPU

Alternatively, you can also generate a server certificate yourself.
The certificate of the server is transferred from the server to the client during establishment of a connection. The client checks the certificate.

The client user decides whether the server certificate is to be trusted.

The user at the client side now has to decide whether the server certificate is to be trusted. If the user trusts the server certificate, the client stores the server certificate in its directory containing the trusted server certificates.

The following example shows a dialog of the client "UA Sample Client". When the user clicks the "Yes" button, the client trusts the server certificate:

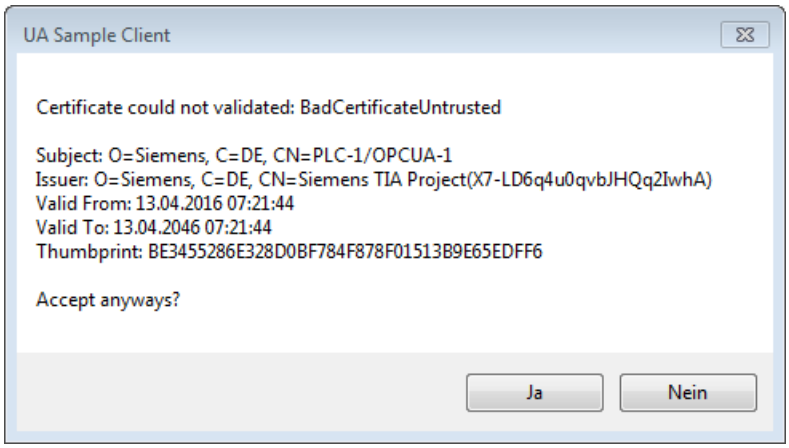

Figure 10-27 Dialog of the client "UA Sample Client"

Where does a client certificate come from?

Client of the S7-1500

If you are using the OPC UA client of an S7-1500 CPU (OPC UA client enabled), you can create certificates for these clients with STEP 7 V15 and higher.

1. In the project tree, select the CPU you want to use as a client.
2. Double-click "Device configuration".
3. In the properties of the CPU, click "Protection & Security > Certificate manager".
4. Double-click "<Add new>" in the "Device certificates" table.
   STEP 7 opens a dialog.
5. Click the "Add" button.
6. Select the "OPC UA client" entry from the "Usage" list.
   Note:
   The IP addresses under which the CPU can be accessed in your system must be entered under "Subject Alternative Name (SAN)".
   You must therefore configure the IP interfaces of the CPU before you generate a client certificate.
7. Click "OK".
   STEP 7 now shows the client certificate in the "Device certificates" table.
8. Right-click this line and select the "Export certificate" entry from the shortcut menu.
9. Select a directory where you will store the client certificate.

Clients of other manufacturers

When you use UA clients from manufacturers or the OPC Foundation, a client certificate is generated automatically during installation or upon the first program call. You have to import these certificates via the global certificate manager in STEP 7 and use them for the corresponding CPU (as shown above).

When you program an OPC UA client yourself, you can have the certificates generated by the program; see the section "Instance certificate for the client". Alternatively, you can generate

certificates with tools, for example with OpenSSL or the certificate generator of the OPC Foundation:

- The procedure for OpenSSL is described here: "Generating PKI key pairs and certificates yourself".
- Working with the certificate generator of the OPC Foundation is described here: "Creating self-signed certificates".

Announcing client certificates to the server

You need to send client certificates to the server to allow a secure connection to be established.

To do this, follow these steps:

1. Select the "Use global security settings for certificate manager" option in the local certificate manager of the server. This makes the global certificate manager available.
   You will find this option under "Protection & Security > Certificate manager" in the properties of the CPU that is acting as server.
   If the project is not yet protected, select "Security settings > Settings" in the STEP 7 project tree, click the "Protect this project" button and log on.
   The "Global security settings" item is now displayed under "Security settings" in the STEP 7 project tree.
2. Double click "Global security settings".
3. Double click "Certificate manager".
   STEP 7 opens the global certificate manager.
4. Click on the "Trusted certificates" tab.
5. Right-click in the tab on a free area (not on a certificate).
6. Select the "Import" command from the shortcut menu.
   The dialog for importing certificates is displayed.
7. Select the client certificate that the server is to trust.
8. Click "Open" to import the certificate.
   The certificate of the client is now contained in the global certificate manager.
   Note the ID of the client certificate just imported.
9. Click the "General" tab in the properties of the CPU that is acting as server.
10. Click "OPC UA > Server > Security > Secure Channel".
11. Scroll down in the "Secure Channel" dialog to the section "Trusted clients".
12. Double-click in the table on the empty row with "<add new>". A browse button is displayed in the row.
13. Click this button.
14. Select the client certificate that you have imported.
15. Click the button with the green check mark.
16. Compile the project.
17. Load the configuration onto the S7-1500 CPU.

Result:
The server now trusts the client. If the server certificate is also considered trusted, the server and client can establish a secure connection.

Accepting client certificates automatically

When you select the option "Automatically accept all client certificates during runtime" (below the "Trusted clients" list), the server automatically accepts all client certificates.

NOTICE
Setting after commissioning In order to avoid security risks, deactivate the "Automatically accept client certificates during runtime" option again after commissioning.

Configuring security settings of the server

The figure below shows the available server security settings for signing and encrypting messages.

Figure 10-28 Configuring security settings of the server

By default, a server certificate is created that uses SHA256 signing. The following security policies are enabled:

- None
  Unsecured end point

  NOTE
  Disabling security policies you do not want
  If you have enabled all security policies in the secure channel settings of the S7-1500 OPC UA server (default setting) – thus, also the end point "None" (no security) – unsecured data traffic (neither signed nor encrypted) between the server and client is also possible. The identity of the client remains unknown with "No security". Each OPC UA client can then connect to the server irrespective of any subsequent security settings.
  When configuring the OPC UA server, make sure that only security policies that are compatible with the security concept of your machine or plant are selected. All other security policies should be disabled.
  Recommendation: If possible, use the setting "Basic256Sha256".

- Basic128Rsa15 -Sign
  Insecure end point, supports a series of algorithms that use the hash algorithm RSA15 and 128-bit encryption.
  This endpoint protects the integrity of the data through signing.
- Basic128Rsa15 -Sign & Encrypt
  Secure endpoint, supports a series of algorithms that use the hash algorithm RSA15 and 128-bit encryption.
  This endpoint protects the integrity and confidentiality of the data through signing and encrypting.
- Basic256Rsa15 -Sign
  Secure endpoint, supports a series of algorithms that use the hash algorithm RSA15 and 256-bit encryption.
  This endpoint protects the integrity of the data through signing.
- Basic256Rsa15 -Sign & Encrypt
  Secure endpoint, supports a series of algorithms that use the hash algorithm RSA15 and 256-bit encryption.
  This end point protects the integrity and confidentiality of the data through signing and encrypting.
- Basic256Sha256 - Sign
  Secure endpoint, supports a series of algorithms for 256-bit hashing and 256-bit encryption.
  This endpoint protects the integrity of the data through signing.
- Basic256Sha256 - Sign & Encrypt
  Secure endpoint, supports a series of algorithms for 256-bit hashing and 256-bit encryption.
  This endpoint protects the integrity and confidentiality of the data through signing and encryption.

- Aes256_Sha256_RsaPss - Sign
  Secure endpoint, supports a range of algorithms for 256-bit encryption and 256-bit hashing. All certificates must use at least Sha256 signatures. This endpoint protects the integrity of the data by signing it.
  For high security requirements. PKI infrastructure required.
- Aes256_Sha256_RsaPss - Sign & Encrypt
  Secure endpoint, supports a range of algorithms for 256-bit encryption and 256-bit hashing. All certificates must use at least Sha256 signatures. This endpoint protects the integrity and confidentiality of data by signing and encrypting it.
  For high security requirements. PKI infrastructure required.

To enable the security setting, click the check box in the relevant line.

NOTE

If you use the settings "Basic256Sha256 -Sign" and "Basic256Sha256 -Sign & Encrypt", the OPC UA server and OPC UA clients must use "SHA256"-signed certificates.

For the settings "Basic256Sha256 -Sign" and "Basic256Sha256 -Sign & Encrypt", the certificate authority of STEP 7 automatically signs the certificates with "SHA256".

"No Security" security policy and authentication via user name and password

You can set the following combination:

Security policy = "No Security" and authentication via user name and password.

- The OPC UA server of the S7-1500 supports this combination. OPC UA clients can connect and encrypt the authentication data or not.
- OPC UA client of the S7-1500 CPU also supports this combination: However, in runtime it only connects if it can send the authentication data encrypted via cable!

10.3.3.6 Generating server certificates with STEP 7

The description below shows the procedure for generating new certificates with STEP 7 and applies in principle to various uses of the certificates. STEP 7 sets the appropriate purpose - in this case "OPC UA Client & Server" - depending on which area of the CPU properties is used to start the following dialog.

Recommendation: To use the full functionality for the security of the OPC UA server, use the global security settings.

The global security settings are enabled in the CPU properties under "Protection & Security > Certificate manager".

Customizing server certificates

STEP 7 automatically generates a certificate for the OPC UA server of the S7-1500 when you activate the server (see "Activating the OPC UA server (Page 216)"). In the process STEP 7 uses the default values for the parameters of the certificate. If you want to change the parameters, follow these steps:

1. Click the Browse button under "General > OPC UA > Server > Security > Secure channel > Server certificate" in the properties of the CPU. A dialog is displayed that shows the certificates available locally.
2. Click the "Add" button.
3. The dialog for generating new certificates is displayed (figure below). The values for an example are already entered:

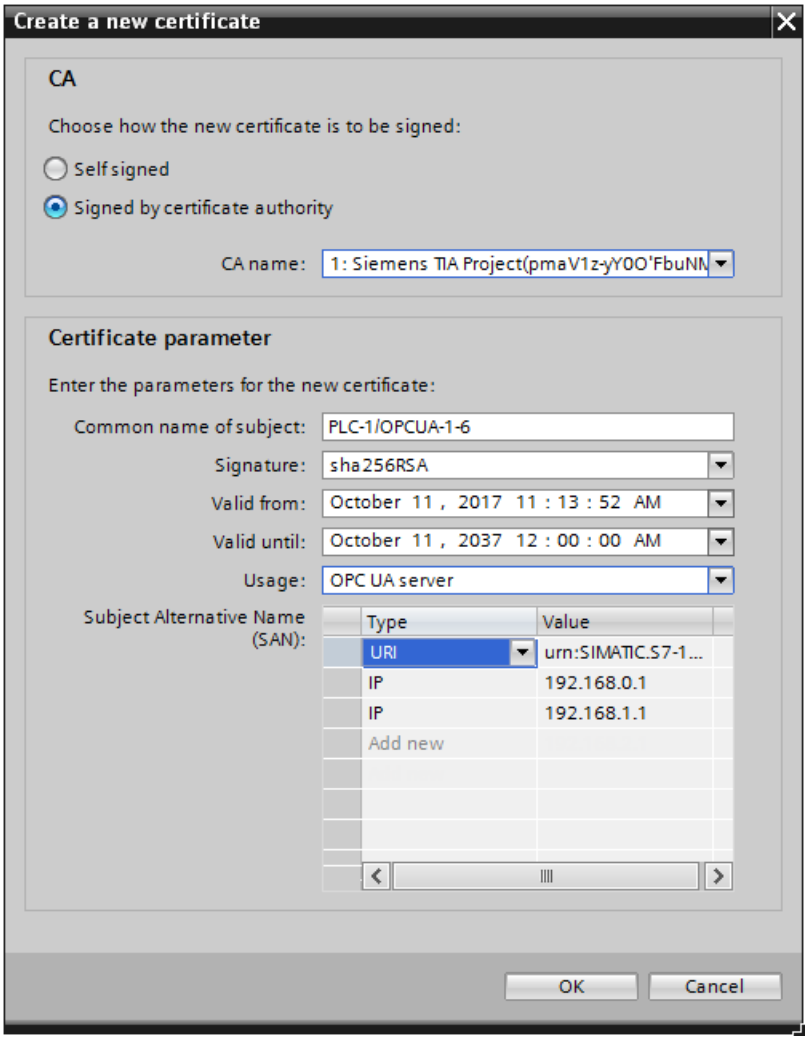

Figure 10-29 Customizing server certificates

4. Use other parameters if this is necessary in accordance with the security specifications in your company or your customer.

Explanation of fields for certificate generation

- CA
  Select whether the certificate is to be self-signed or signed by one of the CA certificates of the TIA Portal. The certificates are described under "Certificates with OPC UA". If you want to generate a certificate that is to be signed by one of the CA certificates of the TIA-Portal, the project must be protected and you must be logged in as a user with all the required function rights. Further information can be found under "Basics of user administration in the TIA Portal".
- Certificate holder
  The default setting always consists of the name of the project and "\OPCUA-1". In the example, the project name is "PLC1". In the properties of the CPU set the project name under "General > Project information" > Name". Keep the default or enter a different name that is more meaningful for the OPC-UA server under "Certificate holder".
- Signature
  Here you select the hash and encryption process that is to be used when signing the server certificate. The following entries are available:
  – "sha1RSA",
  – "sha256RSA".
- Valid from
  Here you enter the date and time for the beginning of the validity of the server certificate.
- Valid until
  Here you enter the date and time for the end of the validity of the server certificate. Ensure that the certificate is valid not only for one year or a few years. In the example the certificate is valid for 30 years. However, for reasons of security you should renew the certificate at much shorter intervals. The long period of validity gives you the opportunity to decide when a suitable moment would be, for example, when the system is being serviced.
- Usage
  The default is "OPC UA client & server". Keep this default for the OPC UA server. The "Create a new certificate" dialog can be called from several points in STEP 7. If, for example, you call this dialog for the Web server of the CPU, "Web server" is entered under "Usage". The following entries are available in the Usage drop-down list:
  – "OPC UA client"
  – "OPC UA client & server"
  – "OPC UA server"
  – "TLS"
  – "Web server"
- Subject Alternative Name (SAN)
  The following is entered in the example above: "URI:urn:SIMATIC.S7-1500.OPC-UAServer:PLC1,IP:192.168.178.151,IP:192.168.1.1". This URI must be correctly entered because it is checked against the communicated application description.
  The following entry would also be valid: "IP: 192.168.178.151, IP: 192.168.1.1". The important thing here is that the IP addresses via which the OPC UA server of the CPU can be accessed are entered here.
  See "Access to the OPC UA server (Page 218)".
  This allows OPC UA clients to verify whether a connection to the OPC UA server of the S7-1500 is really to be established or whether in fact an attacker is trying to send manipulated values from another PC to the OPC UA client.

10.3.3.7 User authentication

Types of user authentication

For the OPC UA server of the S7-1500, you can set what authentication is required for a user of the OPC UA client wishing to access the server.

You have the following options:

- **Guest authentication**
  The user does not have to prove their authorization (anonymous access). The OPC UA server does not check the authorization of the client user
  If you want to use this type of user authentication, select the "Enable guest authentication" option under "OPC UA > Server > Security > User authentication".

  NOTE
  To increase security, you should only allow access to the OPC UA server with user authentication.

- **User name and password authentication**
  The user has to prove their authorization (no anonymous access). The OPC UA server checks whether the client user is authorized to access the server. Authorization is given by the user name and the correct password.
  If you want to use this type of user authentication, select the "Enable user name and password authentication" option under "OPC UA > Server > Security > User authentication".
  Deactivate the guest authentication.
  Enter the user in the "User management" table.
  To do so, click the "<Add new user>" entry. A new user is created with an automatically assigned name. You can edit the user name and enter the password for the user name. You can add a maximum of 21 users.
- **Additional user administration via the security settings of the project**
  The "Enable additional user administration via the security settings of the project" option can be found under the general OPC UA settings (CPU properties: OPC UA > General). If you select this option, the user management for the open project will also be used for user authentication for the OPC UA server: The same user names and passwords are then valid in OPC UA as in the current project.
  Proceed as follows to activate user management for the project:
  – Click "Security settings > Settings" in the project tree.
  – Click the "Protect this project" button.
  – Enter your user name and your password.
  – Enter additional users under "Security settings > Users and roles".
  If you configure an additional OPC UA server in your project, also select the option "Enable additional user administration via the security settings of the project". Repeated input of user names and passwords is then unnecessary.

10.3.3.8 Users and roles with OPC UA function rights

The following options for user authentication use central project settings for project users:

- For the server:
  For configuration of CPU properties (OPC UA > Server > Security > User authentication). Option: "Enable additional user administration via the security settings of the project"
- For the client:
  For configuration of client interface ("Configuration" tab, "Security"). Option: "User (TIA Portal - security settings)"

Requirement

Before you can edit the security settings, the project must be protected and you must be logged on with sufficient rights, for example as administrator.

Settings in the project tree > "Security settings"

You access the central user settings and roles in the protected project in the project tree under "Security settings". This is where you centrally define users with user name, password and function rights. You can simply use these settings elsewhere.

Figure 10-30 Setting user and roles

Reusing central security settings

Examples for reusing elsewhere:

- User selection for user authentication for OPC UA server
  With this setting, you tell the server which client (user) with which user name and which password is allowed to access the server.
- User selection for OPC UA client authentication
  With this setting, you tell the client the user name and password that it is to use for client authentication for the server.

The settings for the client and server must correspond: The user name and password used by the client to log on must have been set up on the server and assigned the required authorizations.

Function rights for server and client

The corresponding function rights for the client or the server must also be enabled for users of the client function and users of the server function on an S7-1500 CPU. It is not enough simply to save the user name and password centrally.

Here is an example to illustrate this type of rights use.

1. Under "Security settings > Users and roles", you define a new role in the "Roles" tab with the name "PLC-opcua-role-all-inclusive", for example.
   Tip: The tab may be covered by an information window ("The current status has not yet been checked..."). In this case, first close the information window.
2. In the "Function rights categories" section, you navigate to the runtime rights and then to the CPU function rights, and select the CPU whose function rights you want to set.
3. You will find the following function rights in the "Function rights" section:
   - **OPC UA server access**
     This function right applies on the OPC UA server of the S7-1500 CPU. Only when this option is selected, can the user with the role "PLC-opcua-role-all-inclusive" transfer certificates, CRLs or trusted lists to the CPU at runtime (push function). This function right is required for automated certificate handling, for example, in the context of GDS (Global Discovery Service).
   - **Managing certificates**
     This function right applies on the OPC UA server of the S7-1500 CPU. Only when this option is enabled, can the user with the role "PLC-opcua-role-all-inclusive" transfer certificates, CRLs or trusted lists to the CPU at runtime (push function). This function right is required for automated certificate handling, for example, in the context of GDS (Global Discovery Service).
   - **User authentication of the OPC UA client**
     This function right applies on the OPC UA client of the S7-1500 CPU (with client instructions). Only when this option is selected, can the user with the role "PLC-opcua-role-all-inclusive" use the user name and password for authentication to establish a session with a server.

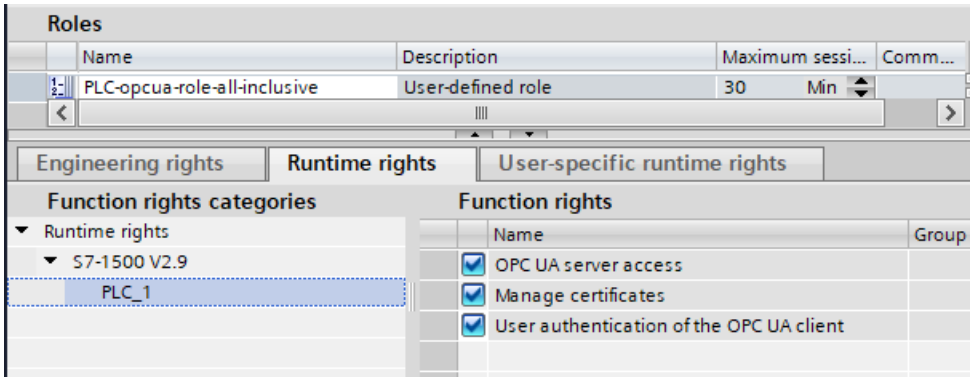

Figure 10-31 Setting function rights

4. The role "PLC-opcua-role-all-inclusive" still needs to be assigned to the relevant users ("Users" tab under "Security settings" in the project tree).

NOTE

"Runtime timeout" for users with OPC UA function rights

The value in the column "Runtime timeout" (max. session duration) in the table for user configuration does not evaluate the CPU for OPC UA runtime rights.

Therefore, a user is not automatically logged out after a certain period of time. For this purpose use OPC UA specific mechanisms such as the parameter "Max. session timeout" (area OPC UA > Server > Settings).

10.3.3.9 Diagnostic settings of the server

Diagnostics

You can specify the scope of the diagnostics of the OPC UA server in the CPU settings.
To change the diagnostics scope, navigate to the "OPC UA > Server > Diagnostics" area.

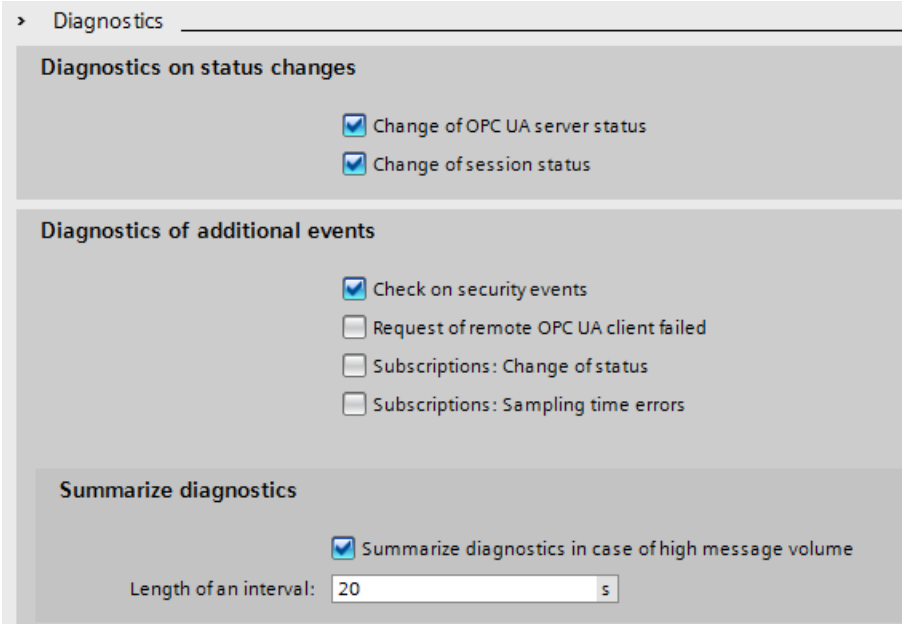

Figure 10-32 Diagnostic settings of OPC UA server

Default setting

The default setting is a diagnostics behavior that supports the most important diagnostics without appreciably increasing the communication load.
You enable diagnostics for subscriptions when the OPC UA server also uses subscriptions, i.e. if necessary during the commissioning phase only.
Reason: A large volume of diagnostic activity generates a high communication load in the CPU and may suppress other important messages. Or, the high volume of diagnostics may result in important messages disappearing in the mass of messages and being ignored.

Additional information

You will find additional information on the meaning and effect of the settings shown above here (Page 292).

10.3.3.10 License for OPC UA

Runtime licenses

A license is required to run the OPC UA server of the S7-1500 CPU. The type of license required depends on the performance of the respective CPU. The following license types are differentiated:

- SIMATIC OPC UA S7-1500 small (required for CPU 1511, CPU 1512, CPU 1513, ET 200SP CPUs, CPU 1515SP PC)
- SIMATIC OPC UA S7-1500 medium (required for CPU 1515, CPU 1516, Software Controller CPU 1507, CPU 1516pro-2PN)
- SIMATIC OPC UA S7-1500 large (required for CPU 1517, CPU 1518)

The required license type is displayed under "Properties > General > Runtime licenses > OPC-UA > Type of required license":

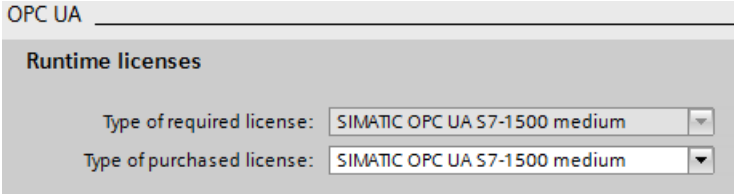

Figure 10-33 OPC UA server Runtime licenses

To confirm purchase of the required license, follow these steps:

1. Click "Runtime licenses > OPC UA" in the properties of the CPU.
2. Select the required license from the "Type of purchased license" drop-down list.

10.3.4 OPC UA server interface configuration

10.3.4.1 What is a server interface?

Definition

A server interface combines nodes of an OPC UA address space of a CPU into a unit, so that a specific view on this CPU is provided for OPC UA clients.
Each server interface defines one or more namespaces in the OPC UA server of the CPU.
STEP 7 (TIA Portal) differentiates between the following types of server interfaces:

- Companion specification
  For this type of server interface, you use a Companion Specification created by a workgroup, for example.
  The workgroup is typically composed of members of the OPC Foundation and another industry organization who have jointly specified an OPC UA information model for a specific purpose (for example, for data exchange with RFID devices or with injection molding machines).
  This information model is realized in the form of OPC UA nodes in the address space of an OPC UA server. OPC UA clients can access these OPC UA nodes.

You can also use the server interface type "Companion specification", for example, to download company-internal information models, e.g. in SiOME.

If you implement a certain companion specification in your project, you apply the specifications of this companion specification into your project as server interface.

For "Companion specification"-type server interfaces, you can import multiple namespaces which the Companion specification uses.

Additional information on companion specifications is available here (Page 238).

Additional information on SiOME is available here (https://support.industry.siemens.com/cs/ww/en/view/109755133).

- When companion specifications refer to type definitions in dependent specifications, use the reference namespaces for this. You import reference namespaces as you would the actual companion specifications.

  See Creating a server interface for companion specification (Page 245).
- If you want to make instance data from FBs or UDTs of the CPU accessible to OPC UA clients, you can have these instance data assignments automatically made as of TIA Portal version V17. You only need to map the FB types or the UDTs to suitable OPC UA data types of an imported reference namespace. For this mapping to be possible, enable the option "Generate OPC UA nodes based on the local data mapping" in the dialog for creating an OPC UA server interface of the type companion specification/reference namespace.

  See Generating OPC UA nodes based on local data mappings of FB types and UDTs (Page 263)

- User-defined server interface:

  For this type of server interface you combine OPC UA nodes of an OPC UA server into a unit.

  To do this, use the specifications for your project or the requirements for your machine or your plant as a basis.

  Additional information on the user-defined server interface is available here (Page 249).

Injection molding machine as an example for companion specification

In this example, a server interface contains the following elements:

- OPC UA nodes which you can write with an OPC UA client to receive information about this injection molding machine (in readable PLC tags)
- OPC UA nodes which you can write with an OPC UA client to transfer values to the injection molding machine (in writable PLC tags)
- OPC UA nodes which you can call with an OPC UA client to start functions of the injection molding machine (via server methods)

This server interface enables a default view of a CPU, which can be used to control an injection molding machine.

For injection molding machines, the companion specifications "OPC UA specifications for plastics and rubber machines" (previously "Euromap") define a whole series of OPC UA nodes which you can apply as a server interface.

Other OPC UA nodes of the CPU are not included in this server interface. This provides a better overview.

Example of user-defined server interface

A CPU should control the production of workpieces. Production begins when a production job arrives from the higher-level control system.

The production jobs are transferred via a server method: A control system transmits information on a workpiece by calling the server method in the CPU. This server method also starts production.

The control system, i.e. the connected OPC UA client, should only see this one server method. Therefore, you create a user-defined server interface in the CPU and assign the server method to this server interface. You enable only this server interface for OPC UA clients and thus limit the view of the CPU to this one function.

10.3.4.2 Using OPC UA companion specifications

Introduction

OPC UA is universally applicable: The standard itself does not, for example, specify how PLC tags are to be named. It is also up to the individual user (application developer) to program and name server methods that can be called over OPC UA.

Information modeling and standardization for devices and sectors

For applications of the same kind, it is worth standardizing your device or machine interface with the "OPC UA toolkit".

Many different bodies and working groups have driven forward standardization and developed a range of companion specifications.

These specifications define:

- The objects, methods and tags with which a typical device or machine is to be described.
- The namespace intended for the specified objects.

Machines are typically structured in functional or technological units, and these units are then standardized.

Companion specifications offer machine and plant operators the benefits of a standardized interface. For example, all RFID readers that comply with the AutoID specifications can be integrated in the same way. This means that all RFID readers that comply with the AutoID specifications can be addressed by OPC UA clients in the same way irrespective of manufacturer.

Another example of companion specifications is the Euromap 77 Companion Specifications from the injection molding machinery sector.

The following section uses the example of Euromap 77 to detail how to apply companion specifications in STEP 7 (TIA Portal) and create the necessary PLC tags.

NOTE

EUROMAP and the OPC Foundation have established the Joint Working Group "OPC UA Plastics and Rubber Machinery".

The existing EUROMAP recommendations EUROMAP 77 (data exchange between injection moulding machines and MES), 82.1 (temperature control devices) and 83 (general definitions) were published under the neutral umbrella of the OPC Foundation as OPC 40077, 40082-1 and 40083.

A major change it the change of the namespace, for example, for EUROMAP 77: Currently "http://opcfoundation.org/UA/PlasticsRubber/IMM2MES/".

The examples listed below use the previously valid designations and references.

Example Euromap 77 (currently: OPC 40077)

Euromap 77 or the successor standard OPC 40077 standardizes the exchange of data between injection molding machines and the higher-level MES (Manufacturing Execution System). This allows the MES to connect all lower-level injection molding machines in the same way.

The standardized data interface facilitates the integration of injection molding machines into a plant.

Using companion specifications: Overview

Euromap 77 is described in the OPC UA XML file "Opc_Ua.EUROMAP77.NodeSet2.xml".

NOTE

Euromap 77, Euromap 83 and OPC UA for Devices (DI)

With Release Candidate 2, some of the Euromap definitions have been transferred from Euromap 77 to Euromap 83 (currently OPC 40083). You will therefore also need to import the OPC UA server interface of Euromap 83.

"OPC UA for Devices" is a generally applicable information model for the configuration of hardware and software components. The information model also serves as the basis for other companion standards and is therefore also imported.

The OPC UA XML files are available here:
Euromap77 (https://www.euromap.org/euromap77)
Euromap83 (https://www.euromap.org/euromap83)
OPC UA for Devices (https://opcfoundation.org/UA/schemas/DI/)

These XML files define an OPC UA interface of an injection molding machine that complies with Euromap 77.

Using Euromap 77: Overview

To use Euromap 77, proceed as follows:

1. Generate an XML file by creating an instance of the type "IMM_MES_InterfaceType" using the SiOME program.
   How to proceed is described below in "Step 1: Create instances in SiOME".
2. In STEP 7 (TIA Portal), create PLC tags and server methods that correspond to the instance of the type "IMM_MES_InterfaceType" (created in Step 1).
   See below for information on how to proceed in "Step 2: Create PLC tags in STEP 7".
   An example of OPC UA nodes and the corresponding PLC tags can be found in section "Creating a server interface for companion specification (Page 245)".
3. In STEP 7 (TIA Portal), add a new server interface of companion specification type and import the XML file you created in step 1.
   The "Creating a server interface for companion specification (Page 245)" section describes how to proceed.
4. Assign the OPC UA nodes of the new server interface to the corresponding PLC tags, which you created in step 2.
   The "Creating a server interface for companion specification (Page 245)" section describes how to proceed.

Step 1: Create instances in SiOME

The following section describes how to use the free program "SiOME", the "Siemens OPC UA Modeling Editor".

With SiOME, you can create an OPC UA XML file, which describes the server interface (an information model).

Download link and explanations about SiOME are available here (https://support.industry.siemens.com/cs/ww/en/view/109755133).

Procedure in STEP 7

To use the new server interface, import the server interface into the STEP 7 project, see section "Creating a server interface for companion specification (Page 245)".

When the project is loaded into the CPU, the new server interface is available for OPC UA clients.

Procedure in SiOME 1.7.3

NOTE

The following description shows the work steps in SiOME 1.7.3.

Follow-up versions of SiOME make it easier for you, for example, to create corresponding DBs, structures, variables or methods in the user program. Using a drag-and-drop operation, you can transfer data, for example, from SiOME to the TIA Portal (user program). In this case, the variables, etc. are already mapped correctly or, for methods, the corresponding FB elements are also generated correctly in the user program.

Download the current SiOME version using the download link listed above, and follow the instructions in the documentation included in the download.

The following description shows the work steps in SiOME 1.7.3.

To use Euromap 77, create an XML file with an instance of "IMM_MES_InterfaceType".

The object type must be instantiated in order for the information model of the specific machine to appear in the address space of the OPC UA server.

The object type "IMM_MES_InterfaceType" is the root object type of Euromap 77. "IMM" stands for "Injection Moulding Machine".

Follow these steps:

1. Download the files "Opc_Ua.EUROMAP77.NodeSet2.xml" and "Opc_Ua_EUROMAP83_NodeSet2.xml" from the Euromap website (see above).
2. Download the file "Opc.Ua.Di.NodeSet2.xml" from the OPC Foundation website.
   The "Opc.Ua.Di.NodeSet2.xml" file contains type definitions which Euromap 77 uses.
3. Start SiOME.
4. First, import the namespace "http://opcfoundation.org/UA/DI/".
   To do so, click the "Import XML" button in the "Information model" area.

   Figure 10-34 "Import XML" button in SiOME

   SiOME displays the dialog for the opening files.
5. To import the file, select the "Opc.Ua.Di.NodeSet2.xml" file and click "Open".
   Result: SiOME imports the XML file and shows the namespace "http://opcfoundation.org/UA/DI/" in the "Namespaces" area.
   The standard namespace "http://opfoundation.org/UA/" is always available in SiOME and does not have to be imported.
6. Now import the namespace "http://www.euromap.org/euromap83/"
   To do so, click the "Import XML" button again in the "Information model" area.
   Select the file "Opc_Ua.EUROMAP83.NodeSet2.xml".
   Result: SiOME imports the XML file and shows the namespace "http://www.euromap.org/euromap83/" in the "Namespaces" area.
7. Now import the namespace "http://www.euromap.org/euromap77/"
   To do so, click the "Import XML" button again in the "Information model" area.
   Select the file "Opc_Ua.EUROMAP77.NodeSet2.xml".
8. Create your own namespace for your project.
   To do this, right-click in the "Namespaces" area on "OPC UA Modelling Editor Project" or on "Namespaces" and select "Add Namespace".
   SiOME opens the "Add Namespace" dialog.

9. Enter the name of a new namespace.
   The "YourCompany.org" namespace is used in the example.
   SiOME now also displays the new namespace:

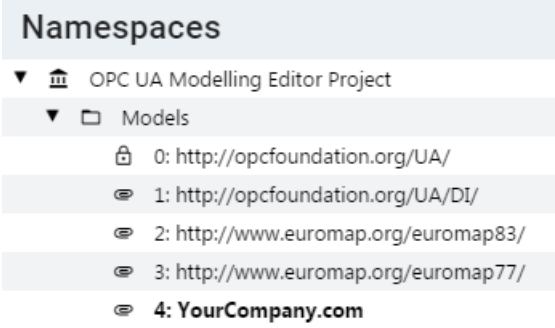

Figure 10-35 Display of the namespace in SiOME

10. Create an instance from the root object type IMM_MES_InterfaceType of the Companion specification Euromap 77.
    To do so, in the "Information model" area, right-click the "DeviceSet" directory and select "Add Instance".
    SiOME displays the "Add Instance" dialog.
11. For "Name", enter a meaningful name for your instance.
    In the example, enter "IMM_Manufacturer_01234".
    For "TypeDefinition", select "IMM_MES_InterfaceType".
    This object type is the root object type of Euromap 77: If you generate an instance of this object type, then use the Euromap 77 once in the address space of your OPC UA server.

12. Click "OK".
    SiOME shows the new instance "IMM_Manufacturer_01234" in the "Information model" area under "DeviceSet":

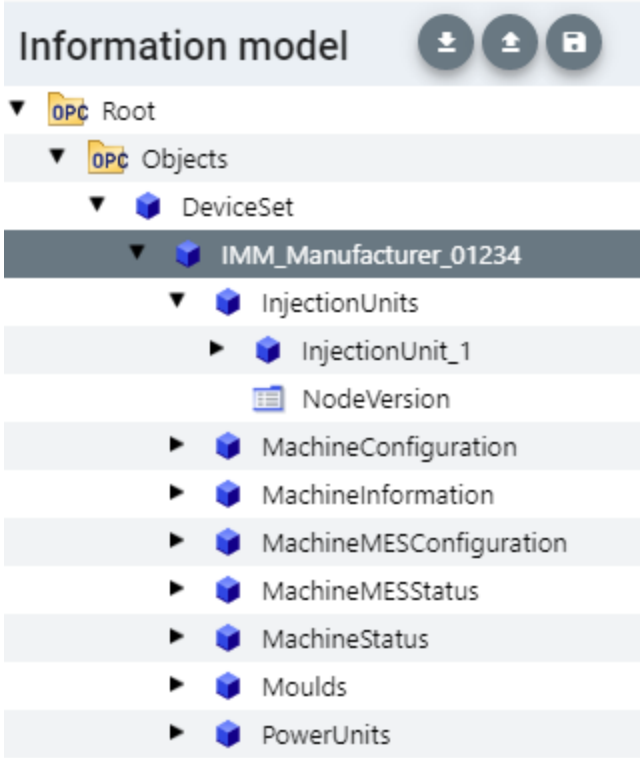

Figure 10-36 Display information model

13. Create an instance of the data type "InjectionUnitType".
    To do this, right-click on the "InjectionUnits" directory in the "Information model" area and select "Add Instance".
    SiOME displays the "Add Instance" dialog.
    For "Name", enter a meaningful name for the instance.
    In the example, enter "InjectionUnit_1".
    For "TypeDefinition", select "InjectionUnitType".
    Click "OK".
14. Create a new "Mould_1" instance of the "MouldType" object type in the "Moulds" directory.
15. Create a new instance "PowerUnit_1" of the "PowerUnitType" object type in the "PowerUnits" directory.

16. Save the XML file.
    To do so, click the "Quick save" button in the "Information model" area:

Figure 10-37 "Quick save" button in SiOME

17. Export the XML file.
    To do so, click the "Export XML" button in the "Information model" area.

Figure 10-38 "Export XML" button in SiOME

    SiOME shows the "Export XML" dialog.
18. Leave all namespaces activated and click "OK".
    SiOME displays the "Save as" dialog.
19. Select a meaningful name and save the exported file.
    In the example, name the XML file "IMM_Manufacturer_01234".

Result:
You have now created an XML file which uses the companion specification "Euromap 77" once (with one instance).

Step 2: Creating PLC tags for the Euromap 77 instance in STEP 7.

For Euromap 77, you must provide PLC tags and server methods in your user program and assign the instance of the "IMM_MES_InterfaceType" type.
To create PLC tags for the instance of the "IMM_MES_InterfaceType" type, proceed as follows.

1. Create a user-defined data type (UDT).
   The figure below shows the beginning of the user-defined data type "InjectionUnit" as example.
   This data type has the same structure as "InjectionUnit" in the type "IMM_MES_InterfaceType".
   Make sure that you use SIMATIC data types that are compatible with the OPC UA data types (see "Mapping of data types" below).

InjectionUnit

	Name	Data type	Default value	Accessible from HMI/OPC UA	Writable from HMI/OPC UA
	BarrelId	String	''	☑	☑
	Index	UDInt	0	☑	☑
	InProduction	Bool	false	☑	☑
	IsPresent	Bool	false	☑	☑

Figure 10-39 Creating a UDT in STEP 7

2. Add a new global data block to your STEP 7 project.
   In the example, name the data block "IMM_Manufacturer_01234", so that there is a reference to the injection molding machine of the respective manufacturer and the serial number.

3. Create a new element in this data block.
   In the example, name this element "InjectionUnit_1"
4. Assign the new user-defined data type "InjectionUnit" to this element.

Result

In your STEP 7 project, you have created a tag for the Euromap 77 in the "IMM_Manufacturer_01234" data block.

10.3.4.3 Creating a server interface for companion specification

For basic information on companion specifications, refer to the section "Using OPC UA companion specifications (Page 238)". The benefits of the Euromap 77 companion scpecification, which provides a model for injection molding machines, is also discussed in detail there.

Using this companion standard, the S7-1500 CPU can control an injection molding machine, for example, and provide an OPC UA client, such as a higher-level MES system, with an interface for accessing the functions and tags of injection molding machine.

An OPC UA server interface of the type "Companion Standard" limits the access of clients to exactly those functions and tags that are required, for example, for higher-level systems (MES systems).

The following description shows how to create a server interface in STEP 7 (TIA Portal) which contains only the Euromap 77 companion specification.

If you want to make OPC UA clients accessible to other tags or methods than those required for the management of an injection molding machine, simply create another OPC UA server interface. In this way, you can clearly arrange the functionality of the CPU as OPC UA server.

Creating a server interface for a companion specification

To create a server interface for a companion specification with STEP 7 (TIA Portal), proceed as follows:

1. Select the CPU that you want to use as an OPC UA server.
2. In the project tree, click "OPC UA communication > Server interfaces".
3. Double-click "Add new server interface".
4. To select this type of server interface, click "Companion specification".
   A general name for the new server interface is entered in the dialog, for example "Server_Interface_1".

5. Change the name of the new server interface so that it is descriptive in your project.
   The name should have the following structure according to Euromap 77:
   "IMM_<Manufacturer>_<Serial number>".
   The example uses the name "IMM_Manufacturer_01234".

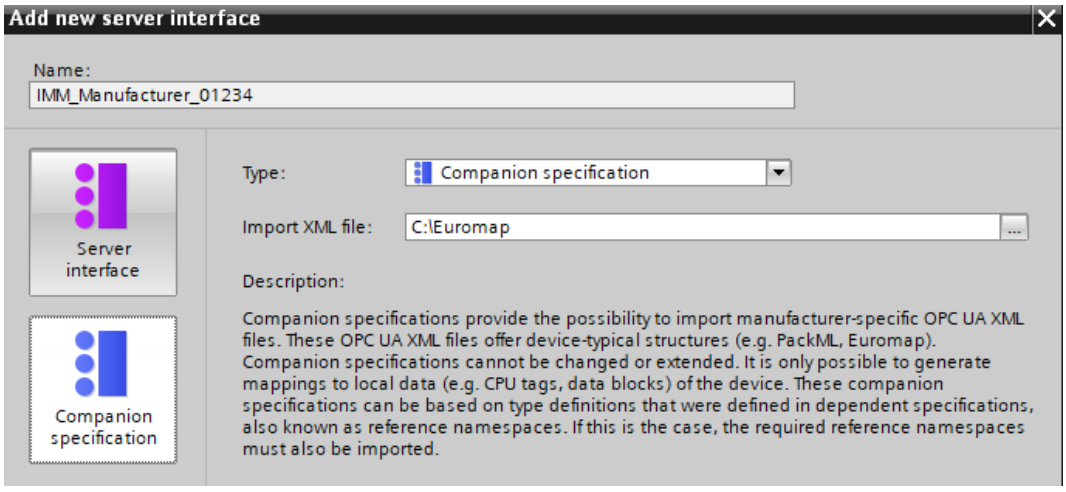

6. In the "Import XML file" field, select an XML file that describes an information model.
   The "Using OPC UA companion specifications (Page 238)" section describes how to create such an XML file with the SiOME tool.
   The figure below shows a section from the information model:
   "IMM_MANUFACTURER_0123456" an instance (use) of the type "IMM_MES_InterfaceType" which was defined by Euromap 77 . "InjectionUnit_1" is an instance of the "InjectionUnitType" type of Euromap 77.

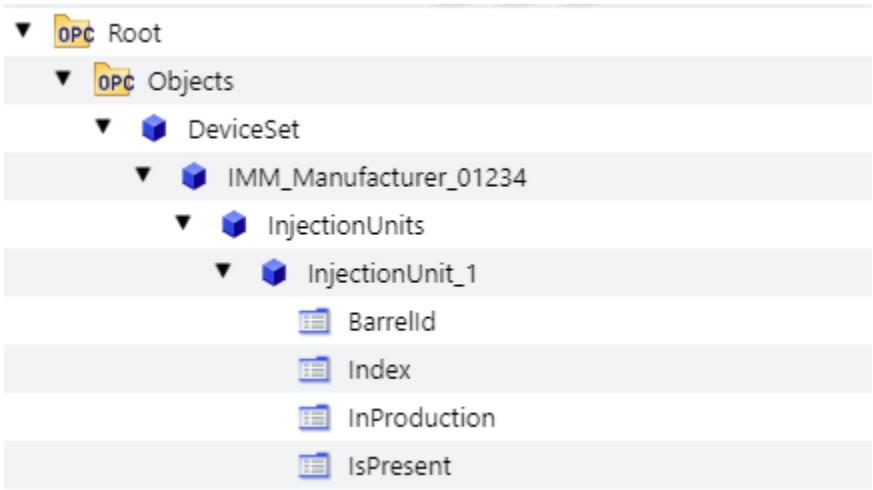

7. Click "OK".
   STEP 7 (TIA Portal) imports the information model described in the selected XML file.
   An error occurs when type definitions are used in the imported XML file that are not yet present in STEP 7 (TIA Portal) and that are also not contained in the imported XML file.
   In the example, an XML file is imported that uses type definitions defined in the following namespaces (Namespaces):
   – http://opcfoundation.org/UA/DI/
   – http://www.euromap.org/euromap83/
   – http://www.euromap.org/euromap77/
   Tip: STEP 7 displays missing namespaces in the lower area of the OPC UA interface editor ("Properties" tab).
   To do this, select the server interface in the project tree (here: IMM_Manufacturer_01234) and select the "Namespaces" area in the inspector window. Missing namespaces are selected.
   If one or more namespaces are missing in your STEP 7 project, create a new server interface of the "Reference namespace" type for each namespace.
   The "Creating a server interface for reference namespace (Page 261)" section describes the procedure.
   If all reference namespaces are available, STEP 7 displays the table without errors:

DeviceSet	Object
IMM_Manufacturer_01234	Object
InjectionUnits	Object
InjectionUnit_1	Object
TemperatureZones	Object
BarrelId	String
Index	UInt32
InProduction	Boolean
IsPresent	Boolean

8. Drag the OPC UA elements from the right area of the table (OPC UA elements) to the left part of the table (OPC UA server interface) so that the respective OPC UA elements (the local PLC tags) are assigned to the respective OPC UA nodes of Euromap 77.
   The figure below shows a section from the assignment of the local data (PLC tags) to the OPC UA nodes of the Euromap 77:

OPC UA-Server-Schnittstelle

Name	Node type	Local data	Data type
DeviceSet	Object		
IMM_Manufacturer_01234	Object		
InjectionUnits	Object		
InjectionUnit_1	Object		
TemperatureZones	Object		
NodeVersion	String		
BarrelId	String	"IMM_Manufacturer_01234"."InjectionUnit_1"."BarrelId"	String
Index	UInt32	"IMM_Manufacturer_01234"."InjectionUnit_1"."Index"	UDInt
InProduction	Boolean	"IMM_Manufacturer_01234"."InjectionUnit_1"."InProduction"	Bool
IsPresent	Boolean	"IMM_Manufacturer_01234"."InjectionUnit_1"."IsPresent"	Bool

NOTICE
Checking the mapping of CPU local data on nodes of the OPC UA server interface When invalid assignments (mappings) exist in the server interface, they can result in incorrect read and write operations. Check the assignments and run a consistency check.

Information on the server interface

The editor for configuring the OPC UA server interface is structured as a table and provides the following information:

- **Name**
  The top node (root node) is named "IMM_Manufacturer_01234" in the example. If a client browses in the address space of the server, this node is the container for all lower-level nodes. BrowseName and the DisplayName of this node depend on the name you have assigned for the server interface.
  In this case, for example, this name stands for the injection molding machine as a whole. It is the name of the instance of the Euromap 77 companion specification that is used here. According to the companion specification, the instance name should begin with "IMM", followed by the name of the manufacturer of the injection molding machine; the serial number of the machine is added to the end. This allows a unique identification of the machine.
  The names of all other (lower-level) nodes are defined by the specification (in the example above by Euromap 77). These node names must not be changed. This ensures a uniform view of all injection molding machines, which complies with the specification.
- **Node type**
  Type of the OPC UA node. The type is specified by the companion specification that is used.
  In the following cases, STEP 7 marks a node type in the table in color:
  – No definition is included for this in the imported XML file or
  – The namespace in which the type was defined is not available in STEP 7.
  In this case, create a server interface of the "Reference namespace" type for the missing namespace or for each of the missing namespaces.
  The missing namespaces can be found under "Namespaces" in the properties of the server interface.
- **Local data**
  STEP 7 displays the data block which is assigned to the OPC UA node: The CPU reads the value of the OPC UA node from this data block.
  If a data block is highlighted in color (e.g. after a consistency check), the specified data block is not available in the CPU.
  In this case, you have to create the missing data block in the CPU (of user program) and supply it with values.
- **Data type**
  The SIMATIC data type of the PLC tag (e.g. element of a data block) in the CPU, from which the value of an OPC UA node (UAVariable type) is read, or to which a value is assigned.

Generate local data

You have the option of generating local data for all or for selected nodes of the server interface that are not already assigned ("mapped") to local data of the CPU. The newly created local data are mapped automatically.
You trigger the automatic generation of local data by clicking the "Generate local data" button (all nodes that are not already mapped) or by selecting individual nodes and then clicking the "Generate local data" shortcut menu.
"Generate local data" button:

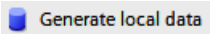

Figure 10-40 "Generate local data" button:

You can only generate nodes that can be mapped to local data, which means no objects, no folders, no methods or input/output arguments of methods.
After you have clicked the button or selected the shortcut menu, you must select in the follow-up dialog box whether the local data should be created in a new DB or in an existing DB.

Consistency check

You have the option to check the server interface.
STEP 7 (TIA Portal) checks whether the OPC UA node of the server interface PLC tags (data blocks) has been assigned compatible SIMATIC data types.
To check the consistency of the server interface, click on the following icon in the toolbar of the OPC UA server interface editor:

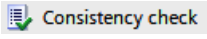

Figure 10-41 "Consistency check" button

Export interface

You have the option of exporting the OPC UA server interface as an XML file. This XML file contains all data type definitions referenced by the server interface.
To export the OPC UA server interface, click on the following icon in the toolbar of the OPC UA server interface editor:

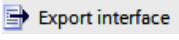

Figure 10-42 "Export interface" button

10.3.4.4 Creating a user-defined server interface

Introduction

The description is based on the following example:
A protective fence surrounds the production cell "Cell_1". The fence is equipped with the gate "Gate_1".

An S7-1500 CPU controls the entire production cell and also controls access through Gate_1.
A robot packs drugs into boxes in the production cell and then stacks the boxes on pallets.
Self-driving vehicles for automated material transport move the pallets to the central warehouse, thereby passing through Gate_1.
The CPU publishes a server interface via which the driverless transport systems arrange for Gate_1 to open.
The server interface contains the server method "smOpenGate" for opening the gate and the tag "Gate_1_State" which indicates the status of the gate (open or closed).

Creating a user-defined server interface

To create an Server interface, follow these steps:

1. Select the CPU that you have used and configured as OPC UA server.
2. Click "OPC UA communication > Server interfaces".
3. Double-click "Add new server interface".
   STEP 7 displays the following dialog.

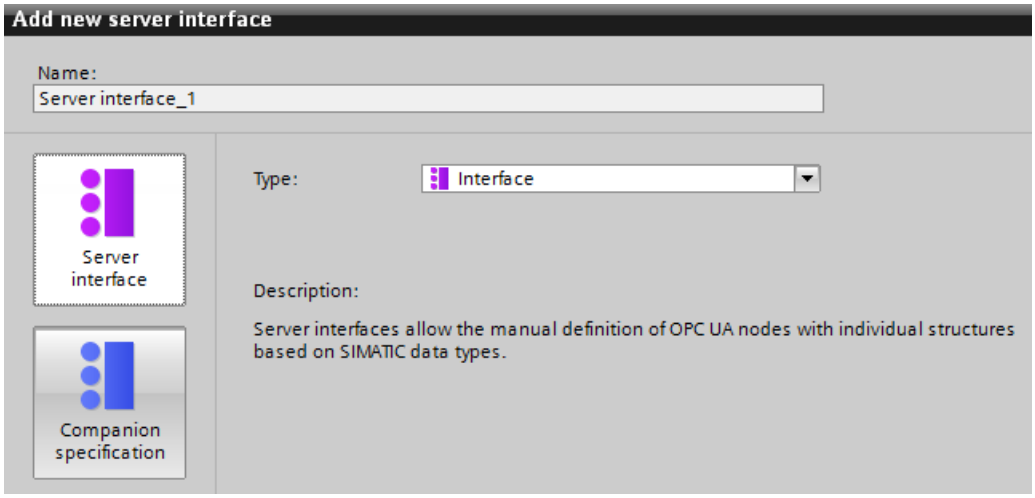

Figure 10-43 Adding the server interface

4. Change the name of the new server interface so that it is descriptive in your project.
   In the example, change the name "Server-interface_1" suggested by STEP 7 to "Cell_1".
5. Click "Server interface" and then "OK".

6. Click on the triangle in front of "Program blocks" in the area "OPC UA elements" to open the "Program blocks" folder.
   STEP 7 displays the following table for editing:

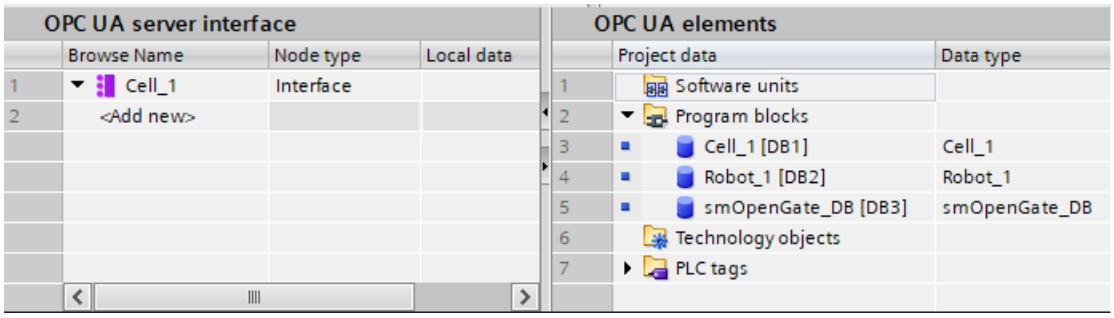

Figure 10-44 Editing the server interface

The editor is divided into two areas.

– **OPC UA server interface**
  On the left is the root node of the server interface "Cell_1".
  This interface is currently still empty: No OPC UA elements have been added to the server interface yet.
– **OPC UA elements**
  On the right are the OPC UA elements.
  OPC UA elements are objects that have been created so far in the STEP 7 project and have the property "Accessible from HMI/OPC UA".
  You can add the OPC UA elements to the new server interface "Cell_1".

7. Drag the OPC UA elements into the "<Add new>" line of the new server interface.

NOTE

The following applies in general: If you store data blocks or technology objects in the left area of the table, STEP 7 (TIA Portal) creates an object in the server interface. The elements of the data blocks are arranged as separate nodes below this.

If you store structures in the left area of the table, STEP 7 creates a node for the structure as a whole and nodes for each element of the structure.

The same applies to arrays: Again, STEP 7 creates a node for the array as a whole and nodes for each element of the array.

When you place a method in the left area of the table, STEP 7 creates a single node; the arguments of the inserted method are displayed for information purposes.

In the example, you drag the "Gate_1_State" tag from the right area to the left area to "<Add new>".
Then, drag the server method into the left area.
This server method is located within the "smOpenGate_DB [DB3]" data block in the right area.

STEP 7 (TIA Portal) displays the dialog as follows:

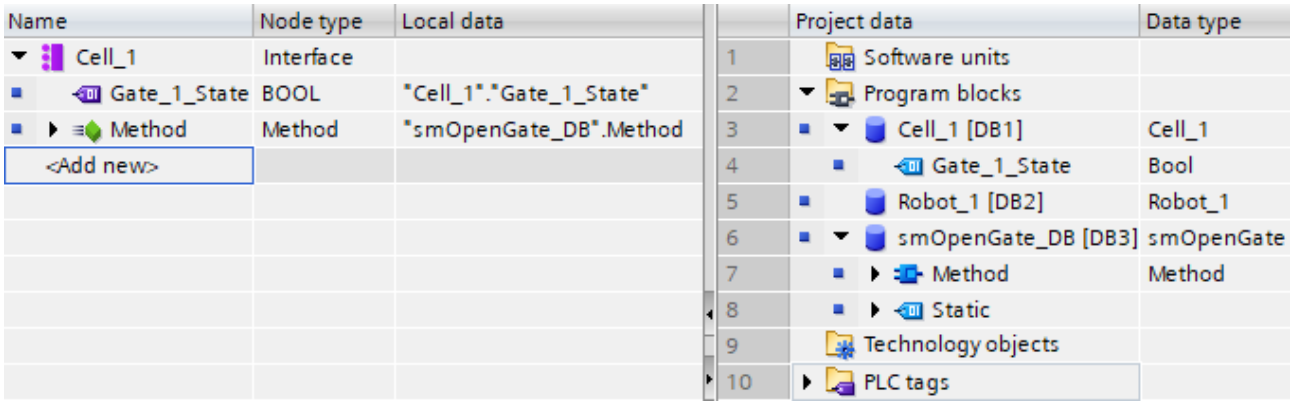

Figure 10-45 Adding OPC UA elements to the server interface

NOTICE
Checking the mapping of CPU local data on nodes of the OPC UA server interface When invalid assignments (mappings) exist in the server interface, they can result in incorrect read and write operations. Check the assignments and run a consistency check.

Limiting the view to OPC UA servers

By selecting the OPC UA elements, you limit the view to the OPC UA server and the options of the OPC UA clients.

In the server interface of the example, the "Robot_1" data block is missing because industrial trucks do not need access to the server methods and tags of the robot.

In this case, it is best to disable the standard server interface (SIMATIC namespace) in the OPC UA properties of the S7-1500 CPU so that the filtered nodes cannot be accessed any other way.

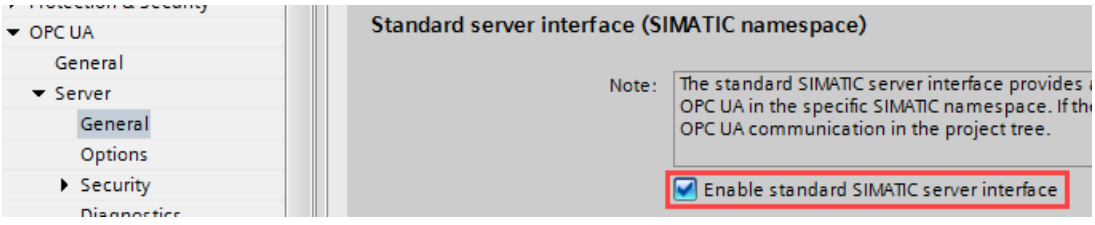

Figure 10-46 Disabling the standard server interface

You can also disable the visibility of each configured OPC UA server interface in the properties of the server interface and thus prevent that this server interface can be used by clients during operation.

- To do this, select the server interface and right-click on the "Properties" command.

This option lets you define multiple server interfaces centrally, for example, and enable and download only the required server interface.

Once a server interface has been defined, you can drag it to another CPU in the project tree.

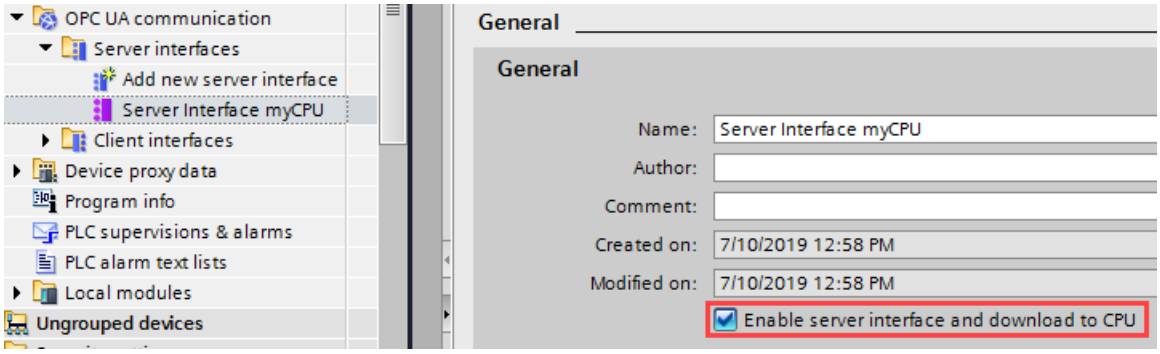

Figure 10-47 Disabling the visibility of the server interface

Information on the server interface

The "OPC UA Server Interface" editor is structured as a table and provides the following information:

Note that not all columns are displayed initially. You determine what is displayed by right-clicking on the header line of the table.

When a row is selected, you can display the OPC UA attributes of the node in the Inspector window ("OPC UA attributes" area), such as node ID, node class, node type, and description.

- **BrowseName**
  The language neutral name of the user-defined server interface is at the top (BrowseName). This name can be freely selected.
  The names (BrowseNames) of the individual OPC UA nodes that have been added to the server interface are under the name of the interface.
  You cannot change the name of an OPC UA node in this dialog. The names come from the STEP 7 project.
  You can delete an OPC UA node from the table. This means that it no longer belongs to the server interface and is no longer visible to OPC UA clients.
- **DisplayName**
  Similar to BrowseName. However, the name can be translated and is displayed, if available, in the corresponding language.
- **Node ID**
  NodeId of the OPC UA node, e.g. http://Server-Node_1; i=1
- **Node type**
  Type of the OPC UA node, for example BOOL, BYTE, INT.
  These node types were defined by Siemens, not by the OPC Foundation. For example, the OPC Foundation uses the Boolean node type for BOOL. BOOL is directly derived from Boolean.
  The specified node type cannot be changed in this dialog: If you want to use a different node type, you must change the type of the respective PLC tags in the STEP 7 project.
- **Data type**
  The SIMATIC data type used in the STEP 7 project is specified, for example, Bool, Byte, Int. etc.

- **Access level**
  - If an OPC UA node is a tag (UAVariable type), the node can only be readable (RD) or readable and writable (RD/WR).
  - If an OPC UA node is a method (UAMethod type), this node can always be called.
- **Local data**
  The SIMATIC data type of the data block in the CPU, from which the value of an OPC UA node (UAVariable type) is read, or to which a value is written.

Generate local data

You have the option of generating local data for all or for selected nodes of the server interface that are not already assigned ("mapped") to local data of the CPU. The newly created local data are mapped automatically.

You trigger the automatic generation of local data by clicking the "Generate local data" button (all nodes that are not already mapped) or by selecting individual nodes and then clicking the "Generate local data" shortcut menu.

"Generate local data" button:

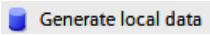

Figure 10-48 "Generate local data" button:

You can only generate nodes that can be mapped to local data, which means no objects, no folders, no methods or input/output arguments of methods.

After you have clicked the button or selected the shortcut menu, you must select in the follow-up dialog box whether the local data should be created in a new DB or in an existing DB.

Consistency check

You have the option to check the consistency of the server interface.

During the consistency check, STEP 7 checks whether the OPC UA nodes of the server interface are each assigned to a suitable OPC UA element (identical data type) or whether the used element still exists in the CPU.

To check the consistency of the server interface, click on the following icon in the toolbar of the OPC UA server interface editor:

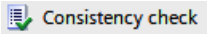

Figure 10-49 "Consistency check" button

Export interface

You have the option of exporting the OPC UA server interface as an XML file. This XML file contains all data type definitions referenced by the server interface.

To export the OPC UA server interface, click on the following icon in the toolbar of the OPC UA server interface editor:

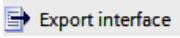

Figure 10-50 "Export interface" button

More information

You can find information on master copies for the OPC UA communication in the section Master copies for OPC UA communication (Page 338).

10.3.4.5 Data types for companion specifications

Mapping of data types

The table below shows the compatible SIMATIC data type for each OPC UA data type.

Assign the data types as shown below (SIMATIC data type - OPC UA data type). Other assignments are not permitted. STEP 7 does not check the observance of this rule and does not prevent an incorrect assignment. You are responsible for the rule-compliant selection and assignment of the data types.

You can also use the listed data types, for example, as elements of structures/UDTs for input and output parameters of self-created server methods (UAMethod_InParameters and UAMethod_OutParameters).

Table 10-3 Mapping of data types

SIMATIC data type	OPC UA data type
BOOL	Boolean
SINT	SByte
INT	Int16
DINT	Int32
LINT	Int64
USINT	Byte
UINT	UInt16
UDINT	UInt32
ULINT	UInt64
REAL	Float
LREAL	Double
LDT	DateTime
WSTRING	String
DINT	Enumeration (Encoding Int32) and all derived data types

SIMATIC data type	OPC UA data type
User-defined data type required (UDT, user-defined data type) The user-defined data type must be created with the prefix "Union_", for example "Union_MyDatatype". See example below the table. The first element (Selector) in this UDT must have the data type "UDINT".	UNION and all derived data types
See LocalizedText and ByteString support for the OPC UA server (Page 256)	LocalizedText ByteString

User-defined data type for UNION required

The figure below shows the tag "MyVariable", which has the "Union_MyDatatype" data type.

This SIMATIC data type corresponds to an OPC UA tag with the data type UNION.

The figure shows an example of the declaration: When Selector = 1, Union takes a ByteArray; when Selector = 2, Union takes a WString.

Name	Data type
Static	
Selector	UDInt
ByteArray	Array[0..1] of Byte
WString	WString[42]

10.3.4.6 LocalizedText and ByteString support for the OPC UA server

As of TIA Portal version V17 and S7-1500 CPU firmware version V2.9, the two OPC UA Built-in data types "LocalizedText" and "ByteString" are available for mapping to corresponding SIMATIC data structures. For the definition of these OPC UA data types, see also OPC 10000-3 DataType definitions.

These data types are used in companion specifications, for example, and can be easily handled by the user program with the OPC UA interface editor.

LocalizedText

A structure containing a string with locale identifier (e.g. 'en-US').

The structure has three elements with a defined order and the following structure in SIMATIC:

- **Encoding** (data type OPC_UA_LocalizedTextEncodingMask): Indicates in bit 0 whether the "Locale" field has a content and in bit 1 whether the "Text" field has a content. Both fields should have a content. We therefore recommend setting the "Encoding" value for SIMATIC to 2#00000011.
- **Local** (WString data type): Locale, for example, 'en-US'.
- **Text** (WString data type): Text box, for example, 'Text'.

ByteString

A sequence of octets.

The structure is built up as follows:

- **ActualLength** (data type "OPC_UA_ByteStringActualLength"): Length of the ByteString array that is filled
- **ByteString** ("Array of Byte" data type): Byte array

Requirement

An OPC UA server interface has been created.

Application

You can import a companion specification or a reference namespace that contains definitions of the "LocalizedText" or "ByteString" type.
Likewise, you can create a server interface and define an address model yourself with the data types "LocalizedText" or "ByteString". The procedure is described in the next section.

Procedure

You will learn how to create a node of the type "LocalizedText" or "ByteString" with the interface editor and then have a SIMATIC data structure created automatically for this node in the paragraphs below.
To define OPC UA nodes of the type "Localized Text"/"ByteString" in a server interface, follow these steps:

1. Create nodes of the type "LocalizedText" or "ByteString" in the "OPC UA server interface" area. These node types are included in the list of selectable node types.

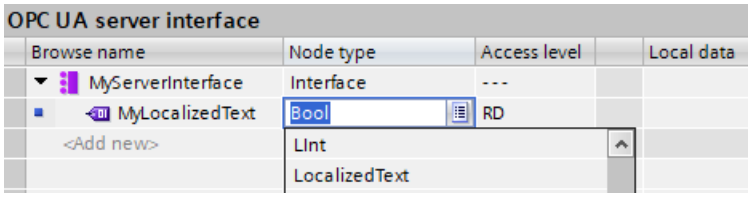

2. Select the "Generate local data" command from the shortcut menu. To generate the local data, select a data block, for example, a new DB with the name "MyServerInterface_Data".

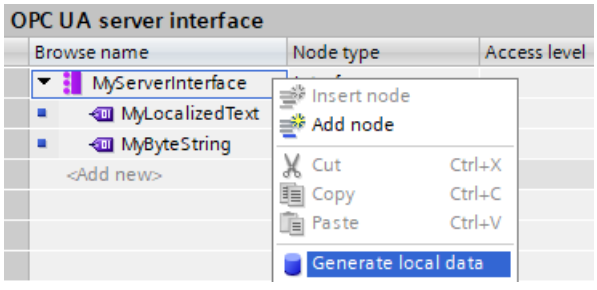

Result: STEP 7 generates the corresponding structure for the mapping in which you still need to adjust the required text length (Text) and the required locale (Locale) for "LocalizedText".
The same is true for "ByteString"; in this case, you must adjust the length and the array.

The consistency check generates a warning to indicate the required adjustments.

OPC UA elements	
Project data	Data type
Software units	
Program blocks	
MyServerInterface_Data [DB1]	MyServerInterface_Data
MyServerInterface.MyLocalizedText	Struct
Encoding	OPC_UA_LocalizedTextEncodingMask
Locale	WString
Text	WString
MyServerInterface.MyByteString	Struct
ActualLength	OPC_UA_ByteStringActualLength
ByteString	Array[0..0] of Byte

Rules

- You can also create UDTs with the structure as shown above for the node types "LocalizedText" or "ByteString" and use them for DB elements.
- You can use the node types "LocalizedText" or "ByteString" in other structures (nests).
- The SIMATIC structures for "LocalizedText" or "ByteString" may only be used completely; an isolated data type, such as "OPC_UA_LocalizedTextEncodingMask" for other purposes, is not provided.
- Input and output parameters of methods can also be of the data type/node type "LocalizedText" or "ByteString".

10.3.4.7 Using additional OPC UA basic data types for companion specifications

Apart from the OPC UA data types listed in the section "Mapping of data types" and their correspondences on the SIMATIC side, there are the following OPC UA basic data types which you can also use:

- OpcUa_NodeId
- OpcUa_QualifiedName
- OpcUa_Guid
- OpcUa_XmlElement
- OpcUa_ByteString
- OpcUa_LocalizedText

Requirement for the use of the basic data types listed above as variables in the application program: The basic data types have to exist as complex data types that are structured exactly like the corresponding OPC UA basic data types.

- OpcUa_NodeId and OpcUa_QualifiedName exist as system data types; that's why you can use these data types not only for single variables but also as elements of a structure.
- For the basic data types or built-in data types GUID and XmlElement you have to create a PLC data type in accordance with the OPC UA specification and subsequently use it as an element in a structure so that the data types of the elements can be resolved. What each PLC data type must look like is described below for every single basic data type.

- For OpcUa_ByteString and OpcUa_LocalizedText, the requirements have been created in TIA Portal V17 to simply use these data types in the server interface of the "Companion Specification" type:
  - You create the corresponding node type in the server interface (for example, OpcUa_LocalizedText)
  - You click on "Generate local data"

  STEP 7 then automatically generates the appropriate data structures in a DB.

System data type "OPC_UA_NodeId"

For the OPC UA basic data type "OpcUa_NodeId", please refer to the following table for the meaning of the parameters. Use OPC_UA_NodeId for the identification of a node in the OPC UA server.

Parameter	S7 data type	Meaning
NamespaceIndex	UINT	Namespace index of the node in the OPC UA server. A node can, for example, be a tag.
Identifier	WSTRING[254]	The designation of the node (object or tag) depends on the identifier type: • Numeric identifier: The node is labeled with a number, for example "12345678". • String identifier: The node is labeled with a name, for example "MyTag". No distinction is made between upper and lower case.
IdentifierType	UDINT	Type of identifier • 0: Numeric identifier • 1: String identifier • 2: GUID • 3: Opaque

System data type "OPC_UA_QualifiedName"

See the following table for the structure of the system data type "OPC_UA_QualifiedName":

Name	S7 data type	Meaning
NamespaceIndex	UINT	The namespace index of the name.
Name	WSTRING[64]	Name of the node or tag.

UDTs for basic data types GUID and XmlElement

UDT "Guid"

For the basic data type "Guid", create the following PLC data type. The default values used as examples can also be set differently.

Guid			
	Name	Data type	Default value
1	Data1	UDInt	16#11223344
2	Data2	UInt	16#5566
3	Data3	UInt	16#7788
4	Data4	ULInt	16#99AABBCCDDEEFF11

UDT "XmlElement"

An XmlElement is a serialized XML fragment (UTF-8 string).

For the basic data type "XmlElement", create the following PLC data type:

XmlElement			
	Name	Data type	Default value
1	XmlElement	WString	WSTRING#''

10.3.4.8 Rules for OPC UA XML files

Importing exported OPC UA XML files to an S7-1500 CPU

Please note the following information when importing server interfaces that come from the OPC UA XML export of an S7-1500.

NOTE

Import blocked for namespace "http://www.siemens.com/simatic-s7-opcua"

You cannot import server interfaces with the namespace "http://www.siemens.com/simatic-s7-opcua" to an S7-1500 CPU because this namespace is reserved for S7-1500 CPUs (standard SIMATIC server interface) and is not available for imports.

If you want to import a server interface with the namespace "http://www.siemens.com/simatic-s7-opcua", open the server interface to be imported (OPC UA XML file) and change the namespace in the relevant places. The file thus changed can then be imported.

Integrity of the OPC UA XML files

OPC UA XML files represent the server address space. These files are, for example, imported by you in the context of OPC UA Companion specifications as a server interface after adaptation to the application, loaded into the S7-1500 CPU and tested.

WARNING

No checking of imported OPC UA XML files

Protect these OPC UA XML files against unauthorized manipulation since STEP 7 does not check the integrity of these files.

Recommendation

To minimize risks in the case of an extension or adaptation of the server address space, follow these steps:

1. Protect the project (project navigation: Security settings > Settings).
2. Export the corresponding server interface before the extension or adaptation.
3. Revise this OPC UA XML file.
4. Import the file again as a server interface.

10.3.4.9 Creating a server interface for reference namespace

Companion specifications and referenced namespaces

A series of OPC UA object types (as well as additional definitions) are defined in a companion specification. These object types are each defined in namespaces so that the names of the object types (type definitions) are unique.

To use a companion specification in your project, create instances of object types of this companion specification.

To do this the object definitions must be available in your STEP 7 project. If this is not the case, you must import the object definitions. To import all definitions of a namespace, create a server interface of type "Reference namespace" for each namespace in STEP 7.

NOTE

EUROMAP and the OPC Foundation have established the Joint Working Group "OPC UA Plastics and Rubber Machinery".

The existing EUROMAP recommendations EUROMAP 77 (data exchange between injection moulding machines and MES), 82.1 (temperature control devices) und 83 (general definitions) were published under the neutral umbrella of the OPC Foundation as OPC 40077, 40082-1 and 40083. However, the examples listed below use the previously valid designations and references.

Example Euromap 77 (currently OPC 40077)

You have added a server interface for the companion specification Euromap 77 (currently OPC 40077).

The server interface uses object types defined in OPC UA DI as well as in Euromap 83 and Euromap 77 in their corresponding namespaces.

Therefore, in addition to the server interface Euromap 77 of the "Companion Specification" type, create additional server interfaces of "Reference namespace" type in STEP 7, in each case for the following namespaces:

- http://opcfoundation.org/UA/DI/
- http://www.euromap.org/euromap83/
- http://www.euromap.org/euromap77/

The following description shows you how to proceed.

Creating a server interface for a reference namespace

To create a server interface for a namespace, proceed as follows:

1. Select the CPU that you want to use as an OPC UA server.
2. Click "OPC UA communication > Server interfaces".
3. Double-click "Add new server interface".
   STEP 7 (TIA) now displays the dialog "Add new server interface".
   A general name for the new server interface is entered in the dialog, for example "Server_Interface_1".
4. Assign a descriptive name for the new server interface.
   In the example, select the name "OPC.Ua.Di" or a similar name that clearly references the namespace "http://opcfoundation.org/UA/DI/".
   This namespace must be imported first. It contains basic definitions (for example, the UAObjectType "DeviceType").

5. For "Import XML file", select an XML file that contains the definitions of the namespace "http://opcfoundation.org/UA/DI/".
   Select the file "Opc.Ua.Di.NodeSet2.xml" in the example. You can download this file here: Opc.Ua.Di.NodeSet2.xml (https://opcfoundation.org/UA/schemas/DI/)
   The figure below shows the dialog with the entries:

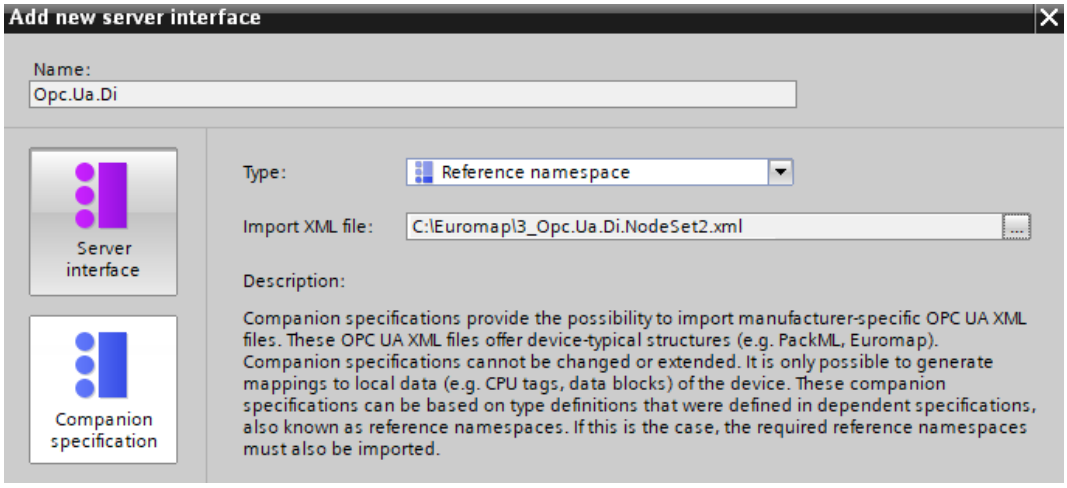

6. Click "OK".
   STEP 7 (TIA) now generates the new server interface.

You can find the server interface in the project tree of STEP 7 (TIA Portal), under "OPC UA Communication > Server interfaces > Namespace references".

If a companion specification uses additional namespaces, add a new server interface for each namespace.

Add additional server interfaces for Euromap77

For Euromap 77, you still need the following namespaces:

- http://www.euromap.org/euromap83/
- http://www.euromap.org/euromap77/

First, add a server interface for the namespace "http://www.euromap.org/euromap83/".

This namespace contains basic definitions for Euromap 77, therefore it is required here first. All definitions of this namespace are included in the XML file "Opc_Ua.EUROMAP83NodeSet2.xml", which you can download from the Euromap website (https://www.euromap.org/en/euromap83).

Then add a server interface for the namespace "http://www.euromap.org/euromap77". All definitions of this namespace are included in the XML file "Opc_Ua.EUROMAP77.NodeSet2.xml", which you can also download from the Euromap website (https://www.euromap.org/en/euromap77).

10.3.4.10 Generating OPC UA nodes based on local data mappings of FB types and UDTs

If you want to make instance data from FBs or UDTs of the CPU accessible to OPC UA clients you can, as of TIA Portal version V17, have these instance data assignments automatically made.

You only have to map the FB types or the UDTs to suitable OPC UA data types of imported reference namespaces. Based on these mappings created in STEP 7 (TIA Portal), generate the

required nodes in the server interface for each FB instance or for each UDT usage during the compile.

If you extend your program and add more FB instances or UDT usages, or if you add existing instances delete, you do not need to worry about adapting the server interface: STEP 7 automatically adjusts the server interface when compiling the program.

Example

- You create a function block (FB) in the user program of the CPU and define in the "Static" area of the interface of the FB the parameters that form the "memory" of the FB. The instances (values) of this parameter are to be accessible for OPC UA clients.
- You create an OPC UA data type (e.g. with SiOME) with elements that correspond to the data type the parameters in the static area of interface of the FB. The order of the elements does not matter. Then import the reference node set file (reference namespace) as a reference name space.

The following figure shows the assignment of elements as comparison of the reference namespace view (server interface) and the OPC UA elements view (program).

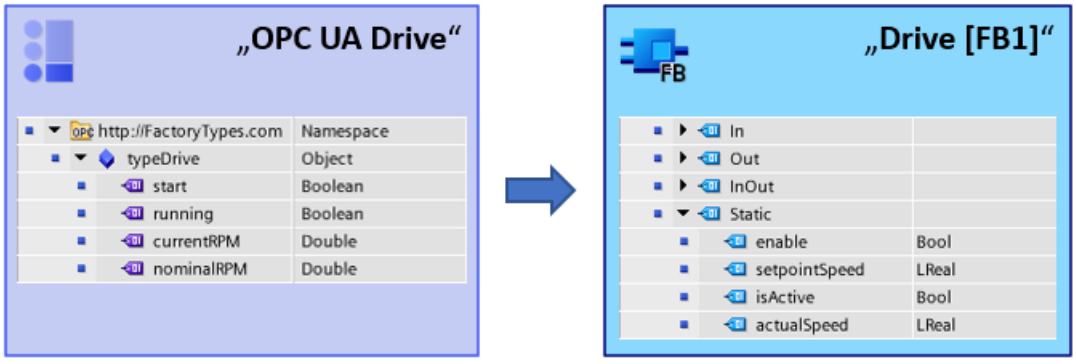

Mapping of data types (FB interface - OPC UA interface): Principle

The following figure shows the assignment of the elements from the user program of the CPU to the elements of the OPC UA server interface. The order of the elements does not have to match.

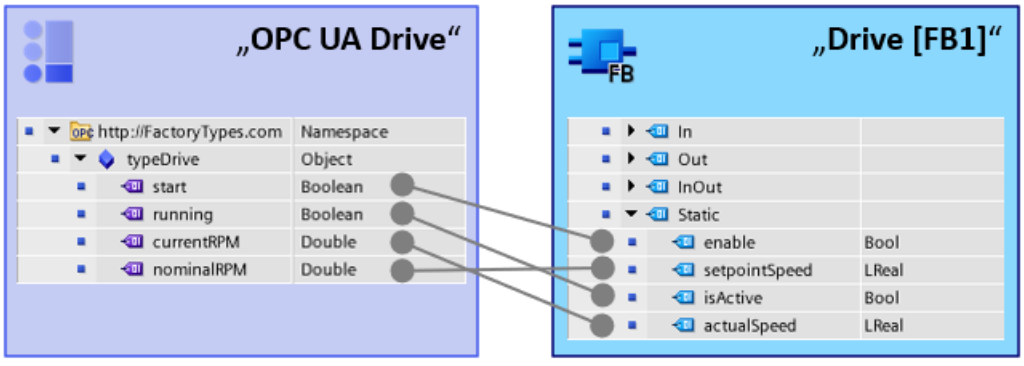

Automatic generation of the OPC UA server instances in the server interface: Principle

The figure below shows the compilation of the project. The instances of the user program are also generated in the server interface.

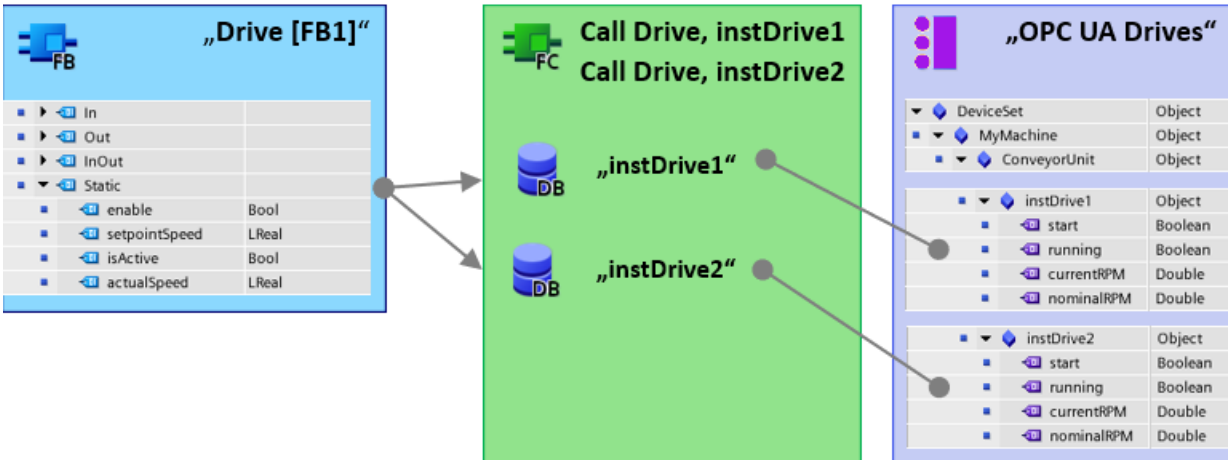

By mapping between FB type information / UDT type information and OPC UA type information, STEP 7 is able to create all instances present in the program as nodes in the server interface.

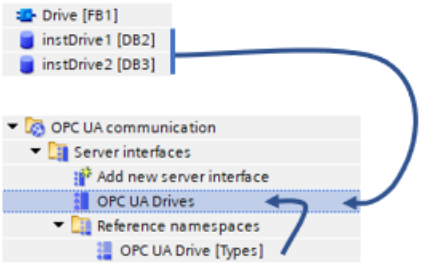

Rules

- Only the FB elements in the "Static" area of an FB interface can be mapped to OPC UA type descriptions.
- When mapping the data types, OPC UA elements from the same FB interface or from the same UDT must always be selected for an object. Mapping from different FBs or UDTs to an object is not permitted.

Requirement

- The FB types used, defined in the "Static" area of an FB, must be configured as "Accessible for OPC UA".
- The UDTs used must be configured as "Accessible for OPC UA".
- A nodeset file (XML file) is available with OPC UA data type definitions that match the FB types or UDTs defined in user program (can be mapped).
  Use the "SiOME" tool to create your node set file (Siemens Industry Online Support).
- The user program with the FB instances and UDT usages is available.

Procedure

To map a data type from a reference namespace to an FB type or UDT data type, follow these steps:

1. Select the CPU that you want to use as an OPC UA server.
2. Import the prepared node set file (XML file) with the type definitions as a reference namespace.
   – In the "Add new server interface" dialog, enable the option "Generate OPC UA nodes based on the local data mapping".
     Only when this option is enabled can you map FB types or UDTs by dragging them to the OPC UA type descriptions.
3. Double-click the icon for the server interface of the "Reference namespace" type that you just generated.
   The editor for mapping between OPC UA server interface and OPC UA elements opens. In the properties area of the editor, in the "Mapping of local data" area, the option "Generate OPC UA nodes based on the local data mapping" is enabled. If not, enable the option now.
   In the "Interface name" field, adapt the name of the server interface to be created. A new server interface of the "Companion specification" type with this name is created during the compile.
4. Assign the existing FB types or UDTs to the nodes of the server interface (reference namespace) by dragging the OPC UA element (right side of the editor) to the corresponding node of the server interface (reference namespace, "Local data" column).

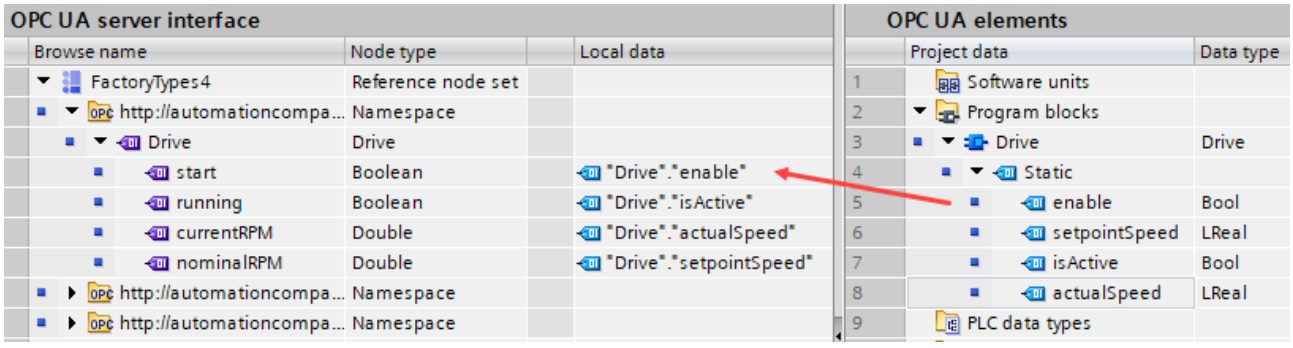

5. Compile the project.
   After the compile, the newly generated nodes of the instances are located in the newly generated server interface. STEP 7 creates an object for each instance DB. The generated elements are located under each of these objects.
   Similarly, STEP 7 also creates an object for each global DB that is created when a UDT is instantiated.

Create user program with FB types or UDT

How to create FBs and UDTs is not explained in detail here; for this purpose use the description for creating a user program, e.g. declare block interface and declare PLC data types (UDT).

Consistency check

The consistency check ("Consistency check" button of the editor) also checks the mapping of the data types and updates the display of the data types in the corresponding column of the editor.

10.3.4.11 Notes on configuration limits when using server interfaces

When you use OPC UA server interfaces, you must comply with limits for the following objects in line with the S7-1500 CPU performance class:

- Number of server interfaces
- Number of OPC UA nodes
- Load object data volume
- If you have implemented methods: Number of server methods or server method instances

Configuration limits for OPC UA server interfaces and methods

The table below sets out the configuration limits for S7-1500 CPUs; these must also be taken into account when you compile and load a configuration (up-to-date technical specifications of the CPUs can be found on the Internet (https://support.industry.siemens.com/cs/ww/en/ps/td)).
A violation of configuration limits results in an error message.

Table 10-4 Configuration limits for OPC UA server interfaces

Technical specification value	**CPU 1510SP (F) CPU 1511 (C/F/T/TF) CPU 1512C CPU 1512SP (F) CPU 1513 (F)**	**CPU 1505 (S/SP/SP F/SP T/SP TF) CPU 1515 (F/T/TF) CPU 1515 SP PC (F/T/TF) CPU 1516 (F/T/TF)**	**CPU 1507S (F) CPU 1517 (F/T/TF) CPU 1518 (F)**
Use of imported companion specifications (information models)			
Maximum number of OPC UA server interfaces: • "Companion specification" type • "Reference namespace" type • "Server interface" type	10 20 10	10 20 10	10 20 10
• Maximum number of OPC UA nodes in user-defined server interfaces	1000	5000	30000
• Maximum size of loadable OPC UA server interfaces	1024 KB	5120 KB	8192 KB
Provision of methods			
Maximum number of usable server methods or max. number of server method instances (instructions OPC_UA_ServerMethodPre, OPC_UA_ServerMethodPost)	20	50	100

10.3.5 Providing methods on the OPC UA server

10.3.5.1 Useful information about server methods

Providing user program for server methods

On the OPC UA server of an S7-1500 CPU (as of firmware V2.5), you have the option of providing methods via your user program. These methods can be used by OPC UA clients, for example to start a manufacturing job using the method call of the S7-1500 CPU.

OPC UA methods, an implementation of "Remote Procedure Calls", provide an efficient mechanism for interactions between different communication nodes. The mechanism provides both job confirmation and feedback values so you no longer have to program handshaking mechanisms.

Using OPC UA methods, you can transfer data consistently without trigger bits/handshaking, for example, or trigger specific actions on the controller.

How does an OPC UA method work?

An OPC UA method in principle operates like a know-how protected function block that is called by an external OPC UA client in runtime.

The OPC UA client only "sees" the defined inputs and outputs. The content of the function block, the method or algorithm, remains hidden to the external OPC UA client. The OPC UA client receives feedback on successful execution and values returned by the function block (method), or an error message if execution has not been successful.

As the programmer, you have full control over and responsibility for the program context in which the OPC UA method runs.

Rules for programming a method and runtime behavior

- Make sure that the values returned by the OPC UA method are consistent with the input values provided by the OPC UA client.
- Follow the rules on assigning name and the structure of parameters, and the permitted data types (see description of the OPC UA server instructions).
- Behavior during runtime: The OPC UA server accepts **one** call per instance. The method instance is not available for other OPC UA clients until the call has been processed by the user program or has timed out.

The basic procedure for implementing a user program as a server method is set out below.

Implementing a server method

A program (function block) for implementing a server method is structured as follows:

1. **Querying the server method call with OPC_UA_ServerMethodPre**
   You first call the "OPC_UA_ServerMethodPre" instruction in your user program (i.e. in your server method).
   This instruction has the following tasks:
   – With this instruction you ask the OPC UA server of the CPU whether your server method was called from an OPC UA client.
   – If the method was called and the server method has input parameters, your server method now receives the input parameters.
     The input parameters of the server method come from the calling OPC UA client.

2. **Editing the server method**
   In this section of the server method, you provide the actual user program.
   You have the same options as in any other user program (for example, access to other function blocks or global data blocks).
   If the server method uses input parameters, these parameters are available to you.
   This section of the server method should only be executed if an OPC UA client has called the server method.
   After successful execution of the method, you set the output parameters of the server method if the method has output parameters.
3. **Responding to server method with OPC_UA_ServerMethodPost**
   To complete the server method, call the "OPC_UA_ServerMethodPost" instruction.
   Use the parameters to notify the "OPC_UA_ServerMethodPost" instruction whether or not the user program has been processed.
   If the user program has been successfully executed, the OPC UA server is notified via the relevant parameters. The OPC UA server then sends the output parameters of the server method to the OPC UA client.

Always call the instructions "OPC_UA_ServerMethodPre" and "OPC_UA_ServerMethodPost" as a pair irrespective of whether the user program is processed by both instructions or continued in the next cycle.
You will find an example of a server method implementation in the STEP 7 online help.

Integrating the server method

The diagram below shows how an OPC UA client (A) calls the server method "Cool":
The CPU executes the instance "Cool1" of the server method "Cool" in the cyclic user program ⑥.
The CPU first uses the instruction "OPC_UA_ServerMethodPre" to query ④ whether an OPC UA client has called the server method "Cool" ①.

- If the server method has not been called, program execution returns directly to the cyclic user program over ④ and ⑥. The CPU resumes the cyclic user program after "Cool1".
- If the server method has been called, this information is returned to the server method "Cool" over ④. The actual functionality is now executed in the Cool server method, see"<Method Functionality>" in the graphic.
  The server method then uses the instruction "OPC_UA_ServerMethodPost" ⑤ to notify the firmware (B) that the instruction has been executed ③.
  The firmware returns this information over ② to the calling OPC UA client (A).
  The CPU resumes the cyclic user program after "Cool1".

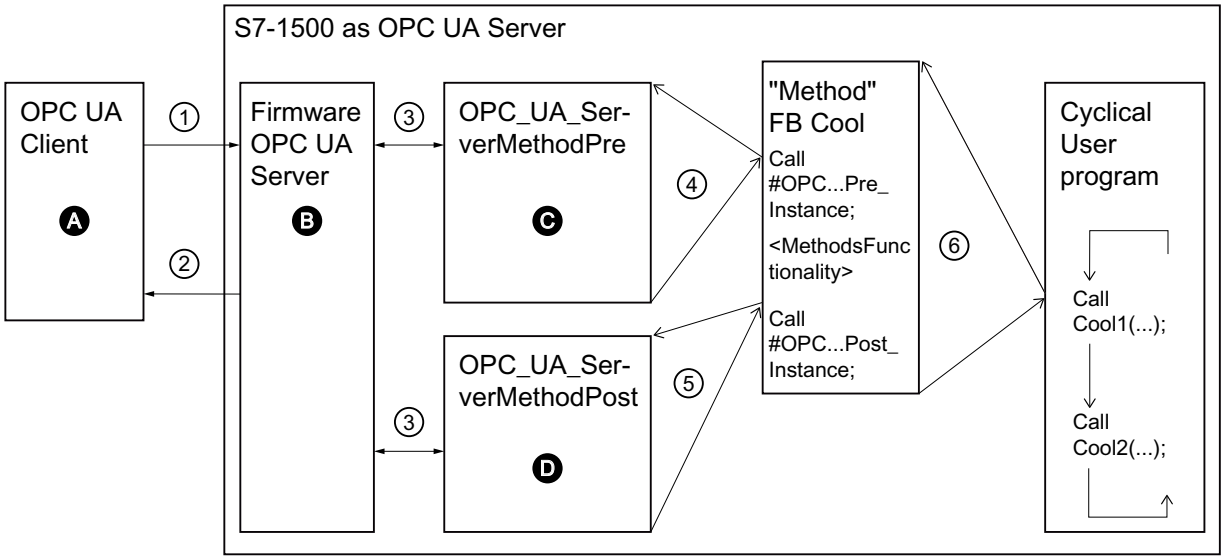

A Call of the server method and management of the "Done" information (method complete)

① Asynchronous call of the server method

② Asynchronous "Done" information for the method called (method complete)

B Wait for OPC UA client calls, management of calls in the queue, forwarding of "Done" information from the cyclic user program to the OPC UA client

③ Data transfer from the OPC UA server to the method instances of the user program and vice versa

C Check whether method has been called.
If it has, forwarding of input data from the OPC UA server to the method instance of the user program and feedback to the method instance that the method has been called ("called")

④ Synchronous call of the instruction OPC_UA_ServerMethodPre as a multi-instance stating the storage area for the input data from the OPC UA server.
The return value indicates whether or not the method has been called by the OPC UA client.

⑤ Check whether the method has been completed or is still active ("busy").

D Check whether the method has been completed.
If it has, the output data of the method instance is forwarded to the OPC UA server and the method instance is notified that the method has been completed. The OPC UA server is notified.

⑥ Call of the method FB (in this case: FB Cool) with the required instance and the process parameters

Figure 10-51 Example: Calling the "Cool" server method

Information about server instructions

The "OPC_UA_ServerMethodPre" and "OPC_UA_ServerMethodPost" are described in detail in the help to the Instructions > Communication > OPC UA > OPC UA server.

10.3.5.2 Boundary conditions for using server methods

Permitted data types

If you provide server methods, observe the following rule:

- Assign the data types as shown below (SIMATIC data type - OPC UA data type). Other assignments are not permitted.

STEP 7 does not check the observance of this rule and does not prevent an incorrect assignment. You are responsible for the rule-compliant selection and assignment of the data types.

You can also use the listed data types, for example, as elements of structures/arrays/UDTs for input and output parameters of self-created server methods (UAMethod_InParameters and UAMethod_OutParameters).

SIMATIC data type	OPC UA data type
BOOL	Boolean
SINT	SByte
INT	Int16
DINT	Int32
LINT	Int64
USINT	Byte
UINT	UInt16
UDINT	UInt32
ULINT	UInt64
REAL	Float
LREAL	Double
LDT	DateTime
WSTRING	String
DINT	Enumeration (Encoding Int32) and all derived data types
User-defined data type required (UDT, user-defined data type) The user-defined data type must be created with the prefix "Union_", for example "Union_MyDatatype". The first element (Selector) in this UDT must have the data type "UDINT".	UNION and all derived data types

Number of implementable server methods and number of arguments

If you implement server methods via your user program, the number of usable methods is limited depending on the CPU type, see the following table (up-to-date technical data of the CPUs can be found in the Internet (https://support.industry.siemens.com/cs/ww/en/ps/td)).

Technical specification value	CPU 1510SP (F) CPU 1511 (C/F/T/TF) CPU 1512C CPU 1512SP (F) CPU 1513 (F)	CPU 1505 (S/SP/SP F/SP T/SP TF) CPU 1515 (F/T/TF) CPU 1515 SP PC (F/T/TF) CPU 1516 (F/T/TF)	CPU 1507S (F) CPU 1517 (F/T/TF) CPU 1518 (F)
Maximum number of usable server methods or max. number of server method instances (OPC_UA_ServerMethodPre, OPC_UA_ServerMethodPost instructions)	20	50	100
Maximum number of arguments per method (More than the specified number of arguments can be configured and loaded into the CPU, but an OPC UA client cannot call the method).	20	20	20

Error message when exceeded

If the maximum number of server methods is exceeded, the OPC_UA_ServerMethodPre or OPC_UA_ServerMethodPost instructions report the error code 0xB080_B000 (TooManyMethods).

Supply of structured data types with nested arrays

If a structured data type (Struct/UDT) contains an array, the OPC UA server does not provide information about the length of this array.

If you use such a structure as the input or output parameter of a server method, for example, you must ensure that the nested array is supplied with the correct length when the method is called.

If you do not adhere to this rule, the method fails with the error code "BadInvalidArgument".

10.3.6 Providing alarms on the OPC UA server

10.3.6.1 Useful information on alarms

Alarms allow you to detect errors in process control in the automation system quickly, to localize them precisely, and to eliminate them. This leads to a significant reduction in downtimes in a plant. The OPC UA information model "Alarms & Conditions" provides a standardized and platform-independent way of message processing.

As of firmware version V2.9, the OPC UA server of an S7-1500 CPU supports the OPC UA information model "Alarms and Conditions". In this way, the OPC UA server provides access to controller alarms.

The following sections describe which alarm types available in SIMATIC are supported at the OPC UA interface of the OPC UA server.

The following sections also describe how you configure the OPC UA server of the S7-1500 CPU for Alarms & Conditions, the main points of how the Alarms & Conditions model is structured with OPC UA, and which special points must be taken into consideration when using alarms from the address space of the OPC UA server as compared to the SIMATIC controller alarms of the CPU alarm system.

Basis for the converting alarms to OPC UA Alarms & Conditions

The Alarms and Conditions information model is specified in the "OPC 10000-9: OPC Unified Architecture Part 9: Alarms & Conditions" specification.

Controller alarms in SIMATIC

The OPC UA server of the S7-1500 CPUs supports the controller alarms listed below, which are available to S7-1500 CPUs. You configure or program these alarms in the usual way, without the need to consider additional rules for use of these alarms by OPC UA clients.

The added benefit of OPC UA Alarms and Conditions is that these alarm types can be displayed not only by HMI devices, web browsers, the CPU display or the TIA Portal, but also by all OPC UA clients that support OPC UA Alarms and Conditions.

- PLC supervision alarms with ProDiag
  You can integrate simple supervisions in your program with just a few configuring steps and without having to change the program code. The configuration of the supervisions is independent of the programming languages of the TIA Portal because only individual operands are supervised, and you do not need any additional programming sections.
- System diagnostics alarms
  Configuration-dependent module events are known by the hardware configuration of the CPU and can be evaluated by connected display devices. They can only be viewed in the alarm editor and cannot be edited.
- Program alarms (Program_Alarm instruction)
  For reporting program synchronous events, program alarms are assigned to one block at a time. They are created in the program editor and edited in the alarm editor (TIA Portal).
- GRAPH alarms
  For GRAPH function blocks, you can also enable alarms; e.g. for interlocks, supervisions and GRAPH warnings (step-time supervisions).

Important information on the alarm types

The following characteristics are significant to the differences in the behavior of alarms:

- Do alarms have a state (e.g. are they incoming, outgoing - with the corresponding time stamps)?
- Do alarms require acknowledgment?

If none of these characteristics apply, which means the alarms have no state and do not require acknowledgment, alarms simply provide information about an event that has occurred ("Fire and Forget"). It is up to the device receiving the alarm to buffer the alarm for further use or only for display.

Alarm class determines acknowledgment behavior

This section covers the setting options for program alarms. You can also set the behavior of the alarms for system diagnostics alarms and PLC supervision alarms (e.g. ProDiag supervision settings) - refer to the linked more information for details.

You can find the setting options for program alarms in the alarm editor (double-click on "PLC supervisions and alarms" in the project tree, select the "Alarms" tab).

For the S7-1500 CPU, you set here via the alarm class whether an alarm needs to be acknowledged or not. In addition to the acknowledgment behavior, when creating a new alarm class, you define the default priority of alarms of this alarm class.

You set whether an alarm has a state or not by means of the "Information only" option, for example, at the alarm type; this results in "Fire-and-Forget" behavior of the alarm.

Here is an example with settings in the alarm editor with different alarm classes ("PLC supervisions and alarms" in the project tree):

- First line "Program_Alarm": Does not require acknowledgment, information only ("Fire and Forget").
- Second line "Program_Alarm_1": Requires acknowledgment and has a state, which means the alarm includes information on whether it is incoming or outgoing.
- Third line "Program_Alarm_2": Does not require acknowledgment and has a state, which means the alarm includes information on whether it is incoming or outgoing.

Alarm types

Name	Type	ID	Location	Alarm text	Info text	Alarm class	Acknowle...	Information only
Program_Alarm	PLC alarm		AlarmType	myText	myINFO	No Acknowledgement	☐	☑
Program_Alarm_1	PLC alarm		AlarmType			Acknowledgement	☑	☐
Program_Alarm_2	PLC alarm		AlarmType			No Acknowledgement	☐	☐

Display of alarms in the TIA Portal

During runtime, you have the option of viewing the alarms in the TIA Portal: The alarm display is located directly under the alarm editor ("Diagnostics" tab > "Alarm display" tab).

The following applies to the state and acknowledgment behavior:

- When you click on the "Current alarms" button, alarms that have been recently incoming, outgoing or acknowledged are displayed. Only alarms with a state and alarms requiring acknowledgment are displayed here. You can also acknowledge an alarm requiring acknowledgment (blue font) in this view via the shortcut menu or using the "Acknowledge" button.
- If you want to observe the chronological development (e.g. alarm came in, was acknowledged and went out), you need to click the "Alarm archive" button. The three events that belong to this alarm are listed one after another only in this view. You can only find the current state in the "Current alarms" view.
- Info reports (alarms with the "Information only" property) are only displayed in the "Alarm archive" view. Because these alarms are only triggered once and not buffered, they do not appear in the "Current alarms" view.
- PLC supervisions are also shown in the alarm display.
- System alarms usually belong to the "No Acknowledgement" alarm class with the "Information only" option. These alarms are logged in the diagnostics buffer in the CPU and thus allow the sequence of system alarms to be analyzed over a limited period. In contrast, operating state changes that are also logged in the diagnostics buffer have a state, which means it is indicated that or when a CPU went into STOP state and if or when

it exited this state again, for example, entered RUN state. This information is displayed with the states "incoming/outgoing".

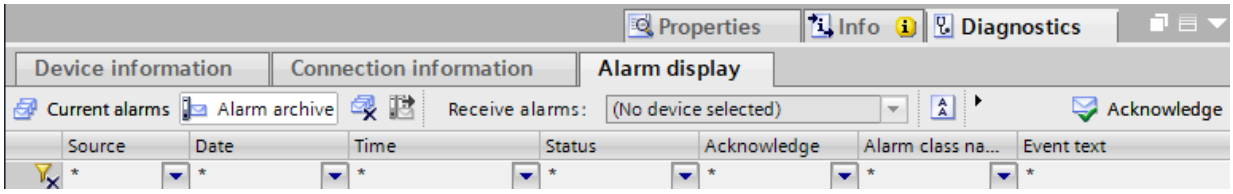

Provision of controller alarms by the OPC UA server

When an OPC UA client wants to receive alarms of the S7-1500 CPU, it needs to subscribe to OPC UA events (MonitoredEventItems).

For this purpose, the address space of the OPC UA server of the S7-1500 CPU contains corresponding nodes that are "Event-Notifiers" and create a subscription for the OPC UA clients to receive the alarms.

For completeness, we also mention that further type definitions are contained in the server address space for this purpose as nodes under "Types". Type definitions under "BaseEventType" and "ConditionType" ensure that the fields used by SIMATIC alarms are also provided in the OPC UA server.

After the activation of OPC UA Alarms and Conditions (CPU properties in the hardware configuration), the OPC UA address space of the S7-1500 CPU thus reflects the various alarm types (controller alarms) as described above:

- ProcessDiagnostics
  Corresponds to the PLC supervision alarms with ProDiag
- SystemDiagnostics
  Corresponds to the system diagnostics alarms
- UserProgram
  Corresponds to the program alarms
- Graph
  Corresponds to GRAPH alarms

By selecting the node for a subscription, you determine which alarm types are received by the OPC UA client. For example, the "Server" node enables receipt of all alarms, the "UserProgram" node only the receipt of program alarms.

Details about the OPC UA model for Alarms and Conditions are given in the next selection, especially for the "Overloads" node, you can find more information here: Handling memory limits for OPC UA Alarms and Conditions (Page 289).

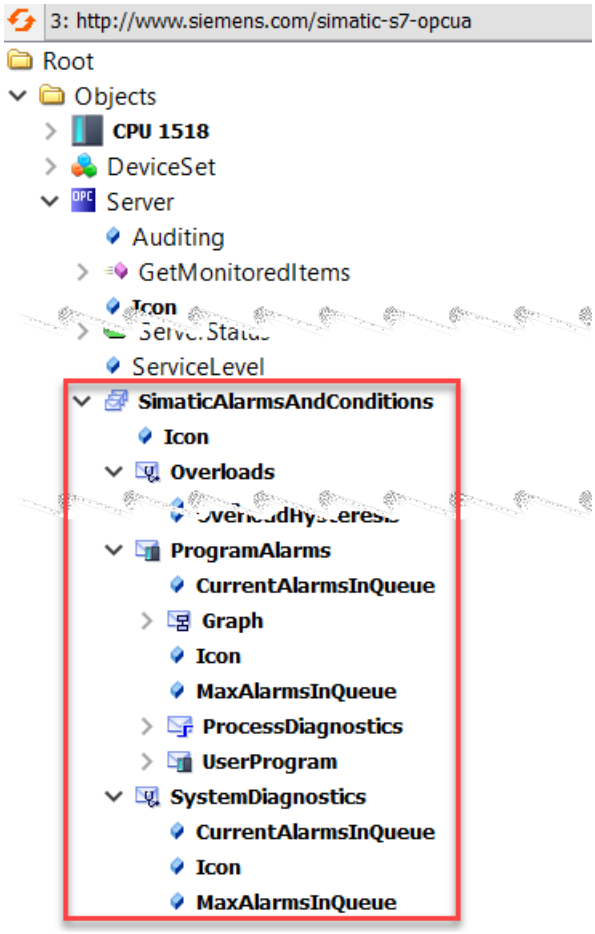

More information on the alarm types

The concepts and configuration options for controller alarms are not described further here. For information on alarm configuration, alarm display and the associated instructions, such as "Progam_Alarm", refer to the STEP 7 online help.

10.3.6.2 OPC UA Events

The basic concepts for alarm processing in OPC UA are expanded on here - the basic concept of "Events" is covered here. The terms used in the various parts of the OPC UA specification have been retained here.

Properties of events

In the address model of the OPC UA server, as of CPU firmware version V2.9, you not only have the option to access PLC tags (read, write) via nodes and to use methods - you can also receive events or alarms via nodes. In OPC UA terminology, these are called "events".

An event includes an event text (Message), time stamp (Time) and event source (SourceNode).

The information supplied with an event from the server depends on the event type. OPC UA defines a BaseEventType in part 5 of the specification (Information Model).

Other event types that provide different alarm behavior are derived from the BaseEventType. This type information of the different event types is visible in the address space of an OPC UA server ("Types" folder). This also applies, for example, to the event types of "Conditions" and "Alarms", which are discussed in the next section.

The OPC UA specification defines for the BaseEventType and for derived EventTypes which properties (fields) of an event are mandatory and which are optional.

The following figure shows the hierarchical structure of BaseEventType.

The following sections show how specialized EventTypes are derived from the root of the derivation hierarchy, the BaseEventType. The SIMATIC-specific derivations ensure that the information supplied in SIMATIC with an alarm and displayed on an HMI device, for example, can also be subscribed to by an OPC UA client in the address space of the OPC UA server.

An event itself is not available as a node in the address space. Events are only triggered by nodes or objects that have the "Event-Notifier" property. These nodes are often also referred to as event signaling objects. Only nodes with this property can be specified as EventMonitoredItem in a subscription to receive corresponding events in the client.

Nodes that can trigger events with an S7-1500 CPU are objects such as "Server", the "SimaticAlarmsAndConditions" object below it, and the three objects below that, ProcessDiagnostics, SystemDiagnostics and UserProgram. The "EventNotifier" attribute is set for these objects in the address space of the OPC UA server of the CPU.

Definition of SimaticEventType

The figure below shows that the type "SimaticEventType" is derived directly from BaseEventType.

BaseEventType is the basic type definition for events with OPC UA.

All event types for OPC UA can be defined, directly or indirectly, based on BaseEventType.

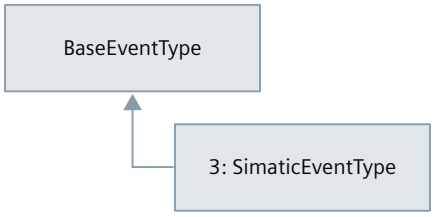

The "SimaticEventType" type is defined in the SIMATIC namespace (http://www.siemens.com/simatic-s7-opcua).

SimaticEventType has all properties of BaseEventType as well as the special properties which are an image of the field structure of SIMATIC alarms.

Description of the event fields for SimaticEventType

The following table contains information on the fields of SimaticEventType for alarms of the type "Information only". Fields that are optional according to OPC UA and are not used by the OPC UA server of the CPU are omitted. You can also find a general description of the fields in the specification OPC 10000-5: OPC Unified Architecture, Part 5: Information Model, Release 1.04.

BrowsePath	DataType	Explanations
EventId	ByteString	Unique Event ID of the event
EventType	NodeId	Node ID of the event type
Time	UtcTime	Time stamp of the event (Event occurrence)
ReceiveTime	UtcTime	Current time stamp at which the OPC UA event was generated.
Message	LocalizedText	Event text
Severity	UInt16	Priority of the alarm from SIMATIC (0..16), spread into a range from 1..1000 with OPC UA, see following table. The priority indicates the urgency with which the event needs a response.
3:AdditionalText_01	LocalizedText	Optional additional text 1
...	...	...
3:AdditionalText_09	LocalizedText	Optional additional text 9
3:AssociatedValue_01	3:SimaticAssociate-dAlarmValue	Optional associated value 1 (not for system diagnostics)
...	...	...
3:AssociatedValue_10	3:SimaticAssociate-dAlarmValue	Optional associated value 10 (not for system diagnostics)
3:InfoText	LocalizedText	Info text
3:ID	UInt16	Alarm number - A number (ID) assigned by the system that is unique within the CPU and identifies an alarm.
3:DisplayClass	UInt16	Display class (used by HMI devices. Determines the events displayed on specific HMI devices.
3:GroupID	UInt8	Acknowledgment group for alarms that are acknowledged together.

Assignment of Priority (SIMATIC) - Severity (OPC UA)

The following table shows how the 17 priorities that you can assign to alarms in the SIMATIC environment are mapped to the 1000-level Severity with the OPC UA server of the S7-1500 CPU.

This assignment depends on the manufacturer. Different assignments may apply to other devices.

OPC Range	Priority 0..16 (SIMATIC)	Severity 1..1000 (OPC UA)
HIGH (667 – 1 000)	16	1000
	15	930
	14	860
	13	790
	12	720
MEDIUM (334 – 666)	11	650
	10	600
	9	550
	8	500
	7	450
	6	400
	5	350
LOW (1 – 333)	4	300
	3	225
	2	150
	1	75
	0	1

10.3.6.3 OPC UA conditions and OPC UA alarms

The following goes further in depth about the basic concepts for OPC UA Conditions and OPC UA Alarms based on the explanations of events in the previous sections. Again, the terms used in the various parts of the OPC UA specification have been retained here.

Properties of Conditions

A prerequisite for understanding is the concept of "Events" in OPC UA.

In OPC UA, if an event alarm object provides status information in addition to its ability to fire Events, we speak of Conditions. Conditions represent a state of a system or one of its components. Basic states are "enabled" and "disabled", other state definitions are also possible.

In turn, interested OPC UA clients are notified of state changes by means of events (Condition Events).

An example of a Condition is state information, for example, that a device requires maintenance.

Properties of Alarms

However, the properties of ConditionType are not sufficient to completely map the characteristics of SIMATIC alarms in the OPC UA server.

From the ConditionType, which is derived from the BaseEventType, OPC UA defines further derived event types such as AcknowledgeableConditionType and AlarmConditionType.

AcknowledgeableConditionType supplements the properties of ConditionType with the "Acknowledgeable" characteristic (AckedState).

AlarmConditionType thus adds the "ActiveState" characteristic to the properties of ConditionType and the AcknowledgeableConditionType. In SIMATIC terminology, this is an incoming alarm. The ActiveState signals that the situation, which the Condition represents, is currently present or has occurred.

Example: A temperature has exceeded a limit. If "ActiveState" is not set, the situation that represents the condition no longer exists - this is usually referred to as a "normal state". In SIMATIC terminology, this corresponds to an outgoing alarm.

In OPC UA, other statuses such as SilenceState and ShelvingState are defined, but these are not relevant to mapping to the SIMATIC alarm system and will therefore not be described further here.

The SimaticAlarmConditionType is derived from the AlarmConditionType and contains all event fields to map the state and acknowledgment information of SIMATIC messages.

Definition of SimaticAlarmConditionType

The following figure shows how events of the type "SimaticAlarmConditionType" are defined by a series of expansions to the OPC UA "BaseEventType".

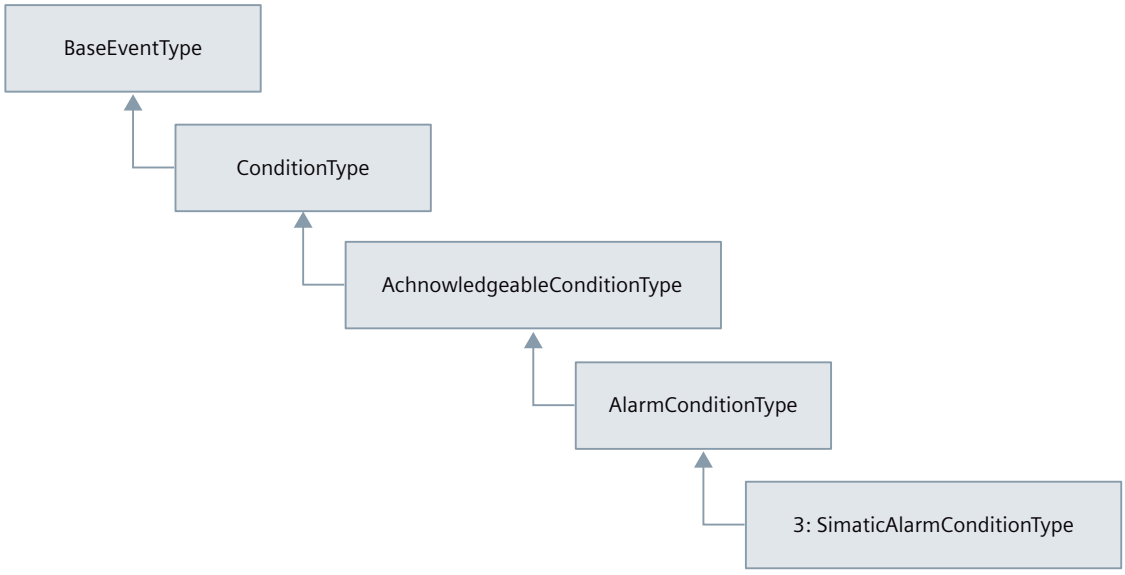

Description of the event fields for SimaticAlarmConditionType

The following table contains information about the fields of SimaticAlarmConditionType for stateful and acknowledgeable alarms, which are added to the event fields such as SimaticEventType. Fields that are optional according to OPC UA and are not used by the OPC UA server of the CPU are omitted. You can also find a description of the fields in the

specification OPC 10000-9: OPC Unified Architecture, Part 9: Alarms & Conditions, Release 1.04.

BrowsePath	DataType	Explanations
ConditionClassId	NodeId	Node IDs for SystemConditionClassType, ProcessConditionClassType or BaseCondition-ClassType are possible
ConditionClassName	LocalizedText	Display name of the ConditionClassId
Retain	Boolean	Indicates that the alarm is still relevant for OPC UA clients (set if alarm is still pending and not acknowledged).
Comment	LocalizedText	• Most recent comment entered using the "AddComment" or "Acknowledge" method. • ZERO after a server restart and if no comment was entered.
Comment.SourceTimestamp	UtcTime	Time stamp for the last change of the comment field
AckedState	LocalizedText	"Acknowledged" or "Unacknowledged"
AckedState.Id	Boolean	Set, if acknowledged
AckedState.TransitionTime	UtcTime	Time at which the alarm was acknowledged. ZERO if not acknowledged or not acknowledgeable.
ActiveState	LocalizedText	"Active" or "Inactive"
ActiveState.Id	Boolean	Set when "active"

10.3.6.4 Activating Alarms and Conditions

Requirements

- S7-1500 CPU firmware version V2.9 or higher
- Runtime license for OPC UA were purchased according to the license specifications and set in the CPU properties

Procedure

To activate alarms through OPC UA Alarms and Conditions, proceed as follows:

1. In the CPU properties, go to the "OPC UA > Server > General" area.
2. Select the "Enable Alarms and Conditions on the OPC UA server" option.
   The corresponding types and objects that can trigger events only become visible in the address space when the option is activated.
3. If required, also activate the option "Allow message acknowledgment by OPC UA client".
   In this case, every connected OPC UA client can acknowledge an alarm requiring acknowledgment with the "Acknowledge" method.

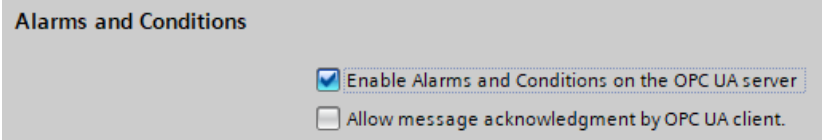

Recommendation: Activate diagnostics "Requests of a remote OPC UA client failed"

When the OPC UA server cannot allocate sufficient memory, it is not possible to generate OPC UA alarms in this state; a message loss for OPC UA clients is possible.

Therefore, you should activate the diagnostics "Requests of a remote OPC UA client failed" to diagnose this state (Properties of the CPU > OPC UA > Server > Diagnostics).

In addition, you should also activate the option "Summarize diagnostics in case of high message volume".

As soon as sufficient memory is available again, OPC UA clients should call the ConditionRefresh method to receive the current state of the alarm system.

More information

You can find information on methods for OPC UA Alarms and Conditions in the section Methods for OPC UA Alarms and Conditions (Page 286).

You can find information on failed requests of a remote client in the section Request of a remote client failed (Page 297).

10.3.6.5 Subscribing to events of an OPC UA server

Subscribing to all events via the "Server" node

OPC UA servers provide events via the "Server" node and lower-level nodes. When OPC UA clients subscribe to the "Server" node, they receive all events and alarms of the OPC UA server.

The "Server" node is located in the "Objects" folder below "Root".

OPC UA servers inform OPC UA clients which event types they use (under "Root > Types > EventTypes" in the address space).

Filter options for events

OPC UA clients can choose and only subscribe to specific nodes under the "Server" node and thus to specific event types, for example, only the "UserProgram" node. This reduces the number of events from the OPC UA server to program alarms.

Another way of filtering is to select the event fields, known as "Select Clause" in OPC UA terminology.

This means that in the subscription, the OPC UA client makes a selection of the event fields in addition to the event alarm object (e.g. the "UserProgram" node). You select the event fields via the browse name of the corresponding field.

OPC UA also defines so-called "Where Clauses". A Where Clause in the event filter is used to further limit the number of events that are supplied by the OPC UA server for the selected object, for example, by filtering to a severity range.

Example client UaExpert

The example of the UaExpert OPC UA client shows how events of an OPC UA server can be received via a subscription. Here is the most important information on the displayed events/alarms:

- Event View is a separate view of events in addition to the Data Access View.
- The "Configuration" area contains the selected event signaling object with the fields for the Select Clause. A configuration of Where clauses is currently not possible in UaExpert.
- In the "Events" area, "Events" tab: Corresponds to the TIA alarm view with activated "Alarm archive" button; events of the "Information only" category and outgoing alarms are also visible there, because UaExpert buffers them in the background for display. These events are not visible in the "Alarms" tab.
- In the "Events" field, "Alarms" tab: Corresponds to the TIA alarm display with activated "Current alarms" button; alarms are visible here with their status, e.g. "active" (corresponds to "incoming") and these alarms can also be acknowledged using the shortcut menu. Outgoing alarms are no longer visible in this view.

In the columns of the Event area, a selection of event fields is offered, for example, the event text (Message) and whether the alarm was acknowledged (A=Acknowledged).

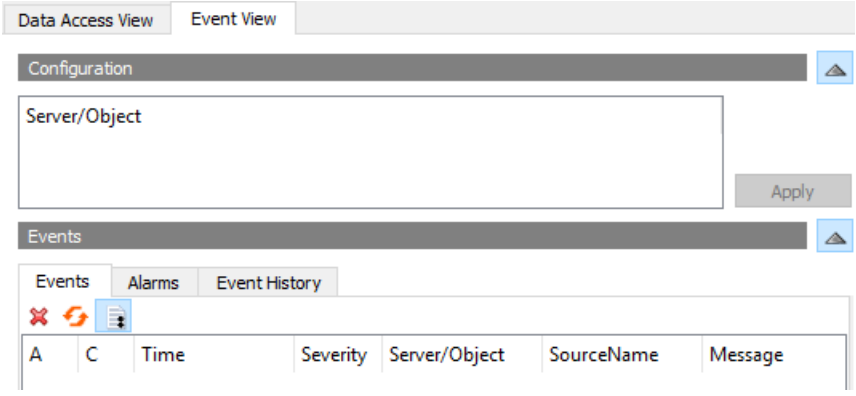

Special features of the display of alarms via the OPC UA server of the CPU

The following once again summarizes the special features of the alarm display via OPC UA Alarms and Conditions for the current status.

Topic	Explanation
Comment	Via OPC UA, you can add a comment to a alarm using the "AddComment" method or the "Acknowledge" method. This comment is no longer available after a server restart.

Topic	Explanation
Pending alarms are not lost after a server restart	The OPC UA server supports the "ConditionRefresh" method with which it makes the current state of the system available to the OPC UA client, for example, after download of a new data block (requires server restart and re-establishment of the connection).

10.3.6.6 Processing associated values of alarms

You can specify placeholders for SIMATIC alarms. With placeholders you can integrate up to 10 associated values (SD_1 to SD_10) into the alarm text. Placeholders can also be specific text list entries.

When you are using alarms with placeholder, you must observe the following rules:

- Placeholders that represent values in the alarm are only inserted automatically for system diagnostic alarms or security event alarms. For other categories of alarms (e.g. program alarms), the placeholders for values are not resolved. The OPC UA clients must resolve these alarms.
- Placeholders that reference text lists are resolved by the CPU (format, e.g.: %t#<name of the text list>).

Example of how values and placeholders are assigned through UaExpert

1. Make sure that you have selected all fields that you need in the UaExpert configuration. Note that each field that is not needed causes a communication load. Therefore, you should avoid a complete selection as shown in the example below.

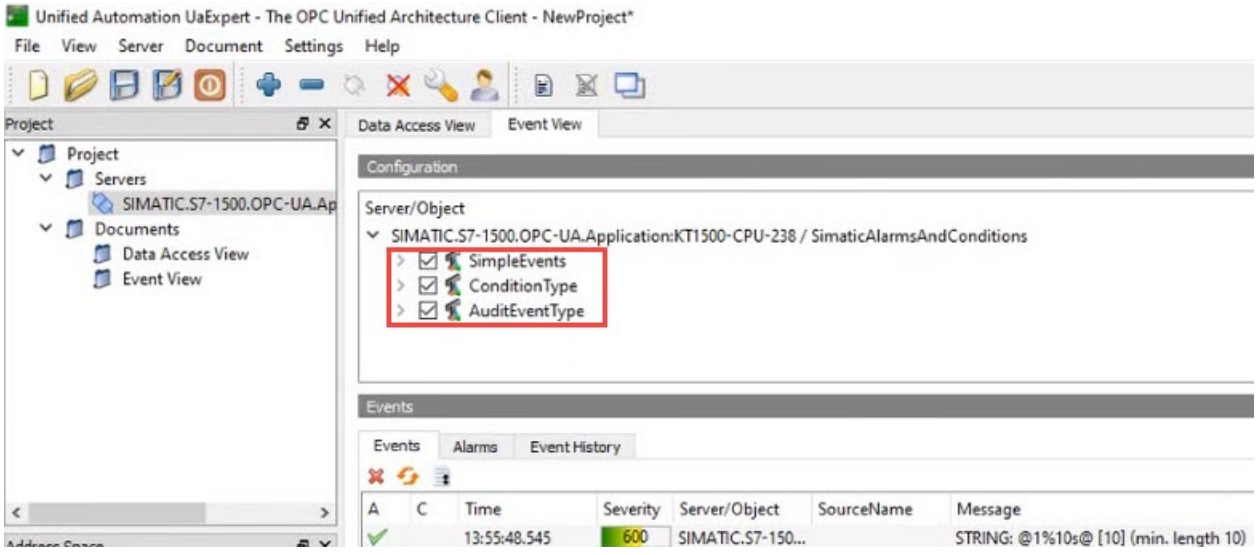

Figure 10-52 ServerObject-Configuration_neutral120

2. In the "Events" tab of UaExpert, you select the alarm with the integrated associated values. In the "Details" area of the alarm, you will find the value that is to be integrated into the alarm.
   Example: "AssociatedValue_01" is assigned to SD_1 (format @1% ...@).
   You will find explanations on the formats for associated values in the TIA Portal information system (e.g. by searching for "Example of associated values").

Support of simple data types as associated values

The field type from "AssociatedValue_01 to ..._10 is of the Union type and is limited to some simple types. The OPC UA data type is SimaticAssociatedAlarmValue. The following simple data types are supported:

3:AssociatedValue_01	SimaticAssociatedAlarmValue
Switch Field	2
Boolean	True
3:AssociatedValue_02	SimaticAssociatedAlarmValue
Switch Field	6
SByte	123
3:AssociatedValue_03	SimaticAssociatedAlarmValue
Switch Field	3
Int16	1234
3:AssociatedValue_04	SimaticAssociatedAlarmValue
Switch Field	4
Int32	12345
3:AssociatedValue_05	SimaticAssociatedAlarmValue
Switch Field	7
Byte	123
3:AssociatedValue_06	SimaticAssociatedAlarmValue
Switch Field	8
UInt16	1234
3:AssociatedValue_07	SimaticAssociatedAlarmValue
Switch Field	11
Float	1
3:AssociatedValue_08	SimaticAssociatedAlarmValue
Switch Field	12
Double	2
3:AssociatedValue_09	SimaticAssociatedAlarmValue
Switch Field	9
UInt32	12345
3:AssociatedValue_10	SimaticAssociatedAlarmValue
Switch Field	13
String	HelloWorld

Figure 10-53 UnionDataTypes_neutral120

Mapping to SIMATIC data types

The following assignment SIMATIC data type => OPC UA data type applies:

Supported data types for SD_1 to SD_10	Mapping to OPC UA
BOOL	Boolean
BBOOL	Boolean
BYTE	Byte

Supported data types for SD_1 to SD_10	Mapping to OPC UA
CHAR	Byte
SINT	SByte
USINT	Byte
WORD	UInt16
WChar	UInt16
INT	Int16
UINT	UInt16
DWORD	Uint32
DINT	Int32
UDINT	Uint32
REAL	Float
LREAL	Double
String	String
WString	String

10.3.6.7 Methods for OPC UA Alarms and Conditions

The OPC UA specification Part 9 (OPC 10000-9: Alarms & Conditions) defines methods for OPC UA servers to enable OPC UA clients to react to state changes, for example.
In the following, the methods are described that are supported by the OPC UA server of the S7-1500 CPU with their special features.

Requirement

Using the relevant methods for the Alarms and Conditions functionality requires the following:

- Alarms and Conditions is activated
- For the "Acknowledge" method, the acknowledgment of alarms by OPC UA clients must be allowed on the server side.

Methods for OPC UA Alarms and Conditions

In the following, the methods are briefly explained with the special features and restrictions caused by the implementation for the OPC UA server of the S7-1500 CPU.
The methods are visible in the type space.
The OPC UA specification listed above contains the general description.
You can find a detailed description of the individual methods below this overview table.

Method	Description
Acknowledge	Method for acknowledging an alarm object that is uniquely identified by a EventId.

Method	Description
ConditionRefresh	Method for requesting an update of all alarm objects (in SIMATIC language: updating of all pending alarms). All monitored items of the subscription are updated. Synchronization of pending alarm objects from the OPC UA server of the CPU is indicated e.g. in the following situations: • Connecting for the first time or resuming the connection (after interrupting the communication) • Screen change on an operator screen of an HMI device
AddComment	Method for adding comments to alarm objects.

Calling the "Acknowledge" and "AddComment" methods

Method calls in OPC UA use MethodId and ObjectId.

In the case of an alarm object, ObjectId is the node ID for the instance of the alarm object.

Since the address model of Simatic Alarms and Conditions does not provide instances for alarm objects, the OPC UA specification provides in this case that the OPC UA client uses the ConditionId as ObjectId.

You can find information on how to determine the ConditionId using a SimpleAttributeOperands in the SelectClause of the event filter, see also the OPC UA specification Part 9 (OPC 10000-9: Alarms & Conditions):

Name	Type	Description
SimpleAttributeOperand		
typeId	NodeId	*NodeId* of the *ConditionType Node*
browsePath[]	QualifiedName	empty
attributeId	IntegerId	Id of the *NodeId Attribute*

Acknowledge

The Acknowledge method (MethodId: i=9111) has the following parameters:

Parameter	Data type	Description
[in] EventId	ByteString	EventId identifies a specific event notification. Only events whose AckedState.Id field has the value "False", can be acknowledged with the "Acknowledge" method.
[in] comment	LocalizedText	Text for commenting the acknowledgment, e.g. by an operator. See also supplementary description of the "AddComment" method.

Method Result Codes

Result Code	Description
Good	Method was successfully executed.

Result Code	Description
BadNotSupported	Method cannot be called because the option for acknowledging for Alarms and Conditions by OPC UA clients is deactivated in the CPU properties for OPC UA.
BadConditionBranchAlreadyAcked	Acknowledgment has already been made.
BadNodeIdUnknown	Method was called with the wrong ConditionId (see notes on ObjectId).
BadEventIdUnknown	Method was called with the wrong EventId.

ConditionRefresh

The ConditionRefresh method (MethodId: i=3875) has the following parameters:

Parameter	Data type	Description
[in] SubscriptionId	Uint32	SubscriptionId of the subscription to be updated.

Method Result Codes

Result Code	Description
Bad_SubscriptionIdInvalid	The SubscriptinId is not valid.
Bad_RefreshInProgress	The "ConditionRefresh" is currently running.
Bad_UserAccessDenied	The method "ConditionRefresh" runs in the context of a wrong session. This means that the subscription belongs to a different session.

NOTE

ConditionRefresh2 method

The OPC UA server of the S7-1500 CPU does not support the ConditionRefresh2 method which can specifically synchronize a monitored item (MonitoredItem) in a subscription. In this case, the OPC UA Server returns the result code "Bad_MethodInvalid". Use the method "ConditionRefresh" instead.

AddComment

You have the possibility to add comments to Alarms- objects of the SimaticAlarmConditionType type because the support of comments is mandatory for OPC UA Alarms and Conditions .

A comment was save in the "Comment" event field.

The following time stamp event fields belong to the comment:

- "Comment.SourceTimestamp" for the time when the comment is transferred to the CPU
- "Time" for the time when the Alarms object was modified

When the "AddComment" method is called, "Time" and "Comment.SourceTimestamp" are identical.

Special features of Alarms and Conditions comments for the OPC UA server of the CPU

The AddComment method (MethodId: i=9029) has the following parameters:

Parameter	Data type	Description
[in] EventId	ByteString	EventId identifies the event notification for which a state was reported.
[in] comment	LocalizedText	Text for commenting the specified Alarms object.

Method Result Codes

Result Code	Description
Good	Method was successfully executed.
BadNodeIdUnknown	Method was called with the wrong ConditionId (see notes on calling the methods "Acknowlege" and "AddComment").
BadEventIdUnknown	Method was called with the wrong EventId.

Special features of Alarms and Conditions comments for the OPC UA server of the CPU

You have the possibility to add comments to alarm objects of the "SimaticAlarmConditionType" type with the AddComment method. A comment is also set when the Acknowledge method is called. The "AddComment" method can be called several times.

- A comment was save in the "Comment" event field. The "Comment.SourceTimestamp" indicates the last time at which a **comment** was set.
- The "Time" time stamp marks the **last modification time of the alarm object**.

When the "AddComment" method is called, "Time" and "Comment.SourceTimestamp" are identical.

When the "Acknowledge" method is called, the two time stamps may differ, since the acknowledgment is asynchronous.

The support of comments for OPC UA Alarms and Conditions is mandatory. The SIMATIC alarm system does not know corresponding comments for alarms. Therefore, some special features have to be considered:

- There is only one comment:
  There is only one comment for an alarm object, so that an existing comment is always overwritten when several method calls are made in succession.
- Lifetime and time stamp:
  Comments are only stored at the current alarm object. If the alarm object no longer exists, e.g. after a server restart, the comment no longer exists either. The corresponding "Comment" and "Comment.SourceTimestamp" event fields are then reset (zero).
  The "Time" event field is then set as if the method call "AddComment" did not exist.
  Example: If you comment on an unacknowledged Alarms object, the "Time" event field receives the time of this comment change. After a server restart, the "Time" event field does not show the time when the comment was set, but the time when the corresponding Event arrived.

10.3.6.8 Handling memory limits for OPC UA Alarms and Conditions

The OPC UA server of the S7-1500 CPU has product-specific limited memory capacity for the "Alarms and Conditions" function (see CPU specifications).

Two memory pools for different categories of alarms are available:

- Pool only for ProgramAlarms (corresponds to program-related alarm originators (producers) such as program alarms via Program_Alarm, ProDiag, Graph)
- Pool only for SystemDiagnostics (corresponds to system diagnostic alarms)

Under unfavorable conditions (e.g. alarm burst) the CPU cannot make all pending alarms (ProgramAlarms or SystemDiagnostics) from the SIMATIC alarm area available to the OPC UA Alarms and Conditions system. However, alarms are not lost in this case.

You have the possibility to react to this overload event in the user program. According to your application you can use the "ConditionRefresh" method to make alarms that "did not make it into the OPC UA Alarms and Conditions system" available to the OPC UA Alarms and Conditions system again.

Requirement

- Alarms and Conditions is activated
- Event subscriptions are set up in the OPC UA client

Principle

The following figure shows a simplified process for temporarily storing ProgramAlarms to make them available again at another time for the OPC UA Alarms and Condition System. The nodes mentioned in the caption are visible in the following image of the address model.

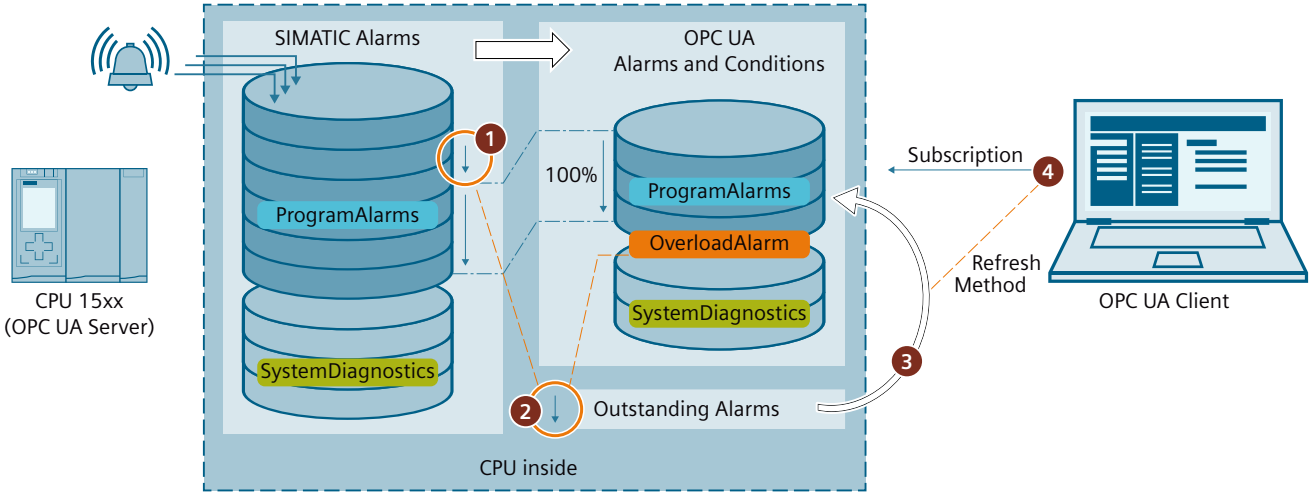

① Number of active alarms is too high to make all alarms accessible via OPC UA Alarms and Conditions

② Overloads alarm (overload alarm) is triggered. This overload alarm is active until the following situation occurs:
- No more alarms are pending for the OPC UA Alarms and Conditions system (OutstandingProgramAlarms = 0) and
- Number of alarms in the OPC UA Alarms and Conditions system < Hysteresis-cleaned maximum value for OPC UA alarms (= MaxAlarmsInQueue - OverloadHysteresis)

Alarms that are not available in the OPC UA Alarms and Conditions system due to the overload situation are buffered by the CPU as "OutstandingAlarms".

③ When an OPC UA client executes the ConditionRefresh method, not only are all alarm objects of the relevant subscription synchronized, but also the alarms outstanding for OPC UA Alarms and Conditions (OutstandingAlarms) are transferred to the Alarms and Conditions memory area - until the maximum number of alarms is reached. "Oldest" alarms are transferred first. After that every subscription to these alarms receives the transferred alarms - not only the OPC UA client that called the ConditionRefresh method.

④ The OPC UA client controls the handling of pending alarms via the information of the Overloads nodes.

Address model for Alarms and Conditions

The following figure shows the nodes of the OPC UA Alarms and Conditions address model.

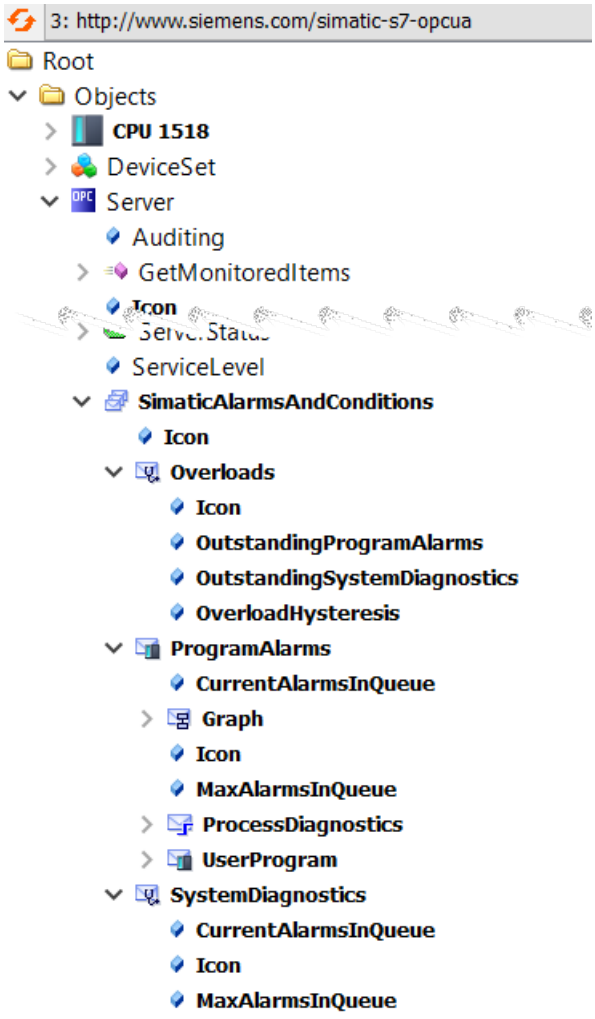

Special features

- When pending alarms go out or are acknowledged, they no longer enter the OCP UA Alarms and Conditions system area via the ConditionRefresh method. They are then "invisible" to OPC UA Alarms and Conditions and thus to the connected OPC UA clients. This fact influences e.g. statistical evaluations of alarm progressions.
- To avoid a high alarm frequency for the Overloads Alarm if the number of alarms oscillates around the maximum value, the limit for triggering the alarm is higher than the limit for canceling this alarm: The value for this difference is displayed in the "OverloadHysteresis" node.
  Example: Maximum number of alarms: 200, OverloadHysteresis: 3.
  Overloads alarm is triggered starting with 200 alarms and is only canceled if there are fewer than 197 alarms. If the number of alarms increases again, it will be triggered again when 200 alarms are exceeded.

10.3.7 Using diagnostics options

10.3.7.1 Diagnostics of the OPC UA server

Online diagnostics of the OPC UA server

The S7-1500 CPU OPC UA server can be diagnosed online with standard OPC UA clients, such as UaExpert.

The diagnostic information is subdivided into the following areas:

- Server Diagnostics
- Sessions Diagnostics
- Subscriptions Diagnostics

In the address space of the server, for example, the following nodes are available with diagnostic information:

- **ServerDiagnosticsSummary**: Server diagnostics summary
  - CurrentSessionCount: Number of active sessions
  - SecurityRejectedSessionCount: Number of sessions rejected due to mismatching end point security settings between client and server
- **SessionsDiagnosticsSummary**: Session diagnostics summary
  - ActualSessionTimeout: Set time that a session lasts, e.g. in the event of disconnection
- **SubscriptionsDiagnosticsArray**: ARRAY with one element per subscription for each session

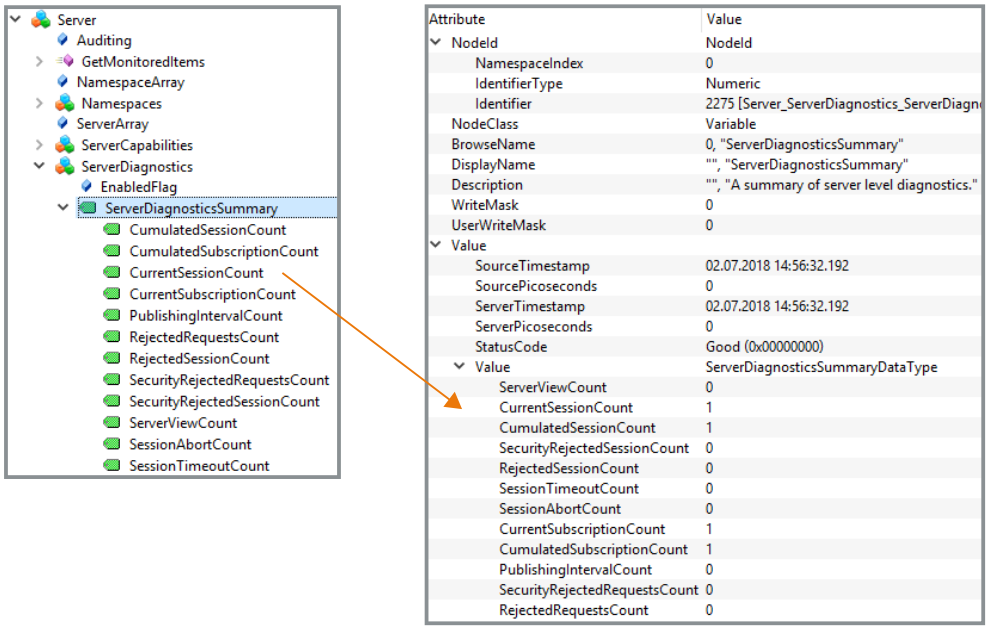

Figure 10-54 Server diagnostics

The SessionsDiagnosticsSummary node also shows the properties of the client application accessing the server within the session.

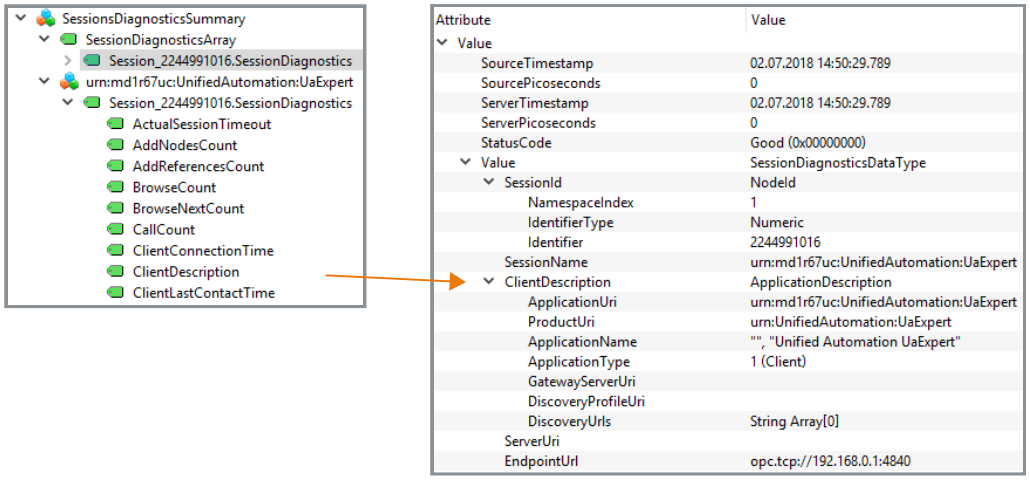

Figure 10-55 Sessions diagnostics with the properties of the client application

Diagnostics of the connection between client and server

To diagnose the status of the connection during program runtime in the client, use the following instruction:

OPC_UA_ConnectionGetStatus: Read connection status.

10.3.7.2 Running diagnostics for OPC UA servers in the program

From STEP 7 (TIA Portal) V18 onwards, you can access nodes in the OPC UA address space of an S7-1500 CPU (firmware version V3.0 onwards) to evaluate the contents for diagnostic purposes in the program.

Functional principle

In the local address space of the CPU, there are numerous nodes where the OPC UA server of the CPU stores data and states. The "OPC_UA_ReadList" instruction enables you to access this information and evaluate it in the user program.

Example: "ServerState" is a node in the address space of the CPU that contains values for the server state or for state transitions (Running, Shutdown, Failed, etc.).

You do not use the instruction as a client instruction, but instead as an instruction for reading nodes of the own local OPC UA address space. In this regard, special rules and requirements apply to this application case.

More information

You can find more information on calling the "OPC_UA_ReadList" instruction for diagnostic purposes in the TIA Portal help, topic "Diagnosing OPC UA servers with OPC_UA_ReadList".

10.3.7.3 Server state transition diagnostics

Information on the server state

S7-1500 CPUs as of firmware version V2.8 are able to create an entry in the diagnostic buffer upon state changes of the OPC UA server.
The diagnostic buffer displays the new state.
The cause of the state change is also displayed, such as download to the CPU, POWER OFF - POWER ON transition, user program instruction or service request from a partner (client).

Requirement

The "Change of OPC UA server status" option is selected (OPC UA > Server > Diagnostics) in the OPC UA properties of the CPU.

NOTE

If this option is selected, the CPU also automatically enters the lowest set security policy into the diagnostic buffer after startup.

Examples

If the OPC UA server of the CPU shuts down due to a download process and then starts with a valid new configuration, the diagnostic buffer shows new server state, e.g. Shutdown => Starting => Running.
If the OPC UA server shuts down due to a download process and the server cannot start because the type dictionary is too large, the diagnostic buffer finally shows the state "Failed" (Shutdown => Starting => Failed).

Server states and state transitions

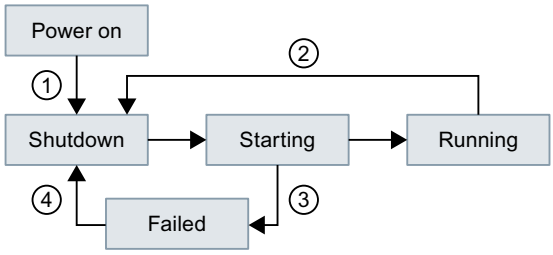

①, ④ POWER ON or Load in RUN, if OPC UA relevant data could be affected.

② Loading the hardware configuration with deactivated OPC UA server. The server remains shut down.
Loading the hardware configuration with activated OPC UA server and faulty OPC UA data (for example, too many structures with the result that the type dictionary becomes too large). In this case, the server cannot start (see ③).

③ OPC UA server cannot start due, for example, to faulty configuration.

Figure 10-56 Server states and state transitions

Description of the server states

The individual states that the OPC UA server can assume are explained below.

Server states	Explanation
Shutdown	Initial status • After POWER ON • After loading the hardware configuration with activated or deactivated OPC UA server. • After loading OPC UA relevant data
Starting	OPC UA address space in server is initialized.
Running	OPC UA server running (normal productive state for OPC UA server).
Failed	Error state. OPC UA server cannot start due, for example, to faulty configuration.

10.3.7.4 Session state transition diagnostics

Information on the session state

S7-1500 CPUs as of firmware version V2.8 are able to create an entry in the diagnostic buffer for state changes of an OPC UA session.
The diagnostic buffer displays the new state. The corresponding session ID is also displayed.

Requirement

The "Change of session states" option (OPC UA > Server > Diagnostics) is selected in the OPC UA properties of the CPU.

Example

A client transmits incorrect authentication data (for example, incorrect password) when a connection is established. The new state of the "ActivationFailed" session is entered with the corresponding session ID in the diagnostic buffer.

Subscription states and state transitions

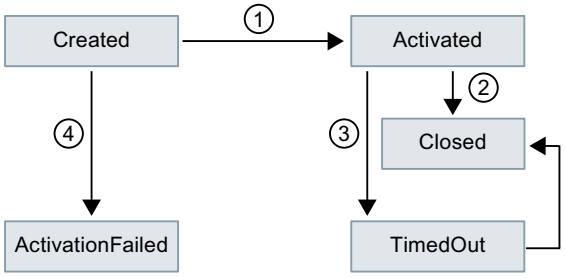

① Client connects to server, login with correct authentication data (correct credentials).

② Client closes connection correctly.

③ Client no longer sends messages; session ends with timeout.

④ Client connects to server, login with incorrect authentication data.

Figure 10-57 Session states and state transitions

10.3.7.5 Check for security events

If the CPU diagnostics detects a security event during the OPC UA communication, it can enter it in the diagnostic buffer.

Requirements

- S7-1500 CPUs as of firmware version 2.8
- The "Check for security events" option is activated (properties of the CPU > OPC UA > Server > Diagnostics).

Security events detected in diagnostics

S7-1500 CPUs perform diagnostics on the following OPC UA relevant security events:

- Client-certificate is invalid (for example, syntactically or semantically incorrect, incorrect signature, current date is not in the validity period)
- User name/password login failed (deactivated or incorrect data)
- Client wants to use a specific security policy or a specific message security mode; the server does not support the security policy or the requested security mode.
- Client does not establish connection according to specification (OPC UA Spec) (for example, unexpected SecureChannelID/SessionID/client Nonce)

Example

If an attempt is made to compromise communications (for example, by session hijacking, man-in-the-middle attacks etc.), the server detects this via analysis.

10.3.7.6 Request of a remote client failed

S7-1500 CPUs as of firmware version V2.8 are able to create an entry in the diagnostic buffer for the following events:

- Bad client requests (incorrect use)
- Service error occurred
- CPU-specific high limits of the OPC UA server were violated

Example of a faulty client request

For example, there is an incorrect request when a client addresses a node (tag) that does not exist or if a resource is requested that does not exist.

In this case, the corresponding service that caused the fault is entered in the diagnostic buffer and the corresponding session ID is also entered.

Service fault

If a service itself fails, the server returns a ServiceFault. In this case, the status code (Bad...) and the according session ID are entered in the diagnostics buffer.

Example of limit violations

If a service request exceeds a CPU-specific limit, for example, number of sessions, number of monitored items, number of subscriptions, etc., this diagnostics is entered in the diagnostics buffer. Together with the message, it is indicated which limit has been violated.

Exception: If you summarize diagnostics and the message occurs frequently, the limit causing the error is not entered. You receive general information that the supported configuration limit has been violated.

Possible entries for the service that is causing the error

Depending on the client application used, requests to the server can be triggered differently from the user's viewpoint, for example, by an online tool with a graphical user interface or by instructions in a client's program.

With its service-oriented architecture, OPC UA follows a request-response paradigm, therefore the respective client application converts the requests into the service requests defined in OPC UA.

The names of these services are defined and grouped according to their use, see also opcfoundation.org.

In the case of an incorrect use, you can find precisely these names of the services, together with the corresponding session ID, in the diagnostic buffer as the service that caused the error.

The services available with OPC UA are listed below.

Discovery Service Set

FindServers

GetEndpoints

Session Service Set
CreateSession
ActivateSession
CloseSession
Cancel

View Service Set
Browse
BrowseNext
TranslateBrowsePathsToNodeIds
RegisterNodes
UnregisterNodes

Attribute Service Set
Write
Read

Method Service Set
Call

Monitored Item Service Set
CreateMonitoredItems
ModifyMonitoredItems
DeleteMonitoredItems
SetMonitoringMode
SetTriggering

Subscription Service Set
CreateSubscription
ModifySubscription
DeleteSubscriptions
Publish
Republish
SetPublishingMode

10.3.7.7 Subscription diagnostics

Information about a subscription

S7-1500 CPUs as of firmware version V2.8 are able to create an entry in the diagnostic buffer at state changes of a subscription.
The diagnostic buffer displays the new state; exception: "KeepAlive".

Requirement

In the OPC UA properties of the CPU, the option "Subscriptions: Change of status" (OPC UA > Server > Diagnostics) is selected.

Example

An OPC UA client is connected to an S7-1500 CPU as OPC UA server and generates a subscription in the server.
The diagnostic options for subscriptions are selected in the OPC UA properties of the CPU.
The "Creating" and "Normal" states are entered one after the other with the corresponding subscription ID in the diagnostic buffer.

Subscription states and state transitions

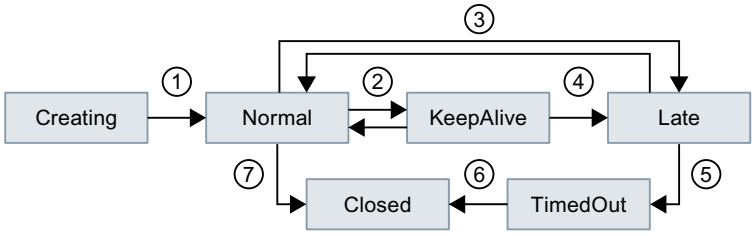

① Subscription is generated and is then active.

② Status change is not entered in the diagnostic buffer because too many entries may be made in the diagnostic buffer depending on the amount of data.

③ See explanation in table for "Late"; for example, no requests to send from client.

④ Maximum KeepAlive value reached.

⑤ See explanation in table for "TimedOut".

⑥ Maximum lifetime of subscription reached.

⑦ Client has deleted subscription.

Figure 10-58 Subscription states and state transitions

Description of the subscription states

A subscription in the OPC UA server can have the following states:

Status	Meaning
Creating	Client has requested a subscription in the server; the server creates the subscription.
Normal	Subscription is created in the server and active.
Closed	Client has deleted the subscription.
KeepAlive	Status if the monitored items do not change over a long period of time. These state transitions are not entered in the diagnostic buffer.
Late	Client has generated a subscription with minimal sampling and publishing intervals. The amount of monitored items is not transmitted to the client during this time. Client no longer transmits requests to send (for example, due to failure).

Status	Meaning
TimedOut	The client has requested a subscription. The server can only honor the subscription (send Publish Response) when there is a sufficient number of send requests (Publish Requests) from the client. When the client stops sending subscription requests, the subscription enters the "TimedOut" state after a certain time.

Subscription: Error in the sampling times

As of firmware V2.5 of the SIMATIC S7-1500 CPU, the OPC UA server can transmit the status code "GoodOverload" when using subscriptions, if an overload of the CPU occurs when sampling the items.

As of firmware V2.8 of the SIMATIC S7-1500 CPU, the OPC UA server can also enter this event into the diagnostic buffer.

Requirement

In the OPC UA properties of the CPU, the option "Subscriptions: Sampling time errors" (OPC UA > Server > Diagnostics) is selected.

Error-free subscription

In the case of an OPC UA subscription to various elements (such as tags), the OPC UA server of the SIMATIC S7-1500 must check the elements for value changes at specified intervals (sampling interval). This check, referred to as "sampling", requires some time, which depends on the number and the data type of the items. After the sampling is completed and a publishing request has been received, the server sends the elements to the client.

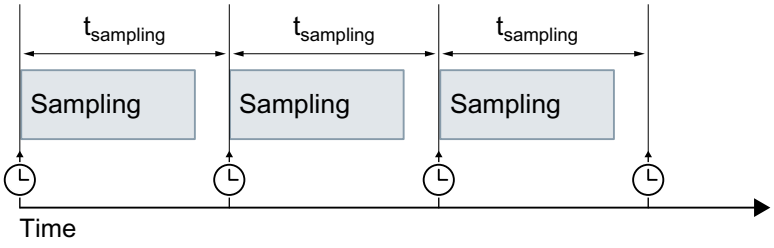

Figure 10-59 Error-free subscription

Subscription with error

If there are too many elements in the queue, there may be an overload of the communication stack. The CPU cannot check all elements in the given sampling interval and must therefore skip the next sampling job.

In this case, the CPU sends the status code "GoodOverload" (0x002F0000) per element, even though the elements were not checked. The meaning of the status code according to IEC 61131-3 is as follows: "Sampling has slowed down due to resource limitations".

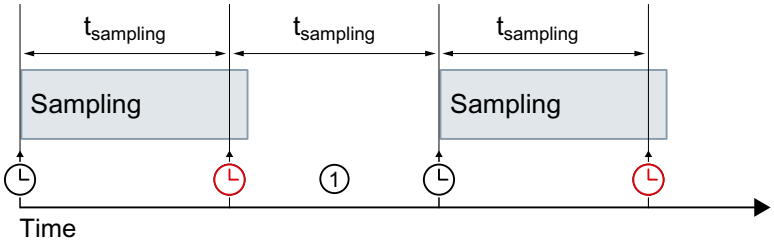

① Sampling job is skipped

Figure 10-60 Subscription with error

See also FAQ 109763090 (https://support.industry.siemens.com/cs/ww/en/view/109763090).

More information

You can find information about the server settings for subscriptions in the section Settings of the server for subscriptions (Page 222).

10.3.7.8 Summarizing diagnostics

To prevent the diagnostics buffer being "swamped" by large numbers of identical OPC UA diagnostics, as of STEP 7 V16 service pack 1, you can set parameters so that these diagnostics are entered in the diagnostics buffer as group alarm. Per interval (monitoring time), the CPU then only generates one group alarm per OPC UA diagnostics.

The following sections describe which diagnostics the CPU groups together and how the process runs with a high message volume.

Requirement

The "Summarize diagnostics in case of high message volume" option is activated in the OPC UA properties of the CPU (OPC UA > Server > Diagnostics, "Summarize diagnostics" area).

Example

An OPC UA client repeatedly "overloads" an S7-1500 CPU as OPC UA server with a sampling rate that the server cannot handle (overload).

The "Summarize diagnostics in case of high message volume" setting is activated.

A message appears in the diagnostics buffer for this diagnostic option. It states that the sampling rate cannot be reached; followed by the number of these events within the configured interval.

OPC UA diagnostics that can be summarized

The diagnostics listed below each form their own groups (type). Diagnostic events from the same group are combined using the setting "Summarize diagnostics in case of high message volume":

- Incorrect use of an OPC UA service
- OPC UA Service error
- Subscription status has changed
- Sampling rate could not be achieved (subscriptions, overload)
- OPC UA security check failed
- Configuration limit of the OPC UA server violated

Principle of operation

The CPU enters the first three events of an event type in the diagnostics buffer. It then ignores all subsequent diagnostics of this group.

At the end of the monitoring time (interval), the CPU generates a group alarm in which it enters the diagnostics and the frequency of this diagnostics during the elapsed interval. If these diagnostics also occur in the intervals that follow, the CPU only generates one group alarm per subsequent interval.

A diagnostic surge leaves the following pattern in the diagnostics buffer: Three individual messages followed by a series of group alarms. This series can consist of two, three or more group alarms depending on the selected monitoring time and duration of the diagnostic surge.

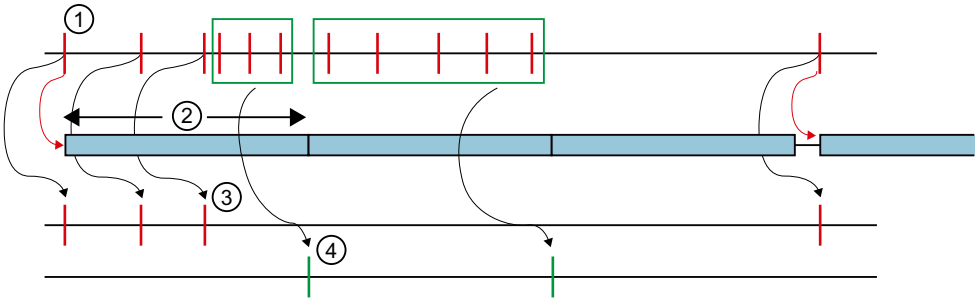

① Diagnostic results of a group (of a type), for example "Sampling rate could not be reached".

② Interval (monitoring time): When a diagnostic event occurs the first time (or reoccurs), the monitoring time is started (or restarted).

③ Single alarms: The first three diagnostic events from the same group are entered in the diagnostics buffer immediately. Starting with the fourth diagnostic event, the CPU generates only group alarms. If a diagnostic event of this group occurs after a pause of at least one interval, the CPU enters a single alarm in the diagnostics buffer and restarts the monitoring time.

④ Group alarms: After three diagnostic events, the CPU only generates a group alarm as a summary of all additional diagnostic events in this interval. If these diagnostic events also occur in the intervals that follow, the CPU only generates one group alarm per subsequent interval.

Figure 10-61 Summary of diagnostics

10.4 Using the S7-1500 CPU as an OPC UA client

10.4.1 Overview and requirements

With STEP 7 (TIA Portal) Version V15.1 and higher, you can assign parameters and program an OPC UA client that can read PLC tags in an OPC UA server. Furthermore it is possible to transfer new values for PLC tags to an OPC UA server. In addition, you can call methods that an OPC UA server provides in your user program. You use the instructions for OPC UA clients in your user program for this.

The instructions of the OPC UA client are based on the standard "PLCopen OPC UA Client for IEC61131-3".

PLCopen specification

With these standardized instructions, you can develop an OPC UA client functions in your user program that can be executed in an S7-1500 CPU.

In addition, it is possible with just a few adaptations to run this user program in controllers of other manufacturers if these manufacturers have also implemented the OPC UA Specification "PLCopen OPC UA client for IEC61131-3".

Convenient editors in STEP 7

For the parameter assignment of the instructions for OPC UA clients, a convenient editor is available in the TIA Portal – the connection parameter assignment (Page 216).

As of Version 15.1, STEP 7 also features an editor for client interfaces (Page 309).

This section describes how you work with these editors.

First, you will be shown how to create and configure a new interface with the interface editor, because you need this type of interface for the subsequent connection parameter assignment.

The description uses an example for better comprehensibility, see Description of the example (Page 308).

Requirements

- You have the required runtime license for OPC UA and have configured the license in STEP 7 (CPU Properties > Runtime Licenses).
- The client of the S7-1500 CPU is activated.

To use the client of the S7-1500 CPU, you must enable it:

1. Select the area "OPC UA > Client" in the properties of the CPU.
2. Select the "Enable OPC UA client" option.

If you do not enable the client, the connection is not established. You receive a corresponding error message at the instructions, for example "OPC_UA_Connect".

For information about the application name, which also applies to the server and the client, see here (Page 216).

Overview

To use the editor and the connection parameter assignment, follow these steps:

1. First, specify a client interface. Add to this the PLC tags and PLC methods interface that you want to access ("First step (Page 309)").
2. Next, configure the connection to the OPC UA server (Second step (Page 323)).
3. Finally, use the configured connection for the OPC UA client instructions (Third step (Page 330)).

10.4.2 Useful information about the client instructions

With the standardized OPC UA client instructions you are able to control communication for the following tasks with the S7-1500 CPU as an OPC UA client:

- Read/write tags of the OPC UA server
- Call methods in the OPC UA server

Optional instructions can be used to determine the following information:

- The status of the connection between the OPC UA client and OPC UA server
- Node IDs of nodes with known hierarchy of the address space

Standardized sequence of OPC UA communication

The sequence of the communication, and thus the order of the instructions, follows a pattern that is illustrated in the following.

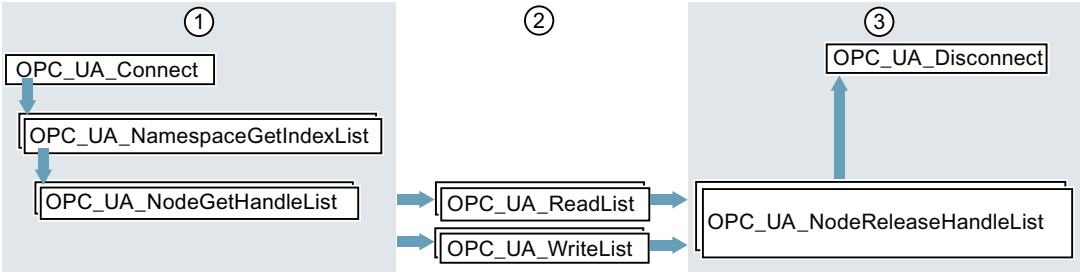

① Instructions for preparation of read and write operations

② Read and write instructions

③ Instructions for "clean-up" after a completed read or write operation

Figure 10-62 Run sequence for a read or write operation

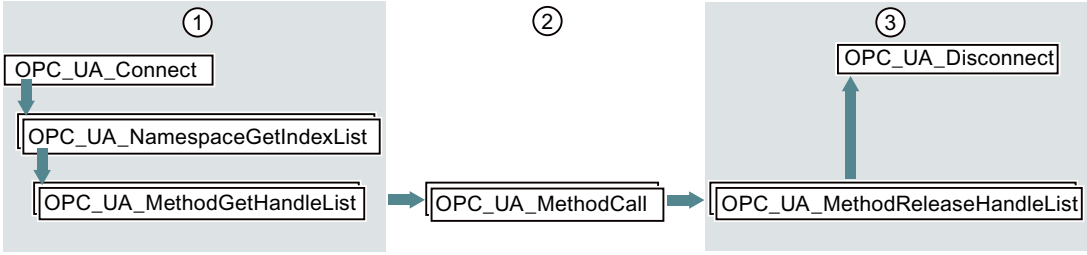

① Instructions for preparation of method calls

② Method calls

③ Instructions for "clean-up" after completed method calls

Figure 10-63 Run sequence for a method call in the OPC UA server

Optional instructions (reading out the status of a connection / reading out node IDs of nodes with known hierarchy of the address space)

- OPC_UA_ConnectionGetStatus
- OPC_UA_TranslatePathList

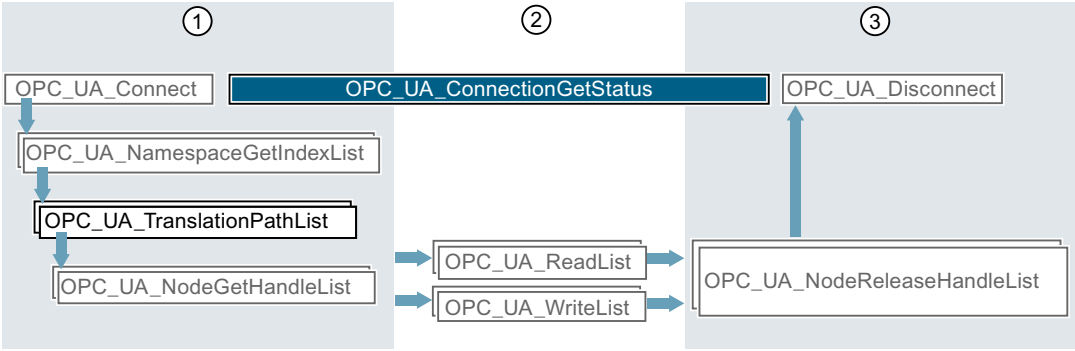

① Instructions for preparation of read and write operations with inserted instruction for requesting, for example, the NodeIDs of nodes of the OPC UA server.

② You can determine the connection status between the establishment and termination of the connection in parallel with other instructions.

③ Instructions for "clean-up"

Figure 10-64 Run sequence of optional instructions

Convenient editors in STEP 7

The OPC UA client instructions are described in detail in the reference part (STEP 7 information system). For parameter assignment of the instructions, a convenient editor is available in the TIA Portal – the connection parameter assignment (Page 323).

We recommend starting with the connection parameter assignment for the first program draft and using additional instructions and manually optimizing the program as required.

Information about the client instructions

The client instructions are described in detail in the help to the Instructions > Communication > OPC UA > OPC UA client.

Application example in Online Support

This application example (https://support.industry.siemens.com/cs/ww/en/view/109762770) provides you with an S7 user block "OpcUaClient" that summarizes the most important functions of the OPC UA instructions, accelerates the implementation for you and simplifies

the programming. The OPC UA server in the example is an S7-1500 controller with a simple simulation program for process values.
The S7 user block performs the following:

- Establishment and termination of the connection to the server
- Diagnostics of the connection and automatic reconnection after connection terminations
- Registered Read
- Registered Write
- Registered Method Call

10.4.3 Number of client instructions that can be used simultaneously

SIMATIC error codes for OPC UA client instructions

The following limits apply to the simultaneous use of OPC UA client instructions (up-to-date technical specifications of the CPUs can be found on the Internet (https://support.industry.siemens.com/cs/ww/en/ps/td)):

Table 10-5 Quantity structures for OPC UA client instructions

OPC UA instruction	Maximum number for CPU 1510SP (F) CPU 1511 (C/F/T/TF) CPU 1512C CPU 1512SP (F) CPU 1513 (F)	Maximum number for CPU 1505 (S/SP/SP F/SP T/SP TF) CPU 1515 (F/T/TF) CPU 1515 SP PC (F/T/TF) CPU 1516 (F/T/TF)	Maximum number for CPU 1507S (F) CPU 1517 (F/T/TF) CPU 1518 (F)
OPC_UA_Connect	4	10	40
OPC_UA_NamespaceGetIndexList	4*	10*	40*
OPC_UA_NodeGetHandleList	4*	10*	40*
OPC_UA_MethodGetHandleList	4*	10*	40*
OPC_UA_TranslatePathList	4*	10*	40*
OPC_UA_ReadList	20 in total (max. 5 per connection, see OPC_UA_Connect)	50 in total (max. 5 per connection, see OPC_UA_Connect)	200 in total (max. 5 per connection, see OPC_UA_Connect)
OPC_UA_WriteList	20 in total (max. 5 per connection, see OPC_UA_Connect)	50 in total (max. 5 per connection, see OPC_UA_Connect)	200 in total (max. 5 per connection, see OPC_UA_Connect)
OPC_UA_MethodCall	20 in total (max. 5 per connection, see OPC_UA_Connect)	50 in total (max. 5 per connection, see OPC_UA_Connect)	200 in total (max. 5 per connection, see OPC_UA_Connect)
OPC_UA_NodeReleaseHandleList	4*	10*	40*
OPC_UA_MethodReleaseHandleList	4*	10*	40*
OPC_UA_Disconnect	4*	10*	40*
OPC_UA_ConnectionGetStatus	4*	10*	40*

* maximum 1 per connection

Maximum number of usable OPC UA client interfaces

If you create OPC UA client interfaces using the connection parameter assignment, the number of client interfaces is limited to 40.

Create the OPC UA client interfaces by double-clicking the "Add new client interface" symbol in the project tree of the "OPC UA communication" area.

The maximum number of OPC UA client interfaces is independent of whether you also use the CPU as OPC UA server.

10.4.4 Example configuration for OPC UA

The following sections describe how you can use the client interfaces editor and the connection parameter assignment.

The description is based on a specific example: Two S7-1500 CPUs operate in the system: One CPU serves as the OPC UA client and the other as the OPC UA server.

You can, of course, also use controllers, sensors and IT systems of other manufacturers as OPC UA clients or servers. In particular, the data exchange between different systems (interoperability) is a major advantage of OPC UA.

Connection parameter assignment using an example:

The plant produces blanks in a production line.

The following controllers are used:

1. An S7-1511 CPU serves as the controller of the production line.
   The controller is named "**Productionline**" in the example.
   The OPC UA server of the controller is enabled.
   The CPU has the IP address 192.168.1.1 in the example.
   This CPU publishes the values of following tags via the OPC UA server:
   - **NewProduct**
     The tag has the data type "BOOL".
     When this PLC tag has the value TRUE, the production line has processed a blank.
     The blank is ready for pick-up.
   - **ProductNumber**
     This tag contains the identification number of the blank.
     The tag has the data type "Int".
   - **Temperature**
     This tag contains temperature values recorded during the production of the blank.
     The tag is an array with elements of the "Real" data type.

   In addition, this CPU provides the following writable tag:
   - **ProductionEnabled**
     The tag is set by the OPC UA client.
     The tag has the data type "BOOL".
     If the value is set to TRUE, the production line is released and may produce blanks.

   In addition, this CPU provides the following method via the OPC UA server:
   - **OpenDoor**
     OPC UA clients can hereby arrange for an access door to be opened to the production line.

2. An S7-1516 CPU controls the interaction with other production lines.
   This CPU is named "**Supervisor**" in the example.
   The OPC UA client of this CPU is enabled.
   Using OPC UA, this CPU can read the NewProduct and ProductNumber tags, set the ProductionEnabled tag and call the OpenDoor method.
   The CPU has the IP address 192.168.1.2 in the example.

The following figure shows the example in the network view of the TIA Portal:

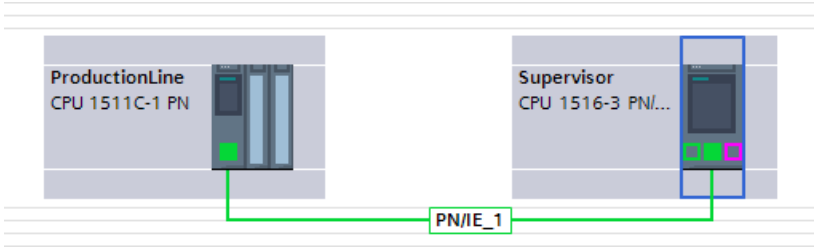

Figure 10-65 Example of assigning connection parameters in the network view

10.4.5 Creating client interfaces

As of Version 15.1, the TIA Portal has an editor for client interfaces.

You group all PLC tags that you want to read or write from an OPC UA server in a client interface.

In addition, the client interface contains all methods that the OPC UA server provides and that you want to call with your user program (that acts as an OPC UA client).

If you create a client interface, STEP 7 also creates data blocks for the parameter assignment of the connection to the OPC UA server from which you want to read data or to which you want to write data.

Maximum number of client interfaces

You can create a maximum of 40 client interfaces.

Editor for client interfaces

To create a client interface, follow these steps:

1. Select the project view in the TIA Portal.
2. In the "Devices" area, select the CPU you want to use as an OPC UA client.
3. Click "OPC UA communication > Client interfaces".

4. Double-click "Add new client interface".
   STEP 7 creates a new client interface and display in the editor.

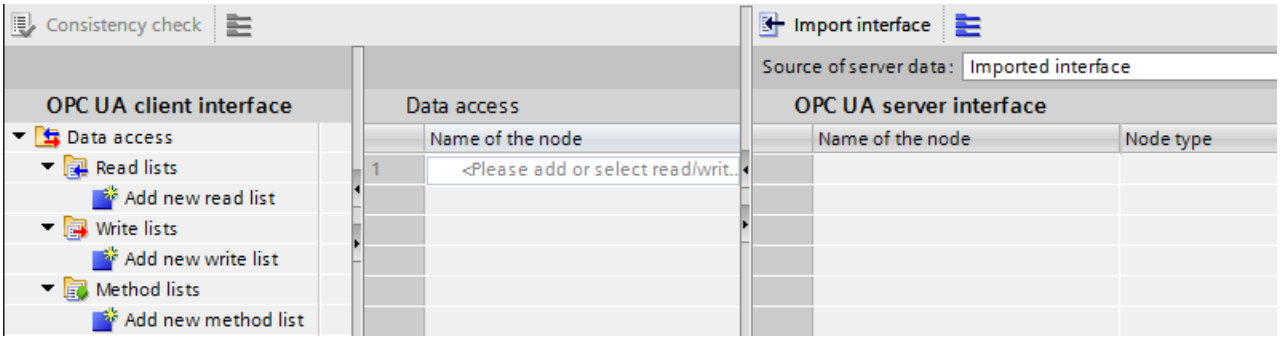

Figure 10-66 Adding OPC UA client interface

   STEP 7 names the new interface "Client interface_1". If a "Client interface_1" already exists, the new interface receives the designation "Client interface_2" etc.
   In addition, STEP 7 creates the following data blocks:
   – Client_Interface_1_Configuration
     The data block already contains all system data types that are needed for the instructions of the OPC UA client.
     This data block is filled when you configure the connection to the OPC UA server.
     You configure a connection in the properties of the client interface, see: Example configuration for OPC UA (Page 308).
   – Client_Interface_1_Data
     A data block for the PLC tags that you want to read or write from an OPC UA server as well as for methods that you want to call in the OPC UA server.
     You use this data block in your user program.
     This data block is currently still empty.
5. Select a descriptive name for the new client interface.
   Select "Productionline" in the example.
   This also changes the names of the associated data blocks to:
   – Productionline_Data
   – Productionline_Configuration
6. To import an OPC UA server interface, click the "Import interface" button in the top right of the editor.
   This allows you to import an XML file which describes the server interface of an OPC UA server.
   Alternative: To determine online the server interface of a connected OPC UA server, see: Determine server interface online (Page 316).
7. STEP 7 displays a dialog with which you can select an XML file.
   This XML file describes a address space of an OPC UA server.
   The address space of an OPC UA server contains all PLC tags and server methods published by an OPC UA server.
   OPC UA clients can access this address space:
   - Read PLC tags
   - Write PLC tags
   - Calling Server Methods
   The address space of an OPC UA server can be divided into one or more server interfaces.

For creating server interfaces, see: Creating a server interface for companion specification (Page 245).

8. Create a **read list** in this client interface.
   To do this, follow these steps:
   – Click "Add new read list" in the left section of the editor.
     STEP 7 adds a new list named "ReadList_1".
     For the example, change the name to "ReadListProduct"
   – Now add the new read list of the PLC tags that you want to read from the OPC UA server.
     In the example the "NewProduct" and "ProductNumber" tags are added to the "ReadListProduct" read list.
     Select the "NewProduct" tag in the right-hand field of the editor ("OPC UA Server interface"). Drag the "NewProduct" tag to the "ReadProduct" read list in the middle field of the editor. Follow the same procedure with the "ProductNumber" tag.

   The figure below shows the right field of the editor.

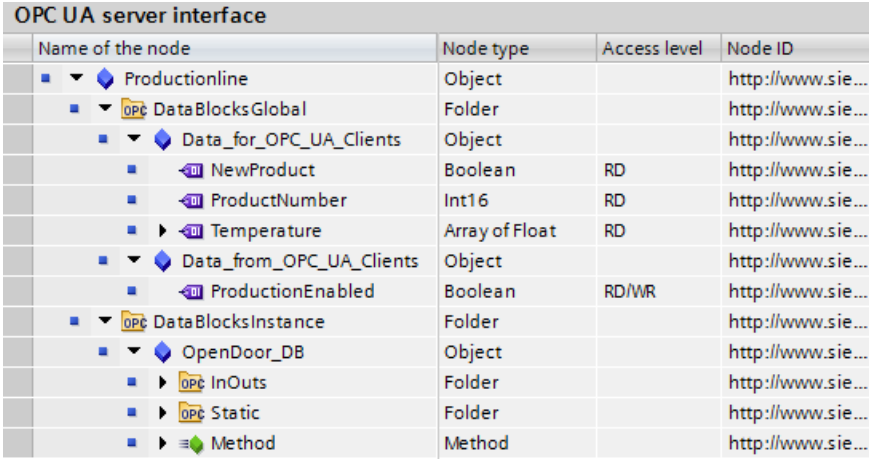

OPC UA server interface

Name of the node	Node type	Access level	Node ID
Productionline	Object		http://www.sie...
DataBlocksGlobal	Folder		http://www.sie...
Data_for_OPC_UA_Clients	Object		http://www.sie...
NewProduct	Boolean	RD	http://www.sie...
ProductNumber	Int16	RD	http://www.sie...
Temperature	Array of Float	RD	http://www.sie...
Data_from_OPC_UA_Clients	Object		http://www.sie...
ProductionEnabled	Boolean	RD/WR	http://www.sie...
DataBlocksInstance	Folder		http://www.sie...
OpenDoor_DB	Object		http://www.sie...
InOuts	Folder		http://www.sie...
Static	Folder		http://www.sie...
Method	Method		http://www.sie...

Figure 10-67 Read list in the OPC UA server interface

Alternative:

You can also select a new read list by dragging the right field of the editor ("OPC UA Server interface") to a node of the type Object or Folder and then dragging it to "Add new read list" in the left field of the editor. The new read list then contains all PLC tags of the node that has been moved.

In the example, select the object "Data_for_OPC_UA_Clients", which contains the tags "NewProduct" and "ProductNumber". STEP 7 generates the new read list "Data_for_OPC_UA_Clients". In addition, the object contains the tag "Temperature". Delete the "Temperature" tag from the read list. Since they should not be read in the example.

Change the name of the read list in "ReadListProduct".

The following figure shows the content of the read list:

ReadListProduct

Name of the node	Node type	Access level	Node ID
NewProduct	BOOL	RD	http://www.siemen...
ProductNumber	INT	RD	http://www.siemen...

Figure 10-68 Read list

NOTE

Read and write lists do not support all node types.

The OPC UA client of the S7-1500 CPU does not support all OPC UA data types (node types) that can be made available via an OPC UA server interface. If you place an unsupported node type, for example, in a read list or write list a corresponding error signal appears. In this case, you cannot include the corresponding node in the read or write list.

Which types are supported is described here: Mapping of data types (Page 166)

---

9. If you want assign new values to PLC tags, create a **write list** in this client interface.
   To do this, follow these steps:
   – Click "Add new write list" in the left section of the editor.
     STEP 7 adds a new list with the name "ReadList_1".
     For the example, change the name to "WriteListStatus".
   – Now add the new write list of all OPC UA server tags to which you want to assign new values.
     In the example, add the "WriteListStatus" tag to the write list "ProductionEnabled".
     Select the Tag of right field of the editor ("OPC UA Server interface"). Drag the tag to the write list in the middle field of the editor.

   Alternative:

   You can also create a new write list by selecting a node of the type Object or Folder in the right field of the editor ("OPC UA server interface") and then dragging to "Add new write list" in the left field of the editor.

   The new write list then contains all tags of the relevant node.

   In the example, select the object "Data_from_OPC_UA_Clients", which contains the tag "ProductionEnabled". STEP 7 generates the new write list "Data_from_OPC_UA_Clients". Change the name in "WriteListStatus".

   The following figure shows the content of the write list:

WriteListStatus

Name of the node	Node type	Access level	Node ID
ProductionEnabled	BOOL	RD/WR	http://www.siemen...

Figure 10-69 Write list

10. If you want to call a method of this OPC UA server, generate a new method list.
    To do this, follow these steps:
    – In the left section of the editor, click "Add new method list".
      STEP 7 adds a new list with the name "Method list_1".
      For the example, change the name to "MethodListOpenDoor".
    – Now add a method of the OPC UA server to the new method list.
      In this example, add the method "OpenDoor" to the method list "MethodListOpenDoor".
      Select the method of right field of the editor ("OPC UA Server interface"). Drag the method to the method list in the middle field of the editor.

    Alternative:
    You can also generate a new method list by selecting a method (node of the type Object) in the right field of the editor (OPC UA Server interface) and then dragging it to "Add new method list" in the left field of the editor. The new method list then contains the method of the relevant node.
    The following figure shows the content of the method list:

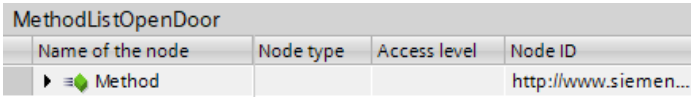

Figure 10-70 Methods list

    If you want to call another method of the OPC UA server, you must create a new method list. Each method list contains only one method.
    See also Useful information about server methods (Page 268).
11. Compile the project.
    To do so, select the project and click the following button in the toolbar:

STEP 7 compiles the project and updates the data blocks that belong to the "Productionline" client interface.

NOTE

During compilation, STEP 7 overwrites all data in the data blocks belonging to the client interface. For this reason, you should neither add to nor correct these data blocks manually.

NOTE

Renaming nod names (DisplayNames)

In read lists, write lists and method lists you can rename the name of a node by means of the shortcut menu. This is the "DisplayName" in the OPC UA language usage.

If you rename the name of a method list node and the node is already used in a programmed block for the method call "OPC_UA_MethodCall", the compilation of the project leads to consistency errors: During the compilation the UDTs of the method are generated with the changed name. The references to the method used in the program are then no longer correct.

To correct the consistency errors, you can either undo the name change of the method in the client interface or navigate to the method call and assign the relevant parameters again there under "Properties > Block parameters" ("Configuration" tab).

Data blocks of client interface

The following data blocks belong to the "Productionline" client interface:

- **Productionline_Configuration**
  A data block for the configuration.
  In the example, this data block is called "Productionline_Configuration".
  The data block already contains all system data types that are needed for the instructions of the OPC UA client.
  In addition, the data block contains general default values for parameter assignment of the connection to an OPC UA server.
  If you are working with connection parameter assignment, this data block will be filled.

- **ProductionLine_Data**
  A data block for the PLC tags that you have entered in the client interface editor.
  In the example, this data block is called "Productionline_Data".
  The figure below shows the data block.

Static	
ReadListProduct	Struct
Variable	"Productionline.ReadListProduct"
NewProduct	Bool
ProductNumber	Int
NodeStatusList	Array[0..1] of DWord
NodeStatusList[0]	DWord
NodeStatusList[1]	DWord
TimeStamps	Array[0..1] of LDT
TimeStamps[0]	LDT
TimeStamps[1]	LDT
WriteListStatus	Struct
Variable	"Productionline.WriteListStatus"
ProductionEnabled	Bool
NodeStatusList	Array[0..0] of DWord
NodeStatusList[0]	DWord
MethodListOpenDoor	Struct
MethodStatusList	Array[0..0] of DWord
MethodStatusList[0]	DWord
MethodResultList	Array[0..0] of DWord
MethodResultList[0]	DWord
Method	Struct
Inputs	"Productionline.MethodListOpendoor.Method.Inputs"
Number	Int
Outputs	"Productionline.MethodListOpendoor.Method.Outputs"
Result	Int

Figure 10-71 "Productionline_Data" data block

Use the "Productionline_Data" data block in your user program and access the read values of the "NewProduct" and "ProductNumber" PLC tags. This is explained in the following section using an example.

Reading and writing PLC tags of the client interface

Example: Reading the "ProductNumber" value

For example, you write in an SCL program:

```
#MyLocalVariable :=
"Productionline_Data".ReadListProduct.Variable.ProductNumber;
```

You use this, for example, to assign the number of the blank that was just produced in the production line to the local tag "#MyLocalVariable".

Requirements:

- A connection exists to the OPC UA server of the CPU, which controls the production line.
- The OPC UA client has read the current values.

For this reason you check whether a read value is valid:

- Check whether the value in "Productionline_Data".ReadListProduct.NodeStatusList[1] is equal to 0.
- Optional: Check when this value was sent from the OPC UA server. This value is in "Productionline_Data".Product.TimeStamps[1]. If no time stamp is requested, the communication load is reduced.

Example: Writing the "ProductEnabled" value

Transfer the new values for PLC tags, in the example for the "ProductionEnabled" tag, to the OPC UA server using the data block.

With the following assignment, you enable the production line in the example plant:

```
"Productionline_Data".WriteListStatus.Variable.ProductionEnabled :=
TRUE;
```

This is only successful, however, if the following requirements are met:

- A connection exists to the OPC UA server of the CPU, which controls the production line.
- Current values are being written via the OPC UA client

Consistency check

Finally, check the consistency of the read/write list or method list.

1. Select the list that you want to check.
2. Click the "Consistency check" button above the "OPC UA client interface" area.

A green check mark indicates an error-free assignment of the tags or methods to the corresponding elements of the server interface.

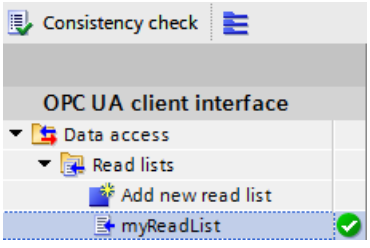

You can assume that the data exchange between client and server and method calls operate without problem in runtime.

In the event of an error a list appears in the Inspector window. From this list you can jump to the respective error.

During the consistency check, STEP 7 checks:

- Whether all elements that you use in the respective list are also present in the server.
- Do the data types used match?
- For methods: Do the number, name, order, and data types of method arguments match?

10.4.6 Determine server interface online

With STEP 7 (TIA Portal) you can determine the interface of an OPC UA server online. This provides information on which tags of a connected OPC UA server you can read or set (write) with OPC UA clients. It also provides information on which server methods of the OPC UA server are available for OPC UA clients.

If you are work offline you can create the interface of the OPC UA server by means of an OPC UA XML file. The address space of the server is described in the OPC UA XML file, see: Export OPC UA XML file (Page 215).

Determine online server interfaces

To determine a server interface online, follow these steps:

1. In the STEP 7 project tree, select the CPU which is configured as OPC UA client (Supervisor in the example).
2. Select the client interface (in the example, OPC UA Communication > Client interfaces > Productionline).
   If no client interface has been created, double-click "Add new client interface".
3. Double-click the selected client interface.
   The editor for client interfaces is displayed.

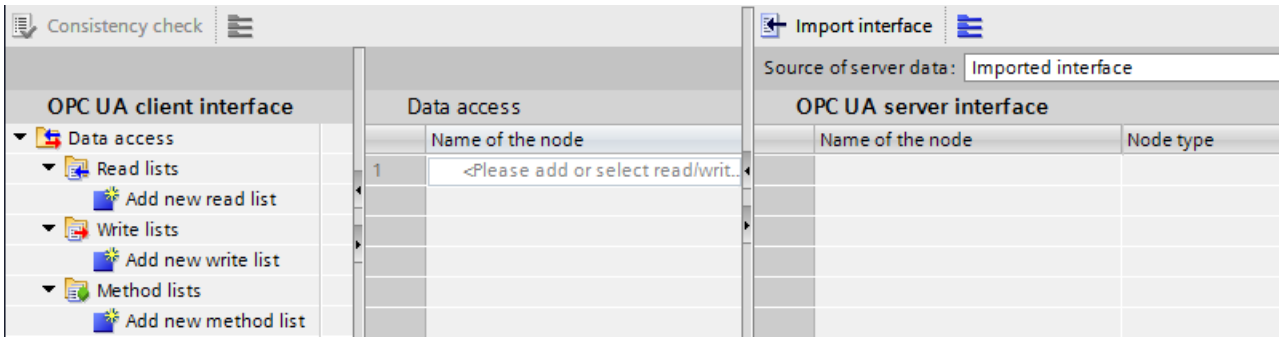

Figure 10-72 Editor for client interface

4. In the left section of the editor, click "Add new read list", "Add new write list", or "Add new method list".
5. In the right field of the editor, select "Online[]" as data source for "Source of server data":

6. Click the "Online Access" button.
   STEP 7 displays the "Connect to OPC UA server" dialog.

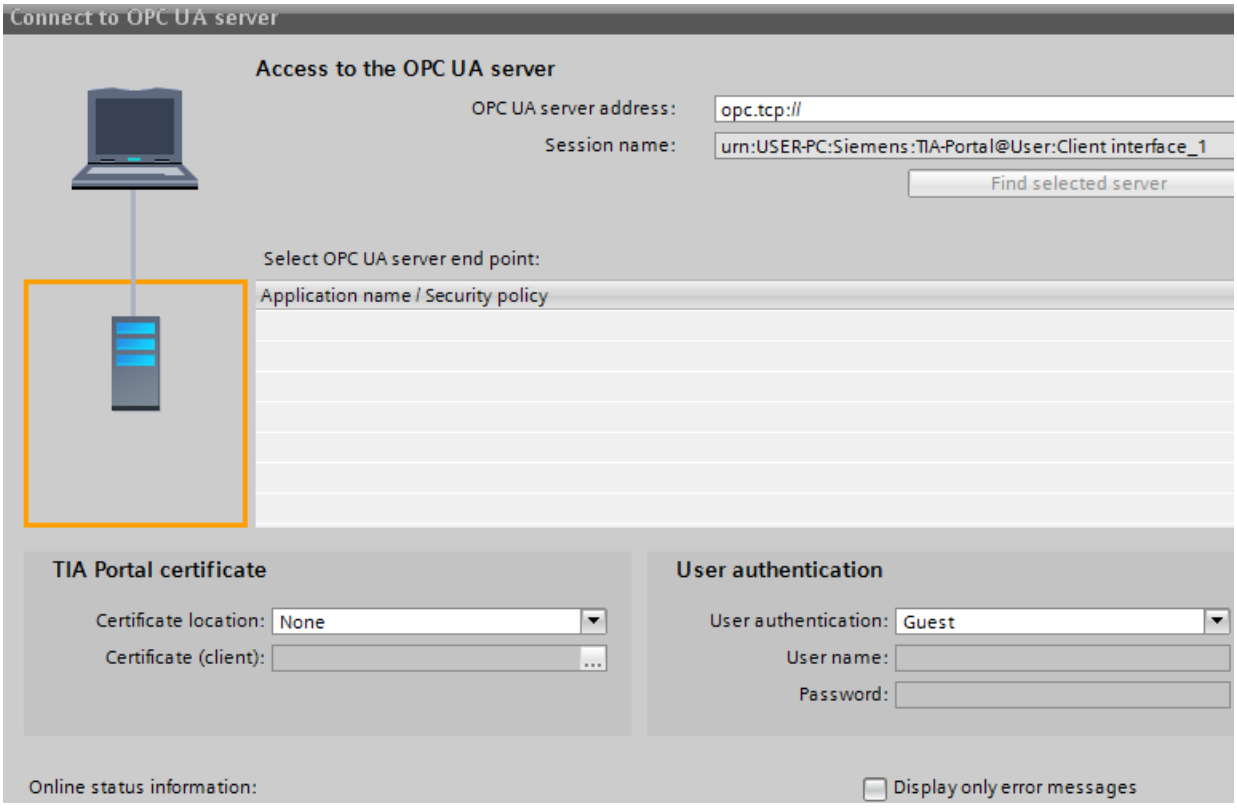

Figure 10-73 "Connect to OPC UA server" dialog

Tip: When establishing an online connection to an OPC UA server for the first time, use the "Online access" button. When reconnecting after a disconnection, select the "Connect to Online Server" button next to the "Online" selection field.

In the top right, enter the IP address of the OPC UA server whose server interface you want to determine online.

7. Click "Find selected server".
   STEP 7 establishes a connection to the OPC UA server and determines all security settings (server endpoints) that the server holds in readiness.
   STEP 7 displays the end points as list:

Figure 10-74 Found OPC UA server with all server endpoints

8. Click on the end point you want to use for a connection of STEP 7 to the OPC UA server.

9. Do you want to use a secure connection?
   - If you have selected a secure end point, then select the entry "TIA Portal" for the "Certificate location".

     And under "Certificate (Client)", select a client certificate for your PC on which STEP 7 (TIA Portal) is currently running.

     If a client certificate does not yet exist for your PC, you can generate a client certificate here in the TIA Portal.

     Proceed as follows to generate a certificate for your PC:

     - Click on the button in the "Certificate (Client)" input field.

     - Click "Add".

     - For "Certificate owners" enter "STEP 7 (TIA Portal)".

     - Select the "OPC UA client" entry at "Usage".

     - For "Subject Alternative Name (SAN)", enter the IP address of your PC, on which you are currently running STEP 7 (TIA Portal), under "Value". Overwrite the already entered IP address.

     - If your PC uses a second IP address, enter this address as well. If your PC does not use a second IP address, delete the second IP address already entered.

     - Click "OK".
   - If you have not selected a secure end point, then keep the default ("None").
10. How do you want log on?
    - If you want to log onto the OPC UA server as guest, then apply the default with "User authentication".
    - If you want to log on with user name and password, select "User name and password".

      Use the user name and password which was stored during the configuration of the OPC UA server in the properties of the CPU under "General > OPC UA > Server > Security > User authentication > User management".
11. Click on the "Go online" button.

    When a secure connection is established, a message appears that you must accept the server certificate for the secure connection to be established. In the message window, you can display further details about the server certificate via a link.

    This standard Windows window only provides information about the server certificate. If you click on the button to install the server certificate, the server certificate is not saved to the certificate memory of the TIA Portal, i.e. at the next connection attempt you will be prompted again to accept the server certificate.

    STEP 7 then establishes a connection to the OPC UA server and again displays the editor for client interfaces.

In the right field of the editor, STEP 7 displays the uppermost level of the address space of the OPC UA server:

Objects	Object	http://opcfoundation.org/UA/;i=85

12. Click on the small black triangle next to "Objects".
    STEP 7 now also displays the level below Objects.
13. Click on the small black triangle next to "Productionline".
    STEP 7 now also displays the level below Productionline.
14. Now open additional lower-level folders:

OPC UA server interface

Name of the node	Node type	Access level
Server	Object	
DeviceSet	Object	
Productionline	Object	
Counters	Object	
DataBlocksGlobal	Object	
Icon	ImagePNG	RD
Data_from_OPC_UA_Clients	Object	
ProductionEnabled	Boolean	RD/WR
Data_for_OPC_UA_Clients	Object	
ProductNumber	Int16	RD
Temperature	Array of Float	RD
NewProduct	Boolean	RD
DataBlocksInstance	Object	
Icon	ImagePNG	RD
OpenDoor_DB	Object	
DeviceManual	String	RD

Figure 10-75 Online view of OPC UA server interface

More information

You can find information about mapping of data types in the section Mapping of data types (Page 166).
For information on how to create a client interface, refer to the section Creating client interfaces (Page 309).

10.4.7 Using multilingual texts

In the client interface editor, you are also importing texts that can be displayed in different languages with the OPC UA XML files (information models). Multilingualism is optional, and each node can be defined differently regarding the languages it offers.
In the XML file, these are the following fields that can be prepared for different languages:

- Display name
- Description

Example for multilingual texts in an OPC UA XML file

In the XML file below, the display name and the description, for example, are entered with a "default" text and multiple localizable texts.

- Default text is the first entry without localization information.
- Localized text is the text after "Locale=" followed by a language code, e.g. "it-IT" for Italian

```
<UAVariable NodeId="ns=3;i=6070" BrowseName="3:EngineeringRevision" ParentNodeId="ns=3;i=1002"
DataType="String">
    <DisplayName>EngineeringRevision</DisplayName>
    <DisplayName Locale="en-US">EngineeringRevision</DisplayName>
    <DisplayName Locale="de-DE">Revisionsstand</DisplayName>
    <Description>Revision Level of the engineering environment.</Description>
    <Description Locale="en-US">Revision Level of the engineering environment.</Description>
    <Description Locale="de-DE">Revisionsstand der Engineeringumgebung.</Description>
    <Description Locale="fr-FR">Niveau de révision de l'environnement d'ingénierie.</Description>
    <Description Locale="it-IT">Livello di revisione dell'ambiente di ingegneria.</Description>
<References>
    <Reference ReferenceType="HasTypeDefinition">i=68</Reference>
    <Reference ReferenceType="HasModellingRule">i=78</Reference>
</References>
</UAVariable>
```

Figure 10-76 Example of multilingual texts in an OPC UA XML file

Display of multilingual texts

When importing a server interface, the available multilingual texts are saved internally and downloaded to a CPU together with the project.

The client editor displays the text from the OPC UA XML file in the columns "Name of the node" (corresponds to "DisplayName") and "Description" (corresponds to "Description").

The following cascading rules determine which language is shown for a node:

- When the node contains text in the currently used editing language, the text is also displayed in the editing language.
  (Setting the editing language: In the project tree, select the area "Languages & resources > Project languages")
- When the node does not contain text in the editing language but a default text is defined there (without language code), the default text is displayed.
- "Name of the node" column: If no default text is defined either but a text in any other language exists, the DisplayName text is displayed in the first available language. This rule does not apply to description texts.
- If none of the conditions listed above is met, no text is displayed.

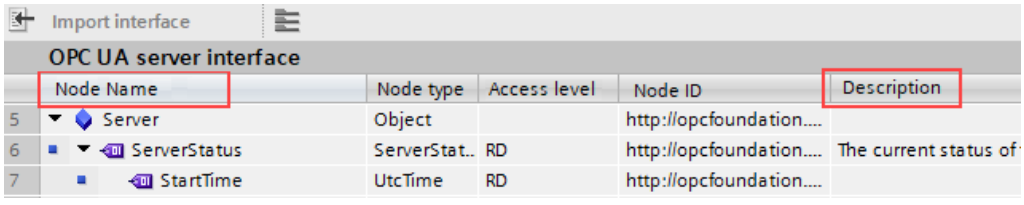

Figure 10-77 Display for multilingual texts

When you change the editing language, the multilingual text in the imported interface will also change according to the rules explained above.

You can then apply the nodes in the corresponding lists (read list, write list, method list) with drag and drop.

You cannot change the language in the lists (read list, write list, method list).

Applying the displayed description texts as comment in PLC data types

When you compile the program, STEP 7 automatically creates PLC data types (UDTs) for each read list, for each write list and for inputs or outputs of each method. These UDTs each have one element for each node.

The UDTs apply the description text as comment according to the rules stated above. STEP 7 creates the comment in only one language, just like the texts in the OPC UA server interface can only be displayed in one language.

10.4.8 Rules for the access to structures

The rules for the access to structures are explained below. Note these rules when reading and writing values of complete structures provided by an OPC UA server.

How the client of the S7-1500 CPU accesses structures

The OPC UA client of the S7-1500 CPU uses neither TypeDictionaries nor DataTypeDefinition attributes, which a server offers for the resolution of these structures.

These options of the OPC UA client for checking structural elements in runtime are limited in the client.

Rules for the access to structures

If you use the client interfaces to configure the read and write lists (connection parameterization) and assign the PLC data types to the imported or online determined address model of the server, the read and write accesses to structures operate trouble-free in runtime.

The configuration by means of client interface automatically ensures that the sequence and the data type of the structural elements are coordinated on client and server side.

Recommendation: Update an S7-1500 CPU (as server) to the current firmware version (e.g. V2.0 > V2.5.2 or higher).

In runtime the OPC UA client only checks the total length of the transmitted value; more detailed checks are not possible.

Strings (WSTRING, STRING and OPC UA ByteString) are also permitted in structures. Strings do have a variable length, but OPC UA surmounts this variability: At the time of transfer, a length field in which the length of the string is encoded is prefixed to each string. Therefore, a S7-1500 CPU as a OPC UA client can check the length of a string and determine whether the string "fits into" the assigned CPU tag. In this manner, the CPU can also check the total length of the structure.

Mapping rules apply to the assignment of OPC UA structures to PLC tags or DB tags (see Mapping of data types (Page 166)).

Example of an error-free assignment of the structure elements

In the imported node set file (XML export), the structure is defined as follows:

opcUaStruct	Object
allOk	Boolean
myOPCstruct1	myOPCUAstruct
varA	Int64
VarB	Byte
nestedStructZ	"myOPCUAstruct"."nestedStructZ"
varD	Float
varE	Double
varC	Double
DeviceManual	String

The structure mapped in the read list matches, both in the order and in the assigned data types, the corresponding nodes of the node set file.

myOPCstruct1	myOPCUAstruct
varA	LINT
VarB	USINT
nestedStructZ	"myOPCUAstruct"."nestedStructZ"
varD	REAL
varE	LREAL
varC	LREAL

If the structure now changes on the server, for example tagA and tagB are swapped, and the read list remains the same in the client, the assignment is no longer correct:

- The total length of the data remains the same (only the order has changed)
- The configuration of the structure is different for client and server!

WARNING

No error message in the case of different structure configuration between client and server

If the structures of client and server do not match, this rule violation will possibly not generate any error during compilation and also not in runtime.

Make sure not to change the configured assignments for structures in runtime. If required, reconfigure the assignment in the read and write lists!

10.4.9 Using connection parameter assignment

10.4.9.1 Creating and configuring connections

With the instructions for OPC UA clients, you create a user program that exchanges data with an OPC UA server. A series of system data types are required for this.

To simplify your work with these system data types, a connection parameter assignment for OPC UA clients is available starting in STEP 7 (TIA Portal) Version 15.1.

Use of the connection parameter assignment is optional and not mandatory. You can also manually create the required system data types.

We use an example to make the description easier to follow, see description of the example (Page 308).

Opening the connection parameter assignment

To configure the connection to an OPC UA server, follow these steps:

1. In the "OPC UA communication" area, double-click the client interface whose parameters you want to assign in the project tree.
   For the example configuration: Double-click the "ProductionLine" client interface.

   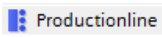

   The section "Create client interface (Page 309)" describes how to create a client interface.
2. Click the "Properties" tab (Inspector window) if the tab is not already displayed.
   STEP 7 now displays the connection parameter assignment for the instructions of the OPC UA client.
   The "General" tab is open.
3. Click on the "Configuration" tab and set the connection to the OPC UA server.

Setting the connection parameters

1. Select a descriptive name for the session. For the example, select the name "OPC UA Connection to ProductionLine".
2. In the "Address" field, enter the IP address of the OPC UA server to which your user program (that operates as an OPC UA client) is to establish a connection. In the example configuration, the CPU that controls the production line has the IP address "192.168.1.1". A connection to the OPC UA server of this CPU is to be established. For this reason, you enter this IP address in the "Address" field. In this case, the OPC UA server uses the default port 4840.
   Alternatively, you can enter a valid DNS name in the "Address" field. The length of the DNS name is limited to 242 characters.
   If the address is not valid, the error message is shown: "Enter a valid address".
   If the string of the "Address", "Port" and "Path" fields contains more than 254 characters, an error message is also displayed.
3. Enter a path within the OPC UA server to restrict access to this path. The information is optional. However, some servers only establish a connection if a server path is specified.
   When you specify a path, it is automatically entered at the "ServerEndpointUrl" entry in the configuration DB for the client interface. The entry then consists of the components "OPC Schematic Prefix", "IP address", "Port number" and "Server path", for example: "opc.tcp://192.168.0.10:4840/example/path".

The following figure shows the entry of the IP address for the OPC UA server:

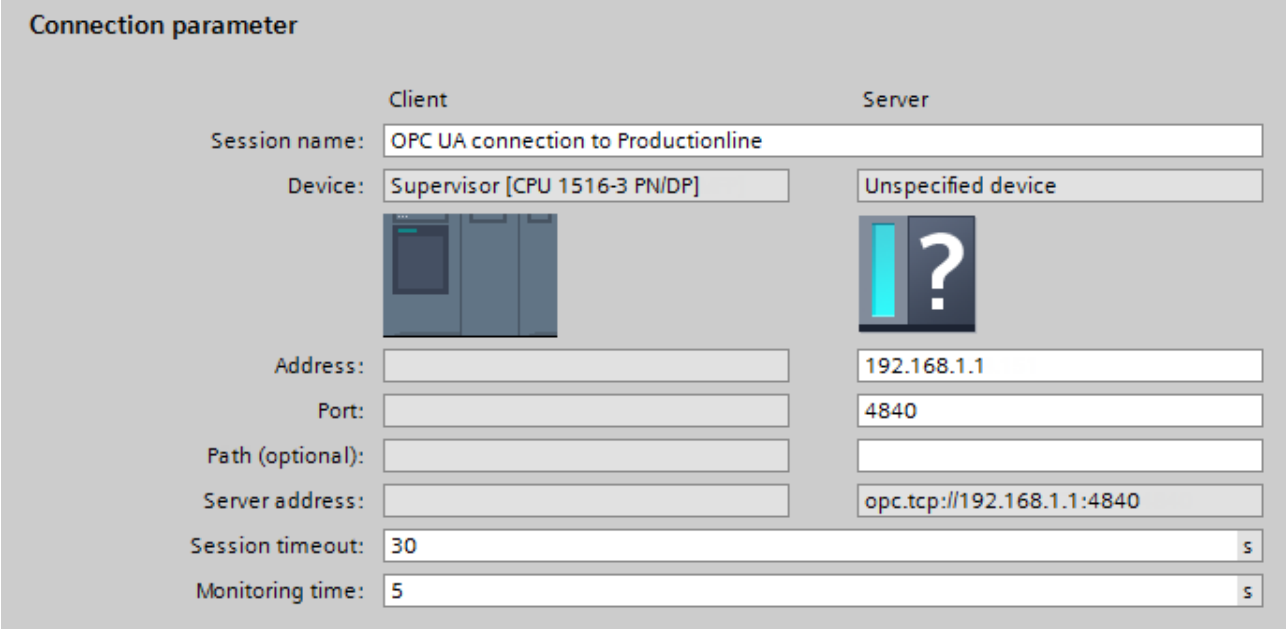

Figure 10-78 Connection parameters

4. If the OPC UA server is not using the standard port 4840, you must insert the port number here.
   For example, enter the number 65535 in the field, if the OPC UA server to which you want to establish a connection uses this port number.
5. In addition, you accept the default settings for session timeout (30 seconds) and monitoring time (5 seconds).

Setting the security parameters

1. Click the "Security" area in the "Configuration" tab.
   This area contains all security settings for the connection to the OPC UA server.

The following settings are possible, for example:

"General" area

Security mode:

Select the security mode that the connection to the OPC UA server must meet from the drop-down list.

If the server does not meet the selected mode, a session is not established.

The following settings are available:

- No security: No secure connection!
- Sign: OPC UA server and OPC UA client sign the data transmission (all messages): Manipulations can thus be detected.
- Sign & Encrypt: OPC UA server and OPC UA client sign and encrypt the data transmission (all messages):

Security policy:
Set the encryption techniques for the signing and encryption of messages.
The following settings are possible:

- No security
- Basic128Rsa15
- Basic256
- Basic256Sha256

To configure a secure connection, you must observe the following items:

- A certificate is required for the client for a secure connection.
- You have to make the client certificate known to the server.

To find out how to proceed, see the section "Handling client and server certificates (Page 224)" under "Certificate of the OPC UA client".

"Certificates" area

Client certificate:
The certificate confirms the authenticity of the OPC UA client.
To select a certificate, click the following symbol:

STEP 7 displays a list of certificates.
Select the certificate that you have made known to the server.
Click the symbol with the green check mark:

Or, create a new certificate. To do so, click the "Add" symbol.
If you create a new certificate, you must make this certificate known to the server.

"User authentication" area
The following settings are possible for user authentication:

- Guest
- User name and password
- Users (TIA Portal - Security Settings)

For more information, see Users and roles with OPC UA function rights (Page 232).

Setting languages

UA tags of the String type can be localized with OPC UA, that is, texts (values for the UA tag) can be available in different languages for the server. For example, localized texts can be available for DisplayName (Name of the node) and Description (Description).
In the "Languages" area of the "Configuration" tab you can, for example, influence the language of the texts returned by the server as follows:
In the "Languages" area, enter a number of languages that the server transfers to the client during connection setup.

The language or the local ID ("language code") associated with it that you enter in the first line is the language preferred by the client.

- If the server can provide the UA tag in the requested language, it is transferred to the client.
- If the server cannot provide the UA tag in the requested language, it checks whether it can provide the UA tag in the language you have entered in the second line (first substitute language).
- The server works its way down the list, and when it can provide neither the requested language nor a substitute language, it will provide the default language.

More information

What causes the connection to an OPC UA server to fail? FAQ.
(https://support.industry.siemens.com/cs/ww/en/view/109766709)

10.4.9.2 Handling of the client certificates of the S7-1500 CPU

Where does the client certificate come from?

If you are using the OPC UA client of an S7-1500 CPU (OPC UA client enabled), you can create certificates for these clients with STEP 7 V15.1 and higher as described in the following sections.

When you use UA clients from manufacturers or the OPC Foundation, a client certificate is generated automatically during installation or upon the first program call. You have to import these certificates with the global certificate manager in STEP 7 and use them for the respective CPU.

If you program an OPC UA client yourself, you can generate certificates through the program. Alternatively, you can generate certificates with tools, for example with OpenSSL or the certificate generator of the OPC Foundation:

- The procedure for OpenSSL is described here: "Generating PKI key pairs and certificates yourself (Page 175)".
- Working with the certificate generator of the OPC Foundation is described here: "Creating self-signed certificates (Page 174)".

Certificate of the OPC UA client of the S7-1500 CPU

A secure connection between the OPC UA server and an OPC UA client is only established if the server classifies the certificate of the client as trusted.

Therefore you have to make the client certificate known to the server.

The following sections describe how you can initially generate a certificate for the OPC UA client of the S7-1500 CPU and then make it available to the server.

1. Generate and export a certificate for the client

For a secure connection you have to generate a client certificate and - if the server and client are located in different projects - export the certificate.
If client and server are in the same project, exporting the client certificate and subsequent import are not necessary.

Requirements

The IP interface of the CPU is configured, an IP address is available.

Background: The IP address under which the CPU can be accessed in your system is entered under "Subject Alternative Name (SAN)".

Creating an OPC UA Client certificate

The easiest way to generate a client certificate for an S7-1500 CPU is to configure a client interface.
The configuration of the client interface provides for the selection or generation of a client certificate, see Creating and configuring connections (Page 323).
Alternatively, you can generate the client certificate as follows:

1. In the project tree, select the CPU you want to use as a client.
2. Double-click "Device configuration".
3. In the properties of the CPU, click "Protection & Security > Certificate manager".
4. Double-click "<Add new>" in the "Device certificates" table.
   STEP 7 opens a dialog.
5. Click the "Add" button.
6. Select the "OPC UA client" entry from the "Usage" list.
7. Click "OK".
   STEP 7 now shows the client certificate in the "Device certificates" table.
8. If the server is in another project: Right-click this line and select "Export certificate" from the shortcut menu.
9. Select a directory where you will store the client certificate.

2. Announcing the client certificate to the server

You have to make the client certificate available to the server to allow a secure connection to be established.
To do this, follow these steps:

1. If the client was configured in another project and you created and exported the client certificate there:
   - Select the "Use global security settings for certificate manager" option in the local certificate manager of the server. This makes the global certificate manager available.
     You will find this option under "Protection & Security > Certificate manager" in the properties of the CPU that is acting as server.
   - If the project is not yet protected, select "Security settings > Settings" in the STEP 7 project tree, click the "Protect this project" button and log on.
     The "Global security settings" item is now displayed under "Security settings" in the STEP 7 project tree.
   - Double click "Global security settings".

- Double click "Certificate manager".
  STEP 7 opens the global certificate manager.
- Click the "Device certificates" tab.
- Right-click in the tab on a free area (not on a certificate).
- Select the "Import" shortcut menu.
  The dialog for importing certificates is displayed.
- Select the client certificate that the server is to trust.
- Click "Open" to import the certificate.
  The certificate of the client is now contained in the global certificate manager. Note the ID of the client certificate just imported.

2. Click the "General" tab in the properties of the CPU that is acting as server.
3. Click "OPC UA > Server > Security > Secure Channel".
4. Scroll down in the "Secure Channel" dialog to the section "Trusted clients".
5. Double-click in the table on the empty row with "<add new>". A browse button is displayed in the row.
6. Click this button.
7. Select the prepared client certificate.
8. Click the button with the green check mark.
9. Compile the project.
10. Load the configuration onto the S7-1500 CPU (server).

Result

The server now trusts the client. If the server certificate is also considered trusted, the server and client can establish a secure connection.

10.4.9.3 User authentication

In the OPC UA client interface of the S7-1500, you can set what authentication is required for a user of the OPC UA client wishing to access the server. To do so, you must select the corresponding client interface in the project tree of the requested S7-1500 CPU under "OPC UA communication > Client interfaces" and select the type of user authentication in the Inspector window under "Properties > Configuration > Security".

Types of user authentication

The following options are available for user authentication:

- **Guest**
  The user does not need to verify authorization (anonymous access). The CPU creates an anonymous session for the user, and the OPC UA server does not check the authorization of the client user.

- **User name and password**
  The user must prove authorization (no anonymous access). The OPC UA server checks whether the client user is authorized to access the server. Authorization is given by the user name and the correct password. These inputs cannot be checked by the client interface, which means all values are accepted as being valid.

  NOTE

  STEP 7 stores user name and password unencrypted in the data block/instance data block. Recommendation: Use the user authentication for the "User (TIA Portal - Security Settings)" TIA project.

- **Users (TIA Portal - Security Settings)**
  You can enter a user name from the list of users entered in the project for authentication. The names of the registered users for the current project are available in the user administration in the project tree under "Security Settings > Users and roles". There you can also enter additional users.
  You can also enter a name that is not listed in the user administration of the project or leave the field blank. This is necessary when the corresponding user name is only provided by a different source during runtime, for example, via HMI or from a different OPC UA client.

"No Security" security policy and authentication via user name and password

You can set the following combination:
Security policy = "No Security" and authentication via user name and password.

- The OPC UA server of the S7-1500 supports this combination. OPC UA clients can connect and encrypt the authentication data or not.
- OPC UA client of the S7-1500 CPU also supports this combination: However, in runtime it only connects if it can send the authentication data encrypted via cable!

Result: With the following configuration, not connection can be established in runtime.

- S7-1500 as OPC UA client
- OPC UA server which supports no encryption of authentication data when "No Security" (="none") is set as security policy.

More information

You can find information about the users and roles with OPC UA function rights in the section Users and roles with OPC UA function rights (Page 232).

10.4.9.4 Using a configured connection

Introduction

This section shows you how to use a configured connection for OPC UA instructions (third step).

Requirements

- You have created a client interface and added PLC tags and PLC methods to this interface, see ("First step (Page 309)").
- You have configured a connection to an OPC UA server (Second step (Page 323)).

Overview

To read data from an OPC UA server or write data to an OPC UA server, use the following instructions:

- OPC_UA_Connect
- OPC_UA_NamespaceGetIndexList
- OPC_UA_NodeGetHandleList
- OPC_UA_ReadList or OPC_UA_WriteList
- OPC_UA_NodeReleaseHandleList
- OPC_UA_Disconnect

Order of the OPC UA instructions

The following figure shows the order in which the OPC UA instructions are called in a user program in order to use these instructions to read or write PLC tags:

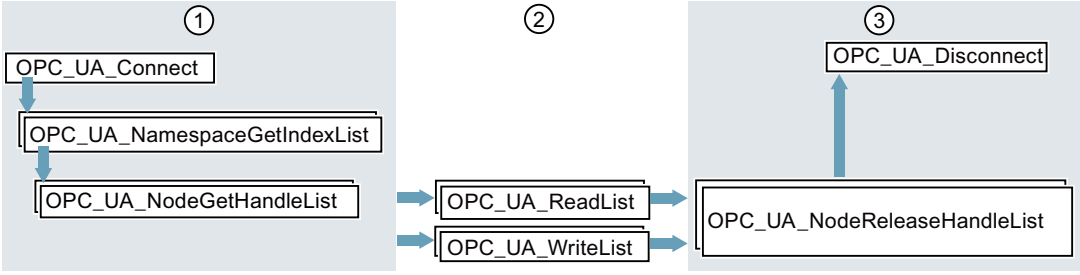

① Instructions for preparation of read and write operations

② Read and write instructions

③ Instructions for "clean-up" after a completed read or write operation
The "OPC_UA_NodeReleaseHandleList" instruction can be omitted if "OPC_UA_Disconnect" is called immediately afterwards.

Figure 10-79 Call sequence for write and read operations

STEP 7 (TIA Portal) automatically supplies the parameters of these instructions if you are using a client interface and a configured connection to an OPC UA server.
The procedure is shown in the following section.

Using a client interface and configured connection

To use a configured OPC UA connection, follow these steps:

1. Open your user program in the TIA Portal.
2. Using drag-and-drop, move the "**OPC_UA_Connect**" instruction into the program editor.
   You will find the instruction under "Instructions > Communication > OPC UA" in the TIA Portal.

3. Select a call option for the instruction
   The example uses a multi-instance.
   STEP 7 displays the instruction in the program editor.
   The editor for the Function Block Diagram (FBD) programming language uses the following display:

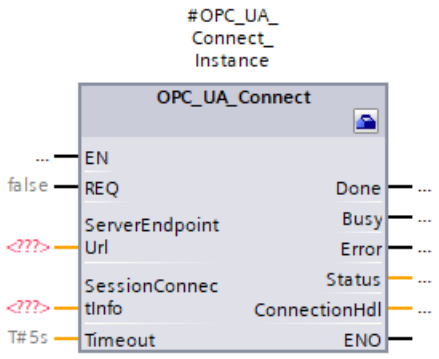

   The editor for the Ladder Logic (LAD) programming language displays the instruction similarly.
4. Click the toolbox symbol in the editor for FBD or LAD.
   The symbol is located in the heading of the instruction:

   If you are using the editor for STL or SCL: Click the small green rectangle below the first character of the instance name:

   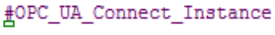

   The example (Page 308) uses "#OPC_UA_Connect_Instance" as the instance name.
   STEP 7 displays the properties of the instruction in a separate dialog.

5. For "Client interface" select the client interface that you want to use for the instruction.
   In the example, we select the "ProductionLine" client interface.
   STEP 7 now interconnects the "ProductionLine" client interface with the parameters of the OPC_UA_Connect instruction:

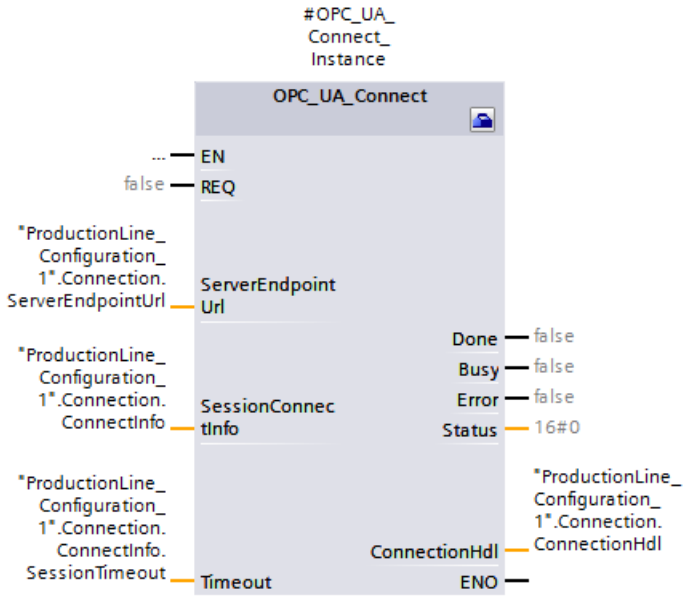

   "ProductionLine" is the interface that the OPC UA client of the example (Page 308) uses for data exchange with the OPC UA server "ProductionLine".
6. Using drag-and-drop, move the "**OPC_UA_NamespaceGetIndexList**" instruction into the program editor.
   You will find the instruction under "Instructions > Communication > OPC UA" in the TIA Portal.
   Select the "Multi-instance" call option.
   Click the toolbox symbol (LAD and FBD) or the small green box below the instance name (STL and SCL) if the editor is not already open.
   Select the client interface that you want to use (in the example "ProductionLine").
   STEP 7 now automatically interconnects all parameters of the "OPC_UA_NamespaceGetIndexList" instruction:
7. Using drag-and-drop, move the "**OPC_UA_NodeGetHandleList**" instruction into the program editor.
   Select the "Multi-instance" call option.
   Click the toolbox symbol (LAD and FBD) or the small green box below the instance name (STL and SCL) if the editor is not already open.
   Select the client interface that you want to use. The example uses the "ProductionLine" client interface.
   Under "Data access > Read/Write list" select the read or write list that you want to use (in the example the read list "Product").

STEP 7 now automatically interconnects all parameters of the "OPC_UA_NodeGetHandleList" instruction:

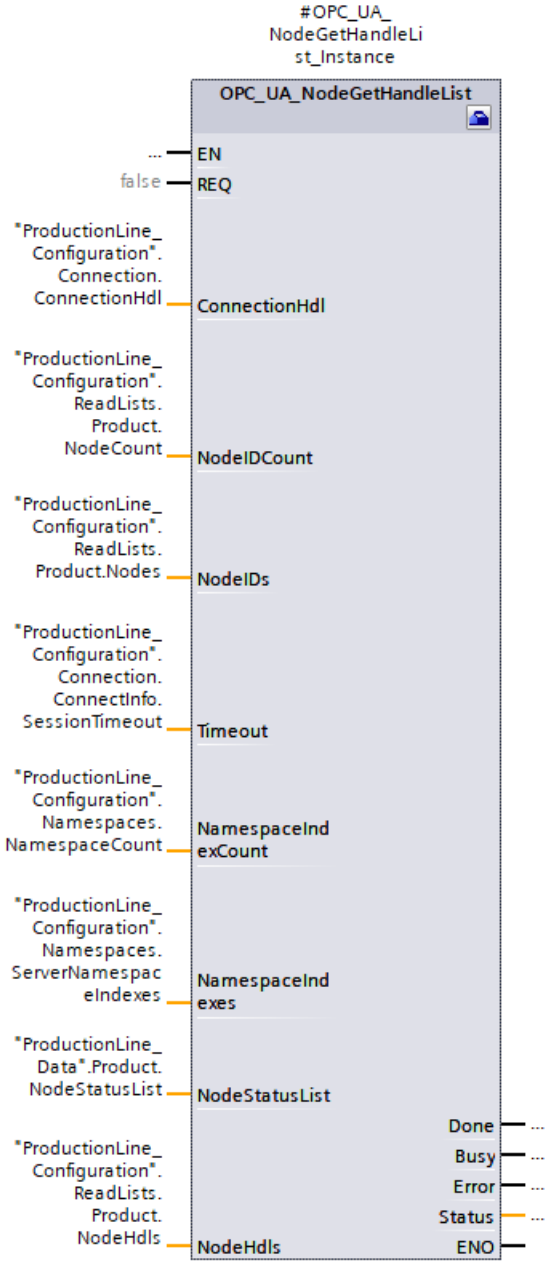

If you want to write data to an OPC UA server, select the write list you want to use under "Data access > Write list" (the "ProductionStatus" write list in the example).

8. Using drag-and-drop, move the "**OPC_UA_ReadList**" instruction into the program editor.
   Select the "Multi-instance" call option.
   Click the toolbox symbol (LAD and FBD) or the small green box below the instance name (STL and SCL) if the editor is not already open.
   Select the client interface that you want to use. The example uses the "ProductionLine" client interface.

Under "Data access > Read list" select the read list that you want to use (in the example the "Product" read list).

STEP 7 now automatically interconnects all parameters of the "OPC_UA_ReadList" instruction.

If you want to write data to an OPC UA server, use the "**OPC_UA_WriteList**" instruction and select the list of tags you want to send to the server under "Data access > Write list" ("ProductionStatus" write list in the example).

9. If you use different read lists or write lists as program-controlled lists in your user program, move the "**OPC_UA_NodeReleaseHandleList**" instruction to the program editor using drag-and-drop operation.

   Select the client interface that you want to use.

   Now select a read list or write list that you want to release: Only release read or write lists that you rarely use, since re-registering is time-consuming.

   Then, repeat the steps starting with step 7 with the "OPC_UA_NodeGetHandleList" instruction.

10. Using drag-and-drop, move the "**OPC_UA_Disconnect**" instruction into the program editor.

    Select the "Multi-instance" call option.

    Click the toolbox symbol (LAD and FBD) or the small green box below the instance name (STL and SCL) if the editor is not already open.

    Select the client interface that you want to use. The example uses the "ProductionLine" client interface.

    STEP 7 now automatically interconnects all parameters of the "OPC_UA_Disconnect" instruction.

Supported instructions

For the following instructions, STEP 7 automatically supplies the parameters if you are using a client interface and a configured connection to an OPC UA server:

- OPC_UA_Connect
- OPC_UA_NamespaceGetIndexList
- OPC_UA_NodeGetHandleList
- OPC_UA_MethodGetHandleList
- OPC_UA_MethodReleaseHandleList
- OPC_UA_ReadList
- OPC_UA_WriteList
- OPC_UA_MethodCall
- OPC_UA_NodeReleaseHandleList
- OPC_UA_Disconnect

Compact instructions

As of TIA Portal V17, compact instructions are available for OPC UA which summarize the write job/read job/method call and the connection establishment:

- OPC_UA_ReadList_C for generating a connection and reading tags
- OPC_UA_WriteList_C for generating a connection and writing tags
- OPC_UA_MethodCall_C for generating a connection and calling methods

You will find information about the compact instructions services in the TIA Portal Help.

10.5 Tips and recommendations

10.5.1 Rules for subscriptions

The following rules apply to subscriptions:

- Group subscriptions in the client according to different sampling and publishing intervals and distribute the monitored elements (variables) to these groups.
  Example: Create a subscription for longer publishing intervals (e.g. 5 seconds) and a subscription for shorter publishing intervals (e.g. 0.1 second).
- Disable unneeded subscriptions.
  Reason: The "Deactivated" subscription mode reduces resource consumption.
- Consider the maximum number of monitored items of subscriptions for the corresponding S7-1500 CPU.
  The information can be found in the technical specification of the respective CPU. The information is based on a sampling / publishing interval of 1 second.
  You can find more information in the FAQ 109755846 (https://support.industry.siemens.com/cs/us/en/view/109755846).
- Select the same sampling and publishing intervals for the OPC UA client and for the OPC UA server.
- Avoid arrays and structures as elements of subscriptions – if the process allows.
  Reason: If even one value of an array/structure changes, the entire structure is transferred, creating an unnecessary communication load.
- Occasional non-compliance with the required sampling rate is acknowledged by the OPC UA server of the S7-1500 CPU according to OPC UA specification with a "GoodOverload" error code, see also TIA Portal Help. Different OPC UA clients handle "Good" error codes unequal to "0" differently. Consider this behavior and, if needed, reduce the communication load according to the measures described above.

More information

For information on how to set the server for subscriptions, refer to the section Settings of the server for subscriptions (Page 222).

10.5.2 Rules for the user program

User programs for OPC UA

The following rules apply to user programs:

- If your application allows it and the communication load is high, you should set a minimum time for cycle OBs.
  Advantages:
  – The cycle time remains constant for the most part
  – The CPU has more time for communication tasks throughout
  Tip: Use the instruction "Runtime_Info"; mode 21 or mode 25 (see TIA Portal Help) to analyze the CPU utilization (e.g. communication).
- Reduce the number of variables or data blocks that can be reached from OPC UA/HMI. By default, all variables from OPC UA/HMI are accessible when creating variables/DBs/IDBs. This measure leads to improved performance when loading in RUN.
  Tip: Using the detailed object display in the TIA Portal, you can easily mark the non-OPC-UA-relevant data blocks as "not accessible from OPC UA".
- Consistent transfer of data beyond the limits of simple data types is only possible with OPC UA methods. If you use other OPC UA functions (Subscriptions, Read/Write), you must ensure data consistency in the application.
- OPC UA offers the "RegisterNodes" service for repeated read and write accesses to the same variables. Servers can use this service to prepare for optimized access to variables. The instruction "OPC_UA_NodeGetHandleList" of the S7-1500 as OPC UA client implicitly calls this service to prepare the server for optimized accesses (in OPC UA usage "Registered Read/Write").

Calling detailed object display in the TIA Portal

To call up the detailed object display, proceed as follows:

1. Switch to the "PLC Programming" portal in the portal view.
2. Select "Show all objects".
3. Switch to the "Details" tab in the selection window.

4. In the "DB accessible from OPC UA" column, disable the accessibility from OPC UA for individual objects.

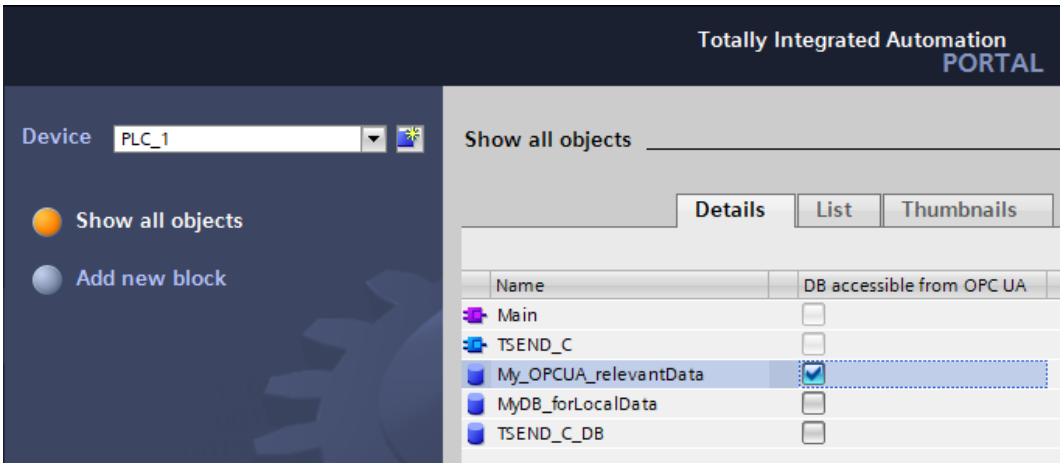

Figure 10-80 Calling detailed object display in the TIA Portal

10.5.3 Master copies for OPC UA communication

Master copies for the OPC UA interfaces

Interfaces of OPC UA servers and OPC UA clients that you want to use multiple times can be stored either in the project library or in a global library. Master copies in the project library can only be used within the project. When you create the master copy in a global library, it can be used in different projects.

The OPC UA capable CPUs differentiate between 3 interface types of the OPC UA server:

- Standard OPC UA server interface
- Companion specification interface
- Namespace reference

When adding the OPC UA interface in the project tree under "OPC UA Communication" each interface type gets its own symbol. The same symbol is used by the master copy.

Create either single master copies or a master copy with multiple interfaces.

Creating multiple master copies from selection

You select one or more elements and create individual master copies from them

1. Open the library in the "Libraries" task card.
2. Select the desired elements.
3. Using a drag-and-drop operation, move the elements to the "Master copies" folder or any subfolder of "Master copies".

Creating a master copy from selection

You select multiple elements and create a single master copy from them that contains all selected elements.

1. Copy to the clipboard the elements that you want to create as master copies.
2. Right-click on the "Master copies" folder or any of its subfolders in the library.
3. In the shortcut menu, select "Paste as a single master copy" command.

If multiple interfaces are added to a master copy from the OPC UA server or OPC UA client, the label and the symbol in the library are changed accordingly.
A symbol with "+" is displayed instead of the simple symbol.

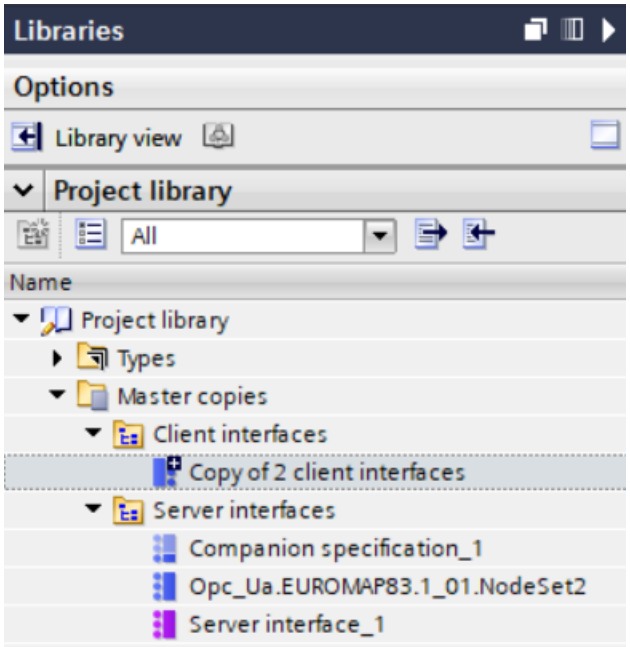

Figure 10-81 Create copy template in STEP 7

More information

For information on how to create a user-defined server interface, refer to the section Creating a user-defined server interface (Page 249).

Addressing via DHCP

11

In order to provide future-proof, efficient and flexible automation, more and more components from the production area support IT standards. Worldwide Ethernet standards, integrated communication and versatility make IT-supported automation an economical solution for your requirements. Functional expansions of the communication options of the S7-1500 CPUs in this direction give you more freedom for the possible uses of your system or machine. You use IT technology to automate efficiently. With the introduction of DHCP and the expansions of DNS for S7-1500 CPU as of firmware version V2.9, you gain more flexibility for the design of your automation solution.

For the interfaces of an S7-1500 CPU you can set that address parameters such as the IP address with subnet mask, can be got from a DHCPv4 server (hereinafter DHCP server).

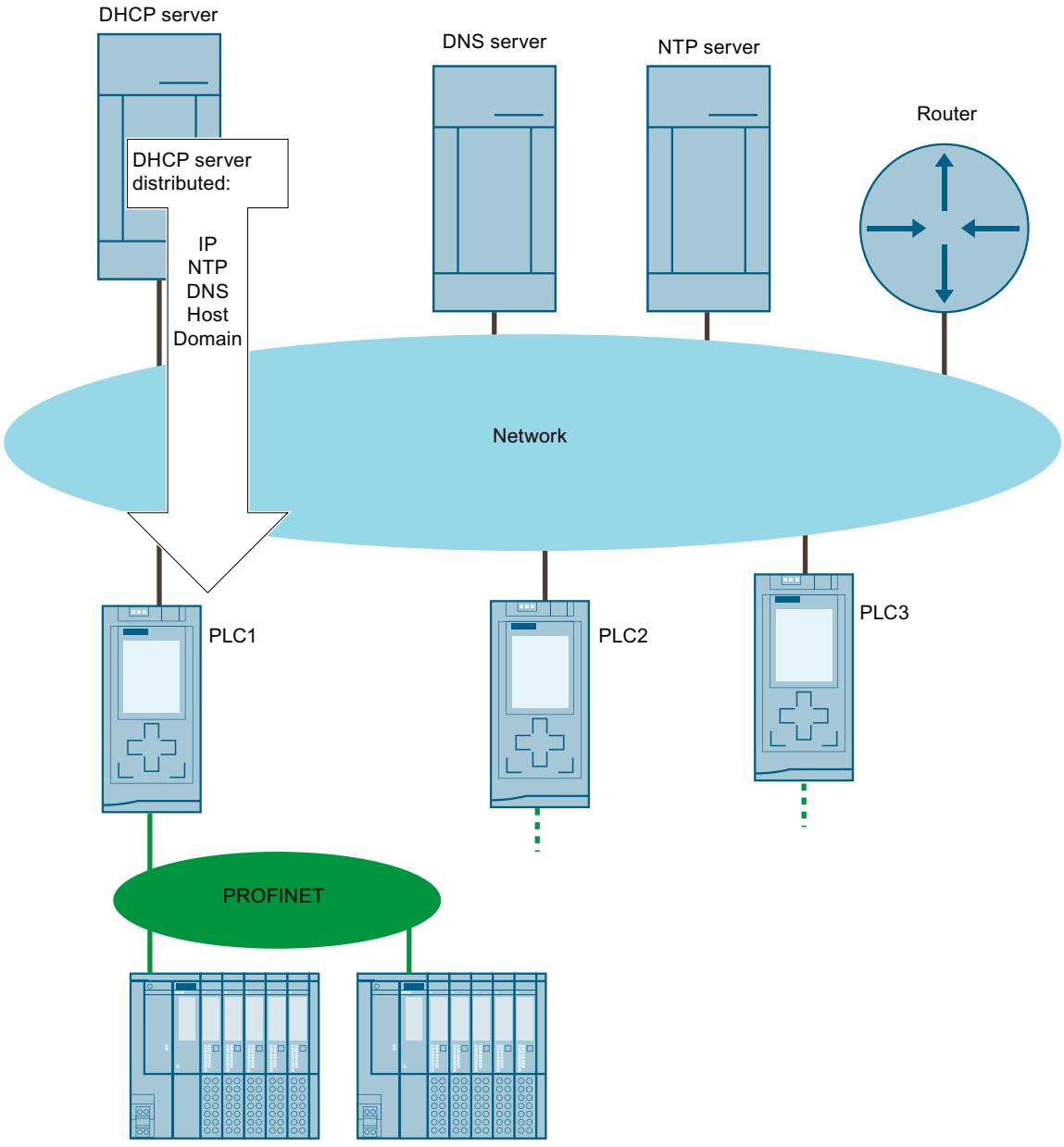

Figure 11-1 Overview of DHCP

Areas of application

- Use of the S7-1500 CPU in a managed IT environment
- Adding new devices in a modular manufacturing structure

11.1 Principle of address assignment via DHCP

Requirement configuration

The following requirements must be met so that a PROFINET interface of the S7-1500 CPU can obtain IP address parameters via a DHCP server:

- The address assignment via a DHCP server is configured.
  Activate DHCP (Page 347)
- No PROFINET IO communication may be configured for the interface.

Principle of DHCP address assignment

The process begins as soon as the project is loaded into the CPU or the CPU is switched on with configured DHCP address assignment and started up, the process of DHCP assignment begins:

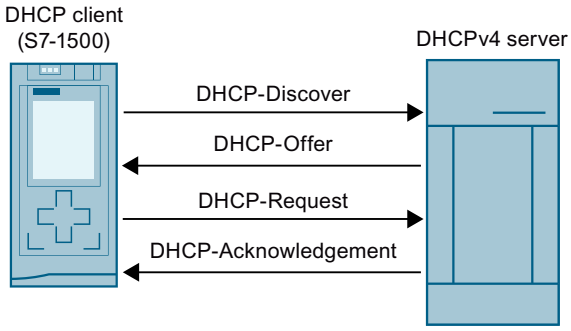

DHCP Discover	The DHCP client searches for a suitable DHCP server via broadcast. The DHCP client identifies itself to the DHCP server with the configured client ID or with its MAC address.
DHCP Offer	The DHCP server offers the DHCP-client IP address parameters (IPv4 address, subnet mask, optional default router) and if necessary further data (options).
DHCP Request	The DHCPclient requests the IP address parameters and options offered in the DHCP offer. The DHCP client of the S7-1500 CPU always accepts the first DHCP offer of a DHCP server that meets the requirements (IP address with subnet mask).
DHCP Acknow-ledgment	The DHCP server confirms and transmits the IP address parameters and options offered in the DHCP offer. The DHCP server also notifies the DHCP client how long the DHCP client can use the address parameters (lease time).

Figure 11-2 Principle of address assignment with DHCP

The IP address parameters and options are stored in the load memory of the CPU. After a general reset or restart of the CPU, the IP address parameters and options are obtained again via DHCP.

DHCP address assignment options

For the S7-1500 CPU you can configure that the following options are obtained via a DHCP server:

- Addresses of up to four DNS servers
  Get addresses of the DNS servers via DHCP (Page 349)
- Address of up to four NTP servers
  Get addresses of the NTP servers via DHCP (Page 349)
- Host and domain name
  Obtain host and domain name via DHCP (Page 350)

If necessary, the DHCP server also supplies the address of a router (default gateway) as option.

How long can the S7-1500 CPU use the DHCP address parameters?

In addition to the address parameters, the DHCP server also notifies the S7-1500 CPU (DHCP client)of the lease time. The lease time defines how long the CPU can use the address parameters.

When the lease time has fully expired, the CPU returns the assigned address parameters. The CPU has an internal time monitoring for the lease time.

At certain times when the lease time expires, the CPU has the option of extending the lease time:

- Renewal: Half of the lease time has expired: The CPU contacts the original DHCP server and asks for an extension of the lease time. The original DHCP server can either confirm the existing lease time or assign a new lease time. With a new lease time, the time monitoring in the CPU is reset.
- Rebinding: 7/8 of the lease term has expired: The CPU contacts all available DHCP servers via broadcast and asks for an extension of the lease time. A DHCP server can either confirm the existing lease time or assign a new lease time. With a new lease time, the time monitoring in the CPU is reset.
  In the event of a negative response from DHCP server during rebinding or if no DHCP server replies, the CPU returns the address parameters after 8/8 of the lease time.

If the CPU has returned the address parameters after the lease time has expired, the CPU starts a new cycle for DHCP addressing with a new DHCP discover.

More information

For information on how to configure client ID, refer to the section Configuring the client ID (Page 348).

11.2 DHCP with DNS

As of STEP 7 V17, the S7-1500 CPU supports the host name and domain address parameters used in name-based communication (DNS).

For specific communication services, name-based addressing via the complete name consisting of host name and domain, is useful:

- The CPU is addressable under the complete name, for example at OPC UA, Open User Communication. In the case of dynamic IP address assignment by the DHCP server, unique addressing is always possible through the DNS name.
- Certificates of the S7-1500 CPU may contain the complete name, for example, for OPC UA communication, web server, secure communication.
  - Only if you configure host name and domain for the S7-1500 CPU in STEP 7, then the complete name is entered in the device certificates in the project as subject alternate name (SAN).
  - As soon as you obtain the host name and/or domain via DHCP or assign it via the user program, the complete name is not stored in the device certificates in the project.

How you set the DNS configuration for your CPU depends on how you assign the host name and domain in your network .

- Central assignment of host name and domain

  You assign the host name and domain centrally in your network, for example via a configured DNS server. In STEP 7 you configure that the CPU obtains the host name and domain via DHCP.

  In the following configuration, only the client ID is configured in the S7-1500 CPU. At the DHCP address assignment the DHCP-server returns the host name and domain options to the CPU.

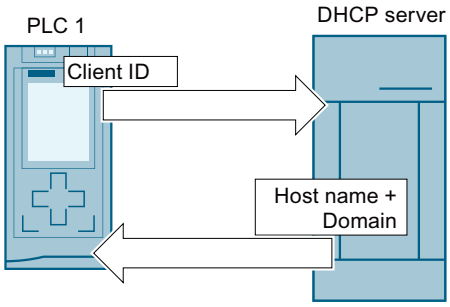

Figure 11-3 Obtain host and domain name via DHCP

  For this configuration, you must first activate the host name and domain configuration in STEP 7. You then configure that the host and domain name are obtained via DHCP.

  Obtain host and domain name via DHCP (Page 350)

- Local assignment of host name and domain

  You can configure the host name and domain in STEP 7 or assign them in the user program.

NOTE

Validity of the data obtained from DHCP

If you change the host name and/or domain in the user program, then all data obtained via DHCP (IP suite, host name, domain, NTP server, DNS server) becomes invalid and is retrieved again from DHCP server. Therefore, you should only change the Hostname and/or Domain in urgent cases and not during operation.

All connections can be dropped if the IP address of the interface changes.

In the following configuration, the host name and its domain are configured in the S7-1500 CPU in addition to its client ID. When assigning DHCP addresses, the CPU supplies

the client ID as well as the host name and the domain to the DHCP server.. The DHCP server receives the information to update, for example a DNS server with the address data of the CPU.

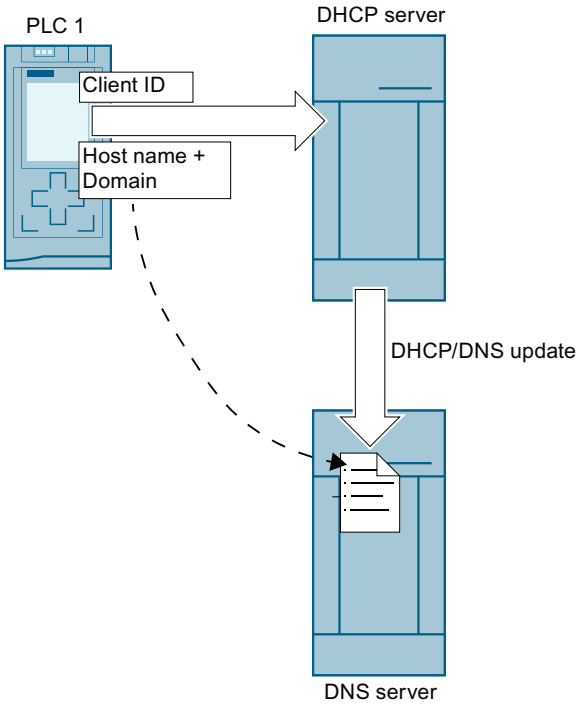

Figure 11-4 Configure host and domain name

For this configuration, you must first activate the host name and domain configuration in STEP 7. You then configure the host name and domain in STEP 7.

- Central assignment of the domain and local assignment of host name.
  - You configure in STEP 7 that the CPU gets the domain via DHCP.
  - You can configure the host name in STEP 7 or assign it via the user program.

  In the following configuration, the host name is also configured in the S7-1500 CPU in addition to its client ID. When assigning DHCP addresses, the CPU supplies the client ID as well as the host name to the DHCPv4 server. The DHCP server supplies the domain option to the CPU.

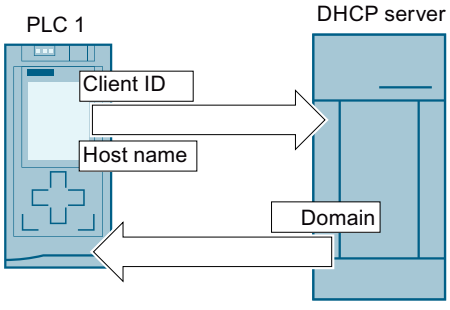

Figure 11-5 Configure host name, obtain domain name via DHCP

For this configuration, you must first activate the host name and domain configuration in STEP 7. Then configure the host name in STEP 7 and configure that the domain is obtained via DHCP.

Requirements

- You have activated the address assignment via DHCP for at least one interface of the S7-1500 CPU.

Configuration of host and domain name

To activate the host name and domain configuration in STEP 7, follow these steps:

1. Select the S7-1500 CPU in STEP 7.
2. In the properties of the CPU, navigate to "Advanced configuration" > "Host and domain name" > "Host and domain name configuration".
3. Select the "Enable host name and domain" check box.

Configuring the host name in STEP 7

To configure the host name in STEP 7, follow these steps:

1. Select the S7-1500 CPU in STEP 7.
2. In the properties of the CPU, navigate to "Advanced configuration" > "Host and domain name" > "Host and domain name configuration"> "Host name".
3. For "Host name configuration:" select "Set host name in the project" from the drop-down list.
4. Enter the host name for "Host name:".
   - Enter your desired host name.
   - If you select the "Host name identical to device name" check box, STEP 7 automatically assigns the device name as the host name.

Only if you have configured the host and domain name in STEP 7, the full name is displayed for "Full name:".

Assign host name in the user program

To assign the host name in the user program, follow these steps:

1. Select the S7-1500 CPU in STEP 7.
2. In the properties of the CPU, navigate to "Advanced configuration" > "Host and domain name" > "Host and domain name configuration" > "Host name".
3. Under "Host name configuration:" select "Set hostname directly on the device (e.g. PLC program, display)" in the drop-down list.
4. Call the instruction "CommConfig" in the user program. The DATA parameter must point to a UDT "Conf_Hostname" where the host name is defined.

You can find more information on the "CommConfig" instruction and on the UDT "Conf-Hostname" in the STEP 7 online help.

Configuring a domain in STEP 7

To configure the domain in STEP 7, follow these steps:

1. Select the S7-1500 CPU in STEP 7.
2. In the properties of the CPU, navigate to "Advanced configuration" > "Host and domain name" > "Host and domain name configuration" > "Domain".
3. For "Domain configuration:" select "Set domain in the project" from the drop-down list.
4. Enter your desired domain under "Domain:".

Only if you have configured the host and domain name in STEP 7, the full name is displayed for "Full name:".

Assigning a domain in the user program

To assign the domain in the user program, follow these steps:

1. Select the S7-1500 CPU in STEP 7.
2. In the properties of the CPU, navigate to "Advanced configuration" > "Host and domain name" > "Host and domain name configuration" > "Domain".
3. Under "Hostname configuration:" select "Set domain directly on the device (for example PLC program, display)" in the drop-down list.
4. Call the instruction "CommConfig" in the user program. The DATA parameter must point to a UDT "Conf_Domainname" where the domain name is specified.

You can find more information on the "CommConfig" instruction and on the UDT "Conf-Domainname" in the STEP 7 online help.

Rules for maximum lengths of host name, domain and client ID

Note the following maximum lengths in bytes. One byte corresponds to one character:

- Host name: Maximum 63 bytes
- Domain: Maximum 252 bytes
- Client ID: Maximum 254 bytes
- Host + Domain name: Maximum 254 bytes
- Host + Domain name + Client ID: Maximum 260 bytes
  Applies only when host and domain name must be sent to the DHCP server.

11.3 Activate DHCP

Requirements

- S7-1500 CPU firmware V2.9 or higher

Procedure

To activate DHCP for the PROFINET interface of an S7-1500 CPU, follow these steps:

1. Select the PROFINET interface of the S7-1500 CPU in STEP 7.
2. In the properties of the interface, navigate to "Ethernet addresses" > "Internet Protocol Version 4 (IPv4)".
3. Select the option "IP address of DHCP server".

Result

You have set the interface so that it obtains your IP address via a DHCP server.
"Use MAC address as client ID" is set as the operating mode for DHCP on the S7-1500 CPU.
How to adjust the client ID is described under Configuring the client ID (Page 348).

11.4 Configuring the client ID

The client ID

The S7-1500 CPU always identifies itself to a DHCP server with the client ID (DHCP option 61). The client ID is interface specific.
The S7-1500 CPU supports the following two operating modes with regard to the client ID:

- Use the MAC address as the client ID: The MAC address of the CPU is used as the client ID for the DHCP client. Note, if you execute a device exchange of the CPU in this operating mode, the MAC address and therefore also the client ID changes.
- User-defined client ID: With this option you specify the client ID in the configuration in STEP 7. You also have the option of adapting the client ID during runtime, for example, in the user program using the "CommConfig" instruction.
  If you perform a device exchange of the CPU in this operating mode, the new CPU is assigned the configured client ID.

Requirement

- You have activated address assignment via DHCP for the interface.

Configuring the client ID

To configure the client ID in STEP 7, follow these steps:

1. Select the PROFINET interface of the S7-1500 CPU in STEP 7.
2. In the properties of the interface, navigate to "Ethernet addresses" > "Internet Protocol Version 4 (IPv4)"> "IP address of DHCP server".
3. For "Operating mode:" select the required operating mode from the drop-down list:
   – Use MAC address as client ID (default setting)
   – User-defined client ID

   If you have selected the option "Use MAC address as client ID", then you are already finished here. For "User-defined client ID", continue with step 4.

4. Enter a valid client ID for "Client ID".
   - A character string with 7-bit ASCII characters is allowed in the area from 0x21 to 0x7e.
   - Some DHCP servers expect a leading "0" (e.g. some SCALANCE devices). In this case, enter "\ 0" followed by your client ID.
   - You can also leave the field blank. In this case, you must select the "Client ID can be changed at runtime" check box.
5. In order to make the user-defined client ID adaptable during runtime, select the "Client ID can be changed during runtime" check box.

Adapting the client ID during runtime

You can use the "CommConfig" instruction to adapt the client ID via the user program. Call the instruction. The DATA parameter must point to a UDT "Conf_ClientId" or a UDT "Conf_ClientId_Opaque". The client ID must be specified in the UDT.
If you have left the user-defined client ID free in the configuration in STEP 7, then the CPU uses the MAC address as the client ID until the client ID is adapted for the first time.

NOTE
Validity of data obtained via DHCP
If you change ClientId with "CommConfig", all data obtained via DHCP will be invalid: IP Suite, domain name, NTP server, DNS server. Therefore, you should only change ClientId in urgent cases and not during operation.

You can find more information on the instruction "CommConfig" and the UDTs "Conf_ClientId" and "Conf_ClientId_Opaque" in the STEP 7 online help.

11.5 Get addresses of the DNS servers via DHCP

Requirements

- You have activated the address assignment via DHCP for at least one interface of the S7-1500 CPU.

Get addresses from DNS servers via DHCP

To obtain the addresses of up to 4 DNS servers via DHCP, follow these steps:

1. Select the S7-1500 CPU in STEP 7.
2. In the properties of the CPU, navigate to "Advanced configuration" > "DNS configuration" > "Server list".
3. For "Name resolution via DNS:" select "Set DNS server remotely (e.g. DHCP)" in the drop-down list.

Result: If the DHCP server supplies addresses from DNS servers as option, the CPU uses up to 4 addresses.

11.6 Get addresses of the NTP servers via DHCP

Requirements

- You have activated the address assignment via DHCP for at least one interface of the S7-1500 CPU.

Obtaining addresses from NTP servers via DHCP

To obtain the addresses of up to four NTP servers via DHCP, follow these steps:

1. Select the S7-1500 CPU in STEP 7.
2. In the properties of the CPU, navigate to "Time of day" > "Time synchronization"> "NTP mode".
3. For "Time synchronization:" select "Set NTP server remotely (e.g. DHCP)" in the drop-down list.

Result: If the DHCP server supplies addresses from NTP servers as option , the CPU uses up to 4 addresses.

11.7 Obtain host and domain name via DHCP

Requirement

- You have activated the address assignment via DHCP for at least one interface of the S7-1500 CPU.
- You have activated the host name and domain configuration in STEP 7.

Obtain host name via DHCP

To obtain the host name via DHCP, follow these steps:

1. Select the S7-1500 CPU in STEP 7.
2. In the properties of the CPU, navigate to "Advanced configuration" > "Host and domain name"> "Host and domain name configuration"> "Host name".
3. For "Host name configuration:" select "Set host name remotely (e.g. DHCP)" in the drop-down list.

Result: If the DHCP server supplies a host name as option, the CPU uses this host name.

Obtaining a domain via DHCP

To obtain the domain via DHCP, follow these steps:

1. Select the S7-1500 CPU in STEP 7.
2. In the properties of the CPU, navigate to "Advanced configuration" > "Host and domain name" > "Host and domain name configuration" > "Domain".
3. For "Domain configuration:" select "Set domain remotely (e.g. DHCP)" in the drop-down list.

Result: If the DHCP server delivers a domain as option, the CPU uses this domain.

Routing 12

12.1 Overview of the routing mechanisms of S7-1500 CPUs

The following table gives an overview of the routing mechanisms of the S7-1500 CPU.

Routing mechanism	Description	Applications	Section
S7 routing	S7 routing is the transfer of data beyond S7 subnet boundaries. You can send information from a transmitter to a receiver across several s7 subnets.	Download user programs Load hardware configuration Execute testing and diagnostics functions	S7 routing (Page 352)
IP forwarding	IP forwarding is a function of devices to forward IP packets between two connected IP subnets.	Simple access from the control level to the field level for configuration and parameter assignment of devices, e.g. via PDM or Web browser. Simplified integration of devices for remote access, e.g. for diagnostics during remote maintenance or firmware update.	IP forwarding (Page 356)
Data record routing	Data can be sent over PROFINET from an engineering station to field devices via multiple networks. Since the engineering station addresses the field devices using standardized records and these records are routed via S7 devices, the term "data record routing" is used to refer to this type of routing.	Data record routing is used, for example, when field devices of different manufacturers are used. The field devices are addressed using standardized data records (PROFINET) for configuration and diagnostics.	Data record routing (Page 364)

12.2 S7 routing

Definition of S7 routing

S7 routing is the transfer of data beyond S7 subnet boundaries. You can send information from a transmitter to a receiver across several s7 subnets. The gateway from one S7 subnet to one or more other subnets is provided by the S7 router The S7 router is a device which has interfaces to the respective S7 subnets. S7 routing is possible via various S7 subnets (PROFINET/Industrial Ethernet and/or PROFIBUS).

Requirements for S7 routing

- All devices that can be reached in a network have been configured in a project in STEP 7 and downloaded.
- All devices involved in the S7 routing must receive routing information about the S7 subnets that can be reached through specific S7 routers. The devices obtain the routing information by downloading the hardware configuration to the CPUs, since the CPUs play the role of an S7 router.

  In a topology with several consecutive S7 subnets, the following order must be kept to when downloading: First download the hardware configuration to the CPU(s) directly connected to the same S7 subnet as the PG/PC, then download one by one the CPUs of the S7 subnets beyond this starting with the nearest S7 subnet through to the S7 subnet furthest away.
- The PG/PC you want to use to establish a connection via a S7 router must be assigned to the S7 subnet it is physically connected to. You can assign the PG/PC to a PG/PC in STEP 7 under Online & Diagnostics > Online accesses > Connection to interface/subnet.
- For S7 subnets of the type PROFIBUS: Either the CPU must be configured as DP master or, if it is configured as a DP slave, the "Test, commissioning, routing" check box must be selected in the properties of the DP interface of the DP slave.
- S7 routing for HMI connections is possible as of STEP 7 V13 SP1.

NOTE

Firewall and S7 routing

A firewall does not recognize the IP address of the sender during S7 routing when the sender is located outside the S7 subnet adjacent to the firewall.

An overview of the devices that support the "S7 routing" function is provided in this FAQ (https://support.industry.siemens.com/cs/ww/en/view/584459).

S7 routing for online connections

With the PG/PC, you can reach devices beyond S7 subnets, for example to do the following:

- Download user programs
- Download a hardware configuration
- Execute test and diagnostics functions

In the following figure, CPU 1 is the S7 router between S7 subnet 1 and S7 subnet 2.

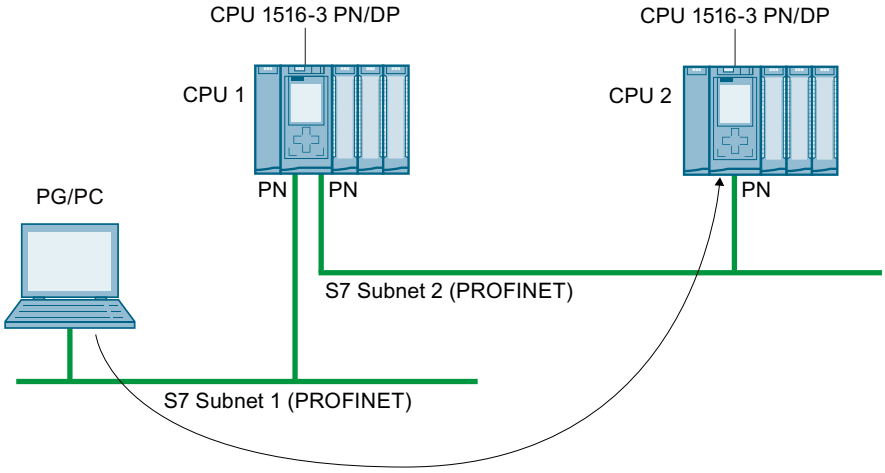

Figure 12-1 S7 routing: PROFINET - PROFINET

The following figure shows the access from a PG via PROFINET to PROFIBUS. CPU 1 is the S7 router between S7 subnet 1 and S7 subnet 2; CPU 2 is the S7 router between S7 subnet 2 and S7 subnet 3.

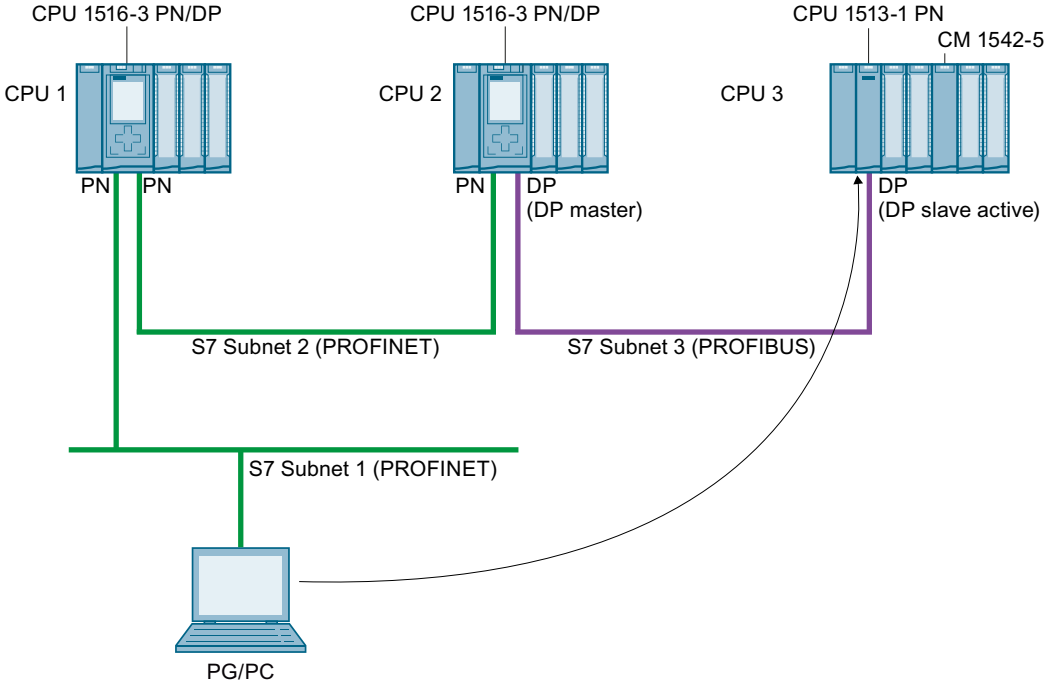

Figure 12-2 S7 routing: PROFINET - PROFIBUS

S7 routing for HMI connections

You have the option of setting up an S7 connection from an HMI to a CPU via different subnets (PROFIBUS and PROFINET or Industrial Ethernet). In the following figure, CPU 1 is the S7 router between S7 subnet 1 and S7 subnet 2.

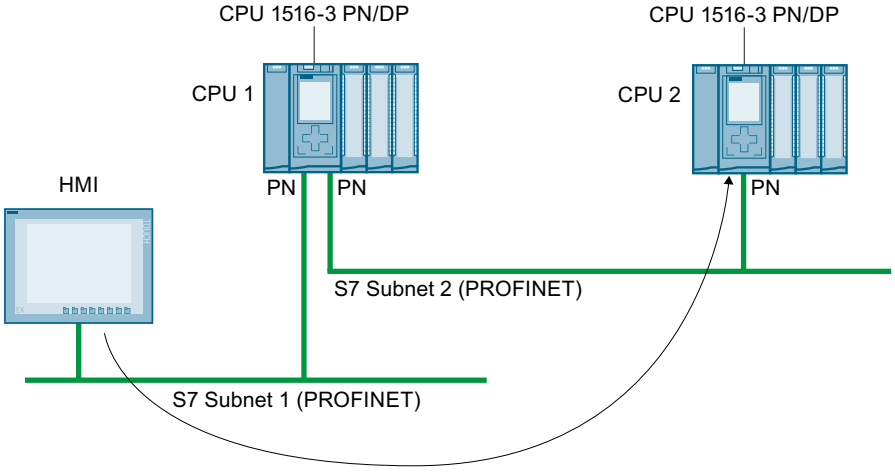

Figure 12-3 S7 routing via HMI connections

S7 routing for CPU-CPU communication

You have the option of setting up an S7 connection from a CPU to another CPU via different subnets (PROFIBUS and PROFINET or Industrial Ethernet). The procedure is described based on examples in the section S7 communication (Page 138).

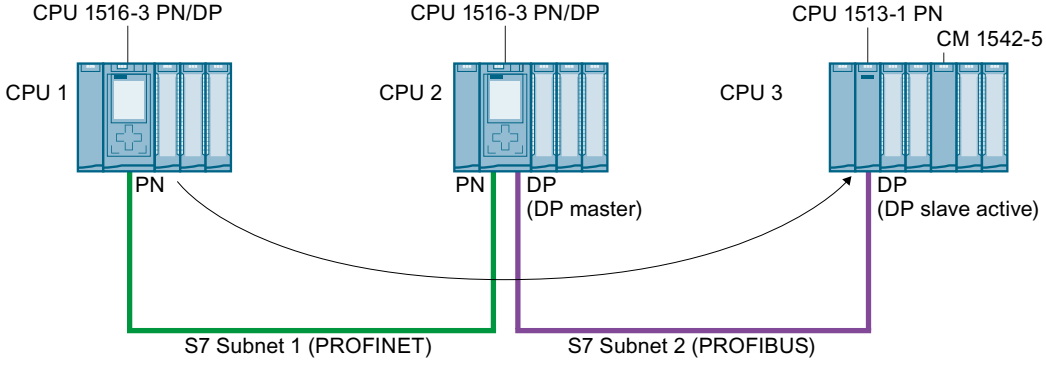

Figure 12-4 S7 routing via CPU-CPU communication

Using S7 routing

For the CPU, select the PG/PC interface and the S7 subnet in the "Go online" dialog of STEP 7. S7 routing is performed automatically.

Number of connections for S7 routing

The number of connections available for S7 routing in the S7 routers (CPUs, CMs or CPs) can be found in the technical specifications in the manuals of the relevant CPU/CM/CP.

S7 routing: Example of an application

The figure below shows the example of an application for remote maintenance of a system using a PG. The connection is made here beyond two S7 subnets via a modem connection.

You configure a remote connection via TeleService in STEP 7 using "Online access" or "Go online".

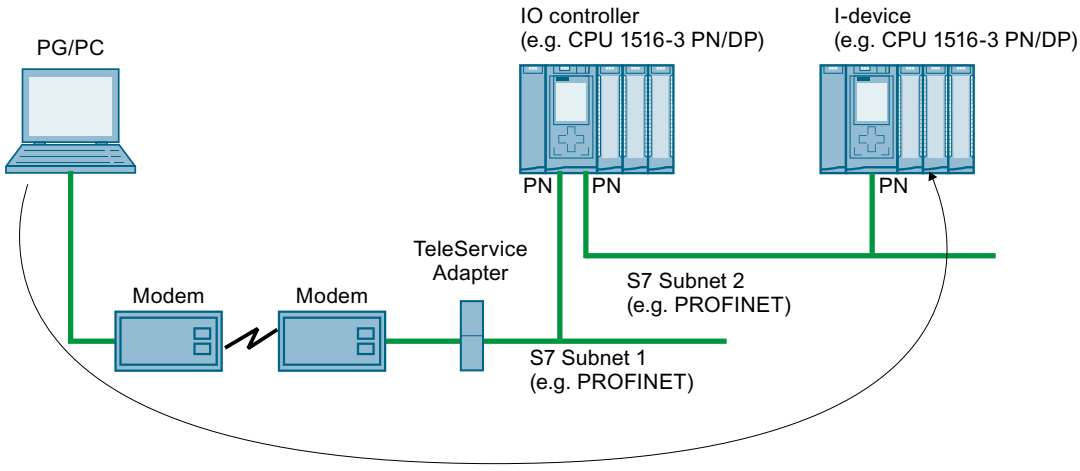

Figure 12-5 Remote maintenance of a plant using TeleService

More information

- The allocation of connection resources with S7 routing is described in the section Allocation of connection resources (Page 372).
- You can find more information on setting up TeleService in the STEP 7 online help.
- For information on HMI communication, refer to the section HMI communication (Page 113).
- You can find more information on S7 routing and TeleService adapters when you search the Internet using the following links:
  - Device manual Industrial Software Engineering Tools TS Adapter IE Basic (https://support.industry.siemens.com/cs/us/en/view/51311100)
  - Downloads for the TS Adapter (https://support.industry.siemens.com/cs/us/en/ps/16006/dl)

12.3 IP forwarding

Forwarding of IP packets with IP forwarding

IP forwarding is a function of devices to forward IP packets between two connected IP subnets.

Enable/disable the IP forwarding function in STEP 7. When IP forwarding is enabled, the S7-1500 CPU forwards received IP packets not addressed to the CPU to locally connected IP subnets or to a configured router.

The following figure shows how a programming device accesses data of an HMI device. Programming device and HMI device are located in different IP subnets. The IP subnets are connected to the two interfaces X1 and X2 of the CPU.

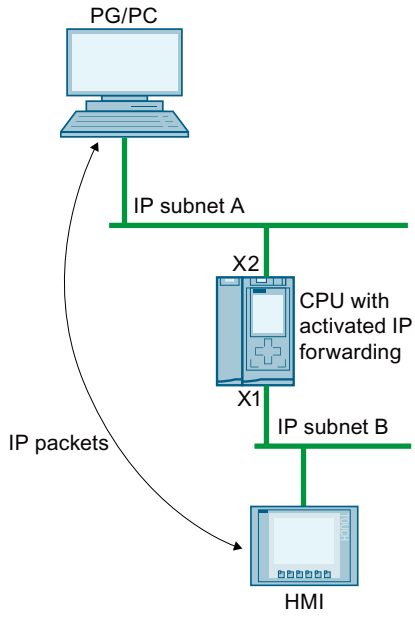

Figure 12-6 Access of a programming device to an HMI via IP forwarding

Areas of application

- Easy access from the control level to the field level for configuration and parameter assignment of field devices, e.g. via PDM or web browser
- Simplified integration of devices for remote access, e.g. for diagnostics during remote maintenance or firmware update

Requirements for using IP forwarding

- S7-1500 CPU as of firmware version V2.8
- Number of Ethernet interfaces:
  - The CPU has at least two Ethernet interfaces.
  - Or the CPU has one Ethernet interface, and a CP 1543-1 as of firmware version V2.2 provides the other Ethernet interface. In this case, the "Access to PLC via communication module" function must be enabled for the CP in the CPU.
- IP forwarding is enabled.
- Suitable standard gateways/routes are configured in each participating device along the outgoing and return paths of the IP packets.

IP route table

When IP forwarding is enabled, the CPU forwards received IP packets that are not addressed to itself. How the CPU forwards the IP packets is defined in its internal IP route table.
The CPU automatically creates the IP route table from the following information of the loaded hardware configuration:

- IP configuration of the Ethernet interfaces
- Configured router

Example of a configuration with IP forwarding

The following figure shows a sample configuration along with the required IP address settings and router settings.

- A PC on the IP subnet 192.168.4.0 communicates with an HMI device on the IP subnet 192.168.2.0.
- The IP address of a router ("Standard Gateway") is configured at the CPU, Ethernet interface X3; in the figure below it is the device that is designated as "IP Router".
  In STEP 7, you configure a router in the interface properties under "Ethernet Addresses" > "IP Protocol".

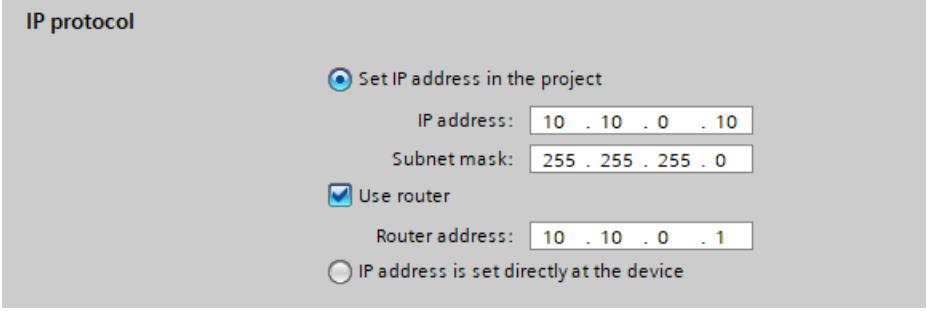

Figure 12-7 Configuring the router

- For the PC, the IP router, the IO device and the HMI device, the IP addresses of a standard gateway or the corresponding routes are also entered.

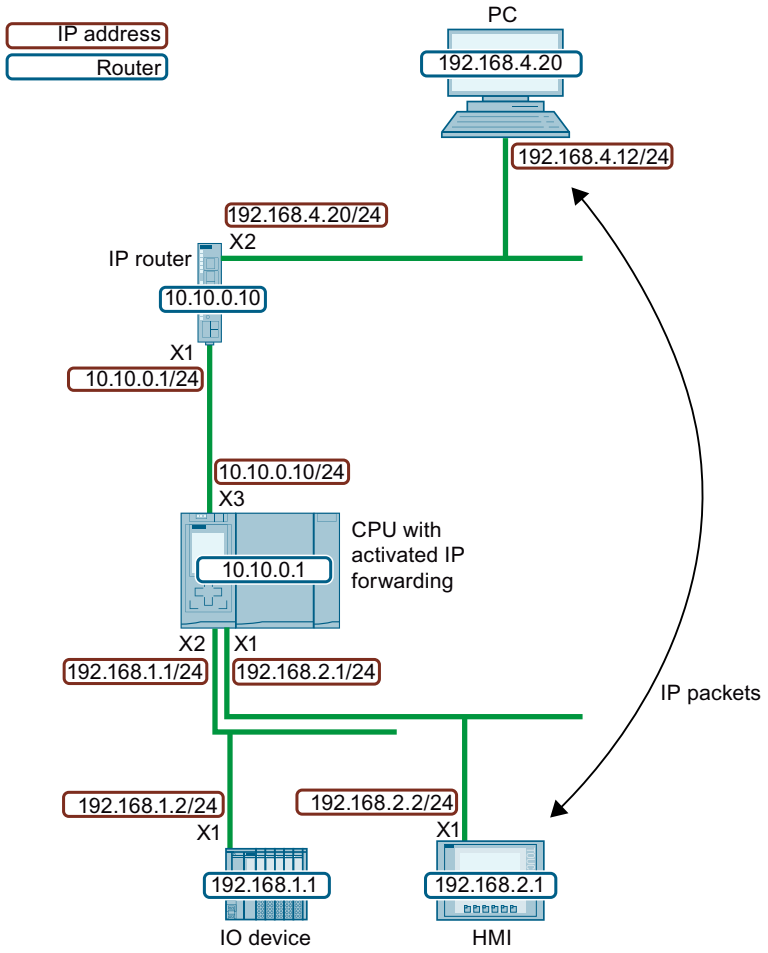

Figure 12-8 Sample configuration

This example configuration results in the following IP routing table for the CPU.

Table 12-1 IP route table of the CPU

Network destination	Interface	Gateway
0.0.0.0/0	10.10.0.10	10.10.0.1
192.168.1.0/24	192.168.1.1	-
192.168.2.0/24	192.168.2.1	-
10.10.0.0/24	10.10.0.10	-

For IP communication between the PG/PC and the HMI device, you need to set up additional IP routes to the IP subnet of the HMI device both in the PC and in the IP router. In the HMI device, you configure the IP address of the CPU interface X1 as the standard gateway.

In a Windows computer, for example, you set up an additional IP route from the command prompt using the command "route add <destination IP subnet> mask <subnet mask> <gateway>". However, you need certain access rights for this. For this example, enter the following prompt:

- "route add 192.168.2.0 mask 255.255.255.0 192.168.4.20"

In an IP router, you set up additional routes, e.g. via a web interface. Set up the following route for this example:

- Destination IP subnet: 192.168.2.0
- Subnet mask: 255.255.255.0
- Gateway: 10.10.0.10

Restrictions

You cannot configure any additional IP routes other than the router ("Standard Gateway") for an S7-1500 CPU. The network destination is either a connected IP subnet, or the network destination can be reached via exactly one configurable router. Because the S7-1500 CPU does not support additional IP routes, you cannot build bi-directional IP router cascades.

In the following configuration, you can configure either "Router 1" or "Router 2" in the CPU. "Router 1" is configured as an example. In this case, you cannot configure "Router 2". IP communication between the PC and the HMI device is not possible because the route is not continuous in both directions.

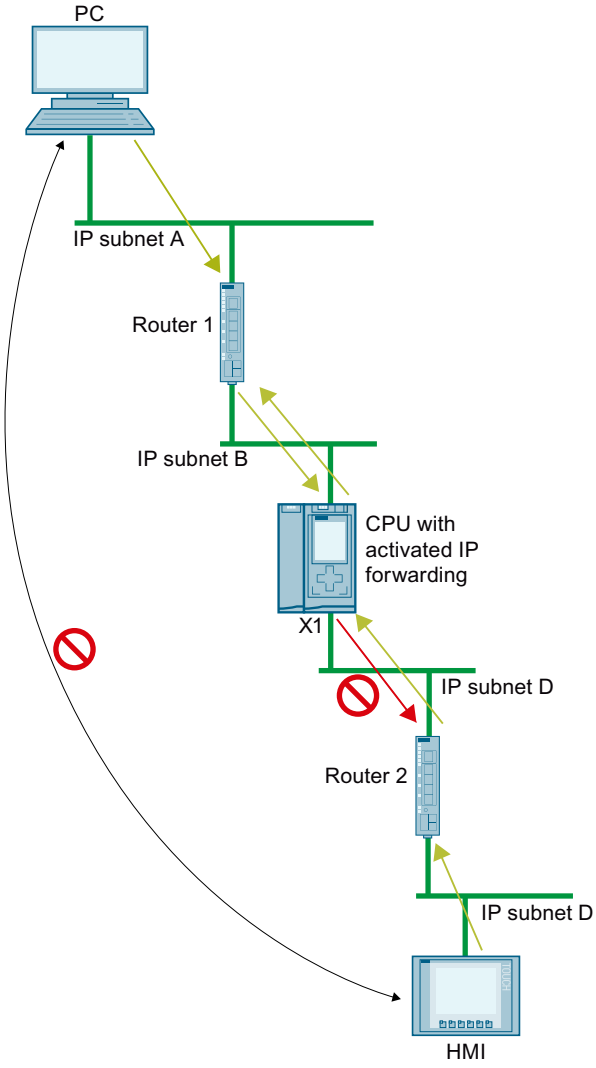

Figure 12-9 Unsupported IP router cascade

IP forwarding via the interface of a CP

IP forwarding also works via the interface of a CP. For this you have to activate the "Access to PLC via communication module" function for this CP in the CPU.

How you enable the "Access to PLC via communication module" function is described in the online help of STEP 7.

Reaching C/C++ Runtime of the CPU 1518 4 PN/DP MFP via interfaces X1 or X2

If you activate PN/DP MFP IP forwarding for the CPU 1518 4 PN/DP, you will not only reach devices in the IP subnet of interface X3 via interfaces X1 and X2, but also C/C++ Runtime. From the C/C++ Runtime of the CPU 1518 4 PN/DP MFP, you reach all devices in the IP subnets of the interfaces X1, X2 and X3.

Conditions:

- IP forwarding is enabled for the CPU 1518 4 PN/DP MFP.
- The IP address of C/C++ Runtime and the IP address of interface X3 are located in the same IP subnet.
- The routes to the IP subnets at X1 and X2 are entered in C/C++ Runtime.
  In C/C++ Runtime, enter a route with the following command: "Route add-net <destination IP subnet> mask <subnet mask> gw <gateway>

The following figure shows a configuration in which a PC accesses the C/C++ Runtime of CPU 1518-4 PN/DP MFP via interface X2.

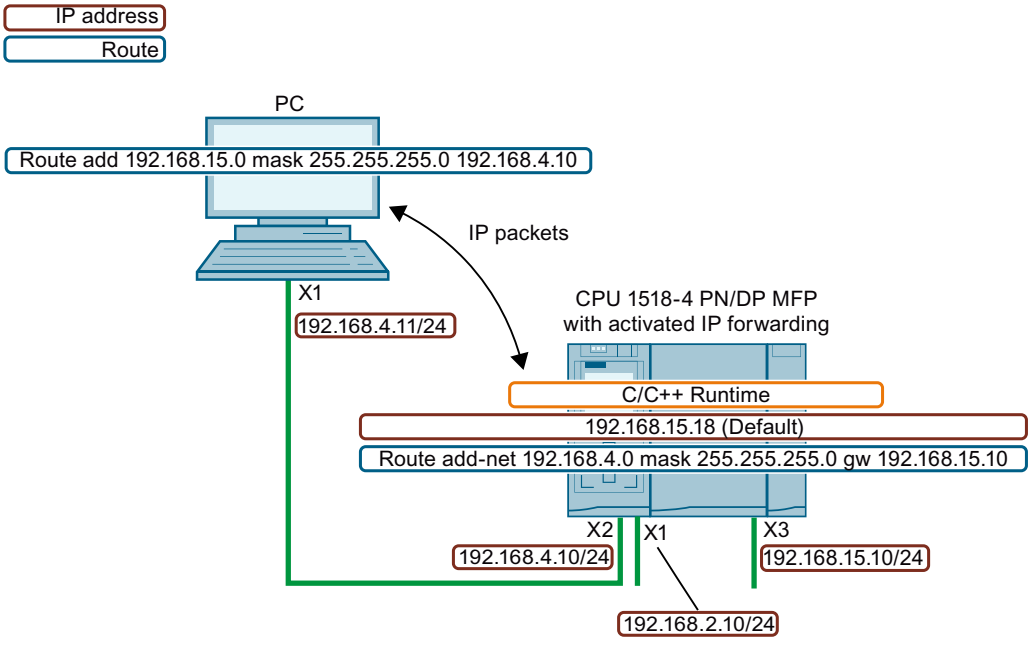

Figure 12-10 Access to C/C++ Runtime via interface X2

Take network security into account for IP forwarding

If you activate IP forwarding for a CPU, you enable "external" access to devices that are actually only accessible and controlled by the CPU. These devices are therefore usually not protected against attacks.

The following figure shows how to protect your automation system against unauthorized access.

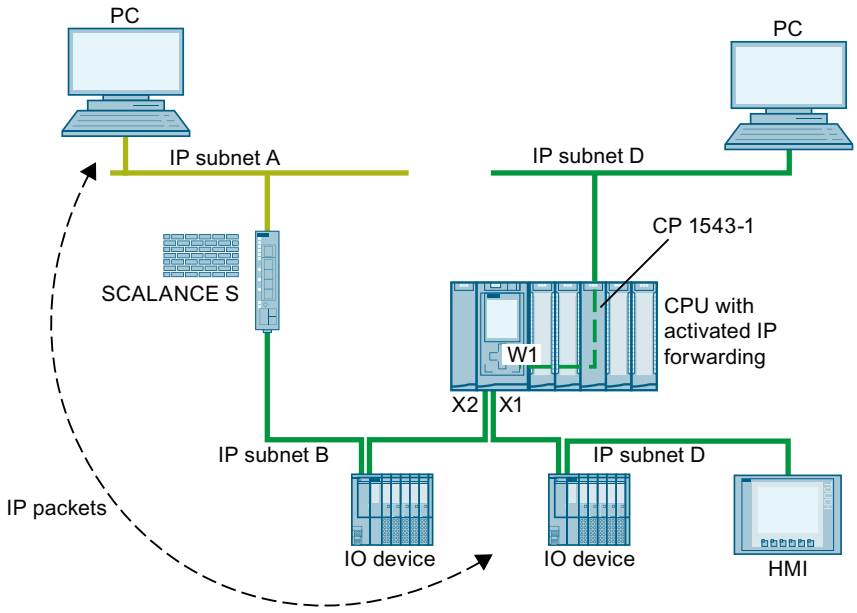

Figure 12-11 Network security for IP forwarding

- The CPU accesses all devices within the dark green IP subnets B and C close to the CPU via the interfaces X1 and X2.
- A SCALANCE S router is configured in the CPU. The CPU accesses the devices in the remote, light green IP subnet A via the router.
- The "Access to PLC via communication module" function is enabled for the CP 1543 in the CPU. The CPU reaches all devices within the IP subnet D via W1 interface.

If IP forwarding is activated in the CPU, a device from IP subnet A can access any device within IP subnets B, C and D close to the CPU.

Protect your automation system and connected devices against unauthorized access from outside.

Separate the CPU-related IP subnets from the remote IP subnets with a firewall. For example, use the SCALANCE S security modules with integrated firewall.
This application example (https://support.industry.siemens.com/cs/ww/en/view/22376747) describes how to protect an automation cell with a firewall using the SCALANCE S602 V3 and SCALANCE S623 security modules.

Enabling/disablng IP forwarding

To enable IP forwarding, proceed as follows:

1. Select the CPU in the network view of STEP 7 (TIA Portal).
2. In the properties of the CPU of the Inspector window, navigate to "General" > "Advanced Configuration" > "IP forwarding".
3. In the "Configuration IPv4 Forwarding" area, select the check box "Activate IPv4 for interfaces of this PLC".

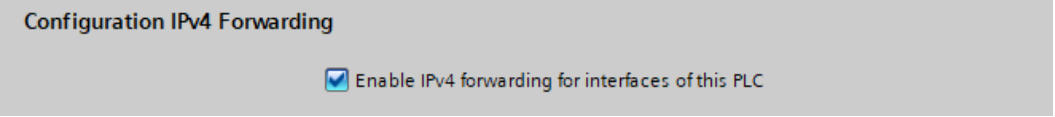

Figure 12-12 Enabling IP forwarding

Result: IP forwarding is enabled for all interfaces of the S7-1500 CPU.

You disable IP forwarding by clearing the check box "Enable IPv4 forwarding for interfaces of this PLC".

12.4 Data record routing

Definition of data record routing

Data can be sent over PROFINET from an engineering station to field devices via multiple networks. Since the engineering station addresses the field devices using standardized records and these records are routed via S7 devices, the term "data record routing" is used to refer to this type of routing.

The data sent using data record routing include the parameter assignments for the participating field devices (slaves) and device-specific information (e.g. setpoint values, limit values).

Data record routing is used, for example, when field devices of different manufacturers are used. The field devices are addressed using standardized data records (PROFINET) for configuration and diagnostics.

Data record routing with STEP 7

You can perform data routing with STEP 7 by calling a device tool (for example, PCT) via the TCI interface (Tool Calling Interface) and passing call parameters. The device tool uses the communication paths that STEP 7 also uses for communication with the field device.

No configuration is required for this type of routing except the installation of the TCI tools on the STEP 7 computer.

Example: Data record routing with the Port Configuration Tool (PCT)

You can use the Port Configuration Tool (PCT) to configure the IO link master of the ET200 and assign parameters to connected IO link devices. The subnets are connected via data record routers. Data record routers are, for example, CPUs, CPs, IMs, IO link master.

You can learn about the constellations of data record routers supported by the PCT in this FAQ (https://support.industry.siemens.com/cs/us/en/view/87611392).

The figure below shows an example configuration with the data record routing with PCT.

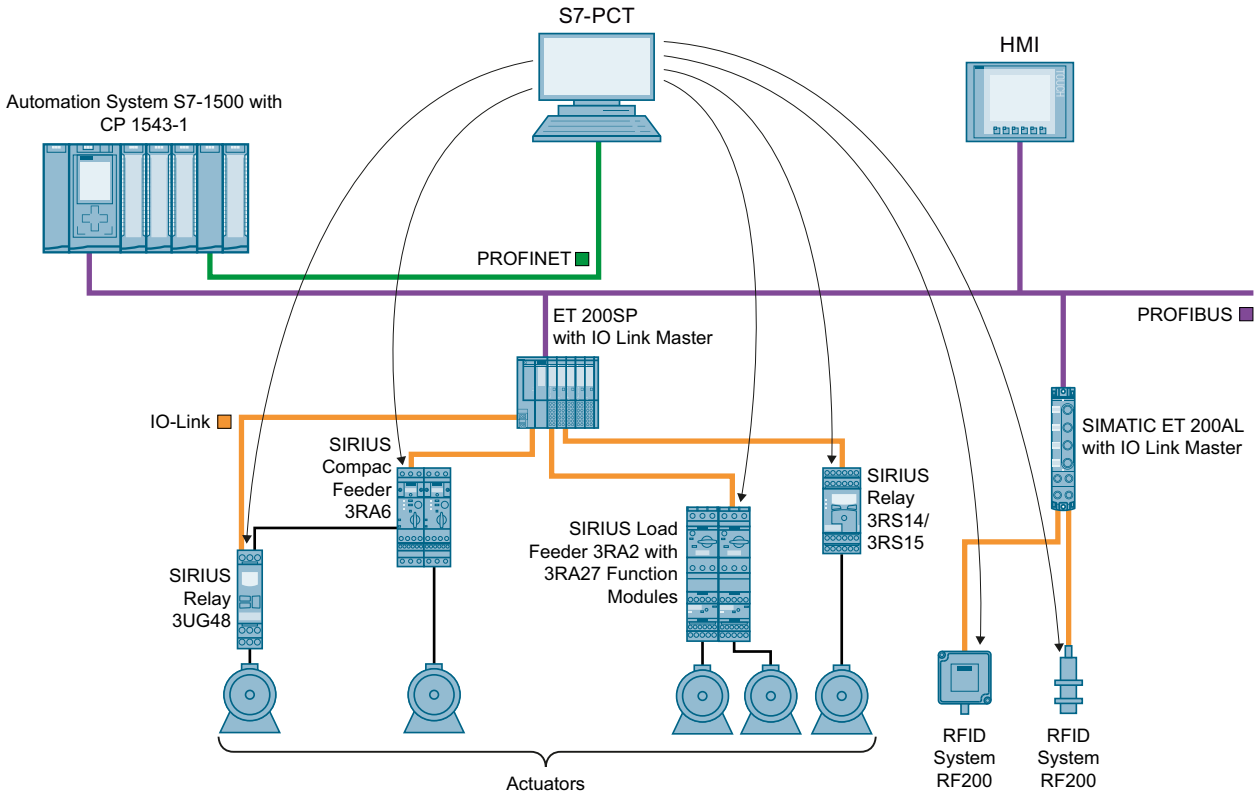

Figure 12-13 Example configuration for data record routing with PCT

Additional information

- The differences that exist between "normal" routing and data record routing are described in this FAQ (https://support.industry.siemens.com/cs/ww/en/view/7000978).
- Whether or not the CPU, CP or CM you are using supports data record routing can be found in the relevant manuals.
- The allocation of connection resources with data record routing is described in the section Allocation of connection resources (Page 372).
- You can find additional information on configuration with STEP 7 in the STEP 7 online help.

12.5 Virtual interface for IP-based applications

As of firmware version 2.8, the S7-1500 CPU offers the option of reaching its IP-based application, such as OPC UA, not only via its local (PN) interfaces, but also via the interfaces of communications processors in the same station. The supported communications processors can be found in the requirements. A communication partner reaches these IP-based applications via a virtual interface that can be configured in the TIA Portal as of version V16. The virtual interface is called W1 (according to IEC 81346-2).

Features of the virtual interface

The virtual interface is not a fully diagnosable interface with the familiar properties of conventional interfaces. The virtual interface is not displayed in the graphical views, because the internal connection via the backplane bus does not represent an S7 subnet and does not have any ports. A physical connection by means of a network cable therefore cannot be established.

The IP address of the virtual interface is displayed (in the TIA Portal, in the CPU display) and can be configured.

The following communication options can be used via the virtual interface W1:

- OPC UA (client and server)
- Programmed OUC connections
- Programming device/HMI communication
- Partner accesses from S7 CPUs via PUT/GET instructions

The activated interface can be used in dialogs where IP-based connections are configured.

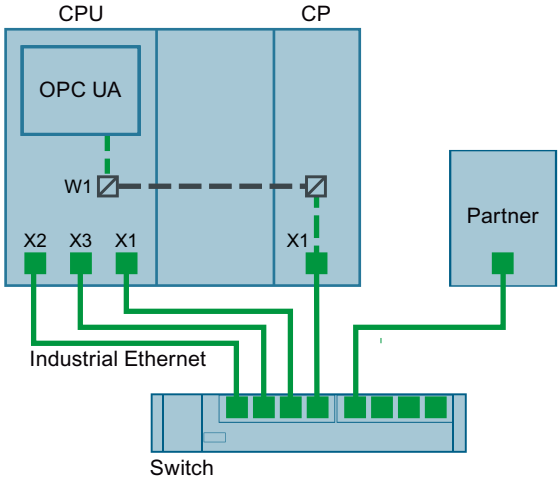

Figure 12-14 Principle of the virtual interface

Compared to conventional interfaces, the virtual interface has the following restrictions:

- No access to the web server over the virtual interface.
- Online backup is not possible via a connected programming device with the TIA Portal.
- If the CPU and communication partners are connected via the virtual interface, they cannot exchange data via LLDP (Link Layer Discovery Protocol).
- The S7 routing service does not use the virtual interface W1.

Requirement

For a CPU service to be accessible via the Ethernet interface of a CP, the following requirements must be fulfilled:

- S7-1500 CPU firmware V2.8 or higher
- CP 1543-1 firmware V2.2 or higher

Recommendation: Use a CP 1543-1 with firmware V3.0 or higher. As of this version, the security functions (firewall) are also available for the virtual interface and no additional firewall needs to be installed between the station and an insecure network.

R/H CPUs do not support this function because R/H CPUs do not support CPs.

Configuration of the virtual interface W1

In the properties of an S7-1500 CPU as of firmware V2.8, you can assign a plugged communication module to the virtual interface W1 under "Advanced Configuration > Access to PLC via communications module". You can then use this for external access to the CPU. If no CPs are plugged in or the plugged CPs do not support access to the CPU, the selection is empty.

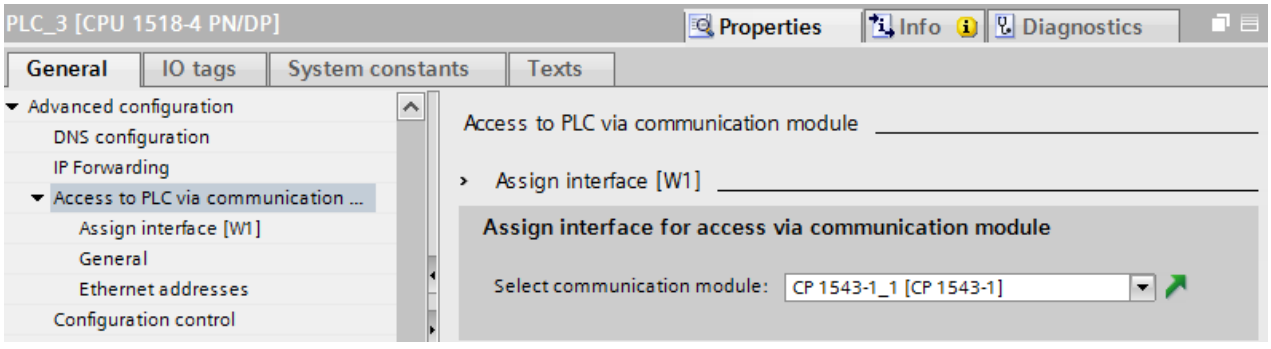

Figure 12-15 Selecting the CP in the CPU properties

After selecting the CP, the specifications and parameters for the virtual interface are displayed. Here, you can edit the settings for the IP protocol and the PROFINET parameters.

- The IP subnet is freely selectable, just like with the CP. The IP subnet is entered via the subnet mask and IP address of the virtual interface.
- When entering the IP subnet for the virtual interface, note that you are not using the same IP subnet as for the local interfaces of the CPU.

Once the IP address is entered, it is shown in the properties dialog of the OPC UA server in the list of server addresses. These settings provide the CPU with the new virtual interface W1, via which the CPU services described above, such as the OPC UA server, can be accessed via a communications module. The corresponding connections and S7 communication (e.g. HMI and BSEND, BRCV) are made via this interface. The OPC UA server does not allow selection of a specific interface (selection via an IP address), either all or none are possible.

NOTE

The IP address of the virtual interface is not listed as W1 in the device display under the currently displayed local interfaces (Xn) but is available under "Addresses" in the "Settings" section. The virtual interface is also visible when no CP is plugged or when the virtual interface is not activated. If no IP suite is available, the IP address and the subnet mask are 0.0.0.0.

If you change the configured and loaded IP address parameters of the virtual interface via display, T_CONFIG instruction or online, the loaded configuration is active again after the CPU restarts.

Configuration changes on the CP

A change of the assigned communication module may have an effect on the configuration of the virtual interface:

- In the properties of the CPU:
  - Assignment of a different CP: The configuration is used for the new CP.
  - Deselect the assigned CP: The virtual interface W1 is deactivated and the configuration is lost.
    When a CP is assigned again, the configuration must be performed again.
- On the device:
  - Moving the CP: If the CP is only moved to another slot of the device, the configuration continues to be valid.
  - Removing the CP: If the CP is deleted or moved to another device, the configuration is retained. In the drop-down list of the CPU, the CP is displayed as missing and compiling the configuration indicates an error. The missing CP can be deselected or assigned to another CP.

Display in the diagnostics and the system constants

The virtual interface W1 is displayed in the diagnostics view under "Online & Diagnostics". The hardware ID of the virtual interface is displayed in the system constants of the CPU properties.

Settings in the communications module (CP 1543-1 as of firmware V3.0)

As of firmware V3.0, you can use the CP's internal firewall to secure data traffic via the virtual interface. To activate the firewall in the communications module, proceed as follows in the protected project:

1. Select the communications module in the STEP 7 work area.
2. In the Inspector window, go to "Properties > Security".
3. Activate the "Enable security functions" option.
   The configurable security functions now appear in the Inspector window.
4. Activate the options "Enable firewall".
   In the Inspector window you can now allow the use of the virtual interface W1.

You can only secure data traffic via the virtual interface W1 of the CPU for the OPC UA service.

NOTE

Checking the manual configuration

If the firewall is enabled, you need to manually check whether the desired services are allowed by the firewall. Only activate those services for the IP and MAC filters that you also want to access over the CP interface. See the notes on security settings and firewall rules of the S7-1500 CPs in the info system of the TIA Portal.

Settings in the communications module (CP 1543-1, firmware V2.2, < V3.0)

The security functions of the CP 1543-1 with a firmware version lower than V3.0 cannot secure data traffic via the virtual interface. Although you can activate the security functions in the TIA Portal, such a configuration cannot be compiled.

NOTICE
Connecting to non-secure networks If you connect the CP to a non-secure network, it is absolutely necessary to connect an additional firewall between the CP and the non-secure network. For example, use the security modules SCALANCE S602 V3 and SCALANCE S623 with integrated firewall.

Connection resources 13

13.1 Connection resources of a station

Introduction

Some communications services require connections. Connections occupy resources in the automation system (station). The connection resources are made available to the station by the CPUs, communications processors (CPs) and communications modules (CMs).

Connection resources of a station

The connection resources available depend on the CPUs, CPs and CMs being used and must not exceed a maximum number per station.

The maximum number of resources of a station is determined by the CPU.

Reserved connection resources

Each CPU has reserved connection resources for PG, HMI and Web server communication. This ensures, for example, that a PG can always establish at least one online connection with the CPU regardless of how many other communications services are already using connection resources.

Dynamic connection resources

In addition, dynamic resources exist. The difference between the maximum number of connection resources and the number of reserved connection resources is the maximum number of dynamic connection resources.

The communication services PG Communication, HMI Communication, S7 Communication, Open User Communication, Web Communication, OPC UA Client/Server Communication and other communication from the pool of dynamic connection resources are used.

The figure below shows an example of how individual components make connection resources available to an S7-1500 station.

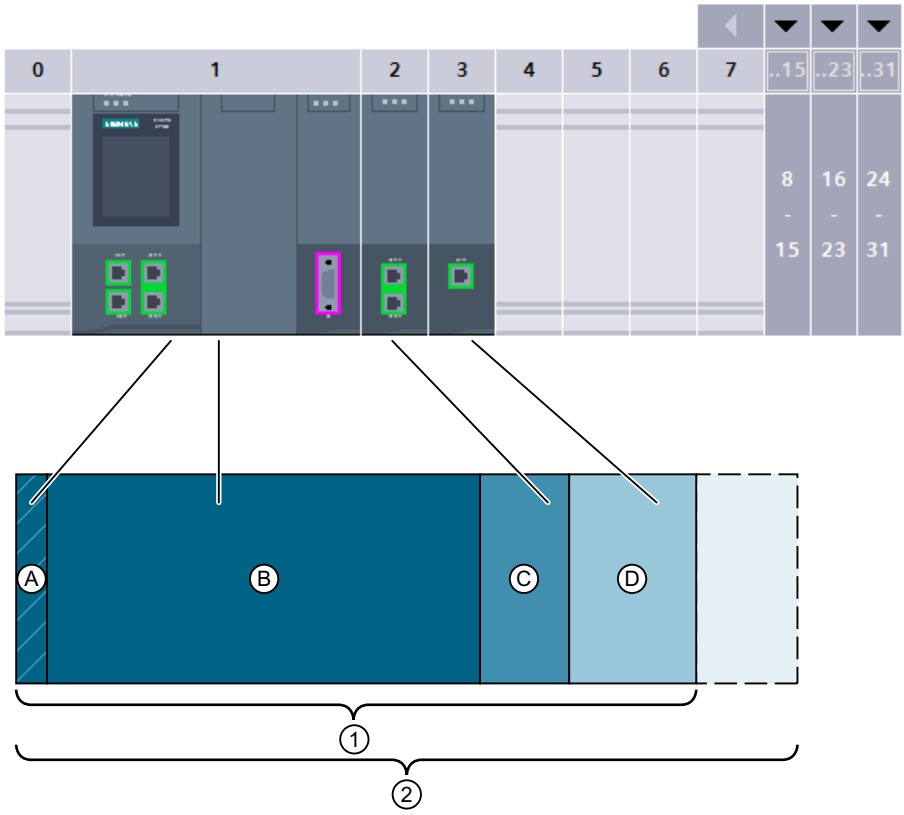

① Available connection resources of the station, of which

- A Reserved connection resources of the station
- A + B Connection resources of CPU 1518
- C Connection resources of communications module CM 1542-1
- D Connection resources of communications processor CP 1543-1

② Maximum communications resources of the station using the example of a configuration from CPU 1518, CM 1542-1 and CP 1543-1

Figure 13-1 Connection resources of a station

Number of connection resources of a station

Table 13-1 Maximum number of connection resources supported for some CPU types

Connection resources of a station	1511 1511C	1512C 1513	1515	1516	1517	1518
Maximum connection resources of the station	96	128	192	256	320	384
of which reserved	10					
of which dynamic	86	118	182	246	310	374
Connection resources of the CPU	64	88	108	128	288	320

Connection resources of a station	1511 1511C	1512C 1513	1515	1516	1517	1518
Max. additionally usable connection resources by plugging in CMs/CPs	32	40	84	128	32	64
Additional connection resources CM 1542-1	64					
Additional connection resources CP 1543-1	118					
Additional connection resources CM 1542-5	40					
Additional connection resources CP 1542-5	16					

The number of connection resources that a CPU or a communication module supports is specified in the device manuals in the Technical Specifications.

Example

You have configured a CPU 1516-3 PN/DP with a CM 1542-1 communication module and a CP 1542-5 communication processor.

- Maximum connection resources of the station: **256**
- Available connection resources:
  - CPU 1516-3 PN/DP: 128
  - CM 1542-1: 64
  - CP 1542-5: 16
  - Total: **208**

The setup provides 208 connection resources. By adding further communication modules, the station can support a maximum of 48 additional connection resources.

Reserved connection resources

10 connection resources are reserved for stations with S7-1500 CPU, ET 200SP CPU and ET 200pro CPU based on S7-1500:

- 4 for PG communication required by STEP 7, for example, for test and diagnostics functions or downloading to the CPU
- 4 for HMI communication which are occupied by the first HMI connections configured in STEP 7
- 2 for communication with the Web server

More information

Information on the connection resources of the S7-1500R/H redundant system is available in the section Connection resources of the redundant system S7-1500R/H (Page 391).

13.2 Allocation of connection resources

Overview - occupation of connection resources

The following figure shows how different connections occupy the resources of the S7-1500.

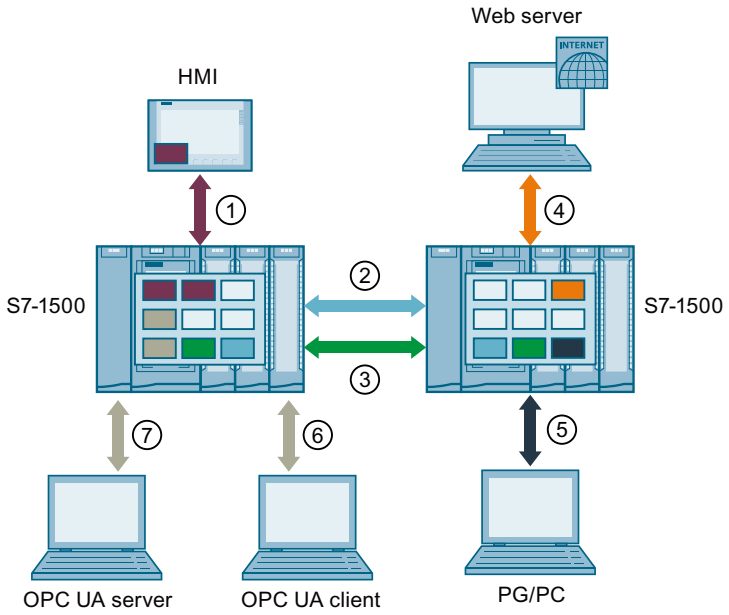

① HMI communication: See below.

② Open User Communication: Connections of Open User Communication occupy a connection resource in every end point.

③ S7 communication: Connections of S7 communication occupy a connection resource in every end point.

④ Web communication: The Web server connection occupies at least one connection resource in the station. The number of occupied connections depends on the browser.

⑤ PG communication: The PG connection occupies one connection resource in the station.

⑥ OPC UA client/server communication: Connection resource allocation for the server, see below

⑦ OPC UA client/server communication: Connection resource allocation for the client, see below

Connection resource for HMI communication

Connection resource for Open User Communication

Connection resource for S7 communication

Connection resource for Web communication

Connection resource for PG communication

Connection resources for OPC UA server communication

Figure 13-2 Allocation of connection resources

Connection resources for HMI communication

With HMI communication, the occupation of connection resources in the station depends on the HMI device being used.

Table 13-2 Maximum occupied connection resources for different HMI devices

HMI device	Maximum occupied connection resources of the station per HMI connection
Basic Panel	1
Comfort Panel	2[1]
RT Advanced	2[1]
RT Professional	3

[1] If you do not use system diagnostics or alarm configuration, the station occupies only one connection resource per HMI connection.

Example: You have configured the following HMI connections for a CPU 1516-3 PN/DP:

- Two HMI connections to an HMI TP700 Comfort. (2 connection resources each)
- One HMI connection to an HMI KTP1000 Basic. (1 connection resource)

In total 5 connection resources are occupied for HMI communication in the CPU.

Connection resources for OPC UA client communication

Each connection that the OPC UA client of the CPU has established to an OPC UA server occupies a connection resource in the station.

When establishing and closing an OPC UA connection, the OPC UA client temporarily occupies an additional connection resource. According to RFC 793, this connection resource is released again after a wait of approx. 60 seconds.

NOTE

Lack of resources due to temporary connection resources

A lack of connection resources occurs in the following situation:

- The OPC UA client of the CPU establishes or closes several connections simultaneously.
- The number of available connection resources of the station is insufficient for permanent and temporary connection resources of the OPC UA client communication.

Ensure that there are always enough available connection resources in the station to establish and end OPC UA connections.

Measures:

- Plan enough reserve for the OPC UA client connections.
- If necessary, establish or close the OPC UA connections one after the other.

Connection resources for routing

To transfer data beyond S7 subnets ("S7 routing"), an S7 connection is established between two CPUs. The S7 subnets are connected via gateways known as S7 routers. CPUs, CMs and CPs in S7-1500 are S7 routers.

The following applies for a routed S7 connection:

- A routed connection occupies one connection resource each in both end points. STEP 7 shows these connection resources in the "Connection resources" table.
- On the S7 router, two special connection resources are occupied for S7 routing. STEP 7 does not show the special connection resources for S7 routing in the "Connection resources" table. The number of resources for S7 routing depends on the CPU. You will find the resources for S7 routing in the technical specifications of the CPU in "Number of S7 routing connections".

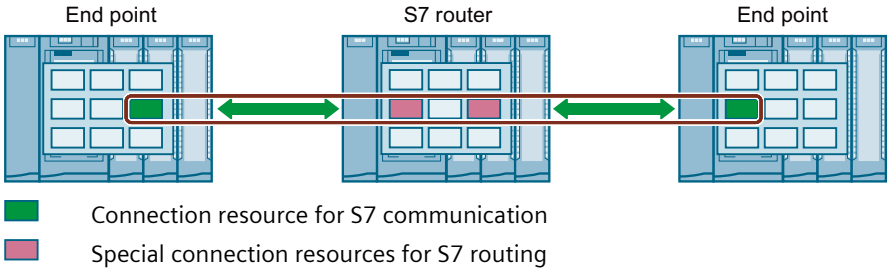

Figure 13-3 Connection resources with S7 routing

Data record routing also enables transfer of data beyond S7 subnets from an engineering station connected to PROFINET to various field devices via PROFIBUS.

With data record routing, as with S7 routing, two of the special connection resources for S7 routing are also occupied on every data record router.

NOTE

Connection resources with data record routing

With data record routing, on the data record router, two special connection resources for S7 routing are occupied. Neither the data record connection nor the allocated connection resources are displayed in the table of connection resources.

When are connection resources occupied?

The time for the occupation of connection resources depends on how the connection is set up (see section Setting up a connection (Page 37)).

- **Programmed setup of a connection**:
  As soon as an instruction to establish a connection is called in the user program (TSEND_C/TRCV_C or TCON), a connection resource is occupied.
  With suitable parameter assignment of the CONT parameter of the TSEND_C/TRCV_C instructions or by calling the TDISCON instruction, the connection can be terminated following data transfer and the connection resource is available again. When the connection is terminated, the connection resources on the CPU/CP/CM are available again.
- **Configured connections** (e.g. S7 connection):
  If you have configured a connection in STEP 7, the connection resource is occupied as soon as the hardware configuration is downloaded to the CPU.
  After using a configured connection for data transfer, the connection is not terminated. The connection resource is permanently occupied. To release the connection resource again, you need to delete the configured connection in STEP 7 and download the modified configuration to the CPU.

- **PG connection**:
  As soon as you have connected the PG to a CPU online in STEP 7, connection resources are occupied.
- **Web server**:
  As long as you have opened the Web server of the CPU in a browser, connection resources are occupied in the CPU.
- **OPC UA server**
  Each connection to the OPC UA server of the CPU occupies a connection resource in the station. This connection resource is released immediately when the connection is terminated.
- **OPC UA client**
  Each connection that the OPC UA client of the CPU has established to an OPC UA server occupies a connection resource in the station. When an OPC UA connection is established, the OPC UA client temporarily occupies an additional connection resource. When an OPC UA connection is terminated, the connection resource is not released again until after a wait time of approx. 60 seconds in accordance with RFC 793.

Monitoring the maximum possible number of connection resources

Offline

During configuration of connections, STEP 7 monitors the occupation of the connection resources. If the maximum possible number of connection resources is exceeded, STEP 7 signals this with a suitable warning.

Online

The CPU monitors the use of connection resources in the automation system. If you establish more connections in the user program than those provided by the automation system, the CPU acknowledges the instruction to establish the connection with an error.

S7-1500 and S7-300 comparison

You will find a comparison of how the communication resources of the S7-1500 and S7-300 are managed in this FAQ (https://support.industry.siemens.com/cs/ww/en/view/109747092).

13.3 Display of the connection resources

Display of the connection resources in STEP 7 (offline view)

You can display the connection resources of an automation system in the hardware configuration. You will find the connection resources in the Inspector window in the properties of the CPU.

Connection resources

	① Station resources			② Module resour...	Module resour...	Module resour...
	Reserved		Dynamic	PLC_1 [CPU 15...	CM 1542-1_1 [..	CP 1543-1_1 [...
Maximum number of resources:		10	246	128	64	118
	Maximum	Configured	Configured	Configured	Configured	Configured
PG communication:	4	-	-	-	-	-
HMI communication:	4	4	6	6	0	4
S7 communication:	0	-	7	4	3	0
Open user communication:	0	-	13	8	5	0
Web communication:	2	-	-	-	-	-
OPC UA client/server communicatio...	0	-	-	-	-	-
Other communication:	-	-	0	0	0	0
Total resources used:		4	26	18	8	4
Available resources:		6	220	110	56	114

Figure 13-4 Example: Reserved and available connection resources (offline view)

① **Station-specific connection resources**

The columns of the station-specific connection resources provide information about the used and available connection resources of the station.

In the example, a maximum of 256 station-specific connection resources are available for the automation system.

- 10 reserved connection resources, of which 4 are already in use and a further 6 available. The used resources are divided up as follows:
  - 4 Resources for HMI communication
- 246 dynamic connection resources, of which 26 are already in use and a further 220 available.
  The used resources are divided up as follows:
  - 6 resources for HMI communication
  - 7 resources for S7 communication
  - 13 resources for Open User Communication

The warning triangle in the column of the dynamic station resources is displayed because the sum of the maximum available connection resources of CPU, CP and CM (= 310 connection resources) exceeds the station limit of 256.

NOTE

Available connection resources exceeded

STEP 7 signals the exceeding of the station-specific connection resources with a warning. To make full use of the connection resources from the CPU, CP and CM, either use a CPU with a higher maximum number of available station-specific connection resources or reduce the number of communications connections.

---

② Module-specific connection resources

The columns of the module-specific connection resources provide information about the use of resources on the CPUs, CPs and CMs of an automation system:

The display is per module and not per interface.

In the example, the CPU makes a maximum of 128 connection resources available, of which 18 are already in use and 110 still available.

The used resources are divided up as follows:

- 6 resources for HMI communication
- 4 resources for S7 communication
- 8 resources for Open User Communication

Display of the connection resources in STEP 7 (online view)

If you are connected to the CPU online, you can also see how many resources are currently being used under "Connection information".

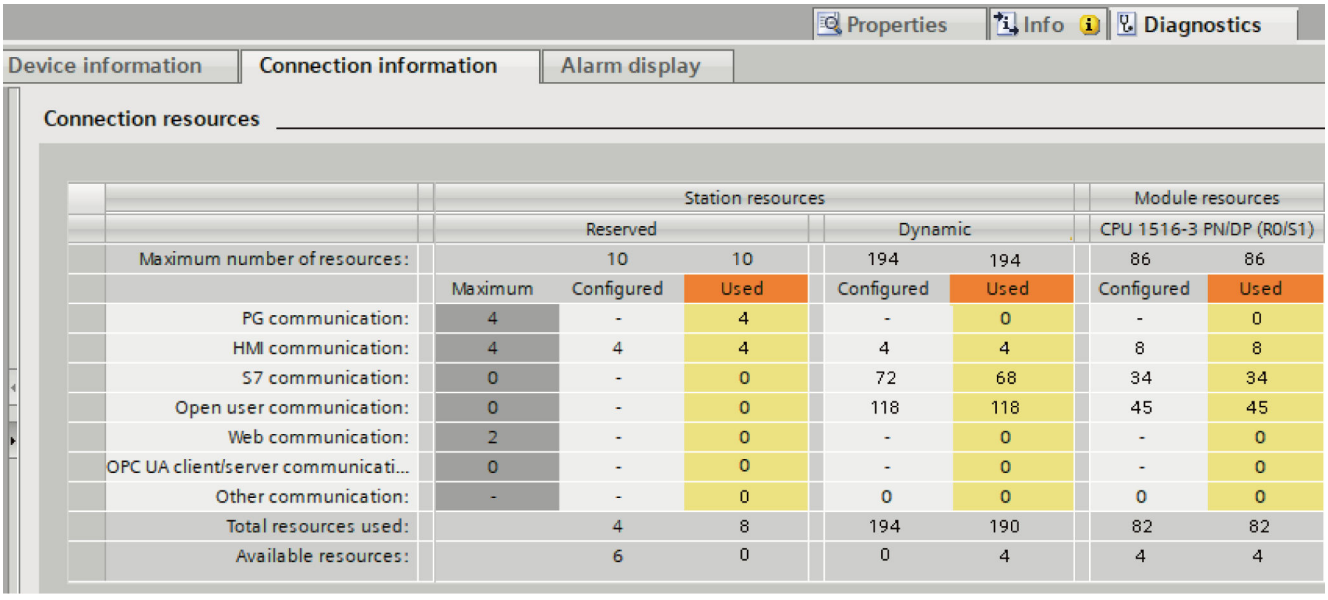

	Station resources					Module resources	
	Reserved			Dynamic		CPU 1516-3 PN/DP (R0/S1)	
Maximum number of resources:		10	10	194	194	86	86
	Maximum	Configured	Used	Configured	Used	Configured	Used
PG communication:	4	-	4	-	0	-	0
HMI communication:	4	4	4	4	4	8	8
S7 communication:	0	-	0	72	68	34	34
Open user communication:	0	-	0	118	118	45	45
Web communication:	2	-	0	-	0	-	0
OPC UA client/server communicati...	0	-	0	-	0	-	0
Other communication:	-	-	0	0	0	0	0
Total resources used:		4	8	194	190	82	82
Available resources:		6	0	0	4	4	4

Figure 13-5 Connection resources - online

The online view of the "Connection resources" table in addition to the offline view also contains columns with the connection resources currently being used. Thus, the online view

displays **all** used connection resources in the automation system, regardless of how the connection was set up.
The "Other communication" row displays connection resources assigned for communication with external devices. The table is updated automatically.

NOTE

If a routed S7 connection goes through a CPU, the required connection resources of the CPU do not appear in the table of connection resources.

Display of the connection resources for HMI

For information regarding the availability and assignment of connection resources for HMI connections, refer to the "Connection resources" properties in the Inspector window of the offline view (in the context of the HMI device).

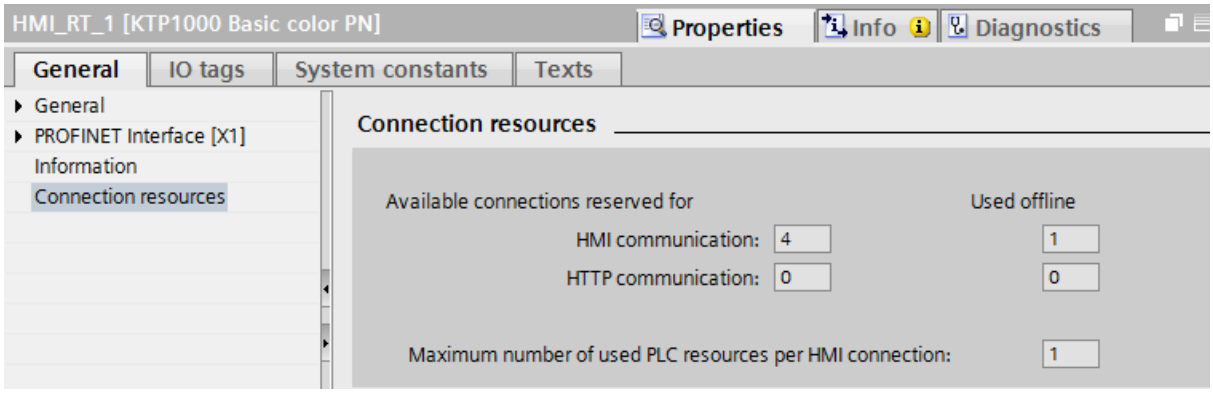

Figure 13-6 Connection resources - HMI communication

The following is displayed in the connection resources area:

- Number of available connections on the HMI reserved for HMI communication and HTTP communication
- Number of connection resources for HMI communication and HTTP communications used offline in the HMI
  If the maximum number of available connection resources for an HMI device is exceeded, a corresponding message is output by STEP 7.
- "Maximum number of used PLC resources per HMI connection". This parameter is a factor that is to be multiplied by the number of HMI connections used offline. The product is the number of HMI resources occupied on the CPU.

Displaying the connection resources in the Web server

You can display the connection resources not only in STEP 7, but also with a browser that displays the relevant page of the Web server.
You will find information on displaying connection resources in the Web server in the Web Server (https://support.industry.siemens.com/cs/us/en/view/59193560)function manual.

Diagnostics and fault correction

14

14.1 Connection diagnostics

Connections table in the online view

After selecting a CPU in the Devices & networks editor of STEP 7, you will see the status of your connections displayed in the online view of the connections table.

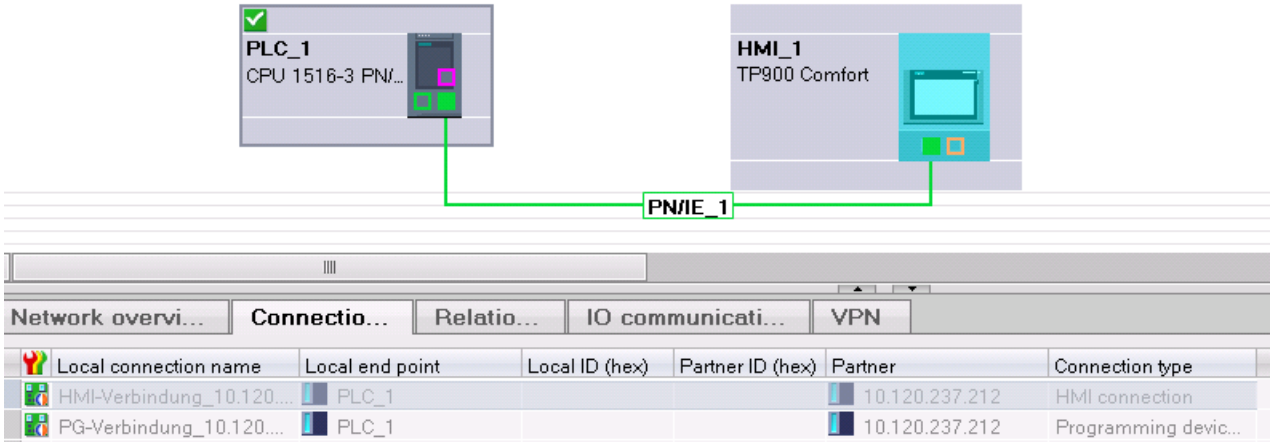

Figure 14-1 Online view of the connections table

After selecting the connection in the connections table, you obtain detailed diagnostic information in the "Connection information" tab.

"Connection information" tab: Connection details

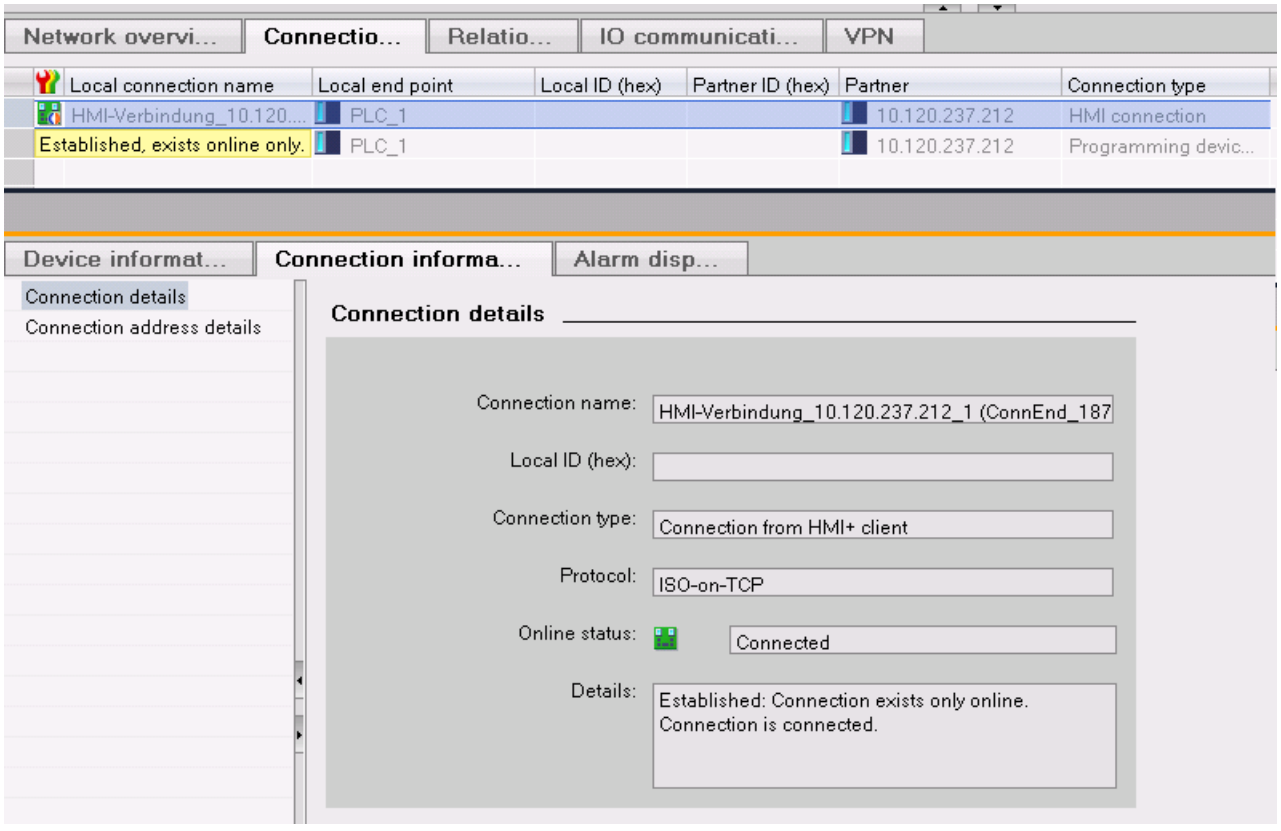

Figure 14-2 Diagnostics of connections - connection details

"Connection information" tab: Address details

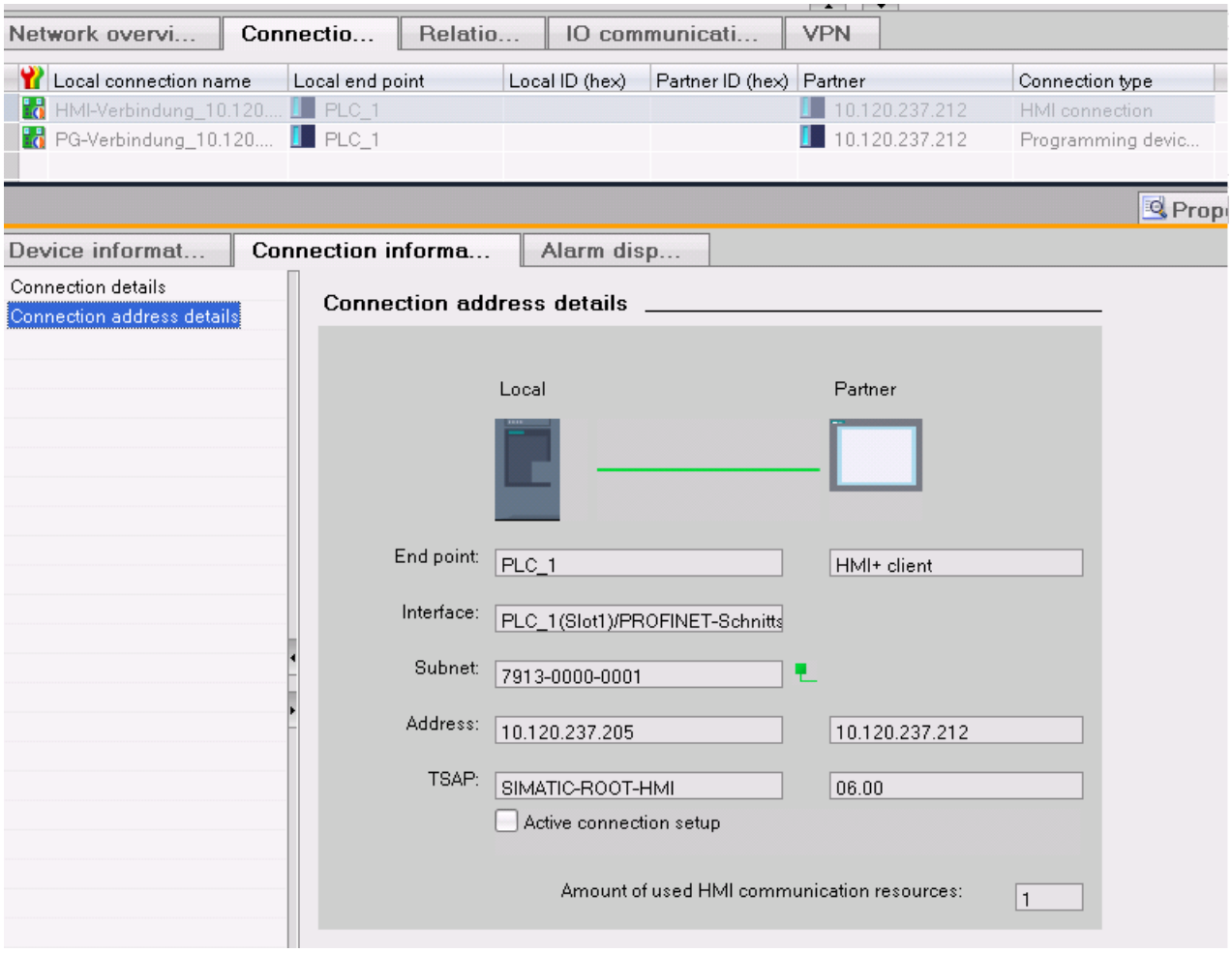

Figure 14-3 Diagnostics of connections - address details

Diagnostics via web server

You can evaluate diagnostic information from the CPU using a web browser via the integrated web server of a CPU.

On the "Communication" Web page, you will find the following information about communication via PROFINET in various tabs:

- Information on the PROFINET interfaces of the CPU (for example addresses, subnets, physical properties).
- Information on the quality of the data transfer (for example number of data packets sent/received error-free).
- Information about the allocation/availability of connection resources.
- The "Connection status" page is similar to the online view in STEP 7 and also provides an overview of all connections with detail view.

Diagnostics with the user program

When you program the T_DIAG instruction, you can evaluate diagnostic information about the configured and programmed connections of the CPU using the user program.

Additional information

You will find the description of the web server functionality in the function manual Web server (https://support.industry.siemens.com/cs/us/en/view/59193560).

14.2 Emergency address

If you cannot reach the CPU via the IP address, you can set a temporary emergency address (emergency IP) for the CPU. Via this emergency address, you can re-establish the connection with a CPU in order to load a device configuration with a valid IP address.

You can set an emergency address regardless of the protection level of the CPU

When do you need an emergency address?

Your CPU cannot be reached in the following cases:

- The IP address of your PROFINET interface is assigned twice.
- The subnet mask is set incorrectly.

Requirements

- You have selected "Set IP address in the project" for the IP protocol in the device configuration in STEP 7.
- The CPU is in STOP mode.

Restoring a valid device configuration with an emergency address

1. Set the emergency address for the interface of the CPU with a DCP tool. For example, the SIMATIC Automation Tool has a DCP command "Define IP address".
   The maintenance LED of the CPU lights up. The diagnostic buffer also shows that an emergency address was activated for an Ethernet interface.
2. Load a STEP 7 project with a valid IP address into the CPU.
3. Switch the CPU off and on again.
   The emergency address is reset.

Result

The CPU starts up with the valid IP address.

Communication with the redundant system S7-1500R/H

15

Introduction

Communication with the S7-1500R/H redundant system basically functions as with the S7-1500 standard system.

This chapter describes the special features and restrictions for communication with the S7-1500R/H redundant system.

Communication options for the S7-1500R/H redundant system

- Open User Communication via TCP/IP, UDP, ISO on-TCP and Modbus/TCP
- S7 communication as server
- HMI communication, PG communication
- Secure PG/HMI communication (see also Secure PG/HMI communication (Page 93))
- SNMP
- Time-of-day synchronization via NTP

Restrictions for communication with the S7-1500R/H redundant system

- Open User Communication:
  - no configured connections
  - No support for Secure Open User Communication
  - Email: The S7-1500R/H CPUs support only the versions < V5.0 of the "TMAIL_C" instruction. Versions from V5.0 are not supported.
  - No support of connection descriptions according to "TCON_Param"
- no OPC UA
- no S7 communication as client
- no web server
- PG communication: It is not possible to access two CPUs online at the same time. You can either access the primary CPU or the backup CPU.
- The CPUs of the S7-1500R/H do not support centrally plugged communication modules.

15.1 System IP addresses

The system IP address of the S7-1500R/H redundant system

In addition to the device IP addresses of the CPUs, the S7-1500R/H redundant system supports system IP addresses:

- System IP address for the PROFINET interfaces X1 of the two CPUs (system IP address X1)
- System IP address for the PROFINET interfaces X2 of the two CPUs (system IP address X2)
- System IP address for the PROFINET interfaces X3 of the two CPUs (system IP address X3)

You use the system IP addresses for communication with other devices (for example, HMI devices, CPUs, PCs). The devices always communicate via the system IP address with the primary CPU of the redundant system. This ensures, for example, that the communication partner can communicate with the new primary CPU (previously backup CPU) in the RUN-Solo system state after failure of the original primary CPU in redundant operation.

There is a virtual MAC address for each system IP address.

You enable the system IP addresses in STEP 7.

Advantages of the system IP addresses compared to device IP addresses

- The communication partner communicates specifically with the primary CPU.
- Communication of the S7-1500R/H redundant system via a system IP address still also works in the event of the failure of the primary CPU.

Applications

You use the system IP addresses for the following applications:

- HMI communication with the S7-1500R/H redundant system: You can use an HMI device to control or monitor the process on the redundant S7 1500R/H system.
- Open User Communication with the S7-1500R/H redundant system:
  - Another CPU or an application on a PC accesses data of the S7-1500R/H redundant system.
  - The S7-1500R/H redundant system accesses a different device.

  TCP, UDP and ISO-on-TCP-connections are possible.
- IP forwarding: If you use the system IP addresses as the gateway/default route for IP routes through the S7-1500R/H redundant system, IP packets are forwarded even if one CPU fails.

Requirements

- The interface of the communication partner is connected to both CPUs, each via the same interface (e.g. X2).
- The system IP address for the interfaces of the S7-1500R/H system is enabled.

Communication via the system IP addresses X2 and X3

If the CPUs of the redundant S7-1500R/H system have two or three PROFINET interfaces, preferably use the PROFINET interface X2 or X3 for communication with other devices.
The following figure shows a configuration in which the communication partners are connected via the respective PROFINET interfaces X2 with the CPUs of the redundant system S7-1500R/H.

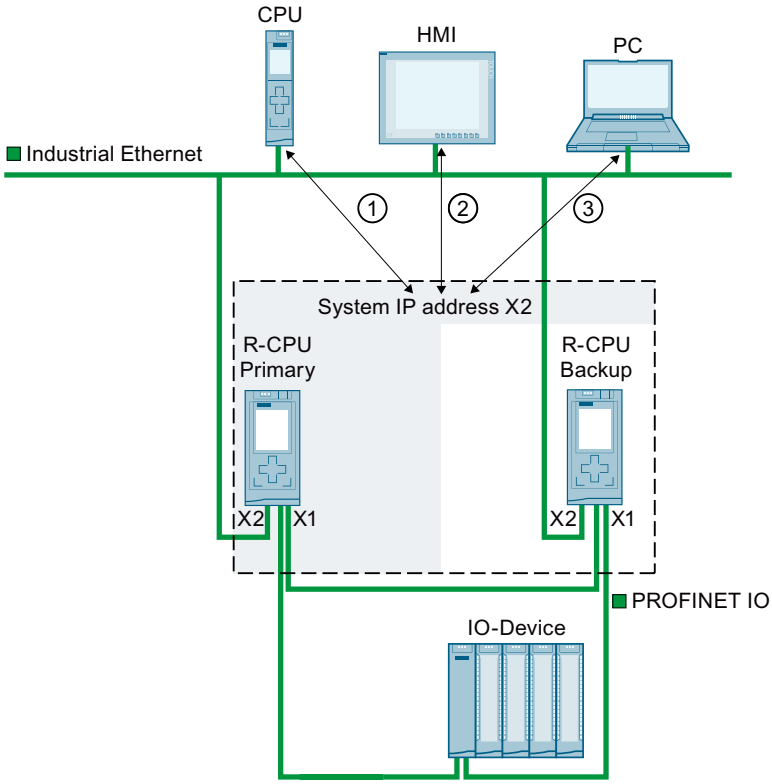

① Open User Communication between a different CPU and the S7-1500R/H redundant system

② HMI communication with the S7-1500R/H redundant system

③ Open User Communication between the S7-1500R/H redundant system and a PC

Figure 15-1 Example: Communication of the S7-1515R redundant system via the system IP address X2

Communication via the system IP address X1

The following diagram shows a configuration where the communication partners are connected with a switch to the PROFINET ring of the S7-1500R/H redundant system. The PROFINET ring connects the communication partners with the respective PROFINET interfaces X1 of the two CPUs.
As the CPU 1513R only has one PROFINET interface, connection via the PROFINET ring is the only possibility of communicating via the system IP address X1.

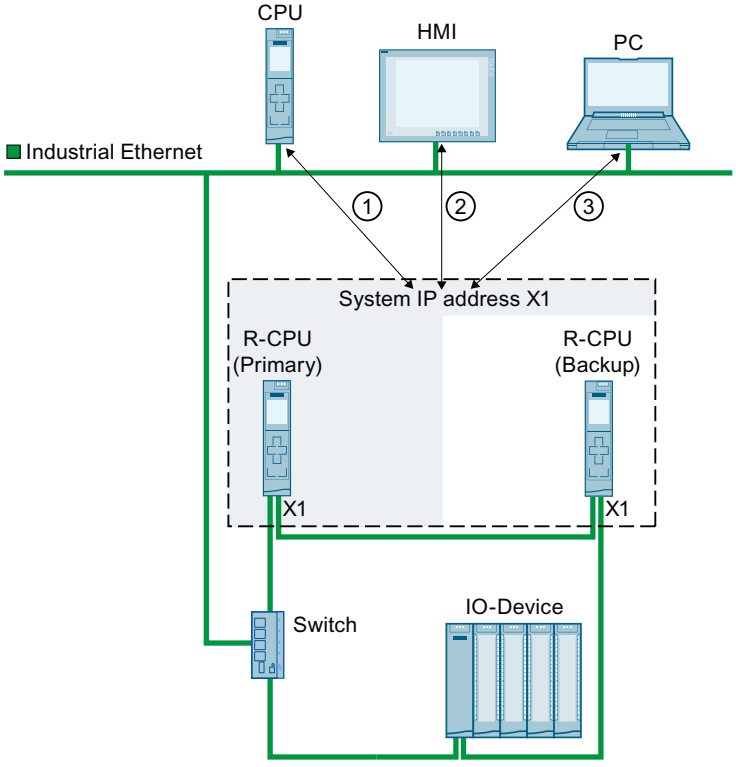

① Open User Communication between the S7-1500R/H redundant system and a different CPU

② HMI communication with the S7-1500R/H redundant system

③ Open User Communication between the S7-1500R/H redundant system and a PC

Figure 15-2 Example: Communication of the S7-1513R redundant system via the system IP address X1

Communication via the system IP addresses X1, X2 and X3

You can use one system IP address for each PROFINET interface of the redundant S7-1500R/H system. PROFINET devices which are connected to the interfaces X1 of the CPUs communicate via the system IP address X1. PROFINET devices which are connected to the interfaces X2 of the CPUs communicate via the system IP address X2. PROFINET devices which are connected to the interfaces X3 of the CPUs communicate via the system IP address X3.

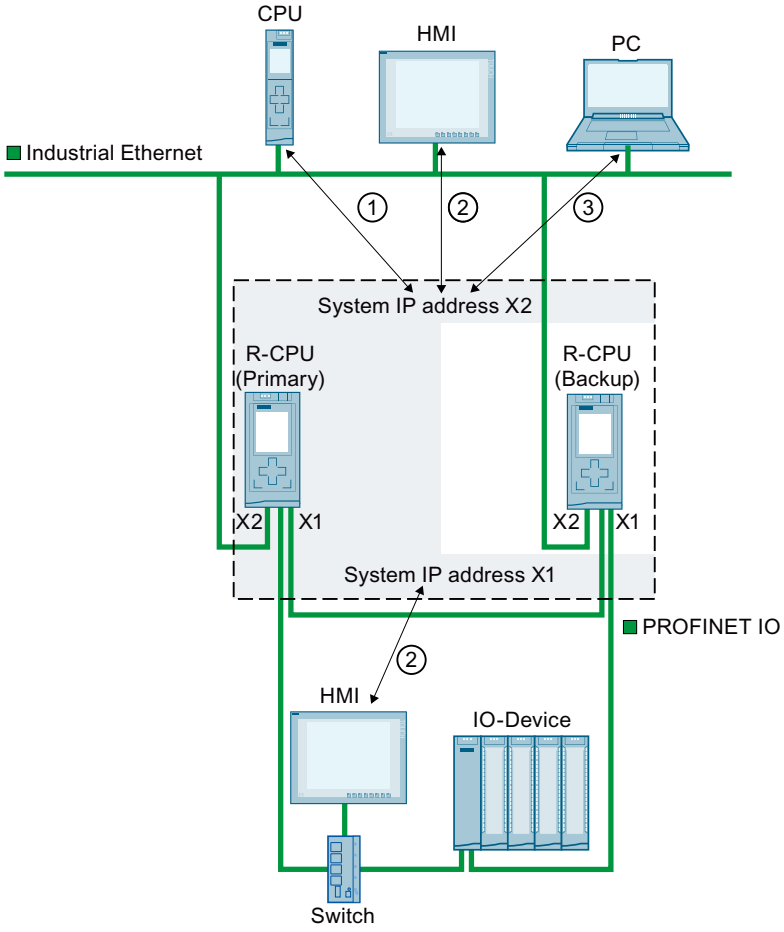

① Open User Communication between the S7-1500R/H redundant system and a different CPU.

② HMI communication with the S7-1500R/H redundant system

③ Open User Communication between the S7-1500R/H redundant system and a PC

Figure 15-3 Example: Communication of the S7-1515R redundant system via the system IP addresses X1 and X2

With an S7-1500H(F) system, you also have the option of dividing your system into several PROFINET rings.

In this case you must connect the required S1/S2 devices in a separate PROFINET ring behind a Y-switch.

Recommendation: For an increased availability of the S1/S2 devices you need two Y-switches with DNA redundancy (SCALANCE XF204-2BA DNA). A Y-switch takes on the roles of MRP manager and DNA manager. Another Y-switch takes on the roles MRP client and DNA client. DNA redundancy is only possible with a connected PROFINET ring.

You can find more information on configuration scenarios with Y-switch in the S7-1500R/H Redundant System (https://support.industry.siemens.com/cs/ww/en/view/109754833) system manual.

IP forwarding via the system IP address

If you use the system IP addresses as the gateway/default route for IP routes through the S7-1500R/H redundant system, IP packets are forwarded even if one CPU fails.

In the following figure, the PC is connected to the two X2 interfaces of the S7-1500R CPUs. Enter the system IP address X2 as gateway in the PC for the route to the HMI device. The HMI device is connected to the PROFINET ring of the redundant system S7-1500 via a switch. The system IP address X1 is configured as router in the HMI device.

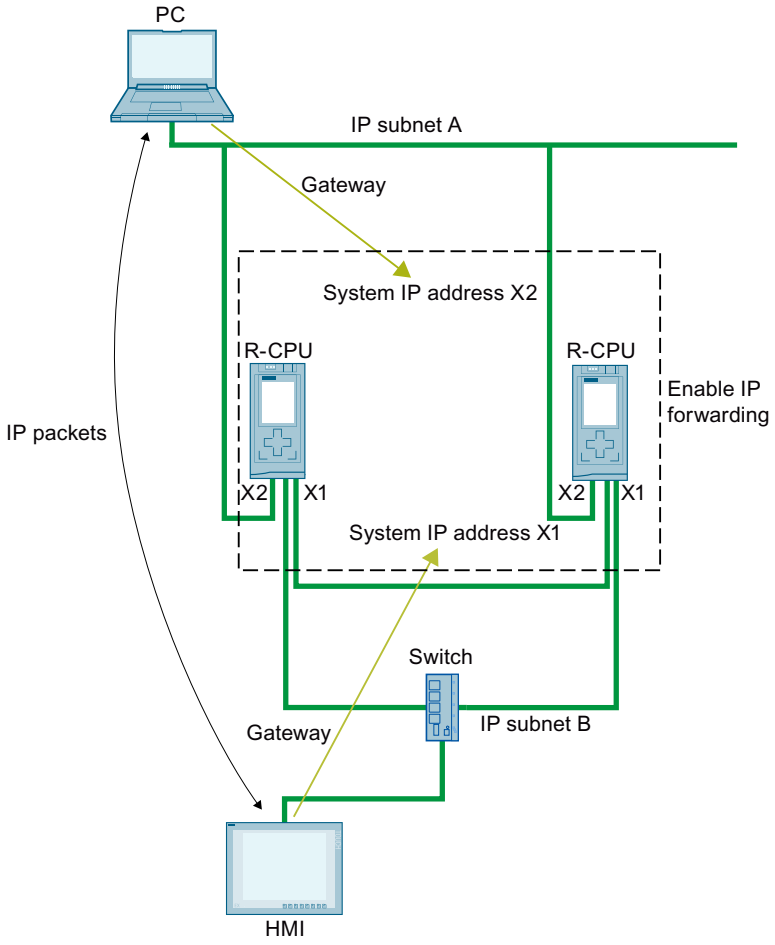

Figure 15-4 Example: IP forwarding via the system IP address

Enable system IP addresses

Requirements:

- STEP 7 V15.1 or higher
- S7-1500R/H redundant system with two CPUs, e.g. two CPUs 1513R-1PN

If the CPUs of the S7-1500R/H redundant system have two PROFINET interfaces (X1 and X2), then you can use a system IP address for both PROFINET interfaces. The following section describes how to enable the system IP address for the interface X1.

Proceed as follows to enable the system IP address for your S7-1500R/H redundant system:

1. In the network view of STEP 7, select the interface X1 of one of the two CPUs.
2. In the Inspector window, go to "Properties" > "General" > "Ethernet addresses" in the area "System IP address for switched communication".
3. Select the check box "Enable the system IP address for switched communication".
   STEP 7 automatically creates a system IP address.

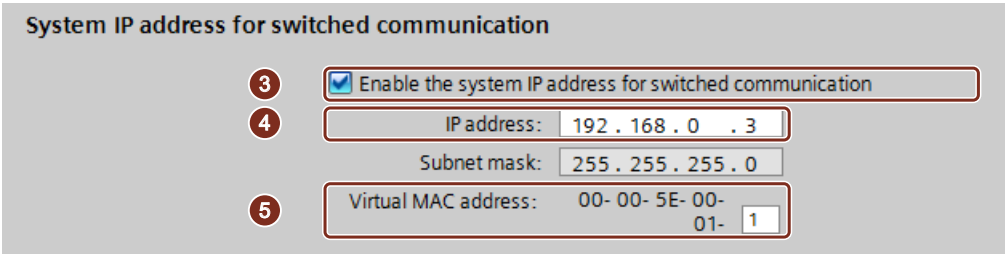

Figure 15-5 Configure IP address

4. Change the system IP address if necessary.
5. If required, change the virtual MAC address. To do this, in "Virtual MAC address", assign a project-wide unique value (value range 01_H to FF_H) for the last byte.

NOTE

Uniqueness of the virtual MAC address

The redundant system S7-1500R/H uses a MAC address from the address range 00-00-5E-00-01-00 to 00-00-5E-00-01-00 for each system IP address. This address range is also used for VRRP (Virtual Redundancy Protocol).

If you use devices with VRRP, e.g. switches, ensure the uniqueness of the MAC addresses within an Ethernet broadcast domain.

Result: The system IP address X1 for the PROFINET interface X1 of the two CPUs is enabled.

15.2 Response to Snycup

Response of communication connections via the system IP address in the system state SYNCUP

- HMI, PG- and S7-connections are temporarily closed. For a short time during the SYNCUP it is not possible to establish connections to the S7-1500R/H redundant system.
- All existing connections of Open User Communication are interrupted:
  - Connections set up by the CPUs of the redundant system as an active connection partner are set up again after the SYNCUP.
  - The S7-1500R/H redundant system sets up connection endpoints again for the passive connection establishment after the SYNCUP.
- The processing of running instances of the instructions TSEND and TRCV is stopped. The block parameter STATUS returns $80C4_H$ (temporary communication error).

15.3 Response to primary-backup switchover

Response of communication connections via the system IP address during a primary-backup switchover

- Running instances of the instructions TSEND and TRCV are stopped and return the status $80C4_H$ (temporary communication error).
- Connections successfully established by the S7-1500R/H redundant system are established again by the new primary CPU.
- The new primary CPU sets up connection endpoints again for the passive connection establishment.

NOTE

Increased duration of connection interruption

If the remote system does not transmit actively after the primary-backup switchover, the connection monitoring (e.g. TCP-Keep-Alive or application) may have to be performed by the remote system until the connection can be re-established.

15.4 Connection resources of the redundant system S7-1500R/H

Maximum number of connection resources of the S7-1500R/H redundant system

The S7-1500R/H redundant system supports a maximum number of connection resources.

The CPU used determines the maximum number of resources for the redundant system:

- CPU 1513R: max. 88 connection resources
- CPU 1515R: max. 128 connection resources (as of V3.0), max. 108 connection resources (up to V2.9.x)
- CPU 1517H: max. 288 connection resources
- CPU 1518HF: max. 320 connection resources

Allocation of connection resources

Communication connections occupy communication resources in the S7-1500R/H redundant system.

Each communication connection to the redundant system S7 1500R/H occupies connection resources in the S7 1500R/H station. The S7-1500R/H station comprises the hardware setup of both CPUs of the redundant S7-1500R/H system.

Depending on the IP address used, a communication connection also uses connection resources in one or both CPUs of the redundant S7-1500R/H system. The S7-1500R/H station can also be used to establish a communication connection.

The following table shows in which CPU a communication connection occupies connection resources depending on the IP address used.

Connect via...	Connection resources of the station	Connection resources CPU with redundancy ID 1	Connection resources CPU with redundancy ID 2
a system IP address	X	X	X
a device IP address of the CPU with redundancy ID 1	X	X	-
a device IP address of the CPU with redundancy ID 2	X	-	X

Display of the occupied connection resources in STEP 7

Requirement: Online connection to the redundant system S7-1500R/H

You will find the online display of the connection resources in the inspector window under "Diagnostics" > "Connection information". STEP 7 always displays the connection resources of the selected CPU and the S7-1500R/H-station.

Connection resources

	Station resources					Module resources	
		Reserved		Dynamic		CPU 1517H-3 PN (R0/S1)	
Maximum number of resources:		10	10	150	150	160	160
	Maximum	Configured	Used	Configured	Used	Configured	Used
PG communication:	4	-	2	-	0	-	2
HMI communication:	4	0	0	0	0	0	0
S7 communication:	0	-	0	0	0	0	0
Open user communication:	0	-	0	0	0	0	0
Web communication:	2	-	0	-	0	-	0
Other communication:	-	-	0	0	0	0	0
Total resources used:		0	2	0	0	0	2
Available resources:		10	8	150	150	160	158

Figure 15-6 Display of the connection resources of the S7-1500R/H redundant system in STEP 7

15.5 HMI communication with the redundant system S7-1500R/H

15.5.1 HMI connection via the system IP address

Requirements

- A S7-1500R/H redundant system, e.g. CPU 1513R-1PN
- System IP address is enabled
- HMI device with PROFINETI interface

Procedure

To set up a HMI connection to an S7-1500R/H redundant system, follow these steps:

1. In the network view of STEP 7, select a PROFINET interface of the HMI device.
2. Using a drag&drop operation, draw a line between the PROFINET interface of the HMI device and a PROFINET interface of the S7-1500R/H redundant system.
   The HMI device and the S7-1500R/H redundant system are networked together.

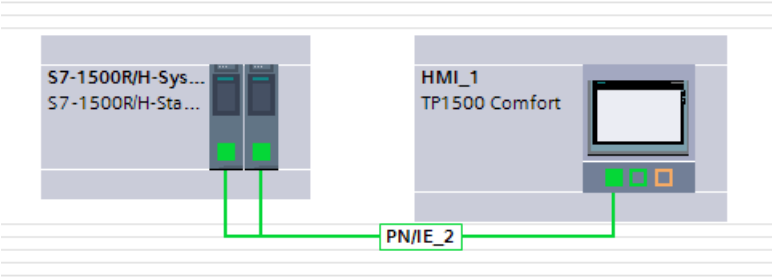

Figure 15-7 Networking an HMI device with the S7-1500R/H redundant system

3. In the list of functions, click the "Connections" icon. This activates connection mode.
4. Using a drag-and-drop operation, draw a line between the HMI device and a CPU of the S7-1500R/H redundant system.
   The list "Connection partners" opens.

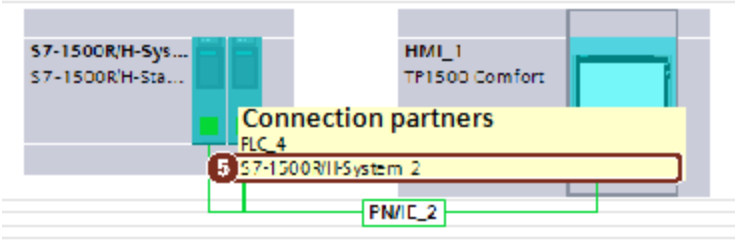

Figure 15-8 Setting up an HMI connection to the S7-1500R/H redundant system

5. Select the S7-1500R/H redundant system in the list "Connection partners".

Result: You have set up a HMI connection between the HMI device and the S7-1500R/H redundant system. The HMI connection uses the system IP address. The HMI device always connects to the primary CPU.

Changing the HMI connection over to the device IP address

To permanently change the HMI connection over to the selected CPU, clear the check box "Use the system IP address for switched communication" in the properties of the HMI connection. The HMI connection then uses the device IP address of the PROFINET interface. In the event of the failure of this CPU, then the HMI connection to this CPU permanently fails.

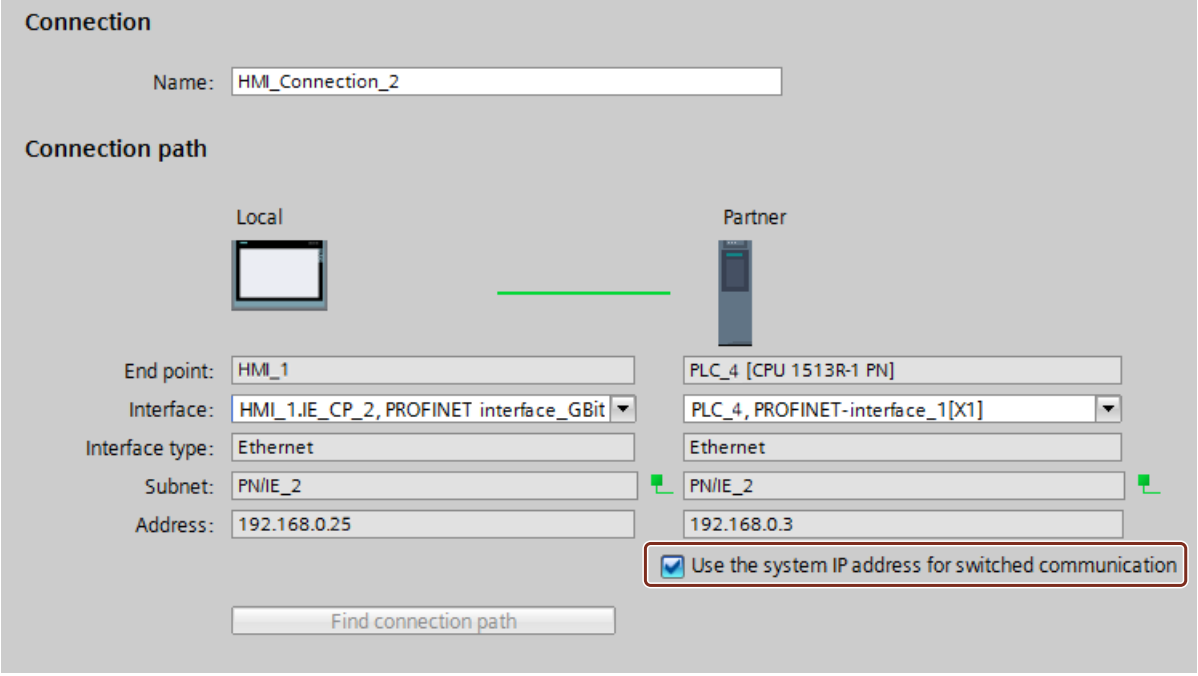

Figure 15-9 Properties of the HMI connection

NOTE

Automatic setup of HMI connection

When you drag-and-drop a tag from the S7-1500R/H redundant system into an HMI screen or into the HMI tag table, STEP 7 automatically sets up an HMI connection. This HMI connection exists by default between the PROFINET interface of the HMI device and the PROFINET interface X1 of the CPU with redundancy ID 1. The connection uses the device IP address of the PROFINET interface X1.

You can change the HMI connection to a system IP address in the properties of the HMI connection.

More information

You can set up an HMI connection to the S7-1500R/H redundant system via the devices IP address. With help of scripts in the HMI configuration, the connection of the failed CPU are switched automatically to the still running CPU. A description to this procedure can be found in the following FAQ (https://support.industry.siemens.com/cs/us/en/view/109781687).

15.6 Open User Communication with the redundant system S7-1500R/H

The following table shows which protocols of the Open User Communication you can use for the S7-1500R/H redundant system and the matching system data types and instructions.

Table 15-1 Protocols, system data types and usable instructions for Open User Communication with the redundant system S7-1500R/H

Protocol	System data type	Instructions
TCP	• TCON_QDN • TCON_IP_v4	Establish connection and send/receive data via: • TSEND_C/TRCV_C or • TCON, TSEND/TRCV or • TCON, TUSEND/TURCV (connection can be terminated via TDISCON)
ISO-on-TCP	• TCON_IP_RFC	
UDP	• TCON_IP_v4 • TADDR_Param • TADDR_SEND_QDN • TADDR_RCV_IP	Establish connection and send/receive data via: • TSEND_C/TRCV_C • TUSEND/TURCV/TRCV (connection can be terminated via TDISCON)
Modbus TCP	• TCON_IP_v4 • TCON_QDN	• MB_CLIENT • MB_RED_CLIENT • MB_SERVER • MB_RED_SERVER

15.6.1 Setting up the connection of the Open User Communication with the redundant S7-1500R/H system

Introduction

The S7-1500R/H redundant system can communicate with other devices via Open User Communication.

You set up the connections in the user program, e.g. via the "TSEND_C" instruction. The S7-1500R/H redundant system does not support configured connections.

You can either set up the connections either via the device IP addresses or via the system IP addresses of the PROFINET interfaces.

Open User Communication via a system IP address of the redundant system S7 1500R/H

If you set up the connection via a system IP address, then communication always takes place via the primary CPU.

Recommendation: Always use a system IP address for Open User Communication.

Open User Communication via a device IP address of the redundant system S7 1500R/H

In redundant mode, the redundant system can establish or terminate connections and send or receive data via every device IP address.

If you set up the connection via a device IP address, then communication takes place via the associated CPU. In the event of the failure of the CPU, then the entire communication via the device IP addresses of this CPU fails.

Setting up a connection via a system IP address

The following describes how to establish a connection to another CPU via a system IP address of a PROFINET interface of the redundant S7 1500R/H system.

You set up the connection in the user program of the redundant system S7-1500R/H with a TSEND_C instruction. You create a corresponding TRCV_C instruction in the user program of the other CPU.

The procedure is described using the example of a TCP connection between the S7-1500R/H redundant system and a CPU 1516-3PN/DP.

Requirements

- An S7-1500R/H redundant system, e.g. 2 CPUs 1513 1PN
- System IP address of the PROFINET interface X1 is enabled.
- CPU 1516-3PN/DP
- The PROFINET interfaces X1 of the CPUs 1513R and the PROFINET interface X2 of the CPU 1516-3PN/DP are located in the same subnet.

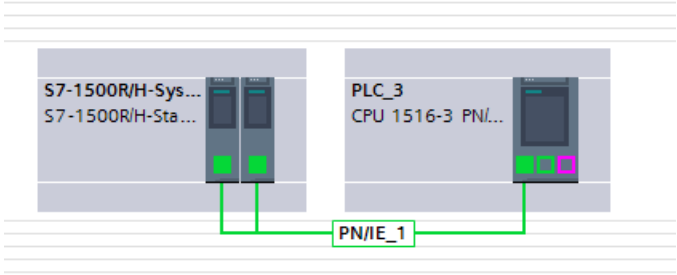

Figure 15-10 Example configuration for TCP-connection

TSEND_C instruction in the user program of the S7-1500R/H redundant system

To set up a TCP-connection to a different CPU, follow these steps:

1. Create a "TSEND_C" instruction in the user program.

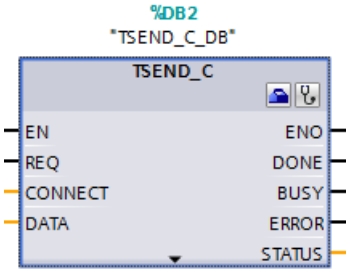

Figure 15-11 S7-1500R/H: "TSEND_C" instruction

2. Select the "TSEND_C" instruction.
3. In the Inspector window, go to "Properties" > "Configuration" > "Connection parameters". On the left-hand side you can see the S7-1500R/H redundant system as a local end point of the connection:
   - "Interface:": X1 is the preset interface.
   - "Subnet:": If the interface X1 is assigned to an S7-subnet, then STEP 7 displays the name of the S7-subnet.
   - The check box "Use address of the H-system" is selected. The system IP address of the S7-1500R/H redundant system is in "Address".

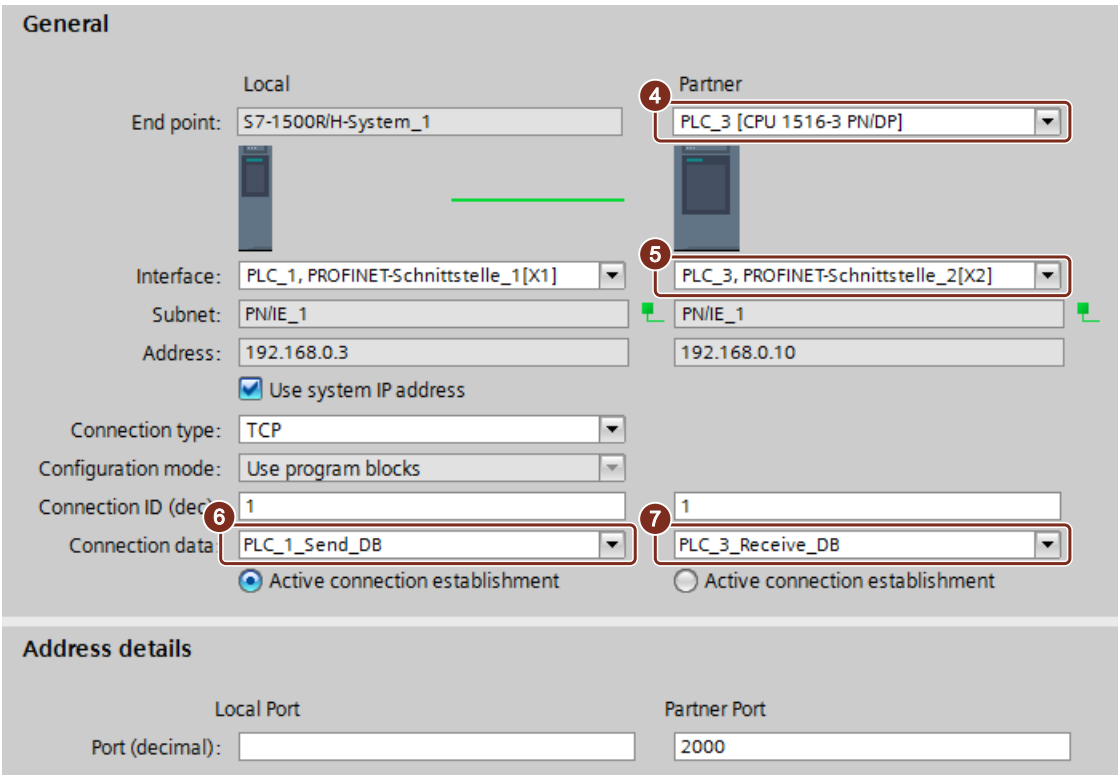

Figure 15-12 S7-1500R/H: Assigning parameters to the TSEND_C instruction in STEP 7

4. In "Partners" under "End point:" select the CPU 1516-3PN/DP as the communication partner.
5. In "Partners" under "Interface:" select the PROFINET interface X2 of the CPU 1516-3PN/DP.
6. In "Local" under "Connection data" select the setting "<new>".
   STEP 7 creates a data block for the connection data in the user program of the S7-1500R/H redundant system, for example "PLC_1_Send_DB".
   "TCP" is set by default as the connection type.
7. In "Partners" under "Connection type" select the setting "NEW".
   STEP 7 creates a data block for the connection data in the user program of the other CPU, for example "PLC_3_Receive_DB".

TRCV_C instruction in the user program of the CPU 1516 3PN/DP

Create a TRCV_C instruction in the user program of the CPU 1516-3PN/DP and assign parameters as below:

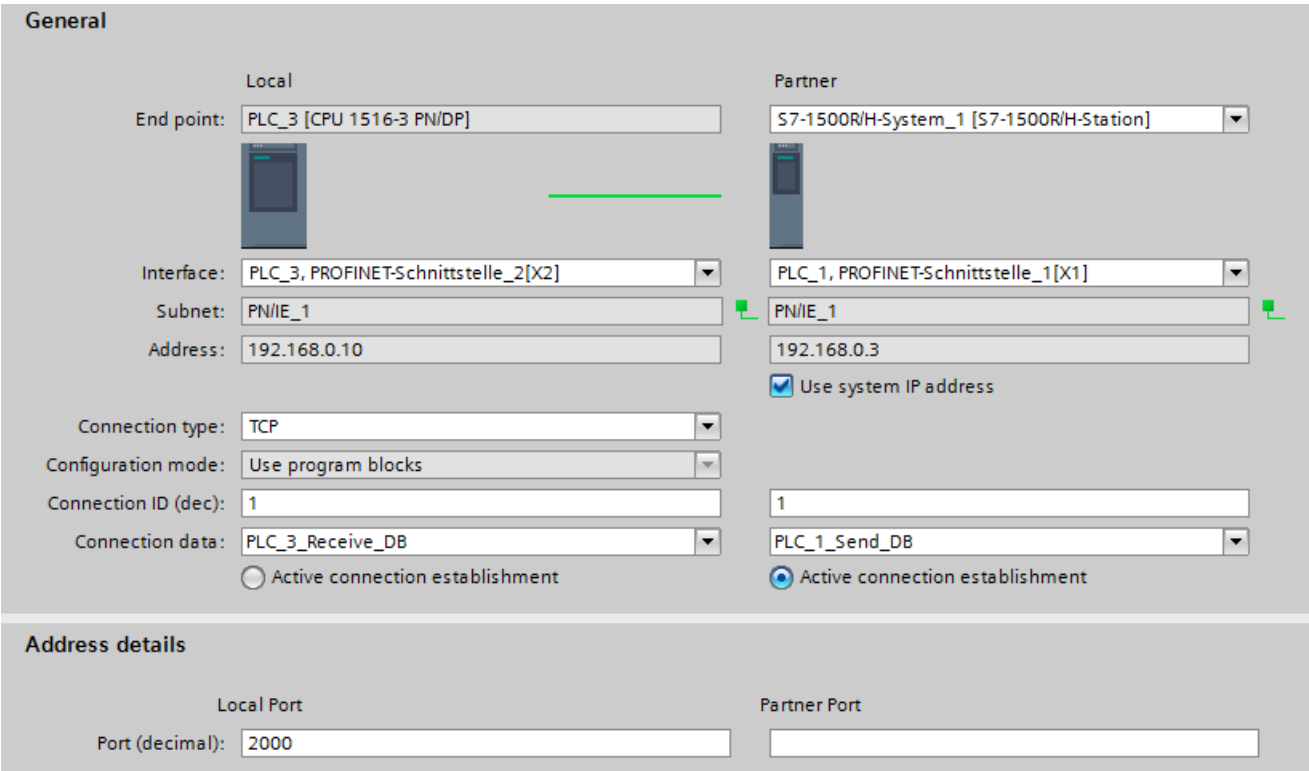

Figure 15-13 S7-1500-3PN/DP: Assigning parameters to the TRCV_C instruction in STEP 7

Setting up a connection via a device IP address

To set up an OUC-connection via a device IP address of one of the two CPUs:

- Select a suitable PROFINET interface of the S7-1500R/H redundant system.
- Deselect the "Use address of H-system" check box.

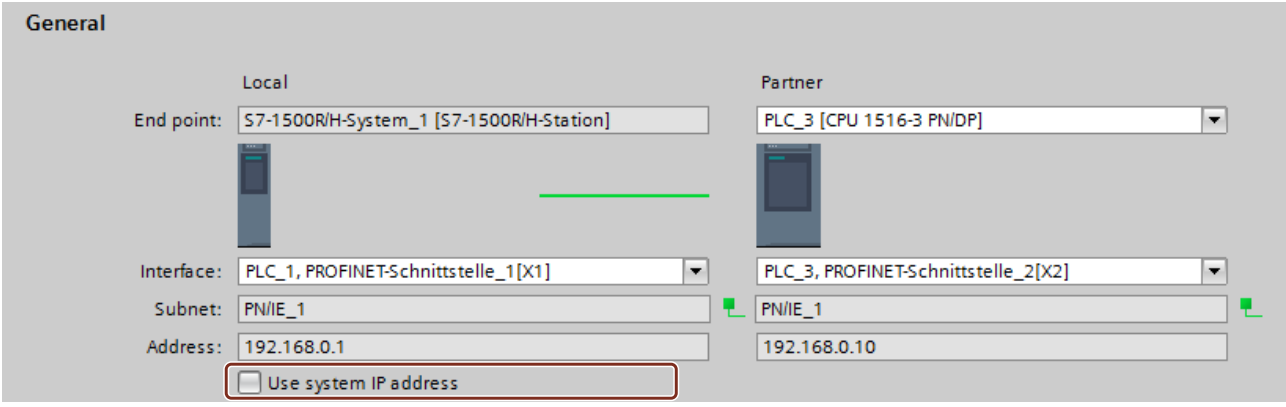

Figure 15-14 OUC-connection via a device IP address

More information

You can find more information on system states in the S7-1500R/H (https://support.industry.siemens.com/cs/ww/en/view/109754833) system manual.
You can find more information on the configuration and parameter assignment of your PROFINET IO system in the PROFINET function manual (https://support.industry.siemens.com/cs/ww/en/view/49948856).

Industrial Ethernet Security with CP 1543-1 16

All-round protection - the task of Industrial Ethernet Security

With Industrial Ethernet Security, individual devices, automation cells or network segments of an Ethernet network can be protected. Data transfer can also be protected by a combination of different security measures:

- Data espionage
- Data manipulation
- Unauthorized access

Security measures

- Firewall
  - IP firewall with stateful packet inspection (layer 3 and 4)
  - Firewall also for Ethernet "non-IP" frames according to IEEE 802.3 (layer 2)
  - Bandwidth limitation
  - Global firewall rules

  All network nodes located in the internal network segment of a CP 1543-1 are protected by its firewall. Exception: If you access the CPU via the interface of the CP with the "Access to PLC via communication module" function, the firewall does not protect this connection.
- Logging
  To allow monitoring, events can be stored in log files that can be read out using the configuration tool or can be sent automatically to a Syslog server.
- HTTPS
  For encrypted transfer of websites, for example during process control.
- FTPS (explicit mode)
  For encrypted transfer of files.
- Secure NTP
  For secure time-of-day synchronization and transmission.
- SNMPv3
  For secure transmission of network analysis information safe from eavesdropping.
- VPN groups
  You can combine the CP 1543-1 with other security modules into VPN groups through configuration. IPsec tunnels are established between all the security modules of a VPN group (VPN). All internal nodes of these security modules can communicate securely with each other through this tunnel.
- Protection for devices and network segments
  The firewall and VPN groups protective functions can be applied to the operation of single devices, multiple devices, or entire network segments.

Additional information

An overview with links to the most important contributions on Industrial Security is available in this FAQ (https://support.industry.siemens.com/cs/ww/en/view/92651441).

16.1 Firewall

Tasks of the firewall

The purpose of the firewall functionality is to protect networks and stations from outside influences and disturbances. This means that only certain previously specified communications relations are permitted.

To filter the data traffic, IPv4 addresses, IPv4 subnets, port numbers or MAC addresses among other things can be used.

The firewall functionality can be configured for the following protocol levels:

- IP firewall with stateful packet inspection (layer 3 and 4)
- Firewall also for Ethernet "non-IP" frames according to IEEE 802.3 (layer 2)

Firewall rules

Firewall rules describe which packets are permitted or forbidden in which direction.

16.2 Logging

Functionality

For test and monitoring purposes, the security module has diagnostics and logging functions.

- Diagnostics functions
  These include various system and status functions that you can use in online mode.
- Logging functions
  This involves the recording of system and security events. Depending on the event type, the recording is made in volatile or non-volatile local buffer areas of the CP 1543-1. As an alternative, it is also possible to record on a network server.
  The parameter assignment and evaluation of these functions is only possible with a network connection.

Recording events with logging functions

You specify which events should be recorded with the log settings. Here you can configure the following recording variants:

- Local logging
  With this variant, you record the events in local buffers of the CP 1543-1. In the online dialog of the Security Configuration Tool, you can then access these recordings, visualize them and archive them on the service station.
- Network Syslog
  With the network Syslog, you use a Syslog server in the network. This records the events according to the configuration in the log settings.

16.3 NTP client

Functionality

To check the time validity of a certificate and the time stamp of log entries, the date and time are maintained on the CP 1543-1 as on the CPU. This time can be synchronized with NTP. The CP 1543-1 forwards the synchronized time to the CPU via the backplane bus of the automation system. This way the CPU also receives a synchronized time for the time events in program execution.

The automatic setting and periodic synchronization of the time takes place either via a secure or non-secure NTP server. You can assign a maximum of 4 NTP servers to the CP 1543-1. A mixed configuration of non-secure and secure NTP servers is not possible.

16.4 SNMP

Functionality

Like the CPU, the CP 1543-1 supports the transfer of management information using the Simple Network Management Protocol (SNMP). To achieve this, an "SNMP agent" is installed on the CP/CPU that receives and responds to the SNMP queries. Information about the properties of devices capable of SNMP is contained in so-called MIB files (Management Information Base) for which the user needs to have the appropriate rights.

With SNMPv1, the "community string" is also sent. The "community string" is like a password that is sent along with the SNMP query. The requested information is sent when the "community string" is correct. The request is discarded when the string is incorrect.

With SNMPv3, data can be transferred encrypted. To do this, select either an authentication method (e.g. SHA) or an authentication and encryption method (e.g AES).

You can activate and deactivate the use of SNMP for the CP/CPU. Deactivate SNMP if the security guidelines in your network do not permit SNMP or if you use your own SNMP solution.

To find out how to activate and deactivate SNMP for the CPU, refer to section SNMP (Page 103).

16.5 VPN

Functionality

For security modules that protect the internal network, VPN (Virtual Private Network) tunnels provide a secure data connection through the non-secure external network.

The module uses the IPsec protocol (tunnel mode of IPsec) for tunneling.

In STEP 7 you can assign VPN groups to security modules. VPN tunnels are automatically established between all modules of a VPN group. A module in one project can belong to several different VPN groups at the same time in the process.

Glossary

Automation system

Programmable logic controller for the open-loop and closed-loop control of process chains of the process engineering industry and manufacturing technology. The automation system consists of different components and integrated system functions according to the automation task.

Backup CPU

If the R/H system is in RUN-Redundant system state, the primary CPU controls the process. The backup CPU processes the user program synchronously and can take over process control if the primary CPU fails.

Bus

Transmission medium that connects several devices together. Data transmission can be performed electrically or via optical fibers, either in series or in parallel.

Client

Device in a network that requests a service from another device in the network (server).

CM

→ Communications module

Communications module

Module for communications tasks used in an automation system as an interface expansion of the CPU (for example PROFIBUS) and providing additional communications options (PtP).

Communications processor

Module for expanded communications tasks covering special applications, for example in the area of security.

Consistent data

Data that belongs together in terms of content and must not be separated when transferred.

CP

→ Communications processor

CPU

Central **P**rocessing **U**nit - Central module of the S7 automation system with a control and arithmetic unit, memory, operating system and interface for programming device.

Device

Generic term for:

- Automation systems (PLC, PC, for example)
- Distributed I/O systems
- Field devices (for example, PLC, PC, hydraulic devices, pneumatic devices) and
- Active network components (for example, switches, routers)
- Gateways to PROFIBUS, AS interface or other fieldbus systems

Device certificates

Such certificates are signed by a certificate authority (CA).
The signature of an end-entity certificate is checked with the public key of the certificate authority certificate.
The "Subject" attribute must not be identical to the "Issuer" attribute.
The "Subject", for example, contains the name of a program as with the OPC UA application certificate.
"Issuer" is the certificate authority that signed the certificate.
The "CA" field must be set to "False".

DP master

Within PROFIBUS DP, a master in the distributed I/O that behaves according to the EN 50170 standard, Part 3.
→ *See also DP slave*

DP slave

Slave in the distributed I/O that is operated on PROFIBUS with the PROFIBUS DP protocol and behaves according to the EN 50170 standard, Part 3.
→ *See also DP master*

Duplex

Data transmission system; a distinction is made between full and half duplex.
Half duplex: One channel is available for alternate data exchange (sending or receiving alternately but not at the same time).
Full duplex: Two channels are available for simultaneous data exchange in both directions (simultaneous sending and receiving in both directions).

End-entity certificate

→ *See also device certificate*

Ethernet

International standard technology for local area networks (LAN) based on frames. It defines types of cables and signaling for the physical layer and packet formats and protocols for media access control.

Ethernet network adapter

Electronic circuitry for connecting a computer to an Ethernet network. It allows the exchange of data / communication within the network.

FETCH/WRITE

Server services using TCP/IP, ISO-on-TCP and ISO for access to system memory areas of S7 CPUs. Access (client function) is possible from a SIMATIC S5 or a third-party device/PC. FETCH: Read data directly; WRITE: Write data directly.

Field device

→ Device

Freeport

Freely programmable ASCII protocol; here for data transfer via a point-to-point connection.

FTP

File **T**ransfer **P**rotocol; a network protocol for transferring files via IP networks. FTP is used to download files from the server to the client or to upload files from the client to the server. FTP directories can also be created and read out and directories and files can be renamed or deleted.

HMI

Human **M**achine **I**nterface, device for visualization and control of automation processes.

IE

→ Industrial Ethernet

IM

→ Interface module

Industrial Ethernet

Guideline for setting up an Ethernet network in an industrial environment. The essential difference compared with standard Ethernet is the mechanical ruggedness and immunity to noise of the individual components.

Instruction

The smallest self-contained unit of a user program characterized by its structure, function or purpose as a separate part of the user program. An instruction represents an operation procedure for the processor.

Interface module

Module in the distributed I/O system. The interface module connects the distributed I/O system via a fieldbus to the CPU (IO controller/DP master) and prepares the data for the I/O modules.

Intermediate CA certificate

This is a certificate authority certificate that is signed with the private key of a root certificate authority.

An intermediate certificate authority signs end-entity certificates with its private key.

The signature of these end-entity certificates is verified with the public key of the intermediate certificate authority.

The "Subject" and "Issuer" attributes of the intermediate CA certificate must not be identical. This certificate authority has after all not signed its certificate itself.

The "CA" field must be set to "True".

IO controller, PROFINET IO controller

Central device in a PROFINET system, usually a classic programmable logic controller or PC. The IO controller sets up connections to the IO devices, exchanges data with them, thus controls and monitors the system.

IO device, PROFINET IO device

Device in the distributed I/O of a PROFINET system that is monitored and controlled by an IO controller (for example distributed inputs/outputs, valve islands, frequency converters, switches).

IP address

Binary number that is used as a unique address in computer networks in conjunction with the Internet Protocol (IP). It makes these devices uniquely addressable and individually accessible. An IPv4 address can be evaluated using a binary subnet mask that results in a network part or a host part as a structure. The textual representation of an IPv4 address consists, for example, of 4 decimal numbers with the value range 0 to 255. The decimal numbers are separated by periods.

IPv4 subnet mask

Binary mask, with which an IPv4 address (as a binary number) is divided into a "network part" and a "host part".

ISO protocol

Communications protocol for message or packet-oriented transfer of data in an Ethernet network. This protocol is hardware-oriented, very fast and allows dynamic data lengths. The ISO protocol is suitable for medium to large volumes of data.

ISO-on-TCP protocol

Communications protocol capable of S7 routing for packet-oriented transfer of data in an Ethernet network; provides network addressing. The ISO-on-TCP protocol is suitable for medium and large volumes of data and allows dynamic data lengths.

Linear bus topology

Network topology characterized by the arrangement of the devices in a line (bus).

MAC address

Worldwide unique device identification for all Ethernet devices. The MAC address is assigned by the manufacturer and has a 3-byte vendor ID and 3-byte device ID as a consecutive number.

Master

Higher-level, active participant in the communication/on a PROFIBUS subnet. The master has rights to access the bus (token) and can request and send data.
→ *See also DP master*

Modbus RTU

Remote **T**erminal **U**nit; Open communications protocol for serial interfaces based on a master/slave architecture.

Modbus TCP

Transmission **C**ontrol **P**rotocol; Open communications protocol for Ethernet based on a master/slave architecture. The data are transmitted as TCP/IP packets.

Network

A network consists of one or more interconnected subnets with any number of devices. Several networks can exist alongside each other.

NTP

The **N**etwork **T**ime **P**rotocol (NTP) is a standard for synchronizing clocks in automation systems via Industrial Ethernet. NTP uses the connectionless UDP transport protocol for the Internet.

OPC UA

OPC Unified **Automation** is a protocol for communication between machines, developed by the OPC Foundation.

Operating states

Operating states describe the behavior of a single CPU at a specific time.
The CPUs of the SIMATIC standard systems have the STOP, STARTUP and RUN operating states.
The primary CPU of the redundant system S7-1500R/H has the operating states STOP, STARTUP, RUN, RUN-Syncup and RUN-Redundant. The backup CPU has the operating states STOP, SYNCUP and RUN-Redundant.

Operating system

Software that allows the use and operation of a computer. The operating system manages resources such as memory, input and output devices and controls the execution of programs.

PG

→ Programming device

PNO

→ PROFIBUS user organization

Point-to-point connection

Bidirectional data exchange via communications modules with a serial interface between two communications partners (and two only).

Port

Physical connector to connect devices to PROFINET. PROFINET interfaces have one or more ports.

Primary CPU

If the R/H system is in RUN-Redundant system state, the primary CPU controls the process. The backup CPU processes the user program synchronously and can take over process control if the primary CPU fails.

Process image (I/O)

The CPU transfers the values from the input and output modules to this memory area. At the start of the cyclic program, the CPU transfers the process image output as a signal state to the output modules. The CPU then reads the signal states of the input modules into the process image input. The CPU then executes the user program.

PROFIBUS

Process **Fi**eld **Bus** - European Fieldbus standard.

PROFIBUS address

Unique identifier of a device connected to PROFIBUS. The PROFIBUS address is sent in the frame to address a device.

PROFIBUS device

Device with at least one PROFIBUS interface either electrical (for example RS-485) or optical (for example Polymer Optical Fiber).

PROFIBUS user organization

Technical committee dedicated to the definition and development of the PROFIBUS and PROFINET standard.

PROFIBUS DP

A PROFIBUS with DP protocol that complies with EN 50170. DP stands for distributed I/O = fast, real-time capable, cyclic data exchange. From the perspective of the user program, the distributed I/O is addressed in exactly the same way as the centralized IO.

PROFINET

Open component-based industrial communications system based on Ethernet for distributed automation systems. Communications technology promoted by the PROFIBUS user organization.

PROFINET device

Device that always has a PROFINET interface (electrical, optical, wireless).

PROFINET interface

Interface of a module capable of communication (for example CPU, CP) with one or more ports. A MAC address is assigned to the interface in the factory. Along with the IP address and the device name (from the individual configuration), this interface address ensures that the PROFINET device is identified uniquely in the network. The interface can be electrical, optical or wireless.

PROFINET IO

IO stands for input/output; distributed I/O (fast, cyclic data exchange with real-time capability). From the perspective of the user program, the distributed I/O is addressed in exactly the same way as the centralized IO.

PROFINET IO as the Ethernet-based automation standard of PROFIBUS & PROFINET International defines a cross-vendor communication, automation, and engineering model.

With PROFINET IO, a switching technology is used that allows all devices to access the network at any time. In this way, the network can be used much more efficiently through the simultaneous data transfer of several devices. Simultaneous sending and receiving is enabled via the full-duplex operation of Switched Ethernet.

PROFINET IO is based on switched Ethernet with full-duplex operation and a bandwidth of 100 Mbps.

Programming device

Programming devices are essentially compact and portable PCs which are suitable for industrial applications. They are identified by a special hardware and software configuration for programmable logic controllers.

Protocol

Agreement on the rules by which the communication between two or more communication partners transpires.

PtP

Point-**t**o-**P**oint, interface and/or transmission protocol for bidirectional data exchange between two (and only two) communications partners.

Redundant systems

Redundant systems have multiple (redundant) instances of key automation components. Process control is maintained if a redundant component fails.

Ring topology

All devices of a network are connected together in a ring.

Root CA certificates

→ *See also root certificate*

Root certificate

This is the certificate of a certificate authority: It signs end-entity certificates and intermediate CA certificates with its private key.
The "Subject" attribute and the "Issuer" of this certificate must be identical. This certificate authority has signed its certificate itself.
The "CA" field must be set to "True".
TIA Portal V14 has such a root CA certificate:
If you configure the OPC UA server of an S7-1500 in the TIA Portal, the TIA Portal generates an end-entity certificate for the OPC UA server and signs that certificate with its own private key.
The signature of this end-entity certificate can be verified with the public key of the TIA Portal. This key can be found in the root CA certificate of the TIA Portal.

Router

Network node with a unique identifier (name and address) that connects subnets together and allows transportation of data to uniquely identified communications nodes in the network.

RS232, RS422 and RS485

Standard for serial interfaces.

RTU

Modbus RTU (RTU: **R**emote **T**erminal **U**nit, transfers the data in binary form; allows a good data throughput. The data must be converted to a readable format before it can be evaluated.

S7 routing

Communication between S7 automation systems, S7 applications or PC stations in different S7 subnets via one or more network nodes functioning as S7 routers.

SDA service

Send Data with Acknowledge. SDA is an elementary service with which an initiator (for example DP master) can send a message to other devices and then receives acknowledgment of receipt immediately afterwards.

SDN service

Send Data with No Acknowledge. This service is used primarily to send data to multiple stations and the service therefore remains unacknowledged. Suitable for synchronization tasks and status messages.

Security

Generic term for all the measures taken to protect against

- Loss of confidentiality due to unauthorized access to data
- Loss of integrity due to manipulation of data
- Loss of availability due to the destruction of data

Self-signed certificates

These are certificates that you sign with your private key and use as end-entity certificates.
The signature of these end-entity certificates is verified with your public key.
The "Subject" and "Issuer" attributes of self-signed certificates must be identical: You have signed your certificate yourself.
The "CA" field must be set to "False".
You can, for example, use self-signed certificates as application certificates for an OPC UA client.
The procedure required to generate a self-signed certificate with the certificate generator of the OPC Foundation is described here (Page %getreference).

Server

A device or more generally an object that can provide certain services; the service is performed at the request of a client.

Slave

Distributed device in a fieldbus system that can only exchange data with a master after the master has requested this.
→ *See also DP slave*

SNMP

Simple **N**etwork **M**anagement **P**rotocol, uses the wireless UDP transport protocol. SNMP works in much the same way as the client/server model. The SNMP manager monitors the network nodes. The SNMP agents collect the various network-specific information in the individual network nodes and makes this information available in a structured form in the MIB (**M**anagement **I**nformation **B**ase). This information allows a network management system to run detailed network diagnostics.

Subnet

Part of a network whose parameters must be matched up on the devices (for example in PROFINET). A subnet includes the bus components and all connected stations. Subnets can be linked together, for example using gateways or routers to form one network.

Switch

Network components used to connect several terminal devices or network segments in a local network (LAN).

Switched communication

In addition to the device IP addresses of the CPUs, the redundant system S7-1500R/H supports system IP addresses:

- System IP address for the X1 PROFINET interfaces of the two CPUs (system IP address X1)
- System IP address for the X2 PROFINET interfaces of the two CPUs (system IP address X2)

You use the system IP addresses for communication with other devices (for example, HMI devices, CPUs, PG/PC). The devices always communicate over the system IP address with the primary CPU of the redundant system. This ensures that the communication partner can communicate with the new primary CPU (previously backup CPU) in the RUN-Solo system state after failure of the original primary CPU in redundant operation.

System states

The system states of the redundant system S7-1500R/H result from the operating states of the primary and backup CPUs. The term system state is used as a simplified expression that refers to the operating states that occur simultaneously on both CPUs. The redundant system S7-1500R/H has the system states STOP, STARTUP, RUN-Solo, SYNCUP and RUN-Redundant.

TCP/IP

Transmission **C**ontrol **P**rotocol / **I**nternet **P**rotocol, connection-oriented network protocol, generally recognized standard for data exchange in heterogeneous networks.

Time-of-day synchronization

Capability of transferring a standard system time from a single source to all devices in the system so that their clocks can be set according to the standard time.

Tree topology

Network topology characterized by a branched structure: Two or more bus nodes are connected to each bus node.

Twisted-pair

Fast Ethernet via twisted-pair cables is based on the IEEE 802.3u standard (100 Base-TX). The transmission medium is a shielded 2x2 twisted-pair cable with an impedance of 100 Ohms (22 AWG). The transmission characteristics of this cable must meet the requirements of category 5.

The maximum length of the connection between the terminal and the network component must not exceed 100 m. The connectors are designed according to the 100Base-TX standard with the RJ-45 connector system.

UDP

User **D**atagram **P**rotocol; communications protocol for fast and uncomplicated data transfer, without acknowledgment. There are no error checking mechanisms as found in TCP/IP.

User program

In SIMATIC, a distinction is made between the CPU operating system and user programs. The user program contains all instructions, declarations and data by which a system or process can be controlled. The user program is assigned to a programmable module (for example, CPU, FM) and can be structured in smaller units.

USS

Universal Serial Interface protocol (**U**niverselles **S**erielles **S**chnittstellen-Protokoll); defines an access method according to the master-slave principle for communication via a serial bus.

Web server

Software/communications service for data exchange via the Internet. The web server transfers the documents using standardized transmission protocols (HTTP, HTTPS) to a Web browser. Documents can be static or put together dynamically from different sources by the web server on request from the Web browser.

Index

A

Advanced Encryption Algorithm, 48

AES, 48

Applicant, 51

Asymmetric encryption, 49

B

BRCV, 139

BSEND, 139

C

Certificate authorities, 51

Certificate subject, 51

CM, 23

Communication
- PG communication, 111
- HMI communication, 113
- Open User Communication, 115
- Open communication, 115
- S7 communication, 138
- Point-to-point connection, 146
- S7 routing, 352
- Data record routing, 364

Communication options
- Overview, 28

Communications
- Communication protocols, 116
- Establishment and termination, 137

Communications module, 23

Communications processor, 23

Communications services
- Connection resources, 36

Communication via PUT/GET instruction
- Creating and configuring a connection, 140

Connection
- Instructions for Open User Communication, 118
- Diagnostics, 380

Connection diagnostics, 380

Connection resources
- Overview, 36
- Overview, 370
- HMI communication, 374
- S7 routing, 374
- Data record routing, 374
- occupying, 375
- Station specific, 377
- Module-specific, 378

Consistency of data, 40

CP, 23

D

Data consistency, 40

Data record routing, 364

Digital certificates, 51

E

Email, 28

E-mail, 117, 133

End-entity certificate, 53

Establishment and termination of communications, 137

Export file for OPC UA, 215

F

FDL, 116

Fetch, 28

Firewall, 401

Freeport protocol, 146

FTP, 28, 117, 133, 134

G

GDS, 181, 185
GET, 139
Global Discovery Server (GDS), 181, 185

H

Handshake Protocol, 50
HMI communication, 28, 113

I

IM, 27
Industrial Ethernet Security, 400
Interface module, 27
Interfaces for communication, 24
Interfaces of communications modules
  Point-to-point connection, 26
Interfaces of communications processors, 25
IP address, emergency address (temporary), 383
IP forwarding, 357
ISO, 28, 116
ISO-on-TCP, 116, 124

L

Logging, 401

M

Man-in-the-middle attack, 51
Modbus protocol (RTU), 146
Modbus TCP, 117

N

NTP, 28, 402

O

Occupation of connection resources, 375
OPC UA
  Introduction, 155
  NodeId, 159
  Namespace, 160
  Identifier, 160
  Security mechanisms, 169
  Signing and encryption, 171
  X.509 certificates, 173
  Certificate generator, 174
  OpenSSL, 175
  Secure channel, 177
  Secure connection, 177
  Layer model, 178
  GDS, 181
  GDS, 185
  Security settings, 199
  End points, 199
  PLC tags, 207
  DB tags, 207
OPC UA client
  Basics, 163
  Certificate, 327
  Authentication, 329
OPC UA server
  Address space, 161
  Basics, 197
  Write and read rights, 207
  Performance, 214
  Performance increase, 214
  XML export file, 215
  Commissioning, 217
  Application name, 217
  Addressing, 218
  TCP port, 220
  Subscription, 221
  TCP port, 222
  Publishing interval, 222
  Sampling interval, 223
  Generating a server certificate, 224
  Security settings, 227
  Customizing the server certificate, 230
  Authentication, 232
  Runtime licenses, 235
  Runtime licenses, 236
Open communication
  Connection configuration, 124
  Setting up TCP, ISO-on-TCP, UDP , 124
  Setting up e-mail, 133
  Setting up FTP, 134

OpenSSL, 175
Open User Communication
  Features, 115
  Protocols, 116
  Instructions, 118

P

PCT, 364
PG communication, 28, 111
Point-to-point connection, 28, 146
Private Key, 44
Procedure 3964(R), 146
Protocols for Open User Communication, 116
Public Key, 44
PUT, 139

R

Record Protocol, 50
RFC 5280, 44
Root certificate, 53

S

S7 communication, 28, 138, 374
S7 routing, 352
  Connection resources, 374
Secure communication, 44
Secure Socket Layer, 50
Security, 400
Security measures, 400
  Firewall, 401
  Logging, 401
  NTP, 402
  SNMP, 402
Self-signed certificates, 51
Server certificate, 230
Setting up a connection, 37
  By configuring, 127
  ISO connection with CP 1543-1, 128
Signature, 52
SNMP, 28, 402
SSL, 50
Symmetric encryption, 48
Syslog, 402
System data type, 119

T

TCON, 118
TCP, 28, 116, 124
TDISCON, 118
Time-of-day synchronization, 28
TLS, 50
Transport Layer Security, 50
TRCV, 118
TRCV_C, 118
TSEND, 118
TSEND_C, 118

U

UDP, 28, 116, 124
URCV, 139
USEND, 139
USS protocol, 146

W

Web server, 28
Write, 28

X

X.509, 44

SIEMENS

Edition 11/2022

FUNCTION MANUAL

SIMATIC

PROFINET

PROFINET with STEP 7

support.industry.siemens.com

SIEMENS

SIMATIC

PROFINET
PROFINET with STEP 7

Function Manual

Introduction 1

Safety instructions 2

Description 3

Parameter assignment/addressing 4

Diagnostics and maintenance 5

Functions 6

PROFINET with the redundant S7-1500R/H system 7

11/2022
A5E03444486-AM

Legal information

Warning notice system

This manual contains notices you have to observe in order to ensure your personal safety, as well as to prevent damage to property. The notices referring to your personal safety are highlighted in the manual by a safety alert symbol, notices referring only to property damage have no safety alert symbol. These notices shown below are graded according to the degree of danger.

⚠ DANGER
indicates that death or severe personal injury **will** result if proper precautions are not taken.

⚠ WARNING
indicates that death or severe personal injury **may** result if proper precautions are not taken.

⚠ CAUTION
indicates that minor personal injury can result if proper precautions are not taken.

NOTICE
indicates that property damage can result if proper precautions are not taken.

If more than one degree of danger is present, the warning notice representing the highest degree of danger will be used. A notice warning of injury to persons with a safety alert symbol may also include a warning relating to property damage.

Qualified Personnel

The product/system described in this documentation may be operated only by **personnel qualified** for the specific task in accordance with the relevant documentation, in particular its warning notices and safety instructions. Qualified personnel are those who, based on their training and experience, are capable of identifying risks and avoiding potential hazards when working with these products/systems.

Proper use of Siemens products

Note the following:

⚠ WARNING
Siemens products may only be used for the applications described in the catalog and in the relevant technical documentation. If products and components from other manufacturers are used, these must be recommended or approved by Siemens. Proper transport, storage, installation, assembly, commissioning, operation and maintenance are required to ensure that the products operate safely and without any problems. The permissible ambient conditions must be complied with. The information in the relevant documentation must be observed.

Trademarks

All names identified by ® are registered trademarks of Siemens AG. The remaining trademarks in this publication may be trademarks whose use by third parties for their own purposes could violate the rights of the owner.

Disclaimer of Liability

We have reviewed the contents of this publication to ensure consistency with the hardware and software described. Since variance cannot be precluded entirely, we cannot guarantee full consistency. However, the information in this publication is reviewed regularly and any necessary corrections are included in subsequent editions.

Siemens AG
Digital Industries
Postfach 48 48
90026 NÜRNBERG
GERMANY

A5E03444486-AM
Ⓟ 10/2022 Subject to change

Copyright © Siemens AG 2013 - 2022.
All rights reserved

Table of contents

1 Introduction 8

1.1 Function manuals documentation guide 12
1.1.1 Information classes Function Manuals 12
1.1.2 Basic tools 13
1.1.3 S7 Port Configuration Tool (S7-PCT) 15
1.1.4 S7 Failsafe Configuration Tool (S7-FCT) 15
1.1.5 MultiFieldbus Configuration Tool (MFCT) 16
1.1.6 SIMATIC Technical Documentation 16

2 Safety instructions 18

2.1 Security information 18

3 Description 19

3.1 Introduction to PROFINET 19
3.1.1 PROFINET terms 21
3.1.2 Basic terminology of communication 23
3.1.3 PROFINET interface 26
3.1.4 Implementation of the PROFINET device model in SIMATIC 28

3.2 Setting up PROFINET 30
3.2.1 Active Network Components 30
3.2.2 Cabling technology 32
3.2.3 Wireless design 34
3.2.3.1 Basics 34
3.2.3.2 Tips on assembly 37
3.2.4 Network security 38
3.2.4.1 Basics 38
3.2.4.2 Network components and software 40
3.2.4.3 Application example 41

4 Parameter assignment/addressing 43

4.1 Assigning an IO device to an IO controller 44

4.2 Device name and IP address 45
4.2.1 Device name 46
4.2.2 IP address 48
4.2.3 Assigning a device name and IP address 50
4.2.4 Assign device name via communication table 55
4.2.5 Permitting changes to the device name and IP address directly on the device 57

4.3 Configuring an IO device through hardware detection 59

4.4 Specifying the router for a PROFINET IO device 60

4.5 Configuring topology 63

4.5.1 Topology view in STEP 7 ... 66
4.5.2 Interconnecting ports in the topology view ... 67
4.5.3 Interconnecting ports - Inspector window ... 68
4.5.4 Automatic assignment of devices by offline/online comparison ... 69
4.5.5 Apply the port interconnections identified online manually to the project ... 70
4.5.6 Include the devices identified online manually in the project ... 71
4.5.7 Automatic assignment of devices by advanced offline/online comparison ... 72

5 Diagnostics and maintenance ... 73

5.1 Diagnostics mechanisms of PROFINET IO ... 73
5.1.1 Diagnostics levels in PROFINET IO ... 74

5.2 Diagnostics via LEDs ... 76

5.3 Diagnostics via the display of the S7-1500 CPUs ... 77

5.4 Diagnostics via Web server ... 80

5.5 Online diagnostics with STEP 7 ... 84

5.6 Extended maintenance concept ... 87

5.7 Diagnostics of the network topology ... 88

5.8 Diagnostics in the user program ... 90
5.8.1 Diagnostics and configuration data records ... 90
5.8.2 Evaluate diagnostics in the user program ... 92

5.9 Maintenance ... 95
5.9.1 I&M data (identification and maintenance) ... 95
5.9.2 Loading I&M data to PROFINET IO devices and your modules ... 95
5.9.3 Asset management ... 96
5.9.3.1 Further information about asset management at PROFINET ... 96
5.9.3.2 Content and structure of an asset management record ... 98
5.9.3.3 Asset management data record for I-devices ... 103

6 Functions ... 108

6.1 Connecting other bus systems ... 108
6.1.1 Linking PROFINET and PROFIBUS ... 109
6.1.2 Connect the DP slave via the IE/PB Link to a PROFINET IO system ... 111

6.2 Intelligent IO devices (I-devices) ... 112
6.2.1 I-device functionality ... 112
6.2.2 Properties and Advantages of the I-Device ... 114
6.2.3 Characteristics of an I-Device ... 114
6.2.4 Data Exchange between higher- and lower-level IO system ... 118
6.2.5 Configuring the I-device ... 120
6.2.6 Program examples ... 122
6.2.7 Diagnostics and interrupt characteristics ... 125
6.2.8 Rules for the Topology of a PROFINET IO System with I-Device ... 127
6.2.9 Boundary conditions when using I-devices ... 130
6.2.10 Configuring PROFIenergy with I-devices ... 131
6.2.11 Enabling/disabling I-device in the user program of the I-device CPU ... 132

6.3 Shared device ... 136
6.3.1 Useful information on shared devices ... 136
6.3.2 Basic information about project-internal shared devices ... 138

6.3.3 Configuring a project-internal shared device ... 140
6.3.4 Basic information on cross-project shared devices ... 143
6.3.5 Configuring a cross-project shared device ... 145
6.3.6 Configuring an I-device as a shared device ... 149
6.3.7 Module-internal shared input/shared output (MSI/MSO) ... 157

6.4 Media redundancy (ring topologies) ... 164
6.4.1 Media Redundancy Protocol (MRP) ... 165
6.4.2 Configuring media redundancy ... 168
6.4.3 Media redundancy with planned duplication of frames (MRPD; not for S7-1500R/H) ... 170
6.4.4 Multiple rings ... 172
6.4.5 MRP interconnection ... 176

6.5 Real-time communication ... 181
6.5.1 Introduction ... 181
6.5.2 RT ... 182
6.5.3 IRT ... 183
6.5.4 Comparison of RT and IRT ... 185
6.5.5 Configuring PROFINET IO with IRT ... 186
6.5.6 Setting the bandwidth usage for the send clock ... 189
6.5.7 Setup recommendations for optimizing PROFINET ... 190
6.5.8 Limitation of the data infeed into the network ... 194

6.6 PROFINET with performance upgrade ... 195
6.6.1 Dynamic frame packing ... 195
6.6.2 Fragmentation ... 197
6.6.3 Fast forwarding ... 198
6.6.4 Configuration of IRT with high performance ... 199
6.6.5 Sample configuration for IRT with high performance ... 203

6.7 Isochronous mode ... 203
6.7.1 What is isochronous mode? ... 203
6.7.2 Use of isochronous mode ... 205
6.7.3 Time sequence of synchronization on PROFINET IO ... 206
6.7.4 Configuring isochronous mode ... 207
6.7.4.1 Introduction ... 207
6.7.4.2 Configuring isochronous mode on PROFINET IO ... 208
6.7.4.3 Setting the application cycle and delay time ... 210
6.7.5 Programming isochronous mode ... 211
6.7.5.1 Basics of Programming ... 211
6.7.5.2 Program execution according to the IPO model ... 212
6.7.5.3 Program execution according to the OIP model ... 213

6.8 Direct data exchange ... 215
6.8.1 Introduction ... 215
6.8.2 Configuring direct data exchange between two S7-1500 CPUs ... 217
6.8.3 Configuring direct data exchange between multiple IO controllers ... 221

6.9 Device replacement without exchangeable medium ... 225
6.9.1 Device replacement without exchangeable medium/PG function ... 227
6.9.2 Replacing an IO device without exchangeable medium ... 228
6.9.3 Permit overwriting of PROFINET device name ... 229

6.10 Standard machine projects ... 232
6.10.1 Multiple use IO systems ... 233
6.10.1.1 What you should know about multiple use IO systems ... 233

6.10.1.2 Configuring multiple use IO systems ... 236
6.10.1.3 Adapt multiple use IO systems locally ... 238
6.10.2 Configuration control for IO systems ... 240
6.10.2.1 Information about configuration control of IO systems ... 240
6.10.2.2 Configuring IO devices as optional ... 243
6.10.2.3 Enabling optional IO devices in the program ... 244
6.10.2.4 Configuring flexible order of IO devices ... 249
6.10.2.5 Customizing arrangement of IO devices in the program ... 251
6.10.2.6 System behavior and rules ... 253

6.11 Saving energy with PROFIenergy ... 255

6.12 Docking systems ... 258
6.12.1 Configuring docking systems ... 260

6.13 Accelerating startup ... 263
6.13.1 Options for accelerating the startup of IO devices ... 263
6.13.2 Prioritized startup ... 264
6.13.3 Configuring prioritized startup ... 265
6.13.4 Optimize the port settings ... 266
6.13.5 Optimize the cabling of the ports ... 267
6.13.6 Measures in the user program ... 268

6.14 Dealing with timeouts while exchanging data ... 269
6.14.1 Terminating communication relation during faults ... 269
6.14.2 Example: Transfer data record for behavior change via FB ... 270

7 PROFINET with the redundant S7-1500R/H system ... 274

7.1 Media redundancy in the redundant S7-1500R/H system ... 275

7.2 H-Sync Forwarding ... 275

7.3 System redundancy S2 ... 276

7.4 System redundancy R1 ... 278

7.5 Switched S1 device ... 280

7.6 Main differences between IO device with system redundancy S2, R1 and standard IO device ... 283

7.7 Installation guidelines ... 284

7.8 Configuring PROFINET IO on a redundant S7-1500R/H system ... 285

7.9 Assigning IO device to the redundant S7-1500R/H system ... 291

7.10 Configuring media redundancy (MRP) for a configuration with the redundant S7-1500R/H system ... 294

7.11 MRP interconnection with the redundant system S7-1500R/H ... 297

Glossary ... 302

Index ... 315

Introduction 1

Purpose of the documentation

This function manual provides an overview of the PROFINET communication system with SIMATIC STEP 7 V17.

STEP 7 V17 is integrated into the high-performance graphical Totally Integrated Automation Portal (TIA Portal), the integration platform for all automation software tools.

This function manual supports you in planning a PROFINET system. The manual is structured into the following subject areas:

- PROFINET basics
- PROFINET diagnostics
- PROFINET functions

Basic knowledge required

The following knowledge is required in order to understand the manual:

- General knowledge of automation technology
- Knowledge of the industrial automation system SIMATIC
- Knowledge about the use of Windows-based computers
- Knowledge about how to use STEP 7 (TIA Portal)

Scope

This documentation is the basic documentation for all SIMATIC products from the PROFINET environment. The product documentation is based on this documentation.

The examples are based on the functionality of the S7-1500 automation system.

What's new in the PROFINET function manual, 11/2022 edition compared to 05/2021 edition

Function	What are the customer benefits?	Where can I find this information?
Project-internal shared device	As of STEP 7 V18, it is also possible to configure project-internal shared devices under certain conditions.	Section Shared device (Page 136)
Maintaining the communication relation (AR)	For high network load, the communication relation is terminated by the CPU. As of FW version V3.0, the communication relation can be maintained by writing a data record.	Section Dealing with timeouts while exchanging data (Page 268)

Function	What are the customer benefits?	Where can I find this information?
Support PROFINET system redundancy R1	As of FW version V3.0, the S7-1500H supports PROFINET system redundancy R1. R1 devices are equipped with two interface modules compared to S2 devices. If one interface module fails, the R1 device can still be reached by the H-CPUs via the second interface module. Thus, R1 devices have a higher availability than S2 devices.	Section PROFINET with redundant S7-1500R/H system (Page 274)
MRP interconnection	As of FW version V3.0, the CPUs of the S7-1500H redundant system may be located in 1 or 2 rings during MRP interconnection.	Section MRP Interconnection with the redundant S7-1500R/H system (Page 296)

What's new in the PROFINET Function Manual, Edition 05/2021 compared to Edition 11/2018

Function	What are the customer benefits?	Where can I find this information?
MRP interconnection	The MRP interconnection procedure is an extension of MRP. MRP interconnection allows the redundant coupling of 2 or more rings with MRP in PROFINET networks. MRP interconnection offers the following advantages: There is no limit to the maximum number of 50 devices in a ring when setting up redundant network topologies. Monitoring of larger topologies with ring redundancy.	Section MRP interconnection (Page 176) Section MRP interconnection with the redundant system S7-1500R/H (Page 296)
Enable/disable the I-device	You can use the "D_ACT_DP" instruction to locally disable or enable the I-device function in the user program of the I-device CPU.	Section Enabling/disabling I-device in the user program of the I-device CPU (Page 132)

What's new in the PROFINET Function Manual, Edition 11/2019 compared to Edition 10/2018

Function	What are the customer benefits?	Where can I find this information?
Direct data exchange	In the case of direct data exchange, an S7-1500 CPU provides cyclic net data from the I/O area to one or more partners. The "Direct data exchange" function enables deterministic, isochronous IO communication between multiple S7-1500 CPUs.	Section Direct data exchange (Page 214)
Switched S1 device	The "Switched S1 device" function of the CPU enables operation of standard IO devices in the S7-1500R/H redundant system.	Section Switched S1 device (Page 280)

What's new in the PROFINET Function Manual, Edition 10/2018 compared to Edition 12/2017

This manual (version 10/2018) includes the following new functions compared to the previous version (version 12/2017):

Function	Applications	Your benefits
PROFINET IO with the redundant S7-1500R/H system	In a PROFINET IO system with the redundant S7-1500R/H system, the IO communication continues even when one CPU fails.	The redundant S7-1500R/H system offers a high degree of reliability and system availability. A redundant configuration of the most important automation components reduces the probability of production downtimes and the consequences of component failures.

What's new in the PROFINET function manual, version 12/2017 compared to version 09/2016

This manual (version 12/2017) encompasses the following new functions compared to the previous version (version 09/2016):

Function	Applications	Your benefits
Specifying the router for a PROFINET IO device	You can specify the IP address of a router for each IO device. You reach the IO device from outside the IP subnet through the router.	In the past, it was only possible to specify a router for a PROFINET IO interface at the IO controller. The IO devices inherited the setting of the IO controller interface. Now you can set the router address independently of the IO controller setting. This allows, for example, a router address at the IO device although you have not set a router address or have set a different address at the IO controller.
Configuring an IO device through hardware detection	You can detect an existing IO device and enter it in your project.	STEP 7 inserts the IO device with all the modules and submodules into the project. Article numbers and firmware versions between real and configured IO devices match. You reduce the configuration effort required.
Asset management	You can centrally manage non-PROFINET components (assets) of a PROFINET device. The PROFINET device makes the identification data of the assets available for evaluation via a standardized data record.	The new standardized PROFINET service makes it possible to manage all the hardware and firmware components of PROFINET devices centrally. The possibilities available for filtering device data, for example, depend on the range of performance of the evaluating application.
Asset management data record for I-devices	Special application of asset management: From the point of view of a higher-level IO controller, the modules plugged into the I-device represent assets. The user program in the I-device compiles the asset management data record. The IO controller can read identification data of the I-device modules through this data record.	See Asset management.

What's new in the PROFINET function manual, Version 09/2016 compared to Version 12/2014

This manual (version 09/2016) encompasses the following new functions compared to the previous version (version 12/2014):

Function	Applications	Your benefits
PROFINET IO on the 2nd PROFINET interface	You can operate another PROFINET IO system on the CPU or connect additional IO devices.	You use a fieldbus type in the plant. The CPU can perform fast and deterministic data exchange as an I-device with a higher-level controller (PROFINET/Ethernet) through the second line.
IRT with very short data cycle times down to 125 µs	You realize high-end applications with IO communication which place very high performance demands on the IO processing.	You make PROFINET IO communication and standard communication possible via one cable even with a send clock of 125 µs.
MRPD: Media Redundancy with Planned Duplication of frames	PROFINET IO IRT enables you to realize applications that place particularly high demands on the reliability and accuracy (isochronous mode).	By sending the cyclic IO data in both directions in the ring, the communication to the IO devices is maintained even when the ring is interrupted and does not result in device failure even with fast update times. You achieve higher reliability than with MRP.
PROFINET performance upgrade	You can implement applications with high speed and send clock requirements. This is of interest to applications with high demands on performance.	Better utilization of the bandwidth results in short reaction times.
Limitation of the data infeed into the network	You limit the network load for standard Ethernet communication to a maximum value.	You flatten peaks in the data feed. You share the remaining bandwidth based on demand.

Conventions

STEP 7: We refer to "STEP 7" in this documentation as a synonym for the configuration and programming software "STEP 7 as of V12 (TIA Portal)" and subsequent versions.

This documentation contains pictures of the devices described. The figures may differ slightly from the device supplied.

You should also pay particular attention to notes such as the one shown below:

NOTE

A note contains important information on the product, on handling of the product and on the section of the documentation to which you should pay particular attention.

Industry Mall

The Industry Mall is the catalog and order system of Siemens AG for automation and drive solutions on the basis of Totally Integrated Automation (TIA) and Totally Integrated Power (TIP).

You can find catalogs for all automation and drive products on the Internet (https://mall.industry.siemens.com).

1.1 Function manuals documentation guide

1.1.1 Information classes Function Manuals

The documentation for the SIMATIC S7-1500 automation system, for the 1513/1516pro-2 PN, SIMATIC Drive Controller CPUs based on SIMATIC S7-1500 and the SIMATIC ET 200MP, ET 200SP, ET 200AL and ET 200eco PN distributed I/O systems is arranged into three areas.

This arrangement enables you to access the specific content you require.
You can download the documentation free of charge from the Internet (https://support.industry.siemens.com/cs/ww/en/view/109742705).

Basic information

The system manuals and Getting Started describe in detail the configuration, installation, wiring and commissioning of the SIMATIC S7-1500, SIMATIC Drive Controller, ET 200MP, ET 200SP, ET 200AL and ET 200eco PN systems. Use the corresponding operating instructions for 1513/1516pro-2 PN CPUs.

The STEP 7 online help supports you in the configuration and programming.

Examples:

- Getting Started S7-1500
- System manuals
- Operating instructions ET 200pro and 1516pro-2 PN CPU
- Online help TIA Portal

Device information

Equipment manuals contain a compact description of the module-specific information, such as properties, wiring diagrams, characteristics and technical specifications.

Examples:

- Equipment manuals for CPUs
- Equipment manuals for interface modules
- Equipment manuals for digital modules
- Equipment manuals for analog modules
- Equipment manuals for communication modules
- Equipment manuals for technology modules
- Equipment manuals for power supply modules
- Equipment manuals for BaseUnits

General information

The function manuals contain detailed descriptions on general topics relating to the SIMATIC Drive Controller and the S7-1500 automation system.
Examples:

- Function Manual Diagnostics
- Function Manual Communication
- Function Manuals Motion Control
- Function Manual Web Server
- Function Manual Cycle and Response Times
- PROFINET Function Manual
- PROFIBUS Function Manual

Product Information

Changes and supplements to the manuals are documented in a Product Information. The Product Information takes precedence over the device and system manuals.
You will find the latest Product Information on the Internet:

- S7-1500/ET 200MP (https://support.industry.siemens.com/cs/de/en/view/68052815)
- SIMATIC Drive Controller (https://support.industry.siemens.com/cs/de/en/view/109772684/en)
- Motion Control (https://support.industry.siemens.com/cs/de/en/view/109794046/en)
- ET 200SP (https://support.industry.siemens.com/cs/de/en/view/73021864)
- ET 200eco PN (https://support.industry.siemens.com/cs/ww/en/view/109765611)

Manual Collections

The Manual Collections contain the complete documentation of the systems put together in one file.
You will find the Manual Collections on the Internet:

- S7-1500/ET 200MP/SIMATIC Drive Controller (https://support.industry.siemens.com/cs/ww/en/view/86140384)
- ET 200SP (https://support.industry.siemens.com/cs/ww/en/view/84133942)
- ET 200AL (https://support.industry.siemens.com/cs/ww/en/view/95242965)
- ET 200eco PN (https://support.industry.siemens.com/cs/ww/en/view/109781058)

1.1.2 Basic tools

The tools described below support you in all steps: from planning, over commissioning, all the way to analysis of your system.

TIA Selection Tool

The TIA Selection Tool tool supports you in the selection, configuration, and ordering of devices for Totally Integrated Automation (TIA).
As successor of the SIMATIC Selection Tools , it assembles the configuration editors for automation technology already familiar into a single tool.

With the TIA Selection Tool , you can generate a complete order list from your product selection or product configuration.
You can find the TIA Selection Tool on the Internet.
(https://support.industry.siemens.com/cs/ww/en/view/109767888)

SIMATIC Automation Tool

You can use the SIMATIC Automation Tool to perform commissioning and maintenance activities on various SIMATIC S7 stations as bulk operations independent of TIA Portal.
The SIMATIC Automation Tool offers a wide range of functions:

- Scanning of a PROFINET/Ethernet system network and identification of all connected CPUs
- Assignment of addresses (IP, subnet, Gateway) and device name (PROFINET device) to a CPU
- Transfer of the date and the programming device/PC time converted to UTC time to the module
- Program download to CPU
- RUN/STOP mode switchover
- CPU localization through LED flashing
- Reading out of CPU error information
- Reading the CPU diagnostic buffer
- Reset to factory settings
- Firmware update of the CPU and connected modules

You can find the SIMATIC Automation Tool on the Internet.
(https://support.industry.siemens.com/cs/ww/en/view/98161300)

PRONETA

SIEMENS PRONETA (PROFINET network analysis) is a commissioning and diagnostic tool for PROFINET networks. PRONETA Basic has two core functions:

- The "Network analysis" offers a quick overview of the PROFINET topology. It is possible to make simple parameter changes (for example, to the names and IP addresses of the devices). In addition, a quick and convenient comparison of the real configuration with a reference system is also possible.
- The "IO test" is a simple and rapid test of the wiring and the module configuration of a plant, including documentation of the test results.

You can find SIEMENS PRONETA Basic on the Internet:
(https://support.industry.siemens.com/cs/ww/en/view/67460624)
SIEMENS PRONETA Professional is a licensed product that offers you additional functions. It offers you simple asset management in PROFINET networks and supports operators of automation systems in automatic data collection/acquisition of the components used through various functions:

- The user interface (API) offers an access point to the automation cell to automate the scan functions using MQTT or a command line.
- With PROFIenergy diagnostics, you can quickly detect the current pause mode or the readiness for operation of devices that support PROFIenergy and change these as needed.
- The data record wizard supports PROFINET developers in reading and writing acyclic PROFINET data records quickly and easily without PLC and engineering.

You can find SIEMENS PRONETA Professional on the Internet.
(https://www.siemens.com/proneta-professional)

SINETPLAN

SINETPLAN, the Siemens Network Planner, supports you in planning automation systems and networks based on PROFINET. The tool facilitates professional and predictive dimensioning of your PROFINET installation as early as in the planning stage. In addition, SINETPLAN supports you during network optimization and helps you to exploit network resources optimally and to plan reserves. This helps to prevent problems in commissioning or failures during productive operation even in advance of a planned operation. This increases the availability of the production plant and helps improve operational safety.

The advantages at a glance

- Network optimization thanks to port-specific calculation of the network load
- Increased production availability thanks to online scan and verification of existing systems
- Transparency before commissioning through importing and simulation of existing STEP 7 projects
- Efficiency through securing existing investments in the long term and the optimal use of resources

You can find SINETPLAN on the Internet
(https://new.siemens.com/global/en/products/automation/industrial-communication/profinet/sinetplan.html).

1.1.3 S7 Port Configuration Tool (S7-PCT)

SIMATIC S7-PCT

The Port Configuration Tool (PCT) is a PC-based software for the parameter assignment of Siemens IO-Link Master modules and IO-Link devices from any manufacturer.

You integrate IO-devices using the standardized device description "IODD", which you get from the respective device manufacturer. S7-PCT supports version 1.0 and V1.1 of the IODD.

S7-PCT is called via the hardware configuration of the IO-Link Master from STEP 7. When STEP 7 is not used or the IO-Link Master is not operated on a SIMATIC controller, "standalone"-operation is also possible.

You can find additional information on IO-Link on the Internet
(https://new.siemens.com/global/en/products/automation/industrial-communication/io-link.html).

1.1.4 S7 Failsafe Configuration Tool (S7-FCT)

SIMATIC S7-FCT

Failsafe Configuration Tool (FCT) enables you to GSD configure the following devices in third-party engineering systems:

- Selected, functionally fail-safe SIMATIC I/O devices
- Functionally fail-safe SIRIUS ACT PROFINET interfaces

The engineering system must meet the following requirements for this:

- Support of the CPD system integration acc. to "PROFIsafe - Profile for Safety Technology on PROFIBUS DP and PROFINET IO"
- TCI implementation to Conformance Class C3

Additional information on S7-FCT can be found on the Internet (https://support.industry.siemens.com/cs/ww/en/view/109762827).

1.1.5 MultiFieldbus Configuration Tool (MFCT)

MultiFieldbus Configuration Tool

The MultiFieldbus Configuration Tool (MFCT) is a PC-based software for the configuration of Siemens MultiFeldbus devices.

With Siemens MF devices, you download the GSDML file of the MultiFeldbus device to the MFCT for configuring.

Four steps are required for configuring:

1. Assigning the IP address
2. Configuring and parameter assignment
3. Transfer the configuration to the MF device
4. Configuring MF devices in the Engineering System

To do this, the MFCT provides the necessary project files in EDS format (Electronic Data Sheet).

The MFCT runs under Windows and does not require installation or administrator rights.
You can find additional information on MFCT on the Internet.
(https://support.industry.siemens.com/cs/de/en/view/109773881)

1.1.6 SIMATIC Technical Documentation

Additional SIMATIC documents will complete your information. You can find these documents and their use at the following links and QR codes.

The Industry Online Support gives you the option to get information on all topics. Application examples support you in solving your automation tasks.

Overview of the SIMATIC Technical Documentation

Here you will find an overview of the SIMATIC documentation available in Siemens Industry Online Support:

Industry Online Support International
(https://support.industry.siemens.com/cs/ww/en/view/109742705)

Watch this short video to find out where you can find the overview directly in Siemens Industry Online Support and how to use Siemens Industry Online Support on your mobile device:

Quick introduction to the technical documentation of automation products per video (https://support.industry.siemens.com/cs/us/en/view/109780491)

YouTube video: Siemens Automation Products - Technical Documentation at a Glance (https://youtu.be/TwLSxxRQQsA)

mySupport

With "mySupport" you can get the most out of your Industry Online Support.

Registration	You must register once to use the full functionality of "mySupport". After registration, you can create filters, favorites and tabs in your personal workspace.
Support requests	Your data is already filled out in support requests, and you can get an overview of your current requests at any time.
Documentation	In the Documentation area you can build your personal library.
Favorites	You can use the "Add to mySupport favorites" to flag especially interesting or frequently needed content. Under "Favorites", you will find a list of your flagged entries.
Recently viewed articles	The most recently viewed pages in mySupport are available under "Recently viewed articles".
CAx data	The CAx data area gives you access to the latest product data for your CAx or CAe system. You configure your own download package with a few clicks: • Product images, 2D dimension drawings, 3D models, internal circuit diagrams, EPLAN macro files • Manuals, characteristics, operating manuals, certificates • Product master data

You can find "mySupport" on the Internet. (https://support.industry.siemens.com/My/ww/en)

Application examples

The application examples support you with various tools and examples for solving your automation tasks. Solutions are shown in interplay with multiple components in the system - separated from the focus on individual products.
You can find the application examples on the Internet.
(https://support.industry.siemens.com/cs/ww/en/ps/ae)

Safety instructions 2

2.1 Security information

Siemens provides products and solutions with industrial security functions that support the secure operation of plants, systems, machines and networks.

In order to protect plants, systems, machines and networks against cyber threats, it is necessary to implement – and continuously maintain – a holistic, state-of-the-art industrial security concept. Siemens' products and solutions constitute one element of such a concept.

Customers are responsible for preventing unauthorized access to their plants, systems, machines and networks. Such systems, machines and components should only be connected to an enterprise network or the internet if and to the extent such a connection is necessary and only when appropriate security measures (e.g. firewalls and/or network segmentation) are in place.

For additional information on industrial security measures that may be implemented, please visit (https://www.siemens.com/industrialsecurity).

Siemens' products and solutions undergo continuous development to make them more secure. Siemens strongly recommends that product updates are applied as soon as they are available and that the latest product versions are used. Use of product versions that are no longer supported, and failure to apply the latest updates may increase customers' exposure to cyber threats.

To stay informed about product updates, subscribe to the Siemens Industrial Security RSS Feed visit (https://www.siemens.com/cert).

Description 3

3.1 Introduction to PROFINET

What is PROFINET IO?

Within the framework of Totally Integrated Automation (TIA), PROFINET IO is the logical further development of:

- PROFIBUS DP, the established fieldbus and
- Industrial Ethernet

PROFINET IO is based on 20 years of experience with the successful PROFIBUS DP and combines the normal user operations with the simultaneous use of innovative concepts of Ethernet technology. This ensures the integration of PROFIBUS DP into the PROFINET world.

PROFINET IO as the Ethernet-based automation standard of PROFIBUS/PROFINET International defines a cross-vendor communication, automation, and engineering model.

Objectives of PROFINET

The objectives of PROFINET:

- Industrial networking, based on Industrial Ethernet (open Ethernet standard)
- Compatibility of Industrial Ethernet and standard Ethernet components
- High robustness due to Industrial Ethernet devices. Industrial Ethernet devices are suited to the industrial environment (temperature, noise immunity, etc.).
- Use of IT standards such as TCP/IP, http.
- Real-time capability
- Seamless integration of other fieldbus systems

Implementation of PROFINET in SIMATIC

PROFINET is implemented in SIMATIC as follows:

- We have implemented communication between field devices in SIMATIC with **PROFINET IO**.
- Installation technology and network components are available as SIMATIC NET products.
- Ethernet standard protocol and procedures (e.g., SNMP = Simple Network Management Protocol for network parameter assignment and diagnostics) are used for remote maintenance and network diagnostics.

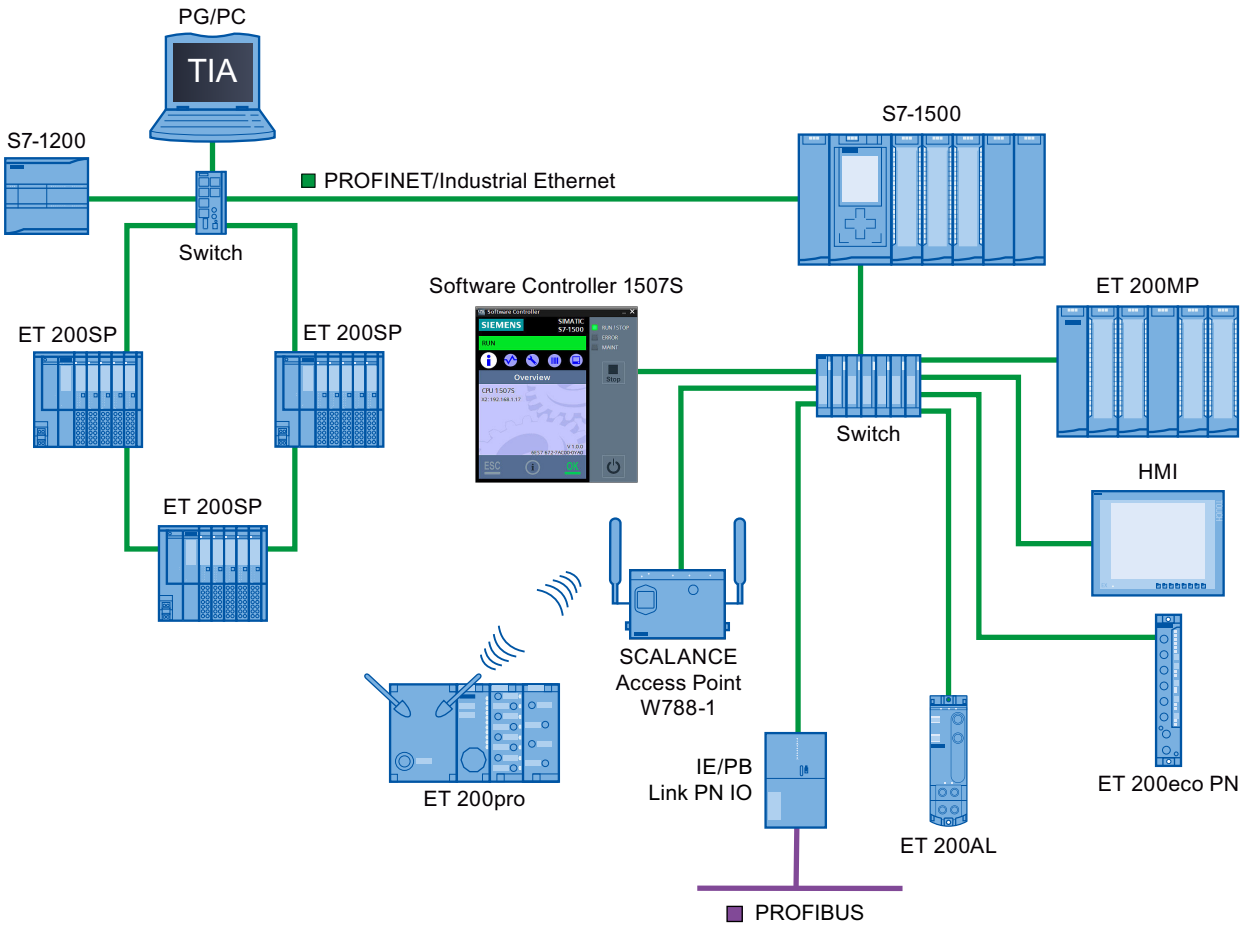

Figure 3-1 PROFINET overview configuration

STEP 7

The STEP 7 engineering tool supports you in setting up and configuring an automation solution. STEP 7 provides a uniform application view over all bus systems.

Documentation from PROFIBUS & PROFINET International on the Internet

You will find numerous documents on the topic of PROFINET at the Internet address (http://www.profibus.com) of the "PROFIBUS & PROFINET International" PROFIBUS user organization, which is also responsible for PROFINET.
Additional information can be found on the Internet (http://www.siemens.com/profinet).

Overview of the most important documents and links

A compilation of the most important PROFINET application examples, FAQs and other contributions in the Industry Online Support is available in this FAQ (https://support.industry.siemens.com/cs/ww/en/view/108165711).

3.1.1 PROFINET terms

Definition: Devices in the PROFINET environment

In the PROFINET environment, "device" is the generic term for:

- Automation systems (PLC, PC, for example)
- Distributed I/O systems
- Field devices (for example, hydraulic devices, pneumatic devices)
- Active network components (for example, switches, routers)
- Gateways to PROFIBUS, AS interface or other fieldbus systems

PROFINET IO devices

The following graphic shows the general names used for the most important devices in PROFINET. In the table below the graphic you can find the names of the individual components in the PROFINET IO context.

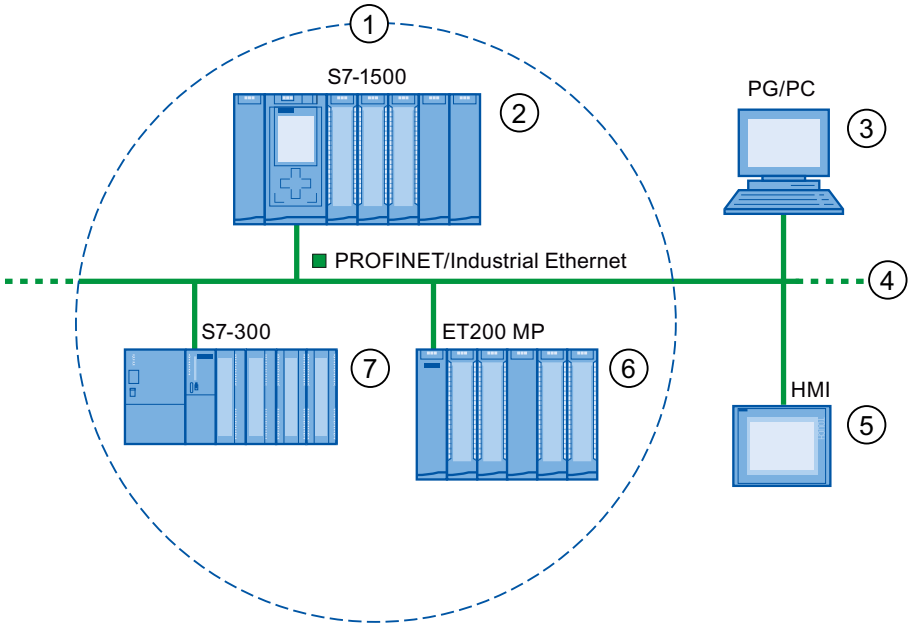

Number	PROFINET	Explanation
①	PROFINET IO System	
②	IO controller	Device used to address the connected IO devices. This means that: The IO controller exchanges input and output signals with field devices.
③	Programming device / PC (PROFINET IO supervisor)	PG/PC/HMI device used for commissioning and for diagnostics
④	PROFINET/Industrial Ethernet	Network infrastructure

⑤	HMI (Human Machine Interface)	Device for operating and monitoring functions.
⑥	IO device	A distributed field device that is assigned to one of the IO controllers (e.g., Distributed IO, valve terminals, frequency converters, switches with integrated PROFINET IO functionality)
⑦	I-device	Intelligent IO device

Figure 3-2 PROFINET devices

IO communication via PROFINET IO

The inputs and outputs of distributed I/O devices are read and written by means of PROFINET IO using what is referred to as IO communication. The following figure provides an overview of IO communication by means of PROFINET IO.

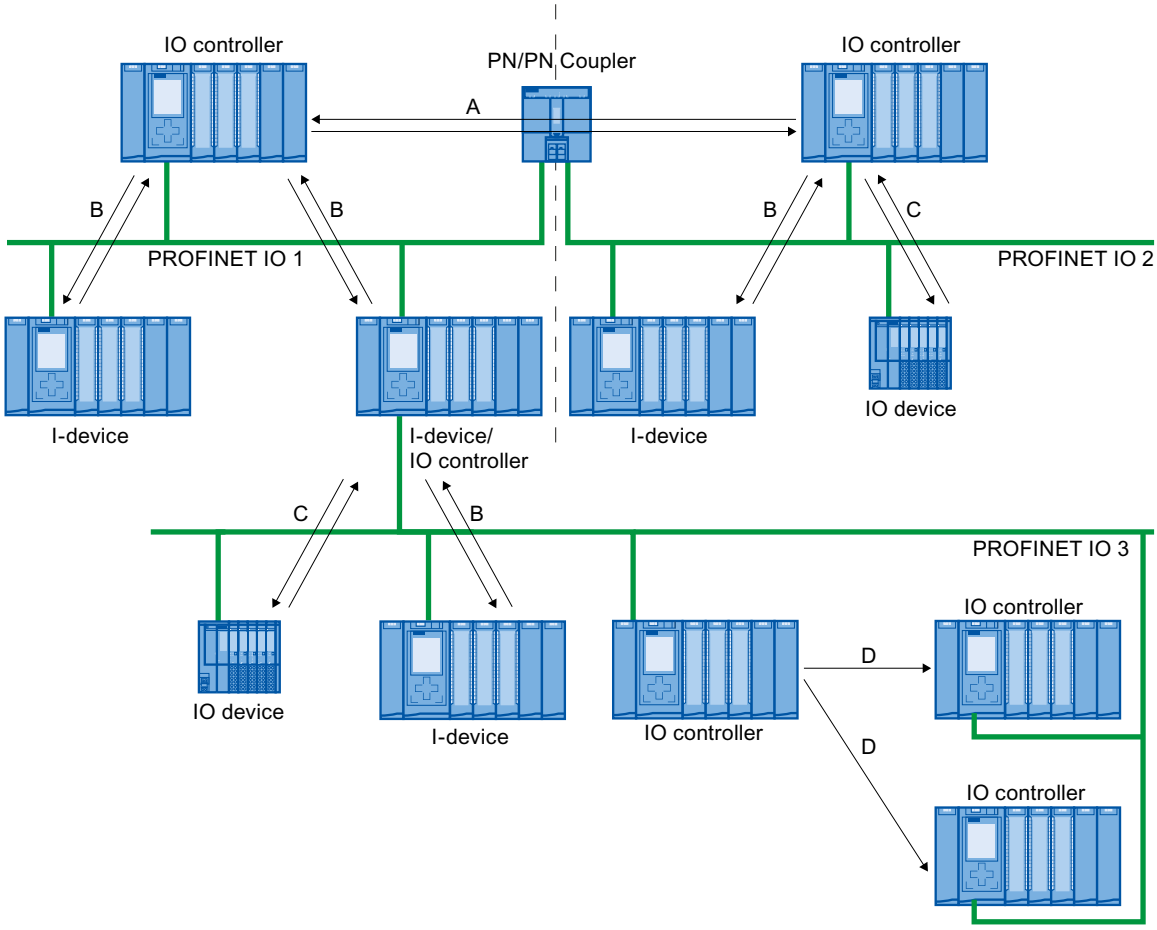

A IO controller - IO controller communication via PN/PN coupler

B IO controller - I-device communication

C IO controller - IO-device communication

D Direct data exchange between S7-1500-CPUs

Figure 3-3 IO communication via PROFINET IO

IO communication via PROFINET IO

Table 3-1 IO communication via PROFINET IO

Communication between ...	Explanation
IO controllers and IO devices	The IO controller sends data cyclically to the IO devices of its PROFINET IO system and receives data from these devices.
IO controller and I-device	A fixed quantity of data is transferred cyclically between the user programs in CPUs of IO controllers and I-devices. The IO controller does not access the I/O module of the I-device, but instead accesses configured address ranges, i.e. transfer ranges, which may be located inside our outside the process image of the CPU of the I-device. If parts of the process image are used as transfer ranges, it is not permitted to use these for real I/O modules. Data transfer takes place using load- and transfer operations via the process image or via direct access.
IO controller and IO controller (PN/PN coupler)	A fixed quantity of data is cyclically transferred between the user programs in CPUs of IO controllers. A PN/PN coupler is required as additional hardware. The IO controllers mutually access configured address ranges, i.e. transfer ranges, which may be located inside or outside the process image of the CPU. If parts of the process image are used as transfer ranges, it is not permitted to use these for real I/O modules. Data transfer takes place using load- and transfer operations via the process image or via direct access. I/O communication with PN/PN coupler is possible between two PROFINET IO systems.
S7-1500-CPU and S7-1500-CPU (direct data exchange)	In the case of direct data exchange, an S7-1500 CPU provides cyclic user data from the I/O area to one or more partners. The direct data exchange is based on PROFINET with IRT and isochronous mode. The data exchange takes place via transfer areas.

See also

Communication (http://support.automation.siemens.com/WW/view/en/59192925)

Network security (Page 38)

Functions (Page 108)

3.1.2 Basic terminology of communication

PROFINET communication

PROFINET communication takes place via Industrial Ethernet. The following transmission types are supported:

- Acyclic transmission of engineering and diagnostics data and interrupts
- Cyclic transmission of user data

The PROFINET-IO communication takes place in real-time.

For additional information on the real-time communication, refer to chapter Real-time communication (Page 180).

Transparent data access

Access to process data from different levels of the factory is supported by PROFINET communication. By using Industrial Ethernet, standard mechanisms of communication and information technology such as OPC/XML can now be used along with standard protocols such as UDP/TCP/IP and HTTP in automation engineering. This allows transparent access from company management level directly to the data from the automation systems at the control level and production level.

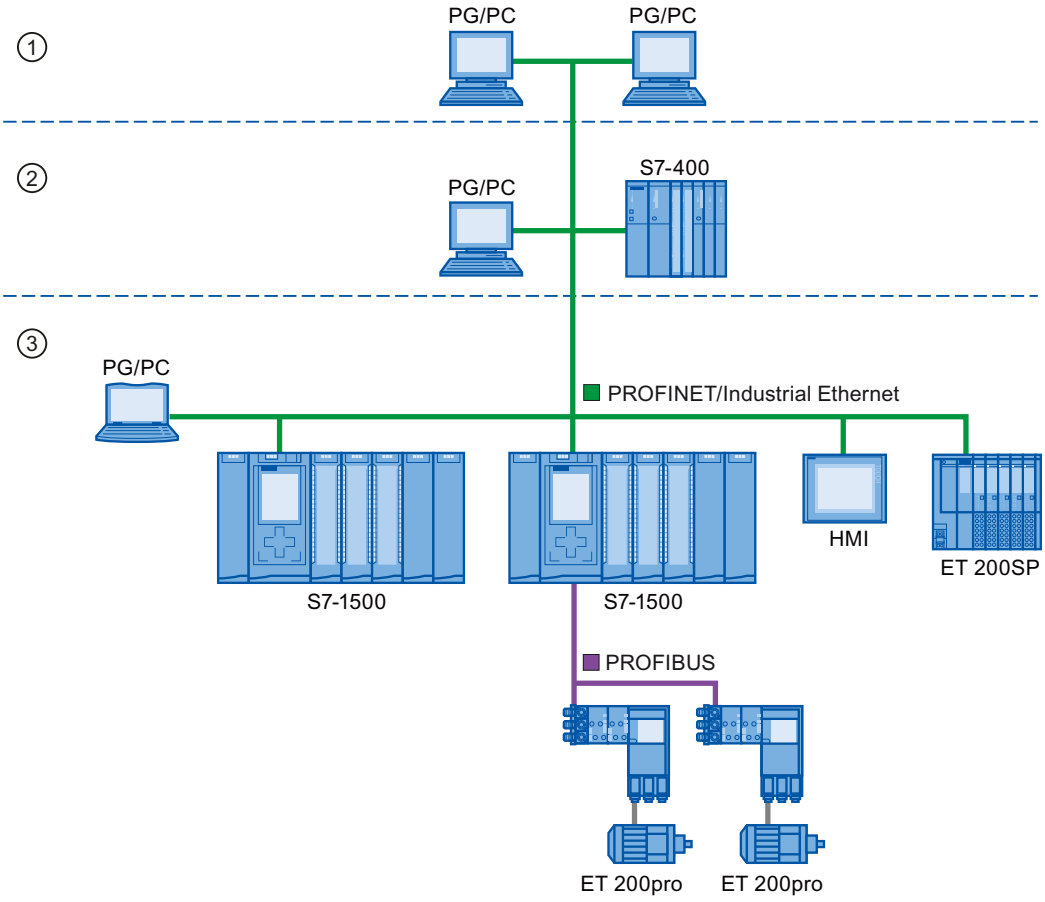

① Management level

② Control level

③ Production level

Figure 3-4 Access to process data

Update time

The update time is a time interval. IO controller and IO device/I-device exchange IO data cyclically in the IO system within this time interval. The update time can be configured separately for each IO device and determines the interval at which output data is sent from the IO controller to the IO device (output module/submodule) as well as input data from the IO device to the IO controller (input module/submodule).

STEP 7 calculates the update time automatically in the default setting for each IO device of the PROFINET IO system, taking into account the volume of data to be exchanged as well as the set send clock.

For additional information on the update time, refer to section Real-time communication (Page 180).

Watchdog time

The watchdog time is the time interval that an IO controller or IO device permits, without receiving IO data. If the IO device is not supplied by the IO controller with data within the watchdog time, the IO device detects the missing frames and outputs substitute values. This is reported in the IO controller as a station failure.

In STEP 7, the watchdog time is made up from an integral multiple of the update time and can be set by the user.

Send clock

The period of time between two consecutive communication cycles. The send clock is the shortest possible interval in data exchange and thus also the smallest value that can be set for the update time.

Relationship between the update time and send clock

The calculated update times are reduction ratios (1, 2, 4, 8, ..., 512) of the send clock. The minimum possible update time thus depends on the minimum send clock of the IO controller that can be set and the efficiency of the IO controller and IO device. Depending on the send clock, it can be that only some of the reduction ratios are available (STEP 7 guarantees this through a pre-selection).

The following tables illustrate the dependency of the update time that can be set on the send clock, using an example of the CPU 1516-3 PN/DP. The update times satisfy the requirements of the PROFINET standard IEC 61158.

Table 3-2 With real-time communication the following applies:

Send clock	Update time	Reduction ratios
250 µs	250 µs to 128 ms	1,2, ..., 512
500 µs	500 µs to 256 ms	1,2, ..., 512
1 ms	1 ms to 512 ms	1,2, ..., 512
2 ms	2 ms to 512 ms	1,2, ..., 256
4 ms	4 ms to 512 ms	1,2, ..., 128

Additional information

For information on real-time communication, refer to the section Real-Time Communication (RT) (Page 182).

3.1.3 PROFINET interface

Overview

PROFINET devices of the SIMATIC product family have one or more PROFINET interfaces (Ethernet controller/interface). The PROFINET interfaces have one or more ports (physical connection options).

In the case of PROFINET interfaces with multiple ports, the devices have an integrated switch.

PROFINET devices with two ports on one interface allow you to configure the system in a line or ring topology. PROFINET devices with three or more ports on one interface are also ideal for setting up tree topologies.

Properties and rules for naming the PROFINET interface and its representation in STEP 7 are explained in the following.

Properties

Every PROFINET device on the network is uniquely identified via its PROFINET interface. For this purpose, each PROFINET interface has:

- A MAC address (factory default)
- An IP address
- A PROFINET device name

Identification and numbering of the interfaces and ports

Interfaces and ports for all modules and devices in the PROFINET system are identified with the following characters:

Table 3-3 Identification for interfaces and ports of PROFINET devices

Element	Symbol	Interface number
Interface	X	In ascending order starting from number 1
Port	P	In ascending order starting from number 1 (for each interface)
Ring port	R	

Examples of identification

Three examples illustrate the rules for identifying PROFINET interfaces:

Table 3-4 Examples for identifying PROFINET interfaces

Sample labeling	Interface number	Port number
X2 P1	2	1
X1 P2	1	2
X1 P1 R	1	1 (ring port)

Representation of PROFINET Interfaces in the Topology Overview in STEP 7

You can find the PROFINET interface in the topology overview in STEP 7. The PROFINET interface for an IO controller and an IO device is represented as follows in STEP 7:

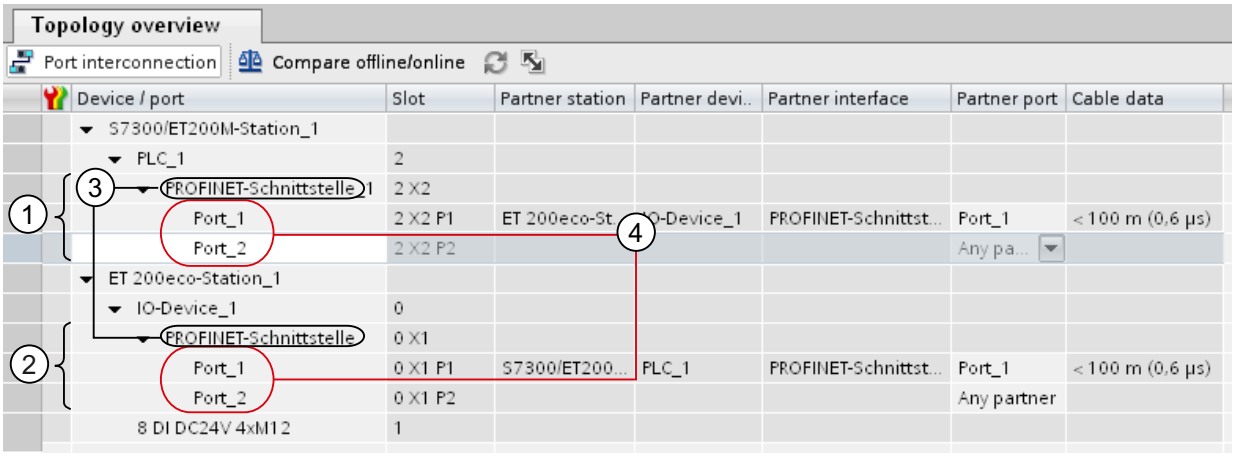

Number	Description
①	PROFINET interface of an IO controller in STEP 7
②	PROFINET interface of an IO device in STEP 7
③	These lines represent the PROFINET interface.
④	These lines represent the "ports" of a PROFINET interface.

Figure 3-5 Representation of the PROFINET interfaces in STEP 7

Schematic Representation of a PROFINET Interface with Integrated Switch

The following schematic diagram shows the PROFINET interface with integrated switch and its ports for all PROFINETdevices.

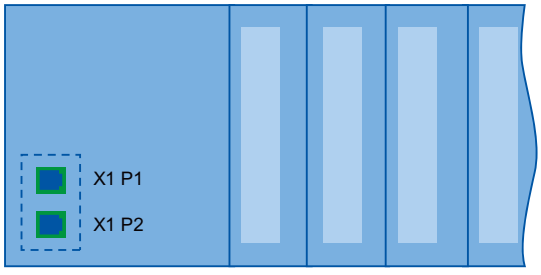

Figure 3-6 PROFINET interface with integrated switch

Functional differences of the PROFINET interfaces

PROFINET interfaces can provide different functions. PROFINET interface functions include identification, configuration, diagnostics and communication services (e.g., open communication). PROFINET interfaces that provide PROFINET IO functions and network security functions are also available.

The following table illustrates the differences using the example of the CPU 1516-3 PN/DP (as of firmware version V2.0), which features two PROFINET interfaces with different functionality.

Table 3-5 Differences between the PROFINET interfaces of the CPU 1516-3 PN/DP (as of firmware version V2.0)

PROFINET interface (X1)	**PROFINET interface (X2)**
2 ports with PROFINET IO functionality:	**1 port with PROFINET IO functionality:**
Identification, configuration and diagnostics	
PG communication	
HMI communication	
S7 communication	
Time-of-day synchronization	
Web server	
Open communication	
OPC UA server	
IO controller	
I-device	
RT	
IRT	-
Isochronous mode	-
Media redundancy	-
Prioritized startup	-

Additional Information on the Functionality of PROFINET interfaces

You can find information on the number and functionality of the interfaces of a PROFINET device in the documentation for the specificPROFINET device.
PROFINET communication services are described in the Communication function manual (http://support.automation.siemens.com/WW/view/en/59192925).
In the Network security (Page 38) section you can find components that are used to protect networks against hazards.
The Functions (Page 108) section describes the PROFINET IO functions.

3.1.4 Implementation of the PROFINET device model in SIMATIC

Slots and modules

A PROFINET device can have a modular and compact structure. A modular PROFINET device consists of slots into which the modules are inserted. The modules have channels which are used to read and output process signals. A compact device has the same design and can include modules, however, it cannot be physically expanded, which means that no modules can be inserted.

This is illustrated by the following graphic.

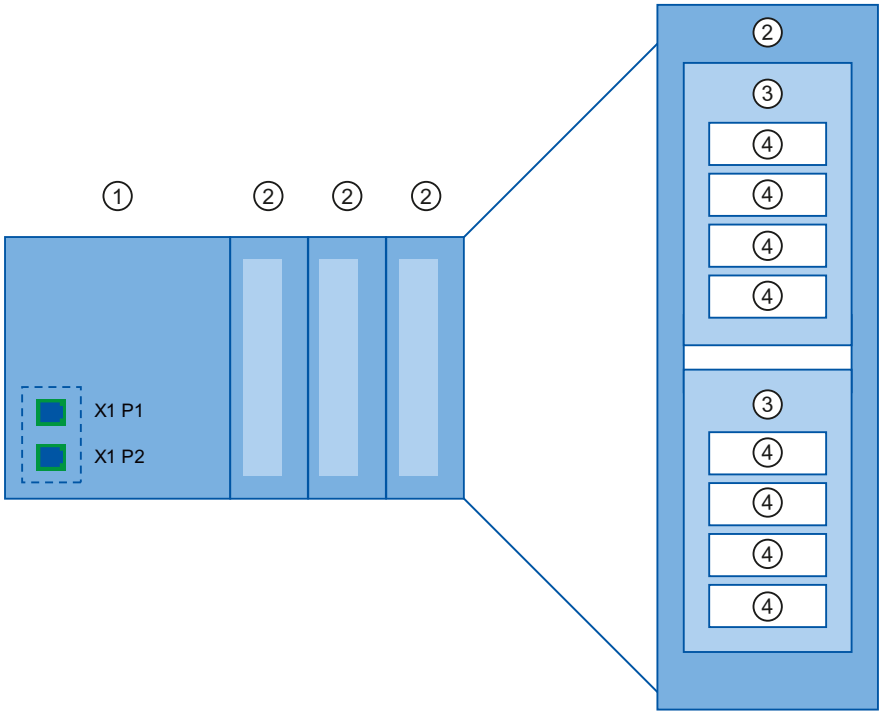

Figure 3-7 Configuration of a PROFINET device

Number	Description
1	Slot with bus interface
2	Slot with module
3	Subslot with submodule
4	Channel

A module can contain multiple submodules.

Representation of PROFINET Device Model in the Device View of STEP 7

The following figure shows the representation of the PROFINET device model in the device view of STEP 7, based on the example of a distributed I/O system ET 200MP:

Device overview

Module	Rack	Slot	I address	Q address	Type
IO-Device_1	0	1			IM 155-5 PN ST
PROFINET-Schnittstelle	0	1 X1			PROFINET interface
Port_1	0	1 X1 P1			Port
Port_2	0	1 X1 P2			Port
DI 32x24VDC HF_1	0	2	16...19		DI32 x 24VDC HF
DQ 32x24VDC/0.5A ST_1	0	3		0...3	DQ32 x 24VDC / 0.5A ST

Figure 3-8 PROFINET device model in the device view of STEP 7

3.2 Setting up PROFINET

Contents of this chapter

The following chapter provides background information on building your communication network.

- Overview of the most important passive network components: These are network components that forward a signal without the possibility of actively influencing it, for example, cables, connectors, etc.
- Overview of the most important active network components: These are network components that actively affect a signal, for example switches, routers, etc.
- Overview of the most common network structures (topologies).

Physical connections of industrial networks

The networking of PROFINET devices in industrial systems is generally possible in 2 different physical ways:

- Connected line
  - By means of electrical pulses via copper cables
  - By means of optical pulses via fiber-optic cables
- Wireless via wireless network using electromagnetic waves

PROFINET devices and cabling technology in SIMATIC are suited for industrial use, as they are based on Fast Ethernet and Industrial Ethernet.

- **Fast Ethernet**
  With Fast Ethernet, you transfer data at a speed of 100 Mbps. This transfer technology uses the 100 Base-T standard for this.
- **Industrial Ethernet**
  Structure of Ethernet in industrial environment.
  The biggest difference from standard Ethernet is the mechanical current carrying capacity and noise immunity of the individual components.

3.2.1 Active Network Components

Introduction

The following active network components are available for PROFINET:

- Switch
- Router

Switched Ethernet

PROFINET IO is based on switched Ethernet with full-duplex operation and a bandwidth of 100 Mbps. In this way, the network can be used much more efficiently through the simultaneous data transfer of several devices. The PROFINET IO frames are processed with high priority.

Switches

Switches are network components used to connect several terminal devices or network segments in a local network (LAN).

For the communication of a device with several other devices on PROFINET, the device is connected to the port of a switch. Other communication devices (including switches) can then be connected to the other ports of the switch. The connection between a communication device and the switch is a point-to-point connection.

A switch has the task of receiving and distributing frames. The switch "learns" the Ethernet address(es) of a connected PROFINET device or additional switches and only forwards those frames that are intended for the connected PROFINET device or the connected switch.

Switch variants

Switches are available in two models:

- Integrated into a PROFINET device
  For PROFINET devices with multiple ports (two or more), we are dealing with devices with an integrated switch (for example, CPU 1516-3 PN/DP).
- As autonomous device (for example, switches of the SCALANCE product family)

Selection Guide for Switches

To use PROFINET with the RT class "RT", you can use any switch of "PROFINET Conformance Class A" or higher. All switches of the SCALANCE product family meet these requirements.

If you want to use PROFINET functions that provide an additional value, such as topology recognition, diagnostics, device exchange without exchangeable medium/programming device, you have to use a switch of the "PROFINET Conformance Class B" or higher.

To use PROFINET with the RT class "IRT", you must use a switch of "PROFINET Conformance Class C". With switches of the SCALANCE product family, watch out for the catalog feature "IRT PROFINET IO switch".

To select appropriate switches, we recommend the SIMATIC NET Selection Tool on the Internet (http://support.automation.siemens.com/WW/view/en/39134641).

Switches of the SCALANCE product family

Use the switches of the SCALANCE product family if you want to use the full scope of PROFINET. They are optimized for use in PROFINET IO.

In the SCALANCE X device family, you will find switches with electrical and optical ports and with a combination of both variants. SCALANCE X202-2IRT, for example, has two electrical ports and two optical ports and supports IRT communication.

Beginning with the SCALANCE X200, you can configure, diagnose and address switches of the SCALANCE X device series as PROFINET IO devices using STEP 7.

Router

A router connects separated network segments with each other (e.g. management level and control level). The volume of data volume must be coordinated with the services of the

respective network segment. A router also separates two networks and acts as a mediator between both networks. It thus reduces the network load. Routing functionality is provided in the SCALANCE X device family, with SCALANCE X300 or higher.

Communication devices on different sides of a router can only communicate with one another if you have explicitly enabled communication between them via the router.

If you want to access manufacturing data directly from SAP, for example, use a router to connect your Industrial Ethernet in the factory with the Ethernet in your office.

NOTE

If devices need to communicate beyond the limits of a network, you must configure the router so that it allows this communication to take place.

Information on routing with STEP 7 is available in the function manual Communication (http://support.automation.siemens.com/WW/view/en/59192925).

3.2.2 Cabling technology

Cables for PROFINET

Electrical and optical cables are available for PROFINET. The type of cable depends on the data transfer requirements and on the ambient conditions.

Simple method for the prefabrication of twisted pair cables

When you set up your PROFINET system, you can cut the twisted-pair cable to the required length on site, strip it with the *stripping tool* (for Industrial Ethernet), and fit the *Industrial Ethernet Fast Connect RJ45 plugs* using the cut-and-clamp method. For more information on installation, refer to the installation instructions in the "SIMATIC NET Industrial Ethernet Network Manual" (http://support.automation.siemens.com/WW/view/en/8763736).

NOTE

A maximum of four plug-in pairs are allowed between two switches per Ethernet path.

Simple method for the prefabrication of fiber-optic cables

The FastConnect FO cabling system is available for the easy, fast and error-free prefabrication of fiber-optic cables. The glass-fiber optic cable consists of:

- FC FO Termination Kit for SC and BFOC plug (cleave tool, Kevlar scissors, buffer grip, fiber remains container)
- FC BFOC Plug
- FC SC Duplex plug
- FO FC Standard cable
- FO FC Trailing cable

Simple method for the prefabrication of POF and PCF cables

The following special tools provide an easy and safe way to prefabricate POF / PCF cables and fit the SC RJ POF plugs:

- POF cable
  Prefabrication case IE Termination Kit SC RJ POF plug
- PCF cable
  Prefabrication case IE Termination Kit SC RJ PCF plug

Overview of transmission media with PROFINET

The following table summarizes the technical specifications of a PROFINET interface with integrated switch or an external switch, and possible transmission media.

Table 3-6 Transmission media with PROFINET

Physical properties	Connection methods	Cable type / transmission medium standard	Transmission rate / mode	Max. segment length (between two devices)	Advantages
Electrical	RJ45 connector ISO 60603-7	100Base-TX 2x2 twisted, symmetrical and shielded copper cable, CAT 5 transmission requirement IEEE 802.3	100 Mbps, full duplex	100 m	Simple and cheap cable connection
Optical	SCRJ 45 ISO/IEC 61754-24	100Base-FX POF fiber-optic cable (Polymer Optical Fiber, POF) 980/1000 µm (core diameter / external diameter) ISO/IEC 60793-2	100 Mbps, full duplex	50 m	Use when there are large differences in potential Insensitive towards electromagnetic radiation Low line attenuation Considerably longer segments possible[1]
		Plastic-cladded glass fiber (Polymer Cladded Fiber, PCF) 200/230 µm (core diameter / external diameter) ISO/IEC 60793-2	100 Mbps, full duplex	100 m	
	BFOC (Bayonet Fiber Optic Connector) and SC (Subscriber Connector) ISO/IEC 60874	Monomode glass fiber optic cable 10/125 µm (core diameter / external diameter) ISO/IEC 60793-2	100 Mbps, full duplex	26 km	
		Multimode glass fiber optic cable 50/125 µm and 62.5/125 µm (core diameter / external diameter) ISO/IEC 9314-4	100 Mbps, full duplex	3000 m	

[1] Applies for fiber-optic cables only

Physical properties	Connection methods	Cable type / transmission medium standard	Transmission rate / mode	Max. segment length (between two devices)	Advantages
Electromagnetic waves	-	IEEE 802.11 x	Depends on the extension used (a, g, h, etc.)	100 m	Greater mobility Cost-effective networking to remote, difficult to access devices

[1] Applies for fiber-optic cables only

See also

PROFINET interface (Page 25)
Assembly Instructions for SIMATIC NET Industrial Ethernet (http://support.automation.siemens.com/WW/view/en/27069465)
PROFINET Installation Guideline (http://www.profibus.com/nc/download/installation-guide/downloads/profinet-installation-guide/display/)

3.2.3 Wireless design

3.2.3.1 Basics

What is Industrial Wireless LAN?

In addition to data communication in accordance with the IEEE 802.11 standard, the SIMATIC NET Industrial Wireless LAN provides a number of enhancements which offer significant benefits for industrial customers. IWLAN is particularly suitable for demanding industrial applications that require reliable wireless communication. This is supported by the following properties:

- Automatic roaming when the connection to Industrial Ethernet is interrupted (Forced Roaming)
- Cost savings generated by using a single wireless network for reliable operation of a process with both process-critical data (alarm message, for example) and non-critical communication (service and diagnostics, for example)
- Cost-effective connection to devices in remote environments that are difficult to access
- Predictable data traffic (deterministic) and defined response times
- Cyclical monitoring of the wireless link (link check)

Objectives and advantages of Industrial Wireless LAN

Wireless data transmission achieves the following objectives:

- Seamless integration of PROFINET devices into the existing bus system via the wireless interface
- Mobile use of PROFINET devices for different production-linked tasks
- Flexible configuration of the system components for fast development in accordance with customer requirements
- Maintenance costs are minimized by savings in cables

Application examples

- Communication with mobile subscribers (mobile controllers and devices, for example), conveyor lines, production belts, translation stages , and rotating machines
- Wireless coupling of communication segments for fast commissioning or cost-effective networking where routing of wires is extremely expensive (e.g. public streets, railroad lines)
- Stacker trucks, automated guided vehicle systems and suspended monorail systems

The following graphic illustrates the many possible applications and configurations for SIMATIC device family wireless networks.

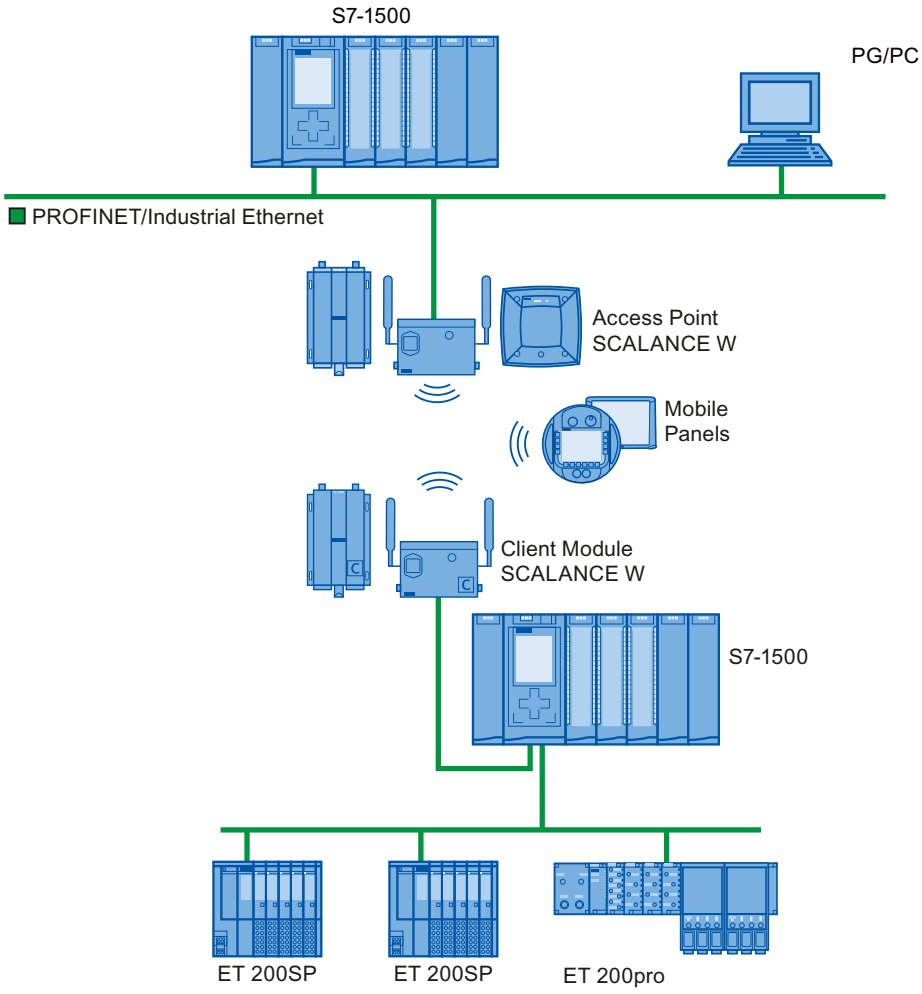

Figure 3-9 Application example for the use of Industrial Wireless LAN

Data transmission rate

In Industrial Wireless LAN, gross data transmission rates of 11 Mbps or 54 Mbps without full duplex are permitted.

Range

With SCALANCE W (access points), wireless networks can be set up indoors and outdoors. Multiple access points can be installed to create large wireless networks in which mobile subscribers are transferred seamlessly from one access point to another (roaming).

As an alternative to a wireless network, point-to-point connections of Industrial Ethernet segments can also be set up over large distances (several hundred meters). In this case, the range and characteristics of the RF field are determined by the antennas used.

NOTE

Range

The range can be considerably less, depending on spatial factors, the wireless standard used, the data rate, and the antennas on the send and receive sides.

3.2.3.2 Tips on assembly

Wireless networks, SCALANCE device family

With PROFINET, you can also set up wireless networks with Industrial Wireless Local Area Network (IWLAN) technology. We recommend implementing the SCALANCE W device line for this.

Update time in STEP 7

If you set up PROFINET with Industrial Wireless LAN, you may have to increase the update time for the wireless devices. The IWLAN interface provides lower performance than the wired data network: Several communication stations have to share the limited transmission bandwidth. For wired solutions, 100 Mbps is available for each communication device.

The Update time parameter can be found in the "Realtime settings" section in the Inspector window of IO devices in STEP 7.

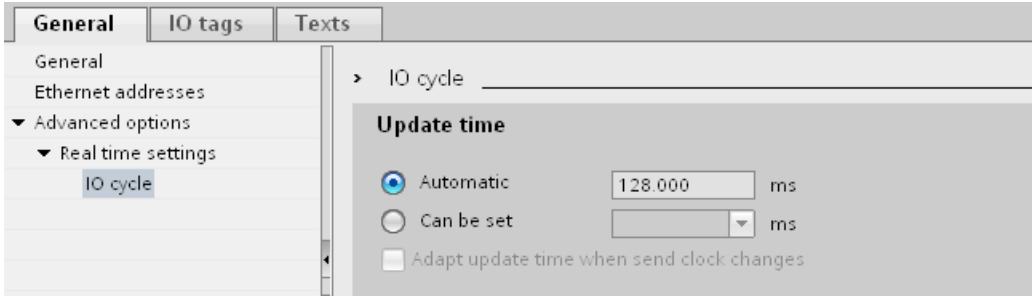

Figure 3-10 Update time in STEP 7

Additional information

More information about SCALANCE W Industrial Wireless LAN components can be found in the manual SIMATIC NET SCALANCE W-700 (http://support.automation.siemens.com/WW/view/en/42784493).

More information about wired data transmission can be found in the manual SIMATIC NET Twisted Pair and Fiber Optic Networks (http://support.automation.siemens.com/WW/view/en/8763736).

More information about wireless data transmission can be found in the manual Basics for configuring an industrial wireless LAN (http://support.automation.siemens.com/WW/view/en/9975764).

You should also read the PROFINET installation guideline of the PROFIBUS User Organization on the Internet (http://www.profibus.com/nc/download/installation-guide/downloads/profinet-installation-guide/display/). Various documents that assist with the setting up of your PROFINET automation solution are available here:

- PROFINET planning guideline
- PROFINET installation guideline
- PROFINET commissioning guideline
- Additional documents for setup of PROFINET

3.2.4 Network security

3.2.4.1 Basics

Introduction

The topic of data security and access protection (Security) has become increasingly important in the industrial environment. The increased networking of entire industrial systems, vertical integration and networking of levels within a company and new techniques such as remote maintenance all result in higher requirements for protecting the industrial plant.

Data security solutions for office environments cannot simply be transferred one-to-one to industrial applications to protect against manipulation in sensitive systems and production networks.

Requirements

Additional security requirements arise from the specific communication requirements in the industrial environment (real-time communication, for example):

- Protection against interaction between automated cells
- Protection of network segments
- Protection against faulty and unauthorized access
- Scalability of network security
- Must not influence the network structure

Definition of security

Generic term for all the measures taken to protect against:

- Loss of confidentiality due to unauthorized access to data
- Loss of integrity due to manipulation of data
- Loss of availability due to destruction of data, for example, through faulty configuration and denial-of-service attacks

Threats

Threats can arise from external and internal manipulation. The loss of data security is not always caused by intentional actions.

Internal threats can arise due to:

- Technical errors
- Operator errors
- Defective programs

Added to these internal threats there are also external ones. The external threats are not really any different to the known threats in the office environment:

- Software viruses and worms
- Trojans
- Man-in-the-middle attacks
- Password Phishing
- Denial of Service

Protective measures

The most important precautions to prevent manipulation and loss of data security in the industrial environment are:

- Physical access protection to the devices
- Filtering and control of data traffic by means of firewall
- A virtual private network (VPN) is used to exchange private data on a public network (Internet, for example).

  The most common VPN technology is IPsec. IPsec (Internet Protocol Security) is a collection of security protocols that are used as the basis for the IP protocol at the mediation level and allow a secured communication via potentially unsecure IP networks.
- Segmenting in protected automation cells

  This concept has the aim of protecting the lower-level network devices by means of security modules. A group of protected devices forms a protected automation cell.
- Authentication (identification) of the devices

  The security modules identify each other over a safe (encrypted) channel using authentication procedures. It is therefore impossible for unauthorized parties to access a protected segment.
- Encrypting the data traffic

  The confidentiality of data is ensured by encrypting the data traffic. Each security module is given a VPN certificate which includes the encryption key.

3.2.4.2 Network components and software

Protection against unauthorized access

The following solutions may be used to connect industrial networks to the intranet and Internet to protect against internal and external threats:

- Communication processors, such as the SIMATIC CP 1543-1
- SCALANCE X-300 and SCALANCE S - the data security components of the SIMATIC NET product family
- SOFTNET security client for use on PCs

Features

Both of these products have a wide variety of features, such as:

- Easy integration of existing networks without configuration, with integrated firewall.
- Segmenting in protected automation cells
- Authentication (identification) of the devices
- Encrypting the data traffic

3.2.4.3 Application example

Data security at the office and production levels

The following graphic contains an application example with protected areas at different levels of the company created using SCALANCE S and the security client. The protected areas are highlighted in light gray.

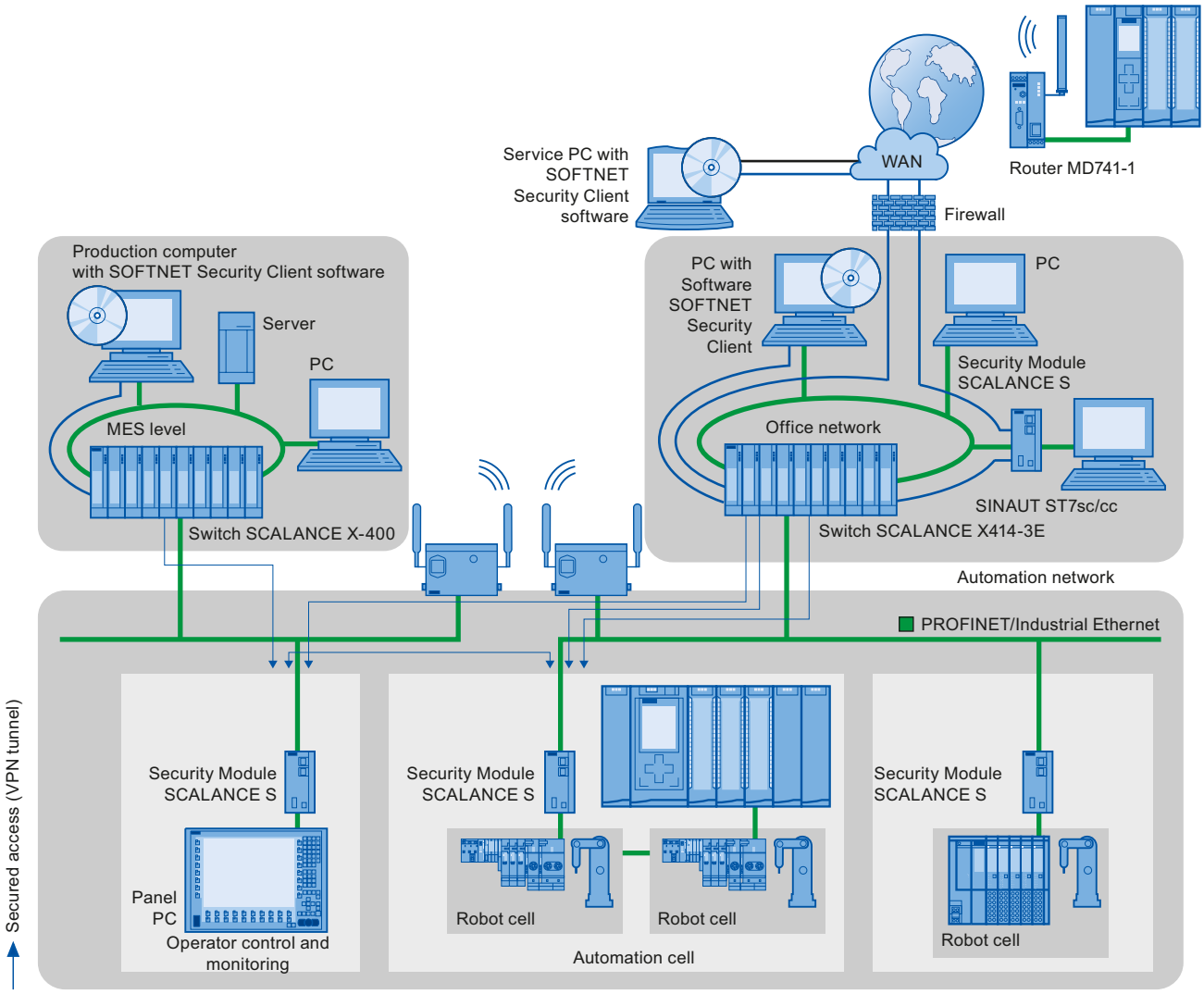

Figure 3-11 Network configuration with the SCALANCE S security module and the SOFTNET security client

Additional information

Additional information on the configuration of a security standard in PROFINET, is available:

- In the PROFINET security guideline. These guidelines can be found on the homepage of the PROFIBUS user organization on the Internet (http://www.profinet.com).
- In the Industrial Ethernet Security (http://support.automation.siemens.com/WW/view/en/56577508) manual
- In the SCALANCE S and SOFTNET Security Client (http://support.automation.siemens.com/WW/view/en/21718449) manual

You can find general information on industrial security concepts, functions and news on the Industrial Security website (http://www.siemens.com/industrialsecurity).

Parameter assignment/addressing 4

To set up an automation system, you will need to configure, assign parameters and interlink the individual hardware components. In STEP 7, the work needed for this is undertaken in the device, topology and network view.

Configuring

"Configuring" is understood to mean arranging, setting and networking devices and modules within the device, topology or network view.

An I/O address is automatically assigned to each module. The I/O addresses can be subsequently modified.

The CPU compares the configuration preset in STEP 7 with the actual current configuration of the system. In this way, potential errors can be detected and reported straight away.

The exact procedure for configuring devices is described in detail in the STEP 7 online help.

Assigning parameters

"Assigning parameters" is understood to mean setting the properties of the components used. The settings for the hardware components and for data communication are configured at the same time.

In STEP 7, you can "assign parameters" for the following settings PROFINET:

- Device names and IP address parameters
- Port interconnection and topology
- Module properties / parameters

The parameters are loaded into the CPU and transferred to the corresponding modules when the CPU starts up. Modules are easy to replace from spare parts, as the parameters assigned for the SIMATIC CPUs are automatically loaded into the new module at each startup.

Adjusting the hardware to the project requirements

You need to configure hardware if you want to set up, expand or change an automation project. To do this, add hardware components to your structure, link these with existing components, and adapt the hardware properties to the tasks.

The properties of the automation systems and modules are preset such that in many cases they do not have to be assigned parameters again.

Parameter assignment is however needed in the following cases:

- You want to change the default parameter settings of a module.
- You want to use special functions.
- You want to configure communication connections.

4.1 Assigning an IO device to an IO controller

PROFINET IO System

A PROFINET IO system is comprised of a PROFINET IO controller and its assigned PROFINET IO devices. After these devices have been placed in the network or topology view, STEP 7 assigns default values for them. Initially, you only have to worry about the assignment of IO devices to an IO controller.

Requirement

- You are in the network view of STEP 7.
- A CPU has been placed (e.g., CPU 1516-3 PN/DP).
- An IO device has been placed (e.g., IM 155-6 PN ST).

Procedure

To assign IO devices to an IO controller, proceed as follows:

1. Place the pointer of the mouse over the interface of the IO device.
2. Press and hold down the left mouse button.
3. Move the pointer.
   The pointer now uses the networking symbol to indicate "Networking" mode. At the same time, you see the lock symbol on the pointer. The lock symbol disappears only when the pointer is over a valid target position.
4. Now move the pointer onto the interface of the IO controller. You can keep the left mouse button pressed or release it when performing this action.
5. Now release the left mouse button or press it again (depending on your previous action).

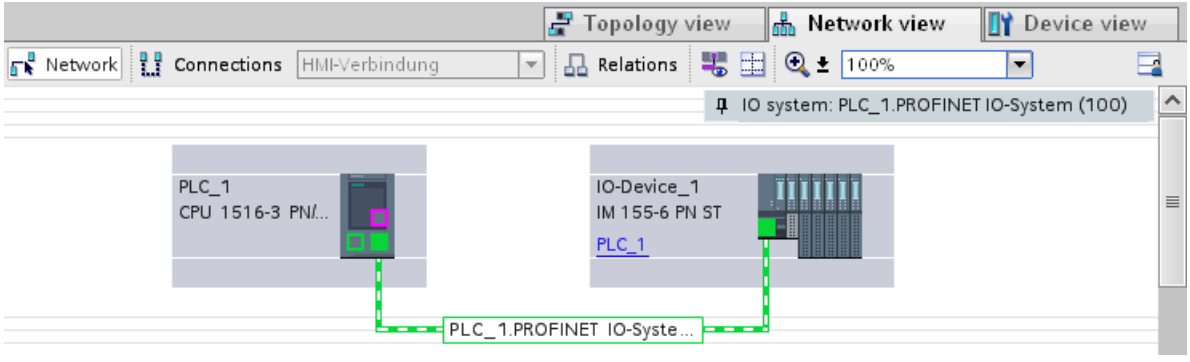

Figure 4-1 Assigning an IO device to an IO controller in the network view of STEP 7

Result

You have assigned an IO device to an IO controller.

Checking the assignment

You can find an overview of the communication relationships in the "IO communication" tab in the tabular area of the network view. This table is context-sensitive for selection in the graphic area:

- Selection of the interface shows the I/O communication of the respective interface.
- Selection of the CPU shows all I/O communication of the CPU (including PROFIBUS).
- Selection of the station (as in the above figure) interface shows the I/O communication of the complete station.

Information on S7-1500R/H

You can find the procedure for assigning an IO device with system redundancy S2 to the redundant S7-1500R/H system in section Assigning IO device to the redundant S7-1500R/H system (Page 291).

4.2 Device name and IP address

Introduction

In order that the PROFINET device can be addressed as node on PROFINET, the following are required:

- A unique PROFINET device name
- A unique IP address in the relevant IP subnet

STEP 7 assigns a device name during the arrangement of a PROFINET device in the hardware and network editor. The IP addresses are typically assigned automatically by STEP 7 and assigned to the devices based on the device name.

You can change the name and IP address manually.

In STEP 7

You can find the device name and the IP address under "Ethernet addresses" in the properties of the PROFINET interface in the Inspector window.

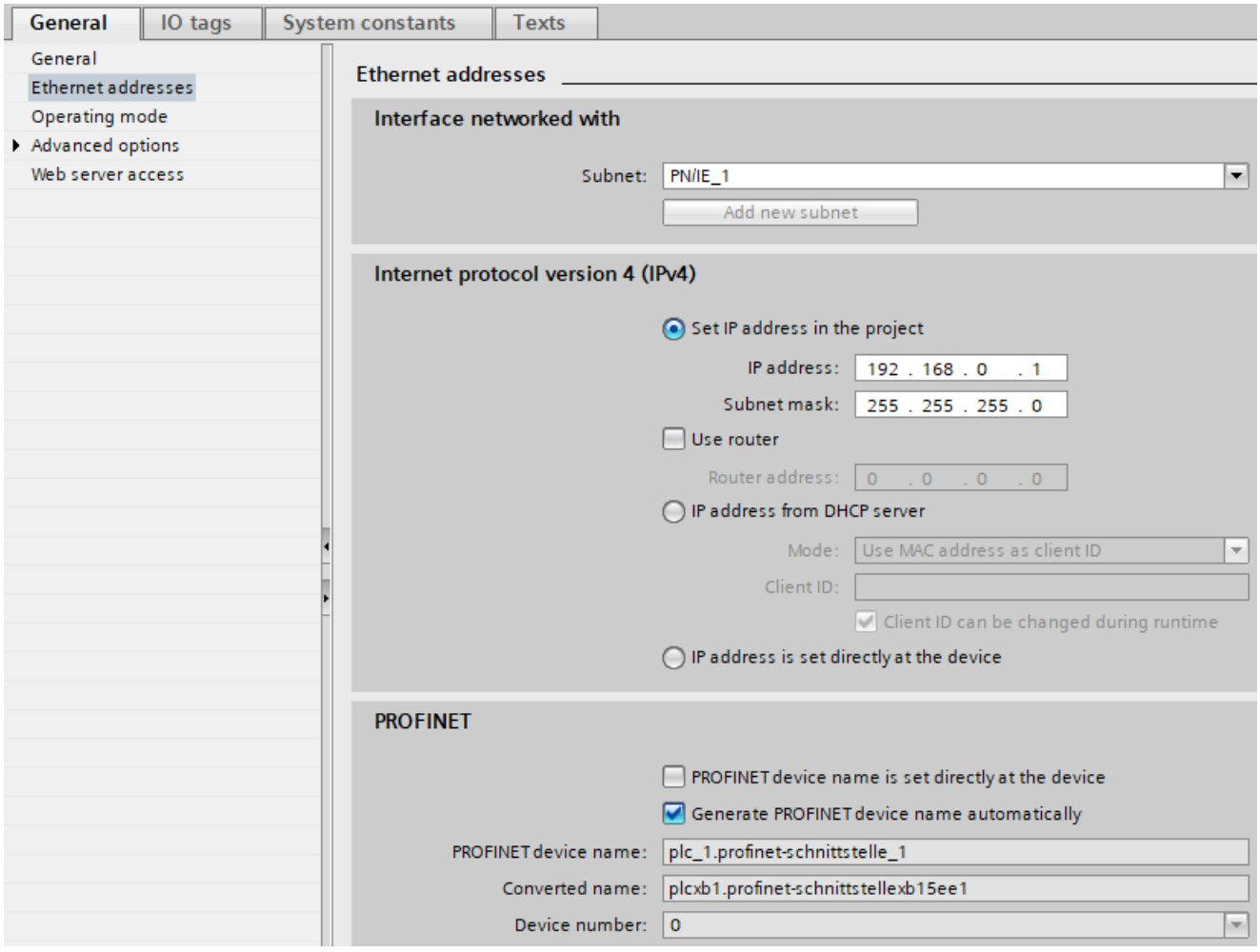

Figure 4-2 Device name and IP address in STEP 7

The function, the assignment and the changing of the device name and the IP address are described in the following sections.

4.2.1 Device name

Device names

Before an IO device can be addressed by an IO controller, it must have a device name. In PROFINET, this method was selected because it is simpler to work with names than with complex IP addresses.

The assignment of a device name for a specific IO device can be compared to setting the PROFIBUS address of a DP slave.

In delivery state, an IO device does not have a device name. A device name must first be assigned before an IO device can be addressed by an IO controller, for example, for

transferring configuration data during startup or for exchanging user data in cyclic mode. You assign the device names to the IO device, for example, with the programming device / PC.

IO devices that have a slot for removable storage media provide the option of writing the device name directly to the removable storage medium in the programming device.

When a device is replaced by a device without removable medium, the IO controller assigns the device name based on topological configuration (see section Configuring topology (Page 63)).

Structured device names

The device name is automatically assigned by default for PROFINET devices S7-1200, S7-1500, ET 200MP, ET 200SP and ET 200AL when these are configured in STEP 7. The device names are formed from the name of the CPU or the name of the interface module. For devices with several PROFINET interfaces, the name of the interface is enhanced, for example, "plc_1.profinet-interface_2" or "io-device_1".

You can structure the device names using DNS conventions.

These conventions are defined by "Internationalizing Domain Names in Applications (IDNA). According to this, device names are written in lower case.

The "Domain Name System" (DNS) is a distributed database (http://iana.org), which manages the name space on the Internet. To structure the names, you use the dot ("."). The hierarchy is shown in ascending order from left to right.

...<Subdomain name>.<Domain name>.<Top-level domain name>

If the name is not DNS-compliant, the name will be converted by STEP 7, for example, to "plcxb1.profinet-schnittstellexb2022c" or "io-devicexb15b32".

Device number

In addition to the device name, STEP 7 also assigns a device number beginning with "1" when an IO device is allocated.

The device number is located in the Inspector window in the properties of the PROFINET interface, under "Ethernet addresses" in the area PROFINET.

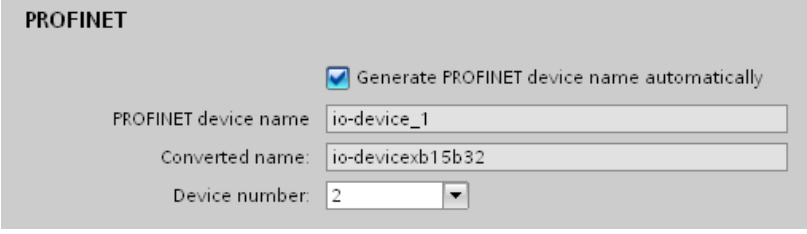

Figure 4-3 Device number

This device number can be used to identify an IO device in the user program (for example, with the instruction "LOG2GEO").

4.2.2 IP address

IP address

To allow a PROFINET device to be addressed as a device on Industrial Ethernet, this device also requires an IP address that is unique within the network. The IP addresses are typically assigned automatically by STEP 7 and assigned to the devices based on the device name. If it is a standalone network, you can apply the IP address and subnet mask suggested by STEP 7. If the network is part of an existing Ethernet company network, obtain the information from your network administrator.

Configuration of the IP address

In accordance with Internet Protocol version 4 (IPv4), the IP address is made up of four decimal numbers with a range of values from 0 through 255. The decimal numbers are separated by periods (for example, 192.162.0.0).

The IP address consists of the following:

- Address of the network
- Address of the device (PROFINET interface of the IO controller/IO device)

Generating IP addresses

You assign the IP addresses of the IO devices in STEP 7. The IO devices receive their IP addresses during parameter assignment by the IO controller.

In addition, for some IO devices (e.g., SCALANCE X, S7-300 CPs), it is possible not to obtain the IP address during startup of the IO controller, but rather to set it beforehand on the device (see Permitting changes to the device name and IP address directly on the device (Page 57)).

The IP addresses of the IO devices always have the same subnet mask as the IO controller and are assigned from the IP address of the IO controller in ascending order. The IP address can be changed manually, if necessary.

For devices with several PROFINET interfaces (e.g., CPU 1516-3 PN/DP), the IP addresses must be located in different subnets.

NOTE

Assignment of the IP address by a DHCP server

As of STEP 7 V17, you can select the option "IP address from DHCP server" for the PROFINET interface. With this option, the PROFINET interface is assigned an IP address by an DHCP server.

When you configure the option "IP address from DHCP server" for a PROFINET interface, this interface does no longer support the PROFINET IO functionality.

For more information on addressing by a DHCP server, please refer to the Communication (http://support.automation.siemens.com/WW/view/en/59192925) function manual.

Default router

The default router is used when data has to be forwarded via TCP/IP or UDP to a partner located outside the local network.

In STEP 7, the default router is named Router. You can activate the use of a router in the Inspector window of a CPU with the "Use router" check box in the "IP protocol" section. STEP 7 assigns the local IP address to the default router by default.

The router address that is set on the PROFINET interface of the IO controller is automatically transferred for the configured IO devices.

Subnet mask

The bits set in the subnet mask decide the part of the IP address that contains the address of the network.

In general, the following applies:

- The network address is obtained from the AND operation of the IP address and subnet mask.
- The device address is obtained from the AND NOT operation of the IP address and subnet mask.

Example of the subnet mask

Subnet mask: 255.255.0.0 (decimal) = 11111111.11111111.00000000.00000000 (binary)

IP address: 192.168.0.2 (decimal) = 11000000.10101000.00000000.00000010 (binary)

Meaning: The first 2 bytes of the IP address determine the network - i.e., 192.168. The last two bytes address the device, i.e. 0.2.

Relation between IP address and default subnet mask

An agreement exists relating to the assignment of IP address ranges and so-called "Default subnet masks". The first decimal number (from the left) in the IP address determines the structure of the default subnet mask with respect to the number of "1" values (binary) as follows:

IP address (decimal)	IP address (binary)	Address class	Default subnet mask
0 to 126	0xxxxxxx.xxxxxxxx....	A	255.0.0.0
128 to 191	10xxxxxx.xxxxxxxx...	B	255.255.0.0
192 to 223	110xxxxx.xxxxxxxx...	C	255.255.255.0

NOTE

Range of values for the first decimal point

A value between 224 and 255 is also possible for the first decimal number of the IP address (address class D etc.). However, this is not recommended because there is no address check for these values.

Masking other subnets

You can use the subnet mask to add further structures and form "private" subnets for a subnet that is assigned one of the address classes A, B or C. This is done by setting other, less significant bits of the subnet mask to "1". For each bit set to "1", the number of "private" networks doubles and the number of devices they contain is halved. Externally, the network continues to function as an individual network.

Example:

You have a subnet of address class B (for example, IP address 129.80.xxx.xxx) and change the default subnet mask as follows:

Masks	Decimal	Binary
Default subnet mask	255.255.0.0	11111111.11111111.00000000-.00000000
Subnet mask	255.255.128.0	11111111.11111111.10000000-.00000000

Result:

All devices with addresses from 129.80.001.000 to 129.80.127.254 are located in a subnet, all devices with addresses from 129.80.128.000 to 129.80.255.254 in a different subnet.

Reading out an IP address in the user program

You can read out the IP address of a PROFINET device in the user program of a S7-1500 CPU. You can find information in this FAQ (https://support.industry.siemens.com/cs/ww/en/view/82947835).

4.2.3 Assigning a device name and IP address

Assigning an IP address and subnet mask for an IO controller for the first time

You have the following options:

- **Using a programming device or PC:**
  Connect your programming device/PC to the same network as the relevant PROFINET device. The interface of the programming device/PC must be set to TCP/IP mode. During the download, first of all display all available devices via the "Accessible devices" download dialog box. Select the target device via its MAC address and then assign its IP address before you download the hardware configuration including the configured IP address (IP address is saved retentively).
- **Using the display of a S7-1500 CPU:**
  The S7-1500 CPUs have a front cover with a display and operating keys. You can use this display to assign or change the IP address. To set the IP address, navigate on the display via the menu items "Settings" > "Addresses" > "X1 (IE/PN)" > "Parameters".
- **Using a memory card:**
  If your PROFINET device is equipped for a memory card (Micro Memory Card/SIMATIC memory card), plug this into your programming device/PC and save the hardware configuration together with the configured IP address on this memory card. Then plug the memory card into the PROFINET device. Once inserted, the PROFINET device automatically applies the IP address.

If you have saved a configuration to the memory card with the "IP address is set directly at the device" option, you must assign the IP address using a different method after inserting the memory card (see section Permitting changes to the device name and IP address directly on the device (Page 57)).

Assigning device names and IP address for "Device replacement without exchangeable medium/programming device"

For devices without exchangeable medium (e.g., ET 200MP, ET 200SP) and devices that support "Device replacement without exchangeable medium/PG" (e.g., ET 200S), the IO controller can identify the device without name from the neighbor relationships specified by the set topology and from actual neighbor relationships determined by the real PROFINET devices. The IO controller then assigns the PROFINET device the configured name and incorporates the PROFINET device in the user data traffic. (See also Device replacement without exchangeable medium (Page 225)).

IP address assignment when replacing IO devices with exchangeable mediumPG

The following is contained on the memory card of the programmable logic controller:

- On the IO controller: Device name and IP address
- On the IO device: Device name

When you remove the memory card from a PROFINET device and insert it in another PROFINET device with exchangeable medium (e.g., ET 200S), device-specific information and the device name are loaded to the device.

If an IO device has to be replaced in its entirety due to a device or module defect, the IO controller automatically assigns parameters and configures the replaced device or module. The cyclic exchange of user data is then restarted. In addition to this, before the power ON of the IO device, the memory card with the valid name must be removed from the faulty IO device and added to the replaced device.

In the event of an error in the PROFINET device, the memory card allows you to replace a module without a programming device/PC. You can also transfer the device data directly from the programming device/PC to the memory card.

Procedure: Changing the device name using properties of the PROFINET interface

You can change the PROFINET name via the properties of the PROFINET interface. This is useful when the PROFINET device has not received its previous name from the automatic generation, for example, in the case of a migration.

1. In the network or device view of the STEP 7 hardware and network editor, select the PROFINET interface of a PROFINET device.
2. In the Inspector window, go to "Ethernet addresses" in the PROFINET area.
3. Clear the "Generate PROFINET device name automatically" check box.

4. Enter the new PROFINET device name in the relevant field.

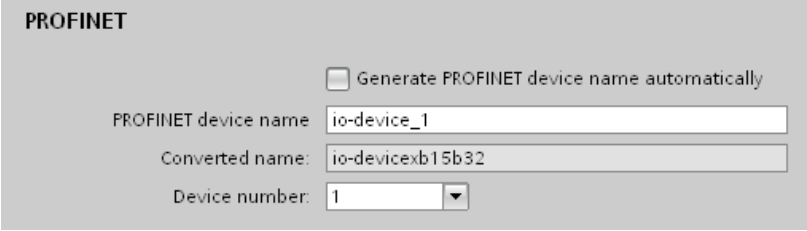

Figure 4-4 Changing the device name of a PROFINET device in the properties

Alternative procedure: Changing the device name of a PROFINET device in the network view

Requirement: The "Generate PROFINET device name automatically" check box is selected.

1. In STEP 7, select the "Network overview" tab in the tabular area of the network view.
2. In the "Device" column, overwrite the name in the row of the relevant PROFINET device.

The name is also changed accordingly in the graphic area of the network view.

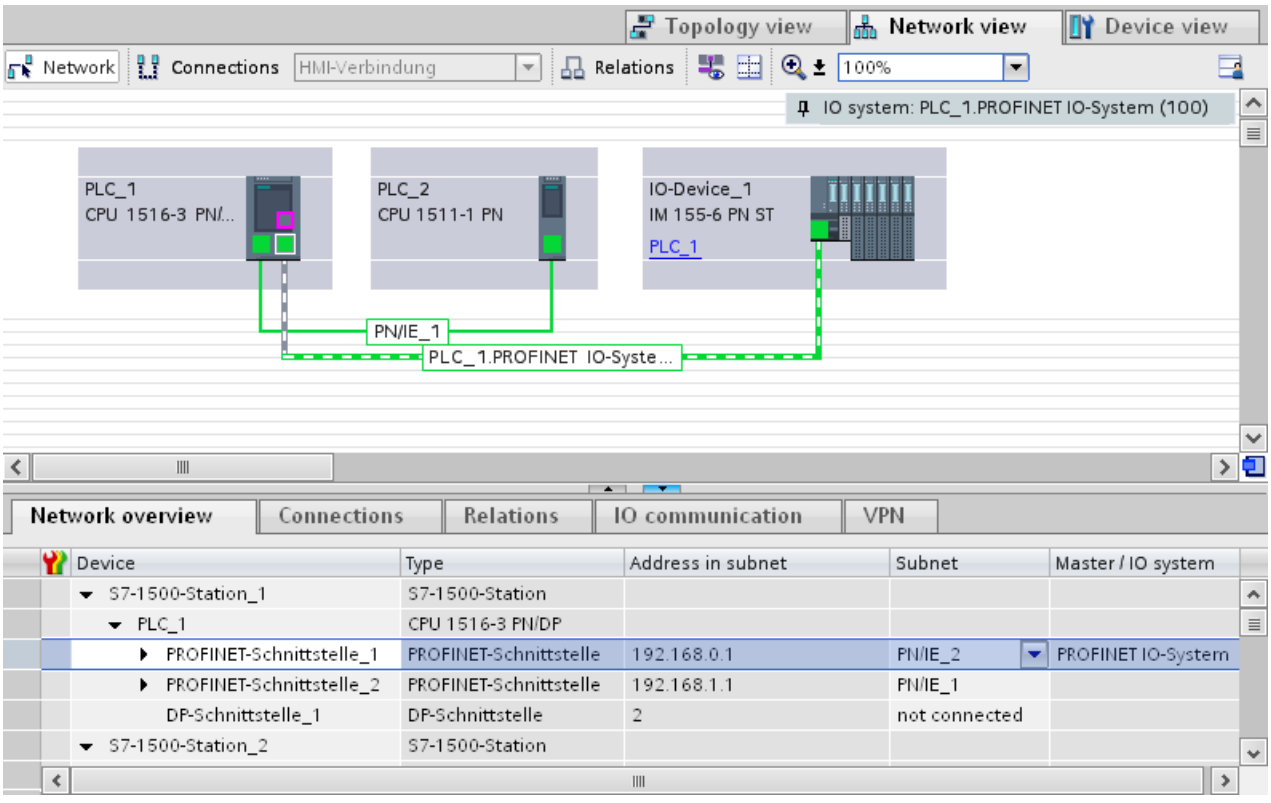

Figure 4-5 Changing the device name of a PROFINET device in STEP 7

Procedure: Changing the IP address

To change the IP address, follow these steps:

1. In the network or device view of the STEP 7 hardware and network editor, select the PROFINET interface of a PROFINET device.
2. In the Inspector window, go to "Ethernet addresses" in the "IP protocol" area.
3. Check that the option "Set IP address in the project" is selected.
4. Enter the new IP address in the relevant field.

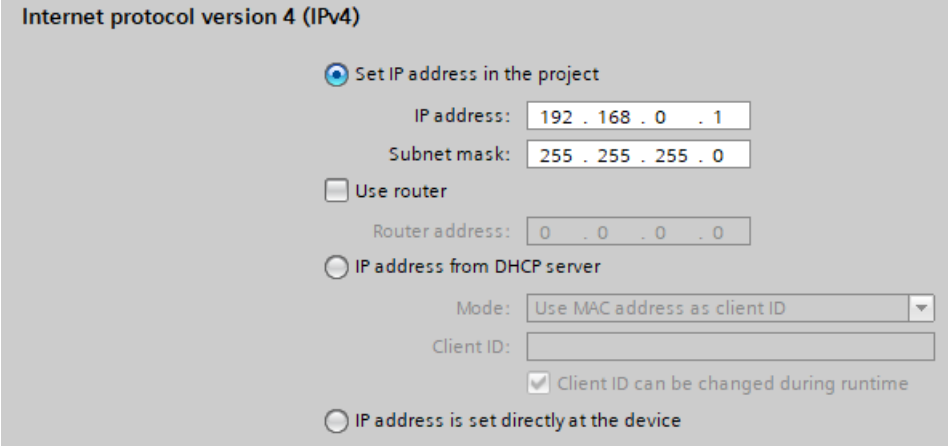

Figure 4-6 Changing the IP address of a PROFINET device in STEP 7

Downloading configured device name to IO device

To load the configured device names to the IO device, follow these steps:

1. Connect your programming device/PC to the same network as the relevant IO device. The interface of the programming device/PC must be set to TCP/IP mode.
2. In STEP 7, select the relevant IO device in the "Accessible devices" dialog based on the MAC address.
3. Click "Assign name" to download the configured device name to the IO device.
   The IO controller recognizes the IO device automatically by its device name and automatically assigns the configured IP address to it.

Identification of the PROFINET device

To clearly identify a device from several identical devices in a control cabinet, for example, you can flash the link LED of the PROFINET device.

To do this, select the menu command **Online > Accessible devices...** in STEP 7. In the "Accessible devices" dialog, set the "PG/PC" interface by means of which you are connected to the devices. STEP 7 now automatically searches for the accessible devices and displays them in the "Accessible devices in target subnet" table. Select the desired PROFINET device and click on the "Flash LED" button. The PROFINET device is identified based on its MAC address.

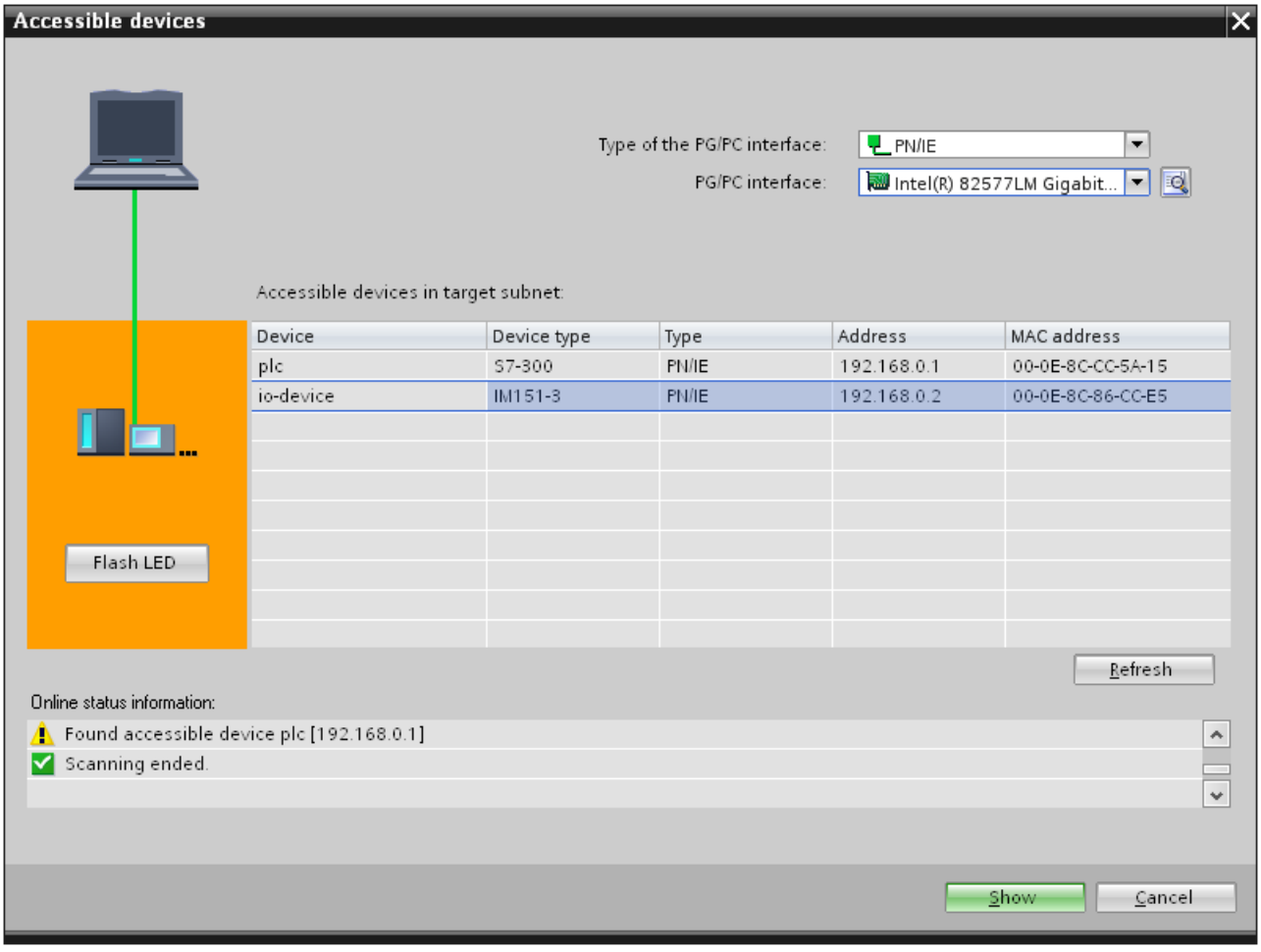

Figure 4-7 "Accessible devices" dialog

Using an different way to assign IP addresses for IO devices

Various IO devices, for example, SCALANCE X,S7-300 CPs, support the option of not having the IP addresses assigned by the IO controller during startup. In this case, the IP address is assigned in a different way. For additional information, refer to the manual of the respective PROFINET device of the SIMATIC device family.

Additional information

You can find a detailed description of the operation and functions of the display of the S7-1500 CPUs in the system manual S7-1500, ET 200MP (http://support.automation.siemens.com/WW/view/en/59191792).

4.2.4 Assign device name via communication table

Introduction

You can assign the device names of PROFINET IO devices configured offline to the devices online. You can do this in the table area of the network view in the table "I/O communication". You can also assign the device names to several devices at the same time.

"Online assignment" tab

In the I/O communication table, you will find the tabs "Offline configuration" and "Online assignment". In the "Online assignment" tab, you can assign the PROFINET device names that were assigned offline to the corresponding IO devices online. To do this, use the buttons "Check devices" and "Assign now".

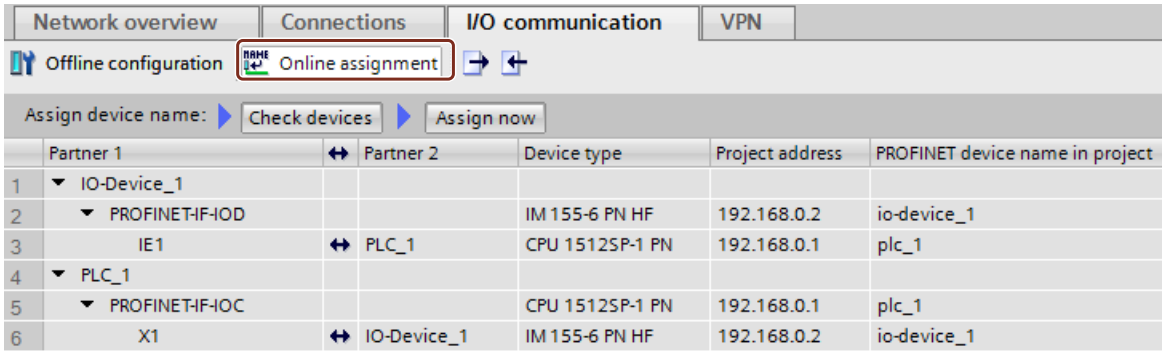

Figure 4-8 Assign device name via communication table

The objects displayed in the table of the "Online assignment" tab depend on the setting of the filter function. If only selected objects should be displayed, only objects of the corresponding context are displayed depending on the selection in the network view.

- PROFINET subnet: All connected devices and their PROFINET interfaces
- IO system All devices involved and their PROFINET interfaces
- Sync domain: All devices involved and their PROFINET interfaces
- Devices: The device and any existing PROFINET interfaces
- Other subnets or interfaces such as MPI or PROFIBUS are not displayed

If the display is set for all devices using the filter function, all devices are displayed that have a PROFINET interface, regardless of whether they are connected via a PROFINET subnet or are part of an IO system. Devices without a PROFINET interface, for example only with a DP or MPI interface, are not displayed.

General procedure

To assign PROFINET device names, you must first detect the IO devices available online. With this procedure, it matters whether the MAC addresses are known or unknown. This results in a general procedure in two steps:

1. Detecting the IO devices available online
2. Assigning configured PROFINET device names to the IO devices available online

Requirements

- You are in the network view.
- There is an online connection to the devices.

Procedure (step 1)

To detect IO devices available online from the I/O communication table, follow these steps:

1. Optional: Entered known MAC addresses in the "MAC address" column. After every valid entry, the check box under "Assign device" is selected for the relevant row.

   NOTE

   You can enter, insert or import the MAC address in different formats. The correct format is automatically entered in the cell. The following entries are supported and then converted to the required format:

   – "08:00:06:BA:1F:20"
   – "08 00 06 BA 1F 20"
   – "080006BA1F20"

   The formats used in the example are automatically converted to "08-00-06-BA-1F-20".

2. Click "Check devices" to start the check of the IO devices available online.
3. Set the PG/PC interface in the dialog window and click "Start".

Intermediate result

After the check, the result is displayed for every device in the table. Online data found is automatically entered in the table and the check box "Assign device" is set to "checked" in the rows in which a MAC address was entered or found online. The result of the check is shown as an icon in the "Status" column.

Status	Meaning
	Matching device and compatible type
	Matching device and incompatible type
	Non-matching device
	Device cannot be reached (with a known MAC address)
	Ready for assignment (with known MAC address)

NOTE

The icon "Ready for assignment" appears when a MAC address exists and matching device data was found, but no PROFINET device name was found online.

You can update the data of the detected devices again via their MAC addresses at any time. To do this, you specify the MAC address and the status of the device is displayed immediately without having to re-detect the device.

Procedure (step 2)

All PROFINET device names configured offline will be assigned to the devices available online in a bulk operation.

1. Click the "Assign now" button.

   NOTE

   The bulk operation cannot be reversed. A message to this effect appears in a dialog window.

2. Click "Start" in the dialog window to start the assignment of the PROFINET device names.

Result

The PROFINET device names configured offline will be assigned to the devices available online. This relates to devices in whose row the check box under "Assign device" is selected, that have a MAC address and have the status "Ready for assignment".

Importing and exporting data

Using the import and export button, you can import or export the data of the I/O communication table for the online assignment:

- When you export, the currently displayed data of the table is exported to a CSV file. Using the filter function of the table, you can select which data will be exported.
- When you import, the data of the CSV file is written to the table. If there are conflicts with values already existing in the table, you can decide whether the data should be overwritten or whether the import needs to be stopped.

4.2.5 Permitting changes to the device name and IP address directly on the device

Introduction

Machines are frequently commissioned on site or integrated into the existing infrastructure without STEP 7. You can find typical applications in all areas of the series machine building. Alternative means for assigning the IP address are available for this.

Procedure

1. In the network or device view of the STEP 7 Hardware and Network editor, select the PROFINET interface of an IO controller.
2. Navigate in the Inspector window to "Ethernet addresses".
3. Select the "IP address is set directly at the device" option in the "IP protocol" area.

4. In the "PROFINET" area, select the " PROFINET device name is set directly at the device" check box.

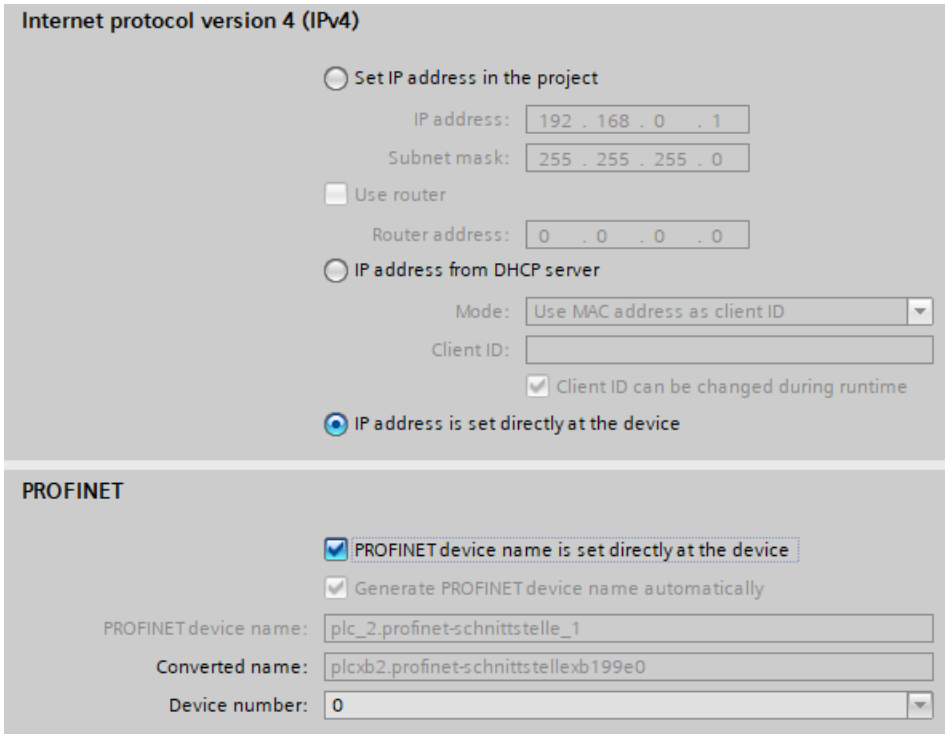

Figure 4-9 Setting the device name and IP address on the device

NOTE

Gateway

When you operate a PROFINET device with the option "Allow adaption of the device name/IP address directly on device", you cannot use this PROFINET device as gateway for S7 routing.

Options for assigning IP addresses and device names

Apart from the known address and device name assignment in the "Ethernet addresses" section of the Inspector window, there are other ways in which the IP address and name can be assigned:

- Assigning by means of the user program with the instruction "T_CONFIG"
- Assignment when downloading the configuration to the target system via the "Extended download to device" dialog box.
- Assignment via the Primary Setup Tool (PST)
- Assignment via the PRONETA ("PROFINET network analysis") commissioning and diagnostics tool
- Assignment via the SIMATIC Automation Tool

Additional information

For information on the "T_CONFIG" instruction and on downloading to the target system, refer to the STEP 7 online help.
A free Download (https://support.industry.siemens.com/cs/ww/en/view/109776941) of the Primary Setup Tool (PST) can be found on the Internet. On this Internet page, you will also find a list of devices for which the PST is approved.

4.3 Configuring an IO device through hardware detection

Introduction

As of STEP 7 V15, you have the possibility to detect a real existing IO device and to import it into your project.
You find the IO device in STEP 7 through the "Hardware detection" function. A detected device can be imported into your project. STEP 7 inserts the IO device with all the modules and submodules.

Requirements

- STEP 7 (TIA Portal) as of V15
- It must be possible to technically access the IO device via IP

Procedure

To detect one or more existing IO devices in STEP 7 and add them to the project, follow these steps:

1. In STEP 7, navigate to "Online" > "Hardware detection".
2. Click "PROFINET devices from network...".
   STEP 7 opens the "Hardware detection of PROFINET devices" window.
3. Select the interface of your programming device at "PG/PC interface:".
4. Click "Start search".
   STEP 7 begins with the hardware detection. When the hardware detection is completed, STEP 7 displays the detected IO devices.
5. Select the IO devices that you want to add to the project by clicking the corresponding check box before the IO device.
6. Click "Add devices".
   After a brief moment, a window is opens to report about the success or failure of the hardware detection.

Result of the hardware detection

If the hardware detection is successful, STEP 7 inserts the IO device with all the modules and submodules into the project.

An IO device configured via hardware detection responds as follows:

- Modules configured through the "Hardware detection" are configured as if they have been inserted from the catalog.
- MAC address: STEP 7 imports the MAC address of the detected IO device into the project.
- IP settings:
  - If the detected IO device already has an IP address, STEP 7 imports the IP address into the project.
  - If the detected IO device does not have an IP address, STEP 7 automatically assigns an IP address in the project.

  PROFINET device name:
  - If the detected IO device already has a PROFINET device name, STEP 7 imports the PROFINET device name into the project.
  - If the detected IO device does not have a PROFINET device name, STEP 7 automatically assigns a PROFINET device name in the project.
- IO devices configured through "Hardware detection" have neither an IP subnet nor an IO controller assigned.

4.4 Specifying the router for a PROFINET IO device

Introduction

You always require a router (also referred to as a "Standard Gateway") when the PROFINET device has to communicate with a node whose IP addresses lie outside the own IP subnet. If the PROFINET device sends an IP packet to an IP address outside its own IP subnet, the IP packet first goes to the configured router. The router in turn checks the IP address. If this lies outside its own subnet, the router passes the IP packet on to the next router. The IP packet is routed to the next router until it has reached the target address.

Like all S7-1500 CPUs, S7-1500 CPUs with several PROFINET interfaces provide the possibility to configure the IP address of a router. However, there is the restriction that you can only enter the IP address of a router at a PROFINET interface.

You cannot configure an IP address of a router for the other PROFINET interfaces of the CPU. IO devices that are connected to this PROFINET interface adopt this setting. Up to and including STEP 7 V14 SP1, these IO devices did not have any possibility to reach devices in a different IP subnet.

As of STEP 7 V15, you have the possibility to assign the address of a router for an IO device independent of the setting of the IO controller. You can now, for example, set a router address at the IO device in the following cases as well:

- You have not set an IP address of a router for the interface of the associated IO controller.
- You have already set a router address for a different interface in the CPU.

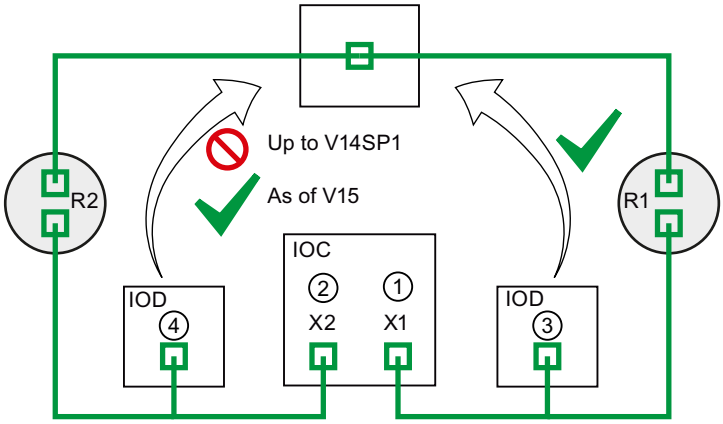

① Router R1 configured at PROFINET X1

② If a router is configured at X1, you cannot configure a router at X2.

③ Because a router is configured at X1, the IO device adopts the IP address of the router R1. The IO device can be reached from a different IP subnet.

④ As of STEP 7 V15, you set the IP address of the router R2 at the IO device irrespective of the setting at the interface X2. The IO device can be reached from a different IP subnet.

Figure 4-10 Specifying the router for an IO device

Further information about the "User router" setting

You have the possibility to configure the use of a router including IP address of the router in the "IP protocol" section of the settings for the PROFINET interface (Ethernet addresses).

Rules

Observe the following rules if you want to configure a router for the PROFINET interface of an IO controller:

- A PROFINET IO device supports exactly one router, irrespective of the number of interfaces.
- You can configure a router for exactly one PROFINET interface. All IO devices that are assigned to the PROFINET interface adopt the configured router from the IO controller.
- You cannot configure a router for the further PROFINET interfaces of the CPU. The further PROFINET interfaces take on the IP address "0.0.0.0" as the router and pass it on to their IO devices.

As of STEP 7 V15, you can configure the use of a router for an IO device. This allows the IO device to communicate with a node outside its own IP subnet, irrespective of the setting of the PROFINET interface of the IO controller.

Configuration example: Configuring a router for an IO device

The following example shows a configuration in which you configure a router at the IO device so that the IO device reaches IP addresses in the higher-level network.

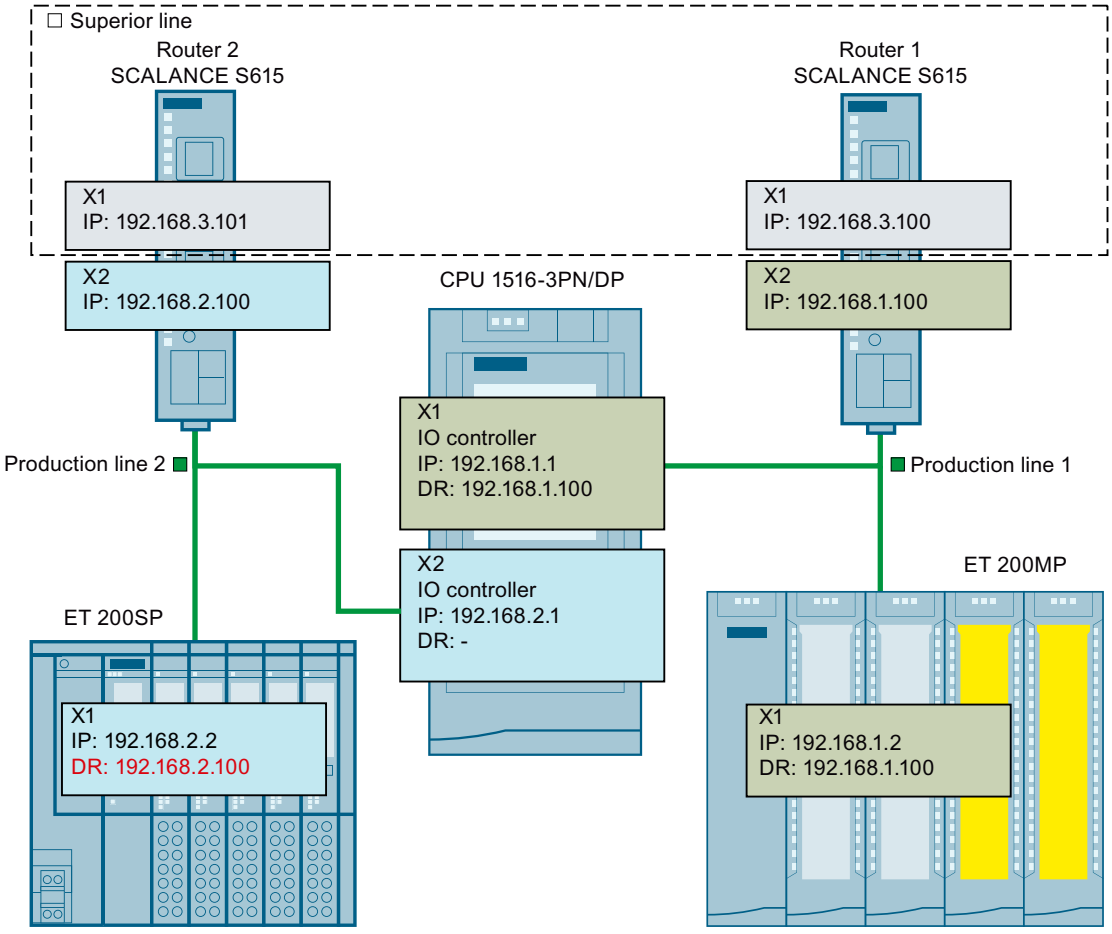

Figure 4-11 Configuration example: Configuring a router for an IO device

You have a CPU 1516-3PN/DP. The two PROFINET interfaces X1 and X2 of the CPU work in the "IO controller" operating mode. The PROFINET interface X1 is connected with the subnet "Production line 1". PROFINET interface X2 is connected with the subnet "Production line 2". The two subnets "Production line 1" and "Production line 2" are each connected via a router with the higher-level network "Superior line".

For PROFINET X1, you configure the router "Router 1" with the IP address 192.168.1.100.

The IO device (ET 200SP) in the "Production line 1" subnet adopts the router from the IO controller.

You cannot configure a router for the PROFINET interface X2 because you have already configured a router for the PROFINET interface X1 of the CPU.

No router is transferred by the PROFINET interface X2 to the IO device in the subnet "Production line 2".

In order for the IO device in the subnet "Production line 2" to reach nodes in the higher-level "Superior line", configure the router "Router 2" with the IP address 192.168.2.100 for the IO device.

Configuring the router for the IO controller

Requirements: You use the "Set IP address in the project" option for the PROFINET interface.
Follow these steps to configure a router for the IO controller in STEP 7:

1. In the network view of STEP 7, select the PROFINET interface of the IO controller.
2. In the Inspector window, navigate to "Properties" > "General" > "Ethernet addresses".
3. Select the "Use router" check box in the "IP protocol" field.
4. Enter the IP address of the router at "Router address".

Configuring a router for an IO device

Requirements:

- STEP 7 as of V15
- CPU 1500 as of firmware version V2.5
- IO device is assigned to the PROFINET interface of an IO controller. The PROFINET interface of the IO controller uses the "Set IP address in the project" option.

Follow these steps to configure a router for the IO device in STEP 7:

1. In the network view of STEP 7, select the PROFINET interface of the IO device.
2. In the Inspector window, navigate to "Properties" > "General" > "Ethernet addresses".
3. Clear the "Synchronize router settings with IO controller" check box.
4. Select the "Use router" check box.
5. Enter the IP address of the router at "Router address".

4.5 Configuring topology

Introduction

If an IO device is assigned to an IO controller, this does not yet specify how the ports are connected to each other.
A port interconnection is not required to use RT, but it provides the following advantages:

- A set topology is assigned with the port interconnection. Based on an online-offline comparison, it is possible to conduct a set-actual comparison with all devices that support this function.
- The "Device replacement without exchangeable medium" function can be used.

A port interconnection is an essential requirement for using IRT.
An overview of various options for setting up a PROFINET network is given below.

Line

All the communication devices are connected in a linear bus topology.
In PROFINET, the linear bus topology is implemented with switches that are already integrated into the PROFINET devices. Therefore, the linear bus topology at PROFINET is merely a special form of tree / star topology.
If a link element (switch, for example) fails, communication across the failed link element is no longer possible. The network is then divided into 2 subsegments.
Linear bus topology structures require the least cabling.

Star

If you connect communication devices to a switch with more than two PROFINET ports, you automatically create a star network topology.
If an individual PROFINET device fails, this does not automatically lead to failure of the entire network, in contrast to other structures. It is only if a switch fails that part of the communication network will fail as well

Tree

If you interconnect several star structures, you obtain a tree network topology.

Ring

In order to increase the availability of a network, use ring structures. In principle, a linear bus topology is connected to a ring through a so-called redundancy manager.
The task of the redundancy manager is managed by an external switch SCALANCE X, a CPU that supports the Media Redundancy Protocol MRP (e.g., CPU 1516-3 PN/DP) or a CP (e.g., CP 343-1 Lean).
If there is a break in the network, the redundancy manager ensures that the data is redirected over an alternative network connection in the ring.

Example for topology

The following example shows a combination of different topologies.

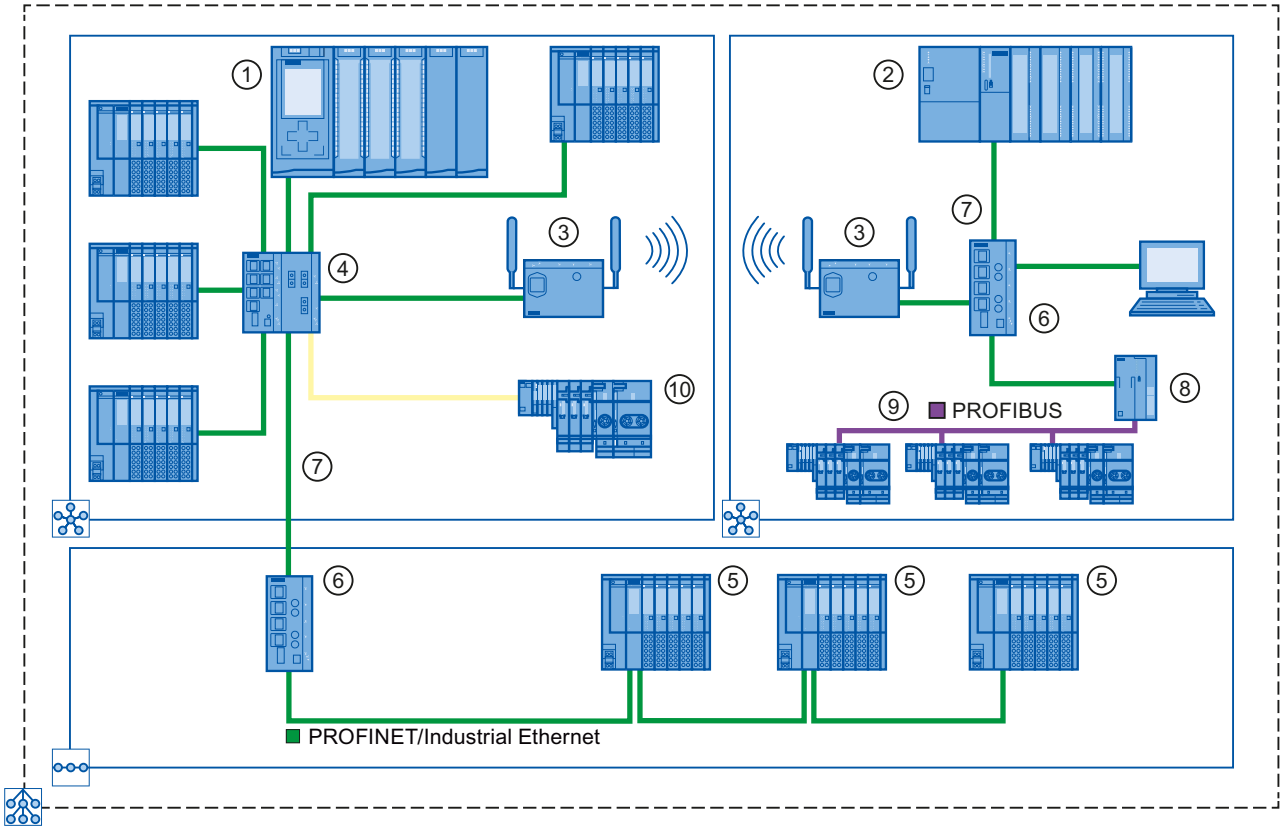

Number	Meaning
①	S7-1500 as IO controller
②	S7-300 as IO controller
③	Industrial WLAN with SCALANCE W
④	SCALANCE X 307-3 with seven electrical and three optical ports
⑤	ET 200SP with integrated 2-port switch
⑥	SCALANCE X 204 with four electrical ports
⑦	PROFINET/Industrial Ethernet
⑧	IE/PB-Link PN IO
⑨	PROFIBUS DP
⑩	ET 200S with two optical ports
	Star topology
	Linear bus topology
	The combination of topology forms results in a tree topology.

Figure 4-12 Combined topology

Additional information

Observe the PROFINET Installation Guideline (http://www.profibus.com/nc/download/installation-guide/downloads/profinet-installation-guide/display/) of the PROFIBUS User Organization when planning your PROFINET topology.

For more detailed information, see the SIMATIC NET Twisted Pair and Fiber Optic Networks (http://support.automation.siemens.com/WW/view/en/8763736) manual.

You can find basic information in the Communication with SIMATIC (http://support.automation.siemens.com/WW/view/en/1254686) manual.

4.5.1 Topology view in STEP 7

Introduction

The topology view is one of three working areas of the hardware and network editor. You undertake the following tasks here:

- Displaying the Ethernet topology
- Configuring the Ethernet topology
- Identify and minimize differences between the set and actual topology (online)

The topology view in STEP 7 consists of a graphic area and a table area.

Graphic area

The graphic area of the topology view displays PROFINET devices with their appropriate ports and port connections. Here you can add more PROFINET devices.

The following figure shows the graphic area of the topology view.

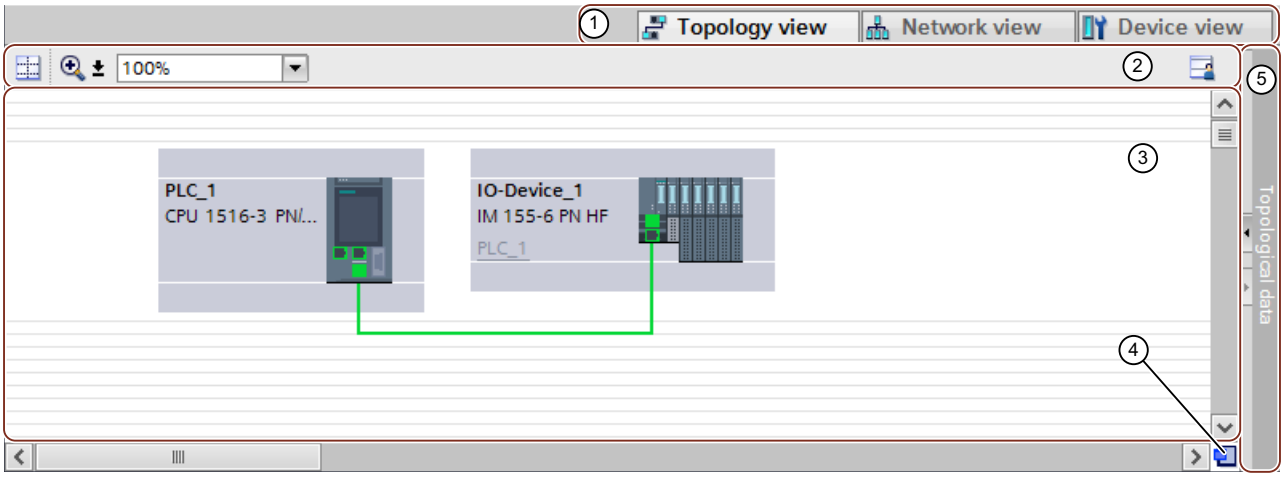

① Selector: Device view/Network view/Topology view

② Toolbar

③ Graphic area of the topology view

④ Overview navigation

⑤ Selector for the table area of the topology view

Figure 4-13 Graphic area of the topology view

Overview navigation

Click in the overview navigation to obtain an overview of the created objects in the graphic area. By holding down the mouse button, you can quickly navigate to the desired objects and display them in the graphic area.

Table area

- Topology overview: This displays the Ethernet or PROFINET devices with their appropriate ports and port connections in a table. This table corresponds to the network overview table in the network view.
- Topology comparison: Here you can import devices and port interconnections automatically through offline/online comparison or extended Offline/Online comparison into STEP 7.

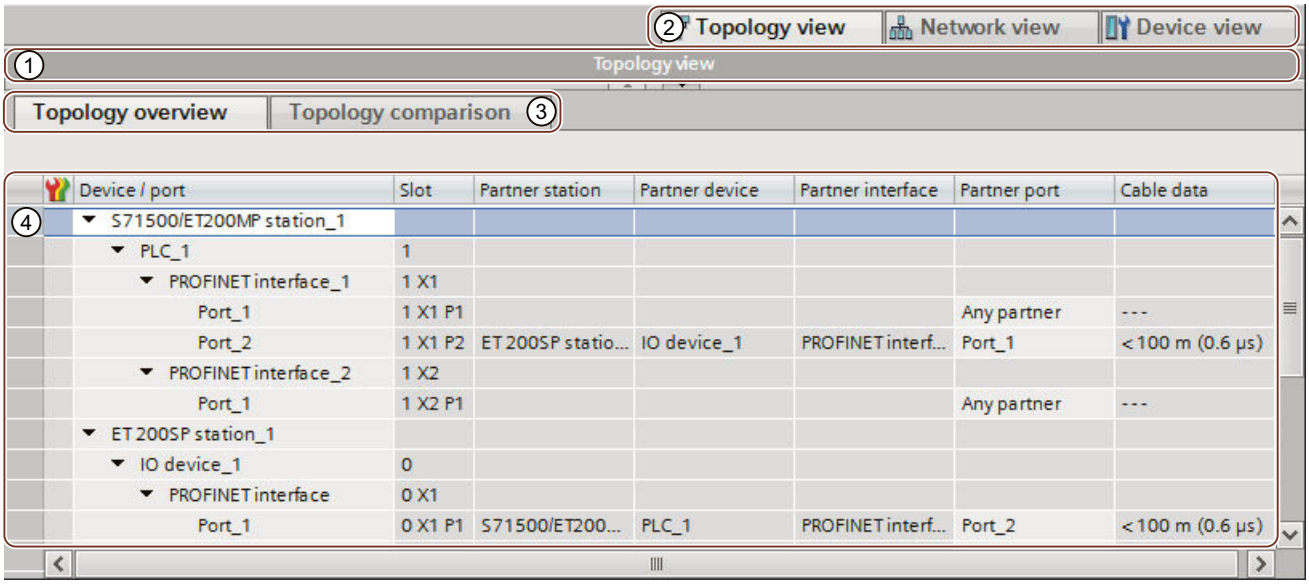

① Selector for the graphic area of the topology view

② Selector: Device view/Network view/Topology view

③ Selector: Topology overview/Topology comparison

④ Table area of the topology view

Figure 4-14 Table area of the topology view

4.5.2 Interconnecting ports in the topology view

Requirement

You are in the graphic view of the topology view.

Procedure

To interconnect ports in the topology view, follow these steps:

1. Place the pointer of the mouse on the port you want to interconnect.
2. Press and hold down the left mouse button.
3. Move the pointer.
   The pointer now uses the networking symbol to indicate "Interconnecting" mode. At the same time, you see the lock symbol on the pointer. The lock symbol disappears only when the pointer is over a valid target position.
4. Now drag the pointer to the target port. You can keep the left mouse button pressed or release it when performing this action.
5. Now release the left mouse button or press it again (depending on your previous action).

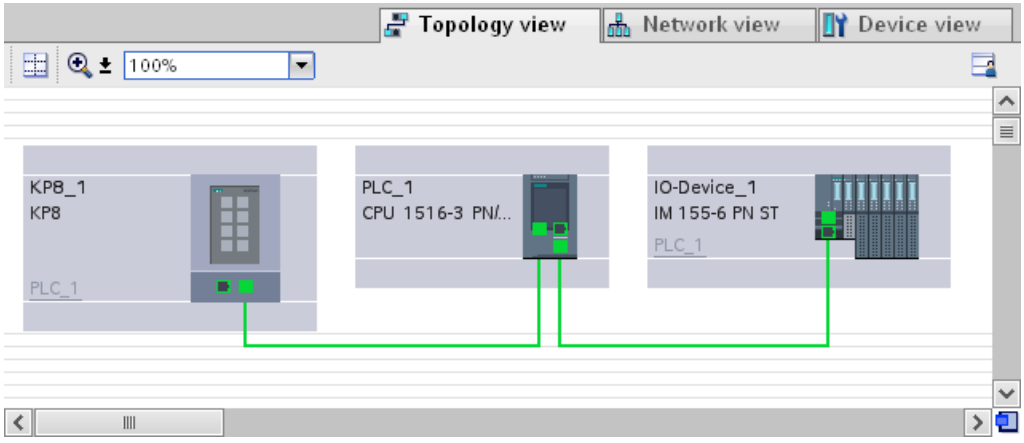

Figure 4-15 Interconnecting ports in the topology view

Result

You have created a port interconnection.

4.5.3 Interconnecting ports - Inspector window

Interconnecting ports in the Inspector window

To interconnect ports, follow these steps:

1. In the device or network view, select the PROFINET device or PROFINET interface.
2. In the Inspector window, navigate to the port property "Port interconnection".
   When the PROFINET interface is selected, you can find this setting in the Inspector window as follows: "Properties > General > Advanced Options > Port [...] > Port Interconnection."

3. In the "Local port" section, you can find the settings at the local port. In the case of fiber-optic cable you can, for example, set the cable names here.
   In the "Partner port" area, select the drop-down list for "Partner port" in order to display the available partner ports and make a selection.

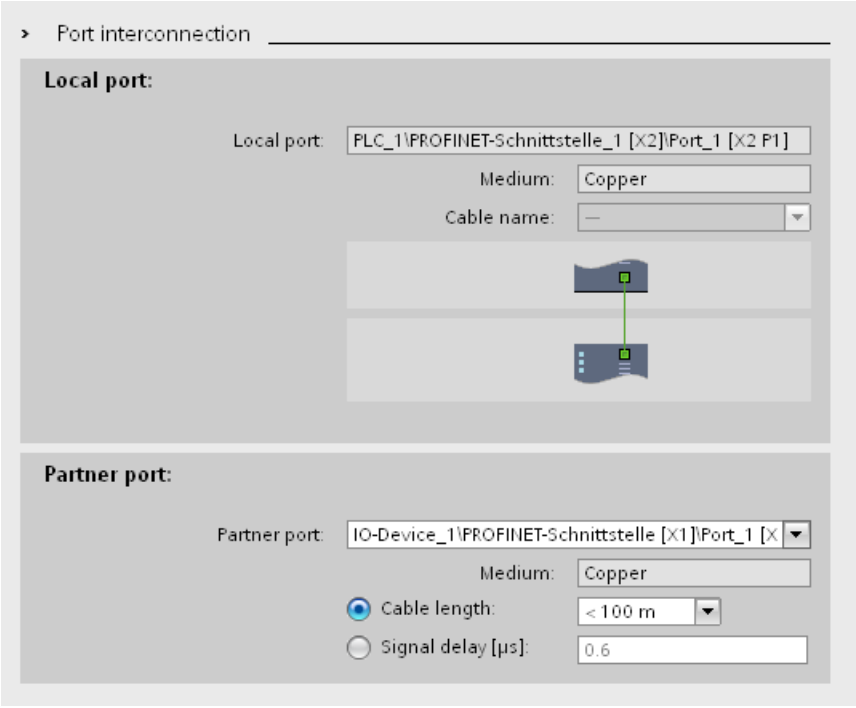

Figure 4-16 Interconnecting ports in the Inspector window in STEP 7

If the PROFINET interface was disconnected, it is automatically connected by this action. In the properties of the subnet you can set whether this subnet should or should not be used for the networking.

4.5.4 Automatic assignment of devices by offline/online comparison

Overview

During the offline/online comparison, the configured topology is compared with the actual existing topology. Devices identified online are automatically assigned to configured devices as far as this is possible.

Start of availability detection

You start the availability detection the first time by clicking the "Compare offline/online" button in the toolbar of the "Topology comparison" tab.

You restart availability detection by clicking the "Update" button.

NOTE

The availability detection can take several seconds. During this time, no user input is possible.

Automatic assignment of a PNIO device

A PNIO device identified online is automatically assigned to a configured device if the following properties of the two devices match up:

- Article no.
- Type
- PROFINET device name

No automatic assignment

In the following situations, no automatic assignment is possible:

- No device can be identified online to match a configured device. (This means that the corresponding columns in the "Online topology" area of the topology comparison table are empty.)
  In this case, you should add the already configured device to your system or delete the configured device from the configuration.
- A device identified online can be assigned to a configured device, but there are differences in the port interconnections.
  In this case, you can Apply the port interconnections identified online manually to the project (Page 70).
- A device identified online cannot be assigned to a configured device. (In this case, the corresponding columns in the "Offline topology" area of the topology comparison table are empty.)
  In this case, you can Include the devices identified online manually in the project (Page 71).

4.5.5 Apply the port interconnections identified online manually to the project

Requirements

You have run an offline/online comparison in the topology view. The result of this is that at least one device identified online was automatically assigned to a configured device, but that there are differences relating to the interconnection.

Procedure

To adopt one more port interconnections identified online in the project manually, follow these steps:

1. Select the row belonging to the port interconnection.
2. If applicable, select further roles using multi-selection.
3. Select "Apply" > "Use selected" in the shortcut menu.
   The content of the corresponding table cells in the "Action" column changes to "Apply".
4. If you have mistakenly prepared too many port interconnections to be included in the project:
   Select the rows belonging to the port interconnections you have mistakenly prepared for inclusion in the project using multi-selection.
   Select "Reset" > "Reset selected" in the shortcut menu.
   The content of the corresponding table cells in the "Action" column change to "No action".
5. Click the "Synchronize" button.

Result

The port interconnections identified online for the corresponding devices are included in the project. Successful adoption is indicated by the diagnostics icon "Identical topology information" for each port.

NOTE

If other port interconnections are recognized for a device identified online and these differ from those that exist in the project, adopting these in the project means that the port interconnections that were previously in the project are replaced by those identified online. If no port interconnections are detected for a device identified online, adopting in the project means that all the port interconnections of this device are deleted in the project.

4.5.6 Include the devices identified online manually in the project

Requirements

You have run an offline/online comparison in the topology view. The result of this is that at least one device identified online could not be assigned to any configured device.

Procedure

To adopt one more devices identified online in the project manually, follow these steps:

1. For a configured device without an online partner, move the mouse pointer to the "Device/port" column of the online topology.
2. Select the device you want to assign to the configured device from the drop-down list of this box.
3. Repeat the previous steps if necessary for other configured devices without an online partner.

Result

The selected device that was identified online is moved up from the end of the table. Following this, it is in the row of the configured device to which you have just assigned it.

4.5.7 Automatic assignment of devices by advanced offline/online comparison

Overview

With the advanced offline/online comparison, ICMP is also used alongside DCP to be able to detect devices that do not support DCP.

Automatic assignment of devices detected by ICMP

With devices detected by ICMP, no type is available.

With passive devices, no article number is available. For this reason, passive devices can only be assigned automatically if you have not assigned an article number in the configured data and the offline and online IP addresses match.

With switches, automatic assignment is possible if the offline and online article number, IP address and PROFINET device name match.

Diagnostics and maintenance 5

5.1 Diagnostics mechanisms of PROFINET IO

Totally Integrated Diagnostics Concept

All SIMATIC products have integrated diagnostics functions that they can use to detect and remedy faults. The components automatically flag a potential fault in the operation and provide detailed information.

Each individual error or several errors occurring concurrently are transferred from the IO device to the IO controller. If you require the full status of the IO device including any pending errors, you can also read the status directly from the IO device.

The following sections provide basic information on using diagnostics via PROFINET IO. You can find a detailed description of the system diagnostics for S7-1500, ET 200MP, ET 200SP and ET 200AL in the Diagnostics (http://support.automation.siemens.com/WW/view/en/59192926) function manual.

Accessing the status of an IO device with a PG/PC or an HMI device

If you are connected to the Industrial Ethernet via a PG/PC with STEP 7 or an HMI device, you can also call up diagnostics information online. This is illustrated by the following graphic.

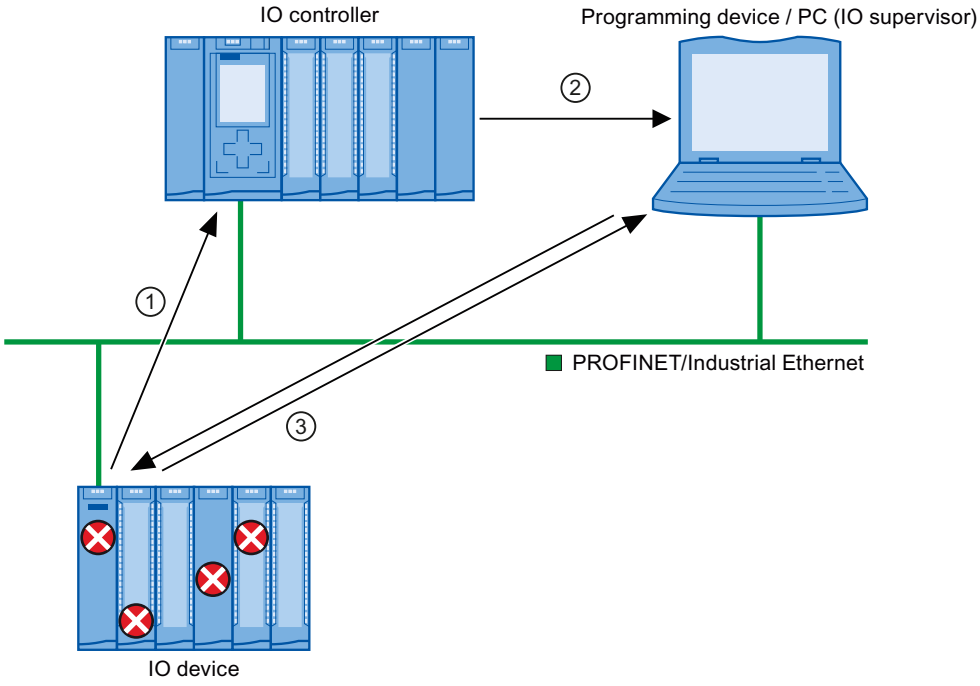

Number	Description
①	The IO device detects an error and sends diagnostics data to the IO controller.
②	The IO controller notifies the programming/HMI device. The display of the system diagnostics is updated.
③	In STEP 7, you can read the station status for "Accessible devices" directly from the IO device regardless of the IO controller. This is only possible if the programming device is connected to Industrial Ethernet. This means that you can access diagnostics information during the commissioning phase or for servicing even if the IO controller is not operational.

Figure 5-1 PROFINET IO diagnostics with PG/PC or HMI device

5.1.1 Diagnostics levels in PROFINET IO

Concept

The IO device sends all error messages that occur to the IO controller. The scope and volume of diagnostics information varies according to the level of diagnostics data evaluation and the PROFINET devices you are using.

Diagnostics levels

You can evaluate diagnostics data at different levels. The number and type of channels is selected, for example, at the diagnostics level 4.

The following figure shows the diagnostics levels with PROFINET IO.

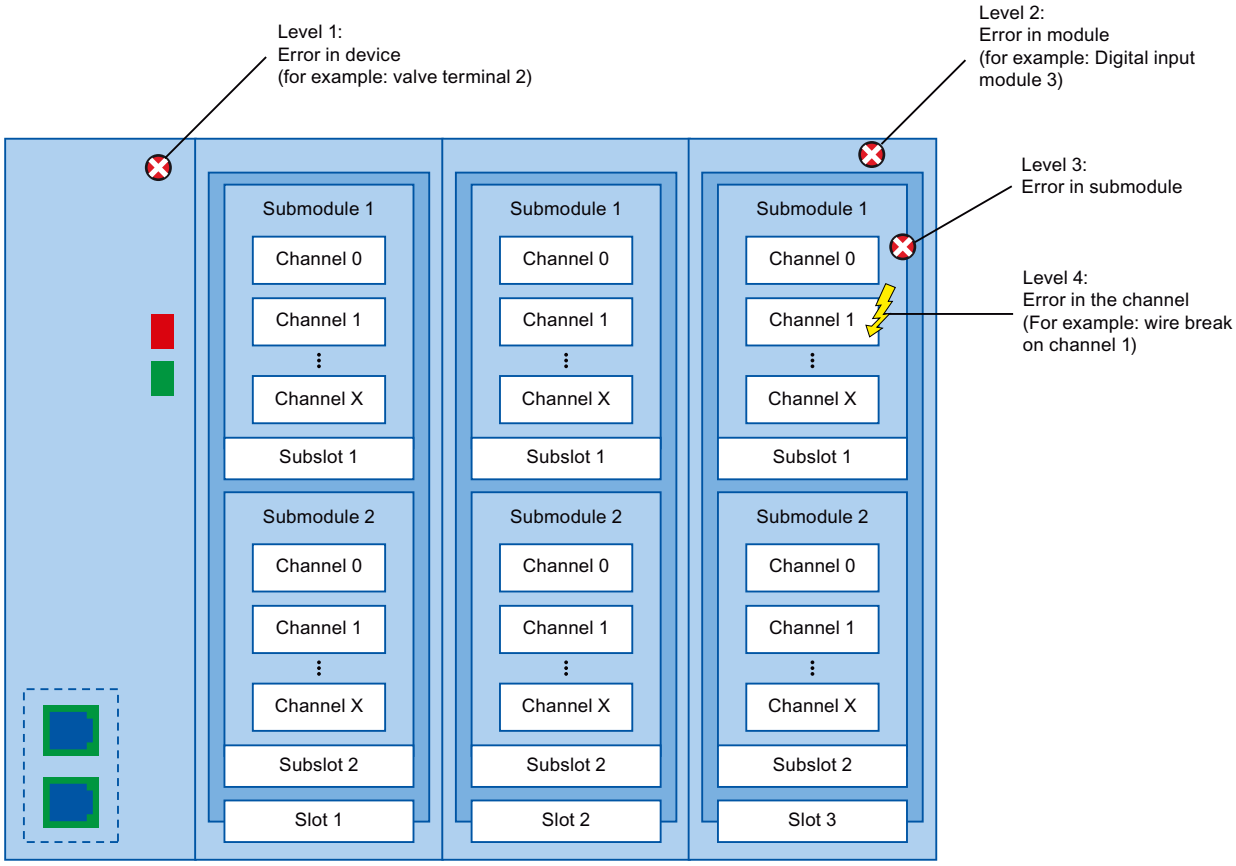

Figure 5-2 Diagnostics levels with PROFINET IO

Representation of diagnostics levels in the device view in STEP 7

The following figure shows the representation of the PROFINET device model in the device view of STEP 7, based on the example of a distributed I/O system ET 200MP:

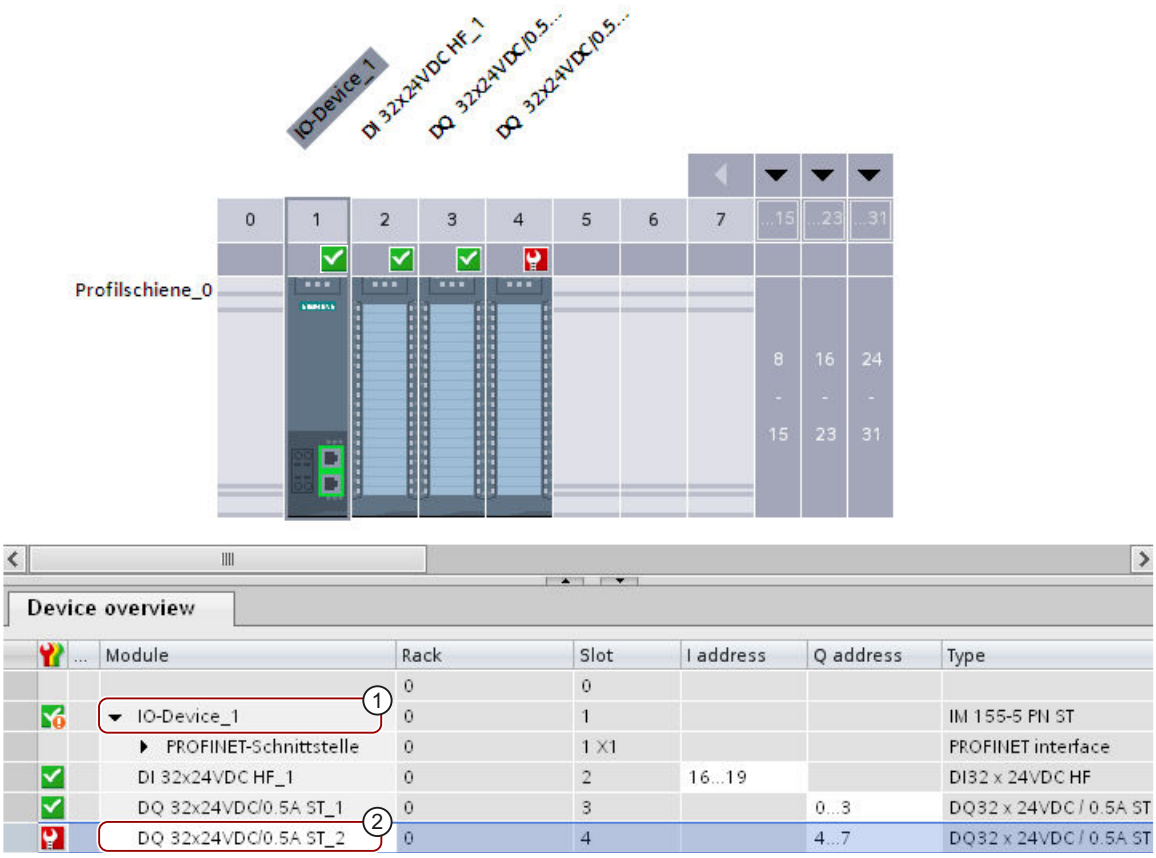

Number	Description	
①	Level 1:	Error(s) in the device
②	Level 2:	Error(s) in the module

Figure 5-3 Diagnostics levels in the device view of STEP 7

Which PROFINET nodes support the extended PROFINET diagnostics?

An overview of the PROFINET nodes that support extended PROFINET diagnostics and of what you have to configure is provided in this FAQ (https://support.industry.siemens.com/cs/ww/en/view/23678970).

5.2 Diagnostics via LEDs

LEDs for diagnostics on PROFINET

Each port of a PROFINET interface of a SIMATIC device has one LED.

The following table shows a summary of the meaning of these LEDs in the S7-1500, ET 200MP, ET 200SP and ET 200AL systems.

Table 5-1 S7-1500, ET 200MP, ET 200SP, ET 200AL: LEDs for diagnostics on PROFINET

LED image	Meaning	S7-1500	ET 200MP	ET 200SP	ET 200AL
		LINK/TX/RX LED		LK LED	P1 Link LED P2 Link LED
LED off	There is no Ethernet connection between the PROFINET interface of the PROFINET device and the communication partner. No data is currently being sent/received via the PROFINET interface.	X	X	X	X
LED green	There is an Ethernet connection between the PROFINET interface of your PROFINET device and a communication partner.	X	X	X	X
LED flashes green	The "LED flashing test" is being performed.	X	X	X	X
LED flickers yellow	Data is currently being received from or sent to a communications partner on Ethernet via the PROFINET interface of the PROFINET device.	X	X	-	-

Additional information

You can find a detailed description of all LEDs of the module with cause of the error and remedies in the relevant documentation for the module.

5.3 Diagnostics via the display of the S7-1500 CPUs

Display

The S7-1500 CPU has a display and operating keys. The display of the CPU shows you the control and status information in different menus. You use operating keys to navigate through the menus and make a variety of settings in the process.

Diagnostics via the display

The following indicators can be evaluated for diagnostics purposes on the display:

- Error and alarm texts (system diagnostics, alarm messages)
- Module status for central and distributed modules

In the following example of a display of the CPU 1516-3 PN/DP, you can see a warning on the diagnostics icon and an exclamation mark on the icon for module.

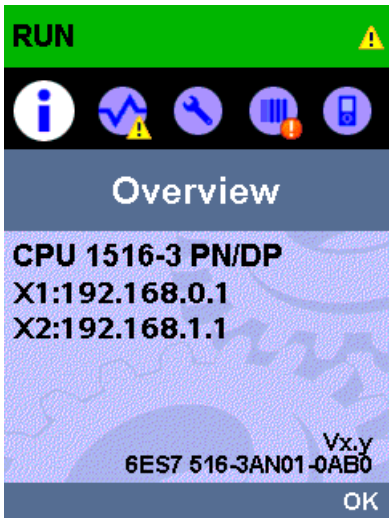

Figure 5-4 Display of overview

Module status

To show the module status, navigate on the display through the menu items "Module" > "PROFINET I/O (X1)" > "Station" > "Slot" > "Status" > "Module status".

The module status indicates that a fault has occurred in the module. The "lower-level status" is the status of the module in the diagnostics level below this. In the example, the status is "good", i.e., the fault is not in the lower diagnostics level submodule or channel, but instead in the module.

Figure 5-5 Display of module status

Error and alarm texts

You can show diagnostics buffer entries and alarm messages for the relevant automation system on the display.
To show the diagnostics buffer entries of the CPU, navigate on the display via the menu items "Diagnostics" > "Diagnostics buffer".

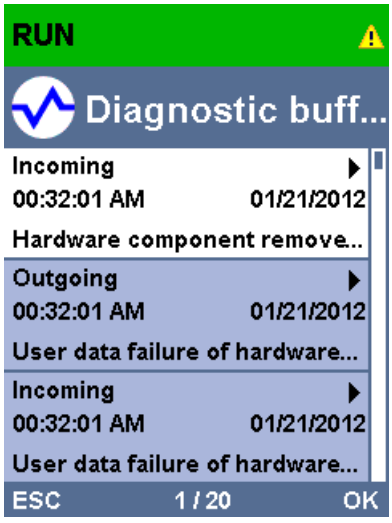

Figure 5-6 Display of diagnostics buffer

To show the alarm messages of the automation system, navigate through the menu items "Diagnostics" > "Alarms" > "Alarm text" on the display.

NOTE

Updating the alarm display

The display shows the currently read status of the CPU in static form, the display is not automatically updated. The alarm display is updated after it has been exited and opened again.

You set the automatic updating of the diagnostics information under: "Display" > "DiagnosticRefresh".

Figure 5-7 Display of alarms

Figure 5-8 Display of alarm message

Additional information

You can find the description of the operation and functions of the display in the SIMATIC S7-1500 Display Simulator (http://www.automation.siemens.com/salesmaterial-as/interactive-manuals/getting-started_simatic-s7-1500/disp_tool/start_de.html).

5.4 Diagnostics via Web server

The CPUs belonging to the S7 family have their own integrated Web server with a wide range of functions.

The following diagnostics options are available to you:

- Start page with general CPU information
- Information on diagnostics
- Contents of the diagnostics buffer
- Module information
- Alarms
- Information about communication
- PROFINET topology
- Motion Control diagnostics
- Trace
- Contents of the diagnostic buffer
- Module status
- Actual topology of the PROFINET system
- Set topology of the PROFINET system (from the configuration)

Set topology and actual topology - graphic view

Requirements for displaying the set and actual topology:

- You have configured the PROFINET ports in the topology editor of the hardware and network editor of STEP 7.
- You have loaded the entire project with STEP 7 in the CPU.

The following shows an example of the graphic view.

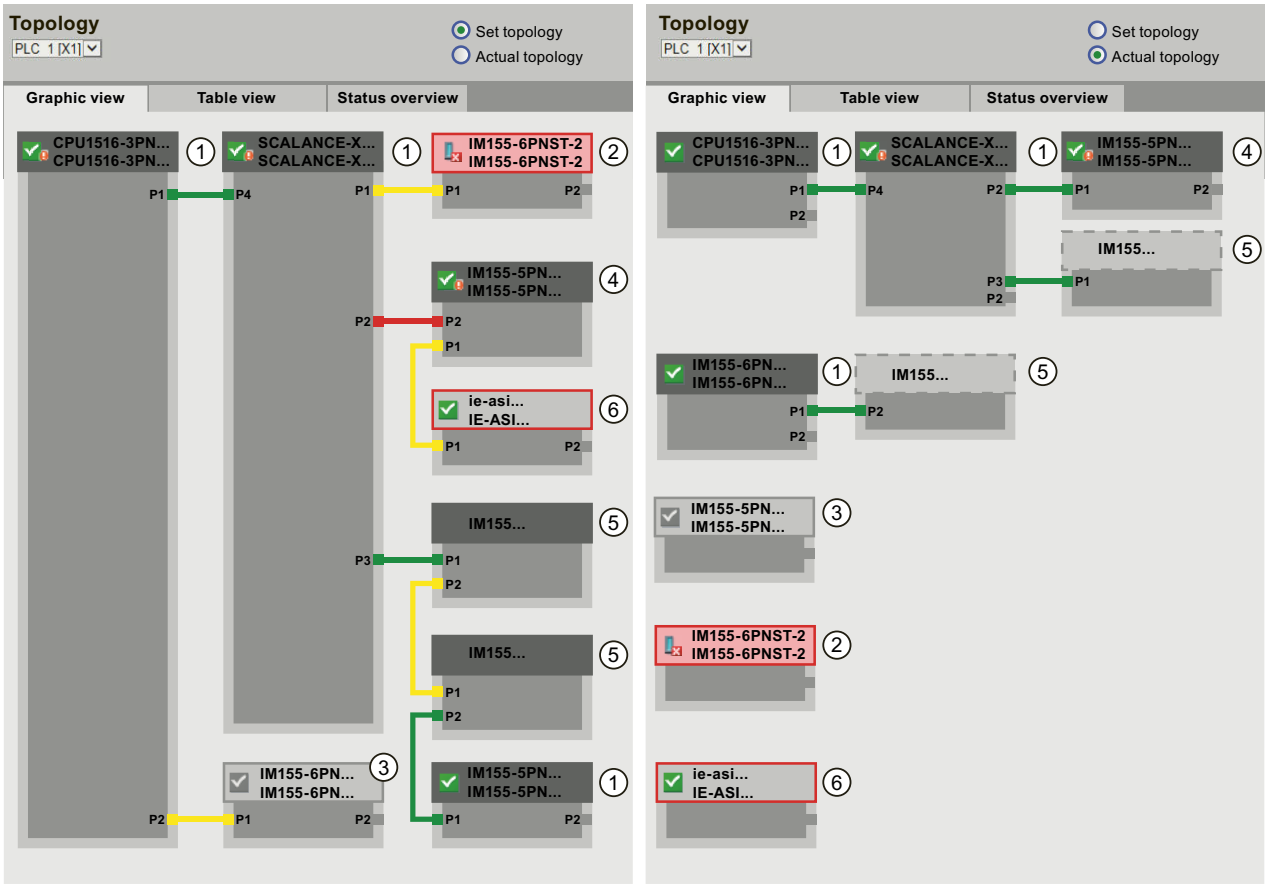

Figure 5-9 Topology - graphic view via the Web server

Meaning of the colored connections in the set/actual topology:

Table 5-2 Meaning of the colored connections in the set/actual topology:

Connection	Meaning	
	Set topology	**Actual topology**
green	The current actual connection matches the configured set connection.	detected connections
red	The current actual connection does not match the configured set connection (e.g., port interchanged).	-
yellow	The connection cannot be diagnosed. Causes: • The communication to an IO device has been disrupted (e.g., cable removed) • Connection to a passive component • Connection to PROFINET devices of another IO controller or PROFINET system	-

① Configured and accessible PROFINET devices

Configured and accessible PROFINET devices are displayed dark-gray. Connections show the ports through which the PROFINET devices of a station are connected.

① Configured but not accessible PROFINET devices

The configured but not accessible PROFINET devices are displayed in pink with red border (e.g., device has failed, cable disconnected).

③ Disabled devices

All disabled, configured PROFINET devices are displayed light-gray.

④ Interchanged ports

Interchanged ports are marked red in the set topology view. The currently connected ports are displayed in the actual topology, the configured set connection in the set topology.

⑤ PROFINET devices of another PROFINET IO system

- In the set topology:
  A PROFINET device of another PROFINET IO system is displayed with a green connection (or red connected if the ports have been interchanged), when it is directly adjoining a configured and accessible PROFINET device ① and it is also accessible. When the PROFINET device of another PROFINET IO system is not accessible, a yellow connection line is displayed.
  The connection between two PROFINET devices that both belong to a different PROFINET IO system, cannot be determined and is always displayed in yellow.
- In the actual topology:
  A PROFINET device of another PROFINET IO system is only displayed if the PROFINET device is in direct proximity to a configured PROFINET device. The PROFINET device is displayed light-gray and with dashed line.

For PROFINET devices of a different PROFINET IO system, **no** status display is shown on the device head.

⑥ Representation of faulty neighbor relations

The devices whose neighbor relations cannot be read out completely or correctly are displayed light-gray with red border.

Additional information

The tabular view of the actual topology and the status overview of the PROFINET devices in the project are possible.
You can find these views, additional topology examples, and detailed information on the operation and the functions of the Web server in the Web server (http://support.automation.siemens.com/WW/view/en/59193560) manual.

5.5 Online diagnostics with STEP 7

For PROFINET, you have the following options to evaluate diagnostics in STEP 7:

- Online & diagnostics - Devices & networks
- Online & diagnostics - diagnostics of PROFINET ports

Online & diagnostics network view

In the hardware and network editor (launched from the "Project tree" by double-clicking "Devices & networks"), you can get an overview of the current state of your system by clicking on the "Go online" button. It also shows the configuration information (for example, non-configured modules). This option is also available in the topology view in similar form.
Schematic drawing of the network view (online):

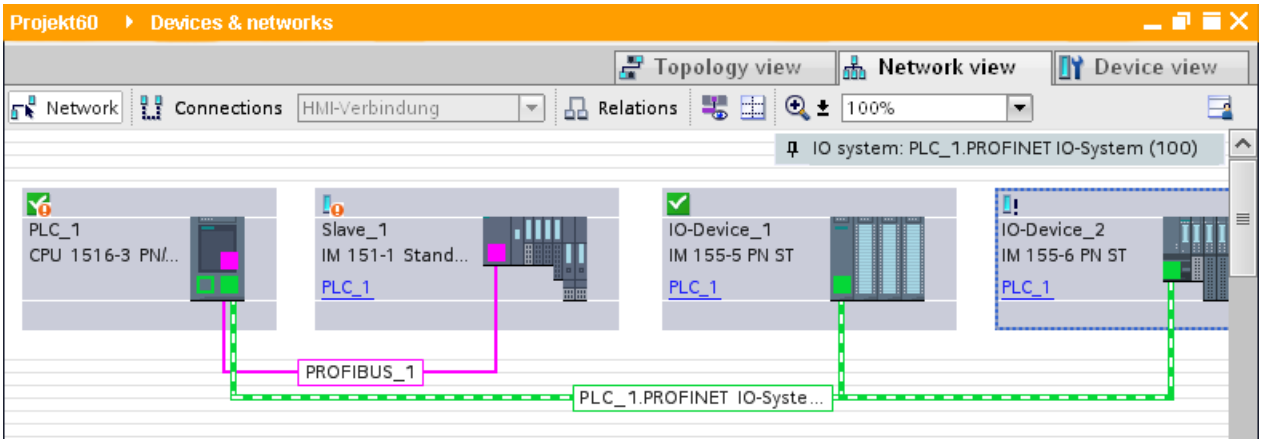

Figure 5-10 Online & diagnostics network view

Online & diagnostics device view

In STEP 7, you can display an overview of the modules in which faults have occurred. To do this, select the menu command "Online > Online & diagnostics". Once you are connected, you can see the status of the accessible devices in the project tree.
Double-click the device which displays an alarm message to access the faulty module directly. The device view is opened in the work area. In the device view of the device that reports the fault you can see directly in which module the fault occurs.
Open the "Diagnostics" tab and the subordinate "Device information" tab in the Inspector window for a more detailed error description.

Schematic drawing of the device view (online):

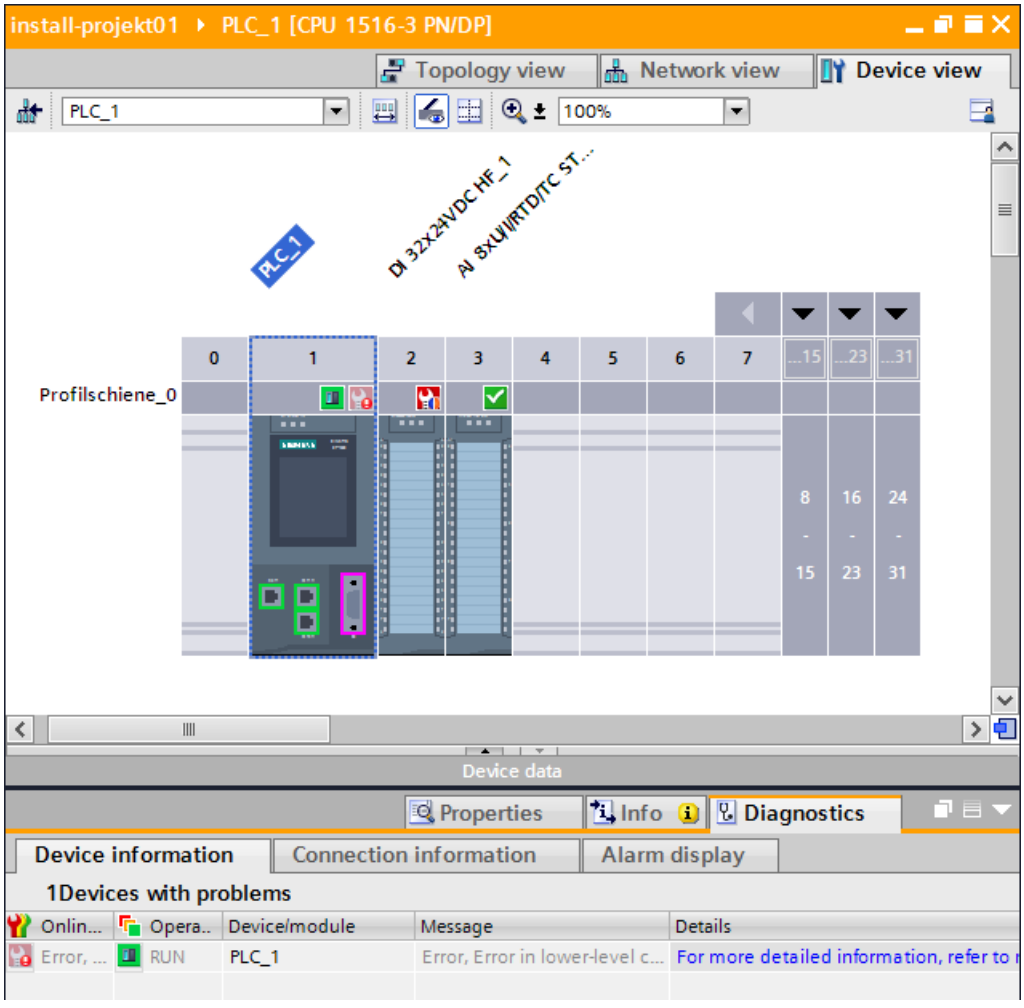

Figure 5-11 Online & diagnostics device view

Diagnostics of PROFINET ports

If you select "PROFINET interface > Ports" in the Diagnostics area in the online & diagnostics device view of a PROFINET device, the ports of the PROFINET interface are listed in a table.

The table provides you with the following information about the ports of the PROFINET interface.

- Name
- Status
- Settings
- Operating mode

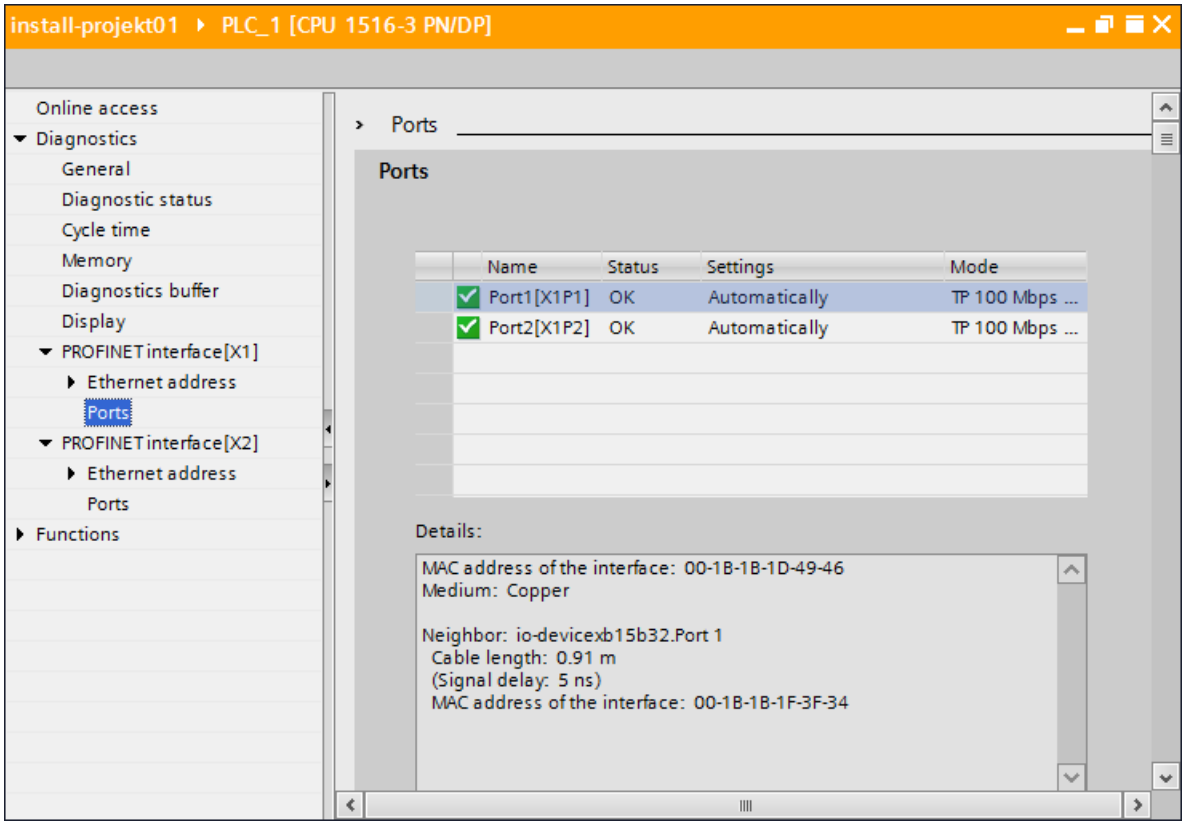

Figure 5-12 Diagnostics of PROFINET ports in STEP 7

Additional information

You can find information on the system diagnostics for S7-1500, ET 200MP, ET 200SP and ET 200AL in the Diagnostics (http://support.automation.siemens.com/WW/view/en/59192926) function manual and online help for STEP 7.

5.6 Extended maintenance concept

Extended maintenance concept

The PROFINET interfaces with integrated switch of the SIMATIC devices support the four-level diagnostics concept in accordance with PROFINET specification Version V2.3 or higher with the following status:

Table 5-3 Classification of the diagnostic status

Diagnostic status	Symbol		Severity of the error
Good	Green checkmark		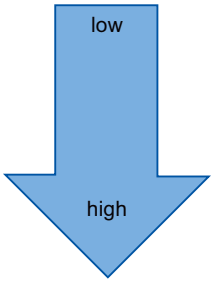
Maintenance required	Green wrench		
Maintenance demanded	Yellow wrench		
Bad	Red wrench		

The aim of the diagnostics concept is the early detection and elimination of potential faults - before they cause a production outage.

Other status information is defined in addition to the Good (no fault) and Bad (fault) status information for a PROFINET device.

The maintenance information is generated with the following system alarms:

- Maintenance required (symbolized by a green wrench) and
- Maintenance demanded (symbolized by a yellow wrench)

The times at which the two system alarms are generated can be customized for most wear parameters.

Example: Maintenance demanded for a PROFINET cable

The following graphic illustrates how diagnostics information is exchanged when the transmission quality on the optical cable decreases due to ageing, for example. In this example, the scenario is considered after a maintenance required has already been diagnosed.

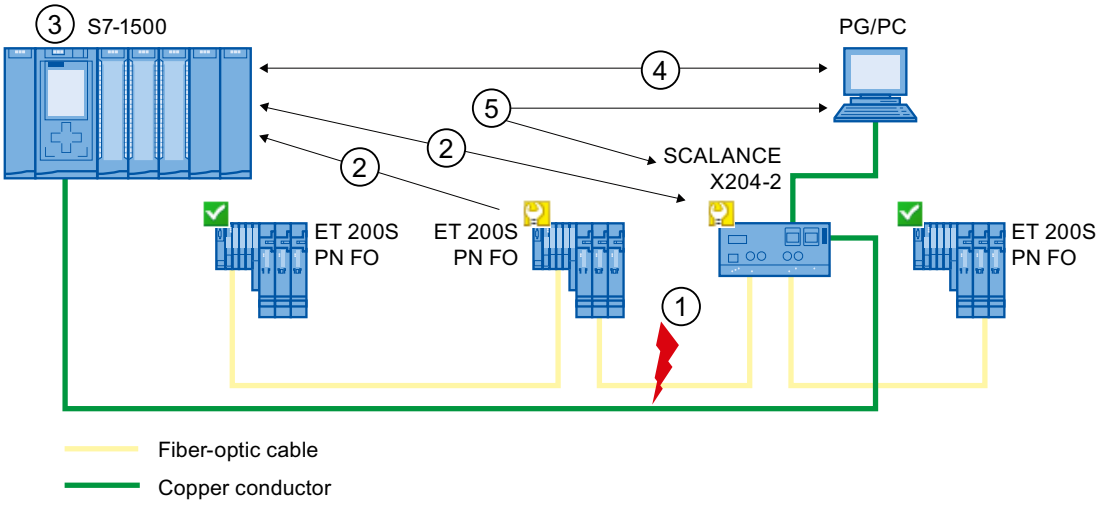

Number	Description
①	The system reserve of the fiber-optic cable drops below 0 dB.
②	Both the ET 200S PN FO and the switch send the maintenance demanded alarm to the IO controller.
③	Based on the interrupts, the IO controller detects the maintenance demanded from the switch and from the IO device. The module information data is updated in the IO controller and the corresponding error OBs are called. Note: To be able to start the error OBs in the IO controller, the "Call the user program if communication errors occur" property must be selected in STEP 7 for the relevant IO controller.
④	In STEP 7 (on the programming device/PC), the maintenance demanded message is indicated on the IO device and at the switch by a yellow wrench symbol.
⑤	STEP 7 can also read out detailed information directly from the switch.

Figure 5-13 Maintenance demanded for a PROFINET cable

5.7 Diagnostics of the network topology

Availability

As an open standard, you can use any SNMP based systems or software solutions for diagnostics in PROFINET.

Network diagnostics

The network management protocol SNMP (Simple Network Management Protocol) uses the wireless UDP transport protocol. It consists of two network components, similar to the client/server model. The SNMP manager monitors the network nodes and the SNMP clients collect the various network-specific information in the individual network nodes and store it

in a structured form in the **MIB** (Management Information Base). This information allows a network management system to run detailed network diagnostics.

MIB

The MIB (Management Information Base) is the database of a device. SNMP clients access this database in the device. The S7 device family supports the following standard MIBs:

- MIB II, standardized in the RFC 1213
- LLDP-MIB, standardized in the international standard IEC 802.1AB
- LLDP-PNIO-MIB, standardized in the international standard IEC 61158-6-10

You will find the MIBs for ET 200 interface modules and couplers with PROFINET interface in this product note (https://support.industry.siemens.com/cs/ww/en/view/109770525).

Detecting the network topology

LLDP (Link Layer Discovery Protocol) is a protocol that is used to detect the closest neighbor. LLDP enables a device to send information about itself and to receive information from its neighbor devices. This information is then saved in the LLDP MIB, for example, and can be queried using SNMP. This information allows a network management system to determine the network topology.

Use of SNMP (Simple Network Management Protocol)

SNMP can be used as follows:

- By users to integrate network diagnostics into a central HMI/SCADA system using the SIMATIC NET OPC server
- By the IT administration of machine and plant operators to monitor their Industrial Ethernet network using standard network management systems.
- By the IT administration, to monitor the automation network, alongside the office network, using standard network management systems.

Use of SNMP in the SIMATIC NET environment

SNMP-compliant devices from the SIMATIC NET family can be monitored and operated via a conventional standard Internet browser. The management system known as web-based management offers a wide range of device-specific information (network statistics, status of redundant supply, for example).

5.8 Diagnostics in the user program

5.8.1 Diagnostics and configuration data records

Diagnostics mechanism

The IO device outputs a diagnostics interrupt to the IO controller when it detects faults such as wire break on an IO module. This interrupt calls a corresponding organization block in the user program (diagnostics interrupt OB82), in order to generate a defined (programmed) response to the fault and passes a diagnostics data record.

Diagnostics data records in PROFINET IO

There are two different types of diagnostics data record:

1. Channel diagnostics data records
   Channel diagnostics data records are generated if a channel is in an error state and / or has triggered an interrupt.
   A diagnostics data record of length 0 is returned if there is no fault.
2. Vendor-specific diagnostics data records
   The structure and size of vendor-specific diagnostics data records depend on the vendor's settings.
   For information about vendor-specific diagnostics data records, refer to the appropriate device manual.

Addressing levels of diagnostics data records

Diagnostics and configuration data is evaluated at the following addressing levels:

- Device level
- AR (Application Relation)
- API (Application Process Identifier)
- Slot
- Subslot

A group of diagnostics and configuration data records are available for each address level (exception: device level always 0xF80c). In HEX representation, the individual groups of data records are distinguished by the first letter of the data record number.

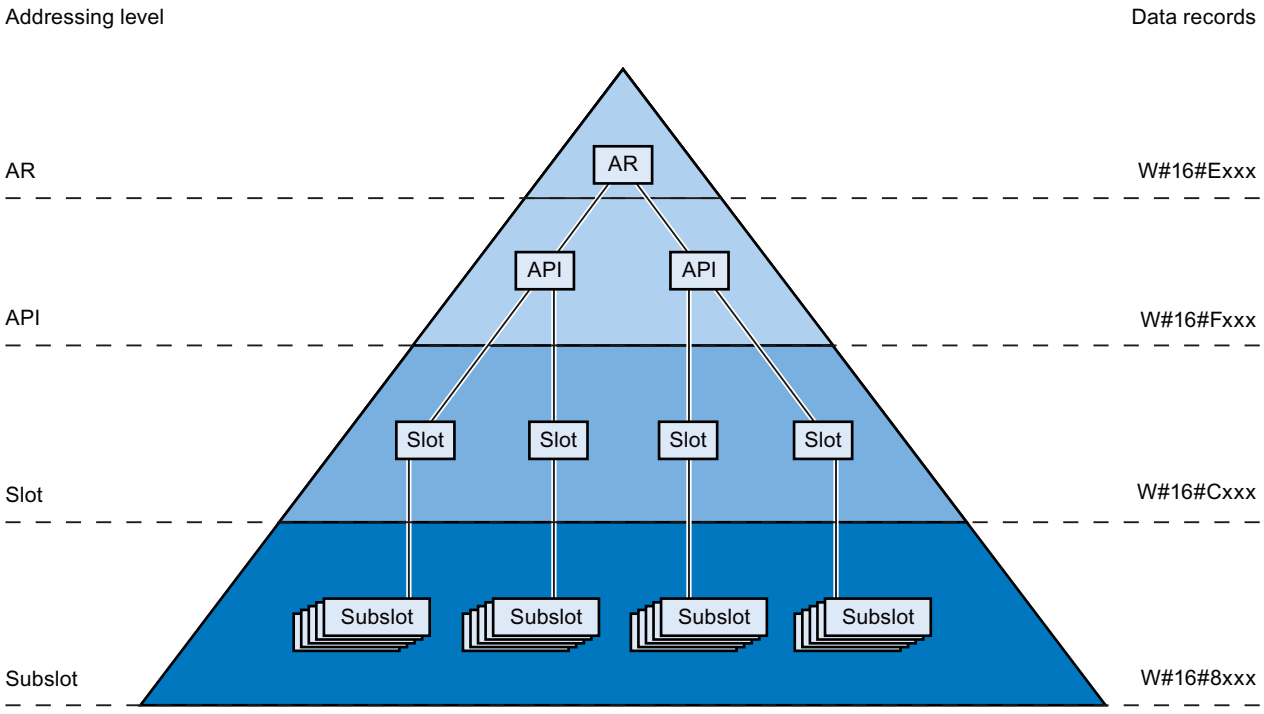

Figure 5-14 Addressing levels of diagnostics data records

The information for each IO device (addressing level AR), module (addressing level slot) or submodule (addressing level subslot) is always transferred in separate diagnostics or configuration data records. The data record returns diagnostics data or configuration data for one or more subslots, slots and APIs, depending on the addressing level.

NOTE

The diagnostics information is only generated for configured modules / submodules / channels.

Library for PROFINET data records

The "LPNDR" block library contains various function blocks. You can use these blocks to read out various device and status information from a PROFINET device and write parameters.

You can execute the following functions using the library blocks:

- Read device information:
  - Information about the interface, e.g. IP and MAC address
  - Information about the device interface, e.g. status, medium, name
  - Information about the link status of the interfaces, e.g. link down, link up
  - Information about the role of the device for MRP, e.g. client, manager
  - Information about the port statistics, e.g. number of received bytes

- Read the MRP status
- Modification of the parameters of analog input module of the ET 200SP in runtime, e.g. in order to disable/enable the channel diagnostics.

The finished functions are freely adaptable and can therefore be used universally.
The "LPNDR" block library with an example project can be found on the Internet (https://support.industry.siemens.com/cs/ww/en/view/109753067).

5.8.2 Evaluate diagnostics in the user program

Diagnostics in the user program

For PROFINET IO, a cross-vendor structure of data records with diagnostics information applies. Diagnostics information is created only for channels on which a fault has occurred. With PROFINET, there are two basic ways to obtain diagnostics information.

1. Evaluating the diagnostics status

Read out the diagnostics of your PROFINET IO system using the instructions "DeviceStates" and "ModuleStates" to localize faulty stations / modules or station / modules with maintenance demanded or maintenance required within a PROFINET IO system.
The instruction RDREC (read data record) is then used to read various diagnostics data records directly from the module concerned and thus obtain detailed information about the error.

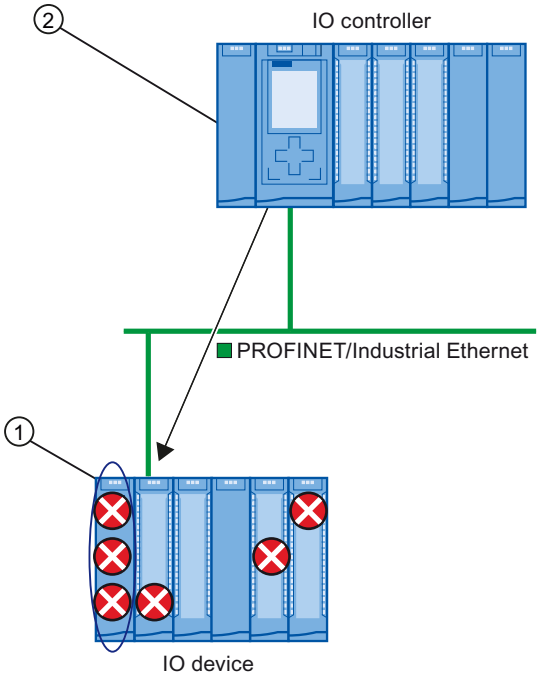

Number	Description
①	All individual errors are collected in a single data record on the interface module.
②	In your user program, the instruction "RDREC" reads the entire station status asynchronously directly from the IO device.

Figure 5-15 Example: Evaluating diagnostics data records with the instruction "RDREC"

2. Evaluation of interrupts

When the error OB (OB 82) is called, the OB's start information provides you with information on the cause and location of the error. Detailed information on the error event can be obtained in the error OB using the instruction "RALRM" (read additional interrupt information).

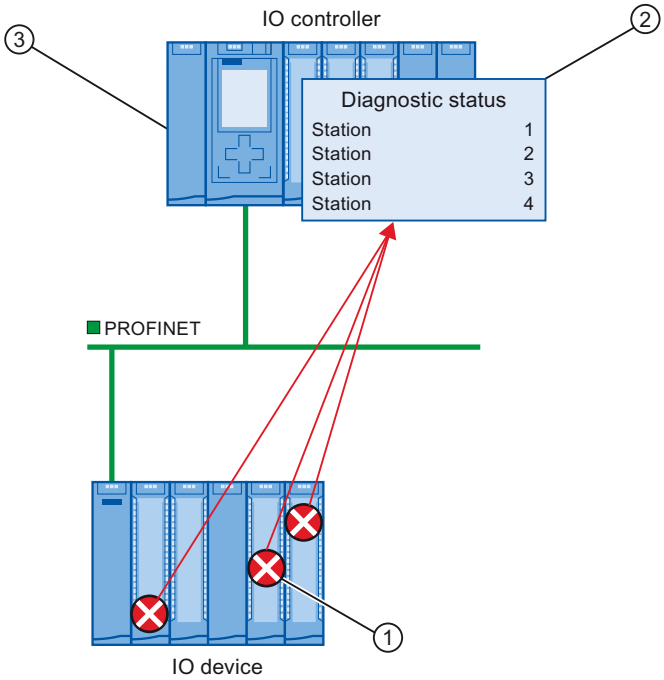

Number	Description
①	Every error is sent to the IO controller individually as channel diagnostics information in the form of an interrupt.
②	In the IO controller, the module status data is updated automatically and the error OB (OB 82) is started.
③	In your user program in the error OB (OB 82), the instruction "RALRM" reads the error synchronously from the IO controller without addressing the IO device.

Figure 5-16 Diagnostics with OB 82 and the instruction "RALRM"

Instructions and OBs

You will find information on the instructions and OBs in the STEP 7 online help.

5.9 Maintenance

5.9.1 I&M data (identification and maintenance)

Definition and properties

Identification and maintenance data (I&M) is information saved to module memory in order to provide support when:

- Checking the plant configuration
- Locating hardware changes in a plant

Identification data (I data) is module information (some of which may be printed on the module housing) such as the order and serial number. I data is read-only vendor-specific module data.

Maintenance data (M data) is plant-specific information such as the location identifier and installation date. M data is created during configuration.

The modules can be uniquely identified in online mode by means of the I&M data.

Further information

To find out whether and to what extent a PROFINET device supports I&M data, refer to the documentation of the relevant device.

5.9.2 Loading I&M data to PROFINET IO devices and your modules

Which I&M data can be loaded to PROFINET IO devices and your modules?

You can load I&M 1 data (plant designation and location identifier) and/or I&M 2 data (installation date) and/or I&M 3 data (additional information) to the actual hardware.

Requirements

- In the project settings (Options > Settings, Hardware configuration > Compiling and downloading), the option "Download I&M data" must be enabled.
- There is an online connection to the PROFINET IO devices and the modules to which you want to load I&M data.
- You have entered the I&M data you want to download in the properties of the respective PROFINET IO devices and your modules (Inspector window: "Properties" tab > "General" tab, Settings > Identification & Maintenance).

Where do I specify which I&M data is downloaded to which PROFINET IO devices?

You specify which I&M data you want to download to which PROFINET IO devices in the "Load preview" dialog. You will find the following alternatives in the drop-down list of the "Identification and maintenance data (I&M)" row:

- Load nothing
  The check boxes for all PROFINET IO devices as well as the check boxes for the loadable I&M data are cleared.
  No I&M data is transferred to the actual hardware during loading with this setting.
- Load data
  The check boxes for all PROFINET IO devices as well as the check boxes for the loadable I&M data are selected.
  The respective I&M 1, I&M 2 and I&M 3 data is transferred to all PROFINET IO devices during loading with this setting.
- Load selected
  You select the check boxes of those PROFINET IO devices to which you want to load I&M data. You also select the check boxes of the identification data you want to load.
  With this setting, you transfer the selected I&M data to the selected PROFINET IO devices during loading.

NOTE

Language dependency of the I&M data to be loaded

The I&M data are loaded to the real hardware in the form that you specified in the properties of the relevant PROFINET IO devices and your modules. There is no language dependency.

5.9.3 Asset management

5.9.3.1 Further information about asset management at PROFINET

Operation of machines and plants without a detailed knowledge of devices and assets is difficult to imagine.

Maintenance requires data for this – data that is extensive and up-to-date as far as possible.

The requirement of greater transparency with regard to the data made available by plant components has been fulfilled by PROFIBUS & PROFINET International (PI): The identification and maintenance data familiar since PROFIBUS times have been extended.

The current PROFINET fulfills this requirement through the definition of a special data record: the Asset Management Record (AMR).

The aim of this definition is to enable you to acquire **all** the components to be maintained online - and not only those components that can be addressed and accessed through the PROFINET device model (Device / Module / Submodule). PROFINET now also reaches non-PROFINET components!

Assets general and asset management data records

Assets are components (hardware and software / firmware) of a machine, for example a laser welding machine, or a plant.

A large number of these device components can already be identified through tried-and-tested I&M functions or corresponding data records (I&M0 to I&M5) in the PROFINET context: The device itself as well as its modules and submodules. Meaning all components that can be addressed through the PROFINET device model.

Components that **cannot** be addressed via the PROFINET device model, but whose data it should be possible to acquire online for operation and maintenance, can be identified through **asset management** functions. This asset management data (short: AM data) is stored in a defined structure in a special data record, the **asset management record** (AMR) mentioned above.

The PROFINET Guideline "Identification & Maintenance Functions" differentiates here between I&M functions (I&M data) and asset management functions (AM data): The following sections only deal with the AM data.

The components that can be read additionally online through asset management data records include both hardware components, such as backplane bus modules of a device as well as firmware components such as a drive control unit with own versioning.

Application examples

Importing asset management records enables you to read the following information during installation or operation, for example:

- Are only approved devices being used (whitelist check)?
- A firmware update is due. Obtain a fast overview: Which devices or components are affected and have to be upgraded?

Making asset management data available

The concept for the asset management of PROFINET devices stipulates that the manufacturers of PROFINET devices have to ensure that non-PROFINET automation components are made available through an asset management record. This data record is assigned to the PROFINET device.

In contrast to a "standard" IO device, with an I-device the project engineer has to make the asset management record available. In this case, the central modules of the I-device are assets. From the perspective of PROFINET, these central modules are not visible from the point of view of the higher-level IO controller. The higher-level IO controller only "sees" the transfer areas through which it exchanges IO data with the I-device.

The principle of this provision is explained in the section.

Reading asset management data

The asset management record has the index 0xF880 and is read with standard PROFINET mechanisms by the user of the records, for example a tool or program for evaluating these data.

A user program in the S7-1500 IO controller, for example, can read out the AMR of an IO device with the RDREC instruction (Index 0xF880).

It is not possible to write to this data record.

Further information

Whether and to which extent a PROFINET device supports asset management data, meaning whether it makes an AMR available, is specified in the documentation of the respective device.

5.9.3.2 Content and structure of an asset management record

Basic structure of the asset management record

You are first provided with an overview of the general structure of the record. The following table describes the framework within which the asset management data blocks are embedded. Each data block represents an asset, a terminal block for example.

Element of the data structure	Designation according to IEC 61158-6-10	Code	Data type / length in bytes
Header AssetManagement-Data	BlockType	0x0035	UINT / 2
	BlockLength	Number of bytes without counting the bytes for BlockType and BlockLength	UINT / 2
	BlockVersion	0x0100	UINT / 2
AssetManagementInfo AssetManagementBlocks (n)	NumbersOfEntries	Number of AssetManagementBlocks	UINT / 2
	AssetManagementBlock 1	See the table below	
	AssetManagementBlock 2		
	...		
	AssetManagementBlock n		

Structure of asset management blocks

Each AssetManagementBlock contains identification data and localization information for an asset. An AssetManagementBlock has a substructure with basic characteristics described below.

The header of an AssetManagementBlock contains the coded information about which of the three possible AM data compilations the data record contains. Devices make a suitable BlockType available in accordance with the various device types:

- Complex devices with information about the hardware and firmware (BlockType "AM_FullInformation")
- Complex devices with information about the hardware (BlockType "AM_HardwareOnlyInformation")
- Devices with information about the firmware (BlockType "AM_FirmwareOnlyInformation")

The differentiation provides an efficient data structure below the header. Nevertheless, the data record can have a considerable size (maximum of 64 KB, depending on the number of assets that the IO device supplies).

Table 5-4 Structure of AssetManagementBlock

Element of the data structure	Designation according to IEC 61158-6-10	Code	Data type / length in bytes
Header AssetManage-mentBlock	BlockType	0x0036 (AM_FullInformation) 0x0037 (AM_HardwareOnlyInformation) 0x0038 (AM_FirmwareOnlyInformation)	UINT / 2
	BlockLength	Number of bytes without counting the bytes for BlockType and BlockLength	UINT / 2
	BlockVersion	0x0100	UINT / 2
	Padding	0x0000 (padding byte)	USINT / 1
	Padding	0x0000 (padding byte)	USINT / 1
AssetManagementBlock (Structure depends on the BlockType. Here it is shown using AM_FullInformation as an example)	IM_UniqueIdentifier	Manufacturer-generated Universal Unique Identifier (UUID) conforming to ISO/IEC 9834-8. Used as a reference key to uniquely identify this asset. Example: 550c5300-d34a-22b4-11d3-55339911-11b3	Array of Byte / 16
	AM_Location	Description of the location of the asset: Either slot-oriented ("Slot and Subslot-Number format") or hierarchical ("Twelve level tree format"). See following description	Array of Byte / 16
	IM_Annotation	Manufacturer-specific notation Example: "Terminal block, Type xyz123 ". 64 bytes are always used. Spaces are used for padding if the string is shorter.	Array of Char / 64
	IM_OrderID	Manufacturer-specific article number Example: "6ES7 131-6BF00-0BA0 ". 64 bytes are always used. Spaces are used for padding if the string is shorter.	Array of Char / 64
	AM_SoftwareRevision (not at AM_HardwareOnlyInformation)	Manufacturer-specific SW version Example: "V6.3.8 ". 64 bytes are always used. Spaces are used for padding if the string is shorter. If the asset supports IM_Software_Revision, the AM_SoftwareRevision is padded with spaces.	Array of Char / 64

Element of the data structure	Designation according to IEC 61158-6-10	Code	Data type / length in bytes
AssetManagementBlock (Structure depends on the BlockType. Here it is shown using AM_FullInformation as an example)	AM_HardwareRevision (not at AM_FirmwareOnlyInformation)	Manufacturer-specific hardware version Example: "A4 ". 64 bytes are always used. Spaces are used for padding if the string is shorter. If the asset supports IM_Hardware_Revision, the AM_HardwareRevision is padded with spaces.	Array of Char / 64
	IM_Serial_Number	Manufacturer-specific unique production-related number. The characters come from the visible range (0x20 ... 0x7E), no control characters. Example: "A78C-1C82 ". 16 bytes are always used. Spaces are used for padding if the string is shorter.	Array of Char / 16
	IM_Software_Revision (not at AM_HardwareOnlyInformation)	Software version, follows a strict structure (SW version prefix, for example "V", digits for functional extension, digits for BugFix, digits for internal change). Example: 'V' 0x01 0x2 0x3 If AM_SoftwareRevision is padded with spaces, you should evaluate IM_Software_Revision. If the asset does not support any hardware, the coding 'V' 0x00 0x00 0x00.	Array of Byte / 4 Prefix (character "V", "R", "P", "U", or "T"), then 3 digits "0" to "9"
	AM_DeviceIdentification	Identification of the device. The structure is as follows: AM_DeviceIdentification.DeviceSubID (for SIEMENS e.g. 0x0000) AM_DeviceIdentification.DeviceID (Device ID from manufacturer, 0x0000 to 0xFFFF) AM_DeviceIdentification.VendorID (Example for Siemens assets: 0x002A) AM_DeviceIdentification.Organization: Example for Siemens assets: 0x0000 (PROFINET)	Array of Byte / 8
	AM_TypeIdentification	Manufacturer-allocated type identification: 0x0000: Unspecified 0x0001: Controller (PLC) 0x0002: PC-based 0x0003: IO module, IO submodule 0x0004: Communications module / submodule 0x0005: Interface module / submodule 0x0006: Active network component 0c0007: Media attached unit (bus adapter) 0x0100 to 0x7FF: Manufacturer-specific	UINT / 2

Element of the data structure	Designation according to IEC 61158-6-10	Code	Data type / length in bytes
AssetManagementBlock (Structure depends on the BlockType. Here it is shown using AM_FullInformation as an example)	IM_Hardware_Revision (not at AM_FirmwareOnlyInformation)	Version of the hardware (0x0000 to 0xFFFF) Example: 0x0003 If AM_HardwareRevision is padded with spaces, you should evaluate IM_Hardware_Revision.	UINT / 2

AM_Location

Asset management at PROFINET supports two formats for coding the location of an asset:

- Slot-oriented format ("Slot and SubslotNumber format")
- Hierarchical format ("Twelve **L**evel **T**ree format" abbreviated **LT** format)

Assets that are part of the PROFINET device use the slot-oriented format. These assets are bound completely to the PROFINET modules and submodules.

Assets that are located outside the PROFINET device use the hierarchical format (LT format) for coding the location of an asset.

These assets are localized by their tree level. The tree level begins with Level 0. The value of Level 0 provides information about the proximity to the PROFINET device:

- If the asset is connected to a module that can be addressed through the PROFINET device model, Level 0 has the value 0. The subsequent levels (Level 1 to Level 3) then have the meaning of slot address, subslot address and channel number. If further assets are connected to this asset, the next Level 4 is used. The limit is reached at Level 11.
- If the asset belongs to a PROFINET device but is not connected to a module that can be addressed through the PROFINET device model, Level 0 has a value between 1 and 0x1FF. An example of such an asset is a power supply unit in the PROFINET device. If a further asset is connected to this power supply unit, for example a sensor, the next tree level is used to localize this sensor (Level 1).
- If the asset is located outside the PROFINET device, but, for example, belongs to a machine into which the PROFINET device is installed, Level 0 has a value between 0x200 and 0x3FE.

The value 0x3FF for a tree level shows that this tree level is not used. This means that no further asset is connected. In this case, all the lower tree levels down to Level 11 must also have this value.

Example AM_Location slot-oriented

A rack and the terminal blocks located on it each supply AM data. The slot assignments are shown in the figure.

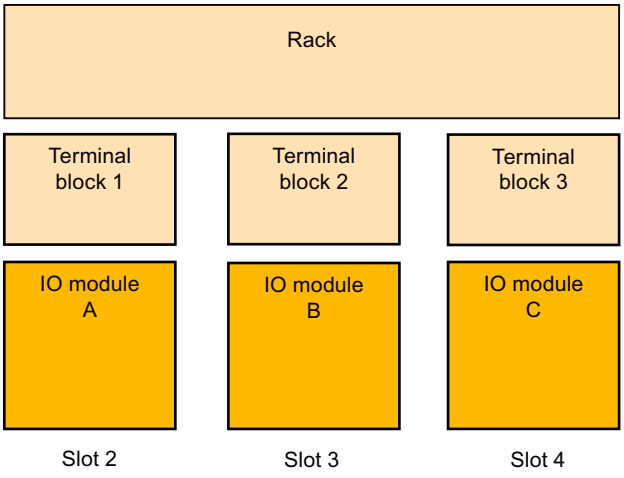

Figure 5-17 Example of assets with slot-oriented AM_Location coding.

Code the AM_Location as an asset for each module as follows:
Bit 0 – 7: AM_Location.Structure = 0x02 (coding "Slot and SubslotNumber format")
Bit 8 – 15: AM_Location.Reserved1 = 0x00 (padding byte)
Bit 16 – 31: AM_Location.BeginSlotNumber = 2 (the "Rack" asset begins from Slot 2 on)
Bit 32 – 47: AM_Location.BeginSubslotNumber = 0xFFFF (the asset encompasses all the subslots of Slot 2. Otherwise you specify the no. of the subslot at which the asset begins)
Bit 48 – 63: AM_Location.EndSlotNumber = 4 (the asset ends at Slot 4)
Bit 64 – 79: AM_Location.EndSubslotNumber = 0xFFFF (the asset encompasses all the subslots of Slot 4. Otherwise you specify the no. of the subslot at which the asset ends)
Bit 80 – 95: AM_Location.Reserved2 = 0x0000 (padding byte)
Bit 96 – 111: AM_Location.Reserved3 = 0x0000
Bit 112 – 127: AM_Location.Reserved4 = 0x0000

Example AM_Location level-oriented

A complex sensor is connected to an IO module (Slot 5, Subslot 1, Channel 1). Two simple sensors, in turn, are connected to the complex sensor. The module can be addressed within the PROFINET device model. Level 0 therefore has the value 0x0000. The next level (Level 1) is specified by the assigned slot. This is followed by the further levels for the subslot and channel and, if appropriate, further subordinate layers.

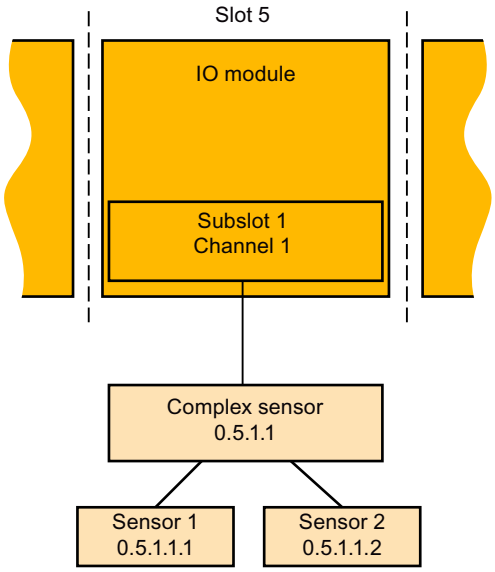

Figure 5-18 Example of assets with hierarchical AM_Location coding.

Detailed coding for the example:
Bit 0 – 7: AM_Location.Structure = 0x01 (LT format)
Bit 8 – 17: AM_Location.Level0 = 0x000 (assets that are assigned to modules always have the Level 0 value 0x000)
Bit 18 – 27: AM_Location.Level1 = 0x005 (Slot 5)
Bit 28 – 37: AM_Location.Level2 = 0x001 (Subslot 1)
Bit 38 – 47: AM_Location.Level3 = 0x001 (Channel 1)
Bit 48 – 57: AM_Location.Level4 = 0x3FF (coding for "Level not used")
Bit 58 – 67: AM_Location.Level5 = 0x3FF (coding for "Level not used")
...
Bit 118 – 127: AM_Location.Level11 = 0x3FF (coding for "Level not used")
Notation used in the screen for the LT coding of complex sensors: 0.5.1.1
The following correspondingly applies for the remaining sensors:
LT coding for simple Sensor 1 at complex sensor: 0.5.1.1.1
LT coding for second simple Sensor 2 at complex sensor: 0.5.1.1.2

5.9.3.3 Asset management data record for I-devices

With STEP 7 (TIA Portal) as of V15 and with S7-1500 CPUs as of firmware V2.5.2, you can compile an asset management data record via a user program. Configured as an I-device, these CPUs then supply the data from centrally plugged modules to a requesting IO controller as assets.

"S7-1500 CPUs" also refers to the CPU variants S7-1500F, S7-1500T, S7-1500C, S7-1500 SW Controller, S7-1500pro CPUs and ET 200SP CPUs.

Asset management records for I-devices

I-devices often represent machines. The PROFINET IO controller to which the I-device is assigned only sees the PROFINET interface (also configured as an IO device) and the transfer areas of the I-device configured by the machine manufacturer. The local modules of the I-device are not visible or cannot be accessed.

The assigned IO controller can read the central modules as assets of the I-device by means of an asset management record that the user program of the I-device compiles.

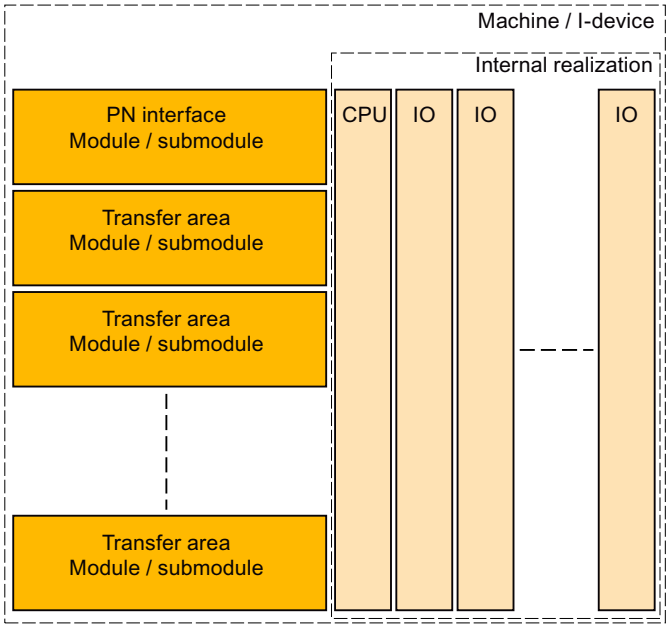

Figure 5-19 Assets of an I-device

Requirement

- S7-1500 CPU as of firmware V2.5.2, configured as I-device
- STEP 7 (TIA Portal) as of V15
- If an IO controller is to read the asset management record:
  The PROFINET IO controller is programmed correspondingly to read an asset management record.
  For a SIMATIC IO controller, for example, you call a read instruction (RDREC) with record index 0xF880. The instruction addresses any submodule of the I-device, for example the first configured transfer area submodule.

Basic procedure

The following steps are fundamentally required to create the requirements so that an I-device can make its local modules available as an asset management record to a requesting IO controller:

1. Make the settings in the properties of the PROFINET interface of the CPU.
   - Activate "IO device" operating mode
   - Activate the "Activate asset management using user program" option
     PROFINET interface forwards a request of an IO controller to the user program of the I-device for reading the asset management record only if the option is selected.

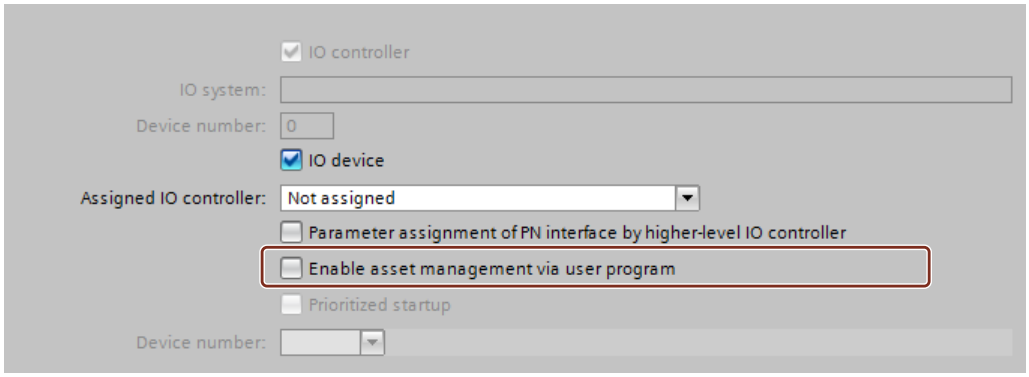

Figure 5-20 Activating asset management using a data record

2. Configure the program routine for compiling the asset management record. The program part collects the required I&M0 data of the plugged central modules and stores them in the corresponding fields of the data record structure of the asset management record.
3. Configure the program part for coordinating the data record provision:
   For this, call the instruction PRVREC (Provide Record) in accordance with the following templates in the corresponding modes:
   - Cyclic calling (for example in the cycle OB) of the PRVREC instruction with Mode 0, in order to recognize the AMR request.
   - When the AM record request is recognized, the PRVREC program has to acknowledge within one second that the request has been recognized. This means that PRVREC must be called with the Mode 2, and with the required AM record. If the I-device does not adhere to the time frame, the I-device acknowledges the record request of the IO controller as negative.
     Particular aspect for configuration of the PRVREC call: PRVREC has to be called with **F_ID = 0**. This codes that this is an IO-device-specific data record. The SLOT and SUBSLOT output parameters therefore also return the value 0.
   - Within 10 seconds the AM record now has to be completed and PRVREC be called with Mode 3 (positive response to the IO controller with provision of the AM record). If the I-device does not adhere to the time frame, the I-device acknowledges the record request of the IO controller as negative.

   A detailed description of the PRVREC instruction and possible error codes for evaluating the function can be found in the online help of STEP 7 (TIA Portal).

Compilation of the asset management record

You have various possibilities for compiling the asset management record for an I-device:

- Recommendation: The Siemens Industry Online Support makes an application available to you that helps you to compile the asset management record.
  The data area of the asset management record is divided in two. The first part consists of an automatically determined area that packages the IM0 data of the slots of the I-device into an asset management block. The second part consists of the user-specific asset management blocks. You configure the user-specific asset management blocks based on pre-configured asset management record structures, fill them with information and make them available to the application.
  The application performs the following:
  - The application determines the required size of all the asset management blocks.
  - The application fills the data block in accordance with the specifications of an asset management record with the automatically determined asset management blocks and your user-specific asset management blocks.
  - The application makes this asset management record available to the higher-level IO controller.

  The application is described in this application example (https://support.industry.siemens.com/cs/ww/en/view/109748894)
- You create the asset management record yourself.
  The following section describes how you can compile an asset management record for an I-device yourself.
  The concept assumes you yourself determine the I&M data for each centrally plugged module and fill the asset management record with this information. The I&M0 data of a module contains basic information about the module such as the manufacturer's code, article number, serial number, hardware and firmware version. These are the data that are also required in the AM record for an asset.

Determine the I&M data of centrally plugged modules

The central structure consists of an optionally plugged power supply unit (Slot 0), followed by the I-device CPU (Slot 1), and then followed by the further modules, such as digital modules, analog modules, etc. (as of Slot 2).

You determine the I&M data with the "Get_IM_Data" instruction for the plugged modules with exception of the CPU:

To assign parameters for the "Get_IM_Data" instruction, you require the hardware identifier (LADDR input parameter). You determine the hardware identifier for each occupied slot with the "GEO2LOG" instruction (Determine hardware identifier from slot).

Summary of the theoretical steps:

1. In a loop, determine the hardware identifiers of the plugged modules with the "GEO2LOG" instruction.
2. For each hardware identifier found, determine the I&M data by using the "Get_IM_Data" instruction and store these data in a data block that you address with the input parameter DATA. Use ARRAY of BYTE for the data storage. This corresponds to the description of the AM record contents in the preceding section.

Forming an AM record with the determined I&M data

The following sections are based on the description of the fundamental structure of the AM record, see the preceding section.

Since each module of an S7-1500 contains hardware and firmware information, select the coding for "AM_FullInformation" for the assigned BlockType.

For the data types used:

- IM_Annotation, IM_OrderID, AM_SoftwareRevision and AM_HardwareRevision: Characters (UTF-8)
- IM_Serial_Number: Characters ("ASCII characters") with the exception of the characters for DEL (0x7F)
- Do not use String data types. They require additional bytes and therefore do not conform to the conventions of the PROFINET standard 61158-6-10 "Application layer protocol specification".

Form the AM_FullInformationBlock for each module as follows:

Table 5-5 AM_FullInformationBlock for modules

Data record element	Description
IM_UniqueIdentifier	Generate a (pseudo) random UUID (hash value) in accordance with ISO 9834-8 as follows: • Generate an 8-byte hash value across the I&M0 data of the module (as of Slot 2). Use the algorithm Fowler-Noll-Vo (in short: FNV); an algorithm for generating variance coefficients (hash values) across data field, see corresponding example code in the Internet or online support. • Generate an 8-byte hash value across the I&M0 data of the CPU. (Use the algorithm Fowler-Noll-Vo (in short: FNV) as described above) • IM_UniqueIdentifier Byte 0 to 7: Hash value of module I&M0 data Bytes 8 to 15: Hash value for CPU-I&M0 data Required customizations to ISO 9834-8: Byte 8, Bit 7 has to be set to 1, and Byte 8, Bit 6 to 0 (result of the AND operator with **00**11 1111, subsequent OR operator with **10**00 0000) Byte 6, Bit 4 to 7 have to be set to 0100 (result of the AND operation with 0000 1111, then OR operation with 0001 0000) Since this algorithm is based on the I&M0 data of the CPU as well as of the modules, it generates a constant IM_UniqueIdentifier for an individual module. When the configuration changes the IM_UniqueIdentifier also changes.
AM_Location	Byte 0 = 0x02 (slot-oriented coding), see description in the preceding section.
IM_Annotation	Example: "S7-1500 module" and pad the remaining bytes of IM_Annotation with spaces (0x20).
IM_OrderID	Copy 20 bytes of the I&M0 data of the module (beginning with offset 2 of the I&M0 data). Pad the remaining 44 bytes with spaces (0x20)
AM_SoftwareRevision	Pad the field with 64 spaces (0x20)
AM_HardwareRevision	Pad the field with 64 spaces (0x20)
IM_Serial_Number	Copy 16 bytes of the I&M0 data of the module (beginning with offset 22 of the I&M0 data)
IM_Software_Revision	Copy 4 bytes of the I&M0 data of the module (beginning with offset 40 of the I&M0 data)
AM_DeviceIdentification	Byte 0, 1, 2, 6, 7 = 0x00 Byte 3 = 0x2A (Vendor = Siemens) Byte 4 = 01, Byte 5 = DeviceID (e.g. CPU 15xx = 0x0E)
AM_TypeIdentification	Copy 2 bytes of the I&M0 data of the module (beginning with offset 48 of the I&M0 data)
IM_Hardware_Revision	Copy 2 bytes of the I&M0 data of the module (beginning with offset 38 of the I&M0 data)

Functions

6

Introduction

The following section describes the PROFINET IO functions for field of application, properties and configuration in STEP 7.

Refer to the documentation for the respective device to see to what extent the PROFINET devices support the described functions.

You can find a tabular overview of the PROFINET devices and the functions these support on the Internet (https://support.industry.siemens.com/cs/ww/en/view/102325771).

6.1 Connecting other bus systems

Fieldbus integration

PROFINET allows you to use a proxy-capable PROFINET device to integrate existing fieldbus systems (for example, PROFIBUS, AS interface). The devices of these fieldbus systems are mapped on proxy PROFINET devices. In this way, you can set up any hybrid systems consisting of fieldbus and Ethernet-based subsystems. This allows a continuous exchange of information.

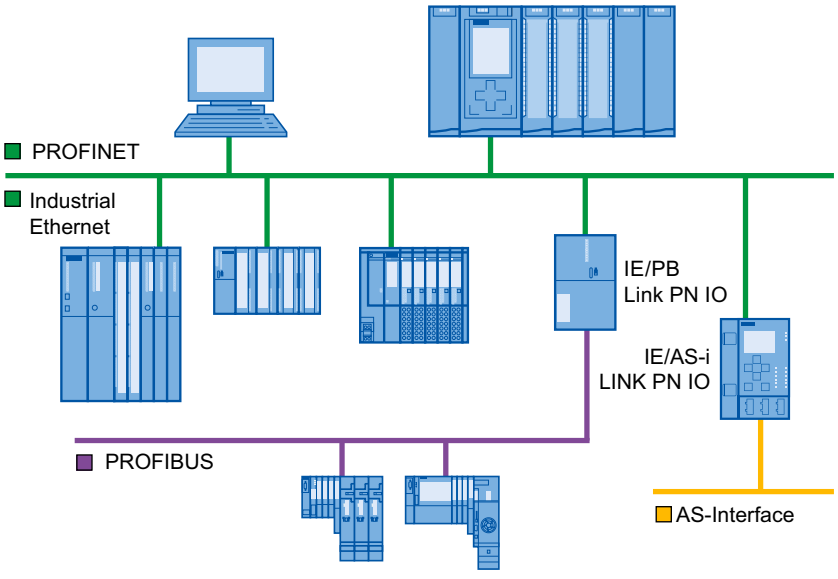

Figure 6-1 Gateways on PROFINET IO

Gateways of an S7-1500 CPU

An overview of the gateways at an S7-1500 CPU is provided in this FAQ (https://support.industry.siemens.com/cs/ww/en/view/88778900).

Connecting to building busses

- BACnet: You can find the procedure for configuring communication between a SIMATIC PLC and a BACnet network with a gateway in this application example (https://support.industry.siemens.com/cs/ww/en/view/109476182).
- M-bus: You can find the procedure for configuring communication between a SIMATIC PLC and an M-bus network with a gateway in this application example (https://support.industry.siemens.com/cs/ww/en/view/109478527).
- DALI: You can find the procedure for configuring communication between a SIMATIC PLC and a DALI network with a gateway in this application example (https://support.industry.siemens.com/cs/ww/en/view/109740160).
- KNX: You can find the procedure for configuring communication between a SIMATIC PLC and a KNX network with a gateway in this application example (https://support.industry.siemens.com/cs/ww/en/view/109739689).

6.1.1 Linking PROFINET and PROFIBUS

Linking PROFINET and PROFIBUS

With a proxy-capable PROFINET device which is equipped with a PROFINET interface in addition to a PROFIBUS interface (for example, IE/PB Link PN IO), you can integrate existing PROFIBUS configurations into the PROFINET configuration.

The following figures shows how a PROFIBUS system is connected via IE/PB Link to a CPU S7-1500 (as of firmware version 1.7).

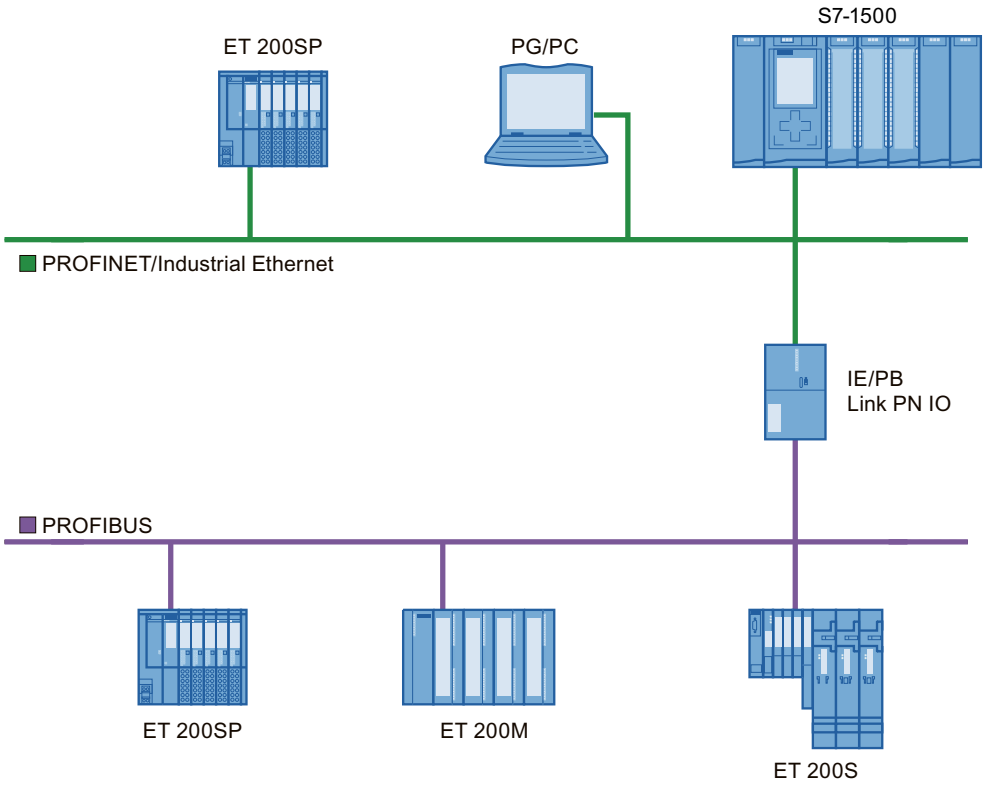

Figure 6-2 Gateway from PROFINET and PROFIBUS via IE/PB link

PROFINET device with proxy functionality

The PROFINET device with proxy functionality is the substitute for a PROFIBUS device on Ethernet. The proxy functionality allows a PROFIBUS device to communicate not only with its master but also with all devices on PROFINET.

With PROFINET you can connect an existing PROFIBUS system to an IO controller, for example with the help of an IE/PB Link PN IO.

From the IO controller perspective, the PROFIBUS DP slaves are connected to the same network as the IE/PB Link PN IO. These slaves have the same device name and IP address as the IE/PB Link PN IO, but different device numbers. Furthermore, each also has a specific PROFIBUS address.

In this way, you can link both DPV0 and DPV1 slaves to PROFINET.

For information on how to connect a DP slave to a PROFINET IO system, refer to section Connect the DP slave via the IE/PB Link to a PROFINET IO system (Page 110).

Diagnostic options with a CPU S7-1500 as IO controller

The CPU S7-1500 (as of firmware version 1.7) as IO controller detects disrupted DP slaves behind the IP/PB link.

6.1.2 Connect the DP slave via the IE/PB Link to a PROFINET IO system

Requirements

- STEP 7 as of V13 SP1
- CPU supports IE/PB link, e.g.:
  - S7-1500 CPU as of firmware version 1.7
  - S7-1500 Software Controller as of firmware version 1.7
  - S7-300/400 CPU

Procedure for connecting a DP slave via an IE/PB Link

To connect a DP slave to a PROFINET IO system via an IE/PB Link in STEP 7, follow these steps:

1. Drag-and-drop a PROFINET CPU, for example CPU 1513-1 PN, from the hardware catalog into the network view of STEP 7.
2. Drag-and-drop an IE/PB Link PN IO from the hardware catalog into the network view of STEP 7. The IE/PB Link PN IO is located under Network components > Gateways > IE/PB Link PN IO.
3. Assign the IE/PB Link PN IO to the CPU.
4. Drag a PROFIBUS interface module e.g. IM155-6 DP HF, from the hardware catalog to the network view.
5. Assign the interface module to the IE/PB Link.

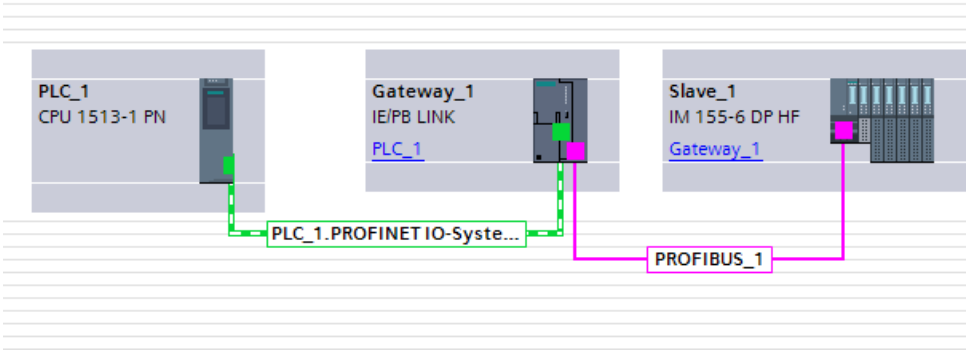

Figure 6-3 Configuring an IE/PB link

6. Select the IE/PB Link PN IO in the network view of STEP 7.

7. In the Inspector window, go to the "Gateway" area and select the "Network gateway as PROFINET IO proxy" option.

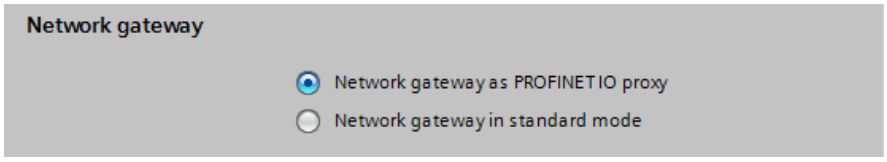

Figure 6-4 Setting a gateway

8. In the PROFINET device number area, you can assign a PROFINET device number for the DP slave.
   If you have selected the "Device number = PB address" check box (default), STEP 7 automatically assigns the device number according to the PROFIBUS address of the slave. In addition, you no longer need to update the device number if the PROFIBUS address changes.

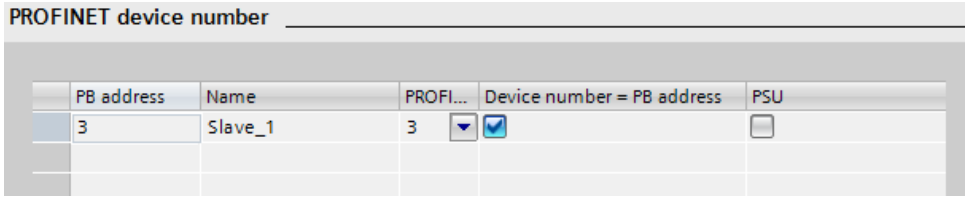

Figure 6-5 Assigning PN device numbers for IE/PB link

Result

You have connected the DP slave to the PROFINET IO system.

Reference

Additional information on the IE/PB link is available in the manual Gateway IE/PB Link PN IO (http://support.automation.siemens.com/WW/view/en/19299692).

6.2 Intelligent IO devices (I-devices)

6.2.1 I-device functionality

I-device functionality

The "I-device" (intelligent IO device) functionality of a CPU facilitates data exchange with an IO controller and operation of the CPU as intelligent preprocessing unit of sub processes, for example. The I-device is linked as an IO device to a "higher-level" IO controller.

The preprocessing is handled by the user program in the I-device. The process values acquired in the centralized or distributed (PROFINET IO or PROFIBUS DP) I/O are preprocessed by the user program and made available to the IO controller.

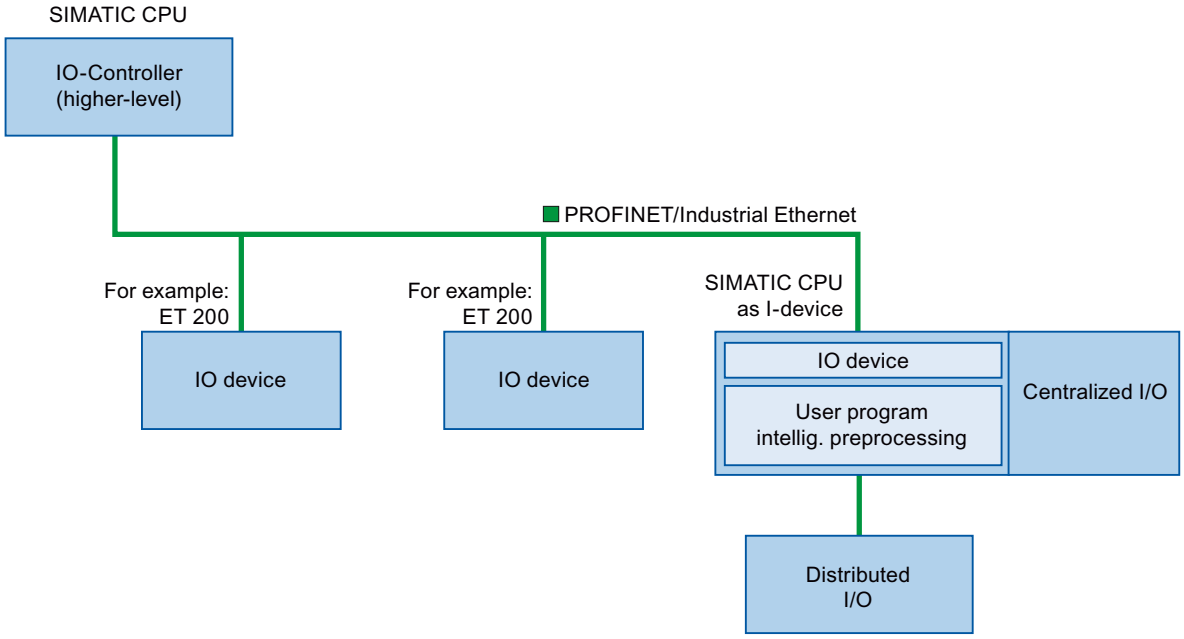

Figure 6-6 I-device

"I-device" naming conventions

In the remainder of this description, a CPU or a CP with I-device functionality is simply called an "I-device".

Application example: Configuration and application of the PROFINET I-device function

A detailed application example is available here (https://support.industry.siemens.com/cs/ww/en/view/109478798).

6.2.2 Properties and Advantages of the I-Device

Fields of application

Fields of application of the I-device:

- Distributed processing
  A complex automation task can be divided into smaller units/subprocesses. This results in manageable processes which lead to simplified subtasks.
- Separating subprocesses
  Complicated, widely distributed and extensive processes can be subdivided into several subprocesses with manageable interfaces by using I-devices. These subprocesses can be stored in individual STEP 7 projects if necessary, which can later be merged to form one master project.
- Know-how protection
  Components can only be delivered with a GSD file for the I-device interface description instead of with a STEP 7 project. The know-how of the user program may no longer be published.

Properties

Properties of the I-device:

- Unlinking STEP 7 projects
  Creators and users of an I-device can have completely separated STEP 7 automation projects. The GSD file forms the interface between the STEP 7 projects. This allows a link to standard IO controllers via a standardized interface.
- Real-time communication
  The I-device is provided with a deterministic PROFINET IO system via a PROFINET IO interface and therefore supports RT (real-time communication) and IRT (isochronous real time).

Advantages

The I-device has the following advantages:

- Simple linking of IO controllers
- Real-time communication between IO controllers
- Relieving the IO controller by distributing the computing capacity to I-devices.
- Lower communication load by processing process data locally.
- Manageable, due to processing of subtasks in separate STEP 7 projects

6.2.3 Characteristics of an I-Device

Principle

An I-device is included in an IO system like a standard IO device.

I-device without lower-level PROFINET IO system

The I-device does not have its own distributed I/O. The configuration and parameter assignment of the I-devices in the role of an IO device is the same as for a distributed I/O system (for example ET 200).

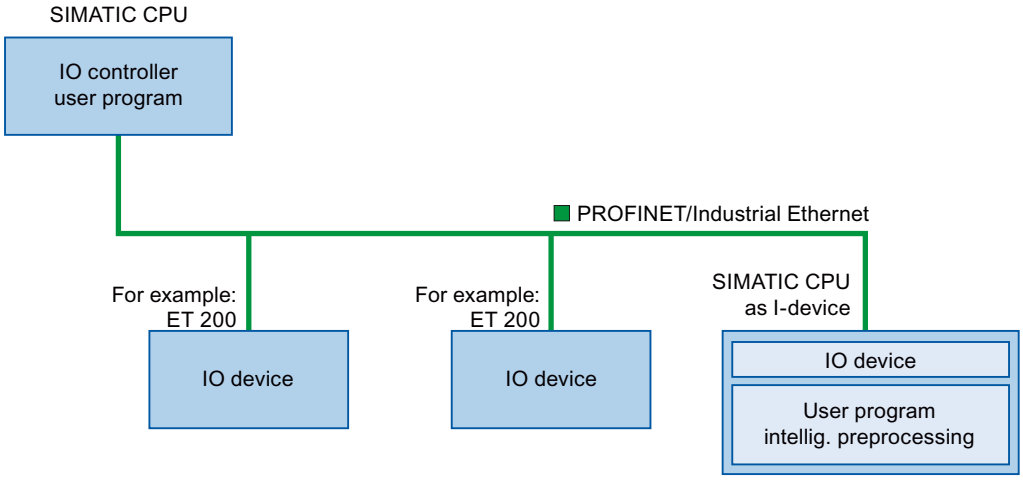

Figure 6-7 I-device without lower-level PROFINET IO system

I-device with lower-level PROFINET IO system

Depending on the configuration, an I-device can also be an IO controller on a PROFINET interface in addition to having the role of an IO device.

This means that the I-device can be part of a higher-level IO system via its PROFINET interface and as an IO controller can support its own lower-level IO system.

The lower-level IO system can, in turn, contain I-devices (see figure below). This makes hierarchically structured IO systems possible.

In addition to its role as IO controller, an I-device can also be used via a PROFIBUS interface as DP master for a lower-level PROFIBUS system.

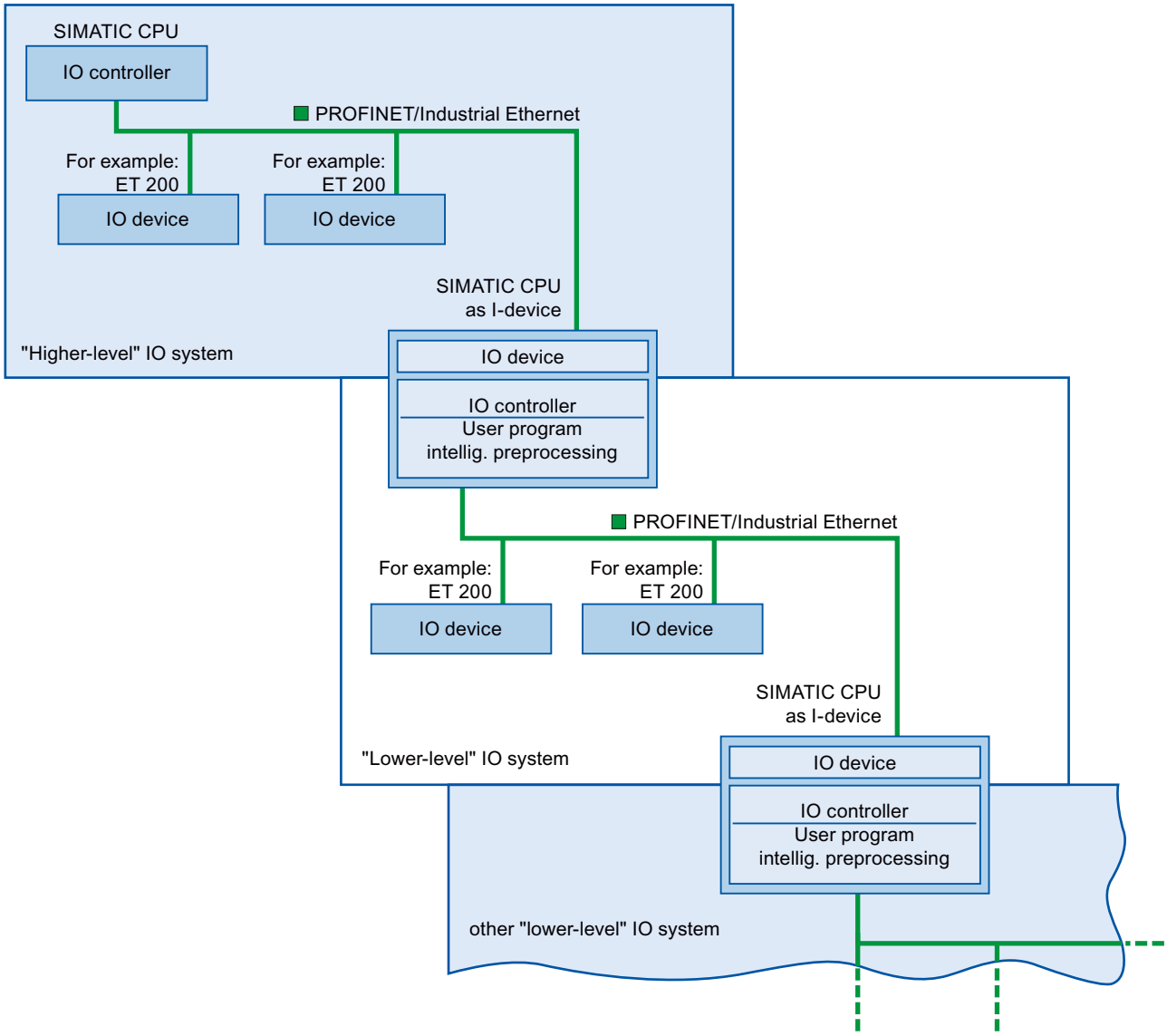

Figure 6-8 I-device with lower-level IO system

Example - the I-device as IO device and IO controller

The I-device as IO device and IO controller is explained based on the example of a print process. The I-device controls a unit (a subprocess). One unit is used, for example, to insert additional sheets such as flyers or brochures in a package of printed material.

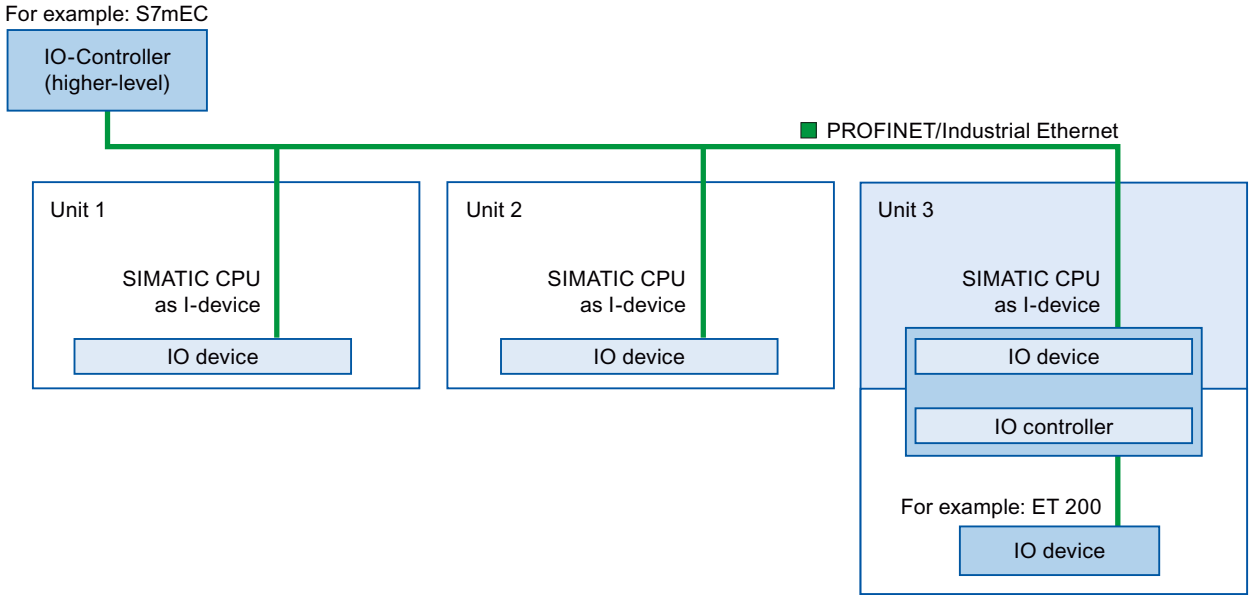

Figure 6-9 Example - the I-device as IO device and IO controller

Unit 1 and unit 2 each consist of an I-device with centralized I/O. The I-device along with the distributed I/O system (for example ET 200) forms unit 3.

The user program on the I-device is responsible for preprocessing the process data. For this task, the user program of the I-device requires default settings (for example control data) from the higher-level IO controller. The I-device provides the higher-level IO controller with the results (for example status of its subtask).

I-device as a shared device

An I-device can also be used simultaneously by multiple IO controllers as a shared device.

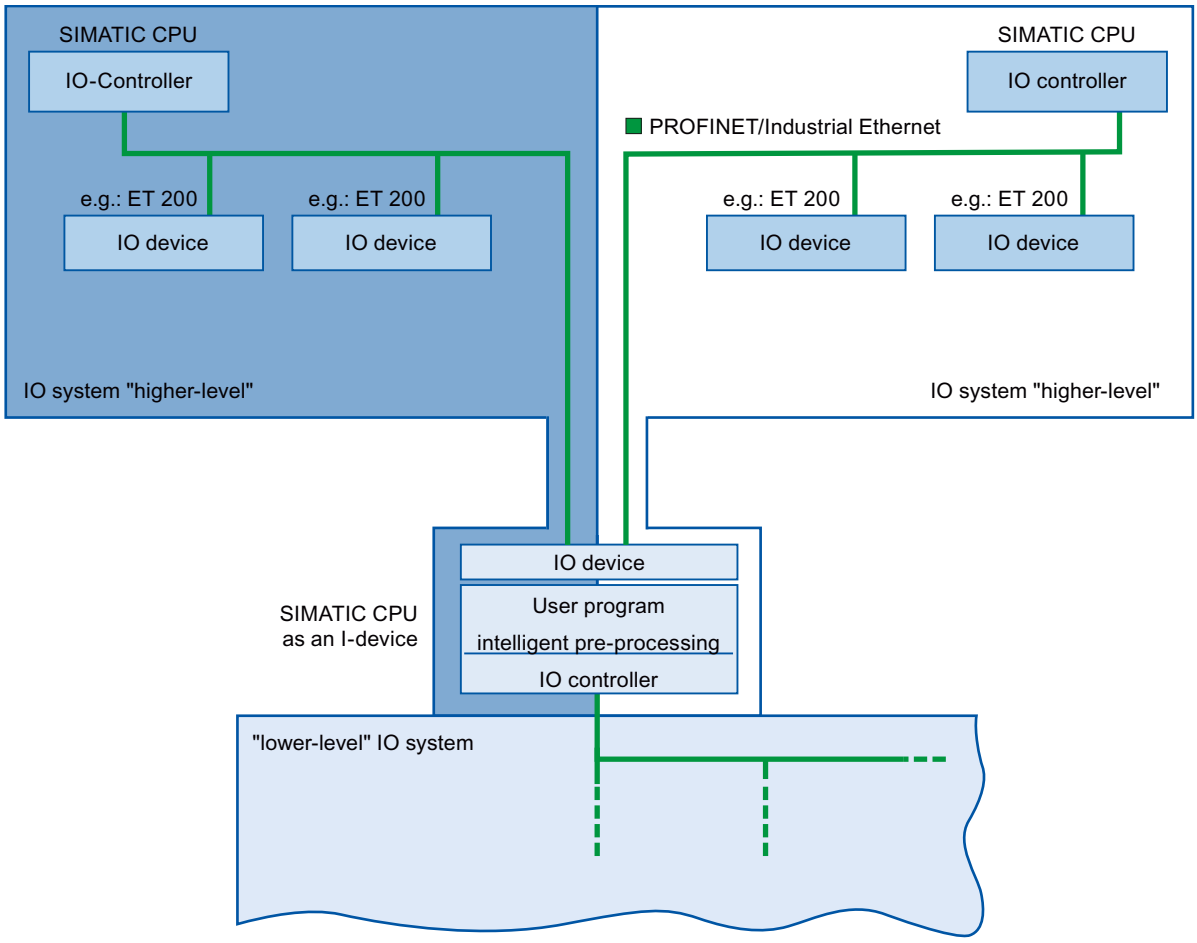

Figure 6-10 I-device as a shared device

Information about configuring an I-device as a shared device is available in the section Configuring an I-device as a shared device (Page 149).

6.2.4 Data Exchange between higher- and lower-level IO system

Introduction

The next chapter shows the data exchange between the higher- and lower-level IO system.

Transfer areas

Transfer areas are an interface to the user program of the I-device CPU. Inputs are processed in the user program and outputs are the result of the processing in the user program.

The data for communication between IO controller and I-device is made available in the transfer areas. A transfer area contains an information unit that is exchanged consistently

between IO controller and I-device. You can find more information on configuration and use of transfer areas in the section Configuring the I-device (Page 120).
The next figure shows the data exchange between the higher- and lower-level IO system. The individual communication relations are explained below based on the numbers.

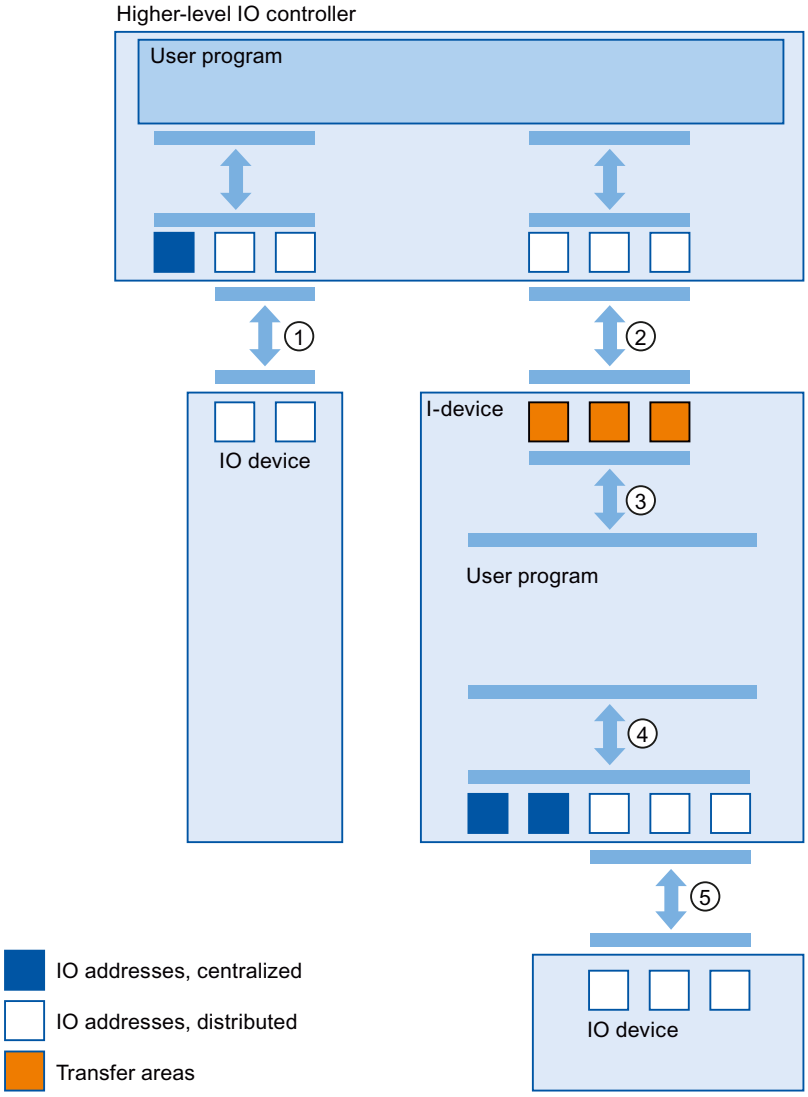

Figure 6-11 Data exchange between higher- and lower-level IO system

① Data exchange between higher-level IO controller and normal IO-device

In this way, the IO controller and IO devices exchange data through PROFINET.

② Data exchange between higher-level IO controller and I-device

In this way, the IO controller and the I-device exchange data through PROFINET.
The data exchange between a higher-level IO controller and an I-device is based on the conventional IO controller / IO device relationship.
For the higher-level IO controller, the transfer areas of the I-devices represent submodules of a preconfigured station.

The output data of the IO controller is the input data of the I-device. Analogously, the input data of the IO controller is the output data of the I-device.

③ **Transfer relationship between the user program and the transfer area**

In this way, the user program and the transfer area exchange input and output data.

④ **Data exchange between the user program and the I/O of the I-device**

In this way, the user program and the centralized / distributed I/O exchange input and output data.

⑤ **Data exchange between the I-device and a lower-level IO device**

In this way, the I-device and its IO devices exchange data. The data transfer is via PROFINET.

6.2.5 Configuring the I-device

Introduction

There are basically two possibilities for configuration:

- Configuration of an I-device within a project
- Configuration of an I-device that is used in another project or in another engineering system.

STEP 7 allows you to configure an I-device for another project or for another engineering system by exporting a configured I-device to a GSD file. You import the GSD file in other projects or engineering systems as with other GSD files. The transfer areas for the data exchange, among other data, are stored in this GSD file.

Configuration of an I-device within a project

1. Drag-and-drop a PROFINET CPU from the hardware catalog into the network view.
2. Drag-and-drop a PROFINET CPU, which can also be configured as an IO device, from the hardware catalog into the network view. This device is configured as I-device (e.g., CPU 1516-3 PN/DP).
3. Select the PROFINET interface for the I-device.
4. In the Inspector window in the area navigation choose "Operating mode" and select the check box "IO device".

5. Now you have the option of choosing the IO controller in the "Assigned IO controller" drop-down list.
   Once you have chosen the IO controller, the networking and the IO system between both devices are displayed in the network view.

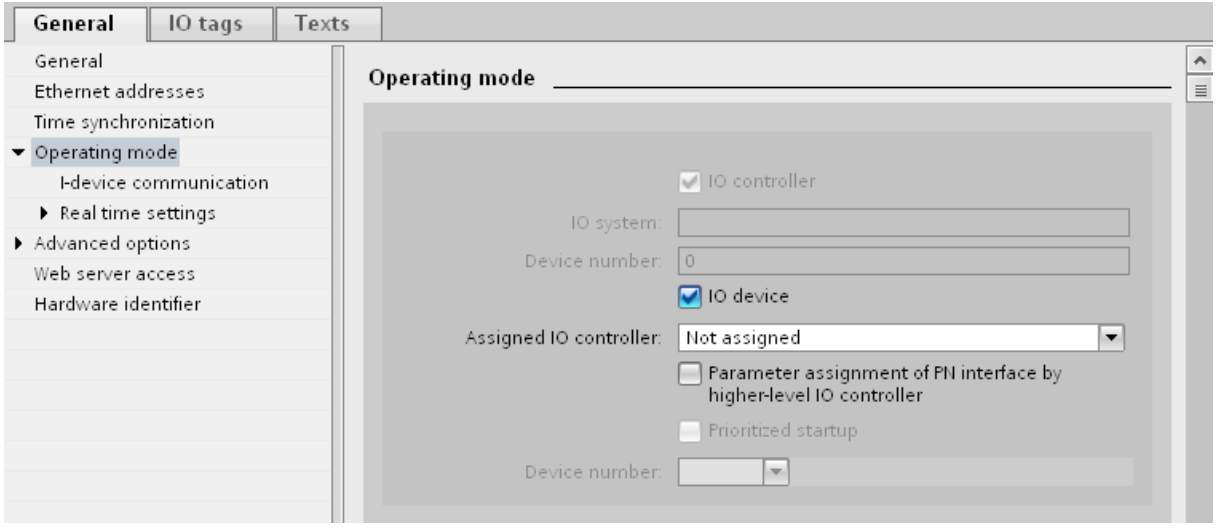

Figure 6-12 Configuring the I-device

6. With the "Parameter assignment of PN interface by higher-level IO controller" check box, you specify whether the interface parameters will be assigned by the I-device itself or by a higher-level IO controller.
   If you operate the I-device with a lower-level IO system, then the parameters of the I-device PROFINET interface (for example, port parameter) cannot be assigned with the higher-level IO controller.
7. Configure the transfer areas. The transfer areas are found in the area navigation section "I-device communication".
   – Click in the first field of the "Transfer area" column. STEP 7 assigns a default name which you can change.
   – Select the type of communication relation: you can currently only select CD or F-CD for "Controller-device communication relation".
   – Addresses are automatically preset; you can correct addresses if necessary, and determine the length of the transfer area which is to be consistently transferred.

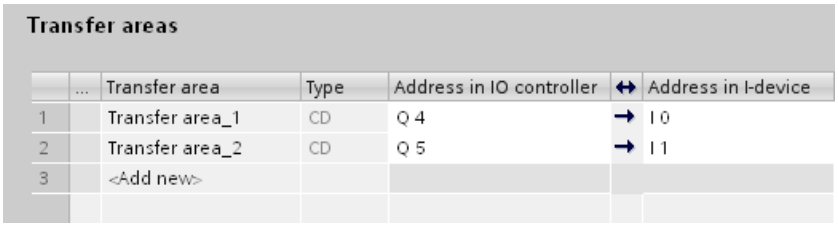

Transfer areas

	...	Transfer area	Type	Address in IO controller	↔	Address in I-device
1		Transfer area_1	CD	Q 4	→	I 0
2		Transfer area_2	CD	Q 5	→	I 1
3		<Add new>				

Figure 6-13 Configuring the transfer areas

8. A separate entry is created in the area navigation for each transfer area. If you select one of these entries, you can adjust the details of the transfer area, or correct them and comment on them.

Configuring an I-device with a GSD file

If you use an I-device in another project, or if the I-device is used in another engineering system, then configure the higher-level IO controller and the I-device as described above.

However, click on the "Export" button after configuring the transfer areas so a new GSD file is created from the I-device. This GSD file represents the configured I-device in other projects.

The "Export" button is found in the "I-device communication" section of the Inspector window.

The hardware configuration is compiled and the export dialog opened.

Assign a name for the I-device proxy as well as a description in the fields provided. Click the "Export" button to complete your process.

Finally, import the GSD file, for example, in another project.

6.2.6 Program examples

Introduction

This simple program example shows how you use the transfer areas of an I-device.

Requirements

You have configured an I-device.

Task

The result of an "AND logic operation" of two inputs (preprocessing) in the I-device is to be provided to the higher-level IO controller. This result is to be assigned to a local output in the IO master (further processing).
Use a transfer area with the following addresses for this purpose:

- Address in the I-device: Q568
- Address in the IO controller: I68

Required steps

The following steps to solve the task:

1. Configuring the transfer area
2. Programming I-device
3. Programming IO controller

Configuring the transfer area

Configure a transfer area with the following properties in the I-device:

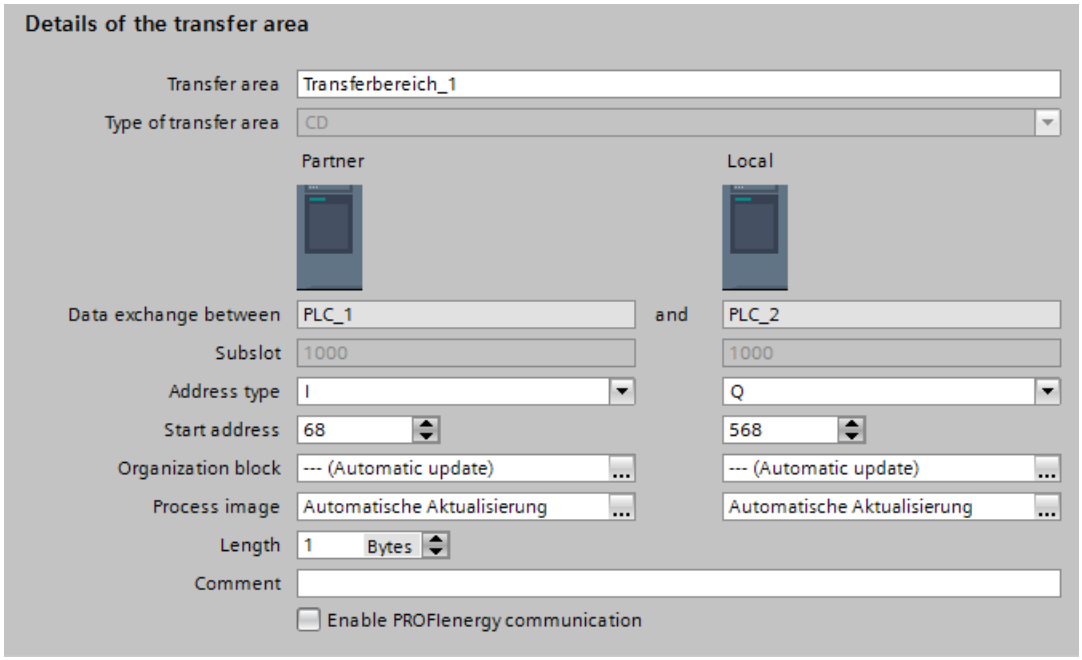

Figure 6-14 I-device transfer area, sample program

Programming I-device

To program the sample program for the I-device, follow these steps:

1. Using the SCL programming language, create a new function with the name "preprocessing" in the project tree in "Program blocks" > "Add new block". Open the function.
2. In the interface of the function "preprocessing", create the following tags:

Name	Data type	Input / output type
input 1	bool	Input
input 2	bool	Input
result	bool	Output

3. In the instruction window of the function "preprocessing", write the following program code:
   #result:=#input 1&#input 2;
4. Call the function "preprocessing" in a program cycle OB, for example, in OB1.

5. Wire the function "preprocessing" in the program cycle OB as follows:

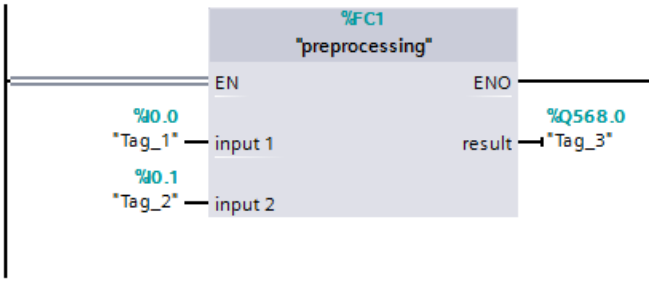

Figure 6-15 I-device sample program

Programming IO controller

To program the sample program for the IO controller, follow these steps:

1. Using the SCL programming language, create a new function with the name "further processing" in the project tree in "Program blocks" > "Add new block". Open the function.
2. In the interface of the function "further processing", create the following tags:

Name	Data type	Input / output type
result	bool	Input
output	bool	Output

3. In the instruction window of the function "further processing", write the following program code:
   #output:=#result;
4. Call the function "further processing" in a program cycle OB, for example, in OB1.
5. Wire the function "further processing" in the program cycle OB as follows:

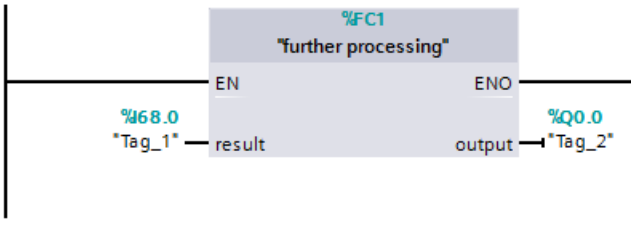

Figure 6-16 IO controller sample program

Result

The IO controller and the I-device can exchange data with each other through the input/output transfer areas.

6.2.7 Diagnostics and interrupt characteristics

Diagnostics and interrupt characteristics

S7 CPUs have numerous diagnostics and interrupt functions that can, for example, report errors or failures of lower-level IO systems. These diagnostics messages reduce down times and simplify localization and elimination of problems.

Diagnostics options in the higher-level IO controller and in the I-device

The following diagnostics functions are available to the higher-level IO controller and the I-device CPU:

- OB 83 (pull/plug)
- OB 86 (rack failure)
- OB 122 (I/O access error)

NOTE

The diagnostics messages of the I/O can be processed in the user program of the I-device CPU and passed on from there to the higher-level IO controller via transfer areas.

Operating state changes and station failure / station return

In the following table, you can see which consequences an operating state change or the failure of an IO controller / I-device of the SIMATIC family has on the respective other(s):

Table 6-1 Operating state changes and station failure / station return

Initial status	Event	I-device response	Higher-level IO controller
I-device CPU is in RUN, higher-level IO controller is in RUN	The I-device CPU changes to STOP	-	During the updating of the process image with the instructions "UPDAT_PI" and "UPDAT_PO" an error report is returned at the parameter RET_VAL. With direct IO access to all transfer areas to the I-device: depending on the type of error handling, e.g., call of OB 122 (IO access error).
I-device CPU is in STOP higher-level IO controller is in RUN	The I-device CPU is starting up	Call of OB 100 (startup). Call of OB 83 (pull/plug) for input transfer areas to the higher-level IO controller. Until call of OB 83 in the case of direct access to the input transfer areas to the higher-level IO controller: depending on the type of error handling, e.g., call of OB 122 (IO access error).	Call of OB 83 (pull/plug) for all transfer areas to the I-device. Until call of OB 83 in the case of direct access to the transfer areas to the I-device: depending on the type of error handling, e.g., call of OB 122 (IO access error).

Initial status	Event	I-device response	Higher-level IO controller
I-device CPU is in RUN, higher-level IO controller is in RUN	The higher-level IO controller changes to STOP	During the updating of the process image with the instructions "UPDAT_PI" and "UPDAT_PO" an error report is returned at the parameter RET_VAL. With direct IO access to the input transfer areas to the higher-level IO controller: depending on the type of error handling, e.g., call of OB 122 (IO access error). Note: Output transfer areas can still be accessed.	-
Higher-level IO controller is in STOP, I-device CPU in RUN	The higher-level IO controller starts up	Call of OB 83 (pull/plug) for input transfer areas to the higher-level IO controller. Until call of OB 83 in the case of direct access to the input transfer areas to the higher-level IO controller: depending on the type of error handling, e.g., call of OB 122 (IO access error).	Call of OB 100 (startup).
I-device CPU is in RUN, higher-level IO controller is in RUN	Station failure I-device, for example, through bus interruption	If the I-device continues to run without a bus connection: Call of OB 86 (rack failure). During the updating of the process image with the instructions "UPDAT_PI" and "UPDAT_PO" an error report is returned at the parameter RET_VAL. With direct IO access to all transfer areas to the higher-level IO controller: depending on the type of error handling, e.g., call of OB 122 (IO access error).	Call of OB 86 (rack failure). During the updating of the process image with the instructions "UPDAT_PI" and "UPDAT_PO" an error report is returned at the parameter RET_VAL. With direct IO access to all transfer areas to the I-device: depending on the type of error handling, e.g., call of OB 122 (IO access error).
I-device CPU is in RUN, higher-level IO controller is in RUN, communication connection between IO controller and I-device is interrupted (bus interruption).	The bus connection between the IO controller and I-device has been reestablished and the I-device is again included in the user data traffic.	Call of OB 86 (rack failure). Call of OB 83 (pull/plug) for input transfer areas to the higher-level IO controller. Until call of OB 83 in the case of direct access to the input transfer areas to the higher-level IO controller: depending on the type of error handling, e.g., call of OB 122 (IO access error).	Call of OB 86 (rack failure). Until reporting of station re-integration by OB 86 with direct IO access to all transfer areas to the I-device: depending on the type of error handling, e.g., call of OB 122 (IO access error)

NOTE

Special characteristic during startup of the higher-level IO controller

In contrast to the station return message from IO devices in the IO controller, which are covered completely by the call of the OB 86, the station return message of a higher-level IO controller in the I-device is separated into 2 parts:

1. Call of the OB 86: The initial values for the outputs of the I-device are set. However, the input values are not yet valid. These values will first be valid with the opening of OB 86 in the higher-level IO controller.
2. Call of OB 83 for each input transfer area; with this call, the validity of an input transfer area is displayed. The starting up of the I device is first complete when the OB 83 has been called for the input transfer areas. This step can be delayed or not occur at all in the following situations:
   - Higher-level IO controller is in STOP: OB 83 is first called at the STOP-RUN transition of the higher-level IO controller.
   - The IRT communication has been disrupted (sync-master failure, topology error, ...). OB 83 is opened only after the IRT communication has taken place.

Reference

For more information on error handling in the case of direct I/O access, refer to "Error handling" in the STEP 7 online help.

6.2.8 Rules for the Topology of a PROFINET IO System with I-Device

Introduction

The following recommendations for the structure and configuration of an IO system when using I-devices will help you to keep the bandwidths required for keeping communication small.

The following communication paths should not overlap:

- Communication paths between the IO controller and the IO device of its IO system.
- Communication paths of the I-device CPU and the IO devices of your IO system.

I-device with one port

Connect an I-device with only one port to a PROFINET switch that is uncoupled from the higher-level IO system. Connect the lower-level IO system to another port of the switch as shown in the following figure.

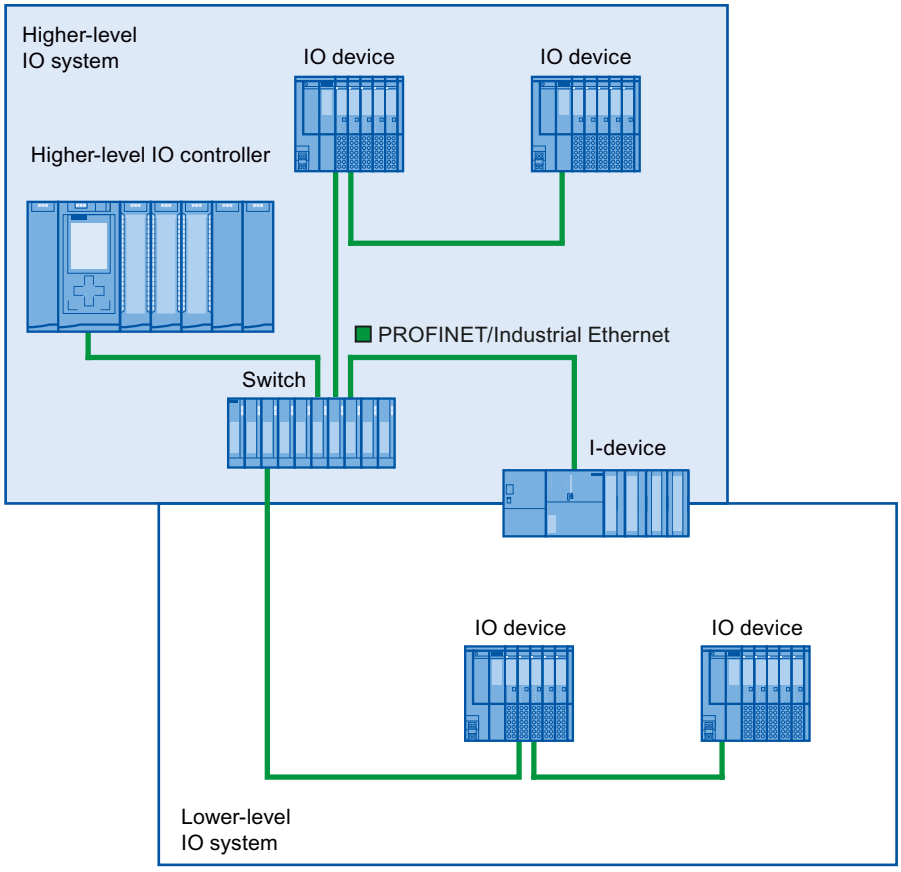

Figure 6-17 I-device with one port

I-device with two ports

With an I-device with two ports, connect one port, uncoupled from the higher-level IO system, to the port of the PROFINET switch. Use the second port for the lower-level IO system as shown in the following figure.

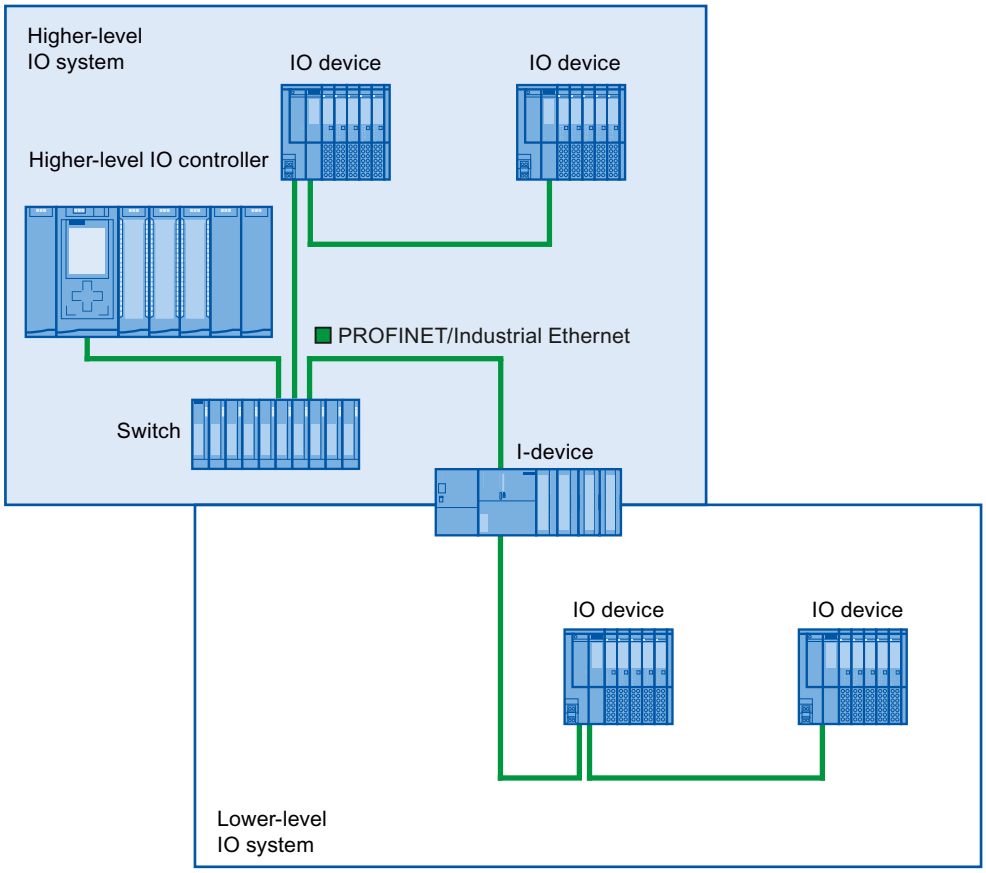

Figure 6-18 I-device with two ports

I-device with three or more ports

If you have an I-device with three or more ports, connect the I-device to one or both ports to the higher-level IO system in a linear bus topology. Connect the third port to the lower-level IO system uncoupled from the linear bus topology as shown in the following figure.

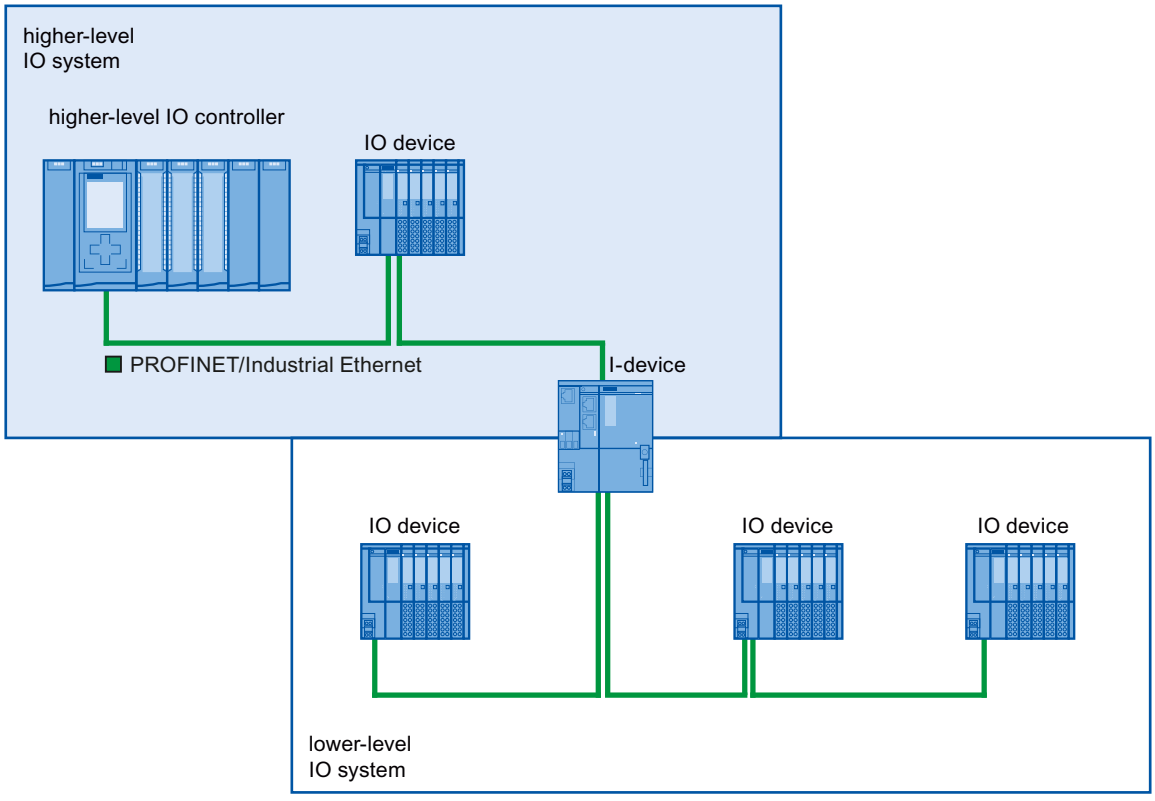

Figure 6-19 I-device with three or more ports

6.2.9 Boundary conditions when using I-devices

Note the following boundary conditions when using I-devices:

Bandwidth

The number of addresses of the configured transfer areas affects the usable bandwidth of the I-device:

- Bandwidth of the transfer areas + bandwidth of the lower-level IO system = total bandwidth used on the I-device

If the address space of the transfer areas is too large, this indicates a larger bandwidth requirement and can thus lead to longer update times.

Tip: Keep the address space of the transfer area as small as possible.

Rules for RT and IRT communication.

IO systems with I-devices are also suitable for setting up real-time applications with RT and IRT communication. The following rules must be followed for this:

- Both the higher-level and the lower-level IO system support RT communication. You can use RT communication for both IO systems at the same time.
- IRT communication can be combined with RT communication. You can use IRT communication in one of the two IO systems. Use IRT either in a higher-level or in a lower-level IO system.

6.2.10 Configuring PROFIenergy with I-devices

The requirement for program-controlled pauses for saving energy with PROFINET devices is that the PROFINET devices support the PROFIenergy protocol.

Only if a PROFINET device (I/O device) supports the PROFIenergy protocol does an I/O controller actually send PE commands to this I/O device, for example to start or stop pauses.

If an I/O device supports the PROFIenergy protocol, this property is saved in its PROFINET GSD file and is available for configuration in an engineering system.

For S7-1500 CPUs as intelligent I/O devices (I-devices), you have the option with STEP 7 V13 service pack 1 or later to set PROFIenergy support for each transfer area.

If you have selected the "Enable PROFIenergy communication" option for a transfer area and import the generated PROFINET GSD file into another project, you can handle an I-device as a PE entity there.

Requirements

- STEP 7 as of V13 service pack 1
- CPU supports PROFIenergy with I-devices, for example CPU 1215C DC/DC/DC as of firmware version 4.2
- You use the PROFINET IO interface as an I-device and have created transfer areas.
- The user program in the I-device handles PROFIenergy commands
  Background: You need to program PROFIenergy functions with I-devices in the user program using the "PE_I_DEV" instruction and corresponding auxiliary blocks; this is different compared with IO devices for which this functionality is made available by the firmware. You may therefore only activate the PROFIenergy support for transfer areas if the user program in the I-device is configured correspondingly as well.

Enabling PROFIenergy for transfer areas of I-devices

Proceed as follows to assign parameters for the support of PROFIenergy:

1. Select the PROFINET interface (X1) of the CPU.
2. Select the required transfer area in the area navigation, for example:
   Operating mode > I-device communication > Transfer_area_1.

3. Select the check box "Enable PROFIenergy communication".

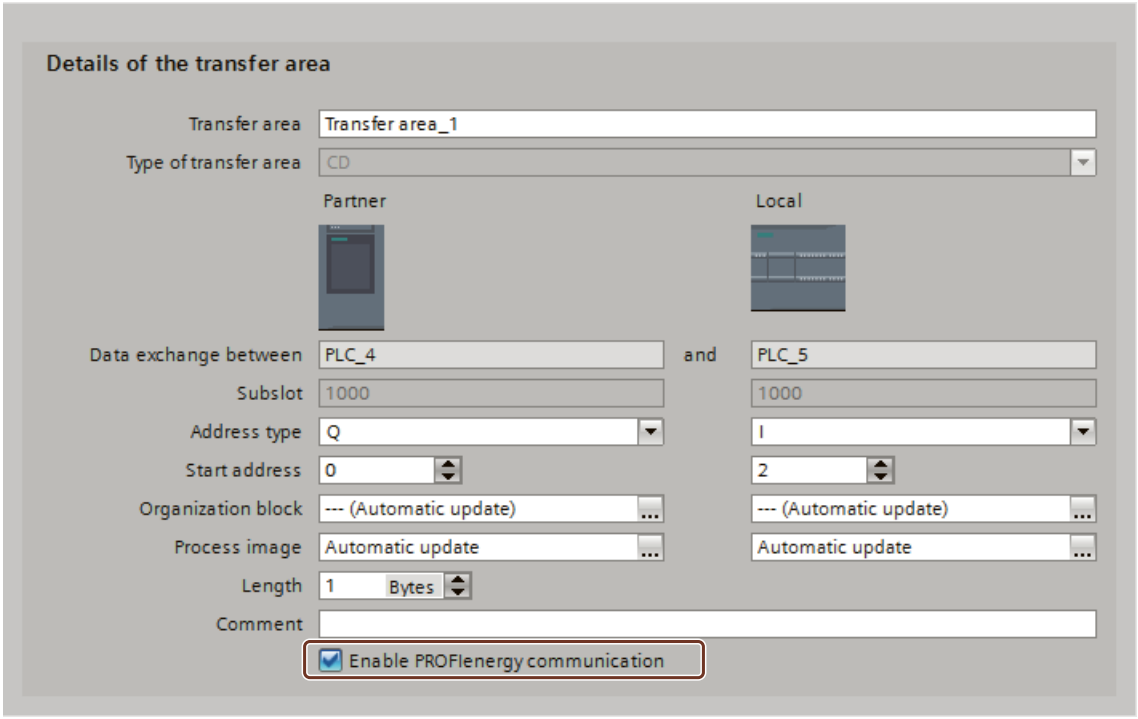

Figure 6-20 Configuring PROFIenergy with I-devices

Once the I-device is fully configured, generate the GSD file for the I-device and import this file in the project for the I/O controller. The GSD file generated contains an entry that specifies that the I-device supports the PROFIenergy profile.

To address the I-device, for example for the PE command "PE_START_END", use the hardware identifier of the "PROFIenergy supporting" transfer area in the I-device.

To address the IO controller for the PE command "PE_I_DEV", use the hardware identifier of the transfer area that is supplied with the data for PROFIenergy on the IO controller.

You can find more information on PROFIenergy in the sectoin Saving energy with PROFIenergy (Page 255).

6.2.11 Enabling/disabling I-device in the user program of the I-device CPU

When a PROFINET interface of a CPU was configured as an I-device in STEP 7, the I-device function is active after a status transition of the CPU from STOP > RUN. If no higher-level IO controller can be reached in this case, the I-device CPU signals an error using its ERROR LED.

As of firmware version 2.9 of an S7-1500/ET 200SP/ET 200pro CPU, you can locally disable or enable the I-device function in the user program of the I-device CPU. You use the "D_ACT_DP" instruction for this. After disabling the function, the I-device CPU no longer signals an error using its ERROR LED.

You can enable/disable the function with the user program at the CPU-internal PROFINET interfaces and for S7-1500 CM 1542-1 as of firmware version V3.0.

Application examples

From a machine OEM's point of view, there are numerous device options possible in **series production of machines**. However, each delivered machine includes only one combination of selected options. All possible machine options can be configured as I-devices by the manufacturer to create and maintain a common user program having all possible options.

A higher-level IO controller used for line control, for example, is not necessary in every machine. In this case, the user program can disable the I-device function in the I-device CPU with the instruction "D_ACT_DP", for example, during startup.

Two production lines are shown schematically in the figure below. The same user program runs in both CPUs with I-device configuration. The I-device in line 1 is controlled by a higher-level IO controller.

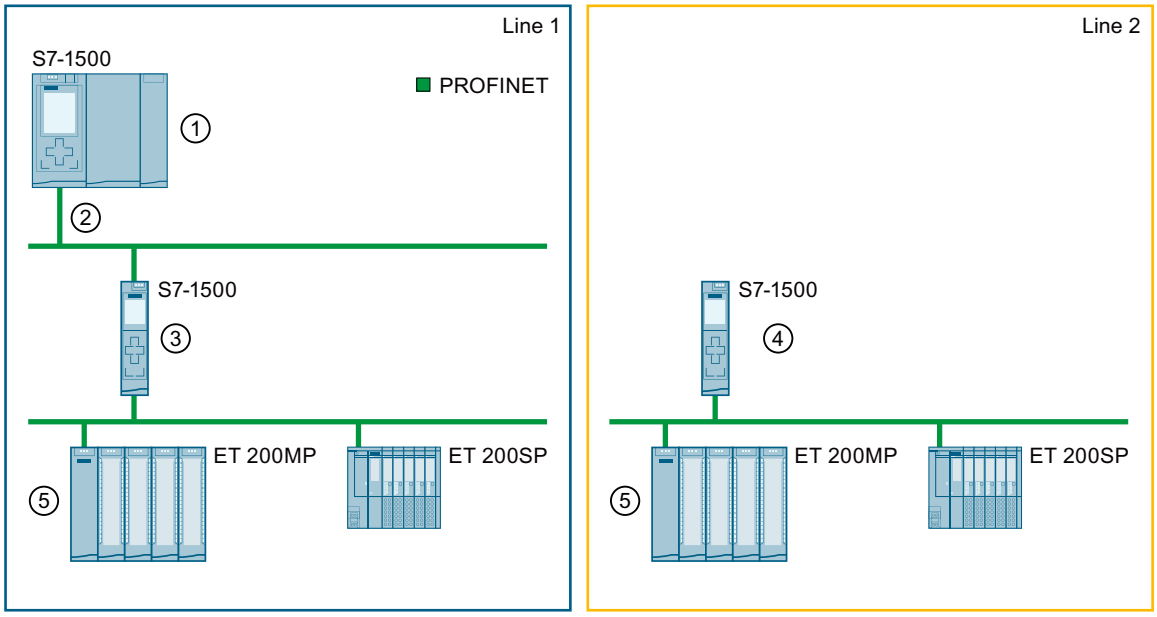

① Higher-level IO controller
② ... controls I-device CPU S7-1500 in the line
③ I-device function is enabled in the user program of this CPU
④ I-device function is disabled in the user program of this CPU
⑤ IO devices

Figure 6-21 Enable/disable the I-device function in the I-device CPU

Automation task control of vehicles in a ride

In a ride (ghost train), the vehicles are connected as I-devices to a higher-level controller via PROFINET.

Feature

The higher-level IO controller takes over the entire coordination and monitoring of the vehicles in the station. Among other things, the higher-level IO controller registers the following states:

- When the vehicles are available in the station
- When the vehicles exit the station

As soon as passengers are seated in the vehicle and the vehicle is closed, the higher-level IO controller issues the start signal.
Along the entire track, the vehicles are traveling independently and do not have a connection to the higher-level IO controller. Because this state does not represent an error, no errors should be signaled via the ERROR LEDs of the CPUs.

Solution

Depending on the position of the vehicle, inside or outside the station, the user program enables or disables the I-device function in the I-device CPU of the vehicle. No diagnostics were signaled via LED on the I-device CPU for enabling and disabling.

Requirements

You operate the CPU as an I-device on one or multiple IO controllers or you have configured the CPU as I-device ("IO device" check box is selected). In the following figure, the right CPU 1518-4 PN/DP is the I-device at the higher-level IO controller CPU 1518-4 PN/DP (PLC_2).

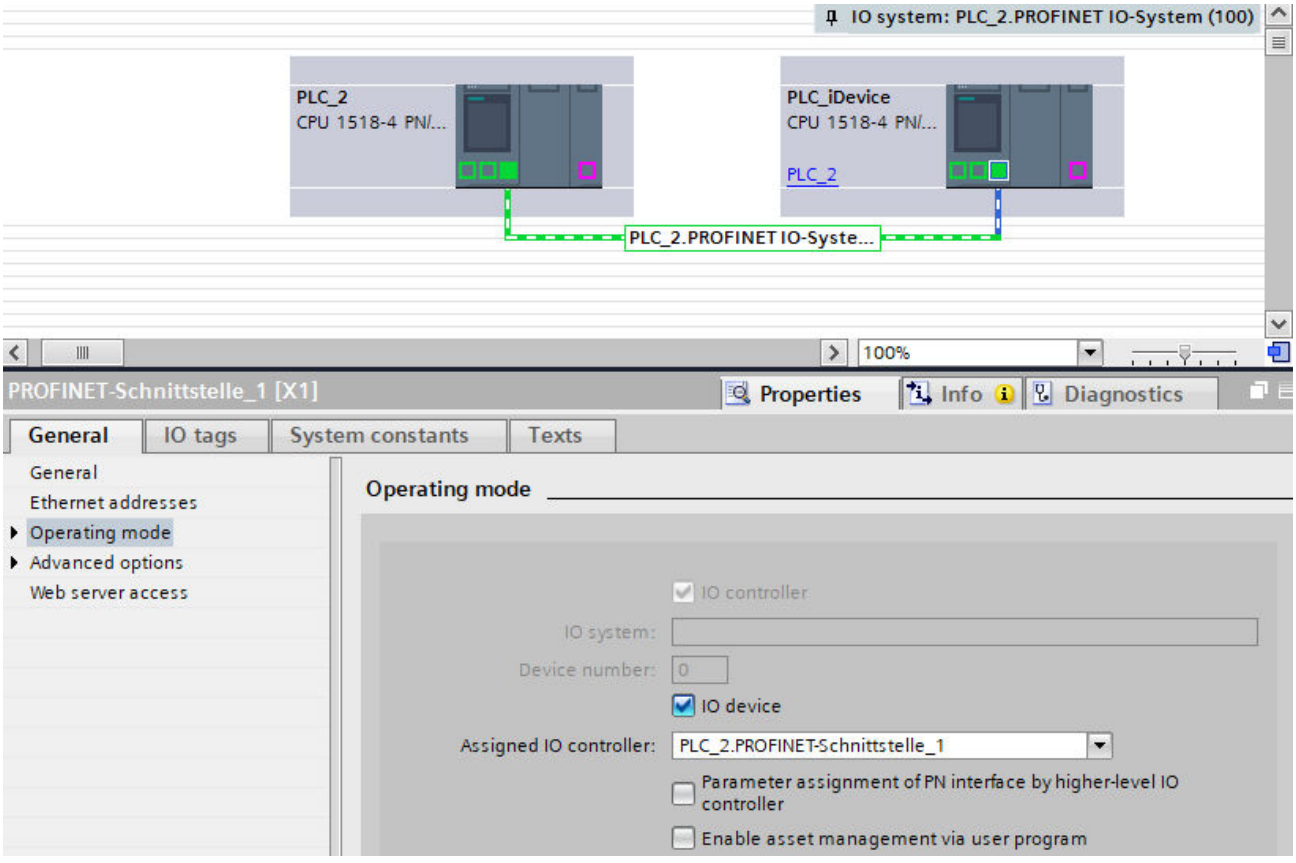

Figure 6-22 Example: Enable I-device

"D_ACT_DP" is an asynchronous instruction. Processing extends over multiple calls. You have started the job by calling "D_ACT_DP" with REQ = 1 in the startup OB of the I-device CPU.
You can find additional information on the "D_ACT_DP" instruction in the STEP 7 online help.

Disabling the I-device function at a PROFINET interface

NOTE

Only disable the I-device function in the I-device CPU when the I-device is not operated on a higher-level IO controller.

You disable the I-device function with the instruction "D_ACT_DP":

- Via the symbolic name or the hardware identification of the I-device of the respective PROFINET interface as LADDR parameter, in the example, HW identification 260
- Via the MODE parameter = 2

PLC_iDevice [CPU 1518-4 PN/DP] | Properties | Info | Diagnostics

General | IO tags | System constants | Texts

Show hardware system constant

	Name	Type	Hardware identi.	Used by	Comment
	PLC_iDevice~PROFINET-Schnittstelle_1~IODevice	Hw_Device	259	PLC_2	
	PLC_iDevice~PROFINET-Schnittstelle_1~Transferbereich_1	Hw_SubModule	261	PLC_2	
	Local~PROFINET-Schnittstelle_1~IODevice	Hw_Device	258	PLC_iDevice	
	Local~PROFINET-Schnittstelle_1~Transferbereich_1	Hw_SubModule	260	PLC_iDevice	
	Local~MC	Hw_SubModule	51	PLC_iDevice	
	Local~Common	Hw_SubModule	50	PLC_iDevice	

Figure 6-23 Example: I-device system constants

Result: The goal has been accomplished: The CPU with disabled I-device function is no longer available for the data exchange with a higher-level IO controller. The higher-level IO controller can be reached again when the I-device function was enabled in the user program of the I-device CPU.

When an I-device that has been active on an IO controller disables itself, all application relations (ARs) that were set up between the I-device and the IO controller in the network are terminated. An IO device failure is signaled at the IO controller end. In the diagnostic buffer of the I-device CPU, "IO device user disable" is displayed with information on the associated PROFINET interface or the name of the IO controller.

Enabling the I-device function at a PROFINET interface

You use the instruction "D_ACT_DP" to enable an inactive I-device function:

- Via the symbolic name or the hardware identification of the I-device of the respective PROFINET interface as LADDR parameter, in the example, HW identification 260
- Via the MODE parameter = 1

Result: After enabling, the I-device can exchange data with a higher-level IO controller.

If at least one IO controller is missing or the connection does not exist, "Hardware component removed or missing" is entered in the diagnostic buffer of the I-device CPU.

NOTE

Temporary access errors

Enabling the I-device function in the user program can result in temporary access errors "I/O data failure in hardware component", for example, because access to the I/O data of the I-device is already possible even though the data has not been declared as valid by the IO controller yet.

These messages are incoming and outgoing error events that can be neglected.

The behavior of IO controller and I-device in case of a station failure and station return still applies as described in the section Diagnostics and alarm response (Page 124).

Calling up the status information of an I-device with the instruction "D_ACT_DP"

You are requesting the status information of an I-device:

- Via the hardware identification of the I-device of the respective PROFINET interface as LADDR parameter, in the example, HW identification 260
- Via the MODE parameter = 0

The status is returned in the RET_VAL parameter:

- RET_VAL = 0x0000: "D_ACT_DP" was completed without errors (disabling an inactive I-device/enabling an active I-device)
- RET_VAL = 0x0001: I-device is enabled
- RET_VAL = 0x0002: I-device is disabled

6.3 Shared device

6.3.1 Useful information on shared devices

Shared device functionality

Numerous IO controllers are often used in larger or widely distributed systems.

Without the "Shared Device" function, each I/O module of an IO device is assigned to the same IO controller. If sensors that are physically close to each other must provide data to different IO controllers, several IO devices are required.

The "Shared Device" function allows the modules or submodules of an IO device to be divided up among different IO controllers. Thus allowing flexible automation concepts. You have, for example, the possibility of combining I/O modules lying near other into an IO device.

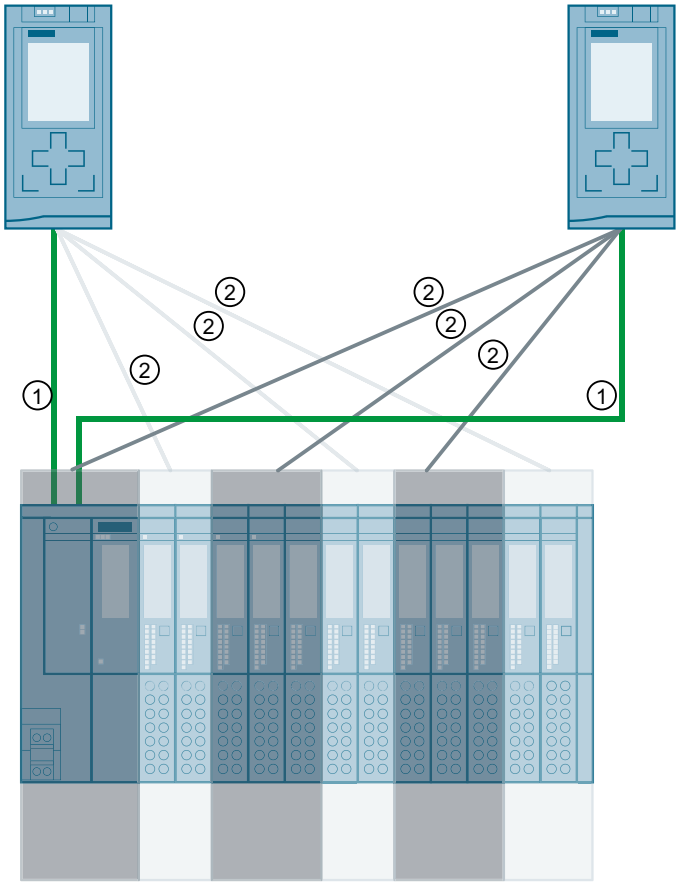

① PROFINET

② Logical assignment

Figure 6-24 Example: Shared device with 2 IO controllers

Principle

Access to modules and submodules of the shared device is then divided up among the individual IO controllers. Each module or submodule of the shared device is assigned exclusively to one IO controller.

Configuration possibilities of shared devices

Since STEP 7 V12 SP1, the S7-1500 CPUs as well as the SIMATIC distributed I/O devices support the "Shared Device" function. The shared device must be present in every project, although it is present only once in the installation. A separate project is required for each CPU accessing the shared device. To find out which components support the "Shared Device" function, see the following FAQ (https://support.industry.siemens.com/cs/us/en/view/102325771).

As of STEP 7 V18, it is possible to configure a shared device and 2 CPUs accessing it in a project. Consequently, only one project is needed. This project contains the shared device as well as both CPUs accessing it. If both the IO controllers and the shared devices can be configured in a project, we call this type of shared devices "Internal project shared devices" in the following.

A project-internal shared device offers the following advantages over a previous shared device:

- Reduction of possible sources of error: Full consistency is checked by STEP 7 in a project.
- Less configuration effort: No use of different STEP 7 projects.
- Improved diagnostics: Complete diagnostics in one project.

Setting of the real-time properties

If, besides the CPUs in the project, additional CPUs outside the project have access to the shared device, you have to enter the number of project-external IO controllers at the PROFINET interface of the shared device. Only then STEP 7 calculates the communication load and resulting update times correctly.

The maximum possible number of IO controllers for the shared device depends on the device. This number is stored in the GSD file of the shared device.

You can set a very short send clock with a CPU as IO controller. The send clock can be shorter than the shortest send clock supported by the shared device. In this case, the shared device is operated by the IO controller with a send clock that it supports (send clock adaptation).

Example:

A CPU supports send clocks starting from 0.25 ms. A configured IO device also supports send clocks starting at 0.25 ms; another IO device supports send clocks starting at 1 ms. In this case, you have the option of setting the short send clock of 0.25 ms for the CPU. The CPU operates the "slow" IO device with the send clock of 1 ms, for example.

Response in the event of fault

You can find information about how PROFINET IO controllers behave in case of an error when accessing the data of a shared device in this FAQ (https://support.industry.siemens.com/cs/ww/en/view/109572804).

6.3.2 Basic information about project-internal shared devices

Requirements

With the project-internal shared device, up to 2 IO controllers and the shared device are located in the same subnet. The project-internal shared device must be assigned to each IO controller. Likewise, at least 1 module or submodule must be assigned to each connected IO controller, otherwise the configuration as shared device is inconsistent. In STEP 7, a corresponding error message is displayed when compiling an inconsistent configuration.

Restrictions

- As of STEP 7 V18, only IO devices that have been installed in the hardware catalog via GSD files are permitted as project-internal shared devices.
- You cannot use I-devices as project-internal shared device.
- In a project, a maximum of 2 IO controllers (CPUs) are allowed to access a project-internal shared device.
- The project-internal shared device does not support system redundancy.
- Fail-safe applications are not supported.
- "TIA Portal Openness" does not support a project-internal shared device.
- Uploading from both CPUs to the same project is not supported. In TIA Portal V18, the 2 CPUs that share the project-internal shared device must be loaded into two different projects.

Access to modules and submodules

Each IO controller has access only to the modules and submodules assigned to it, which means in detail:

- Data exchange only with the assigned modules or submodules
- Receiving alarms and diagnostics only from assigned modules or submodules
- Parameter assignment of assigned modules or submodules only

Rules for the configuration

The following rules apply to a configuration with a project-internal shared device and are automatically checked when the configuration of STEP 7 is compiled:

- All IO controllers that access the project-internal shared device must be on the same subnet as the IO device.
- The project-internal shared device must be an IO device that has been installed into the hardware catalog using a GSD file.
- Each IO controller connected to the project-internal shared device must have at least 1 module or submodule assigned.
- Only 1 IO controller may have access to 1 submodule at a time.
- I/O addresses of a module or submodule can only be edited in the address area of the IO controller to which the project-internal shared device is assigned.
- The send clock must be identical for all IO controllers that have access to the project-internal shared device.
- The following functions are only possible in connection with the IO controller to which the interface module of the project-internal shared device is assigned:
  - Isochronous mode (IRT)
  - Media redundancy
  - Prioritized startup
  - Parameter assignment of the port properties
- If the "Use name as extension for device name" option is selected for one IO system, this option must also be selected for the IO system of the second CPU.

- If you change the name of the project-internal shared device, you must then load all CPUs that share this IO device.
- The maximum sum of communication relations (ARs) for the project-internal shared device must not be exceeded. You can find the maximum sum of the communication relations, for example, in the "Information" area of the Hardware catalog.
  Example:
  An ET 200SP interface module supports up to 4 communication relations as a project-internal shared device. The project-internal shared device is already assigned to 2 IO controllers. A maximum of 2 additional IO controllers that are configured externally to the project may access modules or submodules of the project-internal shared device.

6.3.3 Configuring a project-internal shared device

Below, you can find a description of how to configure a distributed I/O system as a project-internal shared device with STEP 7 V18 or higher.
If one of the following cases applies to your automation task, continue reading in section "Configuring a cross-project shared device (Page 145)":

- Your project contains a shared device that is accessed by more than 2 IO controllers. These IO controllers are either configured in another TIA Portal project or with another engineering tool.
- You want to operate shared devices, but you do not want to integrate them via GSD files.

A "distributed" configuration with different engineering tools for different IO controller families is always possible. However, the description of the procedure is based solely on STEP 7 as of V18.
The description is limited to 2 IO controllers of the S7-1500 family that share a project-internal shared device.
As of STEP 7 V18, only one project is required for a shared device configuration. The project includes the project-internal shared device and a maximum of 2 IO controllers that access it.

Requirements

- STEP 7 (TIA Portal) as of V18
- The IO controllers support the shared device function, for example CPU 1513-1 PN as of firmware version V3.0.
- The IO device supports shared device functionality, e.g., interface module IM 155-5 PN ST.
- The GSD file for the IO device was installed in STEP 7 V18 and used for the configuration.

Procedure - Creating project

To create a project with a project-internal shared device, follow these steps:

1. Start STEP 7.
2. Create a new project, for example with the name "Shared Device".
3. Insert an IO controller (e.g. CPU 1513-1 PN) from the hardware catalog into the network view.
4. Assign a name, for example "PLC_1".
5. Insert another IO controller (e.g. CPU 1513-1 PN) from the hardware catalog.
6. Assign a name, for example "PLC_2".

7. Connect the PROFINET interface X1 of "PLC_1" and "PLC_2" with each other. The PROFINET interfaces of the CPUs are thus in the same subnet.
8. Insert an IO device (e.g. IM 155-6 PN ST) from the hardware catalog. You can find the IO devices installed from the GSD files under "Other field devices > PROFINET IO > IO > SIEMENS AG".
9. Double-click the inserted IO device. The device view opens.
10. Insert all required modules and submodules from the hardware catalog into the device overview table. Also use the modules and submodules installed from the GSD files.
11. Assign parameters for the individual I/O modules.
12. Switch to the network view.
13. Assign the IO device to the IO controllers "PLC_1" and "PLC_2" one after the other.
14. Save the project.

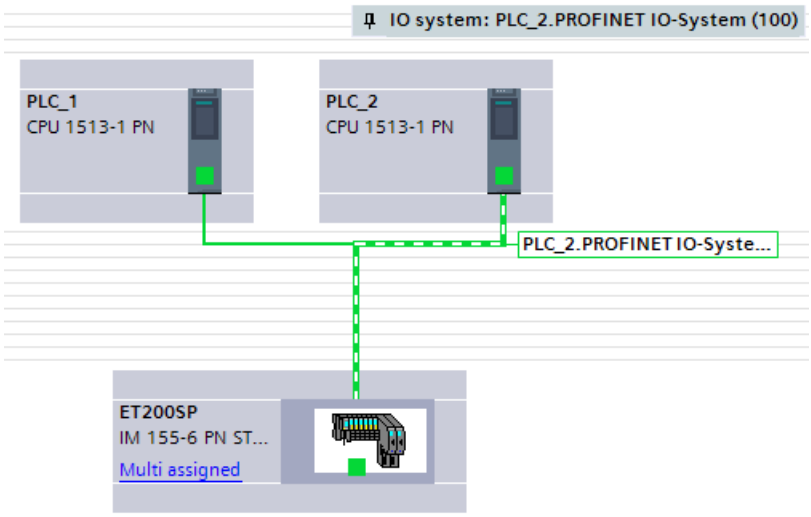

Figure 6-25 Assign a project-internal shared device

Procedure - Parameter assignment of the modules or submodules of the shared device

After the first assignment of the project-internal shared device to an IO controller, all modules or submodules are assigned to this IO controller.

Newly added modules or submodules are assigned to the IO controller to which the interface module is also assigned. If a project-internal shared device is separated from an IO controller, the assigned modules or submodules receive the access status "unknown".

To change the assignment, proceed as follows:

1. In the network view or in the device view of the project, select the interface module of the project-internal shared device.
2. In the Inspector window, under "Properties > General", select the "Shared Device" area.
   A table shows which IO controller has access to the respective module or submodule. The default setting for all modules and submodules is the IO controller to which the project-internal shared device was first assigned.

3. Keep the "PLC_1" setting for all modules and submodules that are to remain in the address area.
   Select the "PLC_2" setting for all modules or submodules that you want to assign to the address area of the other IO controllers.
   Special consideration: With the "Outside the project" option, you select IO controllers that are connected to the PROFINET IO system but are configured in another TIA project or engineering tool.

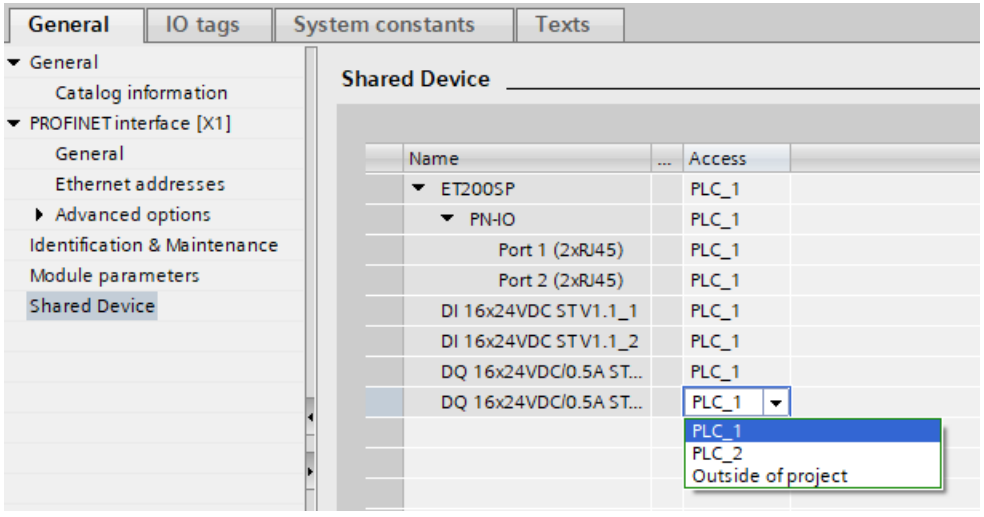

Figure 6-26 Configuring a project-internal shared device

Procedure - Adjusting the real-time settings

Adjusting and checking the settings listed below ensures the following properties:

- All IO controllers and shared devices are operated with the appropriate send clock.
- Update times are calculated correctly based on the communication load.

To adjust and check these settings, proceed as follows:

1. Select the interface module of the project-internal shared device in the network view.
2. In the Inspector window, navigate to the "PROFINET interface > Advanced options > Real time settings > IO cycle" area.
3. If additional project-external IO controllers access this shared device: In the "Shared Device" area, set the number of project-external IO controllers. The maximum number depends on the IO device (specification in GSD file).
4. For each IO controller that has access to modules and submodules of the project-internal shared device, you need to adjust the real-time settings CPU individually.

5. You must set the same send clock for each IO controller that has access to modules and submodules of the project-internal shared device:
   - If you configure an additional, project-external IO controller with STEP 7 (TIA Portal):
     Open the corresponding project.
     Select the PROFINET interface of the IO controller.
     Select the "Advanced options > Real time settings > IO communication" area in the Inspector window and set the shared send clock.
   - If you configure an additional, project-external IO controller with another engineering tool:
     Select the PROFINET interface of the shared device in STEP 7 (TIA Portal) and read out the send clock on the shared device ("Advanced options > Real time settings" area)
     Enter the read send clock in the engineering tool.
   - Special consideration: If you configure **all** IO controllers that have access to the shared device in a common STEP 7 project (TIA Portal or V5.5), you can set shorter send clocks on the IO controller than supported by the shared device (send clock adaptation).

Compiling and loading

If you select the project-internal shared device and click "Compile" in the toolbar, the configuration of both IO controllers is checked for data consistency.
You must load the configurations for the various IO controllers into the IO controllers one after the other.

NOTE
Synchronize router settings with IO controller
The option "Synchronize router settings with IO controller" is enabled by default for IO devices. If the connected IO controllers use the same or no router, leave this setting.
If the connected IO controllers use different routers, disable the option "Synchronize router settings with IO controller". In this case, manually configure the corresponding router address on the project internal shared device.

6.3.4 Basic information on cross-project shared devices

Requirements

- STEP 7 V12 Service Pack 1 or higher
- IO device supports the shared device function, e.g. interface module IM 155-5 PN ST
- IO controller supports the shared device function, for example CPU 1516-3 PN/DP as of firmware version V1.1 or CPU 1215 DC/DC/DC as of firmware version V4.1.

Explanatory notes:

- A CPU that is configured as an I-device can be used as a shared device. For this purpose, you create a GSD file for the I-device in STEP 7 via "GSD export". You then import the GSD file into a different project and assign the I-device to the IO controller there. The CPU has to support the GSD export, for example CPU 1215C DC/DC/DC as of firmware version 4.1. Before the GSDML export, you have to adjust the "Number of IO controllers with access to this I-Device".

Configuring the access

The IO device must be present in several projects so that the modules or submodules of an IO device can be assigned to different IO controllers. A separate project is required for each IO controller.

You use the "Shared device" parameter of the interface module to determine the modules or submodules to which the IO controller has access:

- If the local IO controller has access to the configured module, select the name of the IO controller from the list.
- If the IO controller from a different project and not the local IO controller is to have access to the configured module, select the entry "Outside of project".

The configuration is consistent regarding access if each module or submodule in exactly one project is assigned to an IO controller.

Module or submodule is assigned to another IO controller

The following is about the consequences of the "Outside of project" setting of the "Shared Device" parameter from the point of view of the local IO controller.

In this case, the local IO controller does not have access to the module configured in this way. Specifically, this means:

- No data exchange with the module or submodule
- No reception of alarms or diagnostics, which means no display of the diagnostics status in the online view
- No parameter assignment of the module or submodule

Rules for the configuration

- IO controllers that use the shared device are created in different projects. In each project, care must be taken that the shared device is configured identically in each station. Only one IO controller may have full access to a module or submodule. Inconsistencies in the configuration result in a failure of the shared device.
- If you have selected the "Use router" option for the IO controllers involved, you must have set the same router address in all these IO controllers. You as the user must ensure consistency.
- I/O addresses of a module or submodule can only be edited if a module or submodule is assigned to the IO controller in the same project.
- The shared device must have the same IP parameters and the same device name in each project.

- The send clock must be identical for all IO controllers that have access to the shared device.
- The S7 subnet ID of the subnet to which the shared device is connected must be identical in all projects.
- The following functions are only available if the PROFINET interface of the shared device is assigned to the local IO controller:
  - IRT operation
  - Prioritized startup
  - Parameter assignment of the port properties

Constraints

The following constraints result because a shared device configuration is distributed across several projects:

- The addresses of modules or submodules that are not assigned to this IO controller are missing in the address overview of each IO controller that has access to a shared device.
- The modules or submodules that are not assigned are not taken into consideration in the configuration limit calculation for the shared device during the consistency check. For this reason, you must verify for yourself that the maximum number of submodules or the maximum amount of cyclic IO data for the shared device will not be exceeded.
  For information on the maximum quantities, refer to the documentation for the devices you are using.
- Configuration errors such as the assignment of a module or submodule to several IO controllers are not detected in STEP 7.
- CPUs that are loaded with a shared device configuration do not have any information on whether the IO device is a shared device. Modules or submodules that are assigned to other IO controllers and therefore other CPUs are missing in the loaded configuration. These modules or submodules are therefore displayed neither in the CPU web server nor in the CPU display.

See also

Response in the event of fault
(https://support.industry.siemens.com/cs/ww/en/view/109572804)

6.3.5 Configuring a cross-project shared device

Below, you will find a description of how to configure a distributed I/O system as a shared device with STEP 7 V12, Service Pack 1 or higher.

A "distributed" configuration with different engineering tools for different IO controller families is always possible. However, the description of the procedure is based solely on STEP 7 as of V12, service pack 1. The description is limited to two IO controllers of the S7-1500 family that share a shared device.

Two projects are created (Shared-Device-1 and Shared-Device-2), each with one IO controller (PLC_1 and PLC_2). You must create the shared device in both projects, even though it is physically one and the same IO device.

Requirements

- STEP 7 V12 Service Pack 1 or higher
- The IO controller supports the shared device function, for example CPU 1513-1 PN as of firmware version 1.1.
- IO device supports shared device functionality, for example interface module IM 155-5 PN ST as of firmware version 2.0.

Procedure - Creating project 1

To create the first project with a shared device, follow these steps:

1. Start STEP 7.
2. Create a new project, for example with the name "Shared-Device-1".
3. Insert, for example, a CPU 1513-1 PN from the hardware catalog in the network view.
4. Assign a name, for example "PLC_1".
5. Insert an IO device with the "Shared device" function from the hardware catalog.
6. Assign the IO device to the IO controller "PLC_1".
7. Double-click the IO device and insert all required modules and submodules from the hardware catalog in the device overview table.
8. Assign the module parameters.
9. Save the project.

Procedure - Creating project 2

To create the second project with a shared device, follow these steps:

1. Start STEP 7 once again.
   A new instance of STEP 7 opens.
2. In the new instance, create a new project, for example with the name "Shared-Device-2".
3. Insert, for example, a CPU 1513-1 PN in the network view.
4. Assign a name, for example "PLC_2".
5. Copy the IO device from the project "Shared-Device-1" and insert it in the network view of project "Shared-Device-2".
6. Assign the IO device to the IO controller "PLC_2".
7. Save the project.

Both projects now have an identically structured IO device that must be configured in the next step for the different types of IO controller access.

Procedure - Configuring access to the shared device

The modules and submodules you insert in the shared device are automatically assigned to the local CPU. To change the assignment, follow these steps:

1. Select the interface module in the network view or device view of project "Shared-Device-1".
2. Select the "Shared Device" area in the Inspector window.
   A table shows which CPU has access to the respective module or submodule for all configured modules. The default setting is that the local CPU has access to all modules and submodules.
3. Keep the "PLC_1" setting for all modules and submodules that are to remain in the address area of the local CPU.
   Select the "Outside of project" setting for all modules and submodules that are to be located in the address area of the CPU from the "Shared-Device-2" project ("PLC_2"). This means that an IO controller outside the project is to have access to the module or submodule.

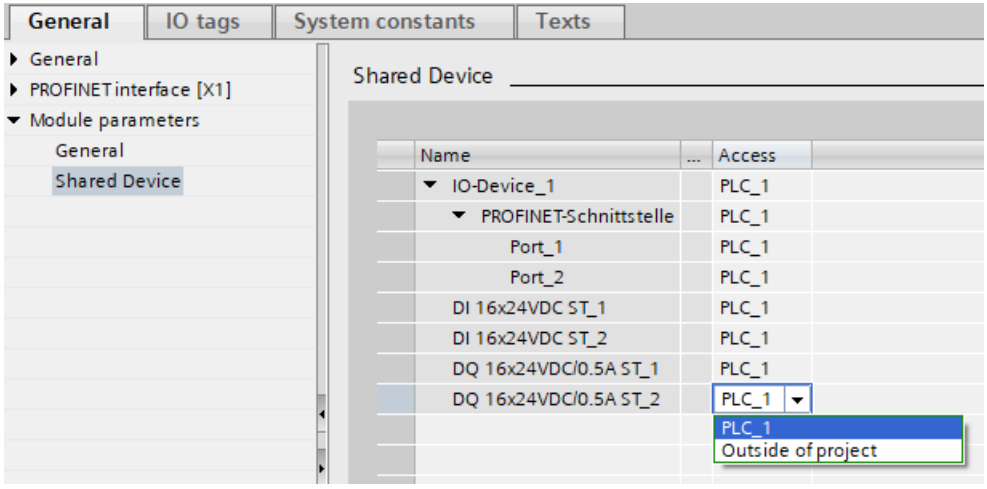

Figure 6-27 Configuring shared device

4. Select the interface module in the network view or device view of project "Shared-Device-2".
5. Select the "Shared Device" area in the Inspector window.
   A table shows which CPU has access to the respective module or submodule for all configured modules.
6. Select the "Outside of project" setting for all modules and submodules that are to be located in the address area of the CPU from the "Shared-Device-1" project ("PLC_1").
7. Finally, check whether the settings for access are "complementary" for each module or submodule in both projects. This means that if the local CPU has access in one project, the "Outside of project" option must be set in the other project and vice versa.
   Special consideration: The option "Outside of project" for the PROFINET interface and therefore for the ports makes the associated parameters read-only and not changeable. Parameters of the PROFINET interface and port parameters can only be edited in the project in which the PROFINET interface is assigned to the local CPU. The ports can be interconnected in both projects regardless of this.

8. Check whether the same IP address parameters and device name are set for the shared device in all projects.
   Check whether the same S7 subnet ID is set in all projects for the subnet to which the shared device is connected (subnet properties, "General" area in the Inspector window).

NOTE

If you make changes to the shared device: Make the same changes in each project on the shared device. Make sure that only one IO controller has access to a module or submodule.

Procedure - Adjusting the real-time settings

Adjusting and checking the settings listed below ensures the following properties:

- All IO controllers and shared devices are operated with the appropriate send clock.
- Update times are calculated correctly based on the communication load.

To adjust and check these settings, proceed as follows:

1. Select the project whose IO controllers have access to the PROFINET interface and the ports of the shared device.
2. Select the interface module of the shared device in the network view.
3. In the Inspector window, navigate to the "PROFINET interface > Advanced options > Real time settings > IO cycle" area.
4. In the "Shared Device" area, set the number of project-external IO controllers. The maximum number depends on the IO device (specification in GSD file).
5. For each IO controller that has access to modules and submodules of the project-internal shared device, you need to adjust the real-time settings CPU individually.
6. You must set the same send clock for each IO controller that has access to modules and submodules of the shared device:
   - If you configure the IO controller with STEP 7 (TIA Portal):
     Open the corresponding project.
     Select the PROFINET interface of the IO controller.
     Select the "Advanced options > Real time settings > IO communication" area in the Inspector window and set the shared send clock.
   - If you configure the IO controller with a different engineering tool:
     Select the PROFINET interface of the shared device in STEP 7 (TIA Portal) and read out the send clock on the shared device ("Advanced options > Real time settings" area)
     Enter the read send clock in the engineering tool.
   - Special consideration: If you configure **all** IO controllers that have access to the shared device in STEP 7 (TIA Portal or V5.5), you can set shorter send clocks on the IO controller than supported by the shared device (send clock adaptation).

Compiling and loading

You must compile the configurations for the different IO controllers and load them to the CPUs one after the other.

Due to the distributed configuration with separate projects, STEP 7 does not output consistency errors in the case of incorrect access parameter assignment. Example for incorrect access parameter assignment:

- Several IO controllers have access to the same module
- IP address parameters or send clocks are not identical

These errors do not show up until operation and are output as configuration errors, for example.

NOTE

After a configuration has been loaded in the IO controller, non-assigned modules or submodules retain their current parameterization state to ensure the independence from the parameterizations of other IO controllers.

See also

Module-internal shared input/shared output (MSI/MSO) (Page 157)

6.3.6 Configuring an I-device as a shared device

Below, you can find a description of how you configure an S7-1500 as an I-device with STEP 7 Version 13 or higher and then use it in 2 projects as a shared device.

A "distributed" configuration with different engineering tools for different IO controller families is generally also possible here. The procedure described below is based on STEP 7 V13 and is limited to a configuration with 2 IO controllers of the S7-1500 family that share the transfer areas of an I-device as a shared device. The I-device itself is also an S7-1500 CPU.

Create 3 projects with one IO controller each (PLC-I-Device, PLC_1 and PLC_2).

The "PLC-I-Device" project is used to configure the I-device. The PROFINET GSD variant of "PLC-I-Device" is used in the "PLC_1" and "PLC_2" projects in order to assign the transfer areas in the respective higher-level IO controller.

Shared I-device concept

To introduce the shared I-device concept, 2 roles are introduced here:

- The role of manufacturer (e.g., machine manufacturer): The manufacturer configures and programs an I-device that performs a particular automation task. Transfer areas are defined as the I/O interface to the operator of the machine. These transfer areas can be assigned to different IO controllers. For the connection to higher-level IO controllers, the manufacturer provides a PROFINET GSD file and discloses the transfer areas via which the I-device can be accessed.
- The role of the operator: The operator uses the I-device as a PROFINET GSD variant during configuration of the PROFINET IO system and, in this process, specifies the I/O addresses under which the IO controllers access the transfer areas.

Manufacturer view

You assign the following parameters for an S7-1500 CPU as an I-device: centralized and distributed I/O, the desired transfer areas, and the number of IO controllers having access to this I-device (always greater than 1 for a shared device!).

Special consideration: The I-device is configured without a higher-level IO controller. As a result, only the local I/O addresses of the transfer area are available (= "Address in the I-device") in order to create the user program for editing the addresses from the transfer area. The I-device that has been completely configured except for the connection to the higher-level IO controller is loaded to the S7-1500 CPU.

You export a PROFINET GSD file from the I-device configuration.

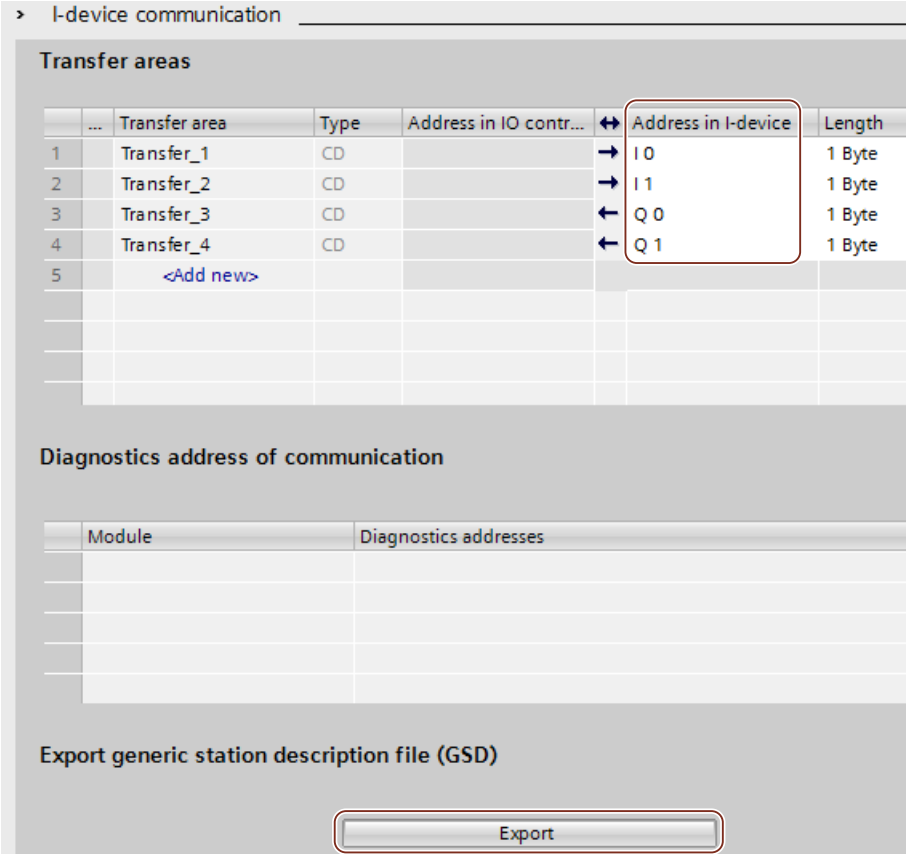

Figure 6-28 Exporting an I-device as a GSD file

Operator view

You must install the PROFINET GSD file created from the I-device configuration in all engineering systems that are involved in configuring a PROFINET IO system with this shared I-device. If all uses of this I-device will be configured with STEP 7 V13, it is sufficient to install the GSD file in STEP 7.

You configure the I-device as a GSD variant on the PROFINET IO system in the projects involved. In STEP 7 V13, this I-device can be found under "Other field devices > PROFINET IO > PLCs & CPs" following installation.

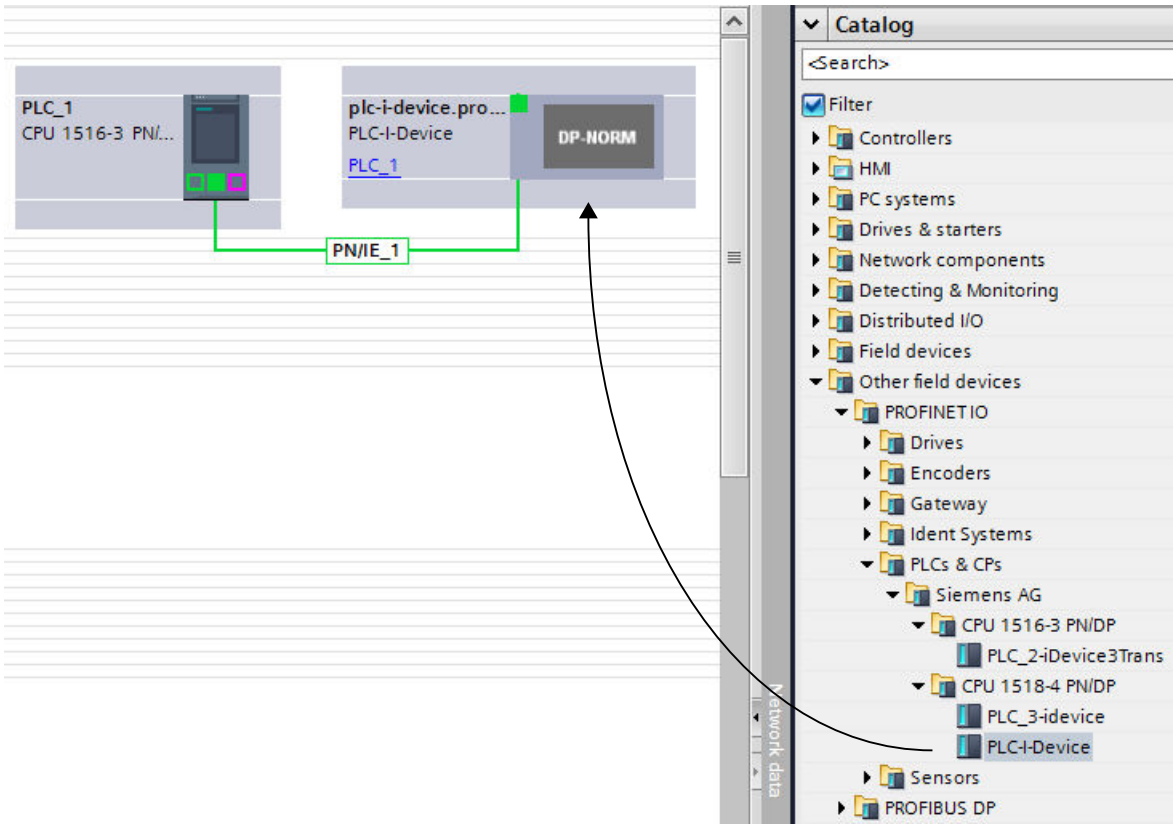

Figure 6-29 Configuring an I-device as a GSD file

In each of the projects involved, you define which transfer areas are assigned exclusively to the higher-level IO controller (default setting: all). Set the remaining transfer areas to "Outside of project". As a result of this setting, the local IO controller has no access to this transfer area and it can therefore be assigned to another IO controller in another project.

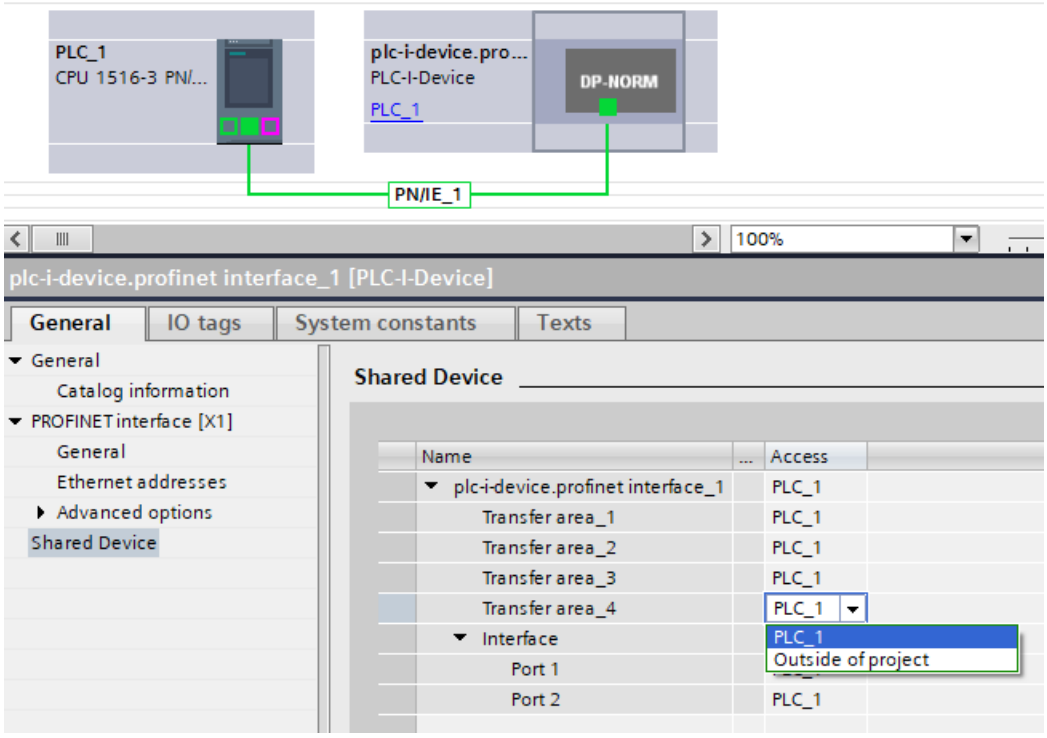

Figure 6-30 Setting the access to the shared I-device.

You adapt the addresses from the view of the IO controller in the device overview. To open the device overview, double-click the I-device.

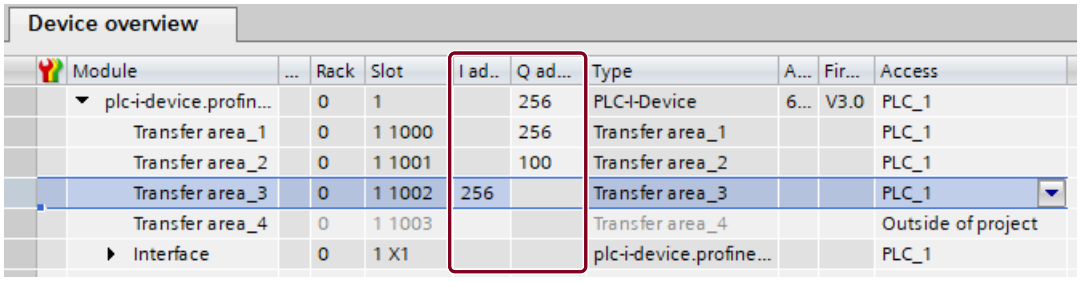

Figure 6-31 I/O addresses of the transfer areas in the device overview

Requirements

- STEP 7 as of V13

Procedure - Creating the PLC-I-device project

To create the project with a shared I-device, follow these steps:

1. Start STEP 7.
2. Create a new project with the name "PLC-I-device".
3. Insert, for example, a CPU 1518-4 PN/DP from the hardware catalog in the network view.
4. Assign a name, for example "PLC-I-Device".
5. Double-click the IO device and configure all required modules and submodules.
6. Assign the module parameters.
   In particular, the following settings for the CPU are necessary in the area of the PROFINET interface [X1]:
   – Activate the "IO device" option in the "Operating mode" area.
   – Activate the "Parameter assignment of PN interface by higher-level IO controller" option in the "Operating mode" area.

– Configure the transfer areas in the "Operating mode > I-device communication" area. The "Address in IO controller" column remains empty because no IO controller is assigned.
  Note: To change an input area to an output area, and vice versa, you must navigate to the area of the corresponding transfer area.

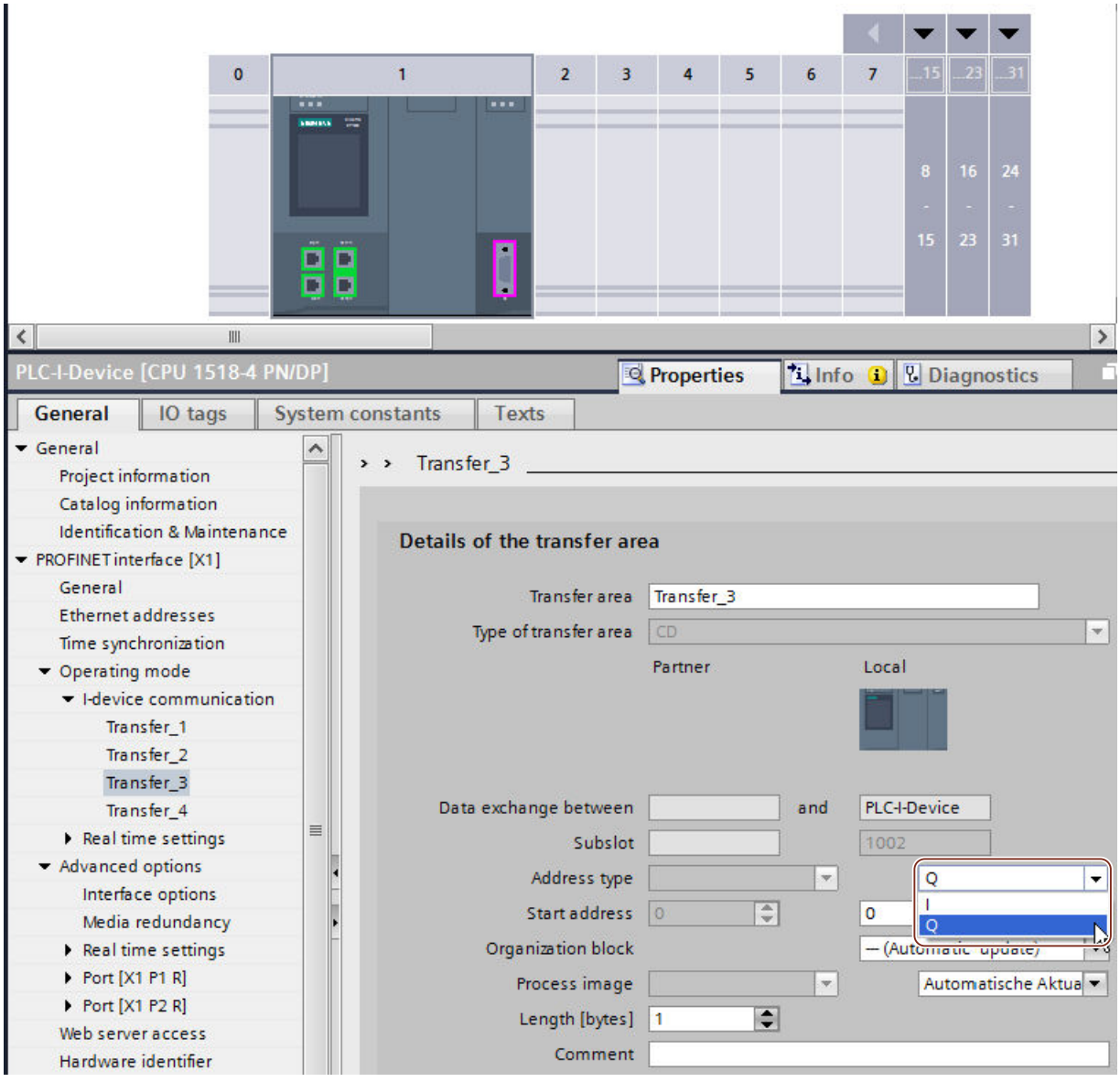

Figure 6-32 Changing the address type for the transfer area

– Select the number of IO controllers, at least 2, that will access the shared I-device during operation ("Operating mode > Real time settings" area, "Shared Device" area).

7. Click the "Compile" button in the toolbar to check your project for consistency errors. Inconsistent projects are not exported as GSD file by STEP 7.

8. Save the project.
9. Click the "Export" button ("Operating mode > I-device communication" area, "Export generic station description file (GSD) section").
   If you do not change the name in the Export dialog, the GSD file has a name in the form "GSDML-V2.31-#Siemens-PreConf_PLC-I-Device-20130925-123456", for example.

Procedure - Creating the PLC_1 project

To create the first project with a shared I-device, follow these steps:

1. Start STEP 7.
2. Install the PROFINET GSD file from the export of the I-device CPU (PLC-I-Device).
3. Create a new project with the name "PLC_1".
4. Insert, for example, a CPU 1516-3 PN/DP in the network view.
5. Assign a name, for example "PLC_1".
6. Insert the I-device from the hardware catalog (Hardware catalog: "Other field devices > PROFINET IO > PLCs & CPs").
7. Assign the I-device to the IO-controller "PLC_1".
8. Select the "Shared Device" area in the properties of the I-device.
   In the table, all transfer areas and the PROFINET interface are assigned to the local IO controller (PLC_1).
9. Define the transfer areas to which the "PLC_1" CPU should **not** have access. Select the "Outside of project" entry for these areas. These transfer areas are provided for the "PLC_2" CPU.
10. Save the project.

Procedure - Creating the PLC_2 project

To create the second project with a shared I-device, follow these steps:

1. Start STEP 7 once again.
   A new instance of STEP 7 opens.
2. In the new instance, create a new project with the name "PLC_2".
3. Insert, for example, a CPU 1516-3 PN/DP in the network view.
4. Assign a name, for example "PLC_2".
5. Insert the I-device from the hardware catalog (Hardware catalog: "Other field devices > PROFINET IO > PLCs & CPs").
6. Assign the I-device to the IO-controller "PLC_2".
7. Adapt the access to the transfer areas as in the "PLC_1" project. Ensure that no duplicate assignments result.
8. Adapt the parameters of the subnet and PROFINET interface. Because the shared I-device involves the same device in different projects, these data must match.
9. Save the project.

Both projects now have an identically configured shared I-device. The IO controller access and the parameters of the PROFINET interface must still be checked in the various projects during the next step.

Summary - Assigning parameters for access to the shared device

The transfer areas are automatically assigned to the local IO controller. To change the assignment, follow these steps:

1. Click the "PLC-I-Device" device in the network view of the "PLC_1" project, and select the "Shared Device" area.
2. A table shows which CPU has access to each of the configured transfer areas. The default setting is that the local CPU has access to all modules and submodules.
3. Keep the "PLC_1" setting for all transfer areas that are to remain in the address area of the local CPU

   Select the "Outside of project" setting for all transfer areas that are to be located in the address area of the "PLC_2" CPU from the "PLC_2" project. This means that an IO controller outside the project is to have access to the transfer area.
4. Follow the same procedure for the remaining projects.
5. Finally, check whether the settings for access are "complementary" for each module or submodule in both projects. This means that if the local CPU has access in one project, the "Outside of project" option must be set in the other project and vice versa.

   Special consideration: The "Outside of project" option for the PROFINET interface and therefore for the ports makes the associated parameters read-only and they cannot be changed. Parameters of the PROFINET interface and port parameters can only be edited in the project in which the PROFINET interface is assigned to the local CPU. The ports can be interconnected in both projects regardless of this.
6. Check whether the same IP address parameters and device name are set for the shared device in all projects.

   Check whether the same S7 subnet ID is set in all projects for the subnet to which the shared device is connected (subnet properties, "General" area in the Inspector window).

NOTE

If you make changes to the I-device (e.g., change the number or length of the transfer areas):

Export the I-device as a GSD file again. Re-install the GSD file in each project that uses the I-device as a shared device. Make sure that only one IO controller has access to a transfer area.

Procedure - Adjusting the real-time settings

To ensure that all IO controllers and shared devices are operated with the appropriate send clock and that the update times are calculated correctly based on the communication load, you must adjust and check the following settings:

1. You must set the same send clock for each IO controller that has access to modules and submodules of the shared device:
   - If you configure the IO controller with STEP 7 (TIA Portal):
     Open the corresponding project.
     Select the PROFINET interface of the IO controller.
     Select the "Advanced options > Real time settings > IO communication" area in the Inspector window and set the shared send clock.
   - If you configure the IO controller with a different engineering tool:
     Select the PROFINET interface of the shared device in STEP 7 (TIA Portal) and read out the send clock on the shared device ("Advanced options > Real time settings" area)
     Enter the read send clock in the engineering tool.
   - Special consideration: If you configure **all** IO controllers that have access to the shared I-device in STEP 7 (TIA Portal or V5.5), you can set shorter send clocks on the IO controller than supported by the shared device (send clock adaptation).

Compiling and loading

You must compile the configurations for the different IO controllers and load them to the CPUs one after the other.
Due to the distributed configuration with separate projects, STEP 7 does not output consistency errors in the case of incorrect access parameter assignment. Example for incorrect access parameter assignment:

- Several IO controllers have access to the same module
- IP address parameters or send clocks are not identical

These errors do not show up until operation and are output as configuration errors, for example.

NOTE

After a configuration has been loaded in the IO controller, non-assigned modules or submodules in the IO device retain their current parameter assignment state. This ensures the independence to configurations of other IO controllers.

6.3.7 Module-internal shared input/shared output (MSI/MSO)

Introduction

This section describes the module-internal shared input/shared output (MSI/MSO) functionality for I/O modules that are operated on PROFINET.

Module-internal shared input/shared output functionality

The module-internal shared input (MSI) function allows an input module to make its input data available to up to 4 IO controllers. Each controller has read access to the same channels. The following figure shows the MSI functionality.

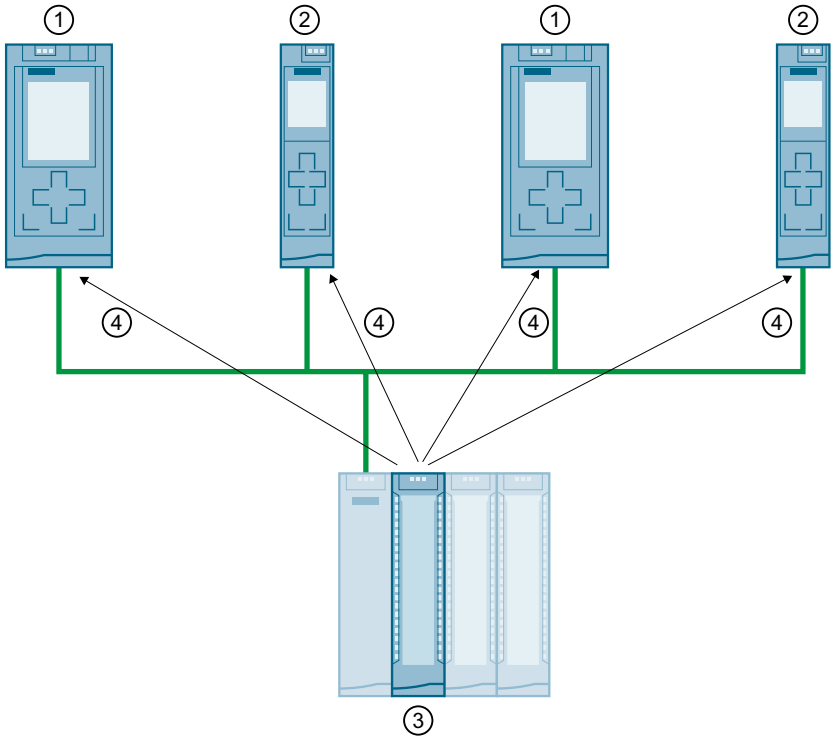

① CPU 1516-3 PN/DP as IO controller

② CPU 1511-1 PN as IO controller

③ Input module with MSI

④ Read access to the input channels of the input module

⑤ Write access to the channels of the I/O module (only with MSO)

Figure 6-33 Example configuration with MSI

The module-internal shared output (MSO) function allows an output module to make its output data available to up to 4 IO controllers. An IO controller has write access to the channels of the output module. Up to 3 IO controllers can additionally have read-access to the channels.

The following figure shows the MSO functionality.

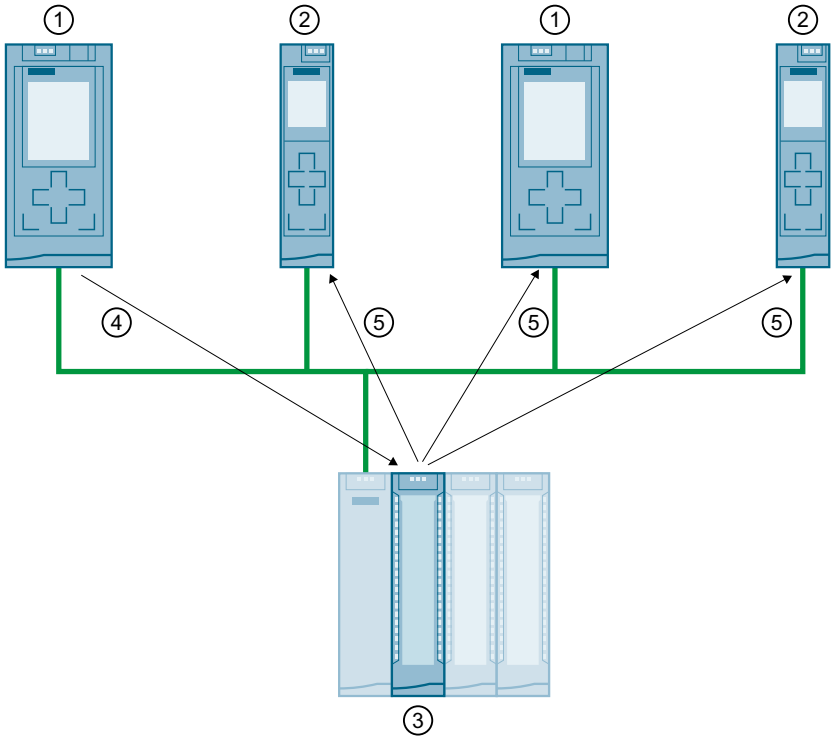

① CPU 1516-3 PN/DP as IO controller
② CPU 1511-1 PN as IO controller
③ Output module with MSO
④ Write access to the output channels of the output module
⑤ Read access to the output channels of the output module

Figure 6-34 Example configuration with MSO

Advantages of MSI/MSO

Module-internal shared input/shared output (MSI/MSO) offers the following advantages:

- Real-time acquisition in multiple CPUs
- Lower costs due to saving on additional IO devices and modules
- Lower space requirements due to saving on additional IO devices and modules
- Reduced communication load because no CPU-CPU communication is needed
- No additional programming effort is needed for CPU-CPU communication

Requirements for the use of MSI/MSO

Observe the following requirements:

- MSI/MSO can only be used with PROFINET IO
- Configuration software: STEP 7 (TIA Portal) as of V12 SP1 with GSD file; the modules are integrated in the hardware catalog as of V13.
- The IM 155-5 PN ST interface module and the modules support MSI/MSO as of firmware version V2.0.0.

Constraints for using of MSI/MSO

Note the following constraints:

- The use of MSI/MSO is not possible in the case of module grouping.
- Modules with MSI/MSO cannot be operated in isochronous mode.
- The maximum number of IO controllers is dependent on the interface module. You can find out how many IO controllers the interface module supports in the equipment manual for the respective interface module.

MSI submodules

The input values of all channels are copied to a basic submodule and up to 3 other MSI submodules during MSI configuration of an input module. The channels of the module are then available with identical input values in the basic submodule and the MSI submodules. The MSI submodules can be assigned to up to 3 IO controllers when the module is used in a shared device. Each IO controller has read access to the same channels.

The following figure shows a digital input module with the basic submodule and 3 MSI submodules. Each submodule is assigned to an IO controller. Diagnostics and parameter assignment of the digital input module can be performed from the IO controller 1 via the basic submodule.

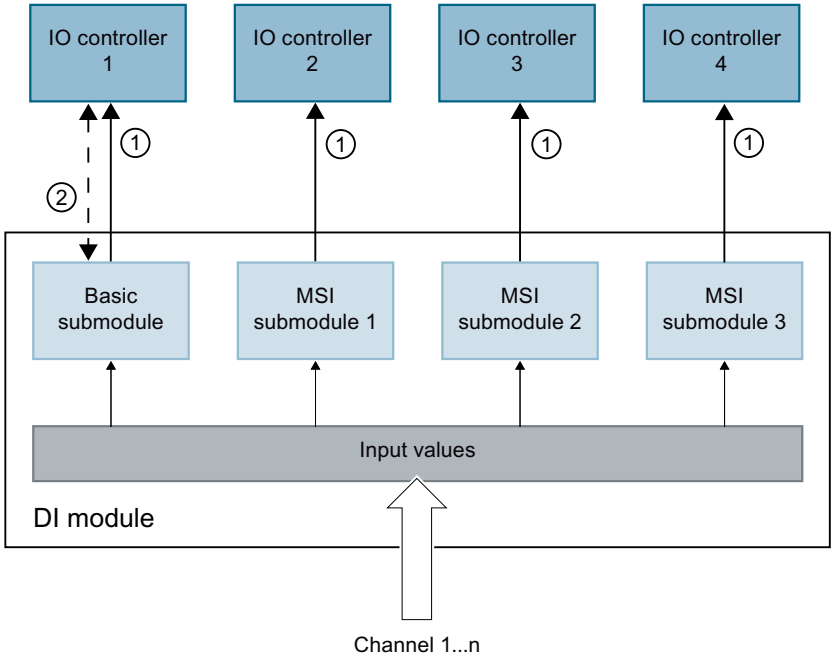

① Read access

② Parameter assignment and system diagnostics

Figure 6-35 DI module with MSI submodules

Value status (Quality Information, QI)

The meaning of the value status depends on the submodule to which it pertains.

With basic submodule (= 1st submodule), the "0" value status indicates that the value is incorrect.

With an MSI submodule (2nd to 4th submodule), the "0" value status indicates that the value is incorrect or the basic submodule has not yet been configured (not ready).

MSO submodules

During MSO configuration of an output module, the output values of all channels of the module are copied from a basic submodule to up to 3 other MSO submodules. The channels of the module are then available with identical values in the basic submodule and the MSO submodules. The MSO submodules can be assigned to up to 3 IO controllers when the module is used in a shared device:

- The IO controller to which the basic submodule is assigned has write access to the outputs of the module. The basic submodule therefore occupies output addresses in the process image of the IO controller.
- The IO controllers to which the MSO submodules are assigned have read access to the outputs of the module. MSO submodules therefore occupy input addresses in the process image of the IO controller.

The following image shows a digital output module with the basic submodule and 3 MSI submodules. Each submodule is assigned to an IO controller. Diagnostics and parameter assignment of the digital output module can be performed from IO controller 1 via the basic submodule.

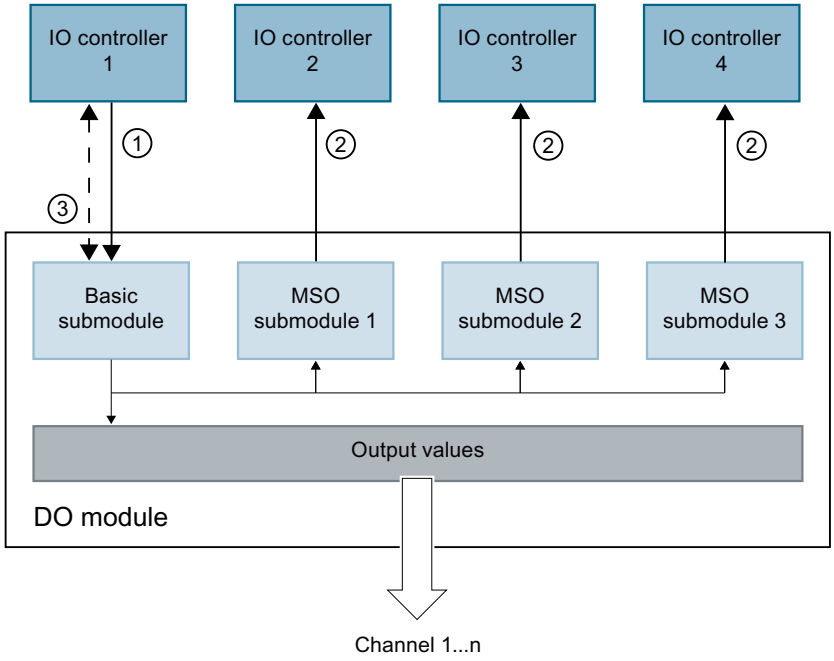

① Write access

② Read access

③ Parameter assignment and system diagnostics

Figure 6-36 DQ module with MSO submodule

Value status (Quality Information, QI)

The meaning of the value status depends on the submodule to which it pertains.

With basic submodule (= 1st submodule), the "0" value status indicates that the value is incorrect.

With MSO submodule (= 2nd to 4th submodule) the "0" value status indicates that the value is incorrect or one of the following errors has occurred:

- The basic submodule parameters have not yet been assigned (not ready for operation).
- The connection between the IO controller and the basic submodule has been interrupted.
- The IO controller from the basic submodule is in the "STOP" or "POWER OFF" state.

Configuring I/O modules with MSI/MSO submodules

Requirements

- STEP 7 as of V13
- IO device supports MSI/MSO (for example IM 155-5 PN ST as of firmware version 2.0.0)

Procedure

1. In the network view of STEP 7, insert an interface module, for example IM 155-5 PN ST as of V2.0.
2. Double-click the IO device.
   You are now in the device view.
3. Place the I/O modules from the hardware catalog in a suitable slot.
4. Add MSI/MSO submodules to the I/O modules:
   – Input modules: Select the number of MSI submodules under "Module parameters > DI Configuration" or "AI Configuration" in the area "Copy of module for Shared Device (MSI)".
   – Output modules: Select the number of MSO submodules under "Module parameters > DO configuration" or "AW configuration" in the area "Copy of module for shared device (MSO)".

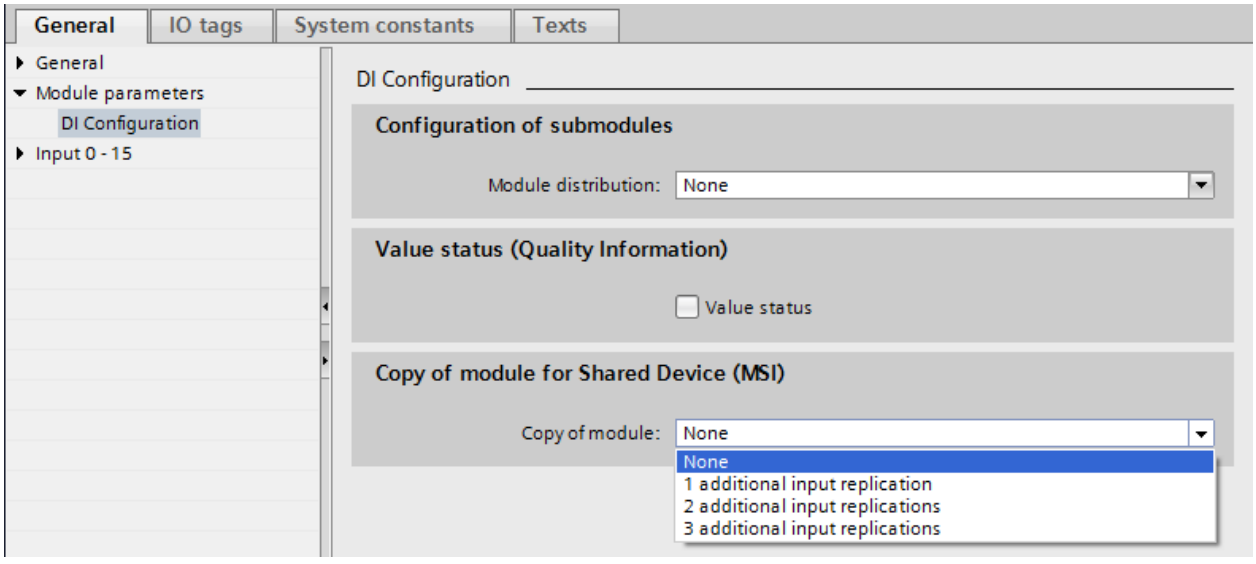

Figure 6-37 Configuring I/O modules with MSI/MSO

Assigning MSI/MSO submodules to an IO controller

You can assign the submodules in a shared device to an IO controller.

You can find additional information under "Configuring a cross-project shared device (Page 145)".

Configuring access to a shared device and the module-internal shared input / shared output (MSI /MSO) function

You can learn how to access a shared device and the MSI /MSO function in STEP 7 with this FAQ (https://support.industry.siemens.com/cs/ww/en/view/109736536).

6.4 Media redundancy (ring topologies)

In order to increase the network availability of an Industrial Ethernet network with optical or electrical linear bus topologies, you can convert a linear bus topology to a ring topology by joining the ends together.

Media redundancy in ring topologies

Devices in a ring topology can be IO devices, IO controllers, external switches and/or the integrated switches of communication modules.

To set up a ring topology with media redundancy, you need to bring together the two free ends of a linear bus topology in one device. Closing the linear bus topology to form a ring is achieved with two ports (ring ports) of a device in the ring. One device of the resulting ring then takes over the role of the redundancy manager. All other devices in the ring are redundancy clients.

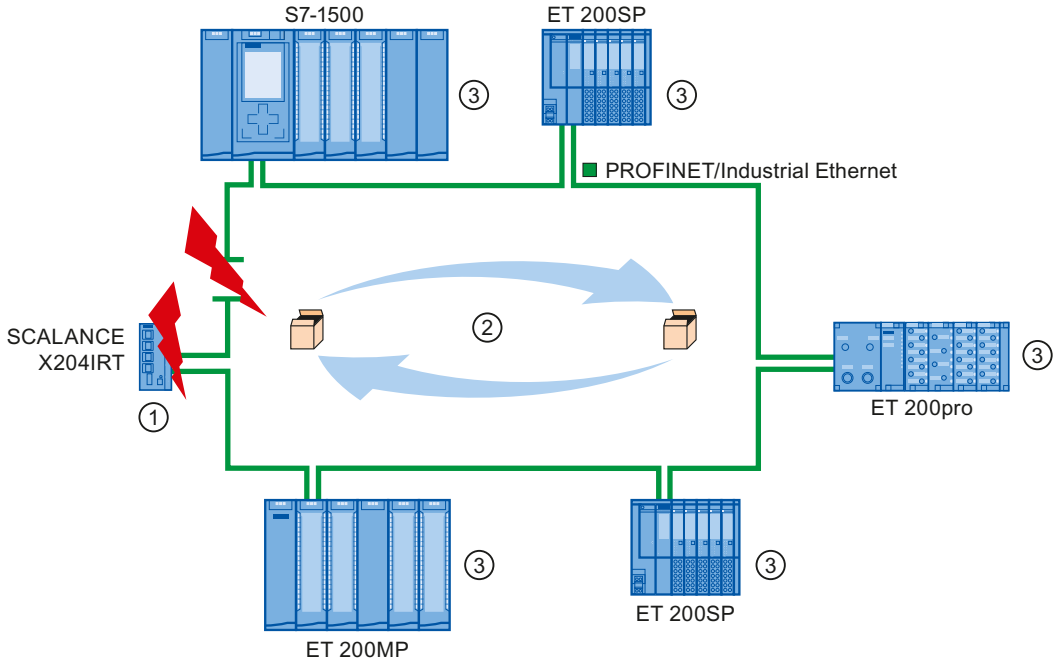

① Redundancy manager

② Test frames

③ Redundancy clients

Figure 6-38 Media redundancy in ring topology

The ring ports of a device are the ports that establish the connection to the two neighboring devices in the ring topology. The ring ports are selected and set in the configuration of the relevant device (is also preset, if applicable).

How media redundancy works in a ring topology

The data paths between the individual devices are automatically reconfigured if the ring is interrupted at any point. The devices are available again after reconfiguration.

In the redundancy manager, one of the two ring ports is blocked in uninterrupted network operation for normal communication so that no data frames are circulated. In terms of data transmission, the ring topology is a linear bus topology. The redundancy manager monitors the ring for interruptions. For this purpose, it sends test frames not only from ring port 1 but also from ring port 2. The test frames pass through the ring in both directions until they arrive at the other ring port of the redundancy manager.

An interruption of the ring can be caused by loss of the connection between two devices or by failure of a device in the ring.

If the test frames of the redundancy manager no longer arrive at the other ring port during an interruption of the ring, the redundancy manager connects its two ring ports. This substitute path once again restores a functioning connection between all remaining devices in the form of a linear bus topology.

The time between the ring interruption and restoration of a functional linear topology is known as the reconfiguration time.

As soon as the interruption has been eliminated, one of the two ring ports is blocked again in the redundancy manager. The redundancy clients are informed about the change and use the original paths to the other devices again.

Media redundancy method

The standard method of media redundancy in SIMATIC is MRP (Media Redundancy Protocol) with a typical reconfiguration time of 200 ms. Up to 50 devices can participate per ring.

In addition, the real-time capable media redundancy process MRPD (Media Redundancy with Planned Duplication of frames) is also available.

6.4.1 Media Redundancy Protocol (MRP)

Media Redundancy Protocol (MRP)

The "MRP" process works in conformity with the Media Redundancy Protocol (MRP) that is specified in the standard IEC 62439-2.

Requirements

- All devices in the ring support MRP.
- You have complied with the rules for topology set out below. STEP 7 monitors compliance with the rules during compilation and outputs corresponding alarms.

Topology

The following schematic shows a possible topology for devices in a ring with MRP. The devices inside the shaded oval are in the redundancy domain.

Example of a ring topology with the MRP media redundancy protocol:

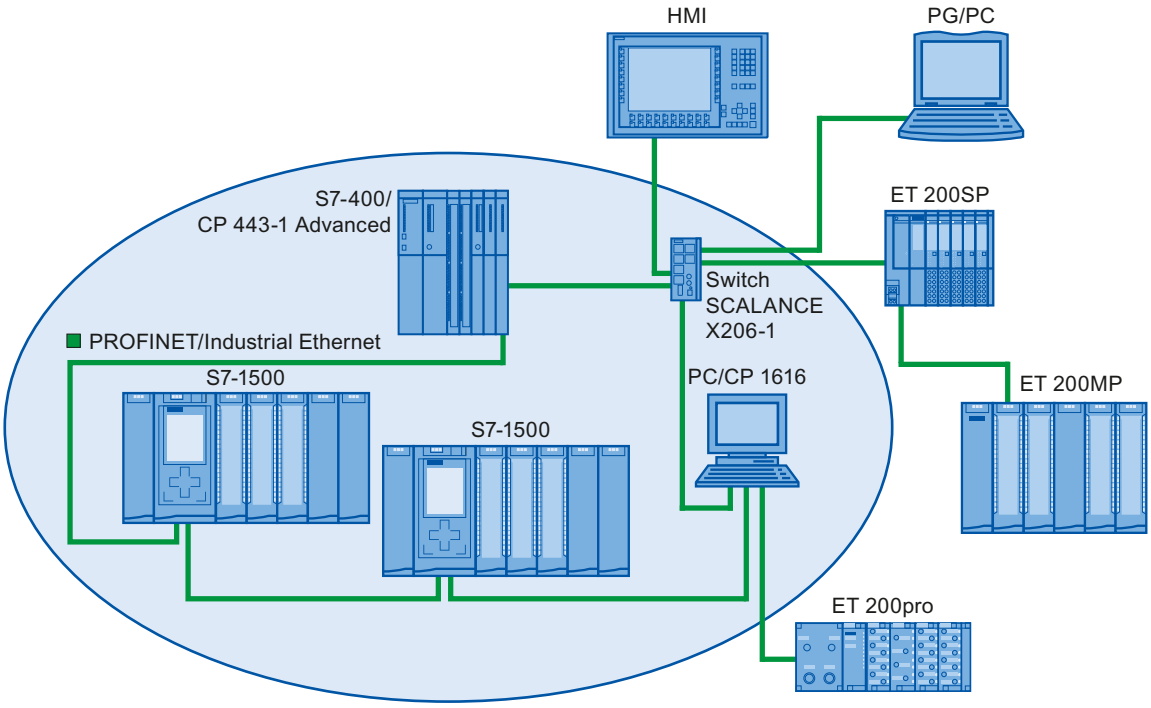

Figure 6-39 Example of a ring topology with the MRP media redundancy protocol:

The following rules apply to a ring topology with media redundancy using MRP:

- All devices must be connected to one other via their ring ports.
- All devices in the ring belong to the same redundancy domain.
- A device in the ring takes on the task of a redundancy manager.
  - One device only has the role of "Manager". No other device may have the role of "Manager". Or
  - One device or multiple devices in the ring have the role of "Manager (auto)". The devices with the role of "Manager (auto)" then negotiate between themselves which device is to take on the role of redundancy manager. In this case, no device is permitted to have the role of "Manager".
- All other devices in the ring are redundancy clients.
- You can connect up to 50 devices in a ring.

Non MRP-compliant devices can, for example, be connected to the ring via a SCALANCE X switch or via a PC with a CP 1616.

Rules for loading the devices of an MRP domain

When loading devices of an MRP domain, frame loops can occur and result in network failure if there is an invalid MRP configuration.

Example: You change the MRP roles of several devices and consecutively load the configuration into the devices involved. Configurations can arise that contradict the roles mentioned above, for example, there may be devices that simultaneously have the "Manager" and "Manager (auto)" roles in the ring.

To ensure that an invalid MRP configuration does not result in the failure of the network, open the ring before loading.

Follow these steps:

1. Open the ring.
2. Load the error-free and consistent MRP configuration from your project onto all the devices involved and ensure that the devices are in data exchange mode (i.e. the application relations (ARs) are set up).
3. Close the ring.

Boundary conditions

MRP and RT

RT operation is possible with the use of MRP.

NOTE

The RT communication is disrupted (station failure) if the reconfiguration time of the ring is greater than the selected response monitoring time of the IO device. This is why you should select a response monitoring time of the IO devices that is sufficiently large.

MRP and IRT

IRT mode is not possible together with MRP.

If you want to use media redundancy together with IRT in a ring, only use devices that support MRPD.

MRP and TCP/IP (TSEND, HTTP, ...)

The TCP/IP communication with MRP is possible, because lost data packages are resent, if applicable.

MRP and prioritized startup

If you configure MRP in a ring, you cannot use the "prioritized startup" function in PROFINET applications on the devices involved.

If you want to use the "prioritized startup" function, then you must disable MRP in the configuration (the device may also not be part of the ring).

Information on S7-1500R/H

You can find information on the media redundancy method MRP of the redundant S7-1500R/H system in section Configuring PROFINET IO on a redundant S7-1500R/H system (Page 285).

Application example: Reading the MRP status in the user program

The "LPNDR_ReadMRPState" function block from the "LPNDR" block library helps you to determine the status of the MRP ring per program. The block reads the MRP information from the PROFINET device (MRP Manager) and outputs the status.

The "LPNDR" block library and the corresponding documentation can be found in this application example (https://support.industry.siemens.com/cs/ww/de/view/109753067).

6.4.2 Configuring media redundancy

Configuring MRP

Proceed as follows to create a PROFINET IO configuration with MRP in STEP 7:

1. Generate a ring via the port interconnections in the topology view. First interconnect the devices to a line topology. Connect the unassigned port of the last device in the line with the unassigned port of the first device.
   The following example shows one CPU 1516-3 PN/DP and two interface modules IM 155-6 PN HF that are interconnected in a ring in the topology view of STEP 7.

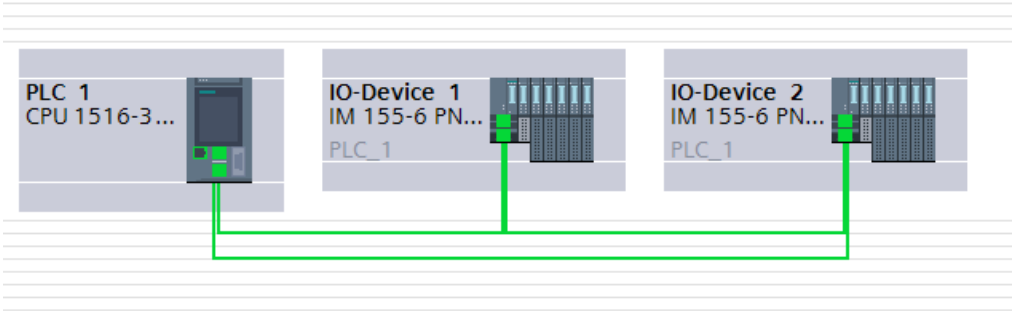

Figure 6-40 Configuring media redundancy

2. Select the PROFINET IO system in the network view.
3. In the Inspector window, navigate to "Properties" > "General" > "PROFINET" > "MRP domains" in the "Ring interconnections" field.
   This field shows you all the topological rings in the IO system with the associated MRP domains.
4. Select the ring generated above in the "Ring interconnections" field.
   The table below it shows all the PROFINET devices in the ring.

5. Set the media redundancy role for the PROFINET devices in the MRP role column.

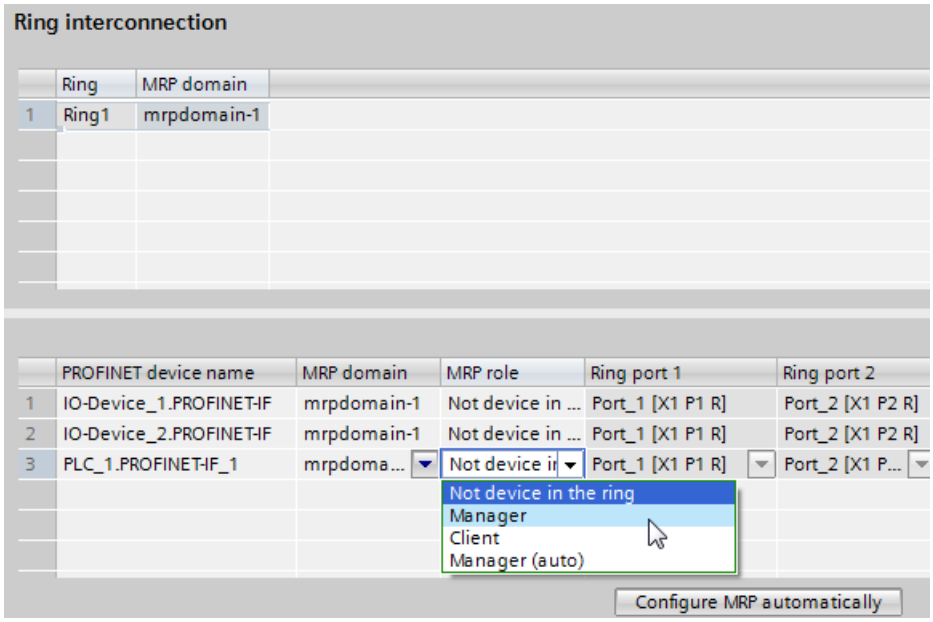

Figure 6-41 MRP domain

Automatic MRP configuration

You can also have the media redundancy roles assigned automatically for your PROFINET devices in the ring.

To have the media redundancy roles assigned automatically, click the "Configure MRP automatically" button. STEP 7 automatically assigns the media redundancy role for each device in the ring. After the automatic MRP configuration, you can make modifications to the media redundancy roles in the "MRP role" column.

"Media redundancy" setting options

Media redundancy role

Depending on the device used, the roles "Manager", "Manager (auto)", "Client" and "Not device in the ring" are available.

Rules:

- A ring must have precisely one device with the role "Manager". No additional devices with the role "Manager" or "Manager (auto)" are permissible. All the other devices may only have the "Client" role.
- If a ring has no device with the "Manager" role, the ring must at least have a device with the role "Manager (auto)". Any number of devices with the "Client" role may exist.
- Managers and clients of an MRP domain can be configured in different projects. In the project without a manager, you need to select the "Redundancy manager outside the project" option so that the configuration can be compiled. For multiple ring configurations, you need to set the option identically for each MRP domain.

Ring port 1 / Ring port 2

Select one at a time those ports you want to configure as ring port 1 or ring port 2. The drop-down list box shows the selection of possible ports for each device type. If the ports are set at the factory, then the fields are unavailable.

If you use single-stage commissioning, use the preset ring ports in STEP 7.

Diagnostic interrupts

If diagnostic interrupts to the MRP state are to be output in the local CPU, select the "Diagnostic interrupts" check box. The following diagnostic interrupts can be configured:

- Wiring or port error
  Diagnostic interrupts will be generated for the following errors in the ring ports:
  - A neighbor of the ring port does not support MRP.
  - A ring port is connected to a non-ring port
  - A ring port is connected to the ring port of another MRP domain.
- Interruption / return (redundancy manager only)
  - In case the ring is interrupted, a diagnostic interrupt "Ring open (incoming)" is generated.
  - When the ring is closed, the diagnostics "Ring open (outgoing)" is generated.

You can respond to these events in the user program by programming the appropriate response in the diagnostic error interrupt OB (OB 82).

Reference

You can find the procedure for configuring a common MRP ring and the topology with two projects in this FAQ (https://support.industry.siemens.com/cs/ww/en/view/109741671).

6.4.3 Media redundancy with planned duplication of frames (MRPD; not for S7-1500R/H)

MRP extension "Media Redundancy with Planned Duplication of frames" (MRPD)

The MRP extension "Media Redundancy with Planned Duplication of frames" (MRPD) provides the advantage that, in the case of a failure of a device or a line in the ring, all other devices continue to be supplied with IO data without interruption and with short update times.

MRPD is based on IRT and MRP. To realize media redundancy with short update times, the PROFINET devices participating in the ring send their data in both directions. The devices receive this data at both ring ports so that there is no reconfiguration time.

Requirements for media redundancy with MRPD

- All the devices of the ring must support MRPD, for example interface module IM 155-6 PN HS as of firmware version 4.0.
- You have configured MRP for all the devices of the ring. You have assigned the MRP role "Not device in the ring" to devices that are not located in the ring.
- You have configured IRT for all the involved components.

Configuring MRPD

You do not have to explicitly activate MRPD in STEP 7. The function is available automatically as soon as all the requirements for MRPD are fulfilled.

Redundancy levels of IO devices with MRPD

The redundancy level of an IO device specifies how strongly the real-time communication is influenced in the case of a power interruption between an IO device and its IO controller.

- Full redundancy: No influence, because the IO controller and IO device are located in the same ring.
- Partial redundancy:
  - If the interruption takes place on a non-redundant part (line) between the IO device and IO controller, real-time communication is influenced.
  - If the interruption takes place on a redundant part (ring), real-time communication is not influenced.
- No redundancy: No redundant path between the IO device and its IO controller, communication is always influenced.

The figure below shows the redundancy levels of the IO devices for an example configuration with MRPD. The three devices in the ring and the switch have the redundancy level "Full redundancy". Device 4 has the redundancy level "Partial redundancy", because the connection between the switch and the device is not redundant.

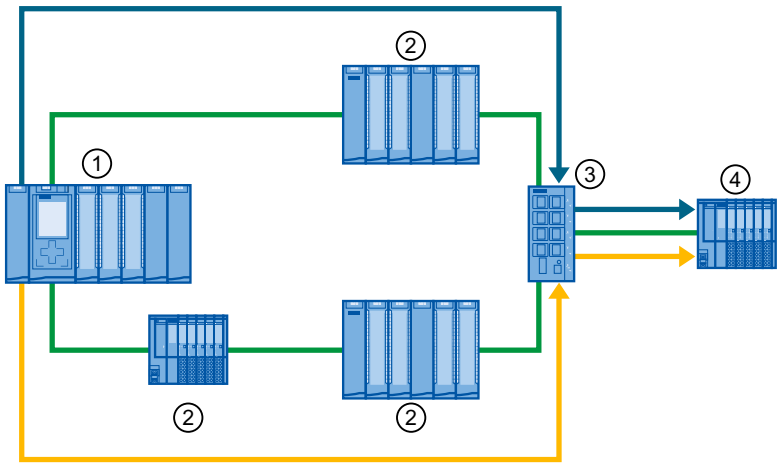

① IO controller in the ring

② IO device in the ring with redundancy level "Full redundancy"

③ Switch in the ring with redundancy level "Full redundancy"

④ IO device in the spur with the redundancy level "Partial redundancy"

Figure 6-42 Example configuration with MRPD

The figure below shows the display of the redundancy levels in STEP 7 for the example configuration.

IO devices

PROFINET device name	RT class	Synchronization role	Redundancy level	DFP group
plc_1.profinet interface_1	RT,IRT	Sync master		
io-device_1	IRT	Sync slave	Full redundancy	
io-device_2	IRT	Sync slave	Full redundancy	
io-device_3	IRT	Sync slave	Full redundancy	
io-device_4	IRT	Sync slave	Partial redundancy	
switch_1	IRT	Sync slave	Full redundancy	

Figure 6-43 Display of the redundancy levels in STEP 7

6.4.4 Multiple rings

Multiple rings

Use multiple rings to achieve higher availability for PROFINET IO networks with star topology. In a multiple ring configuration, several PROFINET lines lead from a switch (star topology). The individual PROFINET lines lead from IO device to IO device. Redundant PROFINET cables run back to the switch from the last IO device on each individual line.

The switch operates as a manager. The manager must have two ring ports for each ring. Multiple rings are possible. The SCALANCE X414 as of firmware version 3.10, for example, supports up to 4 rings.

The manager monitors all the rings individually: It checks for each particular ring (an MRP domain) whether the transmission path is intact. To do this, it uses an MRP instance in each case. An MRP instance is required for each connected ring (set up automatically by STEP 7).

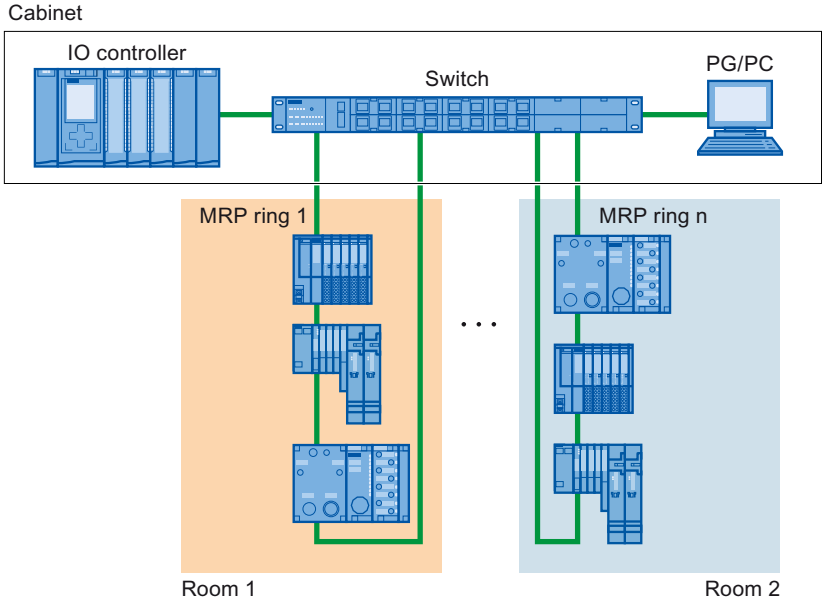

Figure 6-44 Configuration with several rings

Requirements

- SCALANCE X414 as of version 3.10
- SCALANCE X300 as of version 4.0 (configured via GSD file)

Rules for the configuration of multiple rings

- MRP role at multiple rings:
  - The device that belongs to all the rings must have the MRP role in every instance that is entered in the GSD file in the "SupportedMultipleRole" attribute.
  - The switches from the series SCALANCE X300 as of version 4.0 and the switch X414 as of version 4.10 support the MRP role "Manager" for multiple rings.
- If the device that belongs to all rings has the "Manager" role in one ring, no devices with the "Manager (Auto)" role may exist in this ring.

Configuring multiple rings

To configure an MRP configuration with multiple rings, follow these steps:

1. In the topology view, interconnect the ring ports of the devices that are intended to belong to an MRP domain to form a ring.
2. Select the PROFINET IO system in the network view.

3. In the Inspector window, navigate to "Properties" > "General" > "PROFINET" > "MRP domains" in the "Ring interconnections" field.
   This field shows you all the topological rings in the IO system with the associated MRP domains.
4. Select one of the rings generated above in the "Ring interconnections" field.
   The table below it shows all the PROFINET devices in the ring.
5. Set the media redundancy role for the PROFINET devices in the MRP role column.

Example of multiple rings

The following figure shows an example configuration for multiple rings.

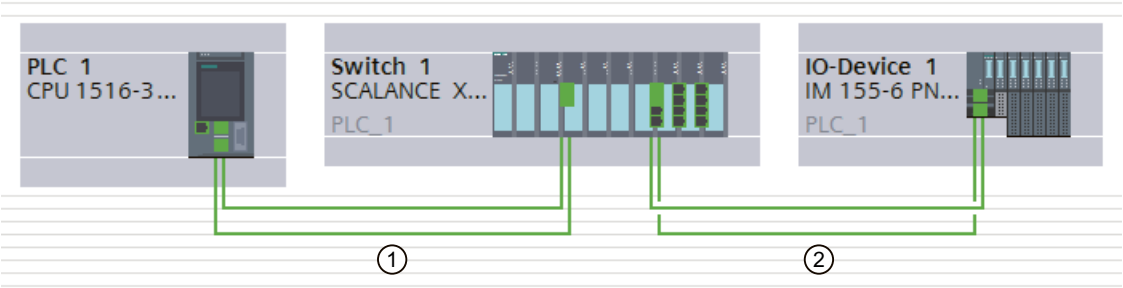

Figure 6-45 Example configuration with two rings 1 and 2

In the example, Switch 1 belongs to two MRP rings. Ring 1 is formed by Switch 1 and PLC 1, Ring 2 by Switch 1 and IO device 1.

STEP 7 automatically assigns the "Manager" role to the switch. The other devices receive the "Client" role.

The manager is located at the point of intersection of the two rings 1 and 2. The manager monitors the two rings separately. To do this, it uses two MRP instances.

One MRP instance checks whether all devices in ring 1 are reachable, another instance monitors whether all devices in ring 2 are reachable (only one device in each case in the example).

You can configure each MRP instance separately.

The following figure shows the two MRP instances in the manager (PROFINET interface of the switch). Here in the example, MRP instance 1 checks whether the devices in the MRP domain "mrpdomain-1" can be reached. The MRP instance 2 is responsible for monitoring the devices of the MRP domain "mrpdomain-2".

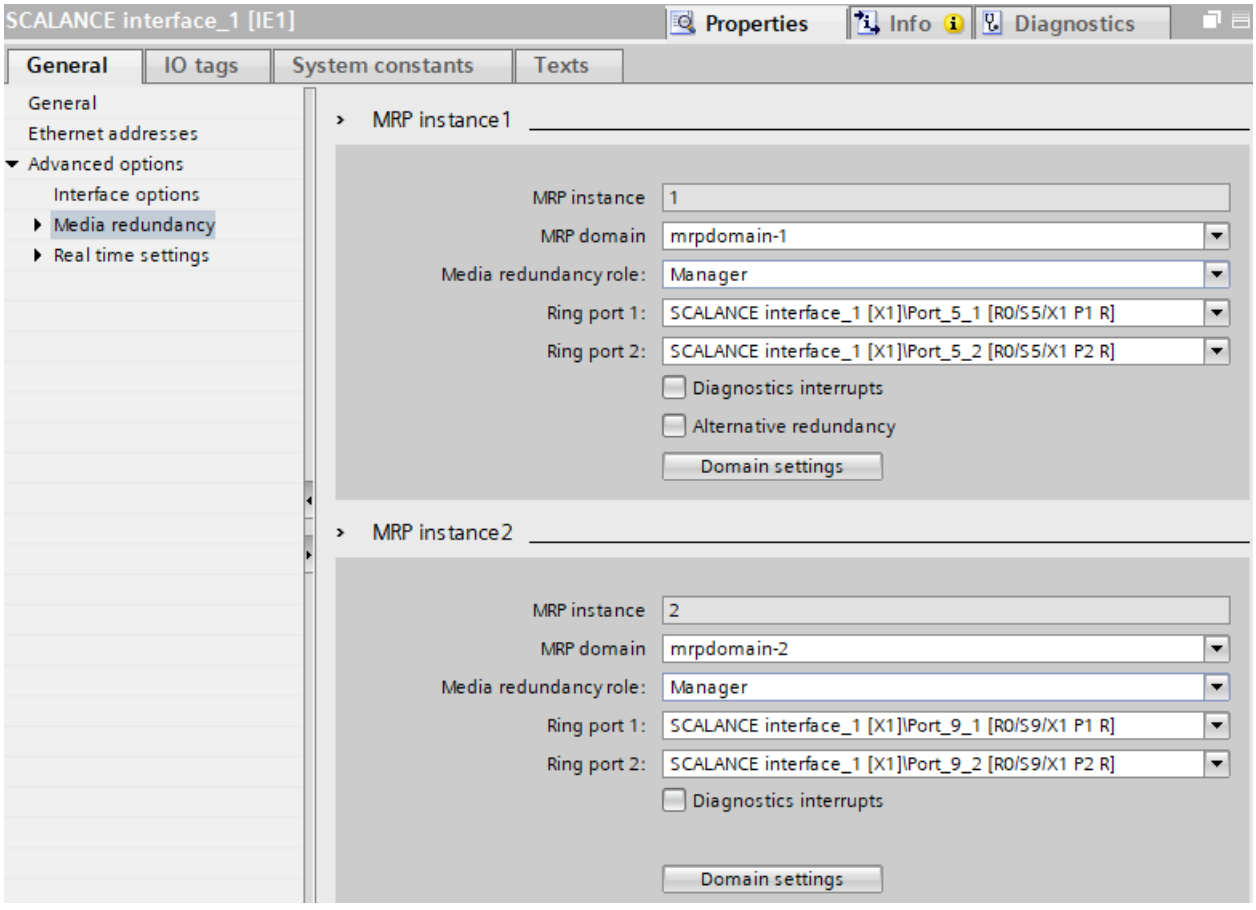

Figure 6-46 Setting media redundancy for multiple rings

The following figure shows Ring 1 (mrpdomain-1). The participants of the mrpdomain-1 are the PROFINET interface of the CPU as the "Client" and the MRP interface 1 of the PROFINET interface of the switch as the "Manager".

Ring interconnection

	Ring	MRP domain
1	Ring1	mrpdomain-1
2	Ring2	mrpdomain-2

	PROFINET device name	MRP instance	MRP domain	MRP role	Ring port 1	Ring port 2
1	PLC_1.PROFINET-IF_1		mrpdomain-1	Client	Port_1 [X1 P1 R]	Port_2 [X1 P2 R]
2	Switch_1.SCALANCE-IF_1	1	mrpdomain-1	Manager	Port_1 [R0/S5/X1 P1 R]	Port_2 [R0/S5/X1 P2 R]

Figure 6-47 Ring 1

The following figure shows Ring 2 (mrpdomain-2). The participants of the mrpdomain-2 are the PROFINET interface of the IO device as the "Client" and the MRP instance 2 of the PROFINET interface of the switch as the "Manager".

Ring interconnection

	Ring	MRP domain
1	Ring1	mrpdomain-1
2	Ring2	mrpdomain-2

	PROFINET device name	MRP instance	MRP domain	MRP role	Ring port 1	Ring port 2
1	IO-Device_1.PROFINET-IF		mrpdomain-2	Client	Port_1 [X1 P1 R]	Port_2 [X1 P2 R]
2	Switch_1.SCALANCE-IF_1	2	mrpdomain-2	Manager	Port_5 [R0/S9/X1 P1 R]	Port_6 [R0/S9/X1 P2 R]

Figure 6-48 Ring 2

6.4.5 MRP interconnection

Definition

The process MRP interconnection is an enhancement of MRP and allows the redundant coupling of two or more rings with MRP in PROFINET networks. MRP interconnection is - like MRP - specified in the standard IEC 62439-2 (Edition 3).

Advantages

MRP interconnection allows the monitoring of larger topologies with ring redundancy. With MRP interconnection, you are not limited to the maximum number of 50 devices in a ring when setting up redundant network topologies. For information on the quantity structure of MRP Interconnection, refer to the SCALANCE XM-400/XR-500 Web Based Management (WBM) (https://support.industry.siemens.com/cs/ww/en/view/109760840) configuration manual.

Requirements

- The media redundancy procedure MRP is used in the participating rings.
- Each ring has its own MRP domain with an MRP manager and MRP clients.
- As MRP managers in the rings, the PROFINET devices support MRP interconnection (see technical specifications of the devices).
  S7-1500 CPUs as of firmware version V2.9 support MRP interconnection.
- If you use PROFINET devices with more than 2 ports as MRP clients in the ring, then MRP interconnection is binding for these devices. For a device without MRP interconnection, telegrams leave the ring. This results in an additional load on the network.
- If you use PROFINET devices with only 2 ports in the ring as MRP clients, then MRP interconnection is recommended for all devices in the ring.

4 devices for MRP interconnection connections

2 MRP-interconnection connections provide redundant coupling between 2 MRP rings. Four devices are required for the 2 connections:

- A Media Redundancy Interconnection Manager (MIM)
- 3 media-redundancy interconnection clients (MIC):
  - Primary MIC
  - Primary Coupled MIC
  - Secondary Coupled MIC

Since each of the four devices is part of an MRP ring, each device also assumes a media redundancy role.
Each of the 4 devices can take over the MRP manager role or MRP client role.

Topology

The following screen shows the redundant coupling of 2 MRP rings.

Redundancy: If the primary connection (primary link) between the two rings is interrupted, the secondary connection (secondary link) takes over the data exchange between the rings after a short reconfiguration time.

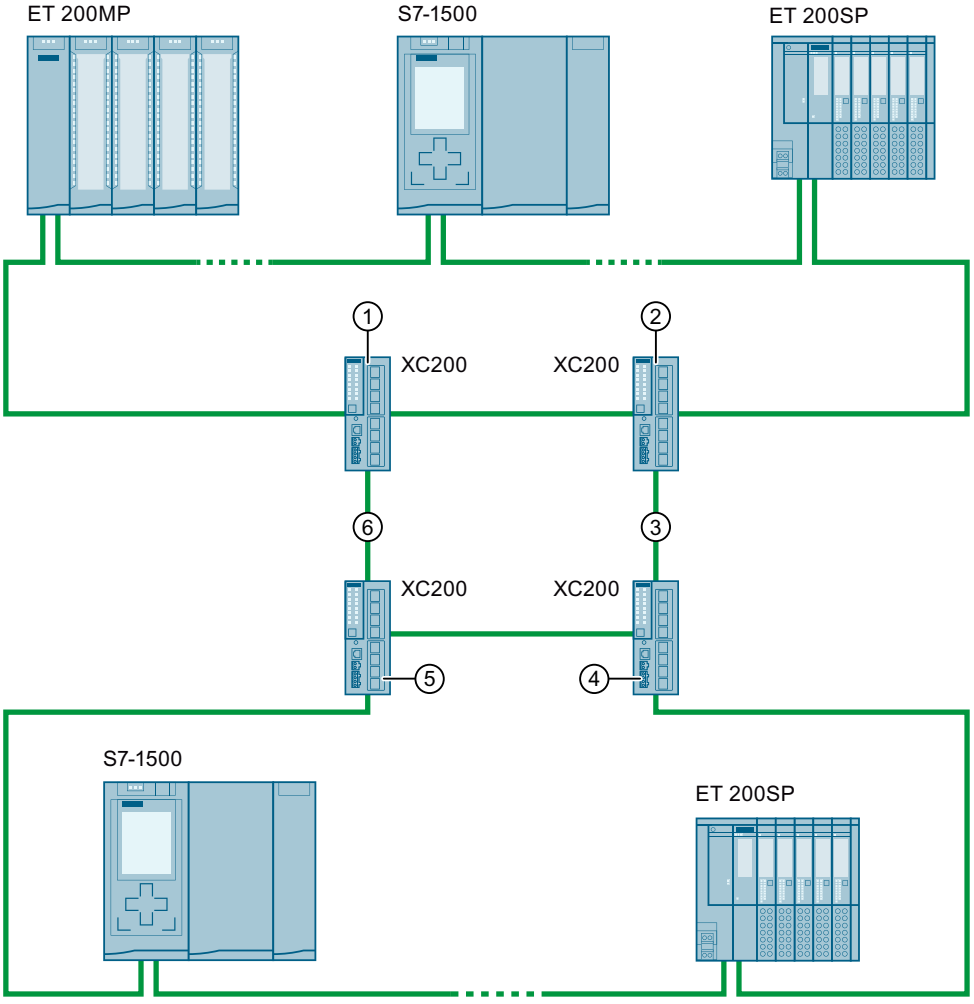

① Primary MIC
② Media Redundancy Interconnection Manager (MIM)
③ Secondary link
④ Secondary Coupled MIC
⑤ Primary Coupled MIC
⑥ Primary link

Figure 6-49 Example: Redundant connection of 2 rings with MRP interconnection

Function of the interconnection ports

Interconnection ports are appropriately configured PROFINET ports of the 4 devices for MRP interconnection. The primary or secondary connection of the rings exists between the interconnection ports.

Via the interconnection ports; the MIM is always informed about the connection status between the Primary MIC and the Primary Coupled MIC ("primary connection") as well as its own connection to the Secondary Coupled MIC ("secondary connection").

Depending on the connection status of the interconnection ports, each MIC sends a message to the MIM when its status changes (Link-Up or Link-Down).

In regular operation the data between the two rings is exchanged over the primary connection (primary link) and the MIM blocks its interconnection port.

Link-Down of the primary connection

In the figure below, the primary connection was interrupted (Link-Down).

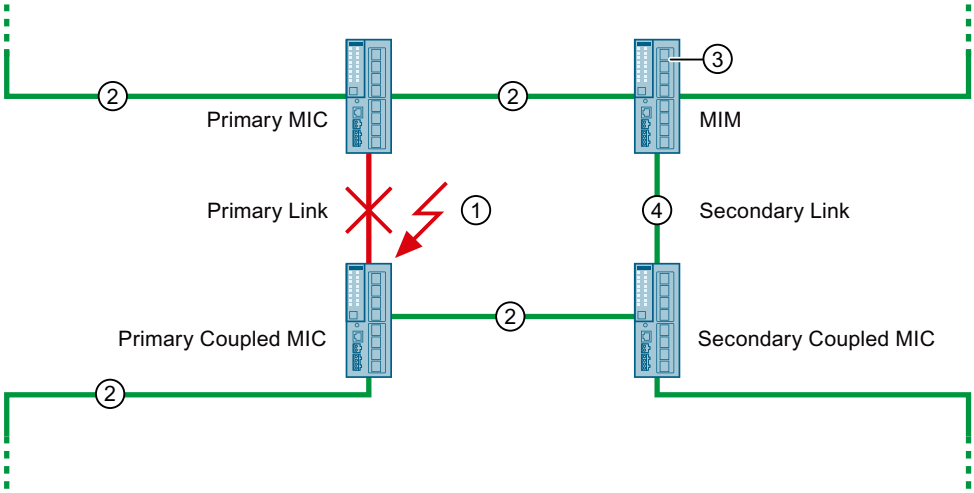

① Link-Down
② Status message: Link-Down primary connection
③ Blocking of the interconnection port is released
④ Data exchange via secondary connection

Figure 6-50 Link-Down of the primary connection

With a Link-Down of the primary connection ①, Primary MIC and Primary Coupled MIC send the status message "Link-Down" via all lines ②.

The MIM then unblocks its interconnection port at ③ and informs the MRP managers in both rings to trigger the reconfiguration of the rings.

After the reconfiguration, the data exchange between the two rings takes place via the secondary connection ④.

As soon as Primary MIC and Primary Coupled "Link-Up" for the primary connection, the MIM blocks its interconnection port and informs the MRP managers in both rings to trigger the reconfiguration of the rings.

After the reconfiguration, the data exchange is again carried out via the primary connection.

Configuring and assigning MRP interconnection parameters

NOTE

MRP interconnection is not integrated into the TIA Portal. This means you cannot configure, parameterize and diagnose MRP interconnection in STEP 7.

You configure and assign MRP interconnection parameters via the integrated web pages (Web Based Management) of the SCALANCE switches used as MIM and MIC (e.g. SCALANCE XC200, XM-400, XR-500).

For the configuration, follow the step-by-step instruction in the configuration manual SCALANCE XM-400/XR-500 Web Based Management (WBM) (https://support.industry.siemens.com/cs/ww/en/view/109760840).

Reconfiguration and watchdog timer

The reconfiguration time of the rings is typically less than 200 milliseconds.

In order for the data exchange to work after a reconfiguration, the watchdog timers of the IO devices must be set sufficiently large. Therefore, when using MRP interconnection, set the watchdog timer of the IO devices to 256 milliseconds or more.

6.5 Real-time communication

6.5.1 Introduction

Propertiessee IRT

PROFINET IO is a scalable real-time communication system based on the Layer 2 protocol for Fast Ethernet. With the RT transmission method, two real-time-support performance levels are available for time-critical process data and IRT for high-accuracy and also isochronous processes .

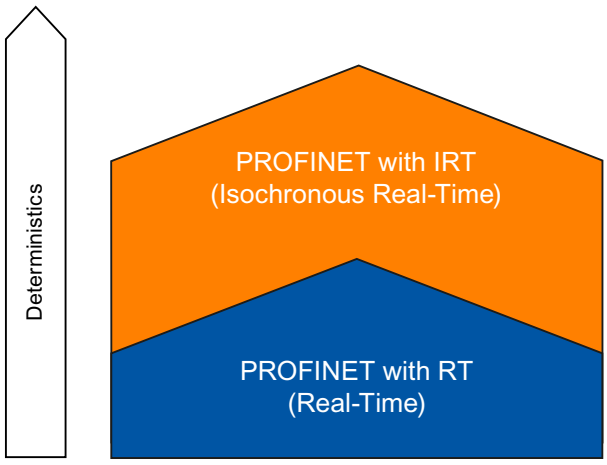

Figure 6-51 Real-time communication performance

Real-time communication and IT communication

Industrial communication, especially in the factory automation and process automation, requires a punctual and deterministic data transmission. This is why, for the cyclic exchange of time-critical IO user data, PROFINET IO does not use TCP/IP, it uses real-time communication (RT) or isochronous real-time communication (IRT) for the synchronized data exchange in reserved time intervals.

Fields of application of PROFINET with RT

PROFINET with RT is suited for:

- Time-critical applications in factory automation
- The implementation of large quantity structures in line process plants

Fields of application of PROFINET with IRT

PROFINET with IRT is particularly suitable for:

- Considerable deterministics with large quantity structures concerning the I/O user data communication (productive data)
- Considerable performance also with many devices concerning the I/O user data communication (productive data)
- Parallel transfer of productive and TCP/IP data via a cable, even with considerable data traffic whilst ensuring the forwarding of productive data by reserving the transmission bandwidth.

International standard IEC 61158

The communication procedures RT and IRT are standardized in the international standard IEC 61158.

6.5.2 RT

PROFINET IO with real-time communication (RT) is the ideal solution for integrating IO systems. This is a solution that also uses standard Ethernet in the devices and commercially available industrial switches as infrastructure components. A special hardware support is not required.

If you want to use PROFINET functions that provide an additional value, such as topology detection, diagnostics, device exchange without exchangeable medium/PG, you have to use switches that support the PROFINET standard according to the IEC 61158 standard. In the integrated switches of PROFINET devices and PROFINET switches (e.g., the SCALANCE product family), PROFINET functions in accordance with the PROFINET standard are implemented and can be used without restriction for integration in the PROFINET IO system (see also section Active network components (Page 30).

Real-time communication (RT)

PROFINET IO frames have priority over standard frames in accordance with IEEE802.1Q. This ensures the required determinism in the automation technology. The data is transferred via prioritized Ethernet frames. With RT, you can achieve update times ≥ 250 µs with RT.

Switching mechanisms

Switches in SIMATIC meet the real-time requirements with two mechanisms on PROFINET: "Store and forward" and "Cut through".

Store and forward

In the Store and forward method, the switch stores the frames completely and places them in a queue. If the switch supports the international standard IEEE 802.1Q, then the data is sorted according to its priority in the queue. The frames are then forwarded selectively to the specific port that can access the addressed node (Store and forward).

Cut through

In the Cut through process the entire data package is not stored temporarily in a buffer, it is passed directly onto the target port as soon as the target address and the target port have been determined.

The times required by the data package to pass through the switch are then minimal and independent of the frame length. The data are only stored temporarily in accordance with the Store and forward process as per priority when the section between the target segment and the port of the next switch is occupied.

6.5.3 IRT

Isochronous real-time communication (IRT)

IRT is a synchronized communication protocol for cyclic exchange of IRT data between PROFINET devices. A reserved bandwidth is available in the send cycle for IRT data. The reserved bandwidth ensures that the IRT data can be transferred at reserved synchronized intervals, without being influenced also by higher other network loads (such as TCP/IP communication, or additional real-time communication).

Advantages

PROFINET with IRT is synchronized communication in reserved time intervals. With IRT you have the option to be able to control time-critical applications such as motion control via PROFINET. With IRT you use further advantages:

- High-precision deterministics allow highest control quality and thus, for example, exact positioning of axes
- Simple and flexible integration of PROFINET devices for real-time applications in existing company networks
- Shortest response times and highest deterministics by means of bandwidth reservation and thus also for applications that have to satisfy highest performance requirements (e.g., printing control/position control for presses, print-mark recognition with packaging machines)
- Secured standard communication parallel to real-time communication via the same transmission medium
- You can continue to use standard components for your PROFINET IO system outside of the sync domain

Properties of isochronous real-time

Topology configuration is a prerequisite for IRT.

In addition to the reserved bandwidth, the frames from defined transmission paths are exchanged for the further optimization of data transfers. For this, the topological information from the configuration is used for planning the communication. Transmission and reception points of every individual data frame at every communication node are thus guaranteed. This allows you to achieve optimal usage of the bandwidth and reach the best possible performance in the PROFINET IO system.

Use of IRT allows you to achieve update times with very high deterministics ≥ 125 µs and a jitter accuracy of the send clock < 1 µs. Isochronous applications are possible with IRT (see section Isochronous mode (Page 203)).

* The minimum update time depends on the CPU used. The update times supported by a CPU are listed in the technical specifications of the CPU manual.

NOTE

IWLAN and IRT

PROFINET devices that are connected to PROFINET IO via access points, do not support IRT.

Synchronization

The prerequisite for the IRTcommunication is a synchronization cycle for all PROFINET devices in a sync domain for distributing a mutual time basis. A synchronism of the transmission cycle of the PROFINET devices within a sync domain is achieved with this basic synchronization.

A sync master specifies the clock to which sync slaves are synchronized. An IO controller or an IO device can have the role of sync master. If the sync master fails, all IO devices with IRT will fail.

Sync master and sync slaves are always devices in a sync domain. Bandwidth is reserved within the sync domain for IRT communication. Real-time and non-real-time communication (TCP/IP communication) is possible outside of the reserved bandwidth.

Default sync domain

If you have created a PROFINET subnet, a special sync domain is automatically created, the default sync domain. All PROFINET devices configured for the PROFINET subnet automatically belong to this sync domain.

For additional information on creating sync domains, refer to the STEP 7 online help.

Time ranges of the communication cycle

The communication cycle is divided into three time ranges, which are shown in the following chart:

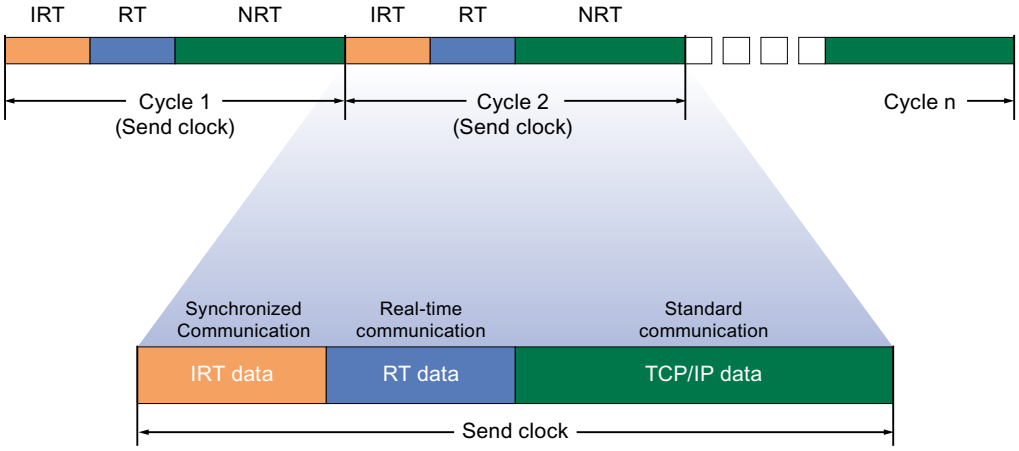

Figure 6-52 Reserving bandwidth

- IRT data (synchronized communication)
  This time range can be reserved in specific steps, depending on the send clock. Only IRT data is transmitted during this time range.
- RT data (real-time communication)
  The cyclic RT data is transferred in this time range. RT data is prioritized over "normal" TCP/IP data. TCP/IP data or Ethernet frames can have a priority of between 1 and 7. RT data have the Priority 6.
- TCP/IP data (standard communication)
  Standard communication (e.g., TCP/IP) is transmitted in the remaining interval of the communication cycle.

In STEP 7, you can set the ratio of the bandwidth usage of cyclic IO data to standard communication. For information on how to set the bandwidth usage, refer to the section Setting the bandwidth usage for the send clock (Page 189)

6.5.4 Comparison of RT and IRT

The most important differences between RT and IRT

Table 6-2 Comparison between RT and IRT

Property	RT	IRT
Transmission method	Prioritizing the RT frames through Ethernet priority (VLAN tag)	Path-based switching on the basis of a communication path plan; no transmission of TCP/IP frames in the time range with IRT communication.
Determinism	Variance of the duration of transmission by the shared use of the transmission bandwidth with other protocols (e.g., TCP/IP)	Exact, planned transmission, transmission and reception times are guaranteed for all topologies.

Property	RT	IRT
Hardware support through special Ethernet controllers is required	Not required	Required
Isochronous application	-	Yes
Starting time of the isochronous application	-	The point in time for the reception of the data is planned exactly. Application can be started synchronized to the cycle.

6.5.5 Configuring PROFINET IO with IRT

Introduction

If you want to configure a PROFINET IO system with IRT, you have to configure the PROFINET IO devices. These PROFINET devices must support IRT. Set which device acts as the sync master and synchronizes the other devices. This is done by configuring a sync domain with a sync master and at least one sync slave.

Requirement

- There is an IO system with an IO controller and at least one IO device.
- You have configured the topology for the IO system.
- The devices support IRT.

Procedure

Proceed as follows to enable an existing IO system for the use of IRT:

1. Select the PROFINET interface of the IO controller.
2. In the Inspector window, navigate to "Advanced options > Real time settings > Synchronization".

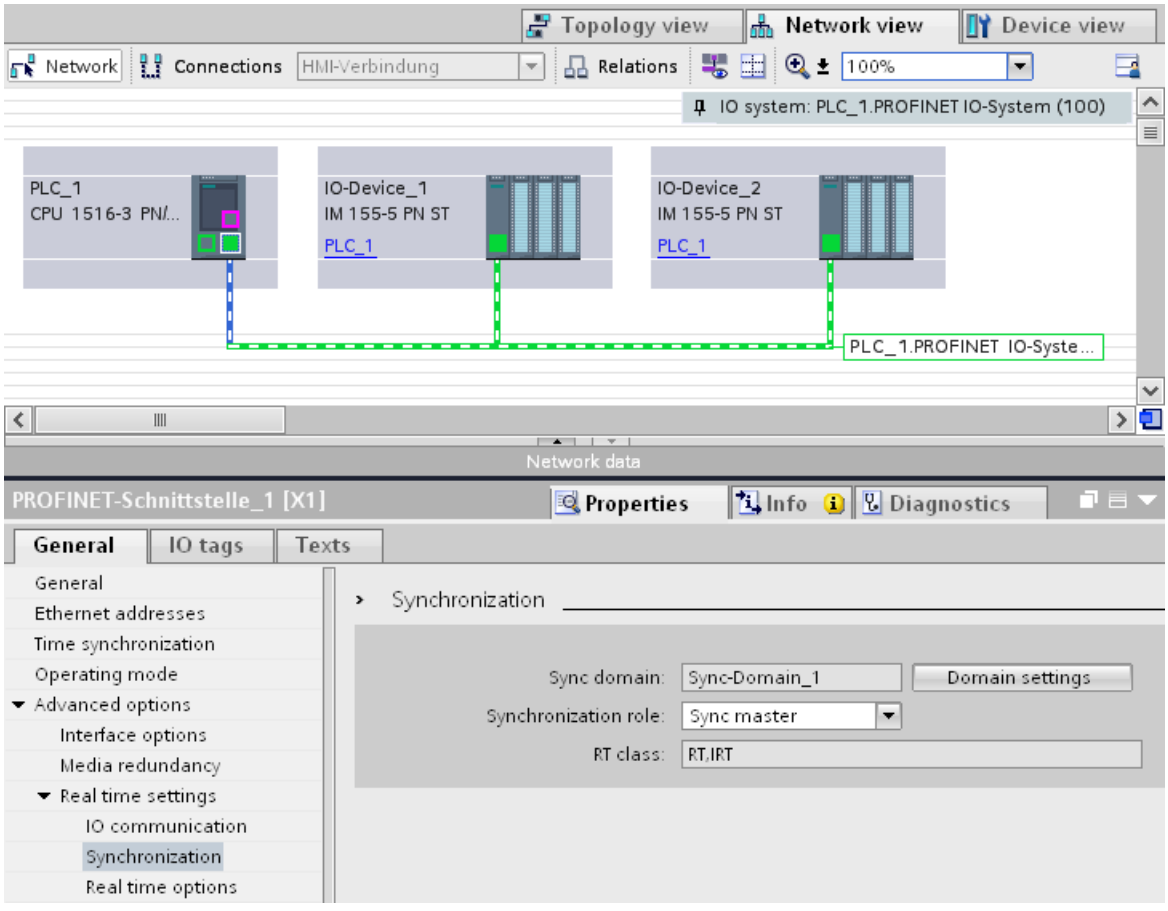

Figure 6-53 IRT configuring sync master

3. Assign the IO controller the role of sync master under "Synchronization role".
4. Select the PROFINET interfaces of an associated IO device.

5. In the Inspector window, navigate to "Advanced options > Real time settings > Synchronization".

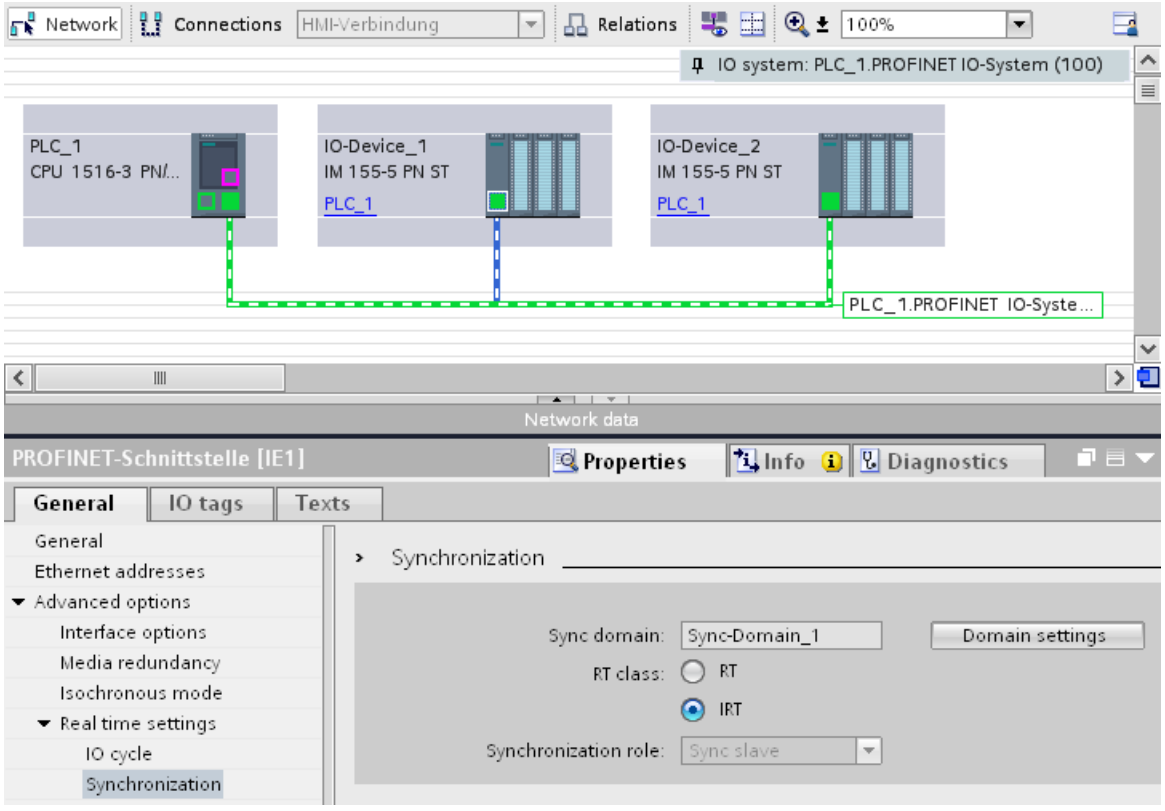

Figure 6-54 IRT configuring sync slave

6. Activate the RT class "IRT". The IO device will then automatically be assigned the synchronization role "sync slave".
7. You can check and correct your settings at any time using the "Domain settings" button.

Or

1. Highlight the PROFINET IO system in the network view.
2. Click on the PROFINET IO system.

3. Navigate to the device of the required sync domain in the Inspector window.

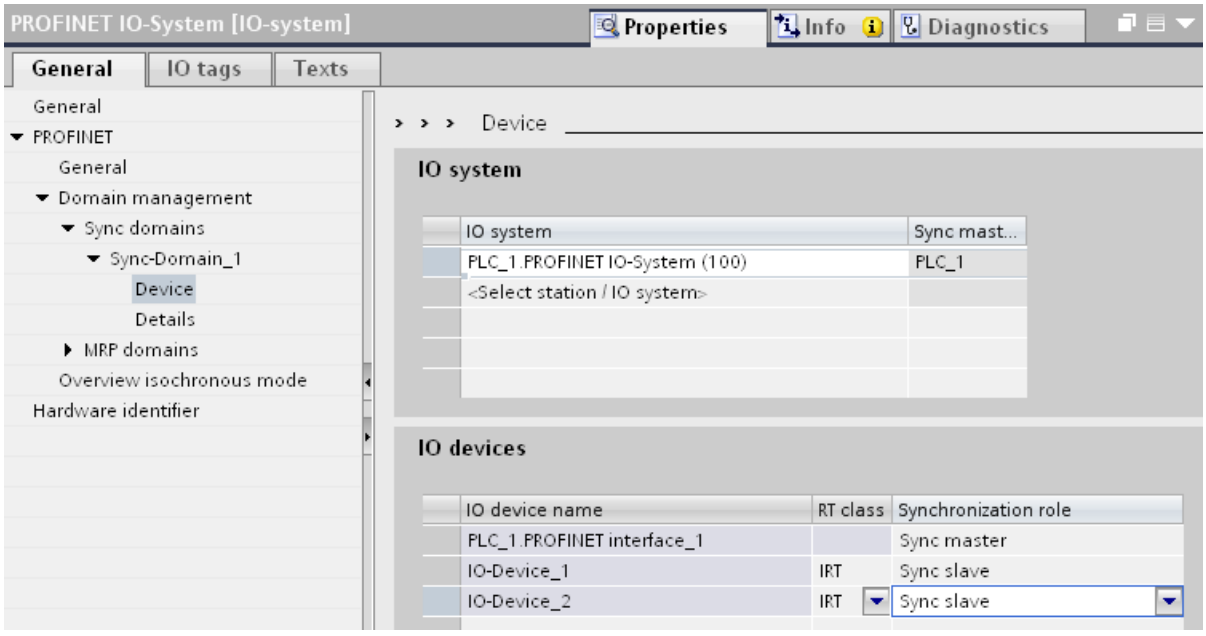

Figure 6-55 IRT configuring sync domain

4. Enter all necessary settings in the tables:
   - Select an IO system.
   - Set the synchronization role "sync master" for the IO controller.
   - Set the RT class for the IO devices to "IRT". The IO devices will then automatically be assigned the synchronization role "sync slave".

You can now load the configuration to the relevant devices with PROFINET IRT.

6.5.6 Setting the bandwidth usage for the send clock

Bandwidth level

For PROFINET IO with IRT, you can specify the maximum portion of the send cycle that you want to use for cyclic IO communication.

You have the following setting options for the bandwidth usage in STEP 7.

- Maximum 25% cyclic IO data. Focus on non-cyclic data.
- Maximum 37.5% cyclic IO data. Focus on non-cyclic data.
- Maximum 50% cyclic IO data. Balanced proportion.
- Maximum 90% cyclic IO data. Focus on cyclic IO data. (Requirement: The "Make 'high performance' possible" option is activated)

Setting the bandwidth usage

To set the bandwidth usage for a PROFINET IO system in STEP 7, follow these steps:

1. Select your IO system in the network view of STEP 7.
2. In the Inspector window, go to "Properties" > "General" > "PROFINET" > "Domain management" > "Sync domains" > "Name of the sync domain" > "Details".
3. Select the desired level of bandwidth usage from the "Bandwidth use" drop-drop down list box.

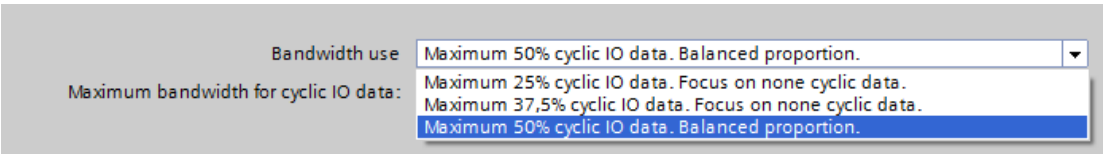

Figure 6-56 Setting the bandwidth usage

For information on how to set the bandwidth usage for IRT with maximum performance, refer to the section Configuration of IRT with high performance (Page 199)

6.5.7 Setup recommendations for optimizing PROFINET

Optimizing PROFINET with RT

PROFINET provides you with high-performance communication on all levels.

The following figures shows an example of an optimized PROFINET topology.

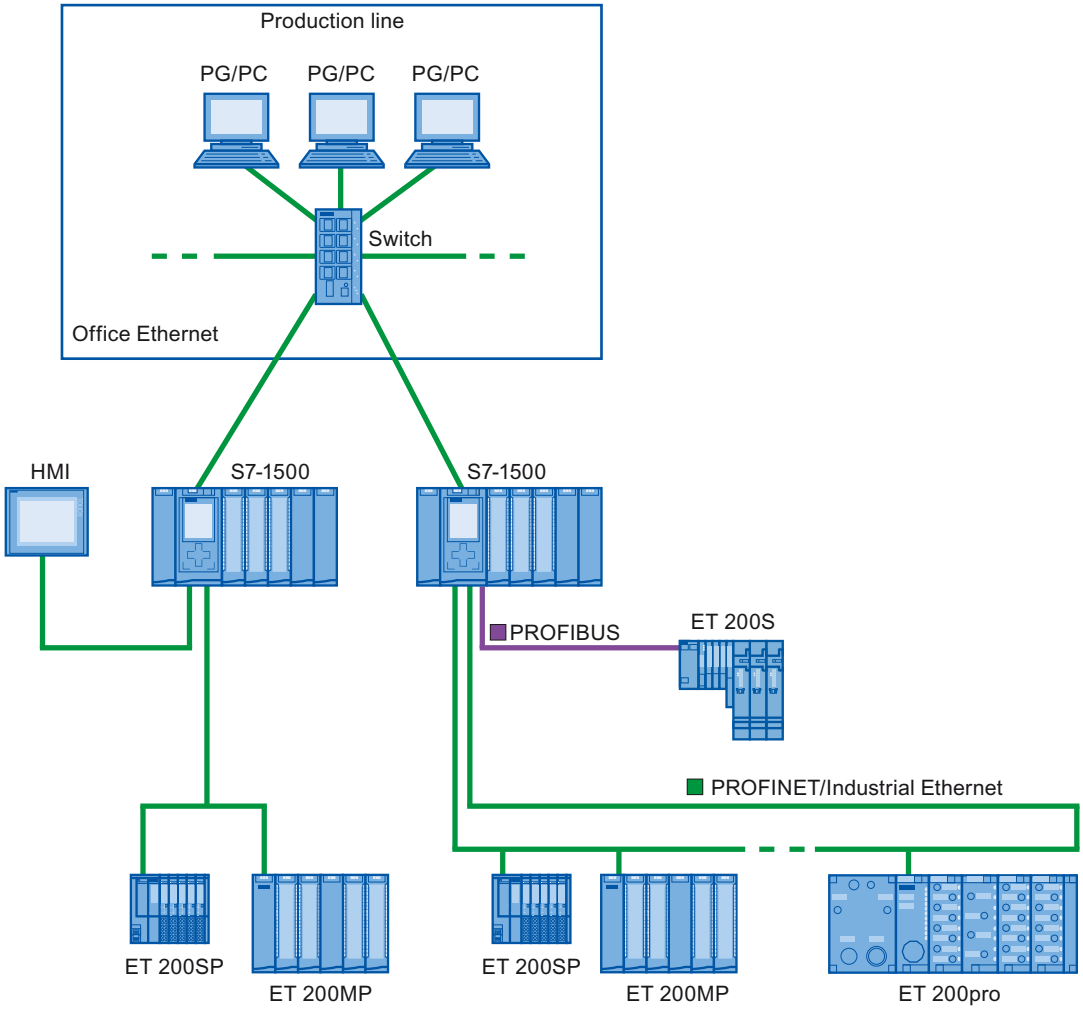

Figure 6-57 Optimized PROFINET topology

When setting up your PN network topology, take care that the various automation applications are distributed among separate network branches so that a sufficient bandwidth reserve will be available for future expansions.

- If you integrate standard Ethernet devices into the network topology or use standard Ethernet communication, take into account the network load caused by standard Ethernet and adapt the network topology as appropriate (max. bandwidth 100 Mbps).
- For communication with higher-level networks with a high data volume, use the most direct paths possible to the higher-level network infrastructure.

Also observe the Installation Guideline (http://www.profibus.com/nc/download/installation-guide/downloads/profinet-installation-guide/display/) of the PROFIBUS User Organization.

Setting up PROFINET with IRT

Keep in mind the following rules for setting up and operating a PROFINET IO system in IRT mode. These rules will ensure best possible operation of your PROFINET IO system.

- When using IRT, you must configure the topology. This will enable exact calculation of the update time, bandwidth, and other parameters.
- If you would like to use multiple sync domains, configure a sync boundary for the port which is currently connected to the PROFINET device of another sync domain.
- In a sync domain, you can only configure one sync master at a time.
- A PROFINET IO system may only be part of a single sync domain.
- If you configure PROFINET devices in a sync domain and want to synchronize with IRT, the PROFINET devices concerned must support IRT communication.
- If possible, use the same PROFINET device as the PROFINET IO controller and sync master.
- If only some of the PROFINET devices in a PROFINET IO system are synchronized, please keep in mind the following: Assign PROFINET devices that are not participating in the IRT communication to the RT class "RT" and the synchronization role "unsynchronized" in the sync domain.

Applications for CPU with multiple PROFINET IO interfaces

- Connecting machines: Your configuration contains machines located on separate IO lines. You can perform real-time communication between the CPUs over PROFINET IO interface X2. Use the I-device or shared I-device function for this purpose.
  The figure below shows an example configuration for two machines connected over the X2 interface with an I-device relationship.

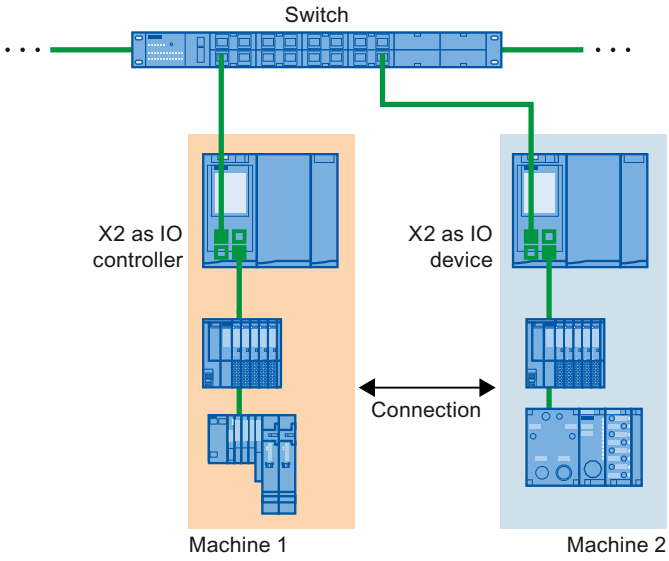

Figure 6-58 I-device connection over 2nd PNIO interface

- Distribution by automation tasks:
  - For automation tasks with high performance and deterministic requirements, use PROFINET with IRT over the X1 interface.
  - For other tasks that you can implement with RT, use the X2 interface.

If you use interface X2 as the PROFINET IO interface for one of the following CPUs, this can affect performance:

- CPU 1515(F)-2 PN
- CPU 1515T(F)-2 PN
- CPU 1516(F)-3 PN/DP
- CPU 1516T(F)-3 PN/DP
- CPU 1516(F)pro-2 PN

You can find additional information in the section PROFINET interface (Page 25) and in the Cycle and Response Times (https://support.industry.siemens.com/cs/ww/en/view/59193558) function manual.

Topological overlap of IO systems in multi-controller applications

In a configuration with multiple IO controllers, shared paths are subject to the combined network loads of all connected PROFINET IO systems.

To avoid high communication loads in multi-controller applications, observe the following recommendations:

- Avoid paths that are shared by multiple IO systems.
  The figure below shows a configuration with two PROFINET IO systems that use the same paths.

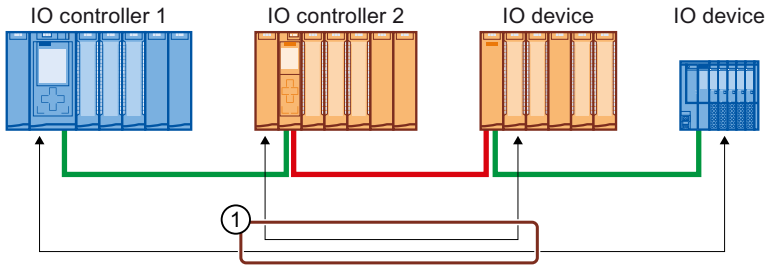

① Shared path

Figure 6-59 Multi-controller application with shared path

In the figure below, the two PROFINET IO systems do not use shared paths.

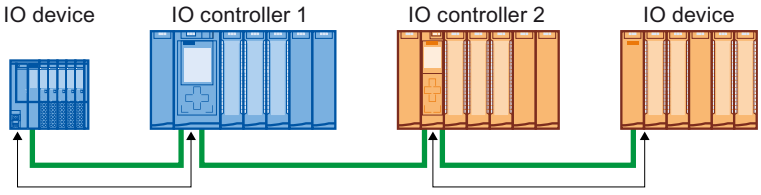

Figure 6-60 Multi-controller application with separate paths

- If separation is not possible: Increase the update time for the affected IO devices.

Installation guidelines of the PROFIBUS user organization

The installation guidelines can be found on the Internet (http://www.profibus.com/nc/download/installation-guide/downloads/profinet-installation-guide/display/).

6.5.8 Limitation of the data infeed into the network

Limiting the data infeed into the network on PROFINET interfaces

The "Limit data infeed into the network" function limits the network load of standard Ethernet communication which is fed into the network by the interface to a maximum value. This does not apply to cyclic real-time communication (RT/IRT).

In a PROFINET IO system, critical network loads can occur quickly with standard Ethernet communication, especially in line topologies. Devices which feed a lot of standard Ethernet communication into the PROFINET IO system, should support the function "Limit data infeed into the network". If necessary, you should optimize your topology by avoiding e.g. standard Ethernet devices in line topologies. You can find additional information on this in section Setup recommendations for optimizing PROFINET (Page 190).

Depending on the performance capability of the PROFINET interface, you can set in its properties whether or not the data infeed into the network should be limited. Requirements for adjustability:

- The interface offers sufficient performance.
- No IO data transfer is configured

If the conditions are not met, the data infeed is always limited.

Depending on the interface, you can activate or deactivate the "Limit data infeed into the network" function. If you use the X1 interface of an S7-1500 CPU as the IO controller or I-device, the "Limit data infeed into the network" function is always enabled. Example: If you are not using the X1 interface of an S7-1500 CPU as IO controller or I-device, you can enable or disable the function.

Uses of the limitation of the data infeed to the network

- Division of the bandwidth for standard Ethernet communication between devices:
  In PROFINET networks cyclic real-time communication and standard Ethernet communication share the same network. This means that only a limited bandwidth remains for standard Ethernet communication. The limitation of the data infeed ensures that the remaining bandwidth for standard Ethernet communication is not used just by one device, but is divided between several devices.
- Smoothing peaks in the data infeed:
  The limitation of the data infeed smooths peak loads of standard Ethernet communication (for example, from Open User Communication, access by the Web server).
- Prevent excessive data at the source:
  If applications in a device generate too much data, this data is not forwarded to the PROFINET network. Negative effects (for example data loss, communication interruption) remain limited to the device feeding in the data and its communications partner. Other nodes are not disturbed.

Setting limitation of the data infeed into the network for a CPU

To set the limitation of the data infeed into the network, follow these steps:

1. In the network view of STEP 7, select the interface of the CPU.
2. In the Inspector window, go to "Properties" > "General" > "Advanced options" > "Interface options".
3. Select or clear the "Limit data infeed into the network" check box.

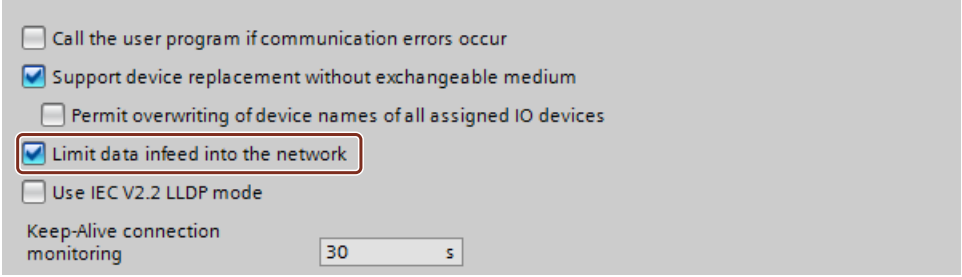

Figure 6-61 Limit data infeed into the network

6.6 PROFINET with performance upgrade

Performance upgrade

The performance upgrade implements the application class "High Performance" of the PROFINET specification V2.3.

The performance upgrade provides a series of measures that lead to the following improvements for PROFINET with IRT:

- Reduction of runtime delays in the IO devices
- Increase in the bandwidth for cyclic IO data
- Reduction of the bandwidth used for PROFINET frames
- Reduction of the send clocks

The improvements achieved with the performance upgrade mean that you can operate your PROFINET IO system with more devices with the same send clock or the same number of devices with a shorter send clock.

With PROFINET, it was previously possible to reach a send clock of 250 µs.

With the performance upgrade, it is now possible to achieve isochronous send clocks of up to 125 µs with the fast forwarding, dynamic frame packing and fragmentation procedures, depending on the performance capability of the CPU (see Technical Specifications in the device manuals). With short send clocks, standard communication remains possible.

The performance upgrade will help you to implement applications with high speed and send clock requirements.

6.6.1 Dynamic frame packing

Dynamic frame packing

Previously, individual PROFINET IO frames were sent for every PROFINET IO device.

The performance upgrade uses the dynamic frame packing procedure that is based on the summation frame method. With the summation frame method, a frame contains the user data for neighboring devices on a line. With Dynamic Frame Packing, every IO device takes its data from the frame and forwards the rest. The frame is shortened from IO device to IO device. Dynamic frame packing improves the use of the bandwidth in a line topology.

The following figure shows how Dynamic Frame Packing works based on the example of a frame containing the user data for 3 IO devices.

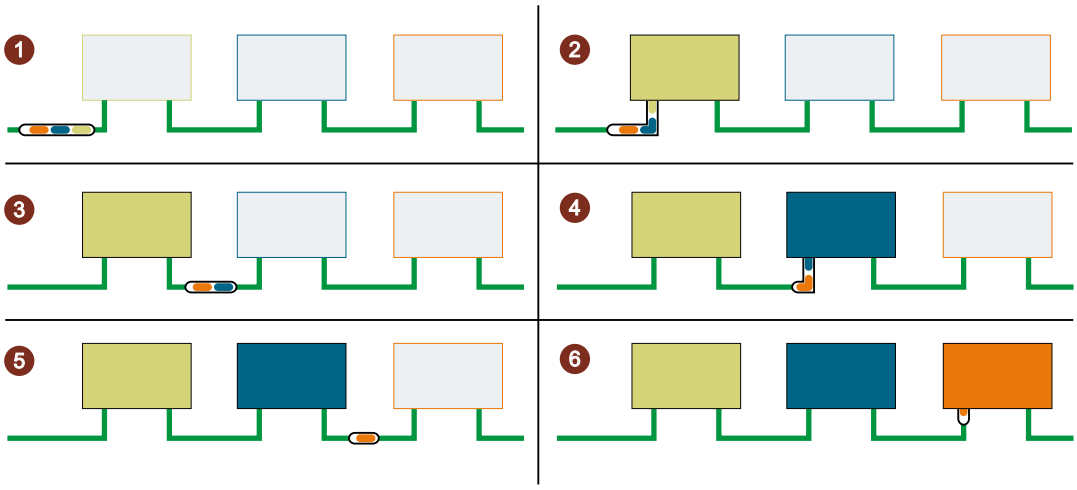

① The PROFINET IO frame contains the user data for all 3 IO devices (green, blue and orange).

② The PROFINET IO frame reaches the first IO device. The IO device takes its user data (green) from the frame and forwards the remaining frame.

③ The PROFINET IO frame contains the user data for two IO devices (blue and orange).

④ The PROFINET IO frame reaches the second IO device. The IO device takes its user data (blue) from the frame and forwards the remaining frame.

⑤ The PROFINET IO frame contains the user data for one IO device (orange).

⑥ The PROFINET IO frame reaches the last IO device. The IO device saves the entire frame including user data (orange).

Figure 6-62 Dynamic Frame Packing (DFP)

DFP groups

Dynamic frame packing automatically groups IO devices that support the performance upgrade into DFP groups. To be grouped together in a DFP group. the IO devices must be located one after the other in a line and must have the same update time and watchdog time. As soon as a maximum frame size for the DFP group is exceeded or a maximum number of members for a DFP group is reached, Dynamic Frame Packing automatically opens a new DFP group.

STEP 7 shows the DFP groups in "Domain management" > "Sync domains" > "Name of the sync domain" > "Device" in the "IO devices" box.

IO devices

PROFINET device name	RT class	Synchronization role	Redundancy level	DFP group
plc_3.profinet interface_1	RT,IRT	Sync master		
io-device_2	IRT	Sync slave	No redundancy	2
io-device_3	IRT	Sync slave	No redundancy	2
io-device_4	IRT	Sync slave	No redundancy	3
io-device_5	IRT	Sync slave	No redundancy	3

Figure 6-63 Display of the DFP groups in STEP 7

NOTE

Dynamic frame packing with high watchdog times

If you set the "Accepted update cycles without IO data" parameter higher than 31 for an IO device, Dynamic Frame Packing does not place this IO device in a DFP group.

6.6.2 Fragmentation

The transfer of a complete standard Ethernet frame with TCP/IP data takes up to 125 µs. This means that the cycle time for PROFINET IO data cannot be reduced by any desired amount.

The performance upgrade uses the fragmentation procedure, which breaks down TCP/IP frames into sub-frames. These frame segments are transferred to the target device over multiple send clocks; there they are reassembled to the original TCP/IP frame.

Fragmentation is a requirement for cycle times lower than 250 µs. In these short send clocks, you can use more bandwidth for cyclic IO data, since the fragments of the standard Ethernet frames use significantly less bandwidth than a complete standard Ethernet frame.

The following figure shows how fragmentation works.

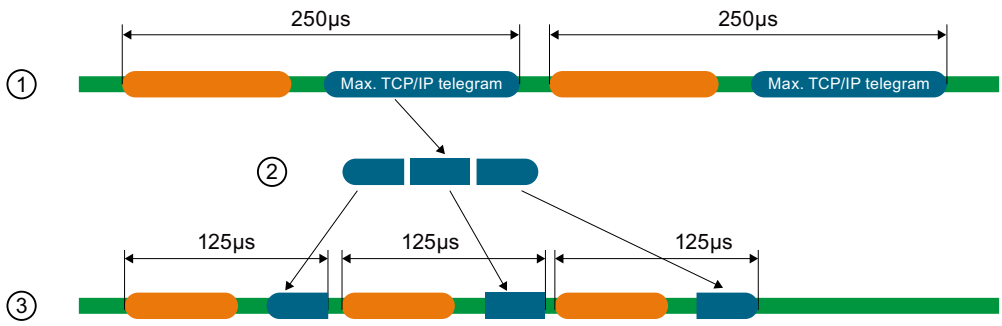

① A standard Ethernet frame with TCP/IP data is up to 125 µs.

② During fragmentation, the standard Ethernet frame is divided into frame segments.

③ The frame segments are divided into multiple short send clocks.

Figure 6-64 Fragmentation

NOTE

The PROFINET IO interface of the IO controller supports fragmentation if all the ports except one are deactivated.

6.6.3 Fast forwarding

To be able to decide whether a frame should be forwarded or used, a PROFINET IO device requires the frame ID. It previously took 1440 ns until the frame ID was present in the IO device.

The performance upgrade uses the fast forwarding procedure in which the frame ID is located nearer the front of the frame. The throughput time in the device is reduced to 320 ns.

With fast forwarding, the throughput time of the frame is reduced in your PROFINET IO system. This results in decisive performance advantages, particularly in line, ring and tree topologies.

The figure below compares the throughput of a PROFINET IO frame in an IO device with and without fast forwarding.

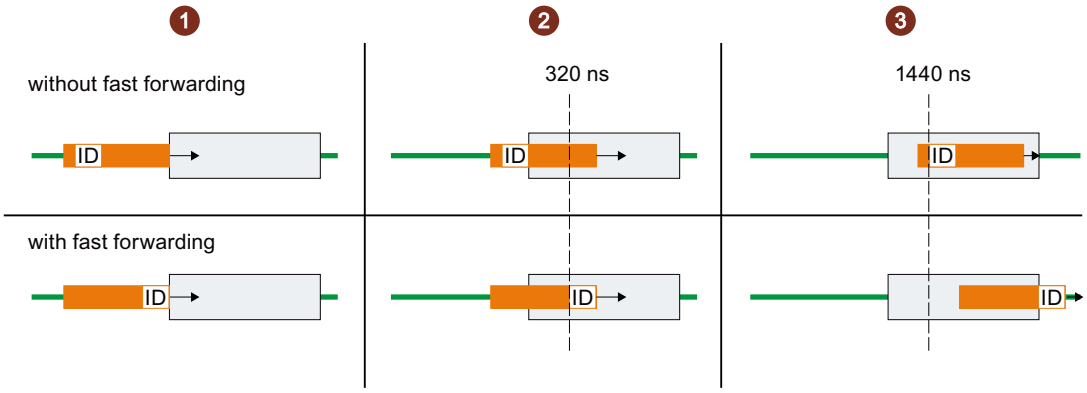

① Start:
- Both PROFINET frames reach the IO device.
  The IO devices start to check the frames for the frame ID

② After 320 ns:
- Without fast forwarding: The IO device is still checking the PROFINET frame for the frame ID.
- With fast forwarding: The IO device receives the frame ID from the PROFINET frame and forwards the frame.

③ After 1440 ns:
- Without fast forwarding: The IO device receives the frame ID from the PROFINET frame and forwards the frame.
- The PROFINET frame with fast forwarding is "ahead" of the PROFINET frame without fast forwarding.

Figure 6-65 Fast forwarding

6.6.4 Configuration of IRT with high performance

High-end applications with IO communication require excellent performance in IO processing, for example in the control of wind turbines (converter control).

To use IRT communication with the highest performance in your PROFINET IO system, enable the option "Make 'high performance' possible".

When you enable the "Make 'high performance' possible" option, this has the following effects:

- You can set send clocks of 187.5 µs and 125 µs (for example CPU 1518-4 PN/DP) or 187.5 µs (for example CPU 1517-3 PN/DP), see Technical specifications in the CPU device manuals.
- You can set more bandwidth use for cyclic IO data.
- You can use the option "Allows the use of 'fast forwarding'".

Requirements

- S7-1500 CPU as of firmware version V2.0

Enable the "Make 'high performance' possible" option.

Follow these steps to activate the "Make 'high performance' possible" option:

1. Select the PROFINET IO system in the network view of STEP 7.
2. In the Inspector window, go to "Properties" > "General" > "PROFINET" > "Domain management" > "Sync domains" > "Name of the sync domain".
3. Enable the "Make 'high performance' possible" option.

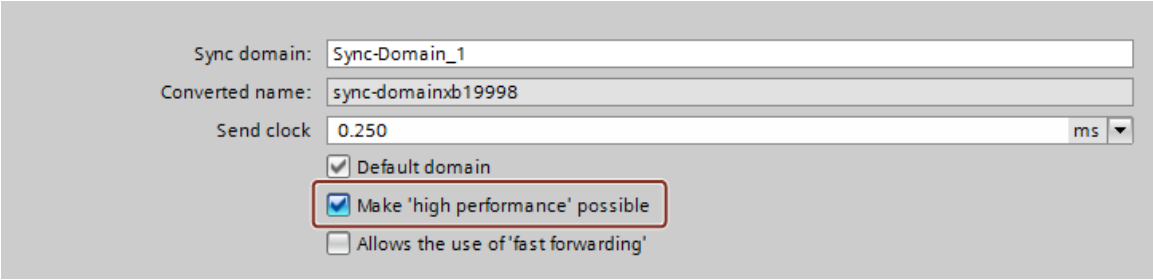

Figure 6-66 Activating high performance

Using more bandwidth for cyclic IO data

Requirement: The "Make 'high performance' possible" option is enabled.

To set more bandwidth for cyclic IO data for your PROFINET IO system, follow these steps:

1. Select your IO system in the network view of STEP 7.
2. In the Inspector window, go to "Properties" > "General" > "PROFINET" > "Domain management" > "Sync domains" > "Name of the sync domain" > "Details".
3. In the drop-down list, select "Maximum 90% cyclic IO data. Focus on cyclic IO data".

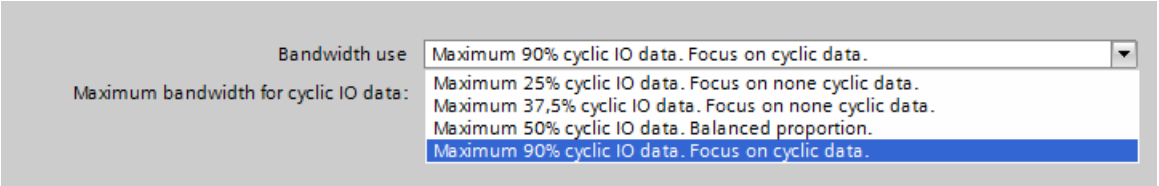

Figure 6-67 Using more bandwidth for cyclic IO data

NOTE

Bandwidth usage in isochronous mode

If you operate your PROFINET IO system in isochronous mode, avoid using the setting for the bandwidth usage "Maximum 90% cyclic IO data. Focus on cyclic IO data."

Setting low send clocks (example CPU 1518-4 PN/DP)

Requirement: The "Make 'high performance' possible" option is enabled.

1. Select the PROFINET IO system in the network view of STEP 7.
2. In the Inspector window, go to "Properties" > "General" > "PROFINET" > "Domain management" > "Sync domains" > "Name of the sync domain".

3. Select the send clock for "Send clock" in the drop-down list.

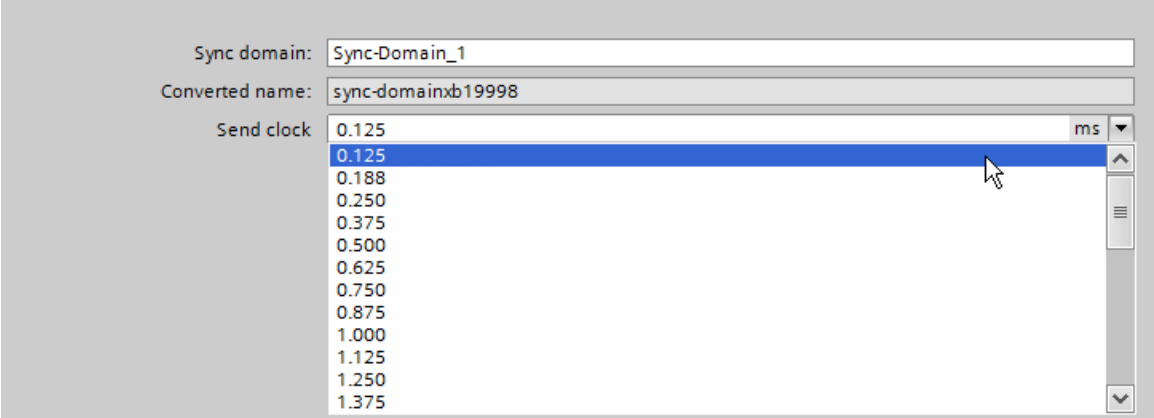

Figure 6-68 Setting low send clocks

Requirements for the fragmentation process (example CPU 1518-4 PN/DP)

If you use the following combinations for send clock and bandwidth settings, the devices in the IO system use the fragmentation process.

- Send clock cycle 125 µs: Always fragmentation irrespective of the bandwidth setting.
- Send clock cycle 187.5 µs: Fragmentation with the bandwidth settings "Maximum 50% cyclic IO data. Balanced proportion." and "Maximum 90% cyclic IO data. Focus on cyclic IO data."

The PROFINET IO interface of the controller supports fragmentation if all the ports except one are deactivated.

Optimizing port settings for low send clocks

You can further optimize the bandwidth use in your PROFINET IO system by using cables with a short cable length (< 20 m) or a short signal delay (max. 0.12 µs) between the devices.

To configure cables with a shorter length or signal delay in STEP 7, follow these steps:

1. Select the port in the topology view of STEP 7.
2. Navigate in the Inspector window to "Port interconnection" in the "Partner port" box.
3. Select the option "Cable length" or "Signal delay:".

4. Select the cable length or enter the signal delay.

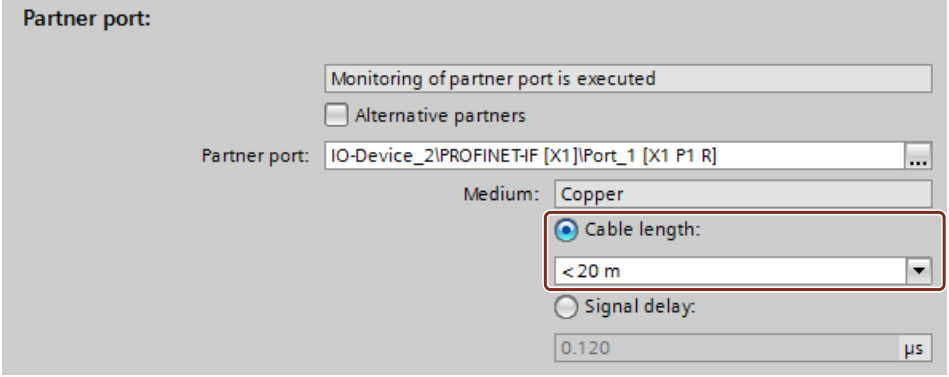

Figure 6-69 Optimizing port settings for low send clocks

Allowing fast forwarding

Requirements:

- The PROFINET IO device has to support the fast forwarding process so that the process can be used by the device.
- The "Make 'high performance' possible" option is enabled.
- The PROFINET IO interface supports fast forwarding if all the ports except one are deactivated.

Follow these steps to allow fast forwarding:

1. Select the PROFINET IO system in the network view of STEP 7.
2. In the Inspector window, go to "Properties" > "General" > "PROFINET" > "Domain management" > "Sync domains" > "Name of the sync domain".
3. Enable the "Allows the use of ‘fast forwarding'" option.

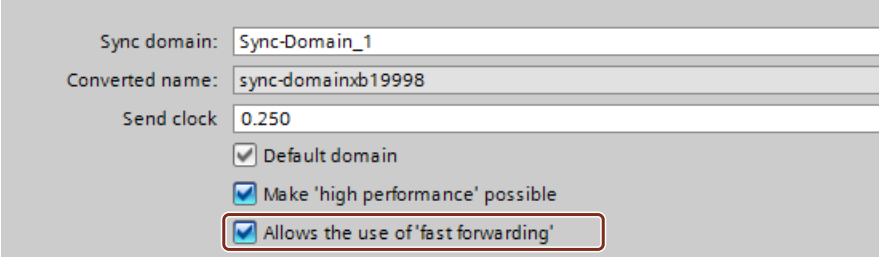

Figure 6-70 Allowing fast forwarding

NOTE

Fast forwarding and IPv6

The operation of fast forwarding in combination with IPv6 is not supported.

As soon as an IO device in the subnet uses an IPv6 address, you must not activate "fast forwarding".

6.6.5 Sample configuration for IRT with high performance

The figure below shows an example configuration with which you can achieve maximum performance.

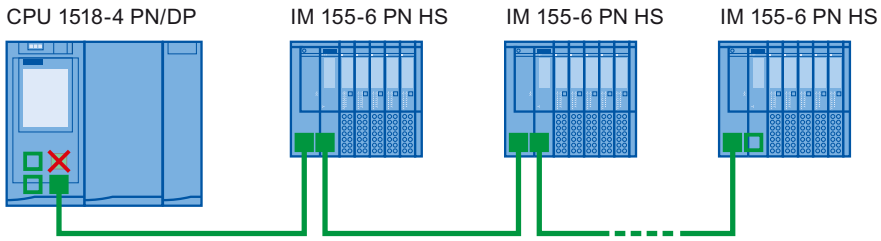

✕ Port 1 of the X1 interface of the CPU is deactivated.

■ Port 2 of the X1 interface and the ports of the interface modules on the bus use the following setting: Medium copper, cable length < 20 m or signal delay max. 0.12µs

□ A programming device connection to the CPU can be established via the interfaces X2 and X3 of the CPU or via the free port at the end of the line.

Figure 6-71 Example configuration for IRT with high performance

Use the following settings for the Sync domain:

- Enable the "Make 'high performance' possible" option.
- Set the send clock to 125 µs.
- Enable the "Allows the use of ‘fast forwarding'" option.

Standard Ethernet communication for IRT with high performance

Standard Ethernet communication is still possible even in a PROFINET IO system with high performance. Keep in mind that you first arrange the IRT nodes, as seen from the IO controller, and arrange the standard Ethernet nodes at the end of the line.

With a large volume of data through standard Ethernet communication, it makes sense to reduce the load on your network by separating standard Ethernet communication and cyclic real-time communication. Example: Use the interface X1 for the PROFINET IO communication and a different interface for the standard Ethernet communication.

6.7 Isochronous mode

6.7.1 What is isochronous mode?

Objectives of isochronous operation

The advantages of the isochronous mode function in automation engineering can be seen in an example from everyday life.

The transmission of data corresponds to the transport of people on public transport. Assuming public transport were to operate at maximum speed while reducing stop times at the passenger terminals to absolute minimum, the last thing many potential passengers would notice of the departing contraption are its red tail lights. The overall travel time is, however, decided by the train, bus or underground-railway clock, because well adjusted timing is essential to a good service. This also applies in automation engineering. Not only

fast cycles but also the adaptation and synchronization of the individual cycles result in optimum throughput.

Just-In-Time

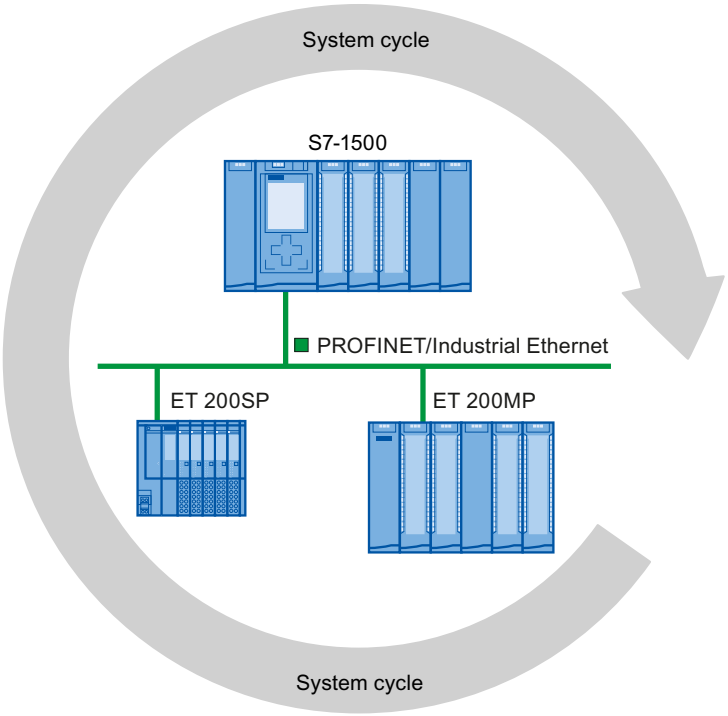

Figure 6-72 System cycle

The fast and reliable response time of a system operating in isochronous mode is due to the fact that all data is provided just-in-time. The basis for this is an equidistant cycle.

The isochronous mode function guarantees synchronization of the following at constant time intervals:

- Signal acquisition and output by the distributed I/O
- Signal transmission via PROFINET IO
- Program execution in the CPU in time with the equidistant PROFINET IO

The result is a system that acquires its input signals, processes them and outputs the output signals at constant time intervals. Isochronous mode guarantees precisely reproducible and defined process response times as well as equidistant and synchronous signal processing for distributed I/O.

Advantages of isochronous mode

The use of isochronous mode allows high-precision control.

- Optimized control loops through constant, calculable dead times
- Determinism, reliable reproducibility of response times
- Consistent (simultaneous) reading in of input data
- Consistent (simultaneous) output of output data

6.7.2 Use of isochronous mode

An isochronous system acquires measured values and process data within a fixed system cycle, processes the signals and outputs them synchronously to the process. Isochronous mode contributes to a high control quality and increased production accuracy. With isochronous mode, the possible fluctuations of process response times are drastically reduced. You make use of the time-assured processing to improve machine cycle times. Even fast processes can be reliably controlled thanks to the precise time reproducibility of all sequences. Shorter cycle times increase the processing speed and help to lower production costs.

In principle, isochronous mode is worthwhile whenever measured values must be acquired synchronously, movements must be coordinated, and process responses must be defined and simultaneously executed, as in the following example. Isochronous mode can thus be used in a wide variety of applications.

Example: Measuring at multiple measurement points with isochronous mode

Automation task

A camshaft production process requires precise measurement of the camshafts for quality assurance purposes.

Feature

For this purpose, a component is needed that can synchronously measure the positions and displacements of the cam during a rotation of the camshaft.

Solution

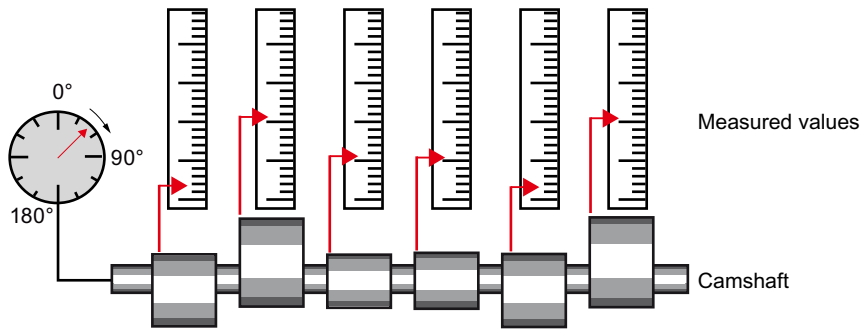

Figure 6-73 Measuring of camshafts

With use of isochronous mode, the measured values are simultaneously acquired at the various measuring points at fixed times. This results in the following workflow:

- Continuously rotate the camshaft
- During continuous rotation, synchronously measure the positions and cam displacements
- Process the next cam shaft

Thus, during a single rotation of the camshaft, all the positions of the camshaft and the associated measured values (red) are measured synchronously. The machine cycle time improves with the same or better measuring accuracy.

Advantage and benefits

The time required for measurement is reduced.

6.7.3 Time sequence of synchronization on PROFINET IO

Introduction

On PROFINET IO, you can isochronously operate I/O modules in distributed I/O systems on a CPU, e.g. in distributed I/O systems ET 200SP, ET 200MP.
Like the I/O modules, the interface modules of the I/O systems must support isochronous mode.

From reading in input data to outputting output data

The basic time sequence of all components involved in synchronization is explained below:

① Measured value acquisition in the process
② Isochronous read-in of input data
③ Transport of input data to the IO controller (CPU) via the subnet
④ Further processing in the isochronous application of the CPU
⑤ Transport of output data to the outputting IO device via the subnet
⑥ Isochronous output of output data

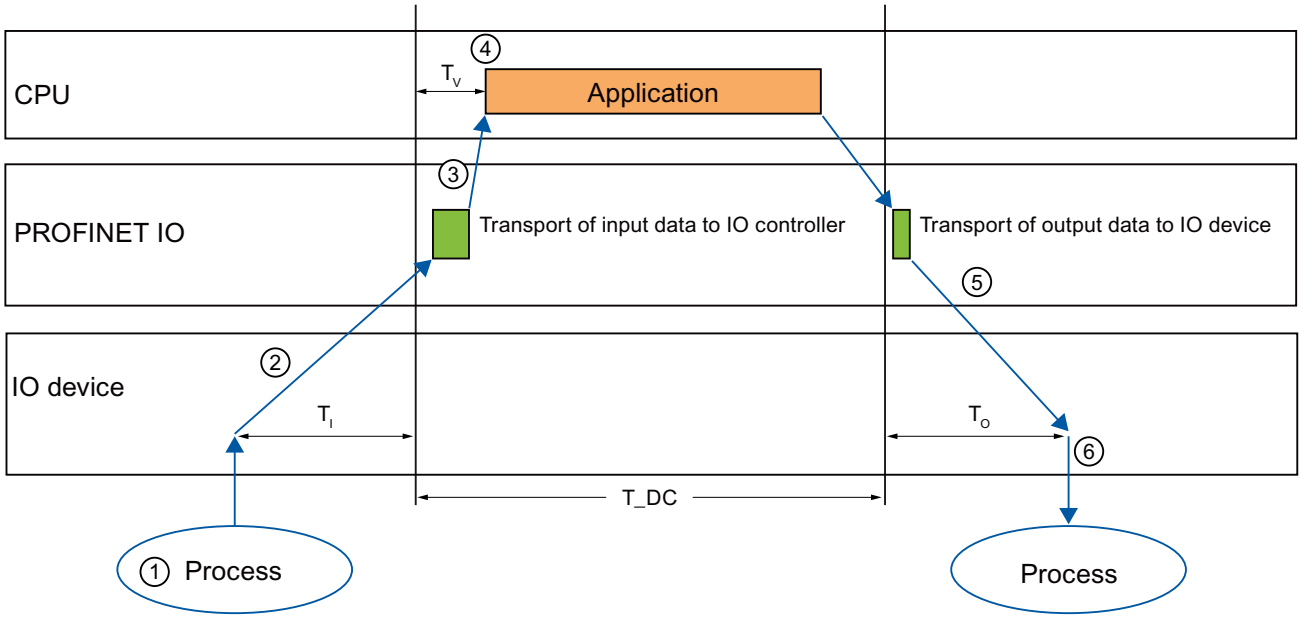

T_DC	Data cycle (Time_DataCycle)
T_I	Time for reading in the input data
T_O	Time for outputting the output data
T_V	Configured delay time

Figure 6-74 Time sequence of synchronization on PROFINET IO

To ensure that all input data is ready for transport via the subnet at the next start of the PROFINET IO cycle, the start of the I/O read-in cycle is advanced by the amount of lead time T_I. T_I is the "flashbulb" for the inputs; at this instant, all synchronized inputs are read in. T_I is necessary in order to compensate for analog-to-digital conversion, backplane bus times, and

the like. The lead time T_I can be configured by STEP 7 or by you. Let the lead time T_I be assigned automatically by STEP 7. With the default setting, STEP 7 ensures that a common, minimum T_I is set.

The subnet transports the input data to the IO controller/DP master. The application is started synchronized to the cycle. That is, the isochronous mode interrupt OB is called after a configurable delay time T_V. The user program in the isochronous mode interrupt OB defines the process response and provides the output data in time for the start of the next data cycle. The length of the data cycle (send clock/DP cycle time) is always configured by you.

T_O is the time for the compensation arising from the backplane bus and the digital-to-analog conversion within the IO device/DP slave. T_O is the "flashbulb" for the outputs. The synchronized outputs are output at this time. Time T_O can be configured by STEP 7 or by you. Let time T_O be assigned automatically by STEP 7. STEP 7 automatically calculates a common, minimum T_O.

6.7.4 Configuring isochronous mode

6.7.4.1 Introduction

Configuring at a glance

Setting parameters for isochronous operation of the I/O module

You use the properties of the I/O addresses of the corresponding I/O module to:

- Set isochronous mode for the module.
- Assign the inputs and outputs of the module to a process image partition and an isochronous mode interrupt OB.

  The data of the process image partition is updated synchronously to the assigned OB. Isochronous mode interrupts give you the option of starting programs isochronously with the PROFINET send clock. Isochronous mode interrupts are processed with high priority.

Setting the send clock

The send clock is the shortest possible transmission interval for the data exchange. In isochronous mode, the send clock corresponds to data cycle T_DC.

You set the send clock in the properties of the PROFINET interface of the CPU or in the sync domain.

Setting the application cycle

The application cycle is a multiple of data cycle T_DC. If the runtime of the isochronous mode interrupt OB is short, the application cycle can be identical to the data cycle (= send clock).

You can reduce the application cycle of the isochronous mode interrupt OB relative to the send clock of an isochronous PROFINET IO system. Set an integer multiple of the send clock as the reducing factor.

You use the factor to reduce the CPU utilization by executing the isochronous mode interrupt OB less frequently. You set the application cycle in the properties of the isochronous mode interrupt OB.

Setting the delay time

The delay time is the time between the start of the send clock and the start of the isochronous mode interrupt OB. During this time, the IO controller performs cyclic data exchange with the IO devices.

STEP 7 sets the default delay time in such a way that the isochronous update of the process image partition automatically falls within the execution window of the application cycle.
You set the delay time in the properties of the isochronous mode interrupt OB. A shorter delay time enables you to increase the processing time for your user program in the isochronous mode interrupt OB.

Additional configurations for isochronous mode on PROFINET IO:

- **Setting IRT as the RT class for the interconnected PROFINET interfaces**
  A precondition for isochronous operation on PROFINET IO is IRT communication (Isochronous Real Time Communication). IRT means synchronized data exchange at reserved time intervals.
- **Configuring the topology of the configuration**
  A precondition for IRT communication is the topology configuration. In addition to the reserved bandwidth, the exchange of frames on defined transmission paths is used for further optimization of data communication. For this, the topological information of the configuration is used for planning the communication.
- **Using a sync domain**, you assign the IO devices (sync slaves) to an IO controller (sync master) for the isochronous data exchange.
  A precondition for IRT communication is a synchronization cycle for all PROFINET devices in a sync domain, for distribution of a common time base. With this basic synchronization, synchronous operation of the transmission cycle of the PROFINET devices within a sync domain is achieved.

6.7.4.2 Configuring isochronous mode on PROFINET IO

Introduction

The configuring of isochronous mode for a module is described as IO device in the following based on the ET 200MP distributed I/O system. The procedure described also applies to other distributed I/O systems (e.g., ET 200S or ET 200SP).
The IO controller is an S7-1500 CPU.

Requirements

- The STEP 7 network view is open.
- A S7-1500 CPU has been placed (e.g., CPU 1516-3 PN/DP).
- An IM 155-5 PN HF interface module (ET 200MP) has been placed and networked with the CPU via PROFINET IO.
- All requirements for an IRT configuration are met:
  - The ports of the networked PROFINET interfaces of the CPU and interface module are interconnected (topology configuration).
  - The RT class of the PROFINET interface of the interface module is set to "IRT" (area "Advanced options > Real time settings > Synchronization").
  - The "sync master" and "sync slave" roles are assigned for the PROFINET interfaces of the CPU and interface module (in the properties of a PROFINET interface: "Advanced options > Real time settings > Synchronization > Domain settings" area).

Procedure

To create an isochronous connection between the I/O and user program, follow these steps:

1. Select the IM 155-5 PN HF in the network view of STEP 7. Change to the device view.
2. Insert an I/O module that can be operated isochronously (e.g. DI 16 x 24VDC HF).
3. Go to the "I/O addresses" area in the Inspector window of the selected I/O module.

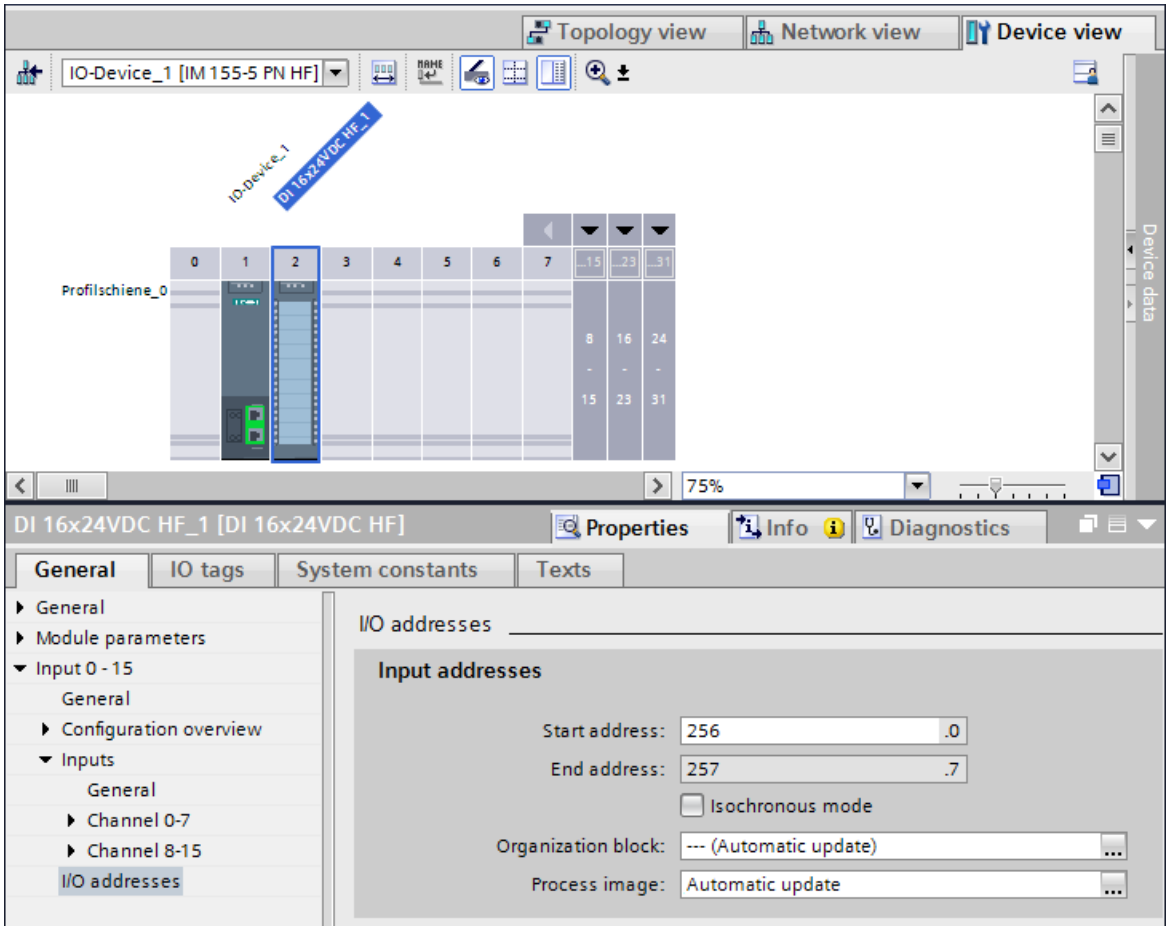

Figure 6-75 Configuring isochronous mode on PROFINET IO

4. Make the following settings in the I/O addresses area:
   - Select the "Isochronous mode" option.
   - Select a process image partition, e.g., process image partition 1.
   - Click the "Organization block" drop-down list. Click the "Add" button or select an existing OB. A dialog box for selecting organization blocks opens.
   - Select the "Synchronous Cycle" OB. Confirm the selection with "OK".

     In the case of automatic number assignment, OB 61 will be generated and opened.

     In the Inspector window, you can continue directly with the setting of the application cycle and delay time (Page 210) in the "Isochronous mode" area and start the programming of the OB in the instruction section.

5. If required, insert additional IO devices in the network view. Adapt the configuration and the settings for the isochronous mode.
6. You want to retrieve information about calculated bandwidths or on adapting the send clock. Select the sync domain in the network view and navigate to the corresponding area of the domain management in the Inspector window.

Reference

You can find examples of parameter assignment and possible settings of isochronous mode for distributed I/O and drives in STEP 7 in this FAQ on the Internet (https://support.industry.siemens.com/cs/ww/en/view/109480489).

6.7.4.3 Setting the application cycle and delay time

Requirements

- You have created an isochronous mode configuration in STEP 7.
- You have created an isochronous mode interrupt OB Synchronous Cycle (OB 6x).
- The isochronous mode interrupt OB is open.

Setting the application cycle

The application cycle is a multiple of data cycle T_DC (send clock). You use the application cycle setting to reduce the CPU utilization caused by execution of the isochronous mode interrupt OB. In the following example, the OB is called only after every 2nd data cycle T_DC in the CPU.

To set the application cycle for your isochronous mode application, follow these steps:

1. Open the "Properties" dialog of the isochronous mode interrupt OB under consideration.
2. In the area navigation, click the "Isochronous mode" group .
3. Set the application cycle in "Application cycle (ms)". Open the drop-down list box and select the application cycle. The drop-down list offers multiples of data cycle T_DC as possible values for the application cycle. Data cycle T_DC is set to 2 ms in the following figure.

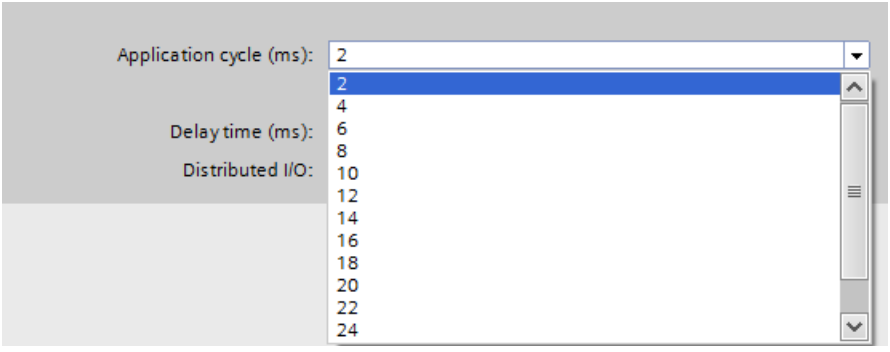

Figure 6-76 Setting the application cycle

Setting the delay time

The delay time is the time between the start of the send clock and the start of the isochronous mode interrupt OB. STEP 7 sets the delay time automatically to the start of the execution window by default. As a result, the isochronous mode update of the process image partition automatically falls within the execution window of the application cycle.

You can also set the delay time manually. A shorter delay time enables you to increase the processing time for your user program in the isochronous mode interrupt OB. If a manual setting is made, note that you must call the "SYNC_PI" and "SYNC_PO" instructions in the execution window of the application cycle.

To set the delay time for your isochronous mode application, follow these steps:

1. Open the "Properties" dialog of the isochronous mode interrupt OB under consideration.
2. In the area navigation, click the "Isochronous mode" group .
3. Clear the "Automatic setting" check box.
4. Enter your desired delay time in "Delay time (ms)".

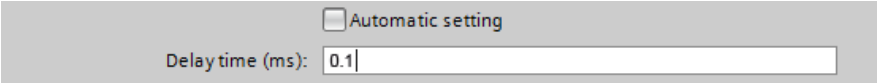

Figure 6-77 Setting the delay time

6.7.5 Programming isochronous mode

6.7.5.1 Basics of Programming

Programming in the isochronous mode interrupt OBs

You program the isochronous section of the program exclusively in the isochronous mode interrupt OBs Synchronous Cycle (OB 6x).

Because the isochronous mode interrupts are processed with high priority, only the time-critical sections of the program should be processed in the isochronous mode interrupt OB. The isochronous mode interrupt OB is called with a configured delay time.

Access to isochronous I/O through call of instructions

You access the isochronous I/O via a process image partition. That is, the addresses of the isochronous modules must be within one process image partition.

You program access to the isochronous IO in isochronous mode interrupt OB Synchronous Cycle (OB 6x) with the SYNC_PI and SYNC_PO instructions.

The isochronous I/O is updated by the call of the "SYNC_PI" and "SYNC_PO" instructions and therefore in the corresponding process image partition.

NOTE

Recommendation: To prevent inconsistent data from being returned to OB 6x, do not use the "DPRD_DAT" and "DPWR_DAT" instructions (direct data access) in the isochronous mode interrupt OB.

The "SYNC_PI" and "SYNC_PO" instructions update the process image partition only within the permitted execution window. The execution window stretches from the end of the cyclic data exchange to the point in time before the end of T_DC at which the outputs can still be copied in time. The data exchange must be started within this time window. If the execution window is violated by the processing of the "SYNC_PI" and "SYNC_PO" instructions, the instructions indicate a corresponding error message.

Program execution models

Depending on the order of the "SYNC_PI" and "SYNC_PO" instruction calls in OB 6x, there are two basic models for the program execution:

- **IPO** model (read **I**nputs - **P**rocessing - write **O**utputs)
- **OIP** model (write **O**utputs - read **I**nputs - **P**rocessing)

6.7.5.2 Program execution according to the IPO model

If the execution time of the isochronous mode interrupt OB is significantly shorter than one data cycle T_DC, use the IPO model. In the IPO model, you do not reduce the data cycle. That is, the application cycle of the isochronous mode interrupt OB is equal to data cycle T_DC.
The IPO model enables the shortest response times.

Programming according to the IPO model in the isochronous mode interrupt OB

For programming according to the IPO model:

1. Call the SYNC_PI instruction at the start of the isochronous mode interrupt OB.
2. Then call the actual user program.
3. Call the SYNC_PO instruction at the end of the isochronous mode interrupt OB.

Table 6-3 Programming according to the IPO model

Step	Action	Explanation
1	Read in (I)	The SYNC_PI instruction reads in the inputs of the process image partition and provides them to the isochronous mode interrupt OB.
2	Process (P)	You program the actual user program of the isochronous mode interrupt OB.
3	Output (O)	The SYNC_PO instruction outputs the data changed by the user program via the process image partition.

Signal sequence in the IPO model

The following figure shows the signal sequence in the IPO model from the acquisition and the processing in the CPU to the output of the process values:

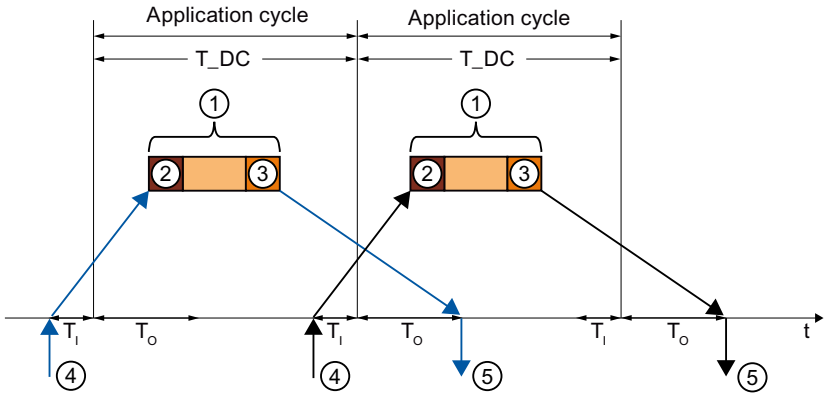

① Execution of isochronous mode interrupt OB

② "SYNC_PI" instruction

③ "SYNC_PO" instruction

④ Isochronous read-in of process values on I/O module at time T_I

⑤ Isochronous output of process values on I/O module at time T_O

Figure 6-78 Signal sequence in the IPO model

At time T_I the process values are read in isochronously on the I/O. The processing of the data in the IPO model is completed within one data cycle T_DC. The output data is always available on the I/O in the next data cycle T_DC at time T_O.
With the IPO model, there is a constant execution time from the "input terminal" to the "output terminal" of T_I + T_DC + T_O.
T_I + 2×T_DC + T_O can be guaranteed for the process response time.

6.7.5.3 Program execution according to the OIP model

Use the OIP model in the case of execution cycles of the isochronous mode interrupt OB of different lengths, if the application cycle is greater than data cycle T_DC.
The data exchange with the process is always deterministic in the OIP model, i.e. takes place at a precisely specified time.

Programming according to the OIP model in the isochronous mode interrupt OB

For programming according to the OIP model:

1. Call the SYNC_PO instruction at the start of the isochronous mode interrupt OB.
2. Then call the SYNC_PI instruction.
3. Then call the actual user program.

Table 6-4 Programming according to the OIP model

Step	Action	Explanation
1	Output (O)	The SYNC_PO instruction outputs the data that was changed by the user program in the previous cycle via the outputs of the process image partition.
2	Read in (I)	The SYNC_PI instruction reads in the inputs of the process image partition of the current cycle and provides the inputs to the isochronous mode interrupt OB.
3	Process (P)	You program the actual user program of the isochronous mode interrupt OB.

Signal sequence in the OIP model

The following figure shows the signal sequence in the OIP model from the acquisition of process values and the processing in the CPU to the output of the process values. The application cycle is twice as long as data cycle T_DC in this example.

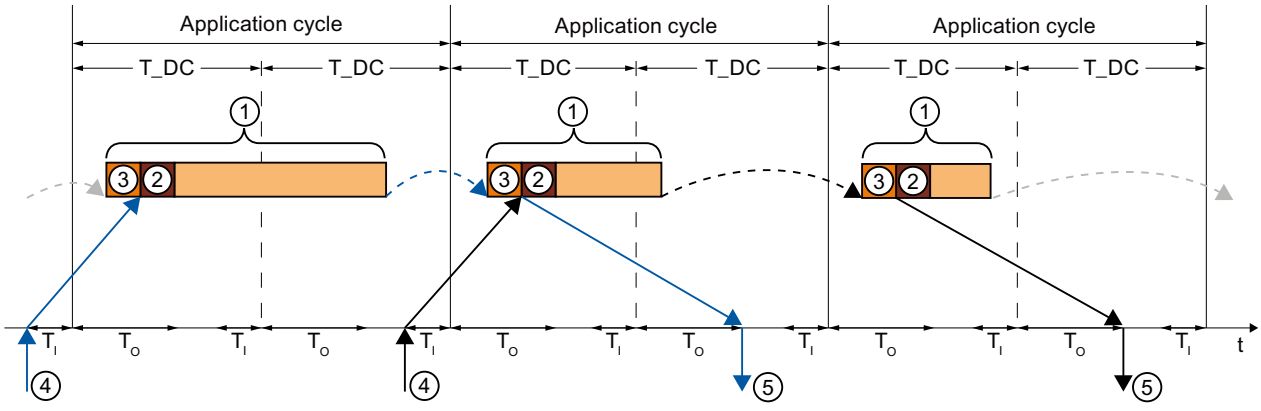

① Execution of isochronous mode interrupt OB

② "SYNC_PI" instruction

③ "SYNC_PO" instruction

④ Isochronous read-in of process values on I/O module at time T_I

⑤ Isochronous output of process values on I/O module at time T_O

Figure 6-79 Signal sequence in the OIP model

At time T_I the process values are read in isochronously on the I/O. The data is processed over 2 application cycles in the OIP model. The output data is always available on the I/O in the following application cycle at time T_DC + T_O.

With the IPO model, there is a constant execution time from the "input terminal" to the "output terminal" of T_I + application cycle + T_DC + T_O.

T_I + 2 x application cycle + T_DC + T_O can be ensured as the process response time.

6.8 Direct data exchange

6.8.1 Introduction

This section describes the direct data exchange function.

Principle of operation

Starting with firmware version V2.8, the S7-1500 CPU supports direct data exchange (cross data traffic) with other S7-1500 CPUs.

In the case of direct data exchange, an S7-1500 CPU provides cyclic user data from the I/O area to one or more partners. The direct data exchange is based on PROFINET with IRT and isochronous mode.

The data exchange takes place via transfer areas.

Direct data exchange between two S7-1500 CPUs (1:1)

The figure below shows the direct data exchange between two S7-1500 CPUs. The output transfer areas of the sending S7-1500 CPU correspond to the input transfer areas of the receiving S7-1500 CPU.

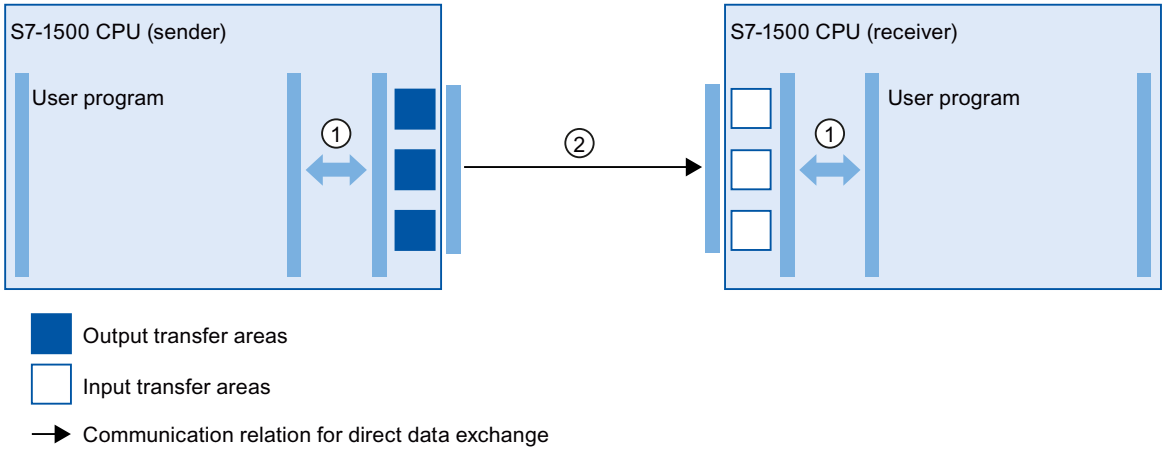

① Transfer relation between the user program and the transfer area. The user program and the transfer areas exchange input and output data via this path.

② Communication relation for direct data exchange You configure the communication relations in STEP 7. You create transfer areas for direct data exchange in the properties of the communication relations.

Figure 6-80 Direct data exchange between two S7-1500 CPUs (1:1)

Direct data exchange with multiple receivers (1:n)

The following figure shows the direct data exchange with multiple S7-1500 CPUs. In this case, the sending S7-1500 CPU provides the data of its output transfer areas to multiple S7-1500 CPUs. Each receiving S7-1500 CPU has its own input transfer areas.

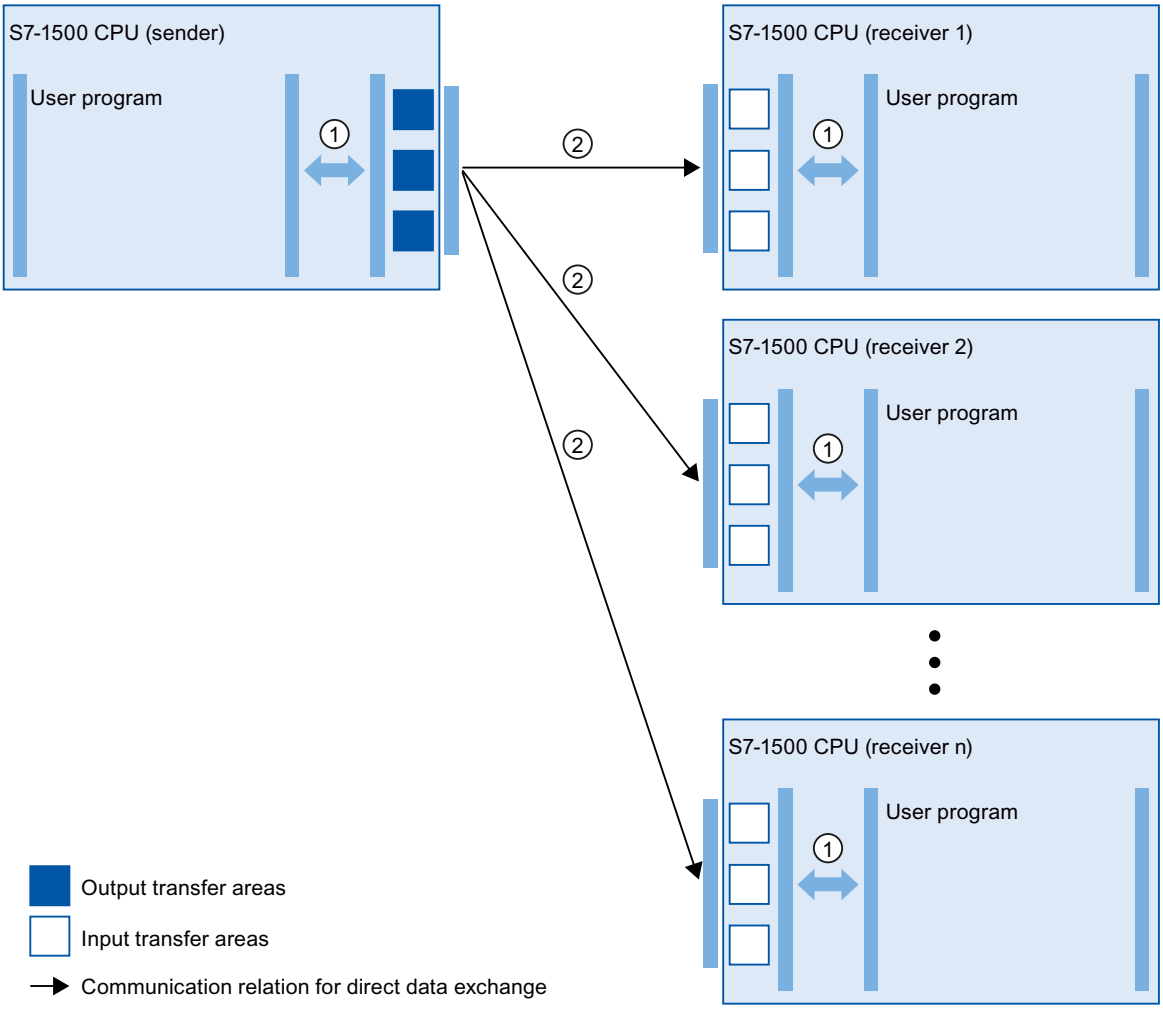

① Transfer relation between the user program and the transfer area. The user program and the transfer areas exchange input and output data via this path.

② Communication relation for direct data exchange You configure the communication relations in STEP 7. You create transfer areas for direct data exchange in the properties of the communication relations.

Figure 6-81 Direct data exchange with multiple receivers (1:n)

Applications

- Deterministic, isochronous I/O communication between multiple S7-1500 CPUs

Properties of direct data exchange

- Always isochronous
- Support of MRPD for MRP configuration
- No acyclic data exchange via PROFINET data record mechanisms
- No PROFINET alarms
- Configuration limits:
  - Maximum data length for direct data exchange 3075 bytes including user data qualifier
  - Maximum data length for a transfer area: 1024 bytes without user data qualifier
  - Maximum number of transfer areas of sender: 128
  - Maximum number of transfer areas of receiver: 512, distributed among a maximum of 64 receivable PROFINET frames and thus up to 64 sender CPUs

Diagnostics options of the receiver

Operating state change of sender:

- When the sender goes from RUN to STOP, the receiver behaves as follows:
  - The "SYNC_PI" and "SYNC_PO" instructions return an error message in parameter RET_VAL during synchronization of the process image.
  - With direct I/O access to the input transfer areas of the direct data exchange, OB 122 "I/O access error" is called, if present.
  - Incoming diagnostic message "I/O data failure in hardware component"
- When the sender goes from STOP to RUN, the receiver behaves as follows:
  - Call of OB 83 "Pull/plug interrupt" for input transfer areas of the direct data exchange
  - Up until the call of OB 83, OB 122 is called if present.
  - Outgoing diagnostic message "User data failure of hardware component"

Station failure/station recovery of the sender:

- When the sender fails, e.g. due to a bus interruption, the receiver behaves as follows:
  - Call of OB86 "Rack failure"
  - The "SYNC_PI" and "SYNC_PO" instructions return an error message in parameter RET_VAL during synchronization of the process image.
  - With direct I/O access to the input transfer areas of the direct data exchange, OB 122 "I/O access error" is called, if present.
- When the sender recovers after a station failure, e.g. because the bus connection is re-established, the receiver behaves as follows:
  - Call of OB86 "Rack failure"

6.8.2 Configuring direct data exchange between two S7-1500 CPUs

The procedure for configuring direct data exchange between two IO controllers is described below.

First, you create the communication relation for direct data exchange. You then configure transfer areas for the connection.

Requirements

- STEP 7 V16 or higher
- Two S7-1500 CPUs firmware version V2.8 or higher
- IRT is configured:
  - Both CPUs are in one sync domain.
  - One CPU is the sync master, and the other CPU is the sync slave.
  - Ports are interconnected.

Setting up the communication relation for direct data exchange

To set up the communication relation for direct data exchange between two S7-1500 CPUs, follow these steps:

1. Select the PROFINET interface X1 of the sending S7-1500 CPU.
2. Change to the table view of the network view, tab "I/O communication".
   The PROFINET interface X1 of the CPU is shown in the "Partner 1" column.
3. In the "Partner 2" column at "<Drop or select the device here>", select the PROFINET interface of the communication partner from the drop-down list as the connection partner.
   Note the communication direction:
   - ←: Communication partner is sender
   - →: Communication partner is receiver

The communication relation for direct data exchange between the two S7-1500 CPUs is set up.

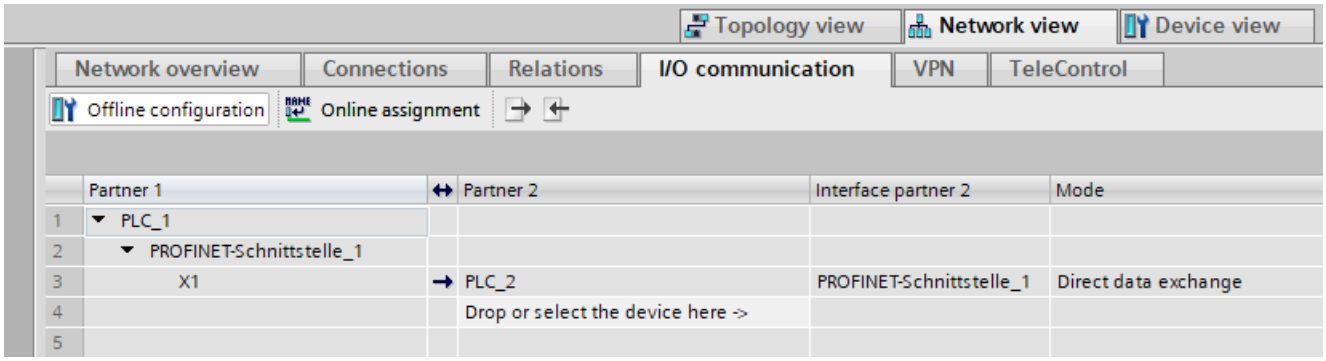

Figure 6-82 Communication relation for direct data exchange

Configuring transfer areas for direct data exchange

To configure a transfer area for direct data exchange, follow these steps:

1. Select the communication relation for direct data exchange.

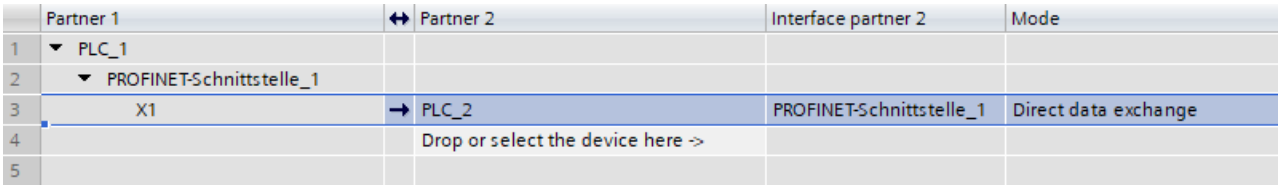

Figure 6-83 Communication relation for direct data exchange

2. Navigate to the properties of the communication relation to "General" > "Direct data exchange" > "Transfer areas".
3. Create a new transfer area by double-clicking on "<Add new>". Assign a meaningful name for the transfer area.

A transfer area for direct data exchange is created.

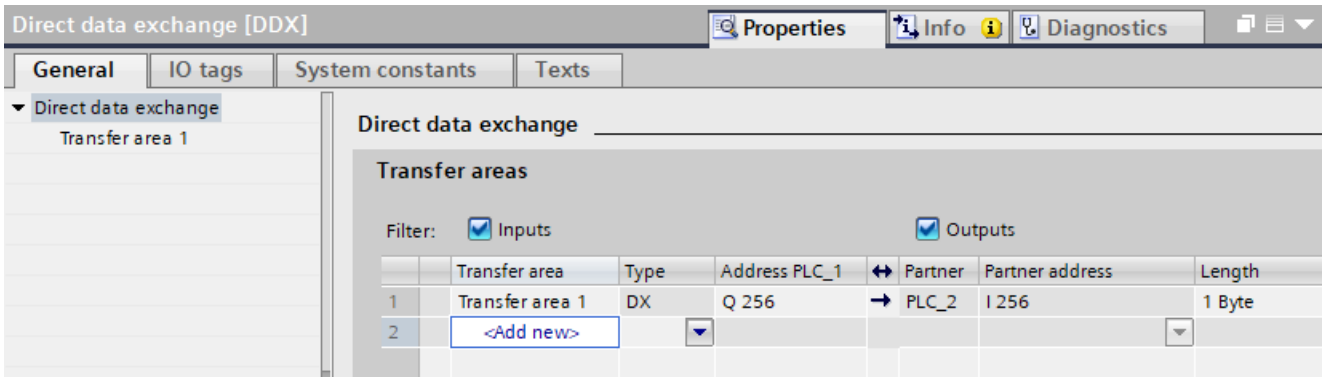

Figure 6-84 Transfer area for direct data exchange

The communication direction of the transfer area is specified by the communication relation. You cannot change the communication direction of the transfer area.

Editing the transfer area

Set the properties of the transfer area under "General" > "Direct data exchange" > "Name of transfer area" > "Detail of the transfer area".

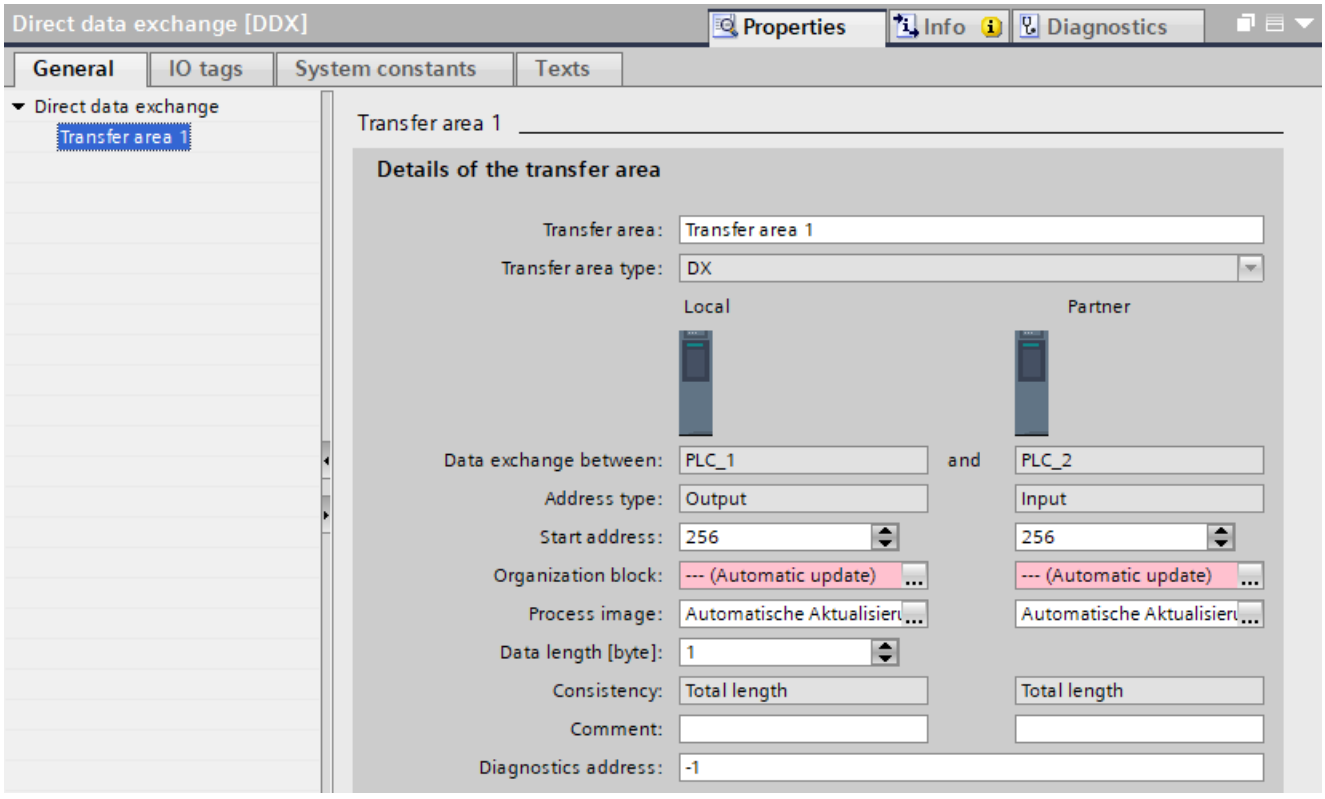

Figure 6-85 Properties of the transfer area

Table 6-5 Overview of the settings of the transfer area

Parameter	Local	Partner
Start address	Set the start address of the input or output transfer areas in the local CPU.	Set the start address of the input or output transfer areas in the partner CPU.
Organization block	Assign the transfer area to an isochronous mode interrupt OB or the "MC-Servo" OB.	Assign the transfer area to an isochronous mode interrupt OB or the "MC-Servo" OB.
Process image	Select a process image partition, e.g. PIP 1. If you have assigned "MC-Servo" as the organization block, STEP 7 automatically sets "PIP OB Servo" as the process image.	Select a process image partition, e.g. PIP 1. If you have assigned "MC-Servo" as the organization block, STEP 7 automatically sets "PIP OB Servo" as the process image.
Data length [bytes]	Set the size of the transfer area.	-

Downloading the configuration to devices

Rules:

- Download the configuration to all CPUs involved.
- If you make changes to the configuration of the direct data exchange, download these changes to all CPUs involved.

6.8.3 Configuring direct data exchange between multiple IO controllers

The procedure for configuring direct data exchange between multiple S7-1500 CPUs is described below.

First, you set up the communication relations for direct data exchange. You then configure transfer areas for the communication relations.

Requirements

- STEP 7 V16 or higher
- S7-1500 CPUs firmware version V2.8 or higher
- IRT is configured:
  - All CPUs are in one sync domain.
  - One CPU is the sync master, and the other CPUs are sync slaves.
  - Ports are interconnected.

Setting up the communication relations for direct data exchange

To set up the connection for direct data exchange between multiple S7-1500 CPUs, follow these steps:

1. Select the PROFINET interface X1 of the sending CPU.
2. Change to the table view of the network view, "I/O communication" tab.
   The PROFINET interface X1 of the CPU is shown in the "Partner 1" column.
3. In the "Partner 2" column at "<Drop or select the device here>", select the PROFINET interface of the communication partner from the drop-down list as the connection partner.
   Note the transfer direction:
   - ←: Connection partner is sender
   - →: Connection partner is receiver

   The connection for direct data exchange between the two S7-1500 CPUs is set up.
4. Repeat step 3 for every other receiving IO controller.

The connections for direct data exchange between the sending CPU and the receiving CPUs are set up.

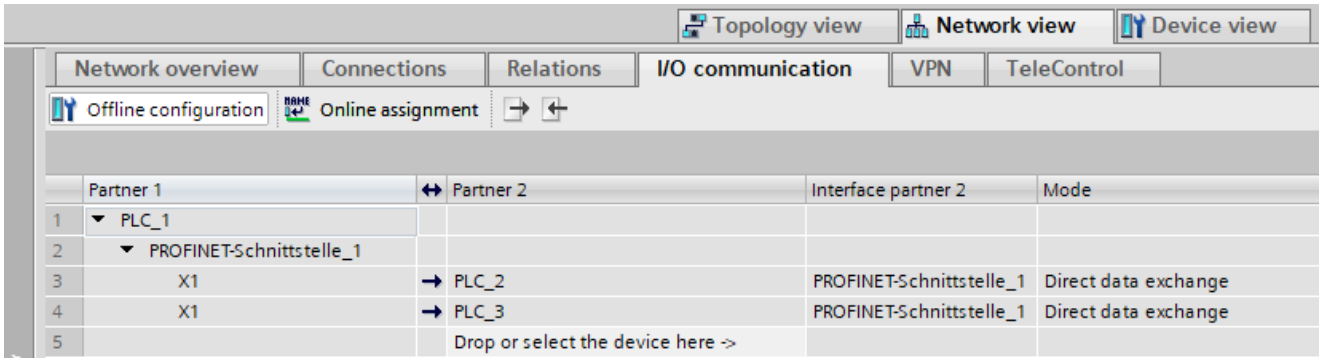

Figure 6-86 Connection for direct data exchange with multiple S7-1500 CPUs

Configuring transfer areas for direct data exchange

The following graphic shows the order for configuration of the transfer areas.

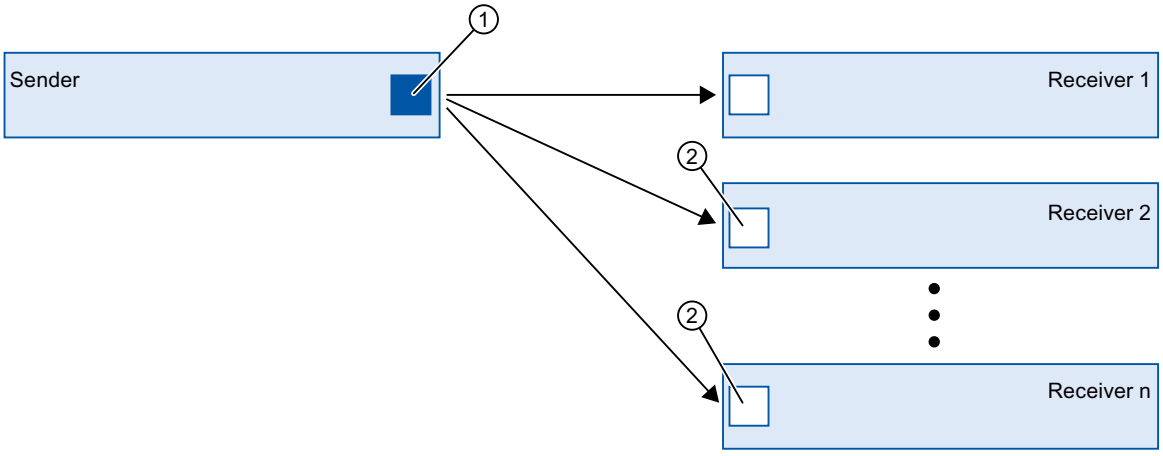

① First, you configure the transfer area between the sender and one receiver. You configure this transfer area at the PROFINET interface of the sender.

② You then configure the transfer areas between the sender and the other receivers. You configure these transfer areas at the PROFINET interfaces of the receivers.

Figure 6-87 Order of configuration of transfer areas in the case of multiple receivers

To configure a transfer area for direct data exchange, follow these steps:

1. Select the PROFINET interface X1 of the sending CPU and change to the table view, "I/O communication" tab.
2. In the table view of the network view, select a communication relation for direct data exchange between the sender and receiver 1.
3. Navigate to the properties of the I/O connection to "General" > "Direct data exchange" > "Transfer areas".

4. Create a new transfer area by double-clicking on "<Add new>". Assign a meaningful name for the transfer area.
   A transfer area for direct data exchange between the sender and receiver 1 is configured.

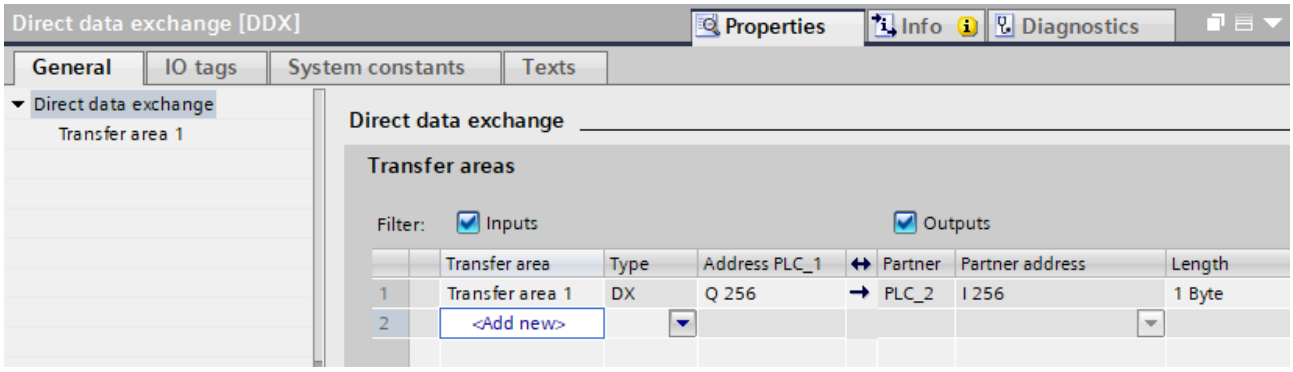

Figure 6-88 Transfer area for direct data exchange

5. Now, select the PROFINET interface of a receiver for which a transfer area is not yet set up, e.g. receiver 2.
6. Change to the table view of the network view to "I/O communication"
   The communication relation for direct data exchange with the sender is displayed.

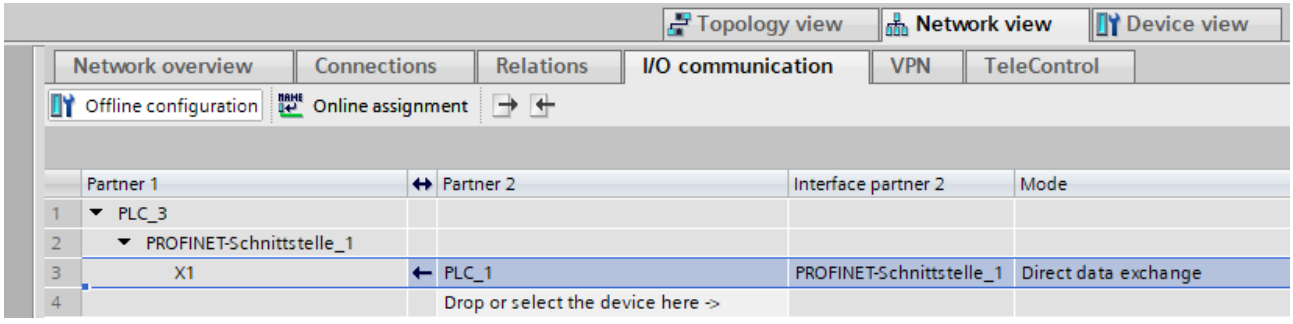

Figure 6-89 Connection for direct data exchange in receiver 2

7. Select the communication relation.
8. Navigate to the properties to "General" > "Direct data exchange" > "Transfer areas".
9. Create a new transfer area by double-clicking on "<Add new>". Assign a meaningful name for the transfer area.
   A transfer area for direct data exchange is configured.
10. Select the transfer area.

11. For "Partner address", select the existing address area in the sender as the output transfer area.

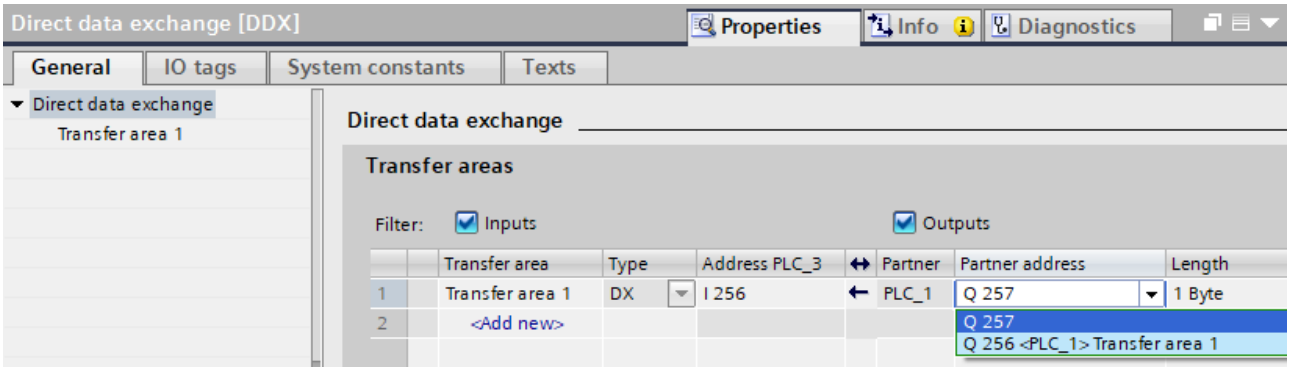

Figure 6-90 Transfer area for direct data exchange of multiple IO controllers

A transfer area for direct data exchange between receiver 2 and the sender is configured.

Editing the transfer area

Set the properties of the transfer area under "General" > "Direct data exchange" > "Name of transfer area" > "Detail of the transfer area".

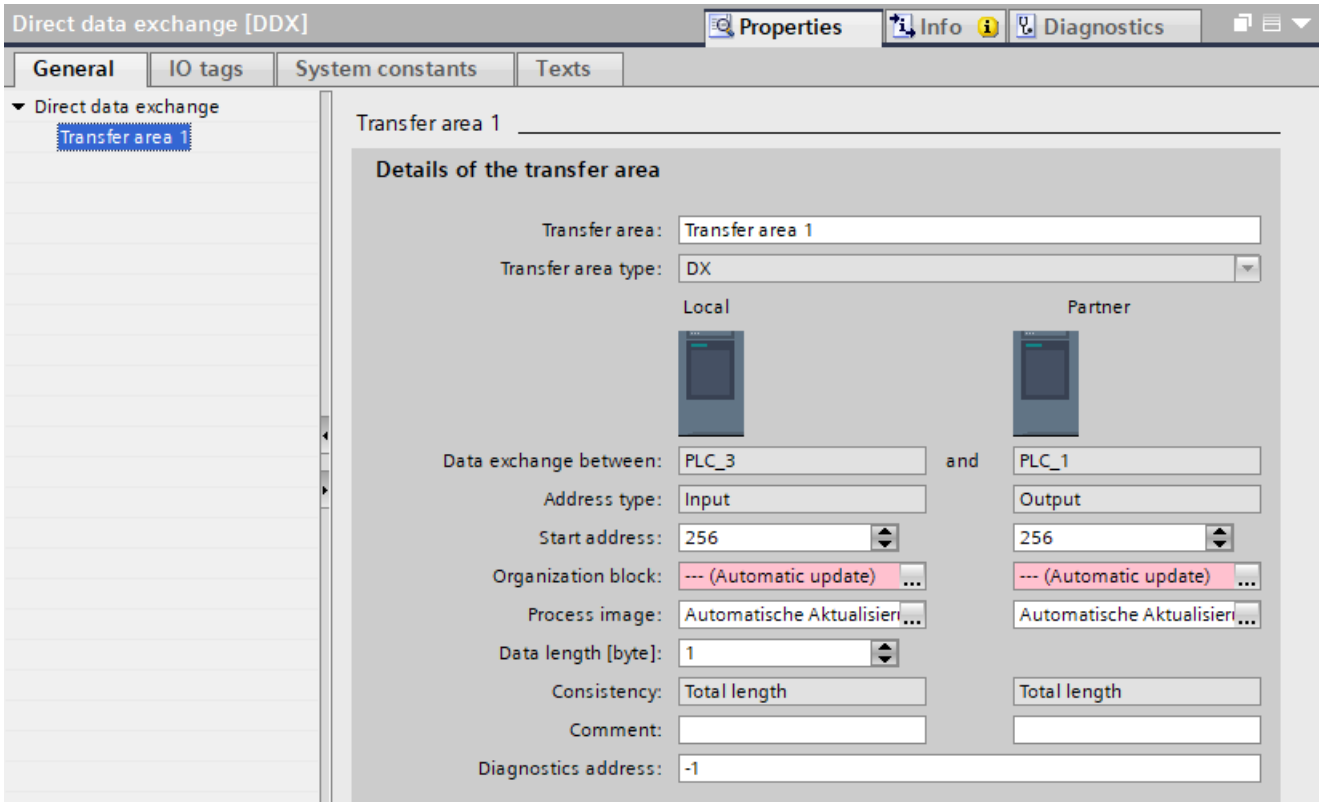

Figure 6-91 Properties of the transfer area

Table 6-6 Overview of the settings of the transfer area

Parameter	Local	Partner
Start address	Set the start address of the input or output transfer areas in the local CPU.	Set the start address of the input or output transfer areas in the partner CPU.
Organization block	Assign the transfer area to an isochronous mode interrupt OB or the "MC-Servo" OB.	Assign the transfer area to an isochronous mode interrupt OB or the "MC-Servo" OB.
Process image	Select a process image partition, e.g. PIP 1. If you have assigned "MC-Servo" as the organization block, STEP 7 automatically sets "PIP OB Servo" as the process image.	Select a process image partition, e.g. PIP 1. If you have assigned "MC-Servo" as the organization block, STEP 7 automatically sets "PIP OB Servo" as the process image.
Data length [bytes]	Set the size of the transfer area.	-

Downloading the configuration to the device

Rules:

- Download the configuration to all CPUs involved.
- If you make changes to the configuration of the direct data exchange, download these changes to all CPUs involved.

6.9 Device replacement without exchangeable medium

Definition

IO devices which have no slot for exchangeable medium (e.g. ET 200SP, ET 200MP) or IO devices which support the PROFINET functionality "Device replacement without exchangeable medium/PG" can be replaced without having an exchangeable medium with saved device names inserted and without having to assign the device name with the PG. The new IO device is given a device name by the IO controller and not by the exchangeable medium or the PG.

To assign the device name, the IO controller uses the configured topology and the neighborhood relations established from the IO devices.

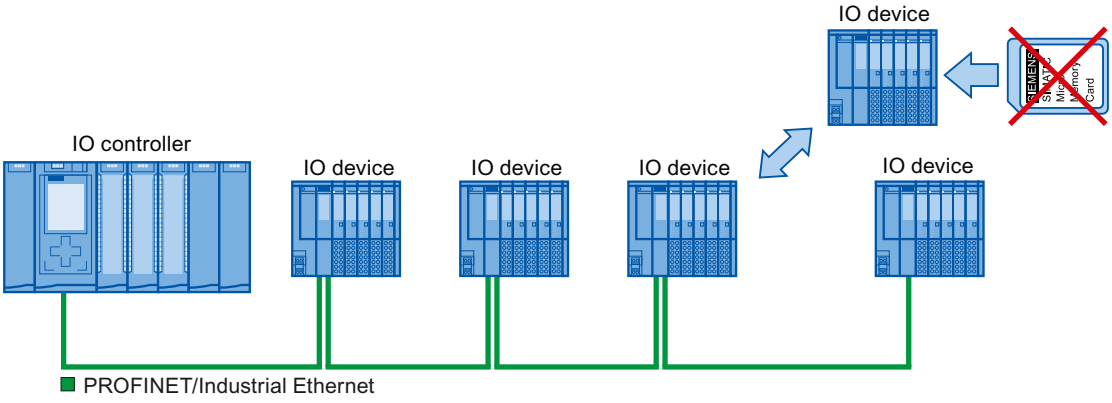

Figure 6-92 Device replacement without exchangeable medium

NOTE

When you exchange a device, make sure that the PROFINET cable is again inserted into the correct port, as it is configured in STEP 7.

Otherwise, the device names can be assigned incorrectly.

Advantages

With the Device replacement without exchangeable medium/PG PROFINET functionality, you can profit from the following advantages:

- After the replacement of the IO device, it automatically obtains its device name from the IO controller. You no longer have to assign device names with the PG or exchangeable medium.
- You can save on the storage medium for the IO device that replaces the removed one.
- Simple device name allocation with series machines that have the same configuration and set topology. It is no longer necessary to assign device names via exchangeable medium/PG.

Which devices support device replacement without exchangeable medium?

An overview of the devices that support the "Device replacement without exchangeable medium" function is provided in this FAQ (https://support.industry.siemens.com/cs/ww/en/view/36752540).

6.9.1 Device replacement without exchangeable medium/PG function

Neighborhood

Neighborhood is the physical relationship between two ports of adjacent PROFINET devices. A PROFINET device is connected in this case through one of its ports over a physical Ethernet line to a specific port of the second PROFINET device in close proximity (neighbors).
Both terminal devices, for example, IO controllers and IO devices with a port, and network components, for example, switches, IO controllers and IO devices with multiple ports, are considered PROFINET devices.

Failure and replacement of an IO device

The following example describes device replacement without exchangeable medium in the case of failure of an IO device.

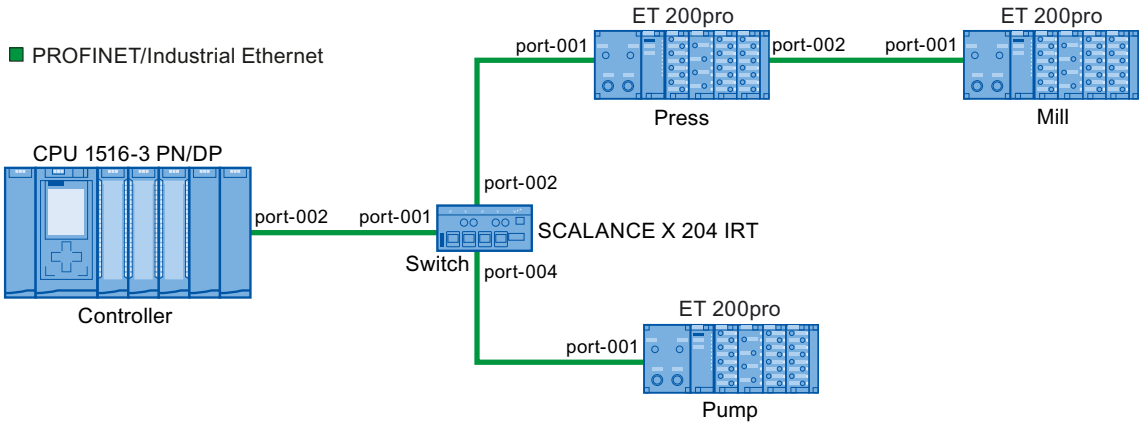

Figure 6-93 Example configuration of device replacement without exchangeable medium

For the device replacement, the following information is available to the IO controller:

PROFINET device	Device alias
Controller	"port-001.Switch"
Switch	"port-002.Controller", "port-001.Press", "port-001.Pump"
Press	"port-002.Switch", "port-001.Mill"
Mill	"port-002.Press"
Pump	"port-004.Switch"

The IO device with the device name "Mill" fails in this example:

Requirement

The PROFINET device replacing the removed one has no device name.

Principles of name assignment

The failure of the "Mill" IO device is considered here.

1. The IO controller queries the device name of the replaced IO device.
2. The IO controller detects that the IO device with the device alias "port-002.Press" does not have a device name.
3. The IO controller assigns the device name "Mill" to the replaced IO device via the device alias "port-002.Press" of the failed IO devices.

NOTE

If you insert a device with the Device replacement without exchangeable medium/PG PROFINET functionality at a different location than the configuration, a different device name is then assigned to the device.

Reset a wrongly inserted device to delivery state before you use it again.

6.9.2 Replacing an IO device without exchangeable medium

Introduction

Replacement of IO devices is sometimes frequently required in automation systems. The IO devices are generally assigned a device name by either inserting an exchangeable medium or via the programming device. The CPU identifies the IO device by using these device names.

Under certain circumstances, replacing an IO device can be done without inserting an exchangeable medium or without the PG.

Requirements

- The topology of the PROFINET IO system with the respective IO devices must be configured.
  By configuring the topology, the neighbor relationships of all the PROFINET devices located in the PROFINET IO system are announced to the PROFINET IO system or the IO controller. From the neighbor relationships specified by the set topology and the actual neighbor relationships established by the real PROFINET devices, the IO controller can identify the replaced IO device without a name and assign to it the configured name and the IP address and then again list it in the user data traffic.
- The affected IO devices in the automation system must support device replacement without exchangeable medium.
  If the individual IO devices in the automation system do not support device replacement without exchangeable medium, a corresponding alarm is output for the IO device.

NOTE

Use only new IO devices as replacements or restore configured IO devices to their delivery state.

Activating/deactivating device replacement without exchangeable medium

The "Device replacement without exchangeable medium" function is activated in the IO controller by default.

To deactivate device replacement without exchangeable medium, follow these steps:

1. In the device or network view of the STEP 7, select the PROFINET interface in the corresponding IO controller.
2. In the interface properties under "Advanced options > Interface options", clear the "Support device replacement without exchangeable medium" check box.

To reactivate device replacement without exchangeable medium, you must select the "Support device replacement without exchangeable medium" check box again.

6.9.3 Permit overwriting of PROFINET device name

With the option "Permit overwriting of PROFINET device names of all assigned IO devices", you can overwrite PROFINET device names of IO devices. This option reduces the effort during automatic commissioning, for example, when replacing a device.

Requirements

- IO controller supports the "Permit overwriting of device names of all assigned IO devices" option, for example CPU 1215C DC/DC/DC as of firmware version 4.0

How the "Permit overwriting of PROFINET device names of all assigned IO devices" option works

The IO controller (CPU) can overwrite the PROFINET device names of IO devices in the IO system when the "Permit overwriting of PROFINET device names of all assigned IO devices" option is enabled.

Multiple use IO systems can only be operated when this option is enabled. The IO controller checks prior to overwriting if the type of the IO device matches the configured type.

If the option is not selected, the IO controller cannot overwrite the device names of the IO devices. In this case, you must manually assign the PROFINET device name on the IO device if the PROFINET device name changes in the configuration or when a device is replaced, or delete the device names of the IO devices prior to an automatic commissioning.

Response during commissioning

Select the option "Permit overwriting of PROFINET device names of all assigned IO devices" only if the following requirements are fulfilled:

- All the configured IO devices are available.
- All IO devices are wired correctly in accordance with the topology configuration.
- No IO device is jumpered.

If configured IO devices are missing or are jumpered (partial commissioning), do not use the option.

You can also use the option for standard machine projects in which you adjust the configuration later via ReconfigIOSystem. Note that the valid configuration is always the one that was transferred to the IO controller in the control data record using the

ReconfigIOSystem Mode:=2 instruction. As soon as you enable the reconfiguration with ReconfigIOSystem Mode:=3, the PROFINET device names are overwritten as defined in the data record.

CAUTION

Error at partial commissioning

If device names are assigned incorrectly during partial commissioning or incorrect wiring, these have to be deleted manually after a correction of the wiring in order to attain correct assignment of the device names.

Behavior during operation

As soon as you replace a device, the new device is overwritten with the configured PROFINET device name.

The PROFINET device name is not overwritten when the MAC address of the IO device is already actively being used in the project.

WARNING

Wrong PROFINET device name

When the "Permit overwriting of PROFINET device names of all assigned IO devices" option is enabled, incorrectly connected devices can be assigned an incorrect PROFINET device name from the configuration.

Depending on the connected I/O, there is risk of death, severe injuries or damage caused by malfunctions.

To rule out any danger, check whether the suitable replacement device has been connected in case of a device replacement and whether the port interconnection matches the configured preset topology.

Typical source of danger

When replacing an IO device ("standard case"), it is almost guaranteed that the replaced device will be connected according to the configured port interconnection.

The figure below shows a scenario whereby the connections of two identical PROFINET cables are swapped at two switch ports. Because the IO controller assigns the device names according to the preset topology, the incorrect connection of the devices has serious effects on the naming.

Due to the control of different actuators, the plant could become hazardous in this case.

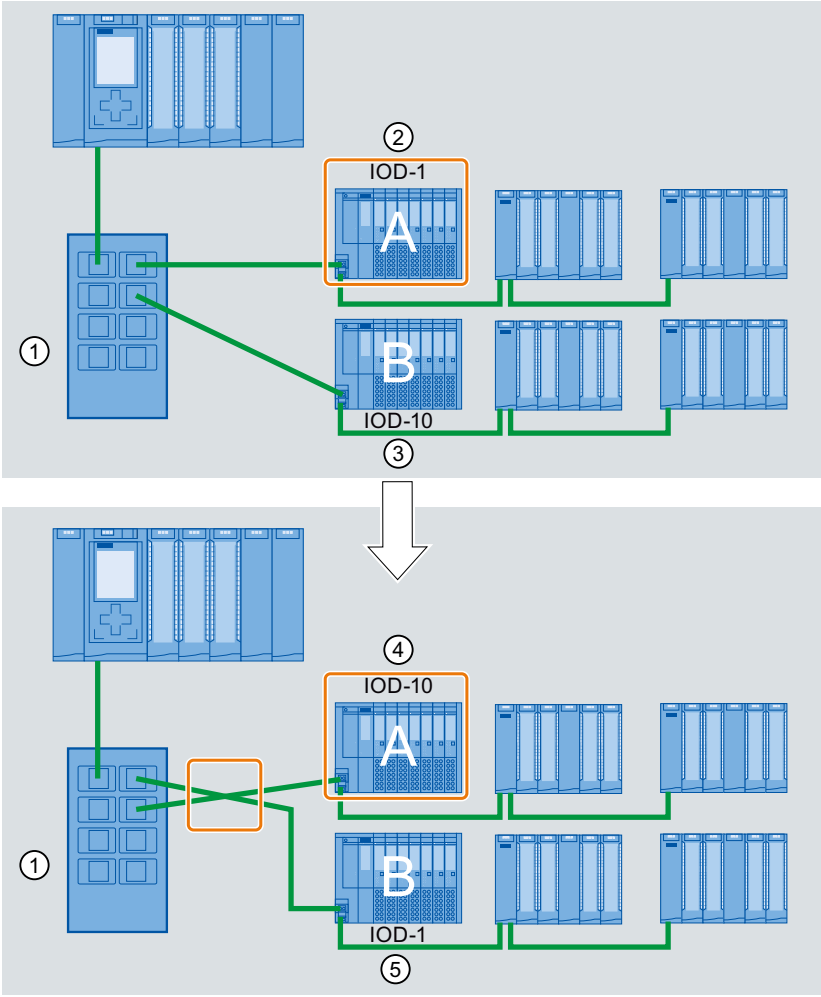

① Switch with connected PROFINET cables
② Device A, device name "IOD-1": controls motor 1
③ Device B, device name "IOD-10": controls motor 10
④ Device A controls motor 10!
⑤ Device B controls motor 1!

Procedure

Proceed as follows to change the "Permit overwriting of PROFINET device names of all assigned IO devices" option:

1. Select the PROFINET interface of the CPU for which you want to change the option in the network view or in the device view.
2. Select the area "Advanced options", section "Interface options".
3. Change the option.

6.10 Standard machine projects

Introduction

Standard machine projects are STEP 7 projects that use a set of innovative functions allowing simple configuration and commissioning of flexible automation solutions for standard machines or for machines with a modular structure.

A hardware configuration consisting of an IO controller and any number of connected IO devices represents a "PROFINET IO system master". This master is configured with a maximum configuration based on a template from which various options can be derived for different standard machines, for example with different configuration variants of the IO system.

Greater flexibility at all levels

Standard machine projects have the following central characteristics:

- Different variants of a standard machine can be loaded from precisely one project with an engineered maximum configuration (IO system options). The standard machine project covers all variants (options) of the IO system.
- An IO system option can be integrated in an existing network locally using simple tools.

Flexibility is provided in more ways than one:

- With suitable configuration, adaptation of the IP address parameters of the IO controller is possible locally using simple tools. This allows a standard machine to be integrated in different plants with little effort or to be included in a network several times.
  IO systems with this property are known as **multiple use IO systems**.
- With suitable configuration and programming, different setups of IO system options can be operated locally that differ in terms of the selection of IO devices used or in terms of the arrangement of the IO devices.
  Since the specific configuration of the IO system is controlled by the user program, this is known as **configuration control for IO systems**.
- Independently of the functions described above, with suitable configuration and programming, you can use different station options of central devices or distributed I/O devices in one project. The devices can be different in terms of the selection and arrangement of the modules.
  Since the concrete configuration of the station is controlled by the user program, this is also known as **configuration control at the device layer**.

Application examples

You can find application examples for configuration control at the device layer, configuration control for IO systems and multiple-use IO systems on the Internet (https://support.industry.siemens.com/cs/ww/en/view/29430270).

Additional information

For more information on multiple use IO systems, refer to section Multiple use IO systems (Page 233).

For more information on the configuration control for IO systems, refer to section Configuration control for IO systems (Page 240).
For more information on configuration control, refer to the system manual S7-1500, ET 200MP (http://support.automation.siemens.com/WW/view/en/59191792).

6.10.1 Multiple use IO systems

6.10.1.1 What you should know about multiple use IO systems

Multiple use automation solutions

For a flexible reusable automation solution as is the case with series machines, the following use cases are typical:

- The machine (and therefore also the PROFINET IO system) is used more than once by the customers.
- The machine is used in different plants by various customers.

For this to be possible, the automation solution must meet the following requirements:

- A project (configuration and program) can be loaded on various machines of the same type without changes.
- Only a few easy adaptations need to be performed locally to integrate the machine into an existing network infrastructure.

The following figure shows how an automation solution with a multiple use IO system is loaded on different automation systems and then one automation system is adapted to the existing network infrastructure locally.

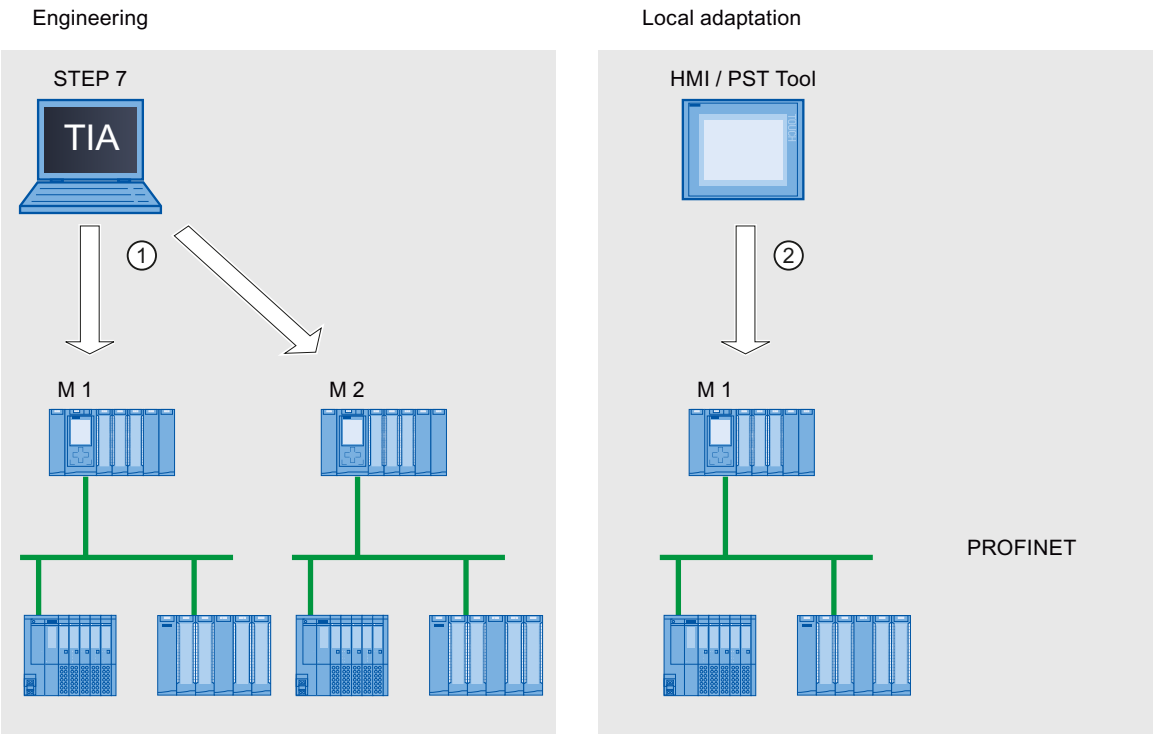

① Load configuration with multiple use IO system

② Set IP address and device name locally on the IO controller

Figure 6-94 "Multiple use IO system" principle

Principle

The automation components for a machine include a PROFINET IO system, consisting of an IO controller (PROFINET interface of a CPU) and the IO devices assigned to it.

With the "Multiple use IO system" setting for the IO system, you turn a STEP 7 project into a "Standard machine project".

The "Multiple use IO system" setting triggers various settings and checks of the configuration by STEP 7. The settings ensure that the IO system is self-contained and there are no dependencies on components outside the IO system.

Requirements

- STEP 7 as of V13
- The IO controller supports the "Multiple use IO system" function, for example a CPU 1512SP-1 PN as of firmware version 1.6.

Rules

The following rules apply to a multiple use IO system:

- No IO device can be configured as shared device.
- The ports of the devices must be interconnected.
  Devices for which no port interconnection is configured, for example, interface module IM 154-6 IWLAN (ET 200pro PN), cannot be operated with STEP 7 V13 as IO devices on a multiple use IO system.
- If an IO device in a multiple use IO system is an I-device (CPU as an "intelligent" IO device):
  - If the I-device has a lower-level IO system, this I-device cannot be connected to the same PROFINET interface as the higher-level IO controller.
    Note: If the I-device is configured using a PROFINET GSD, STEP 7 cannot check for compliance with this rule. In this case, you are responsible for ensuring compliance with the rule.

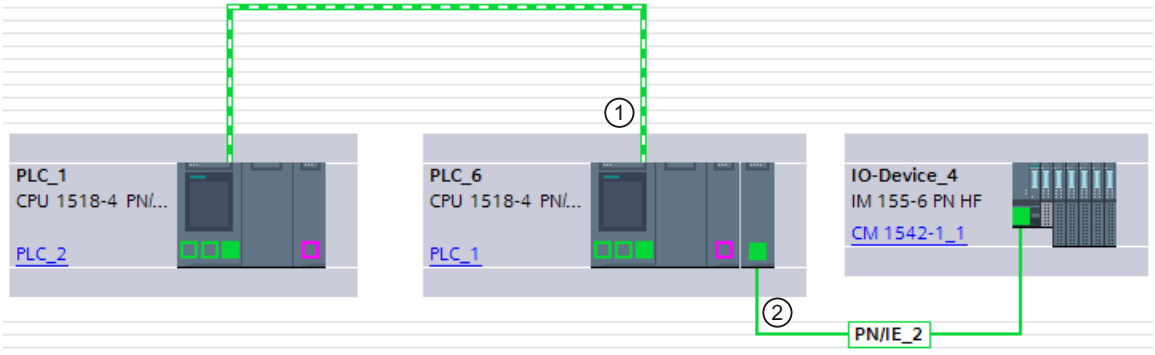

① I-device in multiple use IO system. The PROFINET interface is operated as IO device. No other IO system is connected here.

② A lower-level IO system on the I-device is connected to another PROFINET interface.

Figure 6-95 Example configuration for "Multiple use IO system" with I-device

  - The PROFINET interface of the I-device must be set to "Parameter assignment of PN interface by higher-level controller".
- If MRP (Media Redundancy Protocol) is configured:
  - All IO devices on the multiple use IO system must belong to the same MRP domain.
- If IRT (Isochronous Real Time) is configured:
  - All IO devices in multiple use IO systems must belong to the same sync domain.
  - The sync domain must not include any other IO devices.
- IE/PB Links cannot be operated as an IO device in a multiple use IO system with STEP 7 V13.

Configuration

You specify whether or not a configuration can be used multiple times in the properties of the IO system.

All other parameter settings for the configured devices are then set automatically by STEP 7 and checked during compilation.

Boundary conditions

To prevent a standard machine project from having dependencies on other devices outside of the machine, observe the following:

- A standard machine project consists of an IO controller and the corresponding IO devices. You should therefore configure only one CPU as IO controller and the corresponding IO devices in the standard machine project.
- Do not use connection configured at both ends for the communication. Instead, use only a connection configured at one end or unspecified connections if necessary.

  Background: To configure the communication in a STEP 7 project, it is always possible to set the IP address parameters in the project. For multiple use IO systems, however, this strategy is not possible since the IP address parameters of the IO controller and the assigned IO devices are assigned locally. At the time of the configuration, the IP address parameters are therefore unknown.

  If you nevertheless want to configure communication with devices on PROFINET, for example with a central coordinator, you can only use communications mechanisms that allow dynamic assignment of the IP address parameters in the user program.

  Example: Open User Communication

  If, for example, the device is configured as an active end point (initiator of the connection), the IP address parameters can be stored, for example, in a data block. You then supply the data block with the currently valid IP address parameters during commissioning. For this dynamic type of IP address parameter assignment, there is no system support; in other words, if you change the configuration of the system, the IP address parameters are not automatically adapted.

  You will find a description of handling instructions for Open User Communication under this keyword in the STEP 7 online help.

6.10.1.2 Configuring multiple use IO systems

Requirements

- STEP 7 as of V13
- The IO controller supports the "Multiple use IO system" function, for example a CPU 1512SP-1 PN as of firmware version 1.6.

Procedure

The configuration of a series machine using an S7-1500-CPU as an example is described below.

To create a standard machine project, follow these steps:

1. Create a project.
2. Configure a CPU as the IO controller, for example a CPU 1518-4 PN/DP as of firmware version 1.5.
3. Configure the required IO devices and assign the IO devices to the IO controller.
4. Configure the port interconnection between the devices.

5. Select the IO system so that you can edit the properties in the inspector window.
6. Select the "Multiple use IO system" check box in the "General" area of the inspector window.

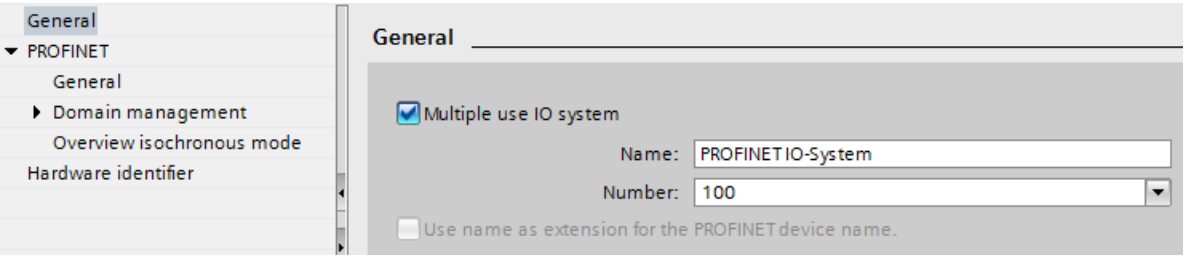

Figure 6-96 Activate "Multiple use IO system"

Result: The following settings are made by STEP 7:

- The device name of the IO controller (CPU) in the standard machine project is set to "PROFINET device name is set directly at the device". The IO controller (CPU) has no PROFINET device name initially.
- The IP protocol of the IO controller (CPU) is set to "IP address is set directly at the device". The CPU has no IP address initially.
- The "Support device replacement without exchangeable medium" option is selected automatically. This option enables automatic commissioning. A commissioning engineer does not have to assign device names to the IO devices locally. The IO controller assigns the device name and IP address to the IO devices based on the preset topology and other settings during startup.
- The device name of the IO devices is set to "Generate PROFINET device name automatically" (from the configured name of the IO device).
- The IP protocol of the IO devices is set to "IP address is set by the IO controller during runtime". The IO devices have no IP address initially. If an IO device is not a typical distributed I/O system (e.g., ET 200 systems), but rather another device such as an HMI device, change the option to "IP address is set directly at the device"; see below.
- The device number for the IO devices is automatically assigned and is used locally for making the IP address unique.

The option "Permit overwriting of PROFINET device name" must be selected (CPU parameters, properties of the PROFINET interface, Ethernet addresses area) so that the IO controller can adapt the device name later at the operator.

This option is disabled by default.

The following figure shows the above-described settings for the IP address and PROFINET device name.

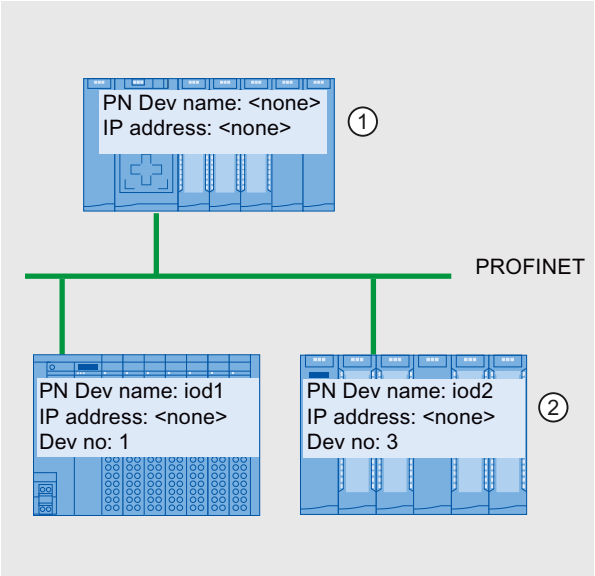

① After the configuration is loaded from the standard machine project, the IO controller has no device name and no IP address.

② Following loading, the IO devices have a device name and a device number but no IP address.

Figure 6-97 Settings for the IP address and the PROFINET device name

How an IO device obtains an IP address locally

Below, you will find an explanation of the "IP address is set by the IO controller during runtime" and "IP address is set directly at the device" options, which can generally be configured for a multiple use IO system.

If you have set the "Multiple use IO system" option for the IO system, STEP 7 automatically sets the "IP address is set by the IO controller during runtime" option for the IO devices.

In this case, the IO controller assigns the IO device an IP address that results from the locally assigned IP address of the IO controller (see next section). This option is appropriate if the IO device is a field device, e.g., ET 200MP, ET 200SP, ET 200AL, or another distributed I/O system.

If the IO device is not a "standard" field device, for example, an HMI device for a Windows operating system, the "IP address is set by the IO controller during runtime" option described above does not work. In this case, choose the "IP address is set directly at the device" option. You must then assign the IP address to the device locally and take steps to ensure that this address is suitable for the IP addresses of the other IO devices and the IP address of the IO controller.

6.10.1.3 Adapt multiple use IO systems locally

A few steps are needed to adapt the machine that was loaded with the standard machine project.

Only the device name and IP address of the IO controller must be adapted locally. The device names and IP addresses of the IO devices result from these adaptations. In this example, the effects of local settings are described for two specific machine modules.
The local settings are possible, for example, with the CPU display and commissioning tools such as Primary Setup Tool (PST) or PRONETA. You do not need a programming device with STEP 7 to make these settings, even though it is possible to do so.

Requirements

- The machine was loaded with a standard machine project (see Configuring multiple use IO systems (Page 236)).
- The display is ready for operation and the desired tool for assigning the IP address and device name is available (e.g., PST Tool, STEP 7).
- The ports of the IO controller and IO devices are interconnected according to the configuration.

Procedure

Observe the boundary conditions and instructions for commissioning an S7-1500. For more information on commissioning an S7-1500 CPU, refer to the system manual S7-1500, ET 200MP (http://support.automation.siemens.com/WW/view/en/59191792).
To adapt a standard machine locally, follow these steps:

1. Integrate the machine into the network.
2. Connect the device for assigning the IP address and device name to the CPU, for example a PG/PC with the appropriate software.
3. Assign the desired device name and IP address to the IO controller.
4. Start up the CPU.

The IO controller then assigns the adapted PROFINET device name and a unique IP address to the IO devices.
The following rules apply to the assignment:

- The device names of the IO devices are formed by chaining together the following name components, separated by a period:
  <configured name of the IO device from the standard machine project>.<name of the associated IO controller set on the device>
- The IP addresses of the IO devices result from the locally configured IP address of the associated IO controller and the device number (sum).

NOTE

Make sure that duplicate IP addresses cannot be created on the subnet during the assignment. The IO controller does not assign a new IP address in this case.

In the following figure, the device name "m1" and the IP address 192.168.1.10 have been assigned to the IO controller of the first machine.
The device name "m2" and the IP address 192.168.1.20 has been assigned for the second machine.

Refer to the figure for the resulting device names and IP addresses.

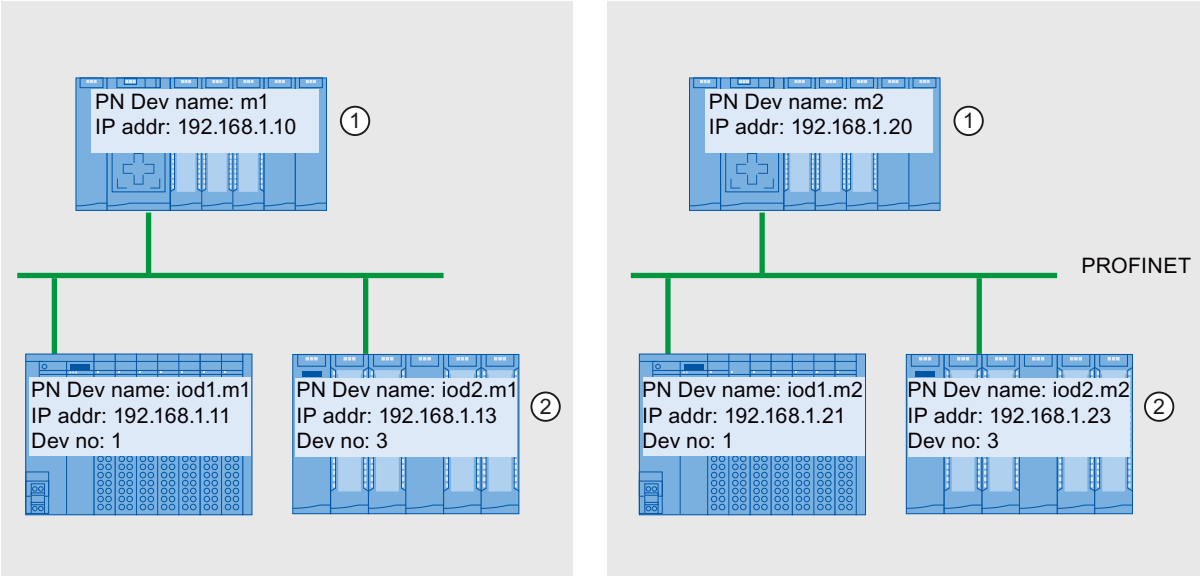

① Set device name and IP address on the IO controller

② After startup, the IO devices have an updated device name (<configured device name>.<device name of IO controller>) and an adapted IP address (= <IP address of IO controller> + <device number>)

Figure 6-98 Example of the assignment of IP addresses and device names at "Multiple use IO system"

See also

Configuring multiple use IO systems (Page 236)

6.10.2 Configuration control for IO systems

6.10.2.1 Information about configuration control of IO systems

Configuration control of IO systems makes it possible to generate several concrete versions of a standard machine from a standard machine project.

You are given the flexibility to vary the configuration of an IO system for a specific application as long as the real configuration can be derived from the set configuration. The configured configuration therefore represents the superset of all real configurations that can be derived from it.

The following figure shows an example of how two IO systems with a different number of IO devices arise from one standard machine project.

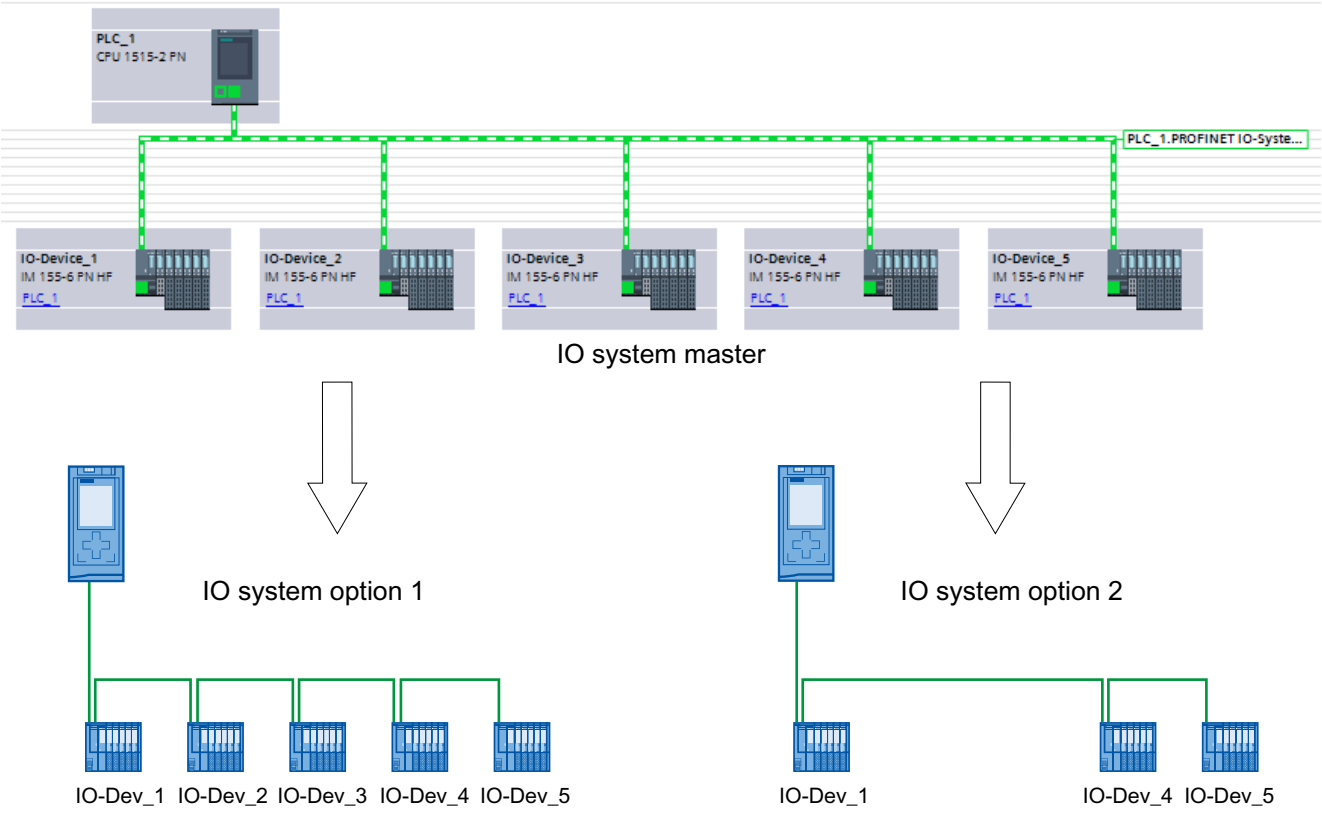

Figure 6-99 Example of configuration control for PROFINET IO systems

In the following sections, you find a description of how to configure and program a PROFINET IO system to commission, for example, a standard machine on-site without using configuration software.

Concept

The principle of configuration control is already known at the device level for the flexible use of submodules/modules ("option handling"). Different configurations can be derived from one engineering project both for central as well as for distributed I/O.

With S7-1500 CPUs as of firmware version V1.7, this principle can also be applied at the IO system level. You have the option of omitting, adding or changing the order of stations (IO devices) of a PROFINET IO system in a specific plant.

Configuration control for devices and configuration control for IO systems can be combined; the functions are independent of each other.

It is possible to operate variants deviating from a maximum configuration of an IO system. In a standard machine project, you can prepare a kit of IO devices which can be flexibly customized for various configurations using configuration control.

The following variations are available:

- Variation of the number of IO devices involved
  You include optional IO devices for the configuration control in the configuration by transferring a suitable data record with the required configuration in the user program.
- Variation of the order of IO devices involved
  You adapt the port interconnection of the IO devices to the topology being used by transferring a suitable data record with the required topology in the user program.

The following figure shows how you serve two different configurations with an IO device marked as optional in the network view of STEP 7.

- Configuration without the optional IO device:
  In this case, you use the instruction "ReconfigIOSystem" to transfer a data record to the PROFINET interface containing the information that no optional IO device is to be included in the configuration.
- Configuration with the optional IO device:
  In this case, you use the instruction "ReconfigIOSystem" to transfer a data record to the PROFINET interface adding the optional IO device to the configuration.

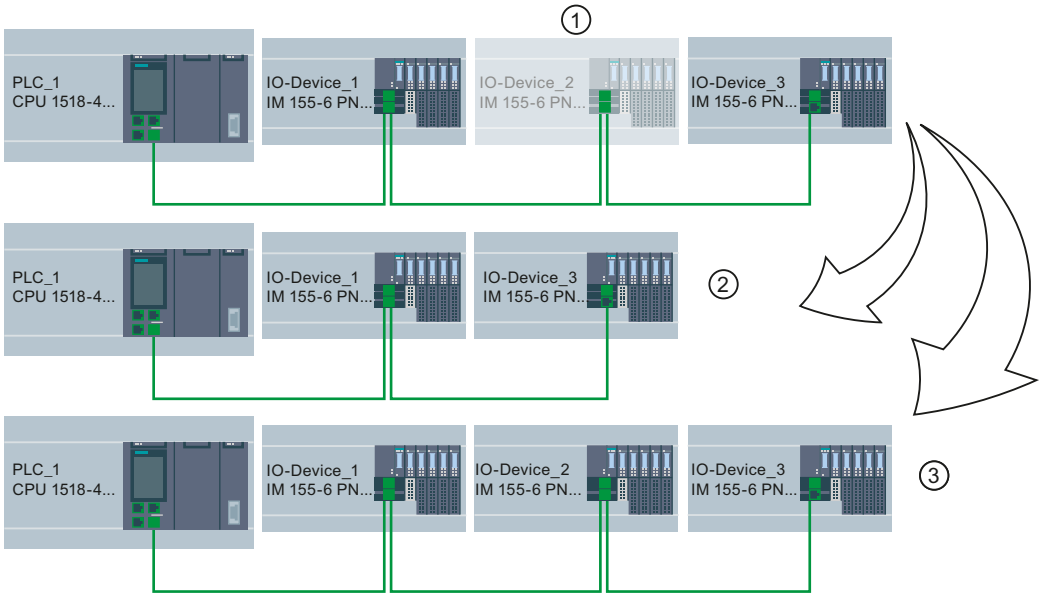

① Determined through parameter assignment: IO Device_2 is optional IO device

② Configuration without the optional IO device

③ Configuration with the optional IO device

Figure 6-100 Example configuration with "Optional IO device" and the associated configuration options

Summary: The procedure in principle

The following phases are distinguished when it comes to the implementation of a standard machine concept:

1. Engineering phase: Creating a standard machine project and loading into specific machine or plant:
   - Completely configuring all IO devices (options) ever required in a specific machine or plant
   - Configuring as optional those IO devices that will be omitted in specific machines or plants
   - Preparing user program (see Configuring flexible order of IO devices (Page 249)) with the possibility of selecting on-site the actually existing configuration via switch or HMI device
2. Commissioning phase: Preparing specific machine or plant for operation:
   - Integrating machine or plant in the on-site network (see Adapt multiple use IO systems locally (Page 238))
   - Selecting the currently existing configuration of the IO system via configured option

6.10.2.2 Configuring IO devices as optional

Requirements

- IO controller supports configuration control for IO systems, for example CPU 1516-3 PN/DP as of firmware version 1.7
- STEP 7 V13 SP1 or higher
- The rules (Page 253) for the establishment and operation of a standard machine project have been considered.

Port interconnection

As of STEP 7 V15.1, port interconnection is not necessary for optional IO devices.

A port interconnection between the devices of the IO system that you want to customize with the user program is mandatory in the following cases.

- You have configured IRT.
- You have configured MRP.
- You are using STEP 7 <= V15.

Procedure

To configure an IO device as optional IO device, proceed as follows:

1. Create a project.
2. Configure an S7-1500 CPU firmware version V1.7 or higher as IO controller.
3. Configure the required IO devices and assign the IO devices to the IO controller.
4. Select the IO device you want to mark as optional.
5. Select the area "PROFINET interface [X1]" > Advanced options".

6. Enable the "Optional IO device" option.

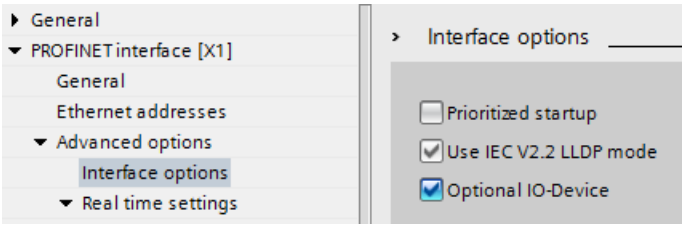

Figure 6-101 Configure the IO device as an optional IO device

7. Repeat steps 4 to 6 for all IO devices to be configured as optional.
8. Load the configuration onto the CPU.

Result: Once this configuration is loaded, the system behavior is as follows:

- The CPU is prepared for the configuration control of the IO system.
- All IO devices are disabled.
- Irrespective of whether you customize the configuration with the user program (adding optional IO devices) or make no changes to the loaded configuration: You must call the instruction "ReconfigIOSystem" in the user program and notify the current configuration to the system!
  The system will not be operational without calling the instruction "ReconfigIOSystem".
  For further information on the proceeding see Enabling optional IO devices in the program (Page 244).

Fast parameter assignment in the "IO communication" table

You can also specify whether or not an IO device is optional in the "IO communication" tab. In an additional "Optional IO device" column, a selectable check box is available for each IO device that indicates whether or not an IO device is optional. Here, you can adjust the setting centrally.

6.10.2.3 Enabling optional IO devices in the program

Requirements

- IO controller supports configuration control for IO systems, for example CPU 1516-3 PN/DP as of firmware version 1.7
- STEP 7 V13 SP1 or higher
- At least one IO device was configured as optional IO device.
- The rules (Page 253) for the establishment and operation of a standard machine project have been considered.

Procedure

Observe the information on and rules for commissioning in the documentation for SIMATIC S7-1500, for the ET 200SP CPUs and for the CPU 1516pro-2 PN.

The following description of the proceeding only includes steps required to understand the program-controlled activation of an optional IO device.

To activate or deactivate IO devices, follow these steps:

1. Create a data record "CTRLREC" for the instruction "ReconfigIOSystem". You can find information on the structure of the data record in the STEP 7 online help.
2. Call the instruction "ReconfigIOSystem" and select MODE 1 to deactivate all IO devices.

   If you set the CPU to STOP or POWER OFF state in order to modify the plant in this status (for example to add an optional IO device), explicit deactivation using "ReconfigIOSystem" with mode 1 is not necessary. In this case, i.e. following a STOP-RUN transition and following a POWER-OFF > POWER-ON transition, all IO devices are deactivated automatically.
3. When you have brought the plant to a safe status that allows restructuring without any danger:

   Put the plant together according to your intended application. Add the required optional IO devices at the points at which you planned this in the configuration (observe the order!) or remove optional IO devices that you no longer require.
4. Network the IO devices.
5. Startup the S7-1500 system and call again the instruction "ReconfigIOSystem". Select MODE 2 to transfer the data record CTRLREC.
6. Following successful transfer of the data record, call again the instruction "ReconfigIOSystem". Select MODE 3 to activate all IO devices forming part of the current configuration.

   Result: The CPU **activates** the following IO devices:
   - All IO devices that you have not set as optional IO devices.
   - All optional IO devices listed in the control data record (CTRLREC).

   The following IO devices remain **disabled**:
   - Docking units (IO devices changing during operation).
   - Optional IO devices that are not listed in the control data record.

NOTE

Call the instruction "ReconfigIOSystem" for all values of the parameter MODE with the same control data record (CTRLREC)!

If you use different data records for the values of the MODE parameter, this results in an inconsistent customization of the configuration and thus to rather incomprehensible error messages.

Example: Data record structure for the activation of an IO device

The IO device "IO-Device_2" is to be activated as the only IO device in the user program.

To do this, you only require the hardware identifier of "IO-Device_2".

Recommendation: Use the system constants of the hardware identifiers instead of the absolute values as shown in this example. With this procedure, the content of the DB is not influenced by changes to the hardware identifiers as the result of changes to the configuration.

The data record is to be stored in a data block and to be transmitted to the PROFINET interface of the IO controller in the user program using the instruction "ReconfigIOSystem".

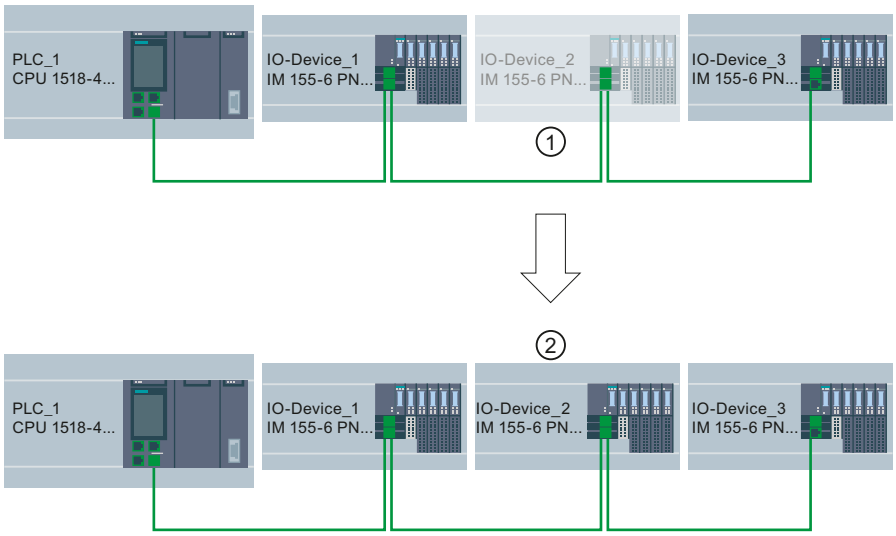

① IO device_2 is configured as optional IO device.

② Once the data record is transmitted and the configuration is activated using the instruction "ReconfigIOSystem" IO device_2 is included in the configuration and participates in the data exchange with the IO controller.

Figure 6-102 Example: Activating an optional IO device

Creating data block

In this example, the control data record is created in a data block. The data block is structured as follows:

Line 2: Array definition: Array of type Word with 4 elements. Array of Word is permitted as the data type.

Line 3: Version of the data record (currently: V1.0).

Line 4: Number of optional IO devices to be activated (here: 1).

Line 5: List of the hardware identifiers of the IO devices, inserted here as system constants.

Line 6: Number of port interconnections that are set in the user program (here: 0).

Line 7: Additional data records (optional)

myCTRLREC

	Name	Data type	Start value	Comment
1	Static			
2	ArrMachineConfig0	Array[0..3] of Word		Array for one optional IO device
3	ArrMachineConfig0[0]	Word	16#0100	
4	ArrMachineConfig0[1]	Word	16#0001	
5	ArrMachineConfig0[2]	Word	"IO-Device_2~IODevice"	
6	ArrMachineConfig0[3]	Word	16#0000	
7	ArrMachineConfig1	Array[0..8] of Word		

Figure 6-103 Data block with control records

Parameter MODE of instruction "ReconfigIOSystem"

You control how the "ReconfigIOSystem" instruction works with the MODE parameter.
The following values are possible for the MODE input parameter:

MODE	Description
1	All IO devices of the IO system can be disabled by calling the instruction with MODE 1. The "ReconfigIOSystem" instruction uses the "D_ACT_DP" instruction internally. "ReconfigIOSystem" returns errors that are detected by D_ACT_DP in the following output parameters: • STATUS (error code) • ERR_INFO (hardware identifier of the IO device causing the error). In STATUS and ERR_INFO, the CPU enters the last determined error/HW identifier and in so doing overwrites an existing error code. For this reason, additional errors can be present besides the entered error.
2	For controlling the actual configuration of the IO system, the instruction transfers the data record to the PROFINET interface, which is addressed with LADDR block parameter (HW identifier of the PROFINET interface).
3	All non-optional IO devices in the IO system and optional IO devices that are listed in the control data record CTRLREC are enabled. The optional IO devices that are **not** listed in the CTRLREC data record remain disabled. If IO devices that are part of docking units (alternating IO devices in operation) are listed in the CTRLREC control data record, the PN IO system reacts as follows: • IO devices of the docking units remain disabled when ReconfigIOSystem is called with MODE 3. This reaction corresponds to the reaction of a configuration without configuration-controlled IO devices. IO devices of docking units are disabled by default and must be enabled in the user program. For more information on docking units, refer to the section Docking systems (Page 257).

Rules for the call sequence of "ReconfigIOSystem"

- Always supply the instruction "ReconfigIOSystem" with the same control data record (CTRLREC input parameter)!
- Call sequence following POWER OFF -> POWER ON transition:
  - ReconfigIOSystem call with MODE 1 (optional).
  - ReconfigIOSystem call with MODE 2 (mandatory, even without previous reconfiguration!).
  - ReconfigIOSystem call with MODE 3 (mandatory).
- Call sequence following STOP > RUN transition:
  - ReconfigIOSystem call with MODE 1 (optional).
  - ReconfigIOSystem call with MODE 2 (mandatory, even when configuration was modified in STOP state). Otherwise not required).
  - ReconfigIOSystem call with MODE 3 (mandatory).
- Call sequence for reconfiguration in RUN state:
  - ReconfigIOSystem call with MODE 1 (mandatory).
  - ReconfigIOSystem call with MODE 2 (mandatory).
  - ReconfigIOSystem call with MODE 3 (mandatory).

Explanations and recommendations concerning the rules

- If you do not list an IO device to be configured as optional IO device in the control data record or data block resp. this IO device does not form part of the configuration and does not take part in data exchange with the CPU.
- If you do not activate any optional IO device at all and work with the loaded configuration without reconfiguration, you still have to follow the proceeding described in the above section and transmit the control data record to the CPU.
  The control data record has the simple structure with the following tags:
  – Version (High Byte =1, Low Byte = 0)
  – Number of optional devices to be activated = 0
  – Number of port interconnections that are set in the user program = 0
- Following a STOP > RUN transition and following a POWER-OFF > POWER-ON transition, all IO devices are deactivated automatically. For this reason, no ReconfigIOSystem call with MODE 1 is required for configuration control to function properly.
  If you use your project as a universally valid sample for programming the configuration control, we still recommend to perform the ReconfigIOSystem call with MODE 1 prior to any reconfiguration. This way, the sample can also be used for reconfigurations in RUN mode.
- Commissioning extensive I/O systems (more than 8 optional IO devices) while using IRT at the same time:
  To keep the startup times short when activating the optional IO devices (ReconfigIOSystem, mode 3), note the following tip: Check the device numbers of the IO devices. The device numbers should follow the topological interconnection starting at the IO controller in ascending order. The further an IO device is from the IO controller topologically, in other words the more IO devices there are between the IO controller and the IO device in question, the higher the device number should be.
  You set the device numbers in the "Ethernet addresses - PROFINET" area in the Inspector window with the PROFINET interface selected.
  Example of the assignment of device numbers with a linear topology:

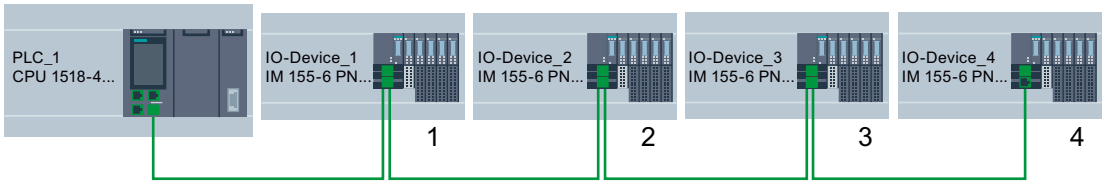

Figure 6-104 Example: Device numbers in a line topology

- The CPU processes the instruction "ReconfigIOSystem" to transfer the control data record asynchronously.
  For this reason, you must call "ReconfigIOSystem" in a loop repeatedly when calling the instruction in the startup program until the output parameter "BUSY" or "DONE" indicate that the data record has been transferred.
  Tip: To program the loop, use the SCL programming language with the instruction REPEAT ... UNTIL.

```
REPEAT
    "ReconfigIOSystem"(REQ := "start_config_ctrl",
                       MODE := 1,
                       LADDR := 64,
                       CTRLREC := "myCTRLREC".ArrMachineConfig0,
                       DONE => "conf_DONE",
```

```
                    BUSY => "conf_BUSY",
                    ERROR => "conf_ERROR",
                    STATUS => "conf_STATUS");
UNTIL NOT "conf_BUSY"
END_REPEAT;
```

Additional information

For information on the basic structure of the data record and on using the instruction "ReconfigIOSystem" see the STEP 7 online help.

See also

Configuring IO devices as optional (Page 243)

6.10.2.4 Configuring flexible order of IO devices

The following section shows how you can create the conditions required to change the order of IO devices in a PROFINET IO system.
This function is also supported with optional IO devices. For simplicity, a maximum configuration without optional IO devices is shown below.

Concept

A typical application for a standard machine project consists of composing an entire plant from a set of various plant units which only differ with respect to the different arrangement of the units, e.g. in the case of transport systems. Each plant unit consists of a functional unit of mechanics (rails or conveyor belts) and electrics (power supply, IO device with IO modules, sensors, actuators, motors, PROFINET port for data exchange with central control ...).
The following figure shows how, simply by exchanging two rail segments, a new transport system is created that is adapted with an upstream points to the local conditions.

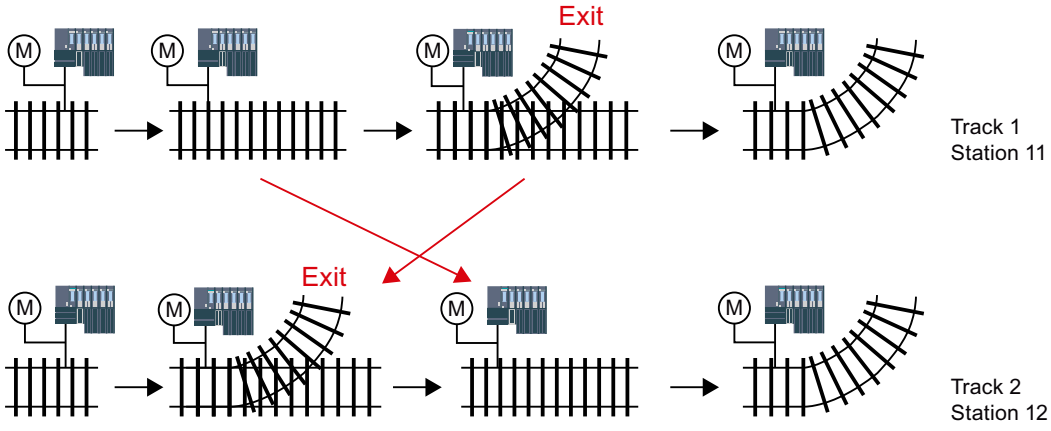

Figure 6-105 Example: Changing the arrangement of IO devices

From the automation viewpoint, no change in the project is required for the flexible adjustment of the PROFINET configuration.

The order of the IO devices is determined by the port interconnection. For each IO device, you define in the port properties the partner port and thus the neighboring device connected at the respective local port. If the partner port is to be defined by the user program, the option "Partner set by user program" is to be selected as partner port.

The figure below shows the initial configuration of the transport system shown above, which is to permit the order of the connected IO devices to be changed via the user program. In the example, the order of IO-Device_2 and IO-Device_3 is to be controlled via the user program.

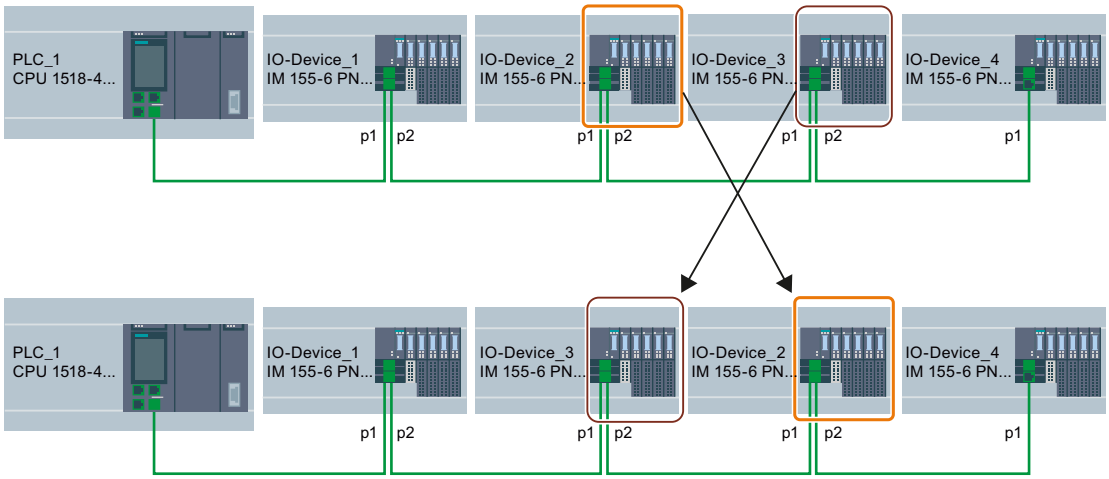

Figure 6-106 Example configuration: Configuring flexible order of IO devices

To determine how the partner port settings are to be selected, you must note for each device and each port of a device which partner can be interconnected.

- If the partner is always the same in the different configurations provided, you select the partner port for this partner.
- If the partners vary in the different configurations, you select "Setting partner by user program".

For the example in the figure above, the following port settings result:

Device	Local port	Partner port setting	Explanation
PLC_1	p1	p1 (IO device_1)	Partner of PLC_1 at port 1 is IO device_1 (always)
IO device_1	p1	p1 (PLC_1)	Partner of IO device_1 at port 1 is PLC_1 (always)
IO device_1	p2	Partner is set by user program	Partner of IO device_1 at port 2 is either IO device_2 or IO device_3 => Setting partner by user program
IO device_2	p1	Partner is set by user program	Partner of IO device_2 at port 1 is either IO device_1 or IO device_3 => Setting partner by user program
IO device_2	p2	Partner is set by user program	Partner of IO device_2 at port 2 is either IO device_3 or IO device_4 => Setting partner by user program
IO device_3	p1	Partner is set by user program	Partner of IO device_3 at port 1 is either IO device_2 or IO device_1 => Setting partner by user program

Device	Local port	Partner port setting	Explanation
IO device_3	p2	Partner is set by user program	Partner of IO device_3 at port 2 is either IO device_4 or IO device_2 => Setting partner by user program
IO device_4	p1	Partner is set by user program	Partner of IO device_4 at port 1 is either IO device_3 or IO device_2 => Setting partner by user program
IO device_4	p2	Any partner	No partner planned at port 2

Requirement

- IO controller supports configuration control for IO systems, for example CPU 1515-2 PN as of firmware version 1.7
- STEP 7 V13 SP1 or higher
- The rules (Page 253) for the establishment and operation of a standard machine project have been considered.

Procedure

To set the partner port for a program controlled interconnection, proceed as follows:

1. Select the PROFINET interface of the device (IO controller or IO device) whose port you want to set.
2. In the properties of the PROFINET interface, select the area "Port interconnection" (Extended options > Port [...] > Port interconnection).
3. From the drop-down list, select "Setting partner by user program" as partner port.
4. Repeat steps 1 to 3 for each port to be interconnected via the user program.

See also

Customizing arrangement of IO devices in the program (Page 251)

6.10.2.5 Customizing arrangement of IO devices in the program

Requirements

- IO controller supports configuration control for IO systems, for example CPU 1516pro-2 PN as of firmware version 1.7 as an IO controller
- STEP 7 V13 SP1
- At least one partner port was configured as "Partner set by user program".
- The rules (Page 253) for the establishment and operation of a standard machine project have been considered.

Procedure

The proceedings corresponds to the proceeding for activating optional IO devices.

Only the structure of the data record must be extended for the program-controlled assignment of the ports. The extension is described in the following sections.

Example: Data record structure for the assignment of partner ports

For the data record structure, you need the HW identifications of the ports.

The data record is to be stored in a data block and to be transmitted to the PROFINET interface of the IO controller in the user program using the instruction "ReconfigIOSystem".

As the input parameter RECORD of the instruction "ReconfigIOSystem" is of the VARIANT data type, you first have to create a data type for the data block.

In the following sections, you find a description of the structure of the PLC data type as well as of the structure of the data block based on this type.

Selecting derived configuration

For the following selected configuration it is shown below what the data record must look like so that the IO devices are interconnected in the planned order by the user program.

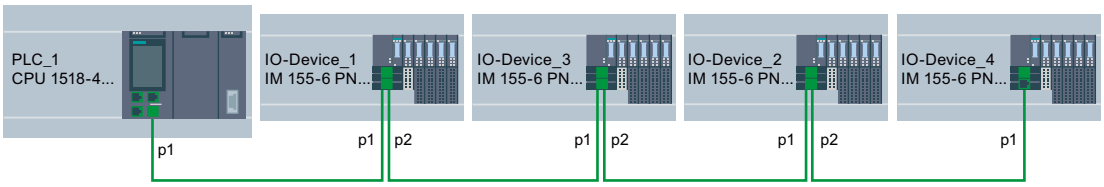

Figure 6-107 Example configuration: Customizing arrangement of IO devices in the user program

This example is based on the flexible configuration from the previous section (Page 249) with the settings for the respective partner ports described there.

The partner ports in the specific derived configuration have been defined so that it is possible to name the HW identifications of the ports involved.

The following table only contains those devices whose ports can be defined by the user program. Only these devices are relevant for the data record structure.

Device	Local port	Partner port setting	Partner port of the selected configuration
IO device_1	p2 = Port 2 HW identifier: 251	Partner is set by user program	Port 1 of IO device_3 HW identifier: 261
IO device_2	p1 = Port 1 HW identifier: 281	Partner is set by user program	Port 2 of IO device_3 HW identifier: 291
IO device_2	p2 = Port 2 HW identifier: 311	Partner is set by user program	Port 1 of IO device_4 HW identifier: 321

Creating data block

For the derived configuration, the structure of the data block "DB-IO-SYSTEM-Port-Interconnections" is explained as an example.

This data block is used when calling the instruction "ReconfigIOSystem" at input parameter "CTRLREC".

Instead of the absolute values for the hardware identifiers of the ports, the system constants of the hardware identifiers are used here.
The data block is structured as follows:
Line 2: Declaration of an Array of Word (only this data type is possible).
Line 3: Version of the control data record: V1.0.
Line 4: Number of optional IO devices: 0.
Line 5: Number of specified port interconnections: 3.
Line 6: Port interconnection 1, local port.
Line 7: Port interconnection 1, partner port.
Line 8: Port interconnection 2, local port.
Line 9: Port interconnection 2, partner port
Line 10: Port interconnection 3, local port.
Line 11: Port interconnection 3, partner port.

IO-SYSTEM-Port-Interconnections

	Name	Datentyp	Startwert	Kommentar
1	Static			
2	ArrMachineConfig	Array[0..8] of Word		data record for port interconn settings
3	ArrMachineConfig[0]	Word	16#0100	
4	ArrMachineConfig[1]	Word	16#0000	
5	ArrMachineConfig[2]	Word	16#0003	
6	ArrMachineConfig[3]	Word	"IO_device_1~PROFINET_interface~Port_2"	
7	ArrMachineConfig[4]	Word	"IO_device_3~PROFINET_interface~Port_1"	
8	ArrMachineConfig[5]	Word	"IO_device_2~PROFINET_interface~Port_1"	
9	ArrMachineConfig[6]	Word	"IO_device_3~PROFINET_interface~Port_2"	
10	ArrMachineConfig[7]	Word	"IO_device_2~PROFINET_interface~Port_2"	
11	ArrMachineConfig[8]	Word	"IO_device_4~PROFINET_interface~Port_1"	

Figure 6-108 Data block with data record for port interconnections

Interconnection not listed in data block

If the partner port was configured as "Setting partner by user program" in the port properties and this port is not listed in the data record or data block resp., then the CPU sets this port to the setting "any partner". If no data record is transmitted at all, the CPU sets this "any partner" setting for all program-controlled assignments.

Additional information

For information on the basic structure of the data record and on using the instruction "ReconfigIOSystem" see the STEP 7 online help.

6.10.2.6 System behavior and rules

Below, you find a description of how an IO system whose configuration is controlled by the user program behaves in operation.
In addition, rules and restrictions are listed here which must be considered when configuring the maximum structure of the configuration in a standard machine project.

System behaviorsee Configuration control for IO systems

- System diagnostics:
  If an optional IO device is deactivated, the IO device is displayed as "deactivated" from the system diagnostics viewpoint (online view or Online & Diagnostics).
- Topology view:
  Offline view: As configured. No interconnection is shown for ports with partner ports configured as "Setting partner by user program".
  Online view: Ports and interconnections with deactivated IO devices are shown in a different shade of green as error-free ports and interconnections of activated IO devices.
- Representation in the Web server:
  The names of devices are shown as configured (Properties > General > Project information).
  The assigned PROFINET device name for the CPU is shown on the "Communication" website, at the "Parameter" tab.
  IP address parameters: Currently assigned IP address parameters are shown on the site "Module state".
  Topology: The current topology resulting from any customizations via user program is shown in the Web server. IO devices configured as optional are shown as "deactivated" IO devices in the Web server.

Rules

The rules for standard machine projects as described here (Page 233) apply.
For configuration-controlled IO systems, the following additional rules apply:

- When configuring MRP (Media Redundancy Protocol):
  The ports configured as ring ports must not be interlinked via user program.
  However, devices with ring ports (devices of an MRP domain) can be optional IO devices.
- When configuring docking stations (= IO devices changing during operation):
  Neither the docking station nor the first IO device of a docking unit may be optional IO devices.
  The ports of the docking units must not be interlinked via user program.
- When configuring IRT:
  The order of synchronized IO devices ("IRT devices") must be defined by the configuration and must not be changed in the different variants of a standard machine. For this reason, the ports of the IRT devices must not be interlinked via user program.
  However, you have the possibility to configure IRT devices primarily as optional IO devices.

You also have the option to interconnect, by user program, RT devices that are, for example, separated from this line by a switchport (see figure).

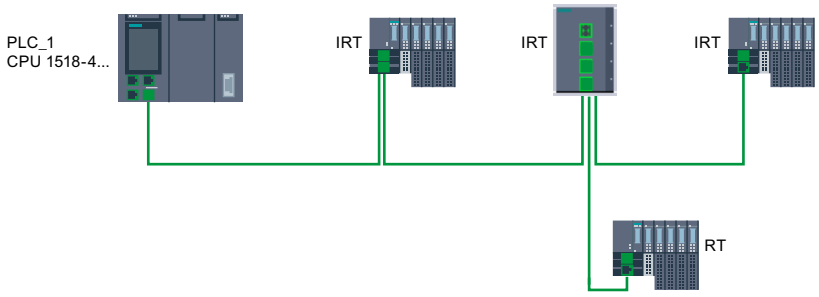

Figure 6-109 Example: Configuration control for IO systems with separated RT device

6.11 Saving energy with PROFIenergy

Saving energy with PROFIenergy

PROFIenergy is a PROFINET-based data interface for switching off consumers centrally and with full coordination during pause times regardless of the manufacturer or device type. Through this, the process should only be provided with the energy that is absolutely required. The majority of the energy is saved by the process; the PROFINET device itself only contributes a few watts of savings potential.

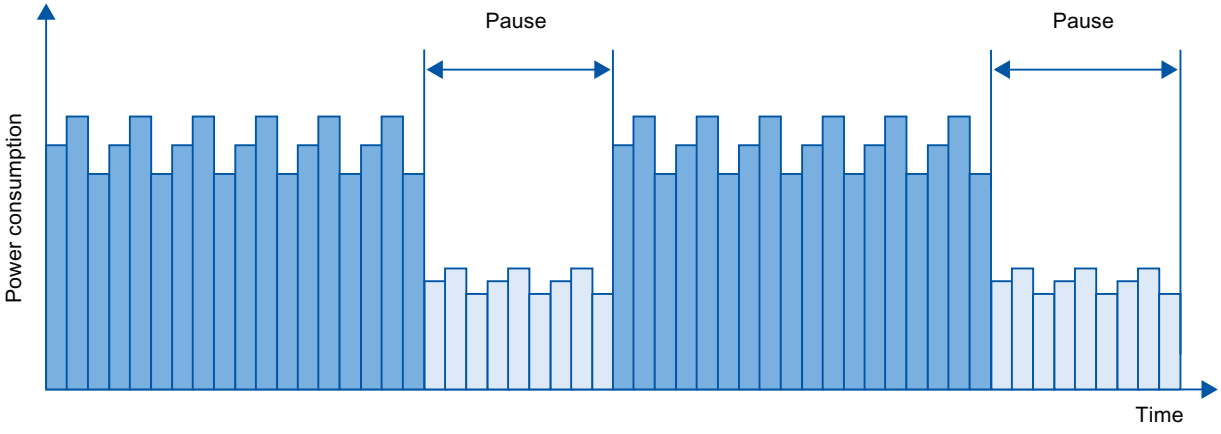

Figure 6-110 Energy savings during pauses with PROFIenergy

Basic information

In order to use the PROFIenergy functionality, the existing IO controller has to be "upgraded" to a so-called "PROFIenergy controller" by means of a function block in the PROFINET IO system and at least one PROFIenergy-capable IO device ("PROFIenergy device") has to exist. The PROFIenergy commands (for example to start or end a pause) are sent by the "PROFIenergy controller" to the individual "PROFIenergy devices". Each "PROFIenergy device"

decides individually how it responds to the PROFIenergy command (response is device- and manufacturer-specific).

No additional hardware is needed; the PROFIenergy commands are directly interpreted by the PROFINET devices.

Principle of operation

At the beginning and end of pauses, the system manager enables or disables the pause function of the system; then the IO controller sends the PROFIenergy command "Start_Pause"/"End_Pause" to the PROFINET devices. The device interprets the contents of the PROFIenergy command and switches off or back on.

Through other PROFIenergy functions, device information can be accessed during pauses. The user can use this information in order to optimally time the transfer of the "Start_Pause"/"End_Pause" command.

PROFIenergy instructions for IO controllers

Two instructions are needed for controlling and monitoring the PROFIenergy functions.

The instruction PE_START_END allows you to easily activate and deactivate the idle state of PROFINET devices. This occurs by means of an incoming edge or outgoing edge. The instruction PE_START_END provides a simple interface for implementing the PROFIenergy commands Start_Pause and End_Pause.

The instruction PE_CMD allows you to transmit all PROFIenergy commands, including Start_Pause and End_Pause. The other commands can be used, for example, to query the current status of the PROFINET device or the behavior during the pauses. The instruction PE_CMD is a convenient means for handling all PROFIenergy functions.

PROFIenergy instruction for I-devices

The instruction PE_I_DEV allows you to also implement PROFIenergy on I-devices. The instruction receives PROFIenergy commands on the I-device and forwards these to the user program for execution. After executing the command, the user program calls the PE_I_DEV instruction again in order to send the acknowledgment to the IO controller. For these replies, each command offers you a helper instruction that supplies the reply data to the instruction.

The instructions can be found in the "Instructions" task card of the STEP 7 program editor.

Configuration and programming

The functions can be comfortably integrated into existing systems. No configuration is required for the use of PROFIenergy. However, amendments to the user program are required:

- Before the "Start_Pause" command, you must ensure that your system is brought into a condition that is suitable for a pause.
- A sequential control system for the beginning of the pause of the devices and for the punctual restarting of the device on break must be programmed (depending on the required startup times that the respective PROFINET device demands).

- The error messages of the PE_CMD instruction must be evaluated, and the required reaction must be programmed (for example, cancellation or continuation of further commands on lower-level PROFINET devices).

NOTE

In the case of the ET 200S distributed I/O system, you have to configure the application of PROFIenergy in STEP 7. You configure PROFIenergy by selecting the "Use energy saving for this potential group" check box in the PM-E DC24V/8A RO power module.

If you want to use PROFIenergy for an I-device, you have to configure this in STEP 7. Information about configuring PROFIenergy for an I-device is available in the section Configuring PROFIenergy with I-devices (Page 131).

Application examples

- SIMATIC S7 library for simple configuration of PROFIenergy.
  The application example is available here
  (https://support.industry.siemens.com/cs/ww/en/view/109478388).
- Application guide for implementation of shutdown concepts with PROFIenergy.
  The application example is available here
  (https://support.industry.siemens.com/cs/ww/en/view/96837137).
- Saving energy with SIMATIC S7 PROFIenergy with I-device
  The application example is available here
  (https://support.industry.siemens.com/cs/ww/en/view/41986454).

6.12 Docking systems

Using alternating IO devices ("alternating partners") during operation in a docking station

The following figure shows an automation cell with a docking station and several docking units.

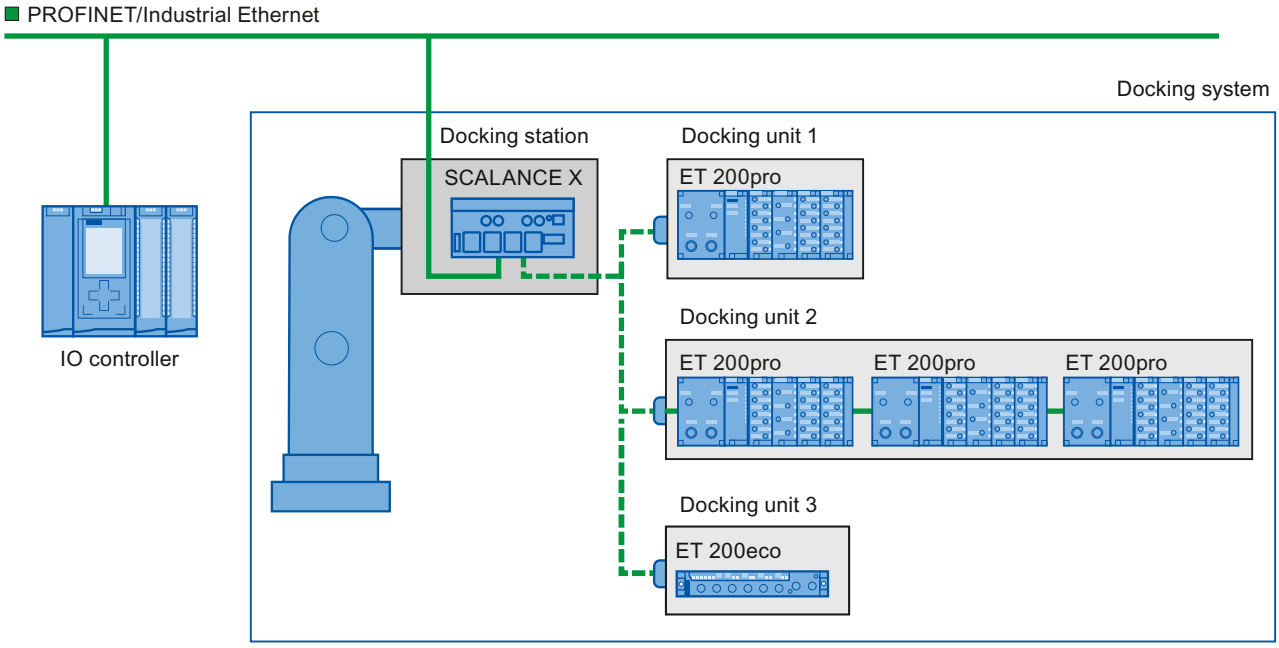

Figure 6-111 Alternating IO devices (partner ports) in a docking system

Area of application for alternating IO devices during operation

You can use the PROFINET function "Alternating IO devices during operation" ("alternating partners"), for the tool changeover for robots, for example. Typical tools include:

- Welding guns
- Positioning tools for manufacturing parts

Requirements for interconnecting alternating partner ports during operation

You can interconnect IO devices with alternating partner ports during operation in the following situations:

- The alternating IO device (docking unit) has no IRT communication configured.
- The PROFINET interface is connected to the Ethernet subnet.
- The PROFINET devices support topology configuration.

- The IO controller, the alternating IO devices (docking unit) and the switch (docking station) on which the alternating IO devices are to be operated support this feature.

NOTE
Unique IP address
Each docking unit of a docking system must be configured with a unique IP address in a shared project and operated on the same IO controller as all other docking units of the system.

Applicative conditions

The following points should be observed when implementing a docking system with alternating IO devices during operation:

- The IO devices of all docking units must be deactivated by default in the configuration.
- At any time, only one docking unit can be active, i.e., only the IO devices of one docking unit can be activated. All IO devices of other docking units must be deactivated or become deactivated before the IO devices of a docking unit can be activated. You activate an IO device with the "D_ACT_DP" instruction.
- A physical connection to this docking unit and its IO devices must be created in order to activate a docking unit. The IO devices are then switched on (power on). At the same time, all the IO devices of this docking unit must be activated in the user program with the "D_ACT_DP" instruction.

NOTE
Automatic deactivation in "Startup" mode of the CPU
If the CPU is in "Startup" mode, IO devices of a docking system that alternate during operation are deactivated automatically.

- After the feedback "IO device activated", you can access the IO device by means of direct I/O access.

- Call the "D_ACT_DP" instruction to activate and deactivate the IO device as close as possible to the start of the OB 1 cycle.

NOTE

Number of alternating IO devices during operation ("alternating partner port") - number of docking units

If you wish to achieve the shortest possible tool changeover times, you must observe the following points that are dependent on the CPU or the CP that is being used:

– Only those IO devices that have been configured with the PROFINET function "Prioritized startup" can start up in an optimized fashion. The number of IO devices with configuration for this PROFINET function is restricted.
– Only a limited number of IO devices can be activated at the same time. This number depends on the available "D_ACT_DP" resources. A docking unit should not contain more than the corresponding number of IO devices. If more IO devices are operated in a docking unit, the IO devices must be activated one after the other, which takes correspondingly longer.

Example: An S7-CPU 1516-3 PN/DP can operate a maximum of 32 IO devices with prioritized startup and can simultaneously activate 8 IO devices by means of "D_ACT_DP".

Therefore, for a scheduled optimum use, a docking unit should include no more than 8 IO devices and no more than 32 IO devices should be used in all the alternating docking units.

6.12.1 Configuring docking systems

Configuring docking systems

The possible connections to the individual IO devices must be configured in STEP 7.

Procedure in STEP 7

1. Configure your system as usual, but do not yet configure the topological interconnections of the individual PROFINET devices.
2. Navigate to the "Topology view" tab.
3. Select the port which you want to operate with alternating partners during operation.
4. Navigate to the "Properties" tab of the inspector window and select "Port interconnection" in the area navigation.
5. Under "Partner port", select the "Alternative partners" option.

6. Select the desired partner ports: To do this, click "<Add alternative partners... and choose a partner port. Repeat this process until all required partner ports are connected.

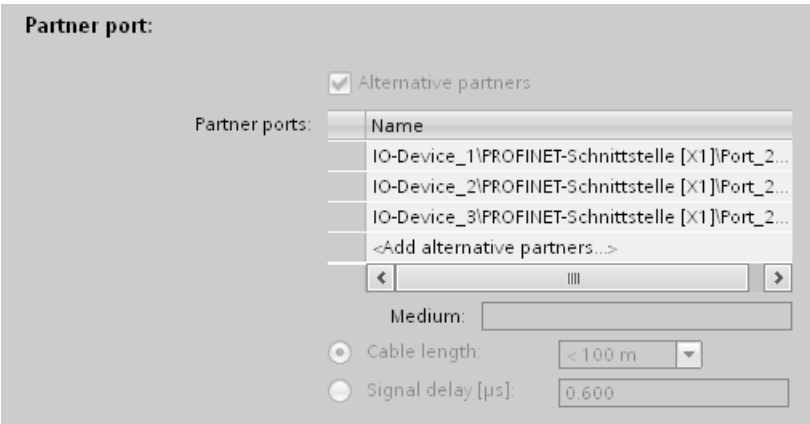

Figure 6-112 Configuring docking systems in STEP 7

Tip: You can also use drag-and-drop operation to connect alternative partner ports in the topology view.

Result

You have interconnected the respective port with one or more alternating IO devices. The connections with the individual alternating partner ports during operation are shown in the topology view by a green, dashed line.

Multiple IO devices as a docking unit ("Alternating partner port")

A docking unit may also consist of several IO devices connected in series. If you use IO devices connected in series as a docking unit, ensure that the topology of the IO devices is configured. A docking unit consisting of two IO devices connected in series (Tool_3_1 and Tool_3_2) is shown at the bottom right in the figure below.

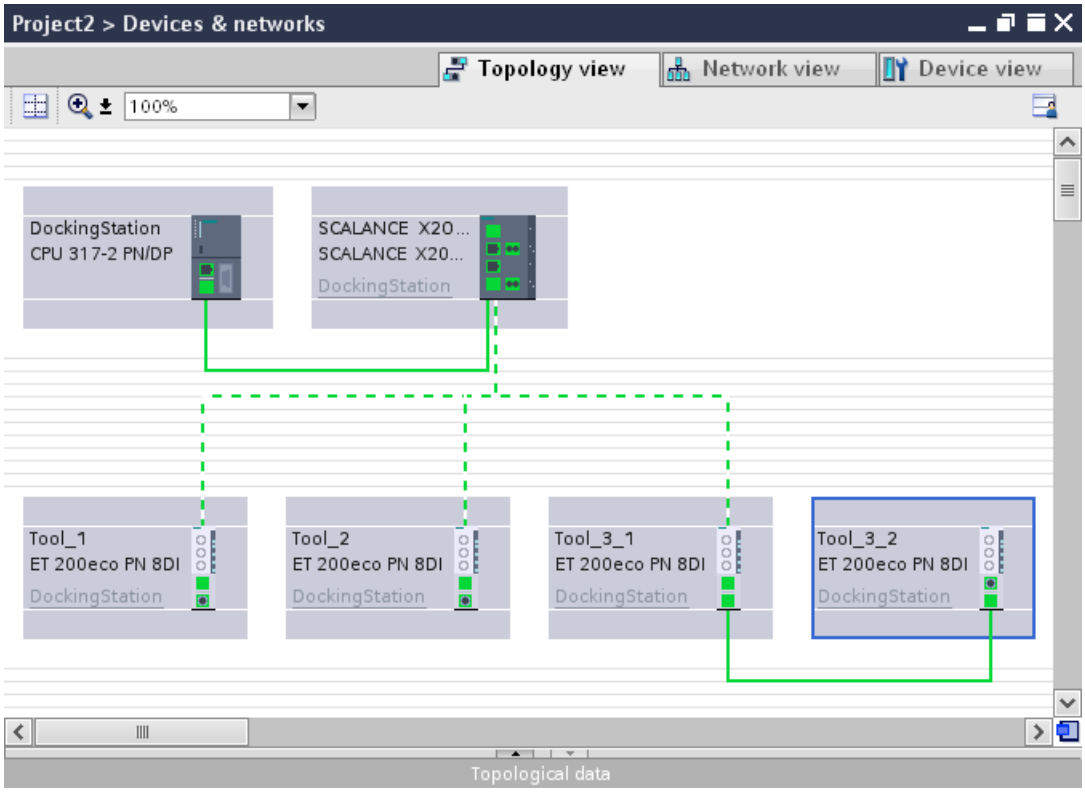

Figure 6-113 Docking system in the topology view of STEP 7

Restriction in the interconnection

The interconnection with a partner port is not possible in the following cases:

- The partner port does not have a suitable type of cable. In this case, a media convertor from the catalog must be inserted.
- The partner port is blocked (deactivated).
- The two ports that are to be interconnected belong to the same interface (it is only possible to interconnect the ports from different interfaces in a station).
- The two ports that are to be interconnected belong to different Ethernet subnets.

Deleting interconnections

Select the port of the alternating partner and remove the interconnection with the "Remove" button.

6.13 Accelerating startup

6.13.1 Options for accelerating the startup of IO devices

Reducing the startup time of IO devices

The time needed for the startup of IO devices depends on various factors and can be reduced in different ways.

You can achieve a significant reduction in the startup time using the "Prioritized startup" PROFINET function.

To further reduce the startup times, use the following measures in addition to the "Prioritized startup":

- Optimize the port settings
- Optimize the cabling of the ports
- Perform measures in the user program (for docking systems only)

These measures will accelerate the startup of IO devices even without "Prioritized startup". However, you can only achieve the fastest startup times of about 500 ms by combining all the measures with "Prioritized startup".

NOTE

Startup time up to 8 s

In the following situation, despite prioritized startup, a startup time of up to 8 s may occur:

On a docking point, multiple physical IO devices dock as an IO device with identical device names and identical IP configurations (for example, docking point for automatic transport system).

Dependencies

The length of the startup time for an IO device (distributed I/O) with the "Prioritized startup" PROFINET function depends on the following factors:

- IO devices (distributed I/O)
- IO structure of the IO device (distributed I/O)
- Modules of the IO device (distributed I/O)
- IO controller
- Switch
- Port setting
- Cabling

- Configured RT class of the IO device

NOTE
Startup time and RT class of the IO device
An IO device with IRT communication requires longer than an IO device with RT communication for the accelerated startup.
The longer startup for IRT is due to the necessity of synchronizing the IO device before the communication can be set up.

NOTE
IWLAN and prioritized startup
PROFINET devices which are connected via access points to PROFINET IO do not support the "Prioritized startup" PROFINET function.

6.13.2 Prioritized startup

Definition

Prioritized startup refers to the PROFINET function for accelerating the startup of IO devices in a PROFINET IO system with RT communication. It shortens the time that the respective configured IO devices require in order to reach the cyclic user data exchange in the following cases:

- After the power supply has returned
- After a station has returned
- After activation of IO devices

WARNING
Data exchange despite multiple use IP addresses/device names in PROFINET IO system
To achieve higher ramp-up times, the IO controller checks the uniqueness of device name of IP address parallel to the device ramp-up. In the case of incorrect or double assignment of device name or IP address, a short-time data exchange is possible until the IO controller reacts to the error. In this time the IO controller can exchange IO data with the false device.
During commissioning, ensure that no IP addresses / device names are assigned multiple times in the PROFINET IO system.

Advantages

The PROFINET functionality "prioritized startup" enables PROFINET IO applications in which machine parts or tools and their IO devices have been permanently replaced. Waiting times of several seconds between the scheduled processes of the restart are reduced to a minimum by this optimization. This accelerates the production process with alternating IO devices (PROFINET functionality "docking systems"), e.g. in tool changer applications, and enables a greater throughput in production.

The PROFINET functionality "prioritized startup" also offers a considerable increase in performance for applications where a quick startup time of the IO devices after "power on" or after station failure / station return is required, or when activating IO devices.

Area of application

You can use prioritized startup, for example, for changing tools for robots in the automotive industry. Typical tools are, for example:

- Welding guns
- Positioning tools for the manufacture of car body parts

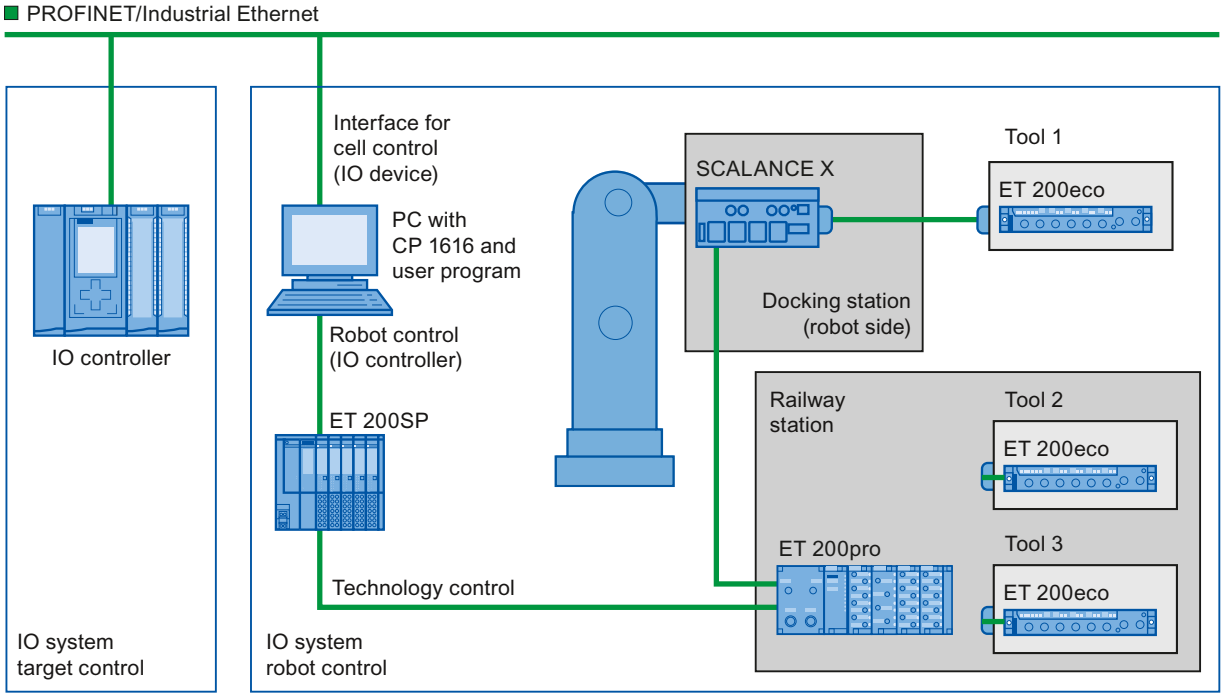

Figure 6-114 Example configuration of a tool changer: Tools 1-3 configured with "Prioritized startup".

6.13.3 Configuring prioritized startup

Requirements

You can enable the "Prioritized startup" PROFINET function for the IO devices (distributed I/O) only in the following cases:

- The IO controller used can prioritize selected IO devices during startup.
- The IO device used supports prioritization.

Procedure

1. Select the IO device in the network view or device view for which you wish to accelerate startup.
2. Open the IO device properties in the Inspector window.
3. Select "PROFINET interface > Advanced options > Interface options".
4. Select the "Prioritized startup" check box.

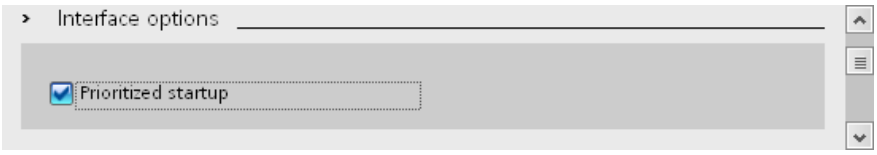

Figure 6-115 Configuring prioritized startup in STEP 7

5. Download the configuration to the IO controller.

NOTE

Prioritized startup after a startup for the first time

A prioritized startup of the IO device is always available to you after the first configuration of this IO device in the very first startup of the PROFINET IO system. Even in the case of spare parts or a reset to factory settings, the first startup is a standard startup for the respective configured IO devices.

NOTE

Number of IO devices (distributed I/O) with prioritized startup

You can only start up a maximum number of IO devices with the "Prioritized startup" PROFINET functionality within one PROFINET IO system. This maximum number depends on the IO controller used.

6.13.4 Optimize the port settings

Optimizing port settings on the IO device and IO controller

The transfer medium and the duplex option are checked during startup of the IO device in the case of copper cabling.

These checks require time, but with specific presets of these options you can save the time the check requires. Make certain that the settings made correspond to the actual conditions (using the correct cables).

Optimizing port settings for accelerated startup

To optimize port settings for accelerated startup, follow these steps:

1. Select the ports of the IO controller or the partner port of the corresponding IO device.
2. Navigate to "Port options > Connection" in the Inspector window. Select the setting "TP 100 Mbps full duplex" under "Transmission rate/duplex"

3. Clear the "Enable autonegotiation" check box.

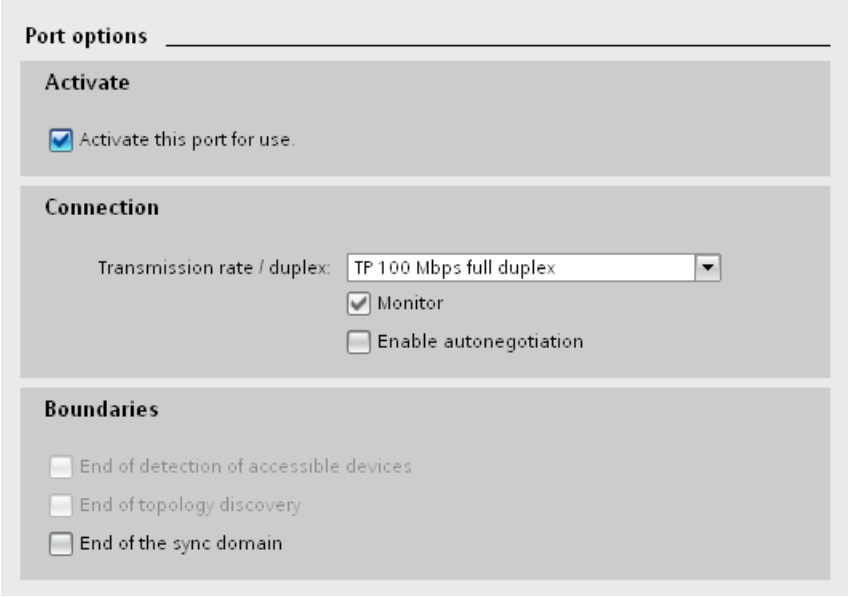

Figure 6-116 Optimizing port settings for accelerated startup in STEP 7

These settings are automatically applied during topology configuration for the partner port.

6.13.5 Optimize the cabling of the ports

Requirements

You have made the following settings for the port in question to reduce the startup time of the IO device:

- Fixed transmission rate
- Autonegotiation deactivated

The time for negotiating the transmission rate during startup is saved.
If you have disabled autonegotiation, you must observe the cabling rules.

Properties of ports

PROFINET devices have the following two types of ports:

Type of port	PROFINET devices
Switch port with crossed pin assignment	For IO devices: Port 2 For S7-CPUs with two ports: Ports 1 and 2
Terminal device port with normal pin assignment	For IO devices: Port 1 For S7-CPUs with one port: Port 1

Crossed pin assignment means that the pin assignment for the ports for sending and receiving between the respective PROFINET devices is inverted internally.

Validity of the cabling rules

The cabling rules described in the following paragraph apply exclusively for the situation in which you have specified a fixed port setting in STEP 7.

Rules for cabling

You can connect several IO devices in series using patch cables. To do this, connect port 2 of the IO device (distributed I/O) with port 1 of the next IO device. The following graphic provides an example with two IO devices.

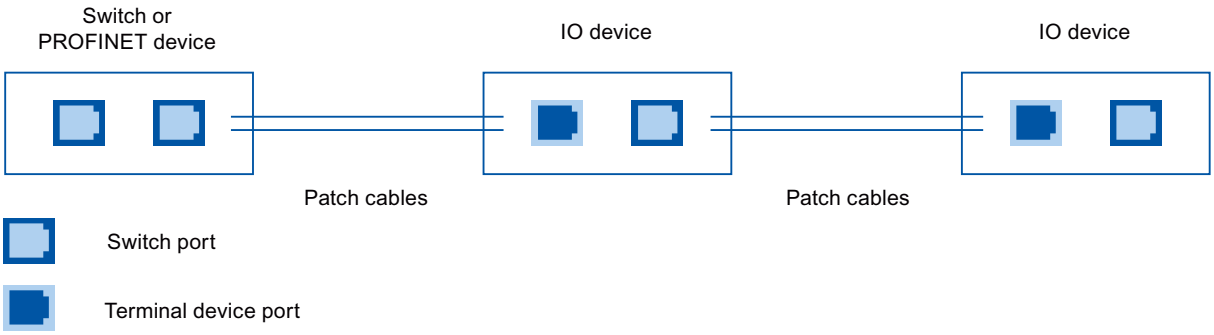

Figure 6-117 Optimized cabling for accelerated startup

6.13.6 Measures in the user program

Introduction

You can make certain changes in the user program to accelerate the startup for IO devices of docking systems that alternate during operation.

Making the required changes to the user program

To accelerate the startup by making changes to the user program, follow these steps:

1. Call the "D_ACT_DP" instruction to activate and deactivate the IO device at the start of the OB 1 cycle.
   If the IO device is replaced, the device that is no longer required must be deactivated and the new device must be activated.
2. If you control the "Power ON" command of the IO devices via the application, then start the activation of the IO devices via the corresponding call of the "D_ACT_DP" instruction as near to the same time as possible. The IO device has to be physically connected for this.
3. You access the IO device using direct access commands after the "D_ACT_DP" instruction has provided the feedback "IO device activated".

6.14 Dealing with timeouts while exchanging data

6.14.1 Terminating communication relation during faults

An existing communication relation (Application Relation, AR) is required for data exchange between an IO controller and an IO device.

In a communication relation, data is transmitted cyclically and acyclically. If acyclic record communication (for example, program instructions "RDREC", "WRREC", or reading a diagnostic data record) detects a protocol error or a timeout, the IO controller cancels the communication relation. In this case, the IO controller assumes that communication is faulty. This also ends the cyclic IO data exchange. The error code is returned as a static error in the instruction to the data record transfer. In the diagnostic buffer of the IO controller, the error is displayed as the event "Failure of an IO device - Timeout in the acyclic PROFINET services".

Possible causes for a termination of the communication relation include:

- A high network load
- Too many ARP telegrams (Address Resolution Protocol).
- Too many UDP frames (User Datagram Protocol).
- Erroneous RPC calls (Remote Procedure Call).

Maintain communication relation

If you can tolerate timeouts during the data record communication from the point of view of your application and no negative repercussions are to be feared, you can change the described default behavior. If, for example, timeouts occur during the data record communication, the communication relation is still preserved. The cyclic IO data exchange still takes place.

A fault in the data exchange is then indicated as a temporary error (status code: 16#DE80_C300 or 16#DF80_C300) in the instruction for data record transfer.

Requirements:

- S7-1500 CPU as of FW version V3.0
- At least 1 IO device must be configured at the addressed PROFINET interface.

You change the behavior by transferring a 0xB072 data record to the PROFINET interface of the IO controller. This data record encodes whether the communication relation should be terminated or remain active in the event of faults. The data record only has an effect on the addressed PROFINET interface.

One way to transfer the 0xB072 data record: Definition of the data record structure in the static local data of a function block and call of this function block in the program cycle OB. To do this, follow these steps:

1. Create a function block in STEP 7.
2. For the static local data (Static) of the function block, you create a structure of the 0xB072 data record.
   – The following table shows the structure of the data record 0xB072.

Byte	Element	Coding	Explanation
0 to 1	BlockType	0xB072	Header The record length is counted from byte 4 "BlockVersionHigh".
2 to 3	BlockLength	8	
4	BlockVersionHigh	0x01	

Byte	Element	Coding	Explanation
5	BlockVersionLow	0x00	
6 to 7	Reserved	-	-
8-9	ReadWriteBehaviorProperties	0, 1	0: Default behavior. The communication relation is terminated in the case of the scenarios described above. 1: The communication relation remains intact in the case of the scenarios described above.
10-11	Reserved	-	-

3. Call the created function block in the program cycle OB (OB1) of your user program. A programming example for this function block can be found in the next section.

The newly set behavior is not permanently stored in the IO controller. The default setting is active again after each network off/network on, overall reset or loading of the hardware configuration. The changed behavior is only active when the write job in the program cycle OB has been completed.

NOTE

Changing communication behavior for each PROFINET interface

The call of the function block in the program cycle OB refers only to the addressed PROFINET interface of the IO controller. If you want to maintain the communication relations for further PROFINET interfaces, you need to call the function block separately in the program cycle OB for each additional integrated PROFINET interface of the IO controller.

Maintaining communication relation with S7-1500R/H systems

Even with S7-1500R/H CPUs, you can change the default behavior by transferring a 0xB072 data record.

However, the S7-1500R/H system does not automatically synchronize this change in behavior for the respective addressed PROFINET interface on both CPUs, since the PROFINET interfaces have different hardware identifiers. Therefore, write the data record during runtime to the respective addressed PROFINET interface of both CPUs. You can only maintain the communication relation at the PROFINET interface X1.

6.14.2 Example: Transfer data record for behavior change via FB

Task

You want to maintain the communication relation (AR) between IO controller and IO device even in the event of a temporarily disturbed data record transfer, due to increased network load for example.

Requirements

An S7-1500 CPU from FW version V3.0 with at least one configured IO device at the addressed PROFINET interface is a requirement.

Solution

Transfer the data record 0xB072 to the PROFINET interface of the IO controller. This instructs the IO controller to maintain an existing communication relation with the IO device.

The following example shows you how to transfer the data record to the PROFINET interface using a function block (FB). Create a structure of the data record 0xB072 in the block interface under "Static". The following figure shows the structure of the data record in "Static" section.

FbBehaviorAR

	Name	Data type	Default value	Retain	Comment
1	Input				
2	Output				
3	InOut				
4	bStart	Bool	0	Set in IDB	Start writing Data record 16#B072
5	InterfaceID	HW_IO	64	Non-retain	Default for Interface X1
6	wBehaviorProperties	Word	16#1	Non-retain	0: AR will be dropped, 1: AR stays active
7	Static				
8	statArRecord	Struct		Non-retain	Data record 16#B072
9	statBlockType	Word	16#B072	Non-retain	Data record number
10	statBlockLength	Word	16#8	Non-retain	Length of block (default: 8)
11	statBlockVersionHigh	Byte	1	Non-retain	Byte 1 of blockversion
12	statBlockVersionLow	Byte	0	Non-retain	Byte 2 of blockversion
13	statReserved	Word	16#0	Non-retain	Reserved for future usage
14	statBehaviorProperties	Word	1	Non-retain	0: AR will be dropped, 1: AR stays active
15	statReserved1	Word	16#0	Non-retain	Reserved for future usage
16	instWrrec	WRREC			Instance of write record
17	Temp				
18	Constant				

Figure 6-118 Example: Interface of the function block for obtaining the communication relation

In addition to the data record 0xB072, the interface contains other tags that you use to transfer the data record. You need the tags in the "InOut" section to assign parameters for the "WRREC" instruction in the function block. The "WRREC" instruction is executed in an organization block (OB1) when the FB is called.

The program in the function block and the call in the program cycle OB are shown in the following sections.

Program in the function block

The data record is transferred at a positive signal at the "#bStart" tag. The parameters for the tags "#wBehaviorProperties", "#bStart" and "#InterfaceID" are passed to the function block when called in the program cycle OB.

```
//==========================================================
// Called in OB1
//==========================================================
#statArRecord.statBehaviorProperties := #wBehaviorProperties;
 #instWrrec(REQ := #bStart,
 ID := #InterfaceID,
```

```
INDEX := DWORD_TO_DINT(16#B072),
LEN := 12, // 0 : any length,
this record uses 12 Bytes,
RECORD := #statArRecord);
IF #instWrrec.ERROR THEN
RETURN; // add error handling
END_IF;
IF #instWrrec.DONE = TRUE THEN
#bStart := FALSE;
END_IF;
```

Calling in a program cycle OB

Drag-and-drop the created function block into the desired program cycle OB (e.g. OB1). The "InOut" parameters are not linked to tags in this example. Instead, they are controlled directly in the instance of the block call via a watch table.

```
//=========================================================
// Call FbBehaviorAR
//=========================================================
"Inst_FbBehaviorAR_1"(bStart:=_bool_inout_,
 InterfaceID:=_hw_io_inout_,
 wBehaviorProperties:=_word_inout_);
```

Control via the watch table

1. Create a new watch table.
2. Drag-and-drop the required tags from the instance of the function block into the watch table.

FHB_PN_AR-Uebersicht ▸ PLC_5 [CPU 1516-3 PN/DP] ▸ Watch and force tables ▸ Watch table_1

	i	Name	Address	Displa..	Monitor val...	Modify v...		Comment
1	// Parameters for control							
2		"Inst_FbBehaviorAR_1".InterfaceID		DEC				X1: 64, X2: 72
3		"Inst_FbBehaviorAR_1".wBehaviorProperties		Hex				0: AR default, 1: AR stays active
4		"Inst_FbBehaviorAR_1".bStart		BOOL				Start writing data record
5	// Parameters for the status display							
6		"Inst_FbBehaviorAR_1".Inst_WRREC.DONE		BOOL				Writing the record is done
7		"Inst_FbBehaviorAR_1".Inst_WRREC.BUSY		BOOL				Writing the record is in progress
8		"Inst_FbBehaviorAR_1".Inst_WRREC.ERROR		BOOL				Error while writing the record
9		"Inst_FbBehaviorAR_1".Inst_WRREC.STATUS		Hex				Function result/error message

Figure 6-119 Watch table for transferring the data record

3. Load your project into the IO controller.
4. Click "Go online".

You transfer the data record to the PROFINET interface as follows:

1. For the "Inst_FbBehaviorAR_1".InterfaceID" tag, enter the appropriate value for the interface for which you want to change the behavior.
2. To change the behavior, enter the value "1" for the "Inst_FbBehaviorAR_1".wBehaviorProperties" tag.
3. Control the "Inst_FbBehaviorAR_1".bStart" tag to transfer the "TRUE" data record.
4. Repeat steps 1 to 3 for an additional interface where you want to change the behavior.

You can see the status of the transmission to the PROFINET interface as follows:

- "Inst_FbBehaviorAR_1".Inst_WRREC.DONE: The data record was successfully transferred to the PROFINET interface.
- "Inst_FbBehaviorAR_1".Inst_WRREC.BUSY: The data record is currently being transferred to the PROFINET interface.
- "Inst_FbBehaviorAR_1".Inst_WRREC.ERROR: The transfer of the data record to the PROFINET interface was faulty.
- "Inst_FbBehaviorAR_1".Inst_WRREC.STATUS: Output of block status or error information. The corresponding interpretations can be found in the STEP 7 help system.

Note that the variables „Inst_FbBehaviorAR_1“.Inst_WRREC.DONE and „Inst_FbBehaviorAR_1“.Inst_WRREC.ERROR are only present for the duration of a program cycle.

Additional steps for S7-1500R/H systems

The PROFINET interface of the 2 R/H CPUs addressed in each case has different hardware identifiers. Therefore, transfer the data record in the case of S7-1500R/H systems to the PROFINET interface of both the CPUs addressed in each case.

The values for the "Inst_FbBehaviorAR_1".InterfaceID" tag for S7-1500R/H systems can be found in the following table:

Table 6-7 Overview of the CPUs and corresponding hardware identifiers of the PROFINET interfaces

CPU	PROFINET interface	Hardware identifier of the PROFINET interface
CPU with redundancy ID "1" (prefixed name: PLC_1)	X1	65164 (prefixed name: Local1~PROFINET-interface_1)
	X2	PROFINET IO is currently not supported.
CPU with redundancy ID "2" (prefixed name: PLC_2)	X1	65364 (prefixed name: Local2~PROFINET-interface_1)
	X2	PROFINET IO is currently not supported.

NOTE

Transferring the data record to the backup CPU

Transfer the data record to the addressed PROFINET interface of the backup CPU only after the S7-1500R/H system has reached the "Run REDUNDANT" system state. Otherwise, the data record cannot be transferred to the addressed PROFINET interface of the backup CPU.

When the S7-1500R/H system has reached the system state "Run REDUNDANT", the CPU redundancy error OB (OB72) is started. The "Fault_ID" tag of the OB72 contains the error code "B#16#03" or "B#16#06".

PROFINET with the redundant S7-1500R/H system 7

Introduction

The same basic rules apply to PROFINET IO communication with the redundant S7-1500R/H as with the S7-1500 automation system. The redundant S7-1500R/H system exchanges IO data cyclically with the IO devices.

The redundant S7-1500R/H system supports a limited scope of PROFINET functions.

The redundant S7-1500R/H system supports media redundancy (MRP) in the PROFINET ring.

You can use the following IO devices on the redundant S7-1500R/H system:

- IO devices with system redundancy S2
- IO devices with system redundancy R1 (S7-1500H as of firmware version V3.0)
- Standard IO devices over the "Switched S1 device" function of the CPU

When configuring PROFINET with the redundant S7-1500R/H system, you must observe a few specifics, e.g. special configuration requirements.

Restrictions

- Real-time communication:
  - RT with a fixed send clock of 1 ms
  - No IRT
  - No MRPD redundancy procedure
  - No PROFINET with performance upgrade
- No isochronous mode
- No direct data exchange
- No operation as I-device
- No access to shared devices
- No support of docking systems
- No support of series machine projects
- Port options (only for PROFINET interface X1):
  - No port disabling possible
  - No configuring of boundaries possible
- Functionality as IO controller:
  - No prioritized startup
  - No enabling/disabling of IO devices
  - No support of series machine projects, e.g. IO systems that can be used multiple times
- PROFINET interface X2 does not support IO functionality (CPU 1515R/CPU 1517H/CPU 1518HF)
- No diagnostics using the web server
- No IP address assignment by the DHCP server

7.1 Media redundancy in the redundant S7-1500R/H system

You can use the redundant S7-1500R/H system in media redundant networks (MRP). In these networks some or all PROFINET devices are connected to the S7-1500R/H via one or more PROFINET rings in a media-redundant manner. If a PROFINET ring is interrupted, then a reconfiguration may occur. After a short reconfiguration time, the PROFINET devices can be accessed again via an alternative path. Note that with the redundant S7-1500R system, the PROFINET ring is mandatory.

7.2 H-Sync Forwarding

Introduction

H-Sync Forwarding enables a PROFINET device with MRP to forward synchronization data (synchronization frames) of a S7-1500R redundant system only within the PROFINET ring.
In addition, H-Sync Forwarding forwards the synchronization data even during reconfiguration of the PROFINET ring. H-Sync Forwarding avoids a cycle time increase if the PROFINET ring is interrupted.

NOTE

Support of H-Sync Forwarding

The technical specifications typically state whether a PROFINET device supports H-Sync forwarding.

The GSD file will also indicate whether the device supports H-Sync Forwarding. The device supports H-Sync Forwarding when the "AdditionalForwardingRulesSupported" attribute in the "MediaRedundancy" element is set to "true".

Conditions

- H-Sync Forwarding is not relevant for redundant S7-1500H systems. With the redundant S7-1500H system, the H-Sync frames are transmitted exclusively via the fiber-optic cables.
- **When you use PROFINET devices with more than two ports (e.g. switch) in the PROFINET ring of an R-system, these devices must support H-Sync Forwarding.**
  H-Sync frames leave the PROFINET ring with a switch without H-Sync Forwarding. This results in an additional load on the network. Another serious result is that the redundancy of other R-systems in the network can fail or startup can be prevented.

- **H-Sync Forwarding is recommended if you are using PROFINET devices with only 2 ports in the PROFINET ring of an R-system.**
  When you operate PROFINET devices without H-Sync Forwarding in the PROFINET ring of the redundant S7-1500R/H system, the following scenario will result in an additional cycle time increase:

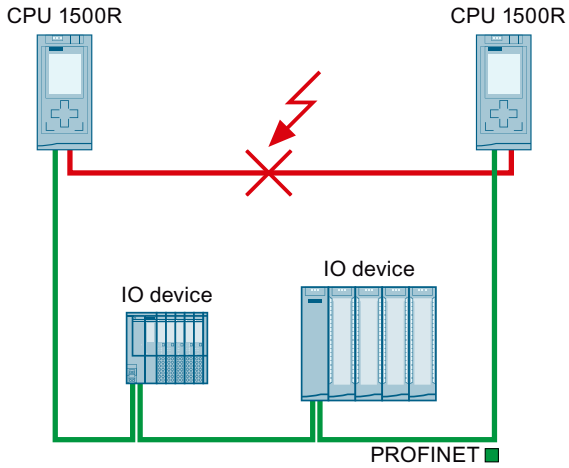

1. The redundant S7-1500R system is in the RUN-Redundant system state.
2. The PROFINET cable which directly connects the two CPUs fails.
3. The PROFINET ring is interrupted.
4. The PROFINET ring is being reconfigured.
5. PROFINET devices without H-Sync Forwarding do not forward any H-Sync frames during the reconfiguration time of the PROFINET ring.
6. The cycle time increases by the reconfiguration time of the PROFINET ring.

Figure 7-1 Failure of the PROFINET cable between the CPUs

If the cyclic program exceeds the cycle monitoring time, the time error OB (OB 80) may be started. Redundancy is lost if the time error OB (OB 80) is not present or the cycle time was exceeded twice with OB 80.

NOTE

If failure of the PROFINET cable that directly connects the two CPUs of the redundant S7-1500R system is unlikely, you can use PROFINET devices without H-Sync Forwarding in the PROFINET ring of the redundant S7-1500R system.

Example: Both CPUs of the redundant S7-1500R system are located directly next to each other in the control cabinet. In this case, it is unlikely that the PROFINET cable will fail.

7.3 System redundancy S2

Introduction

System redundancy S2 is the connection of an IO device via an interface module that supports two ARs to the IO controllers in the redundant system.

IO devices with system redundancy S2 enable uninterrupted process data exchange with the S7-1500R/H redundant system in the event of:

- a CPU fails
- Interruption of the PROFINET ring
- Interruption of the line topology (for S7-1500H as of FW version V3.0)

An IO device with system redundancy S2 supports system redundancy ARs.

In a redundant system, an IO device with system redundancy S2 has a system redundancy AR with each of the two CPUs (IO controllers). An IO device thus supports ARs of two IO controllers simultaneously (for the same modules).

A system redundancy AR can be either a primary AR or a backup AR. An IO device activates the data of the primary AR at the outputs. The data of the backup AR are not initially evaluated.

In STEP 7, you configure system redundancy S2 for an IO device by assigning the IO device to both CPUs of the S7-1500R/H redundant system.

Behavior in system state RUN-Redundant

Both CPUs are IO controllers. The PROFINET communication runs simultaneously on both system redundancy ARs, in each case between one of the CPUs (IO controllers) and the IO device. If the primary CPU fails or is switched to STOP, then the backup CPU becomes the primary CPU and also switches the backup AR to primary AR. The data of this AR becomes active at the outputs.

Abbreviations used for AR in the figure below:

- P-AR: Primary AR
- B-AR: Backup AR

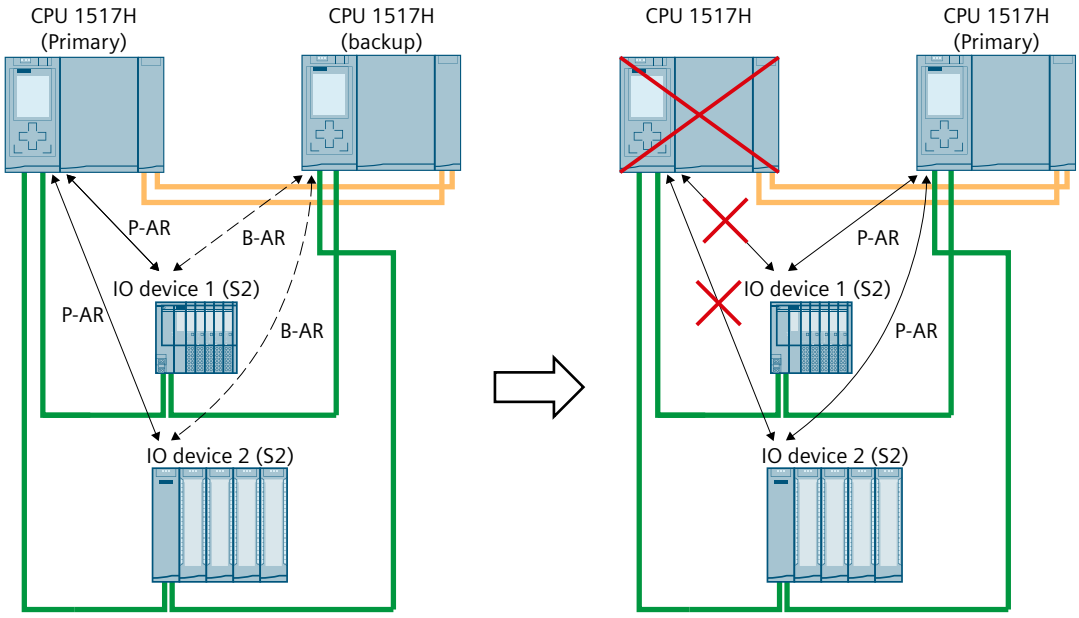

Figure 7-2 Primary backup AR

NOTE

S7-1500H with line topology

With line topology, only the primary AR can fail. In this case, the system switches to the backup AR, but the operating states and the roles of the CPUs remain unchanged.

Behavior in system state RUN-Solo

Only the primary CPU is an IO controller. The PROFINET communication runs on the primary AR between the primary CPU (IO controller) and the IO device. There is no AR between the backup CPU and the IO device.

7.4 System redundancy R1

Introduction

System redundancy R1 is the connection of an IO device via two interface modules, each of which supports an AR to the IO controllers in the redundant system.

IO devices with system redundancy R1 enable uninterrupted process data exchange with the S7-1500H redundant system when:

- a CPU fails
- an interface module fails
- a subnet fails.

Unlike system redundancy S2, system redundancy R1 has a separate interface module for each of the two ARs. Due to these redundant interface modules, the availability is higher than with an S2 device.

In STEP 7 you configure an IO device with system redundancy R1 by:

- Connecting the left interface module of the R1 device to the left H-CPU in the network view.
- Connecting the right interface module of the R1 device to the right H-CPU in the network view.

Reference

You can find information about the setup variants with the redundant system S7-1500R/H in the System Manual Redundant System S7-1500R/H (https://support.industry.siemens.com/cs/us/en/view/109754833).

Behavior in system state RUN-Redundant

The PROFINET communication runs on both system redundancy ARs simultaneously, each between one of the CPUs (IO controller) and an interface module of the R1 device.

In the event of a failure of an interface module of an R1 device or a line break in the line topology, only the ARs switch over. The roles of the H-CPUs do not change.

Abbreviations used for AR in the figures below:

- P-AR: Primary AR
- B-AR: Backup AR

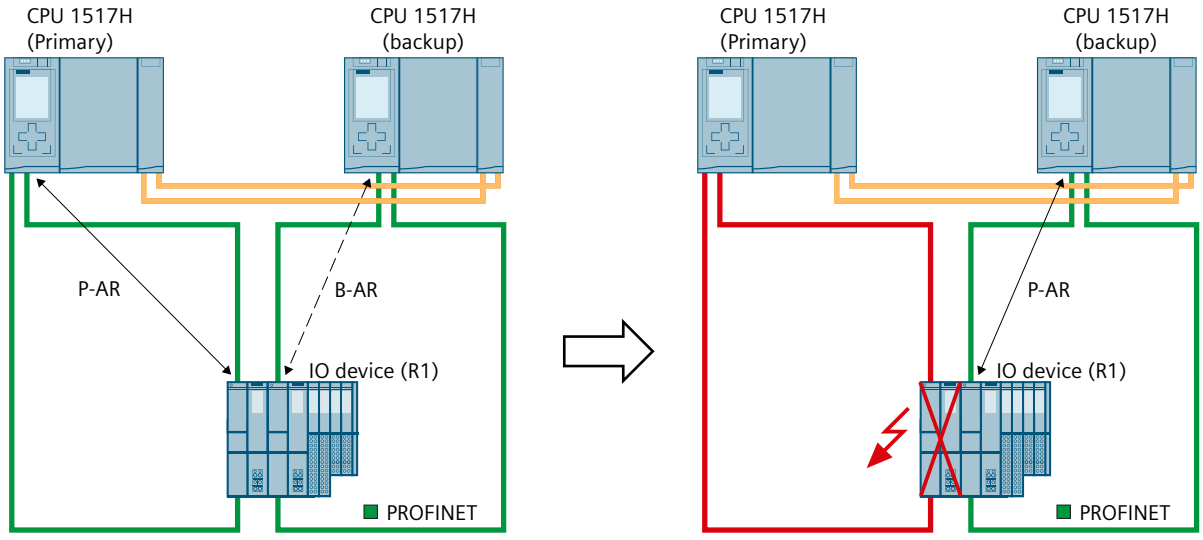

Figure 7-3 Failure of an interface module of an R1 device in the redundant S7-1500H system

If, however, the primary CPU fails or is switched to STOP, the S7-1500H redundant system then behaves as follows:

- The previous backup CPU becomes the new primary CPU.
- The new primary CPU uses the AR to the other, functioning interface module of the IO device and still has access to the inputs and control over the outputs of the IO device.
- The AR between the previous primary CPU and the assigned interface module is disconnected.

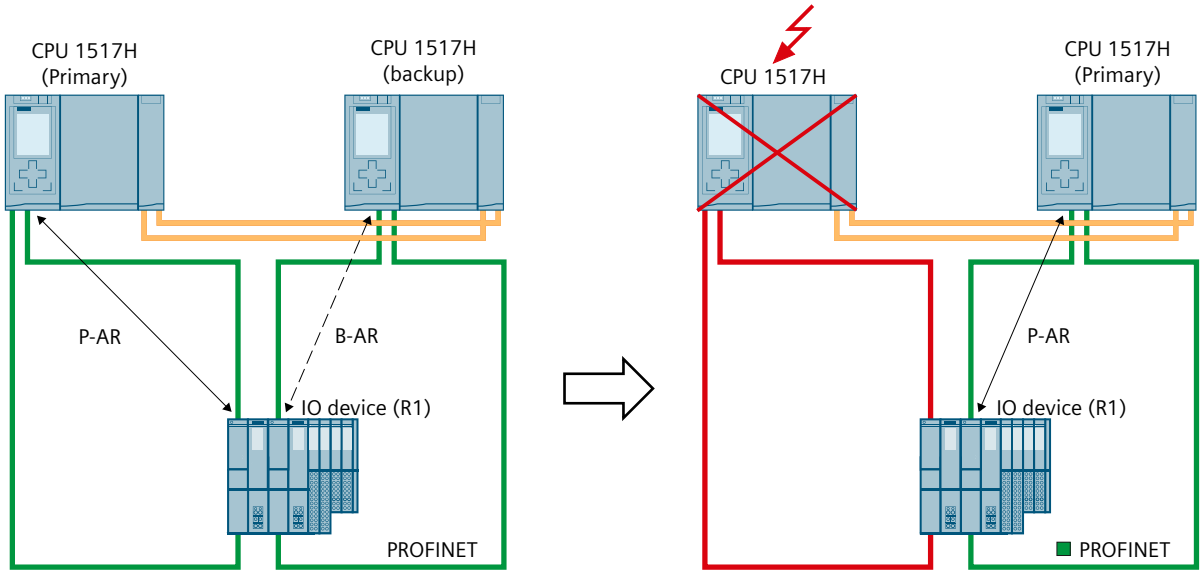

Figure 7-4 Failure of a CPU in the redundant S7-1500H system

NOTE

S7-1500H with line topology

With line topology, only the primary AR can fail. In this case, the system switches to the backup AR, but the operating states and the roles of the CPUs remain unchanged.

Behavior in system state RUN-Solo

Only the primary CPU is an IO controller. PROFINET communication runs on the AR between the primary CPU (IO controller) and the interface module of the IO device assigned to the primary CPU. The backup CPU separates all its ARs.

7.5 Switched S1 device

Introduction

As of FW version V2.8, the S7-1500R/H redundant system supports the "Switched S1 device" function.

The "Switched S1 device" function of the CPU enables operation of standard IO devices on the S7-1500R/H redundant system.

Standard IO devices, too, are always assigned to both CPUs of the S7-1500R/H redundant system. In contrast to an IO device with system redundancy S2, a standard IO device supports only one AR. The AR is available to the primary CPU of the redundant S7-1500R/H system.

In STEP 7 you configure an IO device connected via the "Switched S1 device" function by assigning a standard IO device to both CPUs of the redundant S7-1500R/H system.

As of FW version V3.0, the backup CPU of S7-1500H can establish an AR to an S1 device in a line topology. The primary CPU then receives data via the backup CPU.

NOTE

Standard IO devices in the redundant system S7-1500R

Standard IO devices usually do not support H-Sync Forwarding (Page 275).

To avoid a cycle time increase when the PROFINET ring is interrupted, integrate the standard IO devices downstream of a switch and not in the PROFINET ring.

Behavior in system state RUN-Redundant

The PROFINET communication runs on the AR between one of the CPUs (IO controller, in this example the primary CPU) and the standard IO device. There is no AR between the backup CPU and the standard IO device.

If the primary CPU fails or is switched to STOP, the S7-1500R/H redundant system responds as follows:

- The AR between the primary CPU and the standard IO device is disconnected.
- The previous backup CPU becomes the new primary CPU.
- The S7-1500R/H redundant system temporarily has no access to the inputs and no control over the outputs of the standard IO device. During this time, the configured substitute value behavior applies to the standard IO device.
- The new primary CPU builds an AR to the standard IO device.
- As soon as the new primary CPU has set up the AR, the S7-1500R/H redundant system has access to the inputs again and control over the outputs of the standard IO device.

Abbreviation used for AR in the figures below:

- AR: "normal" AR between a standard IO device and a CPU of the redundant system S7-1500R/H.

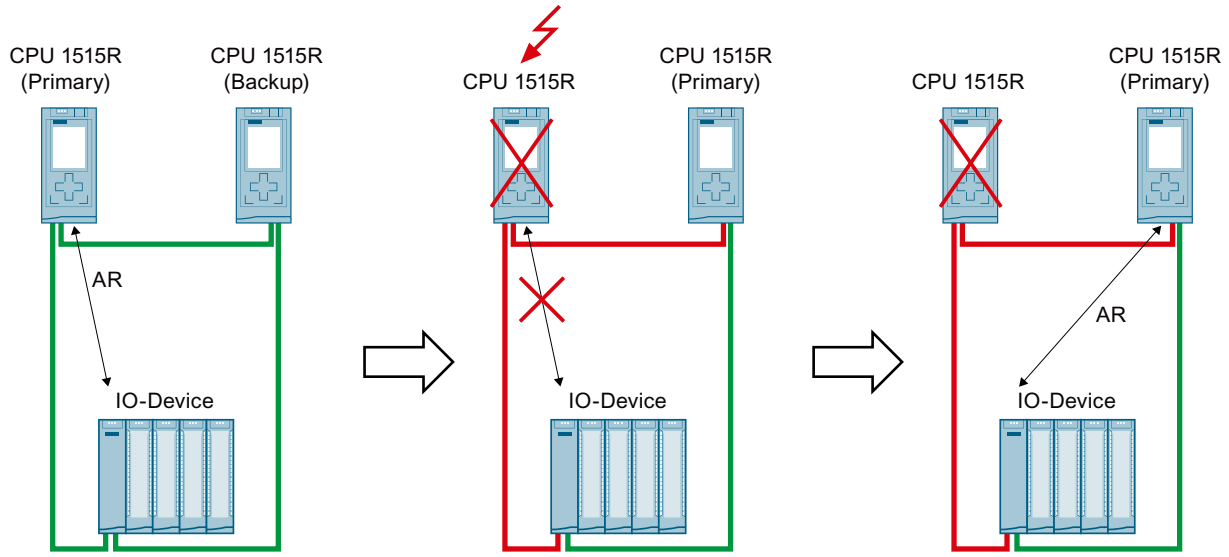

Figure 7-5 Behavior of standard IO devices in case of failure of the primary CPU

If a line in a line topology fails, the redundant S7-1500H system behaves as follows:

- If the line between the primary CPU and a standard IO device is interrupted, then the redundant S7-1500H system temporarily has no access to the inputs and no control over the outputs of the standard IO device. The status of the outputs depends on the substitute value behavior of the respective channels.
- The respective other CPU establishes an AR to the standard IO device.
- Once the new AR has been set up, the redundant S7-1500H system again has access to the inputs and control over the outputs of the standard IO device.

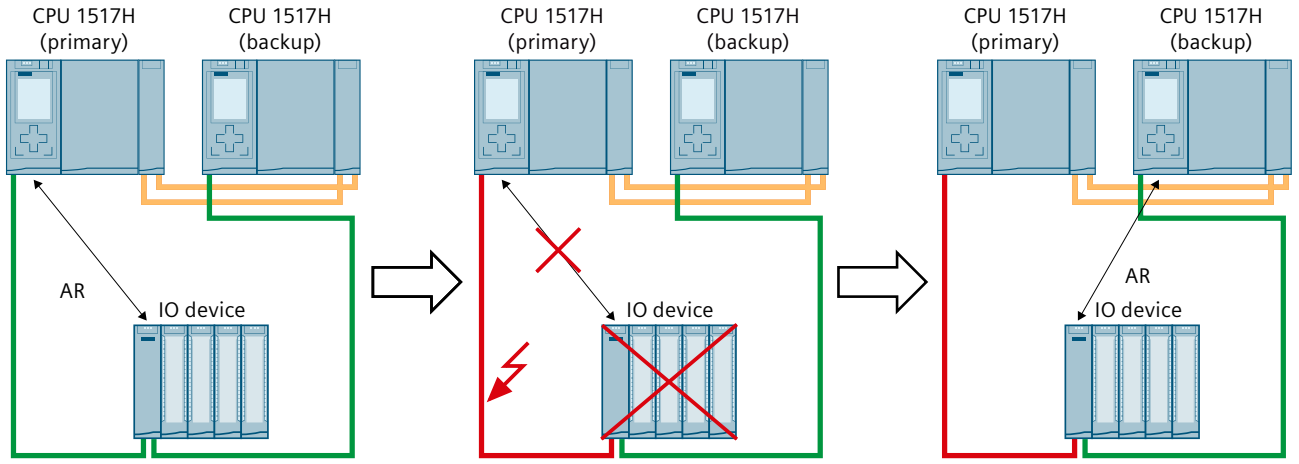

Figure 7-6 Behavior of standard IO devices in case of line failure

Behavior in system state RUN-Solo

Only the primary CPU is an IO controller. PROFINET communication runs on the AR between the primary CPU and the standard IO device. There is no AR between the backup CPU and the IO device.

OB behavior for standard IO devices with primary-backup switchover

If the primary CPU fails or goes to STOP, the standard IO devices temporarily fail. OB 72 "Redundancy error" is called, additional OB 86 "Module rack failure" for the failed IO devices are not called. To detect the failed IO devices, call the DeviceStates instruction in OB 72.

With the "Switched S1 device" function, the new primary CPU establishes the ARs to the standard IO devices again. OB 86 is called for each return of an IO device.

Influence changeover time of switched S1 devices

As of FW version V2.9, you can influence the changeover time between disconnection and return of switched S1 devices after a failure/STOP of the primary CPU.

Advantages:

- Optimization of the changeover time between disconnection and return of switched S1 devices
- Prioritization of the return of S1 devices in the PROFINET ring by setting a lower changeover time for S1 devices with important process functions.

The changeover time depends on the watchdog timer of the switched S1 device. The watchdog timer is the product of the update time multiplied by the accepted update cycles without IO data. With the parameters, you influence the time as of which the new primary CPU starts returning the S1 device. The return also depends on the amount of time that is required for the parameter assignment of the S1 device.

You set the parameters in STEP 7 in the properties of the interface of each S1 device:

- Update time: Advanced options > Real time settings > IO cycle > Update time
- Watchdog timer: Advanced options > Real time settings > IO cycle > Watchdog timer > Accepted update cycles without IO data

Setting a shorter changeover time of an S1 device: Reduce the values of the parameters/of a parameter.

Setting a longer changeover time of an S1 device: Increase the values of the parameters/of a parameter.

7.6 Main differences between IO device with system redundancy S2, R1 and standard IO device

Table 7-1 Main differences between IO device with system redundancy S2, R1 and standard IO device

Property	IO device with system redundancy S2	IO device with system redundancy R1	Standard IO device
Requirement for IO device	Device supports system redundancy S2	Device supports system redundancy R1	-
Maximum simultaneously supported ARs with regard to the same modules	2	2	1

Property	IO device with system redundancy S2	IO device with system redundancy R1	Standard IO device
Behavior when replacing the primary CPU	Continuous connection with S7-1500R/H redundant system Process data is transferred further.	Continuous connection with redundant S7-1500H system Process data is transferred further.	Temporary disconnection from S7-1500R/H redundant system. No process data is transferred until the standard IO device is available again. The status of the outputs depends on the substitute value behavior of the respective channels.
Behavior in case of failure of an interface module	Failure of the S2 device	R1 device continues to transmit process data via the redundant interface module	Failure of the standard IO device
Number of interface modules per device	1	2	1
Number of ARs per interface module	2	1	1

7.7 Installation guidelines

Configuration requirements for the topology with the redundant S7-1500R system

Topology properties	PROFINET ring
MRP role of the CPU	Manager (auto)
MRP role of the IO devices	Client
Other S7-1500R/H systems	No

Port interconnection:

- The two CPUs are directly interconnected via one of the two ports of PROFINET interface X1. No other devices of the ring are located in between.
- The two CPUs can be indirectly interconnected via the other two ports. The other devices of the ring are located in between. See the examples below.

Table 7-2 Number of PROFINET devices, IO devices in the redundant system

Maximum number of devices	Maximum number of S7-1500R
Maximum number of PROFINET devices in the PROFINET ring of the R system The maximum number includes switches, S7-1500R/H CPUs, S7-1500 CPUs (as of V2.5) and HMI devices. It does not include media converters.	50 (recommendation 16)[1]
Maximum number of IO devices that can be connected to the R-CPUs	64

[1] Recommendation: The number of devices in the PROFINET ring affects the availability of the S7-1500R system. The number of PROFINET devices including R-CPUs in the PROFINET ring should not exceed 16. If you operate significantly more devices in the PROFINET ring, the availability is reduced.

Configuration requirements for the topologies with the redundant S7-1500H system

Topology properties	PROFINET ring	Line topology	Combined topology	H-CPUs without additional devices
MRP role of the CPU	Manager (auto)	Not device in the ring		Not device in the ring
MRP role of the IO devices	Client	Not device in the ring	Depending on the installation location: Not device in the ring **or** client	-
Other S7-1500R/H systems	No	Yes		Yes

Table 7-3 Number of PROFINET devices, IO devices in the redundant system

Maximum number of devices	Maximum number of S7-1500H
Maximum number of PROFINET devices in the PROFINET ring of the R/H system The maximum number includes switches, S7-1500R/H CPUs, S7-1500 CPUs (as of V2.5) and HMI devices. It does not include media converters.	50
Maximum number of IO devices that can be connected to the H-CPUs	256

7.8 Configuring PROFINET IO on a redundant S7-1500R/H system

PROFINET IO configurations with the redundant S7-1500R/H system

The following figures show you examples of PROFINET IO configurations with the redundant S7-1500R/H system.

Abbreviations of AR used in the following figures:

- SR-AR: System redundancy AR between an IO device (S2/R1) and a CPU of the redundant S7-1500R/H system
- AR: "normal" AR between a standard IO device and the associated IO controller

S2 IO devices in the PROFINET ring

The redundant S7-1500R system consists of the two CPUs 1515R and two S2 devices in the PROFINET ring. The IO devices support MRP and H-Sync forwarding.

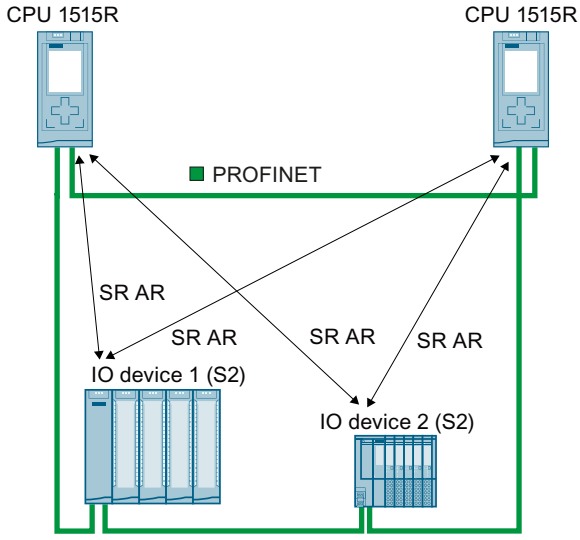

Figure 7-7 Example of a S7-1500R redundant system with two IO devices in the PROFINET ring

IO devices R1 in PROFINET rings

The redundant system S7-1500H consists of the two CPUs 1517H and two R1 devices in two PROFINET rings. The IO devices support MRP.

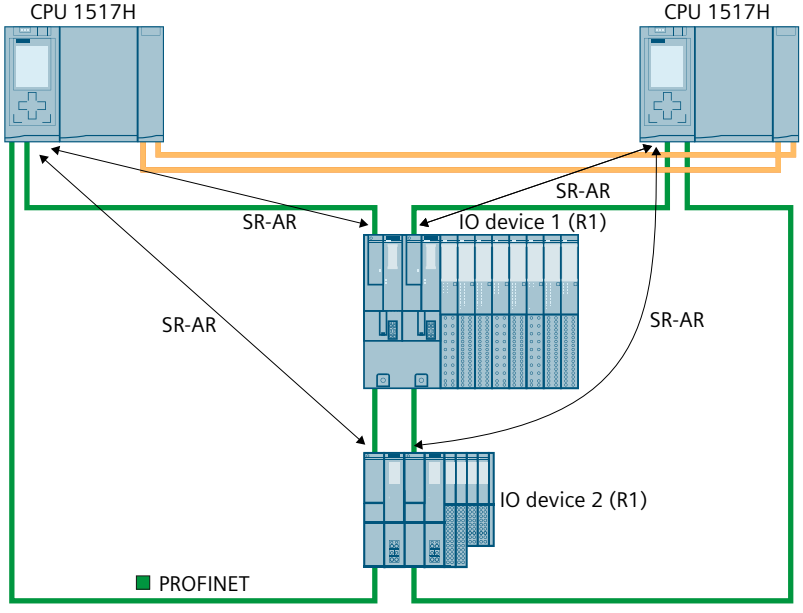

Figure 7-8 Example of a redundant S7-1500H system with two IO devices in two PROFINET rings

PROFINET devices downstream of a switch

To connect additional PROFINET devices to the PROFINET ring, use a switch. For the redundant S7-1500R system, ensure that a switch in the PROFINET ring supports H-SYNC Forwarding in addition to MRP.

You connect the following devices to the PROFINET ring with a switch.

- PROFINET devices with one port
- Non MRP-capable PROFINET devices
- PROFINET devices that do not support H-Sync Forwarding, such as standard IO devices.

The following figure shows a redundant S7-1500R system with connected PROFINET devices downstream of a switch.

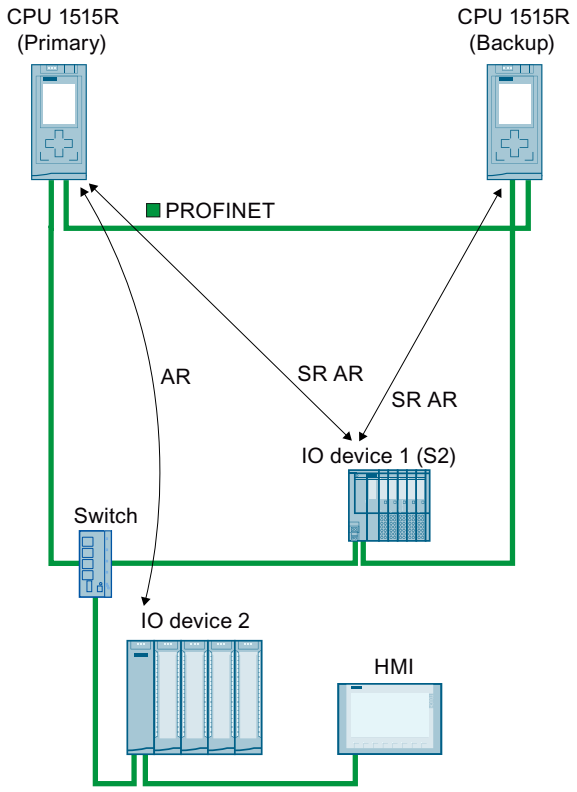

IO device 1 (S2)	IO device 1 is located in the PROFINET ring. The IO device 1 supports system redundancy S2, MRP and H-Sync Forwarding.
Switch	The switch is located in the PROFINET ring. The switch supports MRP and H-SYNC Forwarding.
IO device 2	The IO device 2 is connected to the PROFINET ring via the switch. IO device 2 is a standard IO device that is connected to the redundant S7-1500R system via the "Switched S1 device" function.
HMI device	The HMI device is connected to the PROFINET ring via the switch.

Figure 7-9 PROFINET devices downstream of a switch

Additional PROFINET IO system in the configuration

The configuration can also contain additional IO controllers with their own IO devices. To have enough bandwidth in the PROFINET ring for the redundant S7-1500R/H system, place additional IO controllers with their I/O devices downstream of a switch.

When determining the maximum number of IO devices inside and outside the PROFINET ring, the redundant system in STEP 7 does not recognize the S7-1500 CPUs. If you use S7-1500 CPUs, you must check the maximum number yourself.

The CPU supports H-Sync forwarding and thus may be a node of the PROFINET ring.

The following figure shows a redundant S7-1515R system. An additional PROFINET IO system with a CPU 1516 as IO controller is located downstream of the switch. A separate standard IO device has been assigned to the IO controller.

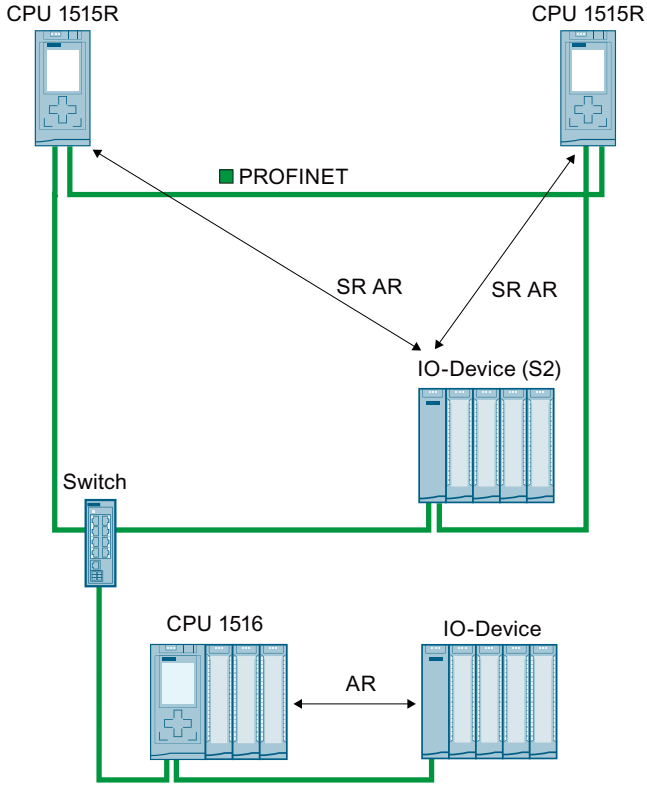

Figure 7-10 Example of a redundant S7-1500R system with an additional PROFINET IO system

Additional IO controllers can also be connected as I-device to the redundant S7-1500R/H system. An I-device is connected like a standard IO device to the redundant S7-1500R/H system.
The redundant S7-1500R/H system supports the use of I-devices only via GSD file and as standard IO device.

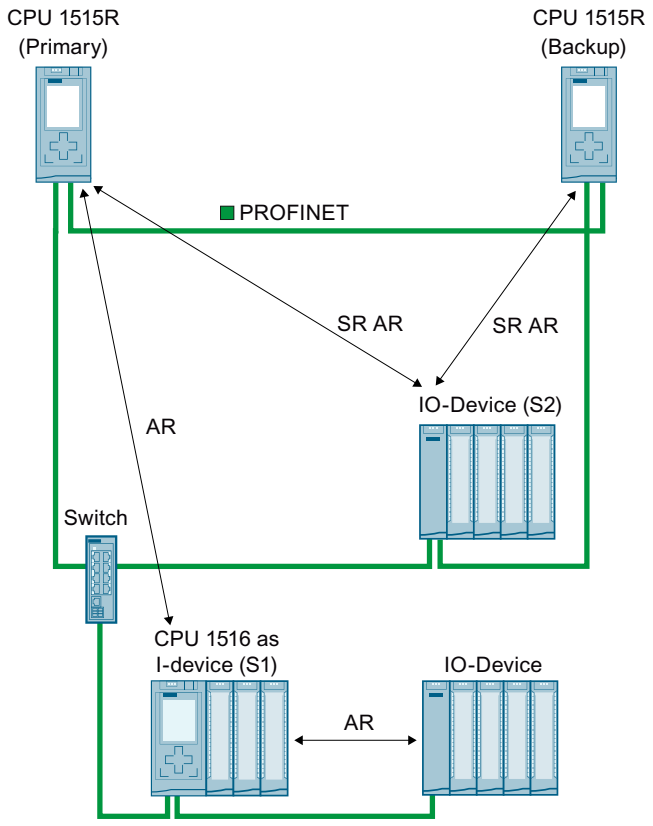

Figure 7-11 I-device downstream of a switch

Connection to another PROFINET IO system via the PN/PN coupler

The redundant S7-1500R/H system cyclically exchanges IO data with another PROFINET IO system via a PN/PN coupler.

In the following figure, the PN/PN coupler connects a redundant S7-1515R system to another PROFINET IO system. The left side of the PN/PN coupler is assigned to the redundant S7-1515R system. The assignment is system-redundant and media-redundant. The right side of the PN/PN coupler is assigned to the CPU 1516 (IO controller). The PROFINET IO system of the CPU 1516 has no redundancy in this example.

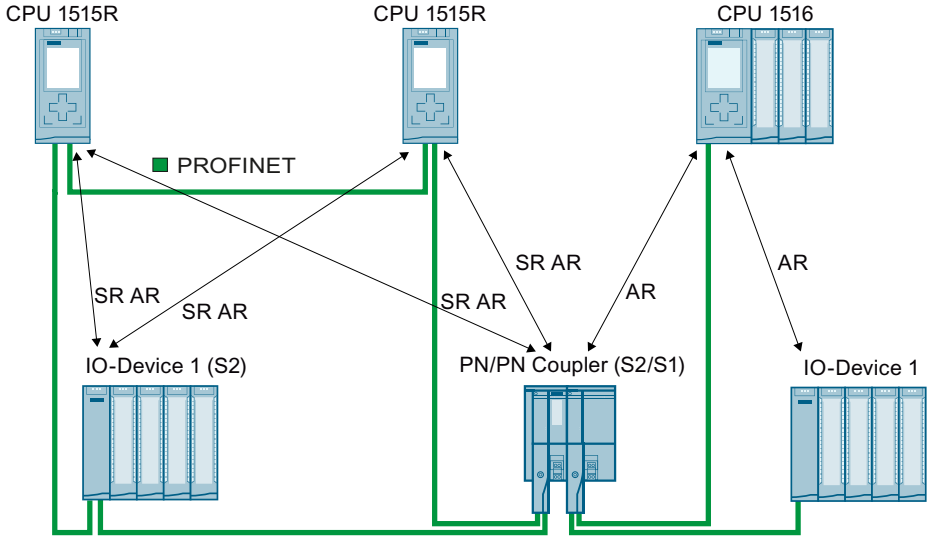

Figure 7-12 Configuration with the PN/PN coupler with one-sided system redundancy (S2/S1)

Connection to an additional redundant S7-1500R/H system via the PN/PN coupler

Two redundant S7-1500R/H systems cyclically exchange IO data via the PN/PN coupler.

In the following figure, the PN/PN coupler connects two redundant S7-1515R systems to each other. Each of the two PN/PN coupler sides are assigned to a redundant S7-1515R system. Each of the two sides of the PN/PN coupler are connected to the respective redundant S7-1515R system in a system-redundant and media-redundant manner.

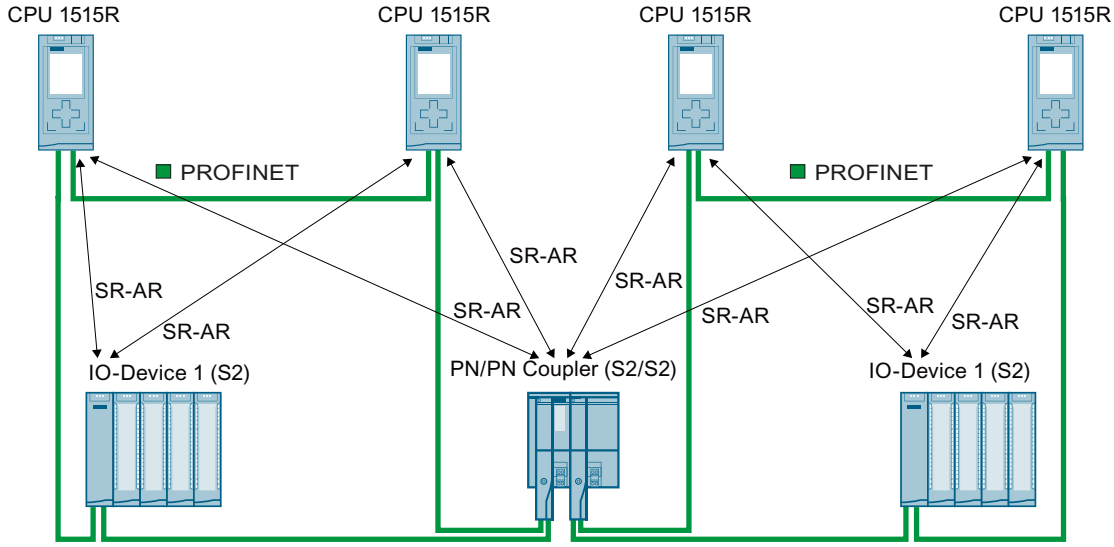

Figure 7-13 Configuration with the PN/PN coupler with two-sided system redundancy (S2/S2)

Reference

You can find more information on the PN/PN coupler in the PN/PN Coupler (https://support.industry.siemens.com/cs/ww/en/view/44319532) manual.

7.9 Assigning IO device to the redundant S7-1500R/H system

Using two examples, this section describes how to assign IO devices to the redundant S7-1500R/H system.

- Procedure for S7-1500R with S2 or S1 devices.
- Procedure for S7-1500H with R1 devices.

Requirements

- Redundant S7-1500R/H system
- IO device:

Redundant system	Switched S1 device (Standard IO device)	IO device with System redundancy S2	IO device with System redundancy R1
S7-1500H as of firmware version V3.0	X	X	X
S7-1500R/H as of firmware version V2.8	X	X	-

Redundant system	Switched S1 device (Standard IO device)	IO device with System redundancy S2	IO device with System redundancy R1
S7-1500R/H with firmware version less than V2.8	-	X	-

Procedure for S7-1500R/H with S2/S1 devices

To assign S2 or S1 devices to the redundant S7-1500H system, connect the interface module of the IO device to each S7-1500H CPU.

1. In the network view of STEP 7, select the PROFINET interface of the IO device.
2. Drag-and-drop a line between the PROFINET interface of the IO device and the PROFINET interface X1 of the left CPU.

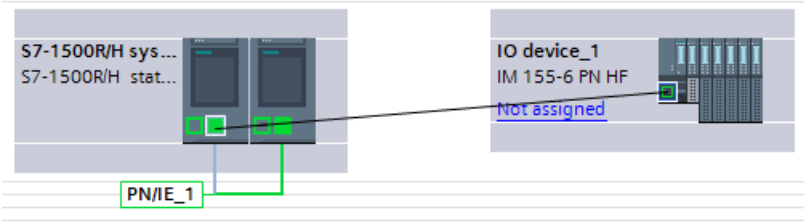

Figure 7-14 Assign IO device to the left CPU

3. Drag-and-drop a line between the PROFINET interface of the IO device and the PROFINET interface X1 of the right CPU.

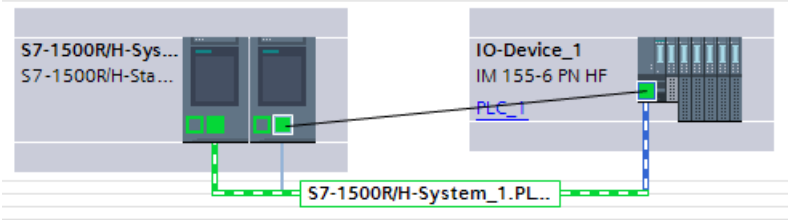

Figure 7-15 Assign IO device to the right CPU

Result: The IO device is connected to the redundant S7-1500R system.

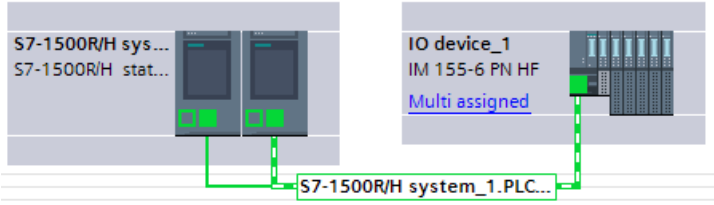

Figure 7-16 S2 device assigned

Procedure for S7-1500H with R1 devices

To assign R1 devices to the redundant S7-1500H system, connect each interface module of the R1 device to an H-CPU.

The left interface module of each R1 device must be connected to the left H-CPU in the network view. The right interface module of each R1 device must be connected to the right H-CPU in the network view.

To do so, proceed as follows:

1. Switch to the network view.
2. Drag-and-drop a line between the PROFINET interface of the left interface module of the ET200SP-R1_1 station and the PROFINET interface X1 of the left H-CPU.
3. Drag-and-drop a line between the PROFINET interface of the right interface module of the ET200SP-R1_1 station and the PROFINET interface X1 of the right H-CPU.
4. Switch to the device view of the ET200SP-R1_1 station and set the watchdog timer for both interface modules. To do this, navigate in the Inspector window to "Properties > PROFINET interface [X1] > Advanced options > Real-time settings > IO cycle".
5. Repeat steps 1 to 4 for the ET200SP-R1_2 station.
   Result: The R1 devices are connected to the S7-1500H redundant system.

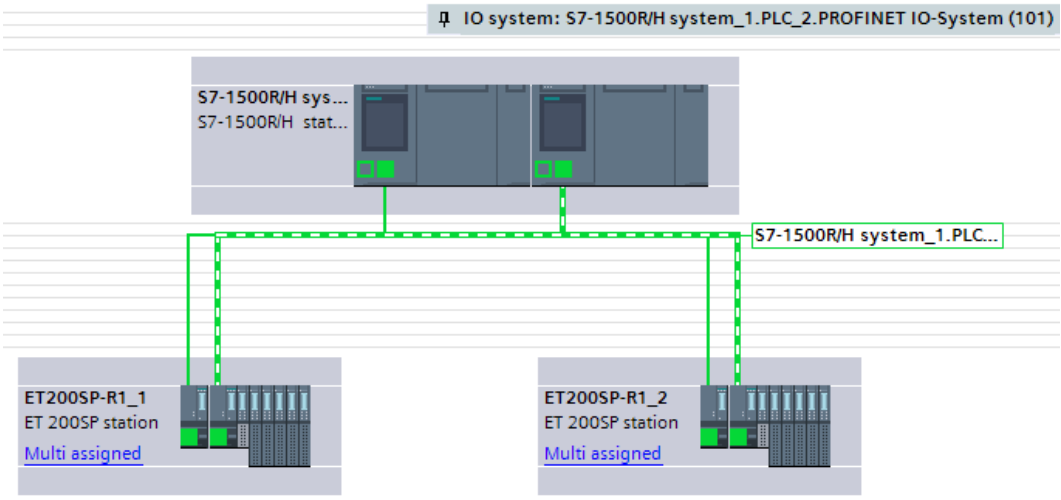

Figure 7-17 R1 devices assigned in the network view with system redundancy

---

NOTE

Alternative method for assigning IO devices.

For larger projects, we recommend assigning the IO devices as follows:

1. Switch to the network view.
2. Move the cursor over the station you want to assign.
3. Press the right mouse button and select "Assign to new DP master/IO Controller" in the shortcut menu.
4. Select both IO Controllers in the following dialog and then click on "Ok". This assigns the left interface module to the left IO Controller and the right interface module to the right IO Controller.
5. Repeat steps 2 through 4 for additional IO devices or mark several stations simultaneously.

I-device as standard IO device

If you want to assign an I-device to the redundant S7-1500R/H system, you have to include the configured I-device via its exported GSD file.
To operate an I-device as standard IO device on the redundant S7-1500R/H system, always use the GSD file of the I-device in the H-system configuration.

- SIMATIC CPU as I-device
  - First, configure the SIMATIC CPU in STEP 7 as an I-device with all transfer areas.
  - Export the I-device as a GSD file. The GSD export can be found in the properties of the PROFINET interface under "Operating mode > I-device communication > Export Generic System Description file (GSD)".
  - Install the GSD file in STEP 7.
- HMI device as I-device ("Direct key" function)
  - The GSD files for SIMATIC Comfort Panel and SIMATIC Mobile Panel can be found under the link at the end of this section.

Assign the I-device integrated via GSD file to the redundant system S7-1500R/H.

See also

GSD file HMIs (https://support.industry.siemens.com/cs/ww/en/view/73502293)

7.10 Configuring media redundancy (MRP) for a configuration with the redundant S7-1500R/H system

This section describes by means of two examples how to configure media redundancy (MRP) for a configuration with the redundant S7-1500R/H system.

- Configuring MRP for a configuration with S2 devices (ET 200SP) with the redundant S7-1500R system.
- Configuring MRP for a configuration with R1 devices (ET 200SP) with the redundant S7-1500H system.

Requirements

- Redundant S7-1500R/H system.
- All devices in the ring support the media redundancy protocol MRP.
- IO devices are assigned to the redundant S7-1500R/H system.
- The MRP domain "mrpdomain-2" was created in the domain settings (S7-1500H).

Configuring MRP for a configuration with S2 devices (ET 200SP) with the redundant S7-1500R system

Specifying MRP role and MRP domain of the CPUs of the redundant S7-1500R system

As soon as you create a redundant S7-1500R system in STEP 7, STEP 7 automatically assigns the MRP role "Manager (auto)" for the PROFINET interfaces X1 of the two CPUs.

Specifying MRP role and MRP domain for the S2 devices of the redundant S7-1500R system in STEP 7

To specify the media redundancy for additional devices in the ring, follow these steps:

1. In the network view of STEP 7, select the PROFINET interface X1 of one of the two CPUs of the redundant S7-1500R system.
2. In the Inspector window, navigate to "Properties > General > Advanced options > Media redundancy".
3. Click the "Domain settings" button.

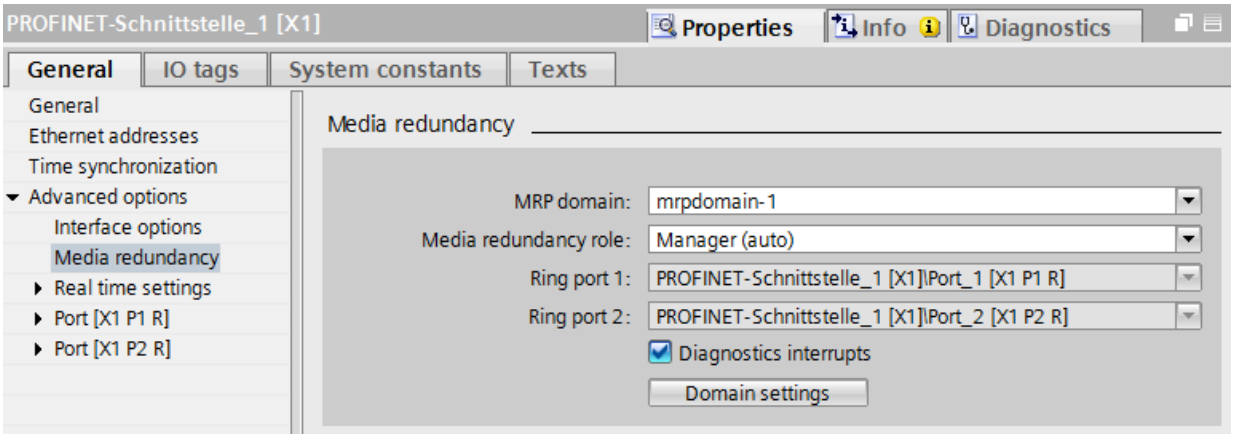

Figure 7-18 S7-1500R: MRP role "Manager (auto)"

In the Inspector window, STEP 7 displays the properties of the MRP domain in which the PROFINET interface X1 of the CPU is located.

4. In the "MRP role" column of the "Devices" table, assign the MRP role "Client" to all the other devices of the ring.

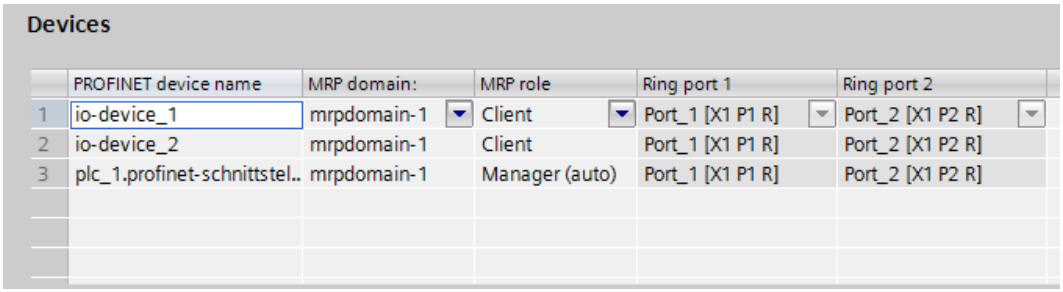

Figure 7-19 S7-1500R: Assigning MRP roles for ring devices

Configuring MRP for a configuration with R1 devices (ET 200SP) with the redundant S7-1500H system

Set MRP role and MRP domain of the CPUs of the redundant S7-1500H system

As soon as you create a S7-1500H redundant system in STEP 7, STEP 7 automatically assigns the MRP role "Not device in the ring" for the PROFINET interfaces X1 of the two CPUs. For the project engineering as PROFINET ring you have to change the MRP role to "Manager (auto)".

To change the MRP role of the redundant system, follow these steps:

1. Switch to the device view of the S7-1500H redundant system.
2. Select the PROFINET interface X1 of the upper H-CPU (mounting rail_0) of the S7-1500H redundant system.
3. In the Inspector window, navigate to "Properties > General > Advanced options > Media redundancy".
4. Change the MRP domain to "mrpdomain-1" (if required) and the media redundancy role for the H-CPU to "Manager (auto)".
5. Select the PROFINET interface X1 of the lower H-CPU of the S7-1500H redundant system.
6. Change the MRP domain to "mrpdomain-2" (if required) and the media redundancy role for the H-CPU to "Manager (auto)".
7. Enable the "Diagnostic interrupts" option.

NOTE

If the "Diagnostic interrupts" option is enabled, diagnostic interrupts are generated at the ring ports in the event of the following errors:

Wiring or port error:

- A neighbor of the ring port does not support media redundancy MRP.
- A ring port is connected to a non-ring port.
- A ring port is connected to the ring port of a different MRP domain.

You can find additional information in the STEP 7 online help.

Specifying MRP role and MRP domain for the R1 devices of the redundant S7-1500H system in STEP 7.

To define the media redundancy for the other devices (IO devices) of the rings, proceed as follows:

1. Switch to the device view of the left ET 200SP (ET200SP-R1_1).
2. Click on the PROFINET interface X1 of the left IM 155-6 PN R1.
3. Change the MRP domain to "mrpdomain-1" (if required) and the media redundancy role to "Client".
4. Click on the PROFINET interface X1 of the right IM 155-6 PN R1.
5. Change the MRP domain to "mrpdomain-2" and the media redundancy role to "Client".
6. Switch to the device view of the right ET 200SP (ET200SP-R1_2) and repeat steps 2 to 5.

NOTE

Alternative method for assigning MRP role and MRP domain.

1. Switch to the network view.
2. Click the connection PN/IE_1.
3. In the Inspector window, navigate to "Properties > General > MRP domains".
4. Scroll down to the "Devices" section.

- Under "PROFINET IO system", select the controller interface.
- Under "Devices" you configure the respective MRP domain and the MRP role.

7.11 MRP interconnection with the redundant system S7-1500R/H

- The S7-1500H CPUs support system redundancy R1 as of firmware version V3.0.
- The S7-1500R/H CPUs support MRP interconnection as of firmware version V2.9.

MRP interconnection enables the redundant data exchange via S7-1500R/H across two or more MRP rings.

Requirements for S7-1500R/H

In addition to the requirements for S7-1500, the following requirements are in effect for S7-1500R/H:

- For S7-1500R/H: The two CPUs of the redundant system are located in the same ring (as of firmware version V2.9).
- For S7-1500H: The two CPUs of the redundant system are located in one or two rings (as of firmware version V3.0).
- You have configured the media redundancy role of the two CPUs as "Manager (auto)" in the ring with the two R/H CPUs.

  You have configured the following in the other rings:
  - For one or more PROFINET devices the media redundancy role "Manager (auto)" or
  - For exactly one PROFINET device the media redundancy role "Manager"

  You have assigned the MRP client role to the other devices in all rings.

Topology with S2 devices

Topology with two rings, using the example of S7-1500R

The following figure shows the redundant coupling based on the example of S7-1500R in 2 rings.

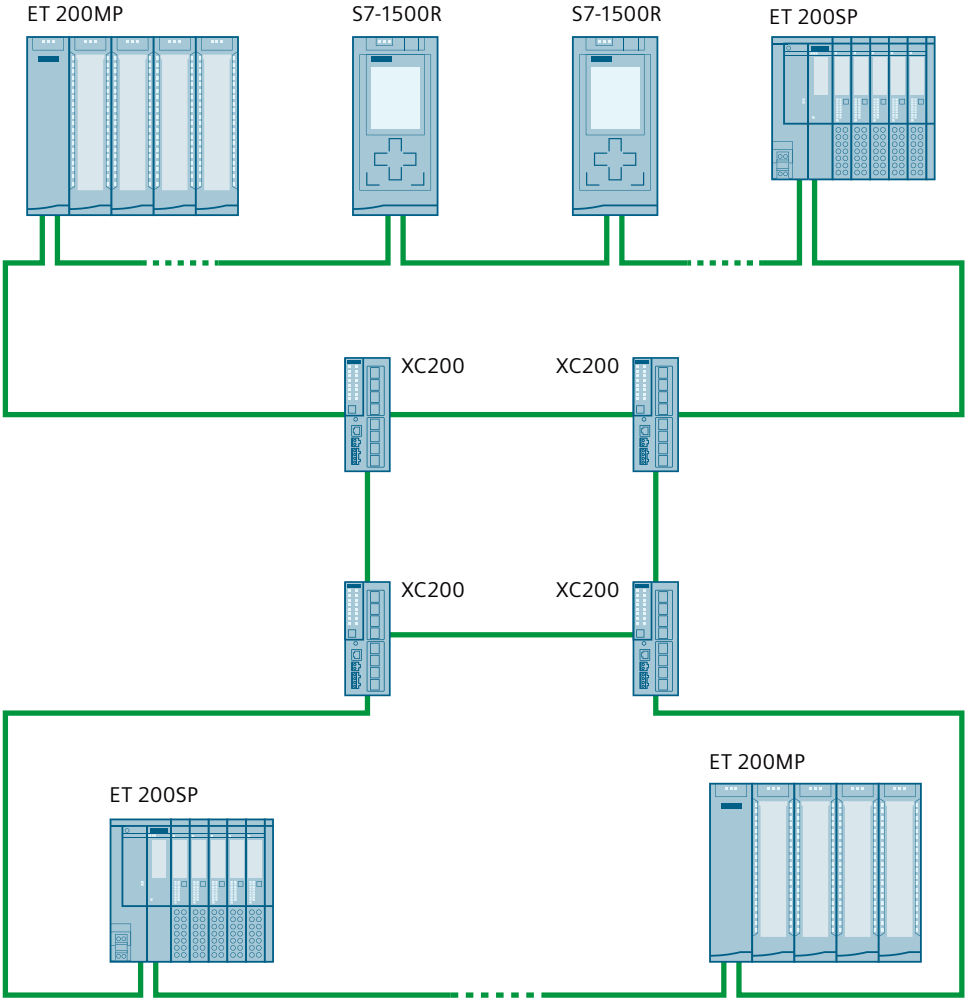

Figure 7-20 Example: Redundant connection of S7-1500R in 2 rings with MRP interconnection

Topology with two rings, using the example of S7-1500H

The figure below shows the redundant coupling, using the example of S7-1500H in two rings.

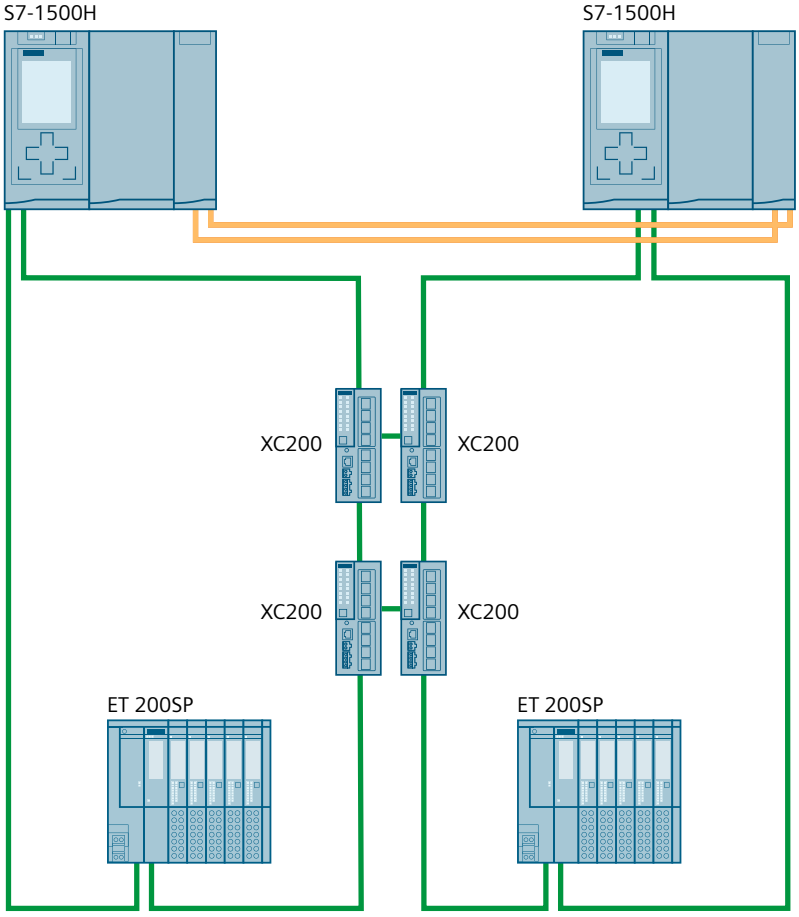

Figure 7-21 Example: Redundant connection of S7-1500H in two rings with MRP interconnection

Topology with multiple rings, using the example of S7-1500H

The figure below shows the redundant coupling, using the example of S7-1500H in four rings.

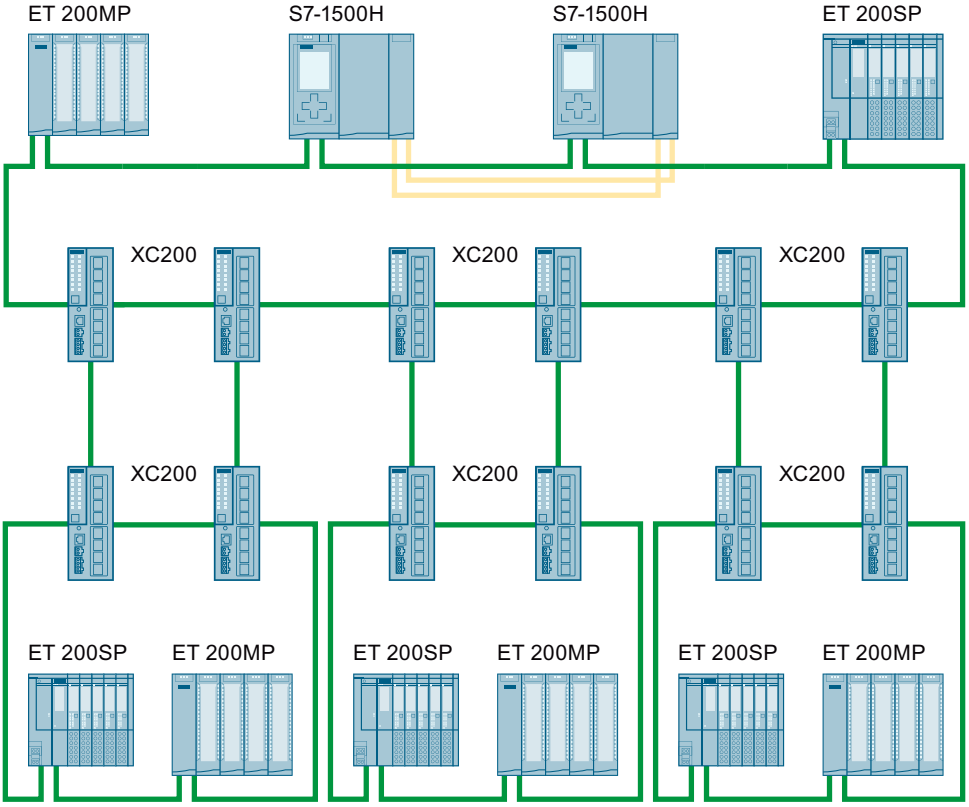

Figure 7-22 Example: Redundant coupling, using the example of S7-1500H in four rings

Topology with R1 devices

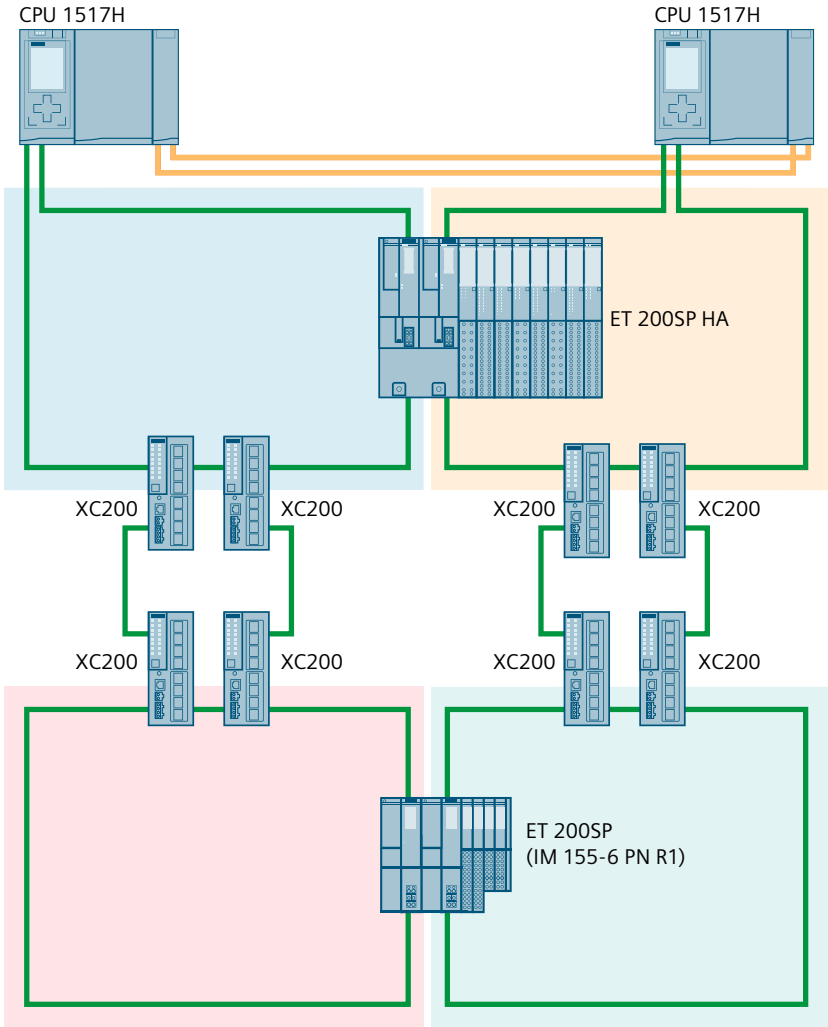

Figure 7-23 Example: S7-1500H configuration with R1 devices and switches with MRP interconnection in the PROFINET ring

Additional information

You can find all information that generally applies to MRP interconnection and thus also to redundant S7-1500R/H systems with MRP interconnection, in the section MRP interconnection (Page 176), for example, constraints, principle of operation, configuration and times.

Tool for setting the watchdog timer

For the correct setting of the watchdog timer, you can use the "S7-1500R/H AddIn (https://support.industry.siemens.com/cs/de/en/view/109769093)" which is available on the Internet and can also be used for MRP interconnections.

Glossary

API

API (**A**pplication **P**rocess **I**dentifier) is a parameter, the value of which specifies the IO data processing process (application).
The PROFINET standard IEC 61158 assigns profiles to specific APIs (PROFIdrive, PROFIsave), which are defined by the PROFINET user organization.
The standard API is 0.

Application

An application is a program that runs directly on the MS-DOS/Windows operating system. An application on the PG is STEP 7, for example.

AR

The AR (**A**pplication **R**elation) comprises all the communication relationships between IO controller and IO device (e.g. IO data, data records, interrupts).
AR is also an addressing level for diagnostic data records.

Asset

An asset is a component of a machine or plant This can be either hardware or software/firmware.

Automation system

Programmable logic controller for the open-loop and closed-loop control of process chains of the process engineering industry and manufacturing technology. The automation system consists of different components and integrated system functions according to the automation task.

Backplane bus

The backplane bus is a serial data bus for module intercommunication and the distribution of the necessary power to the modules. Bus connectors interconnect the modules.

Backup AR

The backup AR is the system redundancy AR between an IO device with system redundancy S2 and the backup CPU of the redundant S7-1500R/H system.

Backup CPU

If the R/H system is in RUN-Redundant system state, the primary CPU controls the process. The backup CPU synchronously executes the user program and can take over the process control on failure of the primary CPU.

Bus

A bus is a transfer medium that interconnects several devices. Data transmission can be performed electrically or via optical fibers, either in series or in parallel.

Communications Cycle and Reservation of Transmission Bandwidth

PROFINET IO is a scalable real-time communication system based on the Layer 2 protocol for Fast Ethernet. With the RT transmission method, two real-time-support performance levels are available for time-critical process data and IRT for high-accuracy and also isochronous processes .

Communications processor

Communication processors are modules used for point-to-point and bus connections.

Configuring

Selecting and putting together individual components of an automation system or installing necessary software and adapting it for a specific application (for example, by configuring the modules).

Consistent data

Data which belongs together in terms of content and must not be separated is known as consistent data.
For example, the values of analog modules must always be handled as a whole, that is, the value of an analog module must not be corrupted as a result of reading out at two different points in time.

CP

→ Communications processor

CPU

Central **P**rocessing **U**nit - Central module of the S7 automation system with a control and arithmetic unit, memory, operating system and interface for programming device.

DCP

DCP (**D**iscovery and Basic **C**onfiguration **P**rotocol). Enables the assignment of device parameters (for example, the IP address) using manufacturer-specific configuration/programming tools.

Default router

The default router is used when data has to be forwarded via TCP/IP to a partner located outside the local network.

Determinism

Determinism means that a system responds in a predictable (deterministic) manner.

Device

In the PROFINET environment, "device" is the generic term for:

- Automation systems (for example, PLC, PC)
- Distributed I/O systems
- Field devices (for example, PLC, PC, hydraulic devices, pneumatic devices)
- Active network components (for example, switches, routers)
- Gateways to PROFIBUS, AS interface or other fieldbus systems

Device name (PROFINET device name)

In the PROFINET IO environment, the device name is a unique identifier for the PROFINET IO interface of a device.

DHCP

DHCP (**D**ynamic **H**ost **C**onfiguration **P**rotocol). Protocol that can be used to assign IP addresses (and other important startup parameters in the Internet environment).

Diagnostics

→ System diagnostics

Diagnostics buffer

The diagnostics buffer represents a backup memory in the CPU, used to store diagnostics events in their order of occurrence.

Diagnostics error interrupt

Modules capable of diagnostics operations report detected system errors to the CPU by means of diagnostics interrupts.
→ *See also CPU*

Direct data exchange

In the case of direct data exchange, an S7-1500 CPU provides cyclic user data from the I/O area to one or more partners.
The direct data exchange function enables deterministic, isochronous I/O communication between multiple S7-1500 CPUs.

DP master

A master which behaves in accordance with EN 50170, Part 3, is known as a DP master.
→ *See also Master*

DP slave

A slave operated on PROFIBUS with PROFIBUS DP protocol and in accordance with EN 50170, Part 3 is referred to as DP slave.
→ *See also Slave*

DPV1

The designation DPV1 refers to the functional extension of acyclic services (to include new interrupts, for example) provided by the DP protocol. The DPV1 functionality is integrated in IEC 61158/EN 50170, Volume 2, PROFIBUS.

Duplex

Half duplex: One channel is available for alternating exchange of information.

Full duplex: Two channels are available for simultaneous exchange of information in both directions.

Ethernet

Ethernet is an international standard technology for local area networks (LAN) based on frames. It defines types of cables and signaling for the physical layer and packet formats and protocols for media access control.

GSD file

As a Generic Station Description, this file contains all properties of a PROFINET device that are necessary for its configuration in XML format.

H-Sync Forwarding

H-Sync Forwarding enables a PROFINET device with MRP to forward synchronization data (synchronization frames) of a S7-1500R redundant system only within the PROFINET ring.

In addition, H-Sync Forwarding forwards the synchronization data even during reconfiguration of the PROFINET ring. H-Sync Forwarding avoids a cycle time increase if the PROFINET ring is interrupted.

S7-1500R: H-Sync Forwarding is recommended for all PROFINET devices with only two ports in the PROFINET ring. All PROFINET devices with more than two ports (e.g. switch) in the PROFINET ring must support H-Sync forwarding.

S7-1500H: H-Sync Forwarding is not relevant for redundant S7-1500H systems.

I-device

The "I-device" (intelligent IO device) functionality of a CPU facilitates data exchange with an IO controller, for example, as intelligent preprocessing unit of sub-processes. In its role as an IO device, the I-device is accordingly integrated into a "higher-level" IO controller.

Industrial Ethernet

Industrial Ethernet is a guideline for installing an Ethernet in an industrial environment. The biggest difference from standard Ethernet is the mechanical current carrying capacity and noise immunity of the individual components.

Interrupt

An interrupt is an event that causes the operating system of an S7-CPU to automatically call an assigned organization block (interrupt OB) in which the user can program the desired reaction.

Interrupt, diagnostics

→ Diagnostics error interrupt

IP address

To allow a PROFINET device to be addressed as a device on Industrial Ethernet, this device also requires an IP address that is unique within the network. Example: An IPv4 address consists of 4 decimal numbers with the value range 0 to 255. The decimal numbers are separated by periods.

The IP address is made up of the following components:

- Address of the network
- Address of the device (generally called the host or network node).

IRT

IRT is a synchronized communication protocol for cyclic exchange of IRT data between PROFINET devices. A reserved bandwidth is available in the send cycle for IRT data. The reserved bandwidth ensures that the IRT data can be transferred at reserved synchronized intervals, without being influenced also by higher other network loads (such as TCP/IP communication, or additional real-time communication).

LAN

Local **A**rea **N**etwork - a local network to which multiple computers within a company are connected. The LAN therefore has a limited geographical span and is only available to the company or institution.

Line depth

Designates the number of external switches or integrated switches interconnected in series.

MAC address

Worldwide unique device identification for all Ethernet devices. It is assigned by the manufacturer and has a 3-byte vendor ID and 3-byte device ID as a consecutive number.

Every PROFINET device is assigned a worldwide unique device identifier at the factory. This 6-byte long device identifier is the MAC address.

Maintenance Required / Maintenance Demanded

A "Maintenance required" system message can be defined for different wear parameters and an inspection of a component can be recommended, for example, when a certain number of operating hours has elapsed.

The "Maintenance demanded" alarm is sent when the part involved needs to be replaced within a foreseeable period.

(Example printer: The maintenance demanded alarm is sent when the ink/printer cartridges have to be replaced immediately.)

Master

Higher-level, active participant in the communication/on a PROFIBUS subnet. It has rights to access the bus (token), sends data and requests it.

Media redundancy

The so-called **M**edia **R**edundancy **P**rotocol (MRP) enables the configuration of redundant networks. Redundant transmission links (ring topology) ensure that an alternating communication path is made available if a transmission link fails. The PROFINET devices that are a part of this redundant network form an MRP domain.

Micro Memory Card (MMC)

Micro Memory Cards are memory media for CPUs and CPs. Their only difference to the SIMATIC memory card is the smaller size. S7-1500 and ET 200SP-CPUs use SIMATIC memory cards.

MPI

The multipoint interface (**M**ulti **P**oint **I**nterface,MPI) represents the programming device interface of SIMATIC S7. It enables multiple devices (programming devices, text-based displays, OPs) to be operated simultaneously by one or more CPUs. Each device is identified by its unique (MPI) address.

MRP

MRP (**M**edia **R**edundancy **P**rotocol) describes the ring redundancy according to IEC 61158 and IEC 62439.

MRP interconnection

The MRP interconnection procedure is an extension of MRP. MRP interconnection enables the redundant coupling of two or more rings with MRP in PROFINET networks.

MRPD

MRPD (**M**edia **R**edundancy with **P**lanned **D**uplication of Frames) based on IRT and MRP. To realize media redundancy with short update times, the PROFINET devices participating in the ring send their data in both directions. The devices receive this data at both ring ports so that there is no reconfiguration time.

Network

A network consists of one or more interconnected subnets with any number of devices. Several networks can exist alongside each other.

OB

→ Organization block

OPC

OPC (OLE for Process Control) refers to a standard interface for communication in automation technology.

Operating states

Operating states describe the behavior of a single CPU at a specific time.

The CPUs of the SIMATIC standard systems feature the STOP, STARTUP and RUN operating states.
The primary CPU of the S7-1500R/H redundant system has the operating states STOP, STARTUP, RUN, RUN-Syncup and RUN-Redundant. The backup CPU has the operating states STOP, SYNCUP and RUN-Redundant.

Organization block

Organization blocks (OBs) form the interface between the CPU operating system and the user program. The order in which the user program is executed is defined in the organization blocks.

Parameter

1. Tag of a STEP 7 code block:
2. Tag used to set one or several characteristics of a module

In delivery state, every module has practical basic settings, which can be modified by configuration in STEP 7.
There are static and dynamic parameters

PG

→ Programming device

PLC

→ Programmable logic controller

Primary AR

The primary AR is the system redundancy AR between an IO device with system redundancy S2 and the primary CPU of the redundant S7-1500R/H system.

Primary CPU

If at least one R/H CPU is in RUN state, the primary CPU is the controlling CPU. The primary CPU controls the process (productive data).
The user program is executed identically in the primary CPU and the backup CPU.

Prioritized startup

Prioritized startup denotes the PROFINET functionality for accelerating the startup of IO devices operated on a PROFINET IO system with RT and IRT communication. It reduces the time that the correspondingly configured IO devices require in order to return to cyclic user data exchange in the following cases:

- After the power supply has returned
- After a station has returned
- After activation of IO devices

Process image (I/O)

The CPU transfers the values from the input and output modules to this memory area. At the start of the cyclic program, the CPU transfers the process image output as a signal state to the output modules. The CPU then transfers the signal states of the input modules to the process image of the inputs. Then the CPU executes the user program.

PROFIBUS

Process **Fi**eld **Bus** - European Fieldbus standard.

PROFIBUS device

A PROFIBUS device has at least one PROFIBUS interface with an electrical (RS485) or optical (polymer optical fiber, POF) interface.

PROFIBUS DP

A PROFIBUS with DP protocol that complies with EN 50170. DP stands for distributed I/O (fast, real-time capable, cyclic data exchange). From the perspective of the user program, the distributed I/Os are addressed in exactly the same way as the centralized I/Os.

PROFIBUS Users Organization

Technical committee dedicated to the definition and development of the PROFIBUS and PROFINETstandard. Additional information can be found on the Internet (Page %getreference).

PROFIenergy

Function for energy saving in the process, for example, during pause times by briefly switching off the entire system via standardized PROFIenergy commands.

PROFINET

Open component-based industrial communication system based on Ethernet for distributed automation systems. Communication technology promoted by the PROFIBUS Users Organization.

PROFINET device

A PROFINET device always has a PROFINET interface (electrical, optical, wireless). A lot of devices also have a PROFIBUS DP interface to connect PROFIBUS devices.

PROFINET IO

Communication concept for the realization of modular, distributed applications within the scope of PROFINET.
PROFINET IO is based on switched Ethernet with full-duplex operation and a bandwidth of 100 Mbps.

PROFINET IO Controller

Device used to address the connected IO devices. This means that the IO controller exchanges input and output signals with assigned field devices. The IO controller is often the controller on which the automation program runs.

PROFINET IO Device

A distributed field device that is assigned to one of the IO controllers (e.g. remote IO, valve terminals, frequency converters, switches)

PROFINET IO System

PROFINET IO controller with assigned PROFINET IO devices.

PROFINET ring

Structure of a network. Common structures include:

- Linear bus topology
- Ring topology
- Star topology
- Tree topology

Programmable logic controller

Programmable logic controllers (PLCs) are electronic controllers whose function is stored as a program in the control unit. The structure and wiring of the device does not therefore depend on the controller's function. A programmable logic controller is structured like a computer. It consists of a CPU with memory, input/output modules and an internal bus system. The IOs and the programming language are oriented to the requirements of the control technology.

Programming device

Programming devices are essentially compact and portable PCs which are suitable for industrial applications. They are identified by a special hardware and software configuration for programmable logic controllers.

Proxy

The PROFINET device with proxy functionality is the substitute for a PROFIBUS device on Ethernet. The proxy functionality allows a PROFIBUS device to communicate not only with its master but also with all devices on PROFINET.

With PROFINET, existing PROFIBUS systems can be integrated into the PROFINET communication with the aid of an IE/PB link, for example. The IE/PB Link PN IO then handles communication via PROFINET on behalf of the PROFIBUS components.

In this way, you can link both DPV0 and DPV1 slaves to PROFINET.

Real-time

Real-time means that a system processes external events within a defined time.

Real-time communication

Group error for RT and IRT.

PROFINET uses its own real-time channel (RT) rather than TCP/IP for communication of time-critical IO user data.

Redundant systems

Redundant systems are characterized by the fact that important automation components are present multiple times (redundantly). Process control is maintained if a redundant component fails.

Router

A router interconnects two subnets. A router works in a similar way to a switch. With a router, however, you can also specify which communication devices may communicate via the router and which may not. The communication devices on various sides of a router can only communicate with one another if you have explicitly enabled communication between these devices via the router. Real-time data cannot be exchanged beyond subnet boundaries.

RT

PROFINET IO with **R**eal **T**ime communication (RT) is the optimal transmission method for time-critical applications in factory automation. PROFINET IO frames are prioritized over standard frames in accordance with IEEE802.1Q. This ensures the required determinism in the automation technology.

Security

Generic term for all the measures taken to protect against

- Loss of confidentiality due to unauthorized access to data
- Loss of integrity due to manipulation of data
- Loss of availability due to the destruction of data

Send clock

Period between two consecutive intervals for IRT or RT communication. The send clock is the shortest possible transmit interval for exchanging data.

SIMATIC

The term denotes Siemens AG products and systems for industrial automation.

SIMATIC NET

Siemens Industrial Communication division for Networks and Network Components.

SIMATIC PC Station

A "PC station" is a PC with communication modules and software components within a SIMATIC automation solution.

SIMATIC Memory Card (SMC)

→ Micro Memory Card (MMC)

Slave

A slave can only exchange data after being requested to do so by the master.
→ *See also DP slave*

SNMP

The network management protocol SNMP (**S**imple **N**etwork **M**anagement **P**rotocol) uses the wireless UDP transport protocol. It consists of two network components, similar to the client/server model. The SNMP manager monitors the network nodes and the SNMP agents collect the various network-specific information in the individual network nodes and stores it in a structured form in the MIB (**M**anagement **I**nformation **B**ase). This information allows a network management system to run detailed network diagnostics.

STEP 7

STEP 7 is an engineering system and contains programming software for the creation of user programs for SIMATIC S7 controllers.

Subnet

All the devices interconnected by switches are nodes of the same network or subnet. All the devices in a subnet can communicate directly with each other.
All devices in the same subnet have the same subnet mask.
A subnet is physically restricted by a router.

Subnet mask

The bits set in the subnet mask decide the part of the IP address that contains the address of the network.
In general, the following applies:

- The network address is obtained from the AND operation of the IP address and subnet mask.
- The device address is obtained from the AND NOT operation of the IP address and subnet mask.

Switch

Network components used to connect several terminal devices or network segments in a local network (LAN).

Switched S1 device

The "Switched S1 device" function of the CPU enables operation of standard IO devices on the S7-1500R/H redundant system.
PROFINET communication runs on an AR between the primary CPU and the standard IO device. When replacing the primary CPU, the standard IO device is briefly disconnected from the S7-1500R/H redundant system until the new primary CPU has set up an AR to the standard IO device.

Sync domain

All PROFINET devices to be synchronized with IRT via PROFINET IO must belong to a sync domain.

The sync domain consists of exactly one sync master and at least one sync slave. An IO controller or switch generally handles the role of the sync master.

Non-synchronized PROFINET devices are not part of a sync domain.

System diagnostics

System diagnostics refers to the detection, evaluation, and signaling of errors that occur within the automation system, for example, programming errors or module failures. System errors can be indicated by LEDs or in STEP 7.

System redundancy AR

In a redundant system, an IO device with system redundancy S2 has a system redundancy AR with each of the two CPUs (IO controllers).

System states

The system states of the redundant S7-1500R/H system result from the operating states of the primary and backup CPUs. The concept of the system state is used to obtain a simplified expression that characterizes the simultaneously occurring operating states of the two CPUs. The following system states are available for the redundant S7-1500R/H system: STOP, STARTUP, RUN-Solo, SYNCUP and RUN-Redundant.

TCP/IP

The Ethernet itself is only a transport system for data - similar to a highway, which is a transport system for people and goods. The actual data transport is performed by so-called protocols - similar to cars and trucks, which transport people and goods on the highway.

The two basic protocols TCP (**T**ransmission **C**ontrol **P**rotocol) and IP (**I**nternet **P**rotocol) - TCP/IP for short - perform the following tasks:

1. The data is broken down into packets at the sender.
2. The packets are transported over the Ethernet to the correct recipient.
3. At the recipient, the packets are reassembled in the correct order.
4. Corrupt packets continue to be sent until they are received correctly.

Most higher-level protocols use TCP/IP to perform their duties. **H**yper **T**ext **T**ransfer **P**rotocol (HTTP), for example transfers documents written in **H**yper **T**ext **M**arkup **L**anguage (HTML) in the **W**orld **W**ide **W**eb (WWW). This technique is what enables you to view web pages in your Internet browser in the first place.

Topology configuration

All the interconnected ports of the PROFINET devices in the STEP 7 project and their relationships to each other.

Twisted-pair

Fast Ethernet via twisted-pair cables is based on the IEEE 802.3u standard (100 Base-TX). The transmission medium is a shielded 2x2 twisted-pair cable with an impedance of 100 Ω

(AWG 22). The transmission characteristics of this cable must meet the requirements of category 5.
The maximum length of the connection between the terminal and the network component must not exceed 100 m. The connectors are designed according to the 100Base-TX standard with the RJ45 connector system.

Update time

An IO device / IO controller in the PROFINET IO system is supplied cyclically with new data from the IO controller / IO device within this time interval. The update time can be configured separately for each IO device and determines the interval at which data is sent from the IO controller to the IO device (outputs) as well as from the IO device to the IO controller (inputs).

User program

In SIMATIC, we distinguish between the CPU operating system and user programs. The user program contains all instructions, declarations and data by which a plant or process can be controlled. The user program is assigned to a programmable module (for example, CPU, CM) and can be structured in smaller units.

WAN

A network that extends beyond LAN boundaries and enables, for example, intercontinental network communication. Legal rights do not belong to the user but to the provider of the communication network.

XML

XML (E**x**tensible **M**arkup **L**anguage) is a flexible, easy to understand and easy to learn data description language. Information is exchanged using readable XML documents. These include continuous text supplemented by structure information.

Index

A

Accelerating startup, 264
  Optimize the port settings, 266
  Optimizing cabling, 267
  Adapting the user program, 268
Advanced offline/online comparison
  Automatic device assignment, 72
Alarm texts, 79
Alternating IO devices during operation, 258
Alternating partner ports during operation, 258
Application cycle, 207
  Setting, 210
Asset management, 96
Assigning parameters, 43
Assignment IO device - controller, 44

B

Bandwidth, 130

C

Cables, 32
Calling status from IO device, 73
Channel, 28
Communication, 23
Communication relations, 269
Compare offline/online
  Automatic device assignment, 69
Configuration control, 232
Configuration control for IO systems, 232, 241, 254
Configuring, 43
Configuring docking system, 260
Configuring hardware and assigning parameters for hardware, 43
CPU display
  IP address, 50
  Diagnostics, 77
Cut through, 183

D

D_ACT_DP, 133, 259
Data access, 24
Data cycle, 206
Data exchange between IO systems, 118
Data security
  Basics, 38
  Security, 38
  SCALANCE, 40
  Example, 41
Default router, 49
Delay time, 207
  Setting, 210
Device name, 46
  Automatically assign, 46
  Structured, 47
  Exchanging without removable storage medium, 51
  Changing, 52
  Permitting changes directly on the device, 57
Device number, 47
Device replacement
  Without exchangeable medium/programming device, 225
  Neighborhood detection, 227
  Failure and replacement of an IO device, 227
  Assign device name, 228
  Configuring, 228
Device replacement without exchangeable medium/programming device, 51, 225
Devices & networks, 84
DHCP, 58

Diagnostics, 73
via LEDs, 76
via CPU display, 77
via Web server, 81
STEP 7, 84
PROFINET ports, 85
User program, 92
Diagnostics status, 92
Evaluation of interrupts, 94
I-device, 125

Diagnostics buffer, 79

Diagnostics data record, 90
Channel-specific, 90
Vendor-specific, 90

Diagnostics levels, 74

Diagnostics status, 92

Display
IP address, 50
Diagnostics, 77

DNS conventions, 47

Docking station, 258

Docking unit, 258

DP cycle time, 207

E

Evaluation of interrupts, 94

Exchangeable medium, 225

Execution window, 211

F

Fast Ethernet, 30

Fiber-optic cable (FOC), 32

Fieldbus integration, 108

Full-duplex mode, 30

Functionality
PROFINET IO, 27
I-device, 112

G

Gateway, 58

Go online, 84

GSD file, 122

H

Hardware and network editor
Assign device name, 46
Assign IP address, 46
Topology view, 66

I

I/O addresses, 207

I/O communication, 45, 55

I&M data, 95
downloading to PROFINET IO devices, 95

Identification data, 95

Identification of the PROFINET device, 53

I-device, 122
Configuring with GSD file, 122

I-device (intelligent IO device)
Functionality, 112
Properties, 114
Lower-level PN IO system, 114
Configuring, 120
Alarm response, 125
Diagnostics, 125
Topology rules, 127

IE/PB link, 109

Industrial Ethernet, 19, 30

Industrial Wireless LAN, 34
Application examples, 35
Range, 36

Instruction
T_CONFIG, 58

Interconnecting ports
In topology view, 68
In the Inspector window, 68

IO controller, 44

IO device, 44
Assigning, 44
Calling status, 73
Activating and deactivating during change, 259
Configuring alternating partners, 260

IO system, 45
Checking the assignment, 45
Data exchange, 118
IP address, 48
Assigning for the first time, 50
Changing, 53
assigning using an different way, 54
Permitting changes directly on the device, 57
IPO model, 212, 212
IRT, 131
Rules, 131
Area of application, 182
Definition, 183
Communication, 183
Properties, 183
Synchronization, 184
Communication cycle, 185
Differences of RT, 185
Configuring, 187
Setup recommendations, 192
Isochronous mode
Definition, 203
Example, 205
Time synchronization, 206
Configuring, 209
Isochronous mode interrupt OB, 206
OB 6x, 211
Isochronous real-time, 181

L

Lead time, 206
LEDs for diagnostics, 76
Linking PROFINET and PROFIBUS, 109
LLDP, 89

M

Machine tailoring, 254
Maintenance concept, 87
Maintenance data, 95
Maintenance demanded, 87
Maintenance required, 87
Media redundancy
Functions in ring topology, 164
Configuring, 168
Media Redundancy Protocol (MRP), 165
MIB, 88
Module, 28
Module-internal shared input (MSI), 157
Module-internal shared output (MSO), 157
Module status, 78
MRP, 165
MRPD, 170
MSI/MSO, 157
Multiple use IO system, 231, 233, 236, 239
Multiple use IO systems, 232

N

Neighborhood detection, 227
Network limits, 31
Network view
I/O communication, 55

O

OB 82, 94
OB MC Servo, 211
OIP model, 212, 213
Online & diagnostics network view, 84
Online assignment (PROFINET device names), 55
Optional IO device, 243
Option handling in the network
see Configuration control for IO systems, 241
Overwriting the PROFINET device name, 231

P

Port
Diagnostics, 85
Alternating partners, 258
Switchport, 267
Terminal port, 267

Prefabricating PCF cables, 33

Prefabricating POF cables, 33

Primary Setup Tool (PST), 58

Prioritized startup, 259
Definition, 264
Configuring, 265

PROFIBUS, 19

PROFIBUS & PROFINET International, 20

PROFIenergy, 131, 255

PROFINET, 19
Objectives, 19
Implementation, 19
Devices, 21
Interface, 21
Equipment designations, 21
Communication, 23
Update time, 24
Watchdog time, 25
Send clock, 25
Interface, 26
Device model, 28
Transmission media, 33
Assigning a device name, 55
Topology rules with I-device, 127
Optimizing with RT, 190
Optimizing with IRT, 192

PROFINET device name, 231

PROFINET interface
Properties, 26
Topology overview, 27

PROFINET IO, 19
Functionality, 27
System, 44
Diagnostics levels, 74
Functionality, 108

Proxy functionality, 110

PST, 58

R

Real-time class, 31

Real-time communication, 181, 182

Redundancy, 164
Redundancy manager, 164
Redundancy clients, 164
Redundancy domains, 165

Redundancy manager, 164

Ring port, 164, 170

Ring topology, 164

Router, 31, 49, 61

RT
Rules, 131
Area of application, 181
Definition, 182
Communication cycle, 185
Differences of IRT, 185

RT class, 207

S

Saving energy, 255

SCALANCE, 31, 37, 40

Security
Definition, 38
Protective measures, 39
Example of data security, 41

Send clock, 25, 206, 207

Set/actual topology, 81

Shared device, 136
Project-internal, 138
Cross-project, 143

SNMP, 88
MIB, 88
Network diagnostics, 88

Standard machine project, 231, 232, 233, 236, 239, 243, 244, 251, 251

Startup of IO devices, 259, 263

Store and forward, 182

Submodule, 28, 157

Subnet, 45

Subnet mask, 49
Example, 49
Assigning for the first time, 50
Switch, 27
Integrated, 27
Selection guide, 31
Switched Ethernet, 30
Switchport, 267
SYNC_PI, 211, 212, 213
SYNC_PO, 211, 212, 213
Sync domain, 184, 207
Synchronous Cycle, 211
System diagnostics, 73

T

T_CONFIG, 58
T_DC, 206, 207, 213, 214
TCP/IP in the communication cycle, 185
Terminal port, 267
Ti, 206
To, 206
Tool changer, 258
Topology
Line, 64
Star, 64
Tree, 64
Ring, 64
Example, 65
Set/actual, 81
Rules about the IO-system with I-device, 127
Ring, 164
Ring, 165
Topology configuration, 207
Topology overview, 27
Topology view
Hardware and network editor, 66
Interconnecting ports, 68
Adopt port interconnections identified online, 71
Adopt devices identified online, 71
Transfer area, 131
Transmission bandwidth, 30
Transmission media with PROFINET, 33
Twisted-pair, 32

U

Update time, 24, 37

V

Value status, 157

W

Watchdog time, 25
Wire break, 88
Wireless networks, 37

SIEMENS

SIMATIC

PROFIBUS
PROFIBUS with STEP 7 V13

Function Manual

Preface

Documentation guide 1

Description 2

Parameter assignment/addressing 3

Diagnostics 4

Functions 5

Service & Support A

12/2014

A5E03775446-AC

Legal information

Warning notice system

This manual contains notices you have to observe in order to ensure your personal safety, as well as to prevent damage to property. The notices referring to your personal safety are highlighted in the manual by a safety alert symbol, notices referring only to property damage have no safety alert symbol. These notices shown below are graded according to the degree of danger.

⚠ DANGER

indicates that death or severe personal injury **will** result if proper precautions are not taken.

⚠ WARNING

indicates that death or severe personal injury **may** result if proper precautions are not taken.

⚠ CAUTION

indicates that minor personal injury can result if proper precautions are not taken.

NOTICE

indicates that property damage can result if proper precautions are not taken.

If more than one degree of danger is present, the warning notice representing the highest degree of danger will be used. A notice warning of injury to persons with a safety alert symbol may also include a warning relating to property damage.

Qualified Personnel

The product/system described in this documentation may be operated only by **personnel qualified** for the specific task in accordance with the relevant documentation, in particular its warning notices and safety instructions. Qualified personnel are those who, based on their training and experience, are capable of identifying risks and avoiding potential hazards when working with these products/systems.

Proper use of Siemens products

Note the following:

⚠ WARNING

Siemens products may only be used for the applications described in the catalog and in the relevant technical documentation. If products and components from other manufacturers are used, these must be recommended or approved by Siemens. Proper transport, storage, installation, assembly, commissioning, operation and maintenance are required to ensure that the products operate safely and without any problems. The permissible ambient conditions must be complied with. The information in the relevant documentation must be observed.

Trademarks

All names identified by ® are registered trademarks of Siemens AG. The remaining trademarks in this publication may be trademarks whose use by third parties for their own purposes could violate the rights of the owner.

Disclaimer of Liability

We have reviewed the contents of this publication to ensure consistency with the hardware and software described. Since variance cannot be precluded entirely, we cannot guarantee full consistency. However, the information in this publication is reviewed regularly and any necessary corrections are included in subsequent editions.

Siemens AG
Industry Sector
Postfach 48 48
90026 NÜRNBERG
GERMANY

A5E03775446-AC
℗ 12/2014 Subject to change

Copyright © Siemens AG 2013 - 2014.
All rights reserved

Preface

Purpose of the manual

This function manual provides an overview of the PROFIBUS communication system with SIMATIC STEP 7 V13.

STEP 7 V13 is integrated into the powerful graphic Totally Integrated Automation Portal (TIA Portal), the new integration platform for all automation software tools.

This function manual supports you in planning a PROFIBUS system. The manual is structured into the following subject areas:

- PROFIBUS basics
- PROFIBUS diagnostics
- PROFIBUS functions

Basic knowledge required

The following knowledge is required in order to understand the manual:

- General knowledge of automation technology
- Knowledge of the industrial automation system SIMATIC
- Knowledge about the use of Windows-based computers
- Proficiency with STEP 7

Scope

This function manual is the basic documentation for all SIMATIC products from the PROFIBUS environment. The product documentation is based on this documentation.

The examples are based on the functionality of the S7-1500 automation system.

Changes compared to previous version

As compared to the previous version (version 07/2014), this manual contains the following amendments/changes:

- Extension of the documentation to STEP 7 (TIA Portal) V13 SP1
- Addition of the function Intelligent DP slaves (I-slaves)
- New guide

Conventions

STEP 7: We refer to "STEP 7" in this documentation as a synonym for the configuration and programming software "STEP 7 as of V12 (TIA Portal)" and subsequent versions.

This documentation contains figures of the devices described. The figures may differ slightly from the device supplied.

You should also pay particular attention to notes such as the one shown below:

Note

A note contains important information on the product described in the documentation, on the handling of the product or on the section of the documentation to which particular attention should be paid.

Additional support

You will find information about available technical support in the appendix Service & Support (Page 91).

The technical documentation for the individual SIMATIC products and systems is available on the Internet (http://www.siemens.com/simatic-tech-doku-portal).

The online catalog and the ordering system are available on the Internet (http://mall.industry.siemens.com).

Security information

Siemens provides products and solutions with industrial security functions that support the secure operation of plants, solutions, machines, equipment and/or networks. They are important components in a holistic industrial security concept. With this in mind, Siemens' products and solutions undergo continuous development. Siemens recommends strongly that you regularly check for product updates.

For the secure operation of Siemens products and solutions, it is necessary to take suitable preventive action (e.g. cell protection concept) and integrate each component into a holistic, state-of-the-art industrial security concept. Third-party products that may be in use should also be considered. You can find more information about industrial security on the Internet (http://www.siemens.com/industrialsecurity).

To stay informed about product updates as they occur, sign up for a product-specific newsletter. You can find more information on the Internet (http://support.automation.siemens.com).

Table of contents

Preface 3

1 Documentation guide 7

2 Description 10

2.1 Introduction to PROFIBUS 10
2.1.1 Applications of PROFIBUS DP 11
2.1.2 PROFIBUS terminology 12
2.1.3 PROFIBUS DP interface 16

2.2 Structure of PROFIBUS networks 17
2.2.1 Passive network components for RS 485 networks 19
2.2.1.1 RS 485 cables 19
2.2.1.2 PROFIBUS FastConnect system 20
2.2.1.3 PROFIBUS bus connector 22
2.2.1.4 M12 bus connector 24
2.2.1.5 Bus terminals for RS 485 networks 24
2.2.1.6 M12 bus terminating resistor 24
2.2.2 Passive components for optical networks 25
2.2.2.1 Fiber-optic cables 25
2.2.2.2 Plastic and PCF fiber-optic cables 26
2.2.2.3 Glass fiber-optic cables 27
2.2.3 Active network components 29
2.2.3.1 Network components in electrical networks 29
2.2.3.2 Network components in optical networks 33
2.2.4 Examples for topology 35
2.2.4.1 Topology with RS485 repeater 35
2.2.4.2 Topology with diagnostic repeater 37
2.2.4.3 OLM topology 40
2.2.4.4 WLAN topology 40
2.2.4.5 Connecting PROFIBUS to PROFINET 41

3 Parameter assignment/addressing 42

3.1 Assigning the DP slave to a DP master 43

3.2 PROFIBUS address 45

3.3 Network settings 46

3.4 Cable configuration 49

3.5 Additional network stations 51

3.6 Bus parameters 52

3.7 Constant bus cycle time 55

4 Diagnostics ... 57

4.1 Overview ... 57

4.2 Diagnostics using the display of the S7-1500 ... 58

4.3 Diagnostics with the diagnostic repeater ... 60

4.4 I&M data (Identification and Maintenance) ... 61

5 Functions ... 62

5.1 Isochronous mode ... 62
5.1.1 What is isochronous mode? ... 62
5.1.2 Use of isochronous mode ... 63
5.1.3 Isochronous applications ... 64
5.1.4 Sequence of synchronization ... 65
5.1.5 Requirements for configuration ... 66
5.1.6 Configuring isochronous mode ... 67
5.1.7 Diagnostics and interrupt functions ... 70
5.1.8 Parameter settings for isochronous mode ... 71
5.1.8.1 Viewing isochronous mode parameters ... 71
5.1.8.2 Change parameters ... 72

5.2 Acyclical data exchange ... 74

5.3 SYNC/FREEZE groups ... 75

5.4 Interrupts ... 77

5.5 Intelligent DP slaves (I-slaves) ... 78
5.5.1 I-slave functionality ... 78
5.5.2 Data exchange with higher-level DP master ... 81
5.5.3 Configuring an I-slave ... 82
5.5.4 Configuring transfer areas ... 84
5.5.5 Sample program ... 85
5.5.6 Diagnostics and interrupt behavior ... 89

A Service & Support ... 91

Glossary ... 94

Index ... 99

Documentation guide

1

The documentation for the SIMATIC S7-1500 automation system and the SIMATIC ET 200MP, ET 200SP and ET 200AL distributed I/O systems is divided into three areas. This division allows you easier access to the specific information you require.

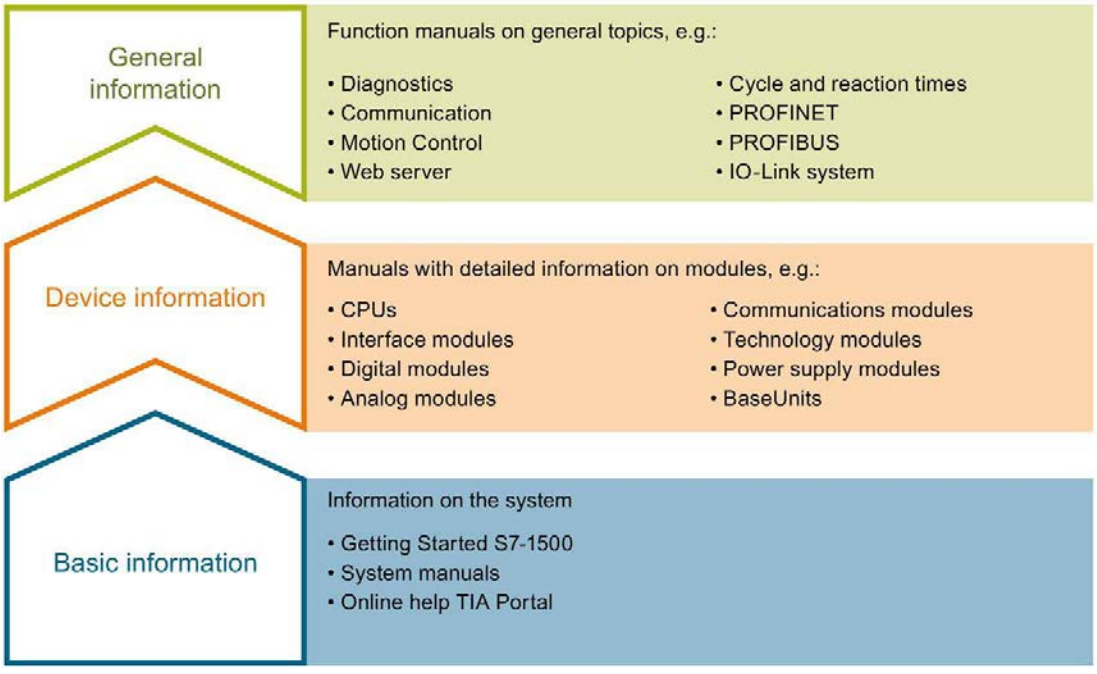

Basic information

System manuals and Getting Started describe in detail the configuration, installation, wiring and commissioning of the SIMATIC S7-1500, ET 200MP, ET 200SP and ET 200AL systems. The STEP 7 online help supports you in the configuration and programming.

Device information

Product manuals contain a compact description of the module-specific information, such as properties, terminal diagrams, characteristics and technical specifications.

General information

The function manuals contain detailed descriptions on general topics such as diagnostics, communication, Motion Control, Web server.

You can download the documentation free of charge from the Internet (http://w3.siemens.com/mcms/industrial-automation-systems-simatic/en/manual-overview/Pages/Default.aspx).

Changes and additions to the manuals are documented in product information sheets.

Manual Collections

The Manual Collections contain the complete documentation of the systems put together in one file.

You will find the Manual Collections on the Internet:

- S7-1500/ET 200MP (http://support.automation.siemens.com/WW/view/en/86140384)
- ET 200SP (http://support.automation.siemens.com/WW/view/en/84133942)
- ET 200AL (http://support.automation.siemens.com/WW/view/en/95242965)

My Documentation Manager

The My Documentation Manager is used to combine entire manuals or only parts of these to your own manual.
You can export the manual as PDF file or in a format that can be edited later.

You can find the My Documentation Manager on the Internet (http://support.automation.siemens.com/WW/view/en/38715968).

Applications & Tools

Applications & Tools supports you with various tools and examples for solving your automation tasks. Solutions are shown in interplay with multiple components in the system - separated from the focus in individual products.

You can find Applications & Tools on the Internet (http://support.automation.siemens.com/WW/view/en/20208582).

CAx Download Manager

The CAx Download Manager is used to access the current product data for your CAx or CAe systems.

You configure your own download package with a few clicks.

In doing so you can select:

- Product images, 2D dimension drawings, 3D models, internal circuit diagrams, EPLAN macro files
- Manuals, characteristics, operating manuals, certificates
- Product master data

You can find the CAx Download Manager on the Internet (http://support.automation.siemens.com/WW/view/en/42455541).

TIA Selection Tool

With the TIA Selection Tool, you can select, configure and order devices for Totally Integrated Automation (TIA).
This tool is the successor of the SIMATIC Selection Tool and combines the known configurators for automation technology into one tool.
With the TIA Selection Tool, you can generate a complete order list from your product selection or product configuration.

You can find the TIA Selection Tool on the Internet (http://w3.siemens.com/mcms/topics/en/simatic/tia-selection-tool).

Description 2

2.1 Introduction to PROFIBUS

What is PROFIBUS?

PROFIBUS is a bus system that networks automation systems and field devices that are compatible with PROFIBUS. As communication medium for the field level, PROFIBUS is an important part of Totally Integrated Automation (TIA).

The different communication networks can be used independent of one another or they can be combined with each other.

PROFIBUS protocols

PROFIBUS DP (distributed I/O) is a communication network for the field level according to IEC 61158-2 / EN 61158-2 with the hybrid access protocols token bus and master-slave. The networking takes place by means of two-wire lines or fiber-optic cables. Data transmission rates of 9.6 kbps to 12 Mbps are possible.

PROFIBUS PA is the PROFIBUS for process automation (PA). It connects the PROFIBUS DP communication protocol with the MBP (Manchester Bus Powered) transmission technology to IEC 61158-2.

PROFIBUS PA networks can be designed based on shielded, twisted two-wire lines intrinsically safe and are therefore suitable for hazardous areas (Ex zones 0 and 1). The data transmission rate is 31.25 kbps.

2.1.1 Applications of PROFIBUS DP

Introduction

The efficiency of control systems is not determined by automation devices alone, but depends to a large extent on the overall configuration of an automation solution. This includes a powerful communication system in addition to plant visualization and operator control and monitoring.

The STEP 7 engineering tool supports you during the engineering and configuration of an automation solution.

Applications of PROFIBUS DP

The PROFIBUS network offers wireless connection of several controllers, components and subnets as electrical network, optical network or by using links. Sensors and actuators are controlled centrally by means of PROFIBUS DP.

The following figure shows connection options to PROFIBUS DP:

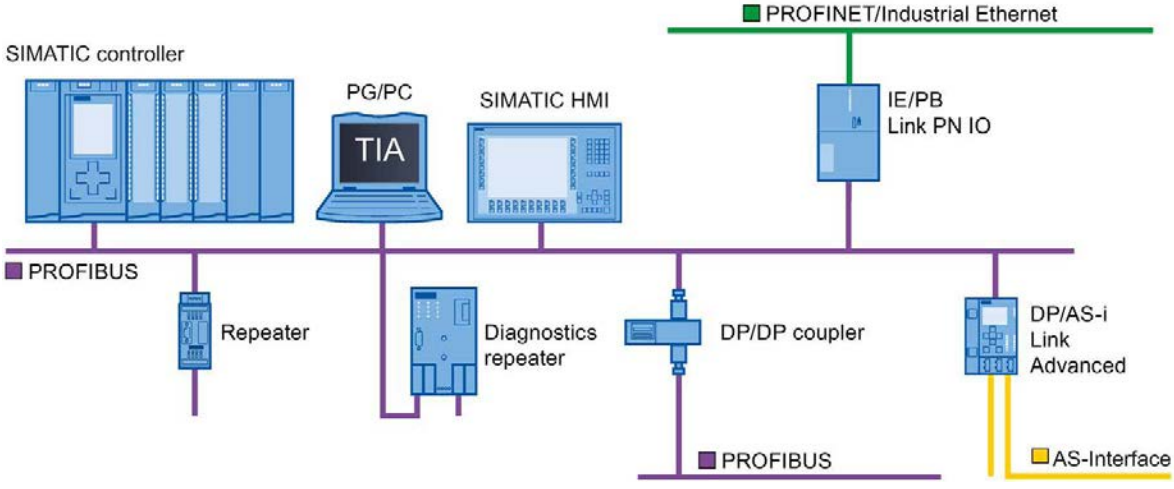

Figure 2-1 Connection options to PROFIBUS DP

Objectives of PROFIBUS DP

Distributed automation systems are increasingly used in production and process automation. This means a complex control task is divided up into smaller, more transparent subtasks with distributed control systems. This creates a high demand for communication between the distributed systems.

Distributed systems offer the following benefits:

- Independent and simultaneous commissioning of individual devices is possible
- Small, manageable programs
- Parallel processing due to distributed automation systems
- Reduced response times
- Higher-level structures can take on additional diagnostics and logging functions.
- Increased plant availability because the rest of the overall system can continue to work when a subordinate station fails.

2.1.2 PROFIBUS terminology

Definition: Devices in the PROFIBUS environment

In the PROFIBUS environment, "device" is the generic term for:

- Automation systems (for example, PLC, PC)
- Distributed I/O systems
- Field devices (for example, hydraulic devices, pneumatic devices)
- Active network components (e.g., diagnostic repeater, optical link module)
- Gateways to AS interface or other fieldbus systems

Devices with PROFIBUS DP

The figure below shows the most important components with PROFIBUS DP. The table below lists the designations of the individual components.

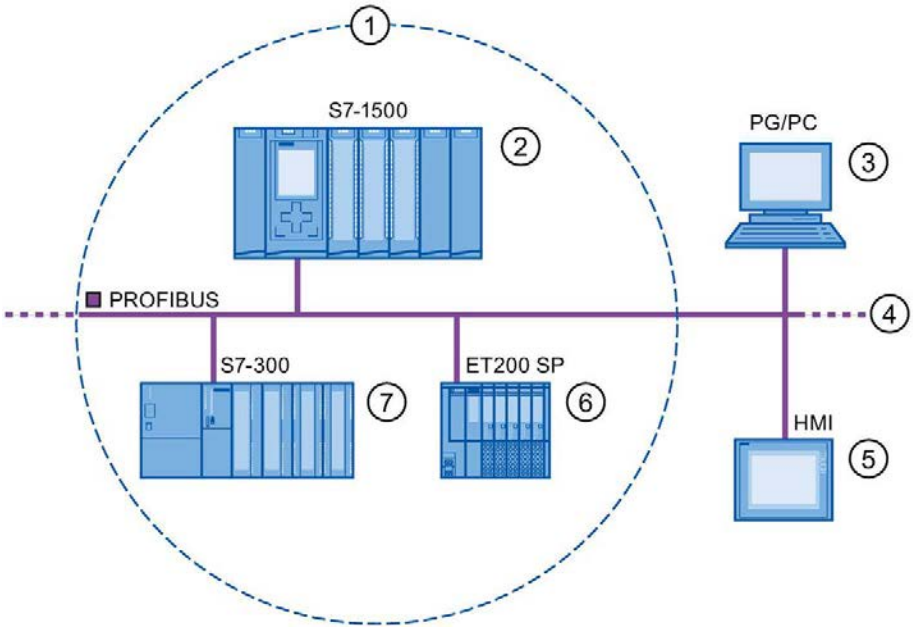

Number	PROFIBUS	Note
①	DP master system	
②	DP master	Device used to address the connected DP slaves. The DP master exchanges input and output signals with field devices. The DP master is often the controller on which the automation program runs.
③	PG/PC	PG/PC/HMI device for commissioning and diagnostics DP master of class 2
④	PROFIBUS	Network infrastructure
⑤	HMI	Device for operating and monitoring functions
⑥	DP slave	Distributed field device assigned to the DP master, e.g., valve terminals, frequency converters.
⑦	I-slave	Intelligent DP slave

Figure 2-2 Devices with PROFIBUS

Overview of I/O communication

I/O communication is the reading or writing of inputs/outputs of the distributed I/O. The figure below gives you an overview of I/O communication using PROFIBUS DP:

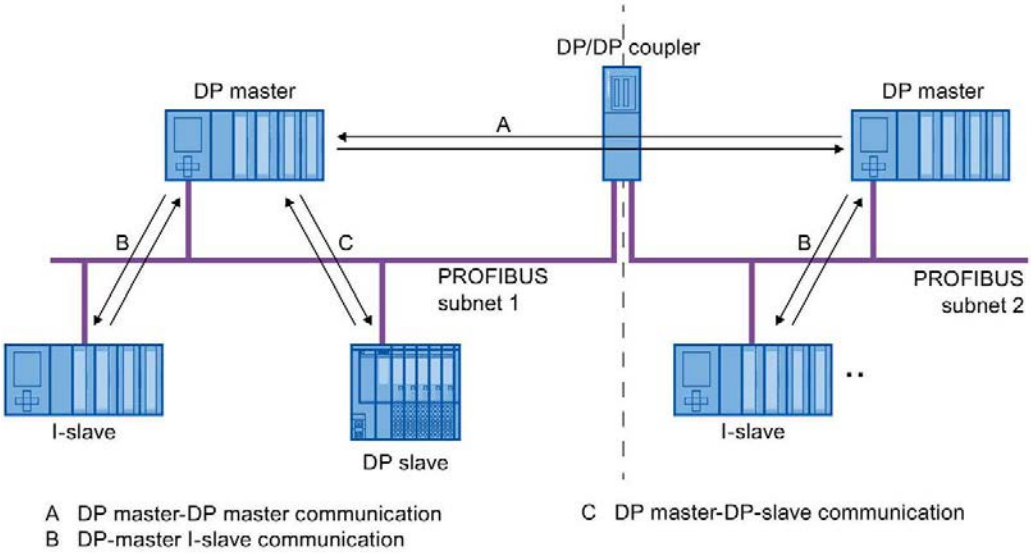

Figure 2-3 I/O communication using PROFIBUS DP

I/O communication is also available with the communication module (CM) or the interface module (IM) with integrated DP interface. These DP interfaces behave like integrated DP interfaces of the CPU.

I/O communication using PROFIBUS DP

Table 2- 1 I/O communication using PROFIBUS DP

Communication between …	Explanation
DP master and DP slave	The data exchange between a DP master and DP slaves with I/O modules takes place as follows: The DP master queries the DP slaves of its master system one after the other, receives input values from the DP slaves, and transmits output data to the DP slaves (master-slave principle).
DP master and I-slave	A fixed amount of data is transmitted cyclically between the user programs in CPUs of DP masters and I-slaves. The DP master does not access the I/O modules of the I-slave, but instead accesses configured address areas, called transfer areas, that can be inside or outside the process image of the I-slave CPU. If parts of the process image are used as transfer areas, these may not be used for actual I/O modules. Data transmission takes place with load and transfer operations using the process image or by direct access.
DP master and DP master	A fixed amount of data is transmitted cyclically between the user programs in CPUs of DP masters. A DP/DP coupler is required as additional hardware. The DP masters mutually access configured address areas, called transfer areas, inside or outside the process image of the CPUs. If parts of the process image are used as transfer areas, these may not be used for actual I/O modules. Data transmission takes place with load and transfer operations using the process image or by direct access.

Additional information

You can find additional information on the hardware configuration in the STEP 7 online help.

2.1.3 PROFIBUS DP interface

Properties

A PROFIBUS device has at least one PROFIBUS interface with an electrical (RS 485) interface or optical (Polymer Optical Fiber, POF) interface.

Table 2- 2 Properties of the PROFIBUS DP interface

Standard	PROFIBUS: IEC 61158/61784
Physical bus/media	PROFIBUS cables (twisted two-wire lines RS 485 or fiber-optic cables)
Transmission rate	9.6 kbps to 12 Mbps

Representation of the PROFIBUS DP interface in STEP 7

In the device view of STEP 7, the PROFIBUS DP interfaces for a DP master and a DP slave are highlighted by a purple rectangle:

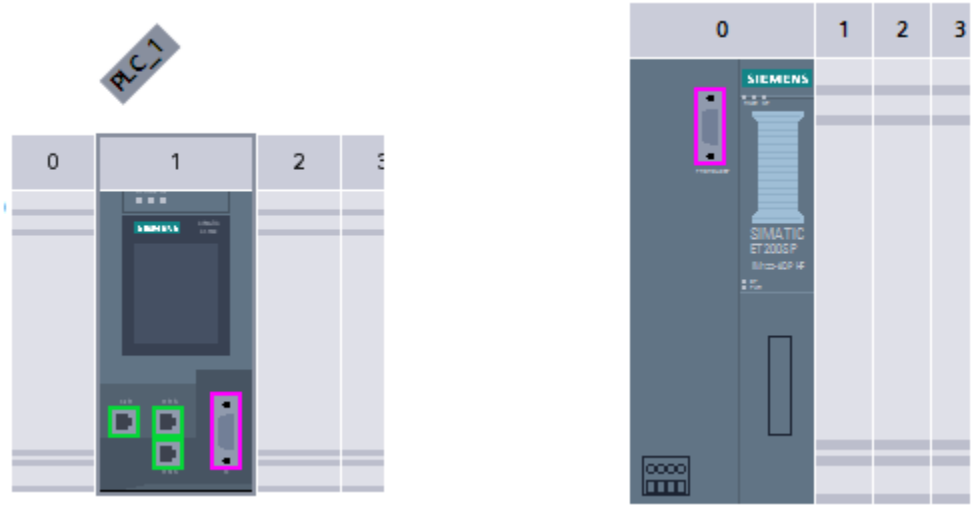

Figure 2-4 PROFIBUS DP interfaces

2.2 Structure of PROFIBUS networks

Contents of this chapter

The following chapter provides background information on building your communication network.

- Overview of the most important passive network components: These are network components that forward a signal without the possibility of actively influencing it, for example, cables, connectors.
- Overview of the most important active network components: These are network components that actively affect a signal, for example, repeaters, diagnostic repeaters.
- Overview of the most common network structures (topologies)

Physical connections of industrial networks

PROFIBUS devices can be networked in industrial plants in two different physical ways:

- By means of electrical signals via copper cables
- By means of optical signals via fiber-optic cables

Selection criteria for networking

The table below includes selection criteria for electrical and optical networking of PROFIBUS devices:

Table 2- 3 Selection criteria for electrical and optical networking

Criteria		Electrical PROFIBUS	Optical network with OLM	Optical network with OBT
Transmission medium	Shielded two-wire line	●	–	–
	POF	–	●	●
	PCF	–	●	●
	Glass	–	●	–
Distances	Max. network span	PROFIBUS DP: 9.6 km PROFIBUS PA: 1.9 km	90 km	9.6 km
	Between two devices	up to 1 km 1)	up to 15 km 2)	up to 300 m 2)
Topology	Bus	●	–	–
	Linear	–	●	●
	Tree	●	●	●
	Ring	–	●	●
Transmission protocols		DP, PA	DP, PA	DP
Connection of devices by means of	OLM	–	●	–
	Integrated interfaces	●	–	●
	Bus terminal	●	–	●
	Bus connector	●	–	–
Electrical network segments can be connected		●	●	–

● Suitable

– Not relevant for this application

1) Depending on data rate and type of service used

2) Depending on cable type used

Installation guideline for PROFIBUS networks

A PROFIBUS segment must be terminated at the start and end; passively with a connector or actively with a bus terminating resistor.

The same principles apply to the installation of a PROFIBUS network as described in the SIMATIC NET PROFIBUS networks (http://support.automation.siemens.com/WW/view/en/35222591) manual.

2.2.1 Passive network components for RS 485 networks

2.2.1.1 RS 485 cables

Introduction

The following applies to all RS 485 cables for PROFIBUS from Siemens:

- Their double shielding makes them especially suited for laying in industrial environments with electromagnetic interference.
- A continuous grounding concept can be implemented by means of the outer shield of the bus cable and the ground terminals of the bus terminals.
- The imprinted meter marking makes it easier to determine the length (accuracy ±5%).

RS 485 cables for PROFIBUS

SIMATIC NET PROFIBUS cables are available in different versions which allow optimum adaptation to different areas of application:

- FC Standard Cable GP (bus cable for fixed laying inside buildings)
- FC Standard Cable IS GP (bus cable for hazardous area)
- FC-FRNC Cable GP (bus cable with halogen-free protective jacket for use inside buildings)
- FC Food Cable (bus cable with PE jacket for use in the food and beverage industry)
- FC Robust Cable (bus cable with PUR jacket for environments subject to chemical and mechanical stress)
- FC Ground Cable (ground cable with PE jacket)
- PROFIBUS FC Trailing Cable (trailing cable for tow chains)
- PROFIBUS Festoon Cable (bus cable for festoon mounting)
- PROFIBUS Torsion Cable (torsion-free bus cable for networking movable plant parts, for example, robots)
- PROFIBUS FC Flexible Cable (bus cable for machine parts that are moved infrequently or cabinet doors)
- SIENOPYR-FR ship cable (for permanent laying on ships and off-shore units in all rooms and on open deck)
- PROFIBUS Hybrid Standard Cable (hybrid cable with 2 power wires (1.5 mm^2) for data and power supply of the ET 200pro)
- PROFIBUS Hybrid Robust Cable (trailable hybrid cable with 2 power wires (1.5 mm^2) for data and power supply of the ET 200pro)

Maximum cable lengths

When using copper cables, the maximum size of a PROFIBUS segment depends on the transmission rate.

If these lengths are not sufficient for your application, you can expand the network by using repeaters. You can achieve a maximum size by cascading up to nine repeaters.

Table 2- 4 Maximum cable lengths

Transmission rate	Maximum cable length of a bus segment	Maximum distance between two stations
9.6 to 187.5 kbps	1000 m	10000 m
500 kbps	400 m	4000 m
1.5 Mbps	200 m	2000 m
3 to 12 Mbps	100 m	1000 m

2.2.1.2 PROFIBUS FastConnect system

PROFIBUS FastConnect (FC)

PROFIBUS FastConnect is a system for fast and easy fabrication of PROFIBUS copper cables.

The system consists of three components:

- FastConnect bus cables for quick mounting
- FastConnect stripping tool
- FastConnect bus connector for PROFIBUS with insulation displacement method

FastConnect bus cables and stripping tool

The special design of the FastConnect bus cables allows for the use of the FastConnect stripping tool to accurately strip away the protective jacket and the braided shield in one step. The connection of the prepared cables takes place in the FastConnect bus connectors using the insulation displacement method.

All PROFIBUS FastConnect bus cables can also be connected to the conventional bus connectors with screw-type terminals.

Area of application

You need FastConnect bus connectors for PROFIBUS for the following applications:

- Connect devices with an electrical 9-pin D-Sub interface to IEC 61158-2 directly with SIMATIC NET PROFIBUS cables.
- Connect electrical segments or individual devices to the Optical Link Module (OLM) and Optical Bus Terminal (OBT).
- Connect devices or programming devices to the repeater.

Versions

The FastConnect bus connector in degree of protection IP20 is available in the following versions:

- with integrated terminating resistor and isolating function
- with or without PG socket
- with a cable outlet of 35°, 90° or 180°
- with device category 3G suitable for zone 2 hazardous area

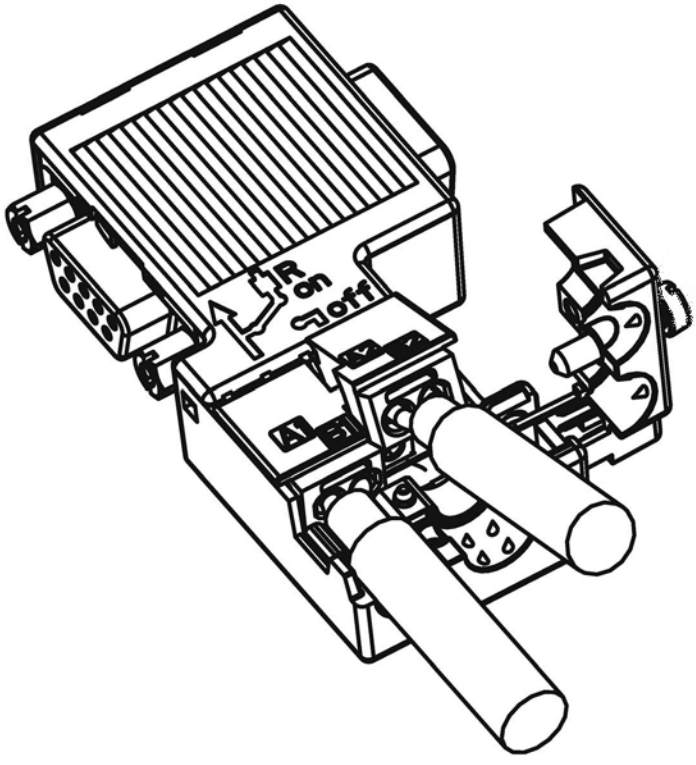

Figure 2-5 Example for PROFIBUS FastConnect bus connector with PG socket, cable outlet 90°

Additional information

For additional information on the available components visit the Siemens Mall (http://mall.industry.siemens.com).

2.2.1.3 PROFIBUS bus connector

Area of application

You need PROFIBUS bus connectors for the following applications:

- Connect devices with a 9-pin D-Sub interface to IEC 61158-2 directly with the SIMATIC NET PROFIBUS cables.
- Connect electrical segments or individual devices to the Optical Link Module (OLM) and Optical Bus Terminal (OBT).
- Connect devices or programming devices to the repeater.

Versions

The PROFIBUS bus connector in degree of protection IP20 is available in the following versions:

- with integrated terminating resistor and isolating function
- with or without PG socket
- with a cable outlet of 35°, 90° or 180°
- with device category 3G suitable for zone 2 hazardous area

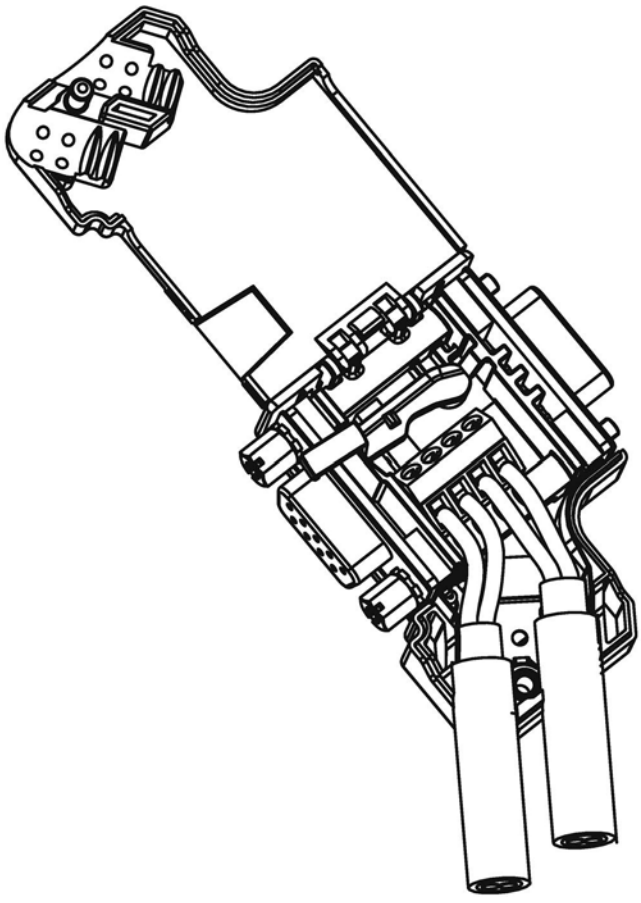

Figure 2-6 Example for PROFIBUS bus connector with PG socket, cable outlet 35°

Additional information

For additional information on the available components visit the Siemens Mall (http://mall.industry.siemens.com).

2.2.1.4 M12 bus connector

Area of application

Devices with an electrical M12 interface can use the M12 bus connector for SIMATIC NET PROFIBUS for direct connection with the SIMATIC NET PROFIBUS cables.

The M12 bus connector in degree of protection IP65 is available in the following versions:

- with screw-type terminals
- with insulation displacement termination
- with a cable outlet of 180°

2.2.1.5 Bus terminals for RS 485 networks

Bus terminal RS 485 and bus terminal M12

A bus terminal is used for the connection of an individual PROFIBUS station with RS485 interface to the PROFIBUS bus cable.

Bus terminals in degree of protection IP20 are available in the following versions:

- Bus terminal RS 485 with or without PG interface, transmission rate 9.6 kbps to 1.5 Mbps, integrated terminating resistor combination (connectible), with 1.5 m and 3 m connecting cable
- Bus terminal M12, transmission rate 9.6 kbps to 12 Mbps, integrated terminating resistor combination with isolating function, with 1.5 m connecting cable

2.2.1.6 M12 bus terminating resistor

Terminating segment with terminating resistor

If there is a station with M12 connection system at the beginning or end of a PROFIBUS segment, you need an M12 bus terminating resistor.

The M12 PROFIBUS connection of a device consists of an M12 socket for the infeed and an M12 male connector to loop-through the bus signal.

This means you need one bus terminating resistor with male contacts (6GK1905-0EC00) and with female contacts (6GK1905-0ED00) for each M12 bus cable.

2.2.2 Passive components for optical networks

2.2.2.1 Fiber-optic cables

Types of fiber-optic cables

Data transmission with fiber-optic cables takes place through modulation of electromagnetic waves in the range of visible and invisible light. These cables are made of high-quality plastic fibers and glass fibers:

- Plastic and PCF fiber-optic cables (Page 26)
- Glass fiber-optic cables (Page 27)

The different types of fiber-optic cables provide solutions matched to the operating and environmental conditions for the connection of components with each other.

Benefits

Fiber-optic cables offer the following benefits when compared with electrical cables:

- Galvanic isolation of the devices and segments
- No potential equalization currents
- No impact on transmission path through external electromagnetic interference
- No lightning protection elements required
- No noise radiation along the transmission route
- Low weight
- Depending on the type of fiber you can implement cable lengths up to few kilometers at even higher transmission rates.
- No dependency of the maximum permitted distances on the transmission rate

Additional information

Additional information of the properties and technical specifications of the passive components and connectors for fiber-optic cables is available in the PROFIBUS network manual (http://support.automation.siemens.com/WW/view/en/35222591).

2.2.2.2 Plastic and PCF fiber-optic cables

Plastic and PCF fiber-optic cables

Plastic (POF) and PCF fiber-optic cables are used for the connection of Optical Link modules with connections for plastic fiber-optic cables (OLM/P), Optical Bus Terminal (OBT) and devices with integrated optical interfaces. Under certain conditions, they are an inexpensive alternative to conventional glass fiber-optic cables.

Plastic Fiber Optic duplex core

The plastic fiber-optic duplex core is a flat dual core with PVC inner jacket without protective jacket. The cable can be easily assembled on-site.

The cable is intended for indoor applications with low mechanical loads or inside cabinets. For OLM connections and with integrated optical interfaces you cover a length of up to 50 m between two devices with this cable.

Plastic Fiber Optic standard cable

The plastic fiber optic standard cable consists of two plastic fibers with robust polyamide inner jacket surrounded by Kevlar tensile elements and a purple PVC protective jacket. The cable can be easily assembled on-site.

The robust round cable is suited for indoor applications. The maximum distance that can be covered is 80 m for OLM/P connections and 50 m with integrated optical interfaces and OBT.

PCF Standard Cable

The pre-assembled PCF Standard Cable consists of two PCF fibers surrounded by Kevlar tensile elements and a purple PVC protective jacket. It is always supplied with a pulling aid installed on one end to pull in the cable channels.

The robust round cable is suited for indoor applications with cable lengths up to 400 m (OLM) or 300 m (integrated optical interfaces, OBT) between two devices.

PCF Standard Cable GP

The PCF Standard Cable GP consists of two PCF fibers surrounded by Aramid tensile elements and a green PVC protective jacket. The cable is pre-assembled and can be ordered by the meter. It is supplied with a pulling aid installed on one end to pull in the cable channels.

The robust round cable is suited for indoor and outdoor applications with cable lengths up to 400 m (OLM) or 300 m (integrated optical interfaces, OBT) between two devices.

PCF Trailing Cable

The PCF Trailing Cable consists of two PCF fibers surrounded by Aramid tensile elements and a green PUR protective jacket. The cable is pre-assembled and can be ordered by the meter. It is supplied with a pulling aid installed on one end to pull in the cable channels.

The robust round cable is suited for moving indoor and outdoor applications with cable lengths up to 400 m (OLM) or 300 m (integrated optical interfaces, OBT) between two devices.

PCF Trailing Cable GP

The PCF Trailing Cable GP consists of two PCF fibers surrounded by Aramid tensile elements and a green PVC protective jacket. The cable is pre-assembled and can be ordered by the meter. It is supplied with a pulling aid installed on one end to pull in the cable channels.

The robust round cable is suited for moving indoor and outdoor applications with cable lengths up to 400 m (OLM) or 300 m (integrated optical interfaces, OBT) between two devices.

2.2.2.3 Glass fiber-optic cables

Glass fiber-optic cables

Glass fiber-optic cables are suitable for connection of optical interfaces that work in the wavelength range around 850 nm and around 1300 nm. They include two graded-index multimode fibers of the type 62.5/125 µm.

The glass fiber-optic cables are available in different versions which makes for an optimum adaptation to different areas of application:

- Fiber Optic standard cable
- INDOOR Fiber Optic indoor cable
- Flexible Fiber Optic trailing cable

Fiber Optic standard cable

The standard cable is the universal cable for indoor and outdoor use.

INDOOR Fiber Optic indoor cable

The indoor cable is intended for weather-proof indoor use. It is halogen-free, non-crush and flame-retardant.

Flexible Fiber Optic trailing cable

The trailing cable was designed for the special application of forced movement, for example, for constantly moved machine parts such as trailing chains. It is mechanically designed for 100,000 bending cycles by ±90° (with the specified minimum radius). Integrated dummy elements ensure a round cross-section of the cable. The trailing cable can be used indoors and outdoors.

Maximum distances between two optical link modules

The following distances may not be exceeded between two OLMs regardless of the optical power budget:

- OLM/P11, OLM/P12: 400 m
- OLM/G11, OLM/G12, OLM/G12-EEC: 3 km
- OLM/G11-1300, OLM/G12-1300: 15 km

Additional information

All operating instructions (http://support.automation.siemens.com/WW/view/en/10805951/133300) of the SIMATIC NET bus components include information on distances that can be covered with the SIMATIC NET glass fiber-optic cables. You can configure your optical network without any calculations using simple limits.

2.2.3 Active network components

2.2.3.1 Network components in electrical networks

Active network components

The following active network components are available for PROFIBUS in electrical networks:

- Repeater RS485
- Diagnostics repeater
- PROFIBUS Terminator
- DP/DP coupler
- IE/PB Link PN IO
- IWLAN/PB Link PN IO
- Active components for the connection of CAN
- Active components for the gateway between PROFIBUS and AS-Interface
  - DP/AS-i LINK Advanced
  - DP/AS-Interface Link 20E
  - DP/AS-i F-Link

RS485 repeater

The RS485 IP20 repeater connects two PROFIBUS bus segments in RS485 technology with up to 32 devices. It provides transmission rates from 9.6 kbps to 12 Mbps.

The RS485 repeater refreshes a signal regarding amplitude, signal width and edge steepness between two segments. It is used when more than 32 stations are connected to the bus or the maximum cable length of a segment is exceeded.

Bus segments can be operated ungrounded (galvanic isolation of segments) with an RS485 repeater.

Diagnostics repeater

The diagnostic repeater connects three PROFIBUS segments in RS485 technology, two of which are diagnostics-capable segments with 31 devices each. It is designed as DP slave to send diagnostics alarms to the DP master.

The diagnostic function provides the location and the cause of cable faults, such as wire break or missing terminating resistors. The fault location is indicated relative to the existing devices.

The diagnostics repeater refreshes a signal regarding amplitude, signal width and edge steepness between the segments. The cascading depth between any two PROFIBUS devices is limited to nine diagnostics repeaters.

PROFIBUS Terminator

The PROFIBUS Terminator forms an active bus termination. Bus devices can be switched off, removed or replaced without affecting data transmission. This is particularly true for bus devices on both ends of the bus cable at which terminating resistors must be connected or supplied. The PROFIBUS Terminator can be mounted on a standard mounting rail.

IE/PB Link PN for the connection of a PROFIBUS segment to an Industrial Ethernet network

The IE/PB Link PN IO as independent component provides the seamless transition between Industrial Ethernet and PROFIBUS. Through the use of IE/PB Link PN IO as substitute on the Ethernet, the existing PROFIBUS devices can continue to be used and can be integrated into a PROFINET application.

A PROFINET IO controller is required for this configuration. The IE/PB Link PN acts as master on the PROFIBUS end.

IWLAN/PB Link PN IO as gateway between LAN and PROFIBUS

PROFIBUS devices can be coupled to PROFINET IO by means of IWLAN/PB Link PN IO. This means you can integrate existing PROFIBUS configurations into PROFINET.

The IWLAN/PB Link PN IO supports the use of IWLAN and WLAN antennas for wireless data transmission, for example, in suspended monorail systems or conveyor systems. Because of the PROFINET support, the numerous PROFIBUS system services, for example, diagnostics by bus, can continue to be used.

A PROFINET IO controller is required for this configuration. The IWLAN/PB Link PN IO acts as master on the PROFIBUS end.

CANopen module for connection to CAN

You can use the CANopen module to easily connect CANopen applications to PROFIBUS.

Typical areas of application:

- Control of hydraulic valves/hydraulic axes in vehicles
- Control of motors in packaging machines and on conveyor belts
- Use in wind turbines for detection of angular encoders
- Detection of HMI devices on machines, e.g., joysticks
- Detection of measured data from displacement transducers, inclination sensors or angle encoders on tower cranes or gantry cranes

DP/DP coupler for connection of two PROFIBUS networks

The PROFIBUS DP/DP coupler is used to connect two PROFIBUS DP networks. Data (0 to 244 bytes) is transmitted from the DP master of the first network to the DP master of another network and vice versa.

The DP/DP coupler comes equipped with two independent DP interfaces that establish the connection to the two DP networks. There is one slave at each DP network. The data exchange between the two DP networks takes place by internal copying in the coupler.

DP/PA bus link for connection of PROFIBUS PA

The DP/PA bus link is the connection between PROFIBUS DP and PROFIBUS PA. This means it connects the process control systems with the field devices of the process automation.

The following components are available for a DP/PA bus link:

- DP/PA coupler Ex [ia]
- DP/PA coupler FDC 157-0
- Interface module IM 153-2 for establishing a DP/PA link.
- Active field distributor AFDiS for hazardous areas

Active components for the gateway between PROFIBUS and AS-Interface

- **DP/AS-i LINK Advanced**:

  The **DP/AS-i LINK Advanced** is PROFIBUS DPV1 slave (according to IEC 61158-2/EN 61158-2) and AS-Interface master (according to AS-Interface specification V3.0 according to EN 50295) and provides transparent data access to AS-Interface from PROFIBUS DP.

  PROFIBUS DP masters can cyclically exchange I/O data with the AS-Interface; DP masters with acyclic services can also make AS-Interface master calls. The **DP/AS-i LINK Advanced** is particularly suited for distributed configurations and for the connection of a subordinate AS-Interface network.

  The DP/AS-i LINK Advanced in the version as AS-Interface single master is completely sufficient for applications with typical configuration limits.

  For applications with high configuration limits, the DP/AS-i LINK Advanced is used as AS-Interface double master. In this case, the duplicate configuration limits can be used on two independently running AS-Interface strands.

- **DP/AS-Interface Link 20E:**

  The DP/AS-Interface Link 20E is PROFIBUS DP slave (in accordance with EN 61158) and AS-Interface master (in accordance with AS-Interface specification V3.0 according to EN 50295) and supports operation of the AS-Interface on PROFIBUS DP.

  Single PROFIBUS masters can cyclically exchange I/O data with the AS-Interface; masters with acyclic services can exchange I/O data and make master calls.

- **DP/AS-i F-Link:**

  The DP/AS-i F-Link is PROFIBUS DP-V1 slave (according to EN 61158) and AS-i master (according to AS-Interface specification V3.0 to EN 50295) and provides transparent data access to AS-Interface from PROFIBUS DP. The DP/AS-i F-Link is also the only AS-i master that can forward safety-oriented input data of ASIsafe slaves to a fail-safe CPU with PROFIBUS DP master by means of the PROFIsafe protocol. Additional safety cabling or monitoring is not required (in particular, no AS-Interface safety monitor). Depending on the slave type, you can transmit binary values or analog values. All slaves according to AS-Interface specification V2.0, V2.1 or V3.0 can be operated as AS-i slaves.

  As fully-featured AS-i master according to specification V3.0, you can use higher configuration limits on the AS-i network (496 inputs and outputs each, up to 62 digital or analog slaves).

Additional information

Information on the components is available in the Siemens Mall (http://mall.industry.siemens.com).

Additional information is available in these manuals:

- PROFIBUS Network Manual (http://support.automation.siemens.com/WW/view/en/35222591)
- Diagnostic repeater (http://support.automation.siemens.com/WW/view/en/7915183)
- DP/DP Coupler (http://support.automation.siemens.com/WW/view/en/1179382)
- SIMATIC NET Twisted-Pair and Fiber-Optic Networks (http://support.automation.siemens.com/WW/view/en/8763736)
- Basics on Setting up an Industrial Wireless LAN (http://support.automation.siemens.com/WW/view/en/9975764)
- SIMATIC bus links, DP/PA coupler, active field distributors, DP/PA Link and Y Link (http://support.automation.siemens.com/WW/view/en/1142696)
- Information on the CANopen module is available on the Internet (http://www.hms-networks.com/can-for-et200s).
- DP/AS-interface LINK Advanced (http://support.automation.siemens.com/WW/view/en/22502958/133300) manual
- DP/AS-i F-Link (http://support.automation.siemens.com/WW/view/en/24196041) manual

See also

Topology with RS485 repeater (Page 35)

OLM topology (Page 40)

WLAN topology (Page 40)

Connecting PROFIBUS to PROFINET (Page 41)

2.2.3.2 Network components in optical networks

Active network components

The following active network components are available for PROFIBUS in optical networks:

- Optical Link Module OLM
- Optical Bus Terminal OBT

Optical Link Module OLM

You can use the PROFIBUS Optical Link Modul OLM to install PROFIBUS networks in line, star structure and redundant ring structure.

The transmission rate of a fiber-optic cable line does not depend on the distance and can be 9.6 kbps to 12 Mbps.

Applications for OLM include, for example, plant buses on PROFIBUS base, networking across buildings using glass fiber-optic cables, mixed networks with electrical and optical segments, large networks (road tunnels, traffic guidance systems) and networks with high demands on availability (redundant ring networks).

Optical Link modules can be combined by means of an RS485 interface and individual devices or entire electrical segments can be integrated into the optical PROFIBUS network.

The following distances may not be exceeded between two OLMs regardless of the optical power budget:

- OLM/P11, OLM/P12: 400 m
- OLM/G11, OLM/G12, OLM/G12-EEC: 3 km
- OLM/G11-1300, OLM/G12-1300: 15 km

Optical Bus Terminal OBT (optical bus terminal)

The Optical Bus Terminal connects an individual PROFIBUS device without integrated optical interface or a PROFIBUS RS 485 segment with up to 31 devices to an optical PROFIBUS.

An individual PROFIBUS DP device is connected with its RS 485 interface by means of a PROFIBUS cable with integrated terminating resistor, for example, connecting cable 830-1T, to the RS 485 interface of the OBT. The OBT is integrated into the optical line by means of two optical interfaces.

The following optical transmission media can be connected to the OBT:

- Plastic fiber-optic cable up to 50 m single distance length. They can be assembled on-site with two 2x2 Simplex connectors.
- PCF fiber-optic cable up to 300 m single distance length. The cables are delivered pre-assembled.

Additional information

Information on the components is available in the Siemens Mall (http://mall.industry.siemens.com).

Additional information is available in these manuals:

- PROFIBUS network manual (http://support.automation.siemens.com/WW/view/en/35222591)
- SIMATIC NET PROFIBUS, Optical Link Module (http://support.automation.siemens.com/WW/view/de/56606534/0/en)
- SIMATC NET Twisted-Pair and Fiber-Optic Networks (http://support.automation.siemens.com/WW/view/en/8763736)

2.2.4 Examples for topology

2.2.4.1 Topology with RS485 repeater

Configuration options with the RS485 repeater

You can operate the RS485 repeater in the following configurations:

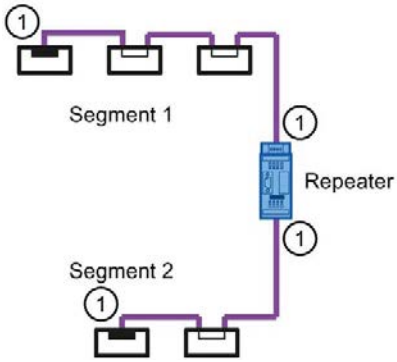

Figure 2-7 Segment 1 and segment 2 connected to RS485 repeater

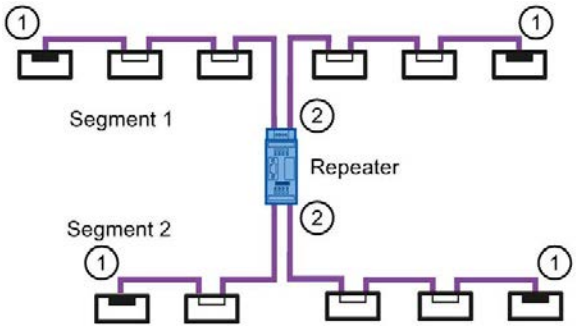

Figure 2-8 Segment 1 and segment 2 looped-through to RS485 repeater

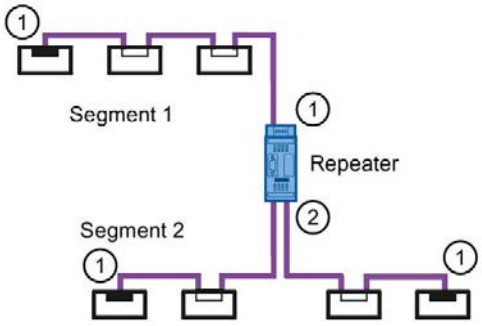

Figure 2-9 Segment 1 connected to RS485 repeater and segment 2 looped-through to RS485 repeater

① Connect terminating resistor

② Do not connect terminating resistor

Configuration example

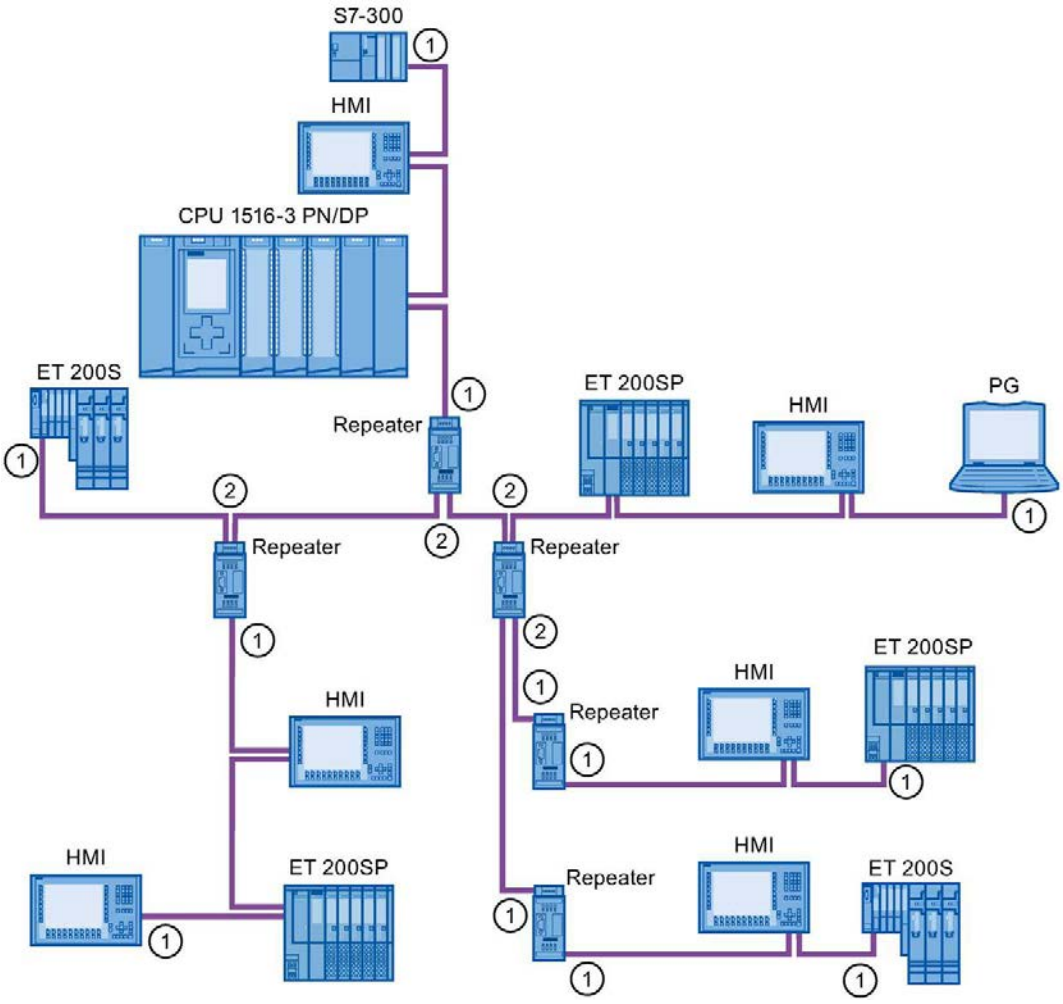

Figure 2-10 Configuration example with five RS485 repeaters

① Connect terminating resistor

② Do not connect terminating resistor

Maximum configuration

If you install a PROFIBUS network with RS485 repeaters, you may not connect more than nine RS485 repeaters in series.

2.2.4.2 Topology with diagnostic repeater

Diagnostic repeater with three segments

You may not exceed the maximum permitted cable length of 100 m per segment that can be monitored for the diagnostic repeater. The segments connected to DP2 and DP3 are diagnostics-capable. The cable length that can be monitored is limited for some cable types.

Maximum cascade depth

You can connect up to nine diagnostic repeaters in series between any two PROFIBUS stations.

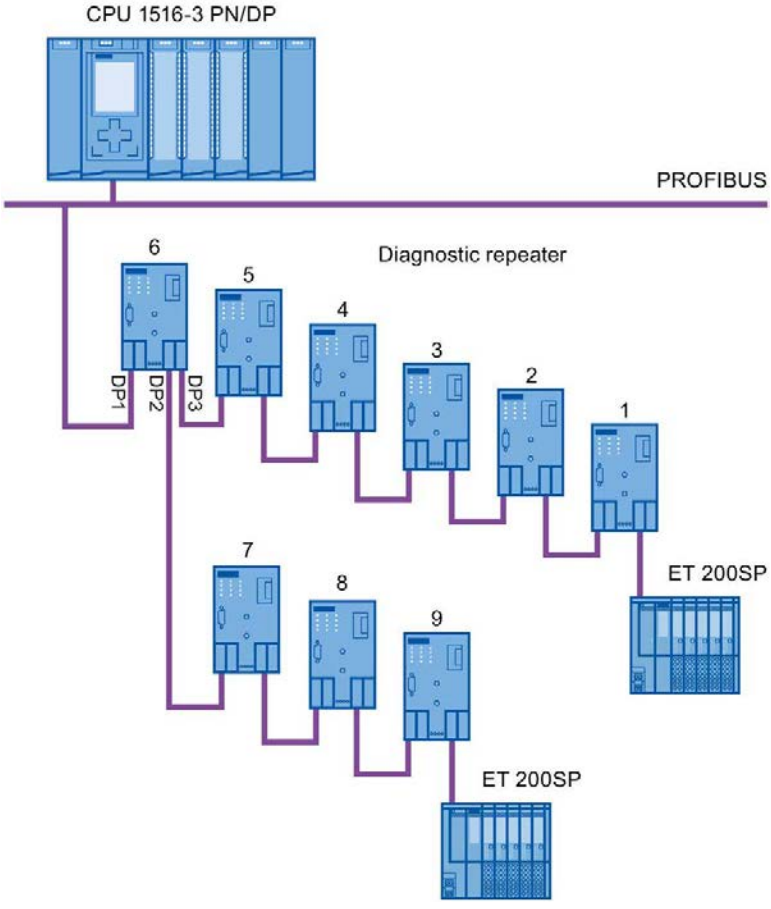

Figure 2-11 Schematic layout of a PROFIBUS network with maximum possible cascade depth at diagnostic repeaters

Example: Maximum cascade depth exceeded

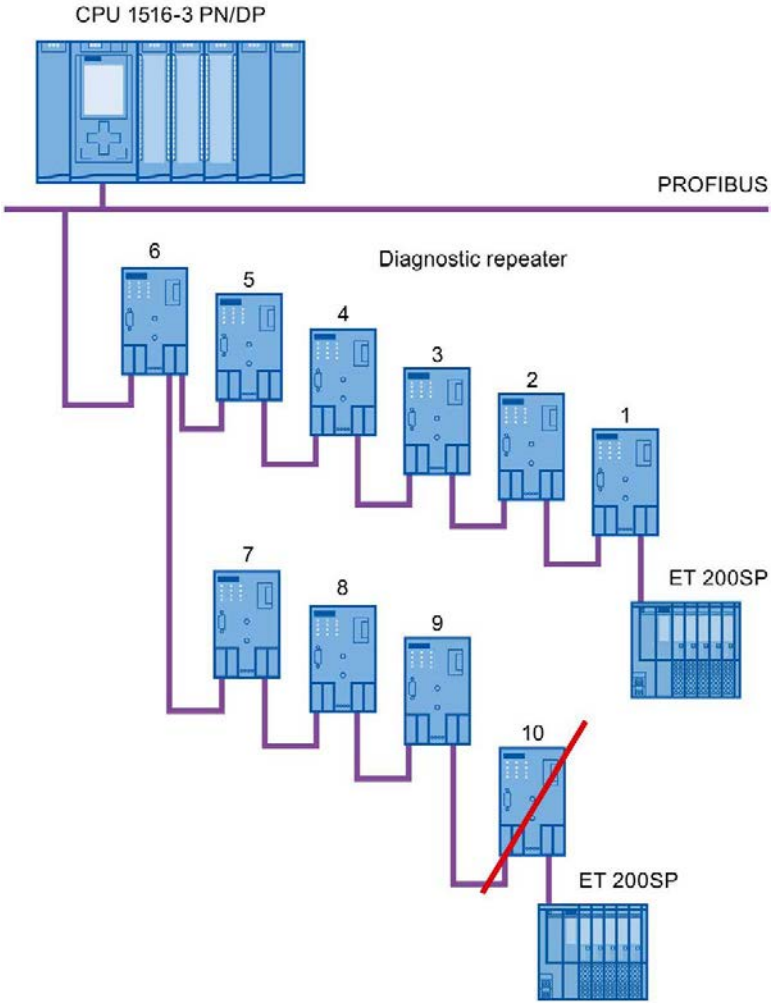

Figure 2-12 Maximum cascade depth exceeded

Layout with several segments

You can increase the number of used diagnostic repeaters by using several segments. The example shows a layout in which the maximum cascade depth is exceeded at two segments.

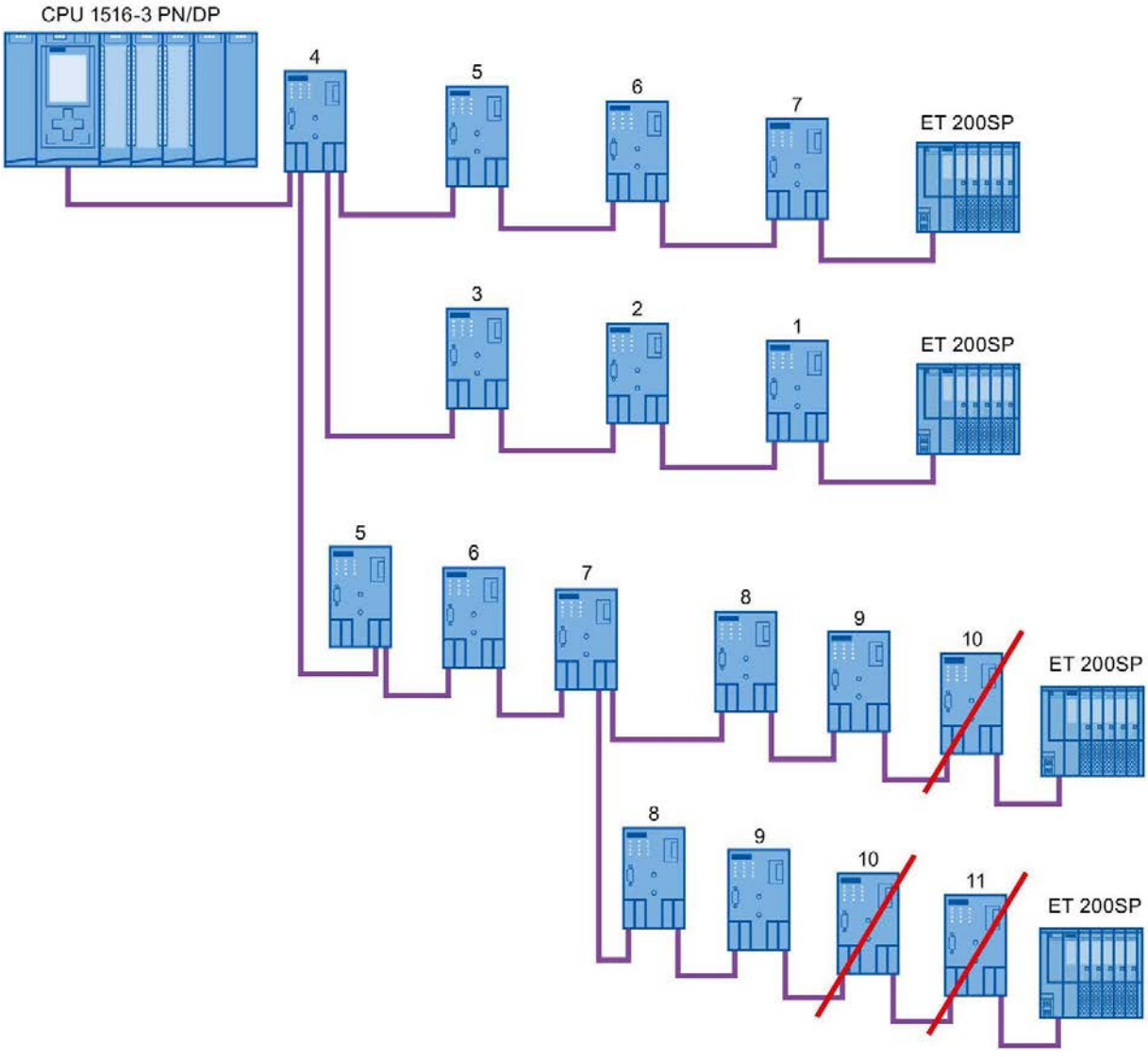

Figure 2-13 Layout with several segments, maximum cascade depth exceeded

Additional information

Additional information is available in the Diagnostic Repeater (http://support.automation.siemens.com/WW/view/en/7915183) manual.

2.2.4.3 OLM topology

Combination of electrical and optical networks with OLM

Additional distances can be covered by means of the Optical Link Module.

Because bus cables across several buildings are particularly vulnerable to damage caused by overvoltage (effect of lightning), the devices in the connected bus segment must be protected against overvoltage.

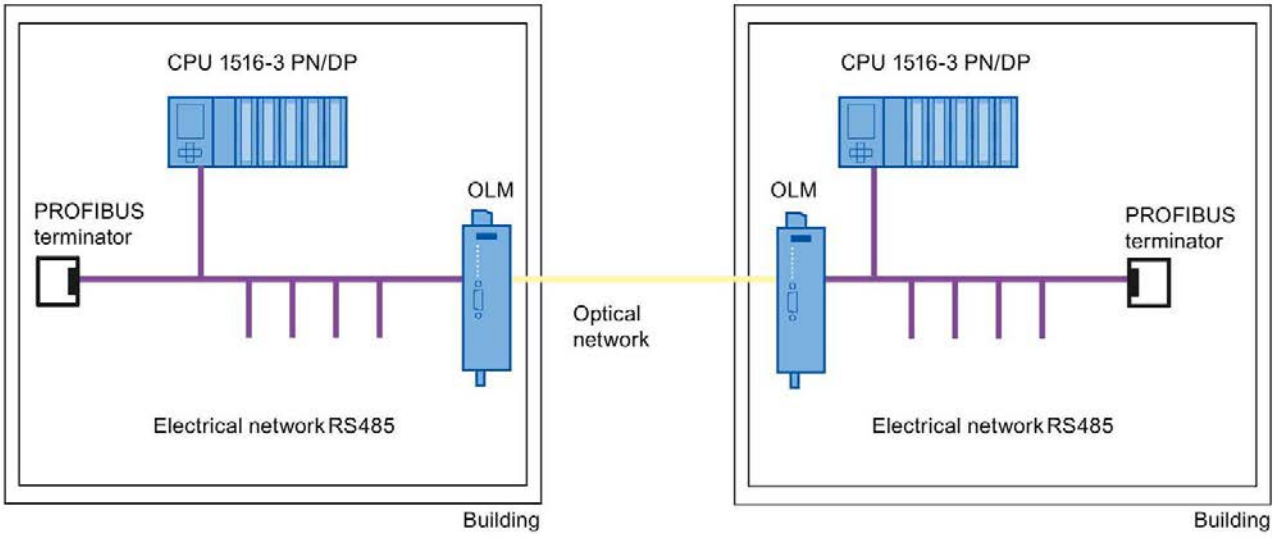

Figure 2-14 Combination of electrical and optical networks

2.2.4.4 WLAN topology

IWLAN/PB Link PN IO as gateway between Industrial Wireless LAN and PROFIBUS

The IWLAN/PB Link PN IO supports the use of IWLAN and WLAN antennas for wireless data transmission. This means the numerous PROFIBUS system services, for example, diagnostic by bus, can be used throughout.

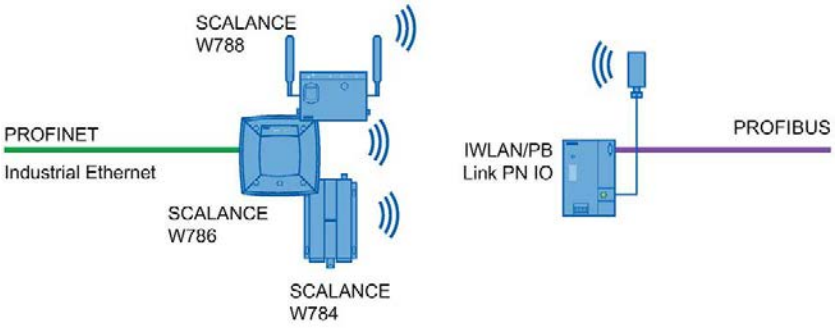

Figure 2-15 PROFIBUS and WLAN

2.2.4.5 Connecting PROFIBUS to PROFINET

PROFIBUS can be integrated in PROFINET. In this way, you can set up any hybrid systems consisting of fieldbus and Ethernet-based subsystems. This provides a continuous data exchange.

Coupling of PROFIBUS and PROFINET

With a proxy-capable PROFINET device that is equipped with a PROFIBUS interface in addition to a PROFINET interface, you can integrate existing PROFIBUS configurations into the PROFINET configuration.

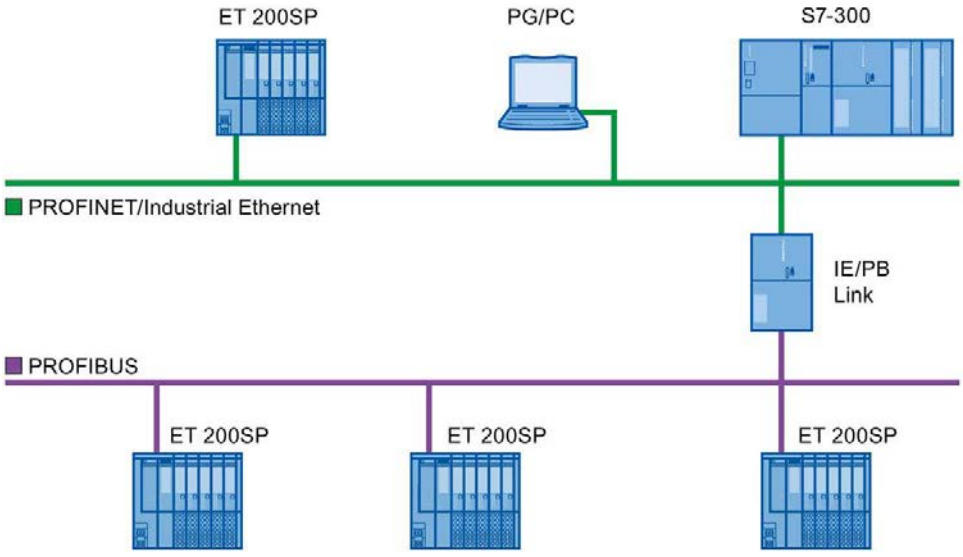

Figure 2-16 Connection of PROFIBUS and PROFINET with IE/PB link

PROFINET device with proxy functionality

The PROFINET device with proxy functionality is the substitute for a PROFIBUS device on Ethernet. The proxy functionality allows a PROFIBUS device to communicate not only with its master but also with all devices on PROFINET.

With PROFINET, existing PROFIBUS systems can be integrated into the PROFINET communication with the aid of an IE/PB link. The IE/PB link PN IO then handles communication via PROFINET on behalf of the PROFIBUS components.

Parameter assignment/addressing 3

To set up an automation system, you will need to configure, assign parameters and link the individual hardware components. The work needed for this is undertaken in the STEP 7 device, topology and network view.

Configuration

"Configuring" is understood to mean arranging, setting and networking devices and modules within the device or network view.

A PROFIBUS address is automatically assigned to each module. The addresses can be subsequently modified.

The CPU compares the preset configuration created in STEP 7 with the actual configuration of the plant. Errors can be detected and signaled immediately this way.

The exact procedure for configuring devices is described in detail in the STEP 7 online help.

Parameter assignment

"Parameter assignment" is understood to mean setting the properties of the components used. The settings for the hardware components and for data exchange are assigned, for example, activating diagnostics, input delay with DI.

The parameters are downloaded into the CPU and transferred to the corresponding modules when the CPU starts up. Modules can be replaced with ease because with SIMATIC CPUs the set parameters are automatically downloaded into the new module during each startup.

Adjusting the hardware to the project requirements

You need to adapt the hardware if you want to set up, expand or change an automation project. To do this, add hardware components to your layout, link them with existing components, and adapt the hardware properties to the tasks.

The properties of the automation systems and modules are preset so that in many cases you do not have to assign parameters again.

But parameter assignment is required in the following cases:

- You want to change the preset parameters of a module.
- You want to use special functions.
- You want to configure communication connections.

Basic procedure for creating a PROFIBUS DP system

- Configuration
  - Creating PROFIBUS devices and modules in STEP 7
  - Assigning the DP slave to a DP master (Page 43)
- Optional: Parameter assignment
  - Assigning the PROFIBUS address (Page 45)
  - Making network settings (Page 46)
  - Considering cable configuration (Page 49)
  - Considering additional network devices (Page 51)
  - Bus parameters – creating a user-defined profile (Page 52)
  - Configuring constant bus cycle time (Page 55)

3.1 Assigning the DP slave to a DP master

PROFIBUS DP system

A PROFIBUS DP system consists of a PROFIBUS DP master and its assigned PROFIBUS DP slaves. Once the devices have been placed in the network view or device view, STEP 7 assigns default parameter values to them. Initially, you only have to assign the DP slaves to one DP master.

Requirement

- The network view of STEP 7 is open.
- A CPU has been placed (e.g., CPU 1516-3 PN/DP).
- A DP slave has been placed (e.g., IM151-1 HF).

Procedure

To assign DP slaves to a DP master, follow these steps:

1. On the DP slave, use the left mouse button to click on the "Not assigned" link. The "Select DP master" menu opens.
2. Select the DP master in the menu to which you want to assign the DP slave.

   Result: A subnet with a DP system is created on the CPU. The CPU is now the PROFIBUS DP master. The DP slave is assigned to the DP master.
3. Repeat steps 1 and 2 for all other DP slaves that you want to assign to the DP master.

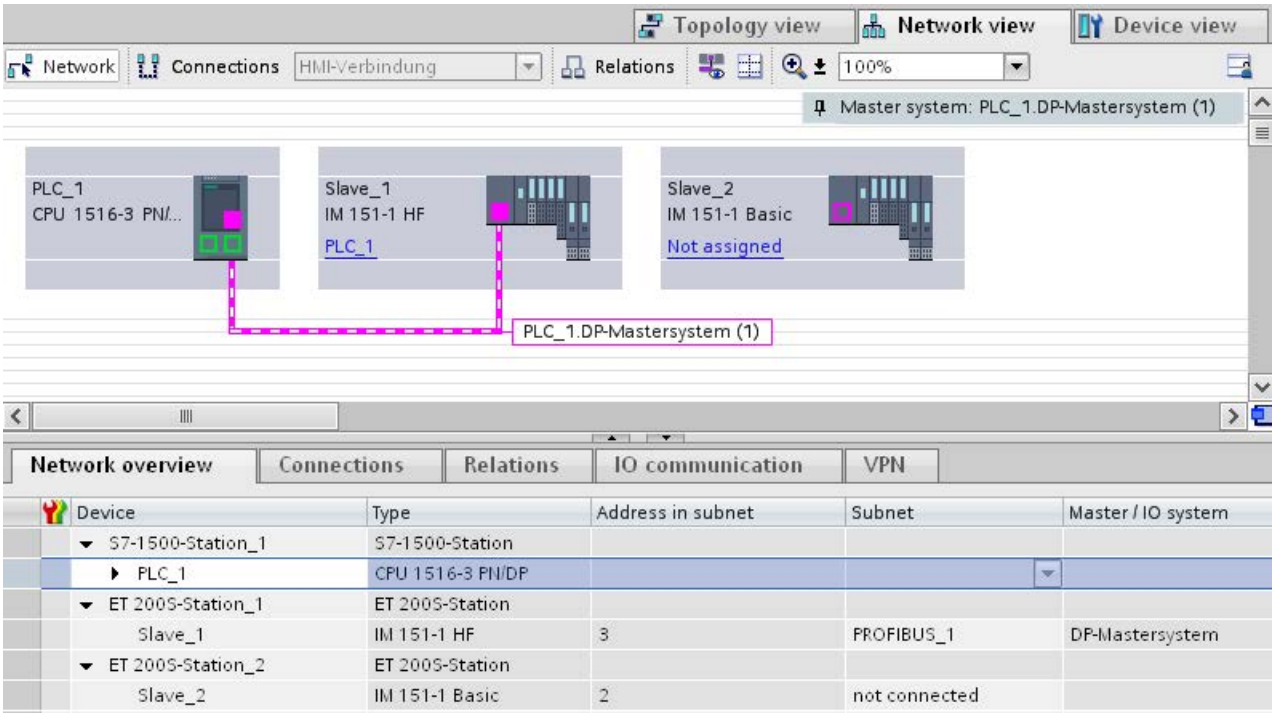

Figure 3-1 Assigning the DP slave to a DP master

Network overview

You can check the communication relationships of the activated interface in the network overview. The network overview is context-sensitive for selection in the network view:

- The selection of the CPU shows the DP communication of the CPU.
- The selection of the station shows the communication of the entire station.
- The selection of the interface shows the DP communication of the interface.

3.2 PROFIBUS address

Devices can be connected to the PROFIBUS subnet that communicate by means of configured connections or that are part of a PROFIBUS DP master system.

If the DP slave has already been assigned to a DP master, the PROFIBUS subnet to which the device is connected is automatically displayed under "Interface linked with".

In the Inspector window under "PROFIBUS", select the subnet to which the interface is linked or add a new subnet.

All devices of a subnet must have different PROFIBUS addresses.

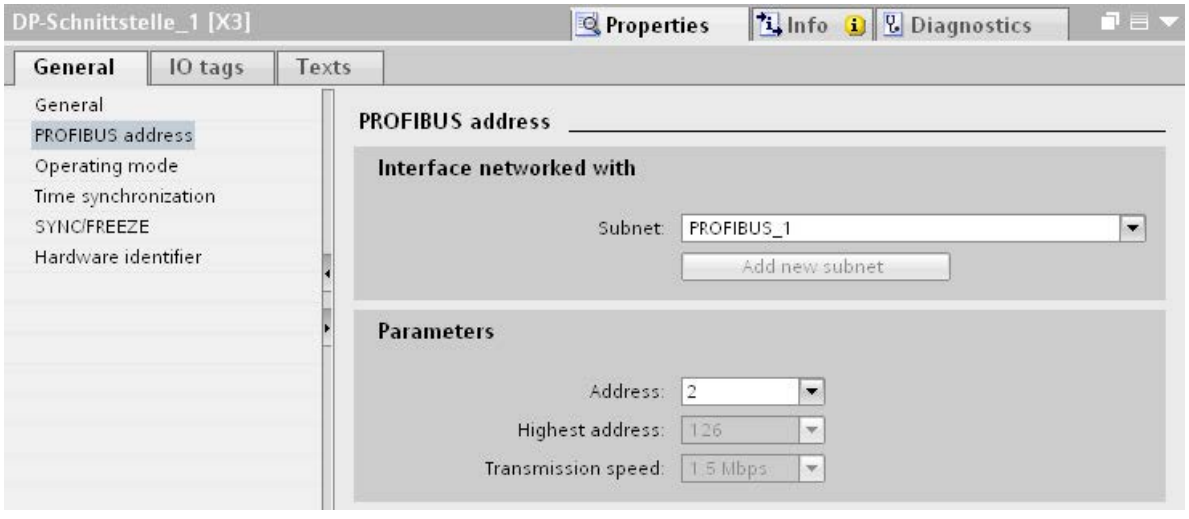

Figure 3-2 PROFIBUS address

Rules for address assignment

STEP 7 automatically assigns device addresses.

You can change the addresses if you observe the following points:

- Assign a unique PROFIBUS address to each device in the PROFIBUS network, each DP master and each DP slave in the PROFIBUS network.
- Depending on the DP slave, not all permitted PROFIBUS addresses are supported. For devices with BCD switches, it is often the case that only the PROFIBUS addresses 1 to 99 are supported.

Changing the PROFIBUS address

You change the PROFIBUS address under "Parameter".

3.3 Network settings

Highest PROFIBUS address (HSA)

Outputs the highest PROFIBUS address of an active device. PROFIBUS addresses greater than HSA are permitted for passive devices, but only up to 126.

Profile

Depending on the connected device types and the protocols used, different profiles are available on the PROFIBUS. The profiles differ with respect to their setting options and calculation of the bus parameters.

The PROFIBUS subnet will only work properly if the bus parameters of all devices have the same values.

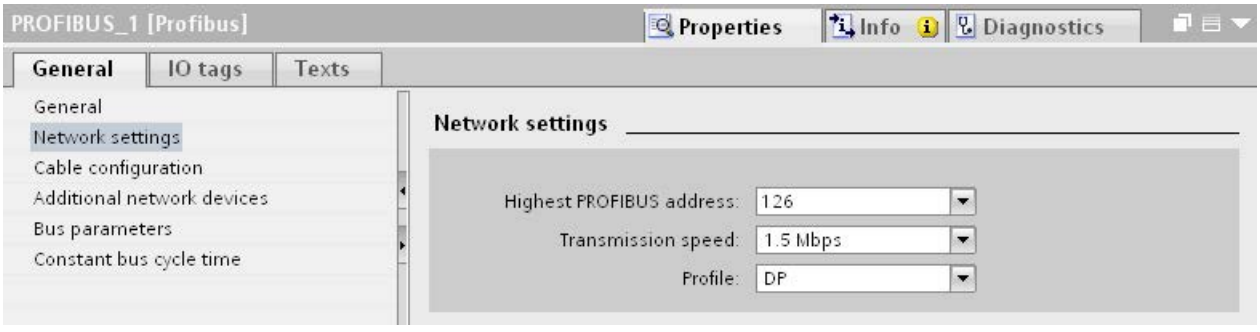

Figure 3-3 Network settings

Profiles and transmission rates

Table 3- 1 Profiles and transmission rates

Profiles	Supported transmission rates
DP	9.6 kbps to 12 Mbps
Standard	9.6 kbps to 12 Mbps
Universal (DP/FMS) (FMS is not supported)	9.6 kbps to 1.5 Mbps
User-defined	9.6 kbps to 12 Mbps

DP (recommended profile)

Select the "DP" profile if only devices meeting the requirements of the standard EN 61158-6-3 are connected to the PROFIBUS subnet. The setting of the bus parameters has been optimized for these devices. These include devices with DP master and DP slave interfaces of SIMATIC S7 as well as distributed I/O devices from third parties.

Note

Profile for constant bus cycle time and isochronous mode

DP is the recommended profile for the configuration of constant bus cycle time and isochronous mode.

Standard

Compared with the "DP" profile, the "Standard" profile gives you the option to take into consideration devices of another project or devices that have not been configured here for calculation of the bus parameters. The bus parameters are then calculated with a simple algorithm that was not optimized.

Universal (DP/FMS) (FMS is not supported)

Select the "Universal (DP/FMS)" profile if individual devices in the PROFIBUS subnet use the FMS service (e.g., CP 343-5, PROFIBUS FMS devices).

As with the "Standard" profile, here, too, you have the option to take additional devices into consideration for calculation of the bus parameters.

User-defined

The PROFIBUS subnet will only work properly if the parameters for the profile have been synchronized. Select the "User-defined" profile if none of the other profiles "match" for operation of a PROFIBUS device and if you have to adapt the bus parameters for your special layout.

You cannot configure all theoretically possible combinations with the user-defined profile either. The PROFIBUS standard prescribes some parameter limits depending on other parameters. It is, for example, not permitted that a responder responds (Min Tsdr) before the initiator is able to receive the frame (Trdy). These standard specifications are also checked in the "User-defined" profile.

Note

User-defined settings

Use user-defined settings only if you are familiar with the PROFIBUS parameters. It is usually better to work with the "DP" profile.

Contact Customer Support (Page 91) if you have any questions.

The bus parameters that were last valid on the PROFIBUS subnet are automatically set as user-defined. If the "DP" bus profile was valid for the subnet, for example, the bus parameters for "DP" are set in the "User-defined" bus profile. You can modify the parameters based on these settings.

The monitoring times are not automatically recalculated in the "User-defined settings" setting so that the uniformity of the set values is not changed without your knowledge, for example, to configure other configuration tools.

You can calculate the monitoring times Ttr and watchdog based on the parameters you have set. To do so, click on the "Recalculate" button.

See also

Additional network stations (Page 51)

3.4 Cable configuration

Considering cable configuration

Information on the cable configuration can be taken into consideration for calculation of the bus parameters. To do so, select the check box "Take into account the following cable configuration" in the properties of the PROFIBUS subnet.

The other information depends on the type of cable used.

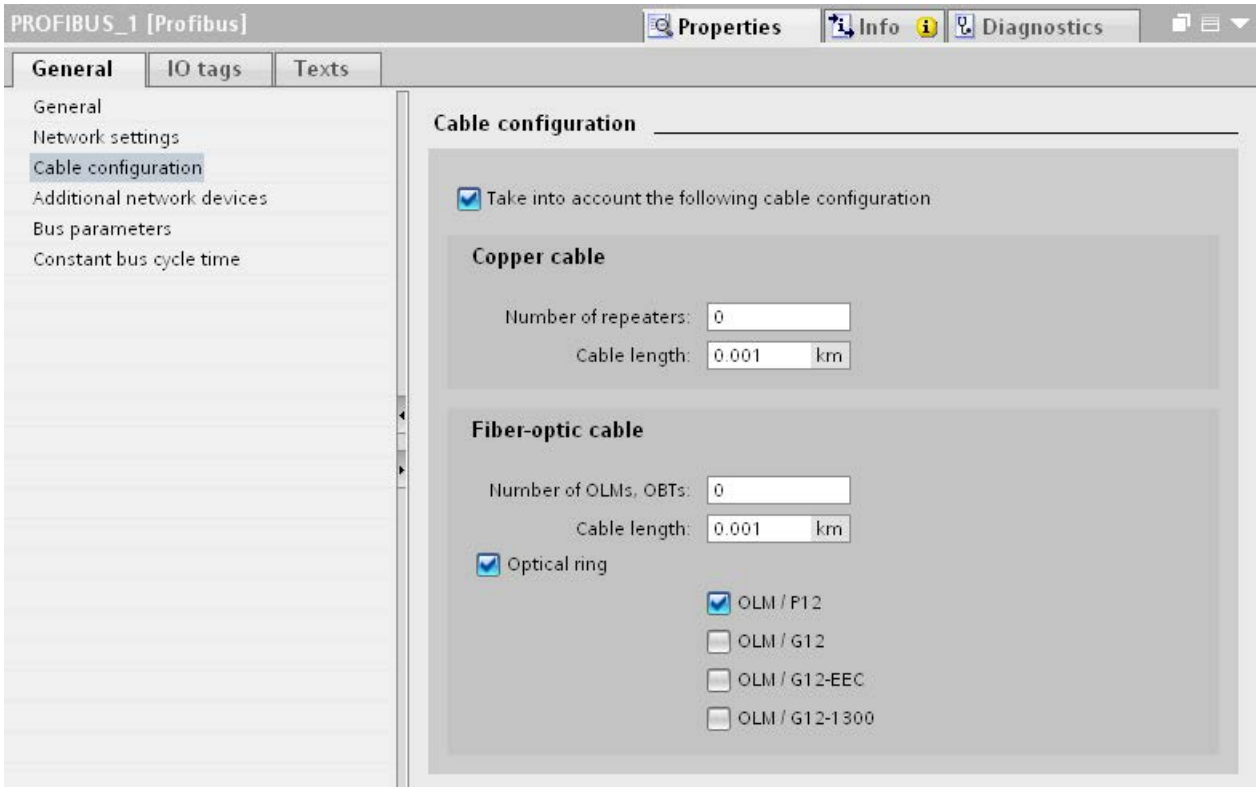

Figure 3-4 Cable configuration

Cable configuration: Fiber-optic cables/optical ring

The calculation depends on the used OLM types. Select the corresponding check box. Multiple selections are possible.

Adapting bus parameters in the optical ring

With the layout as ring, there is a kind of redundancy because you have the option to address all devices using the ring structure even if the connection between two devices is interrupted.

The following configuration conditions must be met in the optical ring:

- A free address below HSA (Highest Station Address)
- Increase of the retry value to at least 3

  (Network settings: user-defined profile)
- Checking and adapting of the slot time

  (Network settings: user-defined profile; bus parameters: Tslot parameter:

  You need short slot time values for OLM / P12, medium slot time values for OLM / G12 and OLM / G12-EEC and high slot time values for OLM / G12-1300. This results in a high performance for small networks and a medium to low performance with medium to large networks.

Additional information

Additional information on adaptation of the retry value and the slot time is available in the PROFIBUS Network Manual (http://support.automation.siemens.com/WW/view/en/35222591).

3.5 Additional network stations

Communication load - considering additional network stations

The bus parameters depend on the communication volume of the active network stations. There are differences between cyclical communication (DP) and connection-oriented, acyclical communication (S7 communication, Send/Receive (FDL)). Contrary to DP, the number and size of the communication jobs (communication load) depends on the user program. This means the communication load cannot always be determined automatically.

If you select the check box "Consider the following network stations", you can consider network stations in the calculation of the bus times that were not configured in the project.

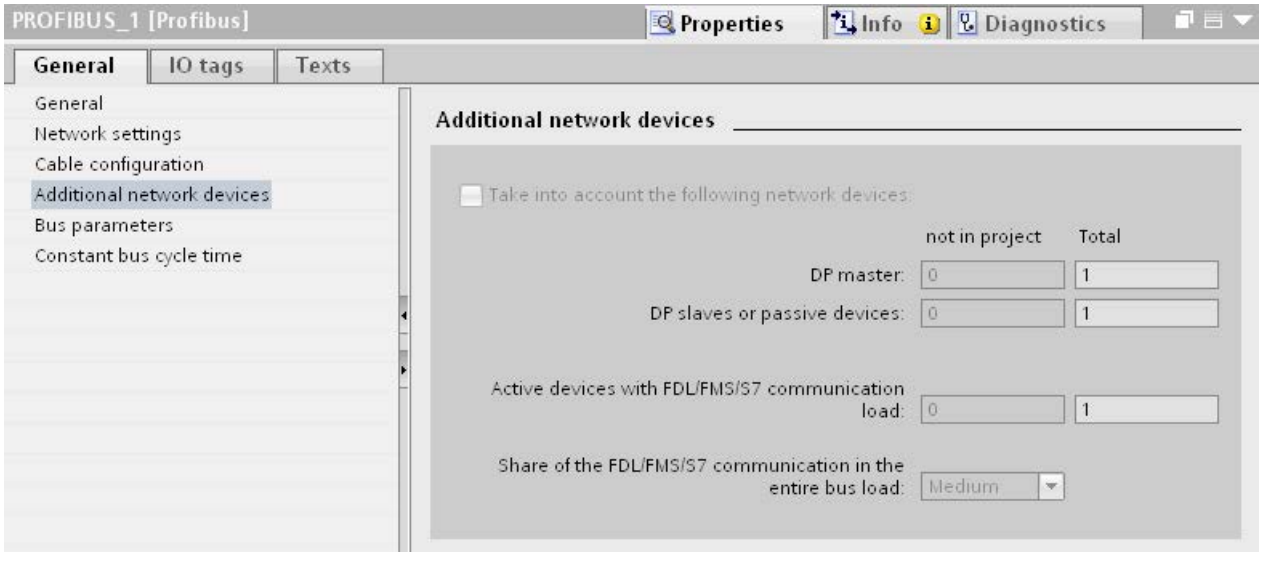

Figure 3-5 Additional network stations

Calculating the bus times

You can specify a network configuration in the parameter group "Additional network stations" for calculation of the bus times that deviates from the configured network configuration.

The network configuration is available for the following profiles:

- Standard
- Universal (DP/FMS)
- User-defined

Quantification of the communication load

The following settings are possible to take the communication load into consideration:

- Number of network stations that are not configured
- Information on the communication load from the user programs for FDL or S7 communication. You can choose from the following levels:
  - Low: Typical for DP, no larger data communication except DP.
  - Medium: Typical for mixed operation of DP and other communication services (e.g., S7 communication), if DP has high time requirements and with medium, acyclical communication volume.
  - High: For mixed operation of DP and other communication services (e.g., S7 communication), if DP has low time requirements and with high, acyclical communication volume.

3.6 Bus parameters

Introduction

Bus parameters control the transmission behavior on the bus. Each device on the bus must correspond with the bus parameters of other devices.

Note

The PROFIBUS subnet will only work properly if the parameters for the bus profile have been synchronized. Change the preset values only if you are familiar with the parameter assignment of the bus profile for PROFIBUS.

Cyclical distribution of the bus parameters

If the check box "Activate cyclical distribution of bus parameters" is selected under "Bus parameters" with the selected PROFIBUS subnet in the Inspector window, the bus parameters are sent cyclically during operation by the modules that support this function. This way you can, for example, connect a programming device to the PROFIBUS during operation.

Disable this function in the following cases:

- In constant bus cycle time mode to minimize the bus cycle.
- If third-party devices are connected in the PROFIBUS subnet whose protocol uses the DSAP 63 (Destination Service Access Point) for multicast.

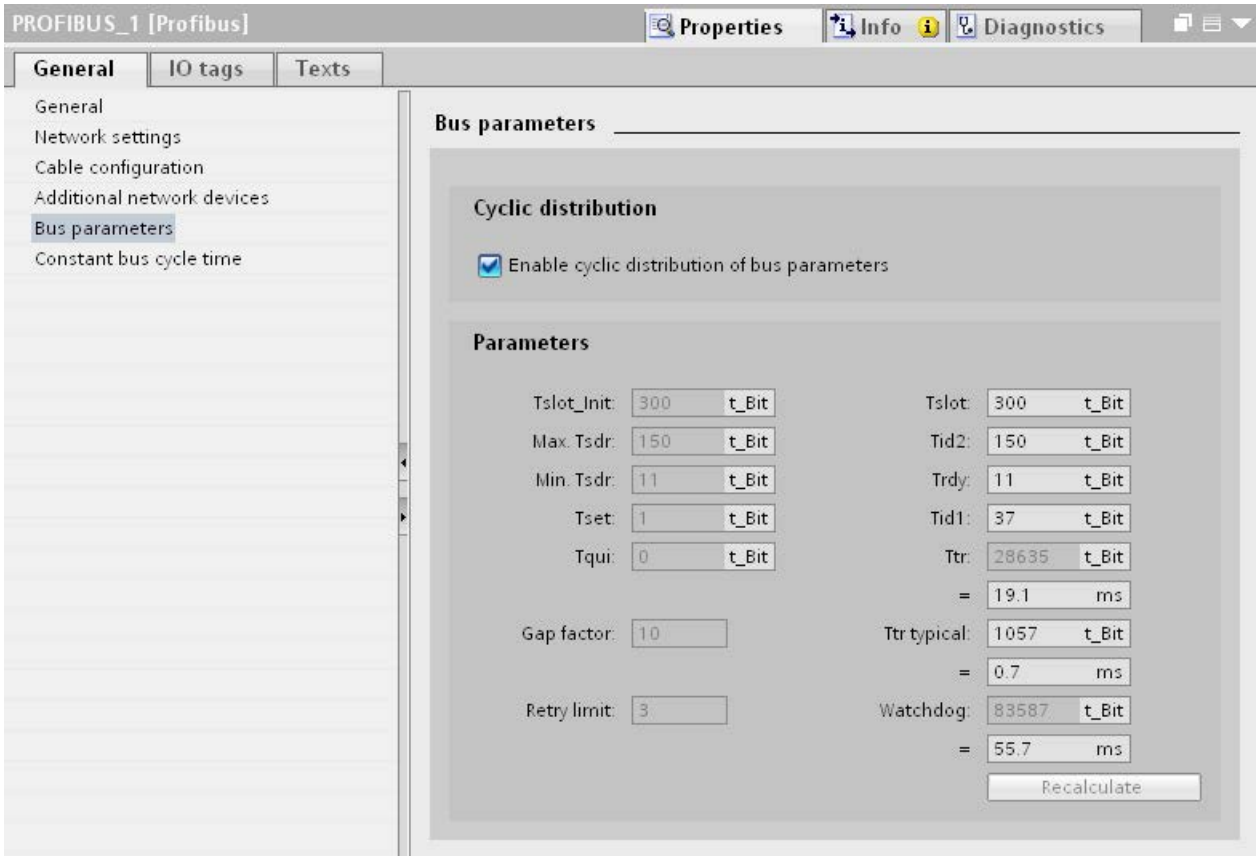

Figure 3-6 Bus parameters

Bus parameters for the bus profile of PROFIBUS subnets

Note

Display of offline values

The offline values of the bus parameters are always displayed even if they are connected online with the target system.

Table 3- 2 Bus parameters - value ranges

Bus parameters	Adjustable [1]	Limit values
Tslot_Init	Yes	Max. Tsdr + 15 <= Tslot_Init <= 16.383 t_Bit
Max. Tsdr	Yes	35 + 2*Tset + Tqui <= Max. Tsdr <= 1,023 t_Bit
Min. Tsdr	Yes	11 t_Bit <= Min. Tsdr <= MIN(255 t_Bit, ... Max. Tsdr - 1, 34 + 2*Tset + Tqui)
Tset	Yes	1 t_bit <= Tset <= 494 t_bit
Tqui	Yes	0 t_bit <= Tqui <= MIN(31 t_bit, Min. Tsdr - 1)
GAP factor	Yes	1 <= GAP factor <= 100
Retry limit	Yes	1 <= Retry limit <= 15
Tslot (slot time)	No	-
Tid2	No	Tid2 = Max. Tsdr
Trdy	No	Trdy = Min. Tsdr
Tid1	No	Tid1 = 35 + 2*Tset + Tqui
Ttr (Target Rotation Time)	Yes	256 t_Bit <= Ttr <= 16,777,960 t_bit
Ttr typical	No	This time is for information only and is not transmitted to the devices.
Watchdog		10 ms <= Watchdog <= 650 s

[1] depending on bus profile

User-defined bus profile

Use the following settings to create a user-defined bus profile:

- minimum Target Rotation Time (Ttr) = 5000x HSA (highest PROFIBUS address of an active device)
- minimum watchdog (Watchdog) = 6250x HSA

Recalculate

Use the button "Recalculate" to recalculate the parameters.

3.7 Constant bus cycle time

Constant bus cycle time

The DP master addresses its assigned DP slaves cyclically. S7 communication may cause the intervals to vary. You can enable a "bus cycle with constant bus cycle time" to achieve identical intervals. This ensures data transmission at the same (constant bus cycle time) intervals.

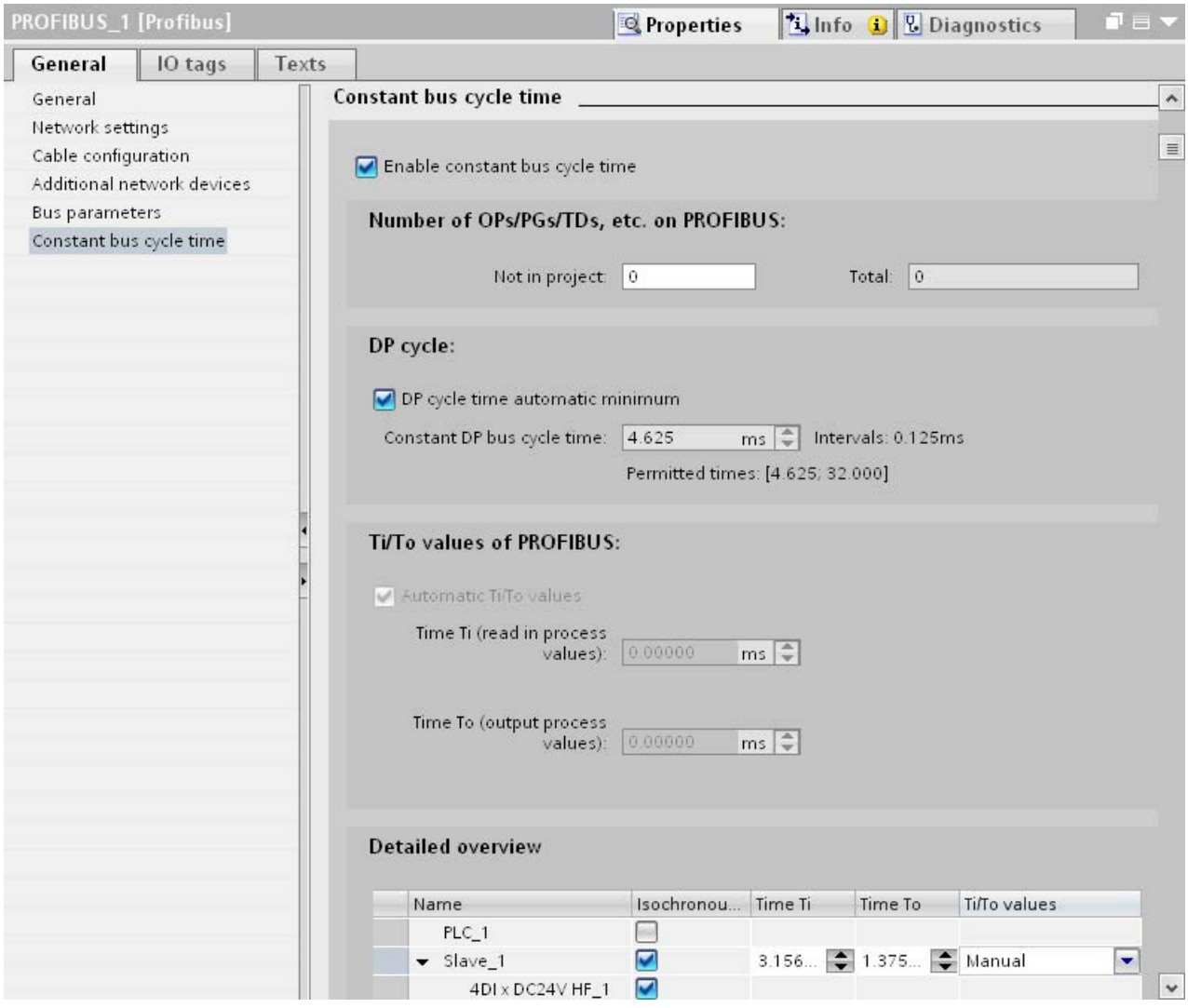

Figure 3-7 Enabling a bus cycle with constant bus cycle time

Number of OPs/PGs/TDs at the PROFIBUS

Here you enter the number of devices that are not configured.

Increasing DP cycle time manually

The following situation can occur especially with very short DP cycle times:
The runtime of the user program is greater than the shortest cycle (see Technical specifications of the CPU, section "Isochronous mode"). You have to manually increase the automatically calculated DP cycle time in this case.

See also

Configuring isochronous mode (Page 67)

Diagnostics 4

4.1 Overview

Diagnostics options

In case of an error you can determine the current status of your automation system and react specifically by using the event-related diagnostics and the evaluation of interrupts.

You can use the following options for diagnostics of the PROFIBUS components:

- Determine the status of the system using the Lifelist in STEP 7.
- Evaluate the module status, error and message texts by using the display of the S7-1500 CPU.
- Run cable diagnostics during operation by means of the diagnostics repeater.
- Evaluate the diagnostics and interrupt behavior in isochronous mode. (Page 70)
- Determine status information for fault localization and fault rectification by using the DP/PA coupler FDC 157-0 configured as PROFIBUS diagnostics slave.

Additional information

Additional information on diagnostics is available in these manuals:

- In the Diagnostics repeater for PROFIBUS-DP (http://support.automation.siemens.com/WW/view/en/7915183) manual for diagnostics with STEP 7, diagnostics in the user program, monitoring function isochronous PROFIBUS, topology display in STEP 7.
- In the Diagnostics (http://support.automation.siemens.com/WW/view/en/59192926) function manual for diagnostics options that are available for the SIMATIC systems S7-1500, ET 200MP, ET 200SP and ET 200AL.
- In the PROFIBUS Network Manual (http://support.automation.siemens.com/WW/view/en/35222591) system manual for diagnostics of fiber-optic cables.
- In the DP/PA Coupler, Active Field Distributors, DP/PA Link and Y Link (http://support.automation.siemens.com/WW/view/en/1142696) operating instructions.
- In the Web Server (http://support.automation.siemens.com/WW/view/en/59193560) function manual for diagnostics options (based on the functionality of the CPU).

4.2 Diagnostics using the display of the S7-1500

Displays

Each CPU in the S7-1500 automation system has a front cover with a display and operating buttons. Control and status information is displayed in different menus on the display. You use the operating buttons to navigate through the menus.

The following states can be evaluated on the display:

- Module status for central and distributed modules
- Error and alarm texts (system diagnostics, user-defined alarms)

Module status

From the station overview you go to the module status for a distributed module via the module overview.

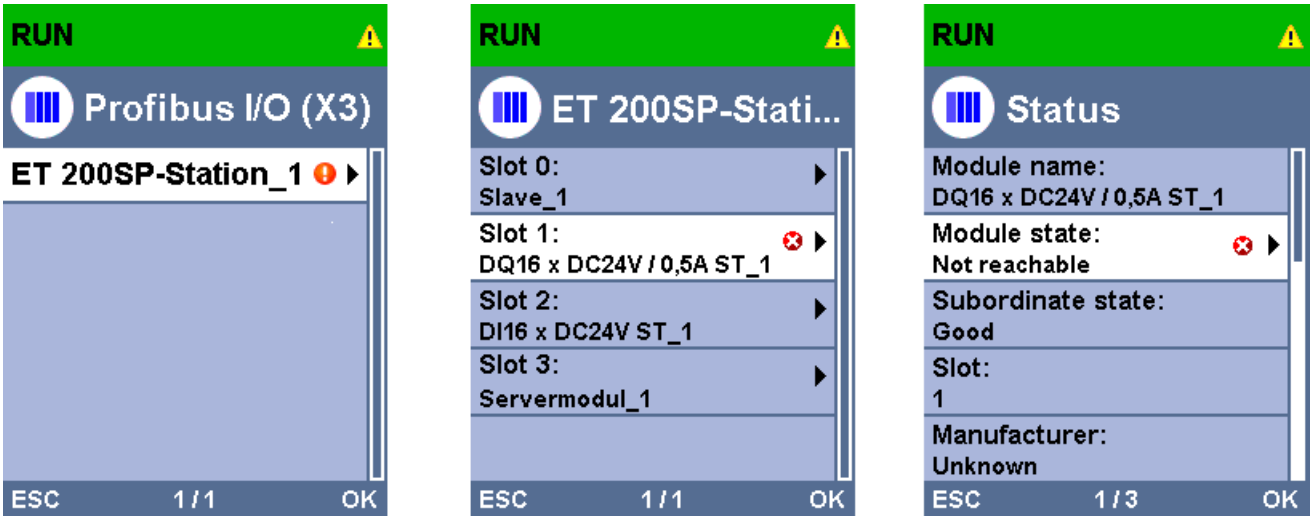

Figure 4-1 Example: Station overview, module overview, module status

Error and alarm texts

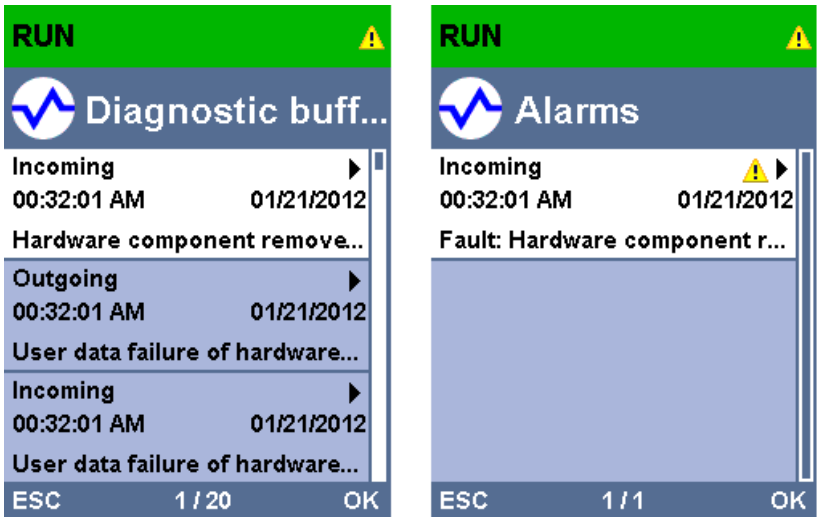

Figure 4-2 Example: Diagnostic buffer, alarms

Additional information

Additional information on the topic "Functions and operation of the display" is available in the documentation for the S7-1500 automation system on the Internet (http://support.automation.siemens.com/WW/view/en/59191792).

4.3 Diagnostics with the diagnostic repeater

Introduction

The diagnostic repeater is a repeater that can monitor two segments of a RS485-PROFIBUS subnet (copper cable) during operation and signal cable faults to the DP master by sending a diagnostic frame. Fault location and the cause of the fault can be displayed in plain text by means of STEP 7 as well as operator control and monitoring devices (SIMATIC HMI).

With its cable diagnostics during operation, the diagnostic repeater allows you to detect and localize cable faults early on. This means plant faults are detected early and plant downtimes can be prevented.

Diagnostic functions

- The diagnostic function provides the location and the cause of cable faults, such as wire break or missing terminating resistors. The fault location is specified relative to the devices present, for example "Break on signal line A and/or B".
- Reading out the saved diagnostic and statistical information.
- Monitoring of the isochronous PROFIBUS, e.g., violation of cycle time.
- Providing identification data.

Additional information

Additional information on diagnostics with STEP 7 and for reading out the diagnostics with the user program is available in the Diagnostic repeater for PROFIBUS DP (http://support.automation.siemens.com/WW/view/en/7915183) manual.

4.4 I&M data (Identification and Maintenance)

Definition and properties

Identification and maintenance data (I&M) is information saved in a module to provide support when:

- Checking the plant configuration
- Locating hardware changes in a plant

Identification data (I data) is module information (some of which may be printed on the module housing) such as the order and serial number. I data is read-only, vendor-specific module information.

Maintenance data (M data) is system-specific information such as the installation location and date. M data is generated in the course of configuration and is written to the module memory.

The modules can be uniquely identified in online mode by means of the I&M data.

Additional information

Information if and to what extent a DP device supports I&M data is available in the respective device manual of the device.

Functions

5

5.1 Isochronous mode

5.1.1 What is isochronous mode?

Why isochronous mode?

Assuming public transport were to operate at maximum speed while reducing stop times at the passenger terminals to absolute minimum, the last thing many potential passengers would notice of the departing contraption are its red tail lights. The overall travel time is, however, decided by the train, bus or underground clock, because well adjusted timing is essential to a good service. This also applies to distributed automation engineering. Not only fast cycles but also the adaptation and synchronization of the individual cycles result in optimum throughput.

Just-In-Time

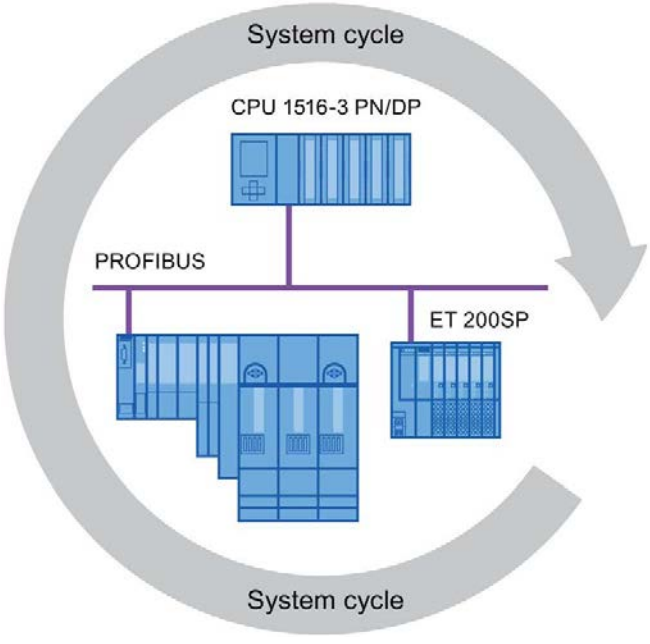

Figure 5-1 System cycle

The high speed and reliable reaction time of a system operating in isochronous mode is based on the fact that all data is provided just-in-time. The constant bus cycle time PROFIBUS DP cycle beats the time here.

Advantages of isochronous mode

The use of isochronous mode provides:

- Optimized controls
- Determinism
- Consistent (simultaneous) reading of input data
- Consistent (simultaneous) output of output data

5.1.2 Use of isochronous mode

The system property "isochronous mode" enables recording of measured values and process data in a defined system cycle. Signal processing takes place in the same system cycle all the way to switching to the "output terminal". This means isochronous mode improves the control quality and provides greater manufacturing precision. Isochronous mode drastically reduces the possible fluctuations of process response times. The time-assured processing can be used for a higher machine cycle.

Isochronous mode is basically always the choice when acquisition of measured values needs to be synchronized, movements need to be coordinated and process reactions need to be defined and take place simultaneously. This means the areas of applications for isochronous mode are manifold.

5.1.3 Isochronous applications

Example: Isochronous measurement at several measuring points

QC requires precise measurement of dimensions within a camshaft production process.

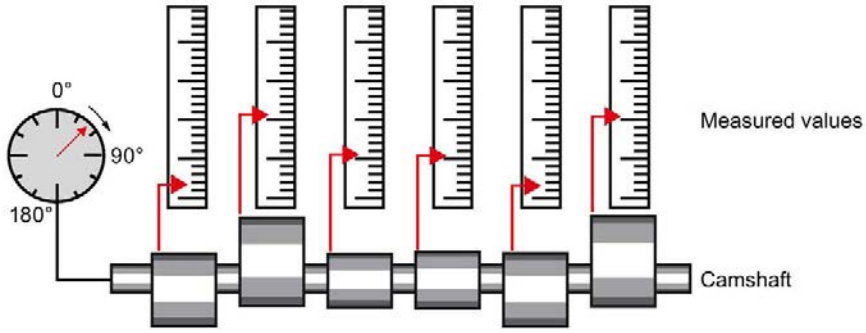

Figure 5-2 Measuring of camshafts

Isochronous workflow

By using the system property "isochronous mode" and the associated simultaneous measured value acquisition, measurement can be performed continuously and the time required for measurement is reduced. Resultant workflow:

- Continuous turning of the camshaft.
- During the continuous turning, measure the positions and cam excursion synchronously.
- Process the next camshaft.

All camshaft positions and the corresponding measured values (red) are measured synchronously within a single rotation of the camshaft. This increases machine output and maintains or enhances precision of the measurement.

5.1.4 Sequence of synchronization

From reading of input data to output of output data

The sequence of all components involved in the synchronization is explained in the paragraphs below:

- Isochronous reading of input data
- Transport of input data by means of the PROFIBUS subnet to the DP master (CPU)
- Further processing in the isochronous application of the CPU
- Transport of output data by means of the PROFIBUS subnet to the output DP slave
- Isochronous output of output data

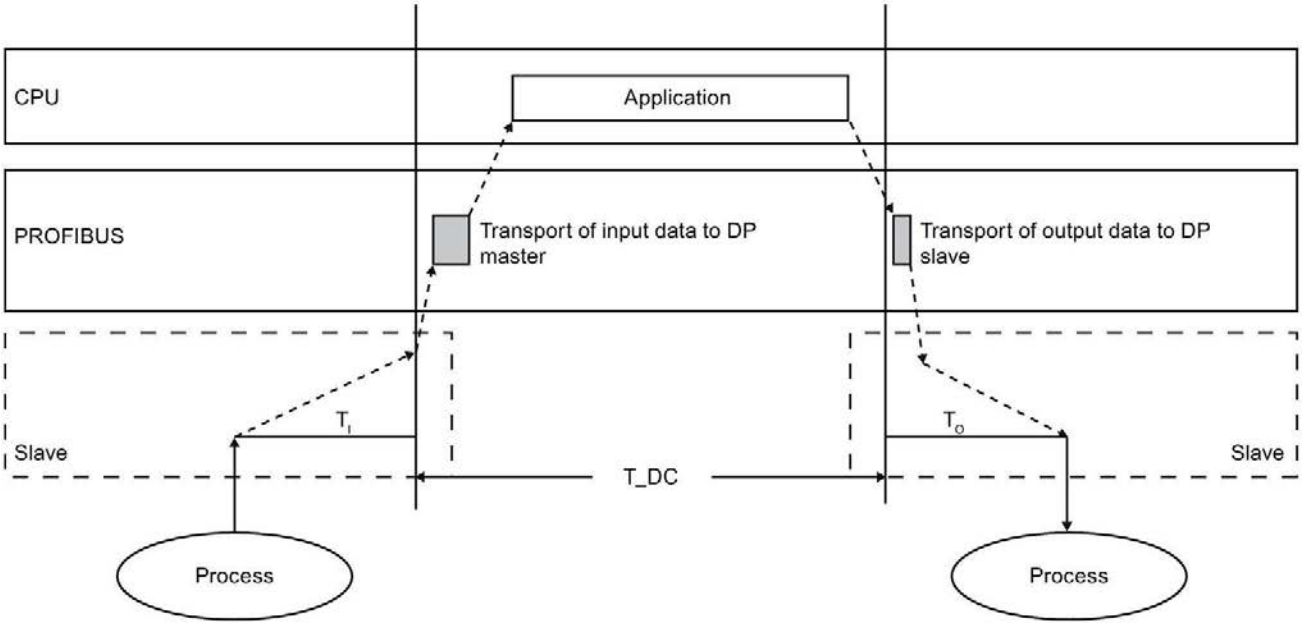

T_DC Date cycle

T_I Time for reading the input data

T_O Time for output of output data

Figure 5-3 Time sequence of synchronization

To ensure that all input data is ready for transportation via the PROFIBUS DP line when the next PROFIBUS DP cycle begins, the I/O read cycle has a lead time T_I so that it starts earlier. The T_I is the "flash gun" for all inputs. This T_I is necessary to compensate for analog to digital conversion, backplane bus times, etc. The lead time T_I can be configured by STEP 7 or by the user. We recommend that you have T_I assigned automatically by STEP 7 .

The PROFIBUS DP line transports the input data to the DP master. The synchronous cycle interrupt OB SynchronousCycle is called. The user program in the synchronous cycle interrupt OB decides the process reaction and provides the output data in time for the start of the next data cycle. The length of the data cycle is always configured by the user.

T_o is the compensation from the backplane bus and the digital to analog conversion within the slave. The T_o is the "flash gun" for all outputs. The time T_o can be configured by STEP 7 or by the user. We recommend that you have T_o assigned automatically by STEP 7.

Without isochronous mode, application, data transmission and field devices have their own, unsynchronized processing cycles; these result in a higher total cycle time with high jitter. With isochronous mode, application, data transmission and field device are synchronized resulting in a minimum total cycle with minimum jitter.

Isochronous mode and non isochronous mode distributed I/O

It is possible to combine isochronous mode distributed I/O with non isochronous mode distributed I/O on one DP master.

5.1.5 Requirements for configuration

Note the following requirements for configuration of isochronous mode:

- Isochronous mode cannot be used in optical PROFIBUS networks.
- Constant bus cycle time and isochronous mode are only possible with the bus profiles "DP" and "User-defined".
- Isochronous mode is only possible with the DP interfaces integrated in the CPU. Isochronous mode with CPs for PROFIBUS is not possible.
- Only the constant bus cycle time master is permitted as active station on the isochronous PROFIBUS DP. OPs and PGs (for example, PCs with PG functionality) influence the time behavior of the isochronous DP cycle and are therefore not permitted.
- Isochronous mode is not permitted across lines.
- Isochronous I/O can only be processed in process image partitions. Isochronous consistent data transmission is not possible without the use of process image partitions. The adherence to quantity structures is monitored because the number of slaves and bytes on the DP master system is limited for each process image partition.
- The addresses of isochronous modules must be located in a process image partition.
- Full isochronous mode from "terminal" to "terminal" is only possible if all components involved in the chain support the system property "isochronous mode".

  Make sure you look for the entry "Isochronous mode" or "Isochronous processing" in the information box of the module when you select it in the catalog.
- When you configure isochronous mode, you may not assign a SYNC/FREEZE group to the slave.

5.1.6 Configuring isochronous mode

Introduction

A SIMATIC automation solution can be connected to the isochronous PROFIBUS with the isochronous mode function. Isochronous mode guarantees the synchronous reading of input data, the processing and output of output data at the same (isochronous) intervals.

Basic procedure for configuration of isochronous mode

1. Setting the properties for isochronous mode on the DP slave:
   - Isochronous DP cycle
   - Isochronous mode of the modules
2. Setting the properties for isochronous mode on the modules:
   - Synchronous cycle interrupt (SynchronousCycle)
   - Process image partition
   - Input delay
3. Create user program with access to isochronous I/O

Requirement

- The network view in STEP 7 is open.
- A CPU has been placed (e.g., CPU 1516-3 PN/DP).
- An interface module has been placed and networked with the CPU (e.g., IM 151-1 HF).
- I/O modules have been placed (e.g., 2DI x DC24V HF and 2DO x DC24V/0,5A HF).

Configuring isochronous mode on the DP slave

1. Select the DP slave in the network view and navigate to the "isochronous mode" area in the Inspector window.
2. Enable the option for synchronization to the DP cycle for the DP slave.

   Default: The DP slaves get the Ti/To values from the subnet which means the values are automatically the same for all DP slaves of the DP master system.
3. Enable the "Isochronous mode" option the the "Detail view" for all I/O modules you want to operate in isochronous mode.
4. Repeat steps 1 and 3 for all DP slaves that you want to operate in isochronous mode.

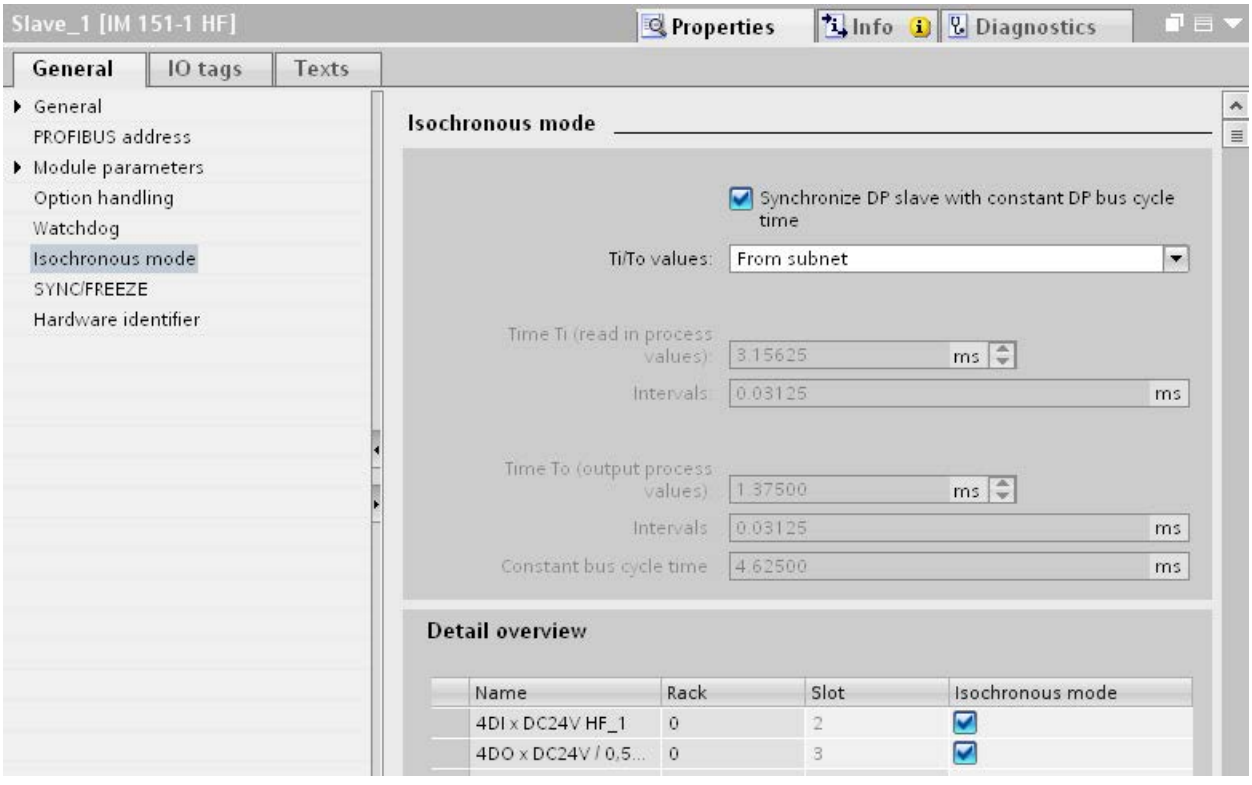

Figure 5-4 Configuring isochronous mode on the DP slave

Configuring synchronous cycle interrupt on the I/O module

1. Select an I/O module in the device view and navigate to the "I/O addresses" area in the Inspector window.
   – The option for isochronous mode is selected.
2. Select the synchronous cycle interrupt in the drop-down list.

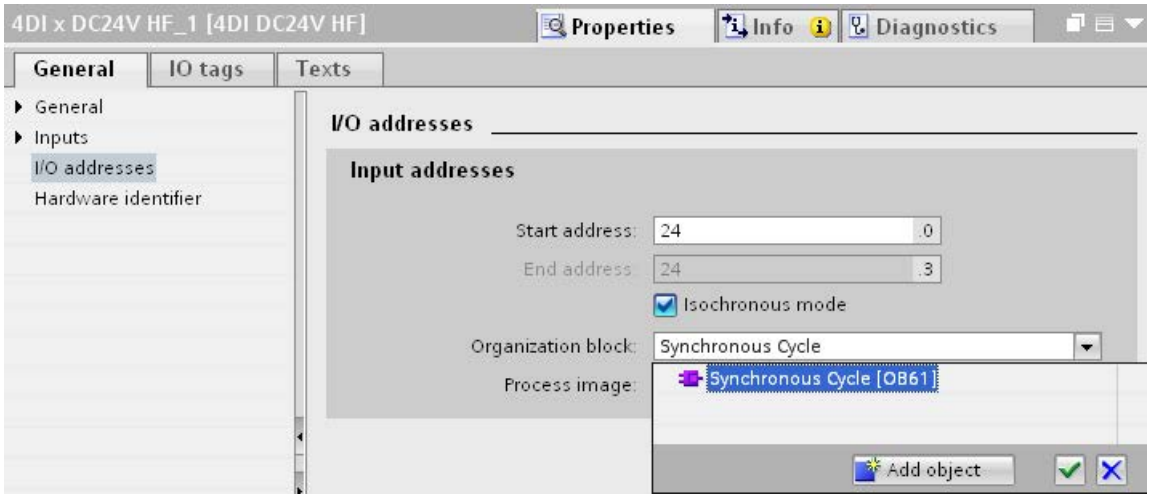

Figure 5-5 I/O addresses - creating the synchronous cycle interrupt OB

3. Assign the process image partition configured in the CPU.

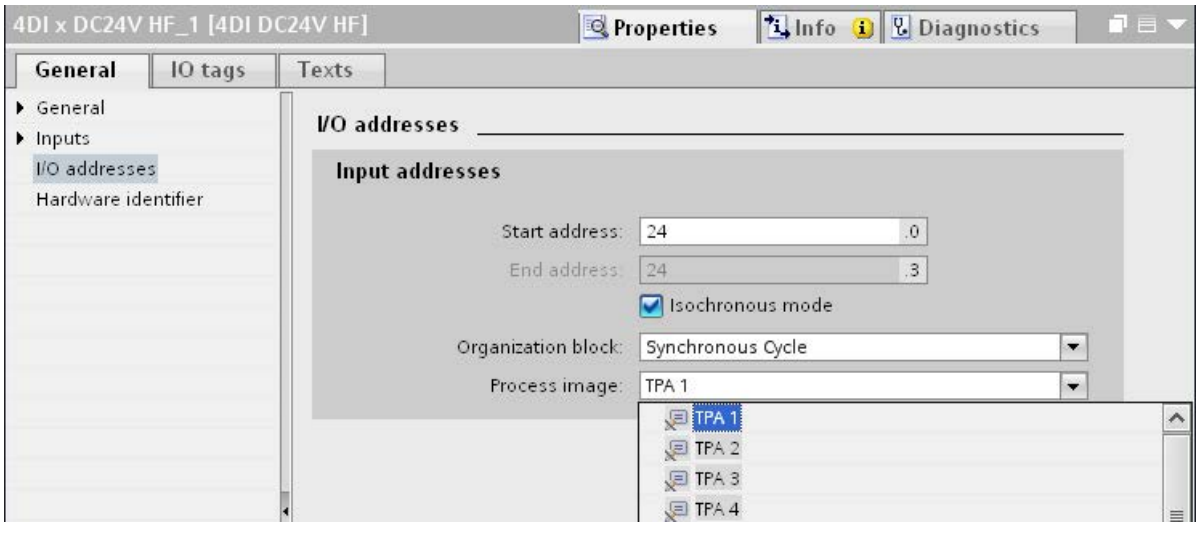

Figure 5-6 I/O addresses - assigning process image partitions

4. Repeat steps 1 and 3 for all I/O modules that you want to operate in isochronous mode.

Programming isochronous mode

To operate your plant in isochronous mode, the user program must be structured accordingly. This means you have to add a synchronous cycle interrupt in the STEP 7 project tree.

You access the isochronous I/O by means of a process image partition, which means the addresses of the isochronous modules must be located in a process image partition. You program access to isochronous I/O with the "SYNC_PI" instructions (updating the process image partitions of the inputs) and "SYNC_PO" (updating the process image partition of the outputs) in the synchronous cycle interrupt OB.

You call the "SYNC_PI" instruction at the start of the synchronous cycle interrupt OB, provided you have selected the automatic setting for the delay time. You call the "SYNC_PO" instruction at the end of the synchronous cycle interrupt OB.

5.1.7 Diagnostics and interrupt functions

The diagnostic and interrupt functions of STEP 7 are available for isochronous mode. These reduce downtimes and simplify localization and elimination of faults.

Events, causes of errors and remedies

Below, you will find the events for diagnostic and interrupt functions and remedies for the problem.

Table 5- 1 Events, causes of errors and remedies

Event	Cause of the error	Remedy
• Synchronous cycle interrupt OB is started with the input parameter EventCount > 0 (number of lost OB calls since last OB call) If configured: • Call of the time error OB • Diagnostic buffer entry "Buffer overflow for OB6x events"	The synchronous cycle interrupt OB takes too long.	• Shorten the synchronous cycle interrupt OB. • Increase the DP cycle. • Reduce the delay time setting (setting with isochronous mode at synchronous cycle interrupt OB).
Error (negative RetVals) when updating the isochronous process image partition with SYNC_PI / SYNC_PO: • Consistency warning • Update time is after / before the permitted access window.	SYNC_PI / SYNC_PO are not called in the permitted access window in the synchronous cycle interrupt OB, which means they are called or processed during the I/O data transfer on PROFIBUS.	• Increase the delay time. • Increase the DP cycle. • Adapt the program.
Error when updating the isochronous process image partition with SYNC_PI / SYNC_PO: • Access error	DP slave / module does not respond / is not available.	

5.1.8 Parameter settings for isochronous mode

Parameter changes as task of the field service technician

The task of a field service technician is to maintain the production process.

In this context the technician has to detect, localize and eliminate errors and performance losses of isochronous mode.

All parameters which influence isochronous mode can be checked and configured using the "Isochronous mode" dialog box.

Parameters should only be changed by experienced users or service technicians.

5.1.8.1 Viewing isochronous mode parameters

"Isochronous mode" dialog box

1. Select "Properties > Isochronous mode" in the Inspector window.

   The "isochronous mode" dialog box opens with an overview of parameters which influence isochronous mode.
   Information on the individual parameters is available under "Detail overview".

2. Compare the values shown with the values in the documentation, or with the value specified by a technician.

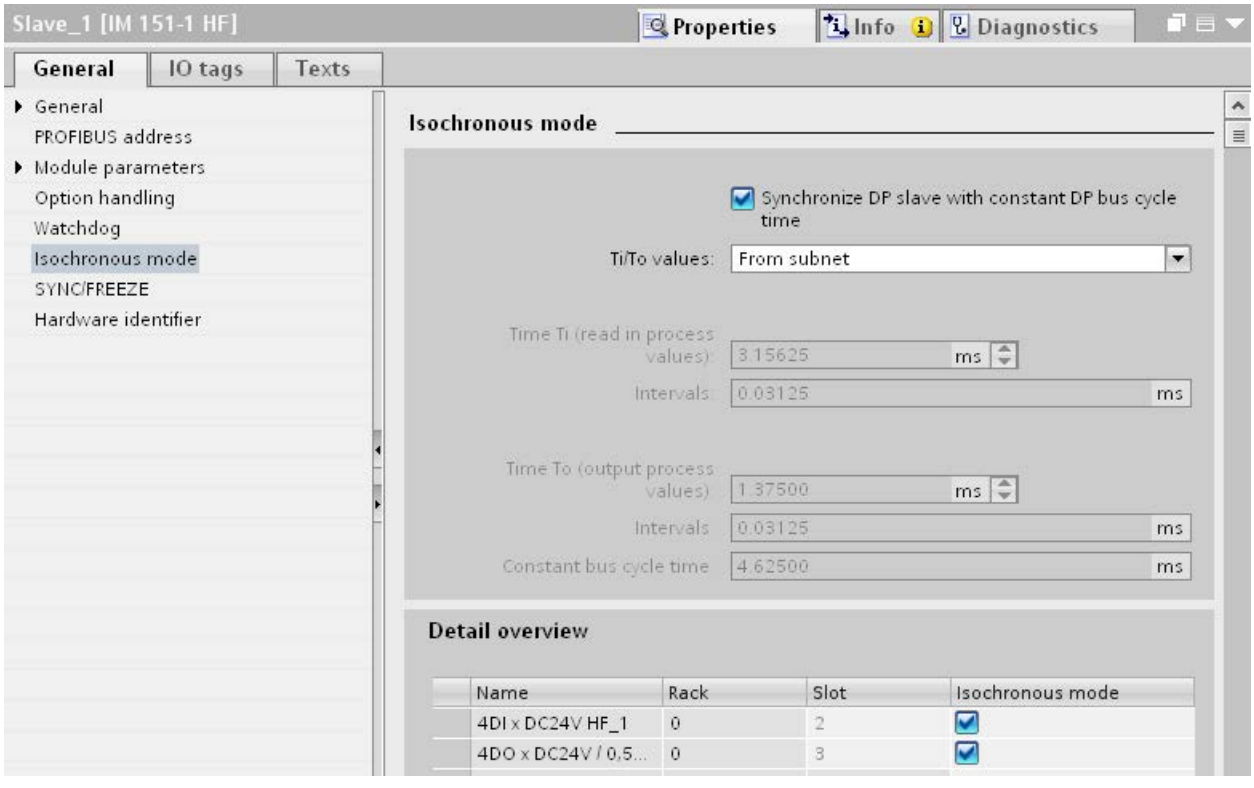

Figure 5-7 Viewing parameters for isochronous mode

5.1.8.2 Change parameters

Changing parameters for the DP master system

You can change the parameters for isochronous mode in the "Constant bus cycle time" dialog box.

1. Select the DP master system in the network view.
2. Select the section "Constant bus cycle time" in the Inspector window.
3. Change the parameters according to the received instructions.

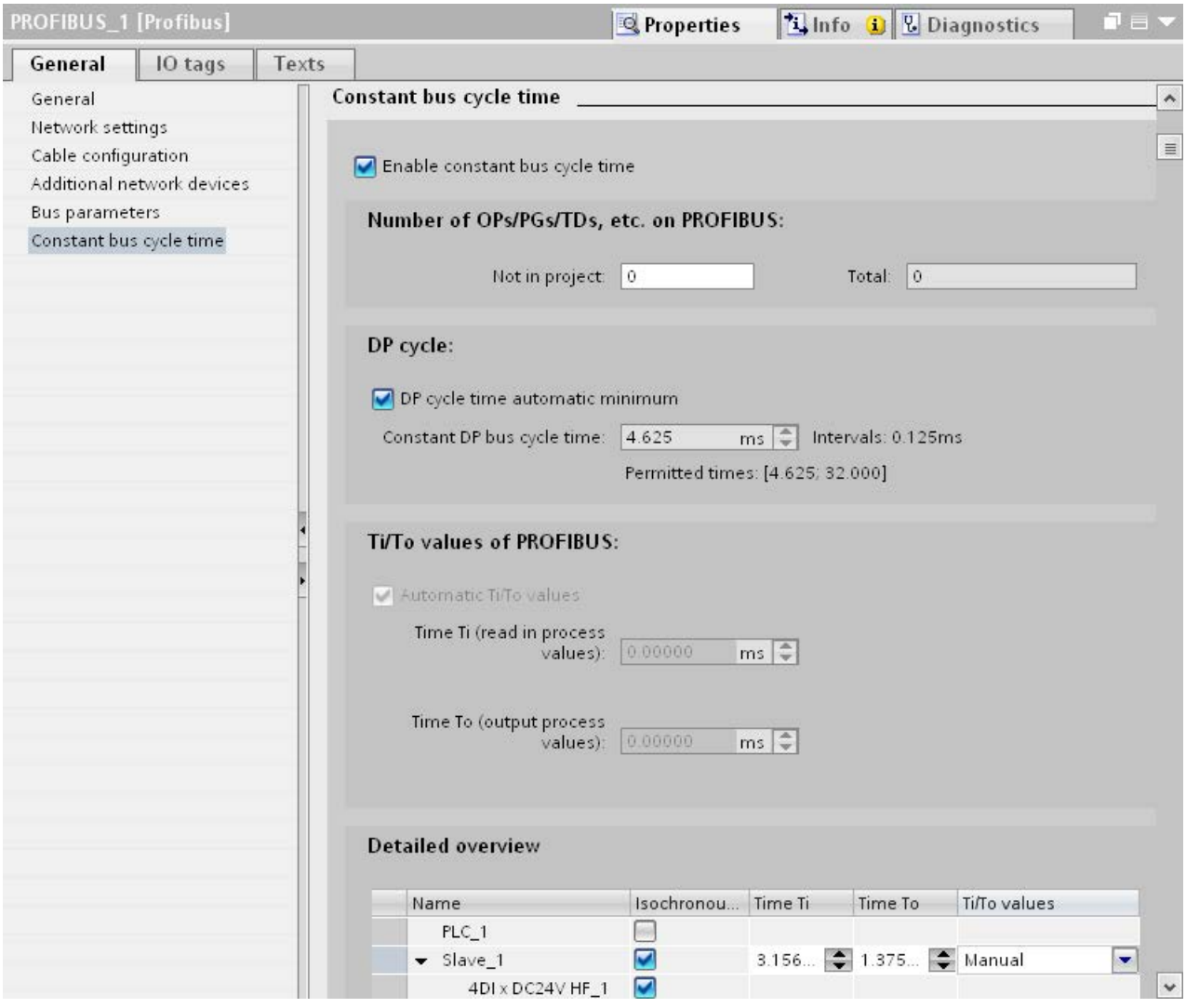

Figure 5-8 Changing parameters for the DP master system

Adapting the input delay

1. Select the input module in the device view.
2. Select the section "Inputs" in the Inspector window.
3. Adapt the input delay.

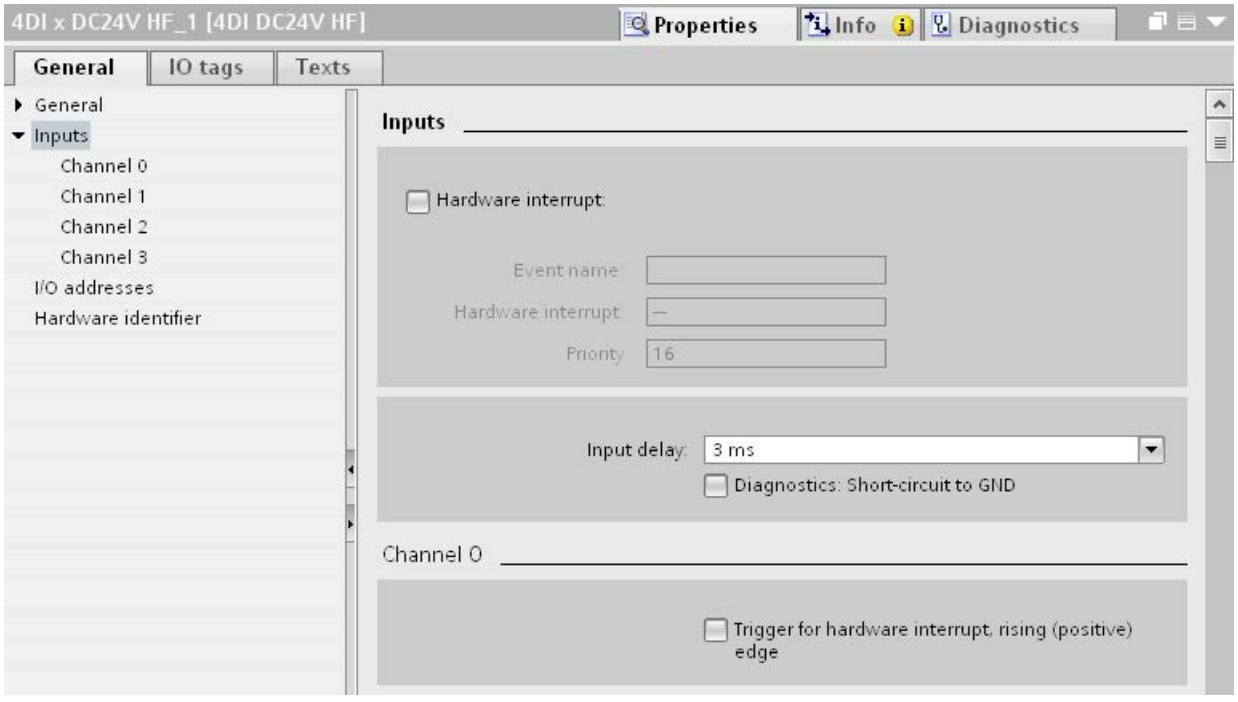

Figure 5-9 Adapting the input delay

Compile, load and save the changed configuration

1. Put the plant out of operation.
2. Select the CPU in the project navigator.
3. Select "Compile > Hardware" in the shortcut menu.
4. Select "Download to device" in the shortcut menu.
5. Save the project.

5.2 Acyclical data exchange

Additional functionality with DPV1 devices (DP master/DP slaves)

DP masters and DP slaves that support DPV1 have the following additional functions compared to the devices that support only DPV0:

- The acyclic data exchange between master and slave is supported.
- Interrupts can be set by a DPV1 slave which ensure handling of the interrupt-triggering event in the master CPU.

Acyclic data exchange

Read/write data record, for example, to change the parameters of a slave during operation. The data records of a module and the structure of these data records is available in the documentation for the respective module.

The table below contains the instructions with their functions for access to DPV1 slaves. Detailed information is available in the STEP 7 online help.

Table 5- 2 Instructions for access to DPV1 slaves

Instructions	Function (DPV1)
RDREC	Read data record
WRREC	Write data record
RALRM	Receive interrupt from a DP slave. (The instruction must be called in the OB that triggers the interrupt.)

5.3 SYNC/FREEZE groups

Assigning the SYNC/FREEZE group to the DP slave

A DP master with the corresponding functionality can send the control commands SYNC and/or FREEZE for synchronization of the DP slaves simultaneously to a group of DP slaves. You must assign SYNC/FREEZE groups to the DP slaves for this purpose.

Requirement: A DP master system has been created in the project.

Procedure

To assign a DP slave to a SYNC/FREEZE group, follow these steps:

1. Select the DP interface of the DP slave you want to assign to a group in the device view or network view.
2. Select the check boxes for the required SYNC/FREEZE groups under the group "SYNC/FREEZE" in the Inspector window.

   You can assign each DP slave to only one SYNC/FREEZE group.

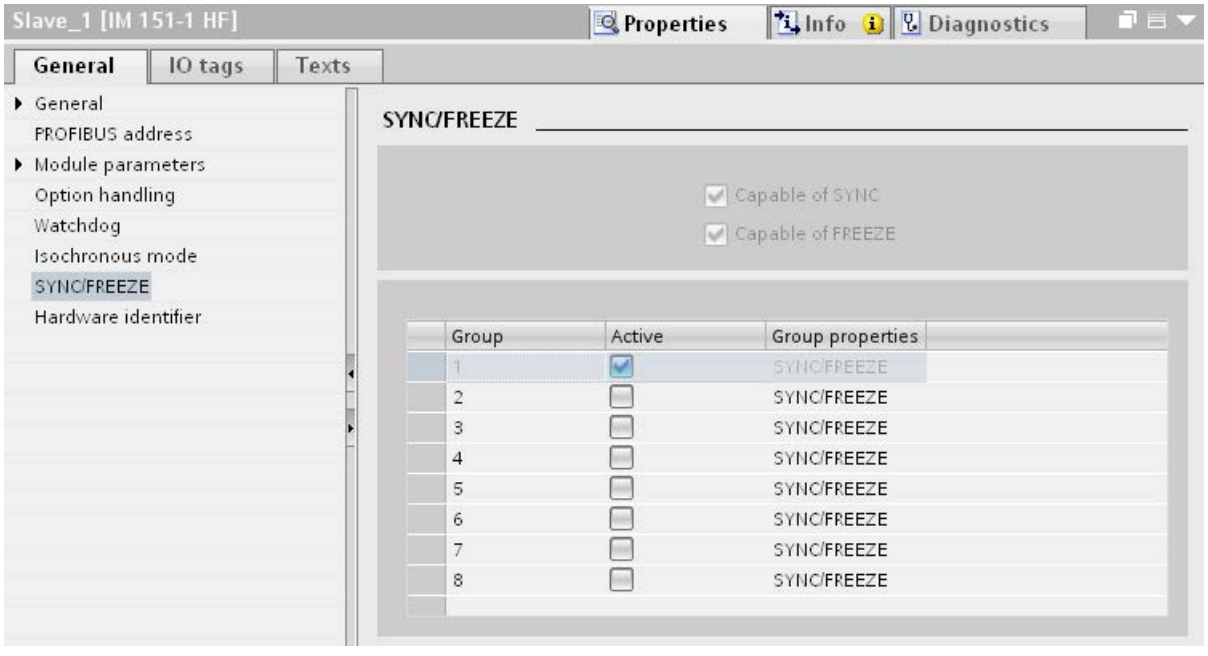

Figure 5-10 Assigning the DP slave to a SYNC/FREEZE group

Important information on the control commands SYNC and FREEZE

You can use the control commands SYNC and FREEZE in the DP master to synchronize the DP slaves event-controlled. The DP master sends the control commands simultaneously to a group of DP slaves in its master system. It does not take into consideration DP slaves that have failed or are currently sending diagnostic information.

Requirement for synchronization using control commands is that you have assigned the DP slaves to SYNC/FREEZE groups.

For a S7 CPU use the instruction DPSYC_FR (SFC 11) to synchronize the DP slaves.

When you select the DP master, you see a list of the eight SYNC/FREEZE groups under "Properties > DP interface > SYNC/FREEZE" in the Inspector window.

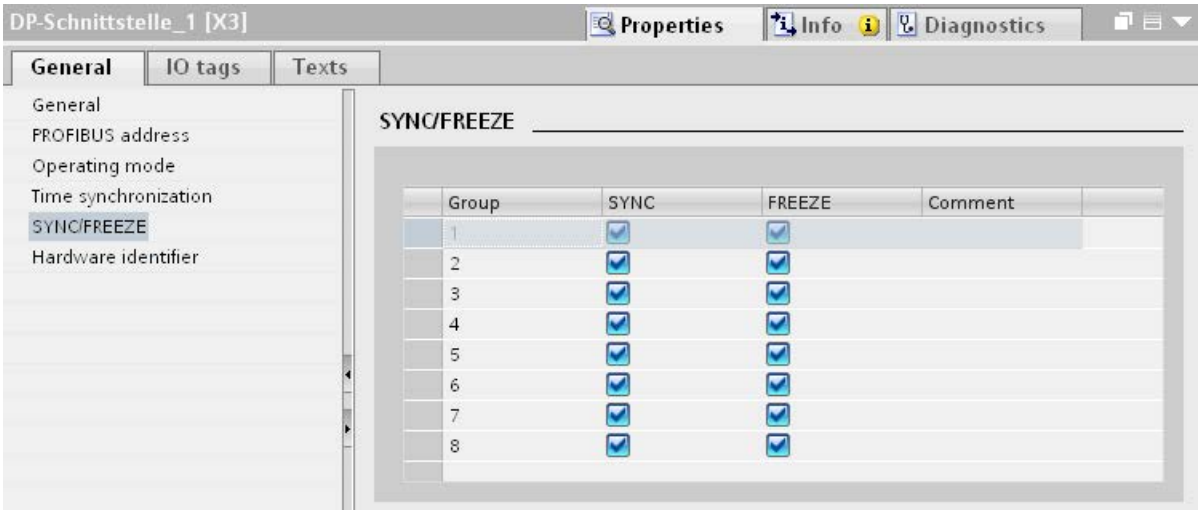

Figure 5-11 SYNC/FREEZE groups on DP master

SYNC control command

The DP master uses the SYNC control command to cause a group of DP slaves to freeze the states of their outputs to the current value.

The DP slaves save the output data of the DP master for the following frames. But the states of the DP slave outputs remain unchanged.

Only after each new SYNC control command does the DP slave set its outputs to the values that it has saved as the output data of the DP master.

The outputs are not updated cyclically again until the DP master has sent a UNSYNC control command.

FREEZE control command

After receiving the FREEZE control command from the DP master, the DP slaves of a group freeze the current status of their inputs. The DP slaves send these frozen input data to the DP master with the following cyclical frames.

The DP slaves freeze the current state of their inputs again after each new FREEZE control command.

The state of the DP slave inputs is only send to the DP master cyclically again when the DP master sends the UNFREEZE control command.

5.4 Interrupts

Interrupts and interrupt OBs for DPV1

Interrupts can be set by a DPV1 slave which ensure handling of the interrupt-triggering event in the master CPU. The interrupt data is evaluated in the CPU and the diagnostics buffer and the module state are updated even in the "STOP" operating mode. The OB is not processed in STOP.

The following DPV1 interrupts are supported:

- Status interrupt
- Update interrupt
- Vendor-specific interrupt

Detailed information is available in the descriptions on the OBs. You can use the corresponding OBs that are provided by the operating system of the S7 CPUs for diagnostic interrupts, hardware interrupts, and pull/plug interrupts.

OB 55 interrupt - Status interrupt

The status interrupt can be triggered when the operating mode of a device or module changes, for example, from RUN to STOP.

OB 56 interrupt - Update interrupt

An update interrupt can be triggered if the parameters of a slot were changed. This may be caused by local access or partner access to the parameters.

OB 57 interrupt - Vendor-specific interrupt

The event that triggers the vendor-specific interrupt can be specified by the manufacturer of a DPV1 slave.

Additional information

A detailed description of the events at which interrupts are triggered is available in the documentation of the respective manufacturer of the DPV1 slave.

5.5 Intelligent DP slaves (I-slaves)

5.5.1 I-slave functionality

I-slave functionality

The "I-slave" (intelligent DP slave) functionality of a CPU supports the exchange of data with a DP master and thus allows the CPU to be used, for example, as intelligent preprocessing unit of subprocesses. The I-slave is connected in its role as DP slave to a "higher-level" DP master.

The preprocessing is handled by the user program in the I-slave. The process values acquired by the I/O modules are preprocessed by the user program and made available to the DP master.

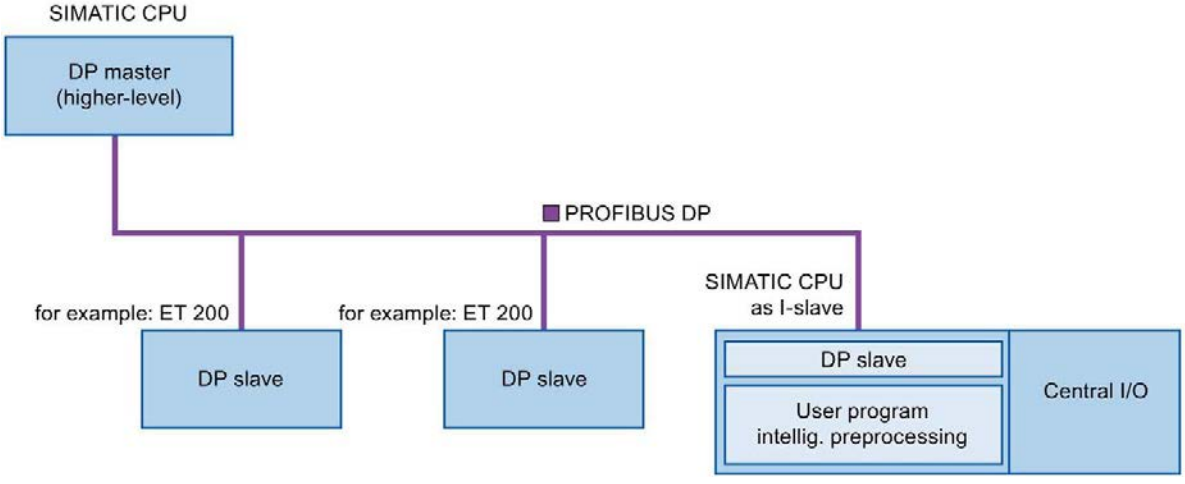

Figure 5-12 I-slave functionality

"I-slave" naming convention

In the remainder of this description, a CPU or a CP with I-slave functionality is simply called an "I-slave".

Advantages of configurations with I-slaves

The I-slave offers the following advantages:

- Simple coupling of CPUs with PROFIBUS interface
- Real-time communication between CPUs and PROFIBUS interface
- Distributed processing

  A complex automation task can be divided into smaller units/subprocesses. This results in manageable processes which lead to simplified subtasks.
- Relieving the DP master by distributing the computing capacity to I-devices
- Lower communication load by processing process data locally
- Separating subprocesses

  Complicated, widely distributed and extensive processes can be subdivided into several subprocesses with manageable interfaces by using I-slaves. These subprocesses can be stored in individual STEP 7 projects if necessary, which can later be merged to form one master project.
- Separating STEP 7 projects

  Creators and users of an I-device can have completely separated STEP 7 projects. The GSD file together with the configuration of the transfer areas of the I-slave form the interface between the STEP 7 projects. This allows coupling to standard DP masters via a standardized interface.
- Know-how protection

  Plant units can now only be delivered with a GSD file and the configuration of the transfer areas instead of with a STEP 7 project for the I-slave interface description. This means that you no longer have to disclose the user program know-how.

Difference: DP slave - I-slave

In the case of a DP slave, the DP master accesses the distributed inputs/outputs directly.

In the case of an I-slave, the DP master accesses a transfer area in the I/O address space of the preprocessing CPU instead of accessing the connected inputs/outputs of the I-slave. The user program running on the preprocessing CPU is responsible for ensuring data exchange between the operand area and inputs/outputs.

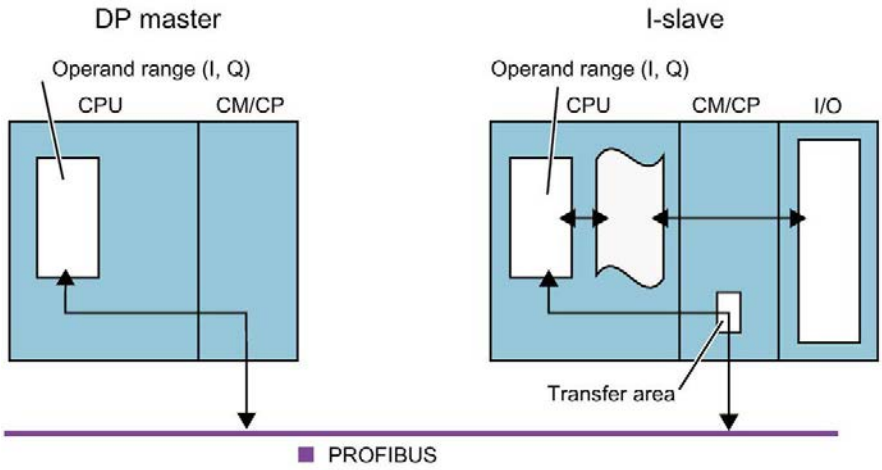

Figure 5-13 Data access to an I-slave

Note

DP master or DP slave

Note: The communication modules of the S7-1500 CPUs/ET 200SP CPUs, for example the CP 1542-5, support the operation as DP master or DP slave only as alternative.

Note

The I/O areas configured for data exchange between the DP master and DP slaves must not be used by I/O modules.

5.5.2 Data exchange with higher-level DP master

Introduction

The following section describes the data exchange between the I-slave and the higher-level DP master.

Transfer areas

Transfer areas are an interface to the user program of the I-slave CPU. Inputs are processed in the user program and outputs are the result of the processing in the user program.

The data for communication between DP master and I-slave is made available in the transfer areas. A transfer area contains an information unit that is exchanged consistently, in terms of bytes, words or overall, between DP master and I-slave. You can find more information on configuration and use of transfer areas in the section Configuring transfer areas (Page 84).

The following figure shows the data exchange between the I-slave and the higher-level DP master. The individual communication relations are explained below based on the numbers.

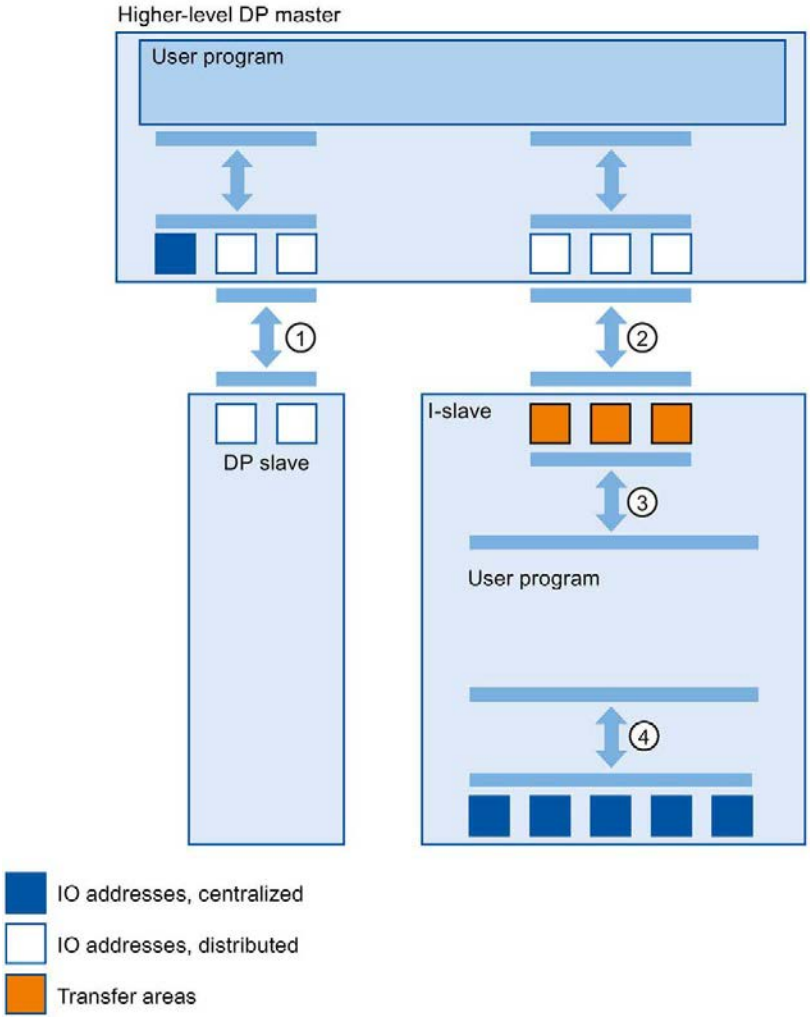

Figure 5-14 Data exchange with the DP master

① Data exchange between higher-level DP master and normal DP slave

In this way, the DP master and the DP slave exchange data through PROFIBUS.

② Data exchange between higher-level DP master and I-slave

In this way, the DP master and the slave exchange data through PROFIBUS.

The data exchange between a higher-level DP master and an I-slave is based on the conventional DP master/DP slave relationship.

For the higher-level DP master, the transfer areas of the I-slave represent submodules of a DP slave.

The output data of the DP master is the input data of the I-slave. Analogously, the input data of the DP master is the output data of the I-slave.

③ Transfer relationship between the user program and the transfer area

In this way, the user program and the transfer area exchange input and output data.

④ Data exchange between the user program and the I/O of the I-slave

In this way, the user program and the centralized I/O of the I-slave exchange input and output data.

5.5.3 Configuring an I-slave

Requirements for configuring an I-slave

The I-slave consists of:

- A CPU from S7-1500 and a communications module CM 1542-5/CP 1542-5 (STEP 7 as of V12)
- A CPU from ET 200SP and a communications module CM DP (STEP 7 as of V13 SP1)

Procedure for configuring an I-slave

This section shows how to configure an I-slave in STEP 7 based on the example of a CPU 1512SP-1 PN. The procedure for the CPUs from S7-1500 with CM 1542-5/CP 1542-5 and for the CPU 1510SP-1 PN with CM DP is the same.

To configure an I-slave, follow these steps:

1. Drag a CPU 1512SP-1 PN from the hardware catalog to the network view.
2. Open the device view of the CPU.
3. Double-click on the CM DP communications module in the hardware catalog.
   STEP 7 creates the CM DP in the device view.
4. Select the PROFIBUS interface of the CM DP communications module.
5. In the Inspector window in the area navigation, select the "Operating mode" entry and enable the "DP slave" check box.
6. Now you can select the DP master in the "Assigned DP Master" drop-down list.

   Once you have selected the DP master, the networking and the DP master system between both devices are displayed in the network view.

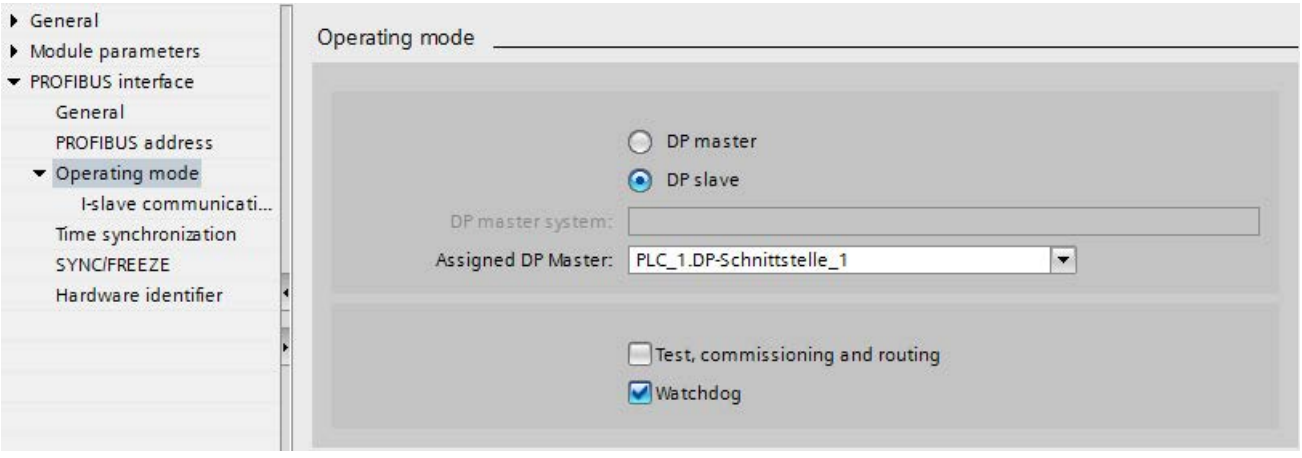

Figure 5-15 Configuring an I-slave

Note

Operation using a GSD file

If you operate an I-slave using a GSD file, you should not select the "Test, commissioning and routing" check box.

Create a DP subnet on the PROFIBUS interface of the I-slave.

Result

You have configured an I-slave.

5.5.4 Configuring transfer areas

Requirements for configuring transfer areas

- You have configured an I-slave in STEP 7.
- You are in the device view of the I-device and have selected the PROFIBUS interface of the communications module.

Procedure for configuring transfer areas

To configure transfer areas for an I-slave in STEP 7, follow these steps:

1. In the area navigation, go to the section "Operating mode" > "I-slave communication" > "Transfer areas".
2. Create transfer areas. Set the properties of the created transfer areas.

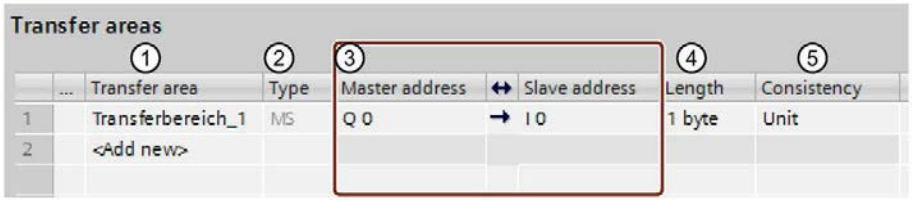

① Click in the first cell of the "Transfer area" column. STEP 7 assigns a default name that you can change.

② Select the type of communication relation: Currently, you can only select MS for "master-slave communication relation".

③ STEP 7 assigns the addresses for the transfer area automatically. Correct the addresses if necessary.

④ Set the length of the transfer area. Specify the length of the transfer area in the cell in the following format: [1...64] Byte/Word.
Examples: "32 Byte", "64 Word"

⑤ Specify whether the transfer area is exchanged in units of bytes or words or consistently over the entire length between the DP master and I-slave.

Figure 5-16 Configuring transfer areas

A separate entry is created in the area navigation for each transfer area. If you select one of these entries, you can adjust the details of the transfer area, or correct them and comment on them.

5.5.5 Sample program

Introduction

This simple sample program shows how you use the transfer areas of an I-slave.

Requirement

You have configured an I-slave.

Task

The result of an "AND logic operation" of two inputs (preprocessing) in the I-slave is to be provided to the higher-level DP master. This result is to be assigned to a local output in the DP master (further processing).
Use a transfer area with the following addresses for this purpose:

- Address in the I-slave: Q568
- Address in the DP master: I68

Required steps

The following steps are necessary to solve the task:

1. Configuring the transfer area
2. Programming the I-slave
3. Programming the DP master

Configuring the transfer area

Configure a transfer area with the following properties in the I-slave:

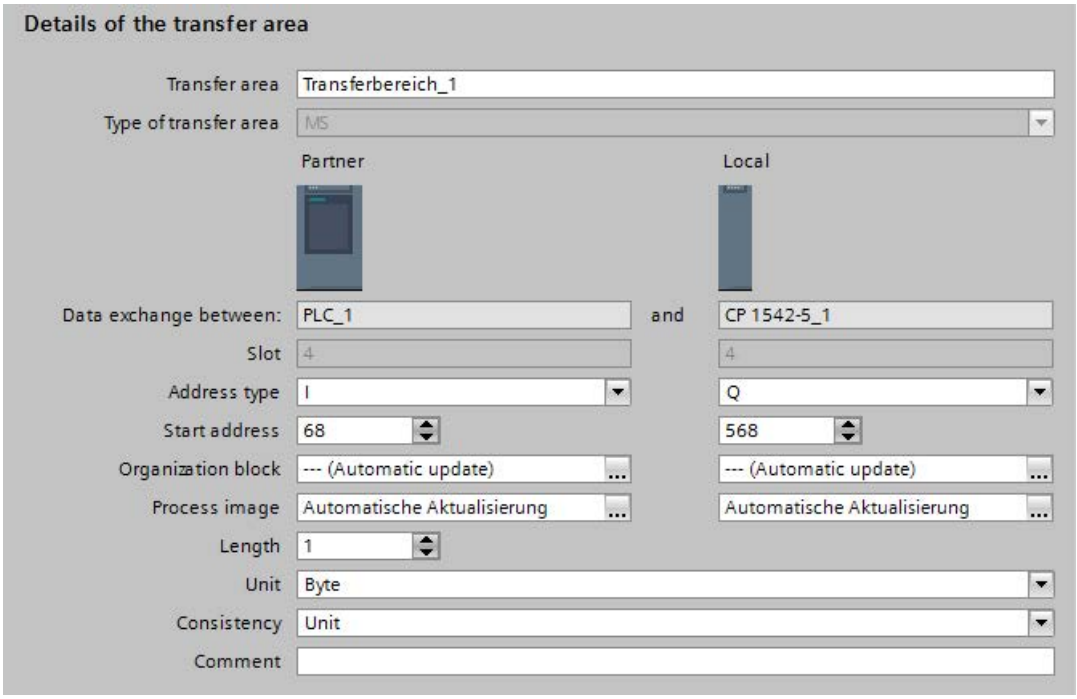

Figure 5-17 Transfer area, I-slave sample program

Programming the I-slave

To program the sample program for the I-slave, follow these steps:

1. Using the SCL programming language, create a new function with the name "preprocessing" in the project tree under "Program blocks" > "Add new block". Open the function.
2. In the interface of the function "preprocessing", create the following tags:

Name	Data type	Input/output type
input 1	bool	Input
input 2	bool	Input
result	bool	Output

3. In the instruction window of the function "preprocessing", write the following program code:
   #result:=#input 1&#input 2;
4. Call the function "preprocessing" in a cycle OB, for example, in OB1.
5. Wire the function "preprocessing" in the cycle OB as follows:

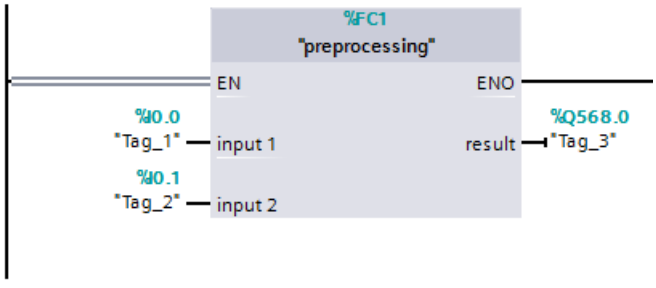

Figure 5-18 I-slave sample program

Programming the DP master

To program the sample program for the DP master, follow these steps:

1. Using the SCL programming language, create a new function with the name "further processing" in the project tree under "Program blocks" > "Add new block". Open the function.
2. In the interface of the function "further processing", create the following tags:

Name	Data type	Input/output type
result	bool	Input
output	bool	Output

3. In the instruction window of the function "further processing", write the following program code:
   #output:=#result;
4. Call the function "further processing" in a cycle OB, for example, in OB1.
5. Wire the function "further processing" in the cycle OB as follows:

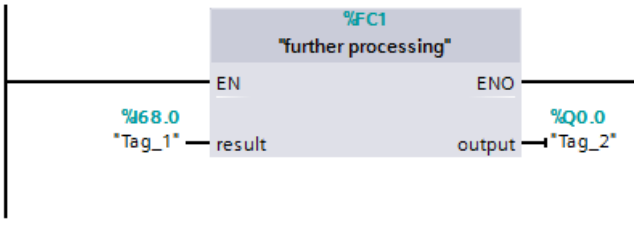

Figure 5-19 DP master sample program

Result

You mastered the task successfully.

5.5.6 Diagnostics and interrupt behavior

Diagnostics and interrupt behavior

S7 CPUs have numerous diagnostics and interrupt functions that can, for example, report errors/faults or failures of underlying DP systems. These diagnostics alarms reduce downtimes and simplify localization and elimination of problems.

Diagnostics options in the higher-level DP master and in the I-slave

The following diagnostics mechanisms are available to the higher-level DP master and the I-slave:

- OB 82 (diagnostic interrupt)

  When the I-slave changes mode, the DP master calls OB 82 (diagnostic interrupt).

  When the DP master changes mode, the I-slave calls OB 82 (diagnostic interrupt).

- OB 86 (rack failure)

  If the bus connection to the I-slave is interrupted, the DP master calls OB 86 (rack failure).

  If the bus connection to the DP master is interrupted, the I-slave calls OB 86 (rack failure).

- OB 122 (I/O access error)

  If you have not set the attribute "Handle errors within block" for OB 122, the following applies:

  – If the bus connection to the I-slave is interrupted, the DP master calls OB 122 (I/O access error) if there is direct access to the relevant transfer areas.

  – If the bus connection to the DP master is interrupted, the I-slave calls OB 122 (I/O access error) if there is direct access to the relevant transfer areas.

Reaction of the transfer areas to mode changes

Table 5- 3 Reaction of the transfer areas to mode changes

DP master	I-slave	Reaction of DP master input transfer areas	Reaction of I-slave input transfer areas
RUN→STOP	RUN	No updating of the process image	The input transfer areas retain their current values. (no access error)
STOP→RUN	RUN	The input transfer areas are updated by the cyclic user program via the process image.	The input transfer areas are updated via the process image.
RUN	RUN→STOP	The I-slave sets the input transfer areas on the DP master to "0".	No updating of the process image
RUN	STOP→RUN	The I-slave sets the input transfer areas on the DP master to "0". After the startup program of the I-slave, the input transfer areas of the DP master are updated via the process image.	Prior to processing of the startup program, the input transfer areas are updated via the process image.

Service & Support

A

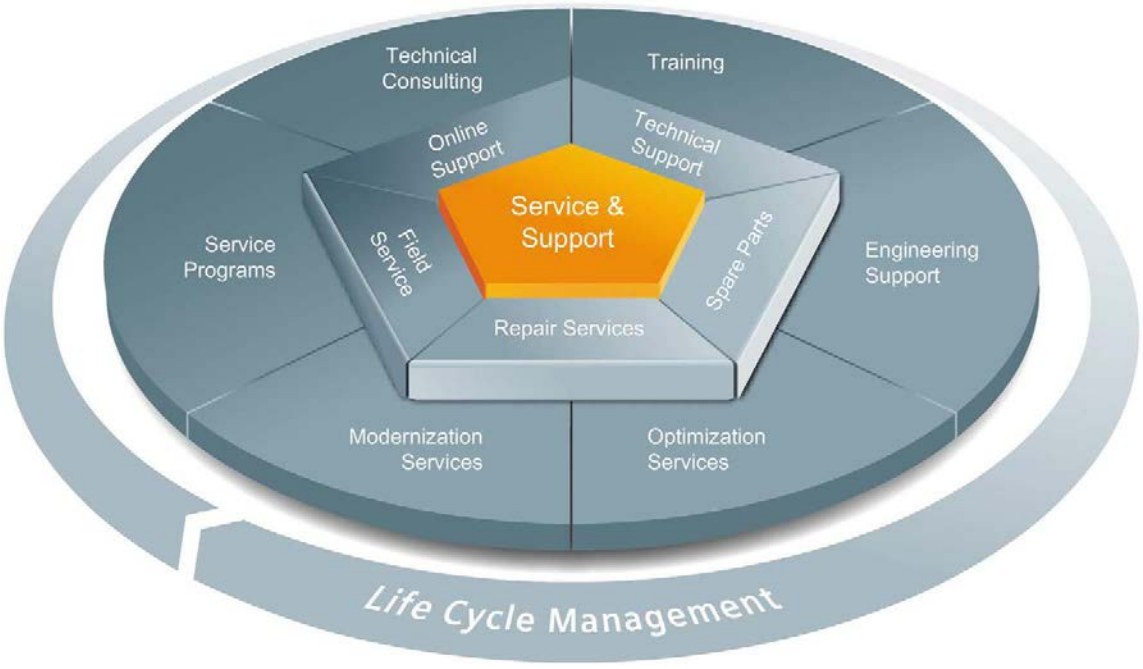

The unmatched complete service for the entire life cycle

For machine constructors, solution providers and plant operators: The service offering from Siemens Industry Automation and Drive Technologies includes comprehensive services for a wide range of different users in all sectors of the manufacturing and process industry.

To accompany our products and systems, we offer integrated and structured services that provide valuable support in every phase of the life cycle of your machine or plant – from planning and implementation through commissioning as far as maintenance and modernization.

Our Service & Support accompanies you worldwide in all matters concerning automation and drive technology from Siemens. We provide direct on-site support in more than 100 countries through all phases of the life cycle of your machines and plants.

You have an experienced team of specialists at your side to provide active support and bundled know-how. Regular training courses and intensive contact among our employees – even across continents – ensure reliable service in the most diverse areas.

Online Support

The comprehensive online information platform supports you in all aspects of our Service & Support at any time and from any location in the world.

You can find Online Support on the Internet at the following address: Internet (http://www.siemens.com/automation/service&support).

Technical Consulting

Support in planning and designing your project: From detailed actual-state analysis, definition of the goal and consultation on product and system questions right through to the creation of the automation solution.

Technical Support

Expert advice on technical questions with a wide range of demand-optimized services for all our products and systems.

You can find Technical Support on the Internet at the following address: Internet (http://www.siemens.com/automation/support-request).

Training

Extend your competitive edge – through practical know-how directly from the manufacturer.

You can find the training courses we offer on the Internet at the following address: Internet (http://www.siemens.com/sitrain).

Engineering Support

Support during project engineering and development with services fine-tuned to your requirements, from configuration through to implementation of an automation project.

Field Service

Our Field Service offers you services for commissioning and maintenance – to ensure that your machines and plants are always available.

Spare parts

In every sector worldwide, plants and systems are required to operate with constantly increasing reliability. We will provide you with the support you need to prevent a standstill from occurring in the first place: with a worldwide network and optimum logistics chains.

Repairs

Downtimes cause problems in the plant as well as unnecessary costs. We can help you to reduce both to a minimum – with our worldwide repair facilities.

Optimization

During the service life of machines and plants, there is often a great potential for increasing productivity or reducing costs.

To help you achieve this potential, we are offering a complete range of optimization services.

Modernization

You can also rely on our support when it comes to modernization – with comprehensive services from the planning phase all the way to commissioning.

Service programs

Our service programs are selected service packages for an automation and drives system or product group. The individual services are coordinated with each other to ensure smooth coverage of the entire life cycle and support optimum use of your products and systems.

The services of a Service Program can be flexibly adapted at any time and used separately.

Examples of service programs:

- Service contracts
- Plant IT Security Services
- Life Cycle Services for Drive Engineering
- SIMATIC PCS 7 Life Cycle Services
- SINUMERIK Manufacturing Excellence
- SIMATIC Remote Support Services

Advantages at a glance:

- Reduced downtimes for increased productivity
- Optimized maintenance costs due to a tailored scope of services
- Costs that can be calculated and therefore planned
- Service reliability due to guaranteed response times and spare part delivery times
- Customer service personnel will be supported and relieved of additional tasks
- Complete service from one source: fewer interfaces and more know-how

Contact

At your service locally, around the globe: your partner for consultation, sales, training, service, support, spare parts... for the entire range of products supplied by Industry Automation and Drive Technologies.

You can find your personal contact in our contacts database at: Internet (http://www.siemens.com/automation/partner).

Glossary

Automation system

Programmable logic controller for the open-loop and closed-loop control of process chains of the process engineering industry and manufacturing technology. The automation system consists of different components and integrated system functions according to the automation task.

Bus

A common transfer route to which all nodes are connected; it has two defined ends.

In the case of PROFIBUS, the bus is a two-wire line or a fiber-optic cable.

Bus connector

Physical connection between the node and bus cable.

Bus system

All stations physically connected to a bus cable form a bus system.

Device

In the PROFIBUS environment, "device" is the generic term for:

- Automation systems (for example, PLC, PC)
- Distributed I/O systems
- Field devices (for example, hydraulic devices, pneumatic devices)
- Active network components
- Gateways to AS interface or other fieldbus systems

Device that can send, receive or amplify data via the bus, for example, a DP slave by means of PROFIBUS DP.

Device

In the PROFIBUS environment, "device" is the generic term for:

- Automation systems (for example, PLC, PC)
- Distributed I/O systems
- Field devices (for example, hydraulic devices, pneumatic devices)
- Active network components
- Gateways to AS interface or other fieldbus systems

Device that can send, receive or amplify data via the bus, for example, a DP slave by means of PROFIBUS DP.

Diagnostics

Monitoring functions for the recognition, localization, classification, display and further evaluation of errors, faults and alarms. They run automatically during plant operation. This increases the availability of systems/plants by reducing commissioning times and downtimes.

DP master

CPU or device that conducts the communication with the DP slaves according to a defined algorithm. To do this, the DP master uses the functions for communication with the DP slaves which are defined by PROFIBUS DP. It acts according to standard EN 50170, Part 3.

→ *Master*

DP slave

Slave in the distributed I/O that is operated on the PROFIBUS with PROFIBUS DP protocol and acts according to standard EN 50170, Part 3. The DP slave is addressed by the DP master and provides it with specified functions (I/O data, diagnostics, etc.).

→ *Slave*

DPV1

The designation DPV1 refers to the functional extension of acyclic services (to include new interrupts, for example) provided by the DP protocol. The DPV1 functionality is integrated in IEC 61158/EN 50170, Volume 2, PROFIBUS.

FDL

Fieldbus Data Link (bus access protocol). Step 2 with PROFIBUS.

HMI device

Human Machine Interface, device for visualization and control of automation processes.

HSA

Highest Station Address. A bus parameter for PROFIBUS. Outputs the highest PROFIBUS address of an active device. PROFIBUS addresses greater than HSA are permitted for passive devices, up to 126.

Industrial Ethernet

Guideline for setting up Ethernet in an industrial environment. The main difference to the standard Ethernet is the mechanical current carrying capacity and interference immunity of the individual components.

I-slave

The "I-slave" functionality of a CPU supports the exchange of data with a DP master and can thus be used, for example, as intelligent preprocessing unit of partial processes. The I-slave is connected in its role as DP slave to a "higher-level" DP master.

Master

A master device that is in possession of the token can send data to other devices and request data from them (= active device).

PCF

Polymer Cladded Fiber (plastic-covered glass fiber)

POF

Polymer Optical Fiber (plastic fiber-optic cable made of light-conducting plastics)

Process image

Address area in the system memory of the DP master. At the start of the cyclic program the signal states of the input modules are transmitted to the process image of the inputs. And the end of cyclic program execution, the process image of the outputs is transmitted to the DP slave as signal state.

PROFIBUS

PROcess FIeld BUS, in IEC 61158-2 as "Type 3" standardized, bit-serial fieldbus system. The standard specifies functional, electrical and mechanical properties.

PROFIBUS is a bus system that networks automation systems and field devices compatible with PROFIBUS at the cell and field level. PROFIBUS is available with the protocols DP (= distributed I/O), FMS (= fieldbus message specification) or PA (process automation).

PROFIBUS address

Unique identification of a device connected to PROFIBUS. The PROFIBUS address is transmitted in the frame for addressing a device. A PC or programming device has the PROFIBUS address "0". DP masters and DP slaves have a PROFIBUS address in the range from 1 to 125.

PROFIBUS device

A PROFIBUS device has at least one PROFIBUS interface with an electrical (RS 485) or optical (Polymer Optical Fiber, POF) interface.

PROFIBUS DP

A PROFIBUS with DP protocol that complies with EN 50170. DP stands for distributed I/O (fast, real-time capable, cyclic data exchange). From the perspective of the user program, the distributed I/Os are addressed in exactly the same way as the centralized I/Os.

PROFINET

Open component-based industrial communication system based on Ethernet for distributed automation systems. Communication technology promoted by the PROFIBUS Users Organization.

RS 485

Asynchronous data transmission process for PROFIBUS DP to ANSI TIA/EIA-RS485-A.

RS 485 repeater

Equipment for amplifying bus signals and for coupling segments over long distances.

Segment

The bus line between two terminating resistors forms a bus segment.

A bus segment can contain up to 32 bus nodes. Segments can be coupled, for example, by means of RS 485 repeaters or diagnostics repeaters.

Slave

Distributed device in a fieldbus system that may exchange data with a master after being requested to do so by the master. Slaves are all DP slaves, for example, such asET 200SP, ET 200MP, ET 200AL.

Standard mounting rail

Standardized metal profile to EN 50022.

The standard mounting rail is used for quick snap-on installation of network components, such as OLM, repeaters, etc.

Subnet

Part of a network whose parameters must be synchronized with the devices (e.g., with PROFIBUS). A subnet includes the bus components and all connected stations.

SynchronousCycle

Name for synchronous cycle interrupt OB in STEP 7.

Target-Rotation-Time (Ttr)

Bus parameter for PROFIBUS. The token is the send permission for a device on PROFIBUS. A device compares a token rotation time it has measured with the Target-Rotation-Time and controls the sending of frames with high priority or low priority based on this comparison.

Terminating resistor

Component that terminates the ends of a data transmission line to prevent reflections in the transmission medium.

Terminator

Terminating resistor of bus segments with transmission rates of 9.6 kbps to 12 Mbps. The power supply is separate from the bus nodes.

TIA Portal

Totally Integrated Automation Portal

Topology

Structure of a network. Common structures are line topology, ring topology, star topology and tree topology.

Transmission rate

Specifies the number of bits transmitted per second.

Watchdog

Mechanism for monitoring the readiness for operation.

Index

A

Acyclic data exchange, 74
Address assignment, 45
Addressing, 42

B

Bus connector
    IP20, 22
    M12 with IP65, 24
Bus parameters
    Adapting, 50
    Description, 52
    Value ranges, 54
Bus profile, user-defined, 54
Bus terminal
    M12, 24
    RS 485, 24

C

Cable configuration, 49
Cables, 19
Calculate bus times, 51
CANopen module, 30
Communication
    I/O communication, 14
Communication load, 51
Components, (See network components)
Configuration, 42
Configuring isochronous mode, 68
    Basic procedure, 67
    DP slave, 68
    Requirements, 66
    Updating the process image partition, 69
Connecting PROFIBUS DP with PROFINET IO, 41
Constant bus cycle time, 55

D

Data exchange between IO systems, 81
Diagnostic repeater
    Cascade depth, 37
    Diagnostics, 60
    Topology, 37
Diagnostics, 57
    Display alarms, 58
    I-slave, 89
    Isochronous mode, errors and remedies, 70
Diagnostics repeater
    Description, 29
Display, diagnostic messages, 58
DP master
    Operated as, 80
DP slave, 43
    Operated as, 80
DP/AS-i F-Link, 31
DP/AS-i LINK Advanced, 31
DP/AS-Interface Link 20E, 31
DP/DP coupler, 30
DP/PA bus link, 31

E

Example of isochronous mode, 64

F

FastConnect system, 20
Fiber-optic, 27
Fiber-optic cables, 25
    Glass, 27
    Optical ring, 49
    PCF, 26
    Plastic, 26

G

GAP factor, 54

H

Hardware
    Configuring, 42
    Parameter assignment, 42

I

I/O addresses, 69
I/O communication, 14
Identification and maintenance data (I&M data), 61
IE/PB Link PN, 30
Increasing DP cycle time, 56
Installation, 17
    Active network components, 29
    Bus connection, 22
    Cables, 19
    FastConnect, 20
    Topology, 35
Interrupt OBs, 77
Interrupts
    DPV1, 77
    Isochronous mode, 70
IO system
    Data exchange, 81
I-slave (intelligent DP slave)
    Diagnostics, 89
    Interrupt behavior, 89
Isochronous mode
    Change parameters, 71
    Description, 62
    Diagnostics, 70
    Dialog box for isochronous mode, 71
    Example, 64
    Interrupts, 70
    Sequence, in principle, 65
IWLAN/PB Link PN IO, 30, 40

M

M12
    Bus connector, 24
    Bus terminating resistor, 24
M12 bus terminating resistor, 24
Maximum cable lengths
    Maximum cable lengths, 20

N

Network, 18
    electrical, conducted, 29
    Optical, 33
    optical, electrical, 18
    Selection criteria, 18
    Topology, 35
Network components
    Bus connections, 20
    CANopen module, 30
    Diagnostics repeater, 29
    DP/AS-i F-Link, 31
    DP/AS-i LINK Advanced, 31
    DP/AS-Interface Link 20E, 31
    DP/DP coupler, 30
    Fiber-optic cables, 25
    IE/PB Link PN, 30
    IWLAN/PB Link PN IO, 30
    OBT, Optical Bus Terminal, 33
    OLM, Optical Link Module, 33
    PROFIBUS terminator, 30
    RS 485 cables, 19
    RS485, 29
Network settings, 46

O

Optical Bus Terminal, OBT, 33
Optical Link Module, OLM
    Description, 33
    Topology, 40
Optical ring, 49, 50

P

Parameter assignment, 42
Process image partition, 69
PROFIBUS
    Address, 45
    Devices, 12
    Installation, 17
    PROFIBUS DP, 11
    Protocols, 10
    RS 485 cables, 19
PROFIBUS address, 45
    Change, 45
    HSA, 46
PROFIBUS DP
    Applications, 11
    Assigning the DP slave, 43
    Connecting with PROFINET, 41
    Definition, 10
    Devices and designations, 13
    Interface, 16
PROFIBUS DP interface
    Properties, 16
    Representation in STEP 7, 16
PROFIBUS terminator, 30
Profiles for network settings
    DP, Standard, 46
    User-defined, 48

PROFINET Proxy functionality, 41
Programming isochronous mode, 70

R

Retry limit, 50, 54
RS 485 cables, 20
RS485 repeater
    Description, 29
    Topology, 35

S

Slot time, 50, 54
SYNC/FREEZE, 75
Synchronization, sequence, 65
Synchronous cycle interrupt, 69
Synchronous cycle interrupt OB,
SynchronousCycle, 70
SynchronousCycle, synchronous cycle interrupt OB, 70

T

Target Rotation Time, 54
Topology
    Connecting PROFIBUS DP with PROFINET, 41
    OLM, 40
    RS485 repeater, 35
    WLAN, 40

SIEMENS

SIMATIC

S7-1500, ET 200MP, ET 200SP

CM PtP - Configurations for point-to-point connections

Function manual

Edition 05/2021

siemens.com

SIEMENS

SIMATIC

S7-1500 / ET 200MP / ET 200SP CM PtP - Configurations for point-to-point connections

Function Manual

Preface

Guide to documentation 1

Introduction 2

Basics of serial communication 3

Configuring / parameter assignment 4

Programming - communication using instructions 5

Startup and Diagnostics 6

05/2021

A5E37509394-AE

Legal information

Warning notice system

This manual contains notices you have to observe in order to ensure your personal safety, as well as to prevent damage to property. The notices referring to your personal safety are highlighted in the manual by a safety alert symbol, notices referring only to property damage have no safety alert symbol. These notices shown below are graded according to the degree of danger.

⚠ DANGER
indicates that death or severe personal injury **will** result if proper precautions are not taken.

⚠ WARNING
indicates that death or severe personal injury **may** result if proper precautions are not taken.

⚠ CAUTION
indicates that minor personal injury can result if proper precautions are not taken.

NOTICE
indicates that property damage can result if proper precautions are not taken.

If more than one degree of danger is present, the warning notice representing the highest degree of danger will be used. A notice warning of injury to persons with a safety alert symbol may also include a warning relating to property damage.

Qualified Personnel

The product/system described in this documentation may be operated only by **personnel qualified** for the specific task in accordance with the relevant documentation, in particular its warning notices and safety instructions. Qualified personnel are those who, based on their training and experience, are capable of identifying risks and avoiding potential hazards when working with these products/systems.

Proper use of Siemens products

Note the following:

⚠ WARNING
Siemens products may only be used for the applications described in the catalog and in the relevant technical documentation. If products and components from other manufacturers are used, these must be recommended or approved by Siemens. Proper transport, storage, installation, assembly, commissioning, operation and maintenance are required to ensure that the products operate safely and without any problems. The permissible ambient conditions must be complied with. The information in the relevant documentation must be observed.

Trademarks

All names identified by ® are registered trademarks of Siemens AG. The remaining trademarks in this publication may be trademarks whose use by third parties for their own purposes could violate the rights of the owner.

Disclaimer of Liability

We have reviewed the contents of this publication to ensure consistency with the hardware and software described. Since variance cannot be precluded entirely, we cannot guarantee full consistency. However, the information in this publication is reviewed regularly and any necessary corrections are included in subsequent editions.

Siemens AG
Digital Industries
Postfach 48 48
90026 NÜRNBERG
GERMANY

A5E37509394-AE
Ⓟ 02/2021 Subject to change

Copyright © Siemens AG 2021.
All rights reserved

Preface

Purpose of the documentation

This documentation provides important information on configuring and commissioning the point-to-point communication modules for the S7-1500 (ET 200MP) and ET 200SP.

Basic knowledge required

The following knowledge is required in order to understand the documentation:

- General knowledge of automation technology
- Knowledge of the industrial automation system SIMATIC
- Knowledge about the use of Windows-based computers
- Proficiency with STEP 7

Scope of the documentation

This documentation is valid for all point-to-point communication modules of the S7-1500 (ET 200MP) and the ET 200SP when used with STEP 7 (TIA Portal) V12 and higher.

Conventions

The term "CPU" is used in this manual both for the CPUs of the S7-1500 as well as for interface modules of distributed I/O systems, such as the IM 155-5.

Also observe notes labeled as follows:

Note

The notes contain important information on the product described in the documentation, on the handling of the product or on part of the documentation to which particular attention should be paid.

Recycling and disposal

For environmentally sustainable recycling and disposal of your old equipment, contact a certified electronic waste disposal company and dispose of the equipment according to the applicable regulations in your country.

Additional support

The range of technical documentation for the individual SIMATIC products and systems can be found on the Internet (http://www.siemens.com/simatic-tech-doku-portal).

Siemens Industry Online Support

You can find current information on the following topics quickly and easily here:

- **Product support**

  All the information and extensive know-how on your product, technical specifications, FAQs, certificates, downloads, and manuals.

- **Application examples**

  Tools and examples to solve your automation tasks – as well as function blocks, performance information and videos.

- **Services**

  Information about Industry Services, Field Services, Technical Support, spare parts and training offers.

- **Forums**

  For answers and solutions concerning automation technology.

- **mySupport**

  Your personal working area in Industry Online Support for messages, support queries, and configurable documents.

This information is provided by the Siemens Industry Online Support in the Internet (https://support.industry.siemens.com).

Industry Mall

The Industry Mall is the catalog and order system of Siemens AG for automation and drive solutions on the basis of Totally Integrated Automation (TIA) and Totally Integrated Power (TIP).

You can find catalogs for all automation and drive products on the Internet (https://mall.industry.siemens.com) and in the Information and Download Center (https://www.siemens.com/automation/infocenter).

Security information

Siemens provides products and solutions with industrial security functions that support the secure operation of plants, systems, machines and networks.

In order to protect plants, systems, machines and networks against cyber threats, it is necessary to implement – and continuously maintain – a holistic, state-of-the-art industrial security concept. Siemens' products and solutions form one element of such a concept.

Customers are responsible for preventing unauthorized access to their plants, systems, machines and networks. Such systems, machines and components should only be connected to an enterprise network or the internet if and to the extent such a connection is necessary and only when appropriate security measures (e.g. firewalls and/or network segmentation) are in place.

For additional information on industrial security measures that may be implemented, please visit (http://www.siemens.com/industrialsecurity).

Siemens' products and solutions undergo continuous development to make them more secure. Siemens strongly recommends that product updates are applied as soon as they are available and that the latest product versions are used. Use of product versions that are no longer supported, and failure to apply latest updates may increase customer's exposure to cyber threats.

To stay informed about product updates, subscribe to the Siemens Industrial Security RSS Feed under (http://www.siemens.com/industrialsecurity).

Table of contents

Preface ... **3**

1 Guide to documentation ... **9**

2 Introduction ... **13**

2.1 Overview of the communication modules ... 13

2.2 Overview of the processing steps ... 16

2.3 Overview of instructions ... 17

3 Basics of serial communication ... **19**

3.1 Serial data transmission ... 19

3.2 Transmission security ... 20

3.3 RS232 mode ... 23

3.4 RS422 mode ... 26

3.5 RS485 mode ... 29

3.6 Handshake procedure ... 32

4 Configuring / parameter assignment ... **37**

4.1 Configuring / parameter assignment of a communication module ... 37

4.2 Special features for the use of the option for performance optimization ... 38

4.3 Communication using Freeport ... 38
4.3.1 Procedure for establishing a serial connection with Freeport ... 39
4.3.2 Data transmission with Freeport ... 41
4.3.3 Sending data with Freeport ... 41
4.3.4 Receiving data with Freeport ... 43
4.3.5 Code transparency ... 48
4.3.6 Receive buffer ... 48
4.3.7 Communication via DMX512 ... 49

4.4 Communication using 3964(R) ... 50
4.4.1 Procedure for establishing a serial connection with 3964(R) ... 50
4.4.2 Data transmission with 3964(R) procedure ... 52
4.4.3 Control characters ... 52
4.4.4 Block check character ... 53
4.4.5 Sending data with 3964(R) ... 53
4.4.6 Receiving data with 3964(R) ... 55

4.5 Communication through Modbus RTU ... 56
4.5.1 Procedure for establishing a serial connection with Modbus RTU ... 56
4.5.2 Overview of modbus communication ... 58
4.5.3 Function Codes ... 62

4.6 Communication using USS ... 64
4.6.1 Procedure for establishing a serial connection with USS ... 64
4.6.2 Overview of USS communication ... 65
4.6.3 Overview of functions ... 67

5 Programming - communication using instructions ... 68

5.1 Overview of point-to-point programming ... 68

5.2 Overview of Modbus programming ... 72

5.3 Overview of USS programming ... 74

5.4 Instructions ... 77
5.4.1 Point-to-point ... 77
5.4.1.1 Overview of Freeport communication ... 77
5.4.1.2 Using the instructions ... 80
5.4.1.3 General parameters for Freeport operations ... 82
5.4.1.4 Port_Config: Configure PtP communication port ... 84
5.4.1.5 Send_Config: Configure PtP sender ... 87
5.4.1.6 Receive_Config: Configure PtP recipient ... 89
5.4.1.7 P3964_Config: Configuring the 3964(R) protocol ... 95
5.4.1.8 Send_P2P: Sending data ... 97
5.4.1.9 Using the BUFFER and LENGTH parameters for communication operations ... 100
5.4.1.10 Receive_P2P: Receiving data ... 101
5.4.1.11 Receive_Reset: Clear receive buffer ... 103
5.4.1.12 Signal_Get: Read status ... 104
5.4.1.13 Signal_Set: Set accompanying signals ... 105
5.4.1.14 Get_Features: Get extended functions ... 107
5.4.1.15 Set_Features: Set extended functions ... 108
5.4.1.16 Error messages ... 110
5.4.2 MODBUS (RTU) ... 119
5.4.2.1 Dependencies between library versions ... 119
5.4.2.2 Overview of the Modbus RTU communication ... 119
5.4.2.3 Modbus_Comm_Load: Configure communication module for Modbus ... 121
5.4.2.4 Modbus_Master: Communicate as Modbus master ... 125
5.4.2.5 Modbus_Slave ... 132
5.4.2.6 Frame structure ... 142
5.4.2.7 Error messages ... 149
5.4.3 USS ... 154
5.4.3.1 Dependencies between library versions ... 154
5.4.3.2 Overview of USS communication ... 154
5.4.3.3 Requirements for using the USS protocol ... 156
5.4.3.4 USS_Port_Scan / USS_Port_Scan_31: Communication by means of a USS network ... 160
5.4.3.5 USS_Drive_Control / USS_Drive_Control_31: Preparing and displaying data for the drive ... 164
5.4.3.6 USS_Read_Param / USS_Read_Param_31: Read data from drive ... 168
5.4.3.7 USS_Write_Param / USS_Write_Param_31: Change data in drive ... 170
5.4.3.8 General information on drive setup ... 173
5.4.3.9 Error messages ... 177

6 Startup and Diagnostics 179
6.1 Startup characteristics 179
6.2 Diagnostic functions 179
6.3 Diagnostic interrupts 180
Glossary 181
Index 185

Guide to documentation

1

The documentation for the SIMATIC S7-1500 automation system, the CPUs 1513/1516pro-2 PN based on SIMATIC S7-1500, and the distributed I/O systems SIMATIC ET 200MP, ET 200SP and ET 200AL is divided into three areas.
This division allows you easier access to the specific information you require.

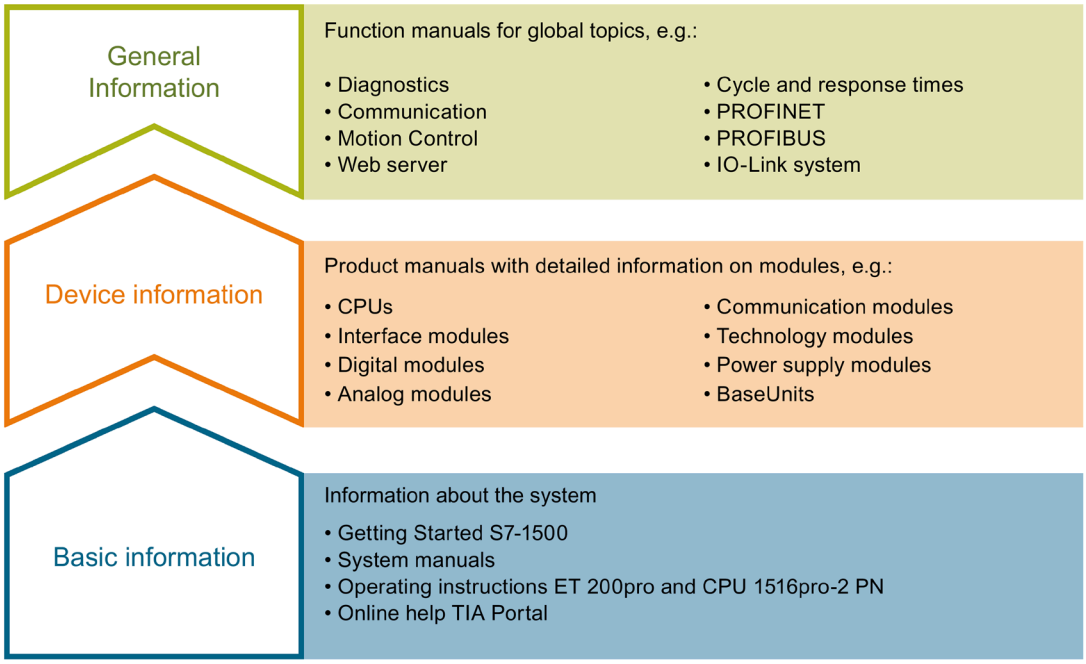

Basic information

System manuals and Getting Started manuals describe in detail the configuration, installation, wiring and commissioning of the SIMATIC S7-1500, ET 200MP, ET 200SP and ET 200AL systems. Use the corresponding operating instructions for the CPUs 1513/1516pro-2 PN. The STEP 7 online help supports you in the configuration and programming.

Device information

Product manuals contain a compact description of the module-specific information, such as properties, terminal diagrams, characteristics and technical specifications.

General information

The function manuals contain detailed descriptions on general topics such as diagnostics, communication, Motion Control, Web server, OPC UA.

You can download the documentation free of charge from the Internet (http://w3.siemens.com/mcms/industrial-automation-systems-simatic/en/manual-overview/Pages/Default.aspx).

Changes and additions to the manuals are documented in product information sheets.

You will find the product information on the Internet:

- S7-1500/ET 200MP (https://support.industry.siemens.com/cs/us/en/view/68052815)
- ET 200SP (https://support.industry.siemens.com/cs/us/en/view/73021864)

Manual Collections

The Manual Collections contain the complete documentation of the systems put together in one file.

You will find the Manual Collections on the Internet:

- S7-1500/ET 200MP (https://support.industry.siemens.com/cs/ww/en/view/86140384)
- ET 200SP (https://support.industry.siemens.com/cs/ww/en/view/84133942)
- ET 200AL (https://support.industry.siemens.com/cs/ww/en/view/95242965)

"mySupport"

With "mySupport", your personal workspace, you make the best out of your Industry Online Support.

In "mySupport", you can save filters, favorites and tags, request CAx data and compile your personal library in the Documentation area. In addition, your data is already filled out in support requests and you can get an overview of your current requests at any time.

You must register once to use the full functionality of "mySupport".

You can find "mySupport" on the Internet (https://support.industry.siemens.com/My/ww/en).

"mySupport" - Documentation

With "mySupport", your personal workspace, you make the best out of your Industry Online Support.

In "mySupport", you can save filters, favorites and tags, request CAx data and compile your personal library in the Documentation area. In addition, your data is already filled out in support requests and you can get an overview of your current requests at any time.

You must register once to use the full functionality of "mySupport".

You can find "mySupport" on the Internet (http://support.industry.siemens.com/My/ww/en/documentation).

"mySupport" - CAx data

In the CAx data area of "mySupport", you can access the latest product data for your CAx or CAe system.

You configure your own download package with a few clicks.

In doing so you can select:

- Product images, 2D dimension drawings, 3D models, internal circuit diagrams, EPLAN macro files
- Manuals, characteristics, operating manuals, certificates
- Product master data

You can find "mySupport" - CAx data on the Internet (http://support.industry.siemens.com/my/ww/en/CAxOnline).

Application examples

The application examples support you with various tools and examples for solving your automation tasks. Solutions are shown in interplay with multiple components in the system - separated from the focus on individual products.

You will find the application examples on the Internet (https://support.industry.siemens.com/sc/ww/en/sc/2054).

TIA Selection Tool

With the TIA Selection Tool, you can select, configure and order devices for Totally Integrated Automation (TIA).
This tool is the successor of the SIMATIC Selection Tool and combines the known configurators for automation technology into one tool.
With the TIA Selection Tool, you can generate a complete order list from your product selection or product configuration.

You can find the TIA Selection Tool on the Internet (http://w3.siemens.com/mcms/topics/en/simatic/tia-selection-tool).

SIMATIC Automation Tool

You can use the SIMATIC Automation Tool to perform commissioning and maintenance activities simultaneously on various SIMATIC S7 stations as a bulk operation independent of TIA Portal.

The SIMATIC Automation Tool provides a multitude of functions:

- Scanning of a PROFINET/Ethernet system network and identification of all connected CPUs
- Address assignment (IP, subnet, gateway) and station name (PROFINET device) to a CPU
- Transfer of the date and the programming device/PC time converted to UTC time to the module

- Program download to CPU
- RUN/STOP mode switchover
- CPU localization by means of LED flashing
- Reading out of CPU error information
- Reading of the CPU diagnostics buffer
- Reset to factory settings
- Firmware update of the CPU and connected modules

You can find the SIMATIC Automation Tool on the Internet (https://support.industry.siemens.com/cs/ww/en/view/98161300).

PRONETA

SIEMENS PRONETA (PROFINET network analysis) allows you to analyze the plant network during commissioning. PRONETA features two core functions:

- The topology overview automatically scans the PROFINET and all connected components.
- The IO check is a fast test of the wiring and the module configuration of a plant.

You can find SIEMENS PRONETA on the Internet (https://support.industry.siemens.com/cs/ww/en/view/67460624).

SINETPLAN

SINETPLAN, the Siemens Network Planner, supports you in planning automation systems and networks based on PROFINET. The tool facilitates professional and predictive dimensioning of your PROFINET installation as early as in the planning stage. In addition, SINETPLAN supports you during network optimization and helps you to exploit network resources optimally and to plan reserves. This helps to prevent problems in commissioning or failures during productive operation even in advance of a planned operation. This increases the availability of the production plant and helps improve operational safety.

The advantages at a glance

- Network optimization thanks to port-specific calculation of the network load
- Increased production availability thanks to online scan and verification of existing systems
- Transparency before commissioning through importing and simulation of existing STEP 7 projects
- Efficiency through securing existing investments in the long term and the optimal use of resources

You can find SINETPLAN on the Internet (https://www.siemens.com/sinetplan).

Introduction 2

2.1 Overview of the communication modules

Automation systems encompass a wide range of components. These also include communication modules. A simple possibility of data exchange is provided by serial communication via point-to-point connections.

Customizing to a wide range of communication partners is possible by setting the communication parameters at a lower layer of the OSI layer model (see section Transmission security (Page 20)).

Communication through point-to-point connection with S7-1500, ET 200MP and ET 200SP takes place exclusively by means of communication modules (CM) with serial interfaces.

SIMATIC S7 offers a number of modules that provide the physical interface and fundamental protocol mechanisms for this application use.

- RS232: An interface that can coordinate the communication between the partners through additional accompanying signals.
- RS422/RS485: An interface that allows longer lines through the use of differential voltages as transmission technology and also enables structures with more than 2 devices through a bus structure (RS485).

Instructions that carry out the coordination between the CPU and CM (Communication Module) are available to transfer data from the CPU to the respective modules. They inform the user program about a successful transmission or the receipt of new data. In systems without a SIMATIC CPU, users must program the function of these instructions themselves (https://support.industry.siemens.com/cs/ww/en/view/59062563).

The function and use of the PtP communication modules is described in this function manual.

Overview of components and order numbers

Tabular overview of communication modules and their application suitability

Communication module	S7-1500	ET 200MP	ET 200SP	Article number
CM PtP RS232 BA [1]	X	X	-	6ES7540-1AD00-0AA0
CM PtP RS422/485 BA	X	X	-	6ES7540-1AB00-0AA0
CM PtP RS232 HF [2]	X	X	-	6ES7541-1AD00-0AB0
CM PtP RS422/485 HF	X	X	-	6ES7541-1AB00-0AB0
CM PtP (ET 200SP)	-	-	X	6ES7137-6AA01-0BA0

[1] BA = Basic

[2] HF = High Feature

Note

CM PtP (ET 200SP) with IM 155-6 MF HF

The use of different field bus protocols, except Profibus/Profinet, is possible with the interface module IM 155-6 MF HF (6ES7155-6MU00-0CN0). In this case, the instruction library PtP Communication cannot be used. Note the information from the Programming Manual CM PtP in operation with PROFINET controller (https://support.industry.siemens.com/cs/ww/en/view/59062563). See also the Equipment Manual for the interface module as a download on the Internet (https://support.industry.siemens.com/cs/ww/en/view/109773210).

Overview of components and interfaces

Tabular overview of communication modules and their functions.

Communication module	Interface	Protocols					Connection technology	
		Freeport	3964(R)	Modbus Master	Modbus Slave	USS-Master	D-Sub 9-pin	D-Sub 15-pin
CM PtP RS232 BA	RS232	X	X	-	-	X	X	-
CM PtP RS422/485 BA	RS422	X	X	-	-	X	-	X
	RS485	X	-	-	-	X	-	X
CM PtP RS232 HF	RS232	X	X	X	X	X	X	-
CM PtP RS422/485 HF	RS422	X	X	X	X	X	-	X
	RS485	X	-	X	X	X	-	X
CM PtP (ET 200SP)	RS232	X	X	X	X	X	ET 200SP BaseUnit [1]	
	RS422 [2]	X	X	X	X	X		
	RS485	X	-	X	X	X		

[1] BaseUnit with terminals instead of D-Sub; assignment depending on physical transmission properties

[2] The CM PtP communication module can also be used for multi-point coupling in RS422 operation

Overview of components and data transmission rates

The communication modules can send and receive data with different data transmission rates. The table below shows the assignment to the individual communication modules.

Communication module	Data transmission rate in bps											
	300	600	1200	2400	4800	9600	19200	38400	57600	76800	115200	250000[1]
CM PtP RS232 BA	X	X	X	X	X	X	X	-	-	-	-	-
CM PtP RS422/485 BA	X	X	X	X	X	X	X	-	-	-	-	-
CM PtP RS232 HF	X	X	X	X	X	X	X	X	X	X	X	-
CM PtP RS422/485 HF	X	X	X	X	X	X	X	X	X	X	X	-
CM PtP (ET 200SP)	X	X	X	X	X	X	X	X	X	X	X	X

[1] Especially for using the DMX512 protocol with RS485

Overview of components and receive buffer size

Each communication module has a buffer to cache received frames. The table below shows the assignment of the maximum size of an individual frame as well as the size of the memory for the individual communication modules.

Module	Receive buffer size KB	Max. frame length KB	Bufferable frames
CM PtP RS232 BA	2	1	255
CM PtP RS422/485 BA	2	1	255
CM PtP RS232 HF	8	4	255
CM PtP RS422/485 HF	8	4	255
CM PtP (ET 200SP)	4	2	255

Accompanying signals and data flow control

- Software data flow control with XON/XOFF

  The Freeport protocol supports data flow control with XON/XOFF via the RS232 and RS422 interfaces.

- Hardware data flow control with RTS/CTS

  The Freeport protocol supports data flow control with RTS/CTS via the RS232 interface.

- Automatic operation of accompanying signals

  The RS232 accompanying signals can be controlled with the Freeport, Modbus master and Modbus slave protocols by means of the RS232 interface. (Only available if hardware data flow control is activated.)

Protocols of the communication modules

You may set up a communication connection with different protocols, depending on the communication modules used:

- Freeport: Transmission of ASCII character strings without specified protocol format
- 3964(R): Communication between programmable logic controllers (master/master communication)
- Modbus RTU: Communication between programmable logic controllers (master/slave communication) The communication module can be the master as well as the slave.
- USS: Communication between a programmable logic controller and a drive (master/slave communication) Communication is tailored to the drive technology requirements. The communication module can only be master.

2.2 Overview of the processing steps

Point-to-point connection

The system provides various networking options for the exchange of data between two or more communication partners. The simplest form of data interchange is via a point-to-point connection between two communication partners.

The communication module (CM) forms the interface between a programmable logic controller and a communication partner. Data is sent in serial mode via point-to-point connection with the communication module.

Configuring / parameter assignment

Configuring the communication module includes the arrangement of the communication module in the device configuration of STEP 7 (TIA Portal) as well as the settings of the specific protocol parameters in the properties dialog of the communication module (static configuration).

Programming

Programming includes the program-specific connection of the communication module to the corresponding CPU by means of the user program. You program the communication module with STEP 7 (TIA Portal).

Communication between CPU, communication module and a communication partner takes place through instructions (Page 77). A number of instructions are available for the S7-1500 and S7-1200 automation systems. You can use these instructions to initiate and control communication in the user program as well as influence the configuration for runtime (dynamic configuration).

For more information, please refer to Overview of instructions (Page 17) and the STEP 7 (TIA Portal) online help.

2.3 Overview of instructions

Data communication

Two types of data exchange between the CPU and the communication module are possible with the communication modules:

- Acyclic data exchange (Universal)

  The point-to-point instructions communicate with the communication module asynchronously by reading or writing data records.

  Data transmission takes place across several cycles.

  Note

  CPU configuration limits

  When using the instructions with asynchronous communication, you should take into account the configuration limits of the respective CPU for reading and writing data records. If multiple instructions need to read or write data records simultaneously on a CPU, there may need to be a gap between the calls of each instruction by the user program.

- Cyclic data exchange (Performance optimized for many short frames (Page 38))

  The point-to-point instructions communicate with the communication module synchronously with the application cycle via the IO data of the communication module.

  The input data comprises 32 bytes, of which 24 bytes are available for the frame. The output data comprises 32 bytes, of which 30 bytes are available for the frame. Using cyclic data optimizes the reaction time, especially if you are using several CM PtPs in parallel.

  Note

  Cyclic data exchange is available with the instruction library PtP-Communication as of V4.0.

Overview of the instructions

The communication protocols are implemented on the communication module. The protocol is used to adapt the interface of the communication module to the interface of the communication partner.

Communication between the CPU, the communication module and a communication partner takes place by means of special instructions and protocols that support the corresponding communication modules.

The instructions form the software interface between the CPU and the communication module. They must be called cyclically from the user program. When the instruction library PtP-Communication as of V4.0 is used, the instructions detect independently whether the Performance option is active and adapt the method for the data exchange.

The instructions are part of STEP 7 (TIA Portal). The instructions are available in the "Instructions" task card under Communication > Communication processor. They apply to all listed communication modules if they support the required function.

Table 2- 1 Instructions for PtP

Instruction	Meaning
Send_P2P (Page 97)	To send data to a communication partner.
Receive_P2P (Page 101)	To receive data from a communication partner.
Receive_Reset (Page 103)	To clear the receive buffer of the communication module.
Port_Config (Page 84)	Dynamically assigning the basic interface parameters.
Send_Config (Page 87)	Send parameter assignment; dynamically assigning serial send parameters of a port.
Receive_Config (Page 89)	Receive parameter assignment; dynamically assigning serial receive parameters of a port.
P3964_Config (Page 95)	Protocol configuration; Dynamically configuring the parameters of procedure 3964(R).
Signal_Get (Page 104)	Reading RS232 accompanying signals.
Signal_Set (Page 105)	Setting RS232 accompanying signals.
Get_Features (Page 107)	Reading the extended functions supported by the communication module.
Set_Features (Page 108)	Activating the extended functions supported by the communication module.

Table 2- 2 Instructions for Modbus

Instruction	Meaning
Modbus_Master (Page 125)	Communicating as Modbus master via the PtP port.
Modbus_Slave (Page 132)	Communicating as Modbus slave via the PtP port.
Modbus_Comm_Load (Page 121)	Configuring the port of the communication module for Modbus RTU.

Table 2- 3 Instructions for USS

Instruction	Meaning
USS_Port_Scan (Page 160)	Communication via the USS network.
USS_Drive_Control (Page 164)	Exchanging data with the drive.
USS_Read_Param (Page 168)	Reading parameters from the drive.
USS_Write_Param (Page 170)	Changing parameters in the drive.

Basics of serial communication 3

3.1 Serial data transmission

During serial data transmission, the individual bits of a character of information to be transmitted are sent successively in a defined sequence.

Bidirectional data traffic - operating mode

In the context of bidirectional data traffic, we distinguish between two operating modes for the communication module:

- Half-duplex operation

  The data is exchanged between the communication partners in both directions alternately. In half-duplex operation one communication partner is sending and the other communication partner is receiving at the same time. In the process one line is alternately used for sending or receiving.

- Full-duplex operation

  The data is exchanged between one or more communication partners in both directions simultaneously, which means you can send and receive data at the same time. This process requires one line for sending and one line for receiving.

Data transmission

The so-called time base synchronism (a fixed timing code used in the transmission of a fixed character string) is only upheld during transmission of a character. Each character to be sent is preceded by a synchronization impulse, also called start bit. The length of the start-bit transmission determines the clock pulse. The end of character transmission is formed by one or two stop bits.

Declarations

In addition to start and stop bits, additional declarations must be made between the sending and receiving partners before serial transmission can take place. These include:

- Data transmission rate
- Frame start and end criteria (e.g., character delay time)
- Parity
- Number of data bits (7 or 8 bits/characters)
- Number of stop bits (1 or 2)

3.2 Transmission security

Transmission security plays an important role in the transmission of data and in the selection of the transmission procedure. Generally speaking, the more layers of the reference model are applied, the higher the transmission security.

Classification of existing protocols

The figure below illustrates how the protocols of the communication module fit into the reference model.

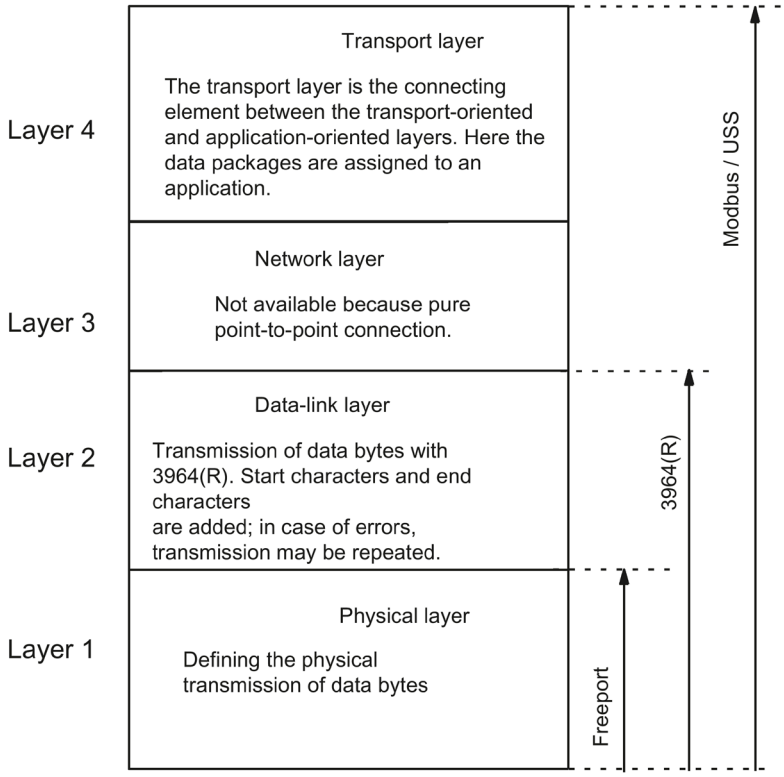

Figure 3-1 Classification of the existing protocols of the communication module in the reference model

Transmission security with Freeport

Transmission security when using Freeport:

- When data is sent with Freeport, there are no data security measures other than the use of a parity bit. This means data transmission with Freeport is very efficient, but data security is not guaranteed. A certain degree of data security can be achieved through parameter assignment of the frame start and frame end conditions.
- Using the parity bit ensures that the inversion of a bit in a character to be sent can be recognized. If two or more bits of a character are inverted, however, there is no guarantee that these errors are still detected.
- To increase transmission security, you can, for example, implement a checksum, a frame length specification, or configurable end conditions. These measures must be implemented by the user.
- A further increase in data security can be achieved by means of acknowledgment frames in response to send or receive frames. This is the case with high-grade protocols for data communication (ISO 7-layer reference model).

Transmission security with 3964(R)

The parity bit is used to increase data security; depending on the configuration, it completes the number of data bits to be transmitted to form an even or odd number.

Using the parity bit ensures that the inversion of a bit in a character to be sent can be recognized. If two or more bits of a character are inverted, however, these errors can no longer be reliably detected.

If parity is set to "none", no parity bit is transmitted. This setup reduces transmission security.

Two different procedures for data transmission can be used, either with or without a block check character:

- Data transmission without block check character: **3964**

  Transmission security is achieved by means of a specified frame structure, frame breakdown, and frame repetitions.
- Data transmission with block check character: **3964R**

  The high degree of transmission security is achieved by means of a specified frame structure and breakdown, frame repetitions, as well as inclusion of a block check character (BCC).

In this manual, the term 3964(R) is used when descriptions and notes refer to both data transmission modes.

Transmission integrity for Modbus and USS

The parity bit is used to increase transmission security; depending on the configuration, it completes the number of data bits to be transmitted to form an even or odd number.

Using the parity bit ensures that the inversion of a bit in a character to be sent can be recognized. If two or more bits of a character are inverted, however, this error can no longer be clearly detected.

If parity is set to "none", no parity bit is transmitted. This setup reduces transmission security.

The cyclic redundancy check (CRC) is additionally used with Modbus. With this method additional redundancy in the form of a so-called CRC value is added for each data block of the user data before data transmission. This is a check value calculated by using a specific procedure that can be used to detect any errors that may occur during transmission.

A BCC (block check character) is additionally used with USS. The block check character is formed during the receipt and is compared with the received BCC after the entire frame has been read in. If these two characters do not match, the frame is not evaluated. When a character is incorrectly transmitted, an error is reliably detected. When an even number of characters is incorrectly transmitted, an error can no longer be reliably detected.

3.3 RS232 mode

The following communication modules support RS232 mode:

- CM PtP RS232 BA
- CM PtP RS232 HF
- CM PtP (ET 200SP)

In RS232 mode, data is sent via two lines. A separate line is available for the send direction and the receive direction. Simultaneous sending and receiving is possible (full duplex).

RS232 signals

In addition to the TXD, RXD and GND signals, the communication module provides additional RS232 signals when using RS232 hardware:

TXD	Output	Transmitted data; Interface is transmitting
RXD	Input	Received data; Interface is receiving
GND		Functional ground; isolated
DCD	Input	Data carrier detect; Carrier signal when connecting a modem. The communication partner signals that it recognizes incoming data.
DTR	Output	Data terminal ready; DTR set to "ON": Communication module switched on, ready for operation DTR set to "OFF": Communication module not switched on, not ready for operation
DSR	Input	Data set ready; DSR set to "ON": Communication partner signals readiness for operation DSR set to "OFF": Communication partner not switched on, not ready for operation
RTS	Output	Request to send; RTS set to "ON": Communication module ready to send; signals to the communication partner that there is data ready to send RTS set to "OFF": Communication module not ready to send
CTS	Input	Clear to send; Communication partner can receive data from the communication module (response to RTS = ON of the communication module) CTS set to "ON": Signals readiness to receive to the communication partner CTS set to "OFF": Signals "Not ready to receive" to the communication partner
RI	Input	Incoming call for connecting a modem (ring indicator)

After power on of the communication module, the output signals are in the OFF state (inactive).

You configure the operation of the DTR/DSR and RTS/CTS control signals in the user interface of the communication module.

The RS232 signals cannot be influenced in case of:

- configured data flow control "Hardware RTS always switched"
  (corresponds to automatic operation of the accompanying signals)
- configured data flow control "Hardware RTS always ON"
  (corresponds to hardware flow control with RTS/CTS)
- configured data flow control "Hardware RTS always ON, ignore DTR/DSR"

For more information, refer to chapter Handshake procedure (Page 32).

Connecting cables

The following standard connecting cables of various lengths are available for connecting to a communication partner which also has a 9-pin D-sub male connector:

Article number	6ES7902-1AB00-0AA0	6ES7902-1AC00-0AA0	6ES7902-1AD00-0AA0
Product type designation	S7 connecting cable RS232		
Cable length	5 m	10 m	15 m

The table below shows the pin assignment for the 9-pin D-sub male connector of the respective communication module.

Male connector*	Pin	Designation	Input/ output	Required/optional for self-fabrication
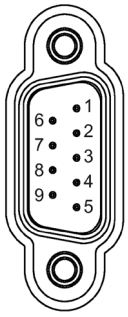	1	DCD	Input	Optional
	2	RXD	Input	Required
	3	TXD	Output	Required
	4	DTR	Output	Optional
	5	GND	—	Required
	6	DSR	Input	Optional
	7	RTS	Output	Optional
	8	CTS	Input	Optional
	9	RI	Input	Optional

* View from the front

The cable or the connector of the listed connecting cables are not available for order as separate items. If you fabricate your own connecting cables you must remember that unconnected inputs at the communication partner may have to be connected to open-circuit potential.

Note that you may only use shielded connector enclosures. A large surface area of the cable shield must be in contact with the connector enclosure on both ends.

CAUTION

Never connect cable shield with GND

Never connect the cable shield with the GND as this could destroy the interfaces. GND must always be connected on both sides (pin 5), otherwise the interface modules could be destroyed.

The figure below illustrates the cable for a point-to-point connection between a communication module and a communication partner.

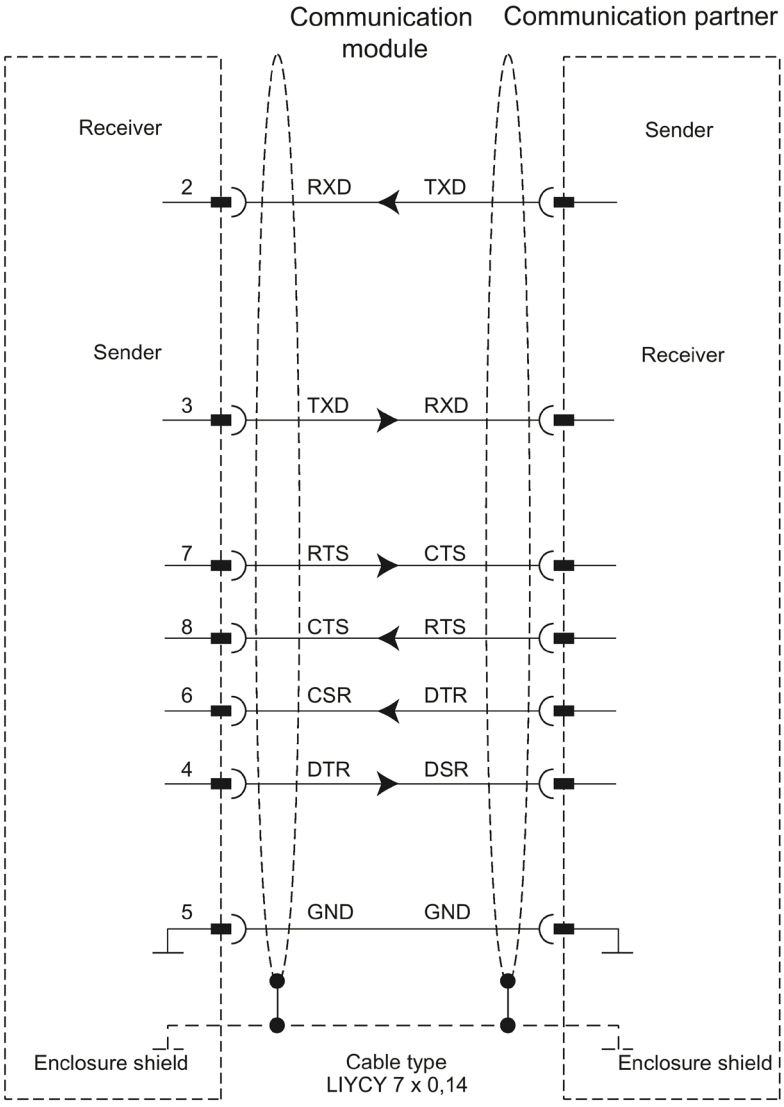

3.4 RS422 mode

The following communication modules support RS422 mode:

- CM PtP RS422/485 BA
- CM PtP RS422/485 HF
- CM PtP (ET 200SP)

In RS422 mode, data is transmitted via two line pairs (four-wire operation). A separate line pair is available for the send direction and the receive direction. Simultaneous sending and receiving is possible (full duplex).

All communication partners must be capable of simultaneous operation of a sender and receiver unit.

The data can be exchanged simultaneously between two or more communication partners. In RS422 multipoint mode, only one slave may send data at any given time.

Interface operating modes

The following table is a summary of the interface operating modes for the various communication modules and protocols.

The communication module can be used in the following topologies in RS422 mode:

- Link between two nodes: Point-to-point connection
- Link between several nodes: Multipoint connection
  (only available with CM PtP (ET 200SP))

Operating mode	Description
Full duplex (RS422) four-wire operation (point-to-point connection)	Both devices have the same priority in this operating mode.
Full duplex (RS422) four-wire operation (multipoint master)	The communication module can be used as multipoint master.
Full duplex (RS422) four-wire operation (multipoint slave)	The communication module can be used as multipoint slave.

The following applies for a multipoint master/slave topology in RS422 mode:

- The sender of the master is interconnected with the receivers of all slaves.
- The senders of the slaves are interconnected with the master's receiver.
- Only the receiver of the master and the receiver of one slave have a default setting. All other slaves operate without default settings.

RS422 signals

The following signals are present on the communication module when using the RS422 hardware:

T (A) -	Output	Transmitted data
T (B) +	Output	Transmitted data
R (A) -	Input	Received data
R (B) +	Input	Received data
GND		Functional ground; isolated

Connecting cables

The following standard connecting cables of various lengths are available for connecting to a communication partner which also has a 15-pin D-sub female connector:

Article number	**6ES7902-3AB00-0AA0**	**6ES7902-3AC00-0AA0**	**6ES7902-3AG00-0AA0**
Product type designation	S7 connecting cable RS422		
Cable length	5 m	10 m	50 m

The table below shows the pin assignment of the 15-pin D-sub female connector of the respective communication module.

Socket*	**Pin**	**Designation**	**Input/output**
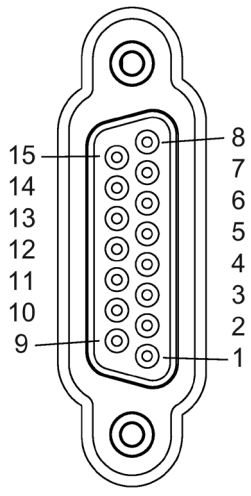	1	-	-
	2	T (A) -	Output
	3	-	-
	4	R (A) -	Input
	5	-	-
	6	-	-
	7	-	-
	8	GND	-
	9	T (B) +	Output
	10	-	-
	11	R (B) +	Input
	12	-	-
	13	-	-
	14	-	-
	15	-	-

* View from the front

The cable or the connector of the listed connecting cables are not available for order as separate items. If you fabricate your own connecting cables you must remember that unconnected inputs at the communication partner may have to be connected to open-circuit potential.

Note that you may only use shielded connector enclosures. A large surface area of the cable shield must be in contact with the connector enclosure on both ends.

CAUTION

Never connect cable shield with GND

Never connect the cable shield with the GND as this could destroy the interfaces. GND must always be connected on both ends (pin 8), otherwise the interface modules could be destroyed.

The figure below illustrates the cable for a point-to-point connection between a communication module and a communication partner.

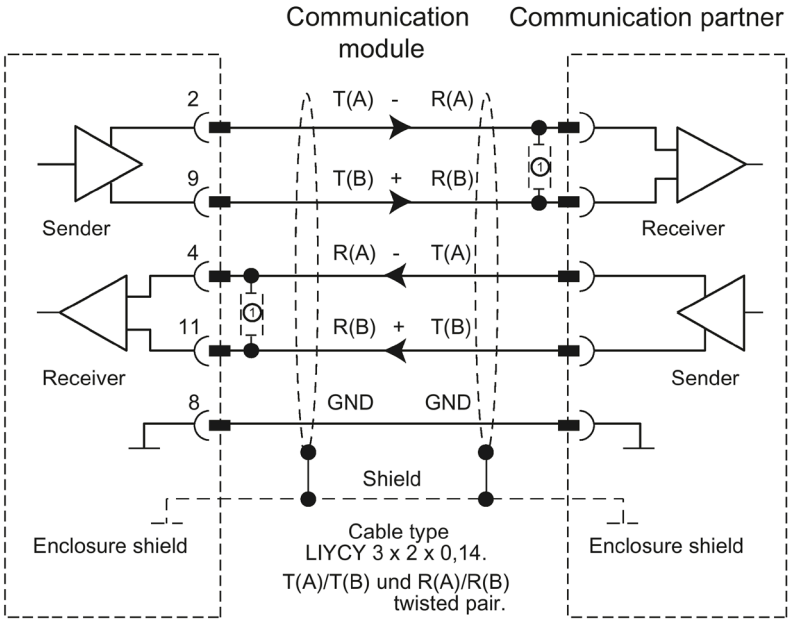

① For cable lengths longer than 50 m, you need to solder a terminating resistor of approx. 330 Ω at the receiver end to ensure interference-free data traffic.

Note

This cable type can be used in the following lengths for a communication module as communication partner: max. 1200 m at 19200 baud, max. 500 m at 38400 baud, max. 350 m at 76800 baud, max. 250 m at 115200 baud.

3.5 RS485 mode

The following communication modules support RS485 mode:

- CM PtP RS422/485 BA
- CM PtP RS422/485 HF
- CM PtP (ET 200SP)

In RS485 mode, data is transmitted via one line pair (two-wire operation). The line pair is available alternately for the send and receive directions. It is possible to either send or receive (half duplex). On completion of a send operation, operation is immediately switched to receive mode (ready to receive). Send mode is reset again as soon as a new send job is received.

Interface operating modes

The following table is a summary of the interface operating modes for the various communication modules and protocols.

Operating mode	Description
Half duplex (RS485) two-wire operation	Operating mode for point-to-point connection or multipoint connection (multipoint) in two-wire operation. The communication module can be the master as well as the slave.

If you operate the Freeport in RS485 mode (half duplex, two-wire operation), you must make provisions in the user program to ensure that only one device sends data at any given time. If more than one device sends data at the same time, the frames are corrupted.

Modbus automatically ensures that only one device is sending.

Changeover times for RS485 communication module in half duplex mode

A maximum time of 0.1 ms is set for the changeover between sending and receiving.

RS485 signals

The following signals are present on the communication module when using the RS485 hardware:

R (A)/T (A) -	Input/output	Received/transmitted data
R (B)/T (B) +	Input/output	Received/transmitted data
GND		Functional ground; isolated

Connecting cables

The table below shows the pin assignment of the 15-pin D-sub female connector of the respective communication module.

Socket*	Pin	Designation	Input/output
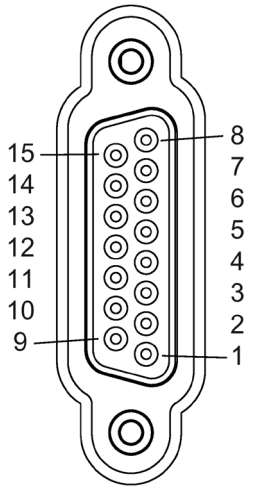	1	-	-
	2	-	-
	3	-	-
	4	R (A)/T (A) -	Input/output
	5	-	-
	6	-	-
	7	-	-
	8	GND	-
	9	-	-
	10	-	-
	11	R (B)/T (B) +	Input/output
	12	-	-
	13	-	-
	14	-	-
	15	-	-

* View from the front

When fabricating the connecting cables, you need to remember that unconnected inputs at the communication partner may have to be connected to open-circuit potential.

Note that you may only use shielded connector enclosures. A large surface area of the cable shield must be in contact with the connector enclosure on both ends.

CAUTION

Never connect cable shield with GND

Never connect the cable shield with the GND as this could destroy the interfaces. GND must always be connected on both ends (pin 8), otherwise the interface modules could be destroyed.

The figure below illustrates the cable for a point-to-point connection between a communication module and a communication partner.

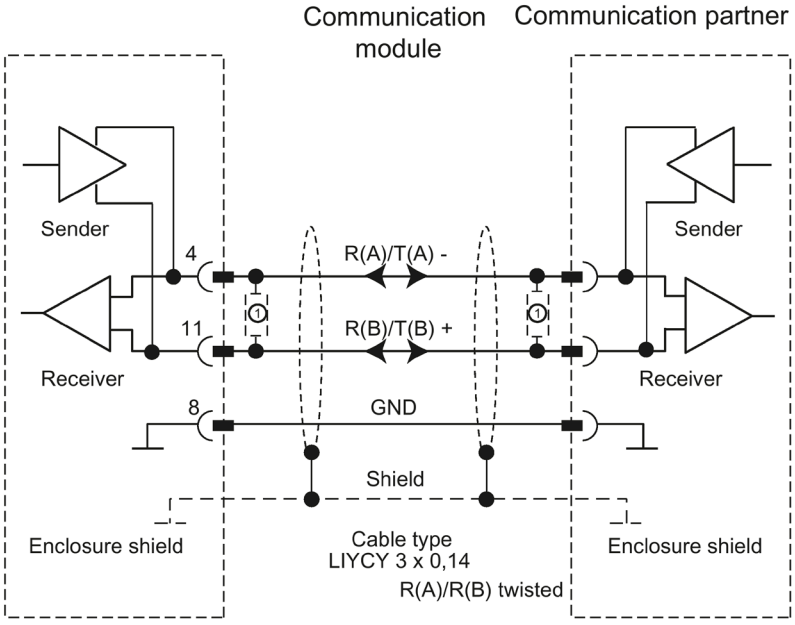

① For cable lengths longer than 50 m, you need to solder a terminating resistor of approx. 330 Ω at the receiver end to ensure interference-free data traffic.

Note

This cable type can be used in the following lengths for a communication module as communication partner: max. 1200 m at 19200 baud, max. 500 m at 38400 baud, max. 350 m at 76800 baud, max. 250 m at 115200 baud, max. 200 m at 250000 baud.

3.6 Handshake procedure

Introduction

Handshaking controls the data flow between two communication partners. The use of the handshaking method prevents data loss during transmission if the devices are operating at different speeds.

We can basically distinguish between the following methods:

Table 3- 1 Overview of methods and interfaces

Method	RS232	RS422	RS485
Software data flow control XON/XOFF	X	X	-
Hardware data flow control (RTS/CTS)	X	-	-
Automatic operation of accompanying signals	X	-	-

Software data flow control

Software data flow control is implemented as follows on the communication module:

- **XON/XOFF**
  - As soon as the communication module has been set to the "XON/XOFF" operating mode by means of parameter assignment, it sends the XON character, thereby allowing the communication partner to send data.
  - On reaching the configured maximum number of frames, or 16 characters ahead of receive buffer overflow, the communication module sends the XOFF character, thereby requesting that the communication partners stop sending. If the communication partner nonetheless continues to send data, an error message is generated if the receive buffer overflows. Data received in the last frame is discarded.
  - As soon as a frame has been fetched by the CPU and the receive buffer is ready to receive data again, the communication module sends the XON character.
  - If the communication module receives the XOFF character during sending, it cancels the current send operation until it receives a XON again from its communication partner. If no XON is received within a specific configurable time, send operation is canceled and a corresponding error message is output.

Note

You can configure the characters for XON and XOFF (any ASCII character).

During parameter assignment of the XON/XOFF software data flow control, user data may not contain any of the configured XON or XOFF characters.

Hardware data flow control

Note

The DTR/DSR signals do not have to be wired for "Hardware RTS always ON, ignore DTR/DSR" parameter assignment.

If "Hardware RTS always ON" is configured, it is imperative that you fully wire the interface signals used. Make sure that the local RTS (out) is connected with the CTS (in) of the communication partner and the local CTS is connected with the RTS of the communication partner. Accordingly, the local DTR must be connected with the DSR of the communication partner and the local DSR with the DTR of the communication partner.

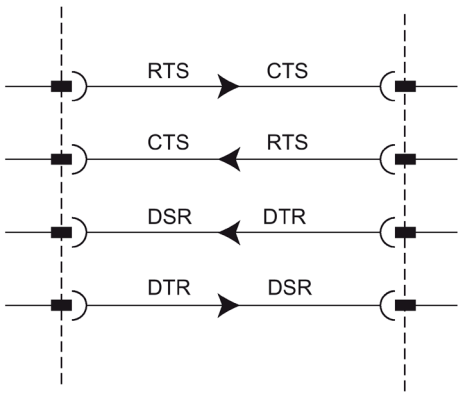

Figure 3-2 Wiring of the interface signals

- **Hardware RTS always ON, ignore DTR/DSR**
  - As soon as the communication module has been set to an operating mode with "Hardware RTS always ON" through parameter assignment, it outputs the RTS = ON signal to the communication partner to indicate its ready state.
  - RTS is set to OFF as soon as the configured maximum number of frames or 16 characters before buffer overflow is reached.
    If the communication partner nonetheless continues to send data, an error message is generated on overflow of the receive buffer. Data received in the last frame is discarded.
  - RTS is reset to ON as soon as the frame has been fetched by the CPU and the receive buffer is ready to receive data again.
  - If CTS switches to OFF during the send operation, the communication module interrupts the send operation until CTS is reset to ON. If CTS is not reset to ON within a specific configurable time, the send operation is canceled and a corresponding error message is output.
- **Hardware RTS always ON**

  The "Hardware RTS always ON" mode corresponds to the "Hardware RTS always ON, ignore DTR/DSR" mode. However, you also need to wire DTR and DSR.
  - As soon as the communication module has been set set to an operating mode with "Hardware RTS always ON" through parameter assignment, it sets DTR = ON and RTS = ON to signal its general ready state to the communication partner.
  - RTS is set to OFF as soon as the configured maximum number of frames or 16 characters before buffer overflow is reached.
    If the communication partner nonetheless continues to send data, an error message is generated on overflow of the receive buffer. Data received in the last frame is discarded.
  - RTS is reset to ON as soon as the frame has been fetched by the CPU and the receive buffer is ready to receive data again.
  - If CTS switches to OFF during the send operation, the communication module interrupts the send operation until CTS is reset to ON. If CTS is not reset to ON within a specific configurable time, the send operation is canceled and a corresponding error message is output.
  - A switch from DSR = ON to DSR = OFF cancels an active send job and triggers an error message.

Automatic operation of accompanying signals

- **Hardware RTS always switched**

  "Hardware RTS always switched" is implemented as follows on the communication module:

  – As soon as the communication module is set to the operating mode with "Hardware RTS always switched" through parameter assignment, it sets the line RTS to OFF and DTR to ON (communication module ready for operation).

    It is not possible to send frames until the DSR line is set to ON. No data is sent via the RS232C interface as long as DSR is set to OFF. A send job is canceled and a corresponding error message is generated.

  – When a send job is pending, RTS is set to ON and the configured RTS ON delay starts. On expiration of the data output time, the system checks whether the communication partner has set CTS to ON. If so, the data is sent via the RS232 interface.

  – If the CTS line is not set to ON within the RTS ON delay, or if CTS changes to OFF during transmission, the send job is aborted and an error message is generated.

  – Once the data has been sent and the configured clear RTS OFF delay has elapsed, the RTS line is set to OFF. The system does not wait for CTS to change to OFF.

  – It is always possible to receive data via the RS232 interface. There will be no reaction if there is a danger of the receive buffer of the communication module overflowing.

  – A switch from DSR = ON to DSR = OFF cancels an active send job and triggers an error message.

  Note

  Set the "RTS ON delay" in such a way that the communication partner is able to enter the ready to receive state before the time elapses.

  Set the "RTS OFF delay" in such a way that the communication partner is able to receive the last characters of the frame completely before RTS is set to OFF and the send request is canceled.

  Note

  When automatic operation of the RS232 signals is configured, RTS and DTR cannot be controlled by means of the corresponding instruction!

Time diagram

The figure below shows the chronological sequence of a send job with configured data flow control "Hardware RTS always switched":

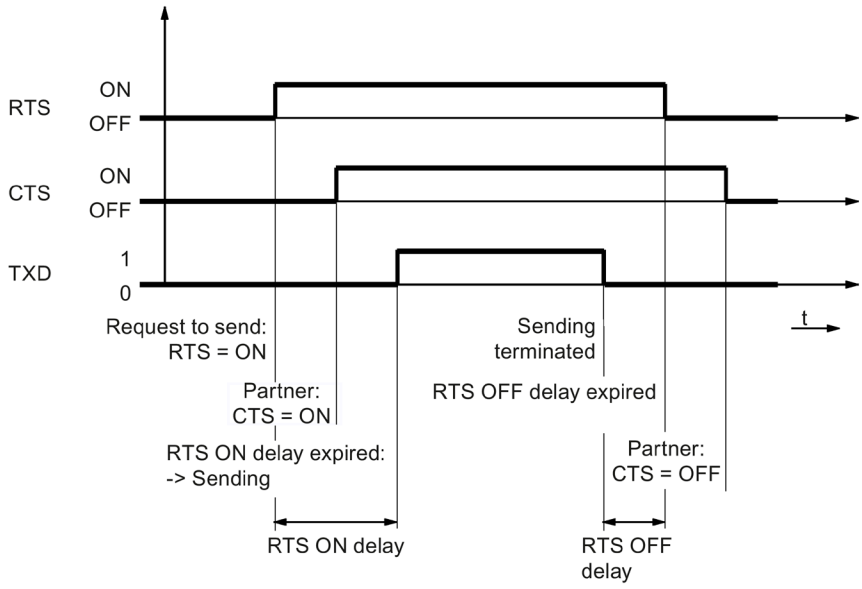

Figure 3-3 Time diagram for Hardware RTS always switched

Additional information

Note

Operation of DTR/DSR or RTS/CTS is accepted by the communication module with the following settings:

- Hardware RTS always ON, ignore DTR/DSR
- Hardware RTS always ON
- Hardware RTS always switched

Configuring / parameter assignment 4

4.1 Configuring / parameter assignment of a communication module

The following sections contain explanations on the following protocols and their parameters:

- Communication using Freeport (Page 38)
- Communication using 3964(R) (Page 50)
- Communication through Modbus RTU (Page 56)
- Communication using USS (Page 64)

This information is required to carry out the parameter assignment and subsequently programming of the communication in accordance with the used protocol.

Configuration and parameter assignment are carried out in the device view of STEP 7 (TIA Portal) and in the properties dialog of the communication module. Some configurations can also be changed during runtime by means of the corresponding "Config" instructions (Port_Config, Send_Config, Receive_Config, P3964_Config).

Procedure for setting up point-to-point communication

The procedure does not depend on the communication module used.

1. In the device view of the STEP 7 (TIA Portal) hardware editor configure an S7-1500 structure with CPU and communication module.
2. You assign the parameters of the communication module interface (protocol, protocol parameters, addresses) in the "General" area of the "Properties" tab.

4.2 Special features for the use of the option for performance optimization

From firmware version V2.0 of the communication module, the option for performance optimization is available. This option is suitable if you are exclusively sending and receiving short frames with several communication modules.

The following overview shows the most important differences between not using and using the Performance option:

Without performance optimization (Universal)	With performance optimization
Limiting the telegram length depending on the communication module to 1, 2, or 4 KB	Limiting the telegram length to 24 bytes for receive frames and 30 bytes for send frames. Longer frames are rejected.
Transmitting a frame requires several cycles of the CPU. The number of cycles increases with the number of communication modules that communicate via data record.	Transmission of a frame requires an application cycle of the CPU and several communication modules can be served in parallel (reaction time optimized, timing behavior improved).
Allocation of an address range of 8 bytes of input data and 0 bytes of output data	Allocation of an address range of 32 bytes of input data and 32 bytes of output data
Available from firmware version V1.0 of the communication module	Available from firmware version V2.0 of the communication modules
Configuration and parameter assignment in the device view of STEP 7 (TIA Portal) and in the Properties dialog of the communication module. The option for performance optimization cannot be changed with "Config" instructions (Port_Config, Send_Config,Receive_Config, P3964_Config).	
Available as of version V1.0 of the instruction libraries PtP Communication, USS Communication and MODBUS (RTU)	Available as of version V4.0 of the instruction library PtP Communication and V5.0 of the instruction libraries USS Communication and MODBUS (RTU)

Note

Modbus RTU

With communication via Modbus RTU with activated performance optimization, there are restrictions to the configuration limits of the transferred data (Page 62).

4.3 Communication using Freeport

4.3.1 Procedure for establishing a serial connection with Freeport

Requirements

- The hardware is set up and there is an electrical connection to the link partner.
- The project has been created in STEP 7 (TIA Portal) and the CPU has been inserted into the hardware configuration.

Procedure - Hardware configuration

1. Insert the CM PtP communication module into the hardware configuration.
2. Set the communication parameters according to the link partner:

   For example, transmission speed, character frame, frame start and frame end

   These parameters are transferred to the CM PtP communication module every time the CPU is started.

Procedure - Programming

1. Create the data structure that is to include the data to be transferred.

Sending data

1. Insert the instructions from the PtP Communication library: Send_P2P for sending data
2. Interconnect the input and output parameters of the instruction, e.g.:
   - HWID from the system tags at the PORT input
   - Data structure with the data to be sent at the BUFFER input

   Note: During operation, each positive edge at the REQ input will send the specified data area once. The block must be called until DONE indicates that the data was transferred to the module.

   In case of an error, setting ERROR once and displaying the corresponding information in STATUS indicates that the data was not transferred.

Receiving data:

1. Insert the instructions from the PtP Communication library: Receive_P2P for sending data
2. Interconnect the input and output parameters of the instruction, e.g.:
   - HWID from the system tags at the PORT input
   - Data structure for storage of received data at the BUFFER input

   Note: A high level at the NDR output during operation indicates that new data was received and stored in the specified data area. The block must be called until NDR=TRUE. The received data can then be analyzed and the RECEIVE_P2P can be called again.

Optional additions

- Instructions that end in _Config can be used optionally to change the parameters of the hardware configuration during operation of the user program. The changes are not saved in the hardware configuration. They are overwritten at the next restart.
- The instructions Signal_Set and Signal_Get can be used to control the RS232 accompanying signals individually if automatic operation is not a suitable option.

4.3.2 Data transmission with Freeport

Introduction

Freeport is a freely programmable frame-based protocol that is also known as ASCII protocol.

The Freeport protocol controls data transmission by means of a point-to-point connection between the communication module and a communication partner. The Freeport protocol contains the physical layer (Layer 1).

The Freeport protocol supports sending and receiving of messages with any structure (all characters from 00H through FFH (for character frames with 8 data bits) or from 00H through 7FH (for character frames with 7 data bits)).

The frame start and end criteria must be configured both for the send and the receive direction. The start and end criteria can be configured differently.

Instructions are available for communication with a communication partner (see Overview of PtP programming).

4.3.3 Sending data with Freeport

Specifying settings for sending

To send a message, the partner must be informed of the start and end of the message. These settings can be permanently set in the hardware configuration or can be adjusted during runtime by using the instruction Send_Config. You can select one of the following options or also combine them:

- Send break before frame start

  You can specify that an additional Break is sent at the beginning of each message transmission on expiration of the RTS ON delay time.
  The duration of the "Break" is specified in bit times.

  Compliance with the send break can be deactivated if other mechanisms are used for synchronization.

- Send idle line

  You can specify that an additional "Idle Line" signal is output at the start of each message transmission.
  The duration of the "Idle Line" is specified in bit times.

  Compliance with the send break can be deactivated if other mechanisms are used for synchronization.

- RTS ON delay

  You can configure the time that has to expire after the RTS (Request to send) before the actual data transmission starts (RS232 only).

- RTS OFF delay

  You can configure the time that has to expire after transmission has been completed before the RTS signal is deactivated (RS232 only).

- Send up to and including the end delimiter

  You can configure the number of end delimiters (1 or 2) and their value.

  All data up to the end delimiter(s) is sent, independent of the selected frame length. The end delimiter must be included in the data to be sent. Data is sent only up to and including the delimiter, even if the specified data length is longer.

- Number of appended characters

  Input of the number of appended characters. Sending takes place up to the configured length. The end delimiter(s) is/are appended automatically. Depending on the number of end delimiters, one to five characters more than the number specified at the instruction are sent to the partner.

Note

If you combine "Send break before frame start", "Send idle line" and "RTS ON delay", these are processed in the order "RTS ON delay", "Send break before frame start" and "Send idle line".

4.3.4 Receiving data with Freeport

Specifying the message start

For data transmission with Freeport, you can choose between several different start criteria. The start criterion defines when a frame starts. Once a criterion that indicates the start of the message is met, the data stream is scanned for message end criteria. Here you select the settings that correspond to the properties of the sending communication partner.

Two different methods are available for detecting the message start:

- **Start on any character**

  Any character can be used to define the start of the message (default).

  This means that the first character sent at the start of communication, or after the frame end has been detected, will be identified as the first character of a message.

- **Start on special condition**

  The start of the message is detected based on the following specified conditions.

  – **After detection of a line break**

    The frame start is not accepted unless a break has been received beforehand, in other words, it is compulsory for the partner to send a break before sending a frame.

  – **After detection of an idle line**

    The frame start is not accepted until the configured idle line duration has expired. This procedure requires a minimum interval between two frames.

  – **After receipt of a start character**

    The frame start is detected when the configured start character is identified.

  – **After detection of one or several start sequences**

    The frame start is detected when the configured string with a length of up to five characters is identified. You can configure up to 4 start sequences. The start sequences that are up to 5 characters long can also contain "don't care characters".

Example:

Table 4- 1 Configured start conditions

Start condition	1st character	2nd character	3rd character	4th character	5th character
1	0x68	xx	xx	0x68	xx
2	0x10	0xaa	xx	xx	xx
3	0xdc	0xaa	xx	xx	xx
4	0xe5	xx	xx	xx	xx
:					

The following message has been received: 68 10 aa 68 bb 10 aa 16

The evaluation of the start criteria begins with the receipt of the first character 0x68.
The 2nd and 3rd characters are free.
When the 4th character (second 0x68) is received, the first start condition is met and further evaluation of the message begins.

Specifying the message end

You can choose from several different end criteria for data transmission using the Freeport protocol. The end criterion defines the point at which a frame has been received completely.

Configurable end criteria are:

- **Recognize message end by message timeout**
- **Recognize message end by response timeout**
- **After character delay time elapses (default)**
- **After receipt of a fixed frame length**
- **After receipt of a maximum number of characters**
- **Read message length from message**
- **After receipt of an end sequence**

Message timeout

When data is received, the end of frame is detected on expiration of the configured time for transferring a frame. Time measurement starts after the start criterion has been met.

Response timeout

The response time is used to monitor the response behavior of the communication partner. If a valid frame start is not recognized after the completion of a send job, the send job is acknowledged with a corresponding message.

The actual end criterion has to be configured additionally.

Expiration of character delay time

When data is received, the frame end is detected when the configured maximum time between successive characters is exceeded (character delay time). The value is specified in bit times.

In this case, the character delay time must be set in such a way as to ensure that it expires between two consecutive frames. However, it should be of sufficient length to exclude incorrect identification of the end of the frame whenever the communication partner performs a transmission pause within a frame.

Note

For higher data transfer speeds, a value of at least 100 bit times is recommended.

Fixed frame length

When data is received, the end of the frame is identified after the configured frame length has been reached.

An error message is output and the frame is discarded if the character delay time expires (if activated) before the fixed frame length has been reached.

Please note the following if the frame length of the received characters does not match the fixed configured frame length:

- All characters received after the fixed configured frame length has been reached will be discarded until a new start criterion is detected.
- An error message is output and the frame is discarded if another (activated) end criterion is met before the fixed frame length has been reached.

Maximum number of characters

When receiving data, the end of the frame is recognized after the declared number of characters have arrived.

This setting can be combined with the "Character delay time" settings. The frame received is also assessed as free of error if another end condition occurs, regardless of whether the maximum number of characters has been reached.

Please note the following if the frame length of the received characters does not match the configured maximum frame length:

- All characters received after the configured maximum number of characters has been reached will be discarded until a new start criterion (e.g. "Idle Line") is detected.
- If a different (activated) end criterion is met before the configured maximum number of characters has been reached, this "frame part" is assessed as a valid frame and the partner waits for a new start criterion. All characters received prior to fulfillment of a new start criterion are discarded.

Note

If no further end criterion is activated, the fixed frame length and maximum number of characters will respond in the same way.

Message length in the message

When data is received, the frame end is detected when the frame length sent with the received frame has been reached.

The following parameters define the characters to be used for evaluation of the message length:

- **Offset of length field in message**

  In the message, the value defines the position of the character that is to be used to determine the message length.

  You can set values from 0 to 4095 characters, depending on the buffer size.

- **Size of length field**

  This value specifies the number of characters as of the first evaluation position to be used to determine the message length.

  You can set values of 1, 2 and 4 characters.

- **Number of characters not counted in length specification**

  Number of characters appended to the frame without counting towards the frame length. This value defines the number of bytes at the end of the frame which should not be included in the evaluation of the message length.

  You can set values from 0 to 255 characters.

Example:

Parameter assignments for "Message length in the message"

Offset of length field in message:	3rd byte ("2" has to be configured as offset)
Size of length field:	1 byte
Number of characters not counted in length specification:	3 bytes

Message					**Number of characters not counted in length specification**		
Start character	**Address**	**Length field**			**Checksum**	**End delimiter**	
Byte 1	Byte 2	Byte 3	Byte ...	Byte X	Byte X+1	Byte X+2	Byte X+3

End sequence

When data is received, the end of the frame is identified when the configured end sequence (max. 5 characters) is received. The end sequence which is up to 5 characters long can also contain "don't care characters". The received data is applied by the CPU, including the end sequence.

If you are working with the end sequence, transmission is not code-transparent and you must exclude the presence of end code in the user data.

Note

Frame end sequence

If there is only one end delimiter, the entry **must** take place in the 5th line.

If there are two end delimiters, the entries **must** take place in the 4th and 5th line (no gaps).

The same applies to the use of additional characters.

4.3.5 Code transparency

Code transparency

Code-transparent means that any character combinations can occur in the user data without the end criterion being recognized.

The code transparency of the procedure depends on the selection of the configured end criterion and flow control:

- With specified end sequence or using XON/XOFF flow control
  - Not code-transparent
- End criterion character delay time, fixed frame length, maximum frame length, message timeout, or response timeout and message length in the message
  - Code-transparent

4.3.6 Receive buffer

Receive buffer of the module

The communication modules have a receive buffer that stores the received frames temporarily until they are transmitted to the CPU. The receive buffer is implemented as a ring buffer, which means the frames are transmitted to the CPU in the order in which they were received until the receive buffer is full. If additional frames are received once the buffer is full, the oldest frame is overwritten. If "Prevent overwriting" was configured, a corresponding message is generated when the receive buffer is full. All further frames are rejected until the receive buffer is ready to receive new ones.

During the parameter assignment, you can specify whether the receive buffer should be deleted during startup. You can also specify the range of values (1 to 255) for the number of buffered receive frames.

The receive buffer of the module may have a size of up to 8 KB, depending on the communication module used (see chapter Introduction (Page 13)). The frame has a maximum length of 4 KB. This means that each communication module is capable of buffering at least two frames.

If you always want to transfer the last frame received to the CPU, you must set the value "1" for the number of buffered frames and deactivate overwrite protection.

Note

If continuous reading of the received data in the user program is interrupted for a certain time, you may find when the receive data is requested again, that the communication module first sends older frames before the CPU receives the most recent one. At the time of interruption, the old frame had already been transmitted from the receive buffer of the communication module and prepared for transmission to the CPU.

4.3.7 Communication via DMX512

You can use the ET 200SP CM PtP (from firmware version V1.0.5) communication module for communication via DMX512 (Digital Multiplex). For communication via DMX512, the use of the performance optimization option is also possible, provided you use the max. value 29_D as the highest address.

You can find more information on setting up a DMX512 connection in the FAQ with the entry ID 109778975 (https://support.industry.siemens.com/cs/ww/en/view/109778975) in Siemens Industry Online Support.

4.4 Communication using 3964(R)

4.4.1 Procedure for establishing a serial connection with 3964(R)

Requirements

- The hardware is set up and there is an electrical connection to the link partner.
- The project has been created in STEP 7 (TIA Portal) and the CPU has been inserted into the hardware configuration.

Procedure - Hardware configuration

1. Insert the CM PtP communication module into the hardware configuration.
2. Set the communication parameters according to the link partner:

   For example, transmission speed, character frame, frame start and frame end

   These parameters are transferred to the CM PtP communication module every time the CPU is started.

Procedure - Programming

1. Create the data structure that is to include the data to be transferred.

Sending data:

1. Insert the instructions from the PtP Communication library: Send_P2P for sending data
2. Interconnect the input and output parameters of the instruction, e.g.:
   - HWID from the system tags at the PORT input
   - Data structure with the data to be sent at the BUFFER input

   Note: During operation, each positive edge at the REQ input will send the specified data area once. The block must be called until DONE indicates that the data was transferred to the module.

   In case of an error, setting ERROR once and displaying the corresponding information in STATUS indicates that the data was not transferred.

Receiving data:

1. Insert the instructions from the PtP Communication library: Receive_P2P for sending data
2. Interconnect the input and output parameters of the instruction, e.g.:
   - HWID from the system tags at the PORT input
   - Data structure for storage of received data at the BUFFER input

   Note: A high level at the NDR output during operation indicates that new data was received and stored in the specified data area. The block must be called until NDR=TRUE. The received data can then be analyzed and the RECEIVE_P2P can be called again.

Optional additions

- Instructions that end in _Config can be used optionally to change the parameters of the hardware configuration during operation of the user program. The changes are not saved in the hardware configuration. They are overwritten at the next restart.
- The instructions Signal_Set and Signal_Get can be used to control the RS232 accompanying signals individually if automatic operation is not a suitable option.

4.4.2 Data transmission with 3964(R) procedure

Introduction

The 3964(R) procedure controls point-to-point data exchange between the communication module and a communication partner and contains both the physical layer (layer 1) and the link layer (layer 2).

Instructions are available for communication with a communication partner (see Overview of PtP programming).

4.4.3 Control characters

Introduction

During data transmission, the 3964(R) procedure adds control characters to the information data (link layer). The communication partner can use these control characters to check whether it has received all data completely and without errors.

Control characters of the 3964(R) procedure

The 3964(R) procedure evaluates the following control characters:

STX	Start of Text	Beginning of the character string to be transmitted	02H
DLE	Data Link Escape	Data transmission changeover	10H
ETX	End of Text	End of the character string to be transmitted	03H
NAK	Negative Acknowledge	Negative acknowledgment	15H
BCC	Block Check Character (only with 3964R)	Block check character	

BCC is formed and monitored automatically in the communication module. The block check character is not transmitted as frame content to the CPU.

Note

If the DLE character is transmitted as an information character within a frame, it is sent twice (DLE duplication) to distinguish it from the DLE control character during connection establishment and termination. The receiver reverses the DLE duplication.

Priority

With the 3964(R) procedure, one communication partner must be assigned a higher and the other a lower priority. If both partners start to establish a connection at the same time, the partner having lower priority will cancel its send job.

4.4.4 Block check character

Block check character

With the 3964R transfer protocol, data security is enhanced by sending an additional block check character (BCC = Block Check Character).

The block check character is the even longitudinal parity (EXOR logic operation of all data bytes) of a sent or received block. Its calculation begins with the first byte of user data (first byte of the frame) after the connection establishment, and ends after the DLE ETX character at connection termination.

Note

With DLE duplication, the DLE character is included twice in the BCC calculation.

4.4.5 Sending data with 3964(R)

Connection establishment for sending

The 3964(R) procedure sends the STX control character to set up the connection. If the communication partner responds with the DLE character before the acknowledgment delay time expires, the procedure switches to send mode.

If the communication partner answers with NAK or any other character (except for DLE or STX), or the acknowledgment delay time expires without a response, the procedure tries to set up the connection again. After the configured number of unsuccessful setup attempts, the procedure cancels the connection setup and sends the NAK character to the communication partner. The communication module outputs a corresponding error message.

Sending data

If the connection is successfully established, the user data contained in the output buffer of the communication module is sent to the communication partner with the selected transmission parameters (a DLE recognized in the user data is doubled during the send job). The communication partner monitors the time intervals between the incoming characters. The interval between two characters must not exceed the character delay time. Monitoring of the character delay time starts immediately after the connection has been established.

If the communication partner sends the NAK character during an active send operation, the procedure cancels the block and repeats it as described above, beginning with connection establishment. If a different character is sent, the procedure first waits for the character delay time to expire and then sends the NAK character to set the communication partner to idle state. Then, the procedure restarts sending with the connection setup STX.

Connection termination during sending

Once the contents of the buffer have been sent, the procedure appends the DLE and ETX characters and (only with 3964R) the block checksum BCC as the end identifier, and then waits for an acknowledgment character. If the communication partner sends the DLE characters within the acknowledgment delay time, the data block has been received without errors. If the communication partner responds with NAK, any other character (except DLE), or with a corrupted character, or if the acknowledgment delay time expires without a response, the procedure restarts sending with the connection setup STX.

After the configured number of attempts to send, the procedure stops the process and sends an NAK to the communication partner. The communication module outputs a corresponding error message.

4.4.6 Receiving data with 3964(R)

Connection setup for receiving

In idle state, when there is no send job to be processed, the procedure waits for the communication partner to set up the connection.

A wait time is started (wait time = acknowledgment delay time - 10 ms, however, maximum of 400 ms) if no free receive buffer is available during the connection setup with STX. An error message is generated if no free receive buffer is available on expiration of this time. The procedure sends the NAK character and returns to the idle state. Otherwise, the procedure sends a DLE and receives the data as described above.

The acknowledgment delay time should be set to the same value at both communication partners.

If the procedure receives any character (except for STX or NAK) while in idle state, it waits for the character delay time (CDT) to expire and then sends the NAK character. The communication module outputs a corresponding error message.

Receiving data

After a successful connection establishment, the incoming receive characters are saved to the receive buffer. If two consecutive DLE characters are received, only one of these is saved to the receive buffer.

After connection has been established and after each receive character, the procedure waits for the next character during the character delay time. If this period expires before another character is received, an NAK is sent to the communication partner. The communication module outputs a corresponding error message. A retry is then expected.

If transmission errors occur during receiving (frame errors, parity errors, etc.), the procedure continues to receive data until the connection is terminated and then sends an NAK to the communication partner. A retry is then expected. If the block still cannot be received without errors after the specified number of transfer attempts, or if the communication partner does not start the retry within a block wait time of 4 seconds, the procedure cancels the receive operation. The communication module reports the first corrupted transfer and the final cancelation.

Connection setup for receiving

If the 3964 procedure detects a DLE ETX string, it terminates the receive operation and confirms a successfully received block by sending a DLE to the communication partner. In the case of a receive error, an NAK is sent to the communication partner. A retry is then expected.

The 3964R procedure terminates the receive operation after having detected the DLE ETX BCC string. It compares the received block check character BCC with the internally calculated longitudinal parity. If the BCC is correct and no other receive errors have occurred, the 3964R procedure sends a DLE and returns to the idle state. The communication module informs the control system that new receive data is available.

If the BCC is faulty or a different receive error occurs, an NAK is sent to the communication partner. A retry is then expected.

4.5 Communication through Modbus RTU

4.5.1 Procedure for establishing a serial connection with Modbus RTU

Requirements

- The hardware is set up and there is an electrical connection to the link partner.
- The project has been created in STEP 7 (TIA Portal) and the CPU has been inserted into the hardware configuration.

Procedure - Hardware configuration

1. Insert the CM PtP communication module into the hardware configuration.
2. Select the Freeport/Modbus protocol.

   Note: With Modbus RTU, most communication parameters are set using the Modbus_Comm_Load instruction during CPU start.
3. Based on the telegram length, decide whether you want to activate the "Performance optimized for many short frames" parameter.

Procedure - Programming

1. Create the data structure that is to include the data to be transferred.
2. Integrate the Modbus_Comm_Load instruction into the cyclic sequence for parameter assignment of the communication module.
3. Interconnect the HWID from the system tags at the PORT input.
4. Call the instruction until successful execution is displayed at the DONE output. Do not call the instruction again thereafter unless you want to change the communication parameters.

Operation as Modbus master:

1. Insert the Modbus_Master instruction from the MODBUS (RTU) library:
2. Interconnect the data structure with the data to be sent at the BUFFER input.
3. Interconnect the instance DB of the Modbus_Master instruction at the MB_DB input of the Modbus_Comm_Load.

   Note: During operation, each positive edge at the REQ input will process the specified job once. The block must be called until DONE indicates that the data was transferred to the module.

   In case of an error, setting ERROR once and displaying the corresponding information in STATUS indicates that the data was not transferred.

Operation as Modbus slave:

1. Insert the Modbus_Slave instruction from the MODBUS (RTU) library.
2. Interconnect the data structure with the Modbus hold registers.
3. Enter the Modbus slave address at the MB_ADDR input.
4. Interconnect the instance DB of the Modbus_Master instruction at the MB_DB input of the Modbus_Comm_Load.

   Note: A high level at the NDR output during operation indicates that new data was received and stored in the specified data area.

4.5.2 Overview of modbus communication

Modbus RTU communication

Modbus RTU (Remote Terminal Unit) is a standard protocol for communication in the network and uses the electrical RS232 or RS422/485 connection for serial data transmission between Modbus devices in the network.

Modbus RTU uses a master/slave network in which the entire communication is triggered by only one master device while the slaves can only respond to the request of the master. The master sends a request to a slave address and only this slave address responds to the command (exception: broadcast frames to slave address 0 which are not acknowledged by the slaves).

The procedure used is a code-transparent, asynchronous half-duplex procedure. Data transmission is carried out without handshake.

Position in the system environment

The following Modbus description refers to the use of the corresponding communication modules.

- CM PtP RS232 HF
- CM PtP RS422/485 HF
- CM PtP (ET 200SP)

Function of the coupling

With the corresponding communication modules and the related instructions, you can establish a communication connection between a remote Modbus control system and a SIMATIC S7.

The GOULD-MODBUS protocol in RTU format is used for transmission.

Function codes 01, 02, 03, 04, 05, 06, 08, 15 and 16 are used for communication between a communication module operated as a Modbus slave and a master system (see Function Codes (Page 62)).

If a SIMATIC S7 communication module is operated as a Modbus master, function codes 11 and 12 are also available.

SIMATIC S7 as a Modbus slave

The master has the initiative for transmission, the communication module works as a slave.

frame traffic from slave to slave is not possible.

The instruction Modbus_Slave makes the data available on a SIMATIC data area in accordance with the mapping specification or stores them.

SIMATIC S7 as a Modbus master

As master, the communication module initiates transmission and, after outputting a request frame, it waits for the configured response monitoring time for a response frame from the slave. If the slave does not respond, the master repeats the request in accordance with the configuration before it outputs an error message.

frame structure

The data exchange "Master-Slave" and/or "Slave-Master" begins with the **slave address**, followed by the **function code**. Then the data are transferred. The structure of the data field depends on the function code used. The CRC check is transmitted at the end of the frame.

ADDRESS	FUNCTION	DATA	CRC-CHECK
Byte/Word	Byte	n byte	2 byte

ADDRESS	Modbus slave address • Standard address: 1 to 247 (bytes) • Extended station address: 1 to 65535 (word)
FUNCTION	Modbus Function Codes (Page 62)
DATA	frame data: Management and net data depending on the function code
CRC-CHECK	frame checksum

Slave address

The slave address can be range from 1 to 247 (byte) or 1 to 65535 (word). The address is used to address a defined slave on the bus.

Broadcast Message

The master uses slave address 0 to address all slaves on the bus.

Broadcast messages are only permitted in conjunction with writing Function codes 05, 06, 15 and 16.

A broadcast message is not followed by a response frame from the slave.

Data Field DATA

The data field DATA is used to transfer the function code-specific data such as:

- Bytecount, Coil_Startaddress, Register_Startaddress; Number_of_Coils, Number_of_Registers, ...

  For details, see "Function Codes (Page 62)".

CRC-Check

The end of the frame is identified by means of the CRC 16 checksum consisting of 2 bytes. It is calculated by the following polynominal: $x^{16} + x^{15} + x^2 + 1$.

The low byte is transmitted first, followed by the high byte.

End of frame

The end of frame is recognized when no transmission takes place during the time period required for the transmission of three and a half characters (3.5 times character delay time) (see Modbus Protocol Reference Guide).

This end of frame TIME_OUT therefore depends on the data transmission rate and is indicated in bit times (35 bit times are fix coded internally; further bit times can be configured in addition at the instruction).

The Modbus frame received from the connection partner is evaluated and formally checked after the end of frame TIME_OUT is received.

Exception responses

On recognition of an error in the request frame from the master, for example, register address illegal, the slave sets the highest value bit in the function code of the response frame.

This step is followed by transmission of a byte exception code that describes the cause of the error.

A detailed description of the meaning of the above-mentioned parameters is available in the "GOULD MODICON Modbus Protocol" (not part of this documentation).

Exception code frame

The exception code frame from the slave has the following structure:

- for example, slave address 5, function code 5, exception code 2

Response frame from the slave EXCEPTION_CODE_xx:

05H	Slave address
85H	Function code
02H	Exception code (1...7)
xxH	CRC checksum "Low"
xxH	CRC checksum "High"

On receipt of an exception code frame by the driver, the current job is completed with error.

The following error codes are defined in accordance with the Modbus specification:

Error code	Meaning in accordance with Modbus specification	Cause - Short Description *
1	Illegal function	Illegal function code
2	Illegal data address	Slave has illegal data address
3	Illegal data value	Slave has illegal data value
4	Failure in Associated Device	Slave has internal error
5	Acknowledge	Function is carried out
6	Busy, Rejected message	Slave is not ready to receive
7	Negative acknowledgement	The function cannot be carried out.
* Check slave for further details.		

RS232 mode

The following communication modules support RS232 mode:

- CM PtP RS232 HF
- CM PtP (ET 200SP)

For more information on RS232 mode, see the chapter RS232 mode (Page 23).

For information on hardware data flow control and on automatic operation of the accompanying signals, refer to the Handshake procedure (Page 32) chapter.

RS422/485 mode

The following communication modules support RS422/485 mode:

- CM PtP RS422/485 HF
- CM PtP (ET 200SP)

For more information on RS422/485 mode, see the chapters RS422 mode (Page 26) and RS485 mode (Page 29).

FAQ

For more information, see the following FAQs in the Siemens Industry Online Support:

- Entry ID 68202723 (https://support.industry.siemens.com/cs/ww/en/view/68202723)
- Entry ID 58386780 (https://support.industry.siemens.com/cs/ww/en/view/58386780)

4.5.3 Function Codes

Function codes used without performance optimization

The function code defines the meaning of the frame. It also defines the structure of a frame.

The following function codes are supported by the communication module:

Function code	Function in accordance with MODBUS specification	Range
01	Read Coil Status	1 to 2000 bit/request
02	Read Input Status	1 to 2000 bit/request
03	Read Holding Registers	1 to 124/125 word/request (124 with extended station address)
04	Read Input Registers	1 to 124/125 word/request (124 with extended station address)
05	Force Single Coil	1 bit/request
06	Preset Single Register	1 word/request
08 *	Loop Back Test	Read slave status or reset event counter in the slave
11 *	Fetch Communications Event Counter (only master)	—
15	Force Multiple Coils	1 to 1968 bits/request
16	Preset Multiple Registers	1 to 123 word/request

* Diagnostic information for slave communication

Modbus function code 00 sends a broadcast message to all slaves (without slave response).

Function codes used with performance optimization

With the option for performance optimization (Page 38) activated, there are the following restrictions to the configuration limits of the transferred data:

Function code	Function in accordance with MODBUS specification	CM PtP is Modbus master	CM PtP is Modbus slave
01	Read Coil Status	1 to 168/160 bits/request (160 with extended station address)	1 to 216/208 bits/request (208 with extended station address)
02	Read Input Status	1 to 168/160 bits/request (160 with extended station address)	1 to 216/208 bits/request (208 with extended station address)
03	Read Holding Registers	1 to 10 word/request	1 to 13 word/request
04	Read Input Registers	1 to 10 word/request	1 to 13 word/request
05	Force Single Coil	1 bit/request	1 bit/request
06	Preset Single Register	1 word/request	1 word/request
15	Force Multiple Coils	1 to 184/176 bits/request (176 with extended station address)	1 to 136/128 bits/request (128 with extended station address)
16	Preset Multiple Registers	1 to 11 word/request	1 to 8 word/request

Modbus function code 00 sends a broadcast message to all slaves (without slave response).

Assignment of the Modbus addresses to the SIMATIC addresses

The table below shows the assignment of the Modbus addresses to the SIMATIC addresses.

Modbus				S7-1500	
FC 1)	**Function**	**Declaration**	**Address area**	**Declaration**	**CPU address**
01	Read bits	Output	1 - 9999	Process image of outputs	Q0.0 - Q1249.6
02	Read bits	Input	10001 - 19999	Process image of inputs	I0.0 - I1249.6
03 2)	Read words	Holding Register	40001 - 49999 or 400001 - 465535	DW0 - DW19998 or DW0 - DW131068	The M address area depends on the CPU
04	Read words	Input	30001 - 39999	Process image of inputs	IW0 to IW19996
05 2)	Write bits	Output	1 - 9999	Process image of outputs	Q0.0 to Q1248.7
06	Write words	Holding Register	40001 - 49999 or 400001 - 465535	DW0 - DW19998 or DW0 - DW131068	The M address area depends on the CPU
15	Write bits	Output	1 - 9999	Process image of outputs	Q0.0 - Q1249.6
16 2)	Write words	Holding Register	40001 - 49999 or 400001 - 465535	DW0 - DW19998 or DW0 - DW131068	The M address area depends on the CPU

1) FC = function code

2) The value of the HR_Start_Offset determines whether data areas or bit memory address areas can be addressed with the FCs 03, 05 and 16 in the SIMATIC CPU.

4.6 Communication using USS

4.6.1 Procedure for establishing a serial connection with USS

Requirements

- The hardware is set up and there is an electrical connection to the link partner.
- The project has been created in STEP 7 (TIA Portal) and the CPU has been inserted into the hardware configuration.

Procedure - Hardware configuration

1. Insert the CM PtP communication module into the hardware configuration.
2. Select the Freeport protocol and set the communication parameters.

   Note: The USS functionality is implemented by the instructions.
3. Based on the telegram length, decide whether you want to activate the "Performance optimized for many short frames" parameter.

Procedure - Programming

1. Insert the USS_Port_Scan instruction from the USS Communication library.
2. Interconnect the HWID from the system tags at the PORT input.
3. Insert the USS_Drive_Control instruction from the USS Communication library.
4. Interconnect the USS_DB data structure in the instance DB of the USS_Drive_Control instruction to the USS_DB input of the USS_Port_Scan instruction. The data structure contains the data to be transferred for all drives.
5. Insert an additional call of the USS_Drive_Control instruction for each additional axis that is to be connected via the USS interface.

   Use the same instance DB each time. The distinction takes place with the help of the USS address that you specify at the DRIVE input of the USS_Drive_Control instruction. This means you have access to the control and feedback data at the parameters of the respective call for each drive.

4.6.2 Overview of USS communication

Position in the system environment

The following USS description refers to the use of the corresponding communication modules.

- CM PtP RS232 BA
- CM PtP RS422/485 BA
- CM PtP RS232 HF
- CM PtP RS422/485 HF
- CM PtP (ET 200SP)

Introduction

The USS® protocol (Universal Serial Interface Protocol) is a basic serial data transmission protocol designed to meet the requirements of drive technology.

The USS protocol defines an access method based on the master-slave principle for communication via a serial bus. One master and up to 16 drives (slaves) can be connected to the bus. The individual drives are selected by the master using an address character in the frame. A drive can never send anything without first being initiated by the master. Therefore, direct data transmission between individual drives is not possible. Communication functions in half-duplex mode. The master function cannot be transferred.

Drive technology requires specific response times for the control tasks and therefore strict cyclical frame traffic:

The master continuously sends frames (job frames) to the drives and expects a response frame from each addressed drive.

A drive must send a response frame if

- it has a received a frame without errors and
- it was addressed in this frame.

A drive may not send if these conditions are not met or the drive was addressed in the broadcast.

The connection with the respective drives exists for the master once it receives a response frame from the drive after a specified processing time (response delay time).

frame structure

Each frame begins with a start character (STX), followed by the length specification (LGE) and the address byte (ADR). The data field comes after that. The frame ends with the block check character (BCC). The frame length includes the user data (quantity n), the address byte (ADR) and the data verification character (BCC).

STX	LGE	ADR	1	2	...	N	BCC

For single-word (16-bit) data, the high byte is sent first followed by the low byte. Correspondingly, with double-word data the high word is sent first, followed by the low word. The length of a frame is specified in bytes.

Data encryption

The data is encrypted as follows:

- STX: 1 byte, start of text, 02H
- LGE: 1 byte, contains the frame length as a binary number
- ADR: 1 byte, contains the slave address and frame type in binary code
- Data fields: One byte each, content depending on job
- BCC: 1 byte, block check character

Data transmission procedure

The master ensures cyclic data transmission in frames. The master addresses all slave devices one after another with a job frame. The nodes addressed respond with a response frame. In accordance with the master-slave procedure, the slave must send the response frame to the master after it has received the job frame. Only then can the master address the next slave.

Data field in the frame

The data field is divided into two areas: the parameter area (PKW) and the process data area (PZD).

STX	LGE	ADR	Parameter (PKW)	Process data (PZD)	BCC

- **Parameter area** (PKW)

  The PKW area handles parameter transmission between two communication partners (e.g., controller and drive). This involves, for example, reading and writing parameter values and reading parameter descriptions and the associated text. The PKW interface generally contains jobs for operation and display, maintenance and diagnostics.

- **Process data area** (PZD)

  The PZD area consists of signals that are required for automation:

  – Control words and setpoints from the master to the slave

  – Status words and actual values from the slave to the master

  The contents of the parameter area and process data area are defined by the slave drives.

  For additional information on this, refer to the drive documentation.

4.6.3 Overview of functions

Transmission sequence

The instructions process the data transmission cyclically with up to 16 drive slaves. Only one job is active for each drive at any one time.

Performance features:

- Creation of data storage areas for communication, depending on the bus configuration
- Execution and monitoring of PKW jobs
- Monitoring of the complete system and troubleshooting
- Communication with the CPU
- Access to the drive functions
- Reading the drive parameters
- Writing the drive parameters

Programming - communication using instructions 5

5.1 Overview of point-to-point programming

Data exchange using Freeport or 3964(R) communication

You must make the send data available in data blocks or in the bit memory address area in the user program of the corresponding CPU. A receive buffer is available in the communication module for the receive data. A corresponding data block is set up in the data block.

In the user program of the CPU, the following instructions carry out the data transfer between the CPU and the communication module.

- Send_P2P
- Receive_P2P

The receive buffer can be deleted with the instruction Receive_Reset.

Dynamic configuration by means of the user program

As an alternative to or in addition to the parameter assignment of the communication module interface described in section Configuring / parameter assignment of a communication module (Page 37), it may be advisable in certain application areas to set up the communication dynamically, i.e., program-controlled by a specific application.

All parameters assigned in the properties dialog of the communication module can also be changed during runtime by means of one of the following "Config" instructions:

Port_Config, Send_Config, Receive_Config, P3964_Config

Program calls for point-to-point communication - sequence

The figure below shows the function of the point-to-point instructions for communication between the user program and communication partner.

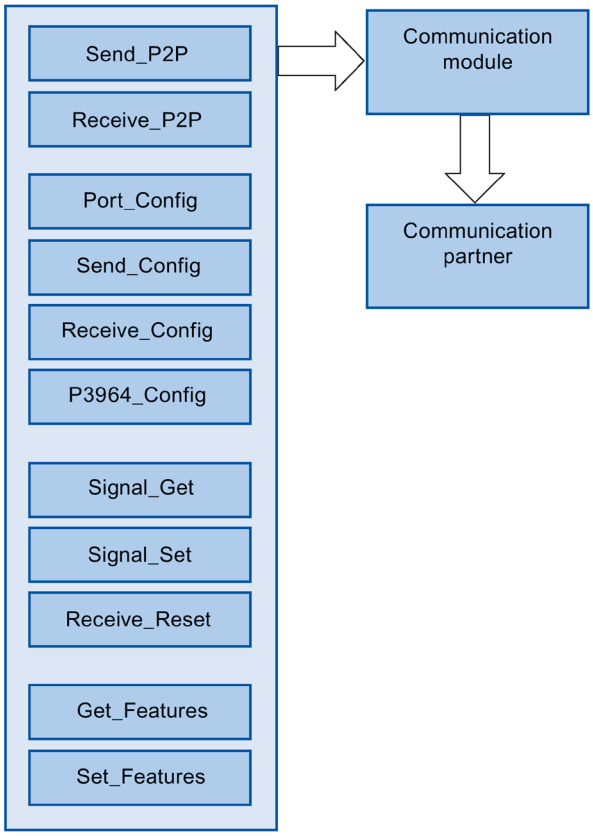

PtP instructions

Application	Instruction	Description
Data exchange between CPU, communication module and communication partner (communication)	Send_P2P (Page 97)	The instruction Send_P2P (send point-to-point data) can be used to send data to the communication partner. Call up the instruction Send_P2P to send data using the Freeport protocol. You have to call the instruction cyclically until you receive a corresponding acknowledgement at the output parameters of the instruction. Note: During parameter assignment of the XON/XOFF data flow control, user data may not contain any of the configured XON or XOFF characters. Default settings are DC1 = 11H for XON and DC3 = 13H for XOFF.
	Receive_P2P (Page 101)	The instruction Receive_P2P (receive point-to-point data) can be used to pick up the messages received in the communication module from a communication partner. Call the Receive_P2P instruction cyclically to receive data using the Freeport protocol. The instruction indicates at the NDR parameter if new received data is available. To signal the start and end of a message transmission, you need to define criteria in the Freeport protocol which identify the start and end of the message.
Deletion of the receive buffer	Receive_Reset (Page 103)	The instruction Receive_Reset (delete receive buffer) allows you to clear the receive buffer of the communication module.
Dynamic parameter assignment of the interface or the protocol (optional)	Port_Config (Page 84)	You can use the Port_Config instruction (port configuration) to configure basic interface parameters, such as the data transmission rate, parity and data flow control dynamically through your user program.
	Send_Config (Page 87)	With the instruction Send_Config(send configuration) you can configure serial send parameters, such as RTS ON delay / RTS OFF delay, dynamically for a point-to-point communication interface.
	Receive_Config (Page 89)	The instruction Receive_Config (receive parameter assignment) allows you to dynamically assign serial receive parameters to a communication module. This instruction configures the conditions that specify the start and the end of a received message.
	P3964_Config (Page 95)	The instruction P3964_Config(configure protocol) can be used to dynamically configure protocol parameters of the procedure 3964(R), such as character delay time, priority and block check using your program.
Operation of RS232 accompanying signals	Signal_Get (Page 104)	With the Signal_Get instruction (get RS232 signals) you can read the current states of the RS232 signals.
	Signal_Set (Page 105)	With the Signal_Set instruction (get RS232 signals), you can set the states of the RS232 signals DTR and RTS.
Enable Modbus CRC support and diagnostic interrupt	Get_Features (Page 107)	You can use the instruction Get_Features(get extended functions) to get information on the Modbus support and on generating diagnostic alarms.
	Set_Features (Page 108)	If supported by the module, you can use the instruction Set_Features(set extended functions) to activate the generation of diagnostic alarms.

Procedure for setting up Freeport or 3964(R) communication

Requirement: The configuration and parameter assignment of a CPU and a communication module in the device view and in the properties dialog of the communication module are complete.

1. In the project navigation for the CPU select the folder "Program blocks" and open the Main (OB1) in the folder by double-clicking it. The program editor opens.
2. From the "Instructions" task card, "Communication" area select the instructions Send_P2P and Receive_P2P and drag-and-drop them into a network of the Main (OB1).
3. Configure the instructions in accordance with your specifications.
4. Download the hardware configuration and the user program to the CPU.

5.2 Overview of Modbus programming

Program calls for Modbus communication - sequence

The figure below shows the function of the Modbus instructions for communication between user program and Modbus device. (The instructions Send_P2P, Receive_P2P and the Config instruction are required downstream).

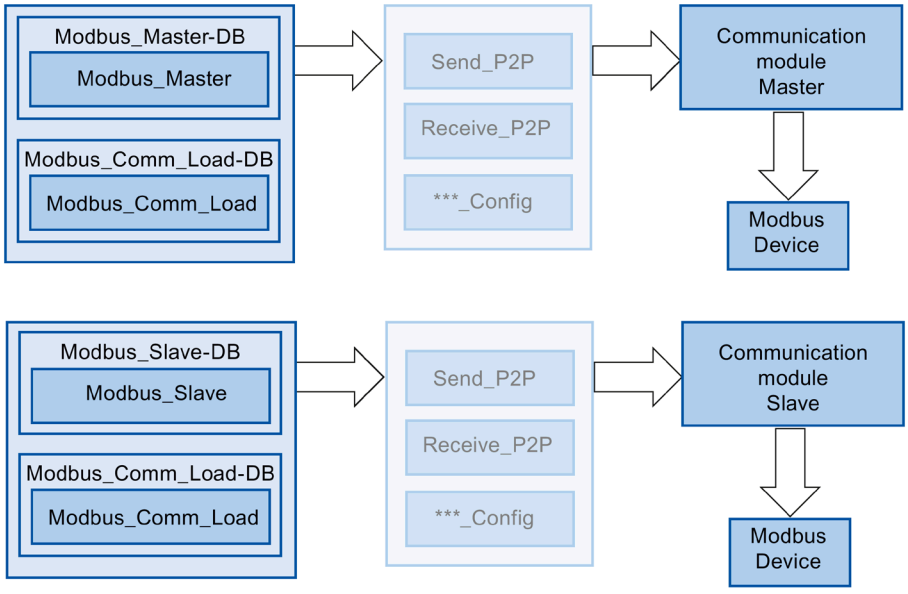

Modbus instructions

Application	Instruction	Description
Data exchange between user program and Modbus device (communication)	Modbus_Master (Page 125)	The Modbus_Master instruction allows you to communicate as Modbus master by means of the PtP port. The CPU can be used as Modbus RTU master device with the Modbus_Master instruction for communication with one or several Modbus slave devices.
	Modbus_Slave (Page 132)	The Modbus_Slave instruction allows you to communicate as Modbus slave by means of the PtP port. The CPU can be used as Modbus RTU slave device with the Modbus_Slave instruction for communication with one Modbus master device.
Parameter assignment of the interface and the protocol (mandatory)	Modbus _Comm_Load (Page 121)	The instruction Modbus_Comm_Load allows you to configure the port of the communication module for Modbus RTU. You have to run Modbus_Comm_Load to set up PtP port parameters, such as data transmission rate, parity and flow control. Once you have configured the interface for the Modbus RTU protocol, it can only be used by the instruction Modbus_Master or the instruction Modbus_Slave .

Note

Alternative use of Modbus_Slave and Modbus_Master

A communication module can be operated either as master or as slave.

Procedure for setting up Modbus communication

Requirement: The configuration and parameter assignment of a CPU and a communication module in the device view and in the properties dialog of the communication module are complete.

1. In the project navigation for the CPU select the folder "Program blocks" and open the Main (OB1) in the folder by double-clicking it. The program editor opens.
2. From the "Instructions" task card, "Communication" area select the instructions for Modbus communication in accordance with your task and drag-and-drop them into a network of the Main (OB1):
   - The instruction Modbus_Comm_Load configures the port of the communication module for Modbus communication.

     The Modbus_Comm_Load must be called in Main (OB1) until DONE (or ERROR) is reported.
   - The instruction Modbus_Master is used for the Modbus master functionality.
   - The instruction Modbus_Slave is used for the Modbus slave functionality.
3. Configure the instructions in accordance with your specifications.
4. Download the hardware configuration and the user program to the CPU.

5.3 Overview of USS programming

Program calls for USS communication - sequence

The figure below shows the function of the USS instructions for communication between user program and USS drive. (The instructions Send_P2P, Receive_P2P and the Config instruction are required downstream).

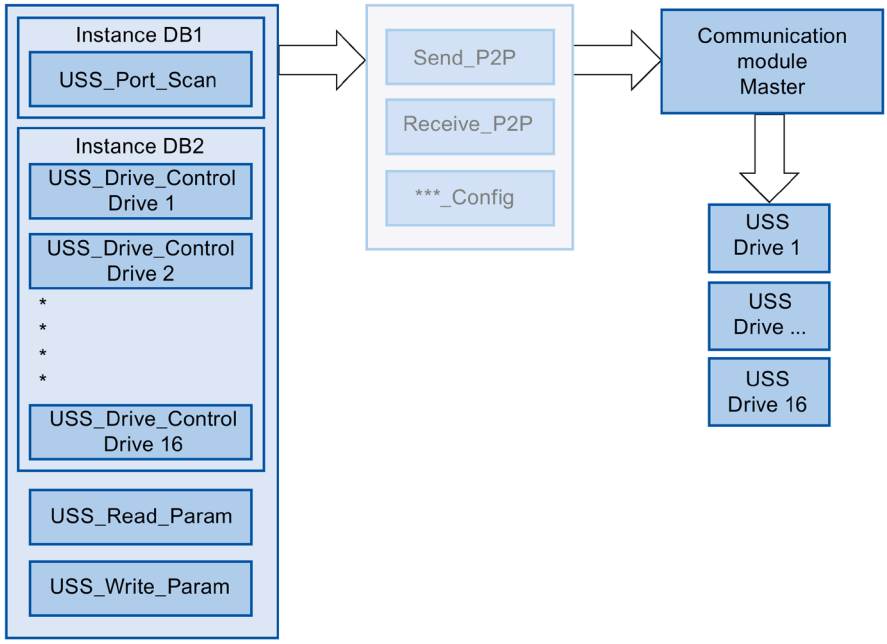

USS instructions

Application	Instruction	Description
Data communication between CPU, communication module and USS drive	USS_Port_Scan (Page 160)	The USS_Port_Scan instruction allows you to communicate via a communication module with up to 16 drives using a USS network (must be called cyclically). The instruction USS_Port_Scan controls the communication between CPU and the drives by means of the PtP communication port. A communication with the drive is processed every time you call this function. The instruction USS_Port_Scan is required once: Since most drives features a configurable internal function that monitors the integrity of the communication based on a timeout, the instruction USS_Port_Scan should be called from a time-controlled OB.
Exchange data with USS drive	USS_Drive_Control (Page 164)	The USS_Drive_Control instruction allows you to prepare the send data for a drive and to display the received data. The inputs and outputs of the instruction correspond to the states and operating functions of the drive. The USS_Drive_Control instruction must be called once for each drive. Only one common instance DB is required for all calls of the instruction USS_Drive_Control for a USS network. Interconnect all calls of the instructions USS_Drive_Control for a USS network with the same instance DB. The USS_Drive_Control instruction should be called from the cyclic Main (OB1) of the main program.
Read or modify parameters in USS drive	USS_Read_Param (Page 168)	The USS_Read_Param instruction allows you to read parameters from the drive. You use the USS_Read_Param instruction to read the operating parameters of the drive that controls the internal drive functions. The USS_Read_Param instruction should be called from the cyclic Main (OB1) of the main program.
	USS_Write_Param (Page 170)	The USS_Write_Param instruction allows you to change parameters in the drive. The USS_Write_Param instruction should be called from the cyclic Main (OB1) of the main program.

Procedure for setting up USS communication

Requirement: The configuration and parameter assignment of a CPU and a communication module in the device view and in the properties dialog of the communication module are complete.

1. In the project tree for the CPU, select the "Program blocks" folder and open the desired time-controlled OB by double-clicking it. The program editor opens.
2. From the "Instructions" task card, "Communication" area select the instruction USS_Port_Scan and drag-and-drop it into a network of a time-controlled OB.

   The instruction USS_Port_Scan allows you to communicate by means of the USS network.
3. In the project navigation for the CPU select the folder "Program blocks" and open the Main (OB1) in the folder by double-clicking it. The program editor opens.

4. From the "Instructions" task card, "Communication" area select the instructions for USS communication in accordance with your task and drag-and-drop them into a network of the Main (OB1):
   - The instruction USS_Drive_Control is used for data exchange with the drive.
   - The instruction USS_Read_Param is used for reading parameters from the drive.
   - The instruction USS_Write_Param is used for changing parameters in the drive.
5. Configure the instructions in accordance with your specifications.
6. Download the hardware configuration and the user program to the CPU.

5.4 Instructions

5.4.1 Point-to-point

5.4.1.1 Overview of Freeport communication

STEP 7 offers extended instructions that can be used for Freeport communication with a protocol specified in the user program. These instructions can be divided into two categories:

- Configuration instructions
- Communication instructions

Data communication

Two types of data exchange between the CPU and the communication module are possible with the communication modules:

- Acyclic data exchange (Universal)

  The Freeport instructions communicate with the communication module asynchronously by reading or writing data records.

  Data transmission takes place across several cycles.

  Note

  CPU configuration limits

  When using the instructions with asynchronous communication, you should take into account the configuration limits of the respective CPU for reading and writing data records. If multiple instructions need to read or write data records simultaneously on a CPU, there may need to be a gap between the calls of each instruction by the user program.

- Cyclic data exchange (Performance optimized for many short frames (Page 38))

  The Freeport instructions communicate with the communication module synchronously with the application cycle via the IO data of the communication module. Using cyclic data optimizes the reaction time, especially if you are using several CM PtPs in parallel.

  Note

  Cyclic data exchange is available with the instruction library PtP-Communication as of V4.0.

Configuration instructions

Before the user program can start the Freeport communication, the communication interface and the parameters for sending and receiving of data must be configured.

The interface configuration and the data configuration can be set for each CM in the device configuration or with the following instructions of your user program:

- Port_Config (Page 84)
- Send_Config (Page 87)
- Receive_Config (Page 89)
- P3964_Config (Page 95)

NOTICE
Device configuration <-> Configuration instructions The device configuration parameters are transferred to the CM upon each Power On of the CPU (return of voltage). The parameters of the configuration instructions are transferred to the CM as defined in your user program. The parameters of the device configuration are not synchronized with the parameters of the configuration instructions, which means the parameters of the configuration instructions are not applied to the CPU device configuration. With your user program, you determine the parameters that apply in the CM and when they apply.

Communication instructions

The user program uses the instructions for Freeport communication to send data to and receive data from the communication interfaces. The CMs send data to and receive data from the communication stations.

- Send_P2P (Page 97)
- Receive_P2P (Page 101)

Note

Data consistency

- If the data to be sent is transmitted consistently, it cannot be changed after the positive edge at the REQ parameter until DONE has been set by the Send_P2P instruction.
- If the receive data is to be read consistently, it may only be evaluated in the cycle in which NDR = TRUE.

The receive buffer can be reset with additional instructions and special RS232 signals can be queried and set.

- Receive_Reset (Page 103)
- Signal_Get (Page 104)
- Signal_Set (Page 105)

The following instructions let you read or write extended functions, as long as these are supported by the module.

- Get_Features (Page 107)
- Set_Features (Page 108)

All Freeport instructions work asynchronously. The instructions must therefore be called until the DONE or NDR output parameter indicates that the execution is complete.

The user program can determine the send and receive status with the help of the query architecture. Send_P2P and Receive_P2P can be run at the same time. The communication modules buffer the send and receive data as required until a module-specific maximum buffer size has been reached.

Note

Resolution of bit times

The number of bit times is specified with the configured data transmission rate for different parameters. Specifying the parameter in bit times makes it independent of the data transmission rate. All parameters with unit of bit times can be specified with a maximum number of 65535.

5.4.1.2 Using the instructions

The Freeport instructions must be called cyclically to query received data or the end of transmission for a send process.

Depending on the data volume and on whether the Performance option has been activated, data transmission may take place over several calls (program cycles).
If a command is completed with DONE = TRUE or NDR = TRUE, it has been executed without errors.

Note

Backing up STATUS

The DONE, NDR, ERROR and STATUS parameters are only available for one block cycle. To display the STATUS, you should therefore copy it to a free data area.

Master

Typical sequence for a master:

1. The Send_P2P instruction triggers transmission to the CM.
   Data transmission is initiated by a positive edge at the REQ input.
2. The Send_P2P instruction is executed in subsequent cycles to query the status of the transmission process.
3. When the Send_P2P instruction signals that transmission is complete at the DONE output, the user code can prepare the receipt of the answer.
4. The Receive_P2P instruction is run repeatedly to query an answer. If the CM has acquired response data, the Receive_P2P instruction copies the response to the CPU and signals that new data has been received at the NDR output.
5. The user program can process the response.
6. Back to step 1 and repetition of the sequence.

Slave

Typical sequence for a slave:

1. The user program runs the Receive_P2P instruction in each cycle.
2. If the CM has received a request, the Receive_P2P signals that new data is available at the NDR output and the request is copied to the CPU.
3. The user program processes the request and creates a response.
4. The response is returned to the master with the Send_P2P instruction.
5. The Send_P2P instruction must be run repeatedly to ensure that the send process is actually taking place.
6. Back to step 1 and repetition of the sequence.

The slave must ensure that Receive_P2P is called up often enough so that a transmission can be received by the master before it cancels the process due to a timeout while waiting for the response. To do so, the user program Receive_P2P can be called from within a cycle OB whose cycle time is sufficiently short so that the master can receive a transmission before the timeout setting expires. If the OB cycle time is set so that two runs can take place during the timeout setting of the master, the user program can receive all transmissions without any losses.

5.4.1.3 General parameters for Freeport operations

Table 5- 1 General input parameters of the Freeport instructions

Parameter	Description
REQ	Data transmission is initiated by a positive edge at the REQ input. Another edge at REQ may only be generated after the command has been completed (DONE or ERROR). Data transmission can take several calls (program cycles), depending on the data volume. When you add a Freeport instruction to your program, STEP 7 prompts you to specify the instance DB (or to have STEP 7 create a corresponding instance DB). Use a unique DB for each PtP instruction call.
PORT	A port address is assigned during configuration of the communication module. The PORT parameter communicates assignment to a specific communication module to the instruction. You can select a symbolic name for the standard port after the configuration. The assigned CM port value is the "Hardware ID" property of the device configuration with S7-1200/1500 and the "Input address" with S7-300/400. The symbolic port name is assigned in the symbol table.

The output parameters DONE, NDR, ERROR and STATUS of the Freeport instructions indicate the execution status of the Freeport functions.

Table 5- 2 Output parameters DONE, NDR, ERROR and STATUS

Parameter	Data type	Standard	Description
DONE	Bool	FALSE	Set to TRUE for one cycle to indicate that the last request was completed with errors; otherwise FALSE.
UNIVERSAL [1]	Bool	FALSE	Type of data communication between the CPU and the CM specified via PORT: FALSE: Performance optimization (cyclic) • Receive frames max. 24 bytes • Send frames max. 30 bytes TRUE: Universal (acyclic) • Limiting the frame length depending on the CM to 1, 2, or 4 KB
NDR	Bool	FALSE	Set to TRUE for one cycle to indicate that new data has been received; otherwise FALSE.
ERROR	Bool	FALSE	Set to TRUE for one cycle to indicate that the last request was completed with errors; the corresponding error code can be found in STATUS; otherwise FALSE.
STATUS	Word	16#0000 or 16#7000	Result status: • If the DONE or NDR bit is set, STATUS is set to 0/16#7000 or to a specific status code. • If the ERROR bit is set, STATUS displays an error code. • If none of the bits listed above is set, the instruction can return status results that describe the current status of the function. The value in STATUS is valid until you call this instruction again (with one and the same port address).

[1] Available from library version V4.0

Table 5- 3 In/out parameter COM_RST

Parameter	Data type	Standard	Description
COM_RST	Bool	FALSE	Initialization of the instruction The instruction is initialized with TRUE. COM_RST is then set back to FALSE. Note: You must set COM_RST to TRUE during startup and should not subsequently change the parameter (that is, do not assign a value when you call the instruction). COM_RST is reset by the instruction following initialization of the instance DB.

Note

Please note that the parameters DONE, NDR, ERROR and STATUS are only set for one cycle.

Table 5- 4 Shared error codes

Error code	Description
16#0000	No error
16#7000	Function not active
16#7001	Initial call after request started.
16#7002	Subsequent call after request started.
16#8x3A	Invalid pointer in parameter x

Table 5- 5 Shared error classes of the STATUS parameter

Description of the class	Error classes	Description
Port configuration	16#81Ax	For the description of frequent errors in the interface configuration
Send configuration	16#81Bx	For the description of errors in the send configuration
Receive configuration	16#81Cx	For the description of errors in the receive configuration
Sending	16#81Dx	For the description of runtime errors during sending
Receiving	16#81Ex	For the description of runtime errors during receiving
RS232 accompanying signals	16#81Fx	For the description of errors in connection with signal processing

See also

Special features for the use of the option for performance optimization (Page 38)

5.4.1.4 Port_Config: Configure PtP communication port

Note

Use with CM1241

The use of this instruction with a CM1241 is only possible from firmware version V2.1 of the module.

Description

The Port_Config instruction (port configuration) allows you to change parameters such as the data transmission rate in runtime using your program. The data pending in the CM is deleted with the execution of Port_Config.

Configuration changes of Port_Config are saved on the CM and not in the CPU. When the voltage returns, the CM is configured with the data saved in the device configuration.

Parameters

Parameter	Declaration	Data type		Default	Description
		S7-1200/1500	S7-300/400/WinAC		
REQ	IN	Bool		FALSE	Starts the transmission of data to the CM upon a positive edge at this input.
PORT	IN	PORT (UInt)	Word	0	Specifies the communication module which is used for the communication: • For S7-1500/S7-1200: "HW identifier" from the device configuration. The symbolic port name is assigned in the "System constants" tab of the PLC tag table and can be applied from there. • For S7-300/S7-400: "Input address" from the device configuration. In the S7-300/400/WinAC systems the PORT parameter is assigned the input address assigned in HWCN.
PROTOCOL	IN	UInt	Word	0	Protocol • 0 = Freeport protocol • 1 = Protocol 3964(R)

Parameter	Declaration	Data type		Default	Description
		S7-1200/1500	S7-300/400/WinAC		
BAUD	IN	UInt	Word	6	Data transmission rate of the port: • 1 = 300 bps • 2 = 600 bps • 3 = 1200 bps • 4 = 2400 bps • 5 = 4800 bps • 6 = 9600 bps • 7 = 19200 bps • 8 = 38400 bps • 9 = 57600 bps • 10 = 76800 bps • 11 = 115200 bps • 12 = 250000 bits/s
PARITY	IN	UInt	Word	1	Parity of the port: • 1 = no parity • 2 = even parity • 3 = odd parity • 4 = mark parity • 5 = space parity • 6 = any
DATABITS	IN	UInt	Word	1	Bits per character: • 1 = 8 data bits • 2 = 7 data bits
STOPBITS	IN	UInt	Word	1	Stop bits: • 1 = 1 stop bit • 2 = 2 stop bits
FLOWCTRL	IN	UInt	Word	1	Flow control: • 1 = no flow control • 2 = XON/XOFF • 3 = Hardware RTS always ON • 4 = Hardware RTS switched • 5 = Hardware RTS always ON, ignore DTR/DSR
XONCHAR	IN	Char		16#0011	Specifies the character that serves as XON character. It is typically a DC1 character (11H). This parameter is only evaluated when software flow control is active.
XOFFCHAR	IN	Char		16#0013	Specifies the character that serves as XOFF character. It is typically a DC3 character (13H). This parameter is only evaluated when software flow control is active.
WAITIME	IN	UInt	Word	2000	Specifies how long to wait for an XON character after receipt of an XOFF character or how long to wait for a CTS = ON signal after CTS = OFF (0 to 65535 ms). This parameter is only evaluated when flow control is active.

Parameter	Declaration	Data type		Default	Description
		S7-1200/1500	S7-300/400/WinAC		
MODE	IN	USInt	Byte	0	Operating mode Valid operating modes are: • 0 = Full duplex (RS232) • 1 = Full duplex (RS422) four-wire mode (point-to-point) • 2 = Full duplex (RS 422) four-wire mode (multipoint master; CM PtP (ET 200SP)) • 3 = Full duplex (RS 422) four-wire mode (multipoint slave; CM PtP (ET 200SP)) • 4 = Half duplex (RS485) two-wire mode [1]
LINE_PRE	IN	USInt	Byte	0	Receive line initial state Valid initial states are: • 0 = "No" initial state [1] • 1 = signal R(A)=5 V, signal R(B)=0 V (break detection): Break detection is possible with this initial state. Can only be selected with: "Full duplex (RS422) four-wire mode (point-to-point connection)" and "Full duplex (RS422) four-wire mode (multipoint slave)". • 2 = signal R(A)=0 V, signal R(B)=5 V: This default setting corresponds to the idle state (no active send operation). No break detection is possible with this initial state.
BRK_DET	IN	USInt	Byte	0	Break detection The following settings are permitted: • 0 = break detection deactivated • 1 = break detection activated
COM_RST	IN/OUT	---	Bool	FALSE	Initialization of the instruction The instruction is initialized with TRUE. The instruction then resets COM_RST to FALSE.
DONE	OUT	Bool		FALSE	TRUE for one cycle after the last request has been completed without errors
ERROR	OUT	Bool		FALSE	TRUE for one cycle after the last request has been completed with errors
STATUS	OUT	Word		16#7000	Error code (see Error messages (Page 110))

[1] Required setting for the use of PROFIBUS cables with CM 1241 for RS485

Additional information about the general parameters is available at "General parameters for Freeport operations (Page 82)".

5.4.1.5 Send_Config: Configure PtP sender

Note

Use with CM1241

The use of this instruction with a CM1241 is only possible from firmware version V2.1 of the module.

Description

The Send_Config instruction (send configuration) allows you to change send parameters in runtime using your program (conditions that identify the start and the end of the data to be sent). Any data pending in a CM is deleted when Send_Config is executed.

Configuration changes of Send_Config are saved on the CM and not in the CPU. The parameters saved in the device configuration are restored once the voltage returns to the CPU or the communication module.

Parameters

Parameter	Declaration	Data type		Default	Description
		S7-1200/1500	S7-300/400/WinAC		
REQ	IN	Bool		FALSE	Activates the configuration change upon a positive edge at this input.
PORT	IN	PORT (UInt)	Word	0	Specifies the communication module which is used for the communication: • For S7-1500/S7-1200: "HW identifier" from the device configuration. The symbolic port name is assigned in the "System constants" tab of the PLC tag table and can be applied from there. • For S7-300/S7-400: "Input address" from the device configuration. In the S7-300/400/WinAC systems the PORT parameter is assigned the input address assigned in HWCN.
RTSONDLY	IN	UInt	Word	0	Number of milliseconds to wait after activation of RTS before a transmission of send data is started. This parameter is only valid if the hardware flow control is active. The valid range is 0 to 65535 ms. The value 0 deactivates the function.
RTSOFFDLY	IN	UInt	Word	0	Number of milliseconds to wait after transmission of send data before RTS is deactivated: This parameter is only valid if the hardware flow control is active. The valid range is 0 to 65535 ms. The value 0 deactivates the function.

Parameter	Declaration	Data type		Default	Description
		S7-1200/1500	S7-300/400/WinAC		
BREAK	IN	UInt	Word	0	This parameter specifies that a BREAK is to be sent at the start of each frame for the specified number of bit times. The maximum is 65535 bit times. The value 0 deactivates the function.
IDLELINE	IN	UInt	Word	0	This parameter specifies that the line is to remain in idle for the specified number of bit times prior to the start of each frame. The maximum is 65535 bit times. The value 0 deactivates the function.
USR_END	IN	STRING[2]		0	Input of end delimiters. No more than 2 end delimiters can be configured. All data including the end delimiter(s) is sent, independent of the configured frame length.
APP_END	IN	STRING[5]		0	Input of characters to be appended. You can append up to 5 characters.
COM_RST	IN/OUT	---	Bool	FALSE	Initialization of the instruction The instruction is initialized with TRUE. The instruction then resets COM_RST to FALSE.
DONE	OUT	Bool		FALSE	TRUE for one cycle after the last request has been completed without errors
ERROR	OUT	Bool		FALSE	TRUE for one cycle after the last request has been completed with errors
STATUS	OUT	Word		16#7000	Error code (see Error messages (Page 110))

Additional information about the general parameters is available at "General parameters for Freeport operations (Page 82)".

5.4.1.6 Receive_Config: Configure PtP recipient

Note

Use with CM1241

The use of this instruction with a CM1241 is only possible from firmware version V2.1 of the module.

Description

The Receive_Config instruction (receive configuration) allows you to change receive parameters in runtime using your program. This instruction configures the conditions that mark the start and the end of received data. Any data pending in a CM is deleted when Receive_Config is executed.

Configuration changes of Receive_Config are saved **non-retentive** on the CM. The parameters saved in the device configuration are restored once the voltage returns to the CPU or the communication module. The Receive_Config instruction therefore must be called again from the user program when the voltage returns to the CPU or to the communication module in order to overwrite the parameters stored in the device configuration.

Parameter

Parameter	Decla-ration	Data type		Default	Description
		S7-1200/1500	S7-300/400/WinAC		
REQ	IN	Bool		FALSE	Activates the configuration change upon a positive edge at this input.
PORT	IN	PORT (UInt)	Word	0	Specifies the communication module which is used for the communication: • For S7-1500/S7-1200: "HW identifier" from the device configuration. The symbolic port name is assigned in the "System constants" tab of the PLC tag table and can be applied from there. • For S7-300/S7-400: "Input address" from the device configuration. In the S7-300/400/WinAC systems the PORT parameter is assigned the input address assigned in HWCN.
RECEIVE_CONDITIONS	IN	Variant	Any	-	The data structure of Receive_Conditions specifies the start and end conditions used to identify the start and end of a frame.
COM_RST	IN/OUT	---	Bool	FALSE	Initialization of the instruction The instruction is initialized with TRUE. The instruction then resets COM_RST to FALSE.
DONE	OUT	Bool		FALSE	TRUE for one cycle after the last request has been completed without errors

Parameter	Decla-ration	Data type		Default	Description
		S7-1200/1500	S7-300/400/WinAC		
ERROR	OUT	Bool		FALSE	TRUE for one cycle after the last request has been completed with errors
STATUS	OUT	Word		16#7000	Error code (see Error messages (Page 110))

Additional information about the general parameters is available at "General parameters for Freeport operations (Page 82)".

Start conditions for the Receive_P2P instruction

The Receive_P2P instruction uses the configuration specified in the device configuration or by the Receive_Config instruction to determine the start and end of Freeport communication frames. The start of the frame is defined by the start conditions. The start of the frame can be determined with one or several start conditions.
If Break as well as Idle Line is activated, Break must be met first and then Idle Line as well. After that, one of the other conditions (start character or start sequence) is sufficient to start data transmission.
The start condition "Any character" cannot be combined with other start conditions.

Data type structure of the Receive_Conditions parameter, part 1 (start conditions)

Table 5- 6 Structure of Receive_Conditions for start conditions

Parameter	Declaration	Data type	Default	Description
START .STARTCOND	IN	Word	16#0002	Specifying the start condition • 01H - detection of the start character • 02H - Any character • 04H - detection of a line break • 08H - detection of an idle line • 10H - detection of start sequence 1 • 20H - detection of start sequence 2 • 40H - detection of start sequence 3 • 80H - detection of start sequence 4 The start conditions can be combined by adding the values together.
START.IDLETIME	IN	Word	16#0028	The number of bit times required in the idle state for a new frame start to be detected (default value: W#16#28). Only in connection with the condition "Detection of an idle line". 0 to FFFF
START .STARTCHAR	IN	Byte	16#0002	The start character for the condition "Start character". (default value: B#16#2)

Parameter	Declaration	Data type	Default	Description
START.SEQ[1] .CTL	IN	Byte	0	Start sequence 1, deactivate/activate comparison for each character: (default value: B#16#0) These are the activation bits for each character of the start character string. • 01H - character 1 • 02H - character 2 • 04H - character 3 • 08H - character 4 • 10H - character 5 When a bit is deactivated for a specific character, this means that each character in this position in the character string represents a valid start character string (e.g. 1FH = all 5 characters interpreted).
START.SEQ[1] .STR[1] .. START.SEQ[1] .STR.[5]	IN	Char[5]	0	Start sequence 1, start character (5 characters).
START.SEQ[2] .CTL	IN	Byte	0	Start sequence 2, deactivate/activate comparison for each character. Default value: B#16#0)
START.SEQ[2] .STR[1] .. START.SEQ[2] .STR.[5]	IN	Char[5]	0	Start sequence 2, start character (5 characters).
START.SEQ[3] .CTL	IN	Byte	0	Start sequence 3, deactivate/activate comparison for each character. Default value: B#16#0
START.SEQ[3] .STR[1] .. START.SEQ[3] .STR.[5]	IN	Char[5]	0	Start sequence 3, start character (5 characters).
START.SEQ[4] .CTL	IN	Byte	0	Start sequence 4, deactivate/activate comparison for each character. Default value: B#16#0
START.SEQ[4] .STR[1] .. START.SEQ[4] .STR.[5]	IN	Char[5]	0	Start sequence 4, start character (5 characters),

Example

Have a look at the following received data in hexadecimal coding: "**68** 10 aa **68** bb 10 aa 16". The configured start character strings are available in the following table. Start character strings are evaluated once the first character 68H has been successfully received. After the fourth character has been successfully received (the second 68H), start condition 1 has been met. Once the start conditions have been met, the evaluation of the end conditions starts.

Processing of the start character string can be canceled due to different errors in parity, framing or time intervals between characters. These errors prevent receipt of the data because the start condition has not been met (an error message is output).

Table 5- 7 Start conditions

Start condition	First character	First character +1	First character +2	First character +3	First character +4
1	**68**H	xx	xx	**68**H	xx
2	10H	aaH	xx	xx	xx
3	dcH	aaH	xx	xx	xx
4	e5H	xx	xx	xx	xx

End conditions for the Receive_P2P instruction

The end of a frame is defined by the first occurrence of one or more configured end conditions.

You can configure the end conditions either in the properties of the communication interface in the device configuration, or with the Receive_Config instruction. The receive parameters (start and end conditions) are reset to the settings in the device configuration each time the voltage returns to the CPU or the communication module. When the STEP 7 user program executes Receive_Config, the settings are set to the parameters of Receive_Config .

Data type structure of the Receive_Conditions parameter, part 2 (end conditions)

Table 5- 8 Structure of Receive_Conditions for end conditions

Parameter	Declaration	Data type	Default	Description
END.ENDCOND	IN	Word	0	This parameter specifies the condition for the frame end: • 01H - response timeout • 02H - message timeout • 04H - character delay time • 08H - maximum frame length • 10H - read message length from message (N+LEN+M) • 20H - end sequence • 40H - fixed frame length
END.FIXLEN	IN	Word	1	Fixed frame length: Only used if the end condition "Fixed frame length" has been selected. 1 to 4000 bytes (up to 4 KB depending on the module)

Parameter	Declaration	Data type	Default	Description
END.MAXLEN	IN	Word	1	Maximum frame length: Only used if the end condition "Maximum frame length" has been selected. 1 to 4000 bytes (up to 4 KB depending on the module)
END.N	IN	Word	0	Byte position of the length field in the frame. Only used with end condition N+LEN+M. 1 to 4000 bytes (up to 4 KB depending on the module)
END .LENGTHSIZE	IN	Word	0	Size of the length field (1, 2, or 4 bytes). Only used with end condition N+LEN+M.
END.LENGTHM	IN	Word	0	Number of characters after the length field that are not included in the value of the length field. This entry is only used with end condition N+LEN+M. 0 to 255 bytes
END.RCVTIME	IN	Word	200	Specify the wait time for the first received character after a frame has been sent. The receive instruction is terminated with an error message if a character is not received within the specified time. This information is used only with the condition "Response timeout". (0 to 65535 ms). Note: This parameter cannot be used as sole end criterion but only in connection with at least one other end condition.
END.MSGTIME	IN	Word	200	Specify how long to wait for receipt of the complete frame after receipt of the first character. This parameter is used only if the condition "Message timeout" is selected. (0 to 65535 ms)
END.CHARGAP	IN	Word	12	Enter the maximum number of bit times between characters. If the number of bit times between characters exceeds the specified value, the end condition has been met. This information is used only with the condition "Character delay time". (0 to 65535 bit times) Note: For higher data transfer speeds, a value of at least 100 bit times is recommended.
END.SEQ.CTL	IN	Byte	0	Character sequence 1, deactivate/activate comparison for each character: These are the activation bits for each character of the end character string. Character 1 is bit 0, character 2 is bit 1, ..., character 5 is bit 4. If a bit is deactivated for a specific character, this means that each character represents a congruence at this position of the character string.
END.SEQ.STR[1] .. END.SEQ.STR[5]	IN	Char[5]	0	Character string 1, start character (5 characters)

Table 5- 9 General parameters of the Receive_P2P instruction

Parameter	Declaration	Data type	Default	Description
GENERAL.MBUF_SIZE	IN	Byte	255	Input number of frames that are to be buffered in the receive buffer of the CM. If no other conditions are active that influence the reaction of the receive buffer (prevent timeout, data flow control), additional frames are discarded once the limit has been reached. (1 to 255 frames)
GENERAL.OW_PROT	IN	Byte	0	Activates the no overwriting function of the buffered frame if the CM receives a new frame and the receive buffer of the CM was not yet read. This step prevents already buffered received frames from being lost. • 0 - not activated • 1 - activated
GENERAL.CLR_MBUF	IN	Byte	0	Activates deletion of the receive buffer during CPU startup. The receive buffer is automatically deleted when the CPU switches from STOP to RUN. The receive buffer only contains frames received after CPU startup. • 0 - not activated • 1 - activated

5.4.1.7 P3964_Config: Configuring the 3964(R) protocol

Note

Use with CM1241

The use of this instruction with a CM1241 is only possible from firmware version V2.1 of the module.

Description

The P3964_Config instruction (protocol configuration) allows you to change protocol parameters for 3964(R), such as character delay time, priority and block check, in runtime using your program.

Configuration changes of P3964_Config are saved on the CM and not in the CPU. The parameters saved in the device configuration are restored once the voltage returns to the CPU or the communication module.

Parameter

Parameter	Declaration	Data type		Default	Description
		S7-1200/1500	S7-300/400/WinAC		
REQ	IN	Bool		FALSE	Starts the instruction upon a positive edge at this input.
PORT	IN	PORT (UInt)	Word	0	Specifies the communication module which is used for the communication: • For S7-1500/S7-1200: "HW identifier" from the device configuration. The symbolic port name is assigned in the "System constants" tab of the PLC tag table and can be applied from there. • For S7-300/S7-400: "Input address" from the device configuration. In the S7-300/400/WinAC systems the PORT parameter is assigned the input address assigned in HWCN.
BCC	IN	USInt	Byte	1	Activates/deactivates the use of the block check • 0 = without block check • 1 = with block check
Priority	IN	USInt	Byte	1	Selection of the priority • 0 = low priority • 1 = high priority

Parameter	Declaration	Data type		Default	Description
		S7-1200/1500	S7-300/400/WinAC		
CharacterDelay-Time	IN	UInt	Word	16#00DC	Setting the character delay time (depending on the set data transmission rate) (default value: 220 ms) 1 ms to 65535 ms
AcknDelayTime	IN	UInt	Word	16#07D0	Setting the acknowledgment delay time (depending on the set data transmission rate) (default value: 2000 ms) 1 ms to 65535 ms
Buildup-Attempts	IN	USInt	Byte	16#0006	Setting the number of connection attempts (default value: 6 connection attempts) 1 to 255
Repetition-Attempts	IN	USInt	Byte	16#0006	Setting the number of transmission attempts (default value: 6 connection attempts) 1 to 255
COM_RST	IN/OUT	---	Bool	FALSE	Initialization of the instruction The instruction is initialized with TRUE. The instruction then resets COM_RST to FALSE.
DONE	OUT	Bool		FALSE	TRUE for one cycle after the last request has been completed without errors
ERROR	OUT	Bool		FALSE	TRUE for one cycle after the last request has been completed with errors
STATUS	OUT	Word		16#7000	Error code (see Error messages (Page 110))

Additional information about the general parameters is available at "General parameters for Freeport operations (Page 82)".

5.4.1.8 Send_P2P: Sending data

Note

Use with CM1241

The use of this instruction with a CM1241 is only possible from firmware version V2.1 of the module.

Description

The Send_P2P instruction (send point-to-point data) starts the transmission of data and transmits the contents of the assigned buffer to the communication module. The CPU program is still being executed while the CM sends the data with the data transmission rate. Only one send instruction per communication module may be pending at any time. The CM signals an error if a second Send_P2P instruction is executed while the CM is already sending a frame.

Parameter

Parameter	Declaration	Data type		Default	Description
		S7-1200/1500	S7-300/400/WinAC		
REQ	IN	Bool		FALSE	Starts the transmission of data to the CM upon a positive edge at this input.
PORT	IN	PORT (UInt)	Word	0	Specifies the communication module which is used for the communication: • For S7-1500/S7-1200: "HW identifier" from the device configuration. The symbolic port name is assigned in the "System constants" tab of the PLC tag table and can be applied from there. • For S7-300/S7-400: "Input address" from the device configuration. In the S7-300/400/WinAC systems the PORT parameter is assigned the input address assigned in HWCN.

Parameter	Declaration	Data type		Default	Description
		S7-1200/1500	S7-300/400/WinAC		
BUFFER	IN	Variant	Any	0	This parameter points to the memory area of the send buffer. **Notes:** • Boolean data and Boolean fields are not supported. • If the send buffer is in the optimized memory area, the maximum permitted length of the sent data is 1024 bytes. Exception: Arrays of Byte, Word or DWord are supported up to a length of 4096 bytes. • If the send buffer is a String or WString, the content of the string is transferred without the current and maximum length. Additional information under "Using the BUFFER and LENGTH parameters for communication operations (Page 100)"
LENGTH	IN	UInt	Word	0	Length in bytes of the data to be transferred. The memory area addressed in the BUFFER parameter is completely transmitted with LENGTH = 0. Additional information under "Using the BUFFER and LENGTH parameters for communication operations (Page 100)"
COM_RST	IN/OUT	---	Bool	FALSE	Initialization of the Send_P2P instruction The instruction is initialized with 1. The instruction then resets COM_RST to 0. Note: The parameter is only available for S7-300/400 instructions.
UNIVERSAL [1]	OUT	Bool	---	FALSE	Type of data communication between the CPU and the CM specified via PORT: FALSE: Performance optimization (cyclic) (Page 38) • Receive frames max. 24 bytes • Send frames max. 30 bytes TRUE: Universal (acyclic) • Limiting the frame length depending on the CM to 1, 2, or 4 KB
DONE	OUT	Bool		FALSE	TRUE for one cycle after the last request has been completed without errors
ERROR	OUT	Bool		FALSE	TRUE for one cycle after the last request has been completed with errors
STATUS	OUT	Word		16#7000	Error code (see Error messages (Page 110))

[1] Available from library version V4.0

Additional information about the general parameters is available at "General parameters for Freeport operations (Page 82)".

Parameter

The DONE and ERROR outputs are in FALSE status when a send instruction is being processed. At the end of the send instruction, one of the DONE or ERROR outputs is set to TRUE for one cycle to signal the status of the send instruction. The error code at the STATUS output can be evaluated when the status of ERROR is TRUE.

The instruction outputs the status 16#7001 when the communication interface accepts the send data. Subsequent executions of Send_P2P output the value 16#7002 if the CM is still sending. At the end of the send instruction, the CM outputs the status 16#0000 for the send instruction (if no error has occurred). Subsequent executions of Send_P2P with REQ = 0 output the status 16#7000 (free).

The diagram below shows the relationship between the output values and REQ. It is based on the assumption that the instruction is called cyclically to check the status of the send process (indicated by the STATUS values).

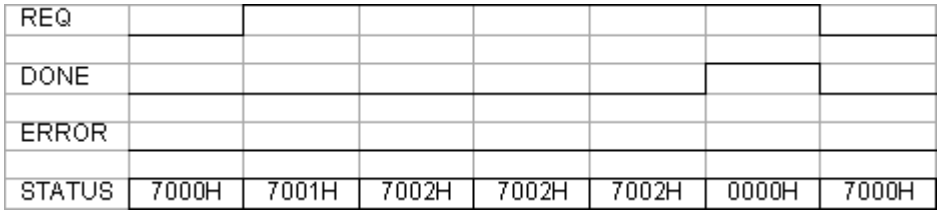

The figure below shows how the DONE and STATUS parameters are only valid for one cycle if a pulse is pending at the REQ line (for one cycle) to trigger the send instruction.

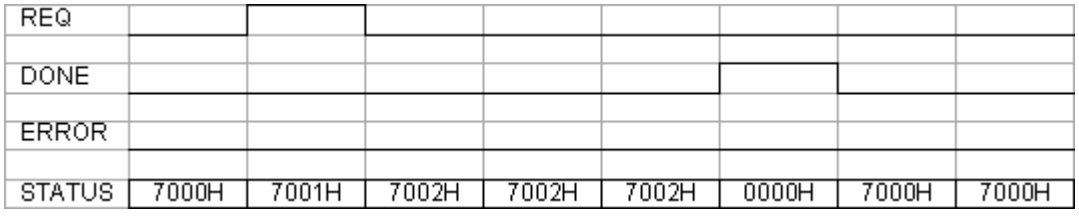

The figure below shows the relationship of the DONE, ERROR and STATUS parameters in case of an error.

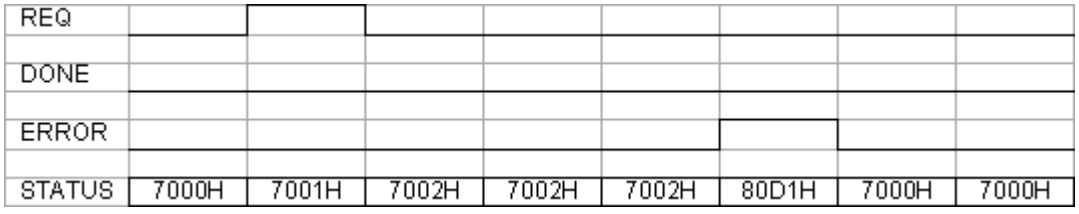

The DONE, ERROR and STATUS values are only valid until Send_P2P is executed again with the same instance DB.

5.4.1.9 Using the BUFFER and LENGTH parameters for communication operations

Interaction of BUFFER and LENGTH parameters for Send_P2P

The minimum data size sent by the Send_P2P instruction is one byte.

The BUFFER parameter specifies the size of the data to be sent if a "0" is passed at the LENGTH parameter during call. The specification of a tag is sufficient for this.

You cannot use the data type Bool or arrays of the Bool type for the BUFFER parameter. If large amounts of data are being transferred we recommend the mapping to the array or structure data types.

Table 5- 10 BUFFER parameter

BUFFER	Description
Elementary data type	When sending: The LENGTH value must include the byte size of this data type. Example: For a Word value, the LENGTH must be two. For a DWord value or Real value, the LENGTH must be four.
Structure	If the option for performance optimization is not activated: • For optimized memory: The maximum permissible length of the BUFFER is 1024 Byte; otherwise 4 KB are permitted depending on the module. • When transmitting, the following applies: The LENGTH value can include a byte size smaller than the complete byte length of the structure; in this case, only the first LENGTH bytes of the structure from BUFFER are sent. If the option for performance optimization is activated: • The maximum permitted length of the BUFFER is 30 bytes.
Array	For optimized memory: If the array data type is not equal to Byte, Word or DWord, the maximum permitted buffer length is 1024 bytes. Depending on the data structure, up to 4 KB can be transmitted if the memory is not optimized, independent of the data structure. For sending: The LENGTH value can include a byte size smaller than the complete byte length of the array, whereby, this byte size is a multiple of the byte size of the data element. Example: The LENGTH parameter of an array of the Word type must be a multiple of two and a multiple of four for an array of the Real type. If BUFFER includes an array with 15 DWord elements (a total of 60 bytes), for example, and you specify LENGTH = 20, the first five DWord elements from the array are transmitted. If LENGTH is not specified or has the value 0, the entire array is transmitted.
String	The LENGTH parameter includes the number or characters to be sent. Only the characters of the String are transmitted. The bytes with the maximum and actual length of the String are not sent.

Table 5- 11 LENGTH parameter

LENGTH	Description
= 0	The complete content of the memory area specified by BUFFER is transferred. If BUFFER points to a string, the entire content of the string is transferred, without the bytes with the maximum and actual length.
> 0	The content up to the configured length of the memory area specified by BUFFER is transferred.

5.4.1.10 Receive_P2P: Receiving data

Note

Use with CM1241

The use of this instruction with a CM1241 is only possible from firmware version V2.1 of the module.

Description

The Receive_P2P instruction (receive data using point-to-point communication) checks the frames received in the CM. If a frame is available, it is transmitted from the CM to the CPU. A receive error is indicated at the STATUS parameter.

Parameters

Parameter	Declaration	Data type		Default	Description
		S7-1200/1500	S7-300/400/WinAC		
PORT	IN	PORT (UInt)	Word	0	Specifies the communication module which is used for the communication: • For S7-1500/S7-1200: "HW identifier" from the device configuration. The symbolic port name is assigned in the "System constants" tab of the PLC tag table and can be applied from there. • For S7-300/S7-400: "Input address" from the device configuration. In the S7-300/400/WinAC systems the PORT parameter is assigned the input address assigned in HWCN.
BUFFER	IN	Variant	Any	0	This parameter points to the start address of the receive buffer. This buffer must be large enough to receive the maximum frame length. **Note:** • Boolean data or Boolean fields are not supported. • If the receive buffer is in the optimized memory area, the maximum permitted length of the received data is 1024 bytes. Exception: Arrays of Byte, Word or DWord are supported up to a length of 4096 bytes. • If the receive buffer is a String or WString, the received data is written to the content of the string and the current length of the string is set accordingly. Additional information under "Using the BUFFER and LENGTH parameters for communication operations (Page 100)"

Parameter	Declaration	Data type		Default	Description
		S7-1200/1500	S7-300/400/WinAC		
UNIVERSAL [1]	OUT	Bool	---	FALSE	Type of data communication between the CPU and the CM specified via PORT: FALSE: Performance optimization (cyclic) (Page 38) • Receive frames max. 24 bytes • Send frames max. 30 bytes TRUE: Universal (acyclic) • Limiting the frame length depending on the CM to 1, 2, or 4 KB
NDR	OUT	Bool		FALSE	TRUE for one cycle if new data is available and the instruction has been completed without errors.
COM_RST	IN/OUT	---	Bool	FALSE	Initialization of the instruction The instruction is initialized with TRUE. The instruction then resets COM_RST to FALSE.
ERROR	OUT	Bool		FALSE	TRUE for one cycle once the instruction has been completed with an error.
STATUS	OUT	Word		16#7000	Error code (see Error messages (Page 110))
LENGTH	OUT	UInt	Word	0	Length of the frame received in bytes More information under "Using the BUFFER and LENGTH parameters for communication operations (Page 100)".

[1] Available as of library version V4.0

Additional information about the general parameters is available at "General parameters for Freeport operations (Page 82)".

The error code at the STATUS output can be evaluated if the status of ERROR is TRUE. The STATUS value provides the reason for terminating the receive operation in the CM.
This is usually a positive value which indicates that the receive operation has been successful and the frame criterion that has been detected.
If the STATUS value is negative (the most significant bit of the hexadecimal value is set), the receive operation was terminated due to an error condition, such as a parity, framing or overflow error.

Each communication module can buffer a module-specific number for frames. If several frames are available in the CM, the Receive_P2P instruction outputs the oldest available frame (FIFO).

5.4.1.11 Receive_Reset: Clear receive buffer

Note

Use with CM1241

The use of this instruction with a CM1241 is only possible from firmware version V2.1 of the module.

Description

The Receive_Reset instruction (reset receiver) clears the receive buffer in the CM.

Parameters

Parameter	Declaration	Data type		Default	Description
		S7-1200/1500	S7-300/400/WinAC		
REQ	IN	Bool		FALSE	Starts the transmission of data to the CM upon a positive edge at this input.
PORT	IN	PORT (UInt)	Word	0	Specifies the communication module which is used for the communication: • For S7-1500/S7-1200: "HW identifier" from the device configuration. The symbolic port name is assigned in the "System constants" tab of the PLC tag table and can be applied from there. • For S7-300/S7-400: "Input address" from the device configuration. In the S7-300/400/WinAC systems the PORT parameter is assigned the input address assigned in HWCN.
COM_RST	IN/OUT	---	Bool	FALSE	Initialization of the instruction The instruction is initialized with TRUE. The instruction then resets COM_RST to FALSE.
DONE	OUT	Bool		FALSE	TRUE for one cycle means that the last request was completed without errors.
ERROR	OUT	Bool		FALSE	TRUE means that the last request was completed with errors. If this output is TRUE, the STATUS output contains the corresponding error codes.
STATUS	OUT	Word		16#7000	Error code (see Error messages (Page 110))

Additional information about the general parameters is available at "General parameters for Freeport operations (Page 82)".

5.4.1.12 Signal_Get: Read status

Note

Use with CM1241

The use of this instruction with a CM1241 is only possible from firmware version V2.1 of the module.

Description

The Signal_Get instruction (get RS232 signals) reads the current states of the RS232 accompanying signals and displays them at the corresponding instruction outputs.

Note

Restriction

- This instruction can only be used with CMs RS232 BA and RS232 HF.
- If RS232C is set for the operating mode, this instruction can also be used with CM PtP (ET200SP).

Parameters

Parameter	Declaration	Data type		Default	Description
		S7-1200/1500	S7-300/400/WinAC		
REQ	IN	Bool		FALSE	Starts the transmission of data to the CM upon a positive edge at this input.
PORT	IN	PORT (UInt)	Word	0	Specifies the communication module which is used for the communication: • For S7-1500/S7-1200: "HW identifier" from the device configuration. The symbolic port name is assigned in the "System constants" tab of the PLC tag table and can be applied from there. • For S7-300/S7-400: "Input address" from the device configuration. In the S7-300/400/WinAC systems the PORT parameter is assigned the input address assigned in HWCN.
NDR	OUT	Bool		FALSE	TRUE for one cycle if the RS232 accompanying signals have been read and the instruction has been completed without errors.
ERROR	OUT	Bool		FALSE	TRUE for one cycle once the instruction has been completed with an error

Parameter	Declaration	Data type		Default	Description
		S7-1200/1500	S7-300/400/WinAC		
STATUS	OUT	Word		16#7000	Error code (see Error messages (Page 110))
DTR	OUT	Bool		FALSE	Data device ready, module ready (output)
DSR	OUT	Bool		FALSE	Data device ready, communication station ready (input)
RTS	OUT	Bool		FALSE	Send request, module ready to send (output)
CTS	OUT	Bool		FALSE	Ready to send, communication station can receive data (input)
DCD	OUT	Bool		FALSE	Data carrier signal detected, signal level received
RING	OUT	Bool		FALSE	Call display, signaling incoming call

Additional information about the general parameters is available at "General parameters for Freeport operations (Page 82)".

5.4.1.13 Signal_Set: Set accompanying signals

Note

Use with CM1241

The use of this instruction with a CM1241 is only possible from firmware version V2.1 of the module.

Description

The Signal_Set instruction (set RS232 signals) allows you to set the RS232 communication signals.

Note

Restrictions

- This instruction can only be used with CMs RS232 BA and RS232 HF.
- If RS232C is set for the operating mode, this instruction can also be used with CM PtP (ET200SP).

Parameters

Parameter	Declaration	Data type		Default	Description
		S7-1200/1500	S7-300/400/WinAC		
REQ	IN	Bool		FALSE	Starts the instruction upon a positive edge of this input.
PORT	IN	PORT (UInt)	Word	0	Specifies the communication module which is used for the communication: • For S7-1500/S7-1200: "HW identifier" from the device configuration. The symbolic port name is assigned in the "System constants" tab of the PLC tag table and can be applied from there. • For S7-300/S7-400: "Input address" from the device configuration. In the S7-300/400/WinAC systems the PORT parameter is assigned the input address assigned in HWCN.
SIGNAL	IN	Byte		0	Selection of the signal to be set (more than one possible): • 01H = RTS • 02H = DTR • 04H = DSR (for interface type DCE only)
RTS	IN	Bool		FALSE	Send request, module ready to send Set this value at the output (TRUE or FALSE), default value: FALSE
DTR	IN	Bool		FALSE	Data terminal ready, module ready Set this value at the output (TRUE or FALSE), default value: FALSE
DSR	IN	Bool		FALSE	Data terminal ready (for DCE interface type only), not used.
COM_RST	IN/OUT	---	Bool	FALSE	Initialization of the instruction The instruction is initialized with TRUE. The instruction then resets COM_RST to FALSE.
DONE	OUT	Bool		FALSE	TRUE for one cycle after the last request has been completed without errors
ERROR	OUT	Bool		FALSE	TRUE for one cycle after the last request has been completed with errors
STATUS	OUT	Word		16#7000	Error code (see Error messages (Page 110))

Additional information about the general parameters is available at "General parameters for Freeport operations (Page 82)".

5.4.1.14 Get_Features: Get extended functions

Note

Use with CM1241

The use of this instruction with a CM1241 is only possible from firmware version V2.1 of the module.

Description

If supported by the module, you can use the Get_Features instruction (get extended functions) to get information on the ability of the module to support CRC and to generate diagnostic messages.

Parameters

Parameter	Declaration	Data type		Default	Description
		S7-1200/1500	S7-300/400/WinAC		
REQ	IN	Bool		FALSE	Starts the instruction upon a positive edge of this input.
PORT	IN	PORT	Word	0	Specifies the communication module which is used for the communication: • For S7-1500/S7-1200: "HW identifier" from the device configuration. The symbolic port name is assigned in the "System constants" tab of the PLC tag table and can be applied from there. • For S7-300/S7-400: "Input address" from the device configuration. In the S7-300/400/WinAC systems the PORT parameter is assigned the input address assigned in HWCN.
NDR	OUT	Bool		FALSE	TRUE for one cycle if new data is available and the instruction has been completed without errors
MODBUS_CRC	OUT	Bool		FALSE	Modbus CRC support
DIAG_ALARM	OUT	Bool		FALSE	Generation of diagnostic messages
SUPPLY_VOLT	OUT	Bool		FALSE	Diagnostics for missing supply voltage L+ is available
COM_RST	IN/OUT	---	Bool	FALSE	Initialization of the instruction The instruction is initialized with TRUE. The instruction then resets COM_RST to FALSE.
ERROR	OUT	Bool		FALSE	TRUE for one cycle once the instruction has been completed with an error
STATUS	OUT	Word		16#7000	Error code (see Error messages (Page 110))

Additional information about the general parameters is available at "General parameters for Freeport operations (Page 82)".

5.4.1.15 Set_Features: Set extended functions

Note

Use with CM1241

The use of this instruction with a CM1241 is only possible from firmware version V2.1 of the module.

Description

If supported by the module, you can use the Set_Features instruction (select extended functions) to activate CRC support and the generation of diagnostic messages.

Parameters

Parameter	Declaration	Data type		Default	Description
		S7-1200/1500	S7-300/400/WinAC		
REQ	IN	Bool		FALSE	The instruction to set extended functions is started upon a positive edge at this input.
PORT	IN	PORT (UInt)	Word	0	Specifies the communication module which is used for the communication: • For S7-1500/S7-1200: "HW identifier" from the device configuration. The symbolic port name is assigned in the "System constants" tab of the PLC tag table and can be applied from there. • For S7-300/S7-400: "Input address" from the device configuration. In the S7-300/400/WinAC systems the PORT parameter is assigned the input address assigned in HWCN.
EN_MODBUS_CRC	IN	Bool		FALSE	Activate Modbus CRC support
EN_DIAG_ALARM	IN	Bool		FALSE	Activate generation of diagnostic messages
EN_SUPPLY_VOLT	IN	Bool		FALSE	Enable diagnostics for missing supply voltage L+ Note: This diagnostics is not supported by S7-1500 / ET 200MP communication modules. This also applies if the parameter can be set in combination with e.g. MODBUS_CRC.
COM_RST	IN/OUT	---	Bool	FALSE	Initialization of the instruction The instruction is initialized with TRUE. The instruction then resets COM_RST to FALSE.
DONE	OUT	Bool		FALSE	TRUE for one execution once the last request is completed without errors

Parameter	Declaration	Data type		Default	Description
		S7-1200/1500	S7-300/400/WinAC		
ERROR	OUT	Bool		FALSE	TRUE for one cycle once the instruction has been completed with an error
STATUS	OUT	Word		16#7000	Error code (see Error messages (Page 110))

Additional information about the general parameters is available at "General parameters for Freeport operations (Page 82)".

5.4.1.16 Error messages

Overview of PtP error messages

The error messages are provided at the STATUS output of an instruction and can be evaluated there or processed in the user program.

Error code	Description	Solution
16#0000	No error	-
RECEIVE status and error codes		
16#0094	frame end identified based on the "Receipt of fixed/maximum frame length"	-
16#0095	frame end identified based on "Message timeout"	-
16#0096	frame end identified based on expiration of the "Character delay time"	-
16#0097	The frame was aborted because the maximum response time was reached.	-
16#0098	frame end identified based on the fulfillment of the "Read message length from message" conditions	-
16#0099	frame end identified based on the receipt of the "End sequence"	-
SEND status and error codes		
16#7000	Block idle	-
16#7001	Initial call for a new frame: Data transmission initiated	-
16#7002	Interim call: Data transmission running	-
16#8085	Invalid length	Select a suitable frame length. • UNIVERSAL = 1 (data communication via data sets): Depending on the module, the following are permissible: 1 ... 1024/2048/4096 bytes • UNIVERSAL = 0 (data communication via IO data; Performance optimized for many short frames (Page 38)): Maximum length is 30 bytes (Send_P2P instruction).
16#8087	The number of characters received by the CM PtP module exceeds the number supported for UNIVERSAL = 0 (performance optimization).	Select a suitable frame length or use UNIVERSAL = 1 (data communication via data sets). With UNIVERSAL = 0 (performance optimization (Page 38)), the maximum length is 24 bytes (Receive_P2P instruction).
16#8088	The specified length exceeds the range set in the receive buffer. Note: If the data type STRING has been specified at the BUFFER parameter, this error code also appears if the current string is shorter than the length specified at the LENGTH parameter.	Change the range in the receive buffer or select a frame length which corresponds to the range set in the receive buffer. Depending on the module, the following are permissible: 1 ... 1024/2048/4096 bytes
16#8090	Configuration error: Odd number of bytes for WString	Select an even number of bytes.
16#8091	Data records 48, 49 and 50 are not supported for UNIVERSAL = 0 (performance optimization).	Deactivate the "Performance optimized for many short frames" parameter. or Access the receive and transmit data via the IO data. or Use at least version V4.0 of the instruction library PtP Communication.

Error code	Description	Solution
RECEIVE status and error codes		
16#7001	Initial call for a new frame: Data transmission initiated	-
16#7002	Interim call: Data transmission running	-
16#8088	The number of characters received exceeds the number specified at the BUFFER parameter.	Select a suitable frame length. Depending on the module, the following are permissible: 1 ... 1024/2048/4096 bytes
16#8090	Configuration error: Odd number of bytes for WString	Select an even number of bytes.
Error message codes of the special functions		
16#818F	Incorrect parameter number setting (with USS only)	Select a suitable parameter number (PARAM). The following are permissible: 0 ... 2047
16#8190	Incorrect setting of the CRC calculation	Select a suitable value for the CRC calculation. The following are valid: deactivated or activated. Check whether the module addressed supports CRC calculation.
16#8191	Incorrect setting of the diagnostic error interrupt	Select a suitable value for "Diagnostics interrupt". The following are valid: Diagnostics interrupt deactivated or diagnostic interrupt activated. Check whether the module addressed supports the generation of diagnostic interrupts.
16#8193	The module does not support supply voltage diagnostics L+.	Select a suitable value for "Diagnostics interrupt". The following are valid: Diagnostics interrupt deactivated or diagnostic interrupt activated. Check whether the module addressed supports the generation of diagnostic interrupts.
Error message codes of the "Port configuration"		
16#81A0	The module does not support this protocol.	Select a valid protocol for the module (PROTOCOL).
16#81A1	The module does not support this data transmission rate.	Select a valid data transmission rate for the module (BAUD).
16#81A2	The module does not support this parity setting.	Select a suitable value for "Parity" (PARITY). The following are valid: • None (1) • Even (2) • Odd (3) • Mark (4) • Space (5) • Any (6)
16#81A3	The module does not support this number of data bits.	Select a suitable value for "Number of data bits" (DATABITS). The following are valid: • 7 (2) • 8 (1)
16#81A4	The module does not support this number of stop bits.	Select a suitable value for "Number of stop bits" (STOPBITS). The following are valid: • 1 (1) • 2 (2)

Error code	Description	Solution
16#81A5	The module does not support this type of data flow control.	Select a valid data flow control for the module (FLOWCTRL).
16#81A7	Invalid value for XON or XOFF	Select suitable values for XON (XONCHAR) and XOFF (XOFFCHAR). Valid range of values: 0...255
16#81AA	Invalid operating mode	Valid operating modes are: • Full duplex (RS232) (0) • Full duplex (RS422) four-wire mode (point-to-point) (1) • Full duplex (RS422) four-wire mode (multipoint master) (2)/ (CM PtP (ET 200SP)) • Full duplex (RS422) four-wire mode (multipoint slave) (3)/ (CM PtP (ET 200SP)) • Half duplex (RS485) two-wire operation. (4)
16#81AB	Invalid receive line initial state	Valid initial states are: • "No" default setting (0) • Signal R(A)=5 V, signal R(B)=0 V (break detection) (1): Can only be selected with: "Full duplex (RS422) four-wire operation (point-to-point connection)" and "Full duplex (RS422) four-wire mode (multipoint slave)". • Signal R(A)=0 V, signal R(B)=5 V (2): This default setting corresponds to the idle state (no active send operation).
16#81AC	Invalid value for "Break detection"	Select a suitable value for "Break detection". The following are valid: • Break detection deactivated (0) • Break detection activated (1).
16#81AF	The module does not support this protocol.	Select a valid protocol for the module.
Error codes of the "Send configuration"		
16#81B5	More than two end delimiters or end sequence > 5 characters	Select suitable values for "End delimiter" and "End sequence". The following are valid: • deactivated (0), • 1 (1) or 2 (2) end delimiters or • deactivated (0), • 1 (1) up to 5 (5) characters for the end sequence.
16#81B6	Send configuration rejected because the 3964(R) protocol was selected	Make sure that no send configuration is transmitted if the 3964(R) protocol is set.

Error code	Description	Solution
Error codes of the "Receive configuration"		
16#81C0	Invalid start condition	Select a suitable start condition. The following are valid: • Send break before frame start • Send Idle Line.
16#81C1	Invalid end condition or no end condition selected	Select a suitable end condition (see Sending data with Freeport (Page 41)).
16#81C3	Invalid value for "Maximum message length"	Select a suitable value for "Maximum message length" (MAXLEN). Valid range of values (depending on the module): 1-1024/2048/4096 (Byte)
16#81C4	Invalid value for "Offset of the length specification in the message"	Select a suitable value for "Offset of the length specification in the message". Valid range of values (depending on the module): 1-1024/2048/4096 (Byte)
16#81C5	Invalid value for "Size of length field"	Select a suitable value for "Size of length field" (LENGTHSIZE). Valid range of values in bytes: • 1 (1) • 2 (2) • 4 (4)
16#81C6	Invalid value for "Number of characters not counted in length specification"	Select a suitable value for "Number of characters not counted in length specification" (LENGTHM). Valid range of values: 0 to 255 (bytes)
16#81C7	The total of "Offset in the message + size of length field + number of characters not counted" is greater than the maximum frame length	Select a suitable value for "Offset in message", "Size of length field" and "Number of characters not counted". Valid range of values: • Offset in the message (depending on the module): 0 ... 1024/2048/4096 (bytes) • Size of length field: 1, 2, or 4 (bytes) • Number of characters not counted: 0 to 255 (bytes)
16#81C8	Invalid value for "Response timeout"	Select a suitable value for "Response timeout". Valid range of values: 1-65535 (ms)
16#81C9	Invalid value for "Character delay time"	Select a suitable value for "Character delay time". Valid range of values: 1 to 65535 (bit times)
16#81CB	frame end sequence is activated, but no character is activated for the check	Activate one or several characters for the check.
16#81CC	frame start sequence is activated, but no character is activated for the check	Activate one or several characters for the check.
16#81CD	Invalid value for "Prevent overwriting"	Select a suitable value for "Prevent overwriting". The following are valid: • Prevent overwriting is deactivated (0) or • Prevent overwriting is activated (1)

Error code	Description	Solution
16#81CE	Invalid value for "Clear receive buffer on startup"	Select a suitable value for "Clear receive buffer on startup". The following are valid: • Clear receive buffer on startup is deactivated (0) • Clear receive buffer on startup is activated (1)
SEND status and error codes		
16#81D0	Receiving send request during runtime of a send command	Make sure that you do not receive an additional send request during runtime of a send command.
16#81D1	The wait time for XON or CTS = ON has expired.	The communication partner has a fault, is too slow or is offline. Check the communication partner or change the parameters, if necessary.
16#81D2	"Hardware RTS always ON": Send job canceled due to change from DSR = ON to OFF	Check the communication partner. Make sure that DSR is ON for the entire duration of transmission.
16#81D3	Send buffer overflow / send frame too long	Select a shorter frame length. The following are valid (depending on the module): 1 ... 1024/2048/4096 (bytes)
16#81D5	Transmission canceled due to parameter changes, detected wire break, or CPU in STOP	Check the parameter assignment, wire break, and CPU status.
16#81D6	Transmission canceled because end identifier was not received	Check the parameter assignment of the end delimiters and the frame of the communication partner.
16#81D7	Communication error between the user program and module	Check the communication (e.g., matching the sequence number).
16#81D8	Transmission attempt rejected because module is not configured	Configure the module.
16#81DF	The module has reset the interface to the FB for one of the following reasons: • Module was restarted • Module parameters were reassigned • CPU STOP	—
Error codes of the receive configuration		
16#81E0	Frame aborted: Receive buffer overflow/received frame too large	Increase the call rate for the receive function in the user program or configure communication with data flow control.
16#81E1	Frame aborted: Parity error	Check the connection line of the communication partners, or verify that the same data transmission rate, parity and stop bit number are configured for both devices.
16#81E2	Frame aborted: Character frame error	Check the settings for start bit, data bits, parity bit, data transmission rate, and stop bit(s).
16#81E3	Frame aborted: Character overflow error	Firmware error: Please contact Customer Support.
16#81E4	Frame aborted: The total length of "Offset in the message + size of length field + number of characters not counted" is greater than the receive buffer	Select a suitable value for offset in message, size of length field, and number of characters not counted.
16#81E5	Frame aborted: Break	Break in receive line to partner. Reconnect or switch on partner.
16#81E6	Maximum number of "Buffered received frames" exceeded	In the user program call the instruction more often or configure a communication with data flow control or increase the number of buffered frames.

Error code	Description	Solution
16#81E7	Synchronization error module and Receive_P2P	Make sure that different instances of the Receive_P2P do not access the same module.
16#81E8	Frame aborted: The character delay time has expired before the message end criterion was detected	Partner device faulty or too slow. Check this, if required, using an interface tester that is interconnected in the transmission line.
16#81E9	Modbus CRC error (only communication modules which support Modbus)	Checksum error of the Modbus frame. Check the communication partner.
16#81EA	Modbus frame too short (only communication modules which support Modbus)	Minimum length of Modbus frame not met. Check the communication partner.
16#81EB	Frame aborted: Maximum frame length reached	Select a shorter frame length at the communication partner. The following are valid (depending on the module): 1-1024/2048/4096 (bytes) Check the parameters for end of frame detection.
Error codes V24 accompanying signals		
16#81F0	The module does not support V24 accompanying signals	You have tried to set accompanying signals for a module that does not support V24 accompanying signals. Make sure that this is an RS232 module or that RS232 mode (ET 200SP) is set.
16#81F1	No operation of the V24 accompanying signals	The V24 accompanying signals cannot be operated manually if hardware data flow control is active.
16#81F2	The DSR signal cannot be set because the module has the type DTE.	Check the configured type of the module. The module type must be DCE (data communication equipment).
16#81F3	The DTR signal cannot be set because the module has the type DCE.	Check the configured type of the module. The module type must be DTE (data terminal equipment).
16#81F4	Block header error (e.g. incorrect block type or incorrect block length)	Check the instance DB and the block header.
Error codes of the receive configuration		
16#8201 [1)]	Receive_Conditions is a pointer to an invalid data type	Enter a pointer to one of the following data types: DB, BOOL, BYTE, CHAR, WORD, INT, DWORD, DINT, REAL, DATE, TIME_OF_DAY, TIME, S5TIME, DATE_AND_TIME, STRING
16#8225	Receive_Conditions points to an optimized memory area greater than 1 kB or Receive_Conditions points to an optimized memory area and the receive length is greater than the area addressed by Receive_Conditions.	Enter a pointer to an area with a maximum length of: • Optimized memory area: 1 KB • Non-optimized memory area: 4 KB Note: If the pointer points to an optimized memory area, do not send more than 1 KB.
16#8229 [1)]	Receive_Conditions is a pointer to BOOL with a number of bits not equal to n * 8	If you are using a pointer to BOOL, the number of bits must be a multiple of 8.

Error code	Description	Solution
Error codes, general		
16#8280	Negative acknowledgment when reading module	You can find more detailed information on error causes in the RDREC.STATUS static parameters and in the description of the SFB RDREC. • Check the input at the PORT parameter • Set the COM_RST parameter before the 1st call.
16#8281	Negative acknowledgment when writing module	Check the input at the PORT parameter You can find more detailed information on error causes in the WRREC.STATUS static parameters and in the description of the SFB WRREC.
16#8282	Module not available	Check the input at the PORT parameter and ensure that the module can be reached.
Error codes of the receive configuration		
16#82C1	Invalid value for "Buffered received frames".	Select a suitable value for "Buffered received frames". Valid range of values: 1-255
16#82C2	Receive configuration rejected because the 3964(R) protocol was selected	Make sure that no receive configuration is sent if the 3964(R) protocol is set.
16#8301 [1)]	Receive_Conditions is a pointer to an invalid data type	Select a valid data type. The following are valid: DB, BOOL, BYTE, CHAR, WORD, INT, DWORD, DINT, REAL, DATE, TIME_OF_DAY, TIME, S5TIME, DATE_AND_TIME, STRING
16#8322	Range length error when reading a parameter	Check the input at the Receive_Conditions parameter
16#8324	Range error when reading a parameter	Check the input at the Receive_Conditions parameter
16#8328	Setting error when reading a parameter	Check the input at the Receive_Conditions parameter
SEND status and error codes		
16#8328 [1)]	BUFFER is a pointer to BOOL with a number of bits not equal to n * 8	If you are using a pointer to BOOL, the number of bits must be a multiple of 8.
Error codes of the receive configuration		
16#8332	Invalid data block at the Receive_Conditions parameter	Check the input at the Receive_Conditions parameter
16#833A	The designation of the data block at the Receive_Conditions parameter refers to a data block which is not loaded.	Check the input at the Receive_Conditions parameter
16#8351	Invalid data type	Check the input at the Receive_Conditions parameter
16#8352 [1)]	Receive_Conditions does not point to a data block	Check the pointer to Receive_Conditions
16#8353 [1)]	Receive_Conditions does not point to a structure of the type Receive_Conditions	Check the pointer to Receive_Conditions

Error code	Description	Solution
Error codes 3964(R) protocol		
16#8380	Parameter assignment error: Invalid value for "Character delay time".	Select a suitable value for "Character delay time" (CharacterDelayTime). Valid range of values: 1 ... 65535 (ms)
16#8381	Parameter assignment error: Invalid value for "Response timeout".	Select a suitable value for "Response timeout" (AcknDelayTime). Valid range of values: 1 ... 65535 (ms)
16#8382	Parameter assignment error: Invalid value for "Priority".	Select a suitable value for "Priority" (Priority). The following are valid: • High (1) • Low (0)
16#8383	Parameter assignment error: Invalid value for "Block check"	Select a suitable value for "Block check" (BCC). The following are valid: • With block check (1) • Without block check (0)
16#8384	Parameter assignment error: Invalid value for "Connection attempts".	Select a suitable value for "Connection attempts" (BuildupAttempts). Valid range of values: 1 ... 255
16#8385	Parameter assignment error: Invalid value for "Transmission attempts".	Select a suitable value for "Transmission attempts" (RepetitionAttempts). Valid range of values: 1 ... 255
16#8386	Runtime error: Number of connection attempts exceeded	Check the interface cable and the transmission parameters. Also check whether the receive function is configured correctly at the partner device.
16#8387	Runtime error: Number of transmission attempts exceeded	Check the interface cable, the transmission parameters and the configuration of the communication partner.
16#8388	Runtime error: Error at the "Block check character" The internally calculated value of the block check character does not correspond to the block check character received by the partner at the connection end.	Check if the connection is seriously disrupted; in this case you may also occasionally see error codes. Check for proper function at the partner device, possibly by using an interface test device that is switched into the transmission line.
16#8389	Runtime error: Invalid character received while waiting for free receive buffer	The send request of the communication partner (STX, 02H) is only answered with DLE when the receive buffer is empty. No additional character may be received before (except STX again). Check for proper function at the partner device, possibly by using an interface test device that is switched into the transmission line.

Error code	Description	Solution
16#838A	Runtime error: Logical error during receiving. After DLE was received, a further random character (other than DLE or ETX) was received.	Check if the partner always duplicates the DLE in the frame header and data string or the connection is terminated with DLE ETX. Check for proper function at the partner device, possibly by using an interface test device that is switched into the transmission line.
16#838B	Runtime error: Character delay time exceeded	Partner device too slow or faulty. Verify by using an interface test device that is switched into the transmission line, if necessary.
16#838C	Runtime error: Wait time for free receive buffer has started	In the user program call the instruction more often or configure a communication with data flow control.
16#838D	Runtime error: frame repetition does not start within 4 s after NAK	Check the communication partner. A received frame that is possibly corrupted must be repeated by the partner within 4 seconds.
16#838E	Runtime error: In idle mode, one or several characters (other than NAK or STX) were received.	Check for proper function of the partner device, possibly using an interface test device that is switched into the transmission line.
16#838F	Runtime error: Initialization conflict - Both partners have set high priority	Set the "Low" priority at one of the partners
16#8391	Parameter assignment error: 3964 configuration data rejected because Freeport is set	If the Freeport protocol is set, make sure that no 3964 parameter assignment data is sent.
Error codes, general		
16#8FFF	The module is not ready temporarily due to a reset.	Repeat the request.

[1] Only with instructions for S7-300/400 CPUs

5.4.2 MODBUS (RTU)

5.4.2.1 Dependencies between library versions

Use the "MODBUS (RTU)" and "Point-to-point" instruction libraries only in one of the following combinations of versions:

"MODBUS (RTU)" library version	"Point-to-point" library version
V1.1	V1.1
V2.1	V2.4
V3.1	V2.4
V4.4	V3.2
V5.0	V4.0

5.4.2.2 Overview of the Modbus RTU communication

Modbus RTU communication

Modbus RTU (Remote Terminal Unit) is a standard protocol for communication in the network and uses the RS232 or RS422/485 connection for serial data transmission between Modbus devices in the network.

Modbus RTU uses a master/slave network in which all communication is triggered by a single master device while the slaves can only respond to the request of the master. The master sends a request to a slave address and only the slave with this slave address responds to the command.

Exception: Modbus slave address 0 sends a broadcast frame to all slaves (without slave response).

Modbus function codes

- A CPU that is operated as a Modbus RTU master can read and write data and I/O states in a Modbus RTU slave connected by means of a communication connection.
- A CPU operated as a Modbus RTU slave allows a Modbus RTU master connected over a communication connection to read and write data and I/O states in its own CPU.

Table 5- 12 Functions for reading data: Reading distributed I/O and program data

Modbus function code	Functions for reading data from the slave (server) - standard addressing
01	Read output bits: 1 to 2000/1992[1)] bits per request
02	Read input bits: 1 to 2000/1992[1)] bits per request
03	Read hold register: 1 to 125/124[1)] words per request
04	Read input words: 1 to 125/124[1)] words per request

1) for extended addressing

Table 5- 13 Functions for writing data: Changing distributed I/O and program data

Modbus function code	Functions for writing of data in the slave (server) - standard addressing
05	Write one output bit: 1 bit per request
06	Write one hold register: 1 word per request
15	Write one or several output bits: 1 to 1960 bits per request
16	Write one or several hold registers: 1 to 122 words per request

- The Modbus function codes 08 and 11 offer diagnostic options for communication with the slave device.
- Modbus slave address 0 sends a broadcast frame to all slaves (without slave response; for function codes 5, 6, 15, 16).

Table 5- 14 Station addresses in the Modbus network

Station		Address
RTU station	Standard station address	1 to 247 and 0 for broadcast
	Extended station address	1 to 65535 and 0 for broadcast

Modbus memory addresses

The number of Modbus memory addresses (input/output addresses) that is actually available depends on the CPU version and the available work memory.

Modbus RTU instructions in your program

- Modbus_Comm_Load: You need to run Modbus_Comm_Load to set up PtP parameters such as data transmission rate, parity and data flow control. Once you have configured the communication module for the Modbus RTU protocol, it can only be used by the Modbus_Master instruction or the Modbus_Slave instruction.
- Modbus_Master: The CPU can be used as Modbus RTU master device with the Modbus master instruction for communication with one or more Modbus slave devices.
- Modbus_Slave: The CPU can be used as Modbus RTU slave device with the Modbus slave instruction for communication with one Modbus master device.

5.4.2.3 Modbus_Comm_Load: Configure communication module for Modbus

Note

Use with CM1241

The use of this instruction with a CM1241 is only possible from firmware version V2.1 of the module.

Description

The Modbus_Comm_Load instruction configures a communication module for communication by means of the Modbus RTU protocol. An instance data block is automatically assigned when you add the Modbus_Comm_Load instruction in your program.

Configuration changes of Modbus_Comm_Load are saved on the CM and not in the CPU. With voltage recovery and pulling/plugging, the CM is configured with the data saved in the device configuration. The Modbus_Comm_Load instruction must be called in these scenarios.

Parameters

Parameter	Declaration	Data type		Standard	Description
		S7-1200/1500	S7-300/400/WinAC		
REQ	IN	Bool		FALSE	Starts the instruction upon a positive edge of this input.
PORT	IN	Port	Word	0	Specifies the communication module which is used for the communication: • For S7-1500/S7-1200: "HW identifier" from the device configuration. The symbolic port name is assigned in the "System constants" tab of the PLC tag table and can be applied from there. • For S7-300/S7-400: "Input address" from the device configuration. In the S7-300/400/WinAC systems the PORT parameter is assigned the input address assigned in HWCN.
BAUD	IN	UDInt	DInt	9600	Selection of the data transmission rate Valid values are: 300, 600, 1200, 2400, 4800, 9600, 19200, 38400, 57600, 76800, 115200 bit/s.
PARITY	IN	UInt	Word	0	Selection of parity: • 0 – None • 1 – Odd • 2 – Even

Parameter	Declaration	Data type		Standard	Description
		S7-1200/1500	S7-300/400/WinAC		
FLOW_CTRL	IN	UInt	Word	0	Selection of flow control: • 0 – (default) no flow control • 1 – Hardware flow control with RTS always ON (not with RS422/485 CMs) • 2 – Hardware flow control with RTS switched (not with RS422/485 CMs)
RTS_ON_DLY	IN	UInt	Word	0	Selection RTS ON delay: • 0 – No delay from "RTS active" until the first character of the frame is sent. • 1 to 65535 – Delay in milliseconds from "RTS active" until the first character of the frame is sent (not with RS422/485 CMs). RTS delays must be used independent of the selection FLOW_CTRL.
RTS_OFF_DLY	IN	UInt	Word	0	Selection RTS OFF delay: • 0 – No delay after transmission of last character until "RTS inactive" • 1 to 65535 – Delay in milliseconds after transmission of last character until "RTS inactive" (not with RS422/485 ports). RTS delays must be used independent of the selection FLOW_CTRL.
RESP_TO	IN	UInt	Word	1000	Response timeout: 5 ms to 65535 ms - Time in milliseconds that Modbus_Master waits for a response from the slave. If the slave does not respond within this period, Modbus_Master repeats the request or terminates the request with an error if the specified number of repetitions (see below, RETRIES parameter) has been sent.
MB_DB	IN/OUT	MB_BASE		-	A reference to the instance data block of the Modbus_Master or Modbus_Slave instructions. The MB_DB parameter must be connected with the (static and therefore not visible in the instruction) MB_DB parameter of the Modbus_Master or Modbus_Slave instruction.
COM_RST	IN/OUT	---	Bool	FALSE	Initialization of the Modbus_Comm_Load instruction The instruction is initialized with TRUE. The instruction then resets COM_RST to FALSE. Note: The parameter is only available for S7-300/400 instructions.
DONE	OUT	Bool		FALSE	The DONE bit is TRUE for one cycle after the last request has been completed without errors.
ERROR	OUT	Bool		FALSE	The ERROR bit is TRUE for one cycle after the last request has been completed with errors. The error code in the STATUS parameter is only valid in the cycle in which ERROR = TRUE.
STATUS	OUT	Word		16#7000	Error code (see Error messages (Page 149))

Modbus_Comm_Load is executed to configure a port for the Modbus RTU protocol. Once you have configured the port for the Modbus RTU protocol, it can only be used by the Modbus_Master or Modbus_Slave instructions.

You have to run Modbus_Comm_Load for the configuration of each communication port that is to be used for Modbus communication. You must assign a unique Modbus_Comm_Load instance DB to each port that you use. Only run Modbus_Comm_Load again if you need to change communication parameters, such as data transmission rate or parity, or in case the network has returned.

For example, an instance data block is assigned to the instruction if you add Modbus_Master or Modbus_Slave to your program. You need to connect the MB_DB parameter of the Modbus_Comm_Load instruction to the MB_DB parameter of the Modbus_Master or Modbus_Slave instruction.

Modbus_Comm_Load data block tags

The table below shows the public static tags in the instance DB of Modbus_Comm_Load that you can use in your program.

Table 5- 15 Static tags in the instance DB

Tag	Data type		Stand-ard	Description
	S7-1200/1500	S7-300/400/WinAC		
ICHAR_GAP	Word		0	Maximum character delay time between characters. This parameter is specified in milliseconds and increases the anticipated period between the received characters. The corresponding number of bit times for this parameter is added to the Modbus default value of 35 bit times (3.5 character times).
RETRIES	Word		2	Number of retries that the master executes before the error code 0x80C8 for "No response" is returned.
EN_SUPPLY_VOLT	Bool		0	Enable diagnostics for missing supply voltage L+
MODE	USInt	Byte	0	Operating mode Valid operating modes are: • 0 = Full duplex (RS232) • 1 = Full duplex (RS422) four-wire mode (point-to-point) • 2 = Full duplex (RS 422) four-wire mode (multipoint master, CM PtP (ET 200SP)) • 3 = Full duplex (RS 422) four-wire mode (multipoint slave, CM PtP (ET 200SP)) • 4 = Half duplex (RS485) two-wire mode [1)]

Tag	Data type		Stand-ard	Description
	S7-1200/1500	S7-300/400/WinAC		
LINE_PRE	USInt	Byte	0	Receive line initial state Valid initial states are: • 0 = "No" initial state [1)] • 1 = signal R(A)=5 V, signal R(B)=0 V (break detection): Break detection is possible with this initial state. Can only be selected with: "Full duplex (RS422) four-wire operation (point-to-point connection)" and "Full duplex (RS422) four-wire mode (multipoint slave)". • 2 = signal R(A)=0 V, signal R(B)=5 V: This default setting corresponds to the idle state (no active send operation). No break detection is possible with this initial state.
BRK_DET	USInt	Byte	0	Break detection The following are valid: • 0 = break detection deactivated • 1 = break detection activated
EN_DIAG_ALARM	Bool		0	Activate diagnostics interrupt: • 0 - not activated • 1 - activated
STOP_BITS	USINT	Byte	1	Number of stop bits; • 1 = 1 stop bit, • 2 = 2 stop bits, • 0, 3 to 255 = reserved

[1)] Required setting for the use of PROFIBUS cables with CM 1241 for RS485

Instruction versions

Version 3.1 is functionally identical to version 3.0 and its version number was only incremented due to internal measures.

5.4.2.4 Modbus_Master: Communicate as Modbus master

Note

Use with CM1241

The use of this instruction with a CM1241 is only possible from firmware version V2.1 of the module.

Description

The Modbus_Master instruction communicates as Modbus master via a port configured by the Modbus_Comm_Load instruction. An instance data block is automatically assigned when you add the Modbus_Master instruction in your program. The MB_DB parameter of the Modbus_Comm_Load instruction must be connected to the (static) MB_DB parameter of the Modbus_Master instruction.

Note

You cannot activate retentivity (Retain) for an instance DB of the Modbus_Master instruction.

Parameters

Parameters	Declaration	Data type		Standard	Description
		S7-1200/1500	S7-300/400/WinAC		
REQ	IN	Bool		FALSE	FALSE = no request TRUE = request to send data to the Modbus slave
MB_ADDR	IN	UInt	Word	-	Modbus RTU station address: Standard addressing range (1 to 247 as well as 0 for Broadcast) Extended addressing range (1 to 65535 as well as 0 for Broadcast) The value 0 is reserved for the broadcast of a frame to all Modbus slaves. Only the Modbus function codes 05, 06, 15 and 16 are supported for the broadcast.
MODE	IN	USInt	Byte	0	Mode selection: Specifies the type of request (read, write or diagnostics). Additional information is available in the table of Modbus functions below.
DATA_ADDR	IN	UDInt	DWord	0	Start address in the slave: Specifies the start address of the data that is accessed in the Modbus slave. The valid addresses are listed in the table of Modbus functions below.
DATA_LEN	IN	UInt	Word	0	Data length: Specifies the number of bits or words this instruction is to access. The valid lengths are listed in the table of Modbus functions below.

Parame-ters	Declaration	Data type		Standard	Description
		S7-1200/1500	S7-300/400/WinAC		
COM_RST	IN/OUT	---	Bool	FALSE	Initialization of the Modbus_Master instruction The instruction is initialized with TRUE. The instruction then resets COM_RST to FALSE. Note: The parameter is only available for S7-300/400 instructions.
DATA_PTR	IN/OUT	Variant	Any	-	Data pointer: Points to the flag or DB address for the data to be written or read. As of instruction version V3.0: The parameter may point to an optimized memory area. In the optimized memory area, a single element or an array is permitted with the following data types: Bool, Byte, Char, Word, Int, DWord, DInt, Real, USInt, UInt, UDInt, SInt, WChar. Every other data type results in error message 16#818C.
DONE	OUT	Bool		FALSE	The DONE bit is TRUE for one cycle after the last request has been completed without errors.
BUSY	OUT	Bool		-	• FALSE – no command active for Modbus_Master • TRUE – command for Modbus_Master in progress
ERROR	OUT	Bool		FALSE	The ERROR bit is TRUE for one cycle after the last request has been completed with errors. The error code in the STATUS parameter is only valid in the cycle in which ERROR = TRUE.
STATUS	OUT	Word		0	Error code (see Error messages (Page 149))

Tags in the data block of the Modbus master

The table below shows the public static tags in the instance DB of Modbus_Master that you can use in your program.

Table 5- 16 Static tags in the instance DB

Tag	Data type	Standard	Description
Blocked_Proc_Timeout	Real	3.0	Duration (in seconds) for which to wait for a blocked Modbus master instance before this instance is removed as ACTIVE. This may happen, for example, if a master request was output and the program then stops to call the master function before it has completely finished the request. The time value must be greater than 0 and less than 55 seconds to avoid an error to occur. See also "Rules for communication by the Modbus-Master" and "Calling the Modbus_Master instruction with different parameter settings".
Extended_Addressing	Bool	FALSE	Configures the slave station address as single or double byte. • FALSE = One-byte address; 0 to 247 • TRUE = Two-byte address (corresponds to extended addressing); 0 to 65535
Compatibility_Mode [1]	Bool	FALSE	Compatibility mode with CP 341 and CP 441-2 and ET 200S 1SI with driver for Modbus RTU and with ET 200S 1SI for Modbus. The default value is 0. • FALSE = as per Modbus specification, not compatible • TRUE = compatible – For FC1 and FC2: The data read from the received frame is written word for word to the addressed CPU memory and exchanged byte by byte. If the number of bits to be transmitted is not a multiple of 16, the bits which are not relevant are set to null in the last word. – For FC15: The words to be transmitted are read word by word from the addressed memory and written byte by byte to the send frame. If the number of bits to be transmitted is not a multiple of 8, the bits in the last byte which are not relevant are read unchanged from the addressed memory and entered in the send frame.
MB_DB	MB_BASE	-	The MB_DB parameter of the Modbus_Comm_Load instruction must be connected to this MB_DB parameter of the Modbus_Master instruction.

[1] The PtP communication modules respond as defined in the Modbus specification. To retain a response as with CP 341, CP 441-2 and ET 200SP 1SI for Modbus, use the "Compatibility_Mode" parameter.

You program can write values to the Blocked_Proc_Timeout and Extended_Addressing tags to control the Modbus master operations.

Rules for communication by the Modbus-Master

- Modbus_Comm_Load must be run to configure a port so that the Modbus_Master instruction can communicate with this port.
- A port which is to be used as Modbus master must not be used by Modbus_Slave . You can use one or several instances of Modbus_Master [1)] with this port. But all versions of the Modbus_Master must use the same instance DB for the port.
- The Modbus instructions do not use communication alarm events to control the communication process. Your program must query the Modbus_Master instruction for completed commands (DONE, ERROR).
- We recommend to call all executions of Modbus_Master for a specific port from a program cycle OB. Modbus master instructions can only be executed in one program cycle or in one cyclical/time-controlled processing level. They may not be processed in different processing levels. The priority interruption of a Modbus master instruction by another Modbus master instruction in a processing level with higher priority results in improper operation. Modbus master instructions may mot be processed in startup, diagnostic or time error levels.

[1)] "Instance of Modbus master" here means a call of the Modbus_Master instruction with the same interconnection to a Modbus_Comm_Load instruction and the same setting for the MB_ADDR, MODE, DATA_ADDR and DATA_LEN parameters.

Example

Modbus_Master is called with MODE=0 and DATA_ADDR=10

This job is now active until it is completed with DONE=1 or ERROR=1 or until the time monitoring configured at the Blocked_Proc_Timeout parameter has expired. If a new command is started after the watchdog time expires and before the previous command has been completed, the previous command is aborted without an error message.

If, while this command is running, the instruction is now called a second time with the same instance data but different MODE and DATA_ADDR parameter settings, this second call is terminated with ERROR=1 and STATUS=8200.

Calling the Modbus_Master instruction with different parameter settings

If multiple calls of the Modbus_Master instruction with different settings for MB_ADDR, MODE, DATA_ADDR or DATA_LEN are placed in your program, you must ensure that only one of these calls is active at any given time. Otherwise, the error message 16#8200 is output (interface is busy with an ongoing request).

If a call cannot be processed in full, the watchdog is activated by the Blocked_Proc_Timeout parameter and terminates the ongoing command.

REQ parameter

FALSE = no request; TRUE = request to send data to the Modbus slave

Enable the requested transmission. This transmits the contents of the buffer to the point-to-point communication interface.

You use the DATA_ADDR and MODE parameters to select the Modbus function code.

DATA_ADDR (Modbus start address in the slave): Specifies the start address of the data that is accessed in the Modbus slave.

The Modbus_Master instruction uses the MODE input instead of a function code input. The combination of MODE and DATA_ADDR specifies the function code that is used in the actual Modbus frame. The table below shows how the MODE parameter, the Modbus function code and the Modbus address range in DATA_ADDR are related.

Table 5- 17 Modbus functions

MODE	DATA_ADDR (Modbus address)			DATA_LEN (data length)			Modbus function code	Operation and data		
0				Bits per request			01	Read output bits:		
	1	to	9999	1	to	2000/1992 [1]		0	to	9998
0				Bits per request			02	Read input bits:		
	10001	to	19999	1	to	2000/1992 [1]		0	to	9998
0				Words per request			03	Read hold register:		
	40001	to	49999	1	to	125/124 [1]		0	to	9998
	400001	to	465535	1	to	125/124 [1]		0	to	65534
0				Words per request			04	Read input words:		
	30001	to	39999	1	to	125/124 [1]		0	to	9998
1				Bits per request			05	Write one output bit:		
	1	to	9999	1				0	to	9998
1				1 word per request			06	Write one hold register:		
	40001	to	49999	1				0	to	9998
	400001	to	465535	1				0	to	65524
1				Bits per request			15	Write multiple output bits:		
	1	to	9999	2	to	1968/1960 [1]		0	to	9998
1				Words per request			16	Write multiple hold registers:		
	40001	to	49999	2	to	123/122		0	to	9998
	400001	to	465534	2	to	123/122 [1]		0	to	65534
2 [2]				Bits per request			15	Write one or several output bits:		
	1	to	9999	1	to	1968/1960 [1]		0	to	9998
2 [2]				Words per request			16	Write one or several hold registers:		
	40001	to	49999	1	to	123		0	to	9998
	400001	to	465535	1	to	122 [1]		0	to	65534
11	Both DATA_ADDR and DATA_LEN operands of the Modbus_Master are ignored with this function.						11	Read status word and event counter of the slave communication. The status word indicates busy (0 – not busy, 0xFFFF - busy). The event counter is incremented for each successful processing of a frame.		

MODE	DATA_ADDR (Modbus address)			DATA_LEN (data length)			Modbus function code	Operation and data		
80				1 word per request			08	Check slave status with data diagnostic code 0x0000 (loopback test – slave returns an echo of the request)		
	-			1				-		
81				1 word per request			08	Reset slave event counter using data diagnostic code 0x000A		
	-			1				-		
104 [3]				Words per request			04	Read input words		
	0	to	65535	1	to	125/124 [1]		0	to	65535
3 to 10, 12 to 79, 82 to 103, 105 to 255	-			-				Reserved		

[1] In extended addressing, see the Extended_Adressing parameter, the maximum data length is shorter by 1 byte or 1 word depending on the data type of the function.

[2] MODE 2 allows you to write one or more output bits and one or more holding registers using the Modbus functions 15 and 16.
MODE 1 uses the Modbus functions 5 and 6 to write 1 output bit and 1 holding register, and Modbus functions 15 and 16 to write multiple output bits and multiple holding registers.

[3] The following applies to S7-300/400/WinAC: Is not supported.

DATA_PTR parameter

The DATA_PTR parameter points to the DB or bit memory address in which reading or writing is performed. If you use a data block, you must create a global data block that provides the data memory for read and write processes on Modbus slaves.

Note

S7-1200/1500 - The data block addressed using DATA_PTR must support direct addressing

The data block must permit direct (absolute) and symbolic addressing.

Note

Using function code 5

Function code 5 is used to set or delete individual bits.

When a bit is set, the value "16#FF00" must be specified in the first word of the addressed DB or bit memory area via DATA_PTR.

- With S7-1200, the value "16#0100" can also be specified to set a bit.
- To reset a bit, the value "16#0000" must be specified in the first word of the DB or bit memory area addressed via DATA_PTR.

All other values are rejected with ERROR = TRUE and STATUS = 16#8384.

Data block structures for the DATA_PTR parameter

- These data types are valid for reading words of the Modbus address range (DATA_PTR) 30001 to 39999, 40001 to 49999 and 400001 to 465535 as well as for writing words to the Modbus address range (DATA_PTR parameter) 40001 to 49999 and 400001 to 465535.
  - Standard array of data types WORD, UINT or INT
  - Named structure of the WORD, UINT or INT type in which each element has a unique name and a 16-bit data type.
  - Named complex structure in which each element has a unique name and a 16-bit or 32-bit data type.
- For reading and writing bits for the Modbus address range (DATA_PTR parameter) 00001 to 09999 and for reading bits from 10001 to 19999.
  - Standard field from Boolean data types.
  - Named Boolean structure from clearly named Boolean tags.
- It is not essential, but nevertheless advisable, to allocate each Modbus_Master instruction its own separate memory area. The reason for this is that data destruction is far more likely if multiple Modbus_Master instructions are reading and writing in the same memory area.
- It is not necessary for the data areas for DATA_PTR to be located in the same global data block. You can create a data block with several areas for Modbus read processes, a data block for Modbus write processes or a data block for each slave station.

Instruction versions

Version 3.0 is functionally identical to version 2.4 and its version number was only incremented due to internal measures.

5.4.2.5 Modbus_Slave

Modbus_Slave: Communicate as Modbus slave

Note

Use with CM1241

The use of this instruction with a CM1241 is only possible from firmware version V2.1 of the module.

Description

Your program can use the Modbus_Slave instruction to communicate as a Modbus slave by using a CM (RS422/485 or RS232). STEP 7 automatically creates an instance DB when you add the instruction. The MB_DB parameter of the Modbus_Comm_Load instruction must be connected to the (static) MB_DB parameter of the Modbus_Slave instruction.

Note

You cannot activate retentivity (Retain) for an instance DB of the Modbus_Slave instruction.

Parameters

Parameters	Declaration	Data type		Standard	Description
		S7-1200/1500	S7-300/400/WinAC		
MB_ADDR	IN	UInt	Word	-	Standard address of the Modbus slave: Standard addressing range (1 to 247) Extended addressing range (0 to 65535) Note: 0 is the broadcast address
COM_RST	IN/OUT	---	Bool	FALSE	Initialization of the Modbus_Slave instruction The instruction is initialized with TRUE. The instruction then resets COM_RST to FALSE. Note: The parameter is only available for S7-300/400 instructions.

Parameters	Declaration	Data type		Standard	Description
		S7-1200/1500	S7-300/400/WinAC		
MB_HOLD_REG	IN/OUT	Variant	Any	-	Pointer to the Modbus hold register DB: The Modbus hold register may be the memory area of the flags or a data block. As of instruction version V4.0: The parameter must point to a memory area that has a length of at least 16 bits. A shorter length results in error message 16#8187. This applies to single elements, arrays, STRUCTs and UDTs. For example, a Single Bool or an array consisting of less than 16 Boolean elements results in the error message. If the length is not a multiple of 16 bits, the remaining bits at the end of the memory area cannot be read or written by the Modbus_Slave instruction. The parameter may point to an optimized memory area. In the optimized memory area, a single element or an array is permitted with the following data types: Bool, Byte, Char, Word, Int, DWord, DInt, Real, USInt, UInt, UDInt, SInt, WChar. Every other data type results in error message 16#818C.
NDR	OUT	Bool		FALSE	New data available: • FALSE – No new data • TRUE – Indicates that new data was written by the Modbus master The NDR bit is TRUE for one cycle after the last request has been completed without errors.
DR	OUT	Bool		FALSE	Read data: • FALSE – No data read • TRUE – Indicates that the instruction has stored the data received by the Modbus master in the target area. The DR bit is TRUE for one cycle after the last request has been completed without errors.
ERROR	OUT	Bool		FALSE	The ERROR bit is TRUE for one cycle after the last request has been completed with errors. If the execution was terminated with an error, the error code in the STATUS parameter is only valid in the cycle in which ERROR = TRUE.
STATUS	OUT	Word		0	Error code (see Error messages (Page 149))

The function codes of the Modbus communication (1, 2, 4, 5 and 15) can read and write bits and words directly in the process image input and in the process image output of the CPU. The MB_HOLD_REG parameter must be defined as data type greater than one byte for these function codes. The table below shows the sample assignment of Modbus addresses to the process image in the CPU.

Table 5- 18 Assignment of Modbus addresses to the process image

Modbus functions						S7-1200			
Code	**Function**	**Data area**	**Address area**			**Data area**	**CPU address**		
01	Read bits	Output	0	to	8191	Process image output	O0.0	to	O1023.7
02	Read bits	Input	0	to	8191	Process image input	I0.0	to	I1023.7
04	Read words	Input	0	to	511	Process image input	IW0	to	IW1022
05	Write bit	Output	0	to	8191	Process image output	O0.0	to	O1023.7
15	Write bits	Output	0	to	8191	Process image output	O0.0	to	O1023.7

Table 5- 19 Assignment of Modbus addresses to the process image

Modbus functions						S7-1500 / S7-300 / S7-400			
Function code	**Function**	**Data area**	**Address area**			**Data area**	**CPU address**		
01	Read bits	Output	0	to	9998	Process image output	O0.0	to	A1249.6
02	Read bits	Input	0	to	9998	Process image input	I0.0	to	I1249.6
04	Read words	Input	0	to	9998	Process image input	IW0	to	IW19996
05	Write bit	Output	0	to	9998	Process image output	O0.0	to	A1249.6
15	Write bits	Output	0	to	9998	Process image output	O0.0	to	A1249.6

Note

The available address area may be smaller, depending on the memory configuration of the CPU.

The function codes of the Modbus communication (3, 6, 16) use a Modbus hold register which is an address area in the memory area of the flags or a data block. The type of holding register is specified by the MB_HOLD_REG parameter of the Modbus_Slave instruction.

Note

S7-1200/1500 - type of the MB_HOLD_REG data block

The data block with Modbus hold register must permit direct (absolute) and symbolic addressing.

Table 5- 20 Diagnostics functions

Modbus diagnostic functions of the S7-1200 Modbus_Slave		
Function codes	**Subfunction**	**Description**
08	0000H	Output request data of echo test: The Modbus_Slave instruction returns the echo of a received data word to the Modbus master.
08	000AH	Clear communication event counter: The Modbus_Slave instruction clears the communication event counter used for Modbus function 11.
11		Call communication event counter: The Modbus_Slave instruction uses an internal communication event counter to detect the number of successful Modbus read and Modbus write requests that are sent to the Modbus slave. The counter is not incremented for function 8, function 11 and broadcast requests. It is also not incremented for requests that result in communication errors (for example, parity or CRC errors).

The Modbus_Slave instruction supports broadcast write requests from Modbus masters as long as the requests include access to valid addresses. Modbus_Slave generates error code 16#8188 for function codes that are not supported by the broadcast function.

Variables of the Modbus slave in instruction version V3.0

This table below shows the public static tags in the instance data block of Modbus_Slave that you can use in your program.

Table 5- 21 Variables of the Modbus slave

Tag	Data type	Standard	Description
HR_Start_Offset	Word	0	Specifies the start address of the Modbus hold register (default = 0)
QB_Start	Word	0	Start address of the valid writable addressing range of the outputs (byte 0 to 65535) Note: The variable is not available for S7-300, S7-400 and WinAC.
QB_Count	Word	0xFFFF	Number of output bytes that can be written by the Modbus master. Note: The variable is not available for S7-300, S7-400 and WinAC.
Extended_Addressing	Bool	FALSE	Extended addressing, configures slave addressing as single or double byte (FALSE = single byte address, TRUE = double byte address)
Request_Count	Word	0	The number of all requests received by this slave
Slave_Message_Count	Word	0	The number of requests received for this specific slave
Bad_CRC_Count	Word	0	The number of received requests that have a CRC error
Broadcast_Count	Word	0	The number of received broadcast requests
Exception_Count	Word	0	Modbus-specific errors that are acknowledged with an exception to the master
Success_Count	Word	0	The number of received requests without protocol errors for this specific slave
MB_DB	MB_BASE	-	The MB_DB parameter of the Modbus_Comm_Load instruction must be connected to this MB_DB parameter of the Modbus_Master instruction.

You program can write values to the HR_Start_Offset and Extended_Addressing tags and control the Modbus slave operations. The other tags can be read to monitor the Modbus status.

Rules for Modbus slave communication

- Modbus_Comm_Load must be run to configure a port so that the Modbus_Slave instruction can communicate by means of this port.
- If a port is to respond as slave to a Modbus master, this port may not be programmed with the Modbus_Master instruction.
- Only one instance of Modbus_Slave can be used with a specific port; otherwise you may encounter unexpected behavior.
- The Modbus instructions do not use communication alarm events to control the communication process. Your program must control the communication process by querying the Modbus_Slave instruction for completed send and receive processes.
- The Modbus_Slave instruction must be executed regularly with a frequency that allows a timely response to incoming requests of a Modbus master. We recommend executing Modbus_Slave in each cycle from a program cycle OB. Modbus_Slave can be executed from a cyclic interrupt OB but we do not recommend it, because excessive time delays in the interrupt program can temporarily block the execution of other interrupt programs.

Time control of the Modbus signal

Modbus_Slave must be executed regularly to receive each request of the Modbus master and respond accordingly. The frequency with which Modbus_Slave is executed depends on the timeout value specified for the response by the Modbus master. This can be seen in the figure below.

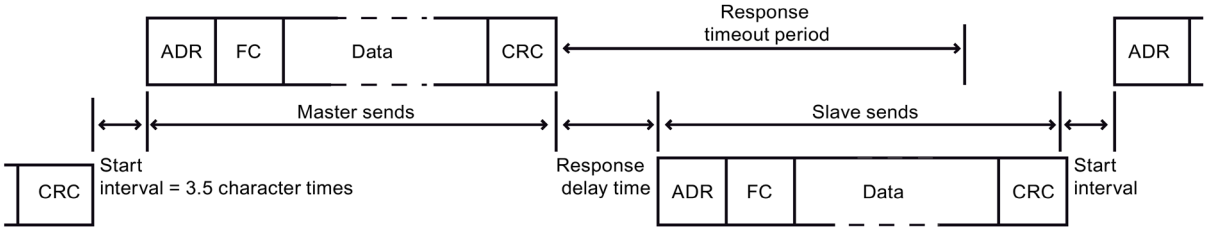

The timeout period of the (RESP_TO) response is the duration that a Modbus master waits for the beginning of an answer from a Modbus slave. This period is not defined by the Modbus protocol, but by a parameter of the Modbus_Comm_Load instruction. As both receiving and sending a frame requires multiple calls of the Modbus_Slave instruction (at least three), you should execute Modbus_Slave at least twelve times during the timeout period for the response of the Modbus master so that the Modbus slave receives and sends data twice as many times as specified by the timeout period.

HR_Start_Offset

The Modbus holding register addresses start at 40001 or 400001. These addresses correspond to the start address of the holding register in the target system memory. But you can configure the HR_Start_Offset tag to configure a start address different than 40001 or 400001 for the Modbus hold register.

The address 0 in the received frame correspond to the start address of the hold register in the target system memory. Use the tag HR_Start_Offset to configure a start address other than 0 for the Modbus hold register.

You can, for example, configure a hold register with start at MW100 and a length of 100 words. With HR_Start_Offset = 20, the address 20 in the received frame corresponds to the start address of the holding register in the target memory (MW100). Each address in the received frame below 20 and above 119 results in an addressing error.

Table 5- 22 Example for addressing the Modbus hold register when DATA_PTR is a pointer to MW100 with a length of 100 words

HR_Start_Offset	Address	Minimum	Maximum
0	Modbus address (word)	0	99
	S7-1500 address	MW100	MW298
20	Modbus address (word)	20	119
	S7-1500 address	MW100	MW298

HR_Start_Offset is a word value which specifies the start address of the Modbus hold register and is saved in the Modbus_Slave instance data block. You select this public static tag by means of the parameter drop-down list once you have added Modbus_Slave in your program.

If you have added Modbus_Slave to an LAD network, for example, you can go to a previous network and assign the value HR_Start_Offset using the move command. The value must be assigned prior to execution of Modbus_Slave.

Enter Modbus slave tag using the standard DB name:

1. Position the cursor in the OUT1 parameter field and enter the character m.
2. Select the required instance DB of the Modbus_Slave instruction from the drop-down list.
3. Position the cursor to the right of the DB name (after the quotation mark) and enter a point.
4. Select "Modbus_Slave_DB.HR_Start_Offset" in the drop-down list.

Instruction versions

Version 4.0 is functionally identical to version 3.0 and its version number was only incremented due to internal measures.

Access to data areas in DBs instead of direct access to MODBUS addresses as of version V4.0

Access to data areas in DBs instead of direct access to MODBUS addresses as of version V4.0

As of instruction version V4.0 of Modbus_Slave and as of firmware versions V2.5 (S7-1500 CPUs) or V4.2 (S7-1200 CPUs), you can access data areas in DBs instead of directly accessing process images and holding registers. In doing so, the attribute "Optimized block access" must be disabled for the DB and it must not be located solely in the load memory.

If a MODBUS request arrives and you have not defined a data area for the MODBUS data type of the corresponding function code, the request is treated as in the previous instruction versions, i.e. process images and holding registers are accessed directly.

If you have defined a data area for the MODBUS data type of the function code, however, the Modbus_Slave instruction reads from this data area or writes to it. Whether it reads or writes depends on the job type.

One individual MODBUS request can only ever be read from or written to one data area. If, for example, you want to read holding registers that extend over multiple data areas, you therefore require multiple MODBUS requests.

Rules for defining data areas

You can define up to eight data areas in different DBs; each DB must only contain one data area. An individual MODBUS request can only ever read from precisely one data area or write to precisely one data area. Each data area corresponds to one MODBUS address area. The data areas are defined in the static tag Data_Area_Array of the instance DB; Data_Area_Array is a field consisting of eight elements.

If you want to use less than eight data areas, the required data areas must be located one behind the other without any gaps. The first blank entry in the data areas ends the data area search during processing. If, for example, you have defined the field elements 1, 2, 4 and 5, only field elements 1 and 2 will be recognized as field element 3 is empty.

The Data_Area_Array field consists of 8 elements: Data_Area_Array[1] to Data_Area_Array[8]

Each field element Data_Area_Array[x], 1 <= x <= 8, is a UDT of the type MB_DataArea and is structured as follows:

Parameter	Data type	Meaning
Data_type	UInt	Identifier for the MODBUS data type that is mapped to this data area: • 0: Identifier for an empty field element or an unused data area. In this case, the values of db, start and length are irrelevant. • 1: Process image output (used with function codes 1, 5 and 15) • 2: Process image input (used with function code 2) • 3: Holding register (used with function codes 3, 6 and 16) • 4: Input register (used with function code 4) Note: If you have defined a data area for a MODBUS data type, the instruction MB_SERVER can no longer access this MODBUS data type directly. If the address of a MODBUS request for such a data type does not correspond to a defined data area, a value of W#16#8383 is returned in STATUS.
db	UInt	Number of the data block to which the MODBUS register or bits subsequently defined are mapped. The DB number must be unique in the data areas. The same DB number must not be defined in multiple data areas. The DB must have standard access and must not be located solely in the load memory. Data areas also start with the byte address 0 of the DB. Permitted values: 1 to 60999
start	UInt	First MODBUS address that is mapped to the data block starting from address 0.0. Permitted values: 0 to 65535
length	UInt	Number of bits (for the values 1 and 2 of data_type) or number of registers (for the values 3 and 4 of data_type). The MODBUS address areas of one and the same MODBUS data type must not overlap. Permitted values: 1 to 65535

Examples of the definition of data areas

- First example: data_type = 3, db = 1, start = 10, length = 6

  The holding registers (data_type = 3) are mapped in data block 1 (db = 1). The Modbus address 10 (start = 10) is located at data word 0. The last valid Modbus address 15 (length = 6) is located at data word 5.

- Second example: data_type = 2, db = 15, start = 1700, length = 112

  The inputs (data_type = 2) are mapped in data block 15 (db = 15). The Modbus address 1700 (start = 1700) is located at data word 0. The last valid Modbus address 1811 (length = 112) is located at data word 111.

Restriction of read access to process images as of version V4.0

Restriction of read access to process images

As of instruction version V4.0 of Modbus_Slave, you can define one area each in the process image of the inputs and in the process image of the outputs to which remote MODBUS devices have read access. Read access by remote MODBUS devices to addresses outside these process image areas is then no longer possible.

Note

Restriction of write access to process images

The option for restricting write access to the process image of the outputs to a specific area is available as of instruction version V3.0.

Definition of read areas in the process images

Read areas in the process images are defined in the following static tags of the instance DB:

- QB_Read_Start: Address of the first byte in the process image output that can be read by a remote MODBUS device (applies to function code 1)
- QB_Read_Count: Number of bytes in the process image output that can be read by a remote MODBUS device (applies to function code 1)
- IB_Read_Start: Address of the first byte in the process image input that can be read by a remote MODBUS device (applies to function codes 2 and 4)
- IB_Read_Count: Number of bytes in the process image input that can be read by a remote MODBUS device (applies to function codes 2 and 4)

Static tags in the instance DB for defining write and read areas in the process images

The following table describes the static variables listed above in the instance DB of the Modbus_Slave instruction that you use to define the read areas in the process images.

For the sake of completeness, the static variables with which you define the write areas in the process images (QB_Start and QB_Count) as of version V3.0 are also specified.

Tag	Data type	Start value
QB_Start	UInt	0
QB_Count	UInt	65535
QB_Read_Start	UInt	0
QB_Read_Count	UInt	65535
IB_Read_Start	UInt	0
IB_Read_Count	UInt	65535

5.4.2.6 Frame structure

Extended_Addressing

You access the Extended_Addressing tag as described for the HR_Start_Offset reference, except that the Extended_Addressing tag is a Boolean value.

You can configure a single byte (Modbus standard) or two bytes (Extended_Adressing = TRUE) with Extended_Adressing = FALSE for addressing the Modbus slave. Extended addressing is used to address more than 247 devices in a single network. With Extended_Adressing = TRUE you can address up to 65535 addresses. The following example shows a Modbus frame.

Table 5- 23 Slave address with one byte (Byte 0)

	Byte 0	**Byte 1**	**Byte 2**	**Byte 3**	**Byte 4**	**Byte 5**	
Request	Slave address	Function code	Start address		Data		
Valid response	Slave address	Function code	Length	Data...			
Error message	Slave address	0xxx	Exception code				

Table 5- 24 Slave address with two bytes (Byte 0 and Byte 1)

	Byte 0	**Byte 1**	**Byte 2**	**Byte 3**	**Byte 4**	**Byte 5**	**Byte 6**
Request	Slave address		Function code	Start address		Data	
Valid response	Slave address		Function code	Length	Data...		
Error message	Slave address		0xxx	Exception code			

Frame description

Data traffic between master and slave / slave and master starts with the slave address, following by the function code. The data is then transferred. The structure of the data field depends on the function code used. The checksum (CRC) is transmitted at the end of the frame.

Function codes with performance optimization

With the option for performance optimization activated, there are restrictions to the configuration limits of the transferred data. More information on the restrictions can be found in the section Function codes (Page 62).

Function code 1 - This function allows individual output bits to be read

Table 5- 25 FC 1 - Read output bits

	Byte 0	Byte 1	Byte 2	Byte 3	Byte 4	Byte 5
Query	Slave address	Function code 1	Start address		Number of outputs	
Valid response	Slave address	Function code 1	Length [1]	Output data [3]		
Error message	Slave address	0x81	Exception code [2]	---		

[1] Length: If there is a remainder when the number of outputs is divided by 8, the number of bytes must be increased by 1.

[2] E code: 01 or 02 or 03 or 04

[3] The output data can contain multiple bytes

	Byte 0	Byte 1	Byte 2	Byte 3	Byte 4	Byte 5	Byte 6
Query	Slave address		Function code 1	Start address		Number of outputs	
Valid response	Slave address		Function code 1	Length [1]	Output data		
Error message	Slave address		0x81	Exception code [2]	---		

[1] Length: If there is a remainder when the number of outputs is divided by 8, the number of bytes must be increased by 1.

[2] E code: 01 or 02 or 03 or 04

[3] The output data can comprise multiple bytes

Function code 2 - This function allows individual input bits to be read

Table 5- 26 FC 2 - Read input bits

	Byte 0	Byte 1	Byte 2	Byte 3	Byte 4	Byte 5
Query	Slave address	Function code 2	Start address		Number of inputs	
Valid response	Slave address	Function code 2	Length [1]	Input data		
Error message	Slave address	0x82	Exception code [2]	---		

[1] Length: If there is a remainder when the number of inputs is divided by 8, the number of bytes must be increased by 1.

[2] E code: 01 or 02 or 03 or 04

	Byte 0	Byte 1	Byte 2	Byte 3	Byte 4	Byte 5	Byte 6
Query	Slave address		Function code 2	Start address		Number of inputs	
Valid response	Slave address		Function code 2	Length [1]	Input data		
Error message	Slave address		0x82	Exception code [2]	---		

[1] Length: If there is a remainder when the number of inputs is divided by 8, the number of bytes must be increased by 1.

[2] E code: 01 or 02 or 03 or 04

Function code 3 - This function allows individual registers to be read

Table 5- 27 FC 3 - Read hold register

	Byte 0	Byte 1	Byte 2	Byte 3	Byte 4	Byte 5
Query	Slave address	Function code 3	Start address		Number of registers	
Valid response	Slave address	Function code 3	Length [1]	Register data		
Error message	Slave address	0x83	Exception code [2]	---		

[1] Length: Number of bytes

[2] E code: 01 or 02 or 03 or 04

	Byte 0	Byte 1	Byte 2	Byte 3	Byte 4	Byte 5	Byte 6
Query	Slave address		Function code 3	Start address		Number of registers	
Valid response	Slave address		Function code 3	Length [1]	Register data		
Error message	Slave address		0x83	Exception code [2]	---		

[1] Length: Number of bytes

[2] E code: 01 or 02 or 03 or 04

Function code 4 - This function allows individual registers to be read

Table 5- 28 FC 4 - Read input words

	Byte 0	Byte 1	Byte 2	Byte 3	Byte 4	Byte 5
Query	Slave address	Function code 4	Start address		Number of input words	
Valid response	Slave address	Function code 4	Length [1]	Input data		
Error message	Slave address	0x84	Exception code [2]	---		

[1] Length: 2 * number of input words

[2] E code: 01 or 02 or 03 or 04

	Byte 0	Byte 1	Byte 2	Byte 3	Byte 4	Byte 5	Byte 6
Query	Slave address		Function code 4	Start address		Number of input words	
Valid response	Slave address		Function code 4	Length [1]	Input data		
Error message	Slave address		0x84	Exception code [2]	---		

[1] Length: 2 * number of input words

[2] E code: 01 or 02 or 03 or 04

Function code 5 - This function can set or delete individual bits

Table 5- 29 FC 5 - Write an output bit

	Byte 0	Byte 1	Byte 2	Byte 3	Byte 4	Byte 5
Query	Slave address	Function code 5	Start address		Value	
Valid response	Slave address	Function code 5	Length	Value		
Error message	Slave address	0x85	Exception code [1]	---		

[1] E code: 01 or 02 or 03 or 04

	Byte 0	Byte 1	Byte 2	Byte 3	Byte 4	Byte 5	Byte 6
Query	Slave address		Function code 5	Start address		Value	
Valid response	Slave address		Function code 5	Length	Value		
Error message	Slave address		0x85	Exception code [1]	---		

[1] E code: 01 or 02 or 03 or 04

Function code 6 - This function allows individual registers to be written

Table 5- 30 FC 6 - Write hold register

	Byte 0	Byte 1	Byte 2	Byte 3	Byte 4	Byte 5
Query	Slave address	Function code 6	Address		Register	
Valid response	Slave address	Function code 6	Address		Register	
Error message	Slave address	0x86	Exception code [1]	---		

[1] E code: 01 or 02 or 03 or 04

	Byte 0	Byte 1	Byte 2	Byte 3	Byte 4	Byte 5	Byte 6
Query	Slave address		Function code 6	Address		Register	
Valid response	Slave address		Function code 6	Address		Register	
Error message	Slave address		0x86	Exception code [1]	---		

[1] E code: 01 or 02 or 03 or 04

Function code 8 - This function is used to check the communication connection

Table 5- 31 FC 8 - Slave status

	Byte 0	Byte 1	Byte 2	Byte 3	Byte 4	Byte 5
Query	Slave address	Function code 8	Diagnostic code		Test value	
Valid response	Slave address	Function code 8	Diagnostic code		Test value	
Error message	Slave address	0x88	Exception code [1]	---		

[1] E code: 01 or 03 or 04

	Byte 0	Byte 1	Byte 2	Byte 3	Byte 4	Byte 5	Byte 6
Query	Slave address		Function code 8	Diagnostic code		Test value	
Valid response	Slave address		Function code 8	Diagnostic code		Test value	
Error message	Slave address		0x88	Exception code [1]	---		

[1] E code: 01 or 03 or 04

Function code 11 - This function can read 2 bytes of "Status word" and 2 bytes of "Event counter"

Table 5- 32 FC 11 - Event counter for slave communication

	Byte 0	Byte 1	Byte 2	Byte 3	Byte 4	Byte 5
Query	Slave address	Function code 11	---			
Valid response	Slave address	Function code 11	Status		Event counter	
Error message	Slave address	0x8B	Exception code [1]	---		

[1] E code: 01 or 04

	Byte 0	Byte 1	Byte 2	Byte 3	Byte 4	Byte 5	Byte 6
Query	Slave address		Function code 11	---			
Valid response	Slave address		Function code 11	Status		Event counter	
Error message	Slave address		0x8B	Exception code [1]	---		

[1] E code: 01 or 04

Function code 15 - This function allows multiple bits to be written

Table 5- 33 FC 15 - Write one/multiple output bits

	Byte 0	Byte 1	Byte 2	Byte 3	Byte 4	Byte 5	Byte 6	Byte 7	Byte n
Query	Slave address	Function code 15	Start address		Number of output words		Byte counter [1]	Value	
Valid response	Slave address	Function code 15	Start address		Number of output words		---		
Error message	Slave address	0x8F	Exception code [2]	---					

[1] Byte counter: If there is a remainder when the number of bytes is divided by 8, the number of bytes must be increased by 1.

[2] E code: 01 or 02 or 03 or 04

	Byte 0	Byte 1	Byte 2	Byte 3	Byte 4	Byte 5	Byte 6	Byte 7	Byte 8	Byte n
Query	Slave address		Function code 15	Start address		Number of output words		Byte counter [1]	Value	
Valid response	Slave address		Function code 15	Start address		Number of output words		---		
Error message	Slave address		0x8F	Exception code [2]		---				

[1] Byte counter: If there is a remainder when the number of bytes is divided by 8, the number of bytes must be increased by 1.

[2] E code: 01 or 02 or 03 or 04

Function code 16 - This function allows individual or multiple registers to be written

Table 5- 34 FC 16 - Write one/multiple hold registers

	Byte 0	**Byte 1**	**Byte 2**	**Byte 3**	**Byte 4**	**Byte 5**	**Byte 6**	**Byte 7**	**Byte n**
Query	Slave address	Function code 16	Start address		Number of registers		Byte counter [1]	Value	
Valid response	Slave address	Function code 16	Start address		Number of registers		---		
Error message	Slave address	0x90	Exception code [2]	---					

[1] Byte counter: Number of registers * 2

[2] E code: 01 or 02 or 03 or 04

	Byte 0	**Byte 1**	**Byte 2**	**Byte 3**	**Byte 4**	**Byte 5**	**Byte 6**	**Byte 7**	**Byte 8**	**Byte n**
Query	Slave address		Function code 16	Start address		Number of registers		Byte counter [1]	Value	
Valid response	Slave address		Function code 16	Start address		Number of registers		---		
Error message	Slave address		0x90	Exception code [2]		---				

[1] Byte counter: Number of registers * 2

[2] E code: 01 or 02 or 03 or 04

5.4.2.7 Error messages

Overview of the Modbus error messages

Error code	Description	Solution
16#0000	No error	-
Configuration error of the interface - Modbus_Comm_Load		
16#8181	The module does not support this data transmission rate.	Select a valid data transmission rate for the module at the BAUD parameter.
16#8182	The module does not support this parity setting.	Select a suitable value for "Parity" at the PARITY parameter. The following are valid: • None (1) • Even (2) • Odd (3) • Mark (4) • Space (5) • Any (6)
16#8183	The module does not support this type of data flow control.	Select a valid data flow control for the module at the FLOW_CTRL parameter.
16#8184	Invalid value for "Response timeout".	Select a suitable value for "Response timeout" at the RESP_TO parameter. Valid range of values: 1 to 65535 (ms)
16#8280	Negative acknowledgment when reading module	Check the input at the PORT parameter. You can find more detailed information on error causes in the Send_Config.RDREC.STATUS or Receive_Config.RDREC.STATUS static parameters or RDREC.STATUS and in the description of the SFB RDREC.
16#8281	Negative acknowledgment when writing module	Check the input at the PORT parameter. You can find more detailed information on error causes in the Send_Config.WRREC.STATUS or Receive_Config.WRREC.STATUS static parameters or WRREC.STATUS and in the description of the SFB WRREC.
16#8282	Module not available	Check the input at the PORT parameter and ensure that the module can be reached.

Error code	Description	Solution
Configuration error - Modbus_Slave		
16#8186	Invalid slave address	Select a suitable slave address at the MB_ADDR parameter. The following are valid: 1-247 at standard address area; 1-65535 at extended address area (0 is reserved for Broadcast)
16#8187	Invalid value at MB_HOLD_REG parameter	Select a suitable value for the hold register at the MB_HOLD_REG parameter.
16#8188	Invalid operating mode or broadcast (MB_ADDR = 0) and MODE parameter ≠ 1	Select the value 1 for MODE in Broadcast mode or select a different operating mode.
16#818C	The pointer to a MB_HOLD_REG area must be a data block or a bit memory address area.	Select a suitable value for the pointer to the MB_HOLD_REG area.
16#8280	Negative acknowledgment when reading module	Check the input at the PORT parameter. You can find more detailed information on error causes in the static parameters Send_P2P.RDREC.STATUS or Receive_P2P.RDREC.STATUS, and in the description of the SFB RDREC.
16#8281	Negative acknowledgment when writing module	Check the input at the PORT parameter. You can find more detailed information on error causes in the static parameters Send_P2P.WRREC.STATUS or Receive_P2P.WRREC.STATUS, and in the description of the SFB WRREC.
16#8389	Invalid data area definition: • Illegal value of data_type • DB number not permitted or not available: – Invalid value of db – DB number does not exist – DB number is already being used by another data area – DB with optimized access – DB is not in work memory • Illegal valid for length • Overlapping of MODBUS address areas that belong to the same MODBUS data type	Check the definition of the data areas. See section Access to data areas in DBs instead of direct access to MODBUS addresses as of version V4.0 (Page 139)
16#8452 [1)]	MB_HOLD_REG is not a pointer to a DB or a bit memory area	Check the MB_HOLD_REG pointer
16#8453 [1)]	MB_HOLD_REG is not a pointer of type BOOL or WORD	Check the MB_HOLD_REG pointer
16#8454 [1)]	The area addressed by MB_HOLD_REG is longer than the DB, or the area addressed is too small for the number of data bytes to be read or written.	Check the MB_HOLD_REG pointer
16#8455 [1)]	MB_HOLD_REG points to a write-protected DB	Check the MB_HOLD_REG pointer
16#8456 [1)]	Error during instruction execution. The cause of the error is shown in the STATUS parameter.	Determine the value of the SFCSTATUS parameter. Check what this means in the description for SFC51, STATUS parameter.

Error code	Description	Solution
Configuration error - Modbus_Master		
16#8180	Invalid value for MB_DB parameter	The value configured for MB_DB (instance data DB) at the Modbus_Comm_Load instruction is not valid. Check the interconnection of the Modbus_Comm_Load instruction and its error messages.
16#8186	Invalid station address	Select a suitable station address at the MB_ADDR parameter. The following are valid: 1-247 at standard address area; 1-65535 at extended address area (0 is reserved for Broadcast)
16#8188	Invalid operating mode or broadcast (MB_ADDR = 0) and MODE parameter ≠ 1	Select the value 1 for MODE in Broadcast mode or select a different operating mode.
16#8189	Invalid data address	Select a suitable value for the data address at the DATA_ADDR parameter. See description Modbus_Master (Page 125) in the Info system
16#818A	Invalid length	Select a suitable data length at the DATA_LEN parameter. See description Modbus_Master (Page 125) in the Info system
16#818B	Invalid value for DATA_PTR	Select a suitable value for the data pointer at the DATA_PTR parameter (M or DB address). See description Modbus_Master (Page 125) in the Info system
16#818C	Interconnection error of the DATA_PTR parameter	Check the interconnection of the instruction.
16#818D	The area addressed by DATA_PTR is longer than the DB, or the area addressed is too small for the number of data bytes to be read or written.	Check the DATA_PTR pointer
16#8280	Negative acknowledgment when reading module	Check the input at the PORT parameter. You can find more detailed information on error causes in the static parameters Send_P2P.RDREC.STATUS or Receive_P2P.RDREC.STATUS, and in the description of the SFB RDREC.
16#8281	Negative acknowledgment when writing module	Check the input at the PORT parameter. You can find more detailed information on error causes in the static parameters Send_P2P.WRREC.STATUS or Receive_P2P.WRREC.STATUS or Receive_Reset and in the description of the SFB WRREC.

Error code	Description	Solution
Communication errors - Modbus_Master and Modbus_Slave		
16#80D1	The wait time for XON or CTS = ON has expired.	The communication partner has a fault, is too slow or is offline. Check the communication partner or change the parameters, if necessary.
16#80D2	"Hardware RTS always ON": Send job canceled due to change from DSR = ON to OFF	Check the communication partner. Make sure that DSR is ON for the entire duration of transmission.
16#80E0	Frame aborted: Send buffer overflow / send frame too long	In the user program call the instruction more often or configure a communication with data flow control.
16#80E1	Frame aborted: Parity error	Check the connection line of the communication partners, or verify that the same data transmission rate, parity and stop bit number are configured for both devices.
16#80E2	Frame aborted: Character frame error	Check the settings for start bit, data bits, parity bit, data transmission rate, and stop bit(s).
16#80E3	Frame aborted: Character overflow error	Check the number of data in the frame of the communication partner.
16#80E4	Frame aborted: Maximum frame length reached	Select a shorter frame length at the communication partner. The following are valid (depending on the module): 1-1024/2048/4096 (bytes)
Communication error - Modbus_Master		
16#80C8	The slave does not respond within the set time	Check the data transmission rate, parity and wiring of the slave.
16#80C9	The slave does not respond within the time set by Blocked_Proc_Timeout.	Check the setting for Blocked_Proc_Timeout. Check if the module has been configured with the Modbus_Comm_Load instruction. The module may possibly need to be reconfigured using Modbus_Comm_Load after a pull/plug or after voltage recovery.
16#8200	The interface is busy with an ongoing request.	Repeat the command later. Make sure that there are no commands still running before you start a new one.
Protocol error - Modbus_Slave (only communication modules that support Modbus)		
16#8380	CRC error	Checksum error of the Modbus frame. Check the communication partner.
16#8381	The function code is not supported or is not supported for broadcast.	Check the communication partner and make sure that a valid function code is sent.
16#8382	Invalid length information in the request frame	Select a suitable data length at the DATA_LEN parameter.
16#8383	Invalid data address in the request frame	Select a suitable value for the data address at the DATA_ADDR parameter.
16#8384	Invalid data value error in the request frame	Check the data value in the request frame of the Modbus master
16#8385	The diagnostic value is not supported by the Modbus slave (function code 08)	The Modbus slave only supports the diagnostic values 16#0000 and 16#000A.

Error code	Description	Solution
Protocol error - Modbus_Master (only communication modules that support Modbus)		
16#8380	CRC error	Checksum error of the Modbus frame. Check the communication partner.
16#8381	Response frame from Modbus Slave with the following error message: The function code is not supported.	Check the communication partner and make sure that a valid function code is sent.
16#8382	Response frame from Modbus Slave with the following error message: Invalid length	Select a suitable data length.
16#8383	Response frame from Modbus Slave with the following error message: Invalid data address in the request frame	Select a suitable value for the data address at the DATA_ADDR parameter.
16#8384	Response frame from Modbus Slave with the following error message: Data value error	Check the request frame to the Modbus slave.
16#8385	Response frame from Modbus Slave with the following error message: The diagnostic value is not supported by the Modbus slave	The Modbus slave only supports the diagnostic values 16#0000 and 16#000A.
16#8386	The returned function code does not match the requested function code.	Check the response frame and the addressing of the slave.
16#8387	A slave that was not requested answers	Check the response frame of the slave. Check the address settings of the slave.
16#8388	Error in the response of the slave to a write request.	Check the response frame of the slave.
16#8828 [1]	DATA_PTR points to a bit address that is not equal to n * 8	Check the DATA_PTR pointer
16#8852 [1]	DATA_PTR is not a pointer to a DB or a bit memory area	Check the DATA_PTR pointer
16#8853 [1]	DATA_PTR is not a pointer of type BOOL or WORD	Check the DATA_PTR pointer
16#8855 [1]	DATA_PTR points to a write-protected DB	Check the DATA_PTR pointer
16#8856 [1]	Error during call of SFC51	Call the Modbus_Master instruction again
Error - Modbus_Slave (only communication modules that support Modbus)		
16#8428 [1]	MB_HOLD_REG points to a bit address that is not equal to n * 8	Check the MB_HOLD_REG pointer
16#8452 [1]	MB_HOLD_REG is not a pointer to a DB or a bit memory area	Check the MB_HOLD_REG pointer
16#8453 [1]	MB_HOLD_REG is not a pointer of type BOOL or WORD	Check the MB_HOLD_REG pointer
16#8454 [1]	The area addressed by MB_HOLD_REG is longer than the DB, or the area addressed is too small for the number of data bytes to be read or written.	Check the MB_HOLD_REG pointer
16#8455 [1]	MB_HOLD_REG points to a write-protected DB	Check the MB_HOLD_REG pointer
16#8456 [1]	Error during call of SFC51	Call the Modbus_Slave instruction again
Error codes, general		
16#8FFF	The module is not ready temporarily due to a reset.	Repeat the request.

[1] Only with instructions for S7-300/400 CPUs

5.4.3 USS

5.4.3.1 Dependencies between library versions

Use the "USS" and "Point-to-point" instruction libraries only in one of the following combinations of versions:

"USS" library version	"Point-to-point" library version
V1.3	V1.1
V2.4	V2.4
V3.1	V2.4
V4.3	V3.2
V5.0	V4.0

5.4.3.2 Overview of USS communication

USS communication

The USS instructions control the operation of drives which support the protocol of the universal serial interface (USS). You can communicate with several drives by means of RS485 connections and the USS instructions with the PtP communication modules. Each RS 485 port can typically operate up to 16 drives. Some communication modules can even operate up to 31 drives.

The USS protocol uses a master-slave network for communication via a serial bus. The master uses an address parameter to send data to a selected slave. A slave cannot send without having first received a send request. Communication between individual slaves is not possible. USS communication takes place in half-duplex mode. The figure below shows a network diagram for a sample application with 16 drives.

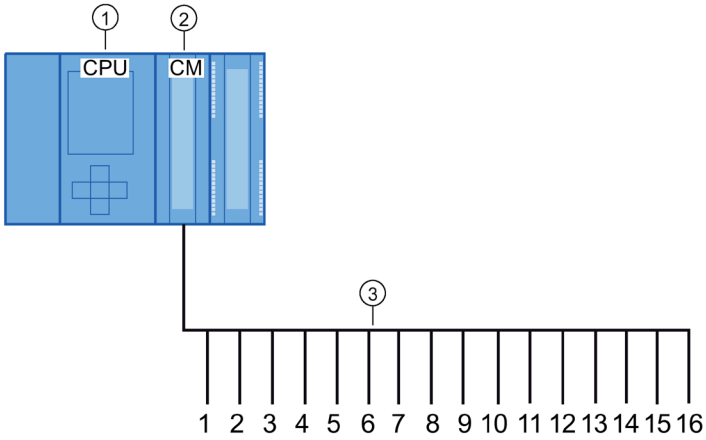

① CPU
② CM
③ USS drives in a USS network

Figure 5-1 Wiring example with S7-1500 communication module

Note

Communicating with a drive via RS232

You can basically also use CM PtP RS232 BA and CM PtP RS232 HF for communication with a drive. However, only **one** drive can be connected to an RS232 port.

Communicating with a drive via RS422

You can basically also use the RS422 interface of the CM PtP RS422/485 BA and CM PtP RS422/485 HF for communication with a drive. However, only **one** drive can be connected to an RS422 port.

USS instructions in your program

- USS_Port_Scan: The instruction USS_Port_Scan allows you to communicate via a communication module with up to 16 drives using a USS network (must be called cyclically).

  There is only one USS_Port_Scan instruction per PtP communication port in the program, and it controls transmission to all drives.
- USS_Drive_Control: The instruction USS_Drive_Control allows you to prepare the send data from USS_Port_Scan for a drive and display its receive data.

  USS_Drive_Control configures the data to be sent and evaluates the data received in a previous request from USS_Port_Scan.
- USS_Read_Param: The instruction USS_Read_Param allows you to read parameters from a drive.
- USS_Write_Param: The instruction USS_Write_Param allows you to change parameters in a drive.

5.4.3.3 Requirements for using the USS protocol

The four USS instructions use 2 FBs and 2 FCs to support the USS protocol. For each USS network, one instance data block (DB) is used for USS_Port_Scan and one instance data block for all calls of USS_Drive_Conrol.

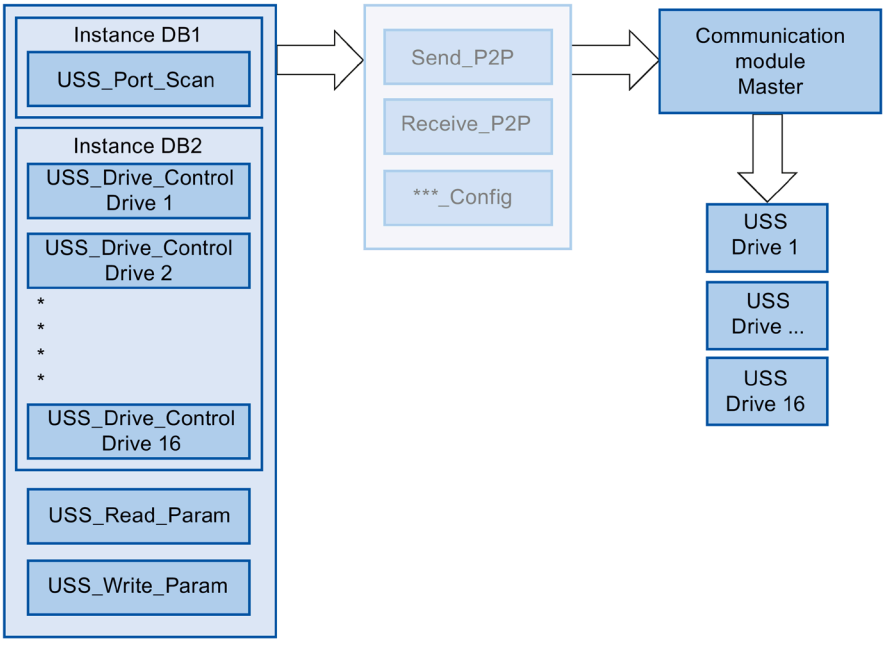

Figure 5-2 USS program sequence

All drives (max. 16) that are connected to one RS485 port are part of the same USS network. All drives that are connected to another RS485 port are part of a different USS network. Each USS network is managed using a unique instance data block for all USS_Drive_Control instructions and one further instance data block for the USS_Port_Scan instruction. All instructions that are part of a USS network must share this instance data block for USS_Drive_Conrol. The USS_Port_Scan, USS_Read_Param and USS_Write_Param instructions have the USS_DB parameter for this function. This parameter must be connected to the (static) USS_DB parameter of the instance DB of the USS_Drive_Control instruction.

- The instructions USS_Drive_Control and USS_Port_Scan are function blocks (FB). If you add the USS_Drive_Control or USS_Port_Scan instruction to the programming editor, you are prompted to assign a DB for this FB in the "Call options" dialog. If it is the first USS_Drive_Control instruction in this program for this USS network, you can apply the DB standard assignment (or change the name, if necessary) and the new DB is created for you. If, however, it is not the first USS_Drive_Control instruction for this drive, you need to select the DB which has already been assigned to this USS network from the drop-down list in the "Call options" dialog.

- The USS_Write_Param and USS_Read_Param instructions are functions (FCs). No DB is assigned when you add these FCs in the editor. If you add these FCs or the USS_Port_Scan instruction in the editor, you need to assign the USS_DB parameter of the corresponding USS_Drive_Control instance DB to the USS_DB input of these instructions. Double-click the parameter field and click the symbol to display the available DBs. Enter a period "." and select the USS_DB parameter from the drop-down list.
- The USS_Port_Scan function controls communication between the CPU and the drives via the point-to-point RS485 communication port. A communication with the drive is processed every time you call this function. Your program must call this function fast enough so that the drives do not signal a timeout. To ensure a constant time response for frame communication, you should call this instruction in a cyclic interrupt OB.
- The USS_Drive_Control instruction gives your program access to a specified drive in the USS network. Its inputs and outputs correspond to the states and operating functions of the drive. If there are 16 drives in your network, you must call USS_Drive_Control at least 16 times in your program, i.e. once for each drive.

  You should only call the USS_Drive_Control instruction from a cyclic OB.
- The operating parameters of the drive are read and written with the USS_Read_Param and USS_Write_Param functions. These parameters control the internal operation of the drive. See the drive manual for a definition of these parameters. Your program may include any number of these functions, but only one read or write request may be active for a drive at any particular time. You may only call the USS_Read_Param and USS_Write_Param functions from the cycle OB of a main program.

NOTICE

USS instruction calls

Only ever call USS_Drive_Control, USS_Read_Param or USS_Write_Param from a cycle OB of the main program. The USS_Port_Scan instruction function can be called from any OB, but it is usually called from a cyclic interrupt OB.

Do not use the USS_Drive_Control, USS_Read_Param or USS_Write_Param instruction in an OB with a higher priority than the corresponding USS_Port_Scan instruction. For example, do not add USS_Port_Scan to the main program or USS_Read_Param to a cyclic interrupt OB. You may encounter unexpected errors if the execution of USS_Port_Scan is interrupted by another instruction.

Note

Parameter ID value

You need to configure the use of 4 PIV words (ParameterIDValue) for the drives.

Calculating time for communication with the drive

Communication with the drive takes place asynchronously to the cycle of the CPU. The CPU usually runs through several cycles before communication with a drive is complete.

To ensure that the watchdog set for the drive is not triggered, the send frames must be sent to the drive within the watchdog time. You must allow for the number of any retries which may be needed to complete the transaction if communication errors occur. By default, up to 2 retries are made for each transaction with the USS protocol.
The maximum time interval between two send frames is calculated as follows:

N * (5 * cycle time + frame runtime + timeout of the receive frame max.) * (number of transmission attempts)

N	Number of drives in this network
Factor 5	5 cycles are typically needed for sending and receiving frames.
Cycle time	Max. cycle time of the cyclic interrupt OB in which the USS_Port_Scan instruction is called.
Frame runtime	Frame time = (number of characters per frame) * (11 Bit per character) / (data transmission rate in Bit/s)
Number of transmission attempts	Number of retries + 1
Timeout of the receive frame	RCVTIME (if no response is received from the drive)
Timeout of the receive frame max.	RCVTIME + MSGTIME (if an incomplete answer is received shortly before the expiration of RCVTIME and monitoring of MSGTIME has expired **or** if a response is still being processed at the expiration of RCVTIME, the timeout is extended by the MSGTIME)

The following times apply for "Received frame timeout" (ms):

Bit/s	115200	57600	38400	19200	9600	4800	2400	1200
Receive_Conditions.END .RCVTIME	25	29	33	56	72	100	100	100
Receive_Conditions.END .MSGTIME	25	29	33	56	72	124	240	460

Timeout of the receive frame max. = (Receive_Conditions.END.RCVTIME (0.072 s) + Receive_Conditions.END.MSGTIME (0.072 s))

Example:

5 drives
Data transmission rate = 9600 bps
28 characters per frame
Cycle time = 0.020 s
Number of retries = 2

Time interval = 5 * ((5*0.02) + ((1*28*11)/9600) + 0.072 + 0.072) * (2+1) = 4.14 (seconds)

The time monitoring of the drive must be set to about 4 seconds in this case.

Note

Option for performance optimization

When performance optimization is activated, the frame length and the baud rate are decisive for the maximum time interval between two send frames of the OB cycle (Send_P2P und Receive_P2P).

5.4.3.4 USS_Port_Scan / USS_Port_Scan_31: Communication by means of a USS network

Note

Use with CM1241

The use of this instruction with a CM1241 is only possible from firmware version V2.1 of the module.

Note

Using the USS_Port_Scan_31 instruction

It is only possible to use the USS_Port_Scan_31 instruction on an S7-1500 CPU.

Description

The USS_Port_Scan instruction processes the communication by means of a USS network for max. 16 drives.

The USS_Port_Scan_31 instruction processes the communication by means of a USS network for max. 31 drives.

STEP 7 automatically creates the instance DB when you add the instruction.

Parameters

Parameter	Declaration	Data type		Standard	Description
		S7-1200/1500	S7-300/400/WinAC		
PORT	IN	Port	Word	0	Specifies the communication module which is used for the communication: • For S7-1500/S7-1200: "HW identifier" from the device configuration. The symbolic port name is assigned in the "System constants" tab of the PLC tag table and can be applied from there. • For S7-300/S7-400: "Input address" from the device configuration. In the S7-300/400/WinAC systems the PORT parameter is assigned the input address assigned in HWCN.
BAUD	IN	DInt		9600	Data transmission rate for USS communication The following are valid: • 1200 bps • 2400 bps • 4800 bps • 9600 bps • 19200 bps • 38400 bps • 57600 bps • 115200 bps
USS_DB	INOUT	USS_BASE		–	The USS_DB parameter must be connected to the (static) USS_DB parameter of the instance DB which is generated and initialized when you add a USS_Drive_Control / USS_Drive_Control_31 instruction to your program.
COM_RST	INOUT	---	Bool	FALSE	Initialization of the USS_Port_Scan / USS_Port_Scan_31 instruction The instruction is initialized with TRUE. The instruction then resets COM_RST to FALSE. Note: The parameter is only available for S7-300/400 instructions.
ERROR	OUT	Bool		FALSE	If TRUE, this output indicates that an error has occurred and that the STATUS output is valid. You may need to check the value of the static tag USS_DB.w_USSExtendedError in the instance DB of the USS_Drive_Control / USS_Drive_Control_31 instruction.
STATUS	OUT	Word		0	Error code (see Error messages (Page 177)).

There is only one USS_Port_Scan / USS_Port_Scan_31 instruction per PtP communication port in the program and each call of this instruction controls a transmission to or from all drives in this network. All USS functions assigned to one USS network and one PtP communication port must use the same instance DB.

Your program must execute the USS_Port_Scan / USS_Port_Scan_31 instruction often enough to prevent a timeout in the drive (see Requirements for using the USS protocol (Page 156) "Calculating time for communication with the drive").

The USS_Port_Scan / USS_Port_Scan_31 instruction is usually called from a cyclic interrupt OB to prevent drive timeouts and to make the last USS data updates available for calls of USS_Drive_Control / USS_Drive_Control_31 .

USS_Port_Scan / USS_Port_Scan_31 data block tags

The table below shows the public static tags in the instance DB of USS_Port_Scan / USS_Port_Scan_31 that you can use in your program.

Table 5- 35 Static tags in the instance DB

Tag	Data type	Standard	Description
MODE	USInt	4	Operating mode Valid operating modes are: • 0 = Full duplex (RS232) • 1 = Full duplex (RS422) four-wire mode (point-to-point) • 2 = Full duplex (RS 422) four-wire mode (multipoint master; CM PtP (ET 200SP)) • 3 = Full duplex (RS 422) four-wire mode (multipoint slave; CM PtP (ET 200SP)) • 4 = Half duplex (RS485) two-wire mode [1)]
LINE_PRE	USInt	2	Receive line initial state Valid initial states are: • 0 = "No" initial state [1)] • 1 = signal R(A)=5 V, signal R(B)=0 V (break detection): Break detection is possible with this initial state. Can only be selected with: "Full duplex (RS422) four-wire mode (point-to-point connection)" and "Full duplex (RS422) four-wire mode (multipoint slave)". • 2 = signal R(A)=0 V, signal R(B)=5 V: This default setting corresponds to the idle state (no active send operation). No break detection is possible with this initial state.
BRK_DET	USInt	0	Activate diagnostics interrupt: • 0 - not activated • 1 - activated
RETRIES_MAX	SInt/Byte	2	Number of retries when communication errors occur. You can use this parameter to set the number of send retries for a request frame if the response frame is not received within the set time.

Tag	Data type	Standard	Description
EN_DIAG_ALARM	Bool	0	Activate diagnostics interrupt: • 0 - not activated • 1 - activated
EN_SUPPLY_VOLT	Bool	0	Enable diagnostics for missing supply voltage L+ • 0 - not activated • 1 - activated

1) Required setting for the use of PROFIBUS cables with CM 1241 for RS485

Version 2.5 is functionally identical to version 2.4 and its version number was only incremented due to internal measures.

Instruction versions

USS_Port_Scan:

Version 2.5 is functionally identical to version 2.4 and its version number was only incremented due to internal measures.

USS_Port_Scan_31:

Version 1.2 is functionally identical to version 1.1 and its version number was only incremented due to internal measures.

5.4.3.5 USS_Drive_Control / USS_Drive_Control_31: Preparing and displaying data for the drive

Note

Use with CM1241

The use of this instruction with a CM1241 is only possible from firmware version V2.1 of the module.

Note

Using the USS_Drive_Control_31 instruction

It is only possible to use the USS_Drive_Control_31 instruction on an S7-1500 CPU.

Description

The USS_Drive_Control instruction prepares send data for max. 16 drives and evaluates the response data of the drives.

The USS_Drive_Control_31 instruction prepares send data for max. 31 drives and evaluates the response data of the drives.

You need to use a separate instance of the instruction for each drive, and all USS functions assigned to one USS network and one PtP communication port must use the same instance DB. You must enter the DB name when you add the first USS_Drive_Control / USS_Drive_Control_31 instruction. You then refer to this DB that was created when the first instruction was added.

STEP 7 automatically creates the DB when you add the instruction.

Parameters

Parameters	Declaration	Data type		Standard	Description
		S7-1200/1500	S7-300/400/WinAC		
RUN	IN	Bool		FALSE	Start bit of the drive: If this parameter is TRUE, this input allows you to operate the drive with the preset speed. If RUN changes to FALSE during operation of the drive, the motor coasts to a standstill. This behavior differs from disconnection of the power supply (OFF2) and braking of the motor (OFF3).
OFF2	IN	Bool		FALSE	"Coast to standstill" bit: If this parameter is FALSE, this bit causes the drive to coast to a standstill without braking.
OFF3	IN	Bool		FALSE	Fast stop bit: If this parameter is FALSE, this bit causes a fast stop by braking the drive.
F_ACK	IN	Bool		FALSE	Error acknowledgment bit: This bit resets the error bit of a drive. The bit is set after clearing the error and the drive detects this way that the previous error no longer has to be reported.

Parame-ters	Declaration	Data type		Standard	Description
		S7-1200/1500	S7-300/400/WinAC		
DIR	IN	Bool		FALSE	Direction control of the drive: This bit is set if the drive is to run forward (if SPEED_SP is positive; see table "Interaction of SPEED_SP and DIR parameters").
DRIVE	IN	USInt	Byte	1	Address of the drive: This input is the address of the USS drive. The valid range is between drive 1 and drive 16.
PZD_LEN	IN	USInt	Byte	2	Word length: This is the number of PZD data words. Valid values are 2, 4, 6 or 8 words.
SPEED_SP	IN	Real		0.0	Speed setpoint: This is the speed of the drive as a percentage of the configured frequency. A positive value means that the drive runs forward (if DIR is true). The valid range is 200.00 to -200.00.
CTRL3	IN	Word		0	Control word 3: Value that is written to a user-defined parameter of the drive. You have to configure it in the drive (optional parameter).
CTRL4	IN	Word		0	Control word 4: Value that is written to a user-defined parameter of the drive. You have to configure it in the drive (optional parameter).
CTRL5	IN	Word		0	Control word 5: Value that is written to a user-defined parameter of the drive. You have to configure it in the drive (optional parameter).
CTRL6	IN	Word		0	Control word 6: Value that is written to a user-defined parameter of the drive. You have to configure it in the drive (optional parameter).
CTRL7	IN	Word		0	Control word 7: Value that is written to a user-defined parameter of the drive. You have to configure it in the drive (optional parameter).
CTRL8	IN	Word		0	Control word 8: Value that is written to a user-defined parameter of the drive. You have to configure it in the drive (optional parameter).
COM_RST	IN/OUT	---	Bool	FALSE	Initialization of the USS_Drive_Control / USS_Drive_Control_31 instruction The instruction is initialized with TRUE. The instruction then resets COM_RST to FALSE. Note: The parameter is only available for S7-300/400 instructions.
NDR	OUT	Bool		FALSE	New data available: If this parameter is TRUE, the bit signals that data of a new communication request is available at the output.
ERROR	OUT	Bool		FALSE	Error occurred: If TRUE, this indicates that an error has occurred and that the STATUS output is valid. All other outputs are set to zero in the event of an error. Communication errors are only signaled at the ERROR and STATUS outputs of the USS_Port_Scan / USS_Port_Scan_31 instruction.
STATUS	OUT	Word		0	Error code (see Error messages (Page 177)).
RUN_EN	OUT	Bool		FALSE	Operation enabled: This bit signals if the drive is running.

Parame-ters	Declaration	Data type		Standard	Description
		S7-1200/1500	S7-300/400/WinAC		
D_DIR	OUT	Bool		FALSE	Drive direction: This bit signals if the drive is running forward. • FALSE – forward • TRUE – backward
INHIBIT	OUT	Bool		FALSE	Drive blocked: This bit signals the status of the block bit for the drive. • FALSE – not blocked • TRUE – blocked
FAULT	OUT	Bool		FALSE	Drive error: This bit signals that an error occurred in the drive. You must remedy the fault and set the F_ACK bit to clear this bit.
SPEED	OUT	Real		0.0	Actual value drive speed (scaled value of STATUS 2 of the drive): This is the speed of the drive as a percentage of the configured speed.
STATUS1	OUT	Word		0	STATUS 1 of the drive This value includes fixed status bits of a drive.
STATUS3	OUT	Word		0	STATUS 3 of the drive This value includes a user-definable status word of the drive.
STATUS4	OUT	Word		0	STATUS 4 of the drive This value includes a user-definable status word of the drive.
STATUS5	OUT	Word		0	STATUS 5 of the drive This value includes a user-definable status word of the drive.
STATUS6	OUT	Word		0	STATUS 6 of the drive This value includes a user-definable status word of the drive.
STATUS7	OUT	Word		0	STATUS 7 of the drive This value includes a user-definable status word of the drive.
STATUS8	OUT	Word		0	STATUS 8 of the drive This value includes a user-definable status word of the drive.

When the initial execution of USS_Drive_Control / USS_Drive_Control_31 takes place, the drive specified by the USS address (DRIVE parameter) is initialized in the instance DB. After initialization, subsequent USS_Port_Scan / USS_Port_Scan_31 instructions can start communication with the drive from this drive number.

If you change the drive number, you must first place the CPU in STOP and then back in RUN to initialize the instance DB. The input parameters are configured in the USS send buffer and any outputs are read from a "previous" valid response buffer. USS_Drive_Control / USS_Drive_Control_31 only configures the data to be sent and evaluates data received in a previous request.

You can control the drive's direction of rotation by using the D_IR input (Bool) or the sign (positive or negative) at the SPEED_SP input (Real). The table below explains how these inputs work together to determine the direction of rotation of the drive, provided the motor rotates forward.

Table 5- 36 Interaction of SPEED_SP and DIR parameters

SPEED_SP	DIR	Direction of rotation of the drive
Value > 0	0	Backward
Value > 0	1	Forward
Value < 0	0	Forward
Value < 0	1	Backward

USS_Drive_Control / USS_Drive_Control_31 data block tags

The table below shows the public static tags in the instance DB of USS_Drive_Control / USS_Drive_Control_31 that you can use in your program.

Table 5- 37 Static tags in the instance DB

Tag	Data type	Standard	Description
USS_DB. W _USSExtended-Error	Word	16#0	USS Drive Extended Error Code - drive-specific value The meaning of the error message depends on which instruction reported an error **first** (ERROR = TRUE). The following cases are distinguished: • USS_Write_Param / USS_Write_Param_31: You can find the meaning of the error code in the description of the drive. • USS_Read_Param / USS_Read_Param_31: You can find the meaning of the error code in the description of the drive. • USS_Port_Scan / USS_Port_Scan_31: Number of the drive affected by the error message.

Instruction versions

USS_Drive_Control:

Version 2.0 is functionally identical to version 1.2 and its version number was only incremented due to internal measures.

USS_Drive_Control_31:

Version 2.0 is functionally identical to version 1.0 and its version number was only incremented due to internal measures.

5.4.3.6 USS_Read_Param / USS_Read_Param_31: Read data from drive

Note

Use with CM1241

The use of this instruction with a CM1241 is only possible from firmware version V2.1 of the module.

Note

Using the USS_Read_Param_31 instruction

It is only possible to use the USS_Read_Param_31 instruction on an S7-1500 CPU.

Description

The USS_Read_Param instruction reads a parameter from one of max. 16 drives.

The USS_Read_Param_31 instruction reads a parameter from one of max. 31 drives.

All USS functions assigned to one USS network and one PtP communication port must use the instance data block of the USS_Drive_Control / USS_Drive_Control_31 instruction. USS_Read_Param / USS_Read_Param_31 must be called from a cycle OB of the main program.

Parameters

Parame-ters	Declaration	Data type		Standard	Description
		S7-1200 /1500	S7-300/400/ WinAC		
REQ	IN	Bool		–	A positive edge at REQ creates a new read request.
DRIVE	IN	USInt	Byte	–	Address of the drive: DRIVE is the address of the USS drive. The valid range is between drive 1 and drive 16.
PARAM	IN	UInt		–	Parameter number: PARAM specifies the drive parameter to write. The range for this parameter is between 0 and 2047. With some drives, the most significant byte of the INDEX parameter can be used to access parameter values greater than 2047. Additional information on access to an extended range is available in your drive manual.
INDEX	IN	UInt		–	Parameter index: INDEX specifies the drive parameter index to which to write. It is a 16-bit value in which the least significant bit is the actual index value with a range of (0 to 255). The drive can also use the most significant byte, which is drive-specific. Additional information is available in your drive manual.
USS_DB	INOUT	USS_BASE		–	The USS_DB parameter must be connected to the (static) USS_DB parameter of the instance DB which is generated and initialized when you add a USS_Drive_Control / USS_Drive_Control_31 instruction to your program.

Parame-ters	Declaration	Data type		Standard	Description
		S7-1200 /1500	S7-300/400/ WinAC		
DONE[1]	OUT	Bool		FALSE	If this parameter is TRUE, the previously requested value of the read parameter is available at the VALUE output. This bit is set when the USS_Drive_Control / USS_Drive_Control_31 instruction recognizes the read response of the drive. This bit is reset the next time USS_Read_Param / USS_Read_Param_31 is called.
ERROR	OUT	Bool		FALSE	ERROR = TRUE: An error has occurred and the STATUS output is valid. All other outputs are set to zero in the event of an error. Communication errors are only signaled at the ERROR and STATUS outputs of the USS_Port_Scan / USS_Port_Scan_31 instruction. You may need to check the value of the static tag USS_DB. w_USSExtendedError in the instance DB of the USS_Drive_Control / USS_Drive_Control_31 instruction.
STATUS	OUT	UInt		0	Error code (see Error messages (Page 177)).
VALUE	OUT	Variant (Word, Int, UInt, DWord, DInt, UDInt, Real)	Any (Word, Int, DWord, DInt, Real)	–	This is the value of the parameter that was read and is only valid if the DONE bit is true.

[1] The DONE bit indicates that valid data was read out of the referenced motor drive and transmitted to the CPU. It does not indicate that the instruction is cabable of immediately read an additional parameter. An empty read request must be sent to the motor drive and acknowledged by the instruction before the parameter channel is freed up for use by the respective drive. The immediate call of USS_Read_Param / USS_Read_Param_31 or USS_Write_Param / USS_Write_Param_31 for the specific motor drive results in error 16#818A.

Instruction versions

USS_Read_Param:

Version 1.5 is functionally identical to version 1.4 and its version number was only incremented due to internal measures.

USS_Read_Param_31:

Version 1.1 is functionally identical to version 1.0 and its version number was only incremented due to internal measures.

5.4.3.7 USS_Write_Param / USS_Write_Param_31: Change data in drive

Note

Use with CM1241

The use of this instruction with a CM1241 is only possible from firmware version V2.1 of the module.

Note

Using the USS_Write_Param_31 instruction

It is only possible to use the USS_Write_Param_31 instruction on an S7-1500 CPU.

Note

For EEPROM write instructions (EEPROM in a USS drive):

Keep the number of EEPROM write operations to a minimum in order to maximize the EEPROM service life.

Description

The USS_Write_Param instruction changes a parameter in one of max. 16 drives.

The USS_Write_Param_31 instruction changes a parameter in one of max. 31 drives.

All USS functions assigned to one USS network and one PtP communication port must use the instance data block of the USS_Drive_Control / USS_Drive_Control_31.

USS_Write_Param / USS_Write_Param_31 must be called from the cycle OB of a main program.

Parameters

Table 5- 38 Data types for the parameters

Parameters	Declaration	Data type		Standard	Description
		S7-1200/1500	S7-300/400/WinAC		
REQ	IN	Bool		–	A positive edge at REQ creates a new write request.
DRIVE	IN	USInt	Byte	–	Address of the drive: DRIVE is the address of the USS drive. The valid range is between drive 1 and drive 16.
PARAM	IN	UInt		–	Parameter number: PARAM specifies the drive parameter to write. The range for this parameter is between 0 and 2047. With some drives, the most significant byte of the INDEX parameter can be used to access parameter values greater than 2047. Additional information on access to an extended range is available in your drive manual.
INDEX	IN	UInt		–	Parameter index: INDEX specifies the drive parameter index to which to write. It is a 16-bit value in which the least significant bit is the actual index value with a range of (0 to 255). The drive can also use the most significant byte, which is drive-specific. Additional information is available in your drive manual.
EEPROM	IN	Bool		–	Save in EEPROM of the drive: If TRUE, the transaction of a parameter for writing to the drive is saved in the EEPROM of the drive. If FALSE, the written value is saved only temporarily and is lost the next time you switch on the drive.
VALUE	IN	Variant (Word, Int, UInt, DWord, DInt, UDInt, Real)	Any (Word, Int, DWord, DInt, Real)	–	Value of the parameter in which you want to write. It must be valid with a positive edge of REQ.
USS_DB	INOUT	USS_BASE		–	The USS_DB parameter must be connected to the (static) USS_DB parameter of the instance DB which is generated and initialized when you add a USS_Drive_Control / USS_Drive_Control_31 instruction to your program.
DONE[1]	OUT	Bool		FALSE	If TRUE, the VALUE input is written to the drive. This bit is set when the USS_Drive_Control / USS_Drive_Control_31 instruction recognizes the write response of the drive. This bit is reset the next time USS_Write_Param / USS_Write_Param_31 is called.

Parame-ters	Declaration	Data type		Standard	Description
		S7-1200 /1500	S7-300/400/ WinAC		
ERROR	OUT	Bool		FALSE	If TRUE, an error has occurred and the STATUS output is valid. All other outputs are set to zero in the event of an error. Communication errors are only signaled at the ERROR and STATUS outputs of the USS_Port_Scan / USS_Port_Scan_31 instruction. You may need to check the value of the static tag USS_DB. w_USSExtendedError in the instance DB of the USS_Drive_Control / USS_Drive_Control_31 instruction.
STATUS	OUT	UInt		0	Error code (see Error messages (Page 177)).

[1] The DONE bit indicates that valid data was read out of the referenced motor drive and transmitted to the CPU. It does not indicate that the USS library is able to read out an additional parameter immediately. An empty write request must be sent to the motor drive and acknowledged by the instruction before the parameter channel is freed up for use by the respective drive. The immediate call of USS_Read_Param / USS_Read_Param_31 or USS_Write_Param / USS_Write_Param_31 FC for the specific motor drive results in error 0x818A.

Instruction versions

USS_Write_Param:

Version 1.6 is functionally identical to version 1.5 and its version number was only incremented due to internal measures.

USS_Write_Param_31:

Version 1.1 is functionally identical to version 1.0 and its version number was only incremented due to internal measures.

5.4.3.8 General information on drive setup

Requirements for the drive setup

- You need to configure the use of 4 PIV words (**P**arameter**I**D**V**alue) for the drives.
- The drives can be configured for 2, 4, 6 or 8 PZD words (**P**ro**c**ess **d**ata area).
- The number of PZD words in the drive must correspond to the PZD_LEN input of the USS_Drive_Control instruction of the drive.
- Make sure that the data transmission rate of all drives corresponds to the BAUD input of the USS_Port_Scan instruction.
- Make sure that the drive is set up for USS communication.
- Make sure that it is specified in the drive that the frequency setpoint is provided by the USS interface.
- Make sure that the drive address is specified (areas: 1-16).
  This address must correspond to the DRIVE input at the USS_Drive_Control block of the drive.
- Make sure that the RS485 network is terminated correctly.

Connection and setup of SINAMICS V20 drive

An application example for operation of a SINAMICS V20 at an S7-1200 is available on the Internet. (http://support.automation.siemens.com/WW/view/en/63696870)

Connecting the SINAMICS V20 drive

Connection example of a SIEMENS G120(C) drive to a USS network. Connection examples for other drives are available in the manual of the respective drive.

The connection of a SINAMICS G120(C) drive to the USS network takes place via plug-in connection. The connection is short-circuit proof and isolated.

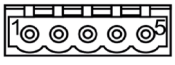

1 0 V reference potential
2 RS485N, receiving and sending (-)
3 RS485N, receiving and sending (+)
4 Cable shield
5 Not used

Figure 5-3 USS connection

NOTICE
Different reference voltages If you connect devices that do not have the same reference voltage, you may create unwanted currents in the connection cable. These unwanted currents may cause communication errors or damages in the devices. Make sure that all devices you connect with a communication cable either have the same reference conductor in the circuit or are electrically disconnected to prevent the occurrence of unwanted currents. Make sure that the shield is connected to the ground or pin 1 of the bus connector on the drive. Make sure that wiring terminal 2 (GND) of the G120(C) is connected to the ground.

If the RS485 master (e.g., S7-1200 CPU with CM1241 communication module) is connected by means of a PROFIBUS connector, wire the bus cables as follows:

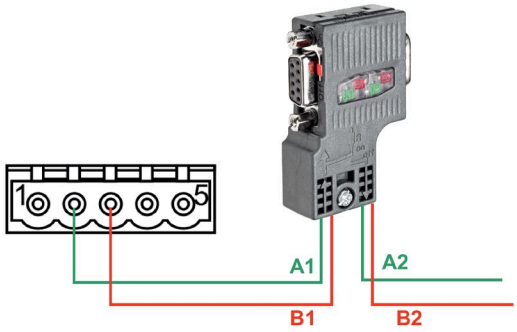

Figure 5-4 Connection of communication module

If the RS485 master is a terminating station in the network or a point-to-point connection, you must use terminals A1 and B1 (not A2 and B2) of the PROFIBUS connector, as these terminals provide termination settings (for example, with the DP plug connector 6ES7972-0BB52-0XA0).

If the G120(C) is configured as terminating station in the network, you must set the switch for the bus terminating resistor to "ON".

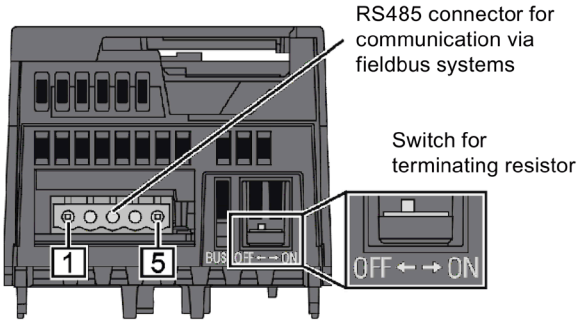

Figure 5-5 Connection of terminating stations

Setup of a G120(C) drive

Before you connect a drive to the S7-1500 or ET 200SP, make sure that the drive has the following system parameters.

Step	Instruction	Operating Instructions	
		G120 [1]	G120C [2]
1	Perform a basic commissioning of the drive with the Operator Panel BOP-2. The converter offers different defaults (macros) for its inputs and outputs and the fieldbus interface. In the ninth step of the basic commissioning (MAC PAR p15), select macro 21 for USS communication. This determines the default for the following parameters: • Data transmission rate (p2020): 38400 bps • Number of PZD (p2022): 2 • Number of PIV (p2023): variable Note: You can also conduct basic commissioning with the STARTER commissioning software or with SINAMICS Startdrive.	Chapter 4.4.3	Chapter 6.4.1
2	Specify the USS address of the converter with the address switch on the control unit of the G120 or on the G120(C). • Valid address range: 1 ... 30 Note: Yon can also set the USS address with the parameter p2021 or with STARTER or SINAMICS Startdrive.	Chapter 6.2.2.1	Chapter 8.4.2.1
	With the following steps you are accessing the parameters directly with the BOP-2 by entering their numbers and modifying their values.	Chapter 4.4.2	Chapter 6.4.2

Step	Instruction	Operating Instructions	
		G120 [1]	**G120C [2]**
3	Adapt the following communication-related converter parameters of your application: • Data transmission rate (p2020), of ≠ 38400 bps (Make sure that setting is identical with the BAUD parameter of the USS_Port_Scan communication instruction.) • Number of PZD (p2022), if ≠ 2 (Make sure that the setting is identical with the PZD_LEN parameter of the USS_Drive_Control communication instruction.) • Number of PIV (p2023) = 4 (Change the value set to "variable" (127) with macro 21 by default to "4" (required by instructions USS_Read_Param and USS_Write_Param.) • Fieldbus SS monitoring time [ms] (p2040)	Chapter 6.2.2.2	Chapter 8.4.2.1
4	Specify the source for the speed setpoint. • n_set Eval (p1000[0]) = 6 (The speed setpoint is provided by the USS bus.)		
5	Set the reference value for speed and frequency. • n_reference f_reference (p2000) = (6,00 min^{-1} to 210000,00 min^{-1}) (all relative speeds or frequencies refer to this reference value. The reference value corresponds to 100% or 4000_{hex} (word) or $4000\ 0000_{hex}$ (double word). The following applies: $f_{reference_value}$ (in Hz) = $n_{reference_value}$ (in ((min^{-1}) / 60) x number of pole pairs))		
6	Transfer the parameters to the non-volatile memory. • Save par (p0971) = 1		

1) G120 (http://support.automation.siemens.com/WW/view/en/62089662)

2) G120(C) (http://support.automation.siemens.com/WW/view/en/61462568)

5.4.3.9 Error messages

Overview of USS error messages

Error code	Description	Remedy
16#0000	No error	-
16#8180	Length error in response of drive	Check the response frame of the drive.
16#8181	Data type error	Check the parameter VALUE.
	Parameter number error	Permissible value range of the parameter PARAM: 0 to 2047
16#8182	Data type error: "Double word" or "Real" may not be returned for the "Word" request.	Check the response frame of the drive.
16#8183	Data type error: "Word" may not be returned for the "Double word" or "Real" request.	Check the response frame of the drive.
16#8184	Checksum error in response of drive	Check the drive and the communication connection.
16#8185	Addressing error	Valid drive address range: 1 to 16
16#8186	Setpoint error	Valid setpoint range: -200% to +200%
16#8187	Incorrect drive number returned	Check the response frame of the drive.
16#8188	Invalid PZD length	Permitted PZD lengths: 2, 4, 6, 8 words
16#8189	The module does not support this data transmission rate.	Select a valid data transmission rate for the module.
16#818A	A different request for this drive is currently active.	Repeat the parameter read or write command later.
16#818B	The drive does not respond.	Check the drive.
16#818C	The drive responds with an error message to a parameter request.	Check the response frame of the drive. Check the parameter request. Check if the instructions USS_Read_Param, USS_Write_Param or USS_Port_Scan have reported an error. If they have, check the value of the static tag USS_DB. w_USSExtendedError of the USS_Drive_Control instruction.
16#818D	The drive responds with an access error message to a parameter request.	Check the response frame of the drive. Check the parameter request.
16#818E	The drive was not initialized.	Check the user program and make sure that the USS_Drive_Control instruction is called for this drive.
16#8280	Negative acknowledgment when reading module	Check the input at the PORT parameter. You can find more detailed information on error causes in the static parameters Port_Config.RDREC.STATUS, Send_Config.RDREC.STATUS , Receive_Config.RDREC.STATUS , Send_P2P.RDREC.STATUS or Receive _P2P.RDREC.STATUS, and in the description of the SFB RDREC.

Error code	Description	Remedy
16#8281	Negative acknowledgment when writing module	Check the input at the PORT parameter. You can find more detailed information on error causes in the static parameters Port_Config.WRREC.STATUS, Send_Config.WRREC.STATUS , Receive_Config.WRREC.STATUS , Send_P2P.RDREC.STATUS or Receive _P2P.RDREC.STATUS, and in the description of the SFB WRREC.
Error codes, general		
16#8FFF	The module is not ready temporarily due to a reset.	Repeat the request.

[1] Only with instructions for S7-300/400 CPUs

Startup and Diagnostics 6

6.1 Startup characteristics

Operating mode transitions

After the communication module starts up, all data between the CPU and the communication module is exchanged by means of instructions.

CPU STOP	During a running data transmission communication module - CPU, both a send and a receive job is aborted. Frames will continue to be received. However, information about this is forwarded to the CPU only after a STOP-RUN transition, provided it has been configured that the receive buffer is not cleared.
CPU RUN	Send and receive operation is ensured in the RUN state of the CPU. With a corresponding configuration in the properties dialog of the communication module, you can automatically clear the receive buffer on the communication module during CPU startup.

From the view of the communication module, there are no further operating states/operating state transitions.

6.2 Diagnostic functions

Introduction

The diagnostic functions of the communication module allow errors that have occurred to be located quickly. The following diagnostic options are available to you:

Diagnostics by means of the display elements of the communication module	The indicators provide information on the operating mode or the possible error states of the communication module. The indicators provide an initial overview of any internal or external errors and interface-specific errors. For more information refer to the device manual of the corresponding communication module.
Diagnostics via the STATUS output of the instructions	Instructions have a STATUS output for error diagnostics; it provides information about communication errors between the communication module and the CPU. You can evaluate the STATUS parameter (Page 110) in the user program (the parameter is present for exactly one cycle).
Diagnostic error interrupt	The communication module can trigger a diagnostic error interrupt on the CPU assigned to it. The communication module makes diagnostic information available. The analysis of this information is made via the user program or by reading the CPU diagnostics buffer.

6.3 Diagnostic interrupts

The diagnostics are displayed as plain text in STEP 7 (TIA Portal) in the online and diagnostics view. You can evaluate the error codes with the user program.

The following diagnostics can be signaled:

- Error (9_H)
- Parameter assignment error (10_H)
- Wire break (109_H)

Glossary

Automation system

An automation system is a programmable logic controller consisting of at least one CPU, various input and output modules, and operating and monitoring devices.

Bit times

"Bit times" are always specified as a number of bits.

The "time" set with bits depends on the selected data transmission rate that is taken into consideration automatically.

Example:

The frame end is to be detected after a gap of two characters.

The set data transmission rate is 9600 bit/s.

The set character frame is 10 bits.

$$10 \times 2 = 20 \text{ bit times}$$

This corresponds to a time of:

$$20 \times 1/9600 \approx 0{,}0021 \text{ s}$$

Communication module

Communication modules are modules for point-to-point connections and bus connections.

Configuring

Configuring refers to the configuration of separate modules of an automation system in the configuration table.

CPU

Central Processing Unit = Central module of the automation system that consists of the control and computing units, memory, system program, and interfaces to the I/O modules.

CTS

Clear to send. The communication partner is ready to receive data.

Cycle time

The cycle time is the time that the CPU requires to process the user program once.

Cyclic program processing

In cyclic program processing the user program runs in program loop, or cycle, that is constantly repeated.

DCD

Data carrier detect. The communication partner signals that it recognizes incoming data.

Default setting

The default setting is a reasonable basic setting that can be used whenever no other value is specified.

Diagnostic events

Diagnostics events are, for example, module errors or system errors in the CPU that may be caused by a program error.

Diagnostic functions

The diagnostic functions cover the entire system diagnostics and include the recognition, interpretation and reporting of errors within the automation system.

Diagnostics buffer

Memory area in which detailed information on all diagnostics events is entered based on the order of their occurrence.

DSR

Data set ready. The communication partner is ready.

DTR

Data terminal ready. The communication module is ready.

Hardware

Hardware is the entire physical and technical equipment of a automation system.

Module parameters

Module parameters are values with which the behavior of the module can be set.

Online/Offline

When you are online there is a data connection between the automation system and programming device, when you are offline there is no data connection between them.

Parameter assignment

Parameter assignment refers to the setting of a module's behavior.

Parameters

Parameters are values that can be allocated. There are two different types of parameters: block parameters and module parameters.

Performance option

From firmware version V2.0 of the communication module, the option for performance optimization is available. This option is suitable if you are exclusively sending and receiving short frames with several communication modules. The frame length is limited to 24 bytes for receive frames and 30 bytes for send frames. The reaction time is optimized, especially when several CM PtPs are used in parallel.

Point-to-point connection

In point-to-point connection, the communication module forms the interface between a programmable logic controller and a communication partner.

Procedure

Procedure refers to the process of a data transmission according to a specific protocol.

Protocol

All communication partners involved in data transmission must follow fixed rules for handling and implementing the data traffic. Such rules are called protocols.

Receive line initial state

The initial state of the receive line for RS422 and RS485 mode:

- enables break detection (wire break)
- ensures a defined level on the receive line while it is not sending.

RI

Ring indicator. Incoming call for connecting a modem.

RTS

Request to send. The communication module is ready to send.

Software

Software refers to the entirety of all programs that are used on a computing system. The operating system and user programs belong to this.

User program

The user program contains all instructions and declarations for processing the signals used for controlling a system or a process. In SIMATIC S7 the user program is structured and divided into small units, the blocks.

USS

The USS® protocol (universal serial interface protocol) defines an access method based on the master-slave principle for communication by means of a serial bus. The point-to-point connection is included as a subset in this protocol.

XON/XOFF

Software data flow control with XON/XOFF. You can configure the characters for XON and XOFF (any ASCII character). The user data may not contain these characters.

Index

3

3964(R)
    Receiving data, 55
    Sending data, 53
3964(R) procedure, 52
    Control characters, 52
    Priority, 52
3964R procedure
    Block check character, 53

A

Accompanying signals, 15
Acyclic data communication, 17, 77
ASCII protocol, 41
Automatic operation of accompanying signals, 35

B

BCC, 52
Bidirectional data traffic, 19
Block check character, 53
Broadcast, 59
BUFFER parameter, Send_P2P, 100

C

Character delay time, 44
Character delay time CDT, 60
Code transparency, 48
Communication
    Query architecture, 80
Communication interfaces
    Programming, 77
Communication module (CM)
    Data reception, 101
    Programming, 77
Connecting cables, 24, 27, 30
CPU RUN, 179
CPU STOP, 179
CRC, 60
CTS, 24
Cyclic data communication, 17, 77

D

Data flow control, 15, 24, 32
    Hardware, 33
    Software, 32
Data transmission, 19
Data transmission rates, 14
Data transmission, trigger, 97
DCD, 24
Diagnostic functions, 179
Diagnostics, 179
DLE, 52
DMX512, 49
DSR, 24
DTR, 24

E

End sequence, 44
ETX, 52

F

Fixed frame length, 44
Frame configuration
    Instructions, 78
frame structure, 59
Freeport, 70, 70
    Code transparency, 48
    End criteria, 44
    Message end, 41
    Message start, 41
    Receive buffer, 48
    Start criteria, 43
Freeport protocol, 41
Full-duplex operation, 19

G

Get_Features, 18, 70
Global library
    Overview of the USS protocol, 154

H

Half-duplex operation, 19
Handshaking, 32
Hardware data flow control, 33
Hardware RTS always ON, 34
Hardware RTS always ON, ignore DTR/DSR, 34
Hardware RTS always switched, 35

I

Idle line, 43
Instructions
    P3964_Config (protocol configuration), 95
    Port_Config (port configuration), 84
    Receive_Config (receive configuration), 89
    Receive_P2P (receive point-to-point data), 101
    Receive_Reset (reset receiver), 103
    Send_Config (send configuration), 87
    Send_P2P (send point-to-point data), 97
    Signal_Get (get RS232 signals), 104
    Signal_Get (set RS232 signals), 105
    USS_Drive_Control / USS_Drive_Control_31, 164
    USS_Port_Scan, 160
    USS_Port_Scan_31, 160
    USS_Read_Param / USS_Read_Param_31, 168
    USS_Write_Param / USS_Write_Param_31, 170
Interface
    X27 (RS 485), 30
    X27 (RS422), 27
Interface configuration
    Instructions, 78
Interfaces, 14

L

LENGTH parameter, Send_P2P, 100
Library for the USS protocol
    General information on drive setup, 173
    Overview, 154
    Requirements for use, 156
    USS_Drive_Control / USS_Drive_Control_31, 164
    USS_Port_Scan, 160
    USS_Port_Scan_31, 160
    USS_Read_Param / USS_Read_Param_31, 168
    USS_Write_Param / USS_Write_Param_31, 170
Line break, 43

M

Main entry, 70
Maximum number of characters, 44
Message length from message, 44
Message timeout, 44
Modbus
    End of frame, 60
    Exception code, 60
    Modbus_Comm_Load, 121
    Modbus_Slave, 125, 132
    RS232 signals, 35
Modbus communication, 58
Modbus instructions, 72
Modbus_Comm_Load, 18, 72, 121
Modbus_Master, 18, 72
Modbus_Slave, 18, 72, 125, 132

N

NAK, 52

O

Operating mode transitions, 179
Order numbers, 13

P

P3964_Config, 18
P3964_Config (protocol configuration), 95
Parameter configuration
    LENGH and BUFFER for Send_P2P, 100
Performance optimization, 38
Performance option, 38, 77, 98, 102
Point-to-point connection, 16
Point-to-point programming, 77
Port_Config, 18, 70
Port_Config (port configuration), 84
Programming
    Modbus, 72
    PtP, 68
    PtP instructions, 77
    USS, 74
Protocols of the communication modules, 15
PtP communication
    Programming, 77
PtP error classes, 83
PtP instructions, 70
PtP instructions return values, 82

Q

Query architecture, 80
Query architecture master, 80
Query architecture slave, 80

R

Receive buffer, 48
Receive buffer size, 15
Receive line initial state, 26
Receive_Config, 18, 70
Receive_Config (receive configuration), 89
Receive_P2P, 18, 70
Receive_P2P (receive point-to-point data), 101
Receive_Reset, 18, 70
Receive_Reset, 18, 70
Receive_Reset (reset receiver), 103
Receiving data, 70
Response timeout, 44
Return values
    PtP instructions, 82
Return values receive runtime, 101
RI, 24
RS232 accompanying signals
    Automatic use, 35
RS232 mode, 23
RS232 signals, 23
RS422 mode, 26
RS422 signals, 27, 29
RS485 mode, 29
RTS, 24

S

Send_Config, 18, 70
Send_Config (send configuration), 87
Send_P2P, 18, 70
Send_P2P (send point-to-point data)
    LENGH and BUFFER parameters, 100
Send_P2P (send point-to-point data), 97
Sending data, 70
Serial data transmission, 19
Set_Features, 18, 70
Shared PtP parameter errors, 83
Signal_Get, 18, 70
Signal_Get (get RS232 signals), 104
Signal_Get (set RS232 signals), 105
Signal_Set, 18, 70
Software data flow control, 32
Start character, 43
Start sequences, 43
STX, 52

T

Transmission security, 20
    for Modbus and USS, 22
    with 3964(R), 21
    with Freeport, 21

U

Unidirectional/bidirectional data traffic, 23
Universal, 38, 77, 98, 102
USS communication, 65
USS instructions, 75
USS master
    Overview of functions, 67
    USS protocol, 65
    USS protocol: Data field,
    USS protocol:Data encryption, 66
    USS protocol:Data transmission procedure, 66
    USS protocol:frame structure, 66
USS protocol
    General structure of the data block:Parameter area (PKW), 67
    General structure of the data block:Process data area (PZD), 67
USS_Drive_Control, 18, 75, 155
USS_Drive_Control / USS_Drive_Control_31, 164
USS_Port_Scan, 18, 75, 155, 160
USS_Port_Scan_31, 160
USS_Read_Param, 18, 75, 155
USS_Read_Param / USS_Read_Param_31, 168
USS_Write_Param, 18, 75, 155
USS_Write_Param / USS_Write_Param_31, 170

X

X27 (RS 485) interface, 30
X27 (RS422) interface, 27
XON/XOFF, 32

SIEMENS

SIMATIC

S7-1500 / ET 200MP / ET 200SP CM PtP in operation without SIMATIC system instructions

Programming and Operating Manual

Preface

Documentation guide 1

Overview 2

Basic information 3

Basic communication mechanisms 4

Data transmission with Freeport 5

Data transmission with 3964(R) 6

Configuration data records 7

Error status 8

Sending data 9

Receiving data 10

Clear receive buffer 11

RS232 signals 12

Error messages 13

05/2021

A5E03908199-AB

Legal information

Warning notice system

This manual contains notices you have to observe in order to ensure your personal safety, as well as to prevent damage to property. The notices referring to your personal safety are highlighted in the manual by a safety alert symbol, notices referring only to property damage have no safety alert symbol. These notices shown below are graded according to the degree of danger.

⚠ DANGER
indicates that death or severe personal injury **will** result if proper precautions are not taken.

⚠ WARNING
indicates that death or severe personal injury **may** result if proper precautions are not taken.

⚠ CAUTION
indicates that minor personal injury can result if proper precautions are not taken.

NOTICE
indicates that property damage can result if proper precautions are not taken.

If more than one degree of danger is present, the warning notice representing the highest degree of danger will be used. A notice warning of injury to persons with a safety alert symbol may also include a warning relating to property damage.

Qualified Personnel

The product/system described in this documentation may be operated only by **personnel qualified** for the specific task in accordance with the relevant documentation, in particular its warning notices and safety instructions. Qualified personnel are those who, based on their training and experience, are capable of identifying risks and avoiding potential hazards when working with these products/systems.

Proper use of Siemens products

Note the following:

⚠ WARNING
Siemens products may only be used for the applications described in the catalog and in the relevant technical documentation. If products and components from other manufacturers are used, these must be recommended or approved by Siemens. Proper transport, storage, installation, assembly, commissioning, operation and maintenance are required to ensure that the products operate safely and without any problems. The permissible ambient conditions must be complied with. The information in the relevant documentation must be observed.

Trademarks

All names identified by ® are registered trademarks of Siemens AG. The remaining trademarks in this publication may be trademarks whose use by third parties for their own purposes could violate the rights of the owner.

Disclaimer of Liability

We have reviewed the contents of this publication to ensure consistency with the hardware and software described. Since variance cannot be precluded entirely, we cannot guarantee full consistency. However, the information in this publication is reviewed regularly and any necessary corrections are included in subsequent editions.

Siemens AG
Digital Industries
Postfach 48 48
90026 NÜRNBERG
GERMANY

A5E03908199-AB
Ⓟ 04/2021 Subject to change

Copyright © Siemens AG 2021.
All rights reserved

Preface

Purpose of the documentation

You have two general options to use point-to-point communication modules:

Use of the communication modules with	Procedure
SIMATIC S7 CPU and Step 7 (TIA Portal) or Step 7 configuration software	Use the available specific instructions (http://support.automation.siemens.com/WW/view/en/59057093).
Third-party CPU and configuration software	You must implement the functionality according to the documentation in the configuration software of the third-party manufacturer.

Requirements

To use point-to-point communication modules with third-party CPU and configuration software, the CPU must support communication via data records and have a suitable fieldbus controller. Information is available in the system manuals ET 200SP distributed I/O system (http://support.automation.siemens.com/WW/view/en/58649293) and S7-1500, ET 200MP automation system (https://support.industry.siemens.com/cs/ww/en/view/59191792).

Basic knowledge required

The following knowledge is required in order to understand the documentation:

- General knowledge of automation technology
- Knowledge of the industrial automation system SIMATIC
- Knowledge about the use of Windows-based computers

Validity of the documentation

This documentation is valid for the following point-to-point communication modules:

- CM PtP RS232 BA (6ES7540-1AD0x-0AA0) (https://support.industry.siemens.com/cs/ww/en/view/59057152) communication module
- CM PtP RS422/485 BA (6ES7540-1AB0x-0AA0) (https://support.industry.siemens.com/cs/ww/it/view/59057390) communication module
- CM PtP RS232 HF (6ES7541-1AD0x-0AB0) (https://support.industry.siemens.com/cs/ww/en/view/59057160) communication module
- CM PtP RS422/485 HF (6ES7541-1AB0x-0AB0) (https://support.industry.siemens.com/cs/ww/en/view/59061372) communication module
- CM PtP (6ES7137-6AA0x-0BA0) (https://support.industry.siemens.com/cs/ww/en/view/59061378) communication module

Conventions

Please also observe notes labeled as follows:

Note

The notes contain important information on the product described in the documentation, on the handling of the product or on part of the documentation to which particular attention should be paid.

Recycling and disposal

For environmentally sustainable recycling and disposal of your old equipment, contact a certified electronic waste disposal company and dispose of the equipment according to the applicable regulations in your country.

Additional assistance

The range of technical documentation for the individual SIMATIC products and systems can be found on the Internet (http://www.siemens.com/simatic-tech-doku-portal).

Siemens Industry Online Support

You can find current information on the following topics quickly and easily here:

- **Product support**

  All the information and extensive know-how on your product, technical specifications, FAQs, certificates, downloads, and manuals.

- **Application examples**

  Tools and examples to solve your automation tasks – as well as function blocks, performance information and videos.

- **Services**

  Information about Industry Services, Field Services, Technical Support, spare parts and training offers.

- **Forums**

  For answers and solutions concerning automation technology.

- **mySupport**

  Your personal working area in Industry Online Support for messages, support queries, and configurable documents.

This information is provided by the Siemens Industry Online Support in the Internet (https://support.industry.siemens.com).

Industry Mall

The Industry Mall is the catalog and order system of Siemens AG for automation and drive solutions on the basis of Totally Integrated Automation (TIA) and Totally Integrated Power (TIP).

You can find catalogs for all automation and drive products on the Internet (https://mall.industry.siemens.com) and in the Information and Download Center (https://www.siemens.com/automation/infocenter).

Security information

Siemens provides products and solutions with industrial security functions that support the secure operation of plants, systems, machines and networks.

In order to protect plants, systems, machines and networks against cyber threats, it is necessary to implement – and continuously maintain – a holistic, state-of-the-art industrial security concept. Siemens' products and solutions form one element of such a concept.

Customers are responsible for preventing unauthorized access to their plants, systems, machines and networks. Such systems, machines and components should only be connected to an enterprise network or the internet if and to the extent such a connection is necessary and only when appropriate security measures (e.g. firewalls and/or network segmentation) are in place.

For additional information on industrial security measures that may be implemented, please visit (http://www.siemens.com/industrialsecurity).

Siemens' products and solutions undergo continuous development to make them more secure. Siemens strongly recommends that product updates are applied as soon as they are available and that the latest product versions are used. Use of product versions that are no longer supported, and failure to apply latest updates may increase customer's exposure to cyber threats.

To stay informed about product updates, subscribe to the Siemens Industrial Security RSS Feed under (http://www.siemens.com/industrialsecurity).

Table of contents

Preface **3**

1 Documentation guide **8**

2 Overview **13**

3 Basic information **17**

3.1 Serial transmission of a character 17

3.2 Transmission security 19

4 Basic communication mechanisms **21**

4.1 Data exchange types 21

4.2 Communication using data record (Universal) 23

4.3 Communication via user data (Performance option) 25

5 Data transmission with Freeport **26**

5.1 Sending data with Freeport 26

5.2 Receiving data with Freeport 28

5.3 Code transparency 32

5.4 Receive buffer 32

5.5 RS232 mode 33

5.6 RS422 mode 34

5.7 RS485 mode 35

5.8 Handshaking 36

5.9 Communication via DMX512 39

6 Data transmission with 3964(R) **40**

6.1 Data transmission with 3964(R) protocol 40

6.2 Control characters 40

6.3 Block checksum 41

6.4 Sending data with 3964(R) 41

6.5 Receiving data with 3964(R) 43

7 Configuration data records ... 44

7.1 Freeport communication ... 44
7.1.1 Port configuration record - data record 57 ... 44
7.1.2 Send configuration record - data record 59 ... 47
7.1.3 Receive configuration record - data record 60 ... 49

7.2 3964 communication ... 52
7.2.1 Port configuration record - data record 57 ... 52
7.2.2 3964 protocol configuration - data record 61 ... 52

7.3 Activate special function - data record 58 ... 53

8 Error status ... 55

8.1 Read error status - data record 55 ... 55

9 Sending data ... 56

9.1 Sending data using data record ... 56
9.1.1 Flow chart for sending using data record ... 56
9.1.2 Send data - data record 48 ... 57
9.1.3 Request acknowledgment - Input data ... 59
9.1.4 Example ... 60

9.2 Sending data via output data ... 61
9.2.1 Flow chart for sending using output data ... 61
9.2.2 Output data when using the Performance option ... 62
9.2.3 Request acknowledgment - Input data ... 63

10 Receiving data ... 64

10.1 Receiving data using data record ... 64
10.1.1 Flow chart for receiving using data record ... 64
10.1.2 Data received - data record 49/50 ... 65
10.1.3 Query: New receive frame - Input data ... 66
10.1.4 Example ... 67

10.2 Receiving data via input data ... 68
10.2.1 Flow chart for receiving via input data ... 68
10.2.2 Input data when using the Performance option ... 69

11 Clear receive buffer ... 71

11.1 Clear receive buffer - data record 54 ... 71

12 RS232 signals ... 72

12.1 Set RS232 secondary signals - data record 53 ... 72

12.2 Read RS232 secondary signals - Input data ... 73

13 Error messages ... 74

Glossary ... 81

Index ... 85

Documentation guide

1

The documentation for the SIMATIC S7-1500 automation system, the CPUs 1513/1516pro-2 PN based on SIMATIC S7-1500, and the distributed I/O systems SIMATIC ET 200MP, ET 200SP and ET 200AL is divided into three areas.
This division allows you easier access to the specific information you require.

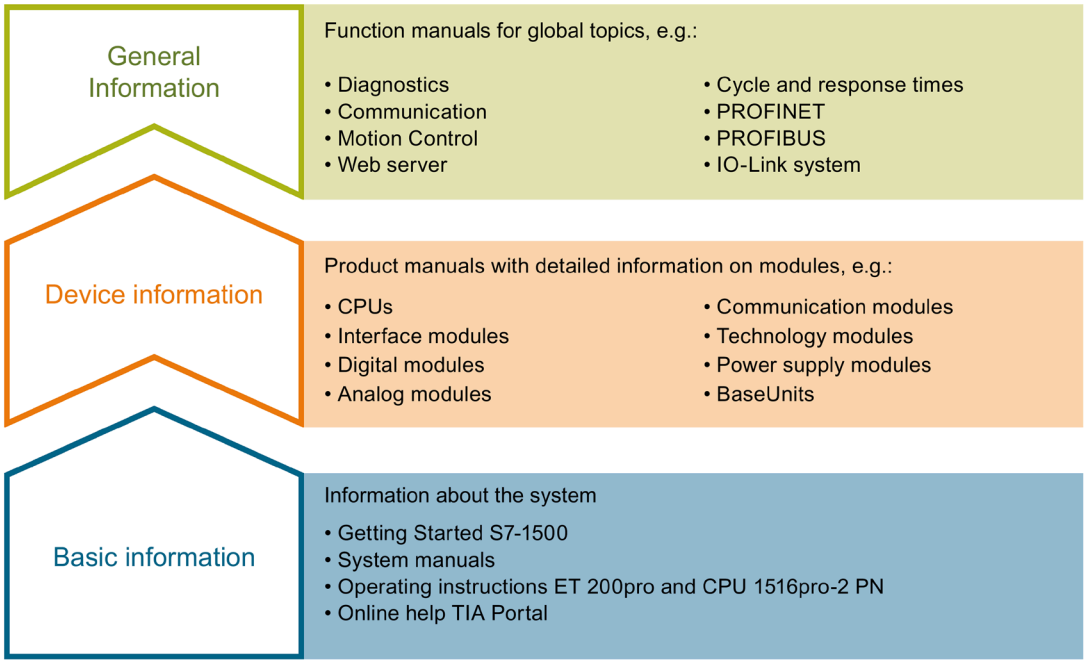

Basic information

System manuals and Getting Started manuals describe in detail the configuration, installation, wiring and commissioning of the SIMATIC S7-1500, ET 200MP, ET 200SP and ET 200AL systems. Use the corresponding operating instructions for the CPUs 1513/1516pro-2 PN. The STEP 7 online help supports you in the configuration and programming.

Device information

Product manuals contain a compact description of the module-specific information, such as properties, terminal diagrams, characteristics and technical specifications.

General information

The function manuals contain detailed descriptions on general topics such as diagnostics, communication, Motion Control, Web server, OPC UA.

You can download the documentation free of charge from the Internet (https://support.industry.siemens.com/cs/ww/en/view/109742705).

Changes and additions to the manuals are documented in product information sheets.

You will find the product information on the Internet:

- S7-1500/ET 200MP (https://support.industry.siemens.com/cs/us/en/view/68052815)
- ET 200SP (https://support.industry.siemens.com/cs/us/en/view/73021864)

Manual Collections

The Manual Collections contain the complete documentation of the systems put together in one file.

You will find the Manual Collections on the Internet:

- S7-1500/ET 200MP (https://support.industry.siemens.com/cs/ww/en/view/86140384)
- ET 200SP (https://support.industry.siemens.com/cs/ww/en/view/84133942)
- ET 200AL (https://support.industry.siemens.com/cs/ww/en/view/95242965)

"mySupport"

With "mySupport", your personal workspace, you make the best out of your Industry Online Support.

In "mySupport", you can save filters, favorites and tags, request CAx data and compile your personal library in the Documentation area. In addition, your data is already filled out in support requests and you can get an overview of your current requests at any time.

You must register once to use the full functionality of "mySupport".

You can find "mySupport" on the Internet (https://support.industry.siemens.com/My/ww/en).

"mySupport" - Documentation

With "mySupport", your personal workspace, you make the best out of your Industry Online Support.

In "mySupport", you can save filters, favorites and tags, request CAx data and compile your personal library in the Documentation area. In addition, your data is already filled out in support requests and you can get an overview of your current requests at any time.

You must register once to use the full functionality of "mySupport".

You can find "mySupport" on the Internet (http://support.industry.siemens.com/My/ww/en/documentation).

"mySupport" - CAx data

In the CAx data area of "mySupport", you can access the latest product data for your CAx or CAe system.

You configure your own download package with a few clicks.

In doing so you can select:

- Product images, 2D dimension drawings, 3D models, internal circuit diagrams, EPLAN macro files
- Manuals, characteristics, operating manuals, certificates
- Product master data

You can find "mySupport" - CAx data on the Internet (http://support.industry.siemens.com/my/ww/en/CAxOnline).

Application examples

The application examples support you with various tools and examples for solving your automation tasks. Solutions are shown in interplay with multiple components in the system - separated from the focus on individual products.

You will find the application examples on the Internet (https://support.industry.siemens.com/sc/ww/en/sc/2054).

TIA Selection Tool

With the TIA Selection Tool, you can select, configure and order devices for Totally Integrated Automation (TIA).
This tool is the successor of the SIMATIC Selection Tool and combines the known configurators for automation technology into one tool.
With the TIA Selection Tool, you can generate a complete order list from your product selection or product configuration.

You can find the TIA Selection Tool on the Internet (http://w3.siemens.com/mcms/topics/en/simatic/tia-selection-tool).

SIMATIC Automation Tool

You can use the SIMATIC Automation Tool to perform commissioning and maintenance activities simultaneously on various SIMATIC S7 stations as a bulk operation independent of TIA Portal.

The SIMATIC Automation Tool provides a multitude of functions:

- Scanning of a PROFINET/Ethernet system network and identification of all connected CPUs
- Address assignment (IP, subnet, gateway) and station name (PROFINET device) to a CPU
- Transfer of the date and the programming device/PC time converted to UTC time to the module
- Program download to CPU
- RUN/STOP mode switchover
- CPU localization by means of LED flashing
- Reading out of CPU error information
- Reading of the CPU diagnostics buffer
- Reset to factory settings
- Firmware update of the CPU and connected modules

You can find the SIMATIC Automation Tool on the Internet (https://support.industry.siemens.com/cs/ww/en/view/98161300).

PRONETA

SIEMENS PRONETA (PROFINET network analysis) allows you to analyze the plant network during commissioning. PRONETA features two core functions:

- The topology overview automatically scans the PROFINET and all connected components.
- The IO check is a fast test of the wiring and the module configuration of a plant.

You can find SIEMENS PRONETA on the Internet (https://support.industry.siemens.com/cs/ww/en/view/67460624).

SINETPLAN

SINETPLAN, the Siemens Network Planner, supports you in planning automation systems and networks based on PROFINET. The tool facilitates professional and predictive dimensioning of your PROFINET installation as early as in the planning stage. In addition, SINETPLAN supports you during network optimization and helps you to exploit network resources optimally and to plan reserves. This helps to prevent problems in commissioning or failures during productive operation even in advance of a planned operation. This increases the availability of the production plant and helps improve operational safety.

The advantages at a glance

- Network optimization thanks to port-specific calculation of the network load
- Increased production availability thanks to online scan and verification of existing systems
- Transparency before commissioning through importing and simulation of existing STEP 7 projects
- Efficiency through securing existing investments in the long term and the optimal use of resources

You can find SINETPLAN on the Internet (https://www.siemens.com/sinetplan).

Overview

2

Overview of components and article numbers

Tabular overview of communication modules.

Communication module	Article number
CM PtP RS232 BA	6ES7540-1AD0x-0AA0
CM PtP RS422/485 BA	6ES7540-1AB0x-0AA0
CM PtP RS232 HF	6ES7541-1AD0x-0AB0
CM PtP RS422/485 HF	6ES7541-1AB0x-0AB0
CM PtP (ET 200SP)	6ES7137-6AA0x-0BA0

Overview of components and interfaces

Tabular overview of communication modules and their functions.

Communication module	Interface	Protocols		Connection of the communication cable	
		Freeport	3964(R)	D-Sub 9-pin	D-Sub 15-pin
CM PtP RS232 BA	RS232	X	X	X	-
CM PtP RS422/485 BA	RS422	X	X	-	X
	RS485	X	-	-	X
CM PtP RS232 HF	RS232	X	X	X	-
CM PtP RS422/485 HF	RS422	X	X	-	X
	RS485	X	-	-	X
CM PtP (ET 200SP)	RS232	X	X	ET 200SP BaseUnit with 18 terminals[1]	
	RS422	X	X		
	RS485	X	-		

[1] ET 200SP BaseUnit instead of sub D; same for all; pin assignment depending on physical transmission properties

Overview of components and data transmission rates

Communication module	Data transmission rate in bps											
	300	600	1200	2400	4800	9600	19200	38400	57600	76800	115200	250000[1]
CM PtP RS232 BA	X	X	X	X	X	X	X	-	-	-	-	-
CM PtP RS422/485 BA	X	X	X	X	X	X	X	-	-	-	-	-
CM PtP RS232 HF	X	X	X	X	X	X	X	X	X	X	X	-
CM PtP RS422/485 HF	X	X	X	X	X	X	X	X	X	X	X	-
CM PtP (ET 200SP)	X	X	X	X	X	X	X	X	X	X	X	X

[1] Especially for using the DMX512 protocol with RS485 (Page 39)

Overview of components and receive buffer size

Module	Receive buffer size in KB	Max. frame length in KB	Bufferable frames
CM PtP RS232 BA	2	1	255
CM PtP RS422/485 BA	2	1	255
CM PtP RS232 HF	8	4	255
CM PtP RS422/485 HF	8	4	255
CM PtP (ET 200SP)	4	2	255

Secondary signals and data flow control

- Software data flow control with XON/XOFF

  The Freeport protocol supports data flow control with XON/XOFF via the RS232 and RS422 interfaces.

- Hardware data flow control with RTS/CTS

  The Freeport protocol supports data flow control with RTS/CTS via the RS232 interface.

- Automatic operation of secondary signals

  The Freeport protocol supports operation of the RS232 secondary signals by means of the RS232 interface. Only available when hardware data flow control is activated.

Application options for the communication modules

You may set up a communication connection with different partners, depending on the communication modules used:

- Freeport: Transmission of ASCII character strings without specified protocol format
- 3964(R): Communication between automation systems (master/master communication)

GSD file

Engineering must be provided with information regarding functionality and parameters of the communication modules for the higher-level application.

The properties of the point-to-point communication modules are defined in a GSD file (Generic Station Description) that is defined based on the GSD schema (ISO 15745: GSD for PROFIBUS and GSDML for PROFINET IEC 61804: EDDL IEC 62453: FDT/DTM). The Engineering System must provide a suitable interpreter that makes the data of the file available to the system.

The GSD file contains:

- Device and identification data
- Parameter assignment data
- Diagnostics data

For parameter assignment of the communication modules, the GSD file must be installed/imported in the Engineering System.

ET 200MP

The respective GSD file for the ET 200MP distributed I/O system is available for download on the Internet:

- GSD file PROFINET IO (https://support.industry.siemens.com/cs/ww/en/view/68189683)
- GSD file PROFIBUS DP (https://support.industry.siemens.com/cs/ww/en/view/80206700)

ET 200SP

The respective GSD file for the ET 200SP distributed I/O system is available for download on the Internet:

- GSD file PROFINET IO (http://support.automation.siemens.com/WW/view/en/57138621)
- GSD file PROFIBUS DP (http://support.automation.siemens.com/WW/view/en/73016883)

Parameter assignment in the application when using a GSD file for PROFIBUS slaves

Important parameters are missing in the GSD file for PROFIBUS slaves. The parameter assignment of the communication module must therefore be performed from the user program using the following data records:

Freeport communication:

- Port configuration record - data record 57 (Page 44) (Port_Config)
- Send configuration record - data record 59 (Page 47) (Send_Config)
- Receive configuration record - data record 60 (Page 49) (Receive_Config)
- Activate special function - data record 58 (Page 53) (Set_Features)

3964 communication:

- Port configuration record - data record 57 (Page 44) (Port_Config)
- 3964 protocol configuration - data record 61 (Page 52) (P3964_Config)
- Activate special function - data record 58 (Page 53) (Set_Features)

Note

Activate special function - data record 58 (Page 53) must always be called as the last data record.

Note

To use the communication module, the CPU must support communication by means of data records.

For a SIMATIC S7 CPU and Step 7 (TIA Portal) / Step 7, the parameter assignment can be performed with the instructions given in parentheses. You can find more information on configuring with GSD file in the FAQ with the entry ID 109487470 (https://support.industry.siemens.com/cs/ww/en/view/109487470) in Siemens Industry Online Support.

Basic information 3

3.1 Serial transmission of a character

Introduction

Different networking options are available for the exchange of data between two or more communication partners. The PtP connection between two communication partners is the simplest means of information exchange.

Point-to-point connection

In point-to-point connection, the communication module forms the interface between an automation system and a communication partner. Data is sent in serial mode via PtP connection with the communication module.

Serial data transmission

During serial data transmission, the individual bits of a character of information to be transferred are sent successively in a defined sequence.

Bidirectional data traffic - operating mode

In the context of bidirectional data traffic, we distinguish between two operating modes for the communication module:

- Half duplex mode

  The data is transferred between one or several communication partners in both directions alternately. Half duplex mode means that data is either sent or received at a given point in time.

- Full duplex mode

  The data is exchanged simultaneously between one or several communication partners, i.e. it is possible to send and receive data simultaneously at a given point in time.

Data transmission

The so-called time base synchronism (fixed time base for transmission of a fixed character string) is only upheld during transmission of a character. Each character to be sent is preceded by a synchronization pulse, which is also known as start bit. The length of the start bit transmission determines the clock cycle. The end of character transmission is formed by one or two stop bits.

Handshakes

In addition to the start and stop bits, both communication partners need further handshake procedures for serial data transmission. These include:

- Data transmission rate
- Character and acknowledgment delay time
- Parity
- Number of data bits (7 or 8 bits/characters)
- Number of stop bits (1 or 2)

3.2 Transmission security

Transmission security plays an important role in the transmission of data and in the selection of the transmission procedure. Generally speaking, the more layers of the ISO/OSI reference model are applied, the higher the transmission security.

Classification of existing protocols

The figure below illustrates how the protocols of the communication module fit into the reference model.

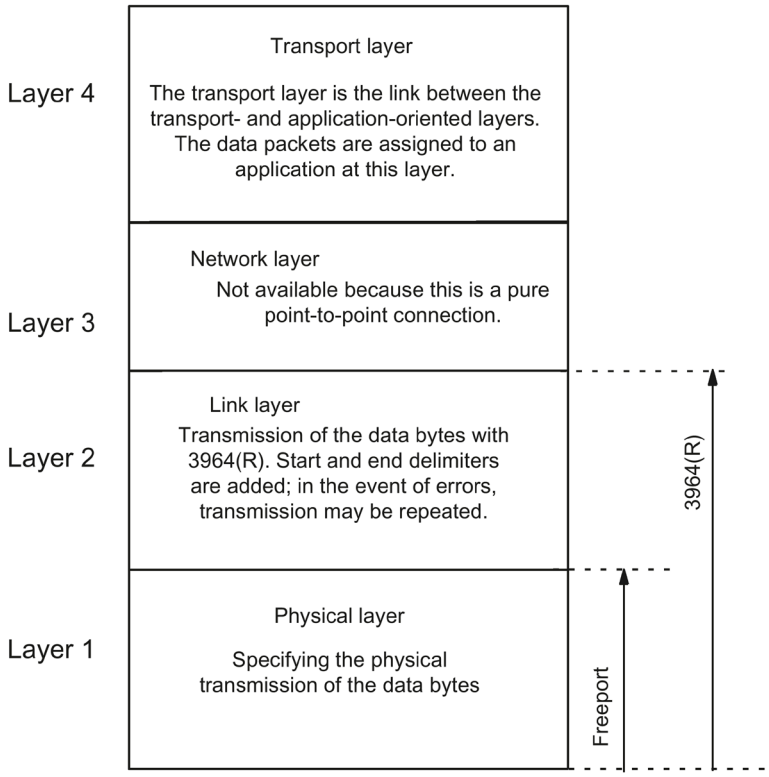

Figure 3-1 Classification of the existing protocols of the communication module in the ISO/OSI reference model

Transmission security with Freeport

Data security when using Freeport:

- Despite the efficiency of data transmission with the Freeport protocol, it is not possible to ensure secure data transmission with Freeport because no data security measures other than the use of a parity bit (can also be disabled, depending on the character frame setting) are applied. A certain degree of data security can be achieved through parameter assignment of the frame start and frame end conditions.
- The parity bit ensures that the inversion of a bit in a character to be sent can be recognized. If two or more bits of a character are inverted, this error can no longer be detected.
- To increase transmission security, you can, for example, implement a checksum, a frame length specification, or configurable end conditions. These measures must be implemented by the user.
- A further increase in data security can be achieved by means of acknowledgment message frames in response to send or receive message frames. This is the case with high-grade protocols for data communication (ISO 7-layer reference model).

Transmission security with 3964(R)

Two different procedures for data transmission can be used, either with or without a block check character:

- Data transmission without block check character: **3964**

  Transmission security is achieved by means of a specified frame structure, frame breakdown, and frame repetitions.
- Data transmission with block check character: **3964R**

  The high degree of transmission security is achieved by means of a specified frame structure and breakdown, frame repetitions, as well as inclusion of a block check character (BCC). The hamming distance in 3964R mode is 3.

The hamming distance represents a measure for data transmission security.

In this manual, the term 3964(R) is used when descriptions and notes refer to both data transmission modes.

Basic communication mechanisms 4

4.1 Data exchange types

Data communication

Two types of data exchange between the CPU and the communication module are possible with the communication modules, depending on whether you are using the Performance option:

Acyclic data exchange (Universal)	**Cyclic data exchange (with performance optimization)**
The CPU communicates with the communication module asynchronously by reading or writing data records (Page 23).	The CPU communicates with the communication module synchronously with the application cycle via the net data of the communication module (Page 25).
Limiting the telegram length depending on the communication module to 1, 2, or 4 KB	Limiting the telegram length to 24 bytes for receive frames and 30 bytes for send frames. Longer frames are rejected.
Transmitting a frame requires several cycles of the CPU. The number of cycles increases with the number of communication modules that communicate via data record.	Transmission of a frame requires an application cycle of the CPU and several communication modules can be served in parallel (reaction time optimized, timing behavior improved).
Allocation of an address range of 8 bytes of input data and 0 bytes of output data	Allocation of an address range of 32 bytes of input data and 32 bytes of output data
Available from firmware version V1.0 of the communication module	Available from firmware version V2.0 of the communication modules
Configuration and parameter assignment with GSD file. The option for performance optimization cannot be changed with the configuration data records 57 to 61.	

Example

In this example, 18 communication modules are used in distributed operation, but the measured values are received by one digital scale each. The scales send their measured values cyclically at such a high speed that the update time of the measured values in the CPU is limited by the communication speed between CPU and communication module.

The following comparison shows the difference of the update time depending on whether performance optimization is used:

	Number of communication modules read in parallel by the CPU	**Update time (interval between two value updates in the CPU) per communication module**
Without Performance option	1	Approx. 30 ms
	18	Approx. 250 ms
With Performance option	1	Approx. 20 ms[1]
	18	Approx. 20 ms[1]

[1] Depending on the application, faster update times are also possible; for example, for sensors that only send short frames cyclically.

4.2 Communication using data record (Universal)

Write/read data record

Note

Reading and writing data records

For information about the functions for reading/writing data records, refer to the documentation of your controller.

The "Write data record" function can be used to configure the devices by means of configuration data records. The "Write data record" function also transmits the send data to the devices. Accordingly, "Read data record" can be used to read diagnostics data and receive data from the devices.

Overview of data records

Configuration data records are available for the following tasks:

- Freeport communication
  Configuration of the communication module for data transmission using the open Freeport frame
  - Port configuration record - data record 57 (Page 44)
  - Activate special function - data record 58 (Page 53)
  - Send configuration record - data record 59 (Page 47)
  - Receive configuration record - data record 60 (Page 49)
- 3964 communication
  Configuration of the communication module for data transmission with 3964(R) protocol
  - Port configuration record - data record 57 (Page 44)
  - 3964 protocol configuration - data record 61 (Page 52)
- Special functions - Activation
  Activating or verifying the active state of diagnostic interrupts.
  - Activate special function - data record 58 (Page 53)

The following data records are available for operating the communication modules:

- Query error status
  Acknowledgment of the communication module in response to the writing of a configuration data record
  - Read error status - data record 55 (Page 55)
- Send data
  Transmitting send data to the communication module and querying transmission acknowledgment in the user data
  - Send data - data record 48 (Page 57)
  - Request acknowledgment - Input data (Page 59)
- Receive data
  Display of a receive frame in the net data
  - Data received - data record 49/50 (Page 65)
  - Query: New receive frame - Input data (Page 66)
- Delete receive buffer
  Deleting the receive buffer of the communication module
  - Clear receive buffer - data record 54 (Page 71)
- RS232 secondary signals
  Manipulation of the RS232 secondary signals of the communication module and reading the RS232 secondary signals in the net data
  - Set RS232 secondary signals - data record 53 (Page 72)
  - Read RS232 secondary signals - Input data (Page 73)

Sending

Sending data via data records is described in the section Sending data using data record (Page 56).

Receiving

Receiving data via data records is described in the section Receiving data using data record (Page 64).

4.3 Communication via user data (Performance option)

From firmware version V2.0 of the communication module, the option for performance optimization is available. This option is suitable if you are exclusively sending and receiving short frames. Unlike in communication via data records (Universal), the number of communication modules in a project does not affect the update time.

In this case, sending and receiving of user data takes place via the net data (cyclic IO data of the automation system) of the communication module. Communication via data records is used for configuration and diagnostics.

Sending

Sending data via net data is described in the section Sending data via output data (Page 61).

Receiving

Receiving data via net data is described in the section Receiving data via input data (Page 68).

Data transmission with Freeport 5

Introduction

Freeport is a freely programmable, frame-based protocol. Freeport enables users to map almost all protocols available in the market in applications.

The Freeport driver controls data transmission via point-to-point connection between the communication module and a communication partner. The Freeport driver contains the physical layer (layer 1).

The Freeport driver supports sending and receiving of messages with any structure (all characters from 00_H through FF_H (for character frames with 8 data bits) or from 00_H through $7F_H$ (for character frames with 7 data bits).

The frame start and end criteria must be configured both for the send and the receive direction. The structure of the send frames may differ from that of the receive frames.

5.1 Sending data with Freeport

Sending data

Note

During parameter assignment of the XON/XOFF data flow control, user data may not contain any of the configured XON or XOFF characters. The default settings are DC1 = 11_H for XON and DC3 = 13_H for XOFF.

Specifying settings for sending

To send a message, the partner must be informed of the start and end of the message (see Send configuration record - data record 59 (Page 47)). You can select one of the following options:

- Send the Break signal at the start of the message

  You can specify that an additional Break is sent at the beginning of each message transmission on expiration of the RTS ON delay time.
  The duration of the "Break" signal is specified in bit times (refer to Send configuration record - data record 59 (Page 47) bytes 12 and 13).

  Compliance with the send break can be deactivated if other mechanisms are used for synchronization.

- Send Idle Line

  You can specify that at the beginning of each message transmission the send line is held in Idle state for a specific time.
  The duration of the "Idle Line" is specified in bit times (refer to Send configuration record - data record 59 (Page 47) bytes 14 and 15).

  Compliance with the send break can be deactivated if other mechanisms are used for synchronization.

- RTS ON delay

  You can configure the time that has to expire after the RTS (Request to send) before the actual data transmission starts (see Send configuration record - data record 59 (Page 47) bytes 8 and 9).

- RTS OFF delay

  You can configure the time that has to expire after transmission has been completed before the RTS signal is deactivated (see Send configuration record - data record 59 (Page 47) bytes 10 and 11).

- Sending including the end delimiter

  You can configure the number of end delimiters (1 or 2) and their value.

  All data up to the end delimiter(s) is sent, independent of the selected frame length. The end delimiter must be included in the data to be sent. Data is sent only up to and including the end delimiter, even if the data length specified is longer (refer to Send configuration record - data record 59 (Page 47) bytes 18 and 21).

- Number of appended characters

  Input of the number of appended characters. All data transferred to the communication module will be sent. The end delimiter(s) is/are appended automatically. Depending on the number of end delimiters, one to five characters more than the specified number are sent to the partner (refer to Send configuration record - data record 59 (Page 47) bytes 22 and 28).

Note

If you do not configure either the "End delimiter" (0) or the "Number of appended characters" (0), all data transferred to the communication module is sent to the partner in a transparent operation.

5.2 Receiving data with Freeport

Introduction

You need to specify message start and end criteria in the Freeport driver to enable detection of a message in the incoming data flow.

Note

The start and end criteria described below can be combined as required. Such combinations may lead to unwanted results if the start and end criteria influence or even exclude each other.

Specifying the message start

For data transmission with Freeport, you can choose between several different start criteria. The start criterion defines when a frame starts. Once a criterion that indicates the start of the message is met, the data stream is scanned for message end criteria. (See Receive configuration record - data record 60 (Page 49) byte 9)

Two different methods are available for detecting the message start:

- **Start on any character**
- **Start on special condition**

Start on any character

- **Start on any character**

  Any character can be used to define the start of the message (default).

  This means that the first character sent at the start of communication, or after the frame end has been detected, will be identified as the first character of a message. (refer to Receive configuration record - data record 60 (Page 49) byte 12)

Start on special condition

The start of the message is detected based on the following specified conditions:

- **After detection of a line break**

  The frame start is not accepted unless a break has been received beforehand, in other words, it is compulsory for the partner to send a break before sending a frame.

- **After detection of an idle line**

  The frame start is not accepted until the configured idle line duration has expired. This procedure requires a minimum interval between two frames. (See Receive configuration record - data record 60 (Page 49) bytes 10 and 11)

- **After receipt of a start character**

  The frame start is detected when the configured start character is identified. (See Receive configuration record - data record 60 (Page 49) byte 12)

- **After detection of one or several start sequences**

  The frame start is detected when the configured string with a length of up to five characters is identified. You can configure up to 4 start sequences. (See Receive configuration record - data record 60 (Page 49) bytes 13 to 37)

Specifying the message end

You can choose from several different end criteria for data transmission using the Freeport driver. The end criterion defines the point at which a message frame has been received completely. (See Receive configuration record - data record 60 (Page 49) byte 39)

Configurable end criteria are:

- **Recognize message end by message timeout**
- **Recognize message end by response timeout**
- **After character delay time elapses (default)**
- **After receipt of a fixed frame length**
- **After receipt of a maximum number of characters**
- **Read message length from message**
- **After receipt of an end sequence**

Message timeout

When data is received, the end of frame is detected on expiration of the configured time for transferring a frame. Time measurement starts after the start criterion has been met. (See Receive configuration record - data record 60 (Page 49) bytes 52 and 53)

An error message is output and the frame is discarded if a message end condition is met before the fixed frame length has been reached.

Response timeout

When data is received, the end of frame is detected on expiration of the configured time between the end of the send operation and the receipt of a frame start. (refer to Receive configuration record - data record 60 (Page 49) bytes 50 and 51)

An error message is output and the frame is discarded if a message end condition is met before the fixed frame length has been reached.

Expiration of character delay time

When data is received, the frame end is detected when the configured maximum time (bit times) between successive characters is exceeded (character delay time). (See Receive configuration record - data record 60 (Page 49) bytes 54 and 55)

In this case, the character delay time must be set in such a way as to ensure that it expires between two consecutive frames. However, it should be of sufficient length to exclude incorrect identification of the end of the frame whenever the communication partner performs a transmission pause within a frame.

Fixed frame length

When data is received, the end of the frame is identified after the configured frame length has been reached. (See Receive configuration record - data record 60 (Page 49) bytes 40 and 41)

An error message is output and the frame is discarded if the character delay time expires (if activated) before the fixed frame length has been reached.

Please note the following if the frame length of the received characters does not match the fixed configured frame length:

- All characters received after the configured maximum number of characters has been reached will be discarded until a new start criterion (e.g. "Idle Line") is detected.
- Receiving is terminated if the character delay time (if activated) expires before the fixed configured frame length has been reached. An error message is generated and the message frame fragment is discarded.
- If a different (activated) end criterion is met before the fixed configured frame length has been reached, this frame part is assessed as a valid frame and the partner waits for a new start criterion. All characters received prior to fulfillment of a new start criterion are discarded.

Maximum number of characters

When receiving data, the end of the message frame is recognized after the declared number of characters have arrived. (See Receive configuration record - data record 60 (Page 49) bytes 42 and 43)

This setting can be combined with the "Character delay time" settings. The frame received is also assessed as free of error if another end condition occurs, regardless of whether the maximum number of characters has been reached.

Please note the following if the frame length of the received characters does not match the configured maximum frame length:

- All characters received after the configured maximum number of characters has been reached will be discarded until a new start criterion (e.g. "Idle Line") is detected.
- If a different (activated) end criterion is met before the configured maximum number of characters has been reached, this frame part is assessed as a valid frame and the partner waits for a new start criterion. All characters received prior to fulfillment of a new start criterion are discarded.

Note

If no further end criterion is activated, the fixed frame length and maximum number of characters will respond in the same way.

Message length in the message

The length of the receive frame is also sent. When data is received, the frame end is identified after the frame length also sent has been reached. If "After character delay time elapses" is activated as an additional end criterion, receiving may be terminated prematurely. An error message is generated and the message frame fragment is discarded.

The following parameters define the characters to be used for evaluation of the message length:

- **Offset of the length field in the message**

  In the message, the value defines the position of the character that is to be used to determine the message length.

  You can set values from 1 to 4096 characters, depending on the buffer size.

  (See Receive configuration record - data record 60 (Page 49) bytes 44 to 45)

- **Size of the length field**

  This value specifies the number of characters as of the first evaluation position to be used to determine the message length.

  You can set values of 0, 1, 2 and 4 characters.

  (See Receive configuration record - data record 60 (Page 49) bytes 46 to 47)

- **Number of characters not counted in length specification**

  Number of characters appended to the frame without counting towards the frame length. This value defines the number of bytes at the end of the frame which should not be included in the evaluation of the message length.

  You can set values from 0 to 255 characters.

  (See Receive configuration record - data record 60 (Page 49) bytes 48 to 49)

End sequence

When data is received, the end of the frame is identified when the configured end sequence (max. 5 characters) is received. The received data is transferred to the CPU including the end sequence. (See Receive configuration record - data record 60 (Page 49) bytes 56 to 61)

If you are working with the end sequence, transmission is not code-transparent and you must exclude the presence of end code in the user data.

5.3 Code transparency

Code transparency

Code transparency means that user data can contain any character combinations, without recognition of the end criterion.

The code transparency of the protocol depends on the selection of the parameterized end criterion and flow control:

- With up to five end delimiters or using XON/XOFF flow control
  - Not code-transparent
- End criterion character delay time, fixed frame length, maximum frame length, message timeout, or response timeout and message length in the message
  - Code-transparent

5.4 Receive buffer

Receive buffer of the module

The receive buffer of the module may have a size of up to 8 KB, depending on the communication module used (see chapter Overview (Page 13)). The maximum frame length always equals half the length of the receive buffer. This means that each communication module is capable of buffering at least two frames.

During parameter assignment, you can specify whether to clear the receive buffer at startup and whether to prevent overwriting of data in the receive buffer. You can also specify the range of values (1 to 255) for the number of buffered receive frames. (See Receive configuration record - data record 60 (Page 49) bytes 62 to 64)

The receive buffer on the communication module is organized as FIFO:

- If several frames are entered in the receive buffer of the communication module, the communication module always sends the oldest frame to the CPU.
- If you always want to transfer the last frame received to the CPU, you must set the value "1" for the number of buffered frames and deactivate overwrite protection.

Note

If continuous reading of the receive data in the user program is interrupted for a certain time and the receive data is then requested again, the communication module will possibly transmit an older frame before the CPU receives the most recent one. At the time of interruption, the old frame had already been transferred from the receive buffer of the communication module and prepared for transmission to the CPU.

5.5 RS232 mode

The following communication modules support RS232 mode:

- CM PtP RS232 BA
- CM PtP RS232 HF
- CM PtP (ET 200SP)

In RS232 mode, data is sent via two lines. A separate line is available for the send direction and the receive direction. Simultaneous sending and receiving is possible (full duplex).

RS232 secondary signals

In addition to the TXD (transmit data), RXD (receive data) and GND signals, the communication module provides the following RS232 secondary signals when using RS232 hardware:

DCD	(input)	Data Carrier detect; Data carrier signal detected
DTR	(output)	Data terminal ready; Module ready for operation
DSR	(input)	Data set ready; Communication partner ready for operation
RTS	(output)	Request to send; Module is ready to send
CTS	(input)	Clear to send; Communication partner can receive data from the module (response to RTS = ON of the communication module)
RI	(input)	Ring Indicator; Ring indicator

After power on of the communication module, the output signals are in the OFF state (inactive).

You can parameterize the operation of the DTR/DSR and RTS/CTS control signals in the configuration data record of the module (Port configuration record - data record 57 (Page 44)).

The RS232 secondary signals cannot be manipulated by data record communication (Set RS232 secondary signals - data record 53 (Page 72)) in case of:

- parameterized data flow control "Hardware RTS always ON"

  (corresponds to automatic operation of the secondary signals)
- parameterized data flow control "Hardware RTS always ON"

  (corresponds to hardware flow control with RTS/CTS)
- parameterized data flow control "Hardware RTS always ON, ignore DTR/DSR "

An error message is generated if an attempt is made to manipulate RS232 secondary signals by means of data record communication.

For more information, refer to chapter Handshaking (Page 36).

5.6 RS422 mode

The following communication modules support RS422 mode:

- CM PtP RS422/485 BA
- CM PtP RS422/485 HF
- CM PtP (ET 200SP)

In RS422 mode, data is transmitted via two line pairs (four-wire mode). A separate line pair is available for the send direction and the receive direction. Simultaneous sending and receiving is possible (full duplex).

The data can be exchanged simultaneously between one or several communication partners. In RS422 multipoint mode, only one multipoint slave may send data at any given time.

Interface operating modes

The following table is a summary of the interface operating modes for the various communication modules and protocols.

The communication module can be used in the following topologies in RS422 mode:

- Link between two nodes: Point-to-point connection
- Link between several nodes: Multipoint coupling
  (only available with CM PtP (ET 200SP))

Operating mode	Description
Full duplex (RS 422) four-wire mode (point-to-point connection)	Both devices have the same priority in this operating mode.
Full duplex (RS422) four-wire mode (multipoint master)	The communication module can be used as multipoint master.
Full duplex (RS 422) four-wire mode (multipoint slave)	The communication module can be used as multipoint slave.

In the case of a multipoint master/slave topology in the RS422 mode:

- The master's sender is connected to the receivers of all slaves.
- The slaves' senders are connected to the master's receiver.
- The receiver of the master and the receiver of one slave are assigned default settings of the receive line (refer to chapter Port configuration record - data record 57 (Page 44) byte 25). All other slaves operate without default settings.

5.7 RS485 mode

The following communication modules support RS485 mode:

- CM PtP RS422/485 BA
- CM PtP RS422/485 HF
- CM PtP (ET 200SP)

In RS485 mode, data is transferred via one line pair (two-wire mode). The line pair is available alternately for the send and receive directions. It is possible to either send or receive (half duplex). On completion of a send operation, operation is immediately switched to receive mode (ready to receive). Send mode is reset again as soon as a new send job is received.

RS485 mode

The following table is a summary of the interface operating modes for the various communication modules and protocols.

Operating mode	Description
Half duplex (RS485) two-wire mode	Operating mode for point-to-point connection or multipoint connection (multipoint) in two-wire mode. The communication module can be the master as well as the slave.

When you operate the Freeport driver in RS485 mode (half duplex, two-wire mode), you must make provisions in the user program to ensure that only one device sends data at any given time. If more than one device sends data at the same time, the frame is corrupted.

Changeover times for RS485 communication module in half duplex mode

A maximum time of 0.1 ms is set for the changeover between sending and receiving.

5.8 Handshaking

Introduction

Handshaking controls the data flow between two communication partners. The use of the handshaking method prevents data loss during transmission if the devices are operating at different speeds.

We can basically distinguish between the following methods:

Table 5- 1 Overview of methods and interfaces

Method	RS232	RS422	RS485
Software data flow control XON/XOFF	X	X	-
Hardware data flow control (RTS/CTS)	X	-	-
Automatic operation of secondary signals	X	-	-

Software data flow control

Software data flow control is implemented as follows on the communication module:

- **XON/XOFF**
  - As soon as the communication module has been set to the "XON/XOFF" operating mode by means of parameter assignment, it sends the XON character, thereby allowing the communication partner to send data.
  - On reaching the configured maximum number of frames or 16 characters ahead of receive buffer overflow, the communication module sends the XOFF character, thereby requesting that the communication partner stop sending. If the communication partner nonetheless continues to send data, an error message is generated if the receive buffer overflows. Data received in the last frame is discarded.
  - As soon as a frame has been fetched by the CPU and the receive buffer is ready to receive data again, the communication module sends the XON character.
  - If the communication module receives the XOFF character during sending, it cancels the current send operation until it receives a XON again from its communication partner. If no XON is received within a specific configurable time, send operation is canceled and a corresponding error message is output.

Note

You can configure the characters for XON and XOFF (any ASCII character).

During parameter assignment of the XON/XOFF software data flow control, user data may not contain any of the configured XON or XOFF characters.

Hardware data flow control

Note

The DTR/DSR signals do not have to be wired for "Hardware RTS always ON, ignore DTR/DSR" parameter assignment.

If "Hardware RTS always ON" is configured, it is imperative that you fully wire the interface signals used. Make sure that the local RTS (out) is connected with the CTS (in) of the communication partner and the local CTS is connected with the RTS of the communication partner. Accordingly, the local DTR must be connected with the DSR of the communication partner and the local DSR with the DTR of the communication partner.

- **Hardware RTS always ON, ignore DTR/DSR**
  - As soon as the communication module has been set to an operating mode with "Hardware RTS always ON" through parameter assignment, it outputs the RTS = ON signal to the communication partner to indicate its ready state.
  - RTS is set to OFF as soon as the configured maximum number of frames or 16 characters before buffer overflow is reached.
    If the communication partner nonetheless continues to send data, an error message is generated on overflow of the receive buffer. Data received in the last frame is discarded.
  - RTS is reset to ON as soon as the frame has been fetched by the CPU and the receive buffer is ready to receive data again.
  - If CTS switches to OFF during the send operation, the communication module interrupts the send operation until CTS is reset to ON. If CTS is not reset to ON within a specific configurable time, the send operation is canceled and a corresponding error message is output.
- **Hardware RTS always ON**

  The "Hardware RTS always ON" mode corresponds to the "Hardware RTS always ON, ignore DTR/DSR" mode. However, you also need to wire DTR and DSR.
  - As soon as the communication module has been set set to an operating mode with "Hardware RTS always ON" through parameter assignment, it sets DTR = ON and RTS = ON to signal its general ready state to the communication partner.
  - RTS is set to OFF as soon as the configured maximum number of frames or 16 characters before buffer overflow is reached.
    If the communication partner nonetheless continues to send data, an error message is generated on overflow of the receive buffer. Data received in the last frame is discarded.
  - RTS is reset to ON as soon as the frame has been fetched by the CPU and the receive buffer is ready to receive data again.
  - If CTS switches to OFF during the send operation, the communication module interrupts the send operation until CTS is reset to ON. If CTS is not reset to ON within a specific configurable time, the send operation is canceled and a corresponding error message is output.
  - A switch from DSR = ON to DSR = OFF cancels an active send job and triggers an error message.

Automatic operation of secondary signals

- **Hardware RTS always switched**

  "Hardware RTS always switched" is implemented as follows on the communication module:

  – As soon as the communication module is set to the operating mode with "Hardware RTS always switched" through parameter assignment, it sets the line RTS to OFF and DTR to ON (communication module ready for operation).

    It is not possible to send frames until the DSR line is set to ON. No data is sent via the RS232C interface as long as DSR is set to OFF. A send job is canceled and a corresponding error message is generated.

  – If a send job is pending, RTS is set to ON and the configured data output wait time starts. On expiration of the data output time, the system checks whether the communication partner has set CTS to ON. If so, the data is sent via the RS232 interface.

  – If the CTS line is not set to ON within the data output time, or changes to OFF during the send operation, the send job is aborted and an error message generated.

  – Once the data has been sent and the configured clear RTS time has elapsed, the RTS line is set to OFF. The system does not wait for CTS to change to OFF.

  – It is always possible to receive data via the RS232 interface. There will be no reaction if there is a danger of the receive buffer of the communication module overflowing.

  – A switch from DSR = ON to DSR = OFF cancels an active send job and triggers an error message.

  Note

  Set the "data output wait time" in such a way that the communication partner is able to enter the ready to receive state before the time elapses.

  Set the "Clear RTS time" in such a way that the communication partner is able to receive the last characters of the frame completely before RTS is set to OFF and the send request is canceled.

Additional information

For information on the settings, refer to chapter Port configuration record - data record 57 (Page 52).

Note

Operation of DTR/DSR or RTS/CTS is accepted by the communication module with the following settings. Operation by means of Set RS232 secondary signals - data record 53 (Page 72) is impossible (any attempt made will trigger an error message):

- Hardware RTS always ON, ignore DTR/DSR
- Hardware RTS always ON
- Hardware RTS always switched

5.9 Communication via DMX512

You can use the ET 200SP CM PtP (from firmware version V1.0.5) communication module for communication via DMX512 (Digital Multiplex). For communication via DMX512, the use of the performance optimization option (Page 25) is also possible, provided you use the max. value 29_D as the highest address.

You can find more information on setting up a DMX512 connection in the FAQ with the entry ID 109778975 (https://support.industry.siemens.com/cs/ww/en/view/109778975) in Siemens Industry Online Support.

Data transmission with 3964(R) 6

6.1 Data transmission with 3964(R) protocol

Introduction

The 3964(R) protocol controls PtP data exchange between the communication module and a communication partner. The 3964(R) protocol contains both the physical layer (layer 1) and the link layer (layer 2).

6.2 Control characters

Introduction

During data transmission, the 3964(R) protocol adds control characters to the information data (link layer). The communication partner can use these control characters to check whether it has received all data completely and without errors.

Control characters of the 3964(R) protocol

The 3964(R) protocol evaluates the following control characters:

- **STX** Start of Text; start of the string to be sent
- **DLE** Data Link Escape
- **ETX** End of Text; end of the string to be sent
- **BCC** Block Check Character (only with 3964R)
- **NAK** Negative Acknowledge; negative response

Note

If the DLE character is transferred as an information character, it is sent twice during connection setup and shutdown (DLE duplication) in order to distinguish it from the DLE control character. The receiver reverses the DLE duplication.

Priority

For operation with 3964(R) protocol, one communication partner must be assigned a higher priority and one communication partner a lower priority. If both partners simultaneously start the connection setup, the partner having lower priority will postpone its send job.

6.3 Block checksum

Block checksum

With the 3964R transfer protocol, data security is enhanced by sending an additional block check character (BCC = Block Check Character).

The block checksum represents the even longitudinal parity (EXOR logic operation of all data bytes) of a sent or received block. Its calculation begins with the first byte of user data (first byte of the frame) after the connection establishment, and ends after the DLE ETX character at connection termination.

Note

With DLE duplication, the DLE character is included twice in the BCC calculation.

6.4 Sending data with 3964(R)

Connection setup for sending

The 3964(R) protocol sends the STX control character to set up the connection. The transition to send mode is initiated when the communication partner responds with the DLE character before the ACK delay time has expired.

The protocol retries to connect if the communication partner responds with NAK or any other character (except DLE or STX), or if inactivity triggers an acknowledgment timeout. After the parameterized number of unsuccessful retries to connect, the connection setup is canceled and the NAK character is transmitted to the communication partner. The communication module outputs a corresponding error message.

Sending data

On successful connection setup, the user data from the output buffer of the communication module and the selected transmission parameters are sent to the communication partner. The partner monitors the time intervals between incoming characters. The interval between two characters must not exceed the character delay time. Monitoring of the character delay time starts immediately after the connection was set up.

If the communication partner transmits an NAK while a transmission is busy, the block transmission is aborted and repeated as shown above starting with the connection setup. If any other character is received, a wait time for expiration of the character delay time is triggered and an NAK is then transmitted to set the communication partner to idle state. Transmission is then restarted with STX connection setup.

Connection shutdown during transmission

After the buffer content has been transmitted, the routine inserts the DLE, ETX characters, appends the BCC block checksum (only for 3964R) and waits for an ACK character. If the communication partner sends the DLE characters within the acknowledgment delay time, the data block has been received without errors. If the communication partner responds with NAK, or any other character (except DLE), or with a corrupt character, or if the acknowledgment delay time expires without response, the routine restarts transmission with STX connection setup.

After the parameterized number of retries to connect, the routine is aborted and NAK is transmitted to the communication partner. The communication module outputs a corresponding error message.

6.5 Receiving data with 3964(R)

Connection setup for receiving

While in idle state and not processing a send job, the module waits for the communication partner to set up the connection.

A wait time is started (wait time = acknowledgment delay time - 10 ms, however, maximum of 400 ms) if no free receive buffer is available during the connection setup with STX. An error message is generated if no free receive buffer is available on expiration of this time. An NAK is transmitted and initiates the transition to idle state. Otherwise, the DLE character is transmitted and the data is received as described above.

The acknowledgment delay time should be set to the same value at both communication partners.

If any character (except for STX or NAK) is received in idle state, the routine waits for expiration of the character delay time (CDT) and then transmits the NAK character. The communication module outputs a corresponding error message.

Receiving data

After successful connection setup, the incoming receive characters are saved to the receive buffer. If two consecutive DLE characters are received, only one of these is saved to the receive buffer.

After connection setup and after each receive character, the routine waits for the next character within the character delay time. If this period expires before another character is received, an NAK is sent to the communication partner. The communication module outputs a corresponding error message. A retry is then expected.

If transfer errors occur during receiving (lost character, frame error, parity error, etc.), the procedure continues to receive data until the connection is terminated and then sends an NAK to the communication partner. A retry is then expected. Receiving is aborted if the block cannot be received without errors after the specified number of transmission retries, or if the communication partner fails to retry transmission within a block delay time of 4 seconds. The communication module reports the first corrupted transfer and the final cancelation.

Connection setup for receiving

Once the DLE ETX string is detected, receiving is terminated and DLE is transmitted to the communication partner for a block that was received without error. In the case of a receive error, an NAK is sent to the communication partner. A retry is then expected.

Receiving is stopped once the DLE ETX BCC string is detected. The BCC is compared with the internally generated longitudinal parity. DLE is transmitted (return to idle state) if the BCC is correct and no other receive error is pending. If the BCC is faulty or a different receive error occurs, an NAK is sent to the communication partner. A retry is then expected.

Configuration data records 7

7.1 Freeport communication

The following three configuration data records must be sent to the communication module for Freeport communication.

7.1.1 Port configuration record - data record 57

Note

Parameter assignment error

If the communication module detects a parameter assignment error when writing the data record 57, the data record is rejected with error status 80E1H.

The corresponding cause of error can be read by means of data record "Read Error Status - data record 55" (error codes of the port configuration).

Port configuration: PORT_CFG (Write Record 0039H)								
Bit->	**7**	**6**	**5**	**4**	**3**	**2**	**1**	**0**
Byte								
0	Block type: 0039H – PORT_CFG							
1								
2	Block length: 0018H							
3								
4	Block version high byte: 01H							
5	Block version low byte: 00H							
6	Reserved[1]							
7								
°	Protocol:							
8	0000H – Freeport protocol							
9	0001H – 3964 protocol 0002H through FFFFH – Reserved							

Port configuration: PORT_CFG (Write Record 0039_H)			
°	Data transmission rate:		
10 **11**	0000_H - Reserved 0001_H - 300 bit/s 0002_H - 600 bit/s 0003_H - 1.2 kbit/s 0004_H - 2.4 kbit/s 0005_H - 4.8 kbit/s 0006_H - 9.6 kbit/s	0007_H - 19.2 kbit/s 0008_H - 38.4 kbit/s 0009_H - 57.6 kbit/s $000A_H$ - 76.8 kbit/s $000B_H$ - 115.2 kbit/s $000C_H$ – 250 kbit/s[2] $000D_H$ through $FFFF_H$ – Reserved	
°	Parity:		
12 **13**	0000_H - Reserved 0001_H - None 0002_H - Even 0003_H - Odd 0004_H - Mark (set parity bit to 1) 0005_H - Space (set parity bit to 0) 0006_H - Any (The parity is not checked during receiving. The parity is always set to "0" during sending.) 0007_H through $FFFF_H$ - Reserved		
°	Data bits:		
14 **15**	0000_H - Reserved 0001_H - 8 data bits per character 0002_H - 7 data bits per character 0003_H through $FFFF_H$ - Reserved		
°	Stop bits:		
16 **17**	0000_H - Reserved 0001_H - 1 stop bit 0002_H - 2 stop bits 0003_H through $FFFF_H$ - Reserved		
°	Data flow control:		
18 **19**	RS232 settings: 0000_H - Reserved 0001_H - None 0002_H - XON/XOFF 0003_H - Hardware RTS always ON, DSR required 0004_H - Hardware RTS always switched, DSR required 0005_H - Hardware RTS always ON, ignore DTR/DSR 0006_H through $FFFF_H$ - Reserved	RS485 settings: 0000_H - Reserved 0001_H - None 0002_H through $FFFF_H$ - Reserved	RS422 settings: 0000_H - Reserved 0001_H - None 0002_H - XON/XOFF 0003_H through $FFFF_H$ - Reserved
20	XON: 00_H through FF_H - XON character		
21	XOFF: 00_H through FF_H - XOFF character		
22 **23**	Wait for XON after XOFF in ms: (0000_H through $FFFF_H$)		

Port configuration: PORT_CFG (Write Record 0039H)	
24	Operating mode:
	00H - RS232 01H - RS422 full duplex four-wire mode (point-to-point) 02H - RS422 full duplex (RS422) four-wire mode (multipoint master) (CM PtP (ET 200SP)) 03H - Full duplex (RS422) four-wire mode (multipoint slave) (CM PtP (ET 200SP)) 04H - Half duplex (RS485) two-wire operation 05H through FFH - Reserved
25	Receive line default:
	00H - "No" default setting 01H -Signal R(A)=5 V, signal R(B)=0 V (break detection): Break detection is possible with this default setting. Can only be selected with: "Full duplex (RS 422) four-wire mode (point-to-point connection)" and "Full duplex (RS 422) four-wire mode (multipoint slave)". 02H - Signal R(A)=0 V, Signal R(B)=5 V: This default corresponds to the idle state (no active send operation). No break detection is possible with this default setting. 03H through FFH - Reserved
26	Break detection:
	00H - Break detection deactivated 01H - Break detection activated 02H through FFH - Reserved
27	Reserved[1]

[1] Reserved bits must be set to 0.

[2] Available as of firmware version V1.0.5 of the communication module and only for RS485 mode

7.1.2 Send configuration record - data record 59

Note

Parameter assignment error

If the communication module detects a parameter assignment error when writing the data record 59, the data record is rejected with error status 80E1H.

The corresponding cause of error can be read by means of data record "Read Error Status - data record 55" (error codes of the send configuration).

Send configuration: SEND_CFG (Write Record 003BH)								
Bit->	**7**	**6**	**5**	**4**	**3**	**2**	**1**	**0**
Byte								
0	Block type 003BH – SEND_CFG							
1								
2	Block length: 001CH							
3								
4	Block version high byte: 01H							
5	Block version low byte: 00H							
6	Reserved[1]							
7								
8	RTS ON delay in ms: (0000H through FFFFH) (not available for RS422/485 modules)							
9								
10	RTS OFF delay in ms: (0000H through FFFFH) (not available for RS422/485 modules)							
11								
12	Break duration in bit times: (0000H through FFFFH)							
13								
14	Idle Line duration in bit times: (0000H through FFFFH)							
15								
16	Reserved[1]							
17								
°	Number of end delimiters: USR_END							
18	02H							
19	Number of end delimiters (0, 1 or 2)							
20	First end delimiter (for number of end delimiters = 1 or 2)							
21	Second end delimiter (for number of end delimiters = 2)							

Send configuration: SEND_CFG (Write Record 003B$_H$)	
°	Number of appended characters: APP_END
22	05$_H$
23	Number of appended characters (0, 1, 2, 3, 4 or 5)
24	First appended character (for number of appended characters = 1, 2, 3, 4 or 5)
25	Second appended character (for number of appended characters = 2, 3, 4 or 5)
26	Third appended character (for number of appended characters = 3, 4 or 5)
27	Fourth appended character (for number of appended characters = 4 or 5)
28	Fifth appended character (for number of appended characters = 5)
29	Reserved[1]
30	
31	

[1] Reserved bits must be set to 0.

7.1.3 Receive configuration record - data record 60

Note

Parameter assignment error

If the communication module detects a parameter assignment error when writing the data record 60, the data record is rejected with error status 80E1H.

The corresponding cause of error can be read by means of data record "Read Error Status - data record 55" (error codes of the receive configuration).

Note

End sequence #1 character check (bytes 56 to 61) - Note sequence

If **one** end delimiter is to be used, the entry **must** be made in "Character #5" (byte 61) and only this character must be activated in "Character #5" (byte 56).

If **two** end delimiters are to be used, the entry **must** be made in "Character #5" (byte 61) and in "Character #4" (byte 60) and only these characters must be activated in "Character #5" and "Character #4" (byte 56).

The same applies to the use of additional characters.

Receive configuration: RCV_CFG (Write Record 003CH)								
Bit->	**7**	**6**	**5**	**4**	**3**	**2**	**1**	**0**
Byte								
0	Block type: 003CH – RCV_CFG							
1								
2	Block length: 0040H							
3								
4	Block version high byte: 01H							
5	Block version low byte: 00H							
6	Reserved[1]							
7								
°	Start conditions:							
8	Reserved[1]							
9	Sequence #4[2]	Sequence #3[2]	Sequence #2[2]	Sequence #1[2]	Idle Line[2]	Break detection[2]	Any character[2]	Start character[2]
10	Idle Line duration in bit times: 0000H through FFFFH							
11								
12	Start characters: 00H through FFH							

Receive configuration: RCV_CFG (Write Record 003CH)						
°	Frame start sequence #1 character check					
13	Reserved[1]	Character #5[2]	Character #4[2]	Character #3[2]	Character #2[2]	Character #1[2]
14	Character #1: 00H through FFH					
15	Character #2: 00H through FFH					
16	Character #3: 00H through FFH					
17	Character #4: 00H through FFH					
18	Character #5: 00H through FFH					
°	Frame start sequence #2 character check					
19	Reserved[1]	Character #5[2]	Character #4[2]	Character #3[2]	Character #2[2]	Character #1[2]
20	Character #1: 00H through FFH					
21	Character #2: 00H through FFH					
22	Character #3: 00H through FFH					
23	Character #4: 00H through FFH					
24	Character #5: 00H through FFH					
°	Frame start sequence #3 character check					
25	Reserved[1]	Character #5[2]	Character #4[2]	Character #3[2]	Character #2[2]	Character #1[2]
26	Character #1: 00H through FFH					
27	Character #2: 00H through FFH					
28	Character #3: 00H through FFH					
29	Character #4: 00H through FFH					
30	Character #5: 00H through FFH					
°	Frame start sequence #4 character check					
31	Reserved[1]	Character #5[2]	Character #4[2]	Character #3[2]	Character #2[2]	Character #1[2]
32	Character #1: 00H through FFH					
33	Character #2: 00H through FFH					
34	Character #3: 00H through FFH					
35	Character #4: 00H through FFH					
36	Character #5: 00H through FFH					
37	Reserved[1]					

Receive configuration: RCV_CFG (Write Record 003CH)								
°	End conditions:							
38	Reserved[1]							
39	Reserved[1]	Fixed frame length[2]	Sequence #1[2]	Read length[2]	Maximum frame length	Character delay time[2]	Message timeout[2]	Response timeout[2]
40	Fixed frame length: 0001H through 0xxxH[3]							
41								
42	Maximum frame length: 0001H through 0xxxH[3]							
43								
44	Offset of the length field in the message: 0000H through 0xxxH[3]							
45								
46	Size of the length field: 01H, 02H, 04H - all other values are not permitted							
47								
48	Number of characters not counted in length specification: 00H through FFH							
49								
50	Response timeout in ms: 0000H through FFFFH							
51								
52	Message timeout in ms: 0000H through FFFFH							
53								
54	Character delay time in bit times: 0000H through FFFFH							
55								
°	End sequence #1 character check							
56	Reserved[1]			Character #5[2]	Character #4[2]	Character #3[2]	Character #2[2]	Character #1[2]
57	Character #1: 00H through FFH							
58	Character #2: 00H through FFH							
59	Character #3: 00H through FFH							
60	Character #4: 00H through FFH							
61	Character #5: 00H through FFH							
62	Maximum number of buffered received frames:							
	00H - Reserved 01H through FFH - 1 through 255							
63	Prevent overwriting:							
	00H - Deactivated (on receive buffer overflow, a new message overwrites the oldest message)01H - Activated (on receive buffer overflow, the new message is discarded) 02H through FFH - Reserved							
64	Clear receive buffer at startup:							
	00H - Deactivated 01H - Activated 02H through FFH - Reserved							
65	Reserved[1]							
66								
67								

1 Reserved bits must be set to 0.

2 You enable the respective parameter by setting the associated bit to 1.

3 Buffer size depends on the communication module used.

7.2 3964 communication

The following two configuration data records must be transferred to the communication module for 3964 communication:

7.2.1 Port configuration record - data record 57

Note

The "Port configuration record" is described in chapter Port configuration record - data record 57 (Page 44).

7.2.2 3964 protocol configuration - data record 61

Note

Parameter assignment error

If the communication module detects a parameter assignment error when writing the data record 61, the data record is rejected with error status 80E1H.

The corresponding cause of error can be read by means of data record "Read Error Status - data record 55" (error codes of the 3964 protocol).

3964 protocol configuration: P3964 (Write Record 003DH)								
Bit->	**7**	**6**	**5**	**4**	**3**	**2**	**1**	**0**
Byte								
0	Block type: 003DH – P3964							
1								
2	Block length: 000CH							
3								
4	Block version high byte: 01H							
5	Block version low byte: 00H							
6	Reserved[1]							
7								
8	3964(R) - With block check:							
	00H - Deactivated 01H - Activated 02H through FFH - Reserved							
9	3964(R) priority:							
	00H - Low priority 01H - High priority 02H through FFH - Reserved							

3964 protocol configuration: P3964 (Write Record 003D$_H$)	
°	3964(R) character delay time:
10	0000$_H$ through 0013$_H$ - Reserved
11	0014$_H$ through FFFF$_H$ - 20 to 65535 ms Default: 00DC$_H$ - 220 ms
°	3964(R) acknowledgment delay time:
12	0000$_H$ through 0013$_H$ - Reserved
13	0014$_H$ through FFFF$_H$ - 20 to 65535 ms Default: 07D0$_H$ - 2000 ms
14	3964(R) connection attempts:
	00$_H$ - Reserved 01$_H$ through FF$_H$ - 1 to 255 connection attempts Default: 06$_H$ - 6 connection attempts
15	3964(R) transmission attempts:
	00$_H$ - Reserved 01$_H$ through FF$_H$ - 1 to 255 transmission attempts Default: 06$_H$ - 6 transmission attempts

[1] Reserved bits must be set to 0.

7.3 Activate special function - data record 58

The following data record can be used to activate diagnostic interrupts (write) and check whether diagnostic interrupts are activated (read).

Note

Parameter assignment error

If the communication module detects a parameter assignment error when writing the data record 58, the data record is rejected with error status 80E1$_H$.

The corresponding cause of error can be read by means of data record "Read Error Status - data record 55" (error codes of the special functions).

Activate special function: PtP SET_FTRS (Write Record 003AH)								
Bit->	**7**	**6**	**5**	**4**	**3**	**2**	**1**	**0**
Byte								
0	Block type: 003A$_H$ – SET_FTRS							
1								
2	Block length: 0008$_H$							
3								
4	Block version high byte: 01$_H$							
5	Block version low byte: 00$_H$							
6	Reserved[1]							
7								

Activate special function: PtP SET_FTRS (Write Record 003AH)	
8	
9	Diagnostics interrupt:
	00_H - Deactivated 01_H - Activated 02_H through FF_H - Reserved
10	Reserved[1]
11	

[1] Reserved bits must be set to 0.

Error status

8

The following data record contains the acknowledgment of the communication module to the writing a configuration data record.

8.1 Read error status - data record 55

Read Error Status: PtP RD_ESTAT (Read Record 0037H)								
Bit->	**7**	**6**	**5**	**4**	**3**	**2**	**1**	**0**
Byte								
0	Block type: 0037H – RD_ESTAT							
1								
2	Block length: 0010H							
3								
4	Block version high byte: 01H							
5	Block version low byte: 00							
6	Reserved[1]							
7								
8	Error codes of the special functions							
9								
10	Error codes of the port configuration							
11								
12	Error codes of the send configuration							
13								
14	Error codes of the receive configuration							
15								
16	Error codes of the RS32 secondary signals							
17								
18	Error codes of the 3964 protocol							
19								

[1] Reserved bits must be set to 0.

A list of all error codes is available in chapter Error messages (Page 74).

Sending data

9

9.1 Sending data using data record

9.1.1 Flow chart for sending using data record

Users can send data based on the sequence outlined below. Management data and send data is transmitted to the communication module by means of a special data record. The communication module provides the acknowledgment in the input data.

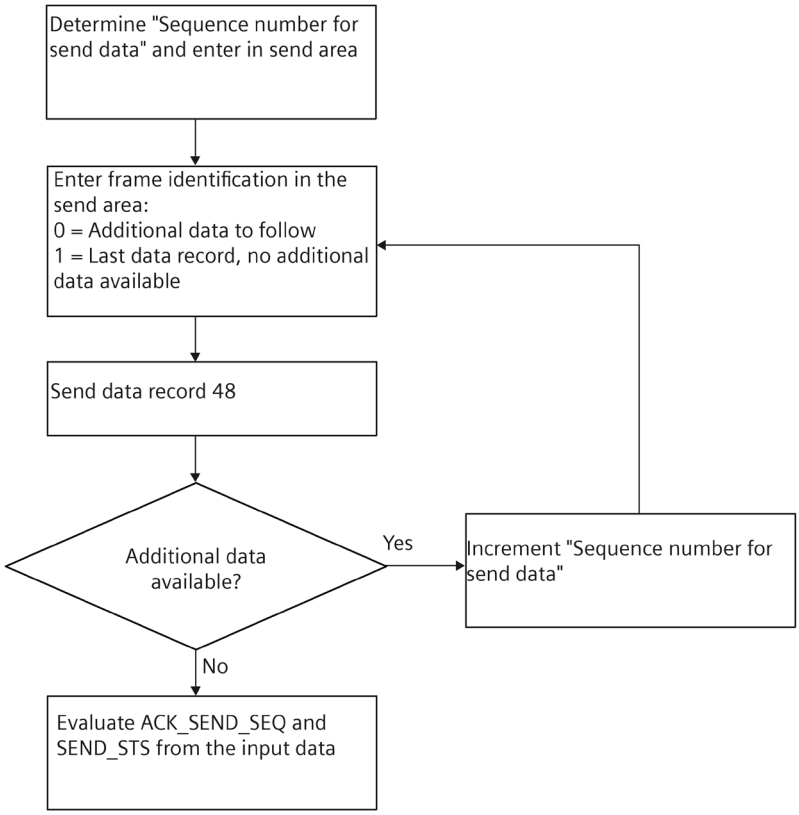

9.1.2 Send data - data record 48

The following data record is used to write send data to the communication module:

Sending data: SEND_PTP Record (Write Record 0030H)								
Byte ↓	Bit 7	Bit 6	Bit 5	Bit 4	Bit 3	Bit 2	Bit 1	Bit 0
0	Sequence number for send data (1 to 255)							
1	Frame end identifier (0 or 1)							
2	Data to transmit byte 0							
: :	: :							

Sequence number for send data

The sequence number for send data identifies a new send frame or a new data record of a frame. The acknowledgment by the module in the input data (Page 59) must be read as first sequence number and incremented by the count of one. For the first data record, the sequence number therefore starts with 1 after a STOP-RUN transition of the CPU. It is then incremented by one for each data record with new content.

The value "0" may not be used as sequence number for send data. as it serves to detect the start of the module. The maximum value 255 is therefore followed by 1.

Frame end identifier

The frame end identifier serves to identify the last data record belonging to a frame.

- 0 means: At least one more data record follows for the current frame.
- 1 means: This data record is the last one for the current frame.

Data to transmit

The data must be stored in the data record as of "Data to transmit byte 0". The size and therefore the number of data records for transmitting a frame is defined by the transmission medium:

- PROFINET: 1, 2, or 4 KB, depending on the communication module
- PROFIBUS: 240 bytes

If the length of the data to transmit is not a multiple of the data record length, the length of the last data record corresponds to the length of the remaining data to transmit.

Acknowledgment from module

The module writes the sequence number received in the data record as acknowledgment to the net data (Page 59).

For the last data record belonging to a frame,the acknowledgment is not written until the module has sent the frame.

This acknowledgment (ACK_SEND_SEQ) must therefore be evaluated along with SEND_STS after the last data record was written.

Startup characteristics

During startup, the module writes to the input data "ACK_SEND_SEQ = 0" (Page 59).

A busy job must be aborted when ACK_SEND_SEQ = 0.

9.1.3 Request acknowledgment - Input data

The acknowledgment is entered by the communication module in ACK_SEND_SEQ in the input data. The input data has the following structure:

Byte ↓	Bit 7	Bit 6	Bit 5	Bit 4	Bit 3	Bit 2	Bit 1	Bit 0
0	: :	MODE[1]	:					
1	ACK_SEND_SEQ							
2	SEND_STS							
3								
4	:							
5	:							
6								
7								

[1] This bit is used for the plausibility check:
0_B: Universal
1_B: Performance option

Before sending a new frame, the feedback of the communication module must be received in the input data.

When the following feedback is received in the input data, the last send frame was sent without errors and the module is ready to accept the next frame:

- ACK_SEND_SEQ = Last "sequence number for send data"
- SEND_STS = 0

When SEND_STS ≠ 0, the last send frame was not sent without errors. In this case, you can find the meaning of the SEND_STS value in the section Error messages (Page 74).

Reaction of the module to an unexpected sequence number

The module rejects a data record with an unexpected sequence number for send data when writing the data record and returns the error message $80B8_H$. In SEND_STS, the value $81D7_H$ can be found in the input data. In this case, active communication must be canceled and transmission with the first data record (Page 57) must be repeated.

The send request is discarded, the incorrect sequence number is applied (if it is not 0) and incremented from this value.

9.1.4 Example

A frame with a length of 500 bytes is to be transmitted. The data record has a length of 240 bytes.

- First data record, length of 240 bytes:

  "Sequence number for send data" = 1

  "Frame end identifier" = 0

  238 bytes user data

- Second data record, length of 240 bytes:

  "Sequence number for send data" = 2

  "Frame end identifier" = 0

  238 bytes user data

- Third data record, length of 26 bytes

  "Sequence number for send data" = 3

  "Frame end identifier" = 1

  24 bytes user data

- Wait for feedback from the communication module; see Request acknowledgment - Input data (Page 59).

Afterwards, a frame with a length of 100 bytes is to be transmitted.

- First = last data record, length of 102 bytes:

  "Sequence number for send data" = 4

  "Frame end identifier" = 1

  100 bytes user data

- Wait for feedback from the communication module; see Request acknowledgment - Input data (Page 59).

9.2 Sending data via output data

9.2.1 Flow chart for sending using output data

Users can send data based on the sequence outlined below. Management data and send data is transmitted to the communication module using output data. The communication module provides the acknowledgment in the input data.

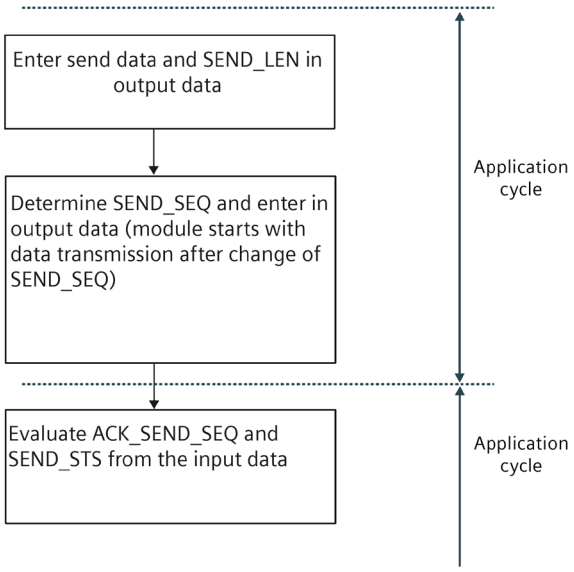

9.2.2 Output data when using the Performance option

When using the Performance option, the send data is written to the communication module via the output data.

Output data

The following table shows the assignment of the output data:

Byte ↓	Bit 7	Bit 6	Bit 5	Bit 4	Bit 3	Bit 2	Bit 1	Bit 0
0	SEND_SEQ							
1	ACK_RCV_ RECORD	SEND_LEN						
2	Data to transmit byte 0							
3	Data to transmit byte 1							
: :	: :							
30	Data to transmit byte 28							
31	Data to transmit byte 29							

SEND_SEQ

SEND_SEQ is the sequence number for send data and identifies a new send frame. In case of a change of SEND_SEQ, the communication module adopts the SEND_LEN value and the data to be transmitted and starts with the serial data transmission.

The SEND_SEQ value for the first send job after a STOP-RUN transition of the CPU is "1". For each additional send frame, the acknowledgment (Page 63) in the input data must be read and this value must then be incremented for SEND_SEQ by the count of one.

The value "0" may not be used. As it serves to detect the STOP-RUN transition of the CPU. The maximum value 255 is therefore followed by 1.

ACK_RCV_RECORD

After receiving a new sequence number for receive data (RCV_SEQ), the ACK_RCV_RECORD bit must be toggled in the output data to acknowledge receipt of the data. Afterwards, the communication module can once again send new input data.

SEND_LEN

SEND_LEN specifies the length of the data to be transmitted (1 to 30 bytes).

Data to transmit

The data to be transmitted contains the send frame whose length is limited to 30 bytes. The data must be stored as of "Data to transmit byte 0".

Acknowledgment from module

The module writes the received sequence number to ACK_SEND_SEQ in the input data (Page 63) as acknowledgment and confirmation that it is ready to accept the next send frame.

9.2.3 Request acknowledgment - Input data

The acknowledgment is entered by the communication module in ACK_SEND_SEQ in the input data. The input data has the following structure:

Byte ↓	Bit 7	Bit 6	Bit 5	Bit 4	Bit 3	Bit 2	Bit 1	Bit 0
0	: :	MODE[1]	: :					
1	ACK_SEND_SEQ							
2	SEND_STS							
3								
4	: :							

[1] This bit is used for the plausibility check:
0_B: Universal
1_B: Performance option

Before sending a new frame, the feedback of the communication module (acknowledgment) must be received in the input data.

When the following feedback is received, the last send frame was sent without errors and the module is ready to accept the next frame:

- ACK_SEND_SEQ = Last sequence number for SEND_SEQ
- SEND_STS = 0

When SEND_STS ≠ 0, the last send frame was not sent without errors. In this case, you can find the meaning of the SEND_STS value in the section Error messages (Page 74).

Reaction of the module to an early send job

If you do not wait for the send acknowledgment, the module writes the value $81D0_H$ in SEND_STS as long as the current send job is active. The communication module initially postpones the new send job and continues with it as soon as the current send job is completed.

Reaction of the module to an unexpected sequence number

The module rejects an unexpected sequence number for send data. In SEND_STS, the value $81D7_H$ can be found.

The send request is discarded, the incorrect sequence number is applied (if it is not 0) and incremented from this value.

Receiving data

10

10.1 Receiving data using data record

10.1.1 Flow chart for receiving using data record

Users can receive data based on the sequence outlined below. The communication module signals the availability of new received data in the input data. The communication module provides management and receive data in a special data record.

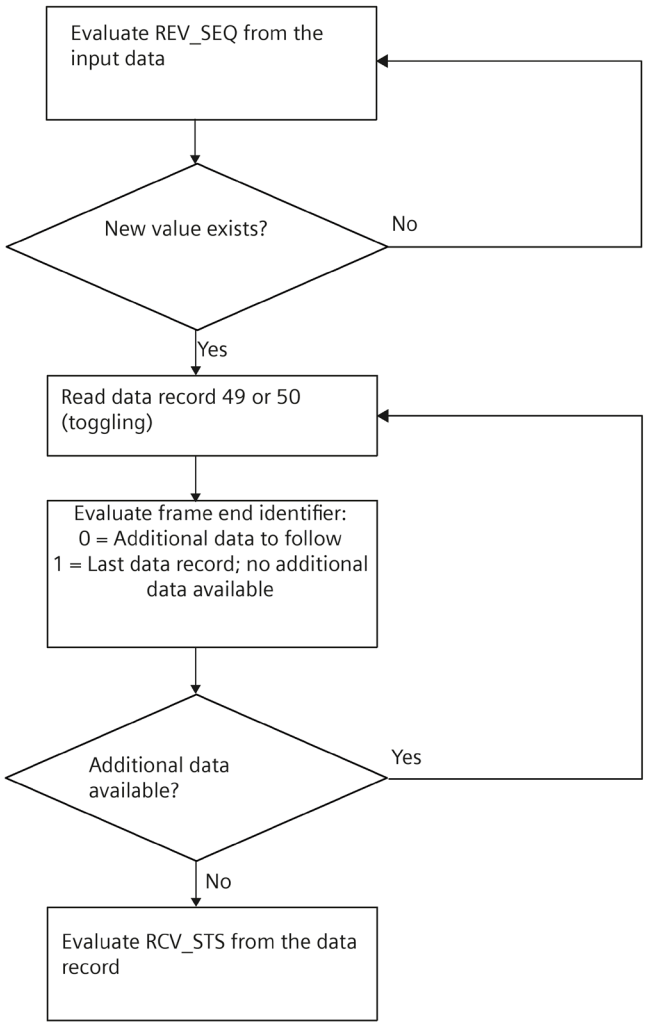

10.1.2 Data received - data record 49/50

A new value for RCV_SEQ in the input data (Page 66) indicates a new frame is ready for reading in the communication module.

The following data records are used to read receive data from the communication module:

Receiving data: RCV_PTP Record (Read Record 0031H/0032H)								
Byte ↓	**Bit 7**	**Bit 6**	**Bit 5**	**Bit 4**	**Bit 3**	**Bit 2**	**Bit 1**	**Bit 0**
0	Sequence number for this data record (1 to 255)							
1	Frame end identifier (0 or 1)							
2	RCV_STS							
3								
4	Receive data byte 0							
: :	: :							

Change of the data record number when receiving data

After startup of the communication module, reading of the frame content must start with the data record number 31H. You must then toggle the data record number with each read process.

Sequence number of this data record

The "Sequence number of this data record" is equal to RCV_SEQ for the first data record of a frame in the input data (Page 66) that were displayed by the new frame. This value is incremented by the count of one for each data record read subsequently. An overflow to 2 is triggered at 255. The values 0 and 1 have a special significance.

Frame end identifier

The frame end identifier is equal to 1 for the last data record that has to be read for this frame, while it is 0 for all other data records.

The size of the last data record that belongs to a frame is determined by the frame length and limited accordingly by the communication module.

RCV_STS

RCV_STS displays the result of the data reception.

- 009xH: Frame received without error
- 8xxxH: Frame received with error

See chapter Error messages (Page 74).

10.1.3 Query: New receive frame - Input data

Sequence number for receive data

A new received frame is indicated by a sequence number for receive data in byte 4 of the input data.

Byte ↓	Bit 7	Bit 6	Bit 5	Bit 4	Bit 3	Bit 2	Bit 1	Bit 0
0	: :	MODE[1]	:					
1	:							
2	:							
3								
4	RCV_SEQ							
5	: :							
6	RCV_STS							
7								

[1] This bit is used for the plausibility check:
0_B: Universal
1_B: Performance option

RCV_SEQ

RCV_SEQ contains the sequence number of the first data record of the frame currently being received by the module.

The values 0 and 1 have special meanings:

RCV_SEQ = 0:

- The communication module has performed a restart after power on and that no frame has been received yet.

RCV_SEQ = 1:

- This is the first frame after power on of the communication module. Reading of the frame content must start with the data record number 31_H.

A busy job must be aborted in both cases.

RCV_STS

In RCV_STS, you can read status information and an error number in case of an error (Page 74).

10.1.4 Example

A frame with a length of 500 bytes was received. The data record has a length of 240 bytes

- In the user data, the frame is indicated by "Sequence number for RCV" = 1.
- You read the data record 0031_H which includes:

  "Sequence number of this data record" = 1

  "Frame end identifier" = 0

  "RCV status or error code" = $009x_H$ [1)]

  It contains 236 bytes of user data.
- You read the second data record 0032_H which includes:

  "Sequence number of this data record" = 2

  "Frame end identifier" = 0

  "RCV status or error code" = $009x_H$ [1)]

  It contains 236 bytes of user data.
- You read the third data record 0031_H which includes:

  "Sequence number of this data record" = 3

  "Frame end identifier" = 1

  "RCV status or error code" = $009x_H$ [1)]

  It contains 28 bytes of user data. The communication module has limited the data record length to 32 bytes.

  This completes reading of the first frame from the CM.

A frame with a length of 100 bytes was received subsequently.

The sequence number for RCV changes from 1 to 4 in the user data.

- You read the data record 0032_H which includes:

  "Sequence number of this data record" = 4

  "Frame end identifier" = 1

  "RCV status or error code" = $009x_H$ [1)]

  The data record contains 100 bytes of user data and the communication module has limited the data record length to 104 bytes.

1) 0x009x Frame received without error
   0x8xxx Frame received with error
   (see error codes in chapter Query: New receive frame - Input data (Page 66))

10.2 Receiving data via input data

10.2.1 Flow chart for receiving via input data

Users can receive data based on the sequence outlined below. The communication module provides management and receive data in the input data.

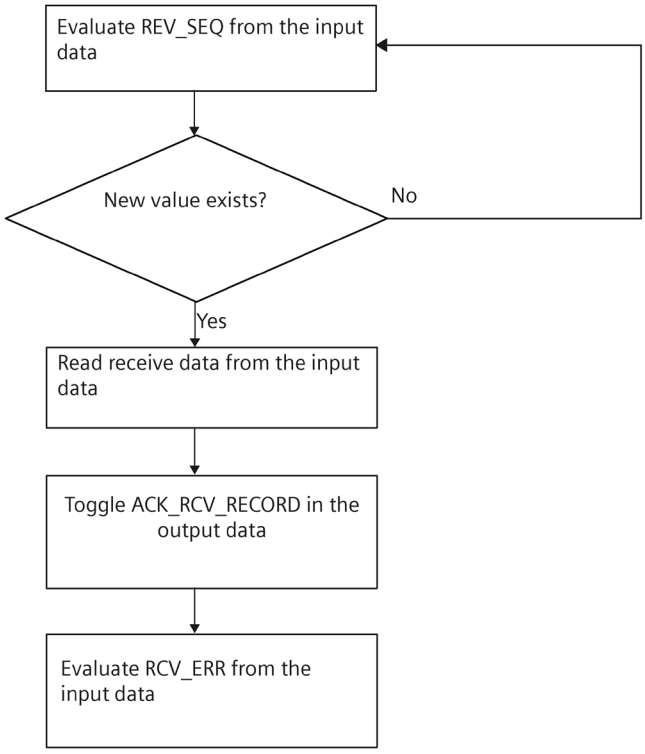

10.2.2 Input data when using the Performance option

When using the Performance option, the receive data is read from the communication module via the input data.

Input data

The following table shows the assignment of the input data:

Byte ↓	Bit 7	Bit 6	Bit 5	Bit 4	Bit 3	Bit 2	Bit 1	Bit 0
0	SGN_STAT	MODE	Ring_ Status	DCD_ Status	CTS_ Status	RTS_ Status	DSR_ Status	DTR_ Status
1	ACK_SEND_SEQ							
2	SEND_STS							
3								
4	RCV_SEQ							
5	RCV_ Record	RCV_LEN						
6	RCV_STS							
7								
8	Receive data byte 0							
9	Receive data byte 1							
: :	: :							
30	Receive data byte 22							
31	Receive data byte 23							

SGN_STAT

This bit indicates whether RS232 secondary signals (Page 73) are available in the current operating mode of the communication module.

MODE

This bit is used for the plausibility check of the data exchange type:

MODE = 0: Universal (data communication via data record)

MODE = 1: Performance option (data communication via net data)

ACK_SEND_SEQ

The module acknowledges an executed send job by writing the associated sequence number in ACK_SEND_SEQ.

The module thus confirms that it is ready to execute the next send job.

RCV_SEQ

RCV_SEQ contains the sequence number of the frame currently shown in the input data and received by the module. This value is incremented by the count of one for each frame read subsequently. An overflow to 2 is triggered at 255.

The values 0 and 1 have special meanings:

RCV_SEQ = 0:

- The communication module has performed a restart after power on and that no frame has been received yet.

  or

- The receive buffer was cleared.

RCV_SEQ = 1:

- This is the first frame after power on of the communication module.

  or

- This is the first frame after clearing the receive buffer.

Acknowledge receipt of data

When a new frame with a new sequence number RCV_SEQ was received by the module, the receive data is read out. The ACK_RCV_RECORD bit must then be toggled in the output data to acknowledge receipt of the data. Afterwards, the communication module can write a new frame to the input data again.

RCV_RECORD

RCV_RECORD returns the value that was last received by the communication module in the ACK_RCV_RECORD bit in the output data.

RCV_LEN

RCV_LEN contains the length of the received data (1 to 24 bytes).

SEND_STS

In SEND_STS, you can read status information and an error number in case of an error (Page 74).

RCV_STS

RCV_STS displays the result of the data reception.

- 009x$_H$: Frame received without error
- 8xxx$_H$: Frame received with error

See chapter Error messages (Page 74).

Clear receive buffer

11

11.1 Clear receive buffer - data record 54

The receive buffer of the communication module is cleared by writing the following data record.

Delete receive buffer: PtP RCV_RST (Write Record 0036H)								
Bit->	**7**	**6**	**5**	**4**	**3**	**2**	**1**	**0**
Byte								
0	Block type: 0036H – RCV_RST							
1								
2	Block length: 0008H							
3								
4	Block version high byte: 01H							
5	Block version low byte: 00H							
6	Reserved[1]							
7								
8	0	0	0	0	0	0	0	1
9	Reserved[1]							
10								
11								

[1] Reserved bits must be set to 0.

MODE = Universal:

The communication module does not acknowledge the reset of its receive buffer.

MODE = Performance option:

Clearing of the receive buffer is signaled back with RCV_SEQ = 0.

RS232 signals

12

12.1 Set RS232 secondary signals - data record 53

The RS232 secondary signals of the communication module are manipulated by writing to the following data record, provided the communication module supports this action in the current mode.

Note

Parameter assignment error

If the communication module detects a parameter assignment error when writing the data record 53, the data record is rejected with error status 80E1H.

The corresponding cause of error can be read by means of data record "Read Error Status - data record 55" (error codes of the RS232 secondary signals).

Set RS232 accompanying signals: PtP SGN_SET (Write Record 0035H)								
Bit->	**7**	**6**	**5**	**4**	**3**	**2**	**1**	**0**
Byte								
0	Block type: 0035H - SGN_SET							
1								
2	Block length: 0008H							
3								
4	Block version high byte: 01H							
5	Block version low byte: 00H							
6	Reserved[1]							
7								
8	Reserved[1]					Set_DSR_ State	Set_DTR_ State	Set_RTS_ State
9	Reserved[1]					DSR_State[2]	DTR_State	RTS_State
10	Reserved[1]							
11								

[1] Reserved bits must be set to 0.

[2] Only available with interface type DCE

Note:

Set_xxx_State = 0: the status of the specified control bit is not changed.

Set_xxx_State = 1: the status of the specified control bit must be set to the value that was specified by xxx_State.

For information on reading the acknowledgment to the writing of this data record, refer to chapter "Error status (Page 55)".

12.2 Read RS232 secondary signals - Input data

The RS232 secondary signals of the communication module can be read in the input data.

Byte ↓	Bit 7	Bit 6	Bit 5	Bit 4	Bit 3	Bit 2	Bit 1	Bit 0
0	SGN_STAT	Mode	Ring_ Status	DCD_ Status	CTS_ Status	RTS_ Status	DSR_ Status	DTR_ Status
: :	: :							

SGN_STAT

This bit indicates whether RS232 secondary signals are available in the current operating mode of the communication module:

- SGN_STAT = 0: RS232 secondary signals not available
- SGN_STAT = 1: RS232 secondary signals available

Ring_Status

This bit indicates the status of the RS232 secondary signal RI (ring indicator).

DCD_Status

This bit indicates the status of the RS232 secondary signal DCD (data carrier signal detected).

CTS_Status

This bit indicates the status of the RS232 secondary signal CTS (send permission).

RTS_Status

This bit indicates the status of the RS232 secondary signal RTS (send request).

DSR_Status

This bit indicates the status of the RS232 secondary signal DSR (ready state of the communication partner).

DTR_Status

This bit indicates the status of the RS232 secondary signal DTR (ready state of the communication module).

Error messages

13

Overview of the status and error messages

Code	Description	Remedy
0000H	No error	-
RECEIVE status and error codes		
0094H	Frame end identified based on the "Receipt of fixed/maximum frame length"	-
0095H	Frame end identified based on "Message timeout"	-
0096H	Frame end identified based on expiration of the "Character delay time"	-
0097H	No response frame was received within the parameterized maximum response time.	-
0098H	Frame end identified based on the fulfillment of the "Read message length from message" conditions	-
0099H	Frame end identified based on the receipt of the "End sequence"	-
SEND status and error codes		
7001H	Initial call for a new frame: Data record transmission initiated	-
7002H	Interim call: Data record transmission in process	-
8085H	Invalid length specification	Select a suitable frame length. • Communication using data record: Depending on the module, the following are permissible: 1 ... 1024/2048/4096 bytes • Communication using net data: Maximum length is 30 bytes.
8087H	The number of characters received by the module exceeds the number supported for performance optimization.	Select a suitable frame length or use communication via data record. For performance optimization, the maximum length is 24 bytes.
Error codes of the special functions		
8190H	Incorrect setting of the CRC calculation	Select a suitable value for CRC calculation. The following are valid: deactivated or activated. Check whether the module addressed supports CRC calculation.
8191H	Incorrect setting of the diagnostic interrupt	Select a suitable value for "Diagnostic interrupt". The following are valid: Diagnostic interrupt deactivated (0) or diagnostic interrupt activated (1).

Code	Description	Remedy
Error codes of the "Port configuration"		
81A0H	The module does not support this protocol.	Select a valid protocol for the module.
81A1H	The module does not support this data transmission rate.	Select a valid data transmission rate for the module.
81A2H	The module does not support this parity setting.	Select a suitable value for "Parity". The following are valid: • None (1) • Even (2) • Odd (3) • Mark (4) • Space (5) • Any (6)
81A3H	The module does not support this number of data bits.	Select a suitable value for "Number of data bits". The following are valid: • 7 (2) • 8 (1)
81A4H	The module does not support this number of stop bits.	Select a suitable value for "Number of stop bits". The following are valid: • 1 (1) • 2 (2)
81A5H	The module does not support this type of data flow control.	Select a valid data flow control for the module.
81A7H	Invalid value for XON or XOFF	Select suitable values for XON and XOFF. Valid range of values: 0...7F. XON must not be equal to XOFF.
81A8H	Error in frame header	Check the data/values in the frame header.
81AAH	Invalid operating mode	Valid operating modes are: • Full duplex (RS232) (0) • Full duplex (RS422) four-wire mode (point-to-point) (1) • Full duplex (RS422) four-wire mode (multipoint master) (2) / (CM PtP (ET 200SP)) • Full duplex (RS422) four-wire mode (multipoint slave) (3) / (CM PtP (ET 200SP)) • Half duplex (RS485) two-wire mode (4)

Code	Description	Remedy
81ABH	Invalid default setting of the receive line	Valid default settings are: • "No" default setting (0) • Signal R(A)=5 V, signal R(B)=0 V (break detection) (1): Can only be selected with: "Full duplex (RS422) four-wire mode (point-to-point connection)" and "Full duplex (RS422) four-wire mode (multipoint slave)". • Signal R(A)=0 V, signal R(B)=5 V (2): This default corresponds to the idle state (no active send operation). No break detection is possible with this default setting.
81ACH	Invalid value for "Break detection"	Select a suitable value for "Break detection". The following are valid: • "0" (break detection deactivated) • "1" (break detection activated)
81AFH	The module does not support this protocol.	Select a valid protocol for the module.
Error codes of the "Send configuration"		
81B5H	More than two end delimiters or End sequence > 5 characters	Select suitable values for "End delimiter" and "End sequence". The following are valid: • deactivated (0), • 1 (1) or 2 (2) end delimiters or • deactivated (0), • 1 (1) up to 5 (5) characters for the end sequence.
81B6H	Send configuration rejected because the 3964(R) protocol was selected	Verify that no send configuration is transmitted if the 3964R) protocol is set.
Error codes of the "Receive configuration"		
81C0H	Invalid start condition	Select a suitable start condition. The following are valid: • Send break before frame start • Send Idle Line.
81C1H	Invalid end condition or no end condition selected	Select a suitable end condition.
81C3H	Invalid value for "Maximum message length"	Select a suitable value for "Maximum message length". Valid range of values (depending on the module): 1-1024/2048/4096 (Byte)
81C4H	Invalid value for "Offset of the length specification in the message"	Select a suitable value for "Offset of the length specification in the message". Valid range of values (depending on the module): 1-1024/2048/4096 (Byte)

Code	Description	Remedy
81C5H	Invalid value for "Size of length field"	Select a suitable value for "Size of length field". Valid range of values in bytes: • 1 (1) • 2 (2) • 4 (4)
81C6H	Invalid value for "Number of characters not counted in length specification"	Select a suitable value for "Number of characters not counted in length specification". Valid range of values: 0 to 255 (bytes)
81C7H	The total of "Offset in the message + size of the length field + number of character not counted" is greater than the maximum frame length	Select a suitable value for "Offset in message", "Size of the length field" and "Number of characters not counted". Valid range of values: • Offset in the message (depending on the module): 0-1022/2046/4094 (Byte) • Size of the length field: 1, 2, or 4 (bytes) • Number of characters not counted: 0-255 (bytes)
81C8H	Invalid value for "Response timeout"	Select a suitable value for "Response timeout". Valid range of values: 1-65535 (ms)
81C9H	Invalid value for "Character delay time"	Select a suitable value for "Character delay time". Valid range of values: 1-65535 (bit times)
81CBH	Frame end sequence is activated, but no character is activated for the check	Activate one or several characters for the check.
81CCH	Frame start sequence is activated, but no character is activated for the check	Activate one or several characters for the check.
81CDH	Invalid value for "Prevent overwriting"	Select a suitable value for "Prevent overwriting". The following are valid: • Prevent overwriting is deactivated (0) or • Prevent overwriting is activated (1)
81CEH	Invalid value for "Clear receive buffer at startup"	Select a suitable value for "Clear receive buffer at startup". The following are valid: • Clear receive buffer at startup is deactivated (0) • Clear receive buffer at startup is activated (1)
SEND status and error codes		
81D0H	Receiving send requests during runtime of a send job	Make sure that you do not receive send requests during runtime of a send job.
81D1H	The waiting time for XON or CTS = ON has expired.	The communication partner has a fault, is too slow or is offline. Check the communication partner or, if necessary, change the parameter assignment.
81D2H	"Hardware RTS always ON": Send command aborted due to change from DSR = ON to OFF	Check the communication partner. Make sure that DSR is ONfor the entire duration of transmission.
81D3H	Send buffer overflow / send frame too long	Select a shorter frame length. The following are valid (depending on the module): 1-1024/2048/4096 (Byte)
81D5H	Transmission aborted due to parameter changes, detected wire break, or because CPU in STOP	Check the parameter assignment, for wire break, and the CPU status.

Code	Description	Remedy
81D6H	Transmission canceled because end identifier was not received	Check the parameter assignment of the end delimiters and the frame of the communication partner.
81D7H	Communication error between the user program and module	Check communication (e.g. consistency of the sequence number).
81D8H	Transmission attempt rejected because module is not configured	Configure the module.
81DFH	The module has reset the interface for one of the following reasons: • Module was restarted • Module parameters were reassigned • CPU STOP	–
Error codes when receiving messages		
81E0H	Frame canceled: Receive buffer overflow / send frame too long	Increase the call rate for the receive function in the user program or configure communication with data flow control.
81E1H	Frame canceled: Parity error	Check the connection line of the communication partners, or verify that both devices are configured for the same data transmission rate, parity and stop bit number.
81E2H	Frame canceled: Character frame error	Check the settings for the start bit, data bits, parity bit, data transmission rate, and stop bit(s).
81E3H	Frame canceled: Character overflow error	Firmware error: Contact Customer Support.
81E4H	Frame canceled: The total length of "Offset in the message + size of the length field + number of character not counted" is greater than the receive buffer	Select a suitable value for Offset in message, Size of the length field, and Number of characters not counted.
81E5H	Frame canceled: Break	Receive line to partner is interrupted. Reconnect or switch on partner.
81E6H	Maximum number of "Buffered receive frames" exceeded	In the user program, increase the call rate of the instruction, or parameterize communication with data flow control, or increase the number of buffered frames.
81E8H	Frame canceled: The character delay time has expired before the message and criterion was detected	Partner device faulty or too slow. Check this, if required, using an interface tester that is interconnected in the transmission line.
81EBH	Frame canceled: Maximum frame length reached	Select a shorter frame length at the communication partner. The following are valid (depending on the module): 1-1024/2048/4096 (Byte) Check the parameters of the frame end detection.

Code	Description	Remedy
Error codes of RS232 secondary signals		
81F0H	The module does not support RS232 secondary signals	You have made an attempt to set up secondary signals on a module that does not support RS232 secondary signals. Verify that this is an RS232 module or that RS232 mode (ET 200SP) is set.
81F1H	No operation of RS232 secondary signals	RS232 secondary signals cannot be manipulated manually as long as hardware data flow is active.
Error codes of the receive configuration		
82C1H	Invalid value for "Buffered receive frames".	Select a suitable value for "Buffered receive frames". Valid range of values: 1-255
82C2H	Receive configuration rejected because the 3964(R) protocol was selected	Verify that no receive configuration is transmitted if the 3964(R) protocol is set.
3964(R) protocol error codes		
8380H	Parameter assignment error: Invalid value for "Character delay time".	Select a suitable value for "Character delay time". Valid range of values: 1-65535 (ms)
8381H	Parameter assignment error: Invalid value for "Response timeout".	Select a suitable value for "Response timeout". Valid range of values: 1-65535 (ms)
8382H	Parameter assignment error: Invalid value for "Priority".	Select a suitable value for "Priority". The following are valid: • High (1) • Low (0)
8383H	Parameter assignment error: Invalid value for "Block check"	Select a suitable value for "Block check". The following are valid: • with block check (1) • without block check (0)
8384H	Parameter assignment error: Invalid value for "Connection attempts".	Select a suitable value for "Connection attempts". Valid range of values: 1-255
8385H	Parameter assignment error: Invalid value for "Transmission attempts".	Select a suitable value for "Transmission attempts". Valid range of values: 1-255
8386H	Runtime error: Number of connection attempts exceeded	Check the interface cable and the transmission parameters. Also check whether the receive function is configured correctly at the partner device.
8387H	Runtime error: Number of transmission attempts exceeded	Check the interface cable, the transmission parameters and the configuration of the communication partner.
8388H	Runtime error: Error at the "Block check character" The internally calculated value of the block check character does not correspond to the block check character received by the partner at the connection end.	Check whether the connection is seriously disrupted; in this case you may also occasionally see error codes. Check for proper function at the partner device, possibly by using an interface test device that is switched into the transmission line.

Code	Description	Remedy
8389H	Runtime error: Invalid character received while waiting for free receive buffer	The send request of the communication partner (STX, 02H) is not answered with DLE until the receive buffer has been cleared. No additional character may be received before it has been cleared (except STX again). Check for proper function at the partner device, possibly by using an interface test device that is switched into the transmission line.
838AH	Runtime error: Logical error during receiving. Another character (other than DLE, ETX) was received after receipt of DLE.	Check whether the partner DLE in the frame header and in the data string is always in duplicate or the connection is released with DLE ETX. Check for proper function of the partner device, possibly using an interface test device that is switched into the transmission line.
838BH	Runtime error: Character delay time exceeded	Partner device too slow or faulty. Check for proper function of the partner device, possibly using an interface test device that is switched into the transmission line.
838CH	Runtime error: Wait time for free receive buffer has started	Increase the call rate of the instruction in the user program, or parameterize communication with data flow control.
838DH	Runtime error: Frame repetition does not start within 4 s after NAK	Check the communication partner. A received frame that is possibly corrupted must be repeated by the partner within 4 seconds.
838EH	Runtime error: One or several characters (except NAK and STX) were received in idle mode.	Verify the proper function of the partner device, for example, by means an interface tester that is interconnected in the transmission line.
838FH	Runtime error: Initialization conflict - Both partners have set high priority	Set the "Low" priority at one of the partners
8390H	Parameter assignment error: Error in frame header	Check the data/values in the frame header.
8391H	Parameter assignment error: 3964 Parameter data record rejected because Freeport is set	Verify that no 3964 parameter data is transmitted if the Freeport protocol is set.

Glossary

Address

The address indicates the physical storage space and enables direct access to the operand that is stored under this address.

Automation system

An automation system is a programmable logic controller consisting of at least one CPU, various I/O modules, and operator control and monitoring devices.

Bit times

"Bit times" are always specified as a number of bits.

The "time" set with bits depends on the selected data transmission rate that is taken into consideration automatically.

Example:

The frame end is to be detected after a gap of two characters.

The set data transmission rate is 9600 bit/s.

The set character frame is 10 bits.

$$10 \times 2 = 20 \text{ bit times}$$

This corresponds to a time of:

$$20 \times 1/9600 \approx 0.0021 \text{ s}$$

Communication module

Communication modules are used for point-to-point connections and bus links.

Configuration

The term configuration refers to the summary of individual modules of an automation system in the configuration table.

CPU

Central Processing Unit = Central module of the automation system that consists of the control and computing units, memory, system program, and interfaces to the I/O modules.

CPU operating system

The CPU operating system organizes all the functions and sequences of the CPU that are not linked to a special control task.

Cycle time

The cycle time denotes the time a CPU requires to execute one user program cycle.

Cyclic program processing

In cyclic program processing, the term cycle denotes execution of the user program in a continuous repetitive program loop.

Default setting

The default is a useful basic setting that is used whenever no other value is specified.

Diagnostic functions

The diagnostic functions cover the entire system diagnostics and the detection, evaluation and reporting of errors in the automation system.

Diagnostics buffer

Memory area in which detailed information on all diagnostics events is entered based on the order of their occurrence.

Diagnostics events

Diagnostics events are, for example, module errors or system errors in the CPU that may be caused by a program error.

Hardware

The term hardware denotes the entire physical and technical equipment of an automation system.

Interrupt

The term interrupt designates the interruption of program execution in the processor of an automation system which is triggered by an external alarm.

Module parameters

Module parameters are values that are used to determine the behavior of the module. We distinguish between static and dynamic module parameters.

Online/Offline

In online mode, there is a data connection between the automation system and programming device, while there is no data connection in offline mode.

Parameter assignment

The term parameter assignment denotes actions that define the response of a module or block.

Parameters

Parameters represent values that can be used to define the behavior of a module or software. We distinguish between module parameters and block parameters.

Performance option

From firmware version V2.0 of the communication module, the option for performance optimization is available. This option is suitable if you are exclusively sending and receiving short frames with several communication modules. The frame length is limited to 24 bytes for receive frames and 30 bytes for send frames. The reaction time is optimized, especially when several CM PtPs are used in parallel.

Point-to-point connection

In point-to-point connection, the communication module forms the interface between an automation system and a communication partner.

Protocol

The communication partners participating in data transmission must conform to fixed rules for the handling and execution of data traffic. These rules are called protocols.

Rack

The rack is a mounting rail with slots that can be used to mount modules.

Software

The term software refers to all programs that are used on a computing system. These include the operating system and user programs.

User program

The user program contains all instructions and declarations for processing the signals used for controlling a system or a process. In SIMATIC S7, the user program is structured and divided into small units, namely the blocks.

Work memory

Work memory is CPU RAM (Random Access Memory) that is accessed by the processor when processing the user program.

Index

3

3964 protocol configuration - data record 61, 52
3964(R)
    Receiving data, 43
    Sending data, 41
3964(R) protocol, 40
    Control characters, 40
    Priority, 40
3964R procedure
    Block check character, 41

A

Acyclic data communication, 21
Application options for the communication modules, 14
Article numbers, 13
Automatic operation of secondary signals, 38

B

BCC, 40
Bidirectional data traffic, 17
Block check character, 41

C

Clear receive buffer - data record 54, 71
Code transparency, 32
Configuration data records, 23
CTS, 33
Cyclic data communication, 21

D

Data flow control, 14, 36
Data record 48, 57
Data record 49/50, 65
Data record 53, 72
Data record 54, 71
Data record 55, 55
Data record 57, 44
Data record 58, 53
Data record 59, 47
Data record 60, 49
Data record 61, 52
Data transmission rates, 14
DCD, 33
DLE, 40
DMX512, 39
DSR, 33
DTR, 33

E

ETX, 40

F

Freeport
    Code transparency, 32
    End criteria, 29
    Message end, 26
    Message start, 26
    Receive buffer, 32
    Receiving data, 28
    RS232 secondary signals, 33
    Sending data, 26
    Start criteria, 28
Full duplex mode, 17

H

Half duplex mode, 17
Handshaking, 36
Hardware data flow control, 37
Hardware RTS always ON, 37
Hardware RTS always ON, ignore DTR/DSR, 37
Hardware RTS always switched, 38

I

Interfaces, 13

N

NAK, 40

P

Performance optimization, 25
Performance option, 21
    Input data, 69
    Output data, 62
Point-to-point connection, 17
Port Configuration Record, 44

Q

Query acknowledgment
    Data record, 59
    Performance option, 63
Query: New receive frame,

R

Read error status - data record 55, 55
Read RS232 secondary signals - input user data, 73
Receive buffer, 32
Receive buffer size, 14
Receive configuration record - data record 60, 49
Receiving using data record
    Flow chart, 64
Receiving using net data
    Flow chart, 68
RI, 33
RS232 mode, 33
RS232 secondary signals, 33
    Automatic use, 38
RS422 mode, 34
RS485 mode, 35
RTS, 33

S

Secondary signals, 14
Send configuration record - data record 59, 47
Send point-to-point - data record 48, 57
Sending using data record
    Flow chart, 56
Sending via user data
    Flow chart, 61
Serial data transmission, 17
Set RS232 secondary signals - data record 53, 72
Software data flow control, 36
STX, 40

T

Transmission security, 19
    with 3964(R), 20
    with Freeport, 20

U

Unidirectional/bidirectional data traffic, 33
Universal, 21

X

XON/XOFF, 36

SIEMENS

Preface

Guide 1

System overview 2

Integration into the automation system 3

SIMATIC

IO-Link system

Function Manual

12/2017

A5E31637677-AB

Legal information

Warning notice system

This manual contains notices you have to observe in order to ensure your personal safety, as well as to prevent damage to property. The notices referring to your personal safety are highlighted in the manual by a safety alert symbol, notices referring only to property damage have no safety alert symbol. These notices shown below are graded according to the degree of danger.

⚠ DANGER

indicates that death or severe personal injury **will** result if proper precautions are not taken.

⚠ WARNING

indicates that death or severe personal injury **may** result if proper precautions are not taken.

⚠ CAUTION

indicates that minor personal injury can result if proper precautions are not taken.

NOTICE

indicates that property damage can result if proper precautions are not taken.

If more than one degree of danger is present, the warning notice representing the highest degree of danger will be used. A notice warning of injury to persons with a safety alert symbol may also include a warning relating to property damage.

Qualified Personnel

The product/system described in this documentation may be operated only by **personnel qualified** for the specific task in accordance with the relevant documentation, in particular its warning notices and safety instructions. Qualified personnel are those who, based on their training and experience, are capable of identifying risks and avoiding potential hazards when working with these products/systems.

Proper use of Siemens products

Note the following:

⚠ WARNING

Siemens products may only be used for the applications described in the catalog and in the relevant technical documentation. If products and components from other manufacturers are used, these must be recommended or approved by Siemens. Proper transport, storage, installation, assembly, commissioning, operation and maintenance are required to ensure that the products operate safely and without any problems. The permissible ambient conditions must be complied with. The information in the relevant documentation must be observed.

Trademarks

All names identified by ® are registered trademarks of Siemens AG. The remaining trademarks in this publication may be trademarks whose use by third parties for their own purposes could violate the rights of the owner.

Disclaimer of Liability

We have reviewed the contents of this publication to ensure consistency with the hardware and software described. Since variance cannot be precluded entirely, we cannot guarantee full consistency. However, the information in this publication is reviewed regularly and any necessary corrections are included in subsequent editions.

Siemens AG
Division Digital Factory
Postfach 48 48
90026 NÜRNBERG
GERMANY

A5E31637677-AB
℗ 01/2018 Subject to change

Copyright © Siemens AG 2013 - 2017.
All rights reserved

Preface

Purpose of the documentation

This function manual provides a general overview of the IO-Link communication system.

It shows the interaction of the various components of an IO-Link system and will help you improve your general understanding of IO-Link.

Basic knowledge required

The following knowledge is required in order to understand the documentation:

- General knowledge of automation technology
- Knowledge of the industrial automation system SIMATIC
- Proficiency with STEP 7

Scope of the documentation

This documentation is the basic documentation for IO-Link systems at Siemens. The product documentation is based on this documentation.

Conventions

In this documentation, "STEP 7" is used as a synonym for all versions of the configuration and programming software "STEP 7 (TIA Portal)".

Please also observe notes marked as follows:

Note

A note contains important information on the product described in the documentation, on the handling of the product or on the section of the documentation to which particular attention should be paid.

Additional support

- Information about Technical Support is available in section Siemens Industry Online Support (Page 4).
- The range of technical documentation for the individual SIMATIC products and systems can be found on the Internet.
- Information about the online catalog and online order system is available in section Industry Mall (Page 5).

Security information

Siemens provides products and solutions with industrial security functions that support the secure operation of plants, systems, machines and networks.

In order to protect plants, systems, machines and networks against cyber threats, it is necessary to implement – and continuously maintain – a holistic, state-of-the-art industrial security concept. Siemens' products and solutions constitute one element of such a concept.

Customers are responsible for preventing unauthorized access to their plants, systems, machines and networks. Such systems, machines and components should only be connected to an enterprise network or the internet if and to the extent such a connection is necessary and only when appropriate security measures (e.g. firewalls and/or network segmentation) are in place.

For additional information on industrial security measures that may be implemented, please visit (https://www.siemens.com/industrialsecurity).

Siemens' products and solutions undergo continuous development to make them more secure. Siemens strongly recommends that product updates are applied as soon as they are available and that the latest product versions are used. Use of product versions that are no longer supported, and failure to apply the latest updates may increase customers' exposure to cyber threats.

To stay informed about product updates, subscribe to the Siemens Industrial Security RSS Feed under (https://www.siemens.com/industrialsecurity).

Siemens Industry Online Support

You can find current information on the following topics quickly and easily here:

- **Product support**

  All the information and extensive know-how on your product, technical specifications, FAQs, certificates, downloads, and manuals.

- **Application examples**

  Tools and examples to solve your automation tasks – as well as function blocks, performance information and videos.

- **Services**

  Information about Industry Services, Field Services, Technical Support, spare parts and training offers.

- **Forums**

  For answers and solutions concerning automation technology.

- **mySupport**

  Your personal working area in Industry Online Support for messages, support queries, and configurable documents.

This information is provided by the Siemens Industry Online Support in the Internet (http://www.siemens.com/automation/service&support).

Industry Mall

The Industry Mall is the catalog and order system of Siemens AG for automation and drive solutions on the basis of Totally Integrated Automation (TIA) and Totally Integrated Power (TIP).

You can find catalogs for all automation and drive products on the Internet (https://mall.industry.siemens.com).

Table of contents

Preface 3

1 Guide 7

2 System overview 8

2.1 Advantages of IO-Link 9

2.2 Overview of IO-Link system 10

2.3 IO-Link interface 12

2.4 IO-Link protocol 14

2.5 Device profiles 16

2.6 IODD and Port Configuration Tool - S7-PCT 17

2.7 Differences between IO-Link specifications V1.0 and V1.1 19

3 Integration into the automation system 20

3.1 Configuration of the IO-Link system 20

3.1.1 Configuration with S7-PCT 22

3.1.2 Configuration without S7-PCT 25

3.1.3 Overview of configuration options 27

3.2 Data access of the automation system and the HMI device 29

3.3 Changing and saving device parameters during plant operation 30

3.4 Replacing a master or device during operation 32

Index 33

Guide 1

Documentation

Various IO-Link products are available from Siemens. Each of these products has a separate documentation. The IO-Link products are embedded in systems, e.g. ET 200SP. The documentation for the system consists of the respective system manual, function manuals and manuals. In addition, the STEP 7 online help and the Port Configuration Tool - S7-PCT online help assist you in configuring and programming your automation system with IO-Link.

IO-Link components from Siemens

Siemens offers a wide range of products and support for IO-Link:

- Master
- Device, I/O modules
- Device, industrial switchgear
- Device, RFID systems (RFID = radio-frequency identification)
- Port Configuration Tool - S7-PCT (https://support.industry.siemens.com/cs/ww/en/view/32469496)
- IO-Link library (https://support.industry.siemens.com/cs/ww/en/view/82981502) with the blocks "IO_LINK_MASTER" and "IO_LINK_DEVICE"
- Overview of the topic IO-Link (https://support.industry.siemens.com/cs/ww/en/view/109737170)

Additional information on the products can be found on the Internet (http://www.siemens.com/io-link).

Additional documentation for IO-Link

You can find a free download of the latest documentation on the IO-Link products on the Internet (https://support.industry.siemens.com/cs/ww/en/ps/15818/man).

System overview

2

Introduction

A continuous communication down to the lowest field level ensures enhanced use of the functions and performance capability of sensors and actuators. Enhanced use of sensors and actuators allows you to operate your machines and plants more productively.

No data other than the actual process value can be exchanged via the standard interfaces (digital, analog) used at the sensor/actuator level. Sensors and actuators with integrated intelligence are now used for increasingly complex functions and require a communication interface tailored to these requirements.

Definition

IO-Link is an innovative, point-to-point communication interface for the sensor/actuator area that is specified in IEC 61131-9.

IO-Link consists of the following system components:

- IO-Link master
- IO-Link device
- Unshielded 3-wire or 5-wire standard cable
- Engineering tool for configuring and assigning parameters of IO-Link

2.1 Advantages of IO-Link

The IO-Link system offers significant advantages as digital interface when connecting sensors/actuators:

- Open standard in accordance with IEC 61131-9
  - Devices can be integrated in the same way in all conventional fieldbus systems and automation systems
- Tool supported parameter setting and central data management
  - Fast configuration and commissioning
  - Simple creation of current plant documentation even for sensors/actuators
- Single, uniform wiring and far fewer different interfaces at the sensors/actors
  - Standardized, uniform interface for sensors and actuators independent of their complexity (switching, measuring, multi-channel, binary, mixed signals, etc.)
  - Reduction in the variety of types and inventory
  - Fast commissioning
  - Any combination of IO-Link devices and sensors/actuators without IO-Link at IO-Link master
- Continuous communication between sensors/actuators and the CPU
  - Access to all process data, diagnostic data and device information
  - Access to device-specific data, such as energy data
  - Remote diagnostics can be performed
- Continuous diagnostic information down to sensor/actuator level
  - Reduction in troubleshooting effort
  - Minimizing risk of failure
  - Preventive maintenance and optimization of service and maintenance planning
- Dynamic change of sensor/actuators parameters by the controller or the operator at the HMI
  - Reduction in downtimes during product change
  - Increased variability of the machine
- Automatic reassignment of parameters when devices are replaced during operation
  - Minimization of downtimes
  - Device replacement by untrained personnel without additional aids
  - Avoidance of incorrect settings
- Integrated device identification
  - Identification of the installed devices
  - Ensure quality of result in production and manufacturing when replacing the device

2.2 Overview of IO-Link system

Components

An IO-Link system consists of the following components:

- IO-Link master
- IO-Link device, for example:
  - Sensors/actuators
  - RFID readers
  - I/O modules
  - Valves
- Unshielded 3-wire or 5-wire standard cables
- Engineering tool for configuring and assigning parameters of IO-Link

Example plant with IO-Link

The figure below shows an example of plant architecture with IO-Link.

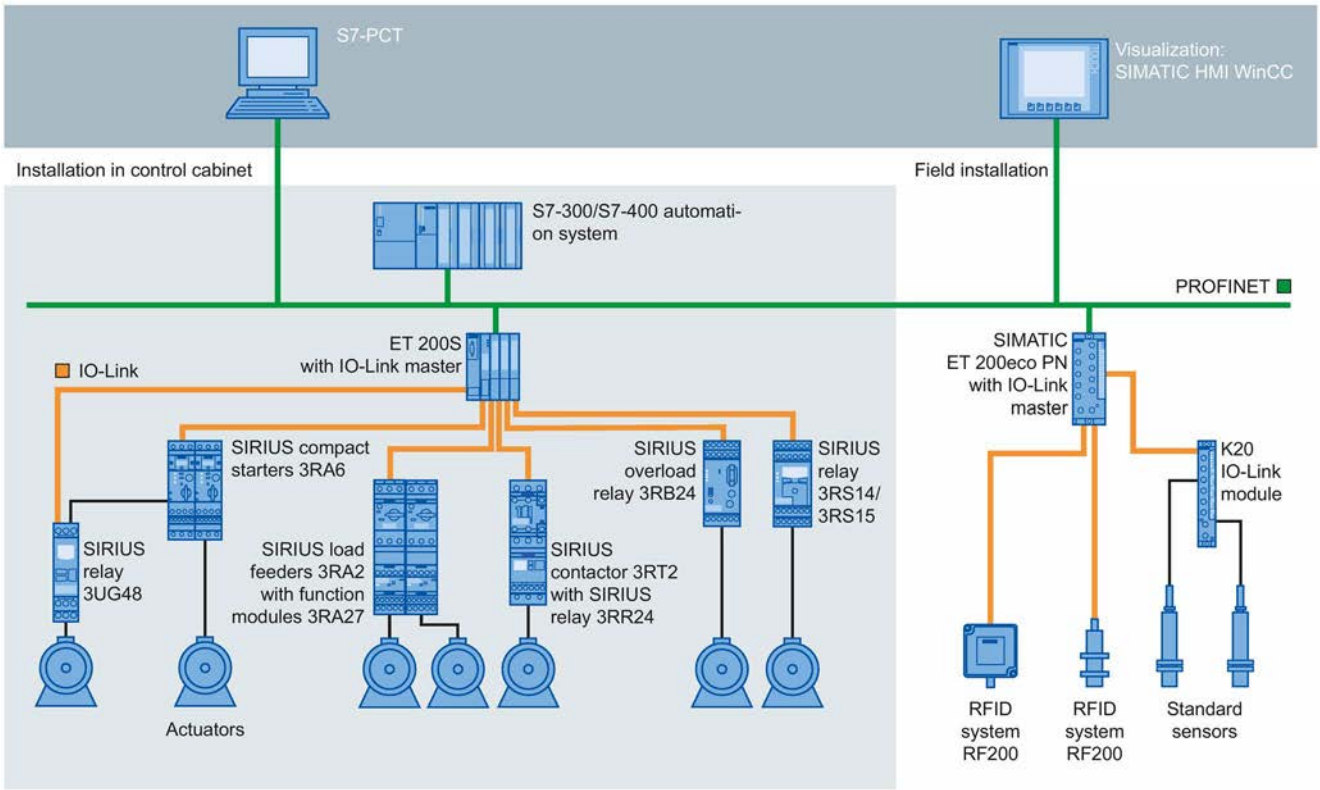

Figure 2-1 Plant architecture with IO-Link

The IO-Link master establishes the connection between the IO-Link devices and the automation system. If the IO-Link master is a component of the I/O system, it is installed either in the control cabinet or directly in the field as remote I/O in degree of protection IP65/67. The IO-Link master communicates by means of various fieldbuses or product-specific backplane buses. An IO-Link master can have multiple IO-Link ports (channels). An IO-Link device can be connected (point-to-point communication) to each port.

Engineering

The IO-Link system is engineered parallel to the overall automation system and can be embedded in it and intermeshed with it.

2.3 IO-Link interface

Introduction

The IO-Link is a serial, bidirectional point-to-point connection for signal transmission and power distribution under any network, fieldbus or backplane bus.

Connection system in IP65/67

M12 connectors and other connectors are defined for the connection system in IP65/67; sensors have a 4-pin connector, actuators a 5-pin connector. IO-Link masters are always equipped with a 5-pin M12 socket.

The pin assignment according to IEC 60974-5-2 is specified as follows:

- Pin 1: 24 V
- Pin 3: 0 V
- Pin 4: Switching and communication cable (C/Q)

In addition to IO Link communication, these three pins also implement the power supply of the device.
Detailed information about the power supply can be found in the documentation of the utilized IO-Link master.

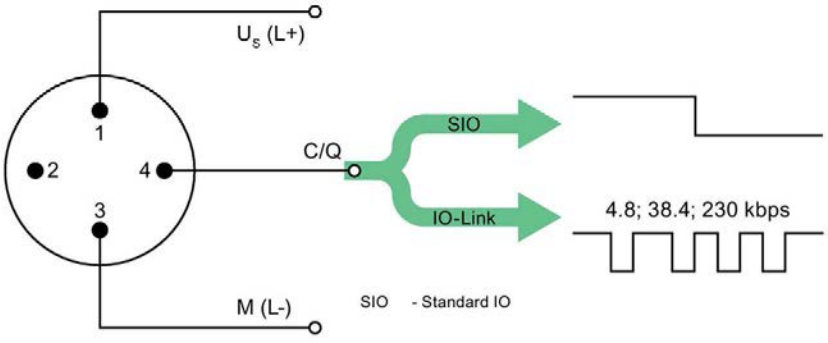

Pin	Signal	Definition	Standard
1	U_S (L+)	24 V	IEC 61131-2
2	-	not defined	-
3	M (L-)	0 V	IEC 61131-2
4	Q	Switching signal DI, DQ (SIO)	IEC 61131-2
4	C	"coded switching signal" (IO-Link)	IEC 61131-9

Figure 2-2 Pin assignment IO-Link device

Port types in IP65/67

Two types of ports are distinguished in the specifications for IO-Link masters:

- Port Class A (Type A)
  With this type, the functions of pins 2 and 5 are not assigned. The manufacturer defines this function. Generally, an additional digital channel is assigned to pin 2.

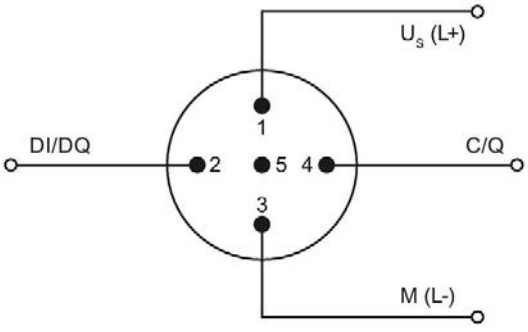

Figure 2-3 Pin assignment Port Class A

- Port Class B (Type B)
  This type offers an additional supply voltage and is suitable for the connection of devices that have an increased power requirement. In this case an additional (galvanically isolated) supply voltage is made available by pins 2 and 5. A 5-wire standard cable is required to use this additional supply voltage.

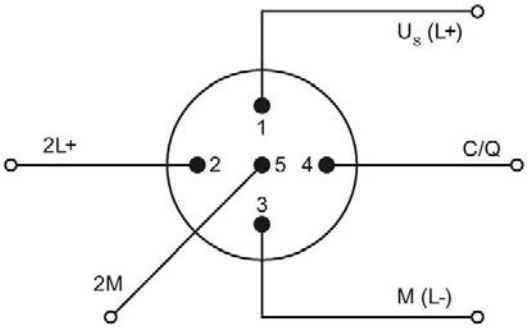

Figure 2-4 Pin assignment Port Class B

Connecting cables

The devices are connected to the master with unshielded 3-wire or 5-wire standard cables with a maximum length of 20 m. Standard cables can be used to wire the sensors. No shielding or compliance with specific regulations is necessary for the installation of the cables.

2.4 IO-Link protocol

Operating modes

The IO-Link port of the master can be operated in the following modes:

- IO-Link:
  The port is located in the IO-Link communication.
- DI:
  The port behaves like a digital input.
- DQ:
  The port behaves like a digital output.
- Disabled:
  The port is disabled.

Transmission rate

In the IO-Link specification V1.1, three data transmission rates (baud rates) are specified for the IO-Link operating mode:

- COM 1 = 4.8 kBaud
- COM 2 = 38.4 kBaud
- COM 3 = 230.4 kBaud (optional according to Specification V1.0)

The IO-Link device only supports one of the defined data transmission rates. The IO-Link master to Specification V1.1 supports all data transmission rates and adjusts automatically to the data transmission rated supported by the device.

Response time of the IO-Link system

The response time of the IO-Link system provides information about the frequency and speed of the data transmission between device and master. The response time depends on various factors.

A value for the minimum cycle time of the device is stored in the device description file IODD of the device (Page 17). This value indicates in which time intervals the master may address the device. The value has a big influence on the response time. The master also has an internal processing time that is factored into the calculation of the response time.

Devices with different minimum cycle time can be configured on a master. The response time for these devices differs accordingly. In other words, the response time for various devices connected to a master can vary greatly.

When you configure the master you can specify a fixed cycle time in addition to the device-specific minimum cycle time stored in the IODD. The master then addresses the device according to this specification.

The typical response time for a device thus results from the effective cycle time of the device and the typical internal processing time of the master.

Transmission performance

IO-Link is a very robust communication system. This communication system operates with a 24V level. If transmissions fail, the frame is repeated two more times. The IO-Link master only detects a break in communication after the failure of the second repeat attempt and reports this to the higher-level CPU.

Data types

Four data types are available:

- Process data → Cyclic data
- PQI → Cyclic data
- Device data → Acyclic data
- Events → Acyclic data

Process data

The process data of the devices is transferred cyclically in a data frame with the process data size being determined by the device. Process data from 0 to 32 bytes is possible per device (input and output, respectively).

Port Qualifier Information (PQI)

Each port has a Port Qualifier Information (PQI). This PQI provides information on the device status of the port and IO-Link (value status). The PQI is transmitted cyclically with the process data. The PQI is disabled by default.

Device data

Device data can be parameters, identification data or diagnostic information. The data is exchanged cyclically and at the request of the IO-Link master. Device data can be written to the device and also read from the device.

Events

When an event occurs, the device signals to the master that an event is present. The master then reads the event. Events can be error messages (for example, short-circuit) and warning/maintenance data (for example, dirt, overheating).

Error messages are transferred from the device to the CPU or the HMI by the IO-Link master.

The IO-Link master can also transfer events and states. Such events are, for example, wire break, break in communication or overload.

Device parameters or events are transmitted independently of the cyclic transmission of process data. The transmissions do not influence or impair each other.

Startup of the IO system

If the port of the master is set to IO-Link mode, the IO-Link master attempts to communicate with the connected IO-Link device. For this purpose the IO-Link master sends a defined signal and waits for the reply of the IO-Link device.

The IO-Link master first attempts a communication with the highest defined data transmission rate. If this transmission attempt fails the IO-Link master attempts a communication with the lowest data transmission rate. The device always supports only one defined data transmission rate.

If the master receives a reply, communication starts. First they exchange communication parameters. If necessary the parameters stored in the system are transferred to the device.

Then the cyclic data exchange of process data and value status starts.

2.5 Device profiles

Introduction

Device profiles are defined for IO-Link to standardize access of the CPU user program to the devices.

Data structure, data contents and basic functionality are defined in the device profiles. A standard user view and an identical program access is thus achieved for a number of different devices that have the same device profile.

IO-Link profiles

The device profile "Smart Sensor Profile" is currently defined for IO-Link. This profile is especially suited for measurement sensors. In other words, measured values are transmitted in addition to switching points.

In addition, the switchgear (for example, contactors) support the LVSG (Low Voltage Switchgear) profile defined in IEC 61915-2.

2.6 IODD and Port Configuration Tool - S7-PCT

Device description IODD

An electronic device description, the IODD file (IO Device Description) is available for each device. The IODD provides a wealth of information for system integration:

- Communication properties
- Device parameters with value range and default value
- Identification, process and diagnostic data
- Device data
- Text description
- Image of the device
- Manufacturer logo

The structure of the IODD is identical for all devices from all manufacturers. The structure of the IODD is always represented in the identical manner by the IO-Link Configuration Tool of the master manufacturer (for Siemens, S7-PCT). This ensures that the handling is the same for all IO-Link devices regardless of the manufacturer.

Two different IODD versions are available for devices that support both V1.0 and V1.1 functionality.

IODDfinder

The IODDfinder is a cross-vendor, central IO-Link database.
This database provides you with the latest IODDs of the device manufacturers and offers an information and download platform.
The IODDfinder is available on the Internet (https://ioddfinder.io-link.com).

IO-Link configuration tool

Configuration tools are required to configure the entire IO-Link system. The IO-Link configuration tools of the master manufacturers are able to read IODDs.

The main tasks of the IO-Link configuration tool include:

- Assigning the devices to the ports of the master
- Address assignment of ports within the address area of the master
- Assigning parameters for the IO-Link device

Diagnostics can also be carried out on the connected devices.

This means the IO-Link configuration tool supports the transparent representation of the IO-Link system down to field level.

Siemens provides S7-PCT for engineering of the IO-Link system.

S7-PCT with IODD of a device

The following figure shows a section from S7-PCT with IODD of a device and the device information contained therein.

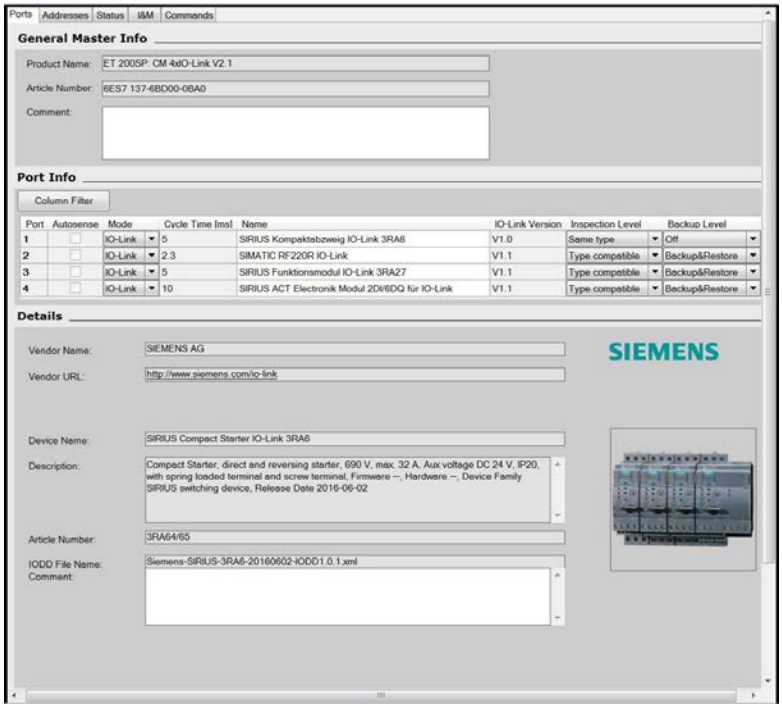

Figure 2-5 S7-PCT with IODD of a device and the device information contained therein

2.7 Differences between IO-Link specifications V1.0 and V1.1

Specification

The technical definition of the IO-Link system is described in a specification of the IO-Link consortium. The first step was the creation of specification version 1.0. The further development and added functions of the IO-Link system led to version 1.1.

The main enhancements of version 1.1 are:

- Data backup for device replacement during operation (Backup&Restore)
- Data transmission rate 230.4 kBaud is mandatory for the IO-Link master

Combination of IO-Link devices

Note the following when combining IO-Link devices:

- Only IO-Link devices that comply with V1.0 can be operated on the IO-Link master to V1.0.
- IO-Link devices that comply with V1.0 and V1.1 can be operated on the IO-Link master to V1.1.
- Data backup and a data transmission rate of 230.4 kBaud of the IO-Link master after V1.1 can only be used when these functions are also supported by the IO-Link device.

Integration into the automation system 3

3.1 Configuration of the IO-Link system

Introduction

An IO-Link system is configured in several steps. In the first step, the master is integrated in the automation system and configured. In the second step, the IO-Link devices are configured.

Integration in the automation system

When using a SIMATIC S7 CPU, use the engineering tool STEP 7, V5.x or STEP 7 (TIA Portal) for configuration.
The IO-Link system is represented by the IO-Link master in the configuration of the automation system or the fieldbus and integrated with STEP 7 or a GSD file.
The IO-Link master itself can be a field bus node (e.g. ET 200eco PN IO-Link master) or a part of the modular IO system that is connected to the field bus (e.g. ET 200SP IO-Link master). In both cases, the number of ports, the address range and the module properties are described in STEP 7 or in the GSD file.

Example configuration in STEP 7 (TIA Portal)

The figure below shows a PROFINET configuration with integrated PROFINET devices ET 200SP and ET 200ecoPN with IO-Link masters.

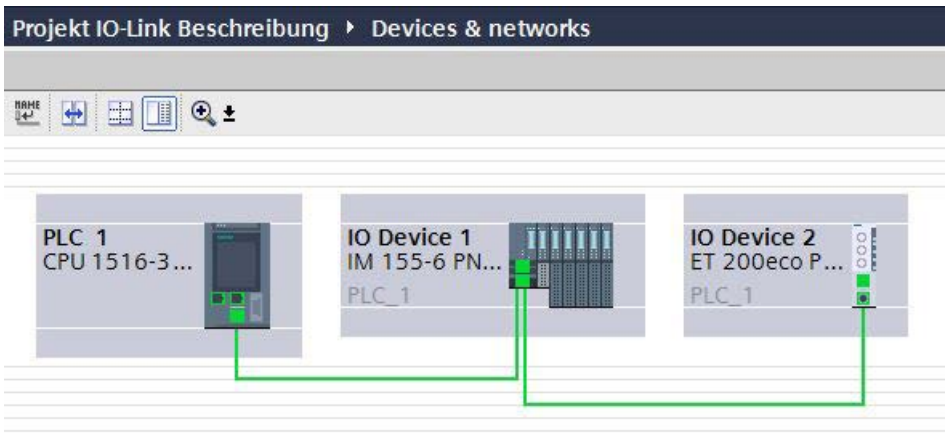

Figure 3-1 Configuration of a PROFINET network with lower-level IO-Link masters

In the device view of the PROFINET device, you can:

- Parameterize the ports
- Specify the input and output address ranges of IO-Link for exchange of cyclic data (process values).

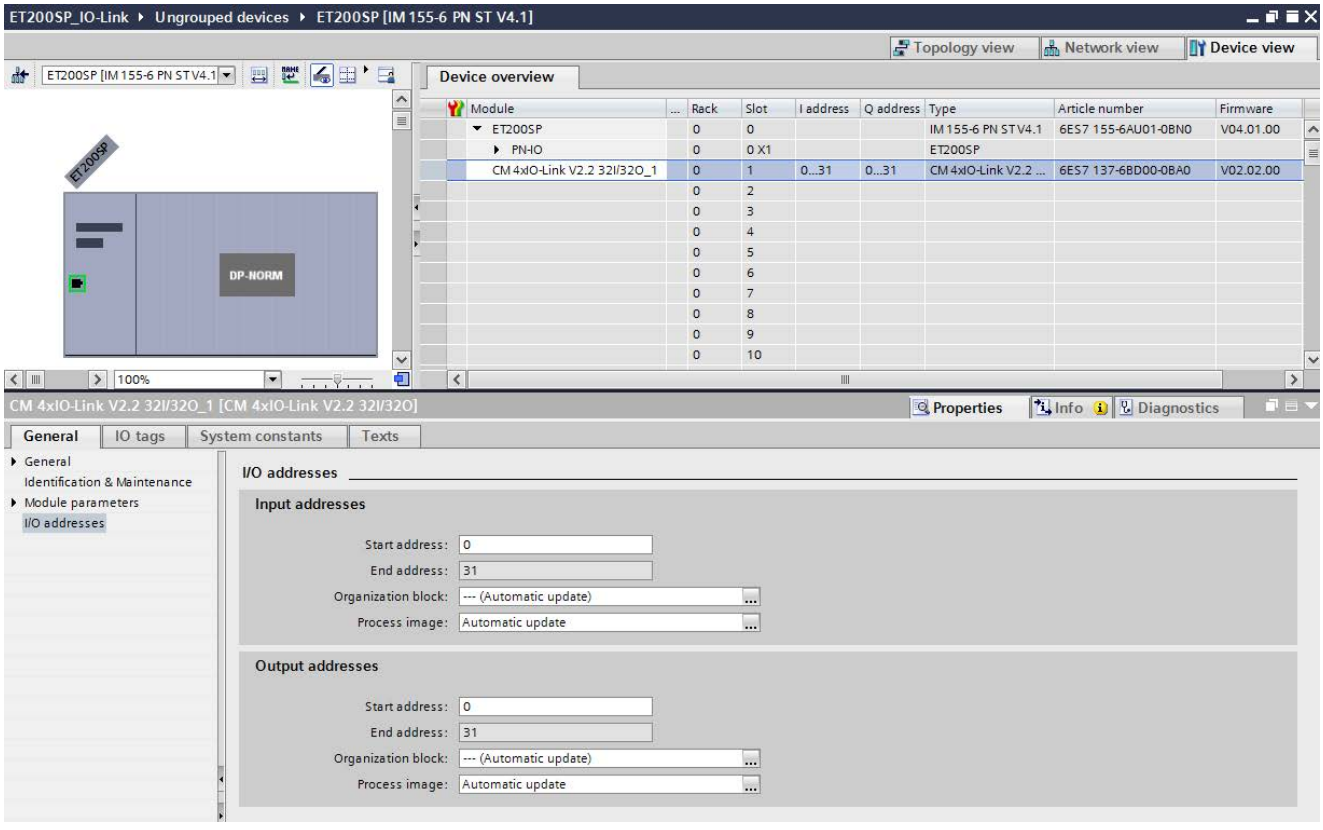

Figure 3-2 Device view with setting of the IO-Link address range

In addition, you can set in the module properties of the IO-Link master how the IO-Link system is to be configured and parameterized.
In doing so, you can select whether or not you also want to work with the S7-PCT configuration tool.

Note

IO data length

To ensure smooth operation, select an IO data length during configuration of the IO-Link master that corresponds at least to the IO data length of all connected IO-Link devices.

3.1.1 Configuration with S7-PCT

Introduction

The following sections describe how you configure your IO-Link master with the S7-Port Configuration Tool (S7-PCT).

You need S7-PCT to display the system architecture completely and transparently all the way to the IO-Link device and to configure and parameterize the IO-Link system in detail.

With S7-PCT you can easily configure the IO-Link devices with the help of the IODD (IO-Link Device Description) supplied by the device manufacturer.
In the S7-PCT online view you can display the diagnostics states and process values of the IO-Link devices in detail.

Configuration with S7-PCT

When you have selected the option "Configuration with S7-PCT", you are also making the settings of the IO-Link master ports with S7-PCT.
These settings include:

- Specification of the address range for each port
- Behavior when replacing an IO-Link device
- Setting the identification data for checking the connected IO-Link device type

Start S7-PCT from HW Config in STEP 7.
S7-PCT shows you all Siemens IO-Link masters you have configured in your automation system.
After selecting an IO-Link master, you can assign its IO-Link ports to the desired IO-Link devices.
To do so, select the corresponding IO-Link devices (or their IODDs) from the device catalog and drag them to the port of the IO-Link master.

Example configuration in S7-PCT

The following figure shows the configuration of an IO-Link master in S7-PCT.

This S7-PCT view shows you a wide variety of information:

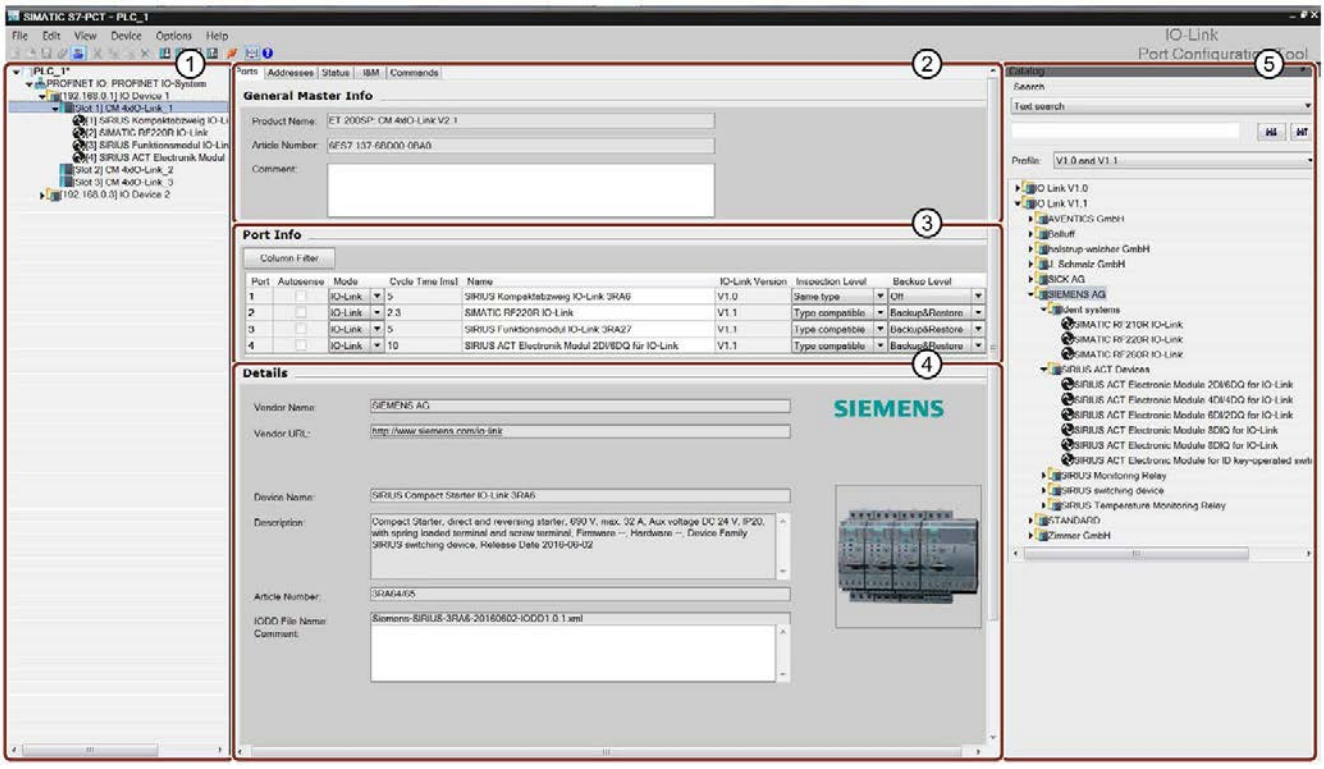

① Higher-level field bus and overview or structure of the lower-level IO-Link master

② Detailed information on the selected IO-Link master

③ Current configuration of the IO-Link ports of the selected IO-Link master

④ Detailed information on the selected IO-Link device

⑤ Device catalog with the IODDS of the IO-Link devices from different manufacturers

Figure 3-3 Configuration of an IO-Link master in S7-PCT

Address range of the ports

In addition to the assignment of the IO-Link devices to the IO-Link master ports, the default address ranges of the ports can be changed. The IO-Link master transfers the process values that it receives from the IO-Link device in these address ranges and makes the process values available to the higher-level automation system.

To set the address range, select the "Addresses" tab.

Setting device parameters

Specific parameter settings are required to adjust the device to the respective application task. The possible parameters and set values are contained in the IODD of each device. You set the device parameters directly in S7-PCT.

After selecting the corresponding device in the project tree (left tree), set the device parameters in the "Parameters" tab.

The figure below shows you an example of the parameter assignment of an IO-Link device:

Identification | Parameters | Monitoring | Diagnostics | Connection

Column Filter

Parameter	Value	Icon	Unit	Status	Help
Parameters					
Parameter Data					
System command					
Device Reset	Device Reset				
Restore Factory Setting	Restore Factory Setting				
Device access locks					
Parameter (write) Access	Locked			changed	
Data Storage	Unlocked				
Operating system functions					
index131 - Group diagnostics	enabled				enable/disable automatic signaling to PLC
index131 - Group error diagnostics	enabled				enable/disable automatic signaling of error messages to PLC
index131 - Local threshold change	enabled				enable/disable local threshold changing via buttons
index131 - Local parameter change	enabled				enable/disable local parameter changing via buttons
index131 - Local reset	enabled				enable/disable local reset via buttons
index131 - Retentive error memory	disabled				enable/disable remanent saving of error messages in the event of a power fa...
index131 - Analog value coding	Tmax [°C] (5)				choose the analog value trasmitted cyclically in the process image
Temperature monitoring					
index131 - Temperature monitoring mode	Range monitoring			changed	set the value of temperature monitoring mode
index131 - Temperature unit	°C				choose the temperature unit for display and monitoring (°C or °F)
index131 - ON-delay time (at Power ON)	enabled				enable/disable starting of delay time at Power-ON
index131 - ON-delay time (at manual reset)	enabled				enable/disable starting of delay time at manual reset of the device
index131 - ON-delay time	0.0		s		set the value of ON-delay time
index131 - Tripping delay time (if the temperat...	0.0		s		set the value of tripping delay time (temperature overshoot or undershoot)
index131 - Temperature sensor type	PT100				choose the type of the connected temperature sensor(s)
index131 - Hysteresis	3			changed	set the value of hysteresis for automatic reset after overshoot or undershoot
index131 - Relay switching response	Closed-circuit principle (NC)				choose the circuit principle of relay switching
Thresholds					
index131 - Threshold ϑ1	30			changed	set temperature threshold 1 for tripping (overshoot or undershoot depends o...
index131 - Threshold ϑ2	20			changed	set temperature threshold 2 for tripping (overshoot or undershoot depends o...
index131 - Warning threshold for ϑ1	28			changed	set temperature warning threshold 1 (overshoot or undershoot depends on ...
index131 - Warning threshold for ϑ2	22			changed	set temperature warning threshold 2 (overshoot or undershoot depends on ...

Figure 3-4 Setting the parameter values of the IO-Link device

Starting from the displayed defaults, you can edit and save the values in the defined value range.

The configuration of the IO-Link system and the parameters of the devices are available to the IO-Link system and the entire automation project. You have the option of saving and printing the configuration and the parameters.

3.1.2 Configuration without S7-PCT

Introduction

The following sections describe how you configure your IO-Link master without the S7-Port Configuration Tool (S7-PCT).

Your options for configuration of the IO-Link system without S7-PCT are limited.
You can configure the port of the IO-Link master using STEP 7 or the GSD file, but you cannot set any parameters of the lower-level IO-Link devices.

Configuration without S7-PCT

You can activate the following parameters in STEP 7 or the GSD file during port configuration:

- Port Qualifier Information (PQI):
  provides information on the status, such as process data of the IO-Link port; is transmitted with the input data of the IO-Link device.
- Operating mode
  - IO-Link Autostart:
    The IO-Link master accepts each connected IO-Link device and starts it automatically.
  - IO-Link Manual:
    The IO-Link master only accepts IO-Link devices that match the Vendor ID and Device ID set below.
    The connected IO-Link device is **not** started automatically.
  - DI:
    The port is operating as a standard digital input.
  - DQ:
    The port is operating as a standard digital output.
  - Disabled:
    The port is disabled.
- Input Data Length:
  Process data length of the input data
- Output Data Length:
  Process data length of the output data
- Vendor ID
  ID number of the device manufacturer. You can find the Vendor ID on the Internet (https://support.industry.siemens.com/cs/ww/en/view/109748852).

- Device ID
  ID number of the device. You can find the Device ID on the Internet (https://support.industry.siemens.com/cs/ww/en/view/109748852).
- Inspection level for data backup:
  - Identical type (V1.0) without Backup&Restore
  - Type-compatible (V1.1) without Backup&Restore
  - Type-compatible (V1.1) with Backup&Restore
  - Type-compatible (V1.1) with Restore

The figure below shows you an example of the settings of a port configuration in STEP 7 or with GSD file:

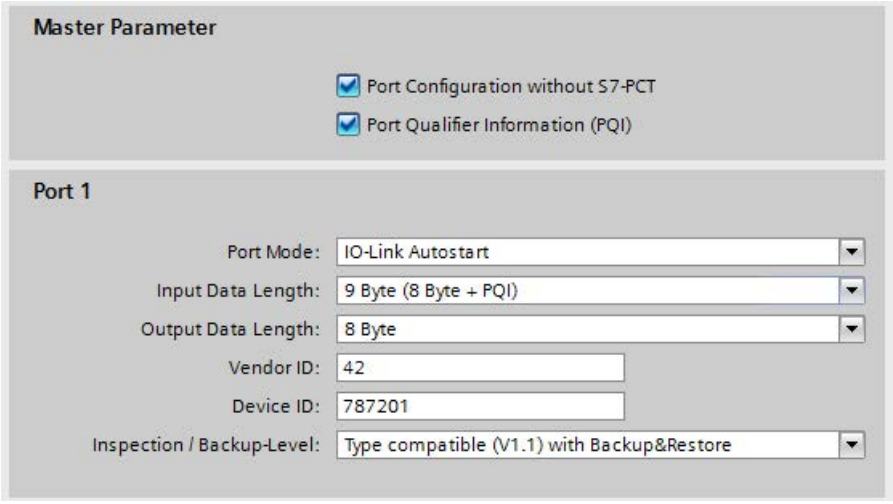

Figure 3-5 Settings of the port configuration in STEP 7 or with GSD file

3.1.3 Overview of configuration options

Introduction

The tables below show the configuration options offered by the SIMATIC IO-Link master with or without S7-PCT and which FW versions of the IO-Link master support the individual configurations.

Comparison of the configuration options

The following table provides an overview of the available options for configuration with and without S7-PCT:

Requirement	Configuration with S7-PCT	Configuration without S7-PCT	
		IO-Link Autostart	IO-Link Manual
Use of the IO-Link device description IODD	Yes	No	No
Setting the length of input and output data (per port)	Automatic	Manual	Manual
Assignment of the Vendor ID and Device ID	Automatic	-	Manual (see FAQ (https://support.industry.siemens.com/cs/ww/en/view/109748852))
Behavior during IO-Link device replacement	Programmable	-	Programmable
Adjustable IO-Link cycle time	Yes	No	No
Adjustable IO-Link device parameters	Yes	No	No
Display of the IO-Link process data structure	Yes	No	No
Monitoring of IO-Link process data	Yes	No	No
Display of IO-Link device diagnostics messages	Yes	No	No

Configuration options of the SIMATIC IO-Link masters

The following table provides an overview of the configuration options supported by the individual IO-Link masters:

Device designation	Article number	As of FW version	Configuration...	
			...with S7-PCT	...without S7-PCT
ET 200SP				
Communications module IO-Link Master CM 4xIO-Link	6ES7137-6BD00-0BA0	V1.0.0	x	-
		V2.2.0	x	x
ET 200AL				
Communications module CM 4xIO-Link 4xM12	6ES7147-5JD00-0BA0	V1.0.0	x	-
		V1.1.0	x	x
ET 200ecoPN				
IO-Link master 4 IO-L + 8 DI + 4 DO DC 24V/1,3A 8×M12	6ES7148-6JA00-0AB0	V6.1.0	x	-
IO-Link master 4 IO-L 4×M12	6ES7148-6JD00-0AB0	V1.0.0	x	x (Autostart only)
ET 200pro				
Electronic module EM 4 IO-LINK HF	6ES7147-4JD00-0AB0	V1.0.0	x	-
ET 200S				
Electronic module 4SI IO-Link	6ES7138-4GA50-0AB0	V1.0.0	x	-
S7-1200				
SM1278 4xIO-LINK MASTER	6ES7278-4BD32-0XB0	V1.0.0	x	-

3.2 Data access of the automation system and the HMI device

Cyclic data exchange

To exchange cyclic process data between an IO-Link device and a CPU, the IO-Link data is assigned by the IO-Link master to the previously set address ranges. The user program of the CPU accesses and processes the process values by using these addresses. The cyclic data from the CPU to the IO-Link device (for example, IO-Link actuator) takes place in reverse order.

Acyclic data exchange

Acyclic data, such as device parameters or events, is exchanged by means of a fixed index and subindex area. The CPU accesses the data using system mechanisms (for example, for online functions such as reading the status). You can use the index and subindex area to access specific device information (for example, to re-assign parameters of the device or master during operation).

Function blocks "IO_LINK_MASTER" and "IO_LINK_DEVICE"

The programming of the CPU user program is another task in addition to the configuration and parameterization of the IO-Link system and its integration into the overall automation system.

For acyclic data exchange, you can use the function blocks "IO_LINK_MASTER" and "IO_LINK_DEVICE" for controllers of the S7-300, S7-400, S7-1200 and S7-1500 product lines.

The function block "IO_LINK_MASTER" reads all relevant functions and accesses to the IO-Link master, the function block "IO_LINK_DEVICE" reads all accesses to the IO-Link devices.
You can use the function block "IO_LINK_MASTER" to restore all parameters saved in the IO-Link master. A typical application is the replacement of the IO-Link master.

Note

Function blocks "IO_LINK_MASTER" and "IO_LINK_DEVICE"

The function blocks "IO_LINK_MASTER" and "IO_LINK_DEVICE" replace the functions of the previously available block "IOL_CALL".

Reference

The IO-Link block library with a description of the integration is available on the Internet (https://support.industry.siemens.com/cs/ww/en/view/82981502).

You can find an application example of using the block library with HMI devices on the Internet (https://support.industry.siemens.com/cs/ww/en/view/90529409).

3.3 Changing and saving device parameters during plant operation

Changing device parameters

You can adjust the device parameters during operation.
The changed parameters will become effective on the device in the process and are retentively saved in the device.

The parameters can be adapted during operation with:

- the engineering tool used (e.g. during plant commissioning)
- the CPU user program (program-controlled)
- HMI (through plant operator during batch change, process optimization)
- Locally through operation on the device (local operating unit on the device)

Saving device parameters (backup)

You can also save the parameters set in the device during commissioning or changed during operation of the plant in the IO-Link master.
This data backup takes place depending on the set behavior of the IO-Link master ports.
You can set the following data backup levels:

- None
  No data backup in the IO-Link master.
- Backup&Restore
  Every time the device parameters are changed, the changed data is automatically saved in the IO-Link master (see section "Triggering a backup").
- Restore
  No automatic data backup in the IO-Link master.

IO-Link Version	Inspection Level	Backup Level
V1.0	No check	Off
V1.1	Type compatible	Backup&Restore
V1.1	Type compatible	Backup&Restore
V1.1	Type compatible	Backup&Restore

Figure 3-6 Overview of data backup level in S7-PCT

Note

IO-Link Specification V1.0

IO-Link master and devices to IO-Link specification V1.0 do not offer this function; a data backup cannot be set (Data backup: None).

Note that the behavior of the IO-Link master and the IO-Link devices during device replacement depends directly on the set data backup level.
You can find additional information on this dependency in the section Replacing a master or device during operation (Page 32).

Triggering a backup

Requirements

- You have set the correct data backup level.
- The IO-Link master and the IO-Link devices you are using support this function (IO-Link Specification V1.1).

Procedure

There are several ways to trigger a backup:

- In the engineering tool:
  After you have downloaded the engineering settings to the device, the IO-Link device immediately triggers a backup.
- In the CPU user program:
  IO-Link device parameters can be changed successively by the user program.
  A backup is only triggered by a system command. The system command must be triggered by the user program after the parameter changes.
  You can implement the parameter changes and the system command for triggering the backup with function blocks of the CPU.
- Using the HMI:
  You proceed as with triggering by the user program.
  The plant operator then triggers the necessary system command on the HMI device.
- Locally by operating the IO-Link device:
  After confirming the input on the IO-Link device, the IO-Link device initiates the backup.

3.4 Replacing a master or device during operation

Replacing a device

Replacing a device during operation is a scenario that occurs again and again and has to be completed without longer plant downtimes. Replace a device quickly and avoid incorrect settings. Devices can also be replaced by operators without special knowledge and aids.

When you use the backup function of the master, the master automatically supplies the saved parameters to the new device during device replacement.
You have the following setting options for device replacement:

- Backup&Restore
  You have set the master port to Backup&Restore. The new device behaves as the replaced device because the master has saved the last parameter change with the backup function.
- Restore
  You have set the master port to Restore. The new device applies the parameter settings that were saved in the master at the time of the last backup.
  If you have made parameter changes since the last backup, these are not saved in the master and are not available to the new device.
  The behavior of the new device can deviate from the behavior of the replaced device.
  This may be useful if you want to make short-term plant optimizations but do not want to save them in the plant backup.

Note

Field calibration of sensors

When you are using sensors that must be adapted to specific rated conditions on site (field calibration), you must repeat this calibration after replacing the device.
The backup does not include the data of the field calibration. After repeating the field calibration, the new device works just like the replaced device.

Replacing a master

Replacing a master during operation is a rather rare scenario. Here, too, longer plant downtimes are to be avoided. Replace a device quickly and avoid incorrect settings. Devices can also be replaced by operators without special knowledge and aids.

You can save the configuration and parameter data of the master and the devices connected to the master in the CPU and download this information to the new master after the replacement.
When using an S7-CPU, you can use function blocks for this purpose.
You can find additional information on function blocks in the section Data access of the automation system and the HMI device (Page 29).

Index

B

Backup, 30
Backup&Restore, 30

C

Configuration, 22
    without S7-PCT, 25
Connecting cables, 13
Connection system in IP65/67, 12

D

Data exchange
    Acyclic, 29
    Cyclic, 29
Data types, 15
Device data, 15
Device parameters, 24
    Changing, 30
    Save, 30
Device profiles, 16

E

Events, 15

F

Function block
    IO_LINK_DEVICE, 29
    IO_LINK_MASTER, 29

I

IODD
    Device description, 17
IO-Link
    Advantages, 9
    Combination, 19
    Components, 7
    Configuration tool, 17
    Definition, 8
    Interface, 12
    Protocol, 14
    Response time, 14
    Specification, 19

O

Operating modes, 14

P

Port
    Address range, 23
Port types in IP65/67, 13
Process data, 15

R

Restore, 30

S

S7-PCT
    Example configuration, 23
Startup of the IO system, 16

T

Transmission performance, 15
Transmission rate, 14

W

with S7-PCT, 22

SIEMENS

SIMATIC

High-precision input/output with Time-based IO

Function Manual

Preface

Documentation guide 1

Time-based IO basics 2

Configuring and parameter assignment 3

Programming 4

11/2019

A5E33454822-AC

Legal information

Warning notice system

This manual contains notices you have to observe in order to ensure your personal safety, as well as to prevent damage to property. The notices referring to your personal safety are highlighted in the manual by a safety alert symbol, notices referring only to property damage have no safety alert symbol. These notices shown below are graded according to the degree of danger.

⚠ DANGER

indicates that death or severe personal injury **will** result if proper precautions are not taken.

⚠ WARNING

indicates that death or severe personal injury **may** result if proper precautions are not taken.

⚠ CAUTION

indicates that minor personal injury can result if proper precautions are not taken.

NOTICE

indicates that property damage can result if proper precautions are not taken.

If more than one degree of danger is present, the warning notice representing the highest degree of danger will be used. A notice warning of injury to persons with a safety alert symbol may also include a warning relating to property damage.

Qualified Personnel

The product/system described in this documentation may be operated only by **personnel qualified** for the specific task in accordance with the relevant documentation, in particular its warning notices and safety instructions. Qualified personnel are those who, based on their training and experience, are capable of identifying risks and avoiding potential hazards when working with these products/systems.

Proper use of Siemens products

Note the following:

⚠ WARNING

Siemens products may only be used for the applications described in the catalog and in the relevant technical documentation. If products and components from other manufacturers are used, these must be recommended or approved by Siemens. Proper transport, storage, installation, assembly, commissioning, operation and maintenance are required to ensure that the products operate safely and without any problems. The permissible ambient conditions must be complied with. The information in the relevant documentation must be observed.

Trademarks

All names identified by ® are registered trademarks of Siemens AG. The remaining trademarks in this publication may be trademarks whose use by third parties for their own purposes could violate the rights of the owner.

Disclaimer of Liability

We have reviewed the contents of this publication to ensure consistency with the hardware and software described. Since variance cannot be precluded entirely, we cannot guarantee full consistency. However, the information in this publication is reviewed regularly and any necessary corrections are included in subsequent editions.

Siemens AG
Division Digital Factory
Postfach 48 48
90026 NÜRNBERG
GERMANY

A5E33454822-AC
℗ 11/2019 Subject to change

Copyright © Siemens AG 2019.
All rights reserved

Preface

Purpose of the documentation

This function manual will support you when you use "Time-based IO" technology with the S7-1500, ET 200MP, and ET 200SP systems.

The documentation deals with the following topics:

- Using "Time-based IO" technology
- Functions of the "Time-based IO" technology
- Hardware and software requirements for "Time-based IO"
- Configuring the "Time-based IO" function with STEP 7 (TIA Portal)

Basic knowledge required

The following knowledge is required in order to understand the Function manual:

- General knowledge of automation technology
- Knowledge of the industrial automation system SIMATIC
- Proficiency with STEP 7 (TIA Portal)
- Knowledge about isochronous mode

Scope of the documentation

The following documentation is valid for all components of the S7-1500, ET 200MP and ET 200SP systems that support the "Time-based IO" technology.

Conventions

The following terms are used as synonyms in this documentation:

- **TIO module**: This term is used as synonym for I/O modules of the type:
  - ET 200MP TM Timer DIDQ 16x24V
  - ET 200SP TM Timer DIDQ 10x24V
- **TIO_Time**: This term is used as synonym for the shared time base (relative time) of the TIO modules.
- **Jitter**: This is a general term that includes various time influences affecting accuracy. This means that:
  - for input data: Deviation of the measured time from the actual event.
  - for output data: Deviation of the actual switching time from the specified time.

You should also pay particular attention to notes such as the one shown below:

Note

The notes contain important information on the product, handling the product or on part of the documentation to which particular attention should be paid.

Additional support

The range of technical documentation for the individual SIMATIC products and systems can be found on the Internet (http://www.siemens.com/simatic-tech-doku-portal).

For more information about configuration of Time-based IO, see the following FAQs in the Siemens Industry Online Support:

- Entry ID 109738186 (https://support.industry.siemens.com/cs/ww/en/view/109738186)
- Entry ID 109736374 (https://support.industry.siemens.com/cs/ww/en/view/109736374)

Additional information on isochronous mode is available in the Isochronous mode (http://support.automation.siemens.com/WW/view/en/49948856) and PROFINET with STEP 7 (https://support.industry.siemens.com/cs/ww/en/view/109755401) manuals.

Siemens Industry Online Support

You can find current information on the following topics quickly and easily here:

- **Product support**

  All the information and extensive know-how on your product, technical specifications, FAQs, certificates, downloads, and manuals.

- **Application examples**

  Tools and examples to solve your automation tasks – as well as function blocks, performance information and videos.

- **Services**

  Information about Industry Services, Field Services, Technical Support, spare parts and training offers.

- **Forums**

  For answers and solutions concerning automation technology.

- **mySupport**

  Your personal working area in Industry Online Support for messages, support queries, and configurable documents.

This information is provided by the Siemens Industry Online Support in the Internet (https://support.industry.siemens.com).

Industry Mall

The Industry Mall is the catalog and order system of Siemens AG for automation and drive solutions on the basis of Totally Integrated Automation (TIA) and Totally Integrated Power (TIP).

You can find catalogs for all automation and drive products on the Internet (https://mall.industry.siemens.com) and in the Information and Download Center (https://www.siemens.com/automation/infocenter).

Security information

Siemens provides products and solutions with industrial security functions that support the secure operation of plants, systems, machines and networks.

In order to protect plants, systems, machines and networks against cyber threats, it is necessary to implement – and continuously maintain – a holistic, state-of-the-art industrial security concept. Siemens' products and solutions only form one element of such a concept.

Customers are responsible for preventing unauthorized access to their plants, systems, machines and networks. Such systems, machines and components should only be connected to an enterprise network or the internet if and to the extent such a connection is necessary and only when appropriate security measures (e.g. firewalls and/or network segmentation) are in place.

For additional information on industrial security measures that may be implemented, please visit (http://www.siemens.com/industrialsecurity).

Siemens' products and solutions undergo continuous development to make them more secure. Siemens strongly recommends that product updates are applied as soon as they are available and that the latest product versions are used. Use of product versions that are no longer supported, and failure to apply latest updates may increase customer's exposure to cyber threats.

To stay informed about product updates, subscribe to the Siemens Industrial Security RSS Feed under (http://www.siemens.com/industrialsecurity).

Table of contents

Preface 3

1 Documentation guide 7

1.1 Guide to documentation function manuals 7

2 Time-based IO basics 13

2.1 Using Time-based IO 13

2.2 Time behavior of Time-based IO 14

2.2.1 Time behavior of standard technology 14

2.2.2 Time-based IO properties 15

2.3 System environment 17

2.4 Hardware requirements 18

2.5 Configuration software requirements 19

2.6 Technical implementation 20

3 Configuring and parameter assignment 24

3.1 Requirements 24

3.2 Settings for Time-based IO 25

4 Programming 27

4.1 Overview of instructions 27

4.2 Programming of Time-based IO 28

4.3 Time-based IO 31

4.3.1 TIO_SYNC: Synchronizing TIO modules 31

4.3.2 TIO_DI: Reading in edges at digital input and associated time stamps 36

4.3.3 TIO_DI_ONCE: Reading in edges once at the digital input and associated time stamps 43

4.3.4 TIO_DQ: Output edges time-controlled at the digital output 51

4.3.5 UDT TIO_SYNC_Data 58

Index 59

Documentation guide 1

1.1 Guide to documentation function manuals

The documentation for the SIMATIC S7-1500 automation system, the CPUs 1513/1516pro-2 PN based on SIMATIC S7-1500, and the distributed I/O systems SIMATIC ET 200MP, ET 200SP and ET 200AL is divided into three areas.
This division allows you easier access to the specific information you require.

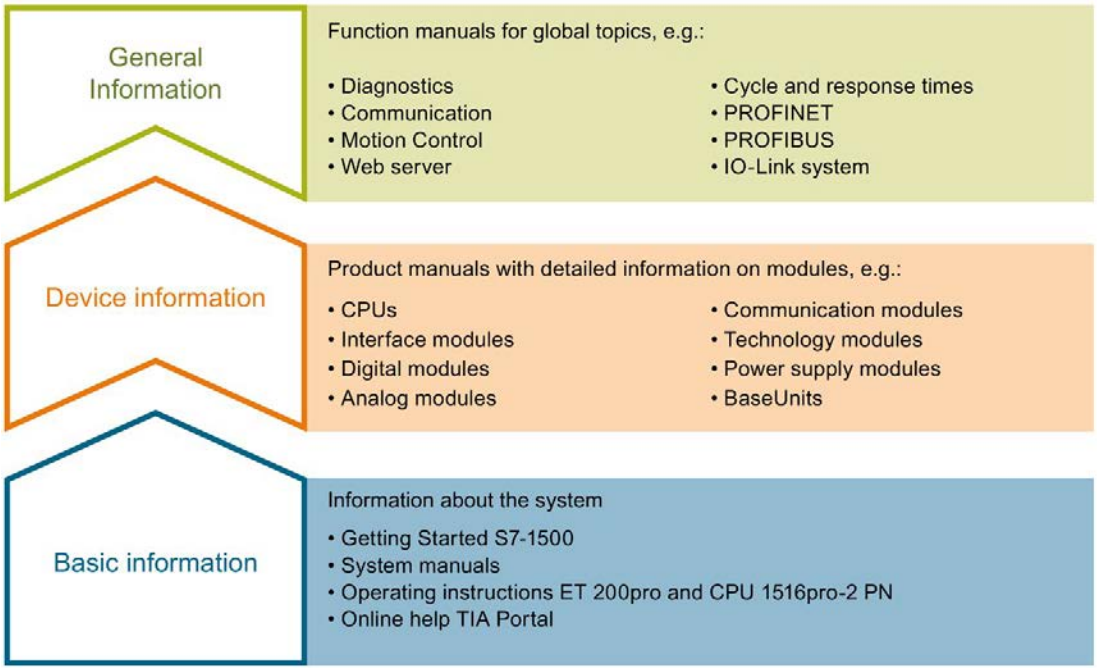

Basic information

System manuals and Getting Started manuals describe in detail the configuration, installation, wiring and commissioning of the SIMATIC S7-1500, ET 200MP, ET 200SP and ET 200AL systems. Use the corresponding operating instructions for the CPUs 1513/1516pro-2 PN. The STEP 7 online help supports you in the configuration and programming.

Device information

Product manuals contain a compact description of the module-specific information, such as properties, terminal diagrams, characteristics and technical specifications.

General information

The function manuals contain detailed descriptions on general topics such as diagnostics, communication, Motion Control, Web server, OPC UA.

You can download the documentation free of charge from the Internet (https://support.industry.siemens.com/cs/ww/en/view/109742705).

Changes and additions to the manuals are documented in product information sheets.

You will find the product information on the Internet:

- S7-1500/ET 200MP (https://support.industry.siemens.com/cs/us/en/view/68052815)
- ET 200SP (https://support.industry.siemens.com/cs/us/en/view/73021864)
- ET 200AL (https://support.industry.siemens.com/cs/us/en/view/99494757)

Manual Collections

The Manual Collections contain the complete documentation of the systems put together in one file.

You will find the Manual Collections on the Internet:

- S7-1500/ET 200MP (https://support.industry.siemens.com/cs/ww/en/view/86140384)
- ET 200SP (https://support.industry.siemens.com/cs/ww/en/view/84133942)
- ET 200AL (https://support.industry.siemens.com/cs/ww/en/view/95242965)

"mySupport"

With "mySupport", your personal workspace, you make the best out of your Industry Online Support.

In "mySupport", you can save filters, favorites and tags, request CAx data and compile your personal library in the Documentation area. In addition, your data is already filled out in support requests and you can get an overview of your current requests at any time.

You must register once to use the full functionality of "mySupport".

You can find "mySupport" on the Internet (https://support.industry.siemens.com/My/ww/en).

"mySupport" - Documentation

With "mySupport", your personal workspace, you make the best out of your Industry Online Support.

In "mySupport", you can save filters, favorites and tags, request CAx data and compile your personal library in the Documentation area. In addition, your data is already filled out in support requests and you can get an overview of your current requests at any time.

You must register once to use the full functionality of "mySupport".

You can find "mySupport" on the Internet (https://support.industry.siemens.com/My/ww/en/documentation).

"mySupport" - CAx data

In the CAx data area of "mySupport", you can access the latest product data for your CAx or CAe system.

You configure your own download package with a few clicks.

In doing so you can select:

- Product images, 2D dimension drawings, 3D models, internal circuit diagrams, EPLAN macro files
- Manuals, characteristics, operating manuals, certificates
- Product master data

You can find "mySupport" - CAx data on the Internet (http://support.industry.siemens.com/my/ww/en/CAxOnline).

Application examples

The application examples support you with various tools and examples for solving your automation tasks. Solutions are shown in interplay with multiple components in the system - separated from the focus on individual products.

You will find the application examples on the Internet (https://support.industry.siemens.com/sc/ww/en/sc/2054).

TIA Selection Tool

With the TIA Selection Tool, you can select, configure and order devices for Totally Integrated Automation (TIA).
This tool is the successor of the SIMATIC Selection Tool and combines the known configurators for automation technology into one tool.
With the TIA Selection Tool, you can generate a complete order list from your product selection or product configuration.

You can find the TIA Selection Tool on the Internet (http://w3.siemens.com/mcms/topics/en/simatic/tia-selection-tool).

SIMATIC Automation Tool

You can use the SIMATIC Automation Tool to perform commissioning and maintenance activities simultaneously on various SIMATIC S7 stations as a bulk operation independent of TIA Portal.

The SIMATIC Automation Tool provides a multitude of functions:

- Scanning of a PROFINET/Ethernet system network and identification of all connected CPUs
- Address assignment (IP, subnet, gateway) and station name (PROFINET device) to a CPU
- Transfer of the date and the programming device/PC time converted to UTC time to the module
- Program download to CPU

- RUN/STOP mode switchover
- CPU localization by means of LED flashing
- Reading out of CPU error information
- Reading of the CPU diagnostics buffer
- Reset to factory settings
- Firmware update of the CPU and connected modules

You can find the SIMATIC Automation Tool on the Internet (https://support.industry.siemens.com/cs/ww/en/view/98161300).

PRONETA

SIEMENS PRONETA (PROFINET network analysis) allows you to analyze the plant network during commissioning. PRONETA features two core functions:

- The topology overview automatically scans the PROFINET and all connected components.
- The IO check is a fast test of the wiring and the module configuration of a plant.

You can find SIEMENS PRONETA on the Internet (https://support.industry.siemens.com/cs/ww/en/view/67460624).

SINETPLAN

SINETPLAN, the Siemens Network Planner, supports you in planning automation systems and networks based on PROFINET. The tool facilitates professional and predictive dimensioning of your PROFINET installation as early as in the planning stage. In addition, SINETPLAN supports you during network optimization and helps you to exploit network resources optimally and to plan reserves. This helps to prevent problems in commissioning or failures during productive operation even in advance of a planned operation. This increases the availability of the production plant and helps improve operational safety.

The advantages at a glance

- Network optimization thanks to port-specific calculation of the network load
- Increased production availability thanks to online scan and verification of existing systems
- Transparency before commissioning through importing and simulation of existing STEP 7 projects
- Efficiency through securing existing investments in the long term and the optimal use of resources

You can find SINETPLAN on the Internet (https://www.siemens.com/sinetplan).

The documentation for the SIMATIC S7-1500 automation system, for CPU 1516pro-2 PN based on SIMATIC S7-1500, and for the distributed I/O systems SIMATIC ET 200MP, ET 200SP and ET 200AL is divided into three areas.
This division allows you easier access to the specific information you require.

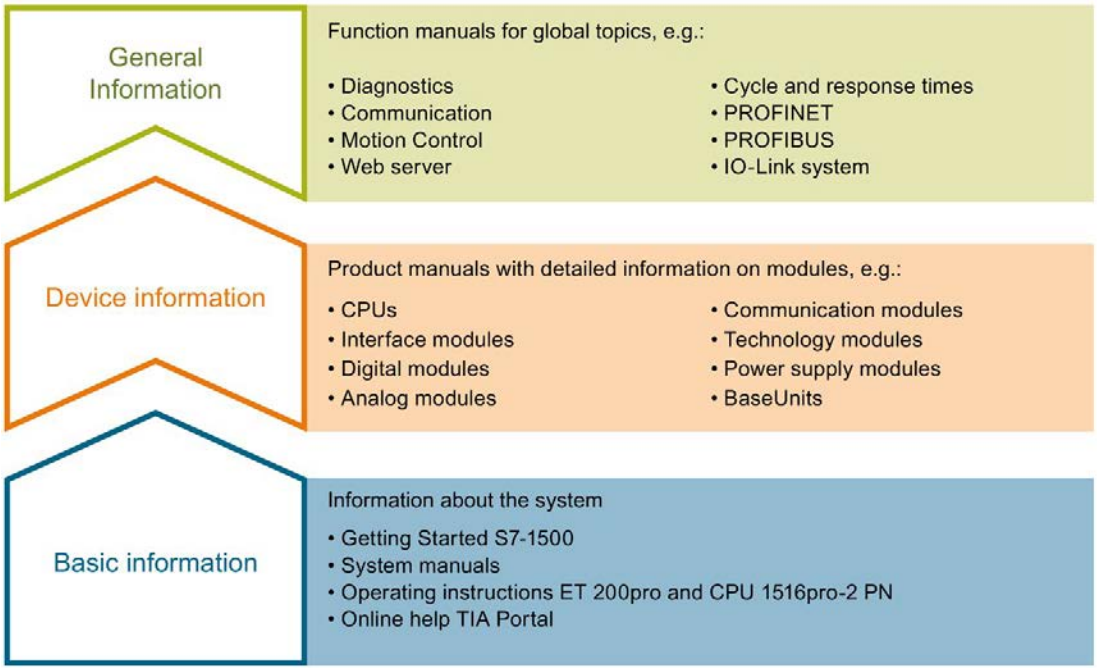

Basic information

System manuals and Getting Started manuals describe in detail the configuration, installation, wiring and commissioning of the SIMATIC S7-1500, ET 200MP, ET 200SP and ET 200AL systems; use the corresponding operating instructions for CPU 1516pro-2 PN. The STEP 7 online help supports you in configuration and programming.

Device information

Product manuals contain a compact description of the module-specific information, such as properties, terminal diagrams, characteristics and technical specifications.

General information

The function manuals contain detailed descriptions on general topics such as diagnostics, communication, Motion Control, Web server, OPC UA.

You can download the documentation free of charge from the Internet.

Changes and additions to the manuals are documented in product information sheets.

You will find the product information on the Internet:

- S7-1500/ET 200MP
- ET 200SP
- ET 200AL

Manual Collections

The Manual Collections contain the complete documentation of the systems put together in one file.

You will find the Manual Collections on the Internet:

- S7-1500/ET 200MP
- ET 200SP
- ET 200AL

"mySupport"

With "mySupport", your personal workspace, you make the best out of your Industry Online Support.

In "mySupport", you can save filters, favorites and tags, request CAx data and compile your personal library in the Documentation area. In addition, your data is already filled out in support requests and you can get an overview of your current requests at any time.

You must register once to use the full functionality of "mySupport".

You can find "mySupport" on the Internet.

Application examples

The application examples support you with various tools and examples for solving your automation tasks. Solutions are shown in interplay with multiple components in the system - separated from the focus on individual products.

You will find the application examples on the Internet.

Time-based IO basics 2

2.1 Using Time-based IO

Many processes in a plant require a relatively precise reproducibility as far as time is concerned. The reproducibility can be optimized to a limited extent by shorter CPU cycle times. The use of high-precision input/output with Time-based IO provides a more accurate reproducibility than the one that can be achieved by optimizing the CPU cycle time. An additional advantage of Time-based IO is the independence from the time scale of the application cycle.

Below is a selection of typical areas of application that can benefit from this technology.

Defined response times

An output signal that responds with a precise delay time that is independent of the application cycle can be output by adding a specified time to the time stamp of an edge at the digital input.

Length measurement

The length of a product passing by can be determined by the difference between two input time stamps and an associated travel speed.

Cam controller

The ongoing movement can be extrapolated from a synchronous position information (for example, from a counter module or an axis). Based on this result, the time of a switching position (cam position) is calculated and transferred to the TIO module (output). This way the switch event takes place at the required position.

Dosing

By specifying a switch-on and a switch-off edge to a time-controlled digital output, a valve can be opened for a specific time and the amount of liquid can be dosed accordingly.

2.2 Time behavior of Time-based IO

2.2.1 Time behavior of standard technology

The time behavior of the inputs/outputs depends on the following factors for standard technology:

- CPU program (program structure)
- Bus cycle times (fieldbus, backplane bus)
- Cycle time of the I/O modules
- Internal cycle time of sensors/actuators

A deterministic statement as to

- when an input event (e.g., sensor signal) has taken place
- when the output event has an effect on the input event (e.g., output switches)

will become inaccurate due to the time factors listed above.

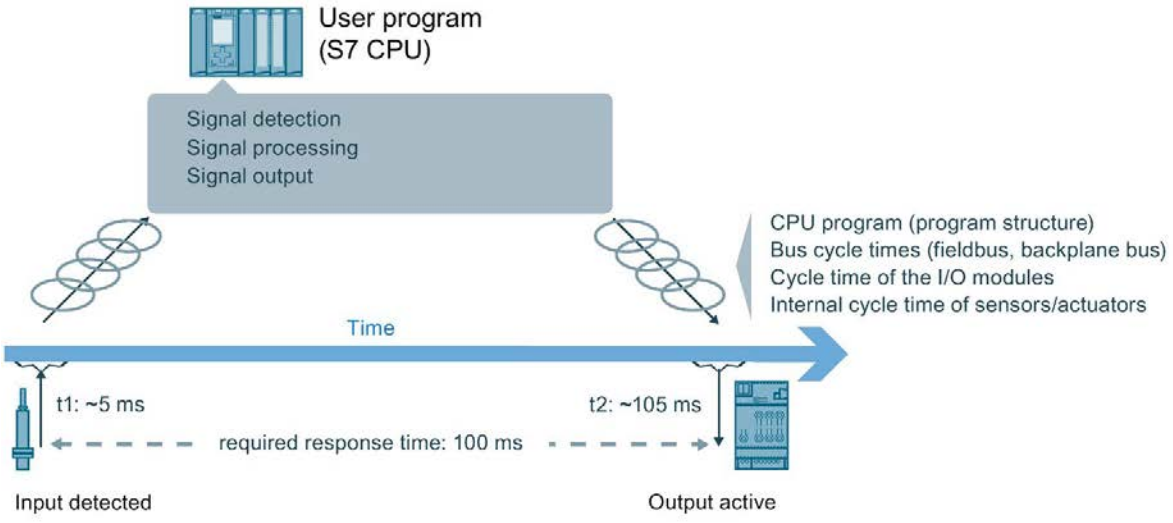

2.2.2 Time-based IO properties

Time-controlled I/O functionality

Time-based IO stands for time-based processing of I/O signals. All input signals are referred to one time (TIO_Time). The input signals receive the time stamp t1. After signal processing, the output event can also be linked with the TIO_Time and output at the required time. Output takes place at time t2.

Here an example for Time-based IO:

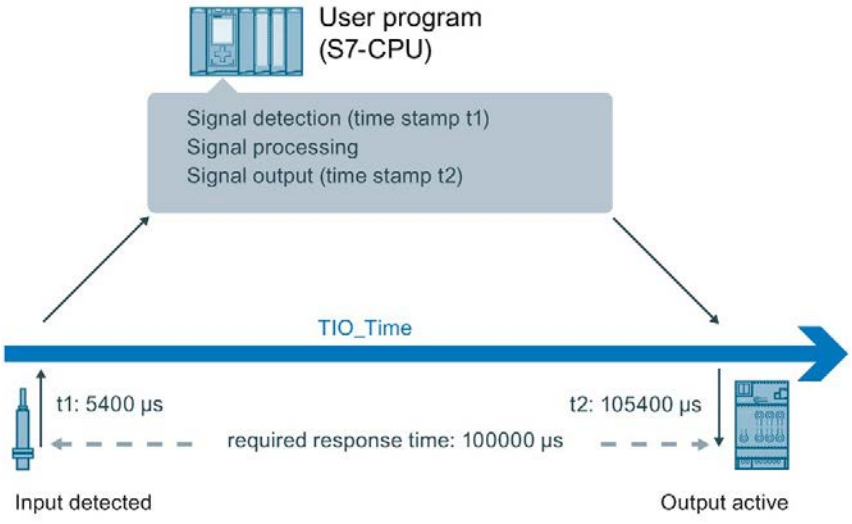

Independence and focus of Time-based IO

The shared time basis (TIO_Time) of all components involved is the basis for Time-based IO. By using TIO_Time, the accuracy of the output with Time-based IO does not depend on:

- CPU program (program structure)
- Bus cycle times (fieldbus, backplane bus)
- Cycle time of the I/O modules

The focus of Time-based IO is not on the I/O response time but on the predictability (determinism) of I/O signals. With Time-based IO, it is possible to respond to an input signal with an output signal within a defined time. Keep in mind the system-dependent minimum response time when using Time-based IO.

Time-based IO stands for:

- I/O functionalities executed with high precision
- I/O processes with time stamp

Accuracy

Accuracy is crucial for the performance capability of Time-based IO.

The accuracy is a property of the TIO modules and indicates the deviation with which the required response is achieved. For Time-based IO, the accuracy and reproducibility of the response is in the millisecond range.

Response time

In addition to a very high accuracy, a minimum response time to an input event can result depending on the configuration.

The response time is the time between the input event and the required output event.

For the minimum response time:

3 × application cycle T_{APP}

2.3 System environment

Introduction

Possible system configurations with PROFINET for the use of Time-based IO are shown below.

Use with STEP 7 (TIA Portal)

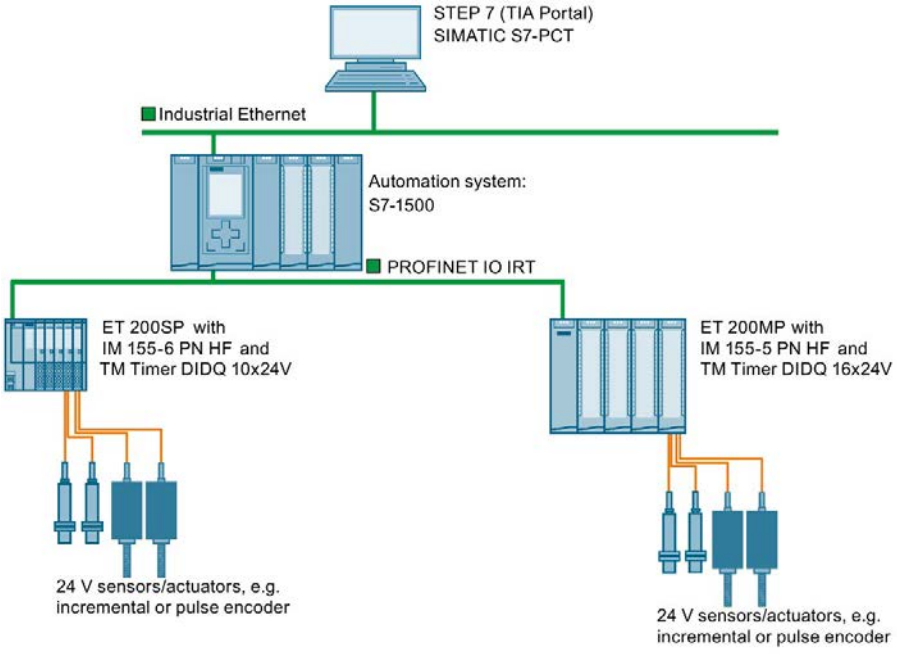

2.4 Hardware requirements

Introduction

The properties of the hardware components required for Time-based IO are listed below. You will also find specific modules as an example.

Requirements

Component	Properties	Examples
CPU	Isochronous mode/ PROFINET IO IRT: provides defines response time and high-precision plant behavior.	• CPU 1511-1 PN
ET 200 interface module	Supports isochronous mode	• ET 200SP with IM 155-6 PN HF (as of firmware V2.1) • ET 200MP with IM 155-5 PN HF
I/O module	TIO module	• ET 200SP: TM Timer DIDQ 10x24V • ET 200MP: TM Timer DIDQ 16x24V (as of firmware V1.0.1)

2.5 Configuration software requirements

Introduction

Below is a list of the software versions which support the "Time-based IO" function.

Requirements

Configuration software	Requirements	Supported hardware components	Additional information
STEP 7 (TIA Portal) V16 and above	PROFINET IO IRT or isochronous mode on the backplane bus	• S7-1500 automation system • ET 200SP and ET 200MP distributed I/O systems • TM Timer DIDQ 16x24V • TM Timer DIDQ 10x24V	STEP 7 (TIA Portal) online help

Additional information on isochronous mode is available in the Isochronous mode (http://support.automation.siemens.com/WW/view/en/49948856) and PROFINET with STEP 7 (https://support.industry.siemens.com/cs/ww/en/view/109755401) manuals.

TIO instructions

The TIO instructions are specific function blocks for use of Time-based IO. The following TIO instructions (Page 27) are available:

- TIO_SYNC
- TIO_DI
- TIO_DI_ONCE
- TIO_DQ

2.6 Technical implementation

Introduction

The information below will help you better understand the core aspects of Time-based IO and find out which SIMATIC functions are used to implement the described aspects.

Synchronization of involved modules (shared time basis)

The Time-based IO technology uses isochronous mode for all involved stations.

Isochronous mode enables multiple TIO modules to be synchronized to a shared time basis. The basis of the shared time basis for the TIO modules is the relative time TIO_Time.

Additional information on isochronous mode is available in the Isochronous mode (http://support.automation.siemens.com/WW/view/en/49948856) and PROFINET with STEP 7 (https://support.industry.siemens.com/cs/ww/en/view/109755401) manuals.

TIO_Time

The TIO_Time is the central time basis to which all time stamps refer.

TIO_Time has the following properties:

- Shared time basis for all TIO modules which are synchronized with the TIO instruction TIO_SYNC.
- The time starts counting again with each CPU startup.
- The TIO_Time has data type LTime (e.g. LT#14s830ms652us315ns).
- All valid time stamps refer to TIO_Time:
  - Input time stamps of the TIO modules are converted to the TIO_Time in the TIO instructions TIO_DI and TIO_DI_ONCE.
  - In the TIO instruction TIO_DQ, output time stamps are converted to the output time stamp of the TIO modules.
- The value of TIO_TIME corresponds to the current time with respect to TIO instructions and is updated with the call of TIO_SYNC. If you want an output to relate not to a previous input time stamp but to the current time, you can use the value of TIO_TIME as basis for the output time stamp. Example: Output of an edge in 20 ms: TIO_DQ.TimeStampRE=TIO_SYNC_DATA.TIO_TIME+LT#20ms)

TIO instructions in the isochronous OB

The TIO instructions must be called in a "Synchronous Cycle" or "MC-PostServo" OB.

You can find additional information in the chapter Programming (Page 27).

Note

The TIO instructions also support geared down isochronous mode. With a clock reduction ratio, the application cycle is longer than the send clock.

Note

The TIO instructions must be called in an "MC-PreServo" OB.

If you use an OB of the "MC-PostServo" type, you can decide separately for each TIO model whether it is used with Motion Control technology objects or with TIO instructions.

If you call the TIO instructions in an "MC-PostServo" type OB, you need to use the IPO model and also cannot use any reduction ratio.

Calling TIO instructions in an OB of the type "MC-PostServo" with reduction ratio "MC-Servo" can result in incorrect calculation of time stamps.

Modes for updating the process image

In isochronous mode, you can influence the order of the update of the process image partition of the input and output data. In doing so, you can select the following program execution models:

- IPO model (application cycle factor = 1)
- OIP model (application cycle factor >= 1)

The abbreviations I, P, O stand for the following processes: I = Input, P= Processing, O = Output.

Additional information on the application cycle factor is available in the PROFINET with STEP 7 (http://support.automation.siemens.com/WW/view/en/49948856) Manual.

IPO model (application cycle factor = 1)

The user program is started after the delay time. Start by updating the corresponding process image partition of the inputs in the user program by calling the SYNC_PI system instruction. Processing is started next (for example, calculation of the time stamps). The corresponding process image partition of the outputs is updated at the end of the user program in the CPU by SYNC_PO.

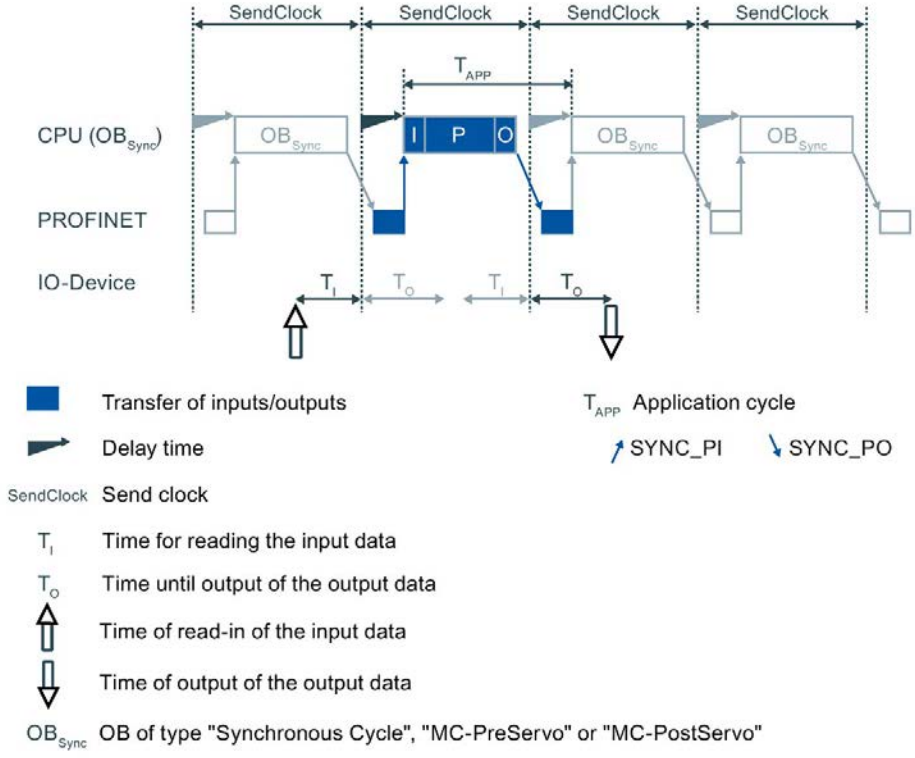

Properties of the IPO model:

- Supports shorter response times
- The application cycle must not be greater than the send clock.

  This gives the application less time than with the OIP model.

OIP model (application cycle factor >= 1)

The user program is started after the delay time. In PIP_Mode 0, the TIO_SYNC instruction updates the process image. In the other modes, you start by updating the corresponding process image partition of the outputs in the user program by calling the SYNC_PO system instruction. As a result, the output data that was calculated in the previous network cycle will become active during the next network cycle (T_O). Next the corresponding process image partition of the inputs is updated in the CPU by SYNC_PI. Processing starts after the data is transmitted (for example, calculation of the time stamps).

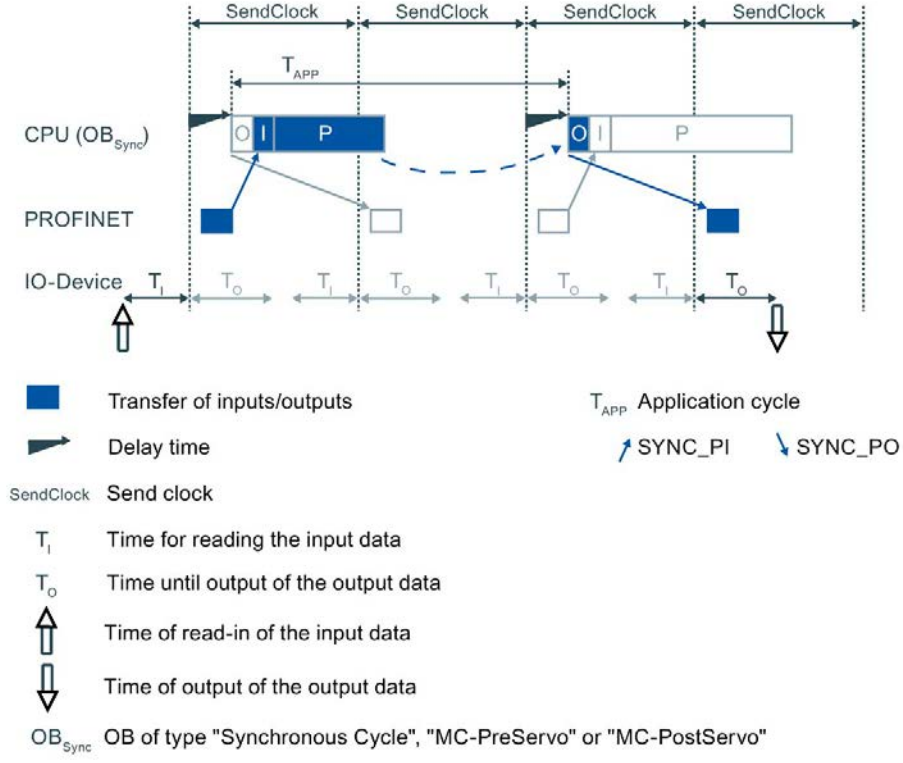

Properties of the OIP model:

- The response time is longer than with the IPO model.
- It is one application cycle longer than permitted by the send clock.
  This gives the application more time than with the IPO model.

Influence of accuracy

To estimate the accuracy you need the accuracy of

- TIO module
- Sensor/ actuator

Consult the data sheets of the respective module regarding the accuracy value.
You have to add the individual jitters of the TIO modules and the sensors/actuators. You can neglect any other influencing factors.

See also

Programming of Time-based IO (Page 28)

Configuring and parameter assignment 3

3.1 Requirements

Introduction

You need additional software components to use Time-based IO. You must also have created the standard configuration for your project.

Below you will learn more about the standard configuration for Time-based IO.

Requirements

In STEP 7 (TIA Portal):

- The project has been created.
- The CPU has been created and the parameters are assigned.
- Automation system and modules have been created and the parameters have been assigned.
- When using an ET 200 station: The connection has been created and the parameters are assigned via PROFINET.
- A "Synchronous Cycle" or "MC-PostServo" type OB has been created.

See also

System environment (Page 17)

Configuration software requirements (Page 19)

3.2 Settings for Time-based IO

Below you will find an overview of which settings have to be made for which components of Time-based IO.

Table 3- 1 Overview of settings for Time-based IO

Component	Where adjustable[1]	Properties to be set	Additional information
When using an ET 200 station: PROFINET subnet	Properties of the PROFINET subnet > sync domain	Create sync domain or edit properties of sync domain	• PROFINET function manual (http://support.automation.siemens.com/WW/view/en/49948856) • Online help in the STEP 7 (TIA Portal) information system
		Specify devices of the sync domain: • Specify CPU as sync master. • Specify ET 200 interface module as sync slave with RT class "IRT".	
S7-1500 station	Properties of the PROFINET interface > isochronous communication	Enable isochronous mode	• Function Manual Isochronous Mode (https://support.industry.siemens.com/cs/ww/en/view/109755401) • PROFINET function manual (http://support.automation.siemens.com/WW/view/en/49948856) • Manual Technology Module TM Timer DIDQ 16x24V (http://support.automation.siemens.com/WW/view/en/95153313) • Manual Technology Module TM Timer DIDQ 10x24V (http://support.automation.siemens.com/WW/view/en/95153951) • Online help in the STEP 7 (TIA Portal) information system
ET 200 station			
TIO module	Properties of the TIO module > I/O addresses	Enable isochronous mode	
	Properties of the TIO module > I/O addresses	Assign or create a "Synchronous Cycle" or "MC-PostServo" type OB	
	Properties of the TIO module > I/O addresses	Assignment of I/O addresses to the process image partition (e.g., PIP1)	
	Properties of the TIO module > Basic parameters	Configure "Module use from the user program"	
	Properties of the TIO module > Basic parameters/Channel parameters	For TM Timer DIDQ 10x24V: If required, assign parameters for Configuration "Use input/output individually"	
		Parameter assignment for use of Timer DI and Timer DQ	
Isochronous OB (Synchronous Cycle or MC-PostServo)	Properties of the Isochronous OB > Isochronous mode	Adjust application cycle, if necessary	

[1] Describes the topic area in the configuration software.

Setting for Time-based IO

If you have no special response time requirements, the following setting is suitable as a starting point:

- Send clock: 2 ms
- Application cycle: 4 ms
- Assignment to the process image partition: PIP1
- PIP_Mode: 0 (OIP model)

FAQ

For more information, see the following FAQs in the Siemens Industry Online Support:

- Entry ID 109738186 (https://support.industry.siemens.com/cs/ww/en/view/109738186)
- Entry ID 109736374 (https://support.industry.siemens.com/cs/ww/en/view/109736374)

See also

Programming of Time-based IO (Page 28)

Programming 4

4.1 Overview of instructions

Introduction

Time-based IO is used with special instructions (TIO instructions). The TIO_SYNC TIO instruction is responsible for synchronizing all involved TIO modules and creates a unique time basis (TIO_Time) to which all actions are referenced.

Additional instructions undertake the reading in of process input signals with associated time stamps and/or the time-controlled output of process output signals.

Note

The TIO instructions are helpful for general time-based IO applications. For special applications, such as cam controllers, there are also separate technology objects, for example, TO_CamOutput.

Note

The TIO instructions use the time stamp functions of the TIO modules. The other functions of the TIO modules can be used independently of the TIO instructions in applications.

TIO instructions

Instruction	Short description
TIO_SYNC	Synchronizes the TIO modules and provides the time basis for Time-based IO
TIO_DI	Detects the edges at the digital input (Timer DI) and supplies the associated time stamp
TIO_DI_ONCE	• Detects the edges at the digital input (timer DI) once and provides the associated time stamp • Controls a timer DI channel which is configured as an edge-triggered enable for another channel.
TIO_DQ	Outputs time-controlled edges at the digital output (Timer DQ)

4.2 Programming of Time-based IO

Introduction

To use Time-based IO, the TIO instructions must be called in an isochronous OB. The application can also run in another OB. This allows you to shorten the runtime of the isochronous OB.

You need the following TIO instructions according to the required task:

TIO module	TIO instructions
• TM Timer DIDQ 16x24V • TM Timer DIDQ 10x24V	• Per digital input, one TIO_DI or TIO_DI_ONCE for read-in • Per digital output, one TIO_DQ for output • One TIO_SYNC (for up to eight TIO modules)

This section below describes the programming of the CPU for Time-based IO.

Requirements

Hardware configuration in STEP 7 (TIA Portal):

- The TIO modules are assigned to an isochronous network.
- The TIO modules are assigned to a shared process image partition.
- The process image partition is assigned to an isochronous OB.
- The TIO modules are configured for use with instructions from the "Time-based IO" library.

Additional information on configuration of Time-based IO is available in the section Settings for Time-based IO (Page 25).

Procedure

1. Create a TIO instruction, TIO_SYNC, in the isochronous OB.
2. Connect all TIO modules to be synchronized at the TIO_SYNC TIO instruction using parameters HWID_1 to HWID_8.

   The HWID can be found in the hardware configuration under "Properties > System constants".

   Note

   Use of symbolic constants is generally preferred instead of absolute numerical values when interconnecting.

3. Set the data update mode at the TIO_SYNC instruction at the PIP_Mode input parameter.

   The description of the modes is available in the chapter Technical implementation (Page 20).

   The parameter assignment of the TIO_SYNC TIO instruction is complete.

4. For the following instructions, note the call sequence depending on the selected value for PIP_Mode:

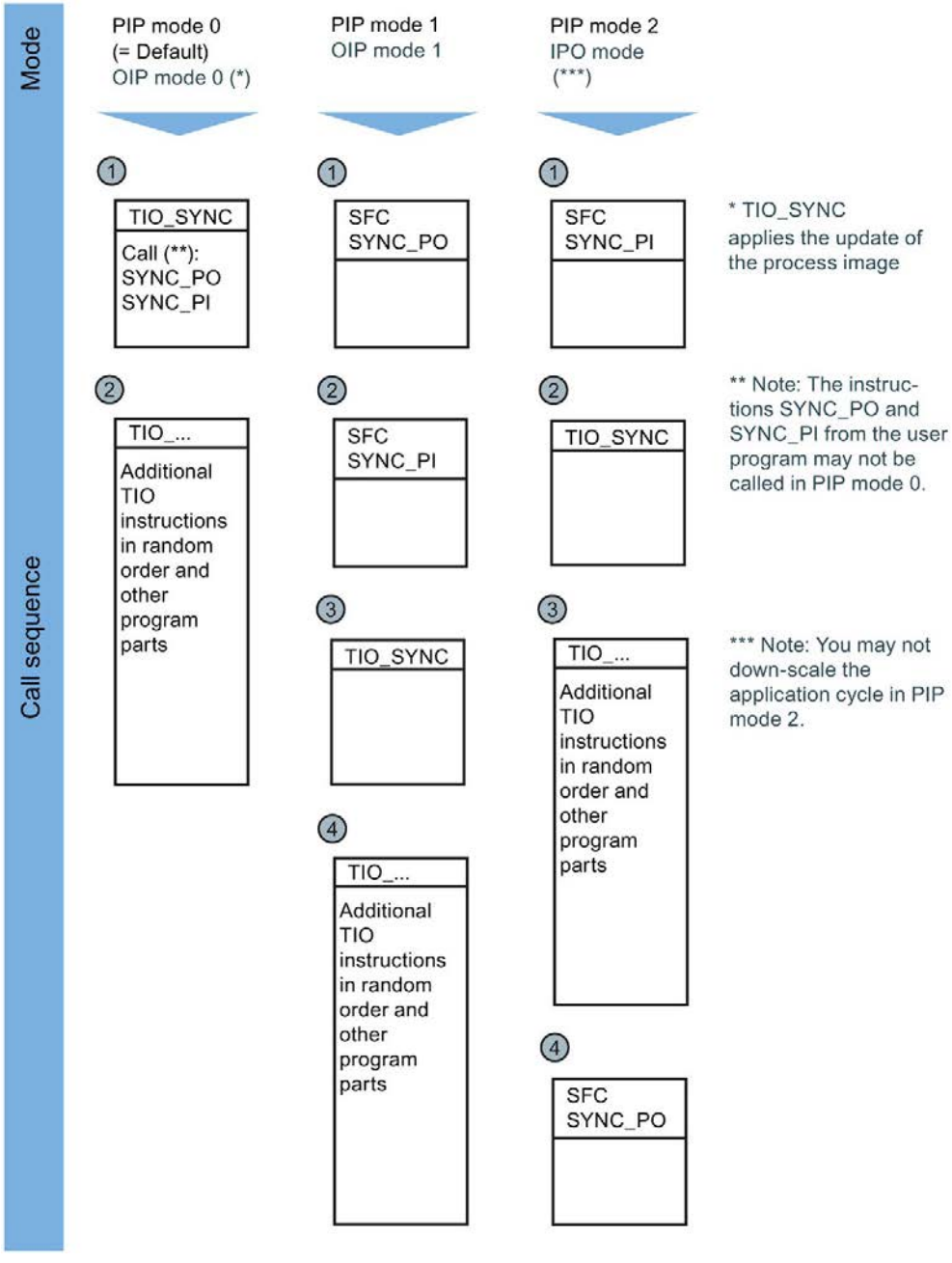

5. Add the TIO instructions for read-in/output required for your application in the isochronous OB.
6. At the TIO instructions for read-in/output, interconnect in each case the input/output TIO_SYNC_Data with the same name output at the TIO_SYNC.
7. At the TIO instructions for read-in/output, assign parameters for the input parameters HWID (see "Properties > System constants" in hardware configuration) and Channel.
The Time-based IO functionality is successfully programmed.

8. Interconnect the Time-based IO functionality with your application, such as evaluating the read-in time stamp in a step sequencer in another OB.
9. If TIO_SYNC does not automatically read out the send clock: Define the send clock manually, e.g. in OB100.
10. Compile and download the entire project to the CPU.

Result

You have completed programming the use of Time-based IO.

FAQ

For more information, see the following FAQs in the Siemens Industry Online Support:

- Entry ID 109738186 (https://support.industry.siemens.com/cs/ww/en/view/109738186)
- Entry ID 109736374 (https://support.industry.siemens.com/cs/ww/en/view/109736374)

4.3 Time-based IO

4.3.1 TIO_SYNC: Synchronizing TIO modules

Description

TIO_SYNC is the basis for all other TIO instructions. TIO_SYNC synchronizes TIO modules to a shared time basis TIO_Time.

You can synchronize up to 8 TIO modules with TIO_SYNC. All TIO modules must be assigned to the same process image partition (PIP). If you select "0" for the input parameter PIP_Mode, you assign the number of the process image partition at the PIP_PART input parameter.

Additional information on configuration of Time-based IO is available in the Configuration and parameter assignment section.

Startup characteristics

At the startup of the CPU, the TIO_SYNC instruction receives and checks the input parameters once and initializes the TIO_Time.

You have several options for handling the optional parameters SendClock, AppCycleFactor and ToTimes:

- SendClock, AppCycleFactor and ToTimes can be read in automatically each time the system is started. This results in a time delay during startup, but the values are always consistent.
- Automatically read in SendClock, AppCycleFactor and ToTimes at each startup and apply the read-in values as set values during commissioning. This results in fast subsequent startups, but is inconsistent after changes in the hardware configuration (repeat commissioning necessary).
- Manually define SendClock, AppCycleFactor and ToTimes before the first call of the instruction, for example, in OB100:

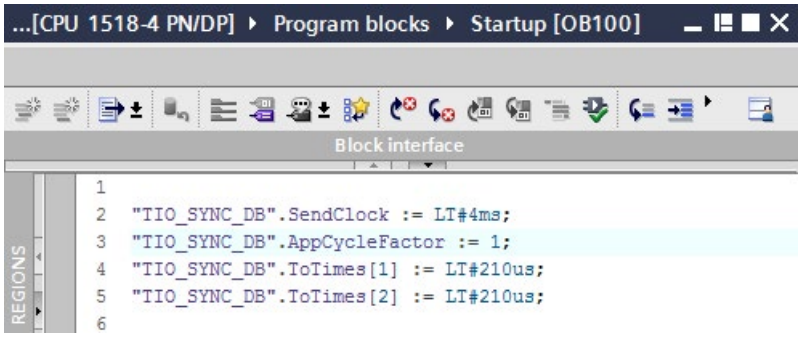

  This results in a fast startup, but you need to manually update the values after changes to the hardware configuration.

  You will find information about the parameters in the table below.

If startup takes place without errors, the instruction changes to normal operation. In the event of an error, the instruction does not change to normal operation and generates an error message.

Functional description

In normal operation, the instruction ensures synchronization of all TIO modules configured at the HWID input.

The calculated TIO_Time for the instructions of the TIO modules is provided at the TIO_SYNC_Data output.

Reaction to error

The Error output indicates if the instruction was processed correctly. In the event of an error, the cause of the error is displayed at the Status output.

Parameter

The table below shows the parameters of the TIO_SYNC instruction.

Parameter	Declaration in library version		Data type	Default	Description
	< V2.0	≥ V2.0	S7-1500		
HWID_1 ... HWID_8*	Input		HW_IO	65535	Hardware identifier for TIO module from hardware configuration
PIP_Mode*	Input		PIP	0	Mode for the data update**: • 0: OIP model with internal update of the process image by SYNC_PO and SYNC_PI. • 1: OIP model without internal update of the process image • 2: IPO model without internal update of the process image
PIP_PART*	Input		USInt	1	Only relevant if PIP_Mode = 0 Number of the process image partition which is to be updated isochronously.
TIO_SYNC_ Data	Output		"TIO_ SYNC_ Data"		Calculated system time for the TIO instructions of the TIO modules and internal data used for synchronization. See UDT TIO_SYNC_Data (Page 58).
Status	Output		DWord	16#0	Status of the instruction: see description of Status parameter
Error	Output		Bool	False	Error = True: An error has occurred. For detailed information see Status parameter. Error is reset as soon as the error is corrected.

Parameter	Declaration in library version		Data type	Default	Description
	< V2.0	≥ V2.0	S7-1500		
OperatingState		Static	Int	0	Internal operating state of the instruction: • 0: Input parameters are checked • 1: Optional parameters are read out • 2: Read-out parameters are checked • 3: Normal operation (all parameters OK, TIO modules synchronized) As soon as operating state 3 is reached, time stamps can be read in and edges can be output. If you want to repeat the synchronization of the TIO modules and the readout of the optional parameters, you can set the operating state to 0.
SendClock	Input	Static	LTime	LT#0ns	Send clock of the sync domain. Apply the send clock from the PROFINET configuration.
AppCycle-Factor		Static	UInt	0	Application cycle factor: • Range of values: 0 <= AppCycleFactor <= 85 • 0: SendClock, AppCycleFactor and ToTimes are read in automatically The application cycle T_{APP} is calculated as follows: T_{APP} = AppCycleFactor × SendClock
ToTimes		Static	LTime array [1...8]	LT#0ns	T_o for each TIO module: Time for output of isochronous output data.

* Checked once at startup of the CPU

** The IPO model (PIP_Mode = 2) provides the shortest response times, but it also places the highest demands on system performance. Processing of all TIO instructions and other program sections must be completed within one send clock. Select the OIP model (PIP_Mode = 0) only if you use only *one* instance of the TIO_SYNC instruction per process image partition so that the SYNC_PI and SYNC_PO instructions are not called more than once in the isochronous OB. In addition, do not call SYNC_PI and SYNC_PO in the other program sections in the OIP model.

Note

The TIO instructions must be called in an "MC-PreServo" OB.

If you use an OB of the "MC-PostServo" type, you can decide separately for each TIO model whether it is used with Motion Control technology objects or with TIO instructions.

If you call TIO_SYNC in an "MC-PostServo" type OB, you need to use PIP_Mode = 2 and also cannot use any reduction ratio.

Status parameter

Error codes or status information is output as double word at the Status output.

The double word is divided as follows:

Error code (DW#16#...)	Meaning
z0yywwww	Error of a system function: • during startup (z = 1) • during normal operation (z = 0) System functions with subordinate use are coded in yy: See table with error codes. wwww specifies the RET_VAL of the system function. The error information is available in the help for the system function.
z0yy0000	An error that does not originate in a system function. This error receives a consecutive error number yy. The error can occur: • during startup (z = 1) • during normal operation (z = 0)

Table with error codes

Error code (DW#16#...)	Meaning	Solution
00000000	No error.	—
1001xxxx	An error has occurred with system function RD_SINFO. The low word xxxx displays the error information of the RET_VAL return value from RD_SINFO.	• Read the description of the RD_SINFO in the STEP 7 (TIA Portal) information system. • Make sure that TIO_SYNC is called in a "Synchronous Cycle" or "MC-PostServo" OB.
10020000	The read cycle time of the isochronous OB is invalid (LT#0ms or negative). The instruction can only be used without errors in an isochronous OB.	• Correct the value of the cycle time. • Make sure that TIO_SYNC is called in a "Synchronous Cycle" or "MC-PostServo" OB.
10030000	The TIO_SYNC instruction is not called in an isochronous OB. The instruction can only be used without errors in an isochronous OB.	Make sure that TIO_SYNC is called in a "Synchronous Cycle" or "MC-PostServo" OB.
10040000	The assigned value at the PIP_Mode input parameter is outside the valid range of 0 to 2.	Correct the value at the PIP_Mode input parameter.
10050000	The configured send clock is outside the permitted range of 0 < SendClock <= 4 ms.	Correct the value of the send clock.
0006xxxx*	An error has occurred during execution of the SYNC_PI system function. The low word xxxx displays the error information of the RET_VAL return value from SYNC_PI.	Read the description of the SYNC_PI in the STEP 7 (TIA Portal) information system.
0007xxxx*	An error has occurred during execution of the SYNC_PO system function. The low word xxxx displays the error information of the return value RET_VAL from SYNC_PO.	Read the description of the SYNC_PO in the STEP 7 (TIA Portal) information system.

Error code (DW#16#...)	Meaning	Solution
10080000	At least one of the hardware identifiers does not belong to a TIO module.	Check the values of input parameters HWID_1 to HWID_8. Specify the hardware identifier of the TIO module from its module properties in the hardware configuration.
10090000	HWID_1 is not a valid hardware identifier. Possible cause: No module with this hardware identifier available.	Check the value of the respective input parameter. In each case, specify the hardware identifier of the TIO module from its module properties in the hardware configuration. An internal system constant of data type Hw_SubModule is available for the symbolic addressing.
100A0000	HWID_2 is not a valid hardware identifier. Possible cause: No module with this hardware identifier available.	
100B0000	HWID_3 is not a valid hardware identifier. Possible cause: No module with this hardware identifier available.	
100C0000	HWID_4 is not a valid hardware identifier. Possible cause: No module with this hardware identifier available.	
100D0000	HWID_5 is not a valid hardware identifier. Possible cause: No module with this hardware identifier available.	
100E0000	HWID_6 is not a valid hardware identifier. Possible cause: No module with this hardware identifier available.	
100F0000	HWID_7 is not a valid hardware identifier. Possible cause: No module with this hardware identifier available.	
10100000	HWID_8 is not a valid hardware identifier. Possible cause: No module with this hardware identifier available.	
10110000	The value at input parameter PIP_PART is outside the valid range of 1 ... 31.	Correct the value at the PIP_PART input parameter.
10120000	The value "2" is configured at the input parameter PIP_Mode, while the value > 1 (reduction ratio) is configured at the static parameter AppCycleFactor.	Correct the value at the PIP_Mode input parameter. PIP_Mode with the value "2" does not allow a reduction ratio.
x0130000	MC-Servo (OB91) is not isochronous to the bus cycle time.	Correct the value of the cycle time of the MC-Servo to the value of the bus cycle time. Note: Calling TIO instructions in an OB of the type "MC-PostServo" with reduction ratio "MC-Servo" can result in incorrect calculation of time stamps.
x014xxxx	An error has occurred when reading the data record. The low word xxxx indicates the error information of the instruction RDREC.	Read the description of the instruction RDREC in the STEP 7 (TIA Portal) information system.
x0FF0000	General internal error.	—

* Available only when "0" is selected for the input parameter PIP_Mode.

4.3.2 TIO_DI: Reading in edges at digital input and associated time stamps

Description

TIO_DI continuously detects the edges at a digital input of a TIO module and returns the associated time stamps.

Startup characteristics

During startup of the CPU, the instruction TIO_DI applies the input parameters once and checks the following:

- Checking HWID
- Checking to see if the number of the digital input (Channel) is in the permitted range (depending on addressed module and channel configuration)
- Checking TIO_SYNC_Data.ERROR: Is an error present at TIO_SYNC?
- Checking TIO_SYNC_Data.TO_TIMES for plausibility (0 ms to 4 ms)
- Checking to see whether the OB is isochronous

If startup takes place without errors, the instruction changes to normal operation. In the event of an error, the instruction does not change to normal operation and generates an error message.

Functional description

In normal operation, the instruction detects the edges at a digital input and the associated time stamps of the last valid, defined edge pair from the preceding isochronous cycle. Use the input parameter EdgeSel to determine the edges for which time stamps are detected.

You connect the input TIO_SYNC_Data with the output of the same name of the TIO_SYNC instruction. This ensures a shared time basis.

The following figure shows an example of the behavior of LEC when a read-in job is started with EdgeSel = 3 (rising and falling edge, order depending on occurrence).

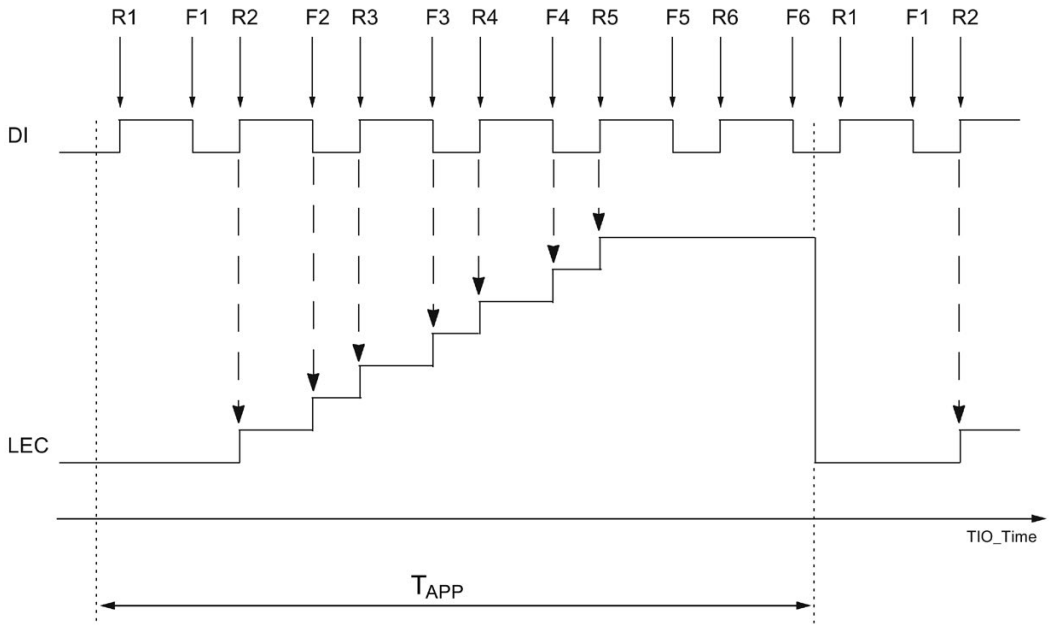

T_{APP} Application cycle

Rn Specified times of a positive DI edge

Fn Specified times of a falling DI edge

The module can count a maximum of seven edges per application cycle. LEC = 7 means therefore that seven or more edges have been counted.

Reaction to error

The Error output indicates if the instruction was processed correctly. In the event of an error, the cause of the error is displayed at the Status output.

Parameter

The table below shows the parameters of the TIO_DI instruction.

Parameter	Declaration in library version		Data type	Default	Description
	< V2.0	≥ V2.0	S7-1500		
HWID*	Input		HW_IO	0	Hardware identifier for TIO module from hardware configuration
Channel*	Input		UInt	0	Number (0 ... m) of the digital input of the connected TIO module
EdgeSel	Input		UInt	3	Specify the edges for which time stamps are detected: 0_D: Invalid 1: Two rising edges 2: Two falling edges 3: Rising and falling edge (order depending on occurrence) 4: First rising, then falling edge 5: First falling, then rising edge 6 to 255: Invalid EdgeSel can be changed during normal operation.
DI	Output		Bool	False	Status of digital input. If an inversion of the digital input is configured, this parameter is inverted as well.
TimeStampRE	Output		LTime	LT#0ns	Time stamp: Time at which a positive edge was detected. Exception: EdgeSel = 2: Time at which a falling edge has been detected (if *multiple* falling edges have occurred during the application cycle).
TimeStampFE	Output		LTime	LT#0ns	Time stamp: Time at which a falling edge was detected. Exception: EdgeSel = 1: Time at which a rising edge has been detected (if *multiple* rising edges have occurred during the application cycle).
EventCountRE	Output		UInt	0	Counter: Is incremented with each new, valid time stamp at a positive edge. The counter is reset with each CPU startup.
EventCountFE	Output		UInt	0	Counter: Is incremented with each new, valid time stamp at a falling edge. The counter is reset with each CPU startup.
LEC	Output		UInt	0	Counter: Number of edges for which no time stamp could be saved. The module can count a maximum of seven edges per application cycle. The counter is reset with each new application cycle.
Status	Output		DWord	16#0	Status of the instruction: see description of Status parameter

Parameter	Declaration in library version		Data type	Default	Description
	< V2.0	≥ V2.0	S7-1500		
Error	Output		Bool	False	Error = True: An error has occurred. For detailed information see Status parameter. Error is reset as soon as the error is corrected.
TIO_SYNC _Data*	Input	InOut	"TIO_ SYNC_ Data"		System time provided for the TIO instructions of the TIO modules by the TIO_SYNC instruction. See UDT TIO_SYNC_Data (Page 58). Connect this input parameter with the "TIO_SYNC_Data" output parameter of the TIO_SYNC instruction.

* Checked once at startup of the CPU

Status parameter

Error codes or status information is output as double word at the Status output.

The double word is divided as follows:

Error code (DW#16#...)	Meaning
z0yywwww	Error of a system function: • during startup (z = 1) • during normal operation (z = 0) System functions with subordinate use are coded in yy: See table with error codes. wwww specifies the RET_VAL of the system function. The error information is available in the help for the system function.
z0yy0000	An error that does not originate in a system function. This error receives a consecutive error number yy. The error can occur: • during startup (z = 1) • during normal operation (z = 0)

Table with error codes

Error code (DW#16#...)	Meaning	Solution
00000000	No error.	—
10010000	The assigned number of the digital input at the Channel input parameter is outside the permitted range (depending on addressed module and channel configuration).	Correct the value at the Channel input parameter.
10020000	The TIO_DI instruction is not called in an isochronous OB. The instruction can only be used without errors in an isochronous OB.	Make sure that TIO_DI is called in a "Synchronous Cycle" or "MC-PostServo" OB.
10030000	An error occurred when reading the HWID input parameter.	Check the value at the HWID input parameter. Specify the hardware identifier of the TIO module from its module properties in the hardware configuration. An internal system constant of data type Hw_SubModule is available for the symbolic addressing.
x0040000	The data in TIO_SYNC_Data is invalid/incorrect.	Check the TIO_SYNC instruction and the interconnection of its TIO_SYNC_Data output.
1005xxxx	An error has occurred during execution of the RD_SINFO system function. The low word xxxx displays the error information of the RET_VAL return value from RD_SINFO.	• Read the description of the RD_SINFO in the STEP 7 (TIA Portal) information system. • Make sure that TIO_DI is called in a "Synchronous Cycle" or "MC-PostServo" OB.

Error code (DW#16#...)	Meaning	Solution
10060000	No TIO module found. Possible cause: The module configured using the hardware identifier is not a TIO module.	• Make sure that the configured module is a TIO module. • Check the value at the HWID input parameter. Specify the hardware identifier of the TIO module from its module properties in the hardware configuration.
10070000	An internal error occurred during the address calculation.	Check the value at the HWID input parameter. Specify the hardware identifier of the TIO module from its module properties in the hardware configuration. An internal system constant of data type Hw_SubModule is available for the symbolic addressing.
00080000	TIO module is not synchronized using the TIO_SYNC instruction. The error code can also indicate that: • A job was already present before the first run of the instruction. • The assigned number at the Channel input parameter is not a digital input.	Check the instruction TIO_SYNC.
10090000	The read cycle time of the isochronous OB is outside the permitted range of 0 < T_{APP} <= 16 ms and is therefore invalid. The instruction can only be used without errors in an isochronous OB.	• Correct the cycle time. • Make sure that TIO_DI is called in a "Synchronous Cycle" or "MC-PostServo" OB.
100A0000	The time T_O of the TIO model stored in TIO_SYNC_Data is outside the permissible range of 0 < T_o <= 4 ms.	Check the instruction TIO_SYNC.
100Bxxxx	An error has occurred during execution of the RD_ADDR system function. The low word xxxx displays the error information of the RET_VAL return value from RD_ADDR.	Read the description of the RD_ADDR in the STEP 7 (TIA Portal) information system.
000C0000	The converted time stamp is invalid. Possible cause: Communication error	Check the communication with the TIO module.
000D0000	The Quality Information of the digital input indicates that an error has occurred at the digital input.	Check the supply voltage L+/1L+/2L+.
000E0000	The assigned number at the Channel input parameter is not a digital input configured as Timer DI.	• Check the channel configuration (only for TM Timer DIDQ 16x24V). • Check the operating mode of the digital input.
000F0000	The assigned value at the EdgeSel input parameter is outside the valid range of 1 to 5.	Correct the value at the EdgeSel input parameter.

Error code (DW#16#...)	Meaning	Solution
10100000	The send clock is outside the permitted range of 0 < SendClock <= 4 ms and is therefore invalid. The error code can also indicate that • The data in TIO_SYNC_Data is invalid or does not exist. • The TIO_DI instruction is not called in an isochronous OB.	Correct the send clock.
x0130000	MC-Servo (OB91) is not isochronous to the bus cycle time.	Correct the value of the cycle time of the MC-Servo to the value of the bus cycle time. Note: Calling TIO instructions in an OB of the type "MC-PostServo" with reduction ratio "MC-Servo" can result in incorrect calculation of time stamps.
10140000	The configured value at the HWID input parameter is not present in the structure at the TIO_SYNC_Data parameter. The HWID and TIO_SYNC_Data parameters are not consistent.	Correct the value at the HWID input parameter or the structure at the TIO_SYNC_Data parameter.
x0FF0000	General internal error.	—

4.3.3 TIO_DI_ONCE: Reading in edges once at the digital input and associated time stamps

Description

TIO_DI_ONCE detects the edges at a digital input of a TIO module **once** and returns the associated time stamps. Alternatively, you can use this instruction to control a timer DI channel that is configured as an edge-triggered enable for another channel.

Startup characteristics

During startup of the CPU, the instruction TIO_DI_ONCE applies the input parameters once and checks the following:

- Checking HWID
- Checking to see if the number of the digital input (Channel) is in the permitted range (depending on addressed module and channel configuration)
- Checking TIO_SYNC_Data.ERROR: Is an error present at TIO_SYNC?
- Checking TIO_SYNC_Data.TO_TIMES for plausibility (0 ms to 4 ms)
- Checking to see whether the OB is isochronous

If startup takes place without errors, the instruction changes to normal operation. In the event of an error, the instruction does not change to normal operation and generates an error message.

Functional description: Time stamp detection

In normal operation, the instruction detects the edges at a digital input and the associated time stamps of the **first** valid, defined edge pair after the start of a read-in job. Use the input parameter EdgeSel to determine the edges for which time stamps are detected. To detect a new edge pair, a new positive edge is required at the REQ input parameter of the instruction.

You connect the input TIO_SYNC_Data with the output of the same name of the TIO_SYNC instruction. This ensures a shared time basis.

The figure below shows an example for the reaction of the bits DONE and BUSY at the start of a read-in job (EdgeSel = 4).

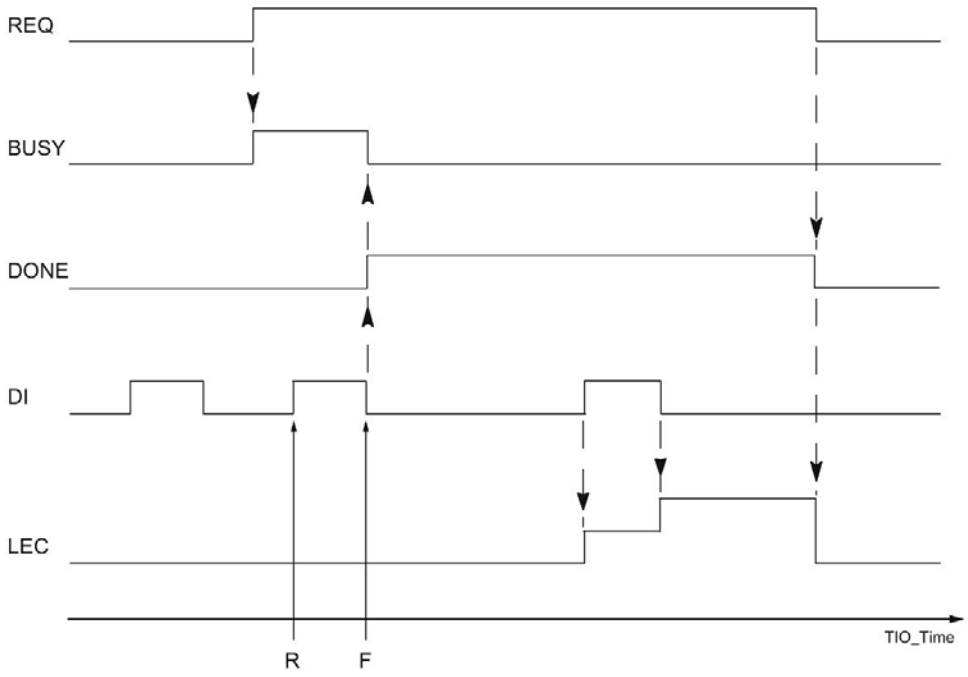

R Read-in time of the positive DI edge

F Read-in time of the falling DI edge

Functional description: edge-triggered enable

You can use this instruction to control a timer DI channel that is configured as an edge-triggered enable for another channel.

Example:

For a TIO module TM Timer DIDQ 10x24V, the following is configured in the hardware configuration for DQ0/DI0:

- Configuration DQ/DI group = timer DQ with enable
- HW enable by DI0 = edge-triggered
- DQ0 is not inverted

In this case, use the instruction TIO_DQ for DQ0 and the instruction TIO_DI_ONCE for DI0. You can control the enable by means of the input parameters REQ and EdgeSel of TIO_DI_ONCE. As soon as TIO_DI_ONCE has recorded a time stamp according to the value of EdgeSel, the enable is considered granted. You take the enable back by resetting REQ.

The following figure shows an example with EdgeSel = 4n (first positive, then falling edge). In this case the first valid positive edge at DI0 grants the enable for DQ0 after the start of a read-in job.

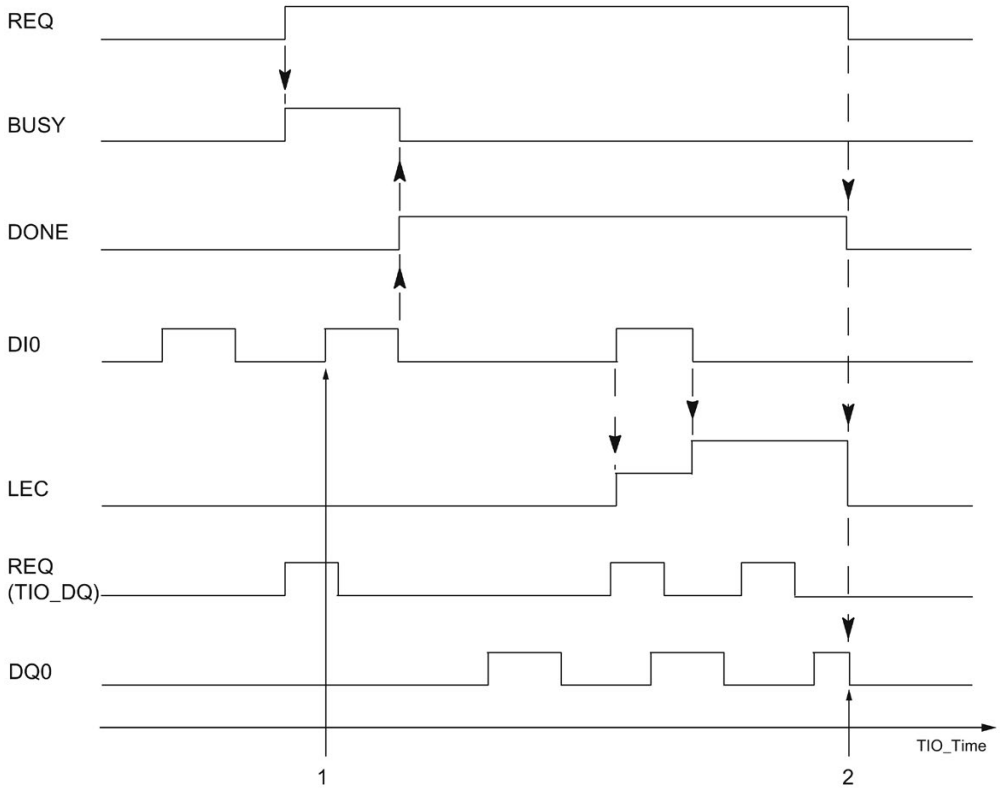

1 Start of enable at positive edge of enable input

2 End of enable when falling edge at REQ

If required, you can use the time stamps detected by the instruction for your application.

Reaction to error

The Error output indicates if the instruction was processed correctly. In the event of an error, the cause of the error is displayed at the Status output.

Parameter

The table below shows the parameters of the TIO_DI_ONCE instruction.

Parameter	Declaration	Data type S7-1500	Default	Description
REQ	Input	Bool	False	Starts the job at a positive edge.
HWID*	Input	HW_IO	0	Hardware identifier for TIO module from hardware configuration
Channel*	Input	UInt	0	Number (0 ... m) of the digital input of the connected TIO module
EdgeSel	Input	UInt	3	Specify the edges for which time stamps are detected: 0_D: Invalid 1: Two rising edges 2: Two falling edges 3: Rising and falling edge (order depending on occurrence) 4: First rising, then falling edge 5: First falling, then rising edge 6 to 255: Invalid If edge-triggered enable is used, the following also applies: 1: Enable at first positive DI edge 2: Enable at first falling DI edge 3: Enable at first DI edge 4: Enable at first positive DI edge 5: Enable at first falling DI edge EdgeSel can be changed during normal operation.
DONE	Output	Bool	False	DONE = True: The job was completed without errors.
BUSY	Output	Bool	False	BUSY = True: The job has not yet been completed.
Error	Output	Bool	False	Error = True: An error has occurred. For detailed information see Status parameter. Error is reset as soon as the error is corrected.
Status	Output	DWord	16#0	Status of the instruction: see description of Status parameter
DI	Output	Bool	False	Status of digital input. If an inversion of the digital input is configured, this parameter is inverted as well.
Time-StampRE	Output	LTime	LT#0ns	Time stamp: EdgeSel = 1: The last but one read-in time at which a positive edge was detected (if *multiple* positive edges have occurred). EdgeSel = 2: The last read-in time at which a falling edge was detected (if *multiple* falling edges have occurred). EdgeSel = 3; 4; 5: The last read-in time at which a falling edge was detected.

Parameter	Declaration	Data type S7-1500	Default	Description
Time-StampFE	Output	LTime	LT#0ns	Time stamp: EdgeSel = 1: The last read-in time at which a positive edge was detected (if *multiple* positive edges have occurred). EdgeSel = 2: The last but one read-in time at which a falling edge was detected (if *multiple* falling edges have occurred). EdgeSel = 3; 4; 5: The last read-in time at which a positive edge was detected.
LEC	Output	UInt	0	Counter: Number of edges for which no time stamp could be saved. The module can count a maximum of seven edges during REQ. The counter is reset with the falling edge at REQ.
TIO_SYNC_Data*	InOut	"TIO_SYNC_Data"		System time provided for the TIO instructions of the TIO modules by the TIO_SYNC instruction. See UDT TIO_SYNC_Data (Page 58). Connect this input parameter with the "TIO_SYNC_Data" output parameter of the TIO_SYNC instruction.
Initialized	Static	Bool	False	Instruction is initialized and ready

* Checked once at startup of the CPU

Status parameter

Error codes or status information is output as double word at the Status output.

The double word is divided as follows:

Error code (DW#16#...)	Meaning
z0yywwww	Error of a system function: • during startup (z = 1) • during normal operation (z = 0) System functions with subordinate use are coded in yy: See table with error codes. wwww specifies the RET_VAL of the system function. The error information is available in the help for the system function.
z0yy0000	An error that does not originate in a system function. This error receives a consecutive error number yy. The error can occur: • during startup (z = 1) • during normal operation (z = 0)

Table with error codes

Error code (DW#16#...)	Meaning	Solution
00000000	No error.	—
10010000	The assigned number of the digital input at the Channel input parameter is outside the permitted range (depending on addressed module and channel configuration).	Correct the value at the Channel input parameter.
10020000	The TIO_DI_ONCE instruction is not called in an isochronous OB. The instruction can only be used without errors in an isochronous OB.	Make sure that TIO_DI_ONCE is called in a "Synchronous Cycle" or "MC-PostServo" OB.
10030000	An error occurred when reading the HWID input parameter.	Check the value at the HWID input parameter. Specify the hardware identifier of the TIO module from its module properties in the hardware configuration. An internal system constant of data type Hw_SubModule is available for the symbolic addressing.
x0040000	The data in TIO_SYNC_Data is invalid/incorrect.	Check the TIO_SYNC instruction and the interconnection of its TIO_SYNC_Data output.
1005xxxx	An error has occurred during execution of the RD_SINFO system function. The low word xxxx displays the error information of the RET_VAL return value from RD_SINFO.	• Read the description of the RD_SINFO in the STEP 7 (TIA Portal) information system. • Make sure that TIO_DI_ONCE is called in a "Synchronous Cycle" or "MC-PostServo" OB.

Error code (DW#16#...)	Meaning	Solution
10060000	No TIO module found. Possible cause: The module configured using the hardware identifier is not a TIO module.	• Make sure that the configured module is a TIO module. • Check the value at the HWID input parameter. Specify the hardware identifier of the TIO module from its module properties in the hardware configuration.
10070000	An internal error occurred during the address calculation.	Check the value at the HWID input parameter. Specify the hardware identifier of the TIO module from its module properties in the hardware configuration. An internal system constant of data type Hw_SubModule is available for the symbolic addressing.
00080000	TIO module is not synchronized using the TIO_SYNC instruction. The error code can also indicate that: • A job was already present before the first run of the instruction. • The assigned number at the Channel input parameter is not a digital input.	Check the instruction TIO_SYNC.
10090000	The read cycle time of the isochronous OB is outside the permitted range of 0 < T_{APP} <= 16 ms and is therefore invalid. The instruction can only be used without errors in an isochronous OB.	• Correct the cycle time. • Make sure that TIO_DI_ONCE is called in a "Synchronous Cycle" or "MC-PostServo" OB.
100A0000	The time T_O of the TIO model stored in TIO_SYNC_Data is outside the permissible range of 0 < T_o <= 4 ms.	Check the instruction TIO_SYNC.
100Bxxxx	An error has occurred during execution of the RD_ADDR system function. The low word xxxx displays the error information of the RET_VAL return value from RD_ADDR.	Read the description of the RD_ADDR in the STEP 7 (TIA Portal) information system.
000C0000	The converted time stamp is invalid. Possible cause: Communication error	Check the communication with the TIO module.
000D0000	The Quality Information of the digital input indicates that an error has occurred at the digital input.	Check the supply voltage L+/1L+/2L+.
000E0000	The assigned number at the Channel input parameter is not a digital input configured as Timer DI.	• Check the channel configuration (only for TM Timer DIDQ 16x24V). • Check the operating mode of the digital input.
000F0000	The assigned value at the EdgeSel input parameter is outside the valid range of 1 to 5.	Correct the value at the EdgeSel input parameter.

Error code (DW#16#...)	Meaning	Solution
10100000	The send clock is outside the permitted range of 0 < SendClock <= 4 ms and is therefore invalid. The error code can also indicate that • The data in TIO_SYNC_Data is invalid or does not exist. • The TIO_DI instruction is not called in an isochronous OB.	Correct the send clock.
x0130000	MC-Servo (OB91) is not isochronous to the bus cycle time.	Correct the value of the cycle time of the MC-Servo to the value of the bus cycle time. Note: Calling TIO instructions in an OB of the type "MC-PostServo" with reduction ratio "MC-Servo" can result in incorrect calculation of time stamps.
10140000	The configured value at the HWID input parameter is not present in the structure at the TIO_SYNC_Data parameter. The HWID and TIO_SYNC_Data parameters are not consistent.	Correct the value at the HWID input parameter or the structure at the TIO_SYNC_Data parameter.
x0FF0000	General internal error.	—

4.3.4 TIO_DQ: Output edges time-controlled at the digital output

Description

TIO_DQ enables a digital output of a TIO module to be switched at specified times.

Startup characteristics

During startup of the CPU, the instruction TIO_DQ applies the input parameters once and checks the following:

- Checking HWID
- Checking to see if the number of the digital input (Channel) is in the permitted range (depending on addressed module and channel configuration)
- Checking TIO_SYNC_Data.Error: Is an error present at TIO_SYNC?
- Checking TIO_SYNC_Data.TO_TIMES for plausibility (0 ms to 4 ms)
- Checking to see whether the OB is isochronous

If startup takes place without errors, the instruction changes to normal operation. The input parameters REQ, Out_Mode, TimeStampRE and TimeStampFE can be changed during normal operation. In the event of an error, the instruction does not change to normal operation and generates an error message.

Functional description

The instruction outputs edges time-controlled at a digital output during normal operation.

- At the time defined at the TimeStampRE input parameter, a positive edge is output at the digital output.
- At the time defined at the TimeStampFE input parameter, a falling edge is output at the digital output.

Depending on the program execution model, a time stamp must exceed the following value:

Program execution model	TimeStampRE> ... TimeStampFE > ...
IPO model	TIO_Time + T_{APP} + T_O
OIP model	TIO_Time + T_{APP} + SendClock + T_O

Use the input parameter Out_Mode to determine if only one edge or both edges are output.

You connect the input TIO_SYNC_Data with the output of the same name of the TIO_SYNC instruction. This ensures a shared time basis.

You start an output job with a positive edge at the REQ parameter. You can only start a new job when there is no error pending and no job is active. When the output job is started, the digital output is switched at the times defined with TimeStampRE and TimeStampFE.

- If the digital output is already set at time TimeStampRE, the output job is not transferred to the module for the positive edge.
- If the digital output is not set at time TimeStampFE, the output job is not transferred to the module for the negative edge.

This means the digital output is not switched in both cases.

The job is done when the last application cycle is executed before the second output time is reached (DONE). Status and Error are constantly being updated during the job runtime. You can cancel an active output job by changing TimeStampRE or TimeStampFE to an invalid time stamp, e.g. LT#5µs.

The figure below shows an example for the reaction of the bits DONE and BUSY at the start of an output job under the following conditions:

- Out_Mode = 2 (both edges are output)
- The two time stamps are not changed between the start of the job and the output.

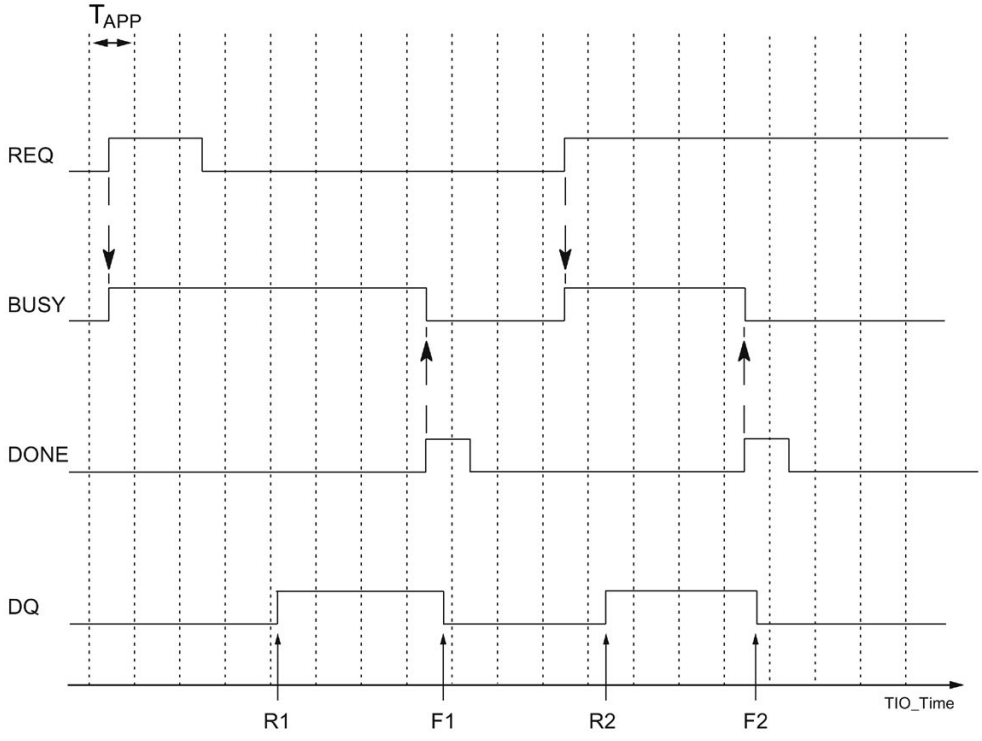

T_{APP}	Application cycle
R1, R2	Specified times of a positive DQ edge
F1, F2	Specified times of a falling DQ edge

Note

Once the job has been started with a positive edge at REQ, you can change the output times with a new input of TimeStampRE and TimeStampFE without having to restart the job.

Constraint:

If a changed time stamp is less than two application cycles before the output time (TimeStampRE - TIO_Time < 2*T_{APP} or TimeStampFE - TIO_Time < 2*T_{APP}), it is not taken into consideration. In this case, the last valid time stamp is used because it was already transferred to the TIO module.

Note

If you specify the same value for TimeStampRE and TimeStampFE, the instruction ignores the job and does not output an edge.

If you specify the value 0 for TimeStampRE or TimeStampFE, you can output the respective edge directly at the digital output with the input parameter Out_Mode = 3. This gives you the option to implement a direct control from the TIO module without time stamp in manual mode. You can use the direct control to interrupt an ongoing job.

Reaction to error

The Error output indicates if the instruction was processed correctly. In the event of an error, the cause of the error is displayed at the Status output.

Parameter

The table below shows the parameters of the TIO_DQ instruction.

Parameter	Declaration in library version		Data type	Default	Description
	< V2.0	≥ V2.0	S7-1500		
REQ	Input		Bool	False	Starts the job at a positive edge.
HWID*	Input		HW_IO	0	Hardware identifier for TIO module from hardware configuration
Channel*	Input		UInt	0	Number (0 ... m) of the digital output of the connected TIO module
Out_Mode	Input		UInt	2	Specify the output mode for the edges at the digital output: 0: Only rising edge is output (TimeStampRE). 1: Only falling edge is output (TimeStampFE). 2: Both edges are output (TimeStampRE and TimeStampFE). 3: Each edge is output directly if TimeStampRE = 0 or TimeStampFE = 0 If both time stamps have the value "0" or if no time stamp has the value "0", no edge is output. 4 to 255: Invalid
TimeStampRE	Input		LTime	LT#0ns	Time stamp: Time when a positive edge is to be output.
TimeStampFE	Input		LTime	LT#0ns	Time stamp: Time when a falling edge is to be output.
StatusDQ	Output		Bool	False	Actual status of the digital output. If an inversion of the digital output is configured, StatusDQ is inverted as well. StatusDQ shows the internal state of the digital output independent of the effect of any configured HW enable.
DONE	Output		Bool	False	DONE = True is displayed for one cycle: The job was completed without errors.
BUSY	Output		Bool	False	BUSY = True: The job has not yet been completed.
Error	Output		Bool	False	Error = True: An error has occurred. In this case, BUSY and DONE are set to False. For detailed information see Status parameter. Error is reset as soon as the error is corrected.
Status	Output		DWord	16#0	Status of the instruction: see description of Status parameter
TIO_SYNC _Data*	Input	InOut	"TIO_ SYNC_ Data"		System time provided for the TIO instructions of the TIO modules by the TIO_SYNC instruction. See UDT TIO_SYNC_Data (Page 58). Connect this parameter with the TIO_SYNC_Data output parameter of the TIO_SYNC instruction.

* Checked once at startup of the CPU

Status parameter

Error codes or status information is output as double word at the Status output.

The double word is divided as follows:

Error code (DW#16#...)	Meaning
z0yywwww	Error of a system function: • during startup (z = 1) • during normal operation (z = 0) System functions with subordinate use are coded in yy: See table with error codes. wwww specifies the RET_VAL of the system function. The error information is available in the help for the system function.
z0yy0000	An error that does not originate in a system function. This error receives a consecutive error number yy. The error can occur: • during startup (z = 1) • during normal operation (z = 0)

Table with error codes

Error code (DW#16#...)	Meaning	Solution
00000000	No error.	—
10010000	The assigned number of the digital output at the Channel input parameter is outside the permitted range (depending on addressed module and channel configuration).	Correct the value at the Channel input parameter.
10020000	The TIO_DQ instruction is not called in an isochronous OB. The instruction can only be used without errors in an isochronous OB.	Make sure that TIO_DQ is called in an OB of the type "Synchronous Cycle" or "MC-PostServo".
10030000	An error occurred when reading the HWID input parameter.	Check the value at the HWID input parameter. Specify the hardware identifier of the TIO module from its module properties in the hardware configuration. An internal system constant of data type Hw_SubModule is available for the symbolic addressing.
x0040000	The data in TIO_SYNC_Data is invalid/incorrect.	Check the TIO_SYNC instruction and the interconnection of its TIO_SYNC_Data output.
1005xxxx	An error has occurred during execution of the RD_SINFO system function. The low word xxxx displays the error information of the RET_VAL return value from RD_SINFO.	• Read the description of the RD_SINFO in the STEP 7 (TIA Portal) information system. • Make sure that TIO_DQ is called in a "Synchronous Cycle" or "MC-PostServo" OB.

Error code (DW#16#...)	Meaning	Solution
10060000	No TIO module found. Possible cause: The module configured using the hardware identifier is not a TIO module.	• Make sure that the configured module is a TIO module. • Check the value at the HWID input parameter. Specify the hardware identifier of the TIO module from its module properties in the hardware configuration.
10070000	An internal error occurred during the address calculation.	Check the value at the HWID input parameter. Specify the hardware identifier of the TIO module from its module properties in the hardware configuration. An internal system constant of data type Hw_SubModule is available for the symbolic addressing.
x0080000	TIO module is not synchronized using the TIO_SYNC instruction. The error code can also indicate that: • A job was already present before the first run of the instruction. • The assigned number at the Channel input parameter is not a digital output.	Check the instruction TIO_SYNC.
10090000	The read cycle time of the isochronous OB is LT#0ms or has as negative value and is therefore invalid. Correct the value. The instruction can only be used without errors in an isochronous OB.	• Correct the cycle time. • Make sure that TIO_DQ is called in a "Synchronous Cycle" or "MC-PostServo" OB.
100A0000	The time T_O of the TIO model stored in TIO_SYNC_Data is outside the permissible range of $0 < T_o <= 4$ ms.	Check the instruction TIO_SYNC.
100Bxxxx	An error has occurred during execution of the RD_ADDR system function. The low word xxxx displays the error information of the RET_VAL return value from RD_ADDR.	Read the description of the RD_ADDR in the STEP 7 (TIA Portal) information system.
000C0000	One or both time stamps at the TimeStampRE and TimeStampFE input parameters are invalid. The error is only signaled for the duration of one application cycle.	Check the TimeStampRE and TimeStampFE input parameters.
000D0000	The Quality Information of the digital output indicates that an error has occurred at the digital output.	• Check the parameter assignment of the digital output. • Check the supply voltage L+/1L+/2L+. • Check the wiring of the digital output for short-circuit, overload, and overtemperature.
000E0000	The number configured at the Channel input parameter is not a digital output configured as Timer DQ.	• Check the channel configuration (only for TM Timer DIDQ 16x24V). • Check the operating mode of the digital output.
100F0000	The read cycle time of the OB of type "Synchronous Cycle" is too long: $T_{APP} > 16$ ms.	Configure a smaller multiple of the send clock as the cycle time.

Error code (DW#16#...)	Meaning	Solution
10100000	The send clock is outside the permitted range of 0 < SEND_CLOCK <= 4 ms and is therefore invalid. The error code can also indicate that • The data in TIO_SYNC_Data is invalid or does not exist. • The TIO_DQ instruction is not called in an isochronous OB.	Correct the send clock.
00110000	The assigned value at the Out_Mode input parameter is outside the valid range of 0 to 3.	Correct the value at the Out_Mode input parameter.
x0130000	MC-Servo (OB91) is not isochronous to the bus cycle time.	Correct the value of the cycle time of the MC-Servo to the value of the bus cycle time. Note: Calling TIO instructions in an OB of the type "MC-PostServo" with reduction ratio "MC-Servo" can result in incorrect calculation of time stamps.
10140000	The configured value at the HWID input parameter is not present in the structure at the TIO_SYNC_Data parameter. The HWID and TIO_SYNC_Data parameters are not consistent.	Correct the value at the HWID input parameter or the structure at the TIO_SYNC_Data parameter.
x0FF0000	General internal error.	—

4.3.5 UDT TIO_SYNC_Data

Description

The data type UDT TIO_SYNC_Data contains the central structure and data for synchronization of the modules and passing of the TIO_Time.

Parameter

Parameter	Data type S7-1500	Description
TIO_TIME	LTime	Shared time basis (relative time) of the TIO modules
PIP_MODE	USInt	Mode for data update (is forwarded by the PIP_Mode input parameter of the TIO_SYNC instruction)
APP_CYC	LTime	Application cycle of the "MC-PostServo" or "Synchronous Cycle", "MC-PreServo" OB
SEND_CLOCK	LTime	Send clock of sync domain (is forwarded by the SendClock parameter of the TIO_SYNC instruction)
SYNC_MODULES	HW_IO array [1...8]	Hardware identifiers of the TIO modules from hardware configuration
TO_TIMES	UDInt-Array [1...8]	T_O for each TIO module:
TIO_TIME_BASE	LTime	Internal use
TBASE	LTime	
ERROR	Bool	

Index

A

Accuracy, (Jitter), 16
    Calculating TIO_Time, 23
Application cycle, 22, 28, 58
Application examples Time-based IO, 13

C

Call sequence, 28
Cam controller, (Application examples Time-based IO)
Clock reduction ratio, 21
Configuration, (System environment)
    Standard configuration, 24
Configuration software, 19
Conventions
    Jitter, 3
    TIO module, 3
    TIO_Time, 3
CPU cycle time, 13
Cycle time, 14

D

Data update, (PIP_Mode)
Default setting, 26
Delay time, 22
Determinism, (Predictability)
Digital input
    TIO_DI, 36
    TIO_DI_ONCE, 43
Digital output
    TIO_DQ, 51
Dosing, (Application examples Time-based IO)

E

Error codes
    TIO_DI, 40, 48
    TIO_DQ, 55
    TIO_SYNC, 34
ET 200, 18, 25
    TM Timer DIDQ, 18

H

Hardware requirements, 18

I

IPO model
    Understanding IPO, 22
Isochronous communication, 20

J

Jitter, 3, 23

L

Length measurement, (Application examples Time-based IO)

M

MC-PostServo, 21
MC-PreServo, 21
Modes, (PIP_Mode)
    Selecting the model of program editing, 21

O

OIP model
    Understanding OIP, 23

P

PIP_Mode, 58
    Setting PIP_Mode, 28
Predictability, 15
Process image partition
    PIP, 28
    PIP1, 25
PROFINET, 19, 24, 25
    Using PROFINET IRT, 20
Programming, 28

R

Reproducibility, 13
Response time, 16
    Defined response times, (Application examples Time-based IO)
    Minimum response time, 16

S

Scope, 3
Send clock, 58
Service & Support, 4
SIMATIC functions, 20
STEP 7, 19
SYNC_PI, 22
SYNC_PO, 22
Synchronous Cycle, 28
    Understanding TIO instructions, 21
System environment, 17

T

TAPP, (Application cycle)
Time behavior
    Standard technology, 14
    Time-based IO, 15
Time-based IO
    Setting Time-based IO, 25
    Understanding SIMATIC functions, 20
    Using the default setting, 26
TIO instructions, 19
    Listing TIO instructions, 27
    TM Timer DIDQ, 19
TIO module, 3, 19, 25
TIO_DI, 36
TIO_DI_ONCE, 43
TIO_DQ, 51
TIO_SYNC, 31
    Synchronized TIO modules, 21
TIO_Time, 3, 15, 27
    TIO_DI, 36
    TIO_DI_ONCE, 43
    TIO_DQ, 51
    TIO_SYNC, 31
    UDT "TIO_SYNC_Data", 58
    Understanding TIO_Time, 20

U

UDT "TIO_SYNC_Data", 58
User program, (Synchronous Cycle)

SIEMENS

SIMATIC

S7-1500, ET 200MP, ET 200SP, ET 200AL
Designing interference-free controllers

Function Manual

Preface

Documentation guide 1

Basic information on electromagnetic compatibility 2

Interference-free cable routing 3

Cable shielding 4

Equipotential bonding 5

Special measures for interference-free operation 6

Lightning protection and overvoltage protection 7

06/2014

A5E03461486-AB

Legal information

Warning notice system

This manual contains notices you have to observe in order to ensure your personal safety, as well as to prevent damage to property. The notices referring to your personal safety are highlighted in the manual by a safety alert symbol, notices referring only to property damage have no safety alert symbol. These notices shown below are graded according to the degree of danger.

⚠ DANGER
indicates that death or severe personal injury **will** result if proper precautions are not taken.

⚠ WARNING
indicates that death or severe personal injury **may** result if proper precautions are not taken.

⚠ CAUTION
indicates that minor personal injury can result if proper precautions are not taken.

NOTICE
indicates that property damage can result if proper precautions are not taken.

If more than one degree of danger is present, the warning notice representing the highest degree of danger will be used. A notice warning of injury to persons with a safety alert symbol may also include a warning relating to property damage.

Qualified Personnel

The product/system described in this documentation may be operated only by **personnel qualified** for the specific task in accordance with the relevant documentation, in particular its warning notices and safety instructions. Qualified personnel are those who, based on their training and experience, are capable of identifying risks and avoiding potential hazards when working with these products/systems.

Proper use of Siemens products

Note the following:

⚠ WARNING
Siemens products may only be used for the applications described in the catalog and in the relevant technical documentation. If products and components from other manufacturers are used, these must be recommended or approved by Siemens. Proper transport, storage, installation, assembly, commissioning, operation and maintenance are required to ensure that the products operate safely and without any problems. The permissible ambient conditions must be complied with. The information in the relevant documentation must be observed.

Trademarks

All names identified by ® are registered trademarks of Siemens AG. The remaining trademarks in this publication may be trademarks whose use by third parties for their own purposes could violate the rights of the owner.

Disclaimer of Liability

We have reviewed the contents of this publication to ensure consistency with the hardware and software described. Since variance cannot be precluded entirely, we cannot guarantee full consistency. However, the information in this publication is reviewed regularly and any necessary corrections are included in subsequent editions.

Siemens AG
Industry Sector
Postfach 48 48
90026 NÜRNBERG
GERMANY

A5E03461486-AB
Ⓟ 07/2014 Subject to change

Copyright © Siemens AG 2013 - 2014.
All rights reserved

Preface

Purpose of the documentation

This documentation will support you in installing and commissioning programmable controllers.

Correct configuration is essential for fault-free operation of programmable controllers.

Basic knowledge required

The following knowledge is required in order to understand the documentation:

- General knowledge of automation technology
- Knowledge of the industrial automation system SIMATIC
- Knowledge of VDE (German Association for Electrical, Electronic and Information Technologies) and EC regulations
- Knowledge of the rules for installing controllers and switchgear

Conventions

You should also pay particular attention to notes such as the one shown below:

Note

A note contains important information on the product described in the documentation, on the handling of the product or on the section of the documentation to which particular attention should be paid.

Scope of the documentation

This documentation is valid for all products of the product series SIMATIC S7-1500, ET 200MP, ET 200SP and ET 200AL.

The product series SIMATIC S7-1500, ET 200MP and ET 200SP are approved for IP20 degree of protection, i.e. the modules of these product series must be installed in a control cabinet.

The SIMATIC ET 200AL product series is approved for IP65/IP67 degree of protection, i.e. the modules need **not** be installed in a control cabinet.

Changes compared to previous version

Changes / enhancements described in this manual, compared to the previous version (version 01/2013):

- Extension of the scope of validity to the distributed I/O system ET 200AL
- Supplement to the section Connection of the cable shielding for ET 200AL
- Components for lightning protection potential equalization amended

Additional support

Additional information on SIMATIC products is available on the Internet. The associated documentation is also available on the Internet.

- The range of technical documentation for the individual SIMATIC products and automation systems can be found on the Internet (http://www.siemens.com/simatic-tech-doku-portal).
- The online catalog and the ordering system are available on the Internet (http://mall.automation.siemens.com).

Security information

Siemens provides products and solutions with industrial security functions that support the secure operation of plants, solutions, machines, equipment and/or networks. They are important components in a holistic industrial security concept. With this in mind, Siemens' products and solutions undergo continuous development. Siemens recommends strongly that you regularly check for product updates.

For the secure operation of Siemens products and solutions, it is necessary to take suitable preventive action (e.g. cell protection concept) and integrate each component into a holistic, state-of-the-art industrial security concept. Third-party products that may be in use should also be considered. You can find more information about industrial security on the Internet (http://www.siemens.com/industrialsecurity).

To stay informed about product updates as they occur, sign up for a product-specific newsletter. You can find more information on the Internet (http://support.automation.siemens.com).

Table of contents

Preface 3
1 Documentation guide 6
2 Basic information on electromagnetic compatibility 7
2.1 Overview of possible interference 7
2.2 Coupling mechanisms 8
3 Interference-free cable routing 9
3.1 Classifying cables into cable categories 9
3.2 Cable routing inside cabinets in buildings 11
3.3 Cable routing outside cabinets and inside buildings 11
3.4 Cable routing outside buildings 12
3.5 Underground cable routing 13
3.6 Bending radii and tensile strength of cables 14
4 Cable shielding 15
4.1 Connecting the cable shielding for S7-1500 and ET 200MP 17
4.2 Connecting the cable shielding for ET 200SP 19
4.3 Connecting the cable shielding for ET 200AL 20
4.4 Connecting the cable shield for bus cables 21
4.5 Connecting the cable shield for other components 22
5 Equipotential bonding 23
6 Special measures for interference-free operation 25
7 Lightning protection and overvoltage protection 26
7.1 What is lightning and overvoltage protection? 26
7.2 Lightning protection zone concept 27
7.3 Rules and components for the transitions between lightning protection zones 29
Index 37

Documentation guide 1

Introduction

The documentation of the SIMATIC products has a modular structure and covers diverse topics concerning your automation system.

The complete documentation for the S7-1500, ET 200SP, ET 200MP and ET 200AL systems consists of the respective system manuals, function manuals and product manuals.

The STEP 7 information system (online help) also supports you when configuring and programming your automation system.

Overview of documentation on the subject of designing interference-free controllers

The following table lists additional documentation which supplements this description of designing interference-free controllers.

Table 1- 1 Documentation on the subject of designing interference-free controllers

Topic	Documentation	Most important contents
System description	System manual S7-1500 Automation System (http://support.automation.siemens.com/WW/view/en/59191792)	• Application planning • Installation • Wiring • Commissioning
	System manual ET 200SP Distributed I/O System (http://support.automation.siemens.com/WW/view/en/58649293)	
	System Manual ET 200MP Distributed I/O System (http://support.automation.siemens.com/WW/view/en/59193214)	
	System manual Distributed I/O System ET 200AL (http://support.automation.siemens.com/WW/view/en/89254965)	

SIMATIC manuals

All current manuals for SIMATIC products are available for download free of charge from the Internet (http://www.siemens.com/automation/service&support).

Basic information on electromagnetic compatibility 2

2.1 Overview of possible interference

Introduction

SIMATIC products and their components have been developed for use in industrial environment and meet the legal EMC requirements (EMC - Electromagnetic Compatibility). However, you still need to conduct an EMC assessment before installing your controller in order to identify possible sources of interference and to include these in your considerations.

Electromagnetic compatibility

Electromagnetic compatibility describes the ability of an electrical device to function properly in its particular electromagnetic environment. Neither the environment itself nor the electrical device are influenced in an unacceptable manner.

Possible interference

Electromagnetic interference can influence an automation system in various ways. The most significant interferences and their causes are as follows:

- Electromagnetic fields having a direct influence on the system
- Interference coupling caused by bus signals (for example, PROFINET)
- Interference influencing the system via the process wiring
- Interference which reaches the system via the power supply and/or protective ground

The figure below shows the likely paths of electromagnetic interference.

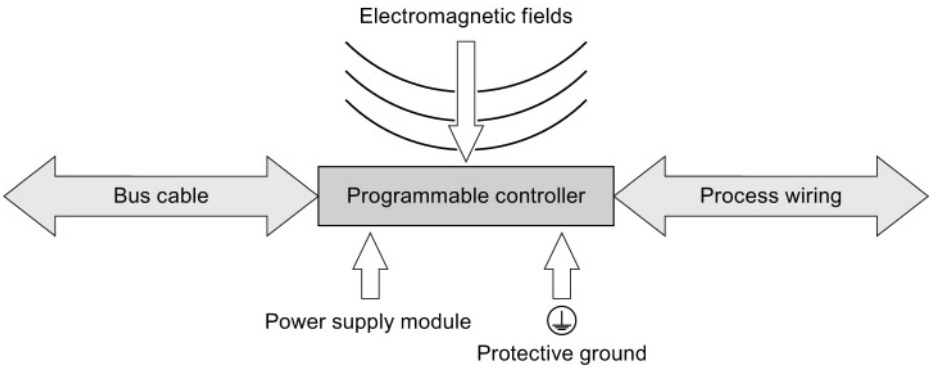

Figure 2-1 Electromagnetic interference

2.2 Coupling mechanisms

Depending on the emitting medium and the distance between the source of interference and the device, interference can reach the automation system via four different coupling mechanisms.

The following table shows possible causes and typical sources of interference for the various coupling mechanisms:

Table 2- 1 Coupling mechanisms

Coupling mechanism	Cause	Typical sources of interference
Galvanic coupling	Two electric circuits share the same cable	• Clocked devices (influence on the network due to converters and third-party power supply units) • Starting motors • Potential differences on component enclosures with shared power supply
Capacitive coupling	Potential difference between conductors	• Interference coupling due to parallel routing of signal cables • Static discharge of the operator
Inductive coupling	Mutual influencing of current-carrying conductor loops. The magnetic fields caused by the current flow induce interference voltages.	• Transformers, motors, electrical welding equipment • Power supply cables routed in parallel • Cables whose currents are switched • High-frequency signal cables • Unwired coils
Radiation coupling	Effect of an electromagnetic wave on a cable configuration. This wave induces currents and voltages.	• Neighboring transmitters (for example, walkie-talkies) • Spark gaps (spark plugs, collectors of electrical motors, welding devices)

Interference-free cable routing 3

This chapter describes the EMC-compatible classification of cables and cable routing for bus, data, signal and supply lines.

3.1 Classifying cables into cable categories

Classify the cables into cable categories according to their sensitivity to interference coupling and interference emission. The further away from one another cables of different cable categories are installed, the lower the mutual influence by capacitive and inductive coupling.

The following table shows the cable categories into which you can classify your cables accordingly.

Table 3- 1 Cable categories

Category A	• Signal lines to I/O modules • Bus and data lines (for example, PROFIBUS, PROFINET) • Lines to HMI devices • Supply lines for extra-low voltages (< 24V DC or < 60V AC)
Category B	• Supply lines with safe electrical isolation (SELV) • Supply voltages < 400 V
Category C	• Supply voltages > 400 V

The following table shows the minimum clearance you must maintain when installing cables.

Table 3- 2 Combination of cable categories

	Category A	Category B	Category C
Category A	• In common bundles or cable channels	• In separate bundles or cable channels (no minimum clearance necessary)	• Inside cabinets in separate bundles or cable channels • Outside cabinets, but inside buildings, on separate cable racks with at least 10 cm clearance
Category B	• In separate bundles or cable channels (no minimum clearance necessary)	• In common bundles or cable channels	
Category C	• Inside cabinets in separate bundles or cable channels • Outside cabinets, but inside buildings, on separate cable racks with at least 10 cm clearance		• In common bundles or cable channels

If you install different cable categories in the same cable channel, use metallic cable channels with metallic partition.

The following figure show a schematic view of a cable channel with partition.

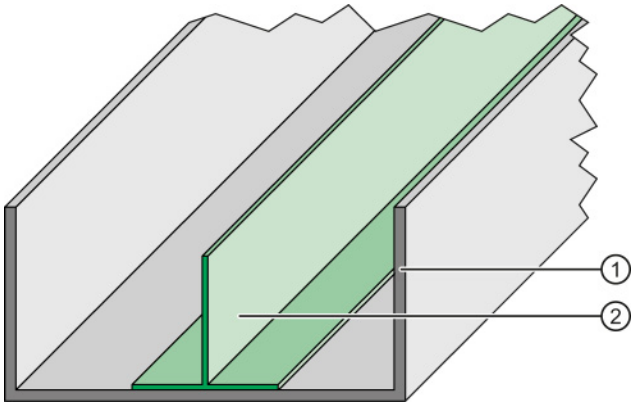

① Metallic cable channel
② Metallic partition

Figure 3-1 Cable channel with partition

3.2 Cable routing inside cabinets in buildings

Rule

Observe the following rules for proper cable routing inside of control cabinets:

- If a crossing of cables is unavoidable, then cross the cables at an angle of 90°, if possible, in order to keep interference from electrical fields as low as possible.
- Do not route cables coming into the cabinet from outside parallel to the shield supports.

3.3 Cable routing outside cabinets and inside buildings

Rule

Observe the following rules for proper cable routing outside control cabinets and inside buildings:

- Read the information in section Assigning cables to cable categories (Page 9).
- If you route the cables in metallic cable channels, you can rearrange the cable channels next to each other.
- Connect metallically conductive cable racks to the potential equalization of the building.
- If a crossing of cables is unavoidable, then cross the cables at an angle of 90°, if possible, in order to keep interference from electrical fields as low as possible.

3.4 Cable routing outside buildings

If possible, lay the cables outside buildings on metallic cable holders. Connect the cable holder joints galvanically to each other and ground the cable holders.

Rule

Observe the following rules when laying cables outside of buildings:

- Use metallic auxiliary terminal boxes to connect cables coming from outside at the junction to cables inside the building. Ground these boxes.
- If a crossing of cables is unavoidable, then cross the cables at an angle of 90°, if possible, in order to keep interference from electrical fields as low as possible.
- Integrate bus cables installed outside of buildings into your lightning and overvoltage concept.

Lightning protection

When you lay cables for SIMATIC devices outside of buildings, you have to take internal and external lightning protection measures.

Reference

For additional information about lightning protection, refer to chapter Lightning protection and overvoltage protection (Page 26).

3.5 Underground cable routing

Rule

Observe the following rules for underground cable routing:

- Lay the cable at least 60 cm below the ground surface.
- Install equipotential bonding approximately 20 cm above the cable. You can use a zinc-plated ground strip, for example. The ground strips also serve as protection against lightning strikes.
- Protect the cable against mechanical damage by, for example, using a plastic pipe and/or a cable warning tape in the ground, approximately 40 cm above the cable.
- Separate the various cable categories in the ground using cable channels, for example.

The following figure shows the arrangement of cable warning tape, equipotential bonding and a cable.

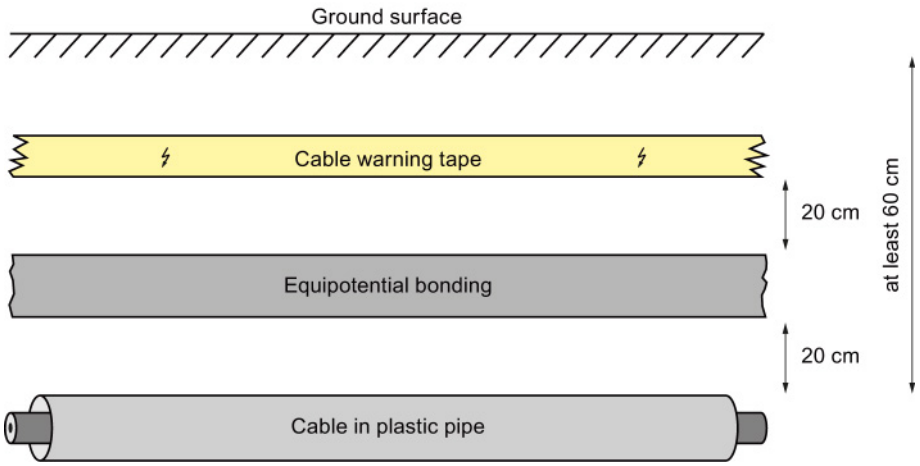

Figure 3-2 Arrangement underground

Lightning protection

When you lay cables for SIMATIC devices outside of buildings, you have to take internal and external lightning protection measures.

Reference

For additional information about lightning protection, refer to chapter Lightning protection and overvoltage protection (Page 26).

3.6 Bending radii and tensile strength of cables

Tensile strain

A high strain on the cables due to tensile forces leads to conductor material flow. The tensile forces thus cause a change in the structure of the material and lower the conductor cross-section. This decrease of the conductor cross-section leads, in turn, to a heating of the conductor and premature wear of the conductor insulation.

Use the supplied cable ties to relieve the terminal points on the plugs for the I/O modules of the product series SIMATIC S7-1500 and SIMATIC ET 200MP.

Bending radius

If you select too small bending radii when laying cables, this will cause the materials to stretch and compress and changes the mechanical structure of the cables. The electrical properties are impaired as a result.

Pay particular attention to the bending radii of fiber-optic cables. If the bending radii are too small, the optical properties of the fiber-optic cable are adversely affected. Reliable transmission is no longer guaranteed.

Cable shielding

4

Shielding is a measure to attenuate (dampen) magnetic, electrical or electromagnetic interference fields.

Interference currents on cable shields are diverted from the shield connection to ground. To avoid interference as a result of these currents, it is imperative to provide a low-impedance connection to the protective conductor.

Rules

Ideally, you should use cables equipped with a protective braided shield. The shield's contacting must be more than 80% at the contact point. Avoid tensile and compression strain on cables with a foil shield. This type of strain can damage the foil shield very slightly at the fastening point. The result is a reduced shielding effect.

Shield connection with grounding at both ends

Always connect the cable shields to the ground at both ends. Low and high frequency interference can be reduced only by connecting both ends of the shield to the ground.

Note

Laying an additional equipotential bonding cable

Whenever potential differences develop between the grounding points, an equalizing current flows on a shielding that is connected at both ends. In this case, lay an additional equipotential bonding cable. You can find more information on this topic in the chapter Equipotential bonding (Page 23).

Shield connection with capacitive grounding at one end

If you do not have the option of installing equipotential bonding (in plants covering a large area, for example), connect capacitive grounding to one end of your shield. In this case, only high-frequency interference will be reduced.

The following figure shows the capacitive grounding of a cable shield. The values indicated in the figure are indicative and will differ from system to system. The capacity diverts the high-frequency interference. This capacity provides high-impedance protection for the power frequency (50 or 60 Hz), thus preventing equalizing currents via the shield. A parallel switched high-impedance resistance prevents the capacity from loading a direct current.

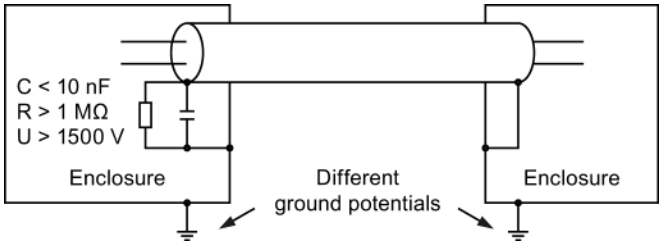

Figure 4-1 Capacitive grounding of the shield

4.1 Connecting the cable shielding for S7-1500 and ET 200MP

A special shield design has been developed for the automation system S7-1500 and the distributed I/O system ET 200MP for the shield connection of the signal lines. The connection element for the cable shield consists of a shield clamp and a shield terminal.

If the front connector is located in the module, the interference currents which occur are diverted by the connection element to the ground via the module and mounting rail.

The shield clamp is a pluggable mount for the analog and technology modules. The shield clamp allows the low-impedance application of cable shields with minimum installation times.

The following figure shows a front connector with mounted shield clamp and associated shield terminal.

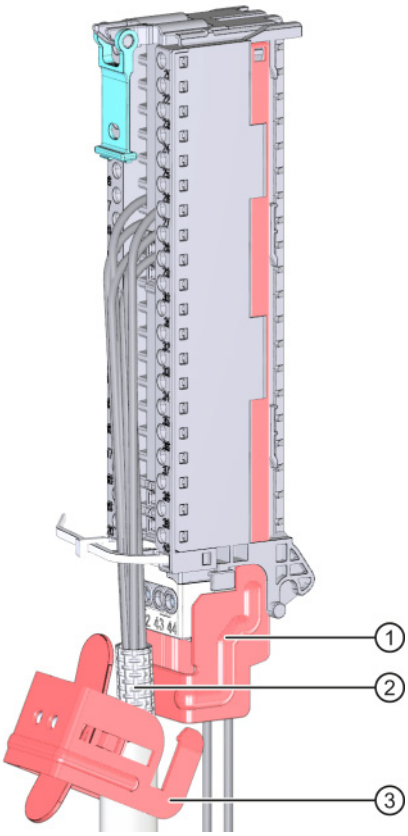

① Shield clamp
② Stripped cable shield
③ Shield terminal

Figure 4-2 Shield clamp and shield terminal on front connector

The shield clamp is inserted from below onto the front connector until the shield clamp latches audibly. The shield terminal is fastened to the shield clamp.

Additional information

For additional information on installing the shield clamp and shield terminal, refer to the "Connecting front connectors" chapter in the S7-1500 automation system (http://support.automation.siemens.com/WW/view/en/59191792) or ET 200MP Distributed I/O System (http://support.automation.siemens.com/WW/view/en/59193214) system manuals.

4.2 Connecting the cable shielding for ET 200SP

A special shield design has been developed for the shield connection of the signal lines of the ET 200SP distributed I/O system. The connection element for the cable shield consists of a shield terminal.

If the front connector is located in the module, the interference currents that occur are diverted by the connection element via BaseUnit and mounting rail to the ground.

The shield terminal is plugged into a mount of the BaseUnit. The shield terminal allows the low-impedance application of cable shields with minimum installation times. There is no need for the otherwise standard connection of the cable shield at the cabinet entry.

The following figure shows a BaseUnit with shield terminal and shield support.

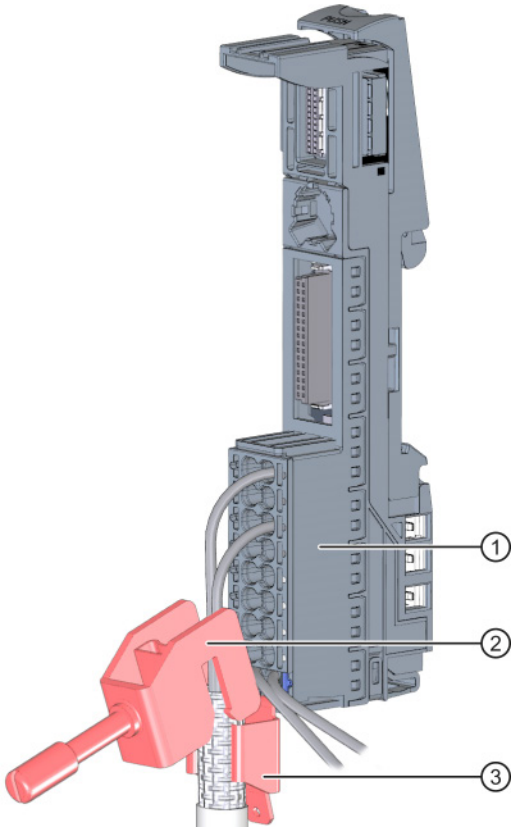

① BaseUnit of ET 200SP
② Shield terminal
③ Shield support with flat plug for terminal sockets

Figure 4-3 BaseUnit with shield terminal

Additional information

For more information on mounting the shield terminal, refer to the "Connecting cable shields" chapter of the system manual ET 200SP Distributed I/O System (http://support.automation.siemens.com/WW/view/en/58649293).

4.3 Connecting the cable shielding for ET 200AL

Each module of the ET 200AL distributed I/O system features a functional ground connection.

Use only shielded cables for connection of analog signals, PROFINET and PROFIBUS signals and for the ET-Connection. If you have screwed the plug in correctly, the interference currents that occur are diverted to the metal parts and functional ground.

If you attach an ET 200AL module to a **conductive**, grounded base, the lower mounting bolt establishes a conductive connection to the earth potential.

If you attach an ET 200AL module to a **non-conductive** base, connect the lower mounting bolt to the ground wire at the same time.

The following figure shows how to connect the functional ground via a ground wire, using the IM 157-1 PN interface module as an example.

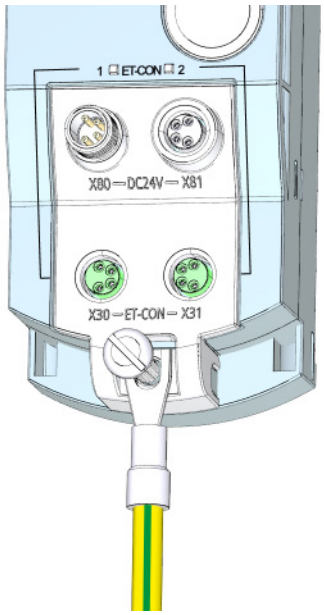

Figure 4-4 Connect functional ground via a ground wire

Additional information

You can find more information on installing ET 200AL modules in the Installing Modules section of the system manual Distributed I/O System ET 200AL (http://support.automation.siemens.com/WW/view/en/89254965).

4.4 Connecting the cable shield for bus cables

In the S7-1500, ET 200MP and ET 200SP systems, the cable shields of PROFIBUS and PROFINET cables are connected to the existing bus connection elements. Cable shield and shield support are thus galvanically connected to each other. If the connector is plugged into the module, the coupled interferences are diverted via the module carrier to the ground. There is no need for the otherwise standard connection of the shield at the cabinet entry.

The following figure shows examples of the shield connection for various bus connection elements.

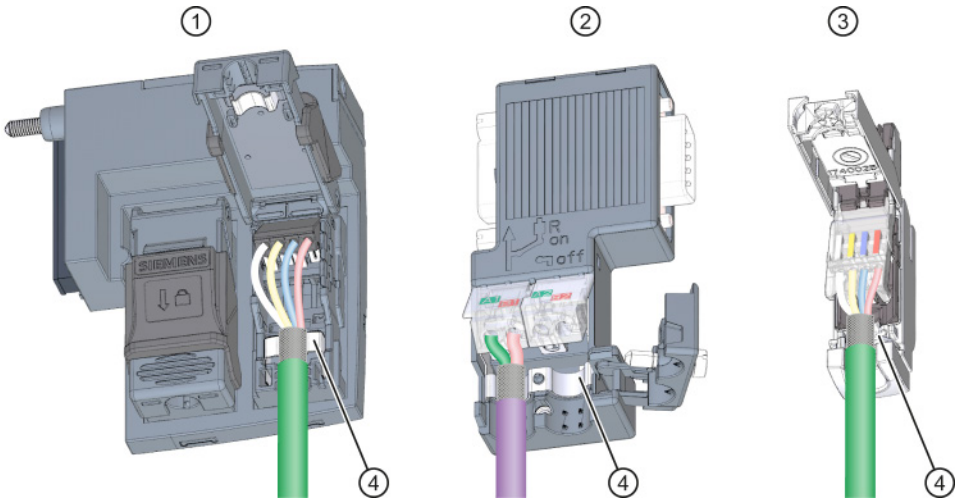

① BusAdapter BA 2xRJ45 for ET 200SP
② PROFIBUSconnector, 9-pin D-Sub
③ PROFINETconnector RJ45
④ Shield support of respective connector

Figure 4-5 Shield connection for bus connection elements

Reference

For more information on installing the connectors, refer to the "Connecting PROFINET IO BusAdapter BA 2xRJ45 to the interface module" chapter of the system manual ET 200SP Distributed I/O System (http://support.automation.siemens.com/WW/view/en/58649293) and to the supplied product information.

4.5 Connecting the cable shield for other components

The following procedures for connecting the shield to devices that do not have any special shield terminals have proven themselves in practice.

Rule

Note the following points when handling the shield:

- Always use metal clamps to mount the protective braided shields of the cables. The clamps must cover a large area of the shield and provide appropriate contact force.
- Attach the shield to a shielding bus directly after the point where the cable enters the cabinet. If you route the shield further to the module, do not connect the shield again in front of the module, as this would create ground loops.

The following figure shows standard types of shield fastening.

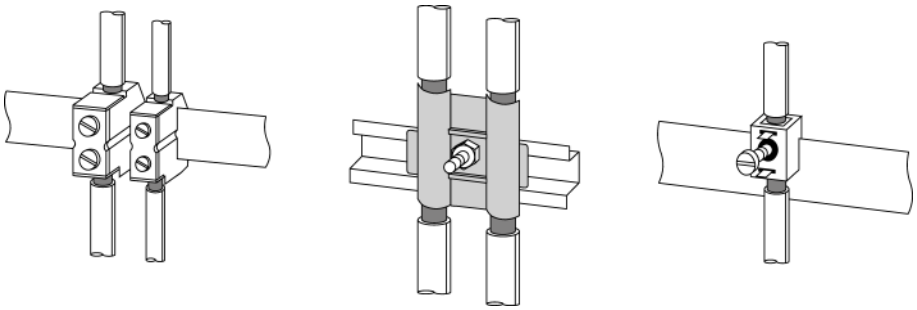

Figure 4-6 Cable shielding

Equipotential bonding

5

Definition according to DIN VDE 0100

Equipotential bonding is an electrical connection which brings the bodies of electrical equipment and external conductive parts to the same, or nearly the same, potential.

Equipotential bonding is divided into:

- Main equipotential bonding
- Additional local equipotential bonding

Both versions of equipotential bonding are of great importance not only for protection against electric shock, but also for EMC.

Main equipotential bonding

Main equipotential bonding is required by DIN VDE 0100 Part 410 as a protective measure and is mandatory, regardless of other measures for protection against direct and indirect contact.

Additional local equipotential bonding

Additional local equipotential bonding is required if:

- Unfavorable grounding conditions exist between plant parts due to different conductivity of the soil (for example, sandy or stony ground)
- Cables bridge a large distance
- Electrical energy is fed in from various power supplies (for example, in the case of multiple substations)
- Considerable electrical power is used (for example, welding robots, large drives)

Measures

In such cases, an additional equipotential bonding cable between the individual potentials can solve the problem. The equipotential bonding cable must also be able to divert large currents and carry lightning stroke current. The following equipotential bonding systems have proven themselves in practice:

- 16 mm^2 for copper equipotential bonding cables up to 200 m long
- 25 mm^2 for copper equipotential bonding cables over 200 m long

To prevent ground loops, equipotential bonding cables are installed in parallel and, whenever possible, near to the signal/bus cable. This allows the area between the two cables to be kept as small as possible.

The following figure shows a schematic view of the installation of an equipotential bonding cable.

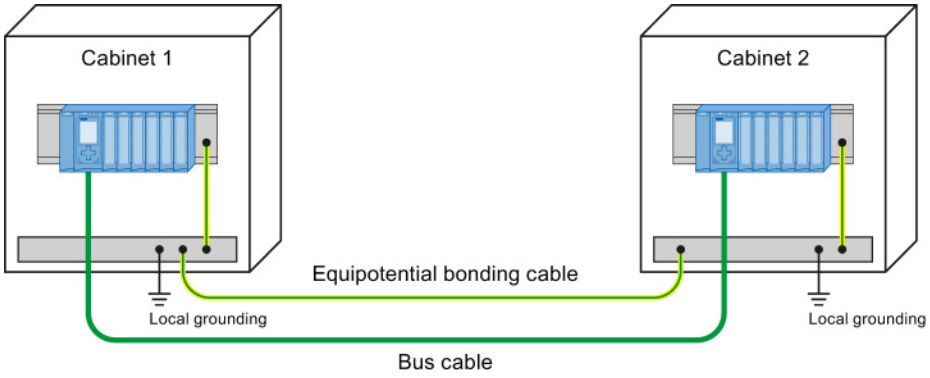

Figure 5-1 Installation of equipotential bonding cables

Rule

Note the following issues regarding equipotential bonding:

- The lower the impedance of an equipotential bonding cable, the more effective is equipotential bonding. The impedance of the additionally installed equipotential bonding cable should not exceed 10% of the shield impedance.
- Connect the equipotential bonding cables to a large area of the grounding system.
- Protect the connection points against corrosion.
- Avoid ground loops.
- Install the equipotential bonding cables in such a way as to minimize the areas enclosed between the equipotential bonding cables and signal lines.

Special measures for interference-free operation 6

Connecting inductances to quenching elements

Ideally, the inductances (for example, contactor or relay coils) controlled by SIMATIC do not require any wiring to external quenching elements. The required quenching elements are already integrated into the modules.

If the SIMATIC output circuit can also be switched off by built-in contacts (such as relay contacts for EMERGENCY OFF), the module's integrated quenching elements are no longer effective. In this case, the inductances must be wired to quenching elements.

Wire inductances to freewheeling diodes, varistors or RC elements, for example.

Table 6- 1 Wiring inductances

Wiring DC-operated inductances		Wiring AC-operated inductances	
with diode	with Z diode	with varistor	with RC element
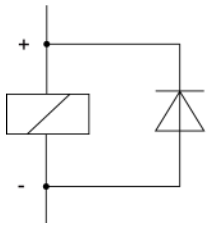	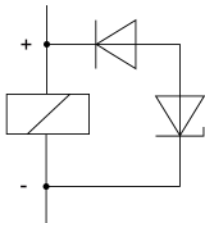	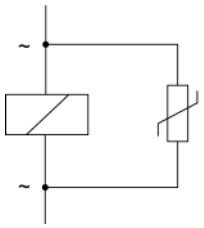	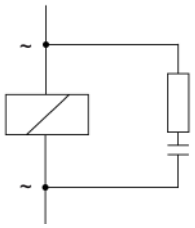

Programming devices

Provide a socket in each cabinet for the supply of the programming devices. The sockets are supplied from the distribution board to which the protective conductor for the cabinet is also connected.

Observe the following points during the installation of the socket in the control cabinet:

- Include the grounding of the socket in your consideration of the equipotential bonding.
- The common star point of the two ground potentials (cabinet and socket) must be close to the two end points.
- An equipotential bonding cable is not permitted as communication cable between programming device and controller.

Lightning protection and overvoltage protection 7

7.1 What is lightning and overvoltage protection?

Introduction

The term "Lightning and overvoltage protection" covers both the concept and system for the protection of structural systems (such as buildings or electrical equipment). This concept also includes the protection of people and animals.

Overvoltages are most frequently caused by lightning strikes.

Lightning protection system

The lightning protection system is the complete system used to reduce physical damage to a structural system as a result of direct lightning strikes and overvoltages. The lightning protection system is divided into external and internal lightning protection.

External lightning protection

External lightning protection is part of the lightning protection system and comprises an interception device, an arrester and a grounding system. In the event of a lightning strike, the external lightning protection serves to divert the lightning current safely to the ground. This measure most frequently prevents fire damage.

Internal lightning protection

Internal lightning protection is part of the lightning protection system and comprises lightning protection equipotential bonding and/or electrical isolation with respect to the external lightning protection. In the event of a lightning strike, the internal lightning protection reduces the damage caused by overvoltages resulting from the lightning.

Even at larger distances of up to 1.5 km, lightning strikes can sometimes still cause damage. You obtain effective lightning protection by expanding the external lightning protection into an overall protection system. This system includes equipotential bonding and surge protection devices.

7.2 Lightning protection zone concept

Introduction

Each building requires a coordinated protection zone concept. The grading of the protection is of key importance for this. Sufficient protection can only be guaranteed if this grading requirement is satisfied.

The lightning protection zone concept described in the standards IEC 62305-4 and DIN EN 62305-4 is used for this purpose. The lightning protection zone concept groups devices and areas that have the same risk potential and can be wired to arresters of the same type.

Use overvoltage protection devices at the transitions of the lightning protection zones based on the requirements. Install the overvoltage protection devices at an appropriate location such as the main or sub-distribution board.

Principle of the lightning protection zone concept

The principle behind the lightning protection zone concept is the division of the areas to be protected from overvoltages, for example buildings, into lightning protection zones based on EMC considerations.

Schematic diagram of the lightning protection zone concept

The following is a schematic diagram of the lightning protection zone concept in a physical structure.

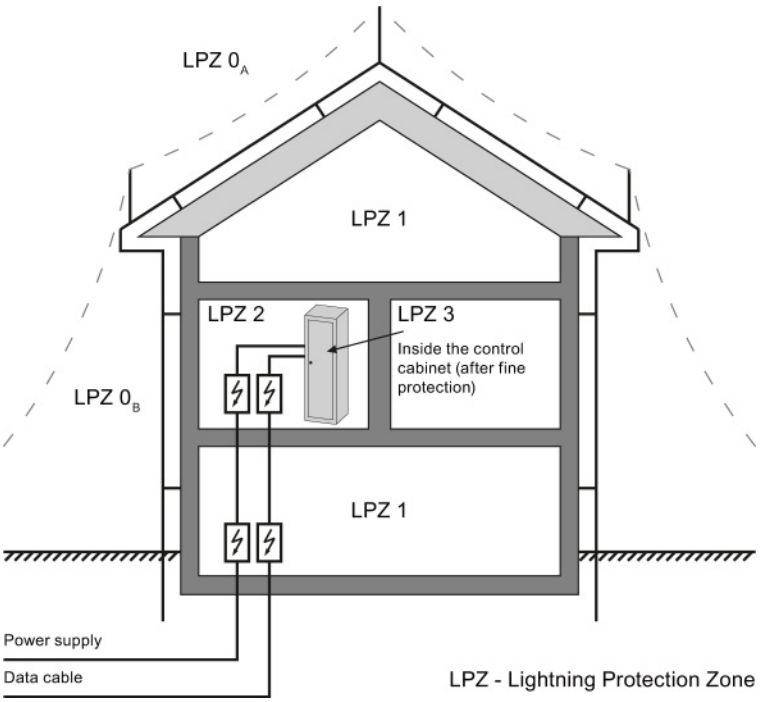

Figure 7-1 Division of a structural system into lightning protection zones

Division of lightning protection zones

The various lightning protection zones (LPZ - Lightning Protection Zone) are limited spatially as follows and not necessarily by physical boundaries, such as walls or floors.

The following table explains the division into various lightning protection zones.

Table 7- 1 External and internal lightning protection zones

Lightning protection zones	
External lightning protection zones:	
LPZ 0_A	• Risk from direct lightning strikes • Risk from the full electromagnetic field of the lightning
LPZ 0_B	• Protected against direct lightning strike • Risk from the full electromagnetic field of the lightning
Internal lightning protection zones:	
LPZ 1	• Protected against direct lightning strike • Attenuated electromagnetic field of the lightning
LPZ 2	• Protected against direct lightning strike • Reduced leakage currents and electromagnetic fields compared to LPZ 1 • Protected terminal devices
LPZ 3	• Protected against direct lightning strike • Protected area inside the terminal device • Local equipotential bonding

Effects of the lightning strike

Direct lightning strikes occur in the lightning protection zone LPZ 0_A. Effects of the lightning strike are high-energy lightning currents and strong electromagnetic fields. These effects are reduced from one lightning protection zone to the next through suitable lightning current or overvoltage arrester/shielding measures.

Frequent damage caused by lightning strikes includes:

- Injury to people and animals, which may in worst cases lead to death
- Damage to buildings
- Fire caused by strong heat development of a lightning strike

Overvoltages

Electromagnetic fields of the lightning channel can be reduced with appropriate shielding measures. Overvoltages due to inductions can be reduced to a safe level starting in lightning protection zone LPZ 0_B with overvoltage arresters.

7.3 Rules and components for the transitions between lightning protection zones

Introduction

This chapter provides you with information on the rules for transitions between lightning protection zones. Measures must be taken to reduce the surge current load and the magnetic fields at the transitions between the lightning protection zones.

Each zone-penetrating metallic/electrical system is incorporated into the equipotential bonding at the zone transition.

The metallic systems include channels, structural parts, and pipes (for water, gas, and heat, for example).

Electrical systems include power and IT cables and wires (for example, power cables and bus cables).

Transitions between lightning protection zones

Overvoltage protection must be provided at the transitions between lightning protection zones (LPZ - Lightning Protection Zone) in accordance with DIN EN 62305. The protection levels are defined at the transitions and implemented by means of overvoltage protection devices (SPD - Surge Protective Device).

- SPD Type 1 - Coarse protection for the transition from LPZ 0 to LPZ 1
- SPD Type 2 - Medium protection for the transition from LPZ 1 to LPZ 2
- SPD Type 3 - Fine protection for the transition from LPZ 2 to LPZ 3

The following figure illustrates the lightning protection zones and the type classes from the supply line to the consumer.

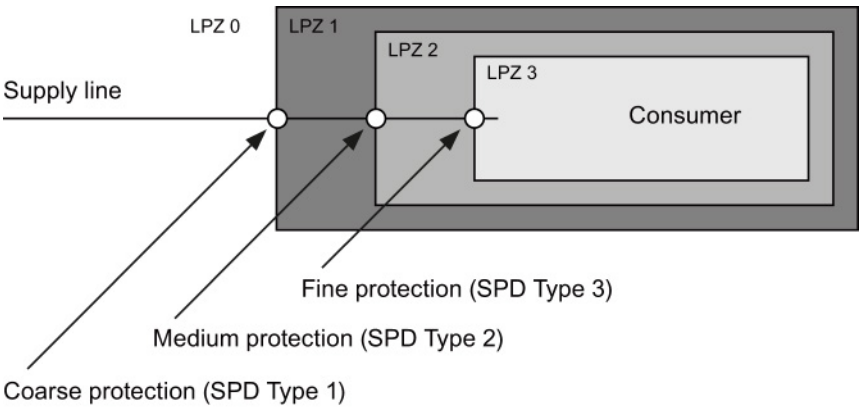

Figure 7-2 Lightning protection zone transitions

Rule for transition from lightning protection zone 0_A to 1

Lightning protection equipotential bonding is required at the transition from lightning protection zone 0_A to 1. The following applies to the transition at the interface of lightning protection zone 0_A to 1:

- Use of lightning arresters prevents introduction of partial lightning currents into structural systems
- Creation of local equipotential bonding at the transition of lightning protection zones, with incorporation of metallic supply systems (for example, pipes, air ducts, cable channels or cable ducts)

Components for lightning protection equipotential bonding from lightning protection zone 0_A to 1

The following table shows components for lightning protection equipotential bonding from lightning protection zone 0_A to 1.

Table 7- 2 Components for transition from lightning protection zone 0_A to 1

Seq. no.	Cables for ...	Connection at the 0_A interface to 1 with:	
		S7-1500/ET 200MP/ET 200SP/ET 200AL	Article number
1	Three-phase TN-C system	DEHNventil® DV M TNC 255	951 300
		DEHNventil® DV M TNC 255 FM *	951 305 *
2	Three-phase TN-S system	DEHNventil® DV M TNS 255	951 400
		DEHNventil® DV M TNS 255 FM *	951 405 *
3	Three-phase TT system	DEHNventil® DV M TT 255	951 310
		DEHNventil® DV M TT 255 FM *	951 315 *
4	AC TN-S system	DEHNventil® DV M TN 255	951 200
		DEHNventil® DV M TN 255 FM *	951 205 *
5	AC TT system	DEHNventil® DV M TT 2P 255	951 110
		DEHNventil® DV M TT 2P 255 FM *	951 115 *
6	Supply U_N = 24 V DC	BLITZDUCTOR® XT, base section BXT BAS	920 300
		BLITZDUCTOR® XT, module BXT ML2 B 180 (I_L = 1.2 A) (2-wire)	920 211
7	Supply U_N = 24 V DC	DEHNbloc® M, DB M 1 150	961 110
		DEHNbloc® M, DB M 1 150 FM * (2 pieces required)	961 115 *
8	Bus cable MPI RS 485, RS 232 (V.24)	BLITZDUCTOR® XT, base section BXT BAS	920 300
		BLITZDUCTOR® XT, module BXT ML2 B 180 (2-wire)	920 211
9	Inputs/outputs of digital modules U_N = 24 V DC	BLITZDUCTOR® XT, base section BXT BAS	920 300
		BLITZDUCTOR® XT, module BXT ML4 B 180 (I_L = 1.2 A) (4-wire)	920 310
10	Inputs/outputs of digital modules U_N = 230 V AC	DEHNbloc® M, DB M 1 255	961 120
		DEHNbloc® M, DB M 1 255 * (2 pieces required)	961 125 *

Seq. no.	Cables for ...	Connection at the 0_A interface to 1 with:	
		S7-1500/ET 200MP/ET 200SP/ET 200AL	Article number
11	Inputs/outputs of analog modules (e.g., 4-20 mA, 1-10 V)	BLITZDUCTOR® XT, base section BXT BAS	920 300
		BLITZDUCTOR® XT, module (I_L = 1.2 A) (4-wire)	920 310
* Version with remote indication contact Components of the series BLITZDUCTOR® XT can be remotely monitored with the appropriate accessories. Additional information is available on the Internet (http://www.dehn.de) **Components can be ordered directly from:** DEHN+SÖHNE GMBH+CO.KG. Hans-Dehn-Straße 1 D-92318 Neumarkt			

Rule for the transition from lightning protection zone 0_B to 1, 1 to 2, or 2 to 3

The transition from lightning protection zone 0_B to 1, 1 to 2, or 2 to 3 prevents strong electromagnetic coupling and serves as overvoltage protection. The following applies to the transition at the interface from lightning protection zone 0_B to 1, 1 to 2, or 2 to 3:

- Use of power cables with surge current-carrying cable shields or twisted-pair IT cables
- Laying cables and lines
  - In continuous, surge current-carrying metal pipes that are grounded at both ends
  - In reinforced concrete channels capable of carrying surge current with grounding at both ends
  - On closed metal cable racks that are grounded at the beginning and end
- Use of fiber-optic cables without a metal shield if such a transmission is intended
- Creation of local equipotential bonding at the transition of lightning protection zones, with incorporation of metallic supply systems (for example, pipes, air ducts, cable channels or cable ducts)

Additional measures

If the actions listed above cannot be implemented, protection by means of overvoltage arresters must be provided. The following sections contain tables with overvoltage arresters that are very suitable for protecting the plant.

Components for lightning protection equipotential bonding from lightning protection zone 0_B to 1 and 1 to 2

The following table shows components for lightning protection equipotential bonding from lightning protection zone 0_B to 1 and 1 to 2.

Table 7- 3 Components for transition from lightning protection zone 0_B to 1 and 1 to 2

Seq. no.	Cables for ...	Connection at the 0_B interface to 1 with:	
		S7-1500/ET 200MP/ET 200SP/ET 200AL	Article number
1	Three-phase TN-C system	DEHNguard® DG M TNC 275	952 300
		DEHNguard® DG M TNC 275 FM *	952 305 *
2	Three-phase TN-S system	DEHNguard® DG M TNS 275	952 400
		DEHNguard® DG M TNS 275 FM *	952 405 *
3	Three-phase TT system	DEHNguard® DG M TT 275	952 310
		DEHNguard® DG M TT 275 FM *	952 315 *
4	AC TN-S system	DEHNguard® DG M TN 275	952 200
		DEHNguard® DG M TN 275 FM *	952 205 *
5	AC TT system	DEHNguard® DG M TT 2P 275	952 110
		DEHNguard® DG M TT 2P 275 FM *	952 115 *
6	Supply U_N = 24 V DC	BLITZDUCTOR® VT, BVT AVD 24	918422
7	Bus cable MPI/DP RS 485	BLITZDUCTOR® XT, base section BXT BAS	920 300
		BLITZDUCTOR® XT, module BXT ML2 BD HFS 5	920 271
8	Bus cable RS 232 (V.24)	BLITZDUCTOR® XT, base section BXT BAS	920 300
		BLITZDUCTOR® XT, module BXT ML2 BE S 12	920 222
9	Industrial Ethernet	DEHNpatch® DPA M CLE RJ45B 48	929 121
10	Inputs of digital modules U_N = 24 V DC	DEHNconnect® RK, DCO RK E 60 (I_L = 0.5 A)	919 990
11	Outputs of digital modules U_N = 24 V DC	DEHNconnect® RK, DCO RK D 5 24 (I_L = 10.0 A)	919 986
12	Inputs/outputs of digital modules U_N = 230 V AC	DEHNguard® DG S 275	952 070
		DEHNguard® DG S 275 FM *	952 090 *
		N-PE arrester in the TT system	
		DEHNgap® C S, DGP C S	952 030
		DEHNgap® C S, DGP C S FM *	952 035 *
13	Inputs/outputs of analog modules (e.g., 4-20 mA, 1-10 V)	DEHNconnect® RK, DCO RK E 60 (I_L = 0.5 A)	919 990

Seq. no.	Cables for ...	Connection at the 0_B interface to 1 with:	
		S7-1500/ET 200MP/ET 200SP/ET 200AL	Article number
14	Inputs/outputs of the fail-safe modules (24 V DC)	DEHNconnect® RK, DCO RK D 5 24	919 986
* Version with remote indication contact Components of the series BLITZDUCTOR® XT can be remotely monitored with the appropriate accessories. Additional information is available on the Internet (http://www.dehn.de) **Components can be ordered directly from:** DEHN+SÖHNE GMBH+CO.KG. Hans-Dehn-Straße 1 D-92318 Neumarkt			

Components for lightning protection equipotential bonding from lightning protection zone 2 to 3

The following table shows components for lightning protection equipotential bonding from lightning protection zone 2 to 3 that you can use for S7-1500/ET 200MP and ET 200SP.

Table 7- 4 Components for transition from lightning protection zone 2 to 3 (for S7-1500/ET 200MP and ET 200SP)

Seq. no.	Cables for ...	Connection at the interface 2 to 3 with:			
		S7-1500/ET 200MP	Article number	ET 200SP	Article number
1	Three-phase TN-S, TT system	DEHNrail® DR M 4P 255	953 400	DEHNguard® DG M TNS 275	952 400
				DEHNguard® DG MOD 275	952 010
		DEHNrail® DR M 4P 255 FM * (I_L = 25.0 A)	953 405 *	DEHNguard® DG M TT 275	952 310
				DEHNguard® DG MOD 275	952 010
				DEHNguard® DG MOD NPE	952 050
2	AC TN-S, TT system	DEHNrail® DR M 2P 255	953 200	DEHNguard® DG M TN 275	952 200
				DEHNguard® DG MOD 275	952 010
		DEHNrail® DR M 2P 255 FM * (I_L = 25.0 A)	953 205 *	DEHNguard® DG M TT 2P 275	952 110
				DEHNguard® DG MOD 275	952 010
				DEHNguard® DG MOD NPE	952 050
3	Supply U_N = 24 V DC	BLITZDUCTOR® VT, BVT AVD 24	918 422	BLITZDUCTOR® VT, BVT AVD 24 ® VT	918 422
4	Bus cable MPI/DP RS 485	BLITZDUCTOR® XT, base section BXT BAS	920 300	---	---
		BLITZDUCTOR® XT, module BXT ML2 BD HFS 5	920 271	---	---
5	Bus cable RS 232 (V.24)	BLITZDUCTOR® XT, base section BXT BAS	920 300	---	---
		BLITZDUCTOR® XT, module BXT ML2 BE S 12	920 222	---	---
6	Industrial Ethernet	DEHNpatch® DPA M CLE RJ45B 48	929 121	---	---
7	Inputs of digital modules U_N = 24 V DC	DEHNconnect® RK, DCO RK E60 (I_L = 0.5 A)	919 990	BLITZDUCTOR® XT, BXT ML4 BD 24 (I_L < 1 A)	920 344

Seq. no.	Cables for ...	Connection at the interface 2 to 3 with:			
		S7-1500/ET 200MP	Article number	ET 200SP	Article number
				BLITZDUCTOR® XT, base section BXT BAS (I_L < 1 A)	920 300
8	Outputs of digital modules U_N = 24 V DC	DEHNconnect® RK, DCO RK D 5 24 (I_L = 10.0 A)	919 986	BLITZDUCTOR® XT, BXT ML4 BD 24 (I_L < 1 A)	920 344
				BLITZDUCTOR® XT, base section BXT BAS (I_L < 1 A)	920 300
				DEHNconnect® SD2, DCO SD2 E 48 (I_L < 10 A)	917 989
9	Inputs/outputs of digital modules U_N = 230 V AC	DEHNguard® DG S 275	952 070	DEHNguard® DG S 275	952 070
				DEHNguard® DG MOD 275	952 010
		DEHNguard® DG S 275 FM *	952 090 *	---	---
		N-PE arrester in the TT system			
		DEHNgap® C S, DGP C S	952 030	---	---
		DEHNgap® C S, DGP C S FM *	952 035 *	---	---
10	Inputs/outputs of analog modules (e.g., 4-20 mA, 1-10 V)	DEHNconnect® RK, DCO RK E 60 (I_L = 0.5 A)	919 990	BLITZDUCTOR® XT, BXT ML4 BD 24 (I_L < 1 A)	920 344
				BLITZDUCTOR® XT, base section BXT BAS (I_L < 1 A)	920 300
11	Inputs/outputs of the fail-safe modules (24 V DC)	---	---	DEHNconnect® RK, DCO RK D 5 24	919 986
				DEHNconnect® RK, DCO RK E 60	919 990

* Version with remote indication contact

Components of the series BLITZDUCTOR® XT can be remotely monitored with the appropriate accessories. Additional information is available on the Internet (http://www.dehn.de)

Components can be ordered directly from:
DEHN+SÖHNE GMBH+CO.KG.
Hans-Dehn-Straße 1
D-92318 Neumarkt

The following table shows components for lightning protection equipotential bonding from lightning protection zone 2 to 3 that you can use for ET 200AL.

Table 7- 5 Components for transition from lightning protection zone 2 to 3 (for ET 200AL)

Seq. no.	Cables for ...	Connection at the interface 2 to 3 with:	
		ET 200AL	Article number
1	Supply U_N = 24 V DC	BLITZDUCTOR® VT, BVT AVD 24 ® VT	918 422
Components of the series BLITZDUCTOR® XT can be remotely monitored with the appropriate accessories. Additional information is available on the Internet (http://www.dehn.de) **Components can be ordered directly from:** DEHN+SÖHNE GMBH+CO.KG. Hans-Dehn-Straße 1 D-92318 Neumarkt			

Index

B

Bending radius, 14

C

Cable shielding, 15

E

Electromagnetic compatibility, 7
Electromagnetic interference, 7
EMC, 7

I

Interference-free operation, 25

L

Lightning protection
    Equipotential bonding, 30
    External, 26
    Internal, 26
    Overvoltage protection, 30, 31
Lightning protection zone concept, 27
Lightning protection zones, 29
    Definition, 28

O

Overvoltage, 28
Overvoltage protection
    Components, 30, 32, 34

T

Tensile strain, 14

SIEMENS

SIMATIC

S7-1500, ET 200MP, ET 200SP, ET 200AL, ET 200pro, ET 200eco PN Analog value processing

Function Manual

Preface

Documentation guide 1

What you should know about analog technology 2

Representation of analog values 3

Connecting transducers 4

Thermocouples 5

Wiring loads/actuators 6

Supported functions 7

High-speed analog modules 8

06/2014

A5E03461439-AC

Legal information

Warning notice system

This manual contains notices you have to observe in order to ensure your personal safety, as well as to prevent damage to property. The notices referring to your personal safety are highlighted in the manual by a safety alert symbol, notices referring only to property damage have no safety alert symbol. These notices shown below are graded according to the degree of danger.

⚠ DANGER
indicates that death or severe personal injury **will** result if proper precautions are not taken.

⚠ WARNING
indicates that death or severe personal injury **may** result if proper precautions are not taken.

⚠ CAUTION
indicates that minor personal injury can result if proper precautions are not taken.

NOTICE
indicates that property damage can result if proper precautions are not taken.

If more than one degree of danger is present, the warning notice representing the highest degree of danger will be used. A notice warning of injury to persons with a safety alert symbol may also include a warning relating to property damage.

Qualified Personnel

The product/system described in this documentation may be operated only by **personnel qualified** for the specific task in accordance with the relevant documentation, in particular its warning notices and safety instructions. Qualified personnel are those who, based on their training and experience, are capable of identifying risks and avoiding potential hazards when working with these products/systems.

Proper use of Siemens products

Note the following:

⚠ WARNING
Siemens products may only be used for the applications described in the catalog and in the relevant technical documentation. If products and components from other manufacturers are used, these must be recommended or approved by Siemens. Proper transport, storage, installation, assembly, commissioning, operation and maintenance are required to ensure that the products operate safely and without any problems. The permissible ambient conditions must be complied with. The information in the relevant documentation must be observed.

Trademarks

All names identified by ® are registered trademarks of Siemens AG. The remaining trademarks in this publication may be trademarks whose use by third parties for their own purposes could violate the rights of the owner.

Disclaimer of Liability

We have reviewed the contents of this publication to ensure consistency with the hardware and software described. Since variance cannot be precluded entirely, we cannot guarantee full consistency. However, the information in this publication is reviewed regularly and any necessary corrections are included in subsequent editions.

Siemens AG
Industry Sector
Postfach 48 48
90026 NÜRNBERG
GERMANY

A5E03461439-AC
Ⓟ 07/2014 Subject to change

Copyright © Siemens AG 2012 - 2014.
All rights reserved

Preface

Purpose of the documentation

This documentation covers general topics applicable to all products.

In addition to introductory information about analog value processing, this manual covers the following topics:

- Wiring transducers to analog inputs
- Wiring actuators/loads to analog outputs
- Compensating for reference junction temperatures
- Calibrating analog modules
- Diagnostics options of an analog module
- High-speed analog modules

Basic knowledge required

The following knowledge is required in order to understand the documentation:

- General knowledge of automation technology
- Knowledge of analog value processing (analog technology)
- Knowledge of the industrial automation system SIMATIC
- Knowledge about how to use STEP 7 (TIA Portal)

Scope of the documentation

This manual is considered the basic documentation for all analog input and analog output modules of the S7-1500, ET 200MP, ET 200SP, ET 200AL, ET 200pro and ET 200eco PN product series.

Changes compared to previous version

Changes / enhancements described in this manual, compared to the previous version (version 12/2013):

- Extension of the scope of validity to the distributed I/O system ET 200AL

Conventions

STEP 7: In this documentation, "STEP 7" is used as a synonym for "STEP 7 as of V12 (TIA Portal)" and subsequent versions of the configuration and programming software.
This documentation includes images of the products it describes. The products supplied may differ slightly from these images.

Please observe notes labeled as follows:

Note

Notes contain important information on a point in the documentation of particular importance.

Additional support

Additional information on SIMATIC products is available on the Internet. The associated documentation is also available on the Internet.

- The portfolio of technical documentation for SIMATIC products and systems can be accessed on the Internet (http://www.siemens.com/simatic-tech-doku-portal).
- The online catalog and the ordering system are available on the Internet (http://mall.automation.siemens.com).

Security information

Siemens provides products and solutions with industrial security functions that support the secure operation of plants, solutions, machines, equipment and/or networks. They are important components in a holistic industrial security concept. With this in mind, Siemens' products and solutions undergo continuous development. Siemens recommends strongly that you regularly check for product updates.

For the secure operation of Siemens products and solutions, it is necessary to take suitable preventive action (e.g. cell protection concept) and integrate each component into a holistic, state-of-the-art industrial security concept. Third-party products that may be in use should also be considered. You can find more information about industrial security on the Internet (http://www.siemens.com/industrialsecurity).

To stay informed about product updates as they occur, sign up for a product-specific newsletter. You can find more information on the Internet (http://support.automation.siemens.com).

Table of contents

Preface 3

1 Documentation guide 7

2 What you should know about analog technology 9

2.1 Overview 9

2.2 Precision/resolution 13

2.3 Scaling analog values 17

2.4 Unscaling analog values 19

2.5 Linearity errors 21

2.6 Repeat accuracy 22

2.7 Operational and basic error limits 23

2.8 Temperature error 26

2.9 Interference frequency suppression 27

2.10 Common mode interference (UCM) 29

2.11 Series mode interference (USM) 31

2.12 Interference voltage suppression 32

2.13 Crosstalk between channels 34

2.14 Diagnostics 36

2.15 Value status 46

2.16 Conversion time of an analog module 49

2.17 Cycle time of an analog module 51

2.18 Settling and response times of analog output modules 52

2.19 Smoothing 54

2.20 Burden with 2-wire transducers 57

3 Representation of analog values 60

3.1 Overview 60

3.2 Representation of input ranges 62

3.3 Representation of output ranges 63

4 Connecting transducers 65
4.1 Overview 65
4.2 Wiring analog inputs with MANA connection 67
4.3 Wiring analog inputs without MANA connection 69
4.4 Wiring voltage transducers 71
4.5 Wiring current transducers 72
4.6 Wiring thermal resistors and resistors 74
4.7 Wiring thermocouples 76
5 Thermocouples 77
5.1 Selecting thermocouples 77
5.2 Structure and operating principle of thermocouples 79
5.3 Compensation for the reference junction temperature 81
5.3.1 Overview 81
5.3.2 Compensation with internal reference junction 84
5.3.3 Compensation with reference channel of the module 86
5.3.4 Compensation, reference channel of Group 0 88
5.3.5 Compensation with fixed reference temperature 91
5.3.6 Compensation by means of dynamic reference temperature 94
5.3.7 "None" or external compensation 98
5.3.8 Compensation type RTD (0) 100
6 Wiring loads/actuators 103
6.1 Overview 103
6.2 Wiring loads/actuators 104
7 Supported functions 106
7.1 Calibrating analog modules 106
7.1.1 Overview 106
7.1.2 Calibrating analog modules 107
7.1.3 Canceling a calibration 111
7.1.4 Resetting analog modules to factory settings 112
8 High-speed analog modules 113
8.1 Basics 113
8.2 ST modules vs HS modules 119
Index 125

Documentation guide

1

Introduction

The documentation of the SIMATIC products has a modular structure and covers diverse topics concerning your automation system.

The complete documentation for the S7-1500, ET 200MP, ET 200SP, ET 200AL, ET 200pro and ET 200eco PN systems consists of the respective system manuals, function manuals and product manuals.

Overview of additional documents related to analog value processing

The following table lists further references that supplement this description of analog value processing.

Table 1- 1 References for analog value processing

Topic	Documentation	Most important contents
System description	System manual S7-1500 Automation System (http://support.automation.siemens.com/WW/view/en/59191792)	• Application planning • Installation • Connecting • Commissioning
	System manual ET 200SP distributed I/O system (http://support.automation.siemens.com/WW/view/en/58649293)	
	System Manual ET 200MP Distributed I/O System (http://support.automation.siemens.com/WW/view/en/59193214)	
	System manual Distributed I/O System ET 200AL (http://support.automation.siemens.com/WW/view/en/89254965)	
	Operating instructions ET 200pro Distributed I/O System (http://support.automation.siemens.com/WW/view/en/21210852)	
	Operating instructions ET 200eco PN Distributed I/O System (http://support.automation.siemens.com/WW/view/en/29999018)	

Topic	Documentation	Most important contents
Configuring interference-free controllers	Function manual Configuring Interference-Free Controllers (http://support.automation.siemens.com/WW/view/en/59193566)	• Basics • Electromagnetic compatibility • Lightning protection
Analog module	Product manual of the respective analog module	• Connecting • Parameters • Technical specifications • Parameter data record • Tables of analog values

SIMATIC manuals

All current manuals for SIMATIC products are available for download free of charge from the Internet (http://www.siemens.com/automation/service&support).

What you should know about analog technology 2

2.1 Overview

Introduction

This chapter is intended to familiarize you with the essential parameters of analog input modules and analog output modules based on the fundamentals of analog technology. The descriptions and examples provided on the following pages serve as a reference to the manuals for the respective analog module and are intended to facilitate the handling of these manuals.

Analog and binary signals

Binary signals can assume only 2 signal states: signal state 1 (voltage present) and signal state 0 (no voltage present). In control engineering, it is frequently necessary to read, process and output analog signals in addition to binary signals. In contrast to binary signals, analog signals take on any number of values within a specific range. Possible analog variables include:

- Temperature
- Pressure
- Speed
- Fill level
- pH value

Transducers

Controllers are only capable of processing analog values in the form of bit patterns. For this purpose, transducers which can be connected to the analog module measure physical variables such as pressure or temperature. The analog input module reads this analog value in the form of current, voltage or resistance. To enable the CPU to process the current or voltage measured, an integrated analog-to-digital converter in the analog input module converts the value into a 16-bit integer value. Depending on the type of measurement, you can use the following transducers:

- Voltage transducers
- Current transducers
  - 2-wire transducers
  - 4-wire transducers
- Resistance transducers
  - 4-wire connection
  - 3-wire connection
  - 2-wire connection
- Thermocouples

Additional information on wiring various types of transducers to analog inputs can be found in Wiring transducers (Page 65).

Example

Speed is acquired using a transducer which converts the speed range of 0 to 1500 rpm to a voltage range of 1 to 5 V. At a measured speed of 865 rpm, the transducer outputs a value of 3.3 V.

The resulting voltage value is calculated as follows:

$$U = \frac{5\ V - 1\ V}{1500\ \frac{U}{min}} * 865\ \frac{U}{min} + 1\ V = 3.3\ V$$

The graph below illustrates voltage acquisition:

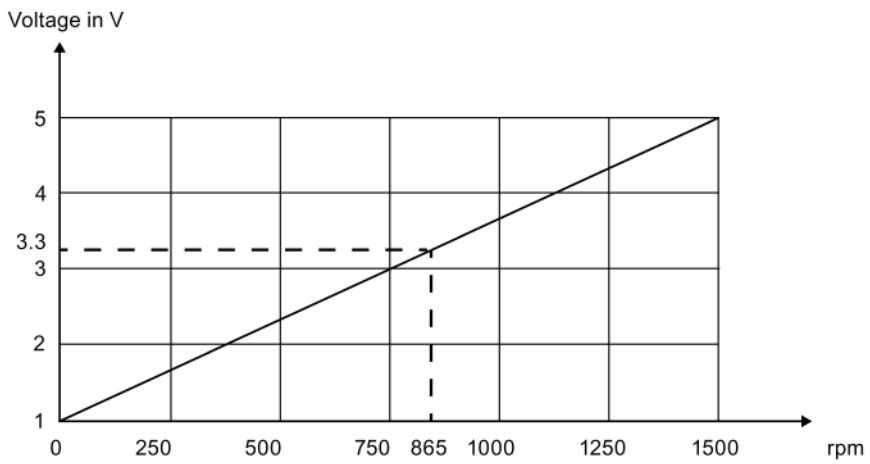

Figure 2-1 Speed measurement

Analog-to-digital conversion

A CPU processes information exclusively in digital format. The analog value is therefore converted into a bit pattern. Conversion is done using an integrated ADC (analog-to-digital converter) in the analog input module. For the CPU, this conversion always returns a 16-bit word for SIMATIC products. The ADC used digitalizes the analog signal and approximates its value with a stepped curve. Resolution and conversion speed are the most important ADC parameters.

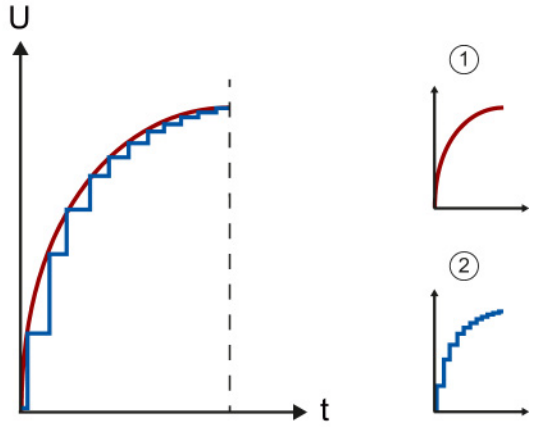

① Analog value
② Digital value

Figure 2-2 Approximation of an analog graph with low- and high-resolution stepped curves

Digital-to-analog conversion

Once the CPU has processed the digital signal, an integrated DAC (digital-to-analog converter) in the analog output module converts the output signal to an analog current or voltage value. The resulting value of the output signal corresponds to the output value used to control the analog actuators. Such actuators include, for example, small servo drives or proportional valves. You will find more information on wiring actuators in Wiring loads/actuators (Page 103).

Important parameters of analog modules

Alongside the type and range of measurement, the precision, resolution and conversion time are the main points to consider when selecting an analog module. For some applications such as systems which cover a large area, common mode or channel isolation are also important. The parameters listed here are examined in more detail in the following pages.

Processing analog signals

The following figure demonstrates analog signal processing in a PLC.

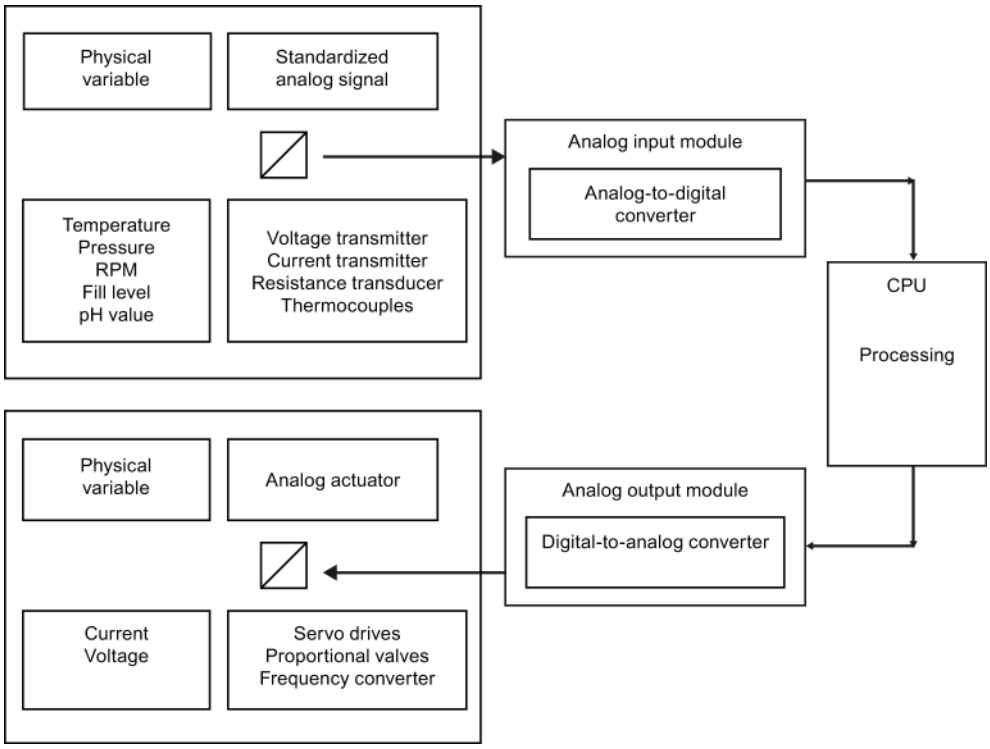

Figure 2-3 Analog value processing

2.2 Precision/resolution

The resolution of an analog module depends on the converter and its external circuitry. An approximation of the analog signal to be acquired/output is returned by a stepped curve. The resolution determines the number of increments of the analog value along this stepped curve. A higher module resolution reduces the length of increments and adds precision to the digitization of the analog signal.

Approximation of an analog value

The figures below show the approximation of an analog value by means of a stepped curve. A low resolution only returns a rough approximation of the actual curve (left figure), while the approximation is more precise at higher resolutions (right figure).

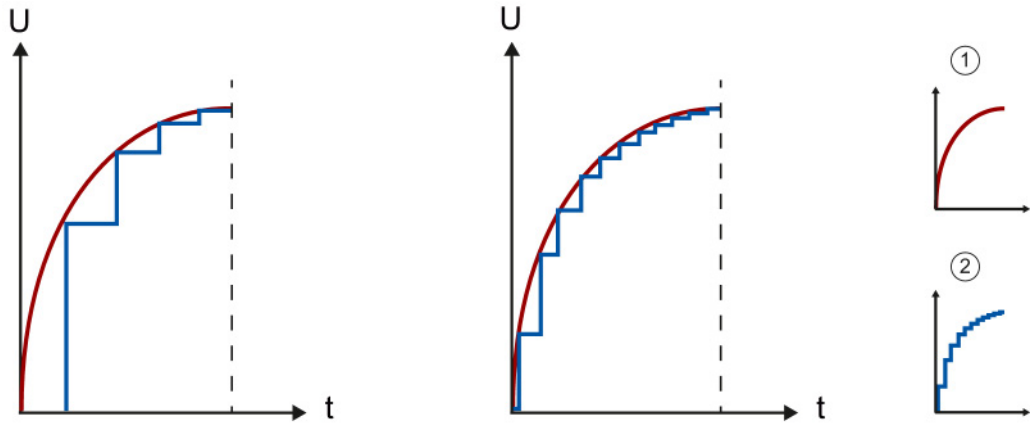

① Analog value
② Digital value

Figure 2-4 Approximation of an analog curve with a stepped curve

Visualization of the measuring range at a resolution of 13 bits and 16 bits

The unipolar measured value from a module having a resolution of 13 bits (= 12 bits + S) is segmented into a total of 2^{12} = 4096 increments. The smallest increment in a measuring range of 0 to10 V is 10 V/4096, equal to 2.4 mV.

A module with16-bit (= 15 bits + S) resolution thus provides an increment of 0.3 mV. If the resolution increases by one bit, the number of increments doubles and the width of an increment halves.

If the resolution increases from 13 bits to 16 bits, the number of increments increases eightfold from 4096 to 32768. With a resolution of 13 bits, the smallest value that can be displayed is therefore 2.4 mV. By contrast, this value is approximately 0.3 mV at a resolution of 16 bits.

Measuring ranges

For the display of the measuring range, SIMATIC S7 distinguishes between the rated range, the overrange and underrange, and the overflow or underflow. This distinction allows you to recognize whether the measured value is actually in the measuring range determined in the technical specifications. The overflow and underflow ranges are reserved for error detection.

At a resolution of 16 bits the theoretically possible 32768 increments are distributed across a voltage range of 11.852 V, which means that only 27648 increments are actually available for the resolution of a measuring range of 10 V. The minimum value which can be represented is therefore 0.3617 mV (see table).

Table 2- 1 Example of resolution for the 0 to 10 V measuring range of a SIMATIC S7 module

Value (increments)	Voltage measuring range	
Decimal	0 to 10 V	Range
32767	11.852 V	Overflow
32512		
32511	11.759 V	Overrange
27649		
27648	10.0 V	Rated range
20736	7.5 V	
1	361.7 µV	
0	0 V	
not relevant for this example		Underrange
as negative values are not possible		Underflow

The digitized visualization of the input ranges, separated into bipolar and unipolar input ranges, is shown in the section Visualization of the input ranges (Page 62). The digitized visualization of the output ranges, separated into bipolar and unipolar output ranges, is shown in the section Visualization of the output ranges (Page 63). You will find a summary of all measuring ranges which you can use with your analog module in the corresponding device manual.

Over and underrange

It may happen for control processes with high signal jumps that the settling curve of the signal briefly leaves the rated range until it reaches the setpoint. The over and underrange ensures that no error is reported while the signal is not in the rated range. If the signal exceeds the over or underrange, however, and reaches the overflow or underflow range, the error state "Overflow" or "Underflow" is diagnosed. This means the over or underrange correspond to a tolerance range between the rated range and the overflow or underflow. Additional information on the settling time is available in the section Settling and response times of analog output modules (Page 52).

The figure below shows the rated range, the overrange and overflow of a unipolar measuring range. The signal leaves the rated range briefly during the settling phase.

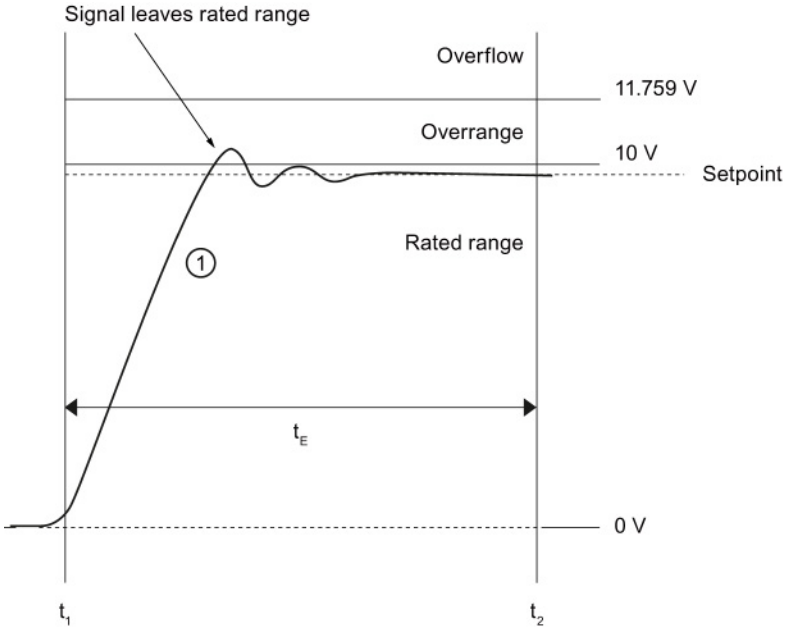

① Analog output signal

t_E Settling time of the signal to the setpoint

t_1 Module ends conversion at the terminal of the analog output channel and outputs the signal

t_2 Signal has settled and the specified analog output value has been reached

Analog module precision

The precision of an analog module is specified as a percentage value or absolute value, for example, in K or °C. This characterizes the total error of measured value acquisition. The basic error limit at 25 °C, as well as the operational limit, are specified in accordance with international standard IEC 61131, which also forms the basis for European Standard EN 61131. For more information on the operational/basic error limits, refer to the Operational and basic error limits (Page 23) section.

Relation between resolution and precision

A certain resolution must be given to reach a specific precision (operational error).

Example

Measuring error as a result of digitization at a resolution of 8 bits and 14 bits

An analog module has a measuring range of 0 V to 10 V. A resolution of 8 bits represents a total of 256 values. This is equivalent to a minimum possible voltage step of 39 mV or 0.4% of the measuring range end value. A resolution of 14 bits represents a total of 16384 values. This is equivalent to a minimum possible voltage step of 0.61 mV or 0.006% of the measuring range end value.

The percentages derived in this way also represent the theoretical best-case values for the operational limit. With a resolution of 8 bits and a measuring range of 0 to 10 V, it is therefore impossible to achieve a precision of more than 0.4 %. In practical life, this value would be clearly worse, depending on the implemented circuitry.

Calculating the maximum measuring error

The maximum measuring error of a 0 to 10 V analog module with an operational limit of ±0.5 % across the entire temperature range is calculated as follows:

10 V x 0.5/100 = 50 mV

This means the maximum measuring error is approximately ±50 mV. This also means that each analog voltage input is subject to a distortion of ±50 mV across the entire input range. A voltage of 3.5 V that is to be measured can therefore be visualized by any value between 3.45 V and 3.55 V.

For more information on the operational/basic error limits, refer to the Operational and basic error limits (Page 23) section.

2.3 Scaling analog values

Scaling

It is often necessary to calculate the actual process value rather than increments (e.g., 10 V = 27648 increments) for further processing of digitalized analog values. The conversion of a value range (e.g., -27648 to +27648 increments) to the original physical quantity (e.g., 0 to 500 liters) is referred to as scaling.

Scaling blocks

STEP 7 offers the suitable program block for scaling of analog values. The SCALE block is included in the STEP 7 scope of delivery and permits input of a high and low limit (e.g., 0 to 500 liters).

Example

In the example below the fill level of a tank with a capacity of 500 liters is to be measured. The transducer used measures a voltage of -10 V with an empty tank and a voltage of +10 V with a full tank. The analog module converts the voltage range from -10 V to +10 V into the value range -27648 to +27648 and converts this range into the original quantity of 0 to 500 liters with the SCALE program block.

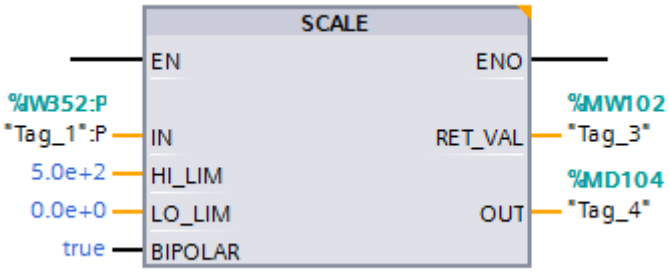

Figure 2-5 Scaling in the SCALE program block

The analog value at input **IN** is read directly by the module or is transferred by a data interface in INT format. The input **LO_LIM** is used to determine the low limit (0 liters) and **HI_LIM** to determine the high limit (500 liters) of the physical quantity. The output **OUT** outputs the scaled value (physical quantity) as floating-point number (LO_LIM <= OUT <= HI_LIM). You can assign parameters via the input **BIPOLAR** to specify if only positive or only negative values are to be converted. If the parameter receives an operand with the state '0', there is a unipolar scaling. An operand with the state '1' results in a bipolar scaling. The output **RET_VAL** outputs an error code in case of an error (e.g., overflow) and the value '0' in case of an error-free execution.

Additional information on the SCALE block can be found in the STEP 7 online help.

Unipolar and bipolar measuring ranges

The measurement of the fill level in our example took place within a bipolar measuring range. In addition to the positive voltage the transducer also provides negative voltage. Because the tank volume is mapped to the range from -27648 to +27648 increments, the measurement of the fill level takes place with twice the resolution (Δ) as in the unipolar measuring range.

Note

Transducers

The prerequisite for a measurement within a bipolar measuring range is that the used transducer supports bipolar measuring ranges.

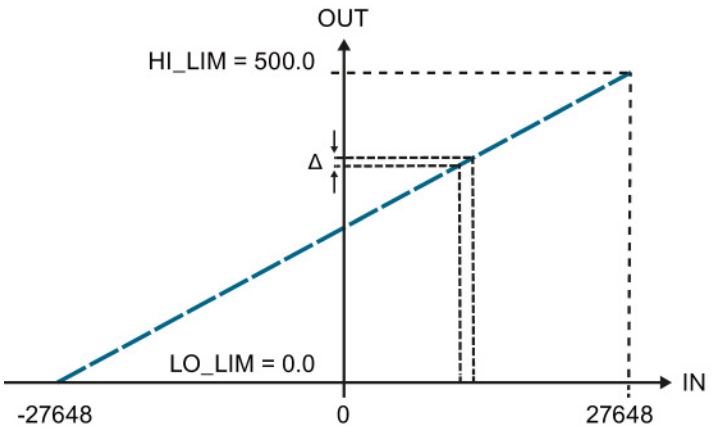

Figure 2-6 Bipolar measuring range

The measurement of the fill level in the bipolar measuring range takes place with twice the resolution (Δ) as in the unipolar measuring range.

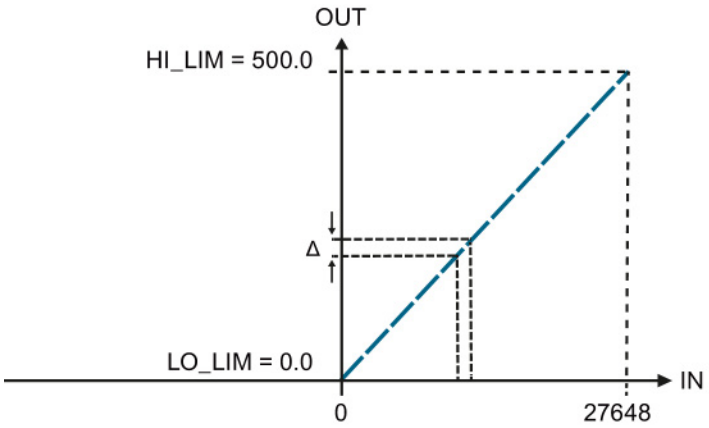

Figure 2-7 Unipolar measuring range

2.4 Unscaling analog values

Unscaling

The output of scaled analog values often requires conversion of the analog value calculated by the user program into the value range of the analog output module. This conversion is referred to as unscaling.

Unscaling blocks

STEP 7 offers the suitable program block for unscaling of analog values. The UNSCALE block is included in the STEP 7 scope of delivery and permits the input of a high and low limit that defines the range of the program value.

Example

An analog value from 0.0 to 100.0% calculated by the user program is to be converted with the UNSCALE block to the value range -27648 to +27648. When the unscaled value is output to an analog output module, this module addresses an analog actuator (e.g., modulating valve). The actuator is to be addressed at a program value of 0% with the minimum value (-10 V or -20 mA) and at 100% with the maximum value (+10 V or +20 mA).

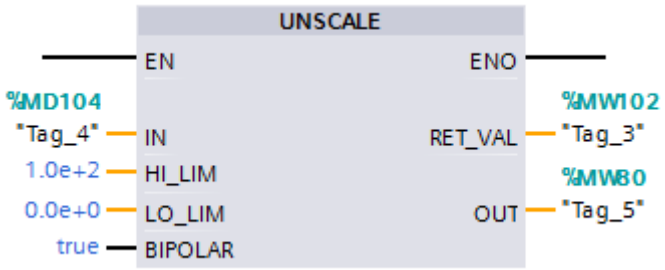

Figure 2-8 Unscaling in the UNSCALE program block

The value calculated by the program must be transferred in the REAL format (**IN**). You use the input **LO_LIM** to determine the low limit (0.0%), and **HI_LIM** to determine the high limit (100.0%) within which the program value moves. The unscaled value is output in INT format at the **OUT** output. You can assign parameters via the input **BIPOLAR** to specify if only positive or only negative values are to be converted. If the parameter receives an operand with the state '0', there is a unipolar scaling. An operand with the state '1' results in a bipolar scaling. The output **RET_VAL** outputs an error code in case of an error and the value '0' in case of an error-free execution.

Additional information on the UNSCALE block can be found in the STEP 7 online help.

Unipolar and bipolar measuring ranges

The figure below shows the scaling for an actuator that is to be addressed at a program value of 0% with the minimum value 0 (0 V or 0 mA) and at 100% (+27648) with the maximum value (10 V or 20 mA).

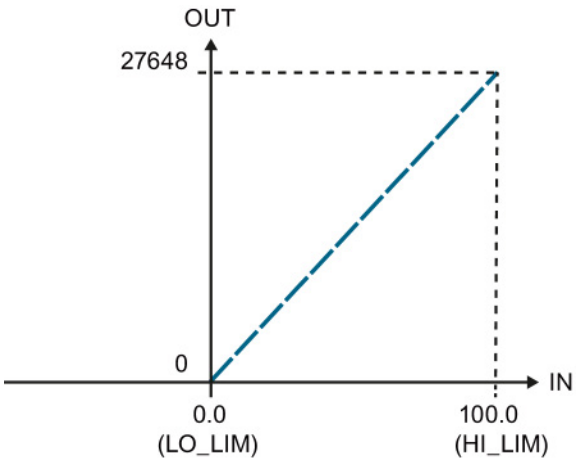

Figure 2-9 Unipolar measuring range

The figure below shows the scaling for an actuator that is to be addressed at a program value of 0% (-27648) with the minimum value 0 (-10 V or -20 mA) and at 100% (+27648) with the maximum value (+10 V or +20 mA).

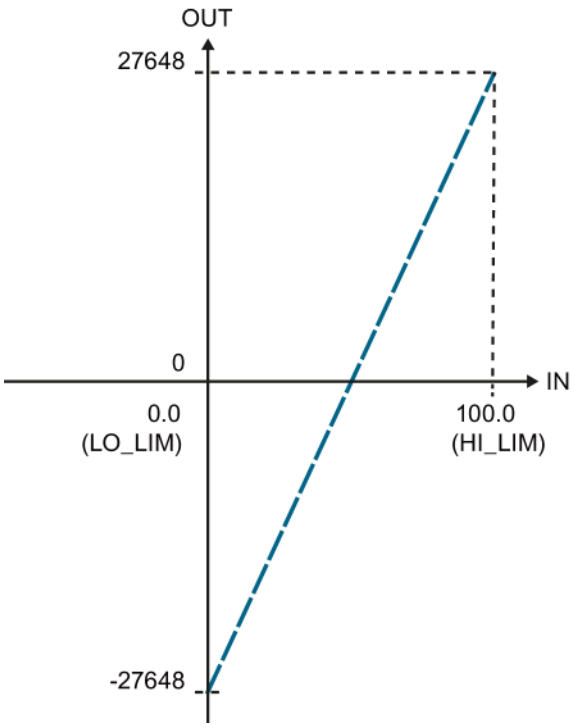

Figure 2-10 Bipolar measuring range

2.5 Linearity errors

Definition

Linearity denotes the deviation of the actual A/D or D/A conversion from the ideal lines within a specified measuring range. The linearity error therefore represents the deviation of the real transmission function from the ideal straight line. The error is given in the technical data as a percentage of the rated range of the analog module.

The figure below shows the linearity error of an ADC, magnified for better visibility.

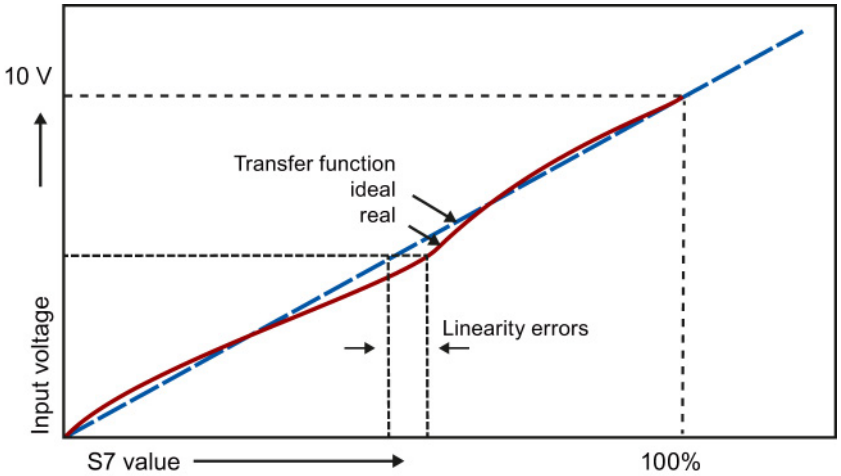

Figure 2-11 Linearity errors

Example

An error of ±1 mV is returned at an input range of ±10 V and a linearity error of ±0.01%. The error is calculated as follows: 10 V · 0.01 % = 1 mV

The linearity error information given in the technical specifications is taken into account in the operational limit. You will find a detailed description of the operational limit in Operational and basic error limits (Page 23).

2.6 Repeat accuracy

Definition

The repeat accuracy is the maximum deviation in measured/output value for the same input signal or output value after another value has been created or output. Other parameters, e.g. the Temperature parameter, remain unchanged. The repeat accuracy refers to the rated range of the module and applies in a steady temperature state.

Measured value variance

The repeat accuracy provides information on the variance of individual measurements. The smaller the variance, the greater the repeat accuracy. The repeat accuracy is therefore one of the most important properties of measuring devices. In the technical data, the repeat accuracy is given as a percentage of the input or output range at 25°C in the steady state.

Example

The specified repeat accuracy for an analog input module as a percentage of the measuring range end value is ±0.02 %. This corresponds to a repeat accuracy of 2 mV for any value within the measuring range of ±10 V. If you change the measured value from 10 V to -10 V, for example, and then measure with 10 V again, the measured value deviation may not exceed ±2 mV.

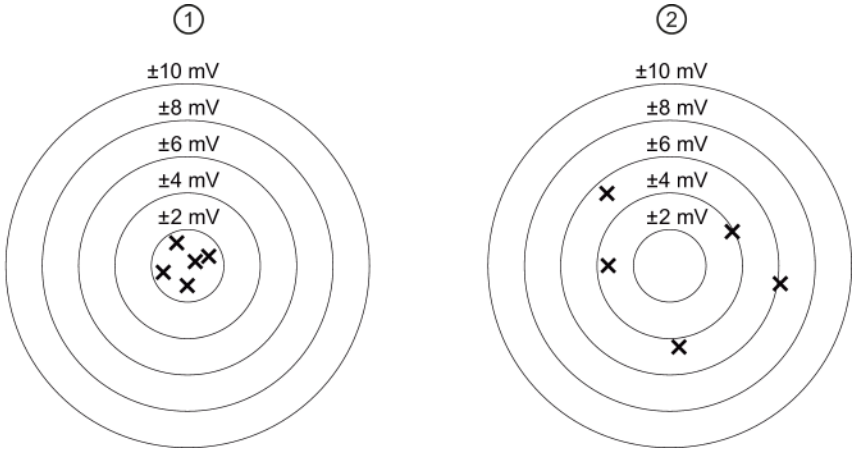

① Good repeat accuracy
② Poor repeat accuracy

Figure 2-12 Repeat accuracy of measured values output

2.7 Operational and basic error limits

Introduction

The following section shows you how to determine the operational or basic error limits and thus the measurement error or output error with the help of the technical specification. The worst-case configuration ensures that the module will not exceed the specified value within the valid operational range.

The precision of analog input or output modules is only part of the precision of the entire measurement section. A measurement section usually consists of transducer, transmitter, transmission line as well as input / output module.

Operational limit

The operational limit is the entire measurement or output error rate of the analog module in the rated range in temperature-settled state within the approved temperature range.

Basic error limit

The basic error limit is the entire measurement or output error rate in the rated range at an ambient temperature of 25 °C and temperature-settled state.

The basic error limit of the module is more or less a theoretical value, because a constant ambient temperature of 25 °C is rarely maintained in plants. For this reason, the operational limit always takes priority in terms of the practical selection and assessment of a module.

Note

The operational limit and basic error limit percentages listed in the technical specifications always relate to the **maximum possible** I/O value (the measuring range end value) in the rated range of the module.

The following image shows an example of operational and basic error limits in comparison with the ideal curve.

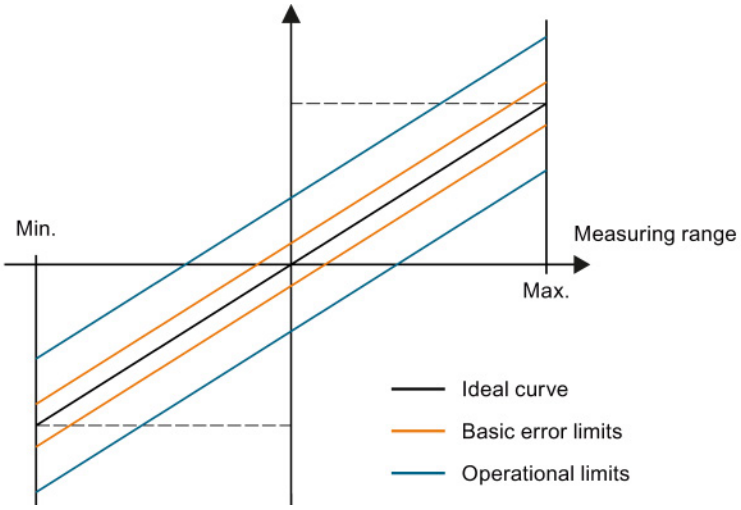

Figure 2-13 Operational and basic error limits

Example of output error calculation

An analog output module is used for voltage output in a range of 0 to 10 V. The module is operating at an ambient temperature of 30 °C, which means that the operational limit applies. Technical specifications of the module:

- Operational limit for the voltage output: ±0.1 %

The result is an output error of approximately ±10 mV (±0.1 % of 10 V) across the rated range of the module.

For example, the output value may range from 2.49 V to 2.51 V at an actual voltage of 2.50 V.

Note

Bipolar measuring ranges

The calculation also applies to bipolar measuring ranges.

An error of ±10 mV is also returned at an input range of ±10 V and a linearity error of ±0.1%.

2.8 Temperature error

Introduction

Analog modules are exposed to operational conditions that have an impact on their precision and on the measurement results they return. Temperature errors develop, for example, if the operating temperature of the module deviates from the ambient temperature of 25 °C. These temperature errors within the approved temperature range are taken into account in the operational limit.

Definition

The temperature error identifies the maximum drift of measuring/output values caused by fluctuation of the ambient temperature at the analog module. The maximum drift can occur at any ambient temperature. The temperature error is specified depending on the module used in percent per degree Celsius and/or percent per Kelvin, e.g. ±0.005%/K, and relates to the measuring range end value of the analog module.

Operational limits of compensation

The temperature error of the reference junction temperature compensation function only occurs with thermocouple measurements. The temperature error of compensation is added to the actual temperature error if "Internal reference junction" operating mode is selected. The temperature error of compensation is defined in the technical specifications as a percentage of the physical rated range of the analog module or as an absolute value in °C.

Note

Calculating the error in thermocouple measurements

Add the error of a thermocouple measurement to the error of the compensation measurement to determine the total error of a thermocouple measurement. These errors are defined in the respective manual.

Example

In this example, the total error of the temperature measurement is determined with the help of a type K thermocouple. The type K thermocouple takes measurements at a temperature range from -270 °C to +1372 °C.

The technical specifications state an operational limit of >-200 °C ±2.4 K for the type K thermocouple. The temperature error of compensation amounts to ±6 °C. The total temperature error is measured as follows at a temperature of >-200 °C:

Operational error (±2.4 K) + temperature error of compensation (±6 °C) = ±8.4 °C.

2.9 Interference frequency suppression

Definition

The interference frequency suppression function is applied to analog input modules to suppress the noise caused by the frequency of the AC voltage supply used.

The frequency of the AC voltage supply is likely to have a negative effect particularly on the values returned by measurements in the low voltage range and on thermocouples.

Parameter assignment

The line frequency at which the system is operated can be set by means of module parameters, for example, in STEP 7.

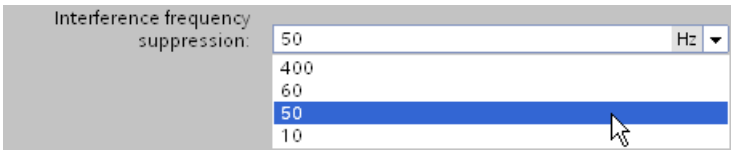

Figure 2-14 Interference frequency suppression

The conversion time changes depending on the set interference frequency suppression. The data sheets of the respective module define this dependency.

Please note the following when selecting interference frequency suppression:

The higher the frequency setting, the shorter the conversion time.

Note

Line frequency

Always select the interference frequency based on the line frequency used. Mismatch errors must be expected if a frequency that deviates from this line frequency is set, for example, to reduce the conversion time. In this case, the specified technical data and, in particular, precision are possibly outside the specified range.

Smoothing

By smoothing analog values, you achieve an additional improvement for the suppression of interference frequencies. For more information on the smoothing of analog values, refer to the section Smoothing (Page 54).

Line frequencies used

The line frequency is the frequency used in an electricity network for AC supply. It is measured in hertz and indicates the number of oscillations per second in a periodic signal. A line frequency of 50 Hz, for example, means 50 oscillations per second.

Europe, Australia and most countries in Asia and Africa use a line frequency of 50 Hz. North and Central America and most countries in South America have electricity networks with a line frequency of 60 Hz.

Frequencies of 400 Hz are most commonly used in on-board networks for airplanes, in the aerospace sector and for military applications. One reason for this is that engines with a line frequency of 400 Hz can usually be made smaller and lighter. As, however, it is not economic to transport such high frequencies over large distances, 400 Hz applications are usually subject to significant spatial limits.

A frequency of 16 2/3 Hz is used for the traction power supply in Germany, Austria and Switzerland. Some modules of the SIMATIC S7 product range also support the interference frequency suppression of this line frequency. The configurable interference frequency suppression in these cases is 16.6 Hz.

2.10 Common mode interference (UCM)

Definition

Common mode interference denotes interference voltages and currents in the lines connecting electrical devices and system components. They affect both the positive and negative line with the same phase angle and amplitude. The interference signal needs an additional current path to affect the utility signal. This current path is usually provided by common reference potential, e.g. earth or ground connection, of the utility signal and interference source.

Common mode interference in analog modules

Common mode interference occurs in analog input and output modules if their reference potential is different from the reference potential of the connected sensor or actuator.

Common mode interference is most likely to occur when analog modules are operated with grounded sensors. The size of the overall system means that voltage differences may develop between machine components with grounded sensors and the analog module reference. These voltage differences affect both the positive and negative signal path equally, which is why they are termed common mode interference.

In operation with non-grounded sensors, the occurrence of common mode interference is not as obvious as in grounded operation. Nevertheless, capacitive or inductive coupling can also create voltage differences in such cases which have the effect of common mode interference. Depending on the conditions in grounded and non-grounded operation, common mode voltage can occur as direct or as alternating voltage.

Example

The following figure of an analog module with two inputs (Ch_1/Ch_2) shows the coupled interference voltages at the inputs (U_{CM1}/U_{CM2}) as well as an interference voltage coupled between these inputs (U_{CM3}). Common mode rejection indicates the extent to which these interference signals can be suppressed. It is calculated using the following equation:
CMR [dB] = 20 · log (U_{CM} / U_a)

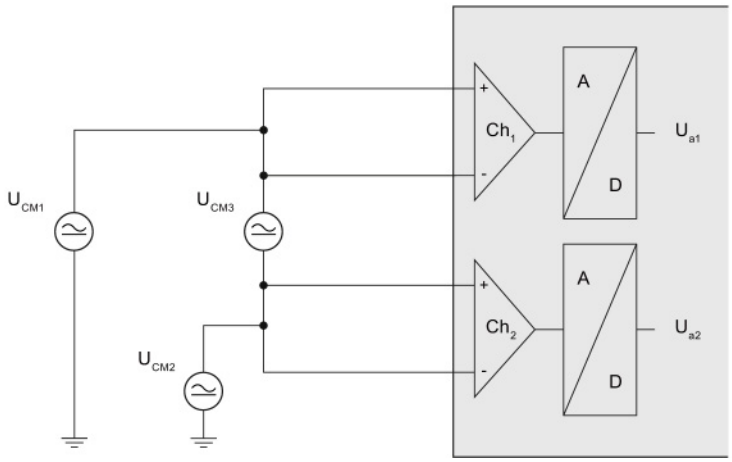

Figure 2-15 Common mode voltage coupled between two inputs

If there is common-mode voltage (U_{CM}), the equation is solved for U_a to calculate the measuring error (U_a):

$$U_a = U_{CM} * 10^{-\frac{CMR}{20}}$$

Note

The common mode rejection (CMR) is detailed in "Common mode interference" in the technical data of the device manual for your analog module.

2.11 Series mode interference (USM)

Definition

Series mode interference is interference voltages and currents affecting the connection lines in opposite directions. They have opposite polarity in the positive and negative directions. Series mode interference currents cause a voltage drop at the input impedance that has the effect of an interference voltage.

Causes

Series mode interference is caused by capacitive or inductive coupling. Inductive coupling generates a magnetic flow that is radiated between adjacent current-carrying conductors. This induces an interference voltage in the conductor. Galvanic coupling is given where different circuits influence each other due to common conductor sections, e.g. common ground connection.

The diagram below shows series mode interference as a voltage source (U_{SM}) connected in series to the actual measuring signal (U_M). The index "SM" stands for "Series Mode". Series Mode rejection indicates the extent to which these interference signals are suppressed. It is calculated using the following equation: SMR [dB] = 20 · log (U_{SM} / U_a)

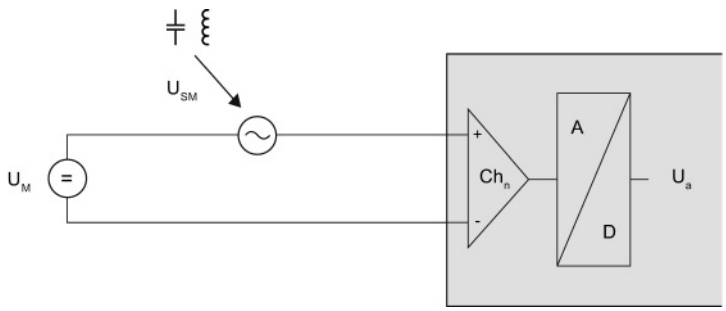

Figure 2-16 Capacitive or inductive interference coupling to the signal cable

The voltage (U_a) measurement error is calculated by solving the equation for U_a.

$$U_a = U_{SM} * 10^{-\frac{SMR}{20}}$$

The following equation shows the calculation of current (I_a) measuring errors using a current input.

$$I_a = \frac{U_{SM}}{R_{ein}} * 10^{-\frac{SMR}{20}}$$

Note

The series mode rejection (SMR) is detailed in "Series mode interference" in the technical data of the device manual for your analog module. The level of input resistance (R_{ein}) is also specified in the technical data.

2.12 Interference voltage suppression

Definition

Interference voltage suppression gives the factor by which the interference signal is suppressed in measurement value acquisition. Higher values reduce the effect of interference on the measurement signal. The technical data differentiates between "Common mode interference" and "Series mode interference". Interference voltage suppression is specified in decibels.

Example

The diagram below shows the measuring error for interference voltages in volts and interference voltage suppression of 0 to 120 dB.

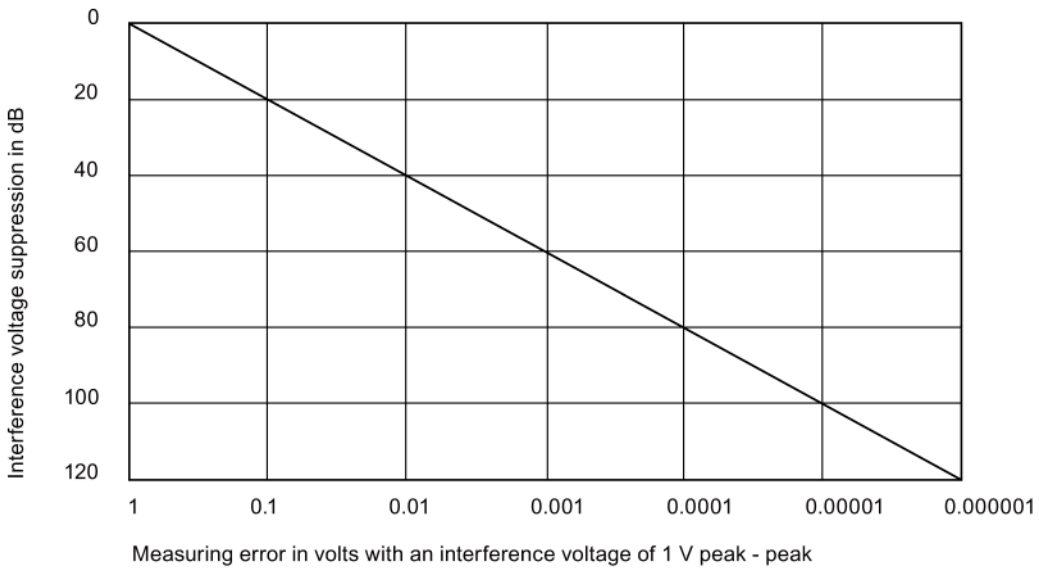

Figure 2-17 Interference voltage suppression

With an interference voltage suppression of 40 dB and an interference voltage of 1 V, the measured value is only distorted by 0.01 V.

Note

Interference-free design

Disturbance variables can be substantially reduced by means of appropriate grounding and shielding to increase interference immunity of the configuration. You will find a detailed description of how to avoid interference in the Configuring interference-free controllers (http://support.automation.siemens.com/WW/view/en/59193566) function manual.

Common mode rejection

The table below sets out the possible common mode rejection specifications in the technical data of an analog input module:

Interference voltage suppression for f = n x (f1 ± 1 %), (f1 = interference frequency), n = 1, 2, ...	
Common mode interference	> 100 dB
Common mode voltage, max.	10 V

If the interference frequency is configured as 50 Hz, the specified interference voltage suppression for common mode interference will only apply for the frequencies 50 Hz ±1 %, 100 Hz ±1 %, 150 Hz ±1 %, etc. Immunity is lower for all other frequencies. Interferences caused by the line voltage distort the measured utility signal in the ratio of 100,000 : 1.
An interference voltage amplitude of 1 V, for example, will affect the utility signal by 10 µV.

The Common Mode voltage (U_{CM}) defines the maximum permitted deviation of the potential between two channels and between one channel and analog ground. The interference voltage suppression defined in the technical specifications must not be exceeded. If the maximum common mode voltage specified, for example, 10 V, is exceeded, the analog signal is processed incorrectly. Depending on the module used, this error may be diagnosed and an error message output. The maximum common mode voltage may be exceeded as a result of varying input or overly long lines.

Series mode rejection

The table below sets out the possible series mode rejection specifications in the technical data of an analog module:

Interference voltage suppression for f = n x (f1 ± 1 %), (f1 = interference frequency), n = 1, 2, ...	
Series mode interference	> 60 dB

If the interference frequency is configured as 50 Hz, the specified interference voltage suppression for series mode interference will only apply for the frequencies 50 Hz ±1 %, 100 Hz ±1 %, 150 Hz ±1 %, etc. Immunity is lower for all other frequencies. Overall, interference caused by the line voltage distorts the utility signal measured by 1000 : 1.
For example, an interference voltage amplitude of 1 V will affect the utility signal by 1 mV.

2.13 Crosstalk between channels

Origin of the term

The term crosstalk/XT was originally used in the field of telecommunication to denote unwanted coupling of voice signals between two cable conductors of different subscribers.

Definition

Crosstalk between signal channels denotes the interactive influence between two independent channels as a result of leakage currents and capacitive or inductive coupling. Crosstalk between the channels changes the signal by the value of the amplitude of the crosstalk signal.

Causes

Technically, it is not feasible to totally isolate the module channels from environmental conditions. This means that it is always possible for leakage currents or disturbance coupling having an interactive effect.

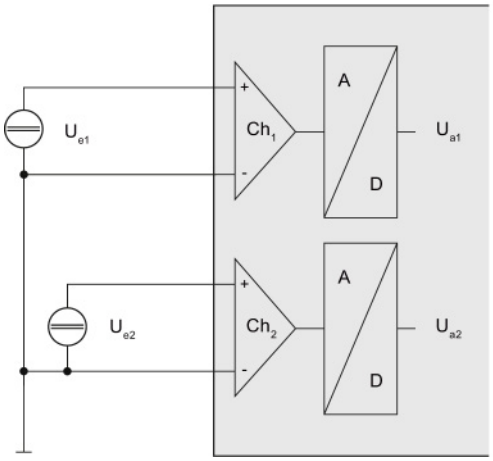

Figure 2-18 Crosstalk between two channels

The diagram shows the effects of crosstalk for the user with two channels (Ch_1/Ch_2) of an analog module. The crosstalk value is the factor by which the utility signal at a second channel U_{a2} is affected by the signal at the first channel U_{e1}. The measuring error (U_{a1}) can be calculated using the following equation:

$$U_{a1} = U_{e2} * 10^{\frac{XT\,[dB]}{20}}$$

Example of crosstalk attenuation

The "crosstalk between inputs" value in the technical specifications is defined as a value of >-100 dB at a measuring range of -10 V to +10 V on channel 1 of an eight-channel analog input module. The voltage at the input has an amplitude of 10 V. What is the error caused by crosstalk at channel 0 (measuring range ±10 V) and channel 2 (measuring range ±80 mV)?

100 dB are equal to a factor of 100,000. The measured values at channels 0 and 2 to 7 are therefore affected by 10 V / 100,000 = 100 µV. This distortion is added to or subtracted from the pending measuring signal and its effect depends on the selected measuring range.

- Channel 0: 100 µV / 10 V = 0.001 %
- Channel 2: 100 µV / 80 mV = 0.125 %

A voltage of 10 V set at channel 1 distorts the measured value at channel 0 by 0.001% and the measured value at channel 2 by 0.125%. The measuring error resulting from crosstalk in this example is therefore 0.001 % or 0.125 %. The basic error limit already includes the error generated as a result of crosstalk between the channels.

Calculating measuring error

You calculate the measurement error at channel 1 in this example based on a change in the measurement voltage of 10 V at channel 2. The crosstalk (XT [dB]) value is defined in the technical specifications in the manual of the analog module that you are using.

$$\text{Measured value error channel 1 [in V]} = \text{measured value change at channel 2 [in V]} * 10^{\frac{\text{XT [dB]}}{20}}$$

$$\text{Measured value error channel 1 [in V]} = 10\ \text{V} * 10^{\frac{-80\ \text{dB}}{20}} = 0.001\ \text{V}$$

A change in the measurement voltage of 10 V at channel 2 causes a measurement deviation of 0.001 V at channel 1.

2.14 Diagnostics

Diagnostics for analog modules

SIMATIC analog modules can diagnose errors. A number of different types of diagnostics are available for analog modules in STEP 7. Please note that the parameter assignment options vary depending on the analog module and product family used. More detailed information on the types of diagnostics can be found in the device manual for your analog input or analog output module.

Proceed as follows to select the diagnostics types of the analog module used:

1. Open STEP 7.
2. Select the analog module in the Device view.
3. Select the "Properties" tab.
4. Select the inputs or the required channel of the analog module in the Inspector window.

Table 2- 2 Overview of diagnosable errors

Type of diagnostics	Analog input module	Analog output module
Wire break	✓	✓
No supply voltage L+	✓	✓
Overflow	✓	✓
Underflow	✓	✓
Common mode error	✓	-
Short-circuit	✓	✓
Overload	-	✓
Reference junction	✓	-

Diagnostics of the analog module are carried out while the system is in operation, on the basis of the current output variables such as current or voltage. If the output current or output voltage is no longer sufficient, the module will not be able to run reliable diagnostics. The limits within which diagnostics are possible are specified in the technical data for each module.

The module reports the diagnosed state to the CPU using a diagnostics error interrupt. If several diagnostics are pending at the same time, the diagnostics with the highest priority is reported to the CPU first. Diagnostics are output on LED displays on the affected module, on the CPU display, on the Web server or on an HMI device.

The configurable diagnostics types depend on the respective selected measuring type or output type. The following tables shows the relationship between the diagnostics types, measuring types or output types of an analog input module or analog output module.

Diagnostics Analog input modules

Table 2- 3 **Diagnostics types of an analog input module to be configured depending on the measurement type "Voltage"**

	No supply voltage L+	Wire break (1 to 5 V)	Overflow	Underflow	Common mode error	Reference junction	Short-circuit
S7-1500	✓	✓	✓	✓	✓	-	-
ET 200MP	✓	✓	✓	✓	✓	-	-
ET 200SP	✓	-	✓	✓	-	-	✓
ET 200AL	-	✓	✓	✓	-	-	✓
ET 200eco PN	✓	✓	✓	✓	-	-	-
ET 200pro	-	✓	✓*	✓*	-	-	✓

* For ET 200pro, the parameters "Overflow" and "Underflow" are combined to the parameter "Overflow/Underflow"

Table 2- 4 **Diagnostics types of an analog input module to be configured depending on the measurement type "Current (4-wire transducer)"**

	No supply voltage L+	Wire break (4 to 20 mA)	Overflow	Underflow	Common mode error	Reference junction	Short-circuit
S7-1500	✓	✓	✓	✓	✓	-	-
ET 200MP	✓	✓	✓	✓	✓	-	-
ET 200SP	✓	✓	✓	✓	-	-	✓**
ET 200AL	-	✓	✓	✓	-	-	✓**
ET 200eco PN	✓	✓	✓	✓	-	-	-
ET 200pro	-	✓	✓*	✓*	-	-	✓

* For ET 200pro, the parameters "Overflow" and "Underflow" are combined to the parameter "Overflow/Underflow"

** Diagnostics for encoder supply only

Table 2- 5 **Diagnostics types of an analog input module to be configured depending on the measurement type "Current (2-wire transducer)"**

	No supply voltage L+	Wire break (4 to 20 mA)	Overflow	Underflow	Common mode error	Reference junction	Short-circuit
S7-1500	✓	✓	✓	✓	✓	-	-
ET 200MP	✓	✓	✓	✓	✓	-	-
ET 200SP	✓	✓	✓	-	-	-	✓**
ET 200AL	-	✓	✓	✓	-	-	✓**
ET 200eco PN	✓	✓	✓	✓	-	-	-
ET 200pro	-	✓	✓*	✓*	-	-	✓

* For ET 200pro, the parameters "Overflow" and "Underflow" are combined to the parameter "Overflow/Underflow"

** Diagnostics for encoder supply only

Table 2- 6 **Configurable diagnostics types of an analog input module depending on the measurement type "Resistor (4-wire connection)"**

	No supply voltage L+	Wire break	Overflow	Underflow	Common mode error	Reference junction	Short-circuit
S7-1500	✓	✓	✓	✓	-	-	-
ET 200MP	✓	✓	✓	✓	-	-	-
ET 200SP	✓	✓	✓	✓	-	-	-
ET 200eco PN	✓	✓	✓	-	-	-	-
ET 200pro	-	✓	✓*	✓*	-	-	-

* For ET 200pro, the parameters "Overflow" and "Underflow" are combined to the parameter "Overflow/Underflow"

Table 2- 7 **Configurable diagnostics types of an analog input module depending on the measurement type "Resistor (3-wire connection)"**

	No supply voltage L+	Wire break	Overflow	Underflow	Common mode error	Reference junction	Short-circuit
S7-1500	✓	✓	✓	✓	-	-	-
ET 200MP	✓	✓	✓	✓	-	-	-
ET 200SP	✓	✓	✓	✓	-	-	-
ET 200AL	-	✓	✓	-	-	-	-
ET 200eco PN	✓	✓	✓	-	-	-	-
ET 200pro	-	✓	✓*	✓*	-	-	-

* For ET 200pro, the parameters "Overflow" and "Underflow" are combined to the parameter "Overflow/Underflow"

Table 2- 8 **Configurable diagnostics types of an analog input module depending on the measurement type "Resistor (2-wire connection)"**

	No supply voltage L+	Wire break	Overflow	Underflow	Common mode error	Reference junction	Short-circuit
S7-1500	✓	-	-	✓	-	-	-
ET 200MP	✓	-	-	✓	-	-	-
ET 200SP	✓	✓	✓	✓	-	-	-
ET 200AL	-	✓	✓	-	-	-	-
ET 200eco PN	✓	✓	✓	-	-	-	-
ET 200pro	-	✓	✓*	✓*	-	-	-

* For ET 200pro, the parameters "Overflow" and "Underflow" are combined to the parameter "Overflow/Underflow"

Table 2- 9 **Configurable diagnostics types of an analog input module depending on the measurement type "Thermal resistor (4-wire connection)"**

	No supply voltage L+	Wire break	Overflow	Underflow	Common mode error	Reference junction	Short-circuit
S7-1500	✓	✓	✓	✓	-	-	-
ET 200MP	✓	✓	✓	✓	-	-	-
ET 200SP	✓	✓	✓	✓	-	-	-
ET 200eco PN	✓	✓	✓	✓	-	-	-
ET 200pro	-	✓	✓*	✓*	-	-	-

* For ET 200pro, the parameters "Overflow" and "Underflow" are combined to the parameter "Overflow/Underflow"

Table 2- 10 **Configurable diagnostics types of an analog input module depending on the measurement type "Thermal resistor (3-wire connection)"**

	No supply voltage L+	Wire break	Overflow	Underflow	Common mode error	Reference junction	Short-circuit
S7-1500	✓	✓	✓	✓	-	-	-
ET 200MP	✓	✓	✓	✓	-	-	-
ET 200SP	✓	✓	✓	✓	-	-	-
ET 200AL	-	✓	✓	✓	-	-	-
ET 200eco PN	✓	✓	✓	✓	-	-	-
ET 200pro	-	✓	✓*	✓*	-	-	-

* For ET 200pro, the parameters "Overflow" and "Underflow" are combined to the parameter "Overflow/Underflow"

Table 2- 11 **Configurable diagnostics types of an analog input module depending on the measurement type "Thermal resistor (2-wire connection)"**

	No supply voltage L+	Wire break	Overflow	Underflow	Common mode error	Reference junction	Short-circuit
S7-1500	-	-	-	✓	-	-	-
ET 200MP	-	-	-	✓	-	-	-
ET 200SP	✓	✓	✓	✓	-	-	-
ET 200AL	-	✓	✓	✓	-	-	-
ET 200eco PN	✓	✓	✓	✓	-	-	-
ET 200pro	-	✓	✓*	✓*	-	-	-

* For ET 200pro, the parameters "Overflow" and "Underflow" are combined to the parameter "Overflow/Underflow"

Table 2- 12 **Diagnostics types of an analog input module to be configured depending on the measurement type "Thermocouple"**

	No supply voltage L+	Wire break	Overflow	Underflow	Common mode error	Reference junction	Short-circuit
S7-1500	✓	✓	✓	✓	✓	✓	-
ET 200MP	✓	✓	✓	✓	✓	✓	-
ET 200SP	✓	✓	✓	✓	-	✓	-
ET 200eco PN	✓	-	✓	✓	-	✓	-
ET 200pro	-	-	✓*	✓*	-	✓	-

* For ET 200pro, the parameters "Overflow" and "Underflow" are combined to the parameter "Overflow/Underflow"

Diagnostics for analog output modules

Table 2- 13 **Diagnostics types of an analog output module to be configured depending on the measurement type "Voltage"**

	No supply voltage L+	Wire break	Overflow	Underflow	Short-circuit	Overload
S7-1500	✓	-	✓	✓	✓	-
ET 200MP	✓	-	✓	✓	✓	-
ET 200SP	✓	-	✓	✓	✓	-
ET 200eco PN	✓	-	-	-	✓	✓
ET 200pro	-	-	-	-	✓	-

Table 2- 14 **Diagnostics types of an analog output module to be configured depending on the measurement type "Current"**

	No supply voltage L+	Wire break	Overflow	Underflow	Short-circuit	Overload
S7-1500	✓	✓	✓	✓	-	-
ET 200MP	✓	✓	✓	✓	-	-
ET 200SP	✓	✓	✓	✓	-	-
ET 200eco PN	✓	✓	-	-	-	✓
ET 200pro	-	✓	-	-	-	-

Note

Measuring ranges

Note that the diagnostics types that can be parameterized depend on the selected measurement/output type as well as on the respective measuring range.

Note

Minimum output values

Certain errors such as wire break and short circuit cannot be diagnosed below a given current or voltage value. Diagnostics are only possible again once the output returns to above this minimum value.

No supply voltage L+

You can diagnose a missing or low supply voltage L+ at the analog module by activating the "No supply voltage L+" checkbox. If the supply voltage is missing or too low, the status and error display on the analog module will provide the relevant information. The entry in the diagnostics buffer also makes this information available to the CPU.

If there is no supply voltage, no other types of diagnostics available are possible either.

Wire break

The term wire break denotes a failure state that is triggered by the interruption of a usually closed electrical circuit.

Wire break in analog input modules

The "Wire break" diagnostics function facilitates the detection of errors during system operation. In STEP 7 you define the module properties by setting various parameters. Depending on the module used, you may, for example, be able to set a current limit parameter at which a wire break is to be reported.

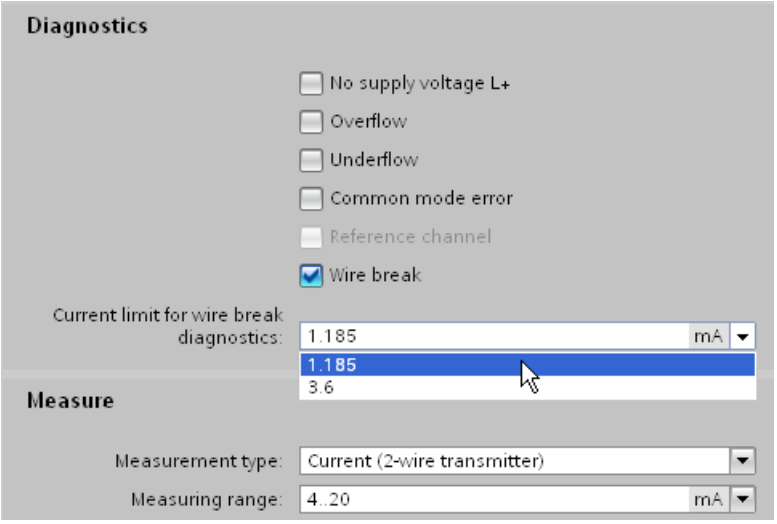

Figure 2-19 Configuring the wire break current limit for an analog input module in STEP 7

Usually, the live zero technique is deployed to detect wire breaks. The start of the measuring range for the standard live zero signal of 4 to 20 mA is assigned the 4 mA signal value. A wire break between the input and sensor can therefore be detected based on the missing current flow. Instead of a current signal, you may also use a voltage signal from 1 to 5 V to detect a wire break. The "Wire break" diagnostics function can therefore only be configured for a range of 4 to 20 mA or 1 to 5 V.

For "Resistor", "Thermal resistor" and "Thermocouple" measurements, a current is impressed into the line. If a wire break occurs, the flow of current is interrupted and the analog module therefore detects the wire break.

Wire break in analog output modules

The analog signal output is used for wire break detection. Reliable wire break diagnostics is not possible if the voltage is too low. In this case, the diagnostics function is deactivated without triggering a change of the diagnostics status.

The current limit up to which the module will diagnose wire break can be found in the technical data for the module.

Overflow/underflow

The resolution of the measuring range of an analog input module distinguishes between the rated range, the overrange or underrange, and the overflow or underflow. The following table assign the number of increments into which the measured signal is divided to the various voltage measuring ranges.

Table 2- 15 Voltage measuring range ±10 V of an analog input module

Value (increments)	Voltage measuring range	Range
Decimal	±10 V	
32767	> 11.759 V	Overflow
32511	11.759 V	Overrange
27649		
27648	10.0 V	Rated range
0	0 V	
-27648	-10 V	
-27649		Underrange
-32512	-11.759 V	
-32768	< -11.759 V	Underflow

As of a decimal value of 32512, the value acquired is beyond the overrange and is no longer valid. If this is the case, the error status "Overflow" is diagnosed. The overrange is a tolerance range before overflow is reached.

As of a decimal value of -32513, the value acquired is below the configured measuring range and is no longer valid. If this is the case, the error status "Underflow" is diagnosed. The underrange is the equivalent of the overrange, but for negative values.

An "Overflow" or "Underflow" diagnostics may be caused, for example, by a wire break, an incorrect measuring range or incorrect wiring.

Note

Accuracy

The accuracy specified in the technical data of the relevant module is only guaranteed within the rated range.

Common mode error

Activating the "Common mode" checkbox diagnoses a violation of the maximum potential difference U_{CM}. A violation of the permitted potential difference U_{CM} has occurred, for example, between the reference point of the measuring inputs and the analog ground M_{ANA} .

Possible causes:

- Wiring error
- Environments with EMC disturbance
- Incorrectly grounded transducers
- Long line lengths
- Sensor not connected
- 2-wire transducer connected to M_{ANA}

Note

With 4-wire transducers, a current meter connected in series will result in too great a drop in voltage.

Potential differences U_{CM} beyond the valid limits may lead to measurement errors and malfunctions. If you want to ensure that the maximum value is not exceeded, interconnect the measuring inputs and analog ground M_{ANA} with an equipotential bonding cable. More detailed information can be found in Wiring transducers.

Short-circuit

Activating the "Short circuit" checkbox activates short-circuit diagnostics for an analog channel. The diagnostics function is triggered by channel overload.

Possible causes:

- Wiring error (e.g. short circuit between conductors at the connections or in the cable)
- Use of faulty or incorrect actuators (e.g. internal short circuit or low input resistance as a result of actuator failure)

The analog signal output is used for short circuit detection. If the voltage is too low, reliable short-circuit diagnostics are not possible. In this case, the diagnostics function is deactivated without triggering a change of the diagnostics status. The voltage limit up to which the module will diagnose a short circuit can be found in the technical data for the module.

SIMATIC modules have a special protective circuit to prevent short circuit. The short circuit current is limited internally in the module. The level of short circuit current is specified in the technical data of your analog module.

Note

Overload

Please note that overload exposes the modules are exposed to a greater thermal load. This can affect the output channels. You should therefore avoid continuously running analog output modules in overload.

Reference junction

This type of diagnostics can only be selected for analog input modules for "Thermocouple" measuring. Selecting the "Reference junction" check box diagnoses an error on the reference channel for compensating the reference junction temperature.

The temperature at the reference junction of a thermocouple is measured at the reference channel of the module using an external thermal resistor (RTD). If an error occurs, for example as a result of a wire break, the temperature measured at the reference junction of the thermocouple will no longer be compensated. The reference temperature may then be outside the valid range.

Additional information on connecting thermocouples and thermal resistors and on how they operate can be found in Thermocouples and Wiring transducers.

Overload

Activating the "Overload" checkbox activates the diagnostics of the thermal monitoring of the output level. The "Overload" diagnostics is triggered when the maximum temperature is exceeded at the output and is detected channel by channel.

The maximum temperature may be exceeded for the following reasons:

- Ambient temperature is too high
- Output is being operated outside the specification

Note

Overload

Please note that overload exposes the modules to a high thermal load. This can affect the output channels. You should therefore avoid continuously running analog output modules in overload.

2.15 Value status

Value status

In case of a faulty analog value, the analog module outputs the error values 0x7FFF (error value for overflow and all other error states) or 0x8000 (error value for underflow) for the affected channel. The user program is now able to detect and evaluate a channel error. The user also has the option to evaluate the system diagnostics event-driven by means of diagnostics alarms.

In addition to the error values 0x7FFF or 0x8000 and the configured diagnostic types, analog input and output modules provide diagnostics information by means of the Process image input (PII). It is referred to as Value status and transferred synchronously with the user data. The value status (Quality Information = QI) provides a statement regarding the validity of the input signal. A distinction is made between the quality level "Good" (signal valid = 1) and "Bad" (signal invalid = 0).

Note

For analog input modules, the use of the value status is an alternative to the evaluation of the channels by the error values 0x7FFF or 0x8000. Compared to the error values, the binary evaluation of the value status (0 or 1) in the user program is simpler and more clearly arranged.

For analog output modules, the value status informs you as to whether the written value can be output by the respective channel. Using the value status you can respond to this information without having to evaluate the diagnostics of the module in the first place.

Example

Enabling the value status of an analog input module

To enable the value status of an analog input module, follow these steps:

- Select the required analog module in STEP 7.
- Select "AI configuration" in the "Properties" tab of the analog module.
- Click the "Value status" button.

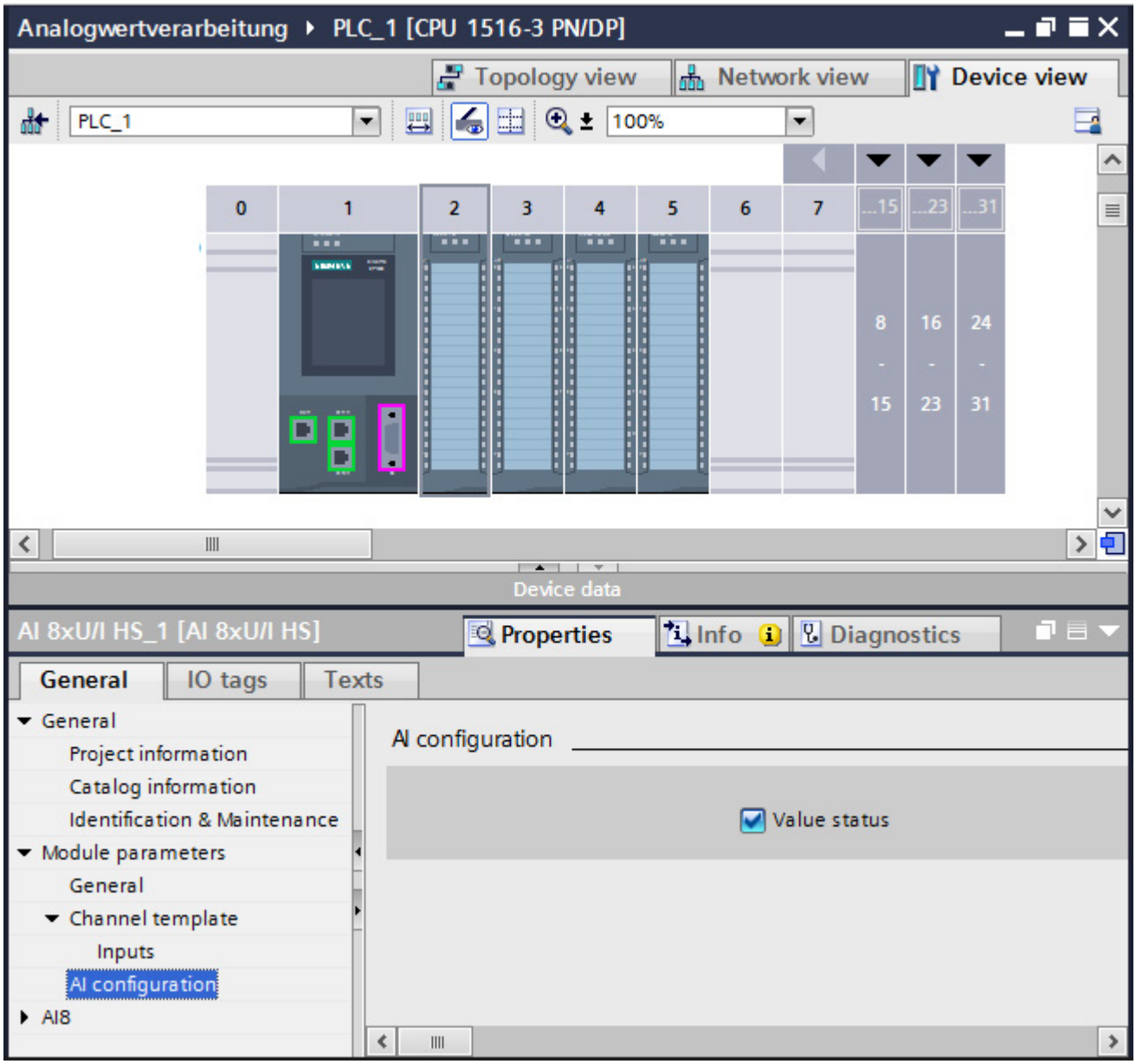

Figure 2-20 Enabling the value status in STEP 7

An additional byte is occupied in the input address space of the respective module when you enable the value status. Each bit in this byte is assigned to a channel and provides information on, for example, whether the output value specified by the user program is actually queued at the module terminal (0= value is invalid; 1= value is valid).

Error occurrence

If a wire break occurs at an analog input module, for example, the current signal state is entered in the process image and the value status of the signal is set to "invalid". To trigger an indicator light in case of an error, for example, evaluate the value status in the user program.

Diagnostics alarms and value status

If you configure analog modules in a third-party product with the help of a GSD file and the diagnostics alarms are not evaluated event-driven, it is best to use the value status.

Note

The Value status represents a group diagnostics which only gives the user a Good or Bad information. The Value status is not suitable for a more specific identification of the cause of the error (e.g., wire break, short circuit in the encoder cable or load voltage failure).

2.16 Conversion time of an analog module

Basic conversion time and conversion time of an analog input channel

The basic conversion time is the minimum time required by one single channel to convert analog values. The actual conversion time comprises both the basic conversion time and, depending on the analog input module used:

- Processing time for measuring resistance
- Processing time for wire break monitoring
- Processing time for overflow/underflow monitoring
- Processing time for checking common mode errors

Example

This example shows channel 6 of an analog input module for resistance measurement in the range of 6000 Ω, a configured integration time of 20 ms, and activated wire break monitoring.

The conversion time of the channel is derived from the total of the following measurement variables:

Measurement variable	Time in ms
Basic conversion time	27
Processing time for RTD/resistance (6000 Ω)	4
Processing time for wire break monitoring in the RTD/resistance and thermocouple areas	9
Conversion time of the channel	**40**

Conversion time of the analog output channels

The conversion time of an output channel starts with the transfer of the digital value from the internal memory of the module and ends with the digital-to-analog conversion.

The conversion time does not include the settling time for the analog signal at the module terminal. Detailed information on the settling time can be found in Settling and response times of analog output modules (Page 52).

Note

Relationship between diagnostics and conversion time

While some diagnostics run parallel to the conversion and do not extend the conversion time, other diagnostics types can lead to an extension of the conversion time, as demonstrated in the example above.

Conversion time for high-speed analog modules

High-Speed analog modules (HS modules) are designed for faster processing of signals. HS modules offer fewer diagnostics and measurement types than standard modules (ST modules). You can find more information on HS modules in the section High-Speed analog modules (Page 113).

2.17 Cycle time of an analog module

Definition

The cycle time of an analog module represents the time that the module needs to process all channels used. The cycle time depends on the form of measured value acquisition used, e.g. multiplex or parallel measured value acquisition.

Sequential measured value processing

This procedure processes the analog channels in the module one after another (sequentially). For analog inputs, the values are connected to a converter, for example using a multiplexer, and sequentially converted.

The cycle time of the analog module is derived from the total conversion time of all activated analog channels of the module. STEP 7 provides the option of deactivating unused analog channels. to reduce the cycle time.

The figure below gives an overview of the factors that determine the cycle time of an n-channel analog module.

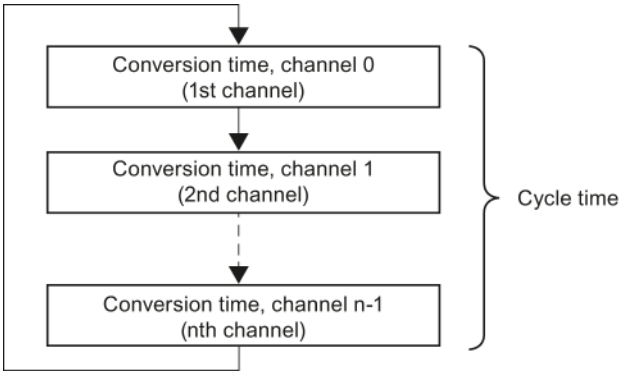

Figure 2-21 Cycle time of an analog module with multiplex conversion

Parallel measured value acquisition

This procedure processes the analog channels of a module at the same time (in parallel) rather than one after another. In parallel measured value processing, the cycle time of the module is usually constant and does not depend on the number of channels used. The goal of parallel measured value acquisition as it is applied by high-speed analog modules, for example, is a shorter cycle time. You can find more information on HS modules in the section High-Speed analog modules (Page 113).

2.18 Settling and response times of analog output modules

Settling and response times provide information on the delay of the output of a specified analog output variable and its availability to the process.

Response time

The response time for a new output value is defined as the time between the input of a digital output value to the internal memory of the module and the value to be output at the analog output being reached (with a residual error of 1 %).

The response time (t_A) is the sum of application time (t_X), conversion time (t_W) and settling time (t_E):

$t_A = t_X + t_W + t_E$

Settling and response times of analog output modules

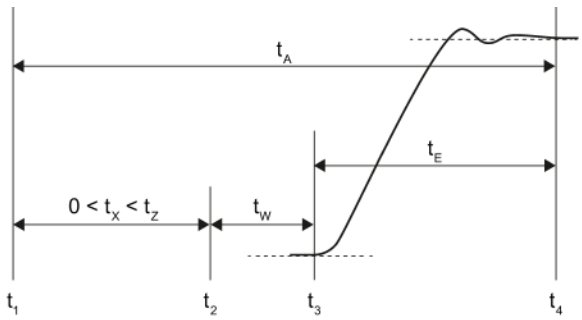

t_A	Response time
t_X	Application time
t_Z	Module cycle time
t_W	Conversion time
t_E	Settling time
t_1	New digital output value is available in the internal memory of the module
t_2	Module activates the digital output value and starts conversion
t_3	Module ends conversion at the terminal of the analog output channel and outputs the analog signal
t_4	Signal has settled and the specified analog output value has been reached (residual error 1 %)

Figure 2-22 Settling and response time of an output channel

Application time

The CPU/IM (interface module) writes new output values to the internal memory of the analog output module. The time required for this is not determined by the CPU/IM. These output values are converted asynchronously to their entry in buffer memory. The worst-case application time (t_X) may be equal to the cycle time (t_Z). This situation develops if the CPU writes a new value to the internal memory of the module immediately after the transfer of the value for conversion. This new value will not be processed until the next conversion.

The figure below shows acyclic access of the analog output module to output values from the internal memory in non-isochronous mode. You can find more information on isochronous mode in the paragraph on isochronous mode of the section High-Speed analog modules (Page 113).

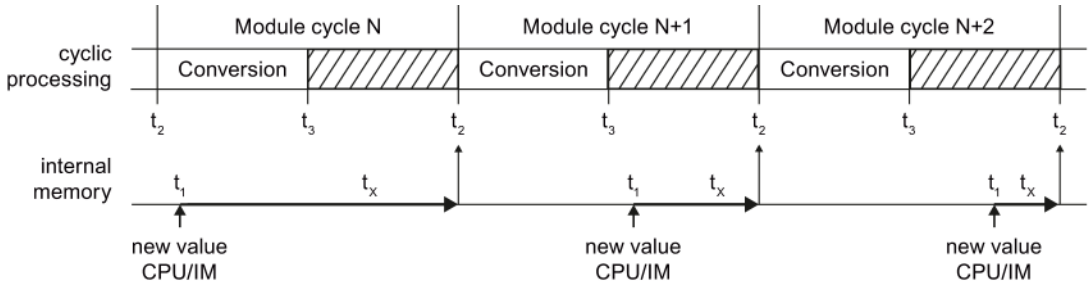

t_X Application time

t_1 New digital output value is available in the internal memory of the module

t_2 Module activates the digital output value and starts conversion

t_3 Module ends conversion at the terminal of the analog output channel and outputs the analog signal

Figure 2-23 Application of the output values

Conversion time

The conversion time of an output channel starts with the transfer of the digital value from the internal memory of the module (t_2) and ends with the digital-to-analog conversion (t_3).

Settling time

The settling time starts when the analog signal is output to the module (t_3) terminals and ends when the output value (t_4) is reached. The output value is reached as soon as the output signal has settled at its final value, taking into account a residual error of 1%.

The settling time depends on the type of output for the module, and on the connected load. The load for the analog output consists of connecting line and connected actuator. When the output is "Current", the settling time increases with high ohmic resistance. Inductive loads cause subsequent fluctuation in the output value. When the output is "Voltage", the capacitive load causes subsequent fluctuation.

2.19 Smoothing

Using the smoothing functions

Most analog input modules allow you to configure smoothing for the measuring signal in STEP 7. Smoothing analog values reduces the effect of interference signals. Smoothing is useful with slow changes in measured values, for example in temperature measurements.

Smoothing principle

The measured values are smoothed by means of filtering. The module forms mean values from a specified number of converted (digitalized) analog values. Smoothing should not be confused with the integration of measured values over a defined period of time. It is therefore not possible to smooth measured signals to filter out a specific interference frequency. However, this smoothing returns more "stable" data values because it suppresses peaks which overlay the measured signal.

4 (none, weak, medium, strong) or more levels of smoothing can be configured by the user depending on the module used. The level determines the number of analog values from which the mean value is generated. The greater the smoothing factor, the better the filtering.

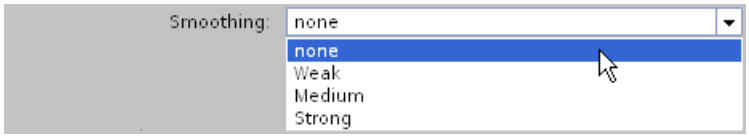

Figure 2-24 Selecting the smoothing level in STEP 7

Smoothing method

A smoothing algorithm is applied to a configurable number of measured values (e.g. 4, 8, 32) in line with the moving average. Each new measured value is factored in, and the oldest measured value then ignored. This mechanism suppresses interference peaks which overlay the measured signal. Utility signal jumps only become evident in the data after some time (see examples below).

The modules of the various product ranges use different smoothing algorithms. Smoothing is either linear or exponential. The differences are apparent particularly with strong smoothing and lead to a faster or slower rate of rise depending on the product used.

For information on whether or not a specific module supports customization of the smoothing function, please refer to the manual of the analog input module.

Example 1: Linear smoothing

The diagram below shows the number of module cycles (k) it takes for each smoothing level setting for the smoothed analog value to reach approximately 100 % after a step response. This specification is valid for all signal changes at the analog input.

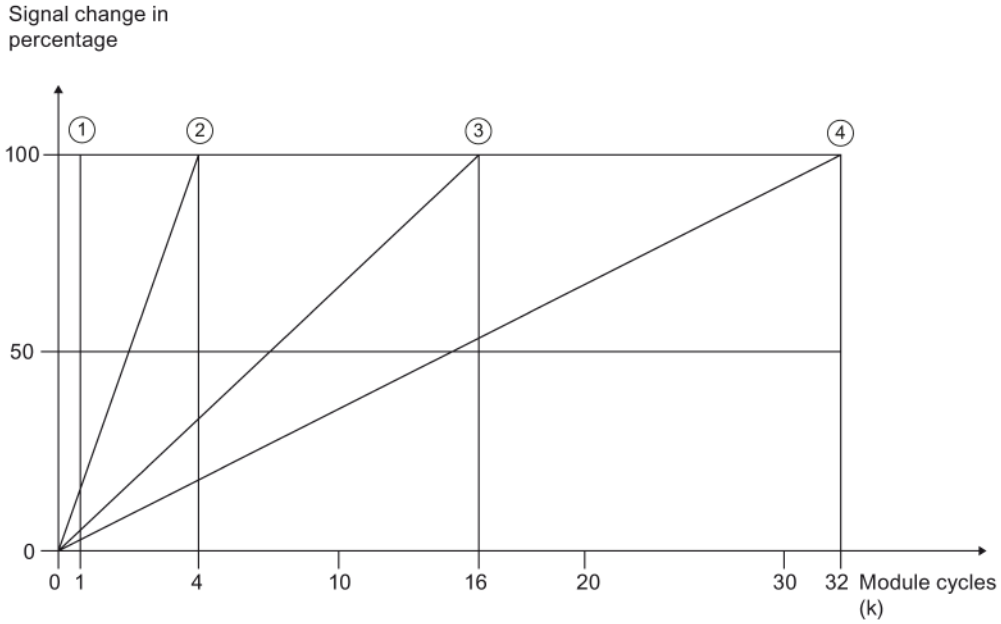

① No smoothing (k = 1)
② Weak smoothing (k = 4)
③ Medium smoothing (k = 16)
④ Strong smoothing (k = 32)

Figure 2-25 Linear smoothing with four smoothing levels

Example 2: Exponential smoothing

The diagram below shows the step response of the smoothing factor for different numbers of module cycles.

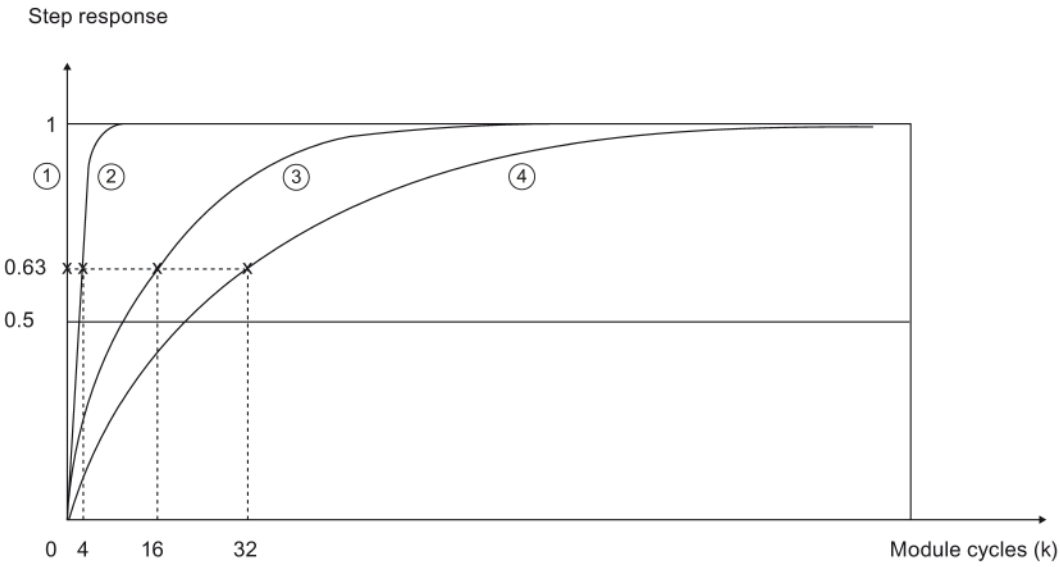

① No smoothing (k = 1)
② Weak smoothing (k = 4)
③ Medium smoothing (k = 16)
④ Strong smoothing (k = 32)

Figure 2-26 Exponential smoothing with four smoothing levels

2.20 Burden with 2-wire transducers

2-wire transducers

2-wire transducers are current transducers which convert the process variable into a current signal of between 4 and 20 mA. Two connection lines supply the transducer with an output current of at least 4 mA. Additional information on connecting 2-wire transducers to analog input modules can be found in the section Wiring current transducers (Page 72).

Burden

The burden indicates how great the external resistance in a current loop may be. If the external resistance is greater than the specified burden, the 2-wire transducer supply voltage is too low. The burden consists of the resistance of the transducer and all other resistances connected to the current loop.

The maximum admissible burden of the transducer, e.g. 820 Ω, is specified in the technical data of the analog module.

Example 1: Connecting a transducer to the electrical circuit

In accordance with the technical data of the 2-wire transducer used, it requires a supply voltage (U_{min}) of at least 8.5 V. Using Ohm's Law, you can calculate the resistance of the transducer used (R_{2DMU}) for a current of 20 mA.

$$R_{2DMU} = \frac{U_{min}}{I} = \frac{8.5\ V}{0.020\ A} = 425\ \Omega$$

With a supply voltage of at least 8.5 V, the transducer has a resistance of 425 Ω. The resistance is less than 820 Ω. You can therefore connect the transducer to the analog input module (AI) without exceeding the maximum burden.

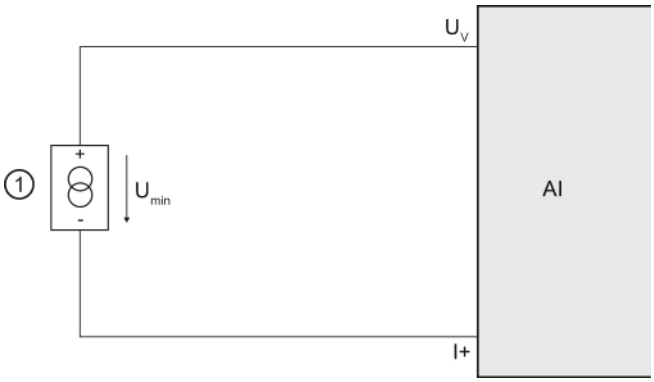

① 2-wire transducers

U_V Terminal for feed voltage at the channel

I+ Terminal for current input

U_{min} Voltage drop at 2-wire transducer

Figure 2-27 Connecting a transducer to the electrical circuit

Example 2: Connecting a transducer and other devices

If multiple measuring devices are connected in series, the sum of all connected resistances may not exceed the value of the maximum burden.

If you have connected a 2-wire transducer to a supply voltage of 8.5 V, you will need to allow for the resistance of the measuring device connected ②.

Maximum transducer burden:	820 Ω
Transducer resistance upon a voltage drop of 8.5 V:	425 Ω
Maximum resistance of additional devices connected:	395 Ω

The resistance of the measuring instrument may therefore not exceed 395 Ω.

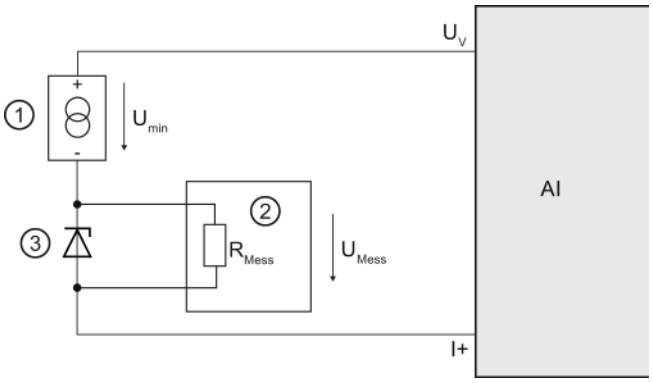

① 2-wire transducers
② Digital multimeter
③ Zener diode
U_V Terminal for feed voltage at the channel
I+ Terminal for current input
U_{min} Voltage drop at 2-wire transducer
R_{Mess} Resistance at measuring instrument
U_{Mess} Voltage drop at the measuring instrument

Figure 2-28 Connecting a transducer and other devices to the circuit

Calculating admissible voltage drop

The maximum additional resistance in the current loop may not exceed 395 Ω at a maximum current of 20 mA. You can calculate the voltage drop at the connected measuring instrument (U_{Mess}) as follows using Ohm's Law:

$U_{Mess} = R_{Mess} * I = 395\ \Omega * 0.020\ A = 7.9\ V$

The voltage drop at the measuring instrument should therefore not exceed 7.9 V.

Representation of analog values 3

3.1 Overview

Conversion of analog values

The CPU only processes analog values in digitalized format.

Analog input modules convert the analog signal into a digital value for further processing by the CPU.

Analog output modules convert the digital output value from the CPU into an analog signal.

Analog value representation at 16-bit resolution

The digitized analog value is the same for all I/O values at the same rated range. The analog values are represented as fixed point numbers in twos complement. This leads to the following conditions:

Table 3- 1 Representation of analog values

Resolution	Analog value															
Bit number	15	14	13	12	11	10	9	8	7	6	5	4	3	2	1	0
Significance of the bits	S	2^{14}	2^{13}	2^{12}	2^{11}	2^{10}	2^{9}	2^{8}	2^{7}	2^{6}	2^{5}	2^{4}	2^{3}	2^{2}	2^{1}	2^{0}

Sign

The sign (S) of the analog value is always set in bit 15:

- "0" → +
- "1" → -

Resolution less than 16 bits

The analog value is left-aligned in the memory of analog modules with a resolution of less than 16 bits. The unused least significant digits are padded with "0" values.

This reduces the number of measured values that can be represented. Modules occupy a range of values of between+32767 and -32768 regardless of the resolution. The scaling between two successive values depends on the resolution of the module.

Example

The following example shows how the least significant digits are padded with "0" values:

- The module with 16-bit resolution is capable of incrementing the values in steps of one unit ($2^0 = 1$).
- The module with 13-bit resolution is capable of incrementing the values in steps of 8 units ($2^3 = 8$).

Table 3- 2 Example: Bit pattern of a 16-bit and 13-bit analog value

Resolution	Analog value															
Bit	15	14	13	12	11	10	9	8	7	6	5	4	3	2	1	0
16-bit	S	2^{14}	2^{13}	2^{12}	2^{11}	2^{10}	2^9	2^8	2^7	2^6	2^5	2^4	2^3	2^2	2^1	2^0
13-bit	S	2^{14}	2^{13}	2^{12}	2^{11}	2^{10}	2^9	2^8	2^7	2^6	2^5	2^4	2^3	0	0	0

S = sign

Note

For information on the resolution supported by each analog module, please refer to the technical data for the relevant module.

3.2 Representation of input ranges

The tables below set out the digitalized representation of the input ranges by bipolar and unipolar input ranges. The resolution is 16 bits.

Please see the device manuals for each analog input module for assignment of the values to the specific measured values in each measuring range.

Table 3- 3 Bipolar input ranges

Dec. value	Measured value in %	Data word																Range
		2^{15}	2^{14}	2^{13}	2^{12}	2^{11}	2^{10}	2^{9}	2^{8}	2^{7}	2^{6}	2^{5}	2^{4}	2^{3}	2^{2}	2^{1}	2^{0}	
32767	>117.589	0	1	1	1	1	1	1	1	1	1	1	1	1	1	1	1	Overflow
32511	117.589	0	1	1	1	1	1	1	0	1	1	1	1	1	1	1	1	Over range
27649	100.004	0	1	1	0	1	1	0	0	0	0	0	0	0	0	0	1	
27648	100.000	0	1	1	0	1	1	0	0	0	0	0	0	0	0	0	0	Rated range
1	0.003617	0	0	0	0	0	0	0	0	0	0	0	0	0	0	0	1	
0	0.000	0	0	0	0	0	0	0	0	0	0	0	0	0	0	0	0	
-1	-0.003617	1	1	1	1	1	1	1	1	1	1	1	1	1	1	1	1	
-27648	-100.000	1	0	0	1	0	1	0	0	0	0	0	0	0	0	0	0	
-27649	-100.004	1	0	0	1	0	0	1	1	1	1	1	1	1	1	1	1	Under range
-32512	-117.593	1	0	0	0	0	0	0	1	0	0	0	0	0	0	0	0	
-32768	<-117.593	1	0	0	0	0	0	0	0	0	0	0	0	0	0	0	0	Underflow

Table 3- 4 Unipolar input ranges

Dec. value	Measured value in %	Data word																Range
		2^{15}	2^{14}	2^{13}	2^{12}	2^{11}	2^{10}	2^{9}	2^{8}	2^{7}	2^{6}	2^{5}	2^{4}	2^{3}	2^{2}	2^{1}	2^{0}	
32767	>117.589	0	1	1	1	1	1	1	1	1	1	1	1	1	1	1	1	Overflow
32511	117.589	0	1	1	1	1	1	1	0	1	1	1	1	1	1	1	1	Over range
27649	100.004	0	1	1	0	1	1	0	0	0	0	0	0	0	0	0	1	
27648	100.000	0	1	1	0	1	1	0	0	0	0	0	0	0	0	0	0	Rated range
1	0.003617	0	0	0	0	0	0	0	0	0	0	0	0	0	0	0	1	
0	0.000	0	0	0	0	0	0	0	0	0	0	0	0	0	0	0	0	
-1	-0.003617	1	1	1	1	1	1	1	1	1	1	1	1	1	1	1	1	Under range
-4864	-17.593	1	1	1	0	1	1	0	1	0	0	0	0	0	0	0	0	
-32768	<-17.593	1	0	0	0	0	0	0	0	0	0	0	0	0	0	0	0	Underflow

3.3 Representation of output ranges

The tables below set out the digitalized representation of the output ranges by bipolar and unipolar range. The resolution is 16 bits.

Please see the device manuals for each analog output module for assignment of the values to the specific output values in each measuring range.

Table 3- 5 Bipolar output ranges

Dec. value	Output value in %	Data word																Range
		2^{15}	2^{14}	2^{13}	2^{12}	2^{11}	2^{10}	2^{9}	2^{8}	2^{7}	2^{6}	2^{5}	2^{4}	2^{3}	2^{2}	2^{1}	2^{0}	
32511	117.589	0	1	1	1	1	1	1	0	1	1	1	1	1	1	1	1	Maximum output value*
32511	117.589	0	1	1	1	1	1	1	0	1	1	1	1	1	1	1	1	Over range
27649	100.004	0	1	1	0	1	1	0	0	0	0	0	0	0	0	0	1	
27648	100.000	0	1	1	0	1	1	0	0	0	0	0	0	0	0	0	0	Rated range
1	0.003617	0	0	0	0	0	0	0	0	0	0	0	0	0	0	0	1	
0	0.000	0	0	0	0	0	0	0	0	0	0	0	0	0	0	0	0	
-1	-0.003617	1	1	1	1	1	1	1	1	1	1	1	1	1	1	1	1	
-27648	-100.000	1	0	0	1	0	1	0	0	0	0	0	0	0	0	0	0	
-27649	100.004	1	0	0	1	0	0	1	1	1	1	1	1	1	1	1	1	Under range
-32512	-117.593	1	0	0	0	0	0	0	1	0	0	0	0	0	0	0	0	
-32512	-117.593	1	0	0	0	0	0	0	1	0	0	0	0	0	0	0	0	Minimum output value**

* When values > 32511 are specified, the output value is limited to 117.589 % or 0 % (0.0 V / 0.0 mA), depending on the module used.

** When values < -32512 are specified, the output value is limited to -117.593 % or 0 % (0.0 V / 0.0 mA), depending on the module used.

Table 3- 6 Unipolar output ranges

Dec. value	Output value in %	Data word																Range
		2^{15}	2^{14}	2^{13}	2^{12}	2^{11}	2^{10}	2^{9}	2^{8}	2^{7}	2^{6}	2^{5}	2^{4}	2^{3}	2^{2}	2^{1}	2^{0}	
32511	117.589	0	1	1	1	1	1	1	1	x	x	x	x	x	x	x	x	Maximum output value*
32511	117.589	0	1	1	1	1	1	1	0	1	1	1	1	1	1	1	1	Over range
27649	100.004	0	1	1	0	1	1	0	0	0	0	0	0	0	0	0	1	
27648	100.000	0	1	1	0	1	1	0	0	0	0	0	0	0	0	0	0	Rated range
1	0.003617	0	0	0	0	0	0	0	0	0	0	0	0	0	0	0	1	
0	0.000	0	0	0	0	0	0	0	0	0	0	0	0	0	0	0	0	
0	0.000	0	0	0	0	0	0	0	0	0	0	0	0	0	0	0	0	Minimum output value**

* When values > 32511 are specified, the output value is limited to 117.589 % or 0 % (0.0 V / 0.0 mA), depending on the module used.

** When values < 0 are specified, the output value is limited to 0% (0.0 V / 0.0 mA).

Connecting transducers 4

4.1 Overview

Introduction

This chapter describes the basic procedure for wiring transducers to analog inputs. Information on specific wiring options is available in the manual of each module.

For more information, e.g. on cable routing and shielding or potential equalization, etc., refer to the function manual for Configuring interference-free controllers (http://support.automation.siemens.com/WW/view/en/59193566).

Transducers that can be wired to analog inputs

You can wire the following transducers to the analog input modules, depending on the type of measurement:

- Voltage transducers
- Current transducers
  - 2-wire transducers
  - 4-wire transducers
- Resistance transducers
  - 4-wire connection
  - 3-wire connection
  - 2-wire connection
- Thermocouples

Isolated transducers and non-isolated transducers

Transducers are available in various models:

- Isolated transducers are **not connected** locally to the ground potential. Floating operation is possible.
- Non-isolated transducers are **connected** locally to the ground potential.

  Non-isolated transducer connections are connected to the conductive enclosure.

  Note: All non-isolated transducers must have a galvanic connection to each other and be locally connected to the ground potential.

Abbreviations used in the figures

Key to the abbreviations in the figures below:

AI	Analog input module
M	Ground connection
L+	Supply voltage connection
M_n+/M_n-	Measuring input, channel n
I_{Cn}+/I_{Cn}-	Current output to thermal resistor (RTD) channel n
U_n+/U_n-	Voltage input channel n
I_n+/I_n-	Current input channel n
COMP+/COMP-	Compensation input
I_{Comp}+/I_{Comp}-	Current output for compensation
U_V	Feed voltage at channel (the connection can be used for 2-wire transducer (2DMU) or with ET 200eco PN and ET 200pro for 2/4-wire transducer).
U_{CM}	Potential difference between the reference points of the measuring inputs / the analog ground M_{ANA}
U_{ISO}	Potential difference between the reference points of the measuring inputs and the central ground
M_{ANA}	Reference point of the analog ground

Lines for analog signals

Always use shielded twisted-pair cables to wire the analog signals. This improves immunity.

4.2 Wiring analog inputs with MANA connection

The reference potentials of the measuring inputs and the central ground are electrically isolated in analog input modules with M_{ANA} connection.

Limited potential difference U_{ISO} (insulation voltage)

Always verify that the admissible potential difference U_{ISO} between the reference point of the analog ground M_{ANA} and the central ground is not exceeded.

Potential difference U_{ISO} may be caused by: Maximum line lengths exceeded.

If you want to ensure that the permitted value U_{ISO} is not exceeded, install an equipotential bonding cable between the terminal M_{ANA} and the central grounding point.

Limited potential difference U_{CM} (common mode)

Always verify that the admissible potential difference U_{CM} between the reference point of the measuring inputs and the analog groundM_{ANA} is not exceeded.

Potential differences U_{CM} may be caused by:

- Environments with EMC disturbance
- Use of grounded transducers
- Use of long cable lengths

Measuring errors / malfunctions can occur if the admissible potential difference U_{CM} is exceeded.

Some modules can detect an invalid potential difference U_{CM} and report this error with an entry in the diagnostics buffer of the CPU.

If you want to ensure that the maximum value U_{CM} is not exceeded, interconnect the reference points of the measuring inputs and the analog ground M_{ANA} with an equipotential bonding cable.

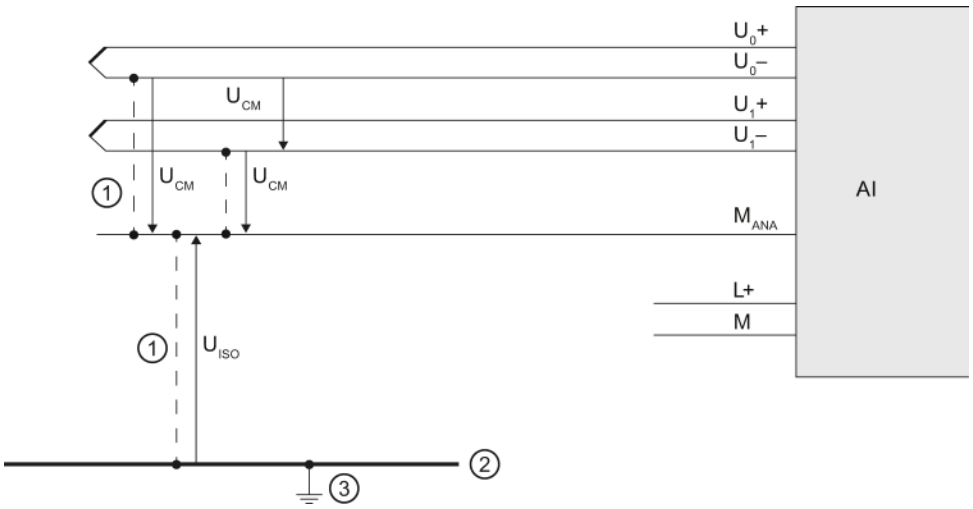

① Equipotential bonding cable
② Grounding bus cable
③ Central ground

Figure 4-1 Example: Reference potential for analog input modules with M_{ANA} connection

4.3 Wiring analog inputs without MANA connection

The reference potentials of the measuring inputs and the central ground are electrically isolated from each other in analog input modules without an M_{ANA} connection.

Limited potential difference U_{ISO} (insulation voltage)

Always verify that the maximum potential difference U_{ISO} between the reference points of the measuring inputs and central ground is not exceeded.

Potential difference U_{ISO} may be caused by: Maximum line lengths exceeded.

If you want to ensure that the permitted value U_{ISO} is not exceeded, install an equipotential bonding cable between the reference points of the measuring inputs and the central grounding point.

Limited potential difference U_{CM} (common mode)

Always ensure that the permitted potential difference U_{CM} between the reference points of the measuring inputs is not exceeded.

Potential differences U_{CM} may be caused by:

- Environments with EMC disturbance
- Use of grounded transducers
- Use of long cable lengths

Measuring errors / malfunctions can occur if the admissible potential difference U_{CM} is exceeded.

Some modules can detect an invalid potential difference U_{CM} and report this error with an entry in the diagnostics buffer of the CPU.

If you want to ensure that the permitted value U_{CM} is not exceeded, install equipotential bonding cables between the reference points of the measuring inputs or, with the ET 200eco PN and ET 200pro, between the reference points of the measuring inputs and ground.

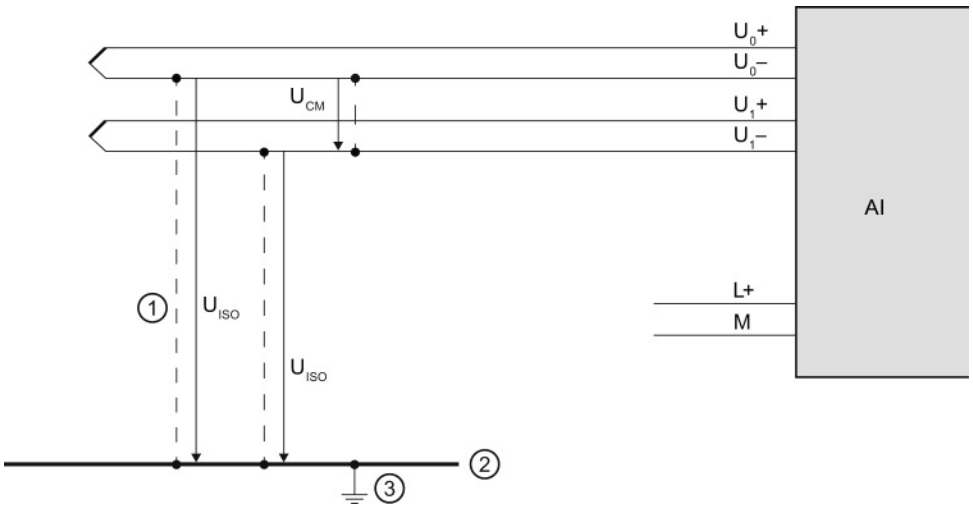

① Equipotential bonding cable (not for 2-wire and resistance transducers)
② Grounding bus cable
③ Central ground

Figure 4-2 Example: Reference potential for analog input modules without M_{ANA} connection

4.4 Wiring voltage transducers

The figure below shows how to connect voltage transducers. If you want to ensure that the permitted value U_{CM} is not exceeded, install equipotential bonding cables to connect the reference points of the measuring inputs to the analog ground M_{ANA}, or with ET 200eco PN and ET 200pro the reference points of the measuring inputs to the ground.

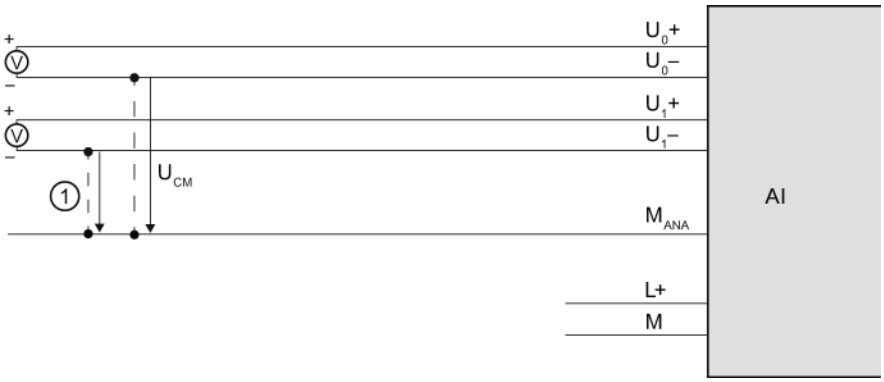

① Equipotential bonding cable (only relevant to modules with M_{ANA} connection)

Figure 4-3 Example: Wiring voltage transducers to an analog input module

4.5 Wiring current transducers

Current transducers are available as 2-wire transducers and 4-wire transducers. Below are a number of ways to supply current transducers with voltage.

Wiring 2-wire transducers with power supply from the module

The 2-wire transducer converts the process variable into a current. The 2-wire transducer is wired to the short circuit-proof supply voltage at the terminals of the analog input module. The transducer is therefore frequently also called a "passive transducer". Its simple wiring means that the 2-wire transducer is frequently used in industrial environments. If you use this type of connection, you will need to set the "Current (**2-wire transducer**)" measurement type in STEP 7.

Note

2-wire transducers must be electrically isolated.

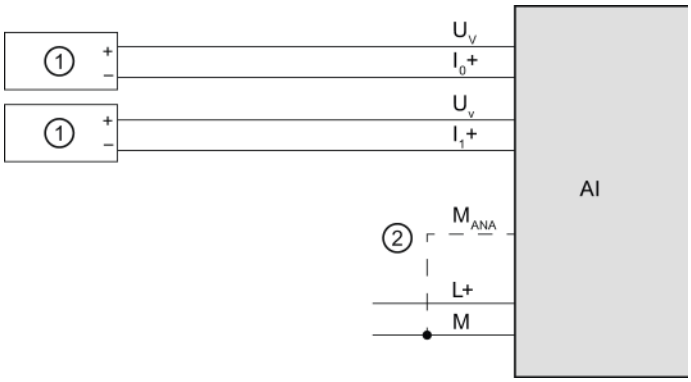

① 2-wire transducers (2WT)

② Equipotential bonding cable (only relevant to modules with M_{ANA} connection)

Figure 4-4 Example: Wiring 2-wire transducers to an analog input module

Wiring 2-wire transducers to an analog input for 4-wire transducers

The figure below shows an alternative to the above connection: supplying the 2-wire transducer from supply line L+ of the module. If you use this type of connection, you will need to set the "Current (**4-wire transducer**)" measurement type in STEP 7.

In this type of connection, galvanic isolation between the supply voltage L+ and the analog circuit will be removed.

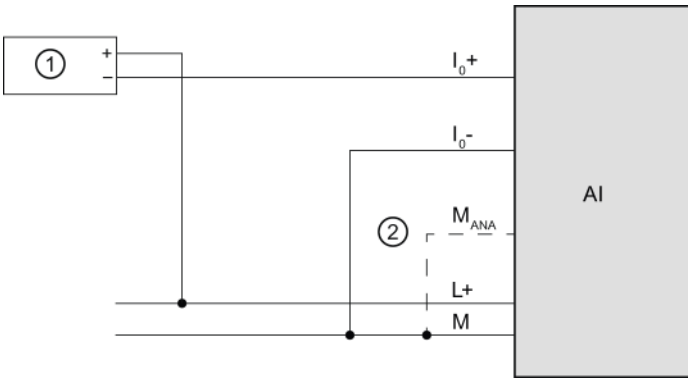

① 2-wire transducers (2WT)

② Equipotential bonding cable (only relevant to modules with M_{ANA} connection)

Figure 4-5 Example: Wiring 2-wire transducers to an analog input for 4-wire transducers

Wiring and connecting 4-wire transducers

4-wire transducers provide terminals for connecting a separate supply voltage. They are powered with an external supply and are frequently called "active transducers". If you use this type of connection, you will need to set the "Current (**4-wire transducer**)" measurement type in STEP 7.

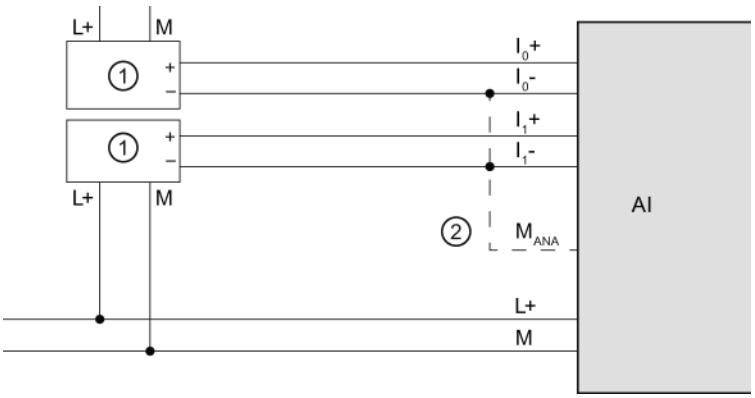

① 4-wire transducers (4WT)

② Equipotential bonding cable (only relevant to modules with M_{ANA} connection)

Figure 4-6 Example: Wiring 4-wire transducers to an analog input module

4.6 Wiring thermal resistors and resistors

The module provides a constant current at terminals I_C+ and I_C- for resistance measurements. The constant current is fed to the resistance to be measured where it is measured as voltage drop. It is important to wire the connected constant current cables directly to the thermal resistor/resistor.

Measurements with 4-wire or 3-wire connection compensate for line resistance and therefore achieve greater accuracy compared to measurements with 2-wire connection.

Measurements with two-wire connection always acquire line resistance in addition to the actual resistance; you must therefore allow for a significant loss of precision in the measuring results.

The figures below give some connection examples.

4-wire connection of a thermal resistor

The voltage at the thermal resistor is acquired using high-impedance measurement via the M_0+ and M_0- terminals. Make sure the wiring is correctly poled (I_{C0}+ and M_0+, and I_{C0}- and M_0- at the thermal resistor).

Always wire the **I_{C0}+ and M_0+** lines, and the **I_{C0}- and M_0-** lines directly to the thermal resistor.

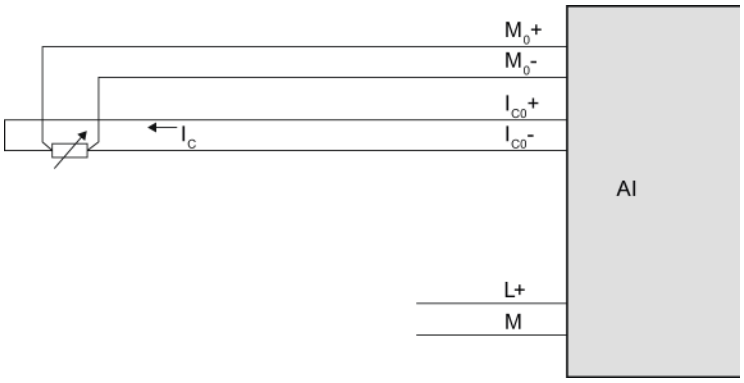

Figure 4-7 Example: 4-wire connection of thermal resistor to an analog input module

3-wire connection of a thermal resistor

Depending on the module, for a 3-wire connection to modules with 4 terminals (per channel), you may need to insert a bridge between **M_0- and I_{C0}-** (see figure below) or between **M_0+ and I_{C0}+**. Always wire the I_{C0}+ and M_0+ lines directly to the thermal resistor. Use cable with wires with identical cross-section.

For ET 200AL, ET 200eco PN and ET 200pro, no bridge is required as all necessary connections are implemented internally.

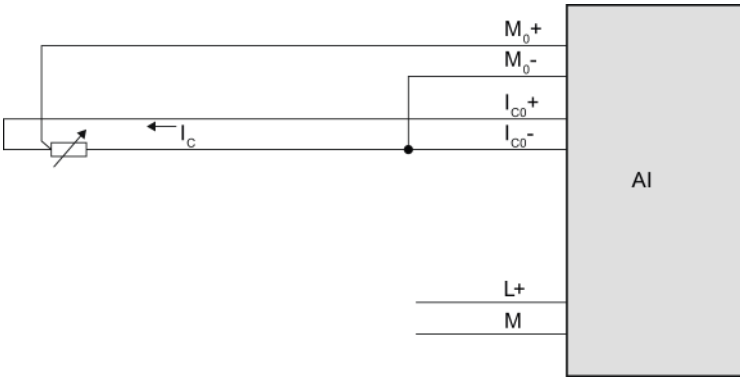

Figure 4-8 Example: 3-wire connection of thermal resistor to an analog input module

2-wire connection of a thermal resistor

When installing a 2-wire device on modules with 4 terminals (per channel), you will need to insert bridges at the module between **M_0+ and I_{C0}+** and between **M_0- and I_{C0}-** as shown in the figure below. The line resistance is measured, but not compensated. As a result of physical limitations, this measurement type is less accurate than measurement with 3-wire or 4-wire connections. The wiring for this type of measurement is, however, simple as the bridges required can be wired in the plug, saving line.

For ET 200AL, ET 200eco PN and ET 200pro, no bridge is required as all necessary connections are implemented internally.

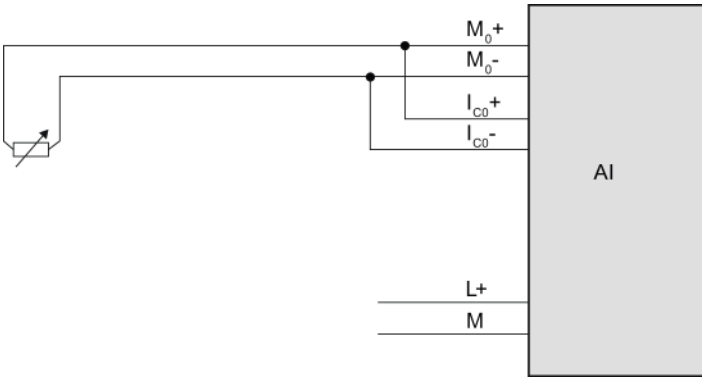

Figure 4-9 Example: 2-wire connection of thermal resistor to an analog input module

4.7 Wiring thermocouples

Introduction

Thermocouples are generally supplied ready-to-use. Protective casing prevents the thermocouples from being destroyed by mechanical force, for example.

Compensating lines

The compensating lines belonging to the respective thermocouples are identified by a special color code, because only the compensating line that is made of the material matching the thermocouple may be used. The standardized compensating lines are specified in DIN EN 60584. Observe the maximum temperatures in the manufacturer's specifications.

Thermocouple connection options

There are various different ways to wire thermocouples to an analog input module:

- Directly ①.
- Using compensating lines ②.
- With a compensating line to the reference junction, connected with a supply line, e.g. copper ③.

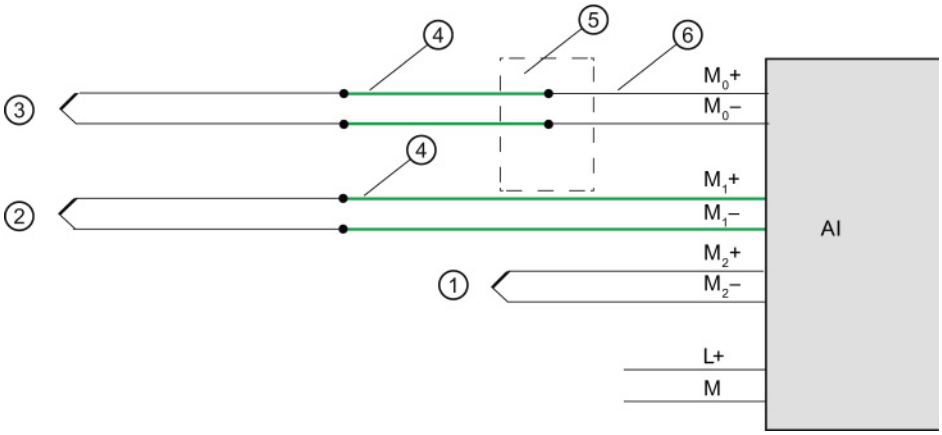

① Thermocouple without compensating line
② Thermocouple with compensating line
③ Thermocouple with compensating line and supply line
④ Compensating line (same material as thermocouple)
⑤ External reference junction
⑥ Copper supply cable, for example

Figure 4-10 Example: Wiring thermocouples to an analog input module

Further information

Further information, such as the selection of thermocouples and how they operate, can be found in the section Thermocouples (Page 77).

Thermocouples 5

5.1 Selecting thermocouples

Introduction

Thermocouples are electrical devices for precise temperature measurement. They consist of two different metals connected at one point. Temperature affecting this point generates a voltage difference from which the temperature can be calculated.

Thermocouples can measure a wide range of temperatures and come in extremely robust models. They are therefore frequently used in industrial applications. Below are some of the criteria to consider when selecting the right thermocouple:

- Temperature range
- Atmospheric conditions
- Price

Grounded thermocouples

In grounded thermocouples, a conductive thermocouple wire is attached to the inside of the sensor housing. This results in good heat transfer from the sensor housing to the thermocouple measuring tip.

Non-grounded thermocouples

In non-grounded thermocouples, the thermocouple is not connected to the sensor housing. The response time following temperature changes is longer than with grounded thermocouples. The measuring point is galvanically isolated.

Type and temperature range

The different thermocouple types are derived from different material compositions.

Note

Due to physical conditions, thermocouples are extremely inaccurate outside the specified temperature range. Only use thermocouple in the temperature range specified by the manufacturer.

The following table lists the types and material compositions, as well as the temperature measuring range of different thermocouples:

Type	Material composition	Temperature range
B	PtRh-PtRh	250 to 1820 °C
C	W-Re	0 to 2315 °C
E	NiCr-CuNi	-270 to 1000 °C
J	Fe-CuNi	-210 to 1200 °C
K	NiCr-Ni	-270 to 1372 °C
L	Fe-CuNi	-200 to 900 °C
N	NiCrSi-NiSi	-270 to 1300 °C
R	PtRh-Pt (Pt 13%)	- 50 to 1769 °C
S	PtRh-Pt (Pt 10%)	-50 to 1769 °C
T	Cu-CuNi	-270 to 400 °C
U	Cu-CuNi	-200 to 600 °C
TXK/XKL	NiCr-CuCr	-200 to 800 °C

5.2 Structure and operating principle of thermocouples

Thermocouple structure

A thermocouple consists of a pair of thermal sensors and the respective installation and wiring elements. Two wires made of different metals/alloys are welded together at their ends (hot end). The welding point forms the so-called measuring point, while the free ends of the thermocouple form the reference junction.

The free ends are interconnected with the evaluation device (e.g. analog input module) via insulated wires or cables.

The different thermocouple types, e.g. K/J/N, are derived from different material composition; the same measuring principle is applied to all thermocouples, independent on their type.

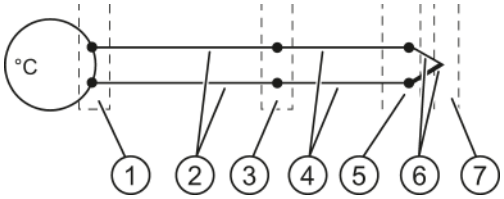

① Thermal voltage acquisition point
② Copper supply cable, for example
③ Reference junction
④ Compensating line (same material as thermocouple)
⑤ Connection point
⑥ Thermocouple with positive and negative thermal elements
⑦ Measurement point

Figure 5-1 Thermocouple

Operating principle of thermocouples

Temperature differences between the measuring point and the free ends of the pair of thermal sensors (connection point) generate a thermal voltage at the reference junction. The value of the thermal voltage is determined by the temperature difference between the measuring point and the free ends, as well as by the material composition of the pair of thermal sensors.

Thermocouples always acquire a differential temperature, which means that the temperature at their free ends (reference junction) must be known to determine the temperature at the measuring point.

The thermocouple can be extended with compensating lines from the connection point. This allows the reference junction to be located at a specific point, for example, where the temperature can be kept constant or the temperature sensor is easy to install. The compensating lines and thermocouple wires are made of the same material. Copper cables are used to connect the reference junction to the module.

Note

Always observe the polarity, as incorrect wiring will result in unacceptable measuring errors.

5.3 Compensation for the reference junction temperature

5.3.1 Overview

Introduction

You have several options for measuring the reference junction temperature in order to obtain a correct temperature value as a function of the temperature difference between the reference junction and the measuring point.

You have various compensation options to suit requirements at the location of the reference junction.

The compensation options supported by the analog module used are specified in the manual of the respective module.

Options of compensating for the reference junction temperature

Table 5- 1 Compensation options: Explanation and use case

Compensation options	Explanation	Use case / special feature
Internal reference junction	**Function principle** With this type of compensation, the temperature of the reference junction is measured using an integrated sensor in the analog module. **Procedure** Connect the thermocouple to the I/O module directly, or with compensating lines; see chapter Compensation with internal reference junction (Page 84).	• For the connection, use compensating lines that match the thermocouple material. • If the reference junction temperature and the module temperature are identical in your system, you may also use lines made from a different material. • Advantages: – Inexpensive – No external reference junction required – No additional wiring required

Compensation options	Explanation	Use case / special feature
Reference channel of the module	**Properties** With this type of compensation, the reference junction temperature is determined using an external thermal resistor (RTD). **Procedure** Connect the thermocouple to the supply lines directly at the reference junction, or indirectly using compensating lines. Wire the supply lines to the corresponding terminals of the module. Wire the thermal resistor (RTD) to the reference channel of the module. The thermal resistor (RTD) must be positioned in the area of the reference junction; see chapter Compensation with reference channel of the module (Page 86).	• They acquire the temperature directly at the reference junction. • The measured temperatures of all channels that you have configured for this compensation type will be corrected automatically by the temperature value of the reference junction. • Advantages: – More precise compared to compensation with internal reference junction; however, you need to install and wire an additional thermal resistor.
Reference channel of group 0	**Properties** With the "TC" (thermocouple...) setting, the channel acts as receiver for the reference junction temperature of group 0. The associated transmitter of group 0 is set up to for the RTD channel. **Procedure** Connect the thermocouple to the supply lines directly at the reference junction, or indirectly using compensating lines. Wire the supply lines to the corresponding terminals of the module. Wire the thermal resistor (RTD) to the configured reference channel for group 0 of the module. The thermal resistor (RTD) must be positioned in the area of the reference junction; see chapter Compensation, reference channel of Group 0 (Page 88).	• They acquire the temperature directly at the reference junction. • The measured temperatures of all channels that you have configured for this compensation type will be corrected automatically by the temperature value of the reference junction (transmitter).
Fixed reference temperature	**Properties** With this type of compensation, the reference junction temperature is stored in the module as fixed value. **Procedure** Connect the thermocouple to the supply lines directly at the reference junction, or indirectly using compensating lines. Wire the supply lines to the corresponding terminals of the module. Depending on the module, you can enter a fixed reference junction temperature in the configuration data (e.g. 20 °C), or use the fixed reference junction temperature of the module (0 °C); see chapter Compensation with fixed reference temperature (Page 91).	• You keep the reference junction temperature constant and know the temperature value. • To ensure high precision, you must ensure that the temperature remains constant (this can be complicated, depending on the application).

Compensation options	Explanation	Use case / special feature
Dynamic reference temperature	**Properties** With this type of compensation, the reference junction temperature is determined using a module. Transfer this temperature value to other modules in the user program by means of a data record. **Procedure** Wire the thermal resistor (RTD) for the reference junction to any channel. The reference junction temperature is transferred with a function block by means of data records from the CPU or IM to the module, see section Compensation by means of dynamic reference temperature (Page 94).	• You are using multiple modules at the reference junction and can therefore compensate for all channels using a common temperature value. • You only need a thermal resistor (RTD) or a thermocouple to measure the temperature value.
No/external compensation	**Properties** With this type of compensation, the reference junction temperature is measured outside the analog input module. You can, for example, connect a compensating box to the thermocouple for this purpose. **Procedure** Connect the compensating box with the connection module of the analog input module with copper cables, see section "None" or external compensation (Page 98).	• The temperature of the reference junction for this type of compensation is specified as 0 °C. This can be achieved by using a compensating box. A separate compensating box is required for each thermocouple. • Thermocouples of type B do not require a compensating box.
RTD (0)	**Properties** This compensation is based on a measurement of the resistance value of a Pt1000 at the clamping unit of a compensation connector or of an external resistance value Pt1000. **Procedure** Additional information about the connection options with and without compensation connector is available in the section Type of compensation RTD (0) (Page 100).	• The reference junction temperature is determined with resistance value of the Pt1000. • All channels of the analog input module that you select for this type of compensation receive the same reference junction temperature.

5.3.2 Compensation with internal reference junction

Function principle

The reference junction for compensation via internal reference junction is at the terminals of the analog input module. Wire the thermocouples or compensating lines directly to the module inputs. The internal temperature sensor acquires the module temperature and returns a compensating voltage.

Note that compensation via internal reference junction will not always reach the precision of external compensation!

Procedure

Configuration steps:

1. Open the project in STEP 7.
2. In the device view, select the required analog module and the corresponding channel.
3. Select the "General" tab in the Inspector window of the selected module.
4. Select the "Inputs/Measuring" area.
5. Select the "Thermocouple" value as "Measurement type".
6. As "Reference junction", select the value "Internal reference junction".

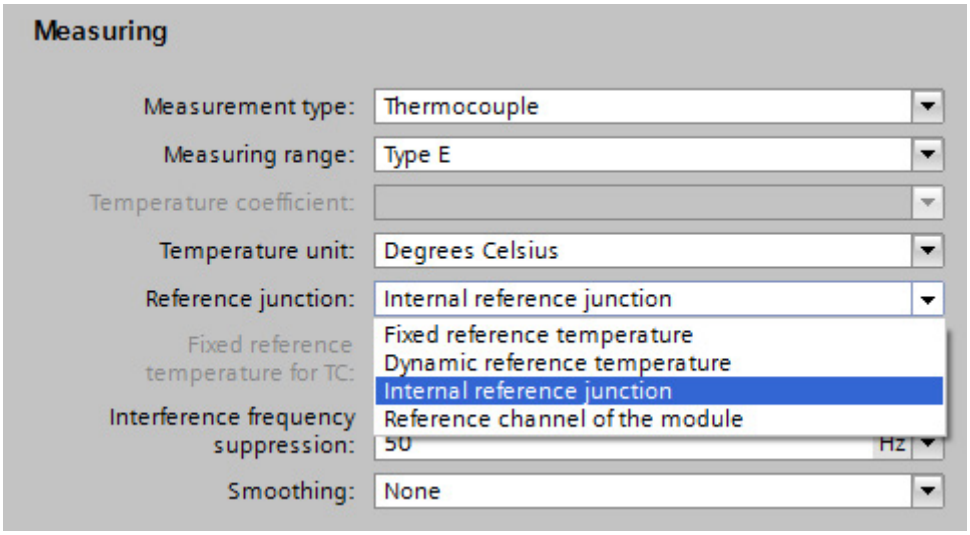

Figure 5-2 Internal reference junction

Wiring thermocouples

Wire the thermocouples directly or indirectly via compensating lines to the module inputs.

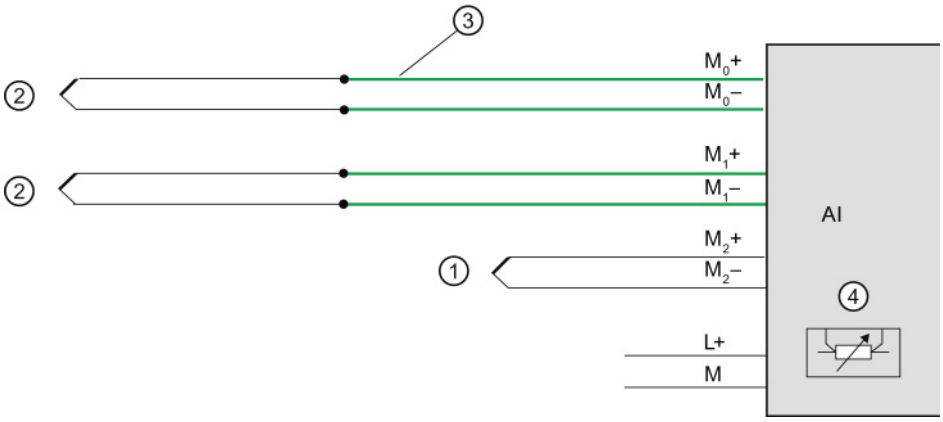

① Thermocouple without compensating line
② Thermocouple with compensating line
③ Compensating line (same material as thermocouple)
④ Internal reference junction

Figure 5-3 Example: Wiring thermocouples for compensation via internal reference junction

5.3.3 Compensation with reference channel of the module

Function principle

With this type of compensation, the reference junction temperature is determined using an external thermal resistor (RTD). Certain modules provide an internal reference channel.

Procedure

Configuration steps:

1. Open the project in STEP 7.
2. In the device view, select the required analog module and the corresponding channel.
3. Select the "General" tab in the Inspector window of the selected module.
4. Select the "Inputs/Measuring" area.
5. Select the "Thermocouple" value as "Measurement type".
6. As "Reference junction", select the value "Reference channel of the module"".

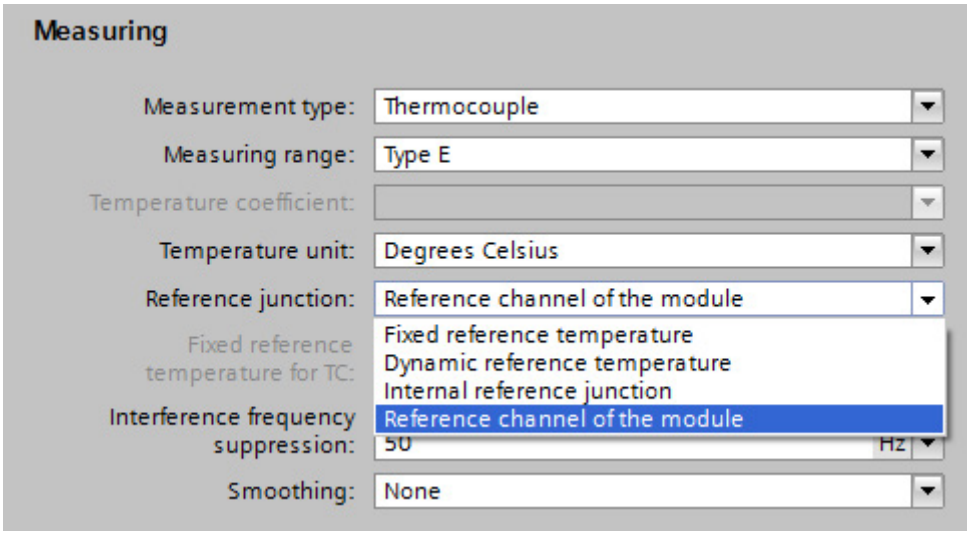

Figure 5-4 Reference channel of the module

Wiring thermocouples and thermal resistors

Connect the thermocouple to the supply lines directly at the reference junction, or indirectly using compensating lines. Wire the supply lines to the corresponding terminals of the module.

You may use cables made of any material to wire the thermal resistor to the module terminals.

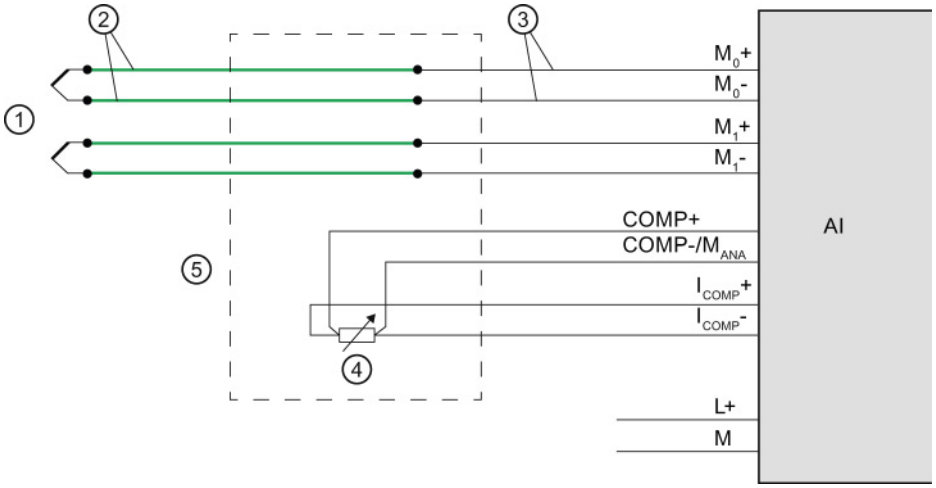

① Thermocouple
② Compensating line (same material as thermocouple)
③ Copper supply cable, for example
④ Thermal resistor (RTD)
⑤ Reference junction

Figure 5-5 Example: Wiring thermocouples/thermal resistors for compensation by means of reference channel of the module

5.3.4 Compensation, reference channel of Group 0

Function principle

For this compensation, a module channel with a connected thermal resistor (RTD) acts as "Reference temperature transmitter". Other channels (reference temperature receivers) with connected thermocouples can be compensated using this reference temperature. The measured temperatures of all channels (receivers) that you have configured for this compensation type will be compensated automatically by the temperature value of the reference junction (transmitter).

The reference junction temperature is determined by means of an external thermal resistor (RTD).

Procedure

Configuration steps:

1. Open the project in STEP 7.
2. In the device view, select the required analog module and the corresponding channel.
3. Select the "General" tab in the Inspector window of the selected module.
4. Select the area "Inputs/measurement".
5. For the channel of the relevant module, specify as transmitter:

   As "Measurement type" select, for example, "Thermal resistor (4-wire connection)".

   As "Reference junction", select the value "Reference channel of group 0".

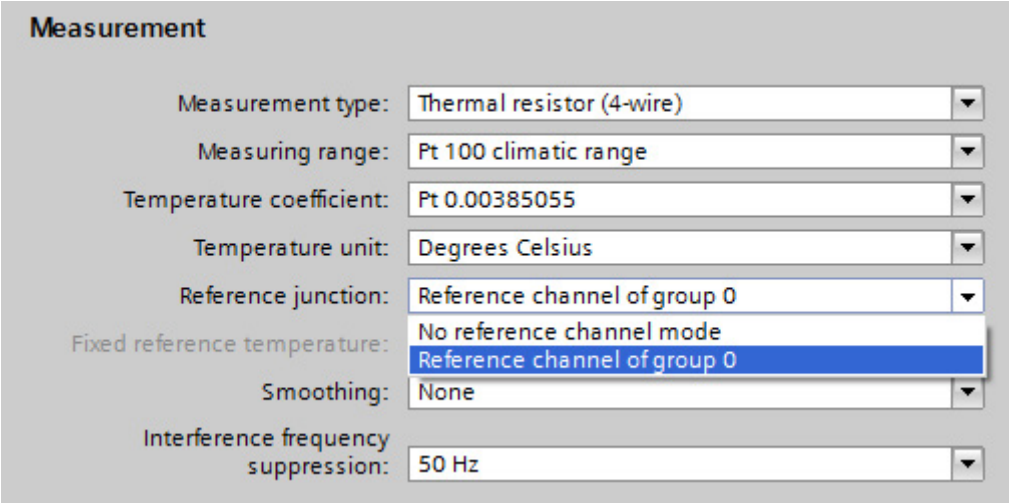

Figure 5-6 Transmitter: Reference channel of group 0

6. For the channels you specify as receivers:

   Select the "Thermocouple" value as "Measurement type".

   As "Reference junction", select the value "Reference channel of group 0".

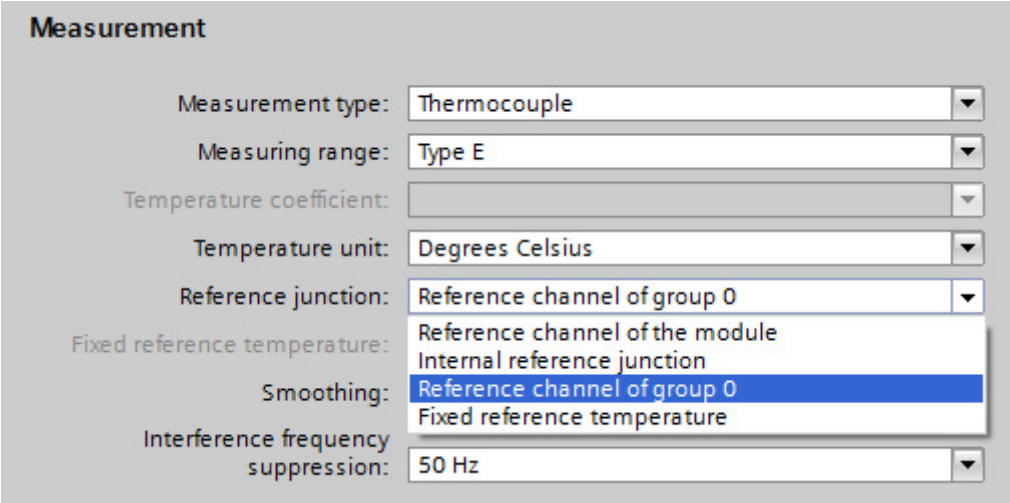

Figure 5-7 Receivers: Reference channel of group 0

Connecting thermocouples and thermal resistors

The example below shows:

- An analog module with thermal resistor as reference temperature transmitter and
- Two analog modules with thermocouple as reference temperature receivers.

Connect the thermocouples to the supply lines at the reference junction, either directly or with compensating lines. Wire the supply lines to the corresponding terminals of the module.

You may use cables made of any material to wire the thermal resistor to the module terminals.

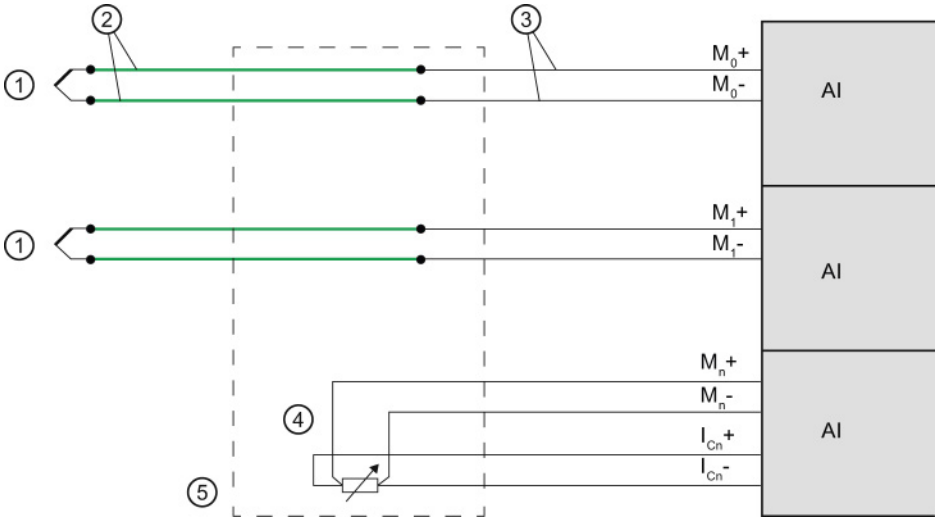

① Thermocouple
② Compensating line (same material as thermocouple)
③ Copper supply cable, for example
④ Thermal resistor (RTD)
⑤ Reference junction

Figure 5-8 Example: Connecting thermocouples/thermal resistors for group 0 compensation

5.3.5 Compensation with fixed reference temperature

Function principle

With this type of compensation, the reference junction temperature is stored in the module as fixed value.

Procedure

Configuration steps:

1. Open the project in STEP 7.
2. Select the required analog module in the Device view.
3. Select the "General" tab in the Inspector window of the selected module.
4. Select the "Inputs/Measuring" area.
5. Select the "Thermocouple" value as "Measurement type".
6. As "Reference junction", select the value "Fixed reference temperature".
7. Specify the temperature of the reference junction in the "Fixed reference temperature" area, for example, 20 °C.

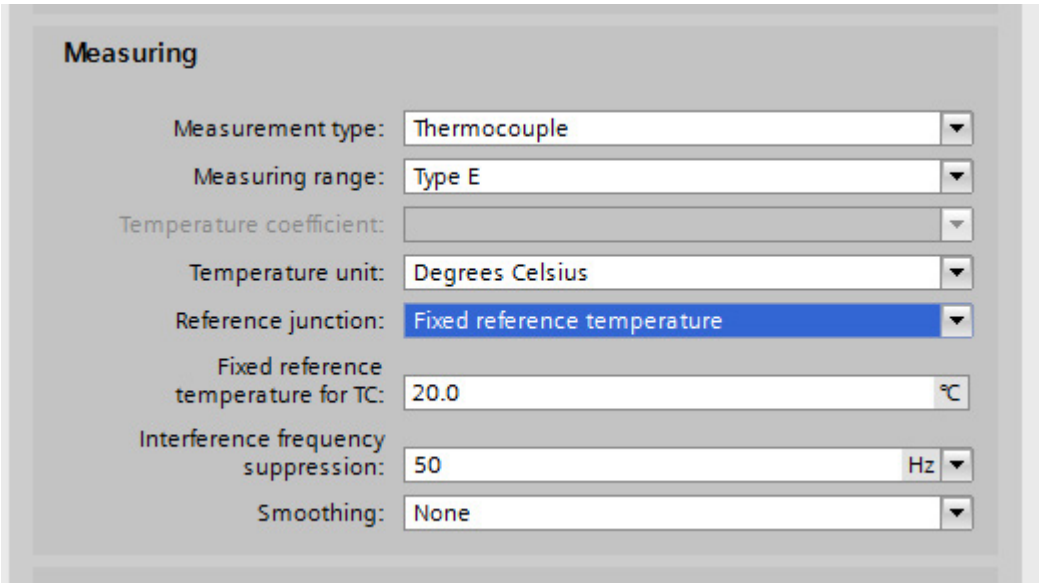

Figure 5-9 Fixed reference temperature

Temperature condition with "Fixed reference temperature" setting

The figure below shows the connection options for thermocouples provided the temperature of the module is kept at a fixed reference temperature (20 °C), for example by installing it in an air-conditioned switch cabinet. The reference junction is in the module.

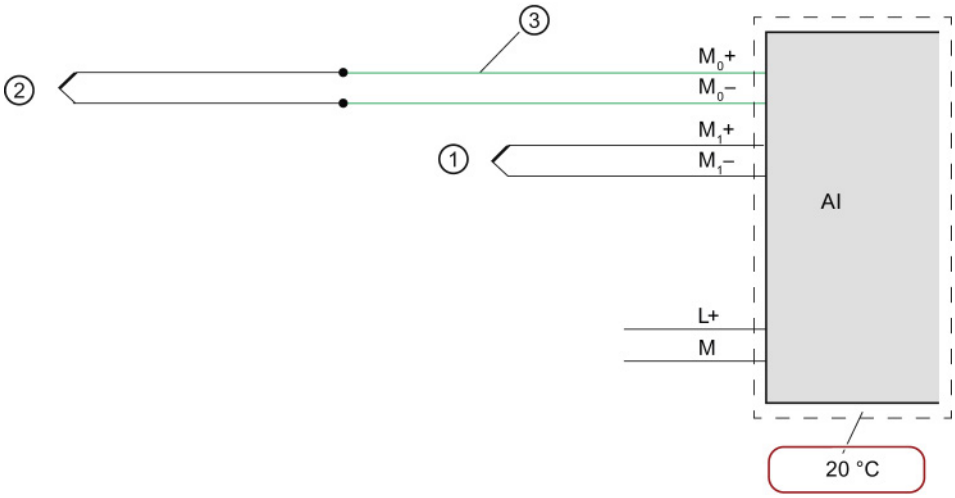

① Thermocouple without compensating line
② Thermocouple via compensating line
③ Compensating line (same material as thermocouple)

Figure 5-10 Example 1: Connecting a thermocouple to an analog module for compensation with "fixed reference temperature"

The figure below shows the connection options for thermocouples provided the temperature of the reference junction (outside the module) is kept at a fixed reference temperature (20 °C).

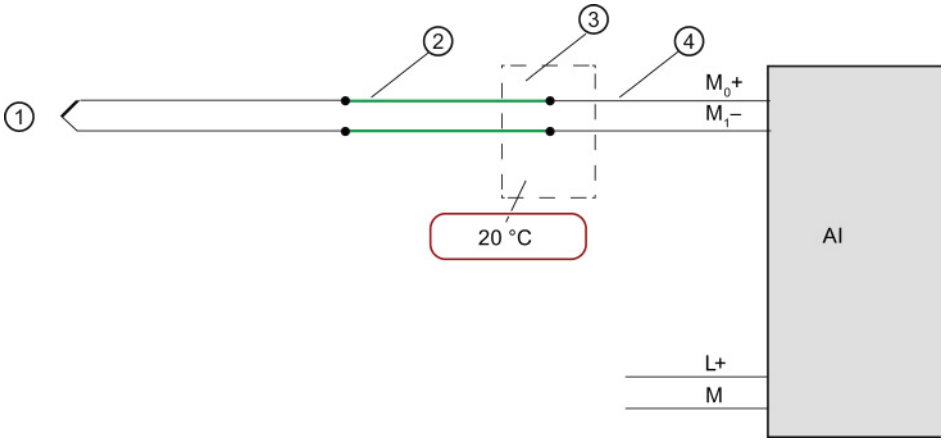

① Thermocouple with compensating line and supply line
② Compensating line (same material as thermocouple)
③ Reference junction
④ Copper supply cable, for example

Figure 5-11 Example 2: Connecting a thermocouple to an analog module for compensation with "fixed reference temperature"

5.3.6 Compensation by means of dynamic reference temperature

Function principle

This compensation type allows you to handle the reference junction temperature for temperature compensation in the user program. You can derive the temperature value from any other module of the station. The reference junction temperature is transferred via data records using the instruction **WRREC** (SFB 53).

The structure of the data records is detailed in the device manual for each module.

Requirement

STEP 7 project with the following contents:

- User program with WRREC (SFB 53) instruction for transferring the data records with reference temperature
- Analog module for acquisition of the process temperature using thermocouple (TC)
- Analog module for measuring the process temperature using thermal resistor (RTD)

Analog module for acquisition of the process temperature using thermocouple (TC)

Configuration steps:

1. Open the project in STEP 7.
2. In the device view, select the required analog module and the corresponding channel.
3. Select the "General" tab in the Inspector window of the selected module.
4. Select the "Inputs/Measuring" area.
5. Select the "Thermocouple" value as "Measurement type".
6. As "Reference junction", select the value "Dynamic reference temperature".

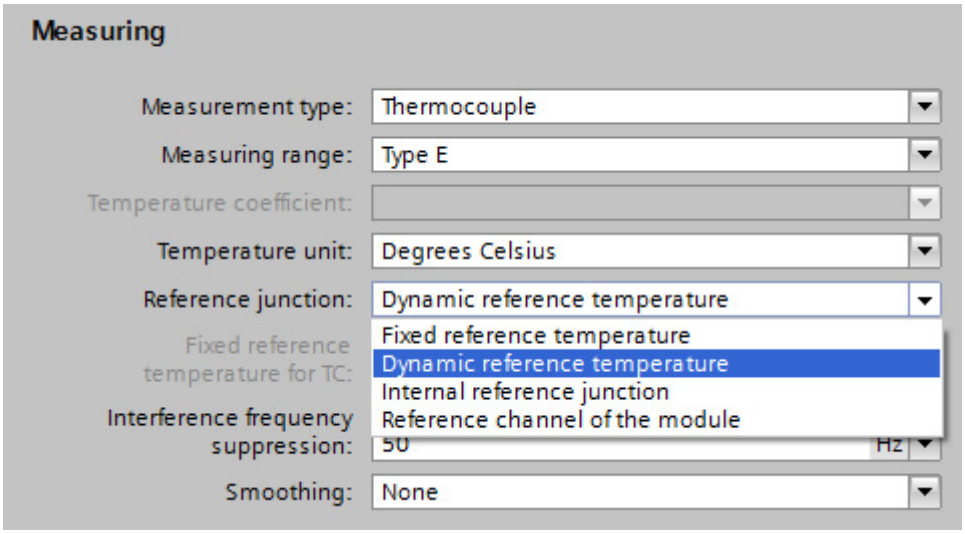

Figure 5-12 Dynamic reference temperature

Analog module for measuring the process temperature using thermal resistor (RTD)

Configuration steps:

1. Open the project in STEP 7.
2. In the device view, select the required analog module and the corresponding channel.
3. Select the "General" tab in the Inspector window of the selected module.
4. Select the "Inputs/Measuring" area.
5. Select the "Thermal resistor (4-wire connection)" value as "Measurement type".

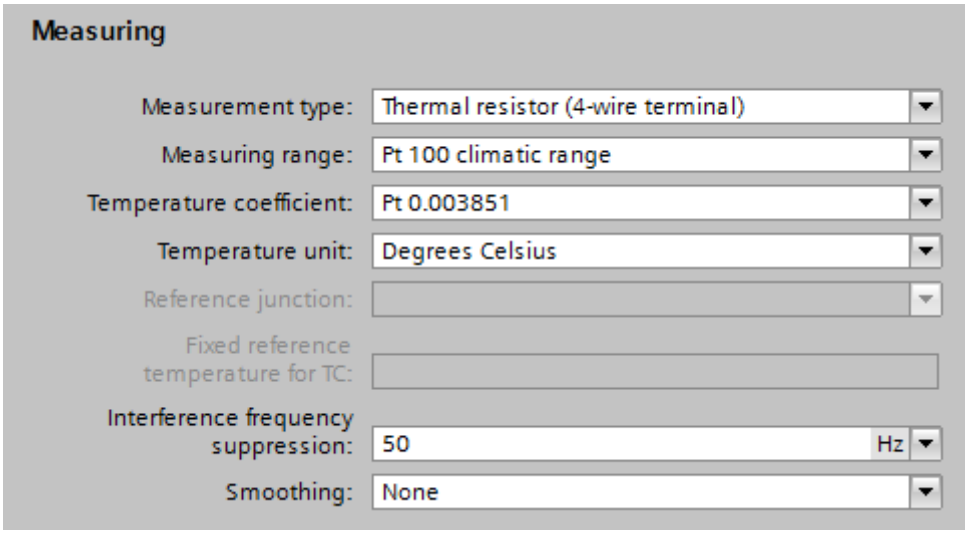

Figure 5-13 Settings for thermal resistor (RTD) type of measurement

Connecting thermocouples and thermal resistors

Connect the thermocouples, for example, to the module inputs using supply lines for temperature compensation with dynamic reference temperature. In this case, the temperature is acquired at the reference junction by means of a thermal resistor (RTD). This reference junction temperature determined in this way is transferred to the analog module with thermocouple via data records with the WRREC instruction.

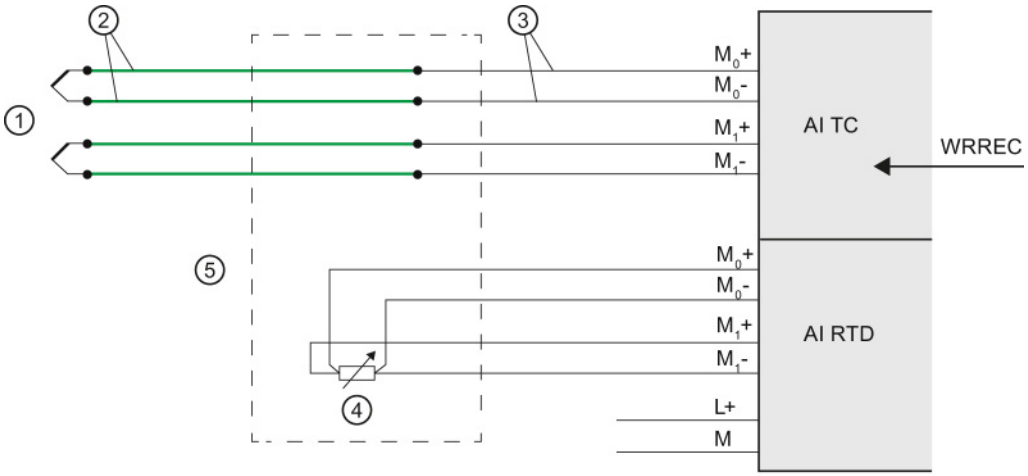

① Thermocouple
② Compensating line (same material as thermocouple)
③ Copper supply cable, for example
④ Thermal resistor (RTD)
⑤ Reference junction

Figure 5-14 Example: Connecting thermocouples/thermal resistors for compensation by means of dynamic reference temperature

5.3.7 "None" or external compensation

Function principle

The reference junction temperature of the thermocouples is measured outside the analog input module, e.g., by means of a compensating box on the thermocouple. The temperature of the reference junction for this type of compensation is specified as 0° C.

The compensating box includes a bridge circuit that is calibrated for a specific reference junction temperature (compensation temperature). The connectors for the ends of the compensating line of the thermocouple form the reference junction. If the actual comparison temperature deviates from the compensation temperature, the temperature-dependent bridge resistor changes. A positive or negative compensation voltage is generated and added to the thermal voltage.

Note

Thermocouples of type B do not require a compensating box.

Procedure

Configuration steps:

1. Open the project in STEP 7.
2. Select the required analog module in the Device view.
3. Select the "Inputs" tab in the Inspector window of the selected module and the respective channel.
4. Select the "Thermocouple" value as "Measurement type" in the "Measuring" area.
5. As "Reference junction", select the value "None" or "External compensation" depending on the used module.

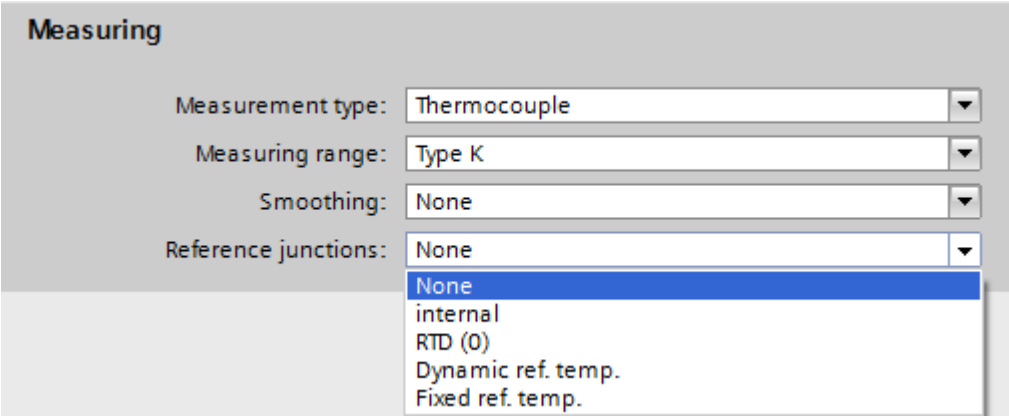

Figure 5-15 No reference junction

Connection of the compensating box

The compensating box is looped into the supply lines of an individual thermocouple. The compensating box must be supplied isolated. The power supply unit must have a sufficient noise filter, e.g., by means of a grounded shielding winding.

Each channel can use its own thermocouple type supported by the analog module regardless of the other channels. A separate compensating box is required for each channel.

Connection example "None" or external compensation

Connect the compensating box with the connection module of the analog input module using copper cables.

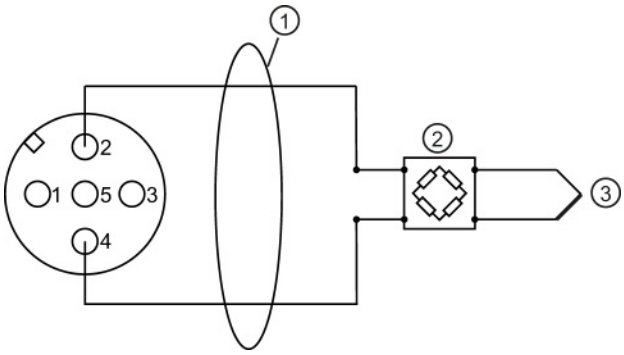

① Copper cables

② Compensating box (per channel), for example; thermocouple type B does not require a compensating box

③ Thermocouple

Figure 5-16 Connection example "No" compensation as reference junction

5.3.8 Compensation type RTD (0)

Function principle

The reference junction temperature is determined by means of the resistance value of a Pt 1000 at the clamping unit of the M12 compensation connector. The resistance measurement is only permitted at the X1 circular socket (channel 0). All of the module's channels with this type of compensation receive the same reference junction temperature.

Procedure

Configuration steps:

1. Open the project in STEP 7.
2. Select the required analog module in the Device view.
3. Select the "Inputs" tab in the Inspector window of the selected module.
4. Select the "Thermocouple" value as "Measurement type" in the "Measuring" area.
5. As "Reference junction", select the value "RTD (0)".

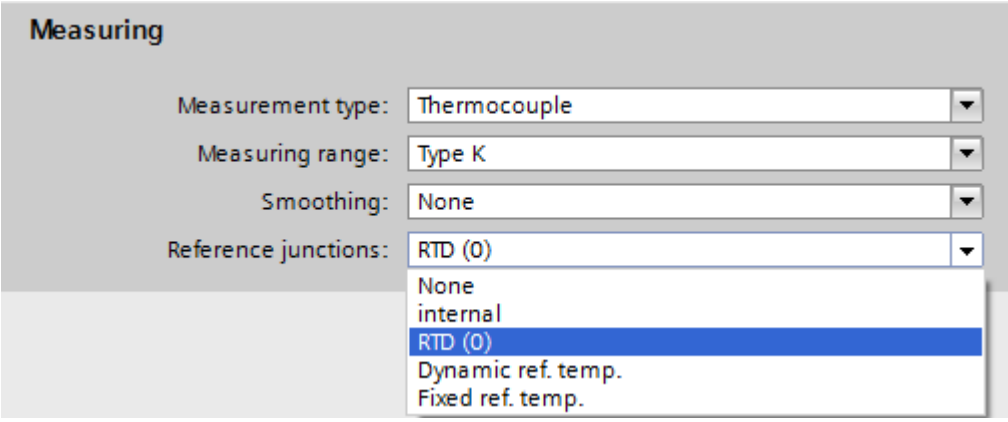

Figure 5-17 Compensation type RTD (0)

Connection example

Connection with M12 compensation connector

Connect the thermocouple to the M12 compensation connector directly or with compensating lines. Install the M12 compensation connector to the X1 circular socket (channel 0) of the CM IO 4 x M12 at the 4 AI TC High Feature.

Connection without M12 compensation connector

To measure the referent junction temperature, connect an external Pt1000 (with α = 003851) to terminals 1 and 3 using copper cables. The thermal resistor Pt1000 must be positioned in the area of the reference junction. Connect the thermocouples to terminals 2 and 4 from the reference junction with copper cables.

Connecting additional thermocouples

You can connect additional thermocouples to the circular sockets X2 to X4 on the CM IO 4 x M12 of the 4 AI TC High Feature. The temperature of reference junction collected by measuring the resistance value at the X1 circular socket applies to all channels of the module that you have selected for this type of compensation.

The figure below shows a connection example "RTD (0)" as reference junction with M12 compensation connector and integrated thermal resistor Pt1000:

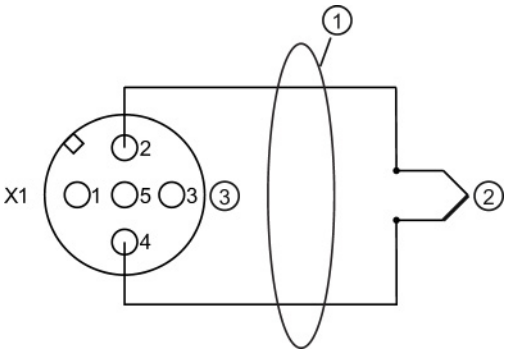

① Direct connection of the thermocouple or with compensating lines

② Thermocouple

③ M12 compensation connector (terminals 1 and 3 with internal Pt1000) only at X1 circular socket. The comparison value of the M12 compensation connector at circular socket X1 also applies to thermocouples at X2, X3 and X4.

Figure 5-18 Connection example "RTD (0)" as reference junction in the M12 compensation connector

The figure below shows a connection example "RTD (0)" as reference junction with external thermal resistor Pt1000:

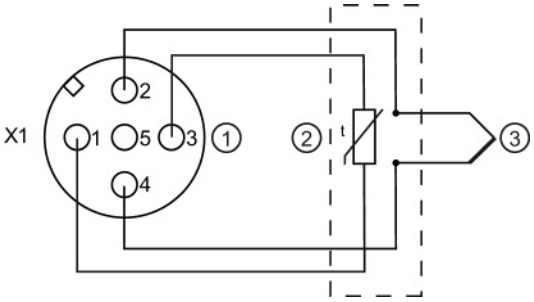

① M12 connector only at X1 circular socket

② External Pt1000 (α = 0.003851) in the area of the reference junction with copper cables at terminals 1 and 3. The comparison value of the external Pt1000 at circular socket X1 also applies to thermocouples at X2, X3 and X4.

③ Thermocouple

Figure 5-19 Connection example "RTD (0)" as reference junction with external Pt1000

Wiring loads/actuators 6

6.1 Overview

Introduction

This chapter describes the basic procedure for wiring loads/actuators to analog outputs. Information on specific wiring options is available in the manual of each module.

For detailed information on cable routing and shielding, potential equalization, etc. please refer to the function manual Configuring interference-free controllers (http://support.automation.siemens.com/WW/view/en/59193566).

Abbreviations used in the figures

Key to the abbreviations in the figures below:

AQ	Analog output module
M	Ground connection
L+	Supply voltage connection
S_n+/S_n-	Sense line channel n
QV_n+/QV_n-	Voltage output channel n
QI_n+/QI_n-	Current output channel n
M_{ANA}	Reference point of the analog ground
U_{ISO}	Insulation voltage

Lines for analog signals

Always use shielded twisted-pair cables to wire the analog signals. This improves immunity.

6.2 Wiring loads/actuators

Reference potential for analog output modules with M_{ANA} connection

Analog output modules have no galvanic connection between the reference point of the analog ground M_{ANA} and the central ground.

Always verify that the admissible potential difference U_{ISO} between the reference point of the analog ground M_{ANA} and the central ground is not exceeded.

Potential difference U_{ISO} may be caused by: Maximum line lengths exceeded.

If you want to ensure the maximum value U_{ISO} is not exceeded, wire terminal M_{ANA} and the central ground with an equipotential bonding cable.

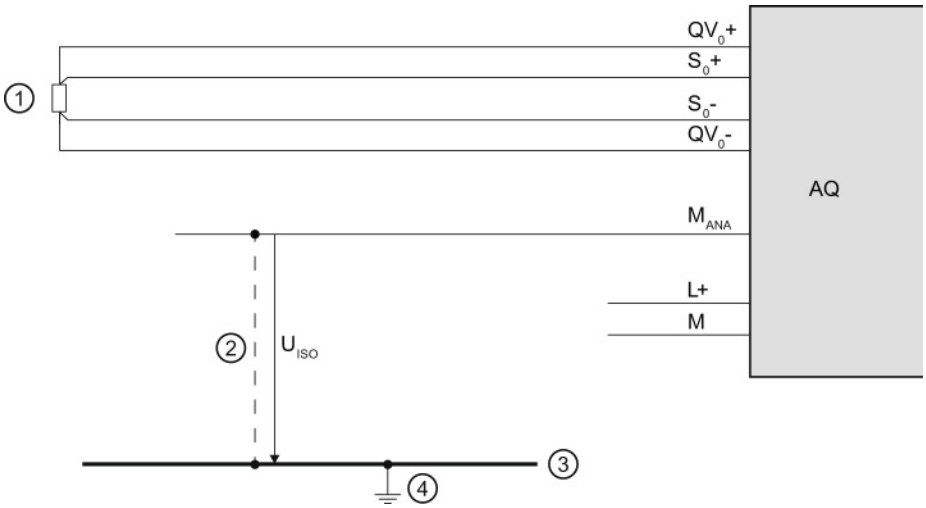

① Load on the voltage output
② Equipotential bonding cable
③ Grounding bus cable
④ Central ground

Figure 6-1 Example: Reference potential for an analog output module with M_{ANA} connection

Reference potential for analog output modules without M_{ANA} connection

Analog output modules have no galvanic connection between the reference potential of the analog output circuits and central ground.

Always verify that the maximum potential difference U_{ISO} between the reference points of the analog output circuits and the central ground is not exceeded.

Potential difference U_{ISO} may be caused by: Maximum line lengths exceeded.

If you want to ensure the maximum value U_{ISO} is not exceeded, interconnect each analog output circuit with the central ground using an equipotential bonding cable.

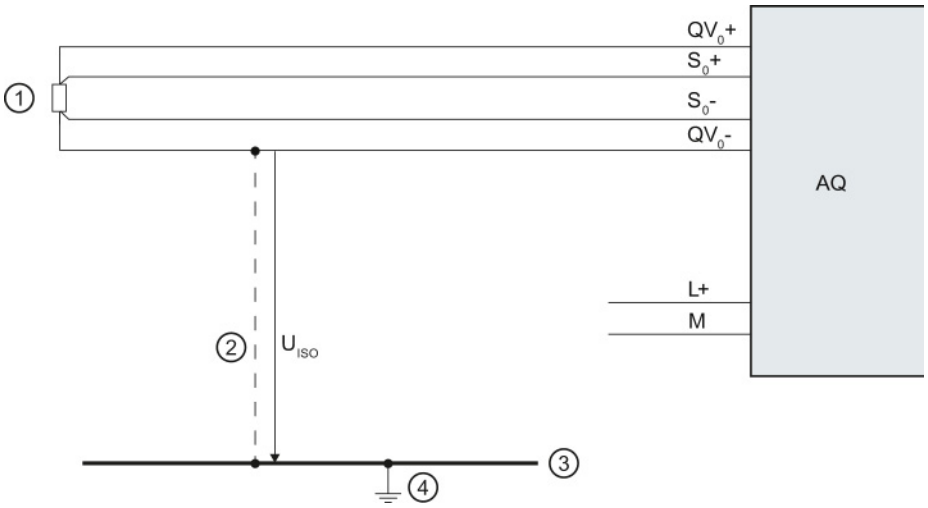

① Load on the voltage output
② Equipotential bonding cable
③ Grounding bus cable
④ Central ground

Figure 6-2 Example: Reference potential for an analog output module without M_{ANA} connection

Supported functions 7

7.1 Calibrating analog modules

7.1.1 Overview

Calibration

A calibration checks the process values measured by the analog input module and the process values output by the analog output module, determines the deviation from the actual values and compensates for any measurement and output errors.

Calibrating analog modules

The SIMATIC analog modules were calibrated before being shipped and have excellent long-term stability; calibration is therefore not required during runtime.

But certain regulations and directives, for example from the Food and Drug Administration (FDA), require regular calibration for all components in a measuring circuit. These components include analog input and output modules.

A calibration makes sense especially for plants in which sensors detect and process relatively small voltages or currents. The calibration compensates for influences on the measuring result by cables and/or temperature.

The calibration collects the new values and saves them retentively on the module. But the calibration values determined prior to delivery at the plant are not lost. You can return to these original calibration values at any time.

Note

The calibration saves the calibration values of each channel for the specific measuring range retentively on the module, which means the values apply to the same measuring range in which the user calibration took place.

If you reconfigure a channel with effective user calibration values to another type of measuring mode, the calibration values saved at the plant for this channel and for this measuring range will become effective.

But the user calibration values are not deleted. They are not overwritten until there is a new user calibration of the channel. If you set the original measuring range for this channel once again without new user calibration, the previously determined user calibration values will become effective.

The respective manual will include information whether or not your analog module supports the "Calibration" functionality.

Scope of functions

The "Calibration" group offers the following functions:

- Specifying the current calibration of all channels
- Calibrating a channel
- Canceling a running calibration
- Resetting the calibration of a channel to the factory settings

7.1.2 Calibrating analog modules

Manual calibration

The following requirements must be met to start manual calibration:

- An online connection exists between STEP 7, the respective CPU and the analog module to be calibrated.
- You have opened the "Online & Diagnostics" view for the selected analog module from the shortcut menu of the project and you are now in the "Functions > Calibration" area.
- The configuration reflects the actual structure of the station.
- No calibration process is busy on the module (if you want to launch calibration).
- A 24 V load voltage must be present at each module for the calibration.
- The last step was successfully completed (if you want to continue or conclude calibration).

Procedure

The basic mask for calibration opens once you start the "Calibration" function. The module reads the following general information data and calibration values after each new selection of a channel:

- **Calibration:** Indicates whether or not the currently effective calibration values are factory calibration values or user calibration values.
- **Measurement type:** Information about the selected measurement type
- **Measuring range:** Currently configured measuring range of the selected channel
- **Gain:** Currently effective gain correction of the analog-digital converter
- **Offset:** Currently effective offset correction of the analog-digital converter

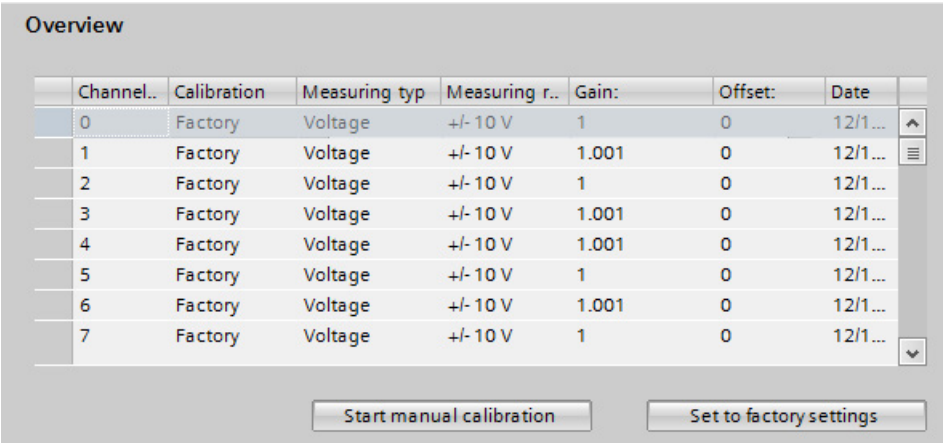

Channel..	Calibration	Measuring typ	Measuring r..	Gain:	Offset:	Date
0	Factory	Voltage	+/- 10 V	1	0	12/1...
1	Factory	Voltage	+/- 10 V	1.001	0	12/1...
2	Factory	Voltage	+/- 10 V	1	0	12/1...
3	Factory	Voltage	+/- 10 V	1.001	0	12/1...
4	Factory	Voltage	+/- 10 V	1.001	0	12/1...
5	Factory	Voltage	+/- 10 V	1	0	12/1...
6	Factory	Voltage	+/- 10 V	1.001	0	12/1...
7	Factory	Voltage	+/- 10 V	1	0	12/1...

Figure 7-1 Calibration table

To start the calibration, follow these steps:

1. Select the line associated with the channel to be calibrated in the overview table.
2. Click the "Start manual calibration" button.
3. Now go through the steps in the "Manual calibration" section.
4. Follow the instructions in the "Command" field.
5. Click ""Next".

The required calibration values of the selected channel according to the measuring range configured for this channel are specified once again during the user calibration.

Note

The calibration can take place in RUN mode as well as STOP mode of the CPU. If the CPU is in RUN, the calibration value that was last collected prior to the start of the calibration is supplied for the duration of the calibration.

The module channel to be calibrated cannot process any new process values during the user calibration. All analog input values of the module are set to 0x7FFF ("Invalid analog value") until the end of the calibration. When the value status is enabled, the value status of the signal is set to "invalid" for the duration of the calibration.

You must provide a voltage and/or temperature during a user calibration. To do so, use the corresponding external wiring and an external voltage/temperature transducer. The field "Command" includes numbers of pins to which you can connect the calibration stimulus. The first pin number identifies the positive connector, the second pin number the negative connector. The accuracy of the calibration depends on the accuracy of the provided voltage/temperature.

Note

To ensure that the module retains the specified measuring accuracy after the user calibration, the provided voltage/temperature must be twice as accurate as specified for the module. Inaccurate voltages or temperature result in a faulty calibration.

The figure below shows an example of channel calibration with "Voltage" measurement, measuring range "+/- 10 V".

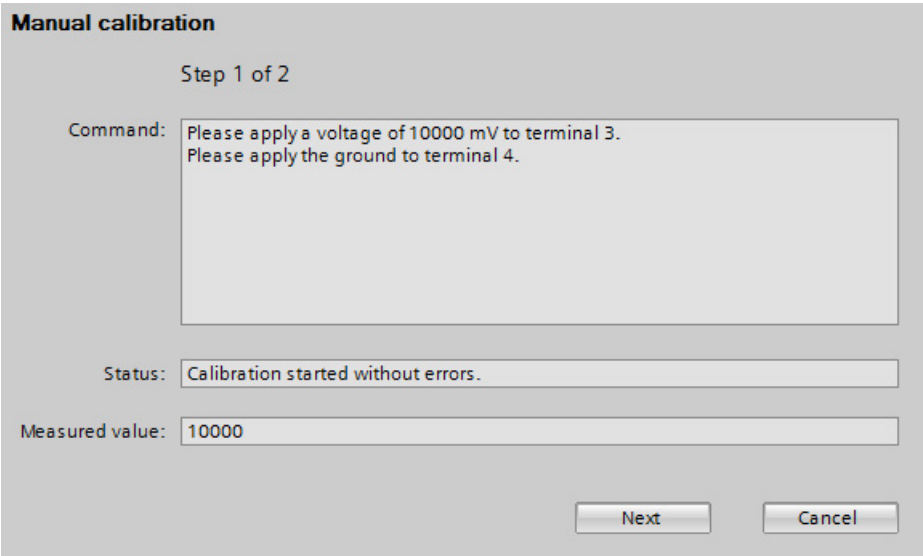

Figure 7-2 Manual calibration

- **Command:** The field "Command" indicates which actions the user has to execute during the current calibration step. Here you execute the specified actions and confirm them with the "Next" button. The module now executes all actions required for the current calibration step. If the calibration step was error-free, the next calibration step takes place.
  The instructions in the "Command" field are to be performed additively. For example, after you have applied the voltage/ground to the terminals 3/4, these connections must remain in place during the execution of the next calibration step.
- **Status:** Depending on the set type of measurement, several calibration steps are required for calibration of a channel. The field "Status" indicates whether or not the last calibration step included errors. If an error occurs during processing of a calibration step, the error is displayed here and calibration of the channel is aborted. All calibration values recorded up to this point are deleted. The calibration values that were in effect prior to the start of the user calibration are effective once again.

Note

Calibrators

If the "Wire break" diagnostics is activated for analog input modules, a test current is applied to the line for the measuring types "Resistance", "Thermistor" and "Thermocouple". This applied test current can result in inaccurate measured values in some calibrators. The wire break monitoring is therefore automatically disabled in some analog modules during the calibration.

To avoid the risk of inaccurate measured values, we recommend you disable the "Wire break" diagnostics during the calibration of analog input modules.

Result

Calibration sets new settings for the channel.

Error occurrence

If an error occurs during the calibration, the module cancels the calibration. All calibration values recorded up to this point are lost. The channel to be calibrated will then have the same settings as before the start of calibration.

7.1.3 Canceling a calibration

Requirement

- You have opened the "Online & Diagnostics" view for the selected analog module from the shortcut menu of the project and you are now in the "Functions > Calibration" area.
- The associated CPU is online.
- A calibration is currently running on the analog module.

Procedure

Click the "Cancel" button to cancel an ongoing calibration.

Result

The active calibration is canceled. The channel to be calibrated will then have the same settings as before the start of calibration.

7.1.4 Resetting analog modules to factory settings

Requirement

- You have opened the "Online & Diagnostics" view for the selected analog module from the shortcut menu of the project and you are now in the "Functions > Calibration" area.
- The associated CPU is online.

Procedure

Proceed as follows to reset the channel of an analog module to factory settings:

1. In the overview table, select the line of the channel to be calibrated.
2. Click the "Set to factory settings" button.

Result

The factory settings of the channel are restored.

Note

When you reset the current channel to the factory settings, the original calibration values that were saved in the delivery state of the module become effective once again. Any existing user calibration values of this channel are lost. You cannot restore these user calibration values.

High-speed analog modules 8

8.1 Basics

High-Speed analog modules (HS) are available for users with high demands regarding performance and speed. The main characteristics of these HS analog modules compared to Standard analog modules (ST) is their shorter cycle times. To achieve this goal, the input and output modules are equipped with components with extremely short throughput and conversion times. In addition, the entire architecture of the modules is designed for faster signal processing.

HS analog modules convert the output of measured values and output values at the same time. Each channel within the module has its own A/D or D/A converter. This means the cycle time is basically the conversion time and independent of the number of activated channels. This is true for analog input modules as well as analog output modules. This means HS modules can be used in fast isochronous mode.

Apart from isochronous mode, the HS analog modules also provide benefits in non-isochronous (free-running) mode. Due to the fast processing of the process signals, HS analog modules are able to detect changes in the process values more quickly and to respond to these events with the appropriate program blocks (for example, hardware interrupt or cyclic interrupt organization blocks). Additional information on the various organizational blocks can be found in the STEP 7 online help.

Isochronous mode

Isochronous mode refers to synchronous coupling:

- Of signal acquisition and output via the distributed I/O
- Of signal transmission via PROFIBUS or PROFINET
- Of program processing with the constant bus cycle time of PROFIBUS or PROFINET.

The result is a system that acquires its input signals in constant time intervals, processes them and outputs the output signals. Isochronous mode guarantees reproducible and defined process reaction times as well as equidistant and synchronous signal processing with distributed I/O.

The bus system and the I/O modules work synchronously with configured isochronous mode. The transmitted input and output data are linked to an "isochronous task" in the CPU. As a result, the data of a cycle are always consistent. All data of a process image belong together logically and in time. Jitter in the user program caused by the acquisition of outdated values is therefore almost impossible.

Even fast processes can be perfectly controlled by the exact timing reproducibility of all processes. Isochronous mode thus contributes to high control quality and hence to greater manufacturing precision. While possible fluctuations of the process reaction times are drastically reduced. The time-assured processing can be utilized to improve machine cycle times. Shorter cycle times increase the processing speed and help to lower production costs.

Send clocks

When you configure isochronous mode, the input and output data is synchronized within a send clock (cycle). The data of the input modules is acquired in cycle n and simultaneously transferred to the IM. The data is available in cycle n+1 in the CPU and can be processed. The CPU copies the data to the IM in the next cycle n+2. The output modules then output the data simultaneously in the same send clock. The acquisition – processing – output therefore takes place in three cycles. You can find more information on the configuration of isochronous mode in the STEP 7 online help.

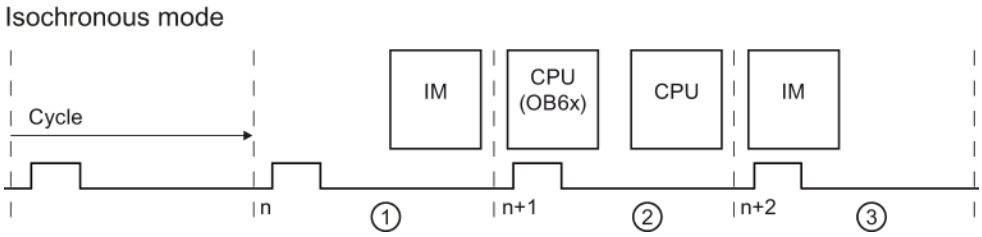

① Measured values of the input modules are acquired and copied to the IM

② Measured values are processed and output values determined

③ Output values are copied to the IM and output by output modules

Figure 8-1 3-cycle model

Oversampling

The use of the oversampling function in analog input or analog output modules requires an isochronous configuration.

With analog input modules, the set send clock is divided into time-equidistant sub-cycles. The send clocks can be subdivided into 2 to 16 sub-cycles. Each sub-cycle reads in a measured value. The read-in measured values of a data cycle are copied to the IM in the next send clock and are then available to the processing CPU one send clock later.

With analog output modules, the set send clock is also divided into time-equidistant sub-cycles. The send clocks can be subdivided into 2 to 16 sub-cycles. Each sub-cycle returns an output value. The output values are copied to the IM by the CPU within the same send clock and are written to the process one send clock later.

The read-in and output values are transmitted in the user data of the analog module. This way, the address space of the module is extended from 2 bytes of user data per channel to 16 x 2 bytes of user data per channel. If you subdivide the send clock into less than 16 sub-cycles, the unused addresses are assigned the error value 0x7FFF during input. For output, the values of the unused addresses are ignored.

Because the sub-cycles have to be within a send clock, oversampling needs an additional send clock to copy the data to the IM, unlike the 3-cycle model of isochronous mode. The result is a 5-cycle model.

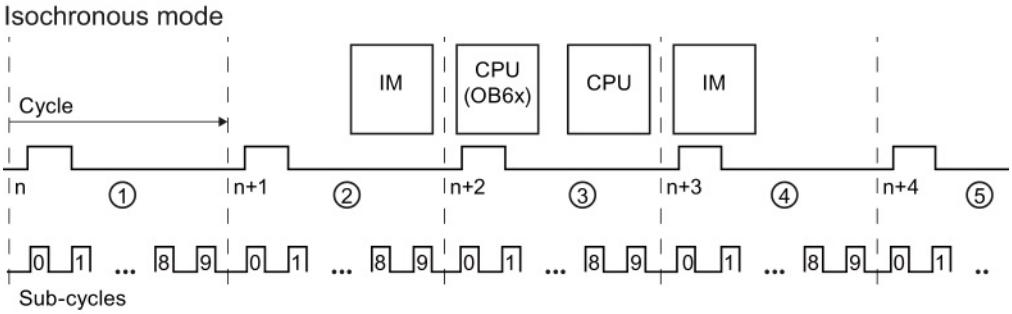

① Send clock is divided into sub-cycles which record the measured value
② Measured values are copied to the IM
③ Measured values are processed and output values determined
④ Output values are copied by the CPU to the IM
⑤ Output values are written to the process

Figure 8-2 5-cycle model

Due to the configured modules, the send clock of an IO device has a minimum possible update time, which means the time interval within which an IO device/IO controller of the PROFINET IO system is supplied with new data. Modules with oversampling functionality, however, offer the option of further reducing the update time for their channels without having to shorten the send clock for the entire S7 station at the same time. The subdivision of the send clock into time-equidistant sub-cycles therefore enables an even faster signal processing speed.

Example

In practice, the use of oversampling makes sense when the isochronous system works with only one specific specific send clock (for example, 1 ms) due to the modules used and when faster sampling of the process values is required. By using oversampling and a subdivision of the send clock into 4 sub-cycles, for example, you can sample the process values in intervals of 250 µs.

Configuring oversampling

Enable the option "Isochronous mode" in the IO device used and set the corresponding parameters ("Send clock", etc.). You define the number of sub-cycles in the relevant distributed analog module with the "Sampling rate" parameter for analog input modules and the "Output rate" parameter for analog output modules. If, for example, you configure a "Sampling rate" of 4 "Values/cycle" for a "Send clock" of 1 ms, the send clock is subdivided into 4 sub-cycles and the process values are sampled in intervals of 250 µs.

Cycle time of an analog input module

If you have configured the system property "Isochronous mode" for HS modules, all analog input modules are synchronized to a shared time within the send clock (cycle) ①. The cycle time is made up of the following time intervals: $t_Z = t_1 + t_2 + t_3 + t_4$

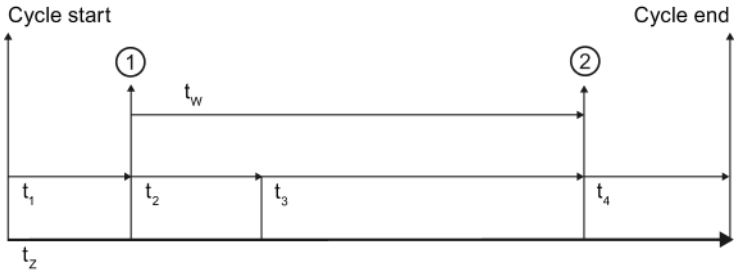

① Synchronization time for all analog input modules in isochronous mode and simultaneously time of the converted input signal at the terminal in this cycle

② Digitalized input signal is transferred to the backplane bus

t_Z Cycle time

t_1 Time between cycle start and synchronization

t_2 Hardware-related runtime up to the analog-digital converter

t_3 Processing time of digitalized input data in the module

t_4 Transfer time of the backplane bus

t_W Conversion time of the module

Figure 8-3 Cycle time of the analog input module

Cycle time of an analog output module

The synchronization time for analog output modules refers to the output of the digital-analog converter ②. Because the impedance of the connected actuator including connection cable is unknown in output modules but has a significant impact on the signal run time, the settling time cannot be added as a fixed value. The respective manuals of the output modules specify the typical load settling times as reference point. But in practice, a measurement with an oscilloscope is required for a precise measurement of the settling time. The settling time may exceed the actual end of the cycle due to very short cycle times and very high capacitive loads. The cycle time is made up of the following time intervals: $t_Z = t_1 + t_2 + t_3$

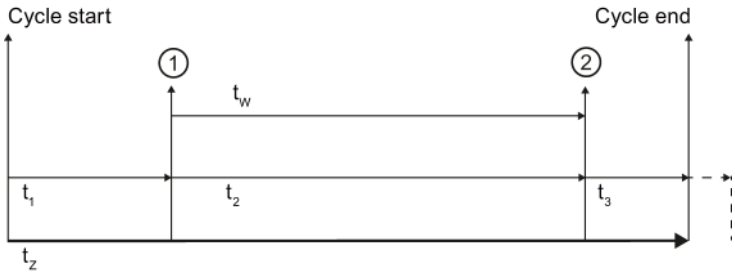

① Output data is available in digital form in the module

② Synchronization time for all analog output modules in isochronous mode and simultaneously output time of data in the digital-analog converter

t_Z Cycle time

t_1 Transfer time of the backplane bus

t_2 Processing time of data in the module until output at digital-analog converter

t_3 Settling time of hardware until setpoint of output value

t_W Conversion time of the module

Figure 8-4 Cycle time of the analog output module

Typical applications

In principle, isochronous mode is worthwhile whenever measured values must be acquired synchronously, movements must be coordinated, and process reactions must be defined and executed at the same time. There are thus numerous areas in which isochronous mode can be used.

Typical applications include, for example, the acquisition of binary signals for quality assurance at specific times and positions. But hydraulic applications with position and pressure control can benefit as well from the equidistant and isochronous data transmission.

The following example shows the use of isochronous mode within the production process of camshafts. Precise measurements must be made at several measuring points for quality assurance.

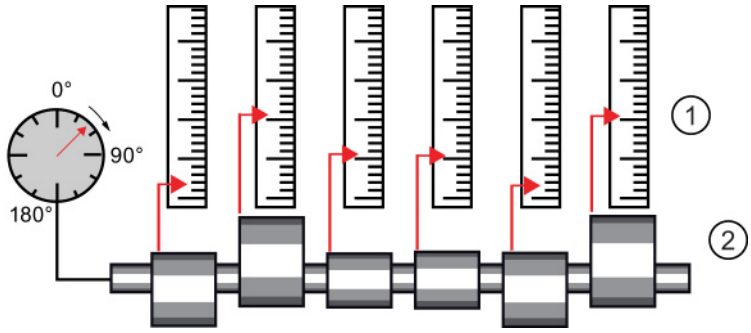

① Measured values
② Camshaft

Figure 8-5 Measuring of camshafts

By using the system property "isochronous mode" and the associated simultaneous measured value acquisition, measurement can be performed continuously. The time required for measurement is reduced. Resultant workflow:

- Continuous machining of the camshaft
- During the continuous turning, measure the positions and cam excursion synchronously
- Process the next cam shaft

All camshaft positions and the corresponding measured values are measured synchronously within a single rotation of the camshaft. This increases machine output and maintains or enhances precision of the measurement.

8.2 ST modules vs HS modules

This section gives you an overview of other important distinctions between standard and high-speed analog modules. The specified numerical values are examples of selected modules. Keep in mind that the information can vary from module to module. The exact information of specific used analog module is available in the corresponding manual.

Conversion method

Instantaneous value conversion

Instantaneous value conversion if often used to convert analog signal into digital information in HS modules. In this type of conversion a very short sample is taken from the measured signal and converted into digital data. This digital information therefore represents an instantaneous value of the measured signal. Instantaneous value conversion is used to acquire fast changes of process values, such as in the area of motion control. The quickly changing physical quantities in this case must be acquired and processed quickly in cooperation with suitable transducers. Input areas are primarily voltage, current and resistance, the latter especially for position potentiometers.

Because the measured signal is converted within a short time, there is a risk of incorrect measurements in case of faulty signals. The analog inputs working with the instantaneous value conversion method cannot detect if the sampled signal value is the target signal or an overlaying disturbing pulse. They always convert the "instantaneously" detected value. This means the pending measurement task should be carefully examined with regard to time constraints.

Integrating conversion

ST modules usually work according to the integrating conversion principle. The integrating conversion involves the sampling of a measured signal across a specified time period (integration time). Although this method is slower than instantaneous value conversion, it returns a conversion with higher immunity to interference. When you select the time interval for the conversion so that it corresponds to one or several periods of the surrounding network frequency, the omnipresent interference that is possibly also overlaying the signal is basically suppressed. SIMATIC modules give you the option to set the network frequency at which the plant is operated by means of parameter assignment. The resolution and conversion times may change depending on the interference frequency suppression that is set. The technical specifications of the respective module define these dependencies.

Analog inputs with integrating methods can be used universally. Even though the cabling must also be carefully designed with these analog inputs, the requirements are much less than those for analog inputs with instantaneous value conversion due to their slower signal acquisition that is basically immune to interference.

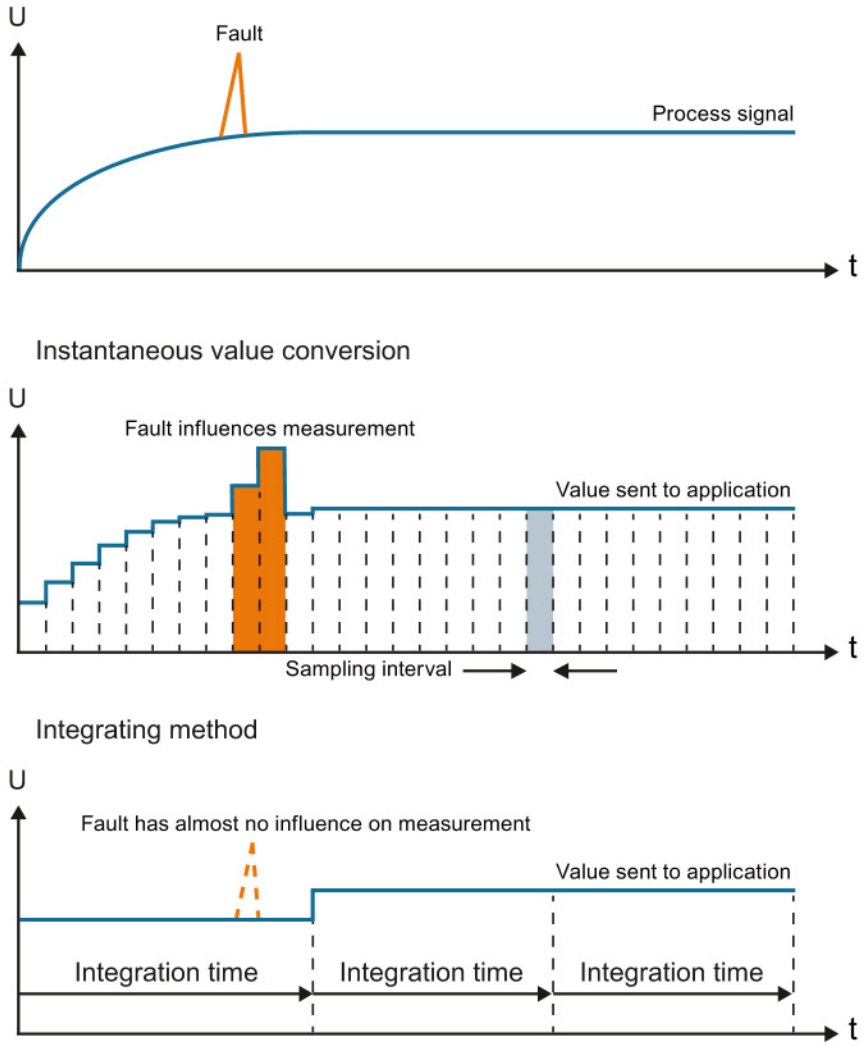

Figure 8-6 While an interference directly influences the value that is supplied to the application with instantaneous value encryption, its influence is negligible for the integrating method.

Electromagnetic compatibility

The entire architecture of HS modules is designed for fast processing of the signals. An interference-free design is therefore critical when using HS modules.

The following rules apply to the wiring of HS modules with sensors and actuators:

- Keep the cables as short as possible
- Use shielded and twisted pair cables
- Low-impedance connection of the cable shield at the respective shield supports
- Short cable loop between shield support and terminal connection

---

Note

Interference-free design

Make sure that you pay close attention to the notes listed in the function manual Configuring interference-free controllers (http://support.automation.siemens.com/WW/view/en/59193566) when using HS modules.

Effect of load on the settling time

The settling times to the setpoint achieved with analog output modules depend on the applied load, among other things. To take advantage of the faster conversion times, only small loads (e.g., max. 47 nF) are permitted in HS modules as specified in the technical specifications.

The type of load has an effect on the form of settling to the setpoint when using output modules. Capacitive loads reduce the rise time due to the charging process and can cause the output signal to overshoot. Inductive loads result in a delayed current increase due to remagnetization and therefore also a shorter rise time. The figure below shows the output signal with no/small ①, medium ② and high ③ capacitive load.

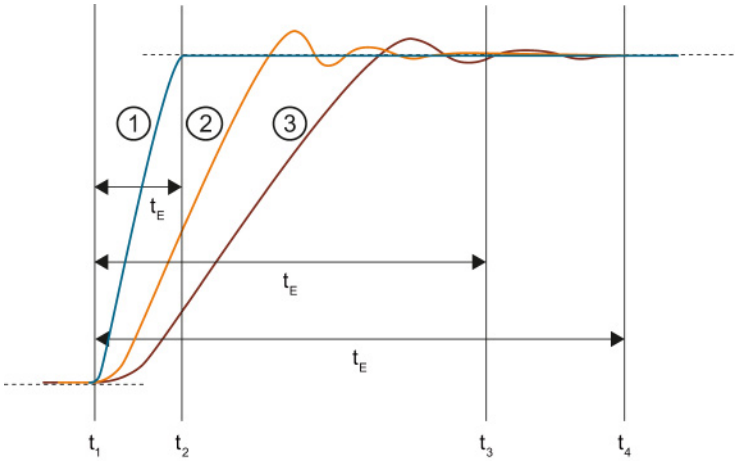

① Reference curve of a signal with no/small load capacity

② Signal with a load capacity of 47 nF

③ Signal with a load capacity of 100 nF

t_E Settling time

t_1 Module ends conversion at the terminal of the analog output channel and outputs the analog signal

t_2 Signal ① has settled and the specified analog output value has been reached (residual error 1 %)

t_3 Signal ② has settled and the specified analog output value has been reached (residual error 1 %)

t_4 Signal ③ has settled and the specified analog output value has been reached (residual error 1 %)

Figure 8-7 Effect of different loads on the settling time

Effect of the cable length on the settling time

Long cables between signal source and module are a target for interferences. You should therefore keep the cables as short as possible especially for HS modules. Cables have a capacitive and inductive component and therefore have an effect on the settling behavior of the signal.

The example below shows the jump of the output voltage of an HS output module with small, medium and long cable length. The overshoot of the input signal increases with the length of the cable and therefore the time until it reaches the setpoint.

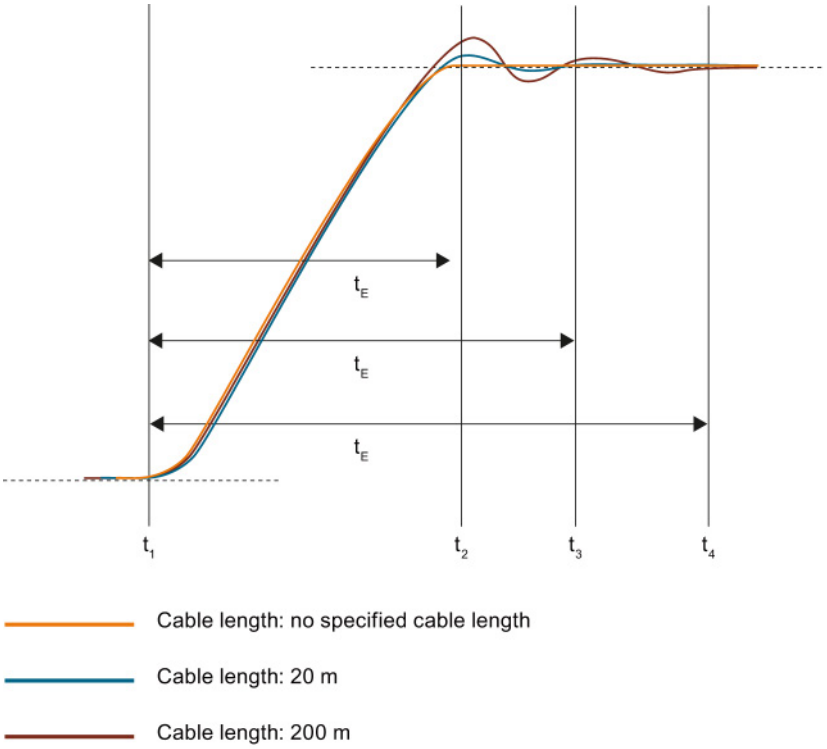

t_E Settling time

t_1 Module ends conversion at the terminal of the analog output channel and outputs the analog signal

t_2 The signal running through a cable with short length has settled and the specified analog output value has been reached (residual error 1 %)

t_3 The signal running through a 20 m cable has settled and the specified analog output value has been reached (residual error 1 %)

t_4 The signal running through a 200 m cable has settled and the specified analog output value has been reached (residual error 1 %)

Figure 8-8 Effect of different cable lengths on the settling time

Effect of the value jump on the settling time

The figure below shows the effect of the height of the value jump between different output values on the settling time for analog output modules. The dotted line indicates the time when the signal has reached the setpoint. The higher the value jump, the later the signal reaches the setpoint.

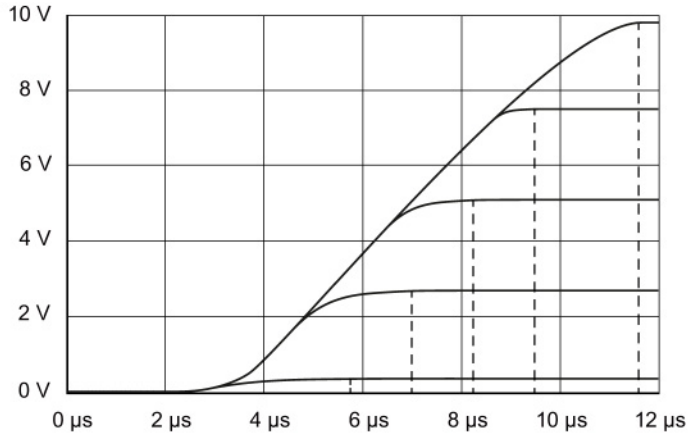

Figure 8-9 Settling time of five different analog signals with different value jumps

Index

A

Abbreviations, 66, 103
Accuracy, 15
Actuators, 11, 103, 104
Additional support, 4
Analog input modules, 60, 65
Analog output modules, 60, 104
Analog value conversion, 60
Application time, 53

B

Basic conversion time, 49
Basic error limit, 15, 24
Basic knowledge
    Required, 3
Bipolar measuring range, 25
Blocks
    SCALE, 17
    UNSCALE, 19
Burden, 57

C

Calibration, 106
    Canceling, 111
Channels
    Calibrating, 108
    Resetting to factory settings, 112
Common mode, 67, 69
Common mode rejection, 30, 33
Common mode voltage, 67
compensation
    Reference channel of group 0, 88
Compensation
    none/external, 98
Compensation with
    Dynamic reference temperature, 94
    fixed reference temperature, 91
    internal reference junction, 84
    RDT (0), 100
    Reference channel of the module, 86
conversion
    analog-to-digital, 21, 51
    digital-to-analog, 21
Conversion
    analog-to-digital, 11
    Digital-to-analog, 11
Conversion time, 27, 49, 53
coupling
    capacitive, 34
    galvanic, 31
    inductive, 31, 34
CPU, 11, 60, 67, 69
Crosstalk, 34
Crosstalk attenuation, 35
Current, 10

D

Digital multimeter, 59
Direct voltage, 69
Documentation
    additional, 7
Drift, 26
Dynamic reference temperature
    Overview, 83

E

EMC, 32
Error
    Linearity errors, 21
    Output error, 25
    Temperature error, 26
ET 200AL, 7
ET 200eco PN, 7
ET 200MP, 7
ET 200pro, 7
ET 200SP, 7
External compensation
    Overview, 83

F

Factory settings
    Resetting channels to, 112
Fixed reference temperature
    Overview, 82

G

Ground connection, 31
GSD file, 48

H

High-speed analog modules
    Isochronous mode, 113

I

Input impedance, 31
Insulation voltage, 67, 69
Interference frequency suppression, 27
Interference voltage, 31
Internal reference junction, 84
    Overview, 81
Isochronous mode
    Oversampling, 114

L

Line frequency
    16 2/3 Hz, 28
    400 Hz, 28
    50 Hz, 28
    60 Hz, 28
Linearity, 21
lines
    for analog signals, 66
Lines
    for analog signals, 103
Load, 53
Loads, 103, 104

M

Material composition
    of thermocouples, 78
Measurement point, 79
Measuring ranges
    Overflow, 42
    Overrange, 42
    Rated range, 42
    Underflow, 42
    Underrange, 42

O

Online catalog, 4
Operating principle
    of thermocouples, 80
Operational limit, 15, 23

P

Pressure, 9
PROFIBUS, 113
PROFINET, 113

Q

Quality Information (QI), 46

R

Reference channel of group 0
    Overview, 82
Reference channel of the module
    Overview, 82
Reference junction, 79
Reference junction temperature, 81
Reference potential, 69, 104
Repeat accuracy, 22
Representation of analog values, 60
    Binary representation, input ranges, 62, 63
    Binary representation, output ranges, 63
Resistance, 10
Resistance thermometers
    see Thermal resistor, 74
Resistance transducers
    4-wire connection, 74
Resolution, 13, 60
Response time, 52
RTD (0)
    Overview, 83

S

S7-1500, 7
Scaling, 17
Scope
    of the documentation, 3
Sensors,
Series mode rejection, 31, 33
Settling time, 53
Setup
    of thermocouples, 79

Sign (S), 60
Signals
    Analog, 9
    Binary, 9
    Processing, 12
Smoothing
    exponential, 56
    Linear, 55
Speed, 9
Standards
    EN 61131, 15
    FDA, 106
Step 7, 4
Step response, 55

T

Temperature, 9
Temperature measuring range
    of thermocouples, 78
Thermal resistor
    2-wire connection, 75
    3-wire connection, 75
    Connecting, 74
Thermocouples
    Wiring, 76
TIA Portal, 4
Transducers, 72
    2-wire, 57, 72
    4-wire, 73
    Connecting, 65
    Current transducers, 10, 57, 72
    Resistance transducers, 10
    Thermal resistor, 74
    Thermocouples, 10, 27, 76, 79
    Voltage transducers, 10, 71
    Wiring, 72
Types of diagnostics, 36
    Common mode error, 43
    No supply voltage, 41
    Overflow/underflow, 42
    Overload, 45
    Reference channel error, 43
    Reference junction, 44
    Short-circuit, 44
    Wire break, 41

U

Unscaling, 19

V

Value status, 46
Variables
    Analog, 9
    physical, 10
variance
    measured value, 22
Voltage, 10
Voltage drop, 59
Voltage measuring ranges
    Overflow, 14
    Overrange, 14
    Rated range, 14
    Underflow, 14
    Underrange, 14
Voltage range, 27

W

Wire break, 41

Z

Zener diode, 59

SIEMENS

Edition 11/2022

FUNCTION MANUAL

SIMATIC

S7-1500

S7-1500/S7-1500T Motion Control Overview V7.0 as of STEP 7 V18

support.industry.siemens.com

SIEMENS

SIMATIC

S7-1500
S7-1500/S7-1500T Motion Control
Overview V7.0 as of STEP 7 V18

Function Manual

Introduction (S7-1500, S7-1500T) 1

Safety instructions (S7-1500, S7-1500T) 2

Overview of functions (S7-1500, S7-1500T) 3

New features (S7-1500, S7-1500T) 4

Using versions (S7-1500, S7-1500T) 5

Configuring (S7-1500, S7-1500T) 6

Programming (S7-1500, S7-1500T) 7

Downloading to CPU (S7-1500, S7-1500T) 8

Diagnostics (S7-1500, S7-1500T) 9

S7-1500/S7-1500T Motion Control

11/2022
A5E03879256-AH

Legal information

Warning notice system

This manual contains notices you have to observe in order to ensure your personal safety, as well as to prevent damage to property. The notices referring to your personal safety are highlighted in the manual by a safety alert symbol, notices referring only to property damage have no safety alert symbol. These notices shown below are graded according to the degree of danger.

⚠ DANGER
indicates that death or severe personal injury **will** result if proper precautions are not taken.

⚠ WARNING
indicates that death or severe personal injury **may** result if proper precautions are not taken.

⚠ CAUTION
indicates that minor personal injury can result if proper precautions are not taken.

NOTICE
indicates that property damage can result if proper precautions are not taken.

If more than one degree of danger is present, the warning notice representing the highest degree of danger will be used. A notice warning of injury to persons with a safety alert symbol may also include a warning relating to property damage.

Qualified Personnel

The product/system described in this documentation may be operated only by **personnel qualified** for the specific task in accordance with the relevant documentation, in particular its warning notices and safety instructions. Qualified personnel are those who, based on their training and experience, are capable of identifying risks and avoiding potential hazards when working with these products/systems.

Proper use of Siemens products

Note the following:

⚠ WARNING
Siemens products may only be used for the applications described in the catalog and in the relevant technical documentation. If products and components from other manufacturers are used, these must be recommended or approved by Siemens. Proper transport, storage, installation, assembly, commissioning, operation and maintenance are required to ensure that the products operate safely and without any problems. The permissible ambient conditions must be complied with. The information in the relevant documentation must be observed.

Trademarks

All names identified by ® are registered trademarks of Siemens AG. The remaining trademarks in this publication may be trademarks whose use by third parties for their own purposes could violate the rights of the owner.

Disclaimer of Liability

We have reviewed the contents of this publication to ensure consistency with the hardware and software described. Since variance cannot be precluded entirely, we cannot guarantee full consistency. However, the information in this publication is reviewed regularly and any necessary corrections are included in subsequent editions.

Siemens AG
Digital Industries
Postfach 48 48
90026 NÜRNBERG
GERMANY

A5E03879256-AH
Ⓟ 10/2022 Subject to change

Copyright © Siemens AG 2012 - 2022.
All rights reserved

Table of contents

1 Introduction (S7-1500, S7-1500T) ... 7

1.1 S7-1500 Motion Control Documentation Guide (S7-1500, S7-1500T) ... 8

1.2 Function Manuals documentation guide (S7-1500, S7-1500T) ... 9
1.2.1 Information classes Function Manuals (S7-1500, S7-1500T) ... 9
1.2.2 Basic tools (S7-1500, S7-1500T) ... 10
1.2.3 SIMATIC Technical Documentation (S7-1500, S7-1500T) ... 12

2 Safety instructions (S7-1500, S7-1500T) ... 14

3 Overview of functions (S7-1500, S7-1500T) ... 15

3.1 Areas of application of S7-1500 Motion Control (S7-1500, S7-1500T) ... 15

3.2 Principle of operation of S7-1500 Motion Control (S7-1500, S7-1500T) ... 16

3.3 Configuration limits (S7-1500, S7-1500T) ... 21

4 New features (S7-1500, S7-1500T) ... 23

4.1 New features V7.0 (S7-1500, S7-1500T) ... 23
4.1.1 New general functions V7.0 (S7-1500, S7-1500T) ... 23
4.1.2 New axis functions V7.0 (S7-1500, S7-1500T) ... 24
4.1.3 New synchronous operation functions V7.0 (S7-1500, S7-1500T) ... 25
4.1.4 New kinematics functions V7.0 (S7-1500, S7-1500T) ... 26

4.2 Innovations V6.0 (S7-1500, S7-1500T) ... 28

4.3 Innovations V5.0 (S7-1500, S7-1500T) ... 30

4.4 Innovations V4.0 (S7-1500, S7-1500T) ... 32

4.5 Innovations V3.0 (S7-1500, S7-1500T) ... 33

5 Using versions (S7-1500, S7-1500T) ... 34

5.1 Overview of versions (S7-1500, S7-1500T) ... 34

5.2 Replacing devices (S7-1500, S7-1500T) ... 37

5.3 Upgrade technology version (S7-1500, S7-1500T) ... 37

5.4 Upgrading to technology version V7.0 (S7-1500, S7-1500T) ... 38

5.5 Upgrade to technology version V3.0 to V6.0 (S7-1500, S7-1500T) ... 39

5.6 Technology versions V1.0 and V2.0 (S7-1500) ... 40

6 Configuring (S7-1500, S7-1500T) ... 43

6.1 Basics on the configuration of technology objects (S7-1500, S7-1500T) ... 43
6.1.1 Add technology object (S7-1500, S7-1500T) ... 43
6.1.2 Copy technology object (S7-1500, S7-1500T) ... 44
6.1.3 Delete technology object (S7-1500, S7-1500T) ... 44
6.1.4 Working with the configuration editor (S7-1500, S7-1500T) ... 45
6.1.5 Toolbar of the configuration (S7-1500, S7-1500T) ... 46

6.2 Compare values (S7-1500, S7-1500T) ... 46

6.3 Working with the parameter view (S7-1500, S7-1500T) ... 47
6.3.1 Structure of the parameter view (S7-1500, S7-1500T) ... 48
6.3.1.1 Toolbar (S7-1500, S7-1500T) ... 48
6.3.1.2 Navigation (S7-1500, S7-1500T) ... 49
6.3.1.3 Parameter table (S7-1500, S7-1500T) ... 49
6.3.2 Opening the parameter view (S7-1500, S7-1500T) ... 50
6.3.3 Working with the parameter view (S7-1500, S7-1500T) ... 51
6.3.3.1 Filtering the parameter table (S7-1500, S7-1500T) ... 51
6.3.3.2 Sorting the parameter table (S7-1500, S7-1500T) ... 52
6.3.3.3 Indicating errors (S7-1500, S7-1500T) ... 53
6.3.3.4 Editing start values in the project (S7-1500, S7-1500T) ... 53
6.3.3.5 Monitoring values online in the parameter view (S7-1500, S7-1500T) ... 54
6.3.3.6 Modifying values (S7-1500, S7-1500T) ... 55
6.3.3.7 Comparing values (S7-1500, S7-1500T) ... 56

6.4 Configuring technological modules and onboard I/O for Motion Control (S7-1500, S7-1500T) ... 57
6.4.1 TM Count 1x24V/TM Count 2x24V (S7-1500, S7-1500T) ... 59
6.4.2 TM PosInput 1/TM PosInput 2 (S7-1500, S7-1500T) ... 61
6.4.3 TM Timer DIDQ 10x24V/TM Timer DIDQ 16x24V (S7-1500, S7-1500T) ... 63
6.4.4 TM Pulse 2x24V (S7-1500, S7-1500T) ... 64
6.4.5 TM PTO 2x24V (S7-1500, S7-1500T) ... 65
6.4.6 TM PTO 4 (S7-1500, S7-1500T) ... 67
6.4.7 CPU 1511C-1 PN/CPU 1512C-1 PN (onboard I/O devices) (S7-1500, S7-1500T) ... 70
6.4.8 SIMATIC Drive Controller (onboard I/O) (S7-1500, S7-1500T) ... 75

7 Programming (S7-1500, S7-1500T) ... 77

7.1 Process response (S7-1500, S7-1500T) ... 77
7.1.1 Organization blocks for Motion Control (S7-1500, S7-1500T) ... 77
7.1.2 Process image partition "OB Servo PIP" (S7-1500, S7-1500T) ... 80
7.1.3 Operational Sequence and Timeouts (S7-1500, S7-1500T) ... 80
7.1.4 Operating modes (S7-1500, S7-1500T) ... 84

7.2 Technology data block (S7-1500, S7-1500T) ... 86
7.2.1 Evaluating the technology data block (S7-1500, S7-1500T) ... 86
7.2.2 Evaluate StatusWord, ErrorWord and WarningWord (S7-1500, S7-1500T) ... 88
7.2.3 Change restart-relevant data (S7-1500, S7-1500T) ... 89

7.3 Motion Control instructions (S7-1500, S7-1500T) ... 90
7.3.1 Motion Control instruction parameters (S7-1500, S7-1500T) ... 90
7.3.2 Add Motion Control instructions (S7-1500, S7-1500T) ... 94
7.3.3 Parameter transfer for function blocks (S7-1500, S7-1500T) ... 96

7.4 Starting Motion Control jobs (S7-1500, S7-1500T) ... 99
7.5 Tracking active jobs (S7-1500, S7-1500T) ... 101
7.5.1 Motion Control instructions with "Done" parameter (S7-1500, S7-1500T) ... 101
7.5.2 Motion Control instructions without "Done" parameter (S7-1500, S7-1500T) ... 104
7.5.3 Motion Control instruction "MC_MoveJog" (S7-1500, S7-1500T) ... 108
7.6 Ending Motion Control jobs (S7-1500, S7-1500T) ... 111
7.7 Restart of technology objects (S7-1500, S7-1500T) ... 112
7.8 Data types (S7-1500, S7-1500T) ... 113

8 Downloading to CPU (S7-1500, S7-1500T) ... 115

9 Diagnostics (S7-1500, S7-1500T) ... 116

Glossary ... 117

Index ... 121

Introduction (S7-1500, S7-1500T) 1

Purpose of the documentation

This documentation provides important information that you need to configure and commission the integrated Motion Control functionality of the S7-1500 Automation systems.

Required basic knowledge

In order to understand this documentation, the following knowledge is required:

- General knowledge in the field of automation
- General knowledge in the field of drive engineering and motion control

Validity of the documentation

This documentation is valid for the S7-1500 product range.

Conventions

- For the path settings in the project navigation it is presumed that the "Technology objects" object is opened in the CPU subtree. The "Technology object" placeholder represents the name of the technology object.
  Example: "Technology object > Configuration > Basic parameters".
- The <TO> placeholder represents the name set in tags for the respective technology object.
  Example: <TO>.Actor.Type
- This documentation contains pictures of the devices described. The pictures may differ in minor details from the devices supplied.

You should also observe the notes that are marked as follows:

NOTE

A note contains important information about the product described in the documentation, about the handling of the product, and about sections in this documentation demanding your particular attention.

Industry Mall

The Industry Mall is the catalog and ordering system of Siemens AG for automation and drive solutions on the basis of Totally Integrated Automation (TIA) and Totally Integrated Power (TIP).

You can find catalogs for all automation and drive products on the Internet (https://mall.industry.siemens.com).

1.1 S7-1500 Motion Control Documentation Guide (S7-1500, S7-1500T)

Product information

Please also note the supplementary information on the Motion Control documentation:

- Product information on the S7-1500/1500T Motion Control documentation
  https://support.industry.siemens.com/cs/ww/en/view/109794046
  (https://support.industry.siemens.com/cs/ww/en/view/109794046)

Documentation

The documentation of the Motion Control functions is divided into the following documents:

- S7-1500/S7-1500T Motion Control Overview
  https://support.industry.siemens.com/cs/ww/en/view/109812056
  (https://support.industry.siemens.com/cs/ww/en/view/109812056)
  This document describes the innovations in the technology versions, functions that are used for all technology objects, and the process response of Motion Control applications.
- S7-1500/S7-1500T Motion Control alarms and error IDs
  https://support.industry.siemens.com/cs/ww/en/view/109812061
  (https://support.industry.siemens.com/cs/ww/en/view/109812061)
  This document describes the technology alarms of the technology objects and the error identifications of the Motion Control instructions.
- S7-1500/S7-1500T Axis functions
  https://support.industry.siemens.com/cs/ww/en/view/109812057
  (https://support.industry.siemens.com/cs/ww/en/view/109812057)
  This document describes the drive and encoder connection and functions for single-axis movements.
- S7-1500/S7-1500T Synchronous operation functions
  https://support.industry.siemens.com/cs/ww/en/view/109812059
  (https://support.industry.siemens.com/cs/ww/en/view/109812059)
  This document describes gearing, velocity synchronous operation and camming as well as cross-PLC synchronous operation.
- S7-1500/S7-1500T Measuring input and cam functions
  https://support.industry.siemens.com/cs/ww/en/view/109812060
  (https://support.industry.siemens.com/cs/ww/en/view/109812060)
  This document describes the detection of the actual position via a measuring input and the output of switching signals via output cam or cam track.
- S7-1500/S7-1500T Kinematics functions
  https://support.industry.siemens.com/cs/ww/en/view/109812058
  (https://support.industry.siemens.com/cs/ww/en/view/109812058)
  This document describes the control of kinematics with up to 6 interpolating axes.

See also

Topic page "SIMATIC Technology - Motion Control: Overview and Important Links"
https://support.industry.siemens.com/cs/ww/en/view/109751049
(https://support.industry.siemens.com/cs/ww/en/view/109751049)

1.2 Function Manuals documentation guide (S7-1500, S7-1500T)

1.2.1 Information classes Function Manuals (S7-1500, S7-1500T)

The documentation for the SIMATIC S7-1500 automation system, for the 1513/1516pro-2 PN, SIMATIC Drive Controller CPUs based on SIMATIC S7-1500 and the SIMATIC ET 200MP, ET 200SP, ET 200AL and ET 200eco PN distributed I/O systems is arranged into three areas.
This arrangement enables you to access the specific content you require.
You can download the documentation free of charge from the Internet (https://support.industry.siemens.com/cs/ww/en/view/109742705).

Basic information

The system manuals and Getting Started describe in detail the configuration, installation, wiring and commissioning of the SIMATIC S7-1500, SIMATIC Drive Controller, ET 200MP, ET 200SP, ET 200AL and ET 200eco PN systems. Use the corresponding operating instructions for 1513/1516pro-2 PN CPUs.
The STEP 7 online help supports you in the configuration and programming.
Examples:

- Getting Started S7-1500
- System manuals
- Operating instructions ET 200pro and 1516pro-2 PN CPU
- Online help TIA Portal

Device information

Equipment manuals contain a compact description of the module-specific information, such as properties, wiring diagrams, characteristics and technical specifications.
Examples:

- Equipment manuals for CPUs
- Equipment manuals for interface modules
- Equipment manuals for digital modules
- Equipment manuals for analog modules
- Equipment manuals for communication modules
- Equipment manuals for technology modules
- Equipment manuals for power supply modules
- Equipment manuals for BaseUnits

General information

The function manuals contain detailed descriptions on general topics relating to the SIMATIC Drive Controller and the S7-1500 automation system.
Examples:

- Function Manual Diagnostics
- Function Manual Communication
- Function Manuals Motion Control
- Function Manual Web Server
- Function Manual Cycle and Response Times
- PROFINET Function Manual
- PROFIBUS Function Manual

Product Information

Changes and supplements to the manuals are documented in a Product Information. The Product Information takes precedence over the device and system manuals.
You will find the latest Product Information on the Internet:

- S7-1500/ET 200MP (https://support.industry.siemens.com/cs/de/en/view/68052815)
- SIMATIC Drive Controller (https://support.industry.siemens.com/cs/de/en/view/109772684/en)
- Motion Control (https://support.industry.siemens.com/cs/de/en/view/109794046/en)
- ET 200SP (https://support.industry.siemens.com/cs/de/en/view/73021864)
- ET 200eco PN (https://support.industry.siemens.com/cs/ww/en/view/109765611)

Manual Collections

The Manual Collections contain the complete documentation of the systems put together in one file.
You will find the Manual Collections on the Internet:

- S7-1500/ET 200MP/SIMATIC Drive Controller (https://support.industry.siemens.com/cs/ww/en/view/86140384)
- ET 200SP (https://support.industry.siemens.com/cs/ww/en/view/84133942)
- ET 200AL (https://support.industry.siemens.com/cs/ww/en/view/95242965)
- ET 200eco PN (https://support.industry.siemens.com/cs/ww/en/view/109781058)

1.2.2 Basic tools (S7-1500, S7-1500T)

The tools described below support you in all steps: from planning, over commissioning, all the way to analysis of your system.

TIA Selection Tool

The TIA Selection Tool tool supports you in the selection, configuration, and ordering of devices for Totally Integrated Automation (TIA).
As successor of the SIMATIC Selection Tools , it assembles the configuration editors for automation technology already familiar into a single tool.

With the TIA Selection Tool , you can generate a complete order list from your product selection or product configuration.
You can find the TIA Selection Tool on the Internet.
(https://support.industry.siemens.com/cs/ww/en/view/109767888)

SIMATIC Automation Tool

You can use the SIMATIC Automation Tool to perform commissioning and maintenance activities on various SIMATIC S7 stations as bulk operations independent of TIA Portal.
The SIMATIC Automation Tool offers a wide range of functions:

- Scanning of a PROFINET/Ethernet system network and identification of all connected CPUs
- Assignment of addresses (IP, subnet, Gateway) and device name (PROFINET device) to a CPU
- Transfer of the date and the programming device/PC time converted to UTC time to the module
- Program download to CPU
- RUN/STOP mode switchover
- CPU localization through LED flashing
- Reading out of CPU error information
- Reading the CPU diagnostic buffer
- Reset to factory settings
- Firmware update of the CPU and connected modules

You can find the SIMATIC Automation Tool on the Internet.
(https://support.industry.siemens.com/cs/ww/en/view/98161300)

PRONETA

SIEMENS PRONETA (PROFINET network analysis) is a commissioning and diagnostic tool for PROFINET networks. PRONETA Basic has two core functions:

- The "Network analysis" offers a quick overview of the PROFINET topology. It is possible to make simple parameter changes (for example, to the names and IP addresses of the devices). In addition, a quick and convenient comparison of the real configuration with a reference system is also possible.
- The "IO test" is a simple and rapid test of the wiring and the module configuration of a plant, including documentation of the test results.

You can find SIEMENS PRONETA Basic on the Internet:
(https://support.industry.siemens.com/cs/ww/en/view/67460624)
SIEMENS PRONETA Professional is a licensed product that offers you additional functions. It offers you simple asset management in PROFINET networks and supports operators of automation systems in automatic data collection/acquisition of the components used through various functions:

- The user interface (API) offers an access point to the automation cell to automate the scan functions using MQTT or a command line.
- With PROFIenergy diagnostics, you can quickly detect the current pause mode or the readiness for operation of devices that support PROFIenergy and change these as needed.
- The data record wizard supports PROFINET developers in reading and writing acyclic PROFINET data records quickly and easily without PLC and engineering.

You can find SIEMENS PRONETA Professional on the Internet.
(https://www.siemens.com/proneta-professional)

SINETPLAN

SINETPLAN, the Siemens Network Planner, supports you in planning automation systems and networks based on PROFINET. The tool facilitates professional and predictive dimensioning of your PROFINET installation as early as in the planning stage. In addition, SINETPLAN supports you during network optimization and helps you to exploit network resources optimally and to plan reserves. This helps to prevent problems in commissioning or failures during productive operation even in advance of a planned operation. This increases the availability of the production plant and helps improve operational safety.

The advantages at a glance

- Network optimization thanks to port-specific calculation of the network load
- Increased production availability thanks to online scan and verification of existing systems
- Transparency before commissioning through importing and simulation of existing STEP 7 projects
- Efficiency through securing existing investments in the long term and the optimal use of resources

You can find SINETPLAN on the Internet
(https://new.siemens.com/global/en/products/automation/industrial-communication/profinet/sinetplan.html).

1.2.3 SIMATIC Technical Documentation (S7-1500, S7-1500T)

Additional SIMATIC documents will complete your information. You can find these documents and their use at the following links and QR codes.

The Industry Online Support gives you the option to get information on all topics. Application examples support you in solving your automation tasks.

Overview of the SIMATIC Technical Documentation

Here you will find an overview of the SIMATIC documentation available in Siemens Industry Online Support:

Industry Online Support International
(https://support.industry.siemens.com/cs/ww/en/view/109742705)

Watch this short video to find out where you can find the overview directly in Siemens Industry Online Support and how to use Siemens Industry Online Support on your mobile device:

Quick introduction to the technical documentation of automation products per video (https://support.industry.siemens.com/cs/us/en/view/109780491)

YouTube video: Siemens Automation Products - Technical Documentation at a Glance (https://youtu.be/TwLSxxRQQsA)

mySupport

With "mySupport" you can get the most out of your Industry Online Support.

Registration	You must register once to use the full functionality of "mySupport". After registration, you can create filters, favorites and tabs in your personal workspace.
Support requests	Your data is already filled out in support requests, and you can get an overview of your current requests at any time.
Documentation	In the Documentation area you can build your personal library.
Favorites	You can use the "Add to mySupport favorites" to flag especially interesting or frequently needed content. Under "Favorites", you will find a list of your flagged entries.
Recently viewed articles	The most recently viewed pages in mySupport are available under "Recently viewed articles".
CAx data	The CAx data area gives you access to the latest product data for your CAx or CAe system. You configure your own download package with a few clicks: • Product images, 2D dimension drawings, 3D models, internal circuit diagrams, EPLAN macro files • Manuals, characteristics, operating manuals, certificates • Product master data

You can find "mySupport" on the Internet. (https://support.industry.siemens.com/My/ww/en)

Application examples

The application examples support you with various tools and examples for solving your automation tasks. Solutions are shown in interplay with multiple components in the system - separated from the focus on individual products.
You can find the application examples on the Internet.
(https://support.industry.siemens.com/cs/ww/en/ps/ae)

Safety instructions (S7-1500, S7-1500T) 2

Siemens provides products and solutions with industrial security functions that support the secure operation of plants, systems, machines and networks.

In order to protect plants, systems, machines and networks against cyber threats, it is necessary to implement – and continuously maintain – a holistic, state-of-the-art industrial security concept. Siemens' products and solutions constitute one element of such a concept.

Customers are responsible for preventing unauthorized access to their plants, systems, machines and networks. Such systems, machines and components should only be connected to an enterprise network or the internet if and to the extent such a connection is necessary and only when appropriate security measures (e.g. firewalls and/or network segmentation) are in place.

For additional information on industrial security measures that may be implemented, please visit (https://www.siemens.com/industrialsecurity).

Siemens' products and solutions undergo continuous development to make them more secure. Siemens strongly recommends that product updates are applied as soon as they are available and that the latest product versions are used. Use of product versions that are no longer supported, and failure to apply the latest updates may increase customers' exposure to cyber threats.

To stay informed about product updates, subscribe to the Siemens Industrial Security RSS Feed visit (https://www.siemens.com/cert).

Overview of functions (S7-1500, S7-1500T) 3

3.1 Areas of application of S7-1500 Motion Control (S7-1500, S7-1500T)

Machines and production lines must increasingly be adapted to different formats, sizes, product types and production processes. S7-1500 Motion Control offers a precise, dynamic and easy-to-implement solution for open- and closed-loop control of electrically driven machine axes.

Drives with PROFIdrive capability, drives with analog setpoint interface and stepper motors are controlled by means of standardized Motion Control instructions in accordance with PLCopen. The axis control panel and comprehensive online and diagnostic functions support easy commissioning and optimization of drives. S7-1500 Motion Control is fully integrated into the system diagnostics of the S7-1500 CPU.

Supported CPUs

The following CPUs support the Motion Control functions:

- Advanced Controller S7-1500(F)/S7-1500T(F)
- Distributed Controller S7-1500SP (F)/S7-1500SP T(F)
- Software Controller S7-1507S (F), S7-1508S (F)/S7-1508S T(F)
- Open Controller S7-1515SP PC2 (F)/S7-1515SP PC2 T(F)
- Drive Controller S7-150xD TF

The S7-1500T Technology CPUs offer extended functions. The fail-safe S7-1500(T)F CPUs enable you to use safety functions additionally.

Motion tasks and functions

S7-1500 Motion Control supports the following functions:

Motion task/Function	S7-1500	S7-1500T
Moving S7-1500 Motion Control enables, for example, continuous motions in roller, belt, chain and other conveyors.		
Speed-controlled continuous motions	✓	✓
Connection of drives		
Torque limiting		
Positioning S7-1500 Motion Control enables precise, cyclic positioning for motion tasks calling for dynamic response and precision.		

Motion task/Function	S7-1500	S7-1500T
Precise absolute and relative positioning (closed-loop position control)	✓	✓
High dynamic response		
Traversing range limits through HW and SW limit switches		
Backlash compensation		
Linear and rotation axes		
Switchover of active encoder	-	✓
Direct specification of motion setpoints		
Processing For continuous processing steps demanding accurate speed, torque and position, S7-1500 Motion Control enables operation of production machines with coordinated axis motions, e.g. flying saw, presses and winder applications.		
Gearing without specification of the synchronous position	✓	✓
Gearing with specification of the synchronous position	-	✓
Velocity gearing		
Camming		
Cross-PLC synchronous operation		
Handling S7-1500 Motion Control enables precise and efficient handling control with up to four mechanically-coupled axes, e.g. for palletizing and pick and place applications. The additional Motion Control package "S7-1500T Motion Control KinPlus" enables operation of up to six mechanically coupled axes.		
Calibration of coordinate systems and zones	-	✓
Moving a kinematics in a linear manner		
Moving a kinematics in a circular manner		
Moving a kinematics with a synchronous "point-to-point" motion		
Conveyor tracking		
Zone monitoring		

3.2 Principle of operation of S7-1500 Motion Control (S7-1500, S7-1500T)

You create a project, configure technology objects, and download the configuration to the CPU with the TIA Portal. The Motion Control functionality is processed in the CPU. You control the technology objects by using the Motion Control instructions in your user program. The TIA Portal provides additional functions for commissioning, optimization and diagnostics.

The following figure provides a schematic representation of the user interfaces and the integration of Motion Control into the S7-1500 CPU. The concepts are then briefly explained:

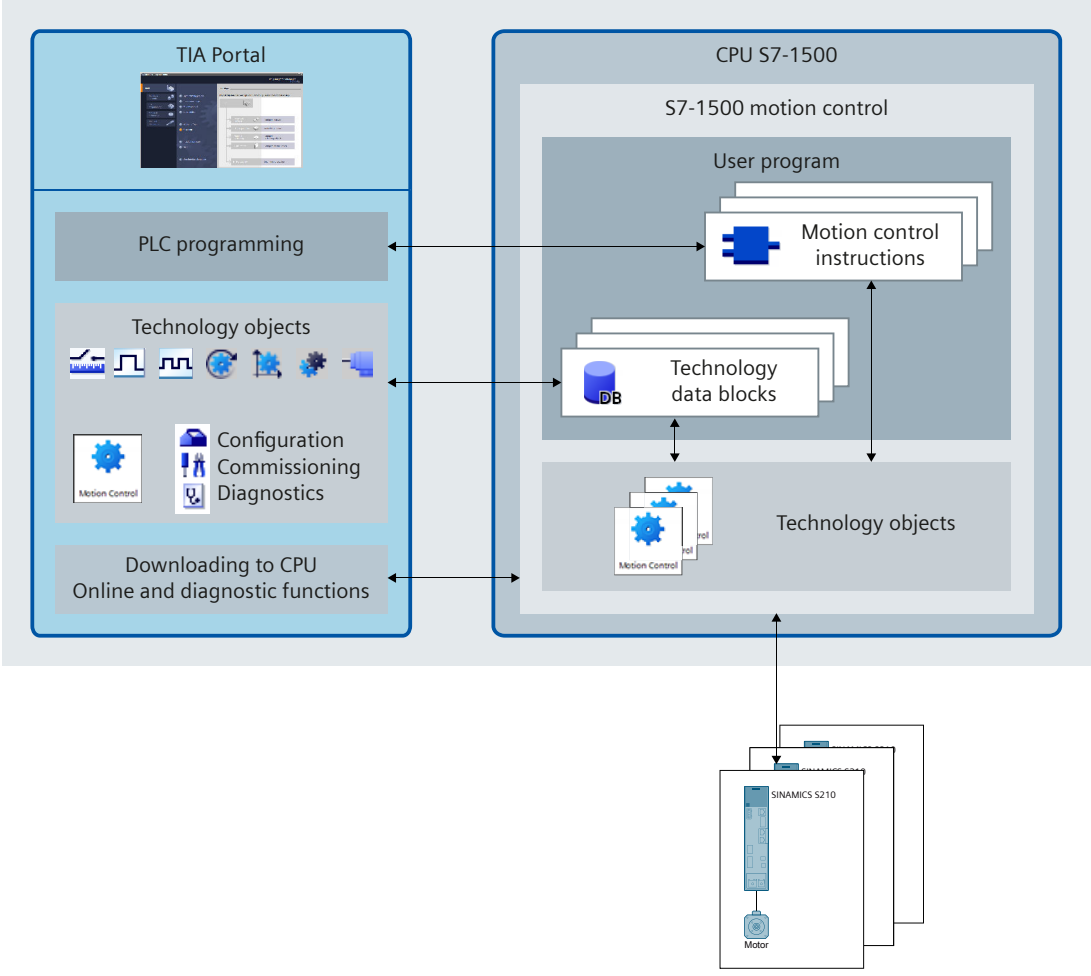

TIA Portal

The TIA Portal supports you in the planning and commissioning of Motion Control functionality:

- Integrating and configuring the hardware
- Creating and configuring the technology objects
- Creating the user program
- Downloading to the CPU
- Commissioning the axes
- Optimizing the drives
- Testing and diagnostics

You use the TIA Portal to configure the hardware, the technology objects as well as your user program. You download the program you created to the CPU. You test your user program and diagnose the hardware with the online and diagnostic functions of the TIA Portal. Automatic data adaptation prevents configuration errors and input errors between components.

Technology objects

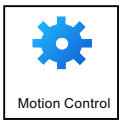

Technology objects represent real objects in the controller, such as an axis. The configuration data of the technology objects mirrors the properties of the real object. You call the functions of the technology objects by means of Motion Control instructions in your user program. These functions are executed in the Motion Control organization blocks (Page 77) independently of the user program. The technology objects perform open- and closed-loop control of the motions of the real objects and report back status information, such as the current position.

The S7-1500 and S7-1500T CPUs support the following technology objects:

Technology object		Description	S7-1500	S7-1500T
	Speed axis	The speed axis technology object ("TO_SpeedAxis") is used to specify the speed for a drive. The technology object calculates speed setpoints taking into account the preset dynamic settings and outputs them to the drive. You program the motion of the axis with Motion Control instructions. All motions of the speed axis take place as speed-controlled motions.	✓	✓
	Positioning axis	The positioning axis technology object ("TO_PositioningAxis") is used to position a drive with closed-loop position control. The technology object calculates position setpoints taking into account the preset dynamic settings and outputs corresponding speed setpoints to the drive. You issue positioning jobs to the axis with Motion Control instructions in your user program.	✓	✓
	Synchronous axis	The synchronous axis technology object ("TO_SynchronousAxis") includes all functions of the positioning axis technology object. The synchronous axis can also be interconnected with a leading value so that it, as the following axis, follows the position change of a leading axis during synchronous operation.	✓	✓
	External encoder	The external encoder technology object ("TO_ExternalEncoder") detects a position and makes this available to the controller. The detected position can be evaluated in the user program.	✓	✓
	Measuring input	The measuring input technology object ("TO_MeasuringInput") is used for quick, accurate and event-dependent detection of the actual position of an axis or external encoder when a signal change occurs at the measuring input.	✓	✓
	Output cam	The output cam technology object ("TO_OutputCam") generates switching signals depending on the position of an axis or external encoder. You can evaluate the switching signals in the user program or feed them to digital outputs.	✓	✓
	Cam track	The cam track technology object ("TO_CamTrack") generates a switching signal sequence depending on the position of an axis or external encoder. A cam track can consist of up to 32 individual output cams. The switch signals are output as a track, which you can evaluate in the user program or connect to digital outputs.	✓	✓

Technology object		Description	S7-1500	S7-1500T
	Cam	The cam technology object ("TO_Cam", "TO_Cam_10k") describes the dependency of an output variable on an input variable in a unit-neutral manner. The cam defines a transfer function f(x) that is used to couple the leading and following axes during camming. The transfer function f(x) is defined using data points and/or segments. Missing function ranges are interpolated. The cam technology object of the type "TO_Cam" can contain up to 1000 points and 50 segments. The cam technology object of the type "TO_Cam_10k" can contain up to 10,000 points and 50 segments.	-	✓
	Leading axis proxy	In the case of a cross-PLC synchronous operation, the leading axis proxy technology object ("TO_LeadingAxisProxy") represents the leading axis for the local synchronous operation within a CPU. The leading axis proxy evaluates the leading value telegram and provides the external leading value for the local following axes.	-	✓
	Kinematics	The kinematics technology object ("TO_Kinematics") is used to interconnect individual axes to a kinematics. The technology object calculates motion setpoints for the tool center point (TCP) of a kinematics taking into account the preset dynamic settings.	-	✓

You can find more in-depth information on the individual technology objects and their possible applications in the Motion Control documentation (Page 8).

Technology data block

You configure the properties of real objects using the technology objects. The configuration data of the technology objects is stored in a technology data block (Page 86). The technology data block contains all configuration data, setpoint and actual values, and status information of the technology object. The TIA Portal automatically creates the technology data block when the technology object is created. You access the data of the technology data block (read/write access) with your user program.

Motion Control instructions

With the Motion Control instructions you perform the desired functionality in the technology objects. The Motion Control instructions are available in the TIA Portal under "Instructions > Technology > Motion Control". The instructions can be called at all execution levels.

The Motion Control instructions conform to PLCopen (version 2.0).

User program

The Motion Control instructions and the technology data block represent the programming interfaces for the technology objects. You use Motion Control instructions to transfer Motion Control jobs for the technology objects in your user program. The technology objects process the jobs in the Motion Control organization blocks, which are called independent of the user

program, and report back the current status to the Motion Control instruction. Each time the Motion Control instruction is called, the current status of the current job is displayed at the output parameters of the Motion Control instruction. You access status information of the technology object and change specific configuration parameters during runtime using the technology data block.

Drives and encoders

Drives ensure the motion of the axis. They are integrated in the hardware configuration.

When you execute a Motion Control job in your user program, the technology object takes over the control of the drive and the reading in of values of encoders.

Drives and encoders with PROFIdrive capability are connected by means of PROFIdrive telegrams. The following connections are possible:

- PROFINET IO
- PROFIBUS DP
- Technology module (TM)
- SINAMICS Integrated (SIMATIC Drive Controller)

Drives with analog setpoint interfaces are connected using an analog output (AQ) and an optional enable signal. Analog inputs and outputs are made available by means of corresponding I/O modules.

A drive is also called an actuator, and an encoder is also called a sensor.

The following figure shows an example configuration in which all components are connected to the CPU by means of PROFINET IO:

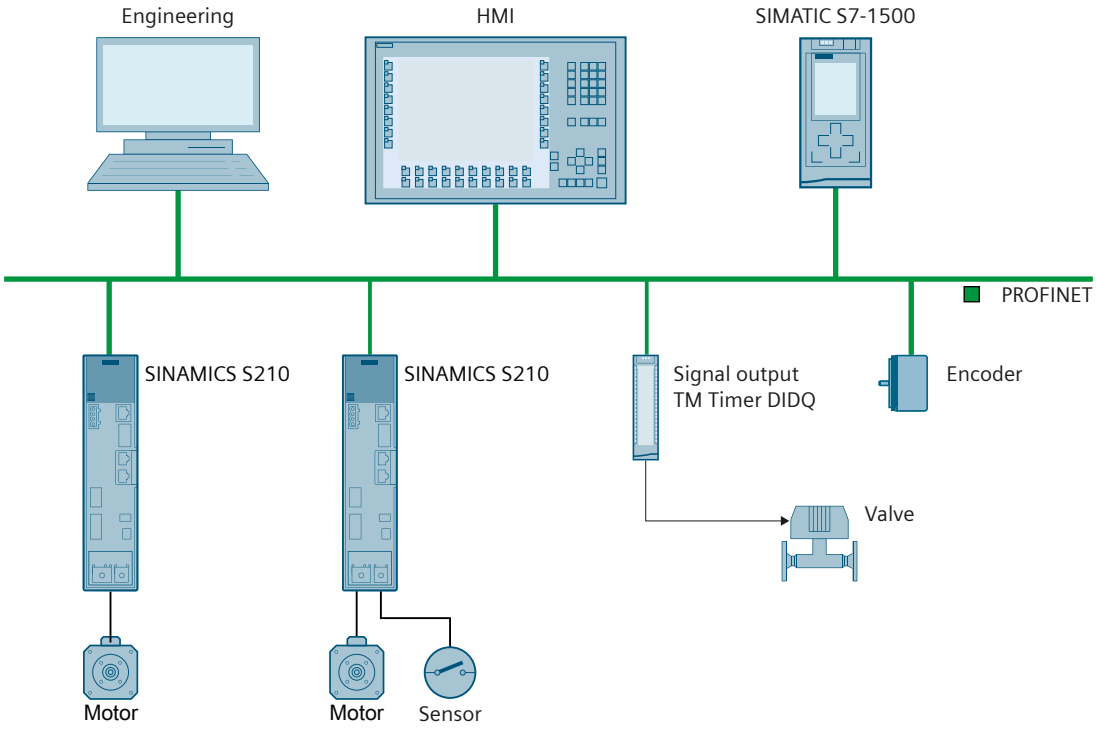

3.3 Configuration limits (S7-1500, S7-1500T)

Motion Control resources

Each CPU offers a defined set of Motion Control resources. For information on the available Motion Control resources, refer to the technical specifications of the utilized CPU.
Each technology object uses Motion Control resources:

Technology object	Motion Control resources used
Speed axis	40
Positioning axis	80
Synchronous axis	160
External encoder	80
Measuring input	40
Output cam	20
Cam track	160

The internal memory requirements of the technology objects are mapped by the Motion Control resources. The memory requirement of the TO DBs is in the work memory.
You can find an overview of the Motion Control resources of a CPU in the TIA Portal under "Tools > Resources".

Extended Motion Control resources (S7-1500T)

The leading axis proxy, cyclic cam and kinematics technology objects use "Extended Motion Control resources". For information on the maximum number of leading axis proxies, cyclic cams and kinematics that can be used in addition to the Motion Control resources, refer to the technical specifications of the relevant CPU.

Technology object	Extended Motion Control resources used
Leading axis proxy	3
Cyclic cam of the type "TO_Cam"	2
Cyclic cam of the type "TO_Cam_10k"	20
Kinematics	30

The internal memory requirements of the technology objects are mapped by the Motion Control resources. The memory requirement of the TO DBs is in the work memory.

Application cycle

As the number of technology objects used increases, the computing time needed by CPU to process the technology objects increases. The Motion Control application cycle can be adapted according to the number of technology objects used.

Selecting the S7-1500 with the TIA Selection Tool

To identify the right SIMATIC S7-1500 CPU for your Motion Control application, use the TIA Selection Tool (https://support.industry.siemens.com/cs/ww/en/view/109767888).

The TIA Selection Tool takes into account the following criteria when selecting the CPU:

- Used technology, e.g. Kinematics
- Configuration limits of the technology objects
- Cycle time
- Safety functions

New features (S7-1500, S7-1500T) 4

4.1 New features V7.0 (S7-1500, S7-1500T)

4.1.1 New general functions V7.0 (S7-1500, S7-1500T)

Technology version V7.0 contains the following new features:

Hardware

- The following new CPUs are available:
  - 1514SP/SP F
  - 1514SP T/TF
  - 1508S T/TF
- The following CPUs with an *03-0AB0 article number are available with a new hardware release:
  - 1510SP
  - 1511, 1511F/T/TF
  - 1512SP
  - 1513, 1513F
  - 1515, 1515F/T/TF
  - 1516, 1516F
  - 1504D T/F

  These CPUs offer the following improved properties with firmware version V3.0:
  - The work memory has been increased.
  - Motion control resources have been increased:

CPU	Motion Control resources
1510SP 1511, 1511F/T/TF 1512SP 1513, 1513F	1120
1504D T/TF	3200

  - The extended Motion Control resources of the technology CPUs have been increased:

CPU	Extended Motion Control Resources
1511T/TF	90
1504D T/TF	160

  - The Motion Control performance of the technology CPUs has been increased by at least 25%.

- The CPUs 1516T/TF offer the following improved properties with firmware version V3.0:
  - The code work memory has been expanded to 3 MB. The data work memory has been expanded to 7.5 MB.
  - The CPU performance and the work memory have been increased according to the new hardware release of the CPU 1516 (standard).

Programming

- Temporary references to technology objects in combination with "DB_ANY".
  You can assign a tag of data type "DB_ANY" of a type-specific reference to a technology object during runtime. If the tag contains a matching technology object type, then the reference becomes valid. After checking the validity, you can use the reference to access technology object data or Motion Control instructions. A conversion function depending on the technology object type is no longer required.
  Parameter transfer for function blocks (Page 95)

4.1.2 New axis functions V7.0 (S7-1500, S7-1500T)

Technology version V7.0 contains the following new features:

Drive and encoder connection

- When connecting a drive via data block, you can configure the communication times T_i, T_o, and T_{DC} for calculating the following error.

Motion control and dynamic limits

- The "MC_MotionInSuperimposed" instruction is available. With this instruction you can assign the axis cyclic applicative motion setpoints for additional distance, velocity and acceleration in addition to the basic motion.
- The "MC_HaltSuperimposed" instruction is available. This instruction decelerates a superimposed motion on the axis generated with the instructions "MC_MoveSuperimposed", "MC_MotionInSuperimposed", or "MC_HaltSuperimposed" to zero velocity.

Traversing range limitation

- Extension SW limit switch:
  - You can additionally configure "Stop at SW limit switch with programmable dynamics".
  - When overtraveling the SW limit switches, emergency stop and retention of the axis enable is possible.
- Extension HW limit switch:
  - When configuring the positioning axis and synchronous axis, the HW limit switches can be configured as "traversable" as before, and now as "non-traversable".
  - When approaching a HW limit switch that cannot be overtraveled, you can configure the alarm response.

Homing

- The "MC_SaveAbsoluteEncoderData" instruction is available. Use this instruction to save the absolute adjustment data for CPU device replacement on the SIMATIC Memory Card.
- With the "MC_Home" instruction, the new incremental encoder adjustment homing type "MC_Home.Mode" = 13 is available. The axis does not perform a compensating motion and the offset of the position is not applied at all encoders of the axis. This makes it easier to readjust individual encoders.
- Active and passive homing of absolute encoders with "MC_Home" is available.
- The homing status of the "<TO>.StatusSensor[1..4].Adjusted" encoders is displayed.
- The S7-1500T CPU supports absolute adjustment/incremental adjustment of non-operational encoders. This means that the respective encoder no longer has to be enabled for homing.

Configuring a control loop

- For axes in a synchronous system, the dynamic filter enables dynamic adaptation of axes with higher dynamic responses to the axis with the lowest dynamic response.

Position monitoring

- The parameter assignment of the additional delay time for following error calculation when the dynamic filter is active is available.

"MC_Power.StopMode" = 3

- The "MC_Power" instruction supports "StopMode" = 3 (coast down).

4.1.3 New synchronous operation functions V7.0 (S7-1500, S7-1500T)

Technology version V7.0 contains the following new features:

Velocity gearing (S7-1500T)

- The "MC_GearInVelocity" instruction is available. With an "MC_GearInVelocity" job, you can start velocity gearing between a leading axis and a following axis.
- Continuous changing of the gear ratio during operation is possible. While that is happening, the following axis remains in the status "Synchronous".

Camming (S7-1500T)

- The "MC_CamIn" instruction has been expanded to include the synchronization profile "SyncProfileReference" = 6. With this setting, the following axis synchronizes in advance over a pre-definable leading value path, starting from the current leading value position. The cam is offset accordingly in the master value range.
- For interpolating the cam technology object, you can improve the system performance using the properties of MC-Interpolator [OB92]. This is possible with the modular S7-1500T(F) CPUs and the SIMATIC Drive Controller as of firmware version V3.0.

4.1.4 New kinematics functions V7.0 (S7-1500, S7-1500T)

Technology version V7.0 contains the following new features:

- For motion preparation of the kinematics technology object, you can improve the system performance using the properties of MC-LookAhead [OB97]. This is possible with the modular S7-1500T(F) CPUs and the SIMATIC Drive Controller as of firmware version V3.0.

  NOTE
  Upgrade
  If you are using user-defined kinematics, disable the system performance improvement after upgrading to technology version V7.0.
  Note the information provided in the section "Upgrading to technology version V7.0" (Page 37).

- You configure mechanical axis couplings in the "Interconnections" configuration window.
- In the new "Joints" configuration window, you configure the joints of the kinematics types with more than four kinematics axes.
- Kinematics control panel:
  - You can now execute the functions of the kinematics control panel with new sliders. You can use the new sliders to finely adjust velocities of motions.
  - 3D visualization provides visual support for commissioning the kinematics technology object.
  - In the JCS, you can jog each kinematics joint individually forward, backward or to a set target position.
  - You can find the dynamics settings for commissioning in the Inspector window under "Properties".

  - The status bits in the "Control panel status" diagnostics window show you whether all kinematics axes are switched on and homed and whether there are errors on the kinematics or the kinematics axes. You can also show additional diagnostics windows via the toolbar.
  - Error messages for commissioning via the kinematics control panel are displayed in a yellow banner above the toolbar.
- Kinematics trace:
  - You can record a maximum of 64 signals in a kinematics trace.
  - You can show or hide the TCP orientation as trace in the kinematics trace.
- The "MC_MoveDirectAbsolute" and "MC_MoveDirectRelative" Motion Control instructions have been extended by the "TurnJoint" parameter.
- The "MC_KinematicsTransformation" and "MC_InverseKinematicsTransformation" Motion Control instructions have been extended by the "AxesCoordSystem" parameter.
- The arrays of the following instruction parameters have been extended from [1..4] to [1..6]:
  - MC_MoveLinearAbsolute.Position
  - MC_MoveLinearRelative.Distance
  - MC_MoveCircularAbsolute.EndPoint
  - MC_MoveCircularRelative.EndPoint
  - MC_MoveDirectAbsolute.Position
  - MC_MoveDirectRelative.Distance
  - MC_KinematicsTransformation.AxesPosition
  - MC_KinematicsTransformation.AxesVelocity
  - MC_KinematicsTransformation.AxesAcceleration
  - MC_InverseKinematicsTransformation.Position
  - MC_InverseKinematicsTransformation.Velocity
  - MC_InverseKinematicsTransformation.Acceleration

NOTE

Upgrade

When upgrading to technology version V7.0, you must adapt the user program.

Note the information provided in the section "Upgrading to technology version V7.0" (Page 37).

- The tag structure of the following tags has been extended by the coordinates B and C:
  - <TO>.Tcp
  - <TO>.KcsFrame
  - <TO>.OcsFrame
  - <TO>.Tool
  - <TO>.TcpInWcs
  - <TO>.TcpInOcs
  - <TO>.StatusOcsFrame[1..3]
  - <TO>.FlangeInKcs
  - <TO>.StatusTool
  - <TO>.StatusConveyor[1..3]
  - <TO>.StatusWorkspaceZone[1..10]

S7-1500T Motion Control KinPlus

- You can use the "S7-1500T Motion Control KinPlus" Motion Control package to configure and commission predefined kinematics types with more than four kinematics axes.
- The following kinematics types are available:
  - Cartesian portal 3D with 2 orientations A, B
  - 6-axis articulated arm with central hand
  - Delta picker 3D with 2 orientations A, B
  - User defined kinematics 3D with 3 orientations
- Joints:
  - The joint coordinate system (JCS) is available.
  - The tag "<TO>.Joint" contains the configuration of the joints for kinematics types with more than four interpolating kinematics axes.
  - The tag "<TO>.JointData" contains the setpoints of the kinematics motion for the joints.
- The tag "<TO>.AxisCoupling" contains the configuration of the mechanical axis coupling for kinematics types with more than four interpolating kinematics axes.

4.2 Innovations V6.0 (S7-1500, S7-1500T)

The technology version V6.0 contains the following new features:

General functions

- All diagnostics information is available through the web server.
- You can use the security settings to restrict access to the technology objects.
- A restart of the technology objects kinematics, output cam, cam track and measuring input no longer cancels an active job with "ErrorID" = 16#8001 but with "ErrorID" = 16#800D instead.
- Technology object data connection via data block: As of TIA Portal V17, you can connect the tag structures of the data type "PD_TELx" that are defined in arrays (Array [0..x] of "PD_TELx"), PLC data types or structures within a data block. This function is available for technology objects as of technology version V3.0 and higher.

Axis functions

- A backlash compensation can be configured for the positioning axis and synchronous axis technology objects.
- A linear axis can be configured with linear motor for the positioning axis and synchronous axis technology objects.
- The actual velocity can be calculated from the actual speed NIST_B from the drive telegram for the positioning axis, synchronous axis and external encoder technology objects.

- The "<TO>.PositionMonitoring.MinDwellTime" tag of the positioning axis and synchronous axis technology objects has the start value 0.01 s as default setting.
- Axis control panel: The "Deceleration" element in the "Control" area has the default 100% of the configured value in "Technology objects > Configuration > Extended parameters > Limits > Dynamics limits".

Synchronous operation functions

Gearing (S7-1500T):

- The "MC_PhasingAbsolute" and "MC_PhasingRelative" instructions have been expanded by additional parameters. You can traverse the leading value offset of following axis from a defined or from the current leading value position.
- In gearing, a following value offset is possible via an "MC_OffsetAbsolute" - or "MC_OffsetRelative" job. You can traverse the following value offset of following axis from a defined leading value position or from the current leading value position.
- With a "MC_GearOut" job, you can desynchronize a gearing.

Camming (S7-1500T):

- In contrast to the cam disc technology object of type "TO_Cam", the transfer function f(x) of the new cam technology object of type "TO_Cam_10k" can comprise up to 10,000 interpolation points.
- A diagnostics area is available for the cam technology object via project tree.
- The "MC_CamIn" instruction has been expanded to include the synchronization profile "SyncProfileReference" = 5. With this setting you can rescale the active cam or replace a new cam at the end of the active cam.
- In camming, a leading value offset is possible via a "MC_PhasingAbsolute" or "MC_PhasingRelative" job. You can traverse the leading value offset of following axis from a defined or from the current leading value position.
- In camming, a following value offset is possible via an "MC_OffsetAbsolute" job or "MC_OffsetRelative" job. You can traverse the following value offset of following axis from a defined leading value position or from the current position. .
- With a "MC_CopyCamData" job, you can copy calculated cam elements to a cam. You can also overwrite any existing cam elements in this step. Copying of cam elements is also possible during active camming.
- With a "MC_CamOut" job you can desynchronize a camming.

Cross-PLC synchronous operation (S7-1500T):

- A cross-PLC synchronous operation between technology objects is possible with different technology versions ≥ V5.0 on CPUs with different firmware versions ≥ V2.8.
- You can provide a cross-PLC leading value over up to eight different transfer areas.

Kinematics functions (S7-1500T)

- In the "Calibration" configuration window can calibrate workspace zones in online and offline mode.
- With a "MC_KinematicsMotionSimulation" job, you can simulate the motion of a kinematics with interconnected axes that are not enabled and exit simulation mode.

- You can configure the maximum smoothing distance in the configuration menu "Technology object > Configuration > Extended parameters> Job sequence" or directly via the "<TO>.Transition.FactorBlendingLength" tag. You can move the kinematics with smoothing distances > 50% of the shorter distance.
- In the "Technology object > Configuration > Extended parameters > Dynamics" configuration menu, you can define the default values for the dynamic responses for synchronous "point-to-point" motions.
- In the kinematics control panel, the dynamic adaptation is effective in "Jog to target position" mode and the dynamic limits of the kinematics axes are taken into account. The "dynamic adaptation without segmentation of the path" is always used.
- The tag "<TO>.StatusWord.InSimulation" indicates the simulation mode of a kinematics.
- The "<TO>.AxesData" tag structure shows the axis data from the kinematics motion.
- The "<TO>.StatusPath.AccumulatedPathLength" tag shows the sum of the distance already traveled.
- The "<TO>.StatusPath.TotalPathLength" tag shows the sum of the total distance (distance already traveled and calculated distance).
- The tag "<TO>.StatusMotionQueue.NumberOfPreparedCommands" shows the number of prepared commands in the job sequence.

4.3 Innovations V5.0 (S7-1500, S7-1500T)

Technology version V5.0 contains the following new features:

General functions

- The values for position, velocity and angle can be configured with higher resolution.
- In the central operation of the technological modules, the clock synchronization is supported via the active backplane bus.
- The organization block MC-PreInterpolator [OB68] enables iposynchronous processing of motion control instructions.
- The default value of the CPU communication load for the following CPUs was reduced from 50% to 20%:
  - S7-1505SP T/TF
  - S7-1511T/TF
  - S7-1515T/TF
  - S7-1516T/TF
- The default values of the bus clocks are:
  - 4 ms for CPUs 1511T/TF and 1515T/TF
  - 2 ms for CPU 1516T/TF
  - 1 ms for CPU 1517T/TF

Axis functions

- In the axis control panel, the dynamic values are retained until the axis control panel is closed.
- With a "MC_Stop" job, you can stop an axis and prevent new jobs.
- With a "MC_Home" job, set positions can be set absolutely or relatively.
- With a "MC_Reset" job, alarms in the drive can be acknowledged without a pending error at the technology object.
- Selected bits in control word 1 and control word 2 can be controlled with a "MC_SetAxisSTW" job.
- With a "MC_WriteParameter" job, hardware limit switches can be enabled and disabled.
- The "<TO>.VelocitySetpoint" tag indicates the active velocity setpoint.
- The tag "<TO>.ModuloCycle" indicates the number of modulo cycles of the setpoint.
- The tag "<TO>.ActualModuloCycle" indicates the number of modulo cycles of the actual value.

Sensor and cam functions (S7-1500T)

- The X142 interface of the SIMATIC Drive Controller is supported.

Synchronous operation functions (S7-1500T)

- With a cross-PLC synchronous operation, a synchronous operation is possible between axes which are located on different CPUs within a project.
- A cross-PLC synchronous operation can be configured using the leading axis proxy technology object.
- The actual value extrapolation has been extended.
- With a "MC_LeadingValueAdditive" job, an additive leading value can be specified for the following axis cyclically to a master value.
- With a "MC_GearInPos" job, a subsequent synchronization via leading value distance is possible for gearing.
- With a "MC_CamIn" job, a subsequent synchronization via leading value distance is possible for camming.
- During synchronization, the tag "<TO>.StatusSynchronizedMotion.StatusWord" indicates that the dynamic limits have been exceeded.
- The tag "<TO>.StatusSynchronizedMotion.WaitingFunctionState" indicates a pending synchronous operation.

Kinematics functions (S7-1500T)

- You can configure the predefined kinematics type "SCARA 2D with orientation".
- A model of the kinematics with the configured zones is displayed in the "Diagnostics" window.
- It is possible to calibrate object coordinate systems offline and online using the "Calibration" window.

- The movement preparation of the kinematics technology object is calculated in the MC-LookAhead [OB97] organization block.
- A kinematics with a synchronous "point-to-point" motion can be traversed absolutely with a "MC_MoveDirectAbsolute" job.
- A kinematics with a synchronous "point-to-point" motion can be traversed relatively with a "MC_MoveDirectRelative" job.
- With a "MC_KinematicsTransformation" job, a forward transformation can be calculated.
- With a "MC_InverseKinematicsTransformation" job, an inverse transformation can be calculated.
- With a "MC_TrackConveyorBelt" job, conveyor tracking is possible.

4.4 Innovations V4.0 (S7-1500, S7-1500T)

Technology version V4.0 contains the following new features:

Axis functions

- Exchange of torque data with the drive in the technological units of the technology object.
  - Additive setpoint torque
  - Current actual torque
  - Permissible torque range
- Extension of the data structure of the positioning axis and synchronous axis for using the kinematics technology object
- Use of optimized data blocks (drive/encoder connection)
- Motion specification via "MotionIn" instructions (S7-1500T)

Synchronous operation functions (S7-1500T)

- Direct synchronous setting with "MC_CamIn" V4.0 (S7-1500T)

Kinematics functions (S7-1500T)

- You can use the following kinematics with the kinematics technology object:
  - Cartesian portals
  - Roller picker
  - SCARA
  - Articulated arm
  - Delta picker
  - Cylindrical robots
  - Tripod
  - User-defined kinematics
- You can record the motions of the kinematics in the kinematics trace.

- With the kinematics control panel you can move the kinematics during the commissioning.
- The status of the motion, errors and warnings are displayed in the diagnostics.

4.5 Innovations V3.0 (S7-1500, S7-1500T)

Technology version V3.0 contains the following new features:

General functions

- Technology CPU S7-1500T

Axis functions

- Force/torque limiting
- Fixed stop detection
- Axis type virtual axis
- MC-PreServo [OB67] and MC-PostServo [OB95]
- Using multiple encoders (S7-1500T)

Synchronous operation functions (S7-1500T)

- Cyclic cam technology object (S7-1500T)
- Gearing with "MC_GearInPos" (S7-1500T)
- Camming with "MC_CamIn" (S7-1500T)

Sensor and cam functions

- Technology object measuring input
- Technology object output cam
- Technology object cam track

Using versions (S7-1500, S7-1500T) 5

5.1 Overview of versions (S7-1500, S7-1500T)

With S7-1500 motion control, the version of the technology also defines the version the technology objects and of the motion control instructions. Only one technology version can be operated on a CPU. The overview shown below includes S7-1500 and S7-1500T.

An overview of versions V1.0 and V2.0 of the technology modules is available here (Page 40).

CPU firmware version and technology version

The following table shows which technology version is available as of which firmware version of the CPU.

CPU firmware version	V7.0	V6.0	V5.0	V4.0	V3.0
V3.0	✓	✓	✓	✓	✓
V2.9[1)]	-	✓	✓	✓	✓
V2.8	-	-	✓	✓	✓
V2.5, V2.6	-	-	-	✓	✓
V2.0, V2.1	-	-	-	-	✓

1) The CPUs 1518T-4 PN/DP and 1518TF-4 PN/DP only support technology version V6.0.

Technology objects of a technology version

The following table shows as of which technology version a technology object is available.

Technology object	V7.0	V6.0	V5.0	V4.0	V3.0
Speed axis	✓	✓	✓	✓	✓
Positioning axis	✓	✓	✓	✓	✓
External encoder	✓	✓	✓	✓	✓
Synchronous axis	✓	✓	✓	✓	✓
Measuring input	✓	✓	✓	✓	✓
Output cam	✓	✓	✓	✓	✓
Cam track	✓	✓	✓	✓	✓
"TO_Cam" cyclic cam (S7-1500T)	✓	✓	✓	✓	✓
"TO_Cam_10k" cyclic cam (S7-1500T)	✓	✓	-	-	-
Leading axis proxy (S7-1500T)	✓	✓	✓	-	-
Kinematics (S7-1500T)	✓	✓	✓	✓	-

S7-1500 motion control instructions

The following table shows from which technology version a motion control instruction is available.

instructions	V7.0	V6.0	V5.0	V4.0	V3.0
MC_Power	✓[1]	✓	✓	✓	✓
MC_Reset	✓	✓	✓[1]	✓	✓
MC_Home	✓[1]	✓	✓[1]	✓	✓
MC_Halt	✓	✓	✓	✓[1]	✓[1]
MC_HaltSuperimposed	✓	-	-	-	-
MC_MoveAbsolute	✓	✓	✓	✓[1]	✓[1]
MC_MoveRelative	✓	✓	✓	✓[1]	✓
MC_MoveVelocity	✓	✓	✓	✓[1]	✓
MC_MoveJog	✓	✓	✓	✓[1]	✓
MC_MoveSuperimposed	✓	✓	✓	✓[1]	✓
MC_SetSensor	✓	✓	✓	✓	✓
MC_Stop	✓	✓	✓	-	-
MC_SetAxisSTW	✓	✓	✓	-	-
MC_WriteParameter	✓[1]	✓	✓	-	-
MC_SaveAbsoluteEncoderData	✓	-	-	-	-
MC_MeasuringInput	✓	✓	✓	✓	✓
MC_MeasuringInputCyclic	✓	✓	✓	✓	✓
MC_AbortMeasuringInput	✓	✓	✓	✓	✓
MC_OutputCam	✓	✓	✓	✓	✓
MC_CamTrack	✓	✓	✓	✓	✓
MC_GearIn	✓	✓	✓	✓	✓[1]
MC_GearInPos	✓	✓	✓[1]	✓	✓
MC_GearInVelocity	✓	-	-	-	-
MC_PhasingRelative	✓	✓[1]	✓	✓	✓
MC_PhasingAbsolute	✓	✓[1]	✓	✓	✓
MC_OffsetRelative	✓	✓	-	-	-
MC_OffsetAbsolute	✓	✓	-	-	-
MC_CamIn	✓[1]	✓[1]	✓[1]	✓[1]	✓
MC_SynchronizedMotionSimulation	✓	✓	✓	✓	✓
MC_GearOut	✓	✓	-	-	-
MC_CamOut	✓	✓	-	-	-
MC_LeadingValueAdditive	✓	✓	✓	-	-
MC_InterpolateCam	✓	✓	✓	✓	✓

[1] Instruction revised in the version

[2] Can only be used as of firmware version V2.8.2

instructions	V7.0	V6.0	V5.0	V4.0	V3.0
MC_GetCamLeadingValue	✓	✓	✓	✓	✓
MC_GetCamFollowingValue	✓	✓	✓	✓	✓
MC_CopyCamData	✓	✓	-	-	-
MC_MotionInVelocity	✓	✓	✓	✓	-
MC_MotionInPosition	✓	✓	✓	✓	-
MC_MotionInSuperimposed	✓	-	-	-	-
MC_TorqueAdditive	✓	✓	✓	✓	-
MC_TorqueRange	✓	✓	✓	✓	-
MC_TorqueLimiting	✓	✓	✓	✓	✓
MC_GroupInterrupt	✓	✓	✓	✓	-
MC_GroupContinue	✓	✓	✓	✓	-
MC_GroupStop	✓	✓	✓	✓	-
MC_MoveLinearAbsolute	✓[1]	✓	✓	✓	-
MC_MoveLinearRelative	✓[1]	✓	✓	✓	-
MC_MoveCircularAbsolute	✓[1]	✓	✓	✓	-
MC_MoveCircularRelative	✓[1]	✓	✓	✓	-
MC_MoveDirectAbsolute	✓[1]	✓	✓	-	-
MC_MoveDirectRelative	✓[1]	✓	✓	-	-
MC_TrackConveyorBelt	✓	✓	✓[2]	-	-
MC_KinematicsMotionSimulation	✓	✓	-	-	-
MC_DefineWorkspaceZone	✓	✓	✓	✓	-
MC_DefineKinematicsZone	✓	✓	✓	✓	-
MC_SetWorkspaceZoneActive	✓	✓	✓	✓	-
MC_SetWorkspaceZoneInactive	✓	✓	✓	✓	-
MC_SetKinematicsZoneActive	✓	✓	✓	✓	-
MC_SetKinematicsZoneInactive	✓	✓	✓	✓	-
MC_DefineTool	✓	✓	✓	✓	-
MC_SetTool	✓	✓	✓	✓	-
MC_SetOcsFrame	✓[1]	✓	✓	✓	-
MC_KinematicsTransformation	✓[1]	✓	✓	-	-
MC_InverseKinematicsTransformation	✓[1]	✓	✓	-	-

[1] Instruction revised in the version

[2] Can only be used as of firmware version V2.8.2

5.2 Replacing devices (S7-1500, S7-1500T)

You can replace an S7-1500 for an S7-1500T of the same design and vice versa. The behavior with respect to functions and the existing configuration is different depending on what is being replaced.

- S7-1500 ⇒ S7-1500T
  The functions of the S7-1500 are expanded to include additional parameters for the extended functions of the S7-1500T. The additional parameters are preassigned with default values and must be configured appropriately.
- S7-1500T ⇒ S7-1500
  - Extended functions are only supported by an S7-1500T and are no longer available after a replacement with S7-1500.
  - Unsupported function blocks are marked.
  - Unsupported technology objects are displayed in an error message after compilation and must be deleted.

5.3 Upgrade technology version (S7-1500, S7-1500T)

To use all the advantages of a new technology version, you need to change the technology version of existing projects for a CPU.

There are two ways of changing the technology version of a CPU:

- Changing the version of the Motion Control instructions
- Adding a technology object with an alternative version

The version of a technology object or a Motion Control instruction is indicated in the properties of the technology object in the "General > Information" tab, "Version" field.

The technology objects and Motion Control instructions are only converted to the selected version of the technology during compilation.

Changing the version of the motion control instructions

Requirements: The firmware of the CPU supports the required technology version.

To change the version of the motion control instructions, proceed as follows:

1. Open the program editor (e.g. by opening the OB1).
2. In the "Instructions" task card, select the higher technology version in the "Technology > Motion control" folder.
   The invalid technology objects and Motion Control instructions are highlighted in red after the CPU is replaced.
3. Save and compile the project.
   The version of the technology objects and Motion Control instructions is changed to the appropriate higher technology version during the project compile.
   Pay attention to any error information that is displayed during compilation. Deal with the causes of the errors indicated.
4. Check the configuration of the technology objects.
5. Take into consideration the notes on upgrading to a technology version, including those on the skipped versions.

Result: You have upgraded the technology version of the CPU.

5.4 Upgrading to technology version V7.0 (S7-1500, S7-1500T)

Extend default Motion Control instructions for kinematics movements and transformation information

Extend the ARRAY [1..4] OF LREAL to ARRAY [1..6] OF LREAL for target coordinates at the Motion Control instructions for kinematics movements and for the default at the Motion Control instructions for transformation information. The parameters have been extended at the instructions for programming kinematics with more than four kinematics axes. As the same instructions are used for programming kinematics with up to four kinematics axes, you must extend the array. To program kinematics with up to four kinematics axes, parameterize array elements 5 and 6 with "0.0".

The following parameters of the instructions have been extended to six elements:

Instruction	Parameters	Technology version	
		≤ V6.0	V7.0
MC_MoveLinearAbsolute	Position	ARRAY [1..4] OF LREAL	ARRAY [1..6] OF LREAL
MC_MoveLinearRelative	Distance		
MC_MoveCircularAbsolute	EndPoint		
MC_MoveCircularRelative	EndPoint		
MC_MoveDirectAbsolute	Position		
MC_MoveDirectRelative	Distance		
MC_KinematicsTransformation	AxesPosition		
	AxesVelocity		
	AxesAcceleration		
MC_InverseKinematicsTransformation	Position		
	Velocity		
	Acceleration		

Upgrading data types with user-defined transformation

When upgrading to technology version V7.0, the "TO_Struct_TransformationAxisData_V1" and "TO_Struct_TransformationCartesianData_V1" data types are automatically upgraded in the "TransformationParameter" system data block.

Manually update the following data types to V2 at all points of use in the project:

Technology version	
≤ V6.0	V7.0
TO_Struct_TransformationAxisData_V1	TO_Struct_TransformationAxisData_V2
TO_Struct_TransformationCartesianData_V1	TO_Struct_TransformationCartesianData_V2
REF_TO TO_Struct_TransformationParameter_V1	REF_TO TO_Struct_TransformationParameter_V2

Disabling system performance improvement for user-defined kinematics

When the technology version is upgraded to V7.0, system performance improvement for motion preparation of the kinematics technology object is enabled.

If you are using user-defined kinematics, clear the "Improve system performance" check box in the MC-LookAhead [OB97] properties under "General > Multi-core processor".

5.5 Upgrade to technology version V3.0 to V6.0 (S7-1500, S7-1500T)

Upgrading to technology version V6.0

Using "DB_ANY" data type with the cam technology object

On motion control instructions from technology version V6.0, direct assignment of the "DB_ANY" data type at the "Cam" parameter results in an access error. Due to this access error, the CPU changes to the "STOP" state.

Use a data type conversion function for the cam technology object of the type "TO_Cam" or "TO_Cam_10k". A description of the procedure can be found in the section "Parameter transfer for function blocks (Page 95)".

Upgrading to technology version V5.0

Version-dependent organization block "MC-LookAhead [OB97]"

If you switch from technology version V4.0 to ≥ V5.0, an "MC-LookAhead [OB97]" organization block (OB) is automatically created.

When switching from technology version V4.0 to ≥ V5.0, you still have the same options as with a technology version V4.0.

If you use multiple kinematics, only one "MC-LookAhead [OB97]" OB is used for all kinematics used. In the "MC-LookAhead [OB97]" OB, the motion formatting of the kinematics technology object is calculated.

Upgrading to technology version V4.0

Version-based UDT names

The following table shows the version-based UDT names for the control words and status words of the SIEMENS telegrams 10x:

UDT name < V4.0	UDT name ≥ V4.0	WORD data type
PD_STW1	PD_STW1_611Umode	Control word 1 (STW1)
PD_STW2	PD_STW2_611Umode	Control word 2 (STW2)
PD_ZSW1	PD_ZSW1_611Umode	Status word 1 (ZSW1)
PD_ZSW2	PD_ZSW2_611Umode	Status word 2 (ZSW2)

If you switch from technology version < V4.0 to ≥ V4.0 or vice versa, an error occurs during the compilation. You have to adapt the UDT names manually.

Upgrading to technology version V3.0

Tags of the technology object

Starting from technology version V3.0, all input and output addresses are specified using data type "VREF". This results in the following changes to the tags of the technical object:

Tag of technology object	Changes starting from V3.0
<TO>.Actor.Interface.AddressIn	Data type: VREF
<TO>.Actor.Interface.AddressOut	Data type: VREF
<TO>.Sensor[1..4].Interface.AddressIn	Data type: VREF
<TO>.Sensor[1..4].Interface.AddressOut	Data type: VREF
<TO>.Actor.Interface.EnableDriveOutputAddress	Data type: VREF
<TO>.Actor.Interface.EnableDriveOutputBitNumber	Tag eliminated
<TO>.Actor.Interface.DriveReadyInputAddress	Data type: VREF
<TO>.Actor.Interface.DriveReadyInputBitNumber	Tag eliminated
<TO>.Sensor[1..4].ActiveHoming.DigitalInputAddress	Data type: VREF
<TO>.Sensor[1..4].ActiveHoming.DigitalInputBitNumber	Tag eliminated
<TO>.Sensor[1..4].PassiveHoming.DigitalInputAddress	Data type: VREF
<TO>.Sensor[1..4].PassiveHoming.DigitalInputBitNumber	Tag eliminated
<TO>.PositionLimits_HW.MinInputAddress	Data type: VREF
<TO>.PositionLimits_HW.MinInputBitNumber	Tag eliminated
<TO>.PositionLimits_HW.MaxInputAddress	Data type: VREF
<TO>.PositionLimits_HW.MaxInputBitNumber	Tag eliminated

5.6 Technology versions V1.0 and V2.0 (S7-1500)

CPU FW and technology versions V1.0 and V2.0

The following table shows which version of the technology is available as of which FW version of CPU.

CPU FW	V2.0	V1.0
V1.6 or higher	✓	-
V1.5	-	✓
V1.1	-	✓
V1.0	-	✓

When changing to a CPU ≥ V1.6, you must change the technology version accordingly. Card replacement from a CPU < V1.6 to a ≥ CPU V1.6 is supported. In the TIA Portal, you can use a CPU ≥ 1.6 only to work on projects with a correspondingly higher technology version.

Technology objects in the technology versions V1.0 and V2.0

The following table shows as of which technology version a technology object is available.

Technology object	V2.0	V1.0
Speed axis	✓	✓
Positioning axis	✓	✓
External encoder	✓	✓
Synchronous axis	✓	-

S7-1500 Motion control instructions in the technology versions V1.0 and V2.0

The following table shows from which technology version a Motion Control instruction is available.

instructions	V2.0	V1.0
MC_Power	✓	✓
MC_Reset	✓	✓
MC_Home	✓[1]	✓
MC_Halt	✓	✓
MC_MoveAbsolute	✓	✓
MC_MoveRelative	✓	✓
MC_MoveVelocity	✓	✓
MC_MoveJog	✓	✓
MC_MoveSuperimposed	✓	-
MC_GearIn	✓	-

1) Instruction revised in the version

Innovations V2.0

Technology Version V2.0 contains the following new features:

- Standardization of the "MC_Home.Mode" parameter for S7-1200 Motion Control and S7-1500 Motion Control
- Simulation mode
- Support of safety functions of the drive

Upgrading to Technology version V2.0

Parameter "Mode" of the Motion Control instruction "MC_Home"

The "MC_Home.Mode" parameter for S7-1200 Motion Control and S7-1500 Motion Control has been standardized within the framework of technology version V2.0. This results in a new assignment of the parameter values for the "MC_Home.Mode" parameter.

The table below shows a comparison of the "MC_Home.Mode" parameter for technology V1.0 and ≥ V2.0:

MC_Home.HomingMode V1.0	Parameter value	MC_Home.Mode ≥ V2.0
Direct homing (absolute)	0	Direct homing (absolute)
Direct homing (relative)	1	Direct homing (relative)
Passive homing	2	Passive homing (without reset)
Passive homing (with configured home position)	3	Active homing
Active homing	4	Reserved
Active homing (with configured home position)	5	Active homing (with configured home position)
Absolute encoder adjustment (relative)	6	Absolute encoder adjustment (relative)
Absolute encoder adjustment (absolute)	7	Absolute encoder adjustment (absolute)
Passive homing (without reset)	8	Passive homing
Abort passive homing	9	Abort passive homing
-	10	Passive homing (with configured home position)

You can find additional information about the "MC_Home.Mode" parameter in the description of the Motion Control instruction "MC_Home".

Resetting the "Mode" parameter of the Motion Control instruction "MC_Home"

When you upgrade the technology version from V1.0 to ≥ V2.0, the "MC_Home.HomingMode" parameter (V1.0) is then renamed to "MC_Home.Mode" (≥ V2.0). The assignment of the parameter values is changed as well.

To reset the "MC_Home.Mode" parameter (V2.0), follow these steps:

1. To change the technology version, follow the instructions given above.
   When compiling the project, the "MC_Home.HomingMode"parameter (V1.0) is renamed to "MC_Home.Mode" (≥ V2.0):
   – The assignment of the parameter values is changed.
     You can find additional information about the "MC_Home.Mode" parameter in the description of the Motion Control instruction "MC_Home".
   – The value configured at the "MC_Home.HomingMode" parameter (V1.0) is lost. As a note on renaming, the following text is entered as the parameter value in the "MC_Home.Mode" parameter (≥ V2.0).
     "The interface has changed. You can find additional information in the description of the Motion Control instruction MC_Home".
   – There is a message in the "Info > Compile" tab in the Inspector window stating that the operand has the wrong data type.
2. Change the value of the "MC_Home.Mode" parameter (≥ V2.0) in your user program according to the new assignment.
3. Save and compile the project.

Configuring (S7-1500, S7-1500T) 6

6.1 Basics on the configuration of technology objects (S7-1500, S7-1500T)

6.1.1 Add technology object (S7-1500, S7-1500T)

The following describes how to add a technology object in the project tree.

Requirement

- A project with a CPU S7-1500 has been created.
- For the output cam, cam track, measuring input technology objects:
  A positioning axis, synchronous axis or external encoder technology object is created in the project.

Procedure

To add a technology object, follow these steps:

1. Open the CPU's folder in the project navigator.
2. Open the "Technology Objects" folder.
3. Double-click "Add new object".
   The "Add new object" dialog opens.
4. Select the required technology object. You can infer the function of the technology object from the displayed description.
5. If you add output cams, cam tracks, measuring inputs to a technology object, select the higher-level technology object in the "Axis or external encoder that is to be assigned".
6. In the "Name" input field, adapt the name to your requirements.
7. To change the suggested data block number, select the "Manual" option.
8. To add your own information about the technology object, click "Additional information".
9. To open the configuration after adding the technology object, select the "Add new and open" check box.
10. To add the technology object, click "OK".

Result

The new technology object was created and created in the "Technology objects" folder in the project tree.
If the "MC-Servo" and "MC-Interpolator" organizational units were not yet available, they were added.

6.1.2 Copy technology object (S7-1500, S7-1500T)

You can copy a technology object in the following ways:

- Copying a technology object within a CPU
- Copying a technology object from a CPU S7-1500 to a CPU S7-1500T
  Additional parameters for the extended functions are preset with default values. You must configure them appropriately.
- Copying a technology object from a CPU S7-1500T to a CPU S7-1500
  Additional parameters, which are not supported by the CPU S7-1500, are reset to the default values.

When you copy a technology object that has lower-level technology objects such as output cams, cam tracks or measuring inputs, the lower-level technology object are also copied.
The following describes how to copy a technology object within a CPU. The procedure also applies accordingly to the other copying methods mentioned.

Requirement

- A project with a CPU S7-1500 has been created.
- You have created an technology object in the project.

Procedure

To copy a technology object, follow these steps:

1. Open the CPU's folder in the project navigator.
2. Open the "Technology Objects" folder.
3. If necessary, open the higher-level technology object.
4. Select the technology object to be copied.
5. Select "Copy" in the shortcut menu.
6. Select the "Technology objects" folder or the higher-level technology object.
7. Select "Paste" in the shortcut menu.

Result

The selected technology object, including lower-level technology objects, has been copied and created in the "Technology objects" folder of the project tree.

6.1.3 Delete technology object (S7-1500, S7-1500T)

You can delete technology objects in the project tree.
When you delete a technology object that has lower-level technology objects such as output cams, cam tracks or measuring inputs, the lower-level technology object are also deleted.

Requirement

- A project with a CPU S7-1500 has been created.
- You have created an technology object in the project.

Procedure

To delete a technology object, follow these steps:

1. Open the CPU's folder in the project navigator.
2. Open the "Technology objects" folder.
3. If necessary, open the higher-level technology object.
4. Select the technology object to be deleted.
5. Select the "Delete" command in the shortcut menu.
   The "Confirm delete" dialog is opened.
6. To delete the technology object, click "Yes".

Result

The selected technology object has been deleted.

6.1.4 Working with the configuration editor (S7-1500, S7-1500T)

You configure the properties of a technology object in the configuration window. To open the configuration window of the technology object in the project view, follow these steps:

1. Open the device "Technology objects" group in the project navigator.
2. Select the technology object and double-click on "Configuration".

The configuration is divided into categories which depend on the object type, for example, basic parameters, hardware interface, extended parameters.

Configuration editor icons

Icons in the area navigation of the configuration show additional details about the status of the configuration:

Symbol	Description
	The configuration contains default values and is complete. The configuration contains only default values. With these default values you can use the technology object without additional changes.
	The configuration contains user-defined or automatically adapted values and is complete. All input fields of the configuration contain valid values and at least one preset value has been changed.
	The configuration is incomplete or incorrect. At least one input field or drop-down list contains an invalid value. The corresponding field or the drop-down list is displayed on a red background. Click the field shows you the roll-out error message that indicates the cause of error.

6.1.5 Toolbar of the configuration (S7-1500, S7-1500T)

The following functions are available in the toolbar of the function view:

Symbol	Function	Explanation
	Show online values	Displays the current values read back from the CPU.
	Couples the function view and parameter view for the objects selected in the navigation	Enables the targeted toggling between the parameter view and function-based view.
	Collapse/expand all nodes and objects	Collapses or expands all nodes and objects of the navigation or the data structure in the currently active view.
	Collapse/expand the nodes below the marked node	Collapses or expands the marked nodes and objects of the navigation or the data structure in the currently active view.

6.2 Compare values (S7-1500, S7-1500T)

If an online connection to the CPU is available, the "Monitor all" function appears in the configuration of the technology object.
The "Monitor all" function provides the following options:

- Comparison of configured start values of the project with the start values in the CPU and the actual values
- Direct editing of actual values and the start values of the project
- Immediate detection and display of input errors with suggested corrections
- Backup of actual values in the project
- Transfer of start values of the project to the CPU as actual values

NOTE
Differences between online and offline values
By adding or deleting technology objects that have a connection to other technology objects, such as cams, cam tracks, measuring inputs or synchronized axes, differences can occur when online and offline values are compared. These differences can be eliminated by re-compiling the project and then uploading it to the CPU.

Icons and operator controls

If there is an online connection to the CPU, the actual values are displayed at the parameters. In addition to the actual values of the parameters, the following symbols appear:

Symbol	Description
	Start value in CPU matches the configured start value in project
	Start value in CPU does not match the configured start value in project
	Software difference in lower-level component: The online and offline versions differ in at least one lower-level software component.

Symbol	Description
	The comparison of the Start value in CPU with the configured start value in project cannot be performed.
	Comparison of the online and offline values is not advisable.
	Use this button to show the start value of the CPU and the start value of the project for the respective parameter.

You can change the start value of the CPU directly and then download it to the CPU. With directly changeable parameters, the actual value can also be changed and the change is transferred immediately to the CPU.

6.3 Working with the parameter view (S7-1500, S7-1500T)

The Parameter view provides you with a general overview of all relevant parameters of a technology object. You obtain an overview of the parameter settings and can easily change them in offline and online mode.

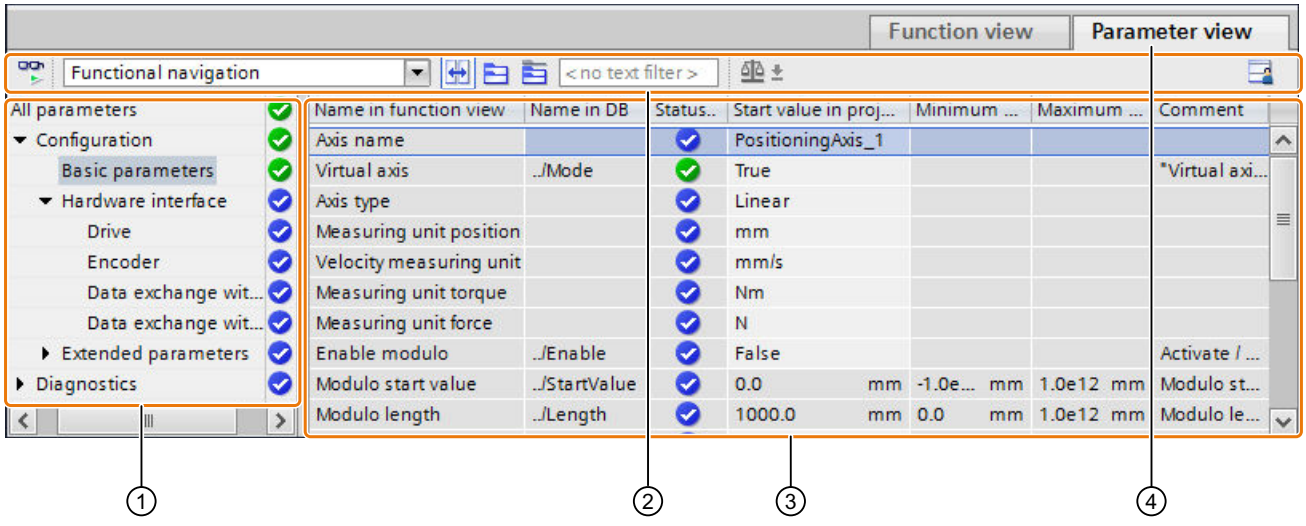

① Navigation (Page 48)

② Toolbar (Page 48)

③ Parameter table (Page 49)

④ "Parameter view" tab

Function scope

The following functions are available for analyzing the parameters of the technology objects and for enabling targeted monitoring and modification.

Display functions:

- Display of parameter values in offline and online mode
- Display of status information of the parameters
- Display of value deviations and option for direct correction
- Display of configuration errors
- Display of value changes as a result of parameter dependencies

- Display of all memory values of a parameter: Start value PLC, Start value in project, Monitor value
- Display of the parameter comparison of the memory values of a parameter

Operator control functions:

- Navigation for quickly changing between the parameters and parameter structures.
- Text filter for faster searches for particular parameters.
- Sorting function for customizing the order of parameters and parameter groups to requirements.
- Memory function for backing up structural settings of the Parameter view.
- Monitoring and modifying of parameter values online.
- Function for saving a snapshot of parameter values of the CPU in order to capture momentary situations and to respond to them.
- Function for applying a snapshot of parameter values as start values.
- Download of modified start values to the CPU.
- Comparison functions for comparing parameter values with one another.

6.3.1 Structure of the parameter view (S7-1500, S7-1500T)

6.3.1.1 Toolbar (S7-1500, S7-1500T)

The following functions can be selected in the toolbar of the parameter view.

Symbol	Function	Explanation
	Monitor all	Starts monitoring of the visible tags in the active table.
Functional navigation	Select navigation structure	Toggle between function-based navigation and the view of the data structure of the technology data block.
	Couples the function view and parameter view for the objects selected in the navigation	Enables the targeted toggling between the parameter view and function-based view.
	Collapse/expand all nodes and objects	Collapses or expands all nodes and objects of the navigation or the data structure in the currently active view.
	Collapse/expand the nodes below the marked nodes	Collapses or expands the marked nodes and objects of the navigation or the data structure in the currently active view.
<Select filter>	Text filter...	After entry of a character string: Display of all parameters containing the entered string in one of the currently visible columns.
	Selection of compare values	Selection of parameter values that are to be compared with one another in online mode (Start value in project, Start value PLC) Only in online mode.
	Save window settings	Saves your display settings for the Parameter view (e.g. selected navigation structure, activated table columns, etc.)

6.3.1.2 Navigation (S7-1500, S7-1500T)

Within the "Parameter view" tab, the following alternative navigation structures can be selected.

Navigation		Explanation
Functional navigation	▼ All parameters ▼ Configuration Basic parameters ▼ Hardware interface Drive Encoder	In the functional navigation, the structure of the parameters is based on the structure in the configuration window ("Function view" tab), commissioning window and diagnostics window.
Data structure	Velocity Acceleration ActualSpeed VelocitySetpoint ▼ Actor Type	In the "Data structure" navigation, the structure of the parameters is based on the structure of the technology data block.

You can use the "Select navigation structure" drop-down list to toggle the navigation structure.

6.3.1.3 Parameter table (S7-1500, S7-1500T)

The table below shows the meaning of the individual columns of the parameter table. You can show or hide the columns as required.

Column	Explanation	Offline	Online
Name in function view	Name of the parameter in the function view. The display field is empty for parameters that are not configured via the technology object.	✓	✓
Name in DB	Name of the parameter in the technology data block. If the parameter is part of a structure or UDT, the prefix "../" is added. The display field is empty for parameters that are not contained in the technology data block.	✓	✓
Full name in DB	Complete path of the parameter in the instance data block. The display field is empty for parameters that are not contained in the technology data block.	✓	✓
Status of configuration	Display of the completeness of the configuration using status symbols.	✓	-
Compare result	Result of the "Compare values" function. This column is displayed when there is an online connection.	-	✓
Start value in project	Configured start value in project. Error indication if entered values have a syntax or process-related error.	✓	✓

✓ This function is visible in offline/online mode.

- This function is not visible in offline/online mode.

Column	Explanation	Offline	Online
Default value	Value that is pre-assigned to the parameter. The display field is empty for parameters that are not contained in the technology data block.	✓	✓
Start value PLC	Start value in the CPU. This column is displayed when there is an online connection.	-	✓
Monitor value	Current value in the CPU. This column is displayed when there is an online connection.	-	✓
Modify value	Value that is to be used to change the monitor value. This column is displayed when there is an online connection.	-	✓
Minimum value	Minimum process-related value of the parameter. If the minimum value is dependent on other parameters, it is defined: • Offline: by the start value in the project. • Online: by the monitor values.	✓	✓
Maximum value	Maximum process-related value of the parameter. If the maximum value is dependent on other parameters, it is defined: • Offline: by the start value in the project. • Online: by the monitor values.	✓	✓
Setpoint	Designates the parameter as a setpoint. These parameters can be initialized online.	✓	✓
Data type	Data type of the parameter. The display field is empty for parameters that are not contained in the technology data block.	✓	✓
Retain	Designates the value as a retentive value. The values of retentive parameters are retained even after the voltage supply is switched off.	✓	✓
Accessible from HMI	Indicates whether the HMI can access this parameter during runtime.	✓	✓
Visible in HMI	Indicates whether the parameter is visible in the selection list of the HMI by default.	✓	✓
Comment	Brief description of the parameter.	✓	✓

✓ This function is visible in offline/online mode.

- This function is not visible in offline/online mode.

6.3.2 Opening the parameter view (S7-1500, S7-1500T)

Requirement

The technology object was added in the project navigator.

Procedure

1. Open the "Technology objects" folder in the project tree.
2. Open the technology object in the project tree.
3. Double-click the "Configuration" object.
4. Select the "Parameter view" tab in the top right corner.

Result

The Parameter view opens. Each displayed parameter is represented by one row in the parameter table.
The displayable parameter properties (table columns) vary depending on whether you are working with the Parameter view in offline or online mode.
In addition, you can selectively display and hide individual table columns.

6.3.3 Working with the parameter view (S7-1500, S7-1500T)

The following table provides an overview of the functions of the Parameter view in online and offline mode described below:

Function/action	Offline	Online
Filtering the parameter table (Page 51)	✓	✓
Sorting the parameter table (Page 52)	✓	✓
Indicating errors (Page 52)	✓	✓
Editing start values in the project (Page 53)	✓	✓
Monitoring values online in the parameter view (Page 54)	-	✓
Modifying values (Page 55)	-	✓
Comparing values (Page 56)	-	✓

✓ This function is possible in offline operation/online operation.

- This function is not possible in offline/online mode.

6.3.3.1 Filtering the parameter table (S7-1500, S7-1500T)

You can filter the parameters in the parameter table in the following ways:

- With the text filter
- With the subgroups of the navigation

Both filter methods can be used simultaneously.

With the text filter

The text filter can only be use on texts in displayed parameter lines and displayed columns.
To work with the text filter, follow these steps:

1. To filter a desired character string, enter it in the "Text filter..." input box.
   The parameter table displays only the parameters containing the character string.

To reset text filtering, the following options are available:

- Select another parameter group in the navigation.
- Switch between data navigation and functional navigation, or vice versa.

With the subgroups of the navigation

To filter the navigation with the subgroups, follow these steps:

1. Click the desired parameter group in the navigation, e.g., "Static".
   The parameter table now only shows the "static" parameters. You can select further subgroups for some groups of the navigation.
2. If all parameters are to be shown again, click "All parameters" in the navigation.

6.3.3.2 Sorting the parameter table (S7-1500, S7-1500T)

The values of the parameters are arranged in rows. The parameter table can be sorted by any displayed column.

- In columns containing numerical values, sorting is based on the magnitude of the numerical value.
- In text columns, sorting is alphabetical.

Sort column-by-column

1. Position the cursor in the header cell of the desired column.
   The background of this cell turns blue.
2. Click the column header.

Result

The entire parameter table is sorted by the selected column. A triangle with tip facing up appears in the column header.
Clicking the column header again changes the sorting as follows:

Symbol	Description
▲	Parameter table is sorted in ascending order.
▼	Parameter table is sorted in descending order.
No symbol	The sorting is removed again. The parameter table shows the default display.

The "../" prefix in the "Name in DB" column is ignored when sorting.

6.3.3.3 Indicating errors (S7-1500, S7-1500T)

Error display

Parameter assignment errors that result in compilation errors (e.g. limit violation) are indicated in the Parameter view.

Every time a value is entered in the Parameter view, a check is made for process-related and syntax errors and displayed with the following indicators:

- Red error symbol in the "Status of configuration" (offline mode) or "Compare result" (online mode, depending on the selected comparison type) columns
- Table field with red background
  If you click the bad field, a roll-out error message appears with information of the permissible value range or the required syntax (format)

Compilation error

From the error message of the compiler, you can directly open the Parameter view (functional navigation) containing the parameter causing the error in situations where the parameter is not displayed in the configuration window.

6.3.3.4 Editing start values in the project (S7-1500, S7-1500T)

With the Parameter view, you can edit the start values in the project in offline mode and online mode.

- You make value changes in the "Project start value" column of the parameter table.
- In the "Status of configuration" column of the parameter table, the progress of the configuration is indicated by the familiar status symbols from the configuration window of the technology object.

Boundary conditions

- If other parameters depend on the parameter whose start value was changed, the start value of the dependent parameters are also adapted.
- If a parameter of a technology object is not editable, it is also not editable in the parameter view. The ability to edit a parameter can also depend on the values of other parameters.

Defining new start values

To define start values for parameters in the Parameter view, follow these steps:

1. Open the Parameter view of the technology object.
2. Enter the desired start values in the "Project start value" column. The value must match the data type of the parameter and must not exceed the value range of the parameter. The limits of the value range can be seen in the "Maximum value" and "Minimum value" columns.

The "Status of configuration" column indicates the progress of the configuration with colored symbols.
Following adaptation of the start values and downloading of the technology object to the CPU, the parameters take the defined value at startup if they are not declared as retentive ("Retain" column).

Error display

When a start value is input, a check is made for process-related and syntax errors and the result is indicated.
Bad start values are indicated by:

- Red error symbol in the "Status of configuration" (offline mode) or "Compare result" (online mode, depending on the selected comparison type) columns

and/or

- Red background in the "Project start value" field
  If you click on the faulty field: a roll-out error message appears with information of the permissible value range or the necessary syntax (format)

Correcting bad start values

1. Correct bad start values using information from the roll-out error message.
   Red error symbol, red field background, and roll-out error message are no longer displayed.

The project cannot be successfully compiled unless the start values are error-free.

6.3.3.5 Monitoring values online in the parameter view (S7-1500, S7-1500T)

You can monitor the values currently taken by the parameters of the technology object in the CPU (Actual values) directly in the Parameter view.

Requirements

- There is an online connection.
- The technology object is downloaded to the CPU.
- The Parameter view of the technology object is open.

Procedure

As soon as the Parameter view is online, the following columns are additionally displayed:

- Compare result
- PLC start value
- Actual value

The "Actual value" column shows the current parameter values on the CPU.

Display

All columns that are only available online are displayed in color as follows:

Color	Description
	The values are modifiable.
	These values cannot be changed.

See also

Parameter table (Page 49)

6.3.3.6 Modifying values (S7-1500, S7-1500T)

With the Parameter view, you can modify values of the technology object in the CPU. You can assign values to a parameter once (control value) and modify them immediately. The modify request is executed as quickly as possible without reference to any particular point in the user program.

DANGER

Danger when modifying

Changing the parameter values while the plant is operating may result in severe damage to property and personal injury in the event of malfunctions or program errors.

Make sure that dangerous states cannot occur before you use the "Modify" function.

Requirements

- There is an online connection.
- The technology object is downloaded to the CPU.
- The Parameter view of the technology object is open.
- The parameter is modifiable. (Associated field in the "Actual value" column has a corresponding background color).

Procedure

To modify values immediately, follow these steps:

1. Enter the desired control value in the "Actual value" column of the parameter table.
   The parameter is modified once and immediately with the specified value.

Error display

When a control value is input, a check is made immediately for process-related and syntax errors and the result is indicated.

You can recognize incorrect control values as follows:

- The field "Actual value" is displayed with red background color.
- If you click in the incorrect field, a roll-out error message appears with information on the permissible value range or the necessary syntax.

Bad control values

- Control values with process-related errors can be transmitted.
- Control values with syntax errors cannot be transmitted.

6.3.3.7 Comparing values (S7-1500, S7-1500T)

You can use comparison functions to compare the following memory values of a parameter:

- Start value in project
- Start value PLC
- Actual value in PLC

Requirements

- There is an online connection.
- The technology object is downloaded to the CPU.
- The Parameter view of the technology object is open.

Procedure

To compare the start values on the various target systems, follow these steps:

1. In the icon , click on the arrow "Select comparison values".
   A selection list containing the comparison options opens:
   – Start value in project / Start value in PLC (default setting)
   – Start value in project / Actual value in PLC
   – Start value in PLC / Actual value in PLC
2. Select the desired comparison option.
   The selected comparison option is carried out immediately:
   – Symbols are used in the "Compare result" column to indicate the result of the comparison of the selected columns.

Symbol in "Compare result" column

Symbol	Meaning
	The compare values are equal and error-free.
	The compare values are not equal and error-free.
	At least one of the two compare values has a process-related or syntax error.
	The comparison cannot be performed. At least one of the two comparison values is not available (e.g. snapshot).

Symbol in the navigation

The symbols are shown in the same way in the navigation if the compare result applies to at least one of the parameters below the displayed navigation structure.

6.4 Configuring technological modules and onboard I/O for Motion Control (S7-1500, S7-1500T)

Use with Motion Control

You can use technology functions of technology modules and the onboard I/Os of the CPUs listed below with Motion Control technology objects. To use the technology functions for Motion Control, specific parameters of the I/O configuration and parameters of the configuration of the technology object must be configured accordingly. Which parameters are relevant for the function is described below. You can set additional parameters that are not listed here. The description of the parameters is found in the documentation of the respective technology module or the respective CPU.

The following technology modules support Motion Control functionalities:

S7-1500/ET 200MP	ET 200 SP	Possible applications
TM Count 2x24V (Page 58) [1]	TM Count 1x24V (Page 58) [1]	• Position detection for homing with zero mark via PROFIdrive telegram • Position detection with measuring input
TM PosInput 2 (Page 60) [1]	TM PosInput 1 (Page 60) [1]	• Position detection for homing with zero mark via PROFIdrive telegram • Position detection with measuring input
TM Timer DIDQ 16x24V (Page 63) [2]	TM Timer DIDQ 10x24V (Page 63) [2]	• Output of output cam and cam track for time-controlled switching [2] • Time-based position detection via measuring input (time stamp recording) [2]
–	TM Pulse 2x24V (Page 64) [1]	• Drive connection using PWM (pulse width modulation)

[1] Automatic data exchange for encoder values is supported

[2] Isochronous mode required

[3] Automatic data exchange for drive and encoder values is supported

S7-1500/ET 200MP	ET 200 SP	Possible applications
TM PTO 4 (Page 67) [3]	TM PTO 2x24V (Page 65) [3]	• Drive connection via PTO (Pulse Train Output) • Position detection with measuring input via PROFIdrive telegram [2] • Position detection for homing with zero mark via PROFIdrive telegram

[1] Automatic data exchange for encoder values is supported

[2] Isochronous mode required

[3] Automatic data exchange for drive and encoder values is supported

The following CPUs support Motion Control functionalities through their onboard I/O:

CPU	Possible applications
CPU 1511C-1 PN/CPU 1512C-1 PN (Page 70) [1]	• Drive connection via PTO (Pulse Train Output) • Drive connection using PWM (pulse width modulation) • Encoder connection via HSC (High-speed counter) • Position detection with measuring input via PROFIdrive telegram [2]
SIMATIC Drive Controller (Page 75)	• Output of output cam and cam track for time-controlled switching [2] • Time-based position detection via measuring input (time stamp recording) [2]

[1] Automatic data exchange for drive and encoder values is supported

[2] Isochronous mode required

Isochronous mode

Isochronous mode is required for use with a measuring input, output cam or cam track.

Technology modules can be used centrally or distributed in the system. Isochronous mode is supported in central operation as well as distributed operation with suitable PROFINET interface modules.

The onboard technology I/Os (X142) of the SIMATIC Drive Controller support clock synchronization.

Automatic data exchange for drive and/or encoder values

By selecting the check box for automatic data exchange, the drive and encoder parameters are automatically applied in the CPU.

Alternatively, you can manually match, by drive and encoder type, the parameters described and identified in the following table.

The following types are available for automatic data exchange:

- **Offline**
  Select the check box if you want to transfer the offline values of the drive or encoder to the configuration of the technology object in the project.
- **Online**
  Select the check box if you want to transfer the effective values online in the drive or encoder to the CPU during runtime. The drive and encoder parameters are transferred from the bus after the (re)initialization of the technology object and (re)start of the drive, encoder or the CPU.

6.4.1 TM Count 1x24V/TM Count 2x24V (S7-1500, S7-1500T)

For use with Motion Control, the following parameters must be configured:

Configuration	
Technology module **TM Count 1x24V/TM Count 2x24V**	**Technology object** **Axis and external encoder**
TM Count 1x24V/TM Count 2x24V > Channel 0/1 > Operating mode	–
Select "Position detection for Motion Control technology object" mode	
TM Count 1x24V/TM Count 2x24V > Channel 0/1 > Module parameters	**Hardware interface > Encoder**
–	Select "Encoder" data connection and the channel configured for Motion Control on the technology module as encoder
Signal type • Incremental encoder	Select encoder type corresponding to configuration for technology module • Incremental [1]
–	**Axis: Hardware interface > Data exchange with encoder** **External encoder: Hardware interface > Data exchange**
	Telegram "Standard telegram 83" is automatically selected after the selection of the encoder.
	Clear the check box "Automatic data exchange for encoder values (online)"
	Select the check box "Automatic data exchange for encoder values (offline)" If the check box is cleared, you can manually match the parameters described and identified in this table.
	Select rotary or linear measuring system type [1]
Signal evaluation • Single • Double • Quadruple	Select fine resolution corresponding to configuration on the technology module [1] • 0 = Single • 1 = Double • 2 = Quadruple
• Rotary type: Enter increments per revolution • Linear type: Configuration not relevant	• Rotary type: Enter increments per revolution corresponding to configuration at technology module (1:1) [1] • Linear type: Enter distance between increments [1]
–	**Axis: Hardware interface > Data exchange with the drive**
• Rotary type: Enter reference speed corresponding to configuration for technology object (1:1) • Linear type: Configuration not relevant	Enter reference speed

[1] Parameters are automatically applied when "Automatic data exchange for encoder values (offline)" is selected

"–" No configuration for technology module/technology object is required for these parameters

Configuration	
Technology module **TM Count 1x24V/TM Count 2x24V**	**Technology object** **Axis and external encoder**
–	**Homing**
Select the homing signal for homing mark 0: • Signal N of the incremental encoder • DI0	Use the homing mode "Use zero mark via PROFIdrive telegram". **TM Count 1x24V as of V2.0** The states of the digital inputs are displayed in the operating mode "Position detection for Motion Control technology object" in the process image. The following bits are used for this purpose: • STS_DI0 (Status of DI0): ZSW2_ENC.Reserved_Bit11 • STS_DI1 (Status of DI1): ZSW2_ENC.Reserved_Bit10 • STS_DI2 (Status of DI2): ZSW2_ENC.Reserved_Bit8 To select one of the digital inputs use, for example, a PLC tag of the data type "PD_TEL83_IN" with the input start address of the desired channel of the module. The status word "ZSW2_ENC" and the named bits can be found within the created tag structure.
TM Count 2x24V > I/O addresses	–
The organization block ("MC-Servo") and the process image ("TPA OB Servo") are selected automatically for the input and output addresses by selecting the channel in the encoder configuration at the technology object.	
Process image: PIP OB servo	

1) Parameters are automatically applied when "Automatic data exchange for encoder values (offline)" is selected

"–" No configuration for technology module/technology object is required for these parameters

Additional configuration for use with the technology object measuring input

Configuration	
Technology module **TM Count 1x24V/TM Count 2x24V**	**Technology object** **Measuring input**
TM Count 1x24V/TM Count 2x24V > Channel 0/1 > Operating mode	**Hardware interface > Measuring input**
Select operating mode "Position detection for Motion Control technology object"	Measuring using PROFIdrive telegram (drive or external encoder)
TM Count 1x24V/TM Count 2x24V > Channel 0/1 > Module parameters You set the parameters for the encoder signals of the channel under "Module parameters" in the operating mode "Position input for Motion Control". The parameters must be set depending on the encoder used.	In the "Number of the measuring input" selection box, select "1" (measuring input 1).

6.4.2 TM PosInput 1/TM PosInput 2 (S7-1500, S7-1500T)

For use with Motion Control, the following parameters must be configured:

Configuration	
Technology module **TM PosInput 1 / TM PosInput 2**	**Technology object** **Axis and external encoder**
TM PosInput 1/2 > Channel 0/1 > Operating mode	–
Select "Position detection for Motion Control technology object" mode	
TM PosInput 1/2 > Channel 0/1 > Module parameters You set the parameters for the encoder signals of the channel under "Module parameters" in the "Position input for Motion Control" mode. The parameters must be set depending on the encoder used. The configuration of the encoder is required for use with an SSI absolute encoder. Information on the configuration is available in the documentation for the respective technology module.	**Hardware interface > Encoder**
–	Select "Encoder" data connection and the channel activated and configured as encoder on the technology module
Signal type • Incremental encoder • Absolute encoder	Select encoder type corresponding to configuration for technology module: • Incremental [1)] • Absolute/Cyclic absolute
–	**Axis: Hardware interface > Data exchange with encoder** **External encoder: Hardware interface > Data exchange**
	Telegram "Standard telegram 83" is automatically selected after the selection of the encoder.
	Clear the check box "Automatic data exchange for encoder values (online)"
	Select the check box "Automatic data exchange for encoder values (offline)" If the check box is cleared, you can manually match the parameters described and identified in this table.
	Select rotary or linear measuring system type [1)]
Signal evaluation • Single • Double • Quadruple	Select fine resolution corresponding to configuration on the technology module [1)] • Incremental encoder: – 0 = Single – 1 = Double – 2 = Quadruple • Absolute encoder: – 0 = Single

[1)] Parameters are automatically applied when "Automatic data exchange for encoder values (offline)" is selected

"–" No configuration for technology module/technology object is required for these parameters

Configuration	
Technology module **TM PosInput 1 / TM PosInput 2**	**Technology object** **Axis and external encoder**
• Rotary type: Enter increments per revolution • Linear type: Configuration not relevant	• Rotary type: Enter increments per revolution corresponding to configuration at technology module (1:1) [1] • Linear type: Enter distance between increments [1]
–	**Axis: Hardware interface > Data exchange with the drive**
• Rotary type: Enter reference speed corresponding to configuration for technology object (1:1) • Linear type: Configuration not relevant	Enter reference speed
–	**Homing**
Select the homing signal for homing mark 0: • Signal N of the incremental encoder • DI0	Use the homing mode "Use zero mark via PROFIdrive telegram".
TM PosInput 1/2 > I/O addresses	–
The organization block ("MC-Servo") and the process image ("TPA OB Servo") are selected automatically for the input and output addresses by selecting the channel in the encoder configuration at the technology object.	

[1] Parameters are automatically applied when "Automatic data exchange for encoder values (offline)" is selected

"–" No configuration for technology module/technology object is required for these parameters

Additional configuration for use with the technology object measuring input

Configuration	
Technology module **TM PosInput 1 / TM PosInput 2**	**Technology object**
	Measuring input
TM PosInput 1/2 > Channel 0/1 > Operating mode	**Hardware interface > Measuring input**
Select operating mode "Position detection for Motion Control technology object"	Measuring using PROFIdrive telegram (drive or external encoder)
TM PosInput 1/2 > Channel 0/1 > Module parameters You set the parameters for the encoder signals of the channel under "Module parameters" in the operating mode "Position input for Motion Control". The parameters must be set depending on the encoder used. The configuration of the encoder is required for use with an SSI absolute encoder. Please note the following information in this regard. Information on the configuration is available in the documentation for the respective technology module.	In the "Number of the measuring input" selection box, select "1" (measuring input 1).

NOTE

When a single-turn absolute encoder is used and two edges are to be measured ("MC_MeasuringInput.Mode" = 2, 3 or 4), the distance between the measured edges of the Measurement input must be < 1 encoder revolution. Otherwise, use a multi-turn absolute encoder.

6.4.3 TM Timer DIDQ 10x24V/TM Timer DIDQ 16x24V (S7-1500, S7-1500T)

You can operate the TM Timer DIDQ technology module centrally on an S7-1500 CPU or decentrally on a distributed I/O. For use with a measuring input, output cam or cam track, the technology module must be used decentrally and with isochronous mode.

For use with Motion Control, the following parameters must be configured:

Use with output cam/cam track technology object

Configuration	
Technology module **TM Timer DIDQ 10x24V/TM Timer DIDQ 16x24V**	**Technology object**
	Output cam / Cam track
Basic parameters	–
Select desired number of outputs under channel configuration (ET 200MP TM Timer DIDQ 16x24V only)	
Channel parameters	**Hardware interface > Output cam output/output cam track**
–	Activate output
	Output via Timer DQ
Select "Timer DQ" mode for the respective output	Select output cam output
I/O addresses	–
Select "Isochronous mode"	

"–" No configuration for technology module/technology object is required for these parameters

Configuration	
Technology module **TM Timer DIDQ 10x24V/TM Timer DIDQ 16x24V**	**Technology object**
	Output cam / Cam track
The organization block ("MC-Servo") and the process image ("TPA OB Servo") are updated automatically for the input and output addresses by selecting the channel in the encoder configuration at the technology object.	

"–" No configuration for technology module/technology object is required for these parameters

Use with technology object measuring input

Configuration	
Technology module **TM Timer DIDQ 10x24V/TM Timer DIDQ 16x24V**	**Technology object**
	Measuring input
Basic parameters	–
Select desired number of inputs under channel configuration	
Channel parameters	**Hardware interface > Measuring input**
Configuration of DI group: Use inputs individually	–
Select "Timer DI" mode for the respective input	Select measuring via timer DI
–	Select measuring input
Select application-dependent input delay	–
I/O addresses	
Select "Isochronous mode"	
The organization block ("MC-Servo") and the process image ("TPA OB Servo") are updated automatically for the input and output addresses by selecting the channel in the input configuration at the technology object.	

"–" No configuration for technology module/technology object is required for these parameters

6.4.4 TM Pulse 2x24V (S7-1500, S7-1500T)

For use with Motion Control, the parameters described below must each be configured:

Drive connection using PWM (pulse width modulation)

Configuration	
TM Pulse 2x24V	**Technology object**
	Axis
TM Pulse 2x24V > Channel configuration	–
Select if you want to use 1 or 2 channels.	
TM Pulse 2x24V > Channel > Operating mode	
Select "Pulse width modulation PWM" or "PWM with DC motor" operating mode	

"–" No configuration for technology object is required for these parameters

Configuration	
TM Pulse 2x24V	**Technology object**
	Axis
TM Pulse 2x24V > Channel > Parameters	**Hardware interface > Drive**
Select "S7 analog output" output format	Select analog drive connection For the selection of the analog output, create a PLC tag of the "Int" type with corresponding address. The offset for the PLC tag to the start address is 2. To activate the output of the PWM signal, set the following two bits of the control interface of the PWM channel in the user program: • SW_ENABLE (= Bit 0 in Byte 9) • TM_CTRL_DQ (= Bit 1 in Byte 9) The offset for byte 9 to the start address of the PWM channel is 9.
TM Pulse 2x24V > Channel > I/O addresses	–
Select the organization block "MC-Servo" for the input and output addresses. The "TPA OB Servo" process image is selected automatically for the input and output addresses by selecting the organization block.	

"–" No configuration for technology object is required for these parameters

6.4.5 TM PTO 2x24V (S7-1500, S7-1500T)

For use with Motion Control, the following parameters must be configured.

Configuration	
Technology module TM PTO 2x24V	**Technology object**
	Axis
TM PTO 2 > Channel 0...1 > Operating mode	–
Select signal type: • PTO (pulse (P) and direction (D)) • PTO (count up (A) and count down (B)) • PTO (A, B phase-shifted) • PTO (A, B phase-shifted - quadruple)	
Configure the interpulse pause for direction reversal.	
–	**Hardware interface > Drive**
	Select drive type "PROFIdrive" and "Drive" data connection. Select the channel at the technology module as drive.
	Hardware interface > Encoder
	Select the encoder type "PROFIdrive" and data connection. Select the simulated encoder of the PTO 2 channel as encoder.

1) Parameters are automatically applied when "Automatic data exchange for drive values (offline)" is selected

2) Parameters are automatically applied when "Automatic data exchange for encoder values (offline)" is selected

"–" No configuration required for these parameters at the technology module/technology object

Configuration	
Technology module TM PTO 2x24V	**Technology object**
	Axis
TM PTO 2 > Channel 0...1 > Diagnostic interrupts	-
When the "Enable diagnostic interrupts" check box is selected, diagnostic interrupts are activated if: • No supply voltage • Errors occur at digital outputs The detected error is displayed for the respective channel with feedback bit "Fault_Present" and "Sensor_Error".	
TM PTO 2 > Channel 0...1 > Axis parameters	**Data exchange with the drive**
–	Telegram "Standard telegram 1" is automatically selected after the selection of the drive.
	Clear check box "Automatic data exchange for drive values (online)"
	Select check box "Automatic data exchange for drive values (offline)" If the check box is cleared, you can manually match the parameters described and identified in this table.
Enter reference speed corresponding to configuration for technology object (1:1)	Enter reference speed of the drive [1]
Enter maximum speed corresponding to configuration for technology object (1:1)	Enter maximum speed of the drive [1] If the maximum speed is exceeded, technology alarm 102 is triggered and displayed.
–	**Data exchange with encoder**
	Telegram "Standard telegram 81" is automatically selected after the selection of the encoder.
	Clear the check box "Automatic data exchange for encoder values (online)"
	Select the check box "Automatic data exchange for encoder values (offline)" If the check box is cleared, you can manually match the parameters described and identified in this table.
	Select rotary measuring system type [2]
Enter increments per revolution	Enter increments per revolution corresponding to configuration at technology module (1:1) [2]
-	Enter fine resolution [2] • 0 = Single
Configure stop behavior • Quick stop time • Ramp stop time	–
TM PTO 2 > Channel 0...1 > Hardware inputs/outputs	–
If you want to use a hardware output to enable the drive, select the "Use ED as drive enable" check box.	No setting required at the technology object. The output is automatically controlled by the "MC_Power".

[1] Parameters are automatically applied when "Automatic data exchange for drive values (offline)" is selected

[2] Parameters are automatically applied when "Automatic data exchange for encoder values (offline)" is selected

"–" No configuration required for these parameters at the technology module/technology object

Configuration	
Technology module TM PTO 2x24V	**Technology object**
	Axis
	Homing
For the hardware input (DI0), select the "Use RS as reference switch" check box.	Use the homing mode "Use zero mark via PROFIdrive telegram".
Select the edge of the hardware input for triggering the reference cam function.	
	"Measuring input > Configuration > Hardware interface" technology object
When using a measuring input, select the "Use MI as measuring input" check box.	Select the measuring input type "Measuring via PROFIdrive telegram (drive or external encoder)". Select the measuring input "1" under hardware connection.
When using Drive ready, select the "Use Rdy as ready signal" check box.	No setting required at the technology object. When the input is used, "MC_Power" waits until the input signal is present before it sets the drive enable.
Configuring input delay	–
TM PTO 2 > Channel 0...1 > Sign-of-life error	
Configure tolerated number of sign-of-life errors	
TM PTO 2 > I/O addresses	
The organization block ("MC-Servo") and the process image ("TPA OB Servo") are selected automatically for the input and output addresses by selecting the PTO channel for the technology object.	

1) Parameters are automatically applied when "Automatic data exchange for drive values (offline)" is selected

2) Parameters are automatically applied when "Automatic data exchange for encoder values (offline)" is selected

"–" No configuration required for these parameters at the technology module/technology object

6.4.6 TM PTO 4 (S7-1500, S7-1500T)

For use with Motion Control, the following parameters must be configured.

Configuration	
Technology module TM PTO 4	**Technology object**
	Axis
TM PTO 4 > Channel configuration	–
Configure the number of channels (1 to 4) you want to use.	
TM PTO 4 > Channel 0...3 > Operating mode	

1) Parameters are automatically applied when "Automatic data exchange for drive values (offline)" is selected

2) Parameters are automatically applied when "Automatic data exchange for encoder values (offline)" is selected

"–" No configuration required for these parameters at the technology module/technology object

Configuration	
Technology module TM PTO 4	**Technology object**
	Axis
Select signal type: • PTO (pulse (P) and direction (D)) • PTO (count up (A) and count down (B)) • PTO (A, B phase-shifted) • PTO (A, B phase-shifted - quadruple)	–
Select signal interface: • RS422, symmetrical/TTL (5V), asymmetrical • 24V asymmetric	
Configure the interpulse pause for direction reversal.	
–	**Hardware interface > Drive**
	Select drive type "PROFIdrive" and "Drive" data connection. Select the pulse output configured at the technology module as drive.
	Hardware interface > Encoder
	The encoder of the actuator telegram (simulated encoder) is automatically selected. Alternatively, an existing encoder interface can be selected.
TM PTO 4 > Channel 0...3 > Diagnostic interrupts	-
When the "Enable diagnostic interrupts" check box is selected, diagnostic interrupts are activated if: • No supply voltage • Errors occur at digital outputs The detected error is displayed for the respective channel with feedback bit "Fault_Present" and "Sensor_Error".	
TM PTO 4 > Channel 0...3 > Axis parameters	**Data exchange with the drive**
–	Telegram "Standard telegram 3" is automatically selected after the selection of the drive.
	Clear check box "Automatic data exchange for drive values (online)"
	Select check box "Automatic data exchange for drive values (offline)" If the check box is cleared, you can manually match the parameters described and identified in this table.
Enter reference speed corresponding to configuration for technology object (1:1)	Enter reference speed of the drive [1]
Enter maximum speed corresponding to configuration for technology object (1:1)	Enter maximum speed of the drive [1] If the maximum speed is exceeded, technology alarm 102 is triggered and displayed.

[1] Parameters are automatically applied when "Automatic data exchange for drive values (offline)" is selected

[2] Parameters are automatically applied when "Automatic data exchange for encoder values (offline)" is selected

"–" No configuration required for these parameters at the technology module/technology object

Configuration	
Technology module TM PTO 4	**Technology object**
	Axis
–	**Data exchange with encoder**
	Telegram "Standard telegram 83" is automatically selected after the selection of the encoder.
	Clear the check box "Automatic data exchange for encoder values (online)"
	Select the check box "Automatic data exchange for encoder values (offline)" If the check box is cleared, you can manually match the parameters described and identified in this table.
	Select rotary measuring system type [2]
Enter increments per revolution	Enter increments per revolution corresponding to configuration at technology module (1:1) [2]
-	Enter fine resolution [2] • 0 = Single
Configure stop behavior • Quick stop time • Ramp stop time	–
TM PTO 4 > Channel 0...3 > Hardware inputs/outputs	–
If you want to use a hardware output to enable the drive, select the "Use drive enable" check box. Next select one of the two hardware outputs DQ0 or DIQ2.	No setting required at the technology object. The output is automatically controlled by the "MC_Power".
	Homing
Activate the hardware input (DI0) for the reference cam.	Use the homing mode "Use zero mark via PROFIdrive telegram".
Select the edge of the hardware input for triggering the reference cam function.	
When using a measuring input, select the "Use DI1 check box as measuring input".	**"Measuring input > Configuration > Hardware interface" technology object**
	Select the measuring input type "Measuring via PROFIdrive telegram (drive or external encoder)". Select the measuring input "1" under hardware connection.
Select the "Use "drive ready"" check box. In the ""Drive ready" input", select the hardware input that is to be used to display whether the drive is ready.	No setting required at the technology object. When the input is used, "MC_Power" waits until the input signal is present before it sets the drive enable.

[1] Parameters are automatically applied when "Automatic data exchange for drive values (offline)" is selected

[2] Parameters are automatically applied when "Automatic data exchange for encoder values (offline)" is selected

"–" No configuration required for these parameters at the technology module/technology object

Configuration	
Technology module TM PTO 4	**Technology object**
	Axis
Configuring input delay	–
TM PTO 4 > Channel 0...3 > Sign-of-life error	
Configure tolerated number of sign-of-life errors	
TM PTO 4 > I/O addresses	
The organization block ("MC-Servo") and the process image ("TPA OB Servo") are selected automatically for the input and output addresses by selecting the PTO channel for the technology object.	

1) Parameters are automatically applied when "Automatic data exchange for drive values (offline)" is selected

2) Parameters are automatically applied when "Automatic data exchange for encoder values (offline)" is selected

"–" No configuration required for these parameters at the technology module/technology object

6.4.7 CPU 1511C-1 PN/CPU 1512C-1 PN (onboard I/O devices) (S7-1500, S7-1500T)

For use with Motion Control, the parameters described below must be configured.

Drive connection via PTO (Pulse Train Output)

Configuration	
CPU 1511C-1 PN/CPU 1512C-1 PN	**Technology object**
	Axis
Pulse generators (PTO/PWM) > PTO1...4/PWM1...4 > General	–
To activate a channel for PTO mode, select one of the following operating modes: • PTO (pulse (A) and direction (B)) • PTO (count up (A), count down (B)) • PTO (A,B phase shifted) • PTO (A,B phase shifted, quadruple)	
–	**Hardware interface > Drive**
	Select drive type "PROFIdrive" and "Drive" data connection. Select the pulse generator of the CPU configured for PTO mode as drive.
	Hardware interface > Encoder
	The encoder of the actuator telegram (simulated encoder) is automatically selected. Alternatively, an existing encoder interface can be selected.

1) Parameters are automatically applied when "Automatic data exchange for drive values (offline)" is selected

2) Parameters are automatically applied when "Automatic data exchange for encoder values (offline)" is selected

"–" No configuration for CPU/technology object is required for these parameters

Configuration	
CPU 1511C-1 PN/CPU 1512C-1 PN	**Technology object**
	Axis
Pulse generators (PTO/PWM) > PTO1...4/PWM1...4 > Axis parameters	**Hardware interface > Data exchange with the drive**
–	Telegram "Standard telegram 3" is automatically selected after the selection of the drive.
	Clear check box "Automatic data exchange for drive values (online)"
	Select check box "Automatic data exchange for drive values (offline)" If the check box is cleared, you can manually match the parameters described and identified in this table.
Enter reference speed corresponding to configuration for technology object (1:1)	Enter reference speed of the drive [1]
Enter reference speed corresponding to configuration for technology object (1:1)	Enter maximum speed of the drive [1] If the maximum speed is exceeded, technology alarm 102 is triggered and displayed.
–	**Hardware interface > Data exchange with encoder**
	Telegram "Standard telegram 3" is automatically selected after the selection of the encoder.
	Clear the check box "Automatic data exchange for encoder values (online)"
	Select the check box "Automatic data exchange for encoder values (offline)" If the check box is cleared, you can manually match the parameters described and identified in this table.
	Select rotary measuring system type [2]
Enter increments per revolution	Enter increments per revolution corresponding to configuration for CPU (1:1) [2]
The fine resolution has the fixed value "0 bit" (= single) and cannot be changed.	Enter the fine resolution corresponding to the configuration on the CPU [2] Bits in incr. actual value (G1_XIST1): 0 (= single)
Pulse generators (PTO/PWM) > PTO1...4/PWM1...4 > Hardware inputs/outputs	**Homing**
Select the hardware input for the reference switch In addition, configure the input delay for the selected hardware input. You configure the input delay in the device configuration at the corresponding DI channel (DI 16/DQ 16 > Inputs > Channel > Input parameters > Input delay).	Use the homing mode "Use zero mark via PROFIdrive telegram" for drive connection via PTO.
Select the edge of the hardware input for triggering the reference output cam function.	

[1] Parameters are automatically applied when "Automatic data exchange for drive values (offline)" is selected

[2] Parameters are automatically applied when "Automatic data exchange for encoder values (offline)" is selected

"–" No configuration for CPU/technology object is required for these parameters

Configuration	
CPU 1511C-1 PN/CPU 1512C-1 PN	**Technology object**
	Axis
When using a measuring input, select the hardware input of the measuring input. The following table includes the configuration description.	–
Select the hardware input that is used to display whether the drive is ready. In addition, configure the input delay for the selected hardware input. You configure the input delay in the device configuration at the corresponding DI channel (DI 16/DQ 16 > Inputs > Channel > Input parameters > Input delay).	
With selected "PTO (pulse (A) and direction (B))" mode, the hardware output for the PTO signal A ("Pulse output (A)") is automatically selected through the device configuration and cannot be changed. For PTO signal B ("Direction output (B)") select one of the hardware outputs offered in the selection box. The hardware outputs for the PTO signals are selected through the device configuration for the following operating modes and cannot be changed: • PTO (count up (A), count down (B)) • PTO (A,B phase shifted) • PTO (A,B phase shifted, quadruple)	
Pulse generators (PTO/PWM) > PTO1...4/PWM1...4 > I/O addresses	
The organization block ("MC-Servo") and the process image ("TPA OB Servo") are selected automatically for the input and output addresses by selecting the PTO channel for the technology object.	

1) Parameters are automatically applied when "Automatic data exchange for drive values (offline)" is selected

2) Parameters are automatically applied when "Automatic data exchange for encoder values (offline)" is selected

"–" No configuration for CPU/technology object is required for these parameters

Additional configuration for use with the technology object measuring input

Configuration	
Technology module CPU 1511C-1 PN/CPU 1512C-1 PN	**Technology object**
	Measuring input
Pulse generators (PTO/PWM) > PTO1...4/PWM1...4 > Hardware inputs/outputs	**Hardware interface > Measuring input**
Select the hardware input of the measuring input. In addition, configure the input delay for the selected hardware input. You configure the input delay in the device configuration at the corresponding DI channel (DI 16/DQ 16 > Inputs > Channel > Input parameters > Input delay).	Measuring using PROFIdrive telegram (drive or external encoder)
	In the "Number of the measuring input" selection box, select "1" (measuring input 1).

Drive connection using PWM (pulse width modulation)

Note that only travel in the positive direction is possible with a drive connection using the integrated PWM function of the compact CPU.

Configuration	
CPU 1511C-1 PN/CPU 1512C-1 PN	**Technology object**
	Speed axis
Pulse generators (PTO/PWM) > PTO1...4/PWM1...4 > General	–
Select "Pulse width modulation PWM" mode	
Pulse generators (PTO/PWM) > PTO1...4/PWM1...4 > Hardware inputs/outputs	
Select the hardware output to be used for pulse output.	
Select whether the set hardware output is to work as a fast push-pull switch or as P switch.	
Pulse generators (PTO/PWM) > PTO1...4/PWM1...4 > Parameters	**Hardware interface > Drive**
Select "S7 analog output" output format	Select analog drive connection For the selection of the analog output, create a PLC tag of the "Int" type with corresponding address. The offset for the PLC tag of the control interface of the PWM channel is 2. To activate the output of the PWM signal, set the following two bits of the control interface of the PWM channel in the user program: • SW_ENABLE (= bit 0 in byte 9) • TM_CTRL_DQ (= Bit 1 in Byte 9) The offset for byte 9 to the start address of the PWM channel is 9.
Select minimum pulse width of 0 µs	–
Select required period duration (e.g. 100 µs)	
Pulse generators (PTO/PWM) > PTO1...4/PWM1...4 > I/O addresses	
Select the organization block "MC-Servo" for the input and output addresses. The "TPA OB Servo" process image is selected automatically for the input and output addresses by selecting the organization block.	

"–" No configuration for technology object is required for these parameters

Encoder connection via HSC (High-speed counter)

Configuration		
CPU 1511C-1 PN/CPU 1512C-1 PN	**Technology object**	
	Axis	**External encoder**
High-speed counter (HSC) > HSC 1...6 > General > Enable	–	–
Enable high-speed counter		
High-speed counter (HSC) > HSC 1...6 > Basic parameters > Operating mode		
Select "Position input for Motion Control" mode		
High-speed counter (HSC) > HSC 1...6 > Basic parameters > Module parameters	**Hardware interface > Encoder**	**Hardware interface > Encoder**
–	Select "Encoder" data connection and the high-speed counter activated and configured as encoder on the CPU	Select "Encoder" data connection and the high-speed counter activated and configured as encoder on the CPU
Signal type • Incremental encoder	Select encoder type according to the device configuration of the CPU [1)] • Incremental	Select encoder type according to the device configuration of the CPU [1)] • Incremental
–	**Hardware interface > Data exchange with encoder**	**Hardware interface > Data exchange**
	Telegram "Standard telegram 83" is automatically selected after the selection of the encoder.	Telegram "Standard telegram 83" is automatically selected after the selection of the encoder.
	Clear the check box "Automatic data exchange for encoder values (online)"	Clear the check box "Automatic data exchange for encoder values (online)"
	Select the check box "Automatic data exchange for encoder values (offline)" If the check box is cleared, you can manually match the parameters described and identified in this table.	Select the check box "Automatic data exchange for encoder values (offline)" If the check box is cleared, you can manually match the parameters described and identified in this table.
	Select rotary measuring system type [1)]	Select rotary measuring system type [1)]
Signal evaluation • Single • Double • Quadruple	Enter fine resolution according to the configured signal evaluation set for the high-speed counter (HSC) [1)] • 0 = Single • 1 = Double • 2 = Quadruple	Enter fine resolution according to the configured signal evaluation set for the high-speed counter (HSC) [1)] • 0 = Single • 1 = Double • 2 = Quadruple
Enter increments per revolution	Enter increments per revolution corresponding to device configuration for CPU (1:1) [1)]	Enter increments per revolution corresponding to device configuration for CPU (1:1) [1)]

[1)] Parameters are automatically applied when "Automatic data exchange for encoder values (offline)" is selected

"–" No configuration for CPU/technology object is required for these parameters

Configuration		
CPU 1511C-1 PN/CPU 1512C-1 PN	**Technology object**	
	Axis	**External encoder**
–	**Hardware interface > Data exchange with the drive**	–
Enter reference speed corresponding to configuration for technology object (1:1)	Enter reference speed	
–	**Homing**	**Homing**
Select the homing signal for homing mark 0: • Signal N of the incremental encoder • DI0 (can be set with the hardware inputs/outputs) In addition, configure the input delay for the selected hardware input. You configure the input delay in the device configuration at the corresponding DI channel (DI 16/DQ 16 > Inputs > Channel > Input parameters > Input delay).	Use the homing mode "Use zero mark via PROFIdrive telegram".	Use the homing mode "Use zero mark via PROFIdrive telegram".
High-speed counter (HSC) > HSC 1...6 > I/O addresses	–	–
The organization block ("MC-Servo") and the process image ("TPA OB Servo") are selected automatically for the input and output addresses by selecting the HSC channel for the technology object.		

1) Parameters are automatically applied when "Automatic data exchange for encoder values (offline)" is selected

"–" No configuration for CPU/technology object is required for these parameters

Additional configuration for use with the technology object measuring input

Configuration	
Technology module CPU 1511C-1 PN/CPU 1512C-1 PN	**Technology object**
	Measuring input
High-speed counter (HSC) > HSC 1...6 > Hardware inputs/outputs	**Hardware interface > Measuring input**
Select the hardware input of the measuring input. In addition, configure the input delay for the selected hardware input. You configure the input delay in the device configuration at the corresponding DI channel (DI 16/DQ 16 > Inputs > Channel > Input parameters > Input delay).	Measuring using PROFIdrive telegram (drive or external encoder)
	In the "Number of the measuring input" selection box, select "1" (measuring input 1).

6.4.8 SIMATIC Drive Controller (onboard I/O) (S7-1500, S7-1500T)

You can use the inputs and outputs of interface X142 of a SIMATIC Drive Controller as measuring input for the measuring input technology object, as well as for the output cam/cam track technology object.

Isochronous mode is required for use with a measuring input, output cam or cam track.

For use with Motion Control, the following parameters must be configured:

Use with output cam/cam track technology object

Configuration	
SIMATIC Drive Controller	**Technology object**
	Output cam / Cam track
Channel parameters > Channel 0 to 7	**Hardware interface > Output cam output/output cam track**
–	Activate output
	Output via Timer DQ
Select desired channel and select operating mode "Timer DQ".	Select output cam output
I/O addresses	–
Select "Isochronous mode"	
The organization block ("MC-Servo") and the process image ("TPA OB Servo") are updated automatically for the input and output addresses by selecting the channel in the encoder configuration at the technology object.	

"–" No configuration at the SIMATIC Drive Controller/technology object is required for these parameters

Use with measuring input technology object

Configuration	
SIMATIC Drive Controller	**Technology object**
	Measuring input
Channel parameters > Channel 0 to 7	**Hardware interface > Measuring input**
–	Select measuring via timer DI
Select desired channel and select operating mode "Timer DI"	Select measuring input
I/O addresses	–
Select "Isochronous mode"	
The organization block ("MC-Servo") and the process image ("TPA OB Servo") are updated automatically for the input and output addresses by selecting the channel in the input configuration at the technology object.	

"–" No configuration at the SIMATIC Drive Controller/technology object is required for these parameters

Programming (S7-1500, S7-1500T) 7

The "Programming" section contains general information on supplying and evaluating the Motion Control instructions and on the technology data block.

You can use Motion Control instructions in the user program to assign jobs to the technology object. You define the job using the input parameters of the Motion Control instructions. You can track the current job status using the job parameters if you use a separate instance for each Motion Control instruction per technology object.

In a typical programming, you can use one or more instances for each Motion Control instruction for each technology object.

The use of a separate instance per technology object is always necessary for Motion Control instructions without parameter "DONE" and for the Motion Control instruction "MC_MoveJog".

Only one instance per technology object may be active in the program flow for the Motion Control instruction "MC_Power". Disable the technology object with the same instance you used to enable the technology object, otherwise an error with error ID 16#800C will occur.

The technology data block is available to you as an additional interface to the technology object.

7.1 Process response (S7-1500, S7-1500T)

7.1.1 Organization blocks for Motion Control (S7-1500, S7-1500T)

When you create a technology object, organization blocks MC-Servo [OB91] and MC-Interpolator [OB92] are automatically created for processing the technology objects. The organization block MC-LookAhead [OB97] is also created for the kinematics technology object as of technology version 5.0. The technology objects are processed in the motion control application cycle. The application cycle consists of required and optional organization blocks (OBs).

In the user program, call the appropriate motion control instruction and start a motion control job for a technology object. In the organization block Main [OB1], call the user program cyclically.

Optionally, programmable motion control OBs are available, which you must insert manually. These organization blocks take into account special requirements with regard to time-critical events or the time sequence of function calls. This makes it possible, for example, to start motions immediately in the event of time-critical events.

The following table shows the organization blocks for motion control:

Organization block	Description	Priority[1)]
MC-PreServo [OB67] (optional)	For For example: Preparation of the telegram contents from the drive system. Is called immediately before the MC-Servo [OB91].	Corresponds to MC-Servo

1) 26 corresponds to highest priority.

Organization block	Description	Priority[1)]
MC-Servo [OB91] (know-how-protected)	Calculation of the position controller System performance, no user program possible.	17 to 26 Default 26
MC-PostServo [OB95] (optional)	For For example: Preparation of the setpoints for the drive system. Is called immediately after the MC-Servo [OB91].	Corresponds to MC-Servo
MC-Transformation [OB98] (optional)	Programming of the transformation of Cartesian coordinates and axis-specific setpoints for user-defined kinematics	17 to 25 Default 25
MC-PreInterpolator [OB68] (optional)	For For example: MotionIn instructions, and instructions for measuring inputs, output cams and cam tracks The MC-PreInterpolator [OB68] is required for iposynchronous processing of motion control instructions. Is called immediately before the MC-Interpolator [OB92].	Corresponds to MC-Interpolator
MC-Interpolator [OB92] (know-how-protected)	Evaluation of the motion control instructions, generation of setpoints and monitoring functionality System performance, no user program possible.	16 to 25 Default 24
MC-LookAhead [OB97] (know-how-protected)	Calculation of the motion processing of the kinematics technology object Applies only to a technology object kinematics V5.0 or higher. System performance, no user program possible.	15 to 16 Default 15

1) 26 corresponds to highest priority.

The clock ratio of the two organization blocks MC-Servo [OB91] and MC-Interpolator [OB92] to each other is always 1:1. You can scale the ratio of the bus clock to the application cycle.

You can set the application cycle and the priority of the organization blocks according to your requirements for control quality and system load.

You can check the runtime of the respective organization block (except MC-LookAhead [OB97]) with the instruction "RT_INFO". The current application cycle (in µs) of the organization blocks MC-PreServo [OB67] and MC-PostServo [OB95] and MC-PreInterpolator [OB68] can be read using the start information.

Application cycle

In the properties of the organization block MC-Servo [OB91], you can set the application cycle in which the organization blocks for MC-Servo [OB91], MC-Interpolator [OB92] and their optional OBs are called:

- **Synchronous to the bus (recommended setting for optimum control quality)**
  The application cycle is synchronous to the selected source of the send clock and the corresponding reduction ratio. The following clock sources are available for selection:
  - PROFINET IO
  - PROFIBUS DP
  - Local bus system (as of firmware version ≥ 2.6)
  - PROFIdrive system for SINAMICS Integrated of SIMATIC Drive Controller

  A bus system that is connected to the CPU via a communications processor/communication module (CP/CM) cannot be used synchronously.
- **Cyclic**
  The application cycle is called at the specified time interval. Processing is asynchronous to the bus clock/send clock.

Ways to influence the process response

The system load is primarily determined by the quantity structure (number of technology objects), the communication load and the user program. The processing time in the application cycle increases with the number of technology objects (MC-Servo [OB91]). Simultaneous starting of motion control instructions results in additional processing times in the application cycle (MC-Interpolator [OB92] and MC-LookAhead [OB97]) at short notice. Optional motion control OBs additionally affect the processing time of the application cycle.

You define the available processing time using the set application cycle. The time available at the end of the application cycle is used for processing the low-priority OBs with the other user program.

The cycle time of the Main [OB1] can increase significantly due to longer processing times in the application cycle.

System overloads are indicated by timeouts or overflows (Page 80) of Main [OB1], MC-Servo [OB91] and MC-Interpolator [OB92].

You have the following options for influencing the system load and the processing times of the user program:

- Adjusting the application cycle:
  - Adjusting the send clock of the bus system
  - Reduce clock
- Adjusting the percentage cycle load of the MC-LookAhead [OB97] (adjustment range 1% to 40%, default setting 20%)
- Adjusting the percentage communication load of the CPU
- To relieve the load on MC-Interpolator [OB92] and MC-LookAhead [OB97], avoid simultaneous starting of motion control instructions
- Improving the system performance for the cam interpolation in the MC-Interpolator [OB92] and for the motion preparation of the kinematics technology object in the MC-LookAhead [OB97] using the properties under "General > Multi-core processor" (S7-1500T FW V3.0 and higher)

  If both the options are activated, a cam interpolation can interrupt the motion preparation of the kinematics technology object.

If necessary, use one or more options to optimize the system and the process response.

Reduction ratio

You can reduce the application cycle of the MC-Servo [OB91] to the send clock of the selected isochronous bus system. You can set an integer multiple of the send clock as the factor. A maximum cycle time of 32 ms is possible for the application cycle.

Note the following settings when you call an isochronous mode interrupt OB (OB6x) and the MC servo (OB91).

- Call both organization blocks with the same source of the send clock (same bus system).
- Use the same application cycle both organization blocks (in ms).

Priority

You can configure the priority of the organization blocks as needed in their properties under "General > Properties > Priority".

When setting the priorities, make sure that the MC-Servo [OB91] is always set before the MC-PreInterpolator [OB68] and the MC-Interpolator [OB92]. The priority of MC-Servo [OB91] must be at least one level higher than the priority of MC-Interpolator [OB92]. The priority of the MC-LookAhead [OB97] must be at least one level higher than the priority of cyclic interrupts.

7.1.2 Process image partition "OB Servo PIP" (S7-1500, S7-1500T)

The process image partition "OB Servo PIP" is made available in isochronous mode for Motion Control when MC-Servo [OB91] is called. All drives and encoders used by Motion Control are assigned to this process image partition.

Because the organization blocks MC-PreServo [OB67] and MC-PostServo [OB95] are called automatically by the MC-Servo [OB91], the process image partition is also available automatically. If you use a MC-PreServo [OB67], the data are read in when the MC-PreServo [OB67] starts. If you use a MC-PostServo [OB95], the data are output after the MC-PostServo [OB95].

Additionally, you should assign all I/O modules used by Motion Control to this process image partition (e.g. hardware limit switches). The assignment results in chronologically synchronous processing with the technology object.

The input process image partition is also updated in STOP mode.

Process image partition in the user program

As of firmware version V1.5, you can access the process image partition "OB Servo PIP" in your user program. This makes it possible to evaluate the process image partition using the trace function.

Process image partition in watch/force table

Access to data of the process image partition "PIP OB Servo" via watch and force tables is not possible.

7.1.3 Operational Sequence and Timeouts (S7-1500, S7-1500T)

When processing the motion control functionality, the motion control organization blocks MC-Servo [OB91] and MC-Interpolator [OB92], including the optional organization blocks, are called and processed in each application cycle. Your user program is processed during the remaining time until the next application cycle.

For error-free program execution, keep to the following rules:

- In each application cycle, MC-Servo [OB91] must be started and executed completely.
- In each application cycle, the relevant MC-Interpolator [OB92] must at least be started.
- For drives connected via PROFINET, the MC-PreServo [OB67], the MC-Servo [OB91], and the MC-PostServo [OB95] must be completely processed in the first PROFINET cycle.

Example

The figure below illustrates the time sequence of the cyclic user program and the application cycle:

- The upper section shows the processing of the Main [OB1] without make-before-break feature of the application cycle by motion control OBs with higher priority.
- The central section shows the processing of Main [OB1] with break-before-make feature. Motion control OBs with higher priority are executed in the application cycle.
  The Main [OB1] is interrupted in the cycle of the application cycle. The cycle time of the user program becomes correspondingly longer.
- The lower section shows a detailed view of the error-free process response of the individual organization blocks.

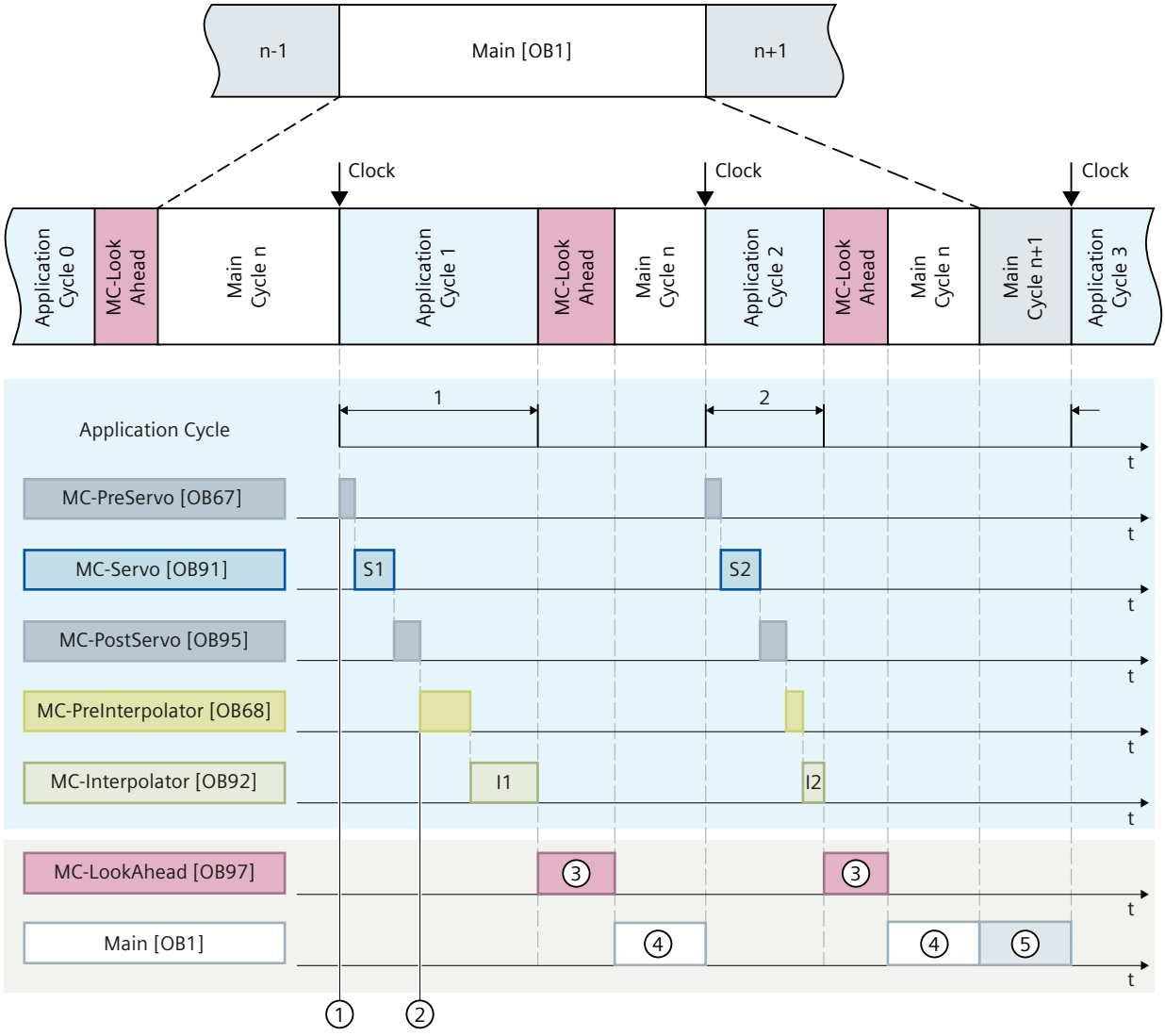

① "TPA OB Servo" input process image partition

② "TPA OB Servo" output process image partition

③ MC-LookAhead cycle

④ Main [OB1] cycle n

⑤ Main [OB1] cycle n+1

The motion control OBs and the Main [OB1] are processed one after the other in application cycle 1. The process image partition "TPA OB SERVO" ① is read before processing the MC-PreServo [OB67]. The MC-Servo [OB91] is displayed as "S1" in the first application cycle. After the processing of the MC-PostServo [OB95], the process image partition "TPA OB SERVO" ② is updated.

The MC-PreInterpolator [OB68] and the MC-Interpolator [OB92] are then processed. The MC-Interpolator [OB92] is displayed as "I1" in the first application cycle. Its processing time varies according to the evaluation of the motion control instructions as well as the monitoring and setpoint generation for all technology objects configured on the CPU for motion control.

Number ③ represents the processing of the MC-LookAhead [OB97]. The processing of the MC-LookAhead [OB97] is interrupted in the first application cycle and continued in the second application cycle.

The Main [OB1]④ is further processed only after all motion control OBs have been processed.

In the second application cycle, the processing time for the MC-Interpolator [OB92] "I2" and MC-LookAhead cycle ③ is shorter than in the first application cycle. The MC-LookAhead [OB97]③ is processed further in the second application cycle. The Main [OB1] cycle n ④ is finished before the third application cycle. The Main [OB1] cycle n+1 ⑤ is already being processed in the remaining time until the third application cycle. This means that parts of two Main [OB1] cycles can be processed between two application cycles.

Overflows

Overflows can occur if the configured application cycle is not adhered to, for example because additional technology objects or programs are added in the MC-PreServo [OB67] or MC-PostServo [OB95]. The application cycle must be adapted in this case. The MC-Servo [OB91] must be completed before the next send clock, irrespective of the permissible duration of the application cycle.

If the processing time of the MC-Servo [OB91] (including MC-PreServo [OB67] and/or MC-PostServo [OB95], if available) exceeds the duration of a send clock, the message "Overflow" is displayed in the diagnostic buffer of CPU. The controller no longer runs isochronously.

If the processing time exceeds the duration of an application cycle, the CPU switches to STOP operating state.

The following figure shows the process response in the case of overflow of MC-Servo [OB91] in the application cycle and in the send clock with a reduction ratio of 2:

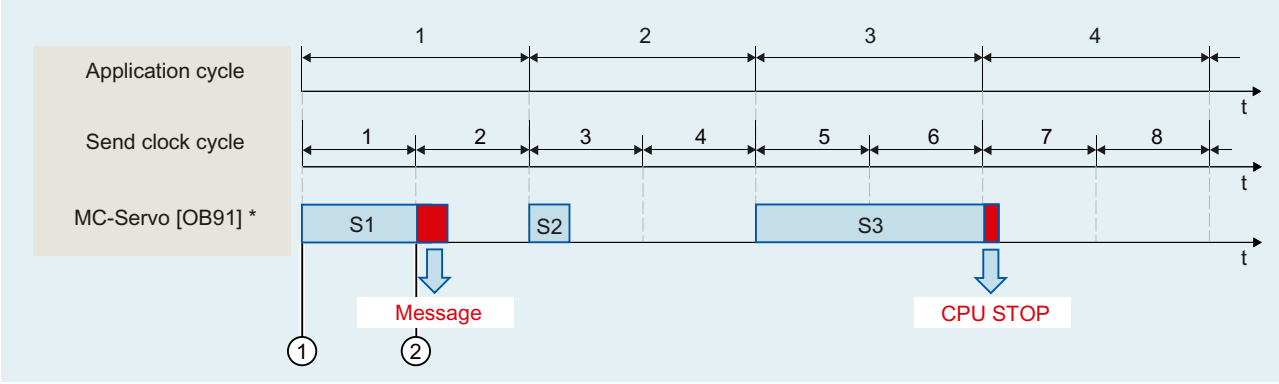

① Start of the processing of MC-Servo [OB91]

② Overflow (message)

* Including MC-PreServo [OB67] and/or MC-PostServo [OB95], when in use

The execution of an MC-Interpolator [OB92] may only be interrupted by an MC-Servo [OB91] call. If more interruptions occur, the CPU switches to STOP mode.

The following figure shows the process response when an MC-Interpolator [OB92] is interrupted over two time slices:

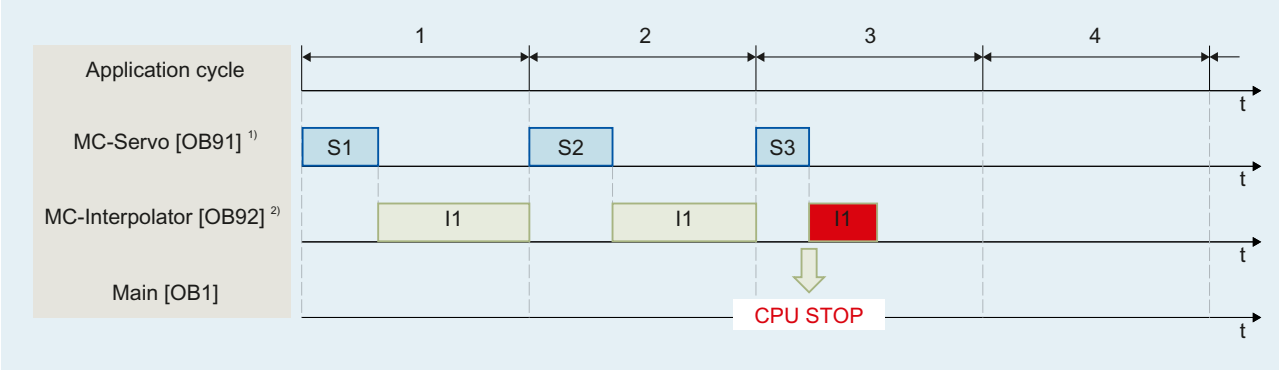

1) Including MC-PreServo [OB67] and/or MC-PostServo [OB95], when in use

2) Including MC-PreInterpolator [OB68], if available

The CPU tolerates a maximum of three consecutive MC-Interpolator [OB92] overflows. If more overflows occur, the CPU switches to STOP mode.

The following figure shows the process response if there are four consecutive individual overflows of MC-Interpolator [OB92]:

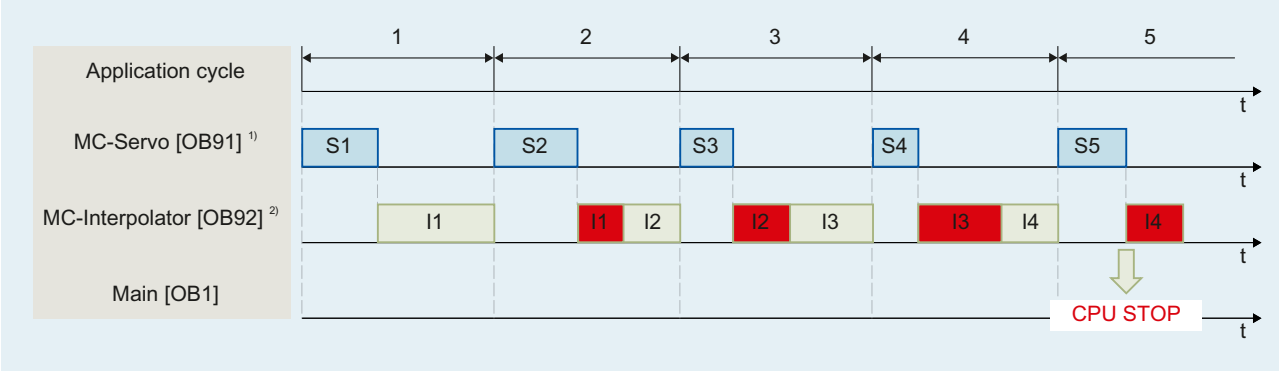

1) Including MC-PreServo [OB67] and/or MC-PostServo [OB95], when in use

2) Including MC-PreInterpolator [OB68], if available

7.1.4 Operating modes (S7-1500, S7-1500T)

This section examines the behavior of the Motion Control in the respective operating modes and in the transitions between operating modes. A general description of the operating modes can be found in the S7-1500 System Manual

Operating modes and transitions

The CPU has the following operating modes:

- STOP
- STARTUP
- RUN
- HOLD

The following figure shows the operating modes and the operating mode transitions:

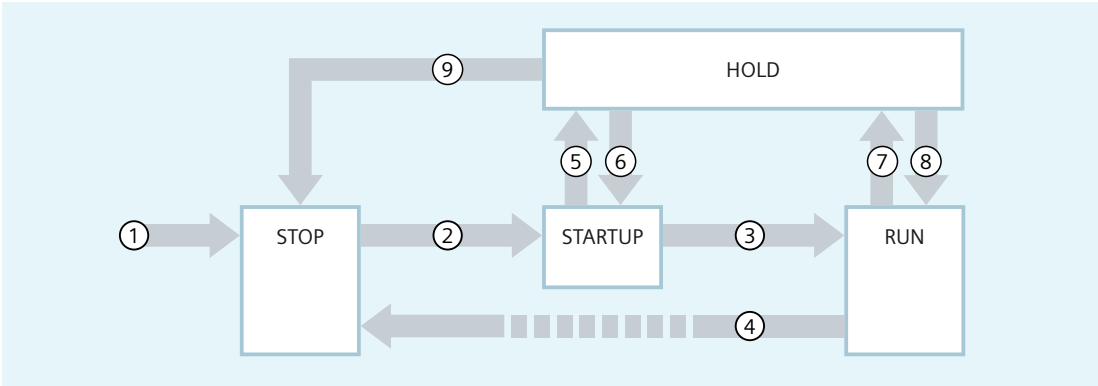

Operating mode transitions

The following table shows the behavior of the Motion Control in the transitions between the operating modes:

No.	Operating mode transition	Behavior
①	POWER ON → STOP	The CPU performs a restart of the technology objects. The technology objects are reinitialized with the values from the load memory.
②	STOP → STARTUP	Not relevant for Motion Control.
③	STARTUP → RUN	The process outputs are enabled.
④	RUN → STOP	When the CPU changes from RUN mode to STOP mode, all technology objects are disabled in accordance with the alarm response "remove enable". Active Motion Control jobs are aborted. If restart-relevant data has been changed for technology objects in RUN, the CPU performs a restart of the corresponding technology objects.
⑤	STARTUP → HOLD	Breakpoint in the start-up routine reached.
⑥	HOLD → STARTUP	Not possible when using technology objects
⑦	RUN → HOLD	Breakpoint reached
⑧	HOLD → RUN	Not possible when using technology objects
⑨	HOLD → STOP	By operation of switch/display or by setting to STOP from programming device.

STOP mode

In STOP mode the user program is not processed and all process outputs are disabled. Thus no Motion Control jobs are executed.
The technology data blocks are updated.

STARTUP mode

Before the CPU starts processing of the cyclical user program, the startup OBs are processed one time.
In STARTUP mode, the process outputs are disabled. Motion Control jobs are rejected.
The technology data blocks are updated.

RUN mode

The user program is processed in RUN mode.
In RUN mode, the programmed Motion Control jobs are cyclically called and processed.
The technology data blocks are updated.

HOLD operating state

Working with breakpoints is not supported when technology objects are used. An overflow of the MC-Servo hereby occurs. This leads to an immediate switch to STOP mode.

In HOLD operating state, events are not initiated and the user program is not executed.
The outputs in the HOLD operating state behave as parameterized. Outputs either supply a configured substitute value or keep the last value output and bring the controlled process to a safe operating state.
When you reach a breakpoint, the CPU executes an implicit restart of the technology object. Homing the technology once again.

7.2 Technology data block (S7-1500, S7-1500T)

The properties of real objects (e.g. axes) are configured by means of the technology objects and saved in a technology data block. The technology data block contains all configuration data, setpoint and actual values, and status information of the technology object. The TIA Portal automatically creates the technology data block when the technology object is created. You access the data of the technology data block (read/write access) with your user program.
You can find a list and description at the tags of the corresponding technology object.

7.2.1 Evaluating the technology data block (S7-1500, S7-1500T)

Access to data in the technology data block occurs in accordance with the access to standard data blocks. Only tags with elementary data types can be accessed in the technology data block. Access to a complete data structure (e.g. STRUCT, ARRAY) is not possible.

Reading values from the technology data block

In your user program you can read actual values (e.g. current position) and status information, or detect error messages in the technology object. When you program a query in your user program (e.g. current velocity), the value is directly read from the technology object.
Reading values from the technology data block takes longer than for other data blocks. If you use these tags several times in a single cycle of your user program, it is recommended to copy the tag values to local tags, and use the local tags in your program.

Writing values to the technology data block

The configuration of the technology object in the TIA Portal is used to write the corresponding data to the technology data block. After they have been loaded into the CPU, these data are stored in the CPU on the SIMATIC Memory Card (load memory).
In the following cases, it may be necessary for the user program to write values to the technology data block:

- Adaptation of the configuration of the technology object (e.g. dynamic limits, software limit switches)
- Use of overrides
- Adaptation of position control (e.g. "Kv" parameter)

Changes to values in the technology data block by the user program can take effect at various points in time. The respective properties of the individual tags are described in the tags of the corresponding technology object:

Effectiveness of changes	Description	
Direct (DIR)	You write changes using direct assignments. The changes are applied only at the start of the next MC-Servo [OB91]. The changes are retained until the next POWER OFF of the CPU or restart of the technology object.	
	LREAL (e.g. <TO>.Override.Velocity)	The technology object performs a range check on the written value, and immediately starts using the new value. If range limits are violated when writing, the technology object automatically corrects the values. If the value is below the range, then the value is set to the low limit of the range; if the range is exceeded, then the value is set to the high limit of the range.
	DINT/BOOL (e.g. <TO>. PositionLimits_SW.Active)	Changes are only permitted in the defined value range. Value changes outside the value range are not applied. If you enter invalid values, the programming error OB (OB 121) is started.
When Motion Control instruction is called (CAL) (e.g. <TO>.Sensor[1..4].ActiveHoming.HomePositionOffset)	You write changes using direct assignments. The changes are applied at the start of the next MC-Servo [OB91] after the call of the corresponding Motion Control instruction in the user program. The changes are retained until the next POWER OFF of the CPU or restart of the technology object.	
Restart (RES) (e.g. <TO>.Homing.AutoReversal)	Since restart-relevant tags have dependencies on other tags, value changes cannot be applied at any arbitrary time. The changes are only used after reinitialization (restart) of the technology object. During a restart the technology object is reinitialized with the data in load memory. You therefore write changes to the start value in the load memory with the extended instruction "WRIT_DBL" (write to data block in load memory). You trigger the restart in your user program using the Motion Control instruction "MC_Reset" with parameter "Restart" = TRUE. Additional information regarding the restart can be found in the section Restarting technology objects (Page 112).	
Read only (RON) (e.g. <TO>.Position)	The tag cannot and must not be changed during runtime of the user program.	

NOTE

Save changes with "WRIT_DBL"

Changes to tags immediately in effect are lost on POWER OFF of the CPU, or restart of the technology object.

If changes in the technology data block should also be retained after POWER OFF of the CPU, or restart of the technology object, you must write the changes to the start value in the load memory with the extended instruction "WRIT_DBL".

NOTE

Using the "READ_DBL" and "WRIT_DBL" data block functions

The "READ_DBL" and "WRIT_DBL" data block functions may only be used on individual tags in conjunction with the tags of the technology object. The "READ_DBL" and "WRIT_DBL" data block functions must not be applied to data structures of the technology object.

Isochronous evaluation of data

If you want to process data of the technology data block in isochronous mode from a Motion Control application cycle, there is the option of evaluating this data in the MC-PreServo [OB67]/MC-PostServo [OB95] as of technology version V3.0. As of technology version V5.0, you also have the option of evaluating these in MC-PreInterpolator [OB68].

7.2.2 Evaluate StatusWord, ErrorWord and WarningWord (S7-1500, S7-1500T)

To be able to symbolically use individual status and error information from the "StatusWord", "ErrorWord" and "WarningWord" data double words, you can evaluate them as described below. For consistent evaluation, you should avoid using bit addressing to access these data double words in the technology data block. Access to an individual bit in the technology data block only lasts as long as the access to the entire data word.

When required, copy the required data double word to a tag of a data structure and query the individual bits of the tag.

The allocation of the individual bits in the data double words can be found in the description of the tags of the corresponding technology object.

Requirements

The technology object has been created.

Procedure

To evaluate the individual bits in the data word "StatusWord", follow these steps:

1. Crate a global data structure. Name the data structure, e.g. as "Status".
2. Create a double word (DWORD) in the data structure "Status". Name the double word, e.g. as "Temp".
3. Create 32 Boolean tags in the "Status" data structure. You can obtain a clearer overview by giving the individual Boolean tags identical names as the bits in the technology DB (e.g. name the fifth Boolean tag "HomingDone").
4. If needed, copy the tag "<TO>.StatusWord" from the technology data block to the double word "Temp" in your data structure.
5. Copy the individual bits of double word "Temp" to the corresponding Boolean tags with bit accesses.
6. Use the Boolean tags to query the status bits.

Evaluate the data words "ErrorWord" and "WarningWord" as specified in steps 1 to 6.

Example

The following example shows how you can read out and save the fifth bit "HomingDone" of the data word "StatusWord":

SCL	Explanation
`#Status.Temp := "TO".StatusWord;`	`//Copy status word`
`#Status.HomingDone := #Status.Temp.%X5;`	`//Copy individual bits per bit access`

STL	Explanation
L "TO".StatusWord	//Copy status word
T #Status.Temp	
U #Status.Temp.%X5	//Copy individual bits per bit access
= #Status.HomingDone	

7.2.3 Change restart-relevant data (S7-1500, S7-1500T)

In order to change restart-relevant data in the technology data block, write to the starting values of the tags in load memory using the extended instruction "WRIT_DBL". In order for the changes to be applied, a restart of the technology object must be performed.

You can see from the description of the tag of the corresponding technology object whether value changes of a tag are restart-relevant.

Requirement

The technology object has been created.

Procedure

To change restart-relevant data, proceed as follows:

1. Create a data block and fill it with the restart-relevant values, that you want to change in the technology data block. In doing so, the data types must match the tags to be changed.
2. Write the values from your data block to the starting values of the tags of the technology data block in load memory, using the extended instruction "WRIT_DBL".

   If restart-relevant data were changed, this will be indicated in the "<TO>.StatusWord.X3 (OnlineStartValuesChanged)" tag of the technology object.
3. Perform a restart of the technology object using the Motion Control instruction "MC_Reset" with parameter "Restart" = TRUE.

After the restart of the technology object, the new value is transferred into the technology data block in work memory, and is effective.

Changing multiple variables with the "WRIT_DBL" instruction

The tag "<TO>.StatusWord.X3 (OnlineStartValuesChanged)" indicates that the value of a tag has been changed.

If you change several variables with "WRIT_DBL", you cannot use "<TO>.StatusWord.X3 (OnlineStartValuesChanged)" to determine which tags have already been written.

To capture the relevant value changes of several variables, build your user program with "WRIT_DBL" similar to the following programming example in a sequencer:

SCL programming example

```
//*******
#FB_STATE_LIMITS_MAX_JERK: //write limits max jerk
#tempRetVal := WRIT_DBL (REQ := TRUE,
SRCBLK := #statDynamicLimits.MaxJerk,
BUSY => #statBusyWriting,
DSTBLK => #axis.DynamicLimits.MaxJerk);
```

```
IF #statBusyWriting THEN
; //wait until writing completed
ELSIF #tempRetVal = 16#0 AND NOT #statBusyWriting
THEN //done without error
//go to next state:
//restart technology object, if all data are
//written to load memory
//Alternatively: Write more variables in
//the next state via WRIT_DBL and
//execute restart later
#statFBState := #FB_STATE_RESTART_TO;
ELSE //error Write DBL
//go to error state
#statStatus := INT_TO_WORD (#tempRetVal);
END_IF;
//*******
#FB_STATE_RESTART_TO: //Restart TO
#instFBReset (Axis := #axis,
Execute := TRUE,
Restart := TRUE);
```

7.3 Motion Control instructions (S7-1500, S7-1500T)

7.3.1 Motion Control instruction parameters (S7-1500, S7-1500T)

The individual Motion Control instructions are described in detail in the section "S7-1500 Motion Control V7".

When creating your user program, take the following explanations of the Motion Control instruction parameters into account.

Reference to the technology object

The technology object is specified for the Motion Control instruction as follows:

- **Parameter "Axis"**

  The "Axis" input parameter of a Motion Control instruction contains a reference to the technology object that is to execute the corresponding job.

  The corresponding technology object is also referenced in the following parameters:
  - Parameter "Master"
  - Parameter "Slave"
  - Parameter "Cam"
  - Parameter "MeasuringInput"
  - Parameter "OutputCam"
  - Parameter "CamTrack"
  - "AxesGroup" parameter

  As of technology version V3.0, the reference to the technology object can be specified, also in limited manner, via the data type "DB_ANY".

  As of firmware version V3.0, you can temporarily home the technology object with "DB_ANY".

For more information on programming with "DB_ANY", refer to the section "Parameter transfer for function blocks (Page 95)".

Job start and transfer of input parameters of a Motion Control instruction

For the start of jobs and the transfer of modified parameter values, a distinction is made between the following Motion Control instructions:

- **Motion Control instructions with "Execute" parameter**
  With a positive edge at the "Execute" parameter, the job is started and the existing values for the input parameters are transferred.
  Subsequently changed parameter values are not transferred until the next job start.
  Resetting the "Execute" parameter does not end the job, but it does affect the display duration of the job status. As long as "Execute" is set to "TRUE", the output parameters will be updated. If "Execute" is reset before the completion of a job, the parameters "Done", "Error" and "CommandAborted" are correspondingly set for only one call cycle.
- **Motion Control instructions with "Enable" parameter**
  The job is started by setting the "Enable" parameter.
  As long as "Enable" = TRUE, the job remains active and changed parameter values will be transferred each time the instruction is called in the user program.
  The job is ended by resetting the "Enable" parameter.
  The input parameters "JogForward" and "JogBackward" of the Motion Control instruction "MC_MoveJog" correspond in their behavior to the "Enable" parameter.

Job status

The following output parameters indicate the status of the job execution:

- **Motion Control instructions with "Done" parameter**
  The normal completion of a job is indicated with parameter "Done" = TRUE.
- **Motion Control instructions without "Done" parameter**
  The achievement of the job objective is indicated by other parameters (e.g. "Status", "InVelocity"). For more information, refer to the "Tracking running jobs (Page 100)" section.
- **Parameter "Busy"**
  As long as a job is in progress, the "Busy" parameter shows the value "TRUE". If a job was ended or canceled, "Busy" shows the value "FALSE".
- **Parameter "Active"**
  If a job is active in Motion Control, the parameter "Active" shows the value "TRUE". As long as a job is in the job sequence, "Active" shows the value "FALSE".
- **Parameter "CommandAborted"**
  If a job was canceled by another job, the "CommandAborted" parameter shows the value "TRUE".
- **Parameter "Error"**
  If a Motion Control instruction error occurs, the "Error" parameter shows the value "TRUE". The "ErrorID" parameter indicates the cause of the error.

As long as the "Execute" or "Enable" parameter is set to "TRUE", the output parameters will be updated. Otherwise, the parameters "Done", "Error" and "CommandAborted" are correspondingly set for only one cycle.

Cancelation of running jobs

An active Motion Control job is canceled by the start of a new Motion Control job. In the process, the current dynamic setpoints (acceleration, deceleration, jerk, velocity) are set to the values of the overriding job.

Example of parameter behavior

The behavior of the parameters of Motion Control instructions is shown in the following chart using the example of two "MC_MoveAbsolute" jobs.

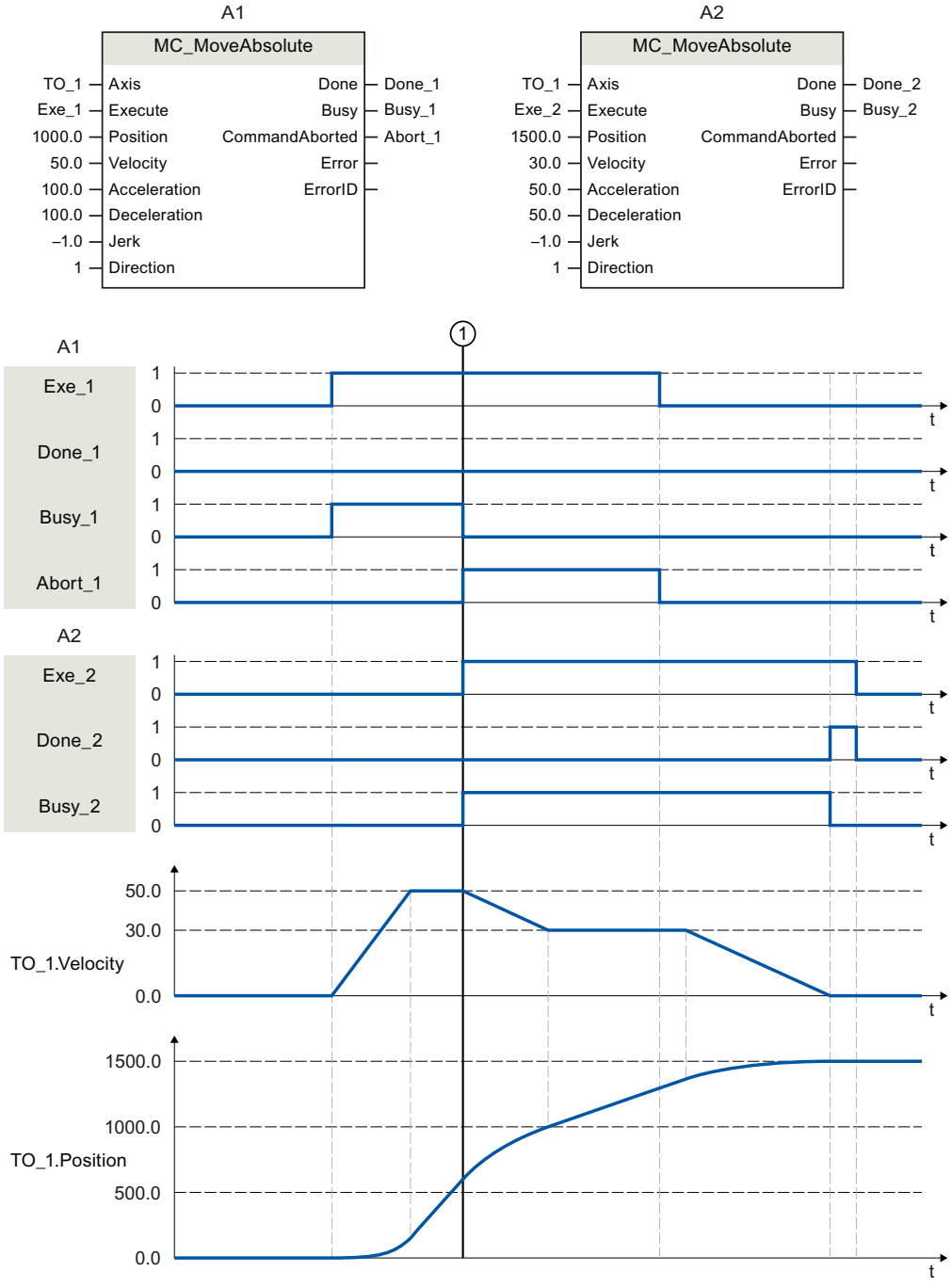

Using "Exe_1", an "MC_MoveAbsolute" job (A1) with target position 1000.0 is initiated. "Busy_1" is set to "TRUE". The axis is accelerated to the specified velocity and moved to the target position (see TO_1.Velocity and TO_1.Position). Before the target position is reached, the job is overridden at time ① by another "MC_MoveAbsolute" job (A2). The termination is signaled via "Abort_1", and "Busy_1" is set to "FALSE". The axis is braked to the velocity

specified in A2 and moved to the new target position 1500.0. When the axis reaches the target position, this is signaled via "Done_2".

Non-position-controlled operation

The position control of the axis can be deactivated with the following parameters:

- MC_Power.StartMode = 0
- MC_MoveVelocity.PositionControlled = FALSE
- MC_MoveJog.PositionControlled = FALSE

For more information, refer to the section "Non-position-controlled operation" of the "S7-1500/S7-1500T Axis functions" (Page 8) documentation.

7.3.2 Add Motion Control instructions (S7-1500, S7-1500T)

You add Motion Control instructions to a program block in the same way as other instructions. You control all available functions of the technology object using the Motion Control instructions. The instructions can be called at all execution levels.

Requirements

The technology object was created.

Procedure

To add Motion Control instructions in your user program, proceed as follows:

1. Double click your program block in the project tree (the program block must be called in the cyclical program).
   The program block is opened in the programming editor, and the available instructions are displayed.
2. In the "Instructions" task card, open the "Technology > Motion Control" folder.
3. Using drag-and-drop, move the Motion Control instruction, e.g. "MC_Power", to the desired segment of the program block.
   The "Call options" dialog opens.
4. In the dialog, specify a name and a number for the instance data block of the Motion Control instruction.

5. Click "OK".
   The Motion Control instruction "MC_Power" is inserted into the network.

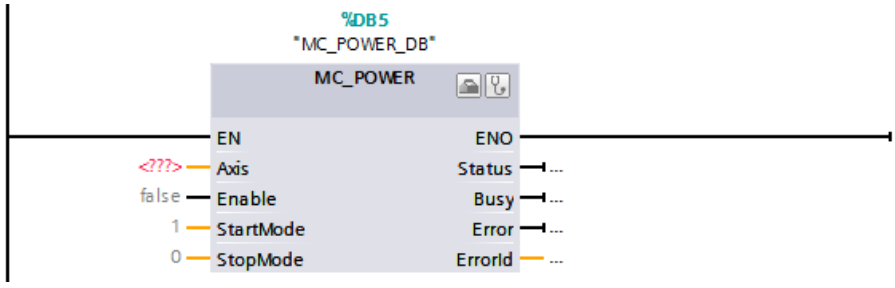

   The instance data block is automatically created under "Program Blocks > System Blocks > Program Resources".

6. Input parameters without a default value (e.g. "Axis"), must be assigned. Select the technology object in the project tree and move the technology object onto <...> at the "Axis" parameter using drag-and-drop.

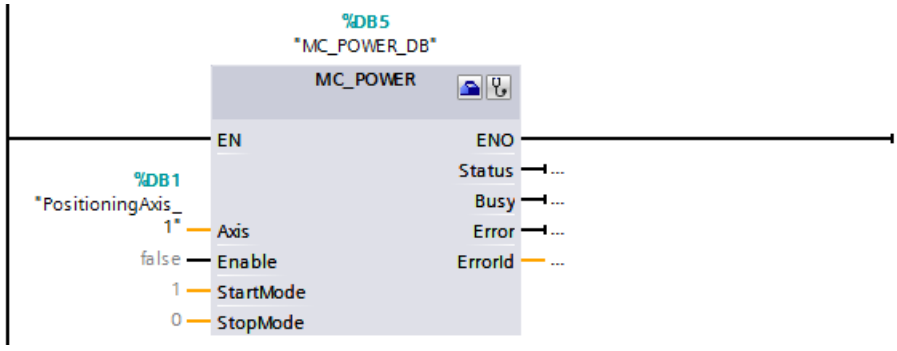

   Once the technology object is specified in the "Axis" parameter, the following buttons are available to you:

	To open the configuration of the technology object, click on the toolbox icon.
	To open the diagnostics of the technology object, click on the stethoscope icon.

7. Add additional Motion Control instructions in accordance with steps 3 through 6.

NOTE

Multi-instance DBs

If you use multi-instances of the Motion Control instructions "MC_Power" or "MC_TorqueLimiting", create the multi-instances in a separate instance data block. This allows you to download program blocks from other sections of your user program without switching off the axes, including in "RUN" mode.

See also

Tracking active jobs (Page 100)

7.3.3 Parameter transfer for function blocks (S7-1500, S7-1500T)

If you want to reuse a function block with Motion Control instructions for different technology objects, create an input parameter of the data type of the respective technology object in the block interface of the calling function block. You assign the data type in the block interface with a direct input. The parameter is then transferred as reference to the technology object to the "Axis" parameter of the Motion Control instructions. The data types of technology objects correspond to the structure of the associated technology data block.

In contrast to standard data types, the data types for technology objects are always passed on as pointers to the function block (Call by reference). This remains true if you declare the data types of the technology objects in "Input" area of the block interface. Write access to function blocks always leads directly to modification of the referenced technology object.

Example 1: Tag transfer with specific data type

By specifying the data type, you can address the tags of the technology object in the function block (<parameters of the block interface>.<tag of the technology object>). The data types for the reference to the technology objects are available in the section "appendix (Page 113)".

The following table shows the declaration of the tags used:

Tag	Declaration	Data type	Description
axis	Input	TO_PositioningAxis	Reference to the technology object
on	Input	BOOL	Signal to enable the axis
actPosition	Output	LReal	Query of the actual position from the technology data block
instMC_POWER	Static	MC_POWER	Multi-instance of the Motion Control instruction "MC_Power"

The following SCL program shows the tag transfer with a specific data type:

SCL	Explanation
`#instMC_POWER(Axis := #axis, Enable := #on);`	`//Call of the Motion Control instruction "MC_Power" with enable of the axis`
`#actPosition := #axis.ActualPosition;`	`//Query of the actual position from the technology data block`

Example 2: Tag transfer with "DB_ANY" for axes

A more flexible option for the transferring technology objects to blocks is provided by the data type "DB_ANY" in combination with references to technology objects. These references can be assigned during runtime.

You can store all types of technology objects in a "DB_ANY" data type ARRAY. An ARRAY of the data type "DB_ANY" can thus represent a list of axes, for example. This allows technology objects to be handled more flexibly in a user program.

This example shows how to enable and disable different axis types with one function block. The technology objects are homed temporarily.

The following technology objects are used:

Number	Data type	Name
1	TO_SpeedAxis	SpeedAxis_1
1	TO_PositioningAxis	PositioningAxis_1
1	TO_SynchronousAxis	SynchronousAxis_1

To enable and disable all three axes with one function block, follow these steps:

1. Add a global data block, in the example "AxesDB".
2. Define the one constant as the last index of the array, e.g. LAST_INDEX_AXES. The constant has the value 2 in this example because 3 axes are used and the array starts at 0.
3. Add an "Array[0.. LAST_INDEX_AXES] of DB_ANY" to the created "AxesDB" data block:

Tag	Declaration	Data type
axes	Static	Array[0.. LAST_INDEX_AXES] of DB_ANY

   The unique assignment of the technology objects to the elements of the array must be carried out once in the user program, for example, when the CPU is started in OB100 (Startup).
4. Assign the created technology objects to the elements of the array from the data block in OB100 (Startup).
   The following SCL program shows the tag transfer with "DB_ANY":
   ```
   //assign technology objects to ARRAY of DB_ANY
   "Data".axes[0] := "SpeedAxis_1";
   "Data".axes[1] := "PositioningAxis_1";
   "Data".axes[2] := "SynchronousAxis_1";
   ```
5. Create a function block, in the example "EnableAxes".
6. Declare the tags as follows:

Tag	Declaration	Data type	Description
enableAxes	Input	BOOL	Enable/disable all axes
axisEnabled	Output	ARRAY [0.. LAST_INDEX_AXES] of BOOL	Status axis enable
axis	InOut	ARRAY[0.. LAST_INDEX_AXES] of DB_ANY	List of the axes
instMC_Power	Static	ARRAY [0.. LAST_INDEX_AXES] of MC_POWER	Array of multi-instances of the MC_POWER
tempRefSpeedAxis	Temp	REF_TO TO_SpeedAxis	Temporary reference of the technology object type TO_SpeedAxis
tempAxesCounter	Temp	Dint	Counter tag for axes

   In the program code, reference the three axis types to the temporary reference of the TO_SpeedAxis technology object. Since the TO_SpeedAxis is a component of the TO_PositioningAxis and the TO_SynchronousAxis, referencing of all three axes is possible.

7. Program the "EnableAxis" FB as follows:

```
// enable all axes
FOR #tempAxesCounter := 0  TO LAST_INDEX_AXES DO
    // build temporary reference
    #tempRefSpeedAxis ?= #axes[#tempAxesCounter];
    // check valid reference
    IF #Ref_SpeedAxis <> NULL THEN
// call multi instance
        #instMC_Power[#tempAxesCounter](Axis :=
#tempRefSpeedAxis^,
                                    Enable := #enableAxes);
// set output states, if axis is enabled
#axisEnabled[#tempAxesCounter] :=
#tempRefSpeedAxis^.StatusWord.%X0;
    ELSE
        ; // implement error handling in case of NULL
END_IF;
END_FOR;
```

Example 3: Tag transfer with "DB_ANY" for cyclic cams

This example shows how to temporarily reference the different technology object types for cyclic cams for cam interpolation. You can also implement the switching of cyclic cams during camming with temporary references.

The following technology objects are used:

Number	Data type	Name
2	TO_Cam	TO_Cam_1, TO_Cam_2
2	TO_Cam_10k	TO_Cam_3_10k_1, TO_Cam_4_10k

1. Proceed as in the first five steps of example 2. Cyclic cams are used instead of axes.
2. Declare the tags of the "InterpolateCams" function block as follows:

Tag	Declaration	Data type	Description
executeCamInter-polation	Input	BOOL	Start cam interpolation
selectedCamIndex	Input	USInt	Cyclic cam index
done	Output	BOOL	Cyclic cam was interpolated
busy	Output	BOOL	Cyclic cam is being interpolated
error	Output	BOOL	Error on the block
cams	InOut	ARRAY[0.. LAST_INDEX_CAMS] of DB_ANY	List of cyclic cams
instInterpolateCam	Static	MC_INTERPOLATECAM	Multi-instance of the MC_INTERPOLATECAM
tempRefCam	Temp	REF_TO TO_CamBase	Temporary reference of the technology object type TO_CamBase

Tag	Declaration	Data type	Description
tempAxesCounter	Temp	Dint	Counter tag for axes

In the program code, reference the cyclic cams to the temporary reference of the TO_CamBase technology object. A reference is possible because the TO_CamBase is a component of the TO_Cam and the TO_Cam_10k.

You can use the "selectedCam" input to access the index of the array and thus select the cyclic cam that is to be interpolated. Start the cam interpolation via the "executeCamming" input.

3. Program the "InterpolateCams" FB as follows.

```
//execute cam interpolation for TO_Cam and TO_Cam_10k
#Ref_Cam ?= #cams[#selectedCamIndex];
// check valid reference
IF #tempRefCam <> NULL THEN
    // call multi instance for cam interpolation
    #instInterpolateCam(Cam := #tempRefCam^,
                        Execute:=#executeCamInterpolation,
                        Done=>#done,
                        Busy=>#busy,
                        Error=>#error);
ELSE
// implement error handling here,
// DB_ANY does not have a type TO_Cam or TO_Cam_10k
    #busy := FALSE;
    #done := FALSE;
    #error := TRUE;
END_IF;
```

7.4 Starting Motion Control jobs (S7-1500, S7-1500T)

Motion Control jobs are started by setting the "Execute" or "Enable" parameter of the Motion Control instruction. The call of the Motion Control instructions for a technology object should occur in an execution level.

When executing Motion Control jobs, you should also take note of the status of the technology object.

Starting Motion Control jobs should be performed in the following steps:

1. Query the status of the technology object.
2. Initiate new job for the technology object.
3. Check job status.

These steps are explained using the example of a job for absolute positioning.

1. Query the status of the technology object

Make sure that the technology object is in the appropriate status to perform the desired job:

- **Has the technology object been released?**
  To execute motion jobs, the technology object must be enabled.
  Enabling is performed using the Motion Control instruction "MC_Power".
  The "MC_Power.Status" parameter (<TO>.StatusWord.X0 (Enable)) must show the value "TRUE".
- **Is a technology alarm pending?**
  To perform motion commands, no technology alarms or alarm responses may be pending. The "<TO>.ErrorDetail.Number" and "<TO>.ErrorDetail.Reaction" tags of the technology object must show the value zero. After resolving the error, acknowledge any pending alarms using the Motion Control instruction "MC_Reset".
  You can find a list of the technology alarms and alarm responses in the "Technology alarms" section of the "S7-1500/S7-1500T Motion Control alarms and error IDs" documentation (Page 8).
- **Has the technology object been homed?**
  In order to perform a job for absolute positioning, the positioning axis/synchronous axis technology object must be homed. The referencing occurs via the Motion Control instruction "MC_Home". The "<TO>.StatusWord.X5 (HomingDone)" tag of the technology object must show the value "TRUE".

2. Initiate new command for the technology object

At the "Position" parameter of a Motion Control instruction, e.g. "MC_MoveAbsolute", specify the position to which the axis should be moved. Start the job with a positive edge at the "Execute" parameter.

3. Check command status

Parameter "Done" of the Motion Control instruction indicates successful completion of a job (target reached, in this case).

If an error is detected, the "Error" parameter of the Motion Control instruction is set to "TRUE", and the job is rejected.

You can program an error handling routine for the Motion Control job. For this purpose, evaluate the error indicated in the "Error" parameter. The cause of the error is indicated in the ErrorID parameter. After resolving the cause of the error, restart the job.

If "Error" = TRUE and "ErrorID" = 16#8001 is indicated during job execution, a technology alarm has occurred.

You can find a list of the ErrorIDs in the "Error IDs on Motion Control instructions" section of the "S7-1500/S7-1500T Motion Control alarms and error IDs" documentation (Page 8)".

More information

An option for evaluating the individual status-, error- and warning bits find can be found in section "Evaluate StatusWord, ErrorWord and WarningWord (Page 88)".

7.5 Tracking active jobs (S7-1500, S7-1500T)

The current status of the job processing is made available via the output parameters of the Motion Control instruction. These parameters are updated with each call of the Motion Control instruction.

When tracking jobs, a distinction is made between three groups:

- Motion Control instructions with "Done" parameter (Page 101)
- Motion Control instructions without "Done" parameter (Page 104)
- Motion Control instruction "MC_MoveJog" (Page 108)

7.5.1 Motion Control instructions with "Done" parameter (S7-1500, S7-1500T)

Jobs of Motion Control instructions with the "Done" parameter are started with a positive edge at the "Execute" parameter. If the job was completed without errors or interruption by another job (e.g. "MC_MoveAbsolute": Target position reached), the "Done" parameter shows the value "TRUE". The CPU processes the Motion Control statements and the technology object in different execution levels. The status bits on the Motion Control statements, such as the "Done" parameter, are updated with a delay.

In positioning instructions, the parameter "Done" is delayed by the set minimum dwell time (<TO>.PositioningMonitoring.MinDwellTime).

The following Motion Control instructions have a "Done" parameter for the S7-1500 CPU:

- MC_Reset
- MC_Home
- MC_Halt
- MC_MoveAbsolute
- MC_MoveRelative
- MC_MoveSuperimposed
- MC_HaltSuperimposed
- MC_SetSensor (S7-1500T)
- MC_Stop
- MC_SetAxisSTW
- MC_WriteParameter
- MC_SaveAbsoluteEncoderData
- MC_MeasuringInput
- MC_AbortMeasuringInput
- MC_PhasingRelative (S7-1500T)
- MC_PhasingAbsolute (S7-1500T)
- MC_OffsetRelative (S7-1500T)
- MC_OffsetAbsolute (S7-1500T)
- MC_GearOut (S7-1500T)
- MC_CamOut (S7-1500T)
- MC_InterpolateCam (S7-1500T)
- MC_GetCamLeadingValue (S7-1500T)
- MC_GetCamFollowingValue (S7-1500T)
- MC_CopyCamData (S7-1500T)

- MC_GroupInterrupt (S7-1500T)
- MC_GroupContinue (S7-1500T)
- MC_GroupStop (S7-1500T)
- MC_MoveLinearAbsolute (S7-1500T)
- MC_MoveLinearRelative (S7-1500T)
- MC_MoveCircularAbsolute (S7-1500T)
- MC_MoveCircularRelative (S7-1500T)
- MC_MoveDirectAbsolute (S7-1500T)
- MC_MoveDirectRelative (S7-1500T)
- MC_TrackConveyorBelt (S7-1500T)
- MC_KinematicsMotionSimulation (S7-1500T)
- MC_DefineWorkspaceZone (S7-1500T)
- MC_DefineKinematicsZone (S7-1500T)
- MC_SetWorkspaceZoneActive (S7-1500T)
- MC_SetWorkspaceZoneInactive (S7-1500T)
- MC_SetKinematicsZoneActive (S7-1500T)
- MC_SetKinematicsZoneInactive (S7-1500T)
- MC_DefineTool (S7-1500T)
- MC_SetTool (S7-1500T)
- MC_SetOcsFrame (S7-1500T)

The behavior of the parameters is shown below by way of example for various situations.

Complete execution of the job

If the Motion Control job has been completely executed all the way to the end, this is indicated with parameter "Done" = "TRUE". The signal state of the "Execute" parameter influences the display duration for the "Done" parameter:

You set "Execute" **after completion** of the job to "FALSE".	You set "Execute" **during processing** of the job to "FALSE".
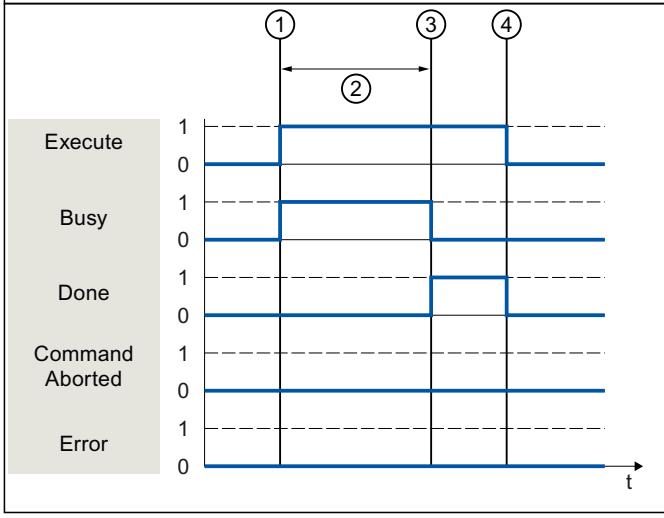	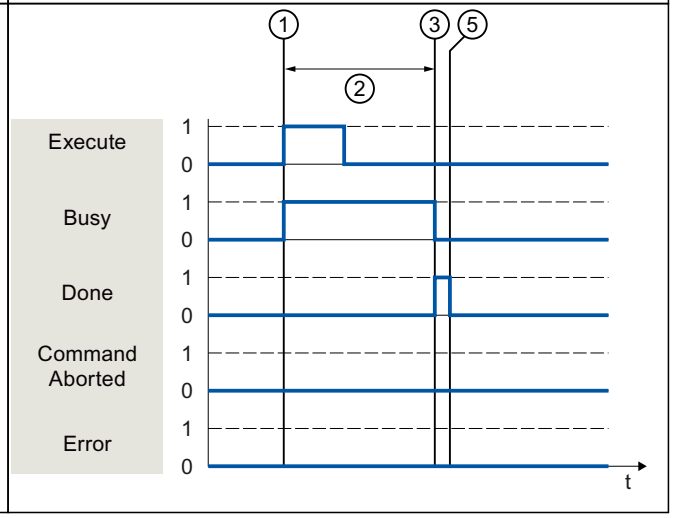

1	The job is started with a positive edge at the "Execute" parameter. Depending on the programming, "Execute" can be reset to the value "FALSE" during the job or the value "TRUE" can be retained until after completion of the job.

②	While the job is being executed, the "Busy" parameter shows the value "TRUE".
③	At the completion of the job (for example, with Motion Control instruction "MC_MoveAbsolute": Target position reached), the "Busy" parameter changes to "FALSE" and the "Done" parameter to "TRUE".
④	As long as the "Execute" parameter retains the value "TRUE" after completion of the job, the "Done" parameter also retains the value "TRUE".
⑤	If the "Execute" parameter was already set to "FALSE" before completion of the job, the "Done" parameter shows the value "TRUE" for only one execution cycle.

Job cancelation

If the Motion Control job is canceled during processing by another job, this is indicated in the "CommandAborted" parameter with the value "TRUE". The signal state of the "Execute" parameter influences the display duration for the "CommandAborted" parameter:

You set "Execute" **after** the job is canceled to "FALSE".	You set "Execute" **before** the job is canceled to "FALSE".
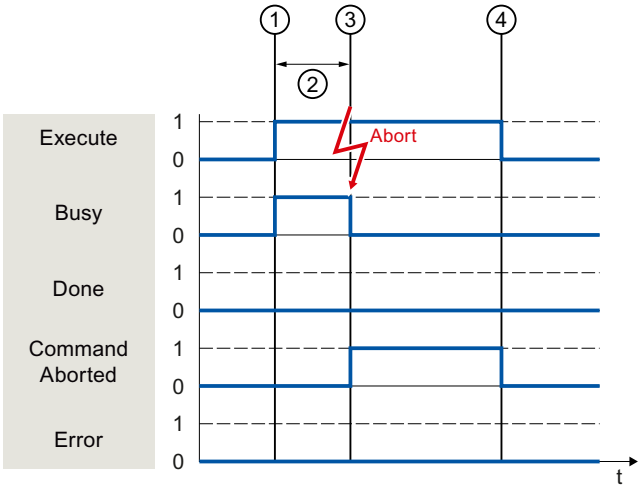	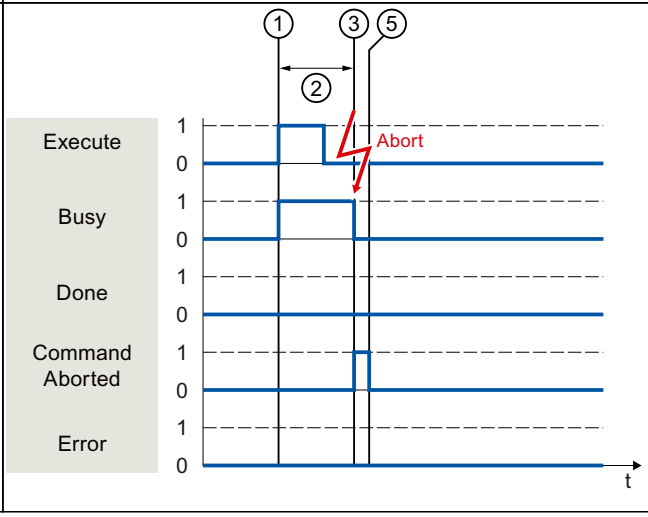

①	The job is started with a positive edge at the "Execute" parameter. Depending on the programming, "Execute" can be reset to the value "FALSE" during the job or the value "TRUE" can be retained until after completion of the job.
②	While the job is being executed, the parameter "Busy" shows the value "TRUE".
③	During job execution, the job is canceled by another Motion Control job. When the job is canceled, the "Busy" parameter changes to "FALSE" and "CommandAborted" changes to "TRUE".
④	As long as the "Execute" parameter retains the value "TRUE" after completion of the job, the "CommandAborted" parameter also retains the value "TRUE".
⑤	If the "Execute" parameter was already set to "FALSE" before the job is canceled, the "CommandAborted" parameter shows the value "TRUE" for only one execution cycle.

Error during job execution

If an error occurs during execution of the Motion Control job, this is indicated with parameter "Error" = "TRUE". The signal state of the "Execute" parameter influences the display duration for the "Error" parameter:

You set "Execute" **after** the occurrence of the error to "FALSE".	You set "Execute" **before** the occurrence of the error to "FALSE".
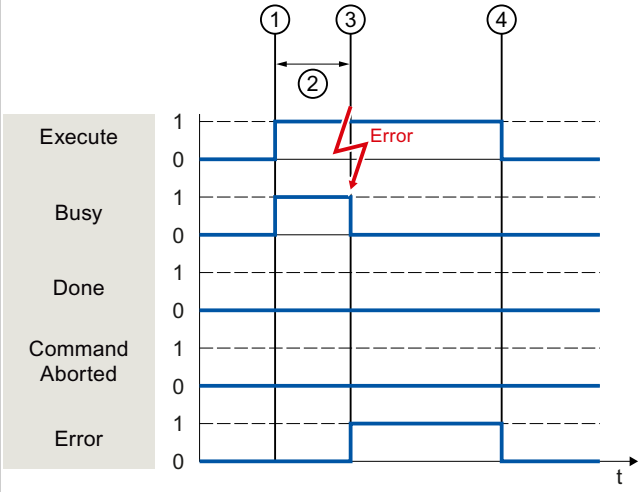	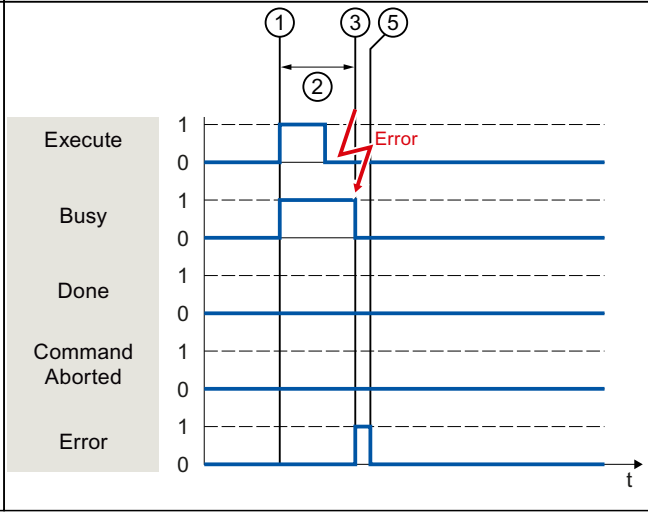

①	The job is started with a positive edge at the "Execute" parameter. Depending on the programming, "Execute" can be reset to the value "FALSE" during the job or the value "TRUE" can be retained until after completion of the job.
②	While the job is being executed, the "Busy" parameter shows the value "TRUE".
③	An error occurs during the execution of the job. When the error occurs, the "Busy" parameter changes to "FALSE" and the "Error" parameter to "TRUE".
④	As long as the "Execute" parameter retains the value "TRUE" after the occurrence of the error, the "Error" parameter also retains the value "TRUE".
⑤	If the "Execute" parameter was already set to "FALSE" before the occurrence of the error, the "Error" parameter shows the value "TRUE" for only one execution cycle.

Motion Control instructions

You can find more information on the Motion Control instructions of the Kinematics technology object in the "S7-1500T Kinematics functions" documentation (Page 8).

7.5.2 Motion Control instructions without "Done" parameter (S7-1500, S7-1500T)

Motion control instructions without the "Done" parameter use a special parameter to indicate that the job objective (e.g. "InVelocity", "InGear") has been achieved. The target state or motion is held until the job is aborted or an error occurs.

The following motion control instructions have a special parameter for indicating the job status:

Motion control instruction	Parameter	S7-1500	S7-1500T
MC_Power	Status	✓	✓
MC_MoveVelocity	InVelocity	✓	✓
MC_MoveJog	InVelocity	✓	✓
MC_GearIn	InGear	✓	✓
MC_GearInPos	InSync	-	✓
MC_GearInVelocity	InSync	-	✓
MC_CamIn	InSync	-	✓
MC_SynchronizedMotionSimulation	InSimulation	-	✓
MC_LeadingValueAdditive	Busy	-	✓
MC_MotionInVelocity	Busy	-	✓
MC_MotionInPosition	Busy	-	✓
MC_MotionInSuperimposed	Busy	-	✓
MC_TorqueLimiting	InClamping and InLimitation	✓	✓
MC_KinematicsTransformation	Busy and Valid	-	✓
MC_InverseKinematicsTransformation	Busy and Valid	-	✓

The following motion control instructions do not have any special parameter for indicating the job status. Feedback is provided via the following tags:

Motion control instruction	Parameter	Description
MC_MeasuringInputCyclic	Busy	The execution of a measuring job is indicated with parameter "Busy" = "TRUE". Completed measuring events are indicated in the corresponding event counters "<TO>.MeasuredValues.MeasuredValue1Counter" and "<TO>.MeasuredValues.MeasuredValue2Counter" of the technology data block.
MC_OutputCam	Busy	The execution of a job is indicated with parameter "Busy" = "TRUE". The CamOutput tag in the associated technology data block indicates the switching state of the output cam.
MC_CamTrack	Busy	The execution of a job is indicated with parameter "Busy" = "TRUE". The TrackOutput tag in the associated technology data block indicates the switching state of the cam track.

The behavior of the parameter is shown for various situations using the motion control instruction "MC_MoveVelocity" as an example:

Example "MC_MoveVelocity"

An "MC_MoveVelocity" job is started with a positive edge at the "Execute" parameter. The job objective is fulfilled when the assigned velocity is reached and the axis travels at constant

velocity. When the assigned velocity is reached and maintained, this is indicated in the "InVelocity" parameter with the value "TRUE".
The motion of the axis can, for example, be stopped with an "MC_Halt" job.

The assigned velocity is reached and maintained

Reaching of the assigned velocity is indicated with parameter "InVelocity" = "TRUE". The "Execute" parameter has no effect on the display duration for the "InVelocity" parameter.

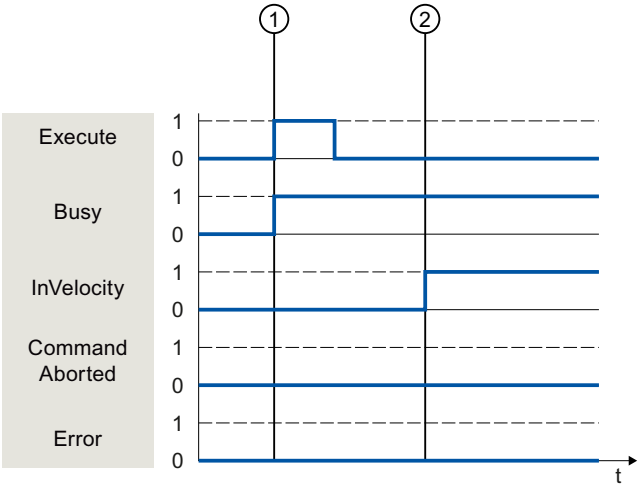

1	The job is started with a positive edge at the "Execute" parameter. Depending on the programming, "Execute" can be reset to the "FALSE" value before or after the parameterized velocity has been reached. While the job is being executed, the parameter "Busy" shows the value "TRUE".
2	When the assigned velocity is reached, the "InVelocity" parameter changes to "TRUE". The "Busy" and "InVelocity" parameters retain the value "TRUE" until another motion control job overrides the "MC_MoveVelocity" job.

The job is aborted before the assigned velocity is reached

If the motion control job is canceled by another job before the assigned velocity is reached, this is indicated with parameter "CommandAborted" = "TRUE". The signal state of the "Execute" parameter influences the display duration for the "CommandAborted" parameter.

You set "Execute" **after** the job is canceled to "FALSE".	You set "Execute" **before** the job is aborted to "FALSE".

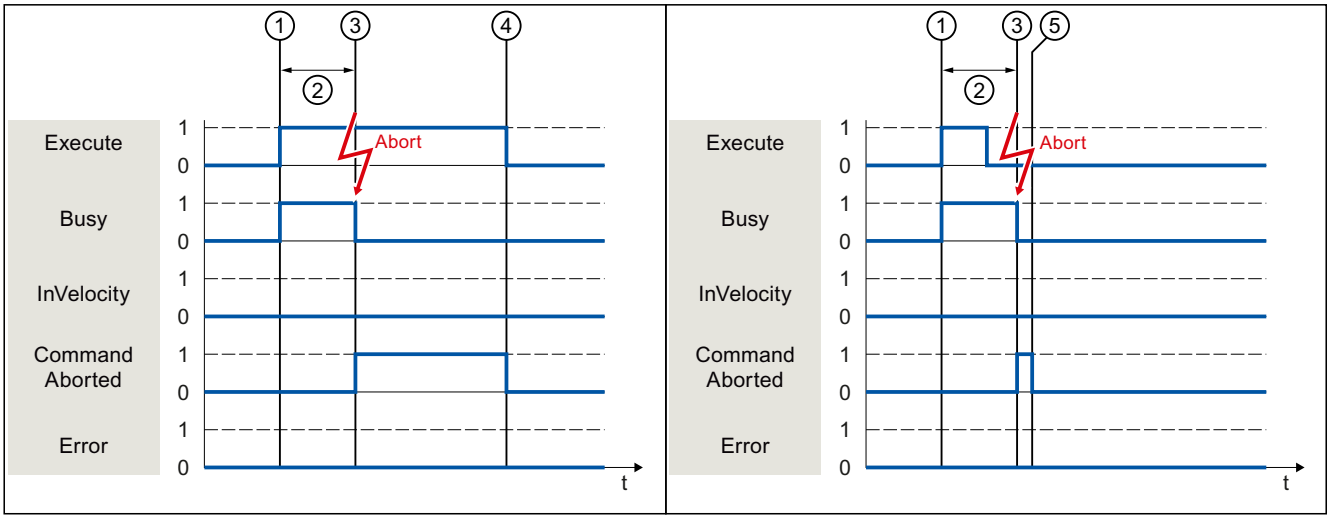

①	The job is started with a positive edge at the "Execute" parameter. Depending on the programming, "Execute" can be reset to the value "FALSE" during the job or the value "TRUE" can be retained until after the job is aborted.
②	While the job is being executed, the "Busy" parameter shows the value "TRUE".
③	During job execution, the job is aborted by another motion control job. When the job is aborted, the "Busy" parameter changes to "FALSE" and "CommandAborted" changes to "TRUE".
④	As long as the "Execute" parameter retains the value "TRUE" after completion of the job, the "CommandAborted" parameter also retains the value "TRUE".
⑤	If the "Execute" parameter was already set to "FALSE" before the job is aborted, the "CommandAborted" parameter shows the value "TRUE" for only one execution cycle.

An error has occurred prior to reaching the assigned velocity

If an error occurs during execution of the motion control job before the assigned velocity has been reached, this is indicated with parameter "Error" = "TRUE". The signal state of the "Execute" parameter influences the display duration for the "Error" parameter.

You set "Execute" **after** the occurrence of the error to "FALSE".	You set "Execute" **before** the occurrence of the error to "FALSE".

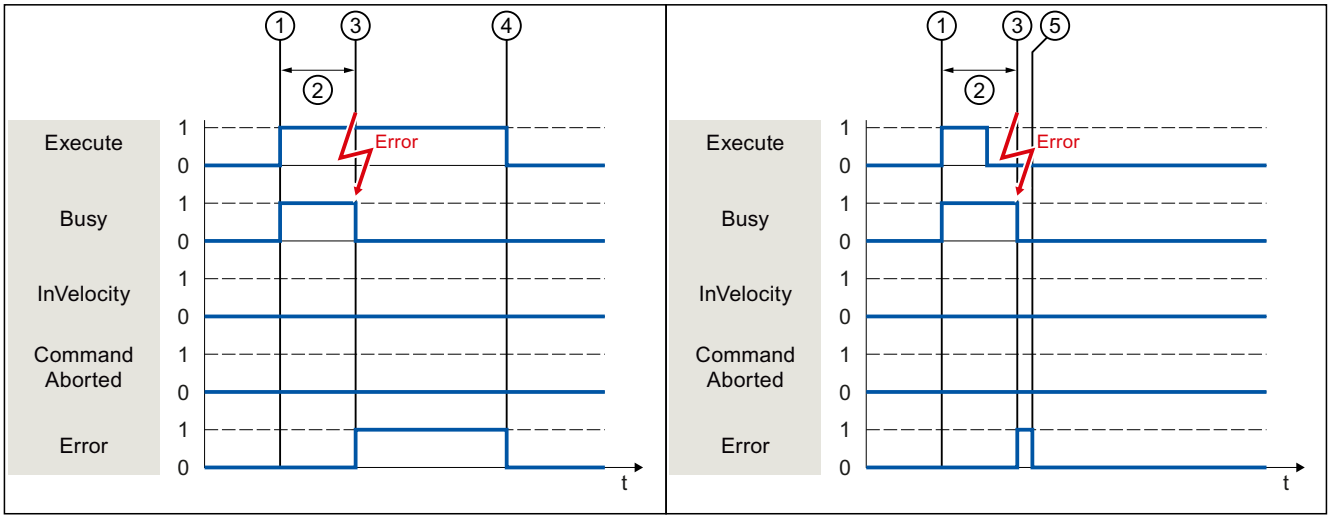

1	The job is started with a positive edge at the "Execute" parameter. Depending on the programming, "Execute" can be reset to the value "FALSE" during the job or the value "TRUE" can be retained until after the error has occurred.
2	While the job is being executed, the "Busy" parameter shows the value "TRUE".
3	An error occurs during the execution of the job. When the error occurs, the "Busy" parameter changes to "FALSE", and the "Error" parameter to "TRUE".
4	As long as the "Execute" parameter retains the value "TRUE" after completion of the job, the "Error" parameter also retains the value "TRUE".
5	If the "Execute" parameter was already set to "FALSE" before the job is aborted, the "Error" parameter shows the value "TRUE" for only one execution cycle.

Motion control instructions

You can find more information on the motion control instructions of the Kinematics technology object in the "S7-1500T Kinematics functions" documentation (Page 8).

7.5.3 Motion Control instruction "MC_MoveJog" (S7-1500, S7-1500T)

An "MC_MoveJog" job is started by setting the "JogForward" or "JogBackward" parameter. The job objective is fulfilled when the assigned velocity is reached and the axis travels at constant velocity. When the assigned velocity is reached and maintained, this is indicated in the "InVelocity" parameter with the value "TRUE".

The job is complete when the "JogForward" or "JogBackward" parameter has been set to the value "FALSE" and the axis has come to a standstill.

The behavior of the parameters in various situations is shown below by way of example.

The assigned velocity is reached and maintained

If the Motion Control job has been performed up to the point of reaching the assigned velocity, then this is indicated in the "InVelocity" parameter with the value "TRUE".

Jog mode is controlled by the "JogForward" parameter.	Jog mode is controlled by the "JogBackward" parameter.

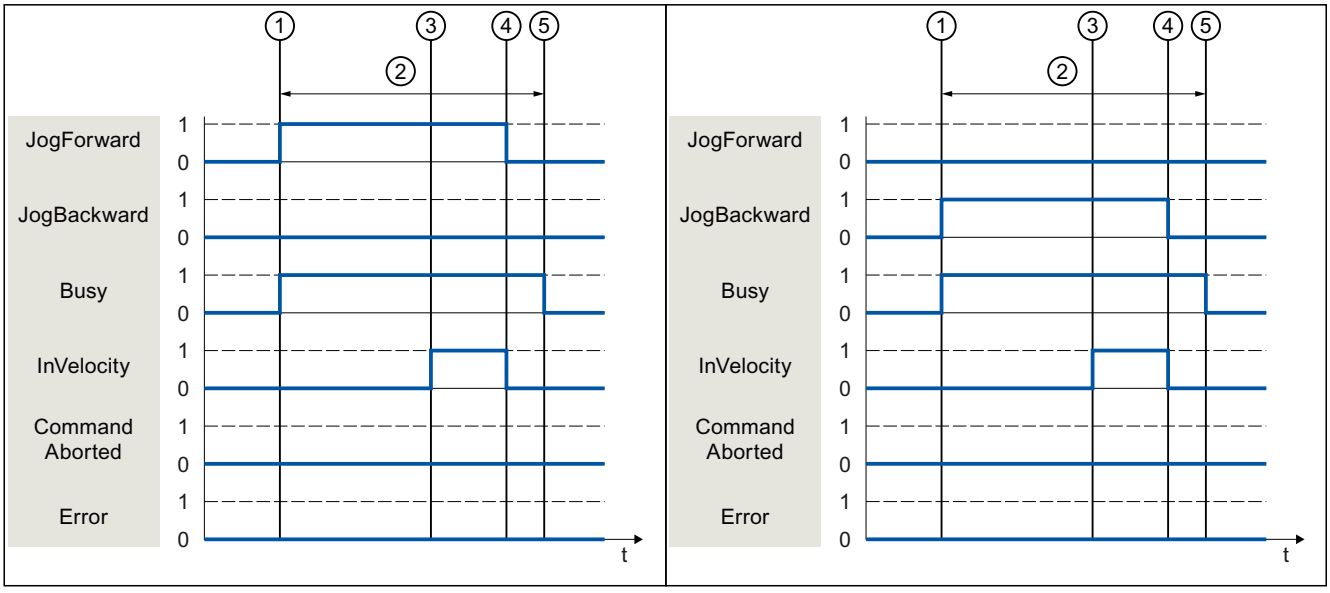

①	The job is started by setting the "JogForward" or "JogBackward" parameter.
②	While the job is being executed, the "Busy" parameter shows the value "TRUE".
③	When the assigned velocity is reached, the "InVelocity" parameter changes to "TRUE".
④	When the "JogForward" or "JogBackward" parameter is reset, the motion of the axis ends. The axis decelerates. The "InVelocity" parameter changes to "FALSE".
⑤	If the axis has come to a standstill, then the Motion Control job is complete and the "Busy" parameter changes to "FALSE".

The job is aborted during execution

If the Motion Control job is canceled during processing by another job, this is indicated in the "CommandAborted" parameter with the value "TRUE". The behavior of the "CommandAborted" parameter is independent of reaching the assigned velocity.

Jog mode is controlled by the "JogForward" parameter.	Jog mode is controlled by the "JogBackward" parameter.

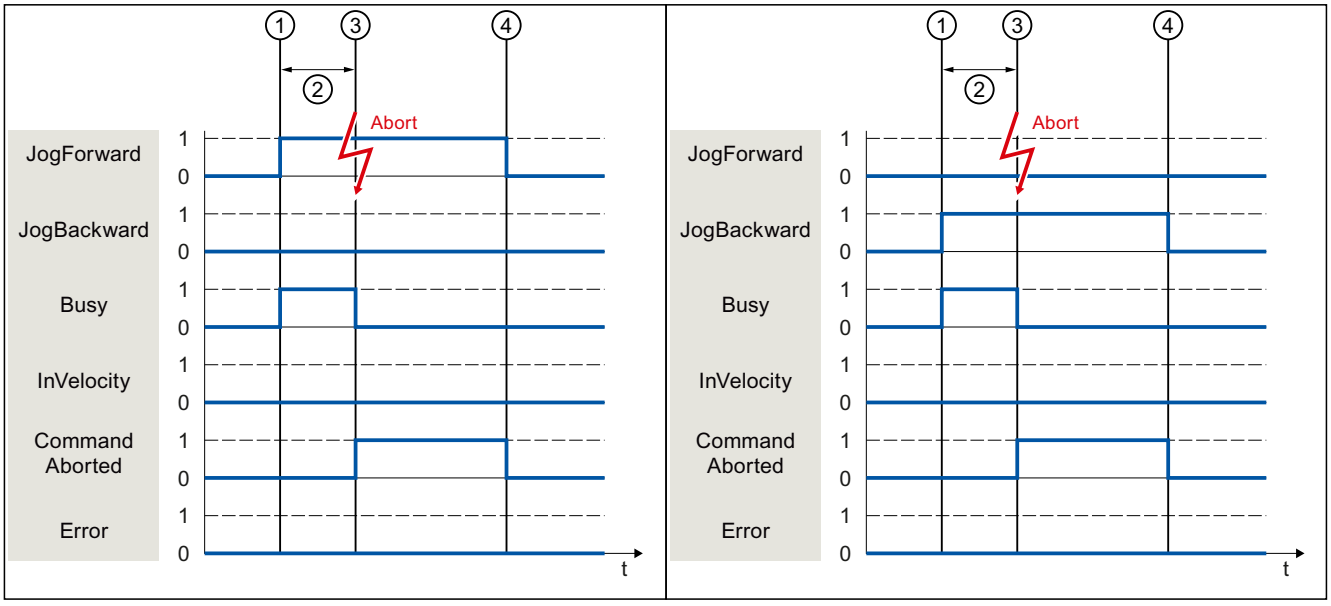

1	The job is started by setting the "JogForward" or "JogBackward" parameter.
2	While the job is processing, the "Busy" parameter shows the value "TRUE".
3	During job execution, the job is aborted by another Motion Control job. When the job is aborted, the "Busy" parameter changes to "FALSE" and "CommandAborted" changes to "TRUE".
4	When the "JogForward" or "JogBackward" parameter is reset, the "CommandAborted" parameter likewise changes to "FALSE".

An error occurs during the execution of the job

If an error occurs during execution of the Motion Control job, this is indicated in the "Error" parameter with the value "TRUE". The behavior of the "Error" parameter is independent of reaching the assigned velocity.

Jog mode is controlled by the "JogForward" parameter.	Jog mode is controlled by the "JogBackward" parameter.

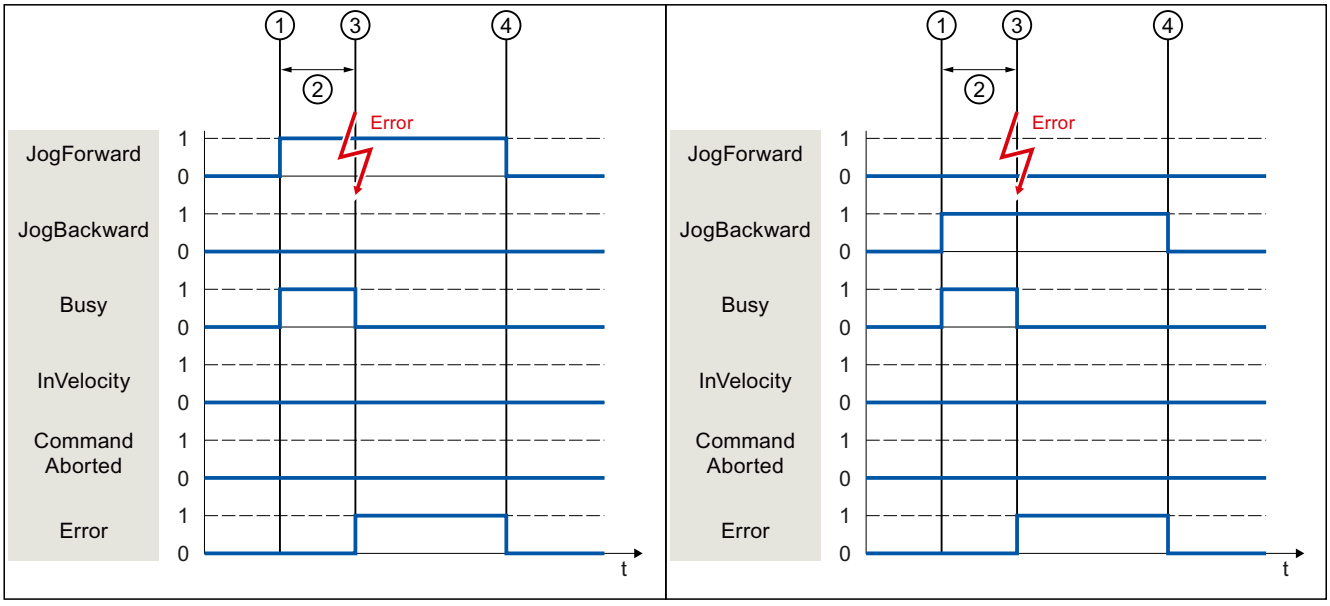

1	The job is started by setting the "JogForward" or "JogBackward" parameter.
2	While the job is being executed, the "Busy" parameter shows the value "TRUE".
3	An error occurs during the execution of the job. When the error occurs, the "Busy" parameter changes to "FALSE", and "Error" changes to "TRUE".
4	When the "JogForward" or "JogBackward" is reset to the value "FALSE", the "Error" parameter likewise changes to "FALSE".

7.6 Ending Motion Control jobs (S7-1500, S7-1500T)

When a job is ended, a distinction is made between error-free completion of the job and a motion cancelation.

Completion of job

The completion of a Motion Control job is indicated as described in the "Tracking running jobs (Page 100)" section.

Job termination

The termination and the substitution behavior are described in the section "Substitution behavior of Motion Control jobs". Special waiting jobs can be canceled with an "MC_Power" job.

Motion cancelation

If a motion must be canceled, you can perform the following measures:

- Execute "MC_Halt" or "MC_Stop"
  To cancel a motion and stop the axis, you can use an "MC_Halt" or "MC_Stop" job.
- Disable "MC_Power"
  In an emergency, you can stop the axis via an emergency stop ramp. To do this, set the "Enable" parameter of the "MC_Power" job to "FALSE". The axis is decelerated according to the selected "StopMode" and all jobs of the technology object are canceled.
- Execute "MC_GearOut" or "MC_CamOut" (S7-1500T)
  To terminate gearing, you can desynchronize the following axis with a "MC_GearOut" job.
  To end camming, you can desynchronize the following axis with an "MC_CamOut" job.

Measuring job cancelation

With an "MC_AbortMeasuringInput" job you can cancel an active one-time or cyclic measuring job.

Cancellation of an active output cam/cam track

- "MC_OutputCam"
  With "MC_OutputCam.Enable" = FALSE you can disable an output cam.
- "MC_CamTrack"
  With "MC_CamTrack.Enable" = FALSE you can disable an active cam track.

7.7 Restart of technology objects (S7-1500, S7-1500T)

After the CPU is switched on, or after technology objects are downloaded into the CPU, the system automatically initializes the technology objects with the start values from the technology data block. If restart-relevant changes are detected during a reload into the CPU, a restart of the technology object is automatically performed.

If restart-relevant data have been changed in RUN mode by the user program, then the technology object must be reinitialized by the user in order for the changes to be used. At a RUN → STOP transition, the CPU automatically performs a restart of technology objects with restart-relevant changes.

If changes in the technology data block should also be retained after the restart of the technology object, then you must write the changes to the start value in load memory using the extended instruction "WRIT_DBL".

Restart required

If a restart of the technology object is required, this is indicated at "Technology object > Diagnostics > Status and error bits > Axis status or Encoder status > Online start value changed", as well as in the tag "<TO>.StatusWord.X3 (OnlineStartValuesChanged)" of the technology object.

Restarting a technology object

A restart of the technology object is triggered by the user by means of the "MC_Reset" Motion Control instruction, with parameter "Restart" = TRUE.

During a restart, all configuration data of the technology object are loaded from load memory into work memory. In the process, the actual values in the technology data block are overwritten.

Note the following during a restart of the technology object:

- A restart resets the "Homed" status of a technology object with incremental actual values ("<TO>.StatusWord.X5 (HomingDone)").
- While a restart is being performed, the technology object cannot perform any jobs. An active restart will be indicated under "Technology object > Diagnostics > Status and error bits > Axis status or Encoder status > Restart active", and in the "<TO>.StatusWord.X2 (RestartActive)" tag of the technology object.
- Motion Control jobs are rejected during a restart with the "Error" = TRUE and "ErrorID" = 16#800D parameters (job not executable, because a restart is active).
- Active Motion Control jobs to the technology objects output cam, cam track, measuring input and kinematics are canceled by a restart with "ErrorID" = 16#800D.
- While a restart is being executed, you cannot access the technology data block.

See also

Change restart-relevant data (Page 89)

7.8 Data types (S7-1500, S7-1500T)

Data types for the use of technology

The table below contains the data types for reference to the respective technology object:

Data type	Description
TO_Object[1)]	Basis of technology objects
TO_Axis[1)]	Basis of axes
TO_SpeedAxis[1)]	Speed axis
TO_PositioningAxis[1)]	Positioning axis
TO_SynchronousAxis[1)]	Synchronous axis
TO_ExternalEncoder[1)]	External encoder
TO_OutputCam	Output cam
TO_CamTrack	Cam track
TO_MeasuringInput	Measuring input
TO_CamBase[1)]	Basic information on cams (S7-1500T)
TO_Cam[1)]	Cam (S7-1500T)
TO_Cam_10k[1)]	
TO_Kinematics	Kinematics (S7-1500T)

1) Cascading technology objects

Data type	Description
TO_LeadingAxisProxy[1)]	Leading axis proxy (S7-1500T)
PD_TELx	Telegram no. "x"
DX_TEL_SyncOp	Leading value telegram
PD_STW1_611Umode	Control word 1 (STW1)
PD_STW2_611Umode	Control word 2 (STW2)
PD_ZSW1_611Umode	Status word 1 (ZSW1)
PD_ZSW2_611Umode	Status word 2 (ZSW2)

1) Cascading technology objects

Cascading technology objects

The structure of the technology objects is structured as follows:

- "TO_Object" is the basis of all technology objects and a component of the "TO_Axis" and "TO_CamBase".
- "TO_Axis" is part of "TO_SpeedAxis", "TO_ExternalEncoder" and "TO_LeadingAxisProxy".
- "TO_SpeedAxis" is part of "TO_PositioningAxis".
- "TO_PositioningAxis" is part of "TO_SynchronousAxis".
- "TO_CamBase" is part of "TO_Cam" and "TO_Cam_10k".

Downloading to CPU (S7-1500, S7-1500T) 8

When downloading to the CPU S7-1500, it is always verified that the project files are consistent online and offline after the download. The data of the technology objects is stored in technology data blocks. The conditions for downloading blocks thus apply when downloading new or modified technology objects.

Downloading in "RUN" mode

When downloading in "RUN" mode of the CPU, a check is made to determine whether a download without restart of the technology object is possible. If restart-relevant configuration values were changed, then a restart of the technology object is automatically performed after the load into the CPU.

Loading a technology object is only possible if the technology object is disabled.

Downloading a function block with multi-instances of Motion Control instructions "MC_Power" is only possible under the following preconditions:

- "MC_Power.Enable" = FALSE
- "MC_Power.Status" = FALSE
- "<TO>.StatusWord.X0" = FALSE

Downloading a function block with multi-instances of Motion Control instructions "MC_TorqueLimiting" is only possible under the following preconditions:

- "MC_TorqueLimiting.Enable" = FALSE
- "MC_TorqueLimiting.Busy" = FALSE
- "<TO>.StatusWord.X26" = FALSE

The following changes **cannot** be downloaded to the CPU in "RUN" mode:

- Changes to the cycle clocks of MC-Servo [OB91]
- Changes to the hardware interface of the technology object in "Technology object > Configuration > Hardware interface"

NOTE

Multi-instance DBs

If you use multi-instances of the Motion Control instructions "MC_Power" or "MC_TorqueLimiting", create the multi-instances in a separate instance data block. This allows you to download program blocks from other sections of your user program without switching off the axes, including in "RUN" mode.

Diagnostics (S7-1500, S7-1500T) 9

The description of Motion Control diagnostics is limited to the diagnostics view of the technology objects in TIA Portal, the technology alarms and the error detections on Motion Control instructions.

The following descriptions can be found in the "S7-1500/S7-1500T Motion Control alarms and error IDs" documentation (Page 8):

- Diagnostics concept
- Technology alarms
- Error IDs in Motion Control instructions

A comprehensive description of the system diagnostics of the S7-1500 CPU can be found in the "Diagnostics" function manual (https://support.industry.siemens.com/cs/ww/en/view/59192926).

Glossary

(S7-1500, S7-1500T)

Absolute synchronous operation

Function corresponds to the Motion Control instruction MC_GearInPos or MC_CamIn.

Absolute value encoder

Position encoder which outputs the position in the form of a digital numerical value. This numerical value is unique within the entire measuring range of the absolute value encoder.

Axis control panel

The axis control panel allows you to move the axis in manual mode, optimize the axis settings, and test the operation of the axis in your system.

Axis type

The axis type differs depending on the unit of measurement according to which the axis is positioned.
Depending on the execution of the mechanics, an axis is implemented as a linear axis or rotary axis:

- For linear axes, the position of the axis is specified as a linear measure, e.g. millimeters (mm).
- For rotary axes, the position of the axis is specified as an angular measure, e.g. degrees (°).

Communication processor (CP)

Module for expanded communications tasks covering special applications, for example in the area of security.

Communications module (CM)

Module for communications tasks which is used as an interface expansion of the CPU (for example PROFIBUS) or provides additional communications options (e.g. PtP) in an automation system.

Drive

The combination of motor (electric or hydraulic), actuator (converter, valve), control system, measuring system and supply (infeed, accumulator).

Dynamic Servo Control (DSC)

In drives that support DSC, you can optionally use the position controller in the drive. The position controller in the drive is usually implemented with a rapid speed-control cycle. This improves the control performance for digitally coupled drives.

Following error

The following error is the difference between the position setpoint and the actual position value. The transmission times of the setpoint to the drive, and of the actual position value to the controller, are taken into account in the calculation of the following error.

GSD file

As a Generic Station Description, this file contains all properties of a PROFINET or PROFIBUS device that are necessary for its configuration.

Hardware limit switch

Mechanical limit position switch that limits the maximum permissible traversing range of the axis.

Homing

With homing, you create the relationship between the position in the technology object and the mechanical position of the axis. The position value in the technology object is assigned to a homing mark at the same time. This homing mark represents a known mechanical position.

Incremental encoder

Position encoder which outputs the position change incrementally in the form of a digital numerical value.

Kv factor

Gain factor of the position controller

Master value

Input value for synchronous operation

Motion Control instruction

Use the Motion Control instructions to start Motion Control jobs at technology objects in your user program and thus execute the desired functionality at the technology objects. You track the status of running jobs with the output parameters of the Motion Control instructions.

Override

Percentage correction of the velocity/speed

Processing cycle clock

The processing of a technology object in the servo cycle clock.

PROFIdrive

PROFIdrive is a profile specified by the PNO (PROFIBUS user organization) for PROFIBUS DP and PROFINET IO for speed- and position-controlled drives.

PROFIdrive frame

Frame for communication according to PROFIdrive.

Relative gearing

Function corresponds to the Motion Control instruction MC_GearIn.

Restart

The technology object is reinitialized with the current configuration parameters.

Safe Stop 1 (SS1)

The Safe Stop 1 (SS1) safety function brings a drive to standstill quickly and safely via an internal rapid stop ramp. Safe Torque Off (STO) is activated after standstill. STO ensures that no more torque generating energy acts on a drive. This prevents unintended startup of the drive.

You can use the SS1 safety function when a fast stop of the drive with a subsequent transition to STO is required. SS1 is used, for example, to quickly stop high inertia loads or to brake drives quickly and safely at high speeds

Safe Stop 2 (SS2)

The Safe Stop 2 (SS2) safety function brings a drive to standstill quickly and safely via an internal rapid stop ramp. After standstill is reached, the standstill position is monitored on the drive side. The drive can deliver full torque to maintain the standstill.

SS2, for example, is used for processing machines and machine tools.

Safe Torque Off (STO)

The Safe Torque Off (STO) safety function is the most commonly used and most basic drive-internal safety function. STO ensures that no more torque generating energy acts on a drive. This prevents unintended startup of the drive. The pulses of the drive are eliminated. The drive is reliably torque-free. This state is monitored internally in the drive.

You can use STO when the drive comes to a standstill in a sufficiently short time on its own due to the load torque or due to friction. Other areas of use are where "coasting" of the drive has no relevance for safety.

Software limit switch

A programmable position which limits the traversing range of an axis.

Synchronization

The phase of the following axis to reach synchronous movement.

Synchronous operation

Defined synchronous movement after synchronization of a following axis to a leading axis.

Technology alarm

If an error occurs at a technology object (e.g. approaching a hardware limit switch), a technology alarm is triggered and indicated.
The impact of a technology alarm on the technology object is specified by the alarm reaction (e.g. remove enable). The alarm reaction is specified by the system.

Technology data block

The technology data block represents the technology object and contains all configuration data, setpoint and actual values, and status information of the technology object.

Technology module (TM)

Module for technological tasks, e.g. counting, measuring and positioning.

Zero mark

Position reference for the movement of rotary and linear incremental encoders. The zero mark of an incremental encoder is used as a homing mark, for example.

Index

A

Actuator, 20

D

Data type
- DB_ANY, 96
- DB_ANY, 98

DB_ANY, 96, 98

E

Extended Motion Control Resources, 21

External encoder
- Adding, 43
- Moving, 44
- Deleting, 45

I

Interpolator OB, 77, 80

M

MC-Interpolator OB, 77, 80

MC-Servo OB, 77, 80

Motion Control resources, 21

P

Positioning axis
- Adding, 43
- Moving, 44
- Deleting, 45

Process image partition "OB Servo PIP", 80

R

Reduction ratio, 77

Reinitialization of technology objects, 112

Restart of technology objects, 112

S

S7-1500 Motion Control
- How it works, 16
- Introduction, 16
- Technology object, 18
- Technology data block, 19
- Motion Control instruction, 19
- Drive and encoder connection, 20
- Configuration limits, 21
- Versions, 34
- Versions, 37
- Configuration, 45
- Technology object, 45
- Configuration, 45
- Configuration, 46
- Process response, 77
- Process response, 80
- Process response, 80
- Process response, 84
- Technology data block, 86
- Technology data block, 86
- Programming, 86
- Technology data block, 88
- Technology data block, 89
- Programming, 90
- Motion Control instruction, 90
- Motion Control instruction, 94
- Programming, 99
- Motion Control instruction, 99
- Technology object, 112
- Programming, 112
- Downloading to CPU, 115

S7-1500 Motion Control
- Technology object, 43
- Configuration, 43
- Technology object, 44
- Configuration, 44

S7-1500 Motion Control drive connection, 20

S7-1500 Motion Control encoder connection, 20

S7-1500 Motion Control instruction, 19
Parameters, 90
Inserting, 94
Starting Motion Control job, 99
Tracking Motion Control job, 101
Ending a Motion Control job, 111

S7-1500 Motion Control operating mode, 84

Sensor, 20

Servo OB, 77, 80

Speed axis
Adding, 43
Moving, 44
Deleting, 45

Synchronous axis
Adding, 43
Moving, 44
Deleting, 45

T

Technology data block
Basics, 19
Basics, 86
Analyzing, 86
Evaluating StatusWord, ErrorWord and Warning-Word, 88
Change restart-relevant data, 89

Technology object
External encoder, 43
Synchronous axis, 43
Positioning axis, 43
Speed axis, 43
External encoder, 44
Synchronous axis, 44
Positioning axis, 44
Speed axis, 44
Speed axis, 45
Positioning axis, 45
Synchronous axis, 45
External encoder, 45
Data types, 96

Technology objects, 18

SIEMENS

Edition 11/2022

FUNCTION MANUAL

SIMATIC

S7-1500

S7-1500/S7-1500T Axis functions V7.0 as of STEP 7 V18

support.industry.siemens.com

SIEMENS

SIMATIC

S7-1500
S7-1500/S7-1500T Axis functions V7.0 as of STEP 7 V18

Function Manual

Introduction (S7-1500, S7-1500T) 1

Safety instructions (S7-1500, S7-1500T) 2

New features V7.0 (S7-1500, S7-1500T) 3

Overview of functions (S7-1500, S7-1500T) 4

Axis functions (S7-1500, S7-1500T) 5

Commissioning (S7-1500, S7-1500T) 6

Diagnostics (S7-1500, S7-1500T) 7

Instructions (S7-1500, S7-1500T) 8

Tags of the technology object data blocks (S7-1500, S7-1500T) 9

Appendix (S7-1500, S7-1500T) A

S7-1500/S7-1500T Motion Control

11/2022
A5E37577655-AE

Legal information

Warning notice system

This manual contains notices you have to observe in order to ensure your personal safety, as well as to prevent damage to property. The notices referring to your personal safety are highlighted in the manual by a safety alert symbol, notices referring only to property damage have no safety alert symbol. These notices shown below are graded according to the degree of danger.

⚠ DANGER
indicates that death or severe personal injury **will** result if proper precautions are not taken.

⚠ WARNING
indicates that death or severe personal injury **may** result if proper precautions are not taken.

⚠ CAUTION
indicates that minor personal injury can result if proper precautions are not taken.

NOTICE
indicates that property damage can result if proper precautions are not taken.

If more than one degree of danger is present, the warning notice representing the highest degree of danger will be used. A notice warning of injury to persons with a safety alert symbol may also include a warning relating to property damage.

Qualified Personnel

The product/system described in this documentation may be operated only by **personnel qualified** for the specific task in accordance with the relevant documentation, in particular its warning notices and safety instructions. Qualified personnel are those who, based on their training and experience, are capable of identifying risks and avoiding potential hazards when working with these products/systems.

Proper use of Siemens products

Note the following:

⚠ WARNING
Siemens products may only be used for the applications described in the catalog and in the relevant technical documentation. If products and components from other manufacturers are used, these must be recommended or approved by Siemens. Proper transport, storage, installation, assembly, commissioning, operation and maintenance are required to ensure that the products operate safely and without any problems. The permissible ambient conditions must be complied with. The information in the relevant documentation must be observed.

Trademarks

All names identified by ® are registered trademarks of Siemens AG. The remaining trademarks in this publication may be trademarks whose use by third parties for their own purposes could violate the rights of the owner.

Disclaimer of Liability

We have reviewed the contents of this publication to ensure consistency with the hardware and software described. Since variance cannot be precluded entirely, we cannot guarantee full consistency. However, the information in this publication is reviewed regularly and any necessary corrections are included in subsequent editions.

Siemens AG
Digital Industries
Postfach 48 48
90026 NÜRNBERG
GERMANY

A5E37577655-AE
Ⓟ 10/2022 Subject to change

Copyright © Siemens AG 2016 - 2022.
All rights reserved

Table of contents

1 Introduction (S7-1500, S7-1500T) ... 11

1.1 S7-1500 Motion Control Documentation Guide (S7-1500, S7-1500T) ... 12

1.2 Function Manuals documentation guide (S7-1500, S7-1500T) ... 13
1.2.1 Information classes Function Manuals (S7-1500, S7-1500T) ... 13
1.2.2 Basic tools (S7-1500, S7-1500T) ... 14
1.2.3 SIMATIC Technical Documentation (S7-1500, S7-1500T) ... 16

2 Safety instructions (S7-1500, S7-1500T) ... 18

3 New features V7.0 (S7-1500, S7-1500T) ... 19

4 Overview of functions (S7-1500, S7-1500T) ... 21

4.1 Speed-controlled axis technology object (S7-1500, S7-1500T) ... 21

4.2 Positioning axis technology object (S7-1500, S7-1500T) ... 22

4.3 Synchronous axis technology object (S7-1500, S7-1500T) ... 25

4.4 External encoder technology object (S7-1500, S7-1500T) ... 27

4.5 Motion control instructions for axis control (S7-1500, S7-1500T) ... 29

4.6 Extended functions of the technology CPU (S7-1500T) ... 30

4.7 Functions in STEP 7 (S7-1500, S7-1500T) ... 31

5 Axis functions (S7-1500, S7-1500T) ... 32

5.1 Configuring basic parameters (S7-1500, S7-1500T) ... 32
5.1.1 Configure axis type (S7-1500, S7-1500T) ... 32
5.1.2 Configure the type of an external encoder (S7-1500, S7-1500T) ... 33
5.1.3 Units of measure (S7-1500, S7-1500T) ... 33
5.1.4 Modulo setting (S7-1500, S7-1500T) ... 34
5.1.5 Virtual axis (S7-1500, S7-1500T) ... 36
5.1.6 Axis in simulation (S7-1500, S7-1500T) ... 36
5.1.7 Actual value calculation for virtual axis or axis in simulation (S7-1500, S7-1500T) ... 37

5.2 Drive and encoder connection (S7-1500, S7-1500T) ... 38
5.2.1 Adding and configuring drives (S7-1500, S7-1500T) ... 39
5.2.1.1 Adding and configuring a PROFINET-IO drive (S7-1500, S7-1500T) ... 41
5.2.1.2 Adding and configuring a PROFIBUS DP drive (S7-1500, S7-1500T) ... 43
5.2.2 Configuring PROFIdrive telegrams (S7-1500, S7-1500T) ... 45
5.2.3 Connecting PROFIdrive drives (S7-1500, S7-1500T) ... 49
5.2.3.1 Connecting PROFIdrive drive directly (S7-1500, S7-1500T) ... 49
5.2.3.2 Connecting a PROFIdrive drive via data block (S7-1500, S7-1500T) ... 50
5.2.3.3 Connect drive/encoder via data block (S7-1500, S7-1500T) ... 50
5.2.3.4 Configuring drive parameters manually (S7-1500, S7-1500T) ... 53
5.2.4 Connecting encoders via PROFIdrive (S7-1500, S7-1500T) ... 54
5.2.4.1 Connecting the encoder directly (S7-1500, S7-1500T) ... 54
5.2.4.2 Connect encoder via data block (S7-1500, S7-1500T) ... 55

5.2.4.3 Configuring the encoder type (S7-1500, S7-1500T) ... 56
5.2.4.4 Configuring encoder parameters manually (S7-1500, S7-1500T) ... 57
5.2.4.5 Using multiple encoders (S7-1500T) ... 58
5.2.4.6 Calculate actual velocity from actual speed NIST_B from PROFIdrive telegram (S7-1500, S7-1500T) ... 60
5.2.5 Transferring drive and encoder parameters automatically (S7-1500, S7-1500T) ... 61
5.2.6 Connecting stepper motors (S7-1500, S7-1500T) ... 63
5.2.7 Connecting drives with analog setpoint interface (S7-1500, S7-1500T) ... 63
5.2.8 Connecting force/torque data via SIEMENS additional telegram 750 (S7-1500, S7-1500T) ... 65
5.2.9 Encoder signal output via TM41 (S7-1500, S7-1500T) ... 66
5.2.10 Tags: Drive and encoder connection (S7-1500, S7-1500T) ... 67

5.3 Safety functions in the drive (S7-1500, S7-1500T) ... 68
5.3.1 Safe stopping process (S7-1500, S7-1500T) ... 70
5.3.2 Safe brake control (S7-1500, S7-1500T) ... 71
5.3.3 Safe monitoring of motion (S7-1500, S7-1500T) ... 71
5.3.4 Safe monitoring of position (S7-1500, S7-1500T) ... 73
5.3.5 Overview of safety-oriented functions (S7-1500, S7-1500T) ... 74

5.4 Mechanics (S7-1500, S7-1500T) ... 75
5.4.1 Configuring the mechanics of the speed axis (S7-1500, S7-1500T) ... 75
5.4.2 Configuring the mechanics of the positioning axis/synchronous axis (S7-1500, S7-1500T) ... 76
5.4.3 Configuring the mechanics of the external encoder (S7-1500, S7-1500T) ... 82
5.4.4 Configuring drive and encoder direction for positioning axis/synchronous axis (S7-1500, S7-1500T) ... 84
5.4.5 Configuring the load gear (S7-1500, S7-1500T) ... 85
5.4.6 Configuring the leadscrew pitch (S7-1500, S7-1500T) ... 85
5.4.7 Backlash compensation (S7-1500, S7-1500T) ... 86
5.4.8 Tags: Mechanics (S7-1500, S7-1500T) ... 92

5.5 Motion control and limits for dynamics (S7-1500, S7-1500T) ... 93
5.5.1 Dynamic defaults for modulo axes (S7-1500, S7-1500T) ... 98
5.5.2 Velocity profile (S7-1500, S7-1500T) ... 98
5.5.3 Override response with and without jerk limitation (S7-1500, S7-1500T) ... 100
5.5.4 Emergency stop deceleration (S7-1500, S7-1500T) ... 102
5.5.5 Torque limits (S7-1500, S7-1500T) ... 102
5.5.5.1 Force/torque limiting (S7-1500, S7-1500T) ... 102
5.5.5.2 Fixed stop detection (S7-1500, S7-1500T) ... 105
5.5.5.3 Additive setpoint torque/additive setpoint force (S7-1500, S7-1500T) ... 106
5.5.5.4 Permissible torque range/force range (S7-1500, S7-1500T) ... 106
5.5.6 Superimposed motions (S7-1500, S7-1500T) ... 107
5.5.7 Motion specification via "MotionIn" (S7-1500T) ... 111
5.5.8 Tags: Motion control and limits for dynamics (S7-1500, S7-1500T) ... 114

5.6 Traversing range limitation (S7-1500, S7-1500T) ... 116
5.6.1 Behavior when approaching and retracting a HW limit switch (S7-1500, S7-1500T) ... 117
5.6.2 Configuring HW limit switches (S7-1500, S7-1500T) ... 121
5.6.3 Behavior when reaching the SW limit switch (S7-1500, S7-1500T) ... 124
5.6.4 Retracting the SW limit switch (S7-1500, S7-1500T) ... 125
5.6.5 Configuring SW limit switches (S7-1500, S7-1500T) ... 125
5.6.6 Tags: Traversing range limitation (S7-1500, S7-1500T) ... 126
5.6.7 Long-term accuracy (S7-1500, S7-1500T) ... 128

5.7 Homing (S7-1500, S7-1500T) 129
5.7.1 Terms for active and passive homing (S7-1500, S7-1500T) 132
5.7.2 Active homing (S7-1500, S7-1500T) 133
5.7.2.1 Active homing with homing output cam and zero mark (S7-1500, S7-1500T) 133
5.7.2.2 Active homing with zero mark (S7-1500, S7-1500T) 137
5.7.2.3 Active homing with digital input (S7-1500, S7-1500T) 138
5.7.2.4 Direction reversal at the hardware limit switch (reversing cam) (S7-1500, S7-1500T) 140
5.7.2.5 Active homing to a hardware limit switch (S7-1500, S7-1500T) 141
5.7.3 Passive homing (S7-1500, S7-1500T) 143
5.7.3.1 Passive homing with homing output cam and zero mark (S7-1500, S7-1500T) 143
5.7.3.2 Passive homing with zero mark (S7-1500, S7-1500T) 145
5.7.3.3 Passive homing with digital input (S7-1500, S7-1500T) 146
5.7.3.4 Cancel passive homing (S7-1500, S7-1500T) 148
5.7.4 Direct homing (S7-1500, S7-1500T) 149
5.7.5 Set setpoint position (S7-1500, S7-1500T) 150
5.7.6 Absolute value adjustment (S7-1500, S7-1500T) 151
5.7.7 Incremental encoder adjustment (S7-1500, S7-1500T) 153
5.7.8 Homing SINAMICS drives with external zero marks (S7-1500, S7-1500T) 153
5.7.9 Homing when backlash compensation is enabled (S7-1500, S7-1500T) 154
5.7.10 Resetting the "Homed" status (S7-1500, S7-1500T) 155
5.7.11 Tags: Homing (S7-1500, S7-1500T) 156

5.8 Position monitoring functions (S7-1500, S7-1500T) 157
5.8.1 Positioning monitoring (S7-1500, S7-1500T) 157
5.8.2 Following error monitoring (S7-1500, S7-1500T) 159
5.8.3 Standstill signal (S7-1500, S7-1500T) 160
5.8.4 Tags: Position monitoring functions (S7-1500, S7-1500T) 161

5.9 Configuring a control loop (S7-1500, S7-1500T) 162
5.9.1 Position control in the drive with Dynamic Servo Control (DSC) (S7-1500, S7-1500T) 163
5.9.2 Position control in the PLC (S7-1500, S7-1500T) 164
5.9.3 Configuring position controller for drives with DSC (S7-1500, S7-1500T) 165
5.9.4 Configuring position controller in the PLC (S7-1500, S7-1500T) 166
5.9.5 Configuring a dynamic filter (S7-1500, S7-1500T) 167
5.9.6 Switching the position control off and on (S7-1500, S7-1500T) 170
5.9.7 Tags: Closed-loop control (S7-1500, S7-1500T) 171

6 Commissioning (S7-1500, S7-1500T) 173

6.1 Commissioning guidelines (S7-1500, S7-1500T) 173

6.2 Take over master control and enable axis (S7-1500, S7-1500T) 175

6.3 Homing with the axis control panel (S7-1500, S7-1500T) 178

6.4 Traversing the axis with the axis control panel (S7-1500, S7-1500T) 179

6.5 Specify the dynamics in the axis control panel (S7-1500, S7-1500T) 180

6.6 Optimize position controller (S7-1500, S7-1500T) 181

6.7 Disable axis and hand over master control (S7-1500, S7-1500T) 186

7 Diagnostics (S7-1500, S7-1500T)..... 187

7.1 Speed-controlled axis technology object (S7-1500, S7-1500T)..... 187
7.1.1 Status and error bits (S7-1500, S7-1500T)..... 187
7.1.2 Motion status (S7-1500, S7-1500T)..... 190
7.1.3 PROFIdrive telegram (S7-1500, S7-1500T)..... 191

7.2 Positioning axis technology object (S7-1500, S7-1500T)..... 191
7.2.1 Status and error bits (S7-1500, S7-1500T)..... 191
7.2.2 Motion status (S7-1500, S7-1500T)..... 195
7.2.3 PROFIdrive telegram (S7-1500, S7-1500T)..... 197

7.3 Technology object external encoder (S7-1500, S7-1500T)..... 197
7.3.1 Status and error bits (S7-1500, S7-1500T)..... 197
7.3.2 Motion status (S7-1500, S7-1500T)..... 199
7.3.3 PROFIdrive telegram (S7-1500, S7-1500T)..... 200

8 Instructions (S7-1500, S7-1500T)..... 201

8.1 MC_Power V7 (S7-1500, S7-1500T)..... 201
8.1.1 MC_Power: Enable, disable technology object V7 (S7-1500, S7-1500T)..... 201
8.1.2 MC_Power: Function chart V7 (S7-1500, S7-1500T)..... 206

8.2 MC_Reset V7 (S7-1500, S7-1500T)..... 207
8.2.1 MC_Reset: Acknowledge alarms, restart technology object V7 (S7-1500, S7-1500T)..... 207

8.3 MC_Home V7 (S7-1500, S7-1500T)..... 209
8.3.1 MC_Home: Home technology object, set home position V7 (S7-1500, S7-1500T)..... 209

8.4 MC_Halt V7 (S7-1500, S7-1500T)..... 212
8.4.1 MC_Halt: Pause axis V7 (S7-1500, S7-1500T)..... 212
8.4.2 MC_Halt: Function chart V7 (S7-1500, S7-1500T)..... 215

8.5 MC_MoveAbsolute V7 (S7-1500, S7-1500T)..... 216
8.5.1 MC_MoveAbsolute: Position axis absolutely V7 (S7-1500, S7-1500T)..... 216
8.5.2 MC_MoveAbsolute: Function chart V7 (S7-1500, S7-1500T)..... 220

8.6 MC_MoveRelative V7 (S7-1500, S7-1500T)..... 221
8.6.1 MC_MoveRelative: Position axis relatively V7 (S7-1500, S7-1500T)..... 221
8.6.2 MC_MoveRelative: Function chart V7 (S7-1500, S7-1500T)..... 224

8.7 MC_MoveVelocity V7 (S7-1500, S7-1500T)..... 225
8.7.1 MC_MoveVelocity: Move axis with velocity/speed setpoint V7 (S7-1500, S7-1500T)..... 225
8.7.2 MC_MoveVelocity: Function chart V7 (S7-1500, S7-1500T)..... 229

8.8 MC_MoveJog V7 (S7-1500, S7-1500T)..... 230
8.8.1 MC_MoveJog: Move axis in jog mode V7 (S7-1500, S7-1500T)..... 230
8.8.2 MC_MoveJog: Function chart V7 (S7-1500, S7-1500T)..... 234

8.9 MC_MoveSuperimposed V7 (S7-1500, S7-1500T)..... 235
8.9.1 MC_MoveSuperimposed: Position axis overlapping V7 (S7-1500, S7-1500T)..... 235
8.9.2 MC_MoveSuperimposed: Function chart V7 (S7-1500, S7-1500T)..... 238

8.10 MC_StopSuperimposed V7 (S7-1500, S7-1500T)..... 239
8.10.1 MC_HaltSuperimposed: Pause superimposed motions on axis V7 (S7-1500, S7-1500T)..... 239
8.10.2 MC_HaltSuperimposed: Function chart V7 (S7-1500, S7-1500T)..... 241

8.11 MC_SetSensor V7 (S7-1500T)..... 243
8.11.1 MC_SetSensor: Switch alternative encoder to operative encoder V7 (S7-1500T)..... 243

8.12 MC_Stop V7 (S7-1500, S7-1500T) 245
8.12.1 MC_Stop: Stop axis and prevent new motion jobs V7 (S7-1500, S7-1500T) 245
8.12.2 MC_Stop: Function chart V7 (S7-1500, S7-1500T) 250

8.13 MC_SetAxisSTW V7 (S7-1500, S7-1500T) 251
8.13.1 MC_SetAxisSTW: Control bits of control word 1 and 2 V7 (S7-1500, S7-1500T) 251

8.14 MC_WriteParameter V7 (S7-1500, S7-1500T) 252
8.14.1 MC_WriteParameter: Write parameter V7 (S7-1500, S7-1500T) 252

8.15 MC_SaveAbsoluteEncoderData V7 (S7-1500, S7-1500T) 254
8.15.1 MC_SaveAbsoluteEncoderData: Saving absolute adjustment for device replacement V7 (S7-1500, S7-1500T) 254

8.16 MotionIn (S7-1500T) 255
8.16.1 MC_MotionInVelocity V7 (S7-1500T) 255
8.16.1.1 MC_MotionInVelocity: Specify motion setpoints V7 (S7-1500T) 255
8.16.1.2 MC_MotionInVelocity: Function chart V7 (S7-1500T) 258
8.16.2 MC_MotionInPosition V7 (S7-1500T) 259
8.16.2.1 MC_MotionInPosition: Specify motion setpoints V7 (S7-1500T) 259
8.16.2.2 MC_MotionInPosition: Function chart V7 (S7-1500T) 262
8.16.3 MC_MotionInSuperimposed V7 (S7-1500T) 264
8.16.3.1 MC_MotionInSuperimposed: Specifying superimposed motion setpoints V7 (S7-1500T) 264
8.16.3.2 MC_MotionInSuperimposed: Function chart V7 (S7-1500T) 266

8.17 Torque data (S7-1500, S7-1500T) 268
8.17.1 MC_TorqueAdditive V7 (S7-1500, S7-1500T) 268
8.17.1.1 MC_TorqueAdditive: Specify additive torque V7 (S7-1500, S7-1500T) 268
8.17.1.2 MC_TorqueAdditive: Function chart V7 (S7-1500, S7-1500T) 270
8.17.2 MC_TorqueRange V7 (S7-1500, S7-1500T) 270
8.17.2.1 MC_TorqueRange: Set high and low torque limit V7 (S7-1500, S7-1500T) 270
8.17.2.2 MC_TorqueRange: Function chart V7 (S7-1500, S7-1500T) 273
8.17.3 MC_TorqueLimiting V7 (S7-1500, S7-1500T) 274
8.17.3.1 MC_TorqueLimiting: Activate/deactivate force/torque limit / fixed stop detection V7 (S7-1500, S7-1500T) 274
8.17.3.2 MC_TorqueLimiting: Function chart V7 (S7-1500, S7-1500T) 277

8.18 Override response of Motion Control jobs V7 (S7-1500, S7-1500T) 279
8.18.1 Override response V7: Homing and motion jobs (S7-1500, S7-1500T) 279
8.18.2 Override response V7: Synchronous operation jobs (S7-1500, S7-1500T) 281
8.18.3 Override response V7: Measuring input jobs (S7-1500, S7-1500T) 283
8.18.4 Override response V7: Kinematics motion commands (S7-1500T) 283

9 Tags of the technology object data blocks (S7-1500, S7-1500T) 286

9.1 Tags of the speed axis technology object (S7-1500, S7-1500T) 286
9.1.1 Legend (S7-1500, S7-1500T) 286
9.1.2 Actual values and setpoints (speed axis) (S7-1500, S7-1500T) 286
9.1.3 "Simulation" tag (speed axis) (S7-1500, S7-1500T) 287
9.1.4 "VirtualAxis" tag (speed axis) (S7-1500, S7-1500T) 287
9.1.5 "Actor" tag (speed axis) (S7-1500, S7-1500T) 287
9.1.6 "TorqueLimiting" tag (speed axis) (S7-1500, S7-1500T) 289
9.1.7 "LoadGear" tag (speed axis) (S7-1500, S7-1500T) 289
9.1.8 "Units" tag (speed axis) (S7-1500, S7-1500T) 290
9.1.9 "DynamicLimits" tag (speed axis) (S7-1500, S7-1500T) 291

9.1.10 "DynamicDefaults" tag (speed axis) (S7-1500, S7-1500T) 291
9.1.11 "Override" tag (speed axis) (S7-1500, S7-1500T) 292
9.1.12 "StatusDrive" tag (speed axis) (S7-1500, S7-1500T) 292
9.1.13 "StatusTorqueData" tag (speed axis) (S7-1500, S7-1500T) 293
9.1.14 "StatusMotionIn" tag (speed axis) (S7-1500, S7-1500T) 294
9.1.15 "StatusWord" tag (speed axis) (S7-1500, S7-1500T) 294
9.1.16 "StatusWord2" tag (speed axis) (S7-1500, S7-1500T) 295
9.1.17 "ErrorWord" tag (speed axis) (S7-1500, S7-1500T) 295
9.1.18 "ErrorDetail" tag (speed axis) (S7-1500, S7-1500T) 296
9.1.19 "WarningWord" tag (speed axis) (S7-1500, S7-1500T) 297
9.1.20 "ControlPanel" tag (speed axis) (S7-1500, S7-1500T) 298
9.1.21 "InternalToTrace[1..4]" tag (speed axis) (S7-1500, S7-1500T) 299

9.2 Tags of the positioning axis technology object (S7-1500, S7-1500T) 299
9.2.1 Legend (S7-1500, S7-1500T) 299
9.2.2 Actual values and setpoints (positioning axis) (S7-1500, S7-1500T) 300
9.2.3 "Simulation" tag (positioning axis) (S7-1500, S7-1500T) 301
9.2.4 "VirtualAxis" tag (positioning axis) (S7-1500, S7-1500T) 301
9.2.5 "Actor" tag (positioning axis) (S7-1500, S7-1500T) 301
9.2.6 "TorqueLimiting" tag (positioning axis) (S7-1500, S7-1500T) 303
9.2.7 "Clamping" tag (positioning axis) (S7-1500, S7-1500T) 304
9.2.8 Sensor[1..4] tags (positioning axis) (S7-1500, S7-1500T) 304
9.2.9 "CrossPlcSynchronousOperation" tag (positioning axis) (S7-1500, S7-1500T) 307
9.2.10 "Extrapolation" tag (positioning axis) (S7-1500, S7-1500T) 308
9.2.11 "LoadGear" tag (positioning axis) (S7-1500, S7-1500T) 309
9.2.12 "Properties" tag (positioning axis) (S7-1500, S7-1500T) 310
9.2.13 "Units" tag (positioning axis) (S7-1500, S7-1500T) 310
9.2.14 "Mechanics" tag (positioning axis) (S7-1500, S7-1500T) 312
9.2.15 "Modulo" tag (positioning axis) (S7-1500, S7-1500T) 312
9.2.16 "DynamicLimits" tag (positioning axis) (S7-1500, S7-1500T) 312
9.2.17 "DynamicDefaults" tag (positioning axis) (S7-1500, S7-1500T) 313
9.2.18 "PositionLimits_SW" tag (positioning axis) (S7-1500, S7-1500T) 313
9.2.19 "PositionLimits_HW" tag (positioning axis) (S7-1500, S7-1500T) 314
9.2.20 "Homing" tag (positioning axis) (S7-1500, S7-1500T) 315
9.2.21 "Override" tag (positioning axis) (S7-1500, S7-1500T) 315
9.2.22 "PositionControl" tag (positioning axis) (S7-1500, S7-1500T) 316
9.2.23 "SetpointFilter" tag (positioning axis) (S7-1500, S7-1500T) 317
9.2.24 "DynamicAxisModel" tag (positioning axis) (S7-1500, S7-1500T) 318
9.2.25 "FollowingError" tag (positioning axis) (S7-1500, S7-1500T) 318
9.2.26 "PositioningMonitoring" tag (positioning axis) (S7-1500, S7-1500T) 319
9.2.27 "StandstillSignal" tag (positioning axis) (S7-1500, S7-1500T) 319
9.2.28 "StatusPositioning" tag (positioning axis) (S7-1500, S7-1500T) 320
9.2.29 "StatusDrive" tag (positioning axis) (S7-1500, S7-1500T) 320
9.2.30 "StatusServo" tag (positioning axis) (S7-1500, S7-1500T) 321
9.2.31 "StatusProvidedLeadingValue" tag (positioning axis) (S7-1500, S7-1500T) 322
9.2.32 StatusSensor[1..4] Tags (positioning axis) (S7-1500, S7-1500T) 322
9.2.33 "StatusExtrapolation" tag (positioning axis) (S7-1500, S7-1500T) 323
9.2.34 "StatusKinematicsMotion" tag (positioning axis) (S7-1500, S7-1500T) 324
9.2.35 "StatusTorqueData" tag (positioning axis) (S7-1500, S7-1500T) 325
9.2.36 "StatusMotionIn" tag (positioning axis) (S7-1500, S7-1500T) 325
9.2.37 "StatusWord" tag (positioning axis) (S7-1500, S7-1500T) 326
9.2.38 "StatusWord2" tag (positioning axis) (S7-1500, S7-1500T) 327

9.2.39 "ErrorWord" tag (positioning axis) (S7-1500, S7-1500T) 328
9.2.40 "ErrorDetail" tag (positioning axis) (S7-1500, S7-1500T) 329
9.2.41 "WarningWord" tag (positioning axis) (S7-1500, S7-1500T) 330
9.2.42 "ControlPanel" tag (positioning axis) (S7-1500, S7-1500T) 331
9.2.43 "InternalToTrace" tag (positioning axis) (S7-1500, S7-1500T) 331

9.3 Tags of the technology object external encoder (S7-1500, S7-1500T) 331
9.3.1 Legend (S7-1500, S7-1500T) 331
9.3.2 Actual values and setpoints (external encoder) (S7-1500, S7-1500T) 332
9.3.3 "Sensor" tag (external encoder) (S7-1500, S7-1500T) 332
9.3.4 "CrossPlcSynchronousOperation" tag (external encoder) (S7-1500, S7-1500T) 335
9.3.5 "Extrapolation" tag (external encoder) (S7-1500, S7-1500T) 335
9.3.6 "LoadGear" tag (external encoder) (S7-1500, S7-1500T) 336
9.3.7 "Properties" tag (external encoder) (S7-1500, S7-1500T) 337
9.3.8 "Units" tag (external encoder) (S7-1500, S7-1500T) 337
9.3.9 "Mechanics" tag (external encoder) (S7-1500, S7-1500T) 338
9.3.10 "Modulo" tag (external encoder) (S7-1500, S7-1500T) 339
9.3.11 "Homing" tag (external encoder) (S7-1500, S7-1500T) 339
9.3.12 "StatusProvidedLeadingValue" tag (external encoder) (S7-1500, S7-1500T) 339
9.3.13 "StatusSensor" tag (external encoder) (S7-1500, S7-1500T) 340
9.3.14 "StatusExtrapolation" tag (external encoder) (S7-1500, S7-1500T) 341
9.3.15 "StatusWord" tag (external encoder) (S7-1500, S7-1500T) 341
9.3.16 "ErrorWord" tag (external encoder) (S7-1500, S7-1500T) 342
9.3.17 "ErrorDetail" tag (external encoder) (S7-1500, S7-1500T) 343
9.3.18 "WarningWord" tag (external encoder) (S7-1500, S7-1500T) 344
9.3.19 "InternalToTrace[1..4]" tag (external encoder) (S7-1500, S7-1500T) 345

A Appendix (S7-1500, S7-1500T) 346

A.1 "MC_Power" function diagrams (S7-1500, S7-1500T) 346
A.1.1 Drive connection via PROFIdrive (S7-1500, S7-1500T) 346
A.1.1.1 PROFIdrive State Machine (S7-1500, S7-1500T) 346
A.1.1.2 "StopMode" = 0, 2 (S7-1500, S7-1500T) 347
A.1.1.3 "StopMode" = 1 (S7-1500, S7-1500T) 348
A.1.1.4 "StopMode" = 3 (S7-1500, S7-1500T) 349
A.1.1.5 Alarm reactions with braking ramp via the technology object (S7-1500, S7-1500T) 350
A.1.1.6 Alarm response "Remove enable" (S7-1500, S7-1500T) 351
A.1.2 Analog drive connection (S7-1500, S7-1500T) 352
A.1.2.1 "StopMode" = 0, 2 (S7-1500, S7-1500T) 352
A.1.2.2 "StopMode" = 1 (S7-1500, S7-1500T) 353
A.1.2.3 "StopMode" = 3 (S7-1500, S7-1500T) 354
A.1.2.4 Alarm reactions with braking ramp via the technology object (S7-1500, S7-1500T) 355
A.1.2.5 Alarm response "Remove enable" (S7-1500, S7-1500T) 356

A.2 Signal flow diagrams position control (S7-1500, S7-1500T) 356

Glossary 359

Index 363

Introduction (S7-1500, S7-1500T) 1

Purpose of the documentation

This documentation provides important information that you need to configure and commission the integrated Motion Control functionality of the S7-1500 Automation systems.

Required basic knowledge

In order to understand this documentation, the following knowledge is required:

- General knowledge in the field of automation
- General knowledge in the field of drive engineering and motion control

Validity of the documentation

This documentation is valid for the S7-1500 product range.

Conventions

- For the path settings in the project navigation it is presumed that the "Technology objects" object is opened in the CPU subtree. The "Technology object" placeholder represents the name of the technology object.
  Example: "Technology object > Configuration > Basic parameters".
- The <TO> placeholder represents the name set in tags for the respective technology object.
  Example: <TO>.Actor.Type
- This documentation contains pictures of the devices described. The pictures may differ in minor details from the devices supplied.

You should also observe the notes that are marked as follows:

NOTE

A note contains important information about the product described in the documentation, about the handling of the product, and about sections in this documentation demanding your particular attention.

Industry Mall

The Industry Mall is the catalog and ordering system of Siemens AG for automation and drive solutions on the basis of Totally Integrated Automation (TIA) and Totally Integrated Power (TIP).

You can find catalogs for all automation and drive products on the Internet (https://mall.industry.siemens.com).

1.1 S7-1500 Motion Control Documentation Guide (S7-1500, S7-1500T)

Product information

Please also note the supplementary information on the Motion Control documentation:

- Product information on the S7-1500/1500T Motion Control documentation
  https://support.industry.siemens.com/cs/ww/en/view/109794046
  (https://support.industry.siemens.com/cs/ww/en/view/109794046)

Documentation

The documentation of the Motion Control functions is divided into the following documents:

- S7-1500/S7-1500T Motion Control Overview
  https://support.industry.siemens.com/cs/ww/en/view/109812056
  (https://support.industry.siemens.com/cs/ww/en/view/109812056)
  This document describes the innovations in the technology versions, functions that are used for all technology objects, and the process response of Motion Control applications.
- S7-1500/S7-1500T Motion Control alarms and error IDs
  https://support.industry.siemens.com/cs/ww/en/view/109812061
  (https://support.industry.siemens.com/cs/ww/en/view/109812061)
  This document describes the technology alarms of the technology objects and the error identifications of the Motion Control instructions.
- S7-1500/S7-1500T Axis functions
  https://support.industry.siemens.com/cs/ww/en/view/109812057
  (https://support.industry.siemens.com/cs/ww/en/view/109812057)
  This document describes the drive and encoder connection and functions for single-axis movements.
- S7-1500/S7-1500T Synchronous operation functions
  https://support.industry.siemens.com/cs/ww/en/view/109812059
  (https://support.industry.siemens.com/cs/ww/en/view/109812059)
  This document describes gearing, velocity synchronous operation and camming as well as cross-PLC synchronous operation.
- S7-1500/S7-1500T Measuring input and cam functions
  https://support.industry.siemens.com/cs/ww/en/view/109812060
  (https://support.industry.siemens.com/cs/ww/en/view/109812060)
  This document describes the detection of the actual position via a measuring input and the output of switching signals via output cam or cam track.
- S7-1500/S7-1500T Kinematics functions
  https://support.industry.siemens.com/cs/ww/en/view/109812058
  (https://support.industry.siemens.com/cs/ww/en/view/109812058)
  This document describes the control of kinematics with up to 6 interpolating axes.

See also

Topic page "SIMATIC Technology - Motion Control: Overview and Important Links"
https://support.industry.siemens.com/cs/ww/en/view/109751049
(https://support.industry.siemens.com/cs/ww/en/view/109751049)

1.2 Function Manuals documentation guide (S7-1500, S7-1500T)

1.2.1 Information classes Function Manuals (S7-1500, S7-1500T)

The documentation for the SIMATIC S7-1500 automation system, for the 1513/1516pro-2 PN, SIMATIC Drive Controller CPUs based on SIMATIC S7-1500 and the SIMATIC ET 200MP, ET 200SP, ET 200AL and ET 200eco PN distributed I/O systems is arranged into three areas.
This arrangement enables you to access the specific content you require.
You can download the documentation free of charge from the Internet (https://support.industry.siemens.com/cs/ww/en/view/109742705).

Basic information

The system manuals and Getting Started describe in detail the configuration, installation, wiring and commissioning of the SIMATIC S7-1500, SIMATIC Drive Controller, ET 200MP, ET 200SP, ET 200AL and ET 200eco PN systems. Use the corresponding operating instructions for 1513/1516pro-2 PN CPUs.
The STEP 7 online help supports you in the configuration and programming.
Examples:

- Getting Started S7-1500
- System manuals
- Operating instructions ET 200pro and 1516pro-2 PN CPU
- Online help TIA Portal

Device information

Equipment manuals contain a compact description of the module-specific information, such as properties, wiring diagrams, characteristics and technical specifications.
Examples:

- Equipment manuals for CPUs
- Equipment manuals for interface modules
- Equipment manuals for digital modules
- Equipment manuals for analog modules
- Equipment manuals for communication modules
- Equipment manuals for technology modules
- Equipment manuals for power supply modules
- Equipment manuals for BaseUnits

General information

The function manuals contain detailed descriptions on general topics relating to the SIMATIC Drive Controller and the S7-1500 automation system.
Examples:

- Function Manual Diagnostics
- Function Manual Communication
- Function Manuals Motion Control
- Function Manual Web Server
- Function Manual Cycle and Response Times
- PROFINET Function Manual
- PROFIBUS Function Manual

Product Information

Changes and supplements to the manuals are documented in a Product Information. The Product Information takes precedence over the device and system manuals.
You will find the latest Product Information on the Internet:

- S7-1500/ET 200MP (https://support.industry.siemens.com/cs/de/en/view/68052815)
- SIMATIC Drive Controller (https://support.industry.siemens.com/cs/de/en/view/109772684/en)
- Motion Control (https://support.industry.siemens.com/cs/de/en/view/109794046/en)
- ET 200SP (https://support.industry.siemens.com/cs/de/en/view/73021864)
- ET 200eco PN (https://support.industry.siemens.com/cs/ww/en/view/109765611)

Manual Collections

The Manual Collections contain the complete documentation of the systems put together in one file.
You will find the Manual Collections on the Internet:

- S7-1500/ET 200MP/SIMATIC Drive Controller (https://support.industry.siemens.com/cs/ww/en/view/86140384)
- ET 200SP (https://support.industry.siemens.com/cs/ww/en/view/84133942)
- ET 200AL (https://support.industry.siemens.com/cs/ww/en/view/95242965)
- ET 200eco PN (https://support.industry.siemens.com/cs/ww/en/view/109781058)

1.2.2 Basic tools (S7-1500, S7-1500T)

The tools described below support you in all steps: from planning, over commissioning, all the way to analysis of your system.

TIA Selection Tool

The TIA Selection Tool tool supports you in the selection, configuration, and ordering of devices for Totally Integrated Automation (TIA).
As successor of the SIMATIC Selection Tools , it assembles the configuration editors for automation technology already familiar into a single tool.

With the TIA Selection Tool , you can generate a complete order list from your product selection or product configuration.
You can find the TIA Selection Tool on the Internet.
(https://support.industry.siemens.com/cs/ww/en/view/109767888)

SIMATIC Automation Tool

You can use the SIMATIC Automation Tool to perform commissioning and maintenance activities on various SIMATIC S7 stations as bulk operations independent of TIA Portal.
The SIMATIC Automation Tool offers a wide range of functions:

- Scanning of a PROFINET/Ethernet system network and identification of all connected CPUs
- Assignment of addresses (IP, subnet, Gateway) and device name (PROFINET device) to a CPU
- Transfer of the date and the programming device/PC time converted to UTC time to the module
- Program download to CPU
- RUN/STOP mode switchover
- CPU localization through LED flashing
- Reading out of CPU error information
- Reading the CPU diagnostic buffer
- Reset to factory settings
- Firmware update of the CPU and connected modules

You can find the SIMATIC Automation Tool on the Internet.
(https://support.industry.siemens.com/cs/ww/en/view/98161300)

PRONETA

SIEMENS PRONETA (PROFINET network analysis) is a commissioning and diagnostic tool for PROFINET networks. PRONETA Basic has two core functions:

- The "Network analysis" offers a quick overview of the PROFINET topology. It is possible to make simple parameter changes (for example, to the names and IP addresses of the devices). In addition, a quick and convenient comparison of the real configuration with a reference system is also possible.
- The "IO test" is a simple and rapid test of the wiring and the module configuration of a plant, including documentation of the test results.

You can find SIEMENS PRONETA Basic on the Internet:
(https://support.industry.siemens.com/cs/ww/en/view/67460624)
SIEMENS PRONETA Professional is a licensed product that offers you additional functions. It offers you simple asset management in PROFINET networks and supports operators of automation systems in automatic data collection/acquisition of the components used through various functions:

- The user interface (API) offers an access point to the automation cell to automate the scan functions using MQTT or a command line.
- With PROFIenergy diagnostics, you can quickly detect the current pause mode or the readiness for operation of devices that support PROFIenergy and change these as needed.
- The data record wizard supports PROFINET developers in reading and writing acyclic PROFINET data records quickly and easily without PLC and engineering.

You can find SIEMENS PRONETA Professional on the Internet.
(https://www.siemens.com/proneta-professional)

SINETPLAN

SINETPLAN, the Siemens Network Planner, supports you in planning automation systems and networks based on PROFINET. The tool facilitates professional and predictive dimensioning of your PROFINET installation as early as in the planning stage. In addition, SINETPLAN supports you during network optimization and helps you to exploit network resources optimally and to plan reserves. This helps to prevent problems in commissioning or failures during productive operation even in advance of a planned operation. This increases the availability of the production plant and helps improve operational safety.

The advantages at a glance

- Network optimization thanks to port-specific calculation of the network load
- Increased production availability thanks to online scan and verification of existing systems
- Transparency before commissioning through importing and simulation of existing STEP 7 projects
- Efficiency through securing existing investments in the long term and the optimal use of resources

You can find SINETPLAN on the Internet
(https://new.siemens.com/global/en/products/automation/industrial-communication/profinet/sinetplan.html).

1.2.3 SIMATIC Technical Documentation (S7-1500, S7-1500T)

Additional SIMATIC documents will complete your information. You can find these documents and their use at the following links and QR codes.

The Industry Online Support gives you the option to get information on all topics. Application examples support you in solving your automation tasks.

Overview of the SIMATIC Technical Documentation

Here you will find an overview of the SIMATIC documentation available in Siemens Industry Online Support:

Industry Online Support International
(https://support.industry.siemens.com/cs/ww/en/view/109742705)

Watch this short video to find out where you can find the overview directly in Siemens Industry Online Support and how to use Siemens Industry Online Support on your mobile device:

Quick introduction to the technical documentation of automation products per video (https://support.industry.siemens.com/cs/us/en/view/109780491)

YouTube video: Siemens Automation Products - Technical Documentation at a Glance (https://youtu.be/TwLSxxRQQsA)

mySupport

With "mySupport" you can get the most out of your Industry Online Support.

Registration	You must register once to use the full functionality of "mySupport". After registration, you can create filters, favorites and tabs in your personal workspace.
Support requests	Your data is already filled out in support requests, and you can get an overview of your current requests at any time.
Documentation	In the Documentation area you can build your personal library.
Favorites	You can use the "Add to mySupport favorites" to flag especially interesting or frequently needed content. Under "Favorites", you will find a list of your flagged entries.
Recently viewed articles	The most recently viewed pages in mySupport are available under "Recently viewed articles".
CAx data	The CAx data area gives you access to the latest product data for your CAx or CAe system. You configure your own download package with a few clicks: • Product images, 2D dimension drawings, 3D models, internal circuit diagrams, EPLAN macro files • Manuals, characteristics, operating manuals, certificates • Product master data

You can find "mySupport" on the Internet. (https://support.industry.siemens.com/My/ww/en)

Application examples

The application examples support you with various tools and examples for solving your automation tasks. Solutions are shown in interplay with multiple components in the system - separated from the focus on individual products.
You can find the application examples on the Internet.
(https://support.industry.siemens.com/cs/ww/en/ps/ae)

Safety instructions (S7-1500, S7-1500T) 2

Siemens provides products and solutions with industrial security functions that support the secure operation of plants, systems, machines and networks.

In order to protect plants, systems, machines and networks against cyber threats, it is necessary to implement – and continuously maintain – a holistic, state-of-the-art industrial security concept. Siemens' products and solutions constitute one element of such a concept.

Customers are responsible for preventing unauthorized access to their plants, systems, machines and networks. Such systems, machines and components should only be connected to an enterprise network or the internet if and to the extent such a connection is necessary and only when appropriate security measures (e.g. firewalls and/or network segmentation) are in place.

For additional information on industrial security measures that may be implemented, please visit (https://www.siemens.com/industrialsecurity).

Siemens' products and solutions undergo continuous development to make them more secure. Siemens strongly recommends that product updates are applied as soon as they are available and that the latest product versions are used. Use of product versions that are no longer supported, and failure to apply the latest updates may increase customers' exposure to cyber threats.

To stay informed about product updates, subscribe to the Siemens Industrial Security RSS Feed visit (https://www.siemens.com/cert).

New features V7.0 (S7-1500, S7-1500T) 3

Technology version V7.0 contains the following new features:

Drive and encoder connection

- When connecting a drive via data block, you can configure the communication times T_i, T_o, and T_{DC} for calculating the following error.

Motion control and dynamic limits

- The "MC_MotionInSuperimposed" instruction is available. With this instruction you can assign the axis cyclic applicative motion setpoints for additional distance, velocity and acceleration in addition to the basic motion.
- The "MC_HaltSuperimposed" instruction is available. This instruction decelerates a superimposed motion on the axis generated with the instructions "MC_MoveSuperimposed", "MC_MotionInSuperimposed", or "MC_HaltSuperimposed" to zero velocity.

Traversing range limitation

- Extension SW limit switch:
  - You can additionally configure "Stop at SW limit switch with programmable dynamics".
  - When overtraveling the SW limit switches, emergency stop and retention of the axis enable is possible.
- Extension HW limit switch:
  - When configuring the positioning axis and synchronous axis, the HW limit switches can be configured as "traversable" as before, and now as "non-traversable".
  - When approaching a HW limit switch that cannot be overtraveled, you can configure the alarm response.

Homing

- The "MC_SaveAbsoluteEncoderData" instruction is available. Use this instruction to save the absolute adjustment data for CPU device replacement on the SIMATIC Memory Card.
- With the "MC_Home" instruction, the new incremental encoder adjustment homing type "MC_Home.Mode" = 13 is available. The axis does not perform a compensating motion and the offset of the position is not applied at all encoders of the axis. This makes it easier to readjust individual encoders.
- Active and passive homing of absolute encoders with "MC_Home" is available.

- The homing status of the "<TO>.StatusSensor[1..4].Adjusted" encoders is displayed.
- The S7-1500T CPU supports absolute adjustment/incremental adjustment of non-operational encoders. This means that the respective encoder no longer has to be enabled for homing.

Configuring a control loop

- For axes in a synchronous system, the dynamic filter enables dynamic adaptation of axes with higher dynamic responses to the axis with the lowest dynamic response.

Position monitoring

- The parameter assignment of the additional delay time for following error calculation when the dynamic filter is active is available.

"MC_Power.StopMode" = 3

- The "MC_Power" instruction supports "StopMode" = 3 (coast down).

Overview of functions (S7-1500, S7-1500T) 4

4.1 Speed-controlled axis technology object (S7-1500, S7-1500T)

The speed axis technology object calculates speed setpoints, taking into account the dynamic settings, and outputs them to the drive. All motions of the speed axis take place as speed-controlled motions. An existing load gear is taken into account on the system side.

+You can find an overview of the supported instructions of the speed axis technology object in the section "Motion Control instructions for axis control (Page 29)".

A drive is assigned to each speed axis, e.g. via a PROFIdrive telegram.

The speed is specified in revolutions per unit of time.

The following figure shows the basic principle of operation of the speed axis technology object:

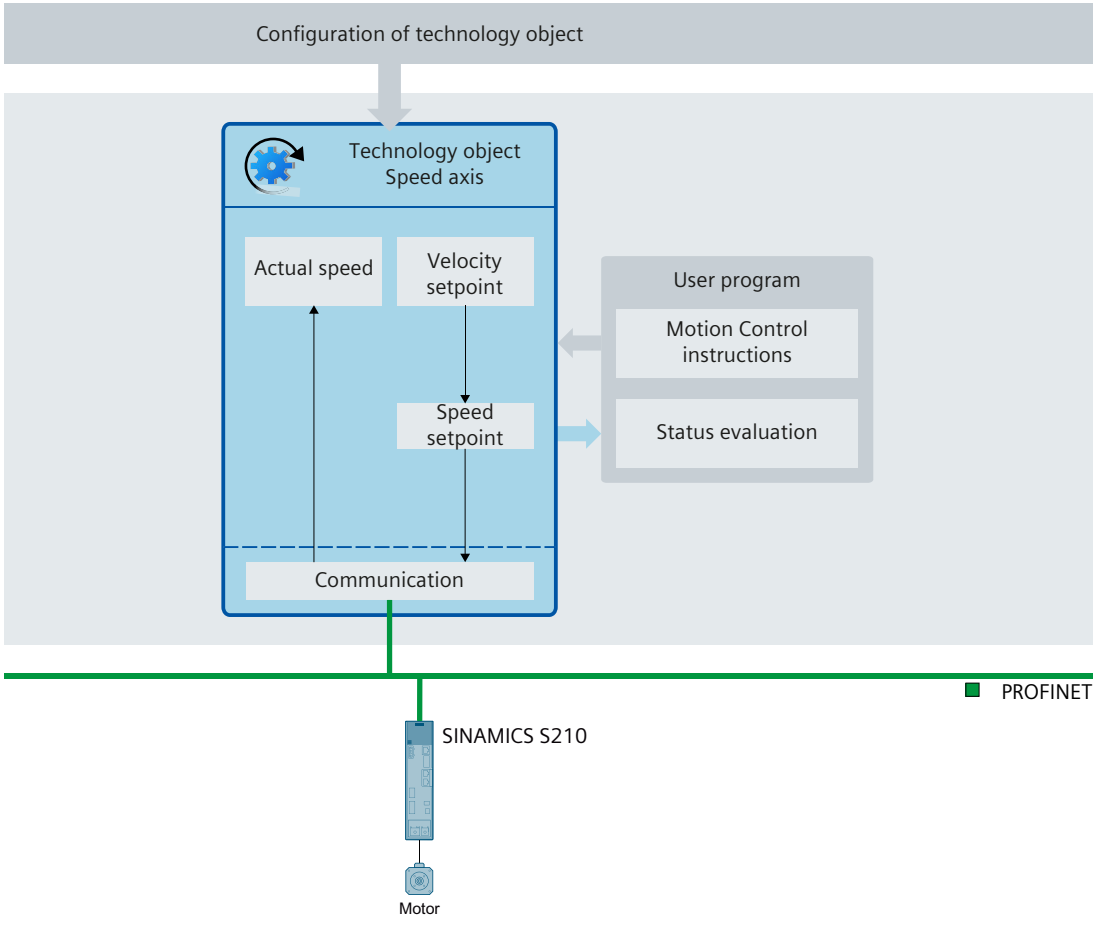

Configuration

The following configurations are available in the speed axis technology object:

- Basic parameters
  - Units of measure (Page 33)
  - Virtual axis (Page 36)
  - Axis in simulation (Page 36)
- Hardware interface
  - Connecting PROFIdrive drives (Page 49)
  - Transfer drive parameters automatically (Page 61)
  - Connecting stepper motors (Page 63)
  - Connecting drives with analog setpoint interface (Page 63)
  - Connecting force/torque data via SIEMENS additional telegram 750 (Page 65)
- Mechanics
  - Configuring the mechanics of the speed axis (Page 75)
  - Configuring the load gear (Page 85)
- Dynamic default values (Page 98)
- Emergency stop (Page 102)
- Limits
  - Dynamic limits (Page 98)
  - Torque limits (Page 102)

4.2 Positioning axis technology object (S7-1500, S7-1500T)

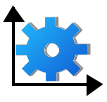

The positioning axis technology object calculates position setpoints, taking into account the encoderc settings, and outputs corresponding speed setpoints to the drive. In position-controlled mode, all movements of the positioning axis take place as position-controlled movements. For absolute positioning, the physical position must be known to the positioning axis technology object.

You can find an overview of the supported instructions of the positioning axis technology object in the section "Motion Control - Instructions for axis control (Page 29)".

Each positioning axis is assigned a drive, e.g. via a PROFIdrive telegram, and an encoder, via a PROFIdrive telegram.

The relationship between the encoder values and a defined position is established by the parameter assignment of the mechanical properties and encoder settings and by a homing operation. The technology object can also perform movements without a position relationship, and relative position movements, even without being in a homed status.

Depending on the design of the mechanics, a positioning axis can be configured as a linear or rotary axis.

The following figure shows the basic principle of operation of the positioning axis technology object:

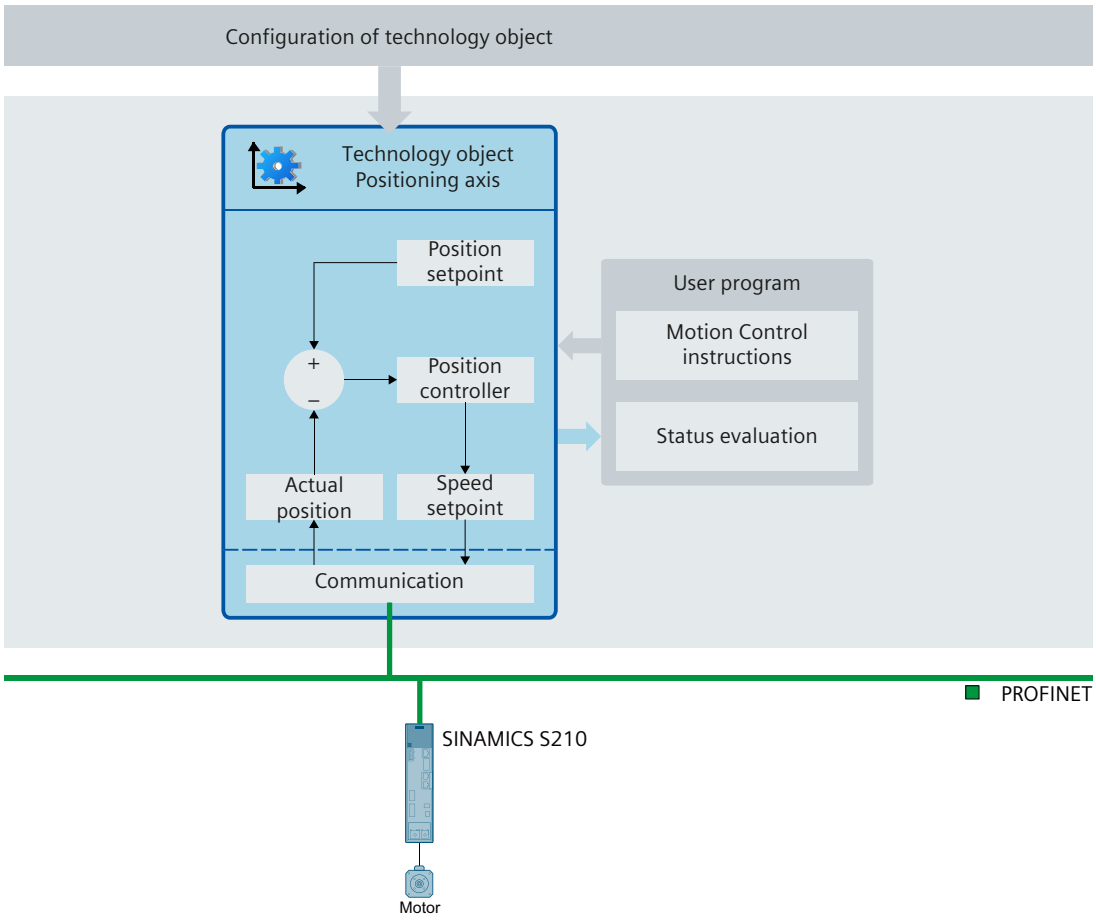

Configuration

The following configurations are available in the positioning axis technology object:

- Basic parameters
  - Axis or encoder type (Page 32)
  - Units of measure (Page 33)
  - Modulo setting (Page 34)
  - Virtual axis (Page 36)
  - Axis in simulation (Page 36)
- Hardware interface
  - Connecting PROFIdrive drives (Page 49)
  - Connecting encoders via PROFIdrive (Page 54)
  - Transferring drive and encoder parameters automatically (Page 61)
  - Connecting stepper motors (Page 63)
  - Connecting drives with analog setpoint interface (Page 63)
  - Connecting force/torque data via SIEMENS additional telegram 750 (Page 65)

- Mechanics
  - Configuring drive and encoder direction for positioning axis/synchronous axis (Page 83)
  - Configuring the load gear (Page 85)
  - Configuring the leadscrew pitch (Page 85)
  - Backlash compensation (Page 86)
- Dynamic default values (Page 93)
- Emergency stop (Page 102)
- Limits
  - Position limits (Page 116)
  - Dynamic limits (Page 93)
  - Torque limits (Page 102)
  - Fixed stop detection (Page 104)
- Homing
  - Active homing (Page 133)
  - Passive homing (Page 142)
- Position monitoring functions
  - Position monitoring (Page 157)
  - Following error (Page 159)
  - Standstill signal (Page 160)
- Control loop
  - Configuring position controller in the PLC (Page 166)
  - Configuring position controller for drives with DSC (Page 165)
  - Configuring a dynamic filter (Page 167)
  - Switching the position control off and on (Page 169)

The following configurations of the positioning axis technology object are specific to synchronous operation:

- Leading value settings
  - Configuring provision of the leading value
  - Configuring the delay time
- Actual value extrapolation

You can find a description of the configuration parameters in the "S7-1500/S7-1500T synchronous operation functions" documentation (Page 12).

4.3 Synchronous axis technology object (S7-1500, S7-1500T)

The synchronous axis technology object includes all functions of the positioning axis technology object.

A synchronous axis can also follow the motions of a leading axis. The synchronous operation relationship between the leading and following axes is specified by a synchronous operation function.

You can find an overview of the supported instructions of the synchronous axis technology object in the section "Motion control instructions for axis control (Page 29)".

The figure below shows the basic principle of operation of the synchronous axis technology object:

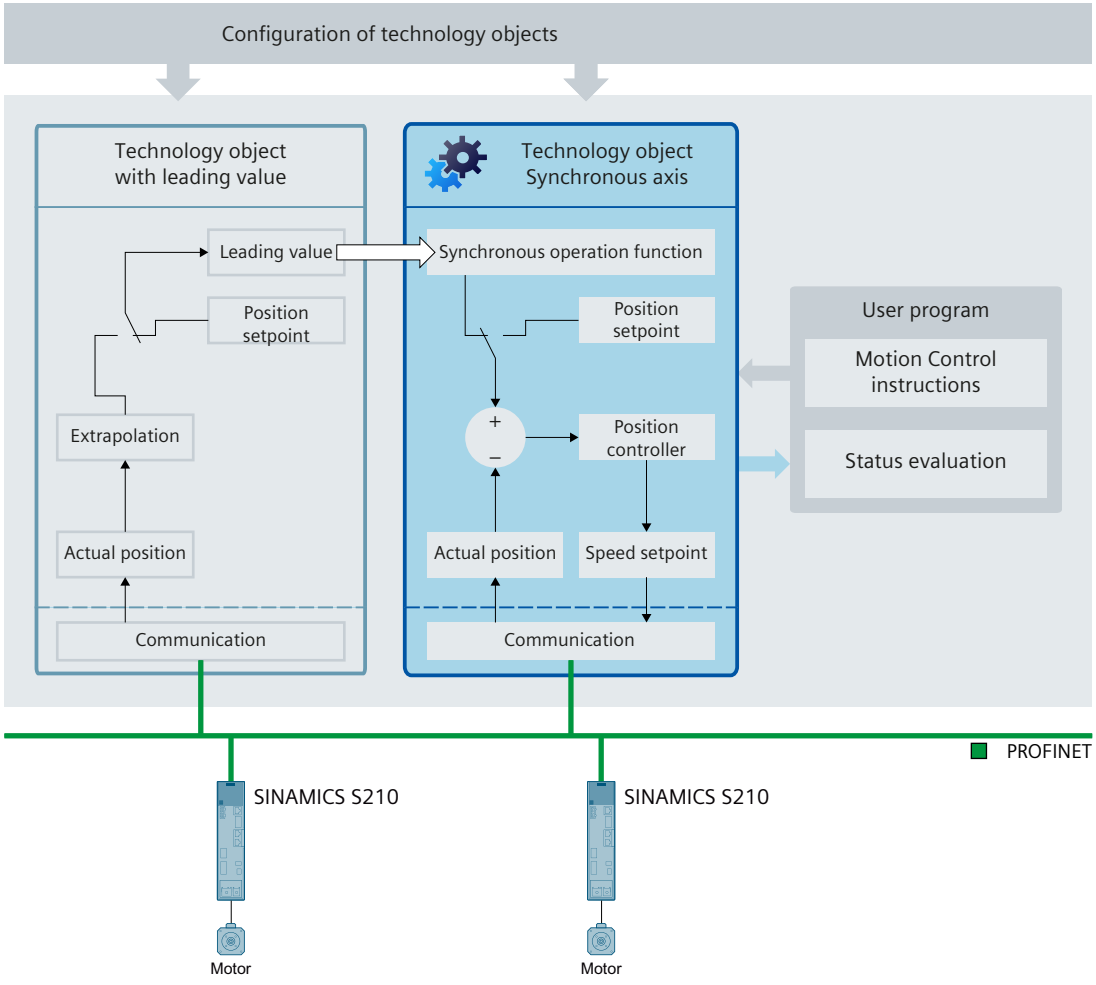

Configuration

The following non-isochronous specific configurations correspond to the positioning axis technology object:

- Basic parameters
  - Axis or encoder type (Page 32)
  - Units of measure (Page 33)
  - Modulo setting (Page 34)
  - Virtual axis (Page 36)
  - Axis in simulation (Page 36)
- Hardware interface
  - Connecting PROFIdrive drives (Page 49)
  - Connecting encoders via PROFIdrive (Page 54)
  - Transferring drive and encoder parameters automatically (Page 61)
  - Connecting stepper motors (Page 63)
  - Connecting drives with analog setpoint interface (Page 63)
  - Connecting force/torque data via SIEMENS additional telegram 750 (Page 65)
- Mechanics
  - Configuring drive and encoder direction for positioning axis/synchronous axis (Page 83)
  - Configuring the load gear (Page 85)
  - Configuring the leadscrew pitch (Page 85)
  - Configuring backlash compensation (Page 86)
- Dynamic default values (Page 93)
- Emergency stop (Page 102)
- Limits
  - Position limits (Page 116)
  - Dynamic limits (Page 93)
  - Torque limits (Page 102)
  - Fixed stop detection (Page 104)
- Homing
  - Active homing (Page 133)
  - Passive homing (Page 142)
- Position monitoring functions
  - Position monitoring (Page 157)
  - Following error (Page 159)
  - Standstill signal (Page 160)
- Control loop
  - Configuring position controller in the PLC (Page 166)
  - Configuring position controller for drives with DSC (Page 165)
  - Configuring a dynamic filter (Page 167)
  - Switching the position control off and on (Page 169)

You can find a description of the configuration parameters in the "S7-1500/S7-1500T Axis functions" documentation (Page 12).

The following configurations of the synchronous axis technology object are specific to synchronous operation:

- Leading value interconnections
- Leading value settings
  - Configuring provision of the leading value
  - Configuring the delay time
- Actual value extrapolation

You can find a description of the configuration parameters in the "S7-1500/S7-1500T synchronous operation functions" documentation (Page 12).

4.4 External encoder technology object (S7-1500, S7-1500T)

The external encoder technology object detects a position and makes this available to the controller.
The actual position detected by the external encoder can be used for the following functions, for example:

- Measured value acquisition by a measuring input
- Position-dependent generation of switching signals and switching signal sequences by output cam and cam track with actual value reference.
- As a leading value of a synchronous axis (S7-1500T)

The relationship between the encoder values and a defined position is established by the parameter assignment of the mechanical properties and encoder settings and by a homing operation.
You can find an overview of the supported instructions of the positioning axis technology object in the section "Motion Control - Instructions for axis control (Page 29)".

The following figure shows the basic principle of operation of the external encoder technology object:

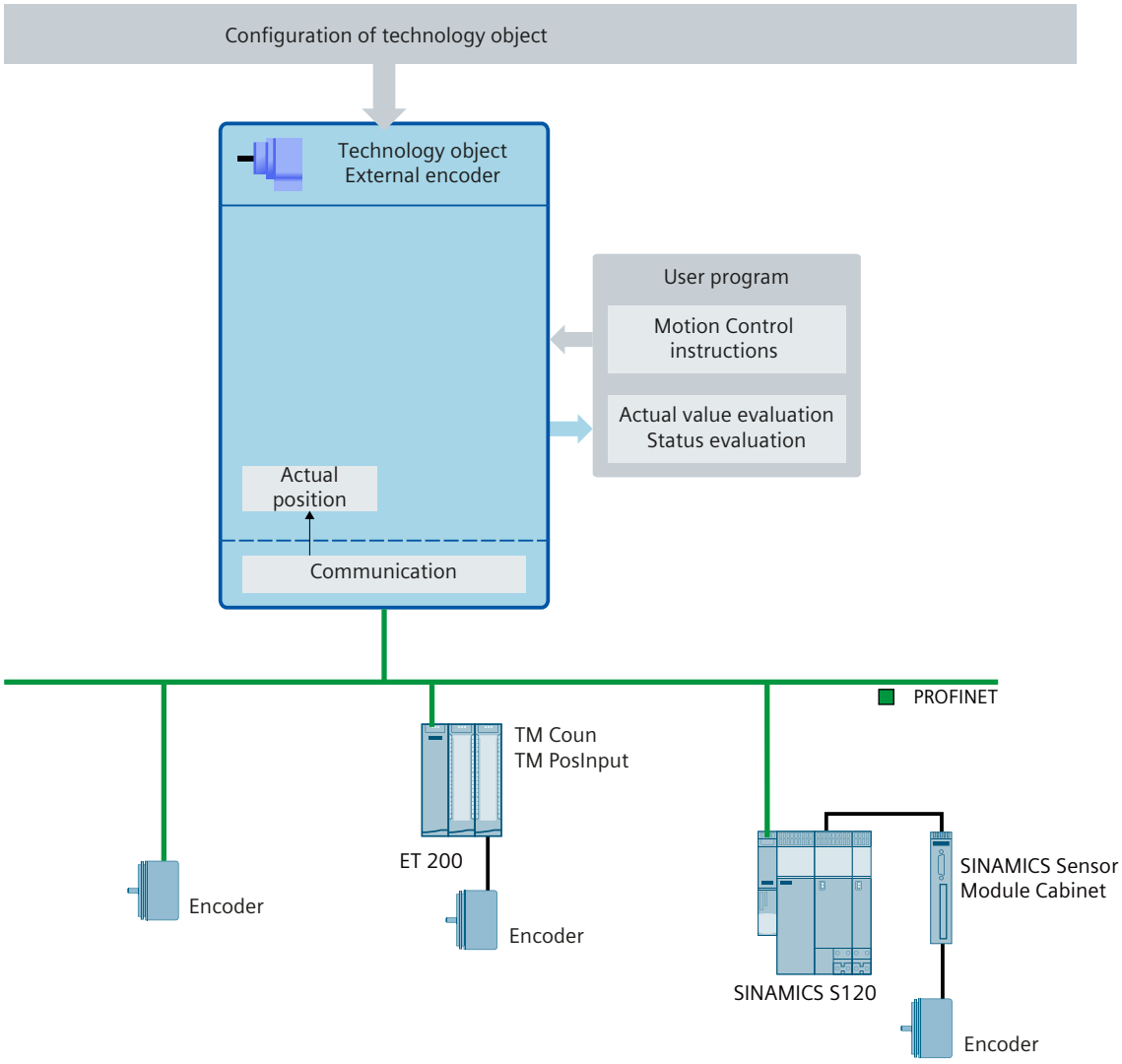

Configuration

The following configurations are available in the technology object external encoder:

- Basic parameters
  - Configure the type of an external encoder (Page 33)
  - Units of measure (Page 33)
  - Modulo setting (Page 34)
- Hardware interface
  - Connecting encoders via PROFIdrive (Page 54)

- Mechanics
  - Configuring the mechanics of the external encoder (Page 81)
  - Configuring the load gear (Page 85)
  - Configuring the leadscrew pitch (Page 85)
- Homing
  - Passive homing (Page 142)

The following configurations of the external encoder technology object are specific to synchronous operation:

- Leading value settings
  - Configuring provision of the leading value
  - Configuring the delay time
- Actual value extrapolation

You can find a description of the configuration parameters in the "S7-1500/S7-1500T synchronous operation functions" documentation (Page 12).

4.5 Motion control instructions for axis control (S7-1500, S7-1500T)

You can execute the functions of the speed axis, positioning axis, synchronous axis and external encoder technology objects using motion control instructions in your user program or using the TIA Portal (under "Technology object > Commissioning").

The following table shows the motion control instructions that are supported by the technology objects:

Motion control instruction	Validity		Technology object		
	S7-1500	S7-1500T	Speed axis (Page 21)	Positioning axis (Page 22) Synchronous axis (Page 24)	External encoder (Page 27)
"MC_Power" Enable, disable technology object	✓	✓	✓	✓	-
"MC_Reset" Acknowledge alarms, restart technology object	✓	✓	✓	✓	✓
"MC_Home" Home technology object, set home position	✓	✓	-	✓	✓
"MC_Halt" Pause axis	✓	✓	✓	✓	-
"MC_MoveAbsolute" Position axis absolutely	✓	✓	-	✓	-
"MC_MoveRelative" Position axis relatively	✓	✓	-	✓	-
"MC_MoveVelocity" Move axes with velocity/speed setpoint	✓	✓	✓	✓	-
"MC_MoveJog" Move axis in jog mode	✓	✓	✓	✓	-

Motion control instruction	Validity		Technology object		
	S7-1500	S7-1500T	Speed axis (Page 21)	Positioning axis (Page 22) Synchronous axis (Page 24)	External encoder (Page 27)
"MC_MoveSuperimposed" Positioning axis overlapping	✓	✓	-	✓	-
"MC_HaltSuperimposed" Pause superimposed motions on the axis.	✓	✓	-	✓	-
"MC_SetSensor" Switch alternative encoder to operative encoder	-	✓	-	✓	-
"MC_Stop" Stop axis and prevent new motion jobs	✓	✓	✓	✓	-
"MC_SetAxisSTW" Control bits of control word 1 and control word 2	✓	✓	✓	✓	-
"MC_WriteParameter" Write parameter	✓	✓	✓	✓	✓
"MC_SaveAbsoluteEncoderData" Save absolute adjustment for device replacement	✓	✓	-	✓	✓
"MC_MotionInVelocity" Specify motion setpoints	-	✓	✓	✓	-
"MC_MotionInPosition" Specify motion setpoints	-	✓	-	✓	-
"MC_MotionInSuperimposed" Specify superimposed motion setpoints	-	✓	-	✓	-
"MC_TorqueAdditive" Specify additive torque	✓	✓	✓	✓	-
"MC_TorqueRange" Set high and low torque limit	✓	✓	✓	✓	-
"MC_TorqueLimiting" Activate/deactivate force/torque limiting / fixed stop detection	✓	✓	✓	✓	-

4.6 Extended functions of the technology CPU (S7-1500T)

In addition to the functionality of the S7-1500 CPU, the S7-1500T CPU provides additional functions:

Additional functions	Description
Multiple encoders for positioning axis/synchronous axis (Page 58)	Up to four encoders can be connected to a positioning axis/synchronous axis. The encoders can be switched over during operation. Only one encoder at a time is active for closed loop position control.

Additional functions	Description
"MotionIn" function (Page 111)	With the "MC_MotionInVelocity", "MC_MotionInPosition", and "MC_MotionInSuperimposed" motion control instructions, you can specify cyclically applicable calculated motion setpoints as the basic motion for the axis. No velocity profile is calculated for this, the values are directly active at the technology object.

4.7 Functions in STEP 7 (S7-1500, S7-1500T)

The following table shows the functions supported by technology objects in STEP 7:

Functions in the TIA Portal	Technology object		
	Speed axis (Page 21)	**Positioning axis** (Page 22) **Synchronous axis** (Page 24)	**External encoder** (Page 27)
"Axis control panel" Move and home axes using the TIA Portal	✓	✓	-
"Optimization" Optimization of closed loop position control	-	✓	-

Axis functions (S7-1500, S7-1500T) 5

5.1 Configuring basic parameters (S7-1500, S7-1500T)

5.1.1 Configure axis type (S7-1500, S7-1500T)

Axes can be configured with different axis types:

- Speed axes are always rotary axes.
- You configure positioning axes and synchronous axes either as rotary or linear axes, depending on the mechanics.

Configure axis type

In the "Axis type" area, select the type that matches the mechanics for your axis.

- **Linear axis**
  You can configure the linear axis either with a standard motor or with a linear motor.
  For linear axes, the position of the axis is specified as a linear measure, e.g. millimeters (mm).
  - Linear axis with standard motor

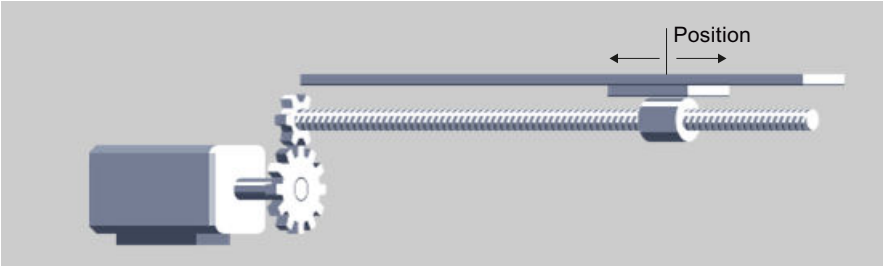

  - Linear axis with linear motor

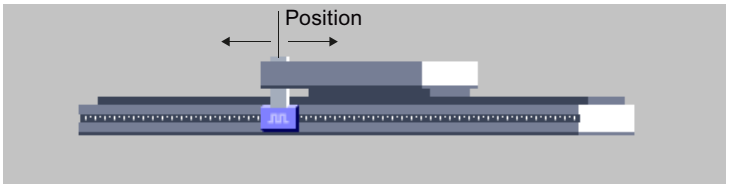

- **Rotary axis**
  The rotary axis is always configured with a standard motor.
  For rotary axes, the position of the axis is specified as an angular measure, e.g. degrees (°).

  Note the following if you apply the drive values automatically from the Startdrive.
  If the drive in the Startdrive is configured as a linear motor, you have to adapt the configuration of the axis type. Change the axis type to "Linear" or attach a standard motor as drive.
  Connecting PROFIdrive drives (Page 49)
  Transferring drive and encoder parameters automatically (Page 61)

5.1.2 Configure the type of an external encoder (S7-1500, S7-1500T)

For the "External encoder" technology object, you can configure whether the encoder accepts linear or rotary motions.
Select the appropriate type for your encoder in the "External encoder type" area.

- Linear
- Rotary

5.1.3 Units of measure (S7-1500, S7-1500T)

Select the units of measure available for the technology object from the drop-down lists.
Setting or changing the measurement units affects the display of the parameter values and the user program:

- Display of parameter values in the technology data block.
- Assignment of parameters in the user program
- Input and display of the position and velocity in the TIA Portal
- Setpoint settings by leading axes in synchronous operation

All information and displays correspond to the selected unit of measure.
When measurement units are changed, the values of individual parameters in the technology object lie outside the minimum value or maximum value due to the LREAL format. Adapt the values or change the measurement units back.
The set units are displayed in the "<TO>.Units" tag structure of the technology object. The tag structure is described under the tags of the respective technology object.

Speed

The supported measurement units for speed (revolutions per time unit) are 1/s, 1/min and 1/h.

Position and velocity

The table below shows the supported measurement units for position and velocity:

Position	Velocity
nm, µm, mm, m, km	mm/s, mm/min, mm/h, m/s, m/min, m/h, km/min, km/h
in, ft, mi	in/s, in/min, ft/s, ft/min, mi/h
°, rad	°/s, °/min, rad/s, rad/min

The acceleration is set accordingly as the position/s² measurement unit.
The jerk is set accordingly as the position/s³ measurement unit.

Force and torque

The table below shows the supported measurement units for force and torque:

Force	Torque
N, kN	Nm, kNm
lbf, ozf, pdl	lbf in, lbf ft, ozf in, ozf ft, pdl in, pdl ft

Time

The measurement unit for time is permanently specified for the following technology objects:

Technology object	Time
Speed axis, positioning/synchronous axis, external encoder	s
Output cam, cam track, measuring input	ms

Position values with higher resolution

If you select the check box "Use position values with higher resolution" in the configuration of the positioning axis, synchronous axis, external encoder and kinematics technology objects, six decimal places are available in the selected unit, instead of the standard three. Due to the LREAL format, the representable position and angle range in [mm] and [°] is limited to +/- 1.0E09.

The following values are reduced by a factor of 1000 for position values with a higher resolution:

- Displayable position range
- Displayable angular range
- Mechanical gear ratio
- Numerical traversing range with regard to long-term stability
- Dynamic values for velocity, acceleration and deceleration

5.1.4 Modulo setting (S7-1500, S7-1500T)

For the positioning axis, synchronous axis and external encoder technology objects, the "Modulo" setting can be activated.

When an axis moves in only one direction, the position value continually increases. To limit the position value to a recurring reference system, you can activate the "Modulo" setting. The long-term accuracy (Page 128) can also be adhered to with modular axes up to the maximum travel time.

When the "Modulo" setting is activated, the position value of the technology object is mapped onto a recurring modulo range. The modulo range is defined by the start value and the length.

For example, to limit the position value of a rotary axis to a full rotation, the modulo range can be defined with start value = 0° and length = 360°. As a result, the position value is mapped onto the modulo range 0° to 359.999°.

The modulo cycle counters for the position setpoint and the actual position on the positioning axis, synchronous axis and external encoder technology objects indicate the number of modulo revolutions.

Modulo cycle counter

If the "Modulo" setting is activated, the modulo cycle counter is activated for the positioning axis, synchronous axis, and external encoder technology objects. The modulo cycle counter is displayed at the technology object for the position setpoint and the actual position. The modulo cycle counter counts the modulo revolutions and thus the number of modulo runs at the technology object.

The tag <TO>.ModuloCycle indicates the number of modulo cycles of the setpoint.

The tag <TO>.ActualModuloCycle indicates the number of modulo cycles of the actual value.

The counter values of the modulo cycles change during switch on, restart and homing.

The following applies to an incremental encoder:

Action	Description
Switching on the CPU	The modulo cycle counter is set to 0.
Reset with "Restart" = TRUE	The modulo cycle counter is set to 0.
Active and passive homing with "Mode" = 2, 3, 5, 8, 10	• If the home position is in the range "Modulo start value ≤ Home position ≤ (Modulo Start value + Modulo length / 2)", the modulo cycle counter is set to 0. • If the home position is in the range "(Modulo start value + Modulo length / 2) < Home position < (Modulo start value + Modulo length)" the modulo cycle is set to -1.
Direct homing absolute with "Mode"= 0, 11	The modulo value is the shortest distance between the current and new position. Depending of the distance, the modulo cycle counter can remain the same, increase by 1 or decrease by 1.
Direct homing absolute with "Mode"= 1, 12	

The following applies to an absolute encoder:

Action	Description
Switching on the CPU	The modulo cycle counter changes according to the determined modulo length from the absolute value of the encoder and the absolute value offset of an absolute value encoder adjustment, if an absolute value encoder adjustment has taken place.
Reset with "Restart" = TRUE	The modulo cycle counter remains unchanged.
Absolute encoder adjustment with "Mode" = 7	The modulo cycle counter is set to 0.
Absolute encoder adjustment with "Mode" = 6	The modulo value is the shortest distance between the current and new position. Depending of the distance, the modulo cycle counter can remain the same, increase by 1 or decrease by 1.
Direct homing absolute with "Mode" = 0, 11	

Action	Description
Direct homing absolute with "Mode"= 1, 12	The modulo value is the shortest distance between the current and new position. Depending of the distance, the modulo cycle counter can remain the same, increase by 1 or decrease by 1.

Enable and configure modulo

Select the "Enable modulo" check box if you want to use a recurring system of units for the axis (e.g. 0° to 360° for an axis of the "rotary" axis type).

- **Modulo start value**
  In this field, define the position at which the modulo range should begin (e.g. 0° for an axis of the "rotary" axis type).
- **Modulo length**
  In this field, define the length of the modulo range (e.g. 360° for an axis of the "rotary" axis type).

5.1.5 Virtual axis (S7-1500, S7-1500T)

S7-1500 Motion Control offers the possibility to configure an axis as a virtual axis. A virtual axis behaves like a real axis, but has no drive or encoder connection. The setpoints are only processed within the controller. A real drive is never controlled in this situation.

Application

A virtual axis, for example, is often used as a virtual leading axis in order to generate the setpoints for several real following axes in synchronous operation.

The "Virtual axis" configuration can only be changed by a new download to the CPU in STOP mode (<TO>.VirtualAxis.Mode).

If you have configured an absolute encoder at the virtual axis, you must home the virtual axis after switching on the CPU.

The further behavior of a virtual axis is identical to the behavior of an axis in simulation (Page 36).

5.1.6 Axis in simulation (S7-1500, S7-1500T)

S7-1500 Motion Control offers the option to move real axes in simulation mode. Speed, positioning and synchronous axes can thus be simulated without a connected drive and encoder in the CPU.

When the simulation mode is activated, the drive and encoder connection does not need to be configured in the axis configuration, for example, if the drive configuration is not yet available at this time. The "Simulation" configuration can be changed during runtime of the user program (<TO>.Simulation.Mode). A valid drive and encoder connection is required when exiting the simulation.

To use a technology object in simulation mode or with SIMATIC S7 PLCSIM, you need to use encoder 1 for closed loop position control of the axis.

Applications

- For example, an axis is simulated for programming the machine application and assigned to the configured hardware later for commissioning.
- During commissioning, for example, not all hardware components are available.
- No axis motions should take place during commissioning.

Characteristics in simulation mode

An axis in simulation does not output setpoints to the drive and does not read any actual values of the encoder. The actual values are formed with a time delay from the setpoints.

Hardware limit switches and home position switches have no effect.

The technology objects measuring input (with signal detection via TM Timer DIDQ or SINAMICS measuring input), output cam and cam track can also be used for axes in simulation.

The following table shows the Motion Control instructions with adapted behavior in simulation mode:

Motion Control instruction	Characteristics in simulation mode
MC_Power	The axis is enabled immediately without waiting for feedback from the drive.
MC_Home	Homing jobs are executed immediately without simulated axis motion.
MC_TorqueLimiting	The specified torque is not output to the drive.

5.1.7 Actual value calculation for virtual axis or axis in simulation (S7-1500, S7-1500T)

The actual value of a virtual axis or an axis in simulation is formed from the setpoint taking time delays into account.

You calculate the time delay from actual value to the setpoint (T_t) as follows:

Calculation	
With precontrol	$T_t = T_{ipo} + T_{servo} + T_{vtc} + T_{addPtc}$
Without precontrol, without DSC	$T_t = T_{ipo} + 1/Kv + T_{addPtc}$
Without precontrol, with DSC for one axis in simulation	$T_t = T_{ipo} + T_{servo} + 1/Kv + T_{addPtc}$

T_t	Time delay from the actual value to the setpoint
T_{ipo}	Cycle time of the MC-Interpolator [OB92]
T_{servo}	Cycle time of the MC-Servo [OB91]
T_{vtc}	Speed control loop substitute time (T_{vtc} from "<TO>.DynamicAxisModel.VelocityTimeConstant")
T_{addPtc}	Additive position control loop equivalent time (T_{addPtc} from "<TO>.DynamicAxisModel.AdditionalPositionTimeConstant")
kV	Gain factor (Kv from "<TO>.PositionControl.Kv")

Switching between real and simulated axis in the user program

5.2 Drive and encoder connection (S7-1500, S7-1500T)

Number of drives and encoders per technology object

The following table shows the number of drives and encoders for the various technology objects.

Technology object	Number of drives (actuators)	Number of encoders (sensors)
Speed axis	1	0
Positioning axis, synchronous axis	1	1 (S7-1500) 1 to 4 (S7-1500T)
External encoder	0	1

Supported drive types

You can connect the following drives:

- Drive with an analog setpoint interface
- Drives with PROFIdrive telegram (PROFINET IO or PROFIBUS DP), e.g.
  - SINAMICS
  - SIMATIC MICRO-DRIVE
  - Technology modules
  - Drives from other manufacturers

Encoder connection options

The following connection options are available for an encoder:

- Connection to the drive
- Encoder on the technology module, e.g. TM Count 1x24V
- PROFIdrive encoder directly on the PROFIBUS DP/PROFINET IO

The actual encoder value is transmitted exclusively via PROFIdrive telegram.

Drive configuration process

Complete the following steps to add and configure a drive.

- Adding a drive unit (Page 39)
  - SINAMICS Startdrive
  - GSD file
  - SIMATIC technology module
- Configuration of the PROFIdrive telegram for PROFIdrive drives (Page 45)

- Configure communication between drive and CPU in the device configuration
  - Configure PROFINET IO network (Page 41)
  - Configure PROFIBUS DP network (Page 43)
- Configure data exchange between technology object and PROFIdrive drive
  - Connect PROFIdrive drive directly (Page 49)
  - Connect PROFIdrive drive via data block (Page 49)
  - Configure drive parameters manually (Page 53)
  - Transfer drive parameters automatically (Page 61)
- Configure data exchange between technology object and drive with analog setpoint interface (Page 63)
- Connect stepper motors (Page 63)

If you want to use a torque pre-control, change the torque limits in the drive from the user program, or evaluate the current actual torque value, you have to connect the additional telegram 750 to the technology object.

- Connecting force/torque data via SIEMENS additional telegram 750 (Page 65)

Encoder configuration process

Add the encoder in the device configuration.

- Add encoder in the device configuration
  - PROFINET-IO encoder
  - Profibus-DP encoder
  - Technology module

Configuring the data exchange between technology object and encoder.

- Connect ProfiDrive encoder directly (Page 54)
- Connect ProfiDrive encoder via data block (Page 55)
- Transfer encoder parameters automatically (Page 61)
- Configure encoder parameters manually (Page 56)

Configure the encoder type (Page 55).

5.2.1 Adding and configuring drives (S7-1500, S7-1500T)

Siemens offers numerous drive systems for various applications.

Depending on the drive, the parameter assignment and implementation in the TIA Portal are different. The application examples provide step-by-step descriptions of how to add and configure the drives.

Using Startdrive

If you use a SINAMICS drive with Startdrive, you can find additional information in the hardware catalog in the "Drives & Starter" folder. For more information on connecting via Startdrive, refer to:

- Getting Started SINAMICS S120 in the Startdrive
  Getting Started SINAMICS S120
  (https://support.industry.siemens.com/cs/ww/en/view/109747452)
- Application example "Configuring an S120 with Startdrive":
  Application example SINAMICS S120
  (https://support.industry.siemens.com/cs/ww/en/view/109743270)
- Application example "Configuring an S210 with Startdrive":
  Application example SINAMICS S210
  (https://support.industry.siemens.com/cs/ww/en/view/109750431)

Using the GSD file

You can add and configure the SINAMICS S210 using a GSD file.
Application example SINAMICS S210
(https://support.industry.siemens.com/cs/ww/en/view/109750431)

Using SINAMICS V90 PN

To add and configure a SINAMICS V90 PN drive in the TIA Portal, you need the Hardware Support Package HSP 0185 (SINAMICS V90 PN).

- Getting Started SINAMICS V90 PN on S7-1500 motion control:
  Getting Started SINAMICS V90 PN
  (https://support.industry.siemens.com/cs/ww/en/view/109739497)
- Configure SINAMICS V90 PN with web server
  Application example SINAMICS V90 PN
  (https://support.industry.siemens.com/cs/ww/en/view/109739053)

Using SIMATIC MICRO-DRIVE PDC

To add and configure a SIMATIC MICRO-DRIVE PDC in the TIA Portal, you need the Hardware Support Package HSP 198.
Application example SIMATIC MICRO-DRIVE PDC
(https://support.industry.siemens.com/cs/ww/us/view/109770395)

Using ET 200SP F - TM ServoDrive

To add and configure a ET 200SP F-TM ServoDrive in the TIA Portal, you need the Hardware Support Package HSP 0311.
Application example ET 200SP F - TM ServoDrive
(https://support.industry.siemens.com/cs/ww/en/view/109780201)

Drives compatibility list

In the Siemens Industry Online Support you can find an overview of the drives you can connect with a S7-1500 CPU.
Compatibility list (https://support.industry.siemens.com/cs/ww/en/view/109750431)

5.2.1.1 Adding and configuring a PROFINET-IO drive (S7-1500, S7-1500T)

Adding and configuring a PROFINET IO drive is described below with the example of a SINAMICS S120 drive. Adding and configuring other PROFINET IO drives may differ from the description in certain respects.

Requirement

- The SIMATIC S7-1500 device is created in the project.
- The desired drive can be selected in the hardware catalog.

If the drive is not available in the hardware catalog, you must install the drive in the "Options" menu as a device description file (GSD).

Adding a drive and telegram in the device configuration

1. Open the device configuration and change to the network view.
2. In the hardware catalog, open the folder "Additional field devices > PROFINET IO > Drives > Siemens AG > SINAMICS".
3. Select the desired drive with the desired version, then drag it to the network view.
4. Assign the drive to the PROFINET interface of the CPU.
5. Open the drive in the device view.
6. Drag a drive object (DO) and a telegram from the hardware catalog and drop it onto a slot of the device overview of the drive.
7. Make sure that the order of the telegrams in the device configuration and in the drive parameter assignment are identical.

Depending on the version of the SINAMICS S120 drive, select "DO with telegram X", or "DO Servo" and a "Telegram X" for the telegram.
For more information on suitable telegrams, refer to the section "Configuring PROFIdrive telegrams (Page 45)".
Repeat step 6, if you want to add another drive and another standard telegram.

Interconnect the port of the CPU with the port of the drive

1. Open the topology view in the device configuration.
2. Interconnect the port of the drive with the port of the CPU as in the real setup.
   To plan your PROFINET topology, please note the PROFINET installation guideline of the PROFIBUS user organization (https:\\www.profibus.com).

Activating isochronous mode of the drive in the device configuration

PROFINET drives can always be operated in isochronous mode or clock synchronized mode. Isochronous mode, however, increases the quality of the closed loop position control of the drive and is therefore recommended for drives such as SINAMICS S120.

To control the drive in isochronous mode, follow these steps:

1. Open the device view of the drive.
2. In the properties window, select the tab "PROFINET interface [X150] > Advanced options > Isochronous mode".
3. Select the "Isochronous mode" check box in this tab.

In the detailed overview, the check box for the telegram must also be selected for isochronous mode.

Configure the CPU as the sync master and set isochronous mode

1. Select the device view of the CPU.
2. In the Properties window, select the tab "PROFINET interface [X1] > Advanced options > Real-time settings > Synchronization".
3. Select "Sync master" from the "Synchronization role" drop-down list.
4. Click the "Domain settings" button.
5. Open the "Domain Management > Sync Domains" tab and set the desired "Send clock" (isochronous clock).

Configuring the drive as a sync slave

1. Select the device view of the drive unit
2. In the Properties window, select the tab "PROFINET interface [X150] > Advanced options > Real-time settings > Synchronization"
3. Select the RT class: "IRT"

Select drive in the configuration of the technology object

1. Add a new technology object axis, or open the configuration of an existing axis.
2. Open the configuration "Hardware interface > Drive".
3. Select from the "PROFIdrive" entry in the "Drive type" drop-down list.
4. Select the drive object of the PROFINET drive from the "Drive" list.

Checking/configuring the properties of the MC-Servo

1. Open the "Program blocks" folder in the project navigator.
2. Select the "MC-Servo" organization block.
3. Select the "Properties" command in the shortcut menu.
4. Select the "Cycle time" entry in the area navigation.
5. The option "Synchronous to the bus" must be selected in the dialog box.

6. An "PROFINET IO system" must be selected in the "Source of the send clock" drop-down list.
7. The application cycle of "MC-Servo" must correspond to the send clock of the bus or be reduced by an integral factor relative to the send clock of the bus.

Result

The PROFINET IO drive is configured in such a way that it can be controlled in isochronous mode in the PROFINET IO network.

The properties of the SINAMICS drive must be configured according to the configuration of the axis with the STARTER software or SINAMICS Startdrive.

Checking isochronous mode on the drive

If the configuration sequence described above is not adhered to during configuration of the axis, and drive-specific errors occur when the project is compiled, the setting for isochronous mode on the drive must be checked.

1. Open the device view of the drive.
2. Select standard telegram in the device overview.
3. Select the properties dialog "General > I/O Addresses".
4. The following settings apply for the input and output addresses:
   - "Isochronous mode" is enabled.
   - "MC-Servo" must be selected for the "Organization block".
   - "PIP OB Servo" must be selected for the "Process image".

5.2.1.2 Adding and configuring a PROFIBUS DP drive (S7-1500, S7-1500T)

Adding and configuring a PROFIBUS drive is described below with the example of a SINAMICS S120 drive. Adding and configuring other PROFIBUS drives may differ from the description in certain respects.

Requirements

- The SIMATIC S7-1500 device is created in the project.
- The desired drive can be selected in the hardware catalog.

If the drive is not available in the hardware catalog, you must install the drive in the "Options" menu as a device description file (GSD).

Adding a drive and telegram in the device configuration

1. Open the device configuration and change to the network view.
2. In the hardware catalog, open the folder "Additional Field Devices > PROFIBUS DP > Drives > Siemens AG > SINAMICS".
3. Select the folder of the desired drive with the desired version, then drag the drive object to the network view.

4. Assign the drive to the PROFIBUS interface of the CPU.
5. Open the drive in the device view.
6. Drag-and-drop a telegram from the hardware catalog onto a slot in the device overview of the drive.

For more information on suitable telegrams, refer to the section "Configuring PROFIdrive telegrams (Page 45)".

If you want to add another drive and another telegram to the device overview, use the "Axis disconnector" in the hardware catalog.

Activating isochronous mode of the drive in the device configuration

PROFIBUS drives can be operated in cyclic mode or isochronous mode. Isochronous mode, however, increases the quality of the position control of the drive.

If you want to control the drive in isochronous mode, follow these steps:

1. Open the device view of the drive.
2. In the properties dialog, select the tab "General > Isochronous Mode".
3. Select the "Synchronize DP slave to constant DP bus cycle time" check box.

Setting isochronous mode

1. Select the network view.
2. Select the DP master system.
3. In the properties dialog, select the tab "General > Constant bus cycle time".
4. Select the desired "Constant DP bus cycle times".

Select drive in the configuration of the technology object

1. Add a new technology object axis, or open the configuration of an existing axis.
2. Open the configuration "Hardware interface > Drive".
3. Select from the "PROFIdrive" entry in the "Drive type" drop-down list.
4. Select the telegram of the PROFIBUS drive from the "Drive" list.

Result

The technology object is connected to the drive and the "MC-Servo" organization block can be checked/configured.

The telegram of the configured drive is assigned to the "PIP OB Servo" process image.

Checking/configuring the properties of the MC-Servo

1. Open the "Program blocks" folder in the project navigator.
2. Select the "MC-Servo" organization block.

3. Select the "Properties" command in the shortcut menu.
   The "MC-Servo" dialog opens.
4. Select the "Synchronous to the bus" option under "General > Cycle time".
5. In the "Distributed I/O" drop-down list, select a "PROFIBUS DP-System".
   The application cycle of "MC-Servo" must correspond to the send clock of the bus or be reduced by an integral factor relative to the send clock of the bus.

You can select a drive connected to the CPU via a communications processor/communications module (CP/CM) in the configuration of the technology object. You cannot select the DP master system of the CP/CM as the source clock for MC-Servo [OB91].

Result

The PROFIBUS DP drive is configured in such a way that it can be controlled in isochronous mode in the PROFIBUS network.
The properties of the SINAMICS drive must be configured according to the configuration of the axis with the STARTER software or SINAMICS Startdrive.

Checking isochronous mode on the drive

If the configuration sequence described above is not adhered to during configuration of the axis, and drive-specific error occurs when the project is compiled, isochronous mode can be checked on the drive.

1. Open the device view of the drive.
2. Select the entry of the telegram in the device overview.
3. Select the properties dialog "General > I/O Addresses".
4. The following settings apply for the input and output addresses:
   – "MC-Servo" must be selected for the "Organization block".
   – "PIP OB Servo" must be select the "Process image".

5.2.2 Configuring PROFIdrive telegrams (S7-1500, S7-1500T)

PROFIdrive

PROFIdrive is the standardized drive technology profile for connecting drives and encoders via PROFIBUS DP and PROFINET IO. Drives that support the PROFIdrive profile are connected according to the PROFIdrive standard.
The current PROFIdrive specification is available at the page of the PROFIBUS user organization under "Download" > "Profiles":
https://www.profibus.com (https:\\www.profibus.com)
Communication between the controller and drive/encoder is performed using various PROFIdrive telegrams. Each of the telegrams has a standardized structure. You can select the appropriate telegram according to the application. Control words and status words as well as setpoints and actual values are transmitted in the PROFIdrive telegrams.

The PROFIdrive profile likewise supports the "Dynamic Servo Control" (DSC) control concept. DSC uses rapid closed loop position control in the drive. This can be used to solve highly dynamic Motion Control tasks.

PROFIdrive telegrams

PROFIdrive telegrams are used to transfer setpoints and actual values, control and status words and other parameters between the controller and drive/encoder.

When a PROFIdrive telegram is used for connection, the drives and encoders are handled and switched on in accordance with the PROFIdrive profile.

The following table shows the possible PROFIdrive telegrams for various technology objects.

Technology object	Possible PROFIdrive telegrams
Speed axis	• 1, 2 • 3, 4, 5, 6, 102, 103, 105, 106 (actual encoder value is not evaluated)
Positioning axis/synchronous axis	
Setpoint and actual encoder value in one drive telegram	3, 4, 5, 6, 102, 103, 105, 106
Setpoint and actual encoder value separately	
Setpoint in drive telegram	1, 2, 3, 4, 5, 6, 102, 103, 105, 106
Actual value from telegram	81, 83
External encoder	81, 83
Measuring input (Measuring via SINAMICS (central probe))	391, 392, 393
Measuring input at axis module	Corresponds to measuring via PROFIdrive

Telegram types

The following table shows the supported PROFIdrive telegram types for the assignment of drives and encoders:

Telegram	Brief description
Standard telegrams	
1[1)]	• Control word STW1[5)], status word ZSW1 • Speed setpoint 16 bit (NSET), actual speed value 16 bit (NACT)
2	• Controls word STW1[5)] and STW2[5)], status words ZSW1 and ZSW2 • Speed setpoint 32 bit (NSET), actual speed value 32 bit (NACT)

1) Isochronous mode is not possible.

2) For use of Dynamic Servo Control (DSC), the motor encoder (first encoder in the telegram) of the drive must be used as the first encoder for the technology object.

3) Can also be used for the telegrams 1, 2, 3, 4, 5, 6, 102, 103, 105, 106

4) When using SINAMICS drives (measuring using SINAMICS measuring input)

5) STW1 and STW2: Bits not used by the technology object can be controlled via the user program with the Motion Control instruction "MC_SetAxisSTW".

Telegram	Brief description
3	• Controls word STW1[5] and STW2[5], status words ZSW1 and ZSW2 • Speed setpoint 32 bit (NSET), actual speed value 32 bit (NACT) • Actual encoder value 1 (G1_XIST1, G1_XIST2)
4	• Controls word STW1[5] and STW2[5], status words ZSW1 and ZSW2 • Speed setpoint 32 bit (NSET), actual speed value 32 bit (NACT) • Actual encoder value 1 (G1_XIST1, G1_XIST2) • Actual encoder value 2 (G2_XIST1, G2_XIST2)
5	• Controls word STW1[5] and STW2[5], status words ZSW1 and ZSW2 • Speed setpoint 32 bit (NSET), actual speed value 32 bit (NACT) • Actual encoder value 1 (G1_XIST1, G1_XIST2) (motor encoder) • Dynamic Servo Control (DSC)[2] – Speed precontrol value – Position difference (XERR) – Kv factor gain position control (KPC)
6	• Controls word STW1[5] and STW2[5], status words ZSW1 and ZSW2 • Speed setpoint 32 bit (NSET), actual speed value 32 bit (NACT) • Actual encoder value 1 (G1_XIST1, G1_XIST2) (motor encoder) • Actual encoder value 2 (G2_XIST1, G2_XIST2) • Dynamic Servo Control (DSC)[2] – Speed precontrol value – Position difference (XERR) – Kv factor gain position control (KPC)
Siemens telegrams (with torque limiting)	
102	• Controls word STW1[5] and STW2[5], status words ZSW1 and ZSW2 • Speed setpoint 32 bit (NSET), actual speed value 32 bit (NACT) • Actual encoder value 1 (G1_XIST1, G1_XIST2) • Torque limiting
103	• Controls word STW1[5] and STW2[5], status words ZSW1 and ZSW2 • Speed setpoint 32 bit (NSET), actual speed value 32 bit (NACT) • Actual encoder value 1 (G1_XIST1, G1_XIST2) • Actual encoder value 2 (G2_XIST1, G2_XIST2) • Torque limiting
105	• Controls word STW1[5] and STW2[5], status words ZSW1 and ZSW2 • Speed setpoint 32 bit (NSET), actual speed value 32 bit (NACT) • Actual encoder value 1 (G1_XIST1, G1_XIST2) (motor encoder) • Dynamic Servo Control (DSC)[2] – Speed precontrol value – Position difference (XERR) – Kv factor gain position control (KPC) • Torque limiting

1) Isochronous mode is not possible.

2) For use of Dynamic Servo Control (DSC), the motor encoder (first encoder in the telegram) of the drive must be used as the first encoder for the technology object.

3) Can also be used for the telegrams 1, 2, 3, 4, 5, 6, 102, 103, 105, 106

4) When using SINAMICS drives (measuring using SINAMICS measuring input)

5) STW1 and STW2: Bits not used by the technology object can be controlled via the user program with the Motion Control instruction "MC_SetAxisSTW".

Telegram	Brief description
106	• Controls word STW1[5] and STW2[5], status words ZSW1 and ZSW2 • Speed setpoint 32 bit (NSET), actual speed value 32 bit (NACT) • Actual encoder value 1 (G1_XIST1, G1_XIST2) (motor encoder) • Actual encoder value 2 (G2_XIST1, G2_XIST2) • Dynamic Servo Control (DSC)[2] – Speed precontrol value – Position difference (XERR) – Kv factor gain position control (KPC) • Torque limiting
SIEMENS additional telegrams (torque data)	
750[3]	• Additive setpoint torque • High and low torque limits • Torque actual values
SIEMENS telegrams (measuring input) [4]	
391	• Control word CU_STW1, status word CU_ZSW1 • Measuring input control word (MT_STW), measuring input status word (MT_ZSW) • Measuring input time stamp of negative (MT1...2_ZS_F) or positive edges (MT1...2_ZS_S) • Digital output 16 bit, digital input 16 bit
392	• Control word CU_STW1, status word CU_ZSW1 • Measuring input control word (MT_STW), measuring input status word (MT_ZSW) • Measuring input time stamp of negative (MT1...6_ZS_F) or positive edges (MT1...6_ZS_S) • Digital output 16 bit, digital input 16 bit
393	• Control word CU_STW1, status word CU_ZSW1 • Measuring input control word (MT_STW), measuring input status word (MT_ZSW) • Measuring input time stamp of negative (MT1...8_ZS_F) or positive edges (MT1...8_ZS_S) • Digital output 16 bit, digital input 16 bit • Analog input 16 bit
Standard telegrams - encoder	
81	• Control word STW2_ENC, status word ZSW2_ENC • Actual encoder value 1 (G1_XIST1, G1_XIST2)
83	• Control word STW2_ENC, status word ZSW2_ENC • Actual speed value 32 bit (NACT) • Actual encoder value 1 (G1_XIST1, G1_XIST2)

1) Isochronous mode is not possible.

2) For use of Dynamic Servo Control (DSC), the motor encoder (first encoder in the telegram) of the drive must be used as the first encoder for the technology object.

3) Can also be used for the telegrams 1, 2, 3, 4, 5, 6, 102, 103, 105, 106

4) When using SINAMICS drives (measuring using SINAMICS measuring input)

5) STW1 and STW2: Bits not used by the technology object can be controlled via the user program with the Motion Control instruction "MC_SetAxisSTW".

The following table shows PROFIdrive telegrams that are not supported but are modified by the MC servo:

Telegram	Brief description
SIEMENS telegrams	
390	Control word CU_STW1, status word CU_ZSW1
394	Control word CU_STW1, status word CU_ZSW1
395	Control word CU_STW1, status word CU_ZSW1

The exact content of the telegrams can be found in the "SINAMICS S120/S150 (https://support.industry.siemens.com/cs/ww/en/view/109763271)" list manual

5.2.3 Connecting PROFIdrive drives (S7-1500, S7-1500T)

5.2.3.1 Connecting PROFIdrive drive directly (S7-1500, S7-1500T)

In the "Drive" field, select an already configured PROFIdrive drive/slot. A suitable PROFIdrive telegram must be configured so that a drive is displayed.

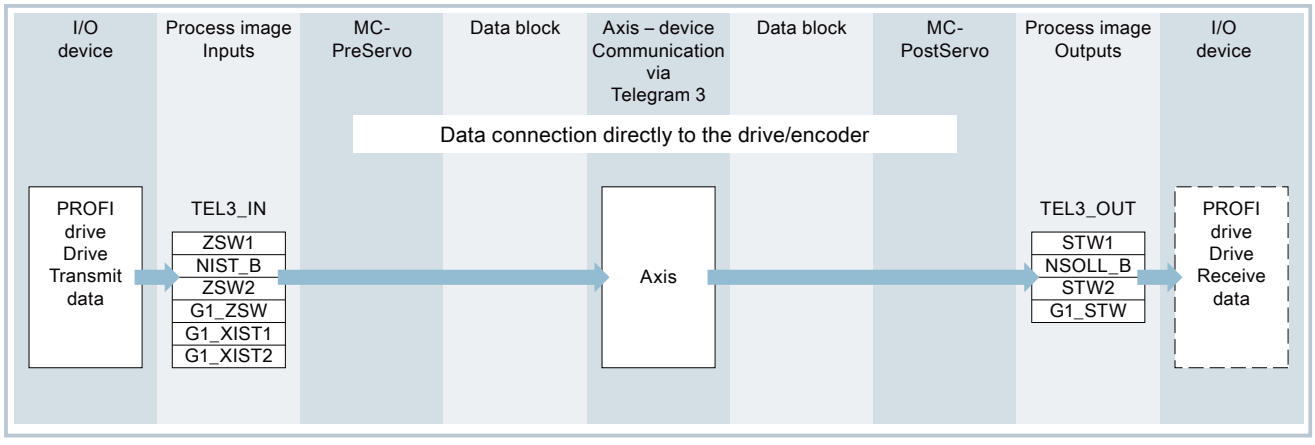

When you have selected a drive, you can use the "Device configuration" button to navigate directly to the device view of the PROFIdrive, e.g. in Startdrive. Use the "Drive configuration" button to navigate to the parameter assignment of the PROFIdrive drive in Startdrive.

NOTE

Option "Show all modules"

If a PROFIdrive drive that has already been configured is not available for selection, use the option "Show all modules" to display all reachable modules.

When you select the option "Show all modules", only the address range for each of the displayed modules is checked. If the address range of the module is large enough for the selected PROFIdrive telegram, you can select the module. For this reason, make sure that you select a PROFIdrive drive.

5.2.3.2 Connecting a PROFIdrive drive via data block (S7-1500, S7-1500T)

Use the connection via data block if you want to influence or evaluate telegram contents in the user program for process-specific reasons.

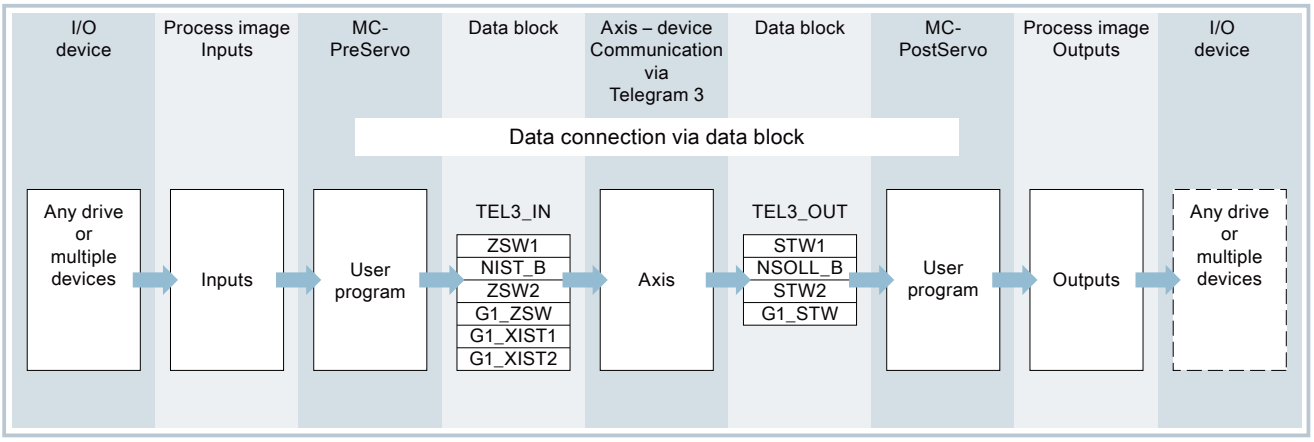

Principle of data connection via data block

Generally, at the start of closed loop position control of the axis (by MC-Servo [OB91]), the input area of the drive or encoder telegram is read.

At the end of closed loop position control, the output area of the drive or encoder telegram is written.

To influence or evaluate process-related telegram contents, a data interface can be connected via a data block before and after the position control.

- The input area of the telegram can be edited using the MC-PreServo [OB67] organization block. The MC-PreServo is called before the MC-Servo.
- The input area of the telegram can be edited using the MC-PostServo [OB95] organization block. The MC-PostServo is called after the MC-Servo.

The data block must be created by the user and contain a data structure of data type "PD_TELx" for the data connection. Here, "x" stands for the telegram number of the drive or encoder configured in the device configuration.

The organization blocks MC-PreServo and MC-PostServo can be programmed by the user and must be added with the command "Add new block". The connection to the I/O via telegram must be programmed in this organization block. When you use DSC you have to edit the signs of life in the telegrams in MC-PreServo and MC-PostServo yourself according to the PROFIdrive standard.

5.2.3.3 Connect drive/encoder via data block (S7-1500, S7-1500T)

Creating the data block for data connection

1. Create a new data block of type "Global DB".
2. Select the data block in the project tree and select "Properties" from the shortcut menu.

3. Disable the following attributes under Attributes and accept the change with "OK":
   – "Only store in load memory"
   – "Data block write-protected in the device"
   – "Optimized block access" for technology version < V4.0
4. Open the data block in the block editor.
5. Create a new tag on "Add" in the block editor.
6. For the new tag, enter "PD_TELx" completely in the "Data type" column. The "x" stands for the telegram number. Example: "PD_TEL3" for standard telegram 3
   You have created a tag structure of the type "PD_TELx". This tag structure contains the "Input" tag structure for the input area of the telegram and the "Output" tag structure for the output area of the telegram.

NOTE

"Input" and "Output" relate to the view of the technology object. For example, the input area contains the actual values of the drive and the output area contains the setpoints for the drive.

For the data connection via a data block, "Input" and "Output" must always be in of the "PD_TELx" tag structure. Do not use standalone tag structures for "Input" and "Output", such as "PD_TEL3_IN".

The data block may contain the data structures of multiple axes and encoders and other contents.

Configuring data connection via a data block

1. Open the configuration window "Hardware interface > Drive" or "Hardware interface > Encoder".
2. Select the entry "Data block" from the "Data block" drop-down list.
3. In the "Data block" field, select the previously created data block.
   Open this data block and select the tag name defined for the drive and encoder.

NOTE

As of TIA Portal V17, you can connect tag structures of the "PD TELx" data type that are defined in arrays (Array [0..x] of "PD_TELx"), PLC data types or structures within a data block.

Programming MC-PreServo and MC-PostServo

- Edit the tag structure for the input area "Input" in the MC-PreServo.
- Edit the tag structure for the output area "Output" in the MC-PostServo.

NOTICE
Machine damage Improper manipulation of drive and encoder telegrams may result in unwanted drive motions. Check your user program for consistency in the drive and encoder connection.

An application example for the use of MC-PreServo and MC-PostServo is available on the Internet (https://support.industry.siemens.com/cs/ww/en/view/109741575).

Configuration of the communication times T_i, T_o, T_{DC}

When calculating the following error, the transmission times of the setpoint to the drive and of the actual position value to the controller are deducted. The transmission times result from the following communication times:

- T_i: Time to import process values
- T_o: Time to export process values
- T_{DC}: Send clock of the PROFINET interface or PROFIBUS send clock

The following error is calculated from the delayed position setpoint by the communication times $T_i + T_o + T_{DC}$ and the cycle time of the MC Servo T_{Servo} minus the actual position in the controller.

Unlike with direct drive or encoder connection, the communication times are not automatically adapted by the technology object with the connection via data block; by default, the communication times are preset to 0.0 s. For the correct calculation of the real following error "<TO>.StatusPositioning.FollowingError" and the system deviation at the position controller "<TO>.StatusServo.ControlDifference", you configure the communication times T_i, T_o, T_{DC} manually.

You can find a description of the communication times in the PROFINET with STEP 7 function manual on the Internet (https://support.industry.siemens.com/cs/ww/en/view/49948856).

Procedure

1. Read the T_i, T_o, and T_{DC} (send clock) from the device configuration of the drive or encoder. You can find the values in the menu "PROFINET interface > Advanced settings > Isochronous mode".
2. Define the read times as variables of the data type "LREAL" in a data block.

NOTE

Enter the time in seconds (s) in the data block. In the device configuration, times are entered in milliseconds (ms). A time Ti of 0.125 ms corresponds to 0.000125 s.

3. Call the "MC_WriteParameter" instruction with the following parameter assignment for "MC_WriteParameter.ParameterNumber". For the input parameter "Value", assign the defined tag for T_i with the corresponding time.

Communication time	MC_WriteParameter.ParameterNumber
T_i	1010
T_o	1011
T_{DC}	1012

4. Assign the associated technology object at the "Axis" input parameter.
5. Start the job with a positive edge at the "Execute" input parameter.
   The output parameter "Done" signals that the change has been applied.
   Bit 3 of the tag "<TO>.StatusWord" (OnlineStartValueChanged) indicates that a restart of the technology object is required to effectively apply the values.
6. Repeat steps 3. to 5. for the communication times T_o and T_{DC}.
7. To apply the change of the communication times, restart the technology object with the instruction "MC_Reset" with "Restart" = TRUE.

Result

The communication times for T_i, T_o and T_{DC} are not taken into account by the technology object when calculating the following error.

NOTE

When you connect the technology object directly to the drive, the technology object automatically adapts the communication times. Do not configure the communication times via the user program in this case.

The communication times are retained with a "RUN → STOP → RUN" transition of the CPU or in case of another restart of the technology object.

Note that the communication times are reset to 0.0 s in the following cases:

- Download of the technology object
- POWER OFF → POWER ON
- Memory reset

In this case, configure the communication times again.

5.2.3.4 Configuring drive parameters manually (S7-1500, S7-1500T)

If the connected drive does not allow the drive parameters to be applied automatically, configure the drive parameters manually. You can find the configured values in the manufacturer's information or in the drive commissioning tool.

Transferring drive and encoder parameters automatically (Page 61)

Standard motor

- **Reference speed**Configure the reference speed of the drive in this field according to the manufacturer's specifications. The specification of the drive speed is a percentage of the reference speed in the range -200% to 200%.
- **Maximum speed**Configure the maximum speed of the drive in this field.
- **Reference torque**In this field, configure the reference torque of the drive according to its configuration.
  The reference torque is required for the force/torque reduction, which is supported with telegram 10x.

Linear motor

- **Reference velocity**Configure the reference velocity of the drive in accordance with the manufacturer's specifications in this field. The specification of the drive velocity is a percentage of the reference velocity in the range -200% to 200%.
- **Maximum velocity**Configure the maximum velocity of the drive in this field.
- **Reference force**In this field, configure the reference force of the drive according to its configuration.
  The reference force is required for the force/torque reduction, which is supported with telegram 10x.

5.2.4 Connecting encoders via PROFIdrive (S7-1500, S7-1500T)

When using a PROFIdrive drive telegram with encoder data for the positioning axis or synchronous axis technology object, e.g. telegram 3, the encoder from the PROFIdrive telegram is automatically connected as the first encoder.

With telegram 6 or 106, the first two encoders are automatically connected (only S7-1500T).

You must connect the encoder separately to the drive in the following applications:

- Drive and encoder data in two separate PROFIdrive telegrams (drive connection via PROFIdrive telegram 1 and encoder connection via PROFIdrive telegram 81/83)
- Connection to the technology object external encoder
- Connection as a second, third or fourth encoder on the positioning axis or synchronous axis technology object (S7-1500T)
- Connection as the first encoder, instead of the automatically connected encoder from the PROFIdrive drive telegram.

5.2.4.1 Connecting the encoder directly (S7-1500, S7-1500T)

In the "Encoder field", select an already configured encoder or its PROFIdrive telegram.

Connection to the drive (not with analog drive connection)

The encoder is configured via the configuration of the PROFIdrive drive. The drive evaluates the encoder signals and sends them to the controller in the PROFIdrive telegram.

Encoder on technology module (TM)

Select a previously configured technology module and the channel to be used. Only technology modules set to the "Position input for Motion Control" mode are displayed for selection.

If no technology module is available for selection, change to the device configuration and add a technology module. If you have selected a technology module, you can access the configuration of the technology module using the "Device configuration" button.

You can operate the technology module centrally on an S7-1500 CPU or decentrally on a distributed I/O. During central operation in the CPU isochrone mode is possible as of firmware version 2.8.1.

You can identify the technology modules suitable for position detection for Motion Control in the documentation for the technology module and the catalog data.

With the compact CPUs (e.g. CPU 1512C-1 PN) you can use the high-speed counters (HSC) for position detection.

PROFIdrive encoder on PROFINET/PROFIBUS (PROFIdrive)

In the "PROFIdrive encoder" field, select a configured encoder on PROFINET/PROFIBUS. When you have selected an encoder, you can configure the encoder using the "Device configuration" button.

Switch to the device configuration in the network view, and add an encoder, in the event that no encoder can be selected.

NOTE

Option "Show all modules"

If a PROFIdrive that has already been configured is not available for selection, use the option "Show all modules" to display all reachable modules.

When you select the option "Show all modules", only the address range for each of the displayed modules is checked. If the address range of the module is large enough for the selected PROFIdrive telegram, you can select the module. For this reason, make sure that you select a PROFIdrive encoder.

5.2.4.2 Connect encoder via data block (S7-1500, S7-1500T)

If you have selected "Data block" under the data connection, select in the "Data block" field a previously created data block which contains a tag structure of the data type "PD_TELx" ("x" stands for the telegram number to be used).

The procedure is described in the section "Connecting a PROFIdrive drive via data block (Page 49)".

5.2.4.3 Configuring the encoder type (S7-1500, S7-1500T)

For position-controlled motion and positioning, the controller must know the actual position value.

The actual position value is provided by a PROFIdrive telegram.

The actual values are represented as incremental or absolute values in the PROFIdrive telegram. The actual values are normalized in the controller to the technological unit taking into account the configuration of the mechanics. The reference to a physical position of the axis or external encoder is established by homing.

The controller supports the following types of actual values (encoder types):

- Incremental actual value
- Absolute actual value with the setting absolute (measuring range > traversing range of the axis)
- Absolute actual value with the setting cyclic absolute (measuring range < traversing range of axis)

Configuration of the encoder type

Make the setting of the encoder type depending on the encoder used and the measuring range of the encoder. The following table contains the selection criteria.

Encoder type	Actual value type	Explanation	Selection
Incremental	The actual value in the PROFIdrive telegram is based on an incremental value.	After POWER ON, position zero is displayed. A transition of the CPU to RUN mode starts the actual value update. The actual value is then also updated in CPU STOP mode. The relationship between the technology object and the mechanical position must be re-established by means of homing.	Select this encoder type when using an incremental encoder.
Absolute	The actual value in the PROFIdrive telegram is based on an absolute value. After POWER ON, position zero is displayed. The first transition of the CPU to RUN mode starts the actual value update. The actual value is then also updated in CPU STOP mode. The supplied absolute value is assigned to the associated mechanical axis position by means of the absolute encoder adjustment. The absolute encoder adjustment must be performed once. The absolute value offset is retentively saved beyond the switching on/off of the controller.	The axis position results directly from the current actual encoder value. The traversing range must be within an encoder measuring range. This means that the zero crossing of the encoder must not be located in the traversing range. When the controller is switched on, the axis position is determined from the absolute actual encoder value.	An absolute encoder is used and the measuring range of the encoder is smaller than the traversing range of the axis. If you cannot ensure that there is no encoder zero crossing in the traversing range, use the "Cyclic absolute" setting.
Cyclic absolute		The encoder supplies an absolute value within its measuring range. The controller includes the traversed measuring ranges and thus determines the correct axis position beyond the measuring range. When the controller is switched off, the traversed measuring ranges are saved in the retentive memory area of the controller. At the next power-on, the saved traversed measuring ranges are taken into account in the calculation of the actual position value.	An absolute encoder is used and the measuring range of the encoder is smaller than the traversing range of the axis. Recommended settings for absolute actual values: The "Cyclic absolute" encoder type is recommended. With this setting, the position of the zero crossing of the encoder is automatically taken into consideration by the technology object.

5.2.4.4 Configuring encoder parameters manually (S7-1500, S7-1500T)

If the connected encoder does not allow the encoder parameters to be applied automatically, configure the encoder parameters manually. You can find the configured values in the manufacturer's information or in the drive commissioning tool.
Transferring drive and encoder parameters automatically (Page 61)

Encoder parameters for a rotary measuring system

Parameters	Drive parameters in SINAMICS	Encoder type		
		Incremental	Absolute	Cyclic absolute
Increments per revolution	p979[2] encoder 1 p979[12] encoder 2	x	x	x
Number of revolutions	p979 [5] encoder 1 p979[15] encoder 2	-	x	x
Bits for fine resolution in the incremental actual value (Gx_XIST1)	p979[3] encoder 1 p979[13] encoder 2	x	x	x
Bits for fine resolution in the absolute actual value (Gx_XIST2)	p979[4] encoder 1 p979[14] encoder 2	-	x	x
Encoder reference speed	p2000	x	x	x

Encoder parameters for linear measuring system

Parameters	Drive parameters in SINAMICS	Encoder type		
		Incremental	Absolute	Cyclic absolute
Distance between two increments	p979[2] encoder 1 p979[12] encoder 2	x	x	x
Bits for fine resolution in the incremental actual value (Gx_XIST1)	p979[3] encoder 1 p979[13] encoder 2	x	x	x
Bits for fine resolution in the absolute actual value (Gx_XIST2)	p979[4] encoder 1 p979[14] encoder 2	-	x	x
Encoder reference velocity	p2000	x	x	x

Evaluation of incremental actual value Gx_XIST1 with absolute encoders

In its default setting "<TO>.Sensor[1..4].Parameter.BehaviorGx_XIST1" = 1, the technology object assumes that the incremental actual value "Gx_XIST1" in the PROFIdrive telegram is supplied as an incremental counter value with a data width of 32 bits by the encoder or by the encoder module. In the "Gx_XIST1", this corresponds to a value between 0 and 4.294.967.295 (32 bits). The technology object expects overflow at these limits.
If "Gx_XIST1" is transmitted in the PROFIdrive telegram with a data width of less than 32 bits, configure "<TO>.Sensor[1..4].Parameter.BehaviorGx_XIST1" with 0. In this configuration, the technology object does not expect an incremental counter value with 32 bits, but evaluates only the data width according to the parameter assignment of the encoder at the technology

object in "Gx_XIST1". The overflow in "Gx_XIST1" is also expected based on this parameter assignment. You can diagnose whether the data width of the incremental counter value is less than 32 bits with a trace of "Gx_XIST1" from the PROFIdrive telegram. If "Gx_XIST1" overflows back to 0 before it reaches 4,294,967,295, then the data width is less.

5.2.4.5 Using multiple encoders (S7-1500T)

The S7-1500T technology CPU offers the option of using up to 4 encoder or measuring systems per positioning axis and synchronous axis as the actual position for the closed loop position control

Only one encoder at a time is active for closed loop position control. You can switch between the 4 encoder or measuring systems.

However, the actual values of all configured encoders can be evaluated in the user program.

This opens up the following possible application areas, for example:

- Use of additional machine encoders (besides the motor encoder), e.g. as direct measuring systems for more accurate detection of actual positions of machining processes.
- Use of alternative encoder systems following a tool change in a flexible manufacturing process.

You configure the encoders in the axis configuration. You control the switchover of the encoders in the user program with the Motion Control instruction "MC_SetSensor".

Configuring an axis with multiple encoders

Note the following configuration windows when using multiple encoders:

- In the configuration window "Hardware interface > Encoder", configure which alternative encoders are to be used and their corresponding encoder type (incremental, absolute or cyclic absolute).
  All encoders marked as used supply continually updated actual values to the closed loop position control regardless of their use.
- In the configuration window "Hardware interface > Encoder", configure an encoder as "Encoder at power-up". This is necessary because an encoder must always be assigned to the positioning axis and synchronous axis. To use Dynamic Servo Control (DSC), you must configure the motor encoder of the drive as the first encoder on the axis. The motor encoder is always the first encoder in the telegram.
- In the configuration window "Hardware interface > Data exchange with encoder", configure additional encoder details and the telegram that is to be used to connect the encoders. The configuration must be performed for each encoder used.
  Each encoder to be used or each measuring system may differ with regard to its encoder mounting type.
- In the configuration window "Extended parameters > Mechanics", configure the encoder mounting type and any gear parameters. The configuration must be performed for each encoder used.
- The axis can be homed with any configured encoder. In the configuration window "Extended parameters > Homing", configure the parameters for active and passive homing. The configuration can be performed for each encoder used.
  When the axis is homed with an encoder, the axis is homed and retains the "homed" status following encoder switchover.

Encoder switchover in the user program

For closed loop position control of the positioning and synchronous axes, an encoder must always be active. Individual encoders may fail as long as they are not involved in closed loop position control.

With the Motion Control instruction "MC_SetSensor", you switch over the encoder for closed loop position control of the axis.

The switchover can occur during an active motion job or at a standstill. The axis does not have to be enabled.

A switchover during an active homing or restart job is not possible.

NOTE

Homing

Homing with the Motion Control instruction "MC_Home" or the axis control panel is always performed with the encoder involved in closed loop position control.

The homing status of the axis is not changed following an encoder switchover.

Simulation

When the axis is simulated, all encoders configured as "used" are simulated.

"Mode" = 2 and 3 can be used to prepare a switchover.

Position adjustment mode

Following the switchover to an alternative encoder or encoder system, you can select what happens if the actual positions of the encoders are different.

You define how to deal with the difference in the actual positions of the encoders using input parameter "Mode" of the Motion Control instruction "MC_SetSensor".

- **Switch over encoder and transfer actual position to the encoder to be switched ("Mode" = 0)**
  With this encoder switchover, step changes in the actual position are prevented. Bumpless switchover of the encoders is possible.
- **Switch over sensor without transferring the actual position ("Mode" = 1)**
  Following a switchover to an encoder without adjustment, a step change of the actual position may occur. This can be desirable if the new encoder is intended to compensate for possible mechanical influences (such as slip) in the positioning.
  The position difference is not implemented immediately but rather after a delay using time constant "<TO>.PositionControl.SmoothingTimeByChangeDifference" in order to prevent step changes in the actual position with active closed loop position control.
- **Transfer actual position ("Mode" = 2)**
  The actual position of the axis is transferred to the encoder specified in the "Sensor" parameter.
- **Transfer actual position of the reference encoder ("Mode" = 3)**
  The actual position of the "Reference encoder" ("ReferenceSensor" parameter) is transferred to the encoder specified in the "Sensor" parameter.

5.2.4.6 Calculate actual velocity from actual speed NIST_B from PROFIdrive telegram (S7-1500, S7-1500T)

If you use an encoder with a low resolution, configure the following calculation methods:

- For positioning axis and synchronous axis technology objects: Calculate actual velocity from actual speed "NIST_B" from telegram
- For technology object external encoder: Calculate actual velocity from actual speed "NIST_B" of encoder telegram 83

For encoders with low resolution, the calculation of the actual velocity from the actual speed "NIST_B" in the PROFIdrive telegram is more precise than the standard calculation from the change in the actual position in the servo cycle.

Encoder resolution	Recommended configuration	Explanation
High	<TO>.Sensor[1..4].ActualVelocityMode = 0	Calculation of the actual velocity from the differentiation of the actual position
Low	<TO>.Sensor[1..4].ActualVelocityMode = 1	Calculation of the actual velocity from the actual speed "NIST_B" from the PROFIdrive telegram

The calculation of the actual velocity is relevant for the following Motion Control functions:

- Actual value extrapolation for actual value coupling in synchronous operation (S7-1500T)
- Output cam with output cam reference "Actual value"
- Transition from follow-up mode to position-controlled mode
- Calculation of the emergency stop ramp
- Standstill detection

NOTE

The calculation method of the actual velocity has no influence on the position control and the motion control of the technology object.

WARNING

Use of drive telegrams with two encoders

The standard telegrams 4 and 6 and the Siemens telegram 106 support up to two encoders.

Note that the actual speed "NIST_B" is only transferred for encoder 1 in the drive telegram.

If you have connected the second encoder of the telegram for encoder 2 in the technology object and for this encoder "Calculate actual velocity from actual speed NIST_B from PROFIdrive telegram" (<TO>.Sensor.Sensor (2).ActualVelocityMode = PROFIDRIVE_NIST), then the first encoder of the telegram returns the actual speed and the second encoder of the telegram returns the actual position.

If you calculate actual velocity from actual speed "NIST_B" of encoder telegram 83, you must configure the following reference values:

- With rotary measuring system: Encoder reference speed "<TO>.Sensor[1..4].Parameter.ReferenceSpeed"
- With linear measuring system: Encoder reference velocity "<TO>.Sensor[1..4].Parameter.ReferenceVelocity"

When calculating the actual velocity from the actual speed "NIST_B" from drive telegrams, the reference value from the tag "<TO>.Actor.DriveParameter.ReferenceSpeed" or "<TO>.Actor.DriveParameter.ReferenceVelocity" is automatically used. You do not need to configure any additional reference values in "<TO>.Sensor[1..4]".

5.2.5 Transferring drive and encoder parameters automatically (S7-1500, S7-1500T)

Identical reference values for the drive and encoder connections must be set in the controller and in the drive and encoder for the operation.

The speed setpoint NSET and the actual speed value NACT are transferred in the PROFIdrive telegram as a percentage of the reference speed. The reference value for the speed must be set identically in the controller and in the drive.

The resolution of the actual value in the PROFIdrive telegram must likewise be set identically in the controller and in the drive and encoder modules

Automatic transfer of parameters during runtime (online)

The drive and encoder parameters can be automatically applied in the CPU for the following drives and encoders.

- SINAMICS drives (see "compatibility list (https://support.industry.siemens.com/cs/ww/en/view/109750431)")
- Certified PROFINET encoder as of encoder profile 4.1

The corresponding parameters are transferred after the (re-)initialization of the technology object or (re)start of the drive and the CPU. Changes in the drive configuration are transferred after restart of the drive or technology object.

Successful transfer of the parameters can be checked in the controller with the value of the tags "<TO>.StatusDrive.AdaptionState" = 2 and "<TO>.StatusSensor[1..4].AdaptionState" = 2 of the technology object.

Automatic transfer of parameters during configuration (offline)

If you have completed the drive configuration, e.g. with SINAMICS Startdrive, you can transfer the drive or encoder parameters offline in the technology object. The parameters are automatically transferred to the CPU before the download.

Parameters

The settings for automatic transfer can be found in the TIA Portal under "Technology object > Configuration> Hardware interface > Data exchange with the drive/encoder".

The drive and encoder settings are made in the configuration or the respective hardware.

The following table compares the settings in the TIA Portal, in the controller and the corresponding drive/encoder parameters:

Setting in the TIA Portal	Controller tag in the technology data block	Drive parameter	Automatic transfer
Drive			

Setting in the TIA Portal	Controller tag in the technology data block		Drive parameter	Automatic transfer
Telegram number	Telegram input address <TO>.Actor.Interface.AddressIn		Telegram number P922	-
	Telegram output address <TO>.Actor.Interface.AddressOut			
Motor type	<TO>.Actor.MotorType		Servo drive with "Linear motor" bit r108.12	✓
	0	Standard motor		
	1	Linear motor		
Reference speed in [rpm] (standard motor)	<TO>.Actor.DriveParameter.ReferenceSpeed		(SINAMICS drives: P2000)	✓
Maximum speed of motor in [1/min] (standard motor)	<TO>.Actor.DriveParameter.MaxSpeed		(SINAMICS drives: P1082)	✓
Reference torque in [NM] (standard motor)	<TO>.Actor.DriveParameter.ReferenceTorque		(SINAMICS drives: P2003)	✓
Reference velocity in [m/min] (linear motor)	<TO>.Actor.LinearMotorDriveParameter.ReferenceVelocity		(SINAMICS drives: P2000)	✓
Maximum velocity in [m/min) (linear motor)	<TO>.Actor.LinearMotorDriveParameter.MaxVelocity		(SINAMICS drives: P1082)	✓
Reference force in [N] (linear motor)	<TO>.Actor.LinearMotorDriveParameter.ReferenceForce		(SINAMICS drives: P2003)	✓
Encoder				
Telegram	<TO>.Sensor[1..4].Interface.AddressIn		P922	-
	<TO>.Sensor[1..4].Interface.AddressOut			
Encoder type	<TO>.Sensor[1..4].Type		P979[5] Encoder 1 P979[15] Encoder 2	-
	0	Incremental		
	1	Absolute		
	2	Cyclic absolute		
Measuring system	<TO>.Sensor[1..4].System		P979[1] Bit0 Encoder 1 P979[11] Bit0 Encoder 2	✓
	0	Linear		
	1	Rotary		
Resolution (linear encoder) The grid spacing is specified on the nameplate of the encoder as a separation distance of the marks on the linear measuring system.	<TO>.Sensor[1..4].Parameter.Resolution		P979[2] Encoder 1 P979[12] Encoder 2	✓
Increments per revolution (rotary encoder)	<TO>.Sensor[1..4].Parameter.StepsPerRevolution		P979[2] Encoder 1 P979[12] Encoder 2	✓
Number of bits for fine resolution XIST1 (cyclic actual encoder value, linear or rotary encoder)	<TO>.Sensor[1..4].Parameter.FineResolutionXist1		P979[3] Encoder 1 P979[13] Encoder 2	✓
Number of bits for fine resolution XIST2 (absolute encoder value, linear or rotary encoder)	<TO>.Sensor[1..4].Parameter.FineResolutionXist2		P979[4] Encoder 1 P979[14] Encoder 2	✓

Setting in the TIA Portal	Controller tag in the technology data block	Drive parameter	Automatic transfer
Distinguishable encoder revolutions (rotary absolute encoder)	<TO>.Sensor[1..4].Parameter.DeterminableRevolutions	P979[5] Encoder 1 P979[15] Encoder 2	✓
Encoder reference speed (rotary measuring system)	<TO>.Sensor[1..4].Parameter.ReferenceSpeed	P2000	✓
Encoder reference velocity (linear measuring system)	<TO>.Sensor[1..4].Parameter.ReferenceVelocity	P2000	✓

5.2.6 Connecting stepper motors (S7-1500, S7-1500T)

Drives with a stepper motor interface are connected using telegram 3 and with the help of PTO (Pulse Train Output) pulse generators.

Use the following modules to control the stepper motors:

- TM PTO 2x24V / TM PTO 4
- SIMATIC MICRO-Drive F-TM StepDrive S

For functional support of stepper motor operation, quantization of the control deviation can be set.

Through the specification of a quantization, a range around the target position is defined in which no correction of the actual position is to be made. This prevents a possible oscillation of the stepper motor around the target position. Two types of quantization can be set:

- Quantization of the control deviation corresponding to the encoder resolution ("<TO>.PositionControl.ControlDifferenceQuantization.Mode" = 1)
  This prevents oscillation of the motor in standstill between two increment values, for example. This mode is especially helpful when using multiple encoders. With this setting, the quantization is adapted appropriately at an encoder switchover. This mode is helpful for stepper motors with encoders in which the resolution of the encoder is lower than the step size of the stepper motor.
- Direct specification of a value for quantization of the control deviation.
  ("<TO>.PositionControl.ControlDifferenceQuantization.Mode" = 2, value setting in "<TO>.PositionControl.ControlDifferenceQuantization.Value")
  This mode is helpful for stepper motors with encoders in which the resolution of the encoder is greater than the step size of the stepper motor.

5.2.7 Connecting drives with analog setpoint interface (S7-1500, S7-1500T)

Drives with analog setpoint interfaces are connected using an analog output and an optional enable signal. The speed setpoint is specified via an analog output signal (e.g. from -10 V to +10 V) from the CPU.

Analog output

In the "Analog output" field, select the PLC tag of the analog output via which the drive is to be controlled.

In order to be able to select an output, you first need to add an analog output module in the device configuration and define the PLC tag name for the analog output.

Activate enable output

Select the "Activate enable output" check box if the drive supports an enable.

Select the PLC tag of the digital output for the drive enable in the corresponding field. With the enable output, the speed controller in the drive is enabled, or disabled.

In order to be able to select an enable output, a digital output module must be added in the device configuration and the PLC tag name must be defined for the digital output.

NOTE

If you do not use an enable output, the drive cannot be immediately disabled on the part of the system due to error reactions or monitoring functions. A controlled stop of the drive is not guaranteed.

Enable ready input

Select the "Enable ready input" check box if the drive can signal its readiness.

Select the PLC tag of the digital input via which the drive is to signal its operational readiness to the technology object in the corresponding field. The power module is switched on and the analog speed setpoint input is enabled.

In order to be able to select a ready input, you first need to add a digital input module in the device configuration and define the PLC tag name for the digital input.

NOTE

The enable output and the ready input can be separately enabled.

The following boundary conditions apply to the activated ready input:

- The axis is only enabled ("MC_Power Status" = TRUE) when a signal is present at the ready input.
- If a signal is not present at the ready input on an enabled axis, the axis is disabled with an error.
- If the axis is disabled with the instruction "MC_Power" ("Enable" = FALSE), the axis is disabled even when a signal is present at the ready input.

Reference speed with analog setpoint interface

The reference speed of the drive is the speed with which the drive spins when there is an output of 100% at the analog output. The reference speed must be configured in the drive, and transferred into the configuration of the technology object.

The analog value that is output at 100% depends on the type of the analog output. For example, for an analog output with +/- 10 V, the value 10 V is output at 100%.

Analog outputs can be overridden by approximately 17%. This means that an analog output can be operated in the range from -117% to 117%, insofar as the drive permits this.

Reference velocity with analog setpoint interface

With a linear motor, the reference velocity is the velocity at which the drive moves with an output of 100% at the analog output. The reference velocity must be configured for the drive and transferred to the configuration of the technology object.

The analog value that is output at 100% depends on the type of the analog output. For example, for an analog output with +/- 10 V, the value 10 V is output at 100%.

Analog outputs can be overridden by approximately 17%. This means that an analog output can be operated in the range from -117% to 117%, insofar as the drive permits this.

5.2.8 Connecting force/torque data via SIEMENS additional telegram 750 (S7-1500, S7-1500T)

With the connection of the Siemens additional telegram 750 you can use the following functions:

- Specification of an additive setpoint torque (torque precontrol) with MC_TorqueAdditive
- Setting the upper and lower torque limit with MC_TorqueRange
- Reading out the actual torque value with <DB>.StatusTorqueData.ActualTorque or ActualForce

---

NOTE

Force data for linear motors

When using a linear motor, force data is transferred via SIEMENS additional telegram 750 instead of torque data.

Activation of the additional data in the technology object

If you want to configure the data connection of the torque data, select the "Torque data" check box in TO_Axis > Configuration > Hardware interface > Drive data exchange with the drive > Additional data. If you have selected a drive with which the additional telegram 750 has been configured, the "Torque data" check box is preselected.

Data connection of the additional telegram in the technology object

If you select the entry "Additional telegram" in the "Data connection" drop-down list, you can edit the "Additional telegram" drop-down list.

- Select an additional telegram configured in the "Additional telegram" field.
- Select the "Show all modules" check box if you want to display all submodules of the connected drive. You can also find self-defined supplemental telegrams with this function.

Connect additional telegram via data block

If you select the "Data block" entry in the "Data connection" drop-down list, you can select the previously created data block which contains a tag structure of the "PD_TEL750" data type.

In the "Data block" field, select the data block which you want to use to integrate the torque data.

5.2.9 Encoder signal output via TM41 (S7-1500, S7-1500T)

With the TM41 you can emulate the axis position (a leading value) as encoder signal output. The output angle signal behaves like the signal of an incremental encoder. This means that you can, for example, provide a leading value as an encoder signal for an external control.

The TM41 is connected to a TO Axis via standard telegram 3. The TO can be used as an axis at the Motion FBs in the user program.

In the following figure, a real servo axis operated with DSC is controlled by a virtual axis on the SIMATIC S7-1500 and an axis with signal output is controlled via a TM41 module. The position of the servo axis is output via an encoder signal at the TM41 through the synchronous operation coupling of the two following axes. The encoder signals can be evaluated by other controllers.

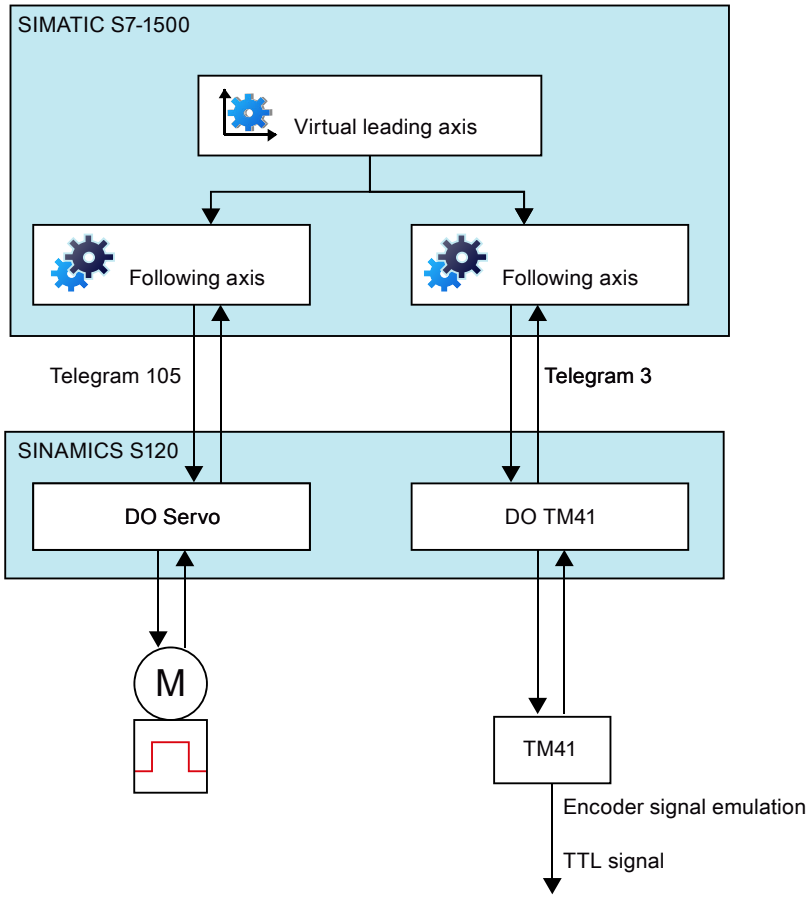

Requirements for the drive

- The TM41 can only be connected to SINAMICS S120 drives.
- The value [0] must be configured in the drive for the "Selection of operating mode" (p4400).

Restrictions

Please note the following restrictions for operation of the TM41 at the technology object.

- No active homing
- No measuring via digital drive
- Backlash compensation must be deactivated.
- Following error monitoring must be deactivated.
- Position monitoring must be deactivated.
- Standstill monitoring must be deactivated.
- Hardware limit position monitoring must be deactivated.

Necessary position controller setting

- Precontrol = 100%
- Speed control loop substitute time = 0.000

Automatic transfer of parameters

Recommendation: For the TM41, the automatic transfer of parameters should always be executed online.

Proceed as follows for automatic transfer offline:

1. Commission the TM41 online.
2. Upload the drive parameters to the TIA Portal project so that the parameters in the Startdrive project are consistent with the online parameters in the drive.

Transferring drive and encoder parameters automatically (Page 61)

5.2.10 Tags: Drive and encoder connection (S7-1500, S7-1500T)

The following technology object tags are relevant for the drives and encoder connections:

Drive telegram	
Tag	**Description**
<TO>.Actor.Interface.AddressIn	Input address for the PROFIdrive telegram
<TO>.Actor.Interface.AddressOut	Output address for the PROFIdrive telegram or the analog setpoint
<TO>.Actor.DriveParameter.ReferenceSpeed	Reference value (100%) for the speed setpoint (NSET) of the drive
<TO>.Actor.DriveParameter.MaxSpeed	Maximum value for the speed setpoint of the drive (NSET)
<TO>.Actor.DriveParameter.ReferenceTorque	Reference torque for the torque transferred as a percentage
<TO>.Actor.LinearMotorDriveParameter.ReferenceVelocity	Reference value (100%) for the velocity setpoint of a liner motor
<TO>.Actor.LinearMotorDriveParameter.MaxVelocity	Maximum value for the velocity setpoint of a linear motor

Drive telegram	
Tag	**Description**
<TO>.Actor.LinearMotorDriveParameter.ReferenceForce	Reference force for the force of a linear motor, which is transmitted as percentage value

Encoder telegram	
Tag	**Description**
<TO>.Sensor[1..4].Interface.AddressIn	Input address for the PROFIdrive telegram
<TO>.Sensor[1..4].Interface.AddressOut	Output address for the PROFIdrive telegram
<TO>.Sensor[1..4].System	Encoder system linear or rotary
<TO>.Sensor[1..4].Type	Encoder type, incremental, absolute or cyclic absolute
<TO>.Sensor[1..4].Parameter.Resolution	Resolution for linear encoder Space between two lines
<TO>.Sensor[1..4].Parameter.StepsPerRevolution	Steps per revolution for rotary encoder
<TO>.Sensor[1..4].Parameter.DeterminableRevolutions	Number of differentiable encoder revolutions for a multi-turn absolute encoder
<TO>.Sensor[1..4].Parameter.ReferenceSpeed	Reference speed for the actual speed (NSET_B), which is transmitted as percentage value
<TO>.Sensor[1..4].Parameter.ReferenceVelocity	Reference velocity for the actual speed (NSET_B), which is transmitted as percentage value

Fine resolution	
Tag	**Description**
<TO>.Sensor[1..4].Parameter.FineResolutionXist1	Number of bits for fine resolution XIST1 (cyclic actual encoder value)
<TO>.Sensor[1..4].Parameter.FineResolutionXist2	Number of bits for fine resolution XIST2 (absolute value of encoder)

Simulation mode		
Tag	**Description**	
<TO>.Simulation.Mode	Simulation mode	
	0	No simulation, normal operation
	1	Simulation mode

5.3 Safety functions in the drive (S7-1500, S7-1500T)

In addition to programming the motion sequences, you must also reduce the risks of the machine through safety functions to ensure machine safety. The SINAMICS drive system provides integrated safety functions, hereinafter referred to as "Safety Integrated Functions".

The "Safety Integrated Functions" of the SINAMICS drive system available can be subdivided into the following functions:

- Safe stopping process
- Safe brake control
- Safe monitoring of motion
- Safe monitoring of position

More information on the "Safety Integrated Functions" in SINAMICS drives is available in the "SINAMICS S120 Safety Integrated" function manual (https://support.industry.siemens.com/cs/ww/en/view/109771806).

Interaction between the technology object and the SINAMICS "Safety Integrated Functions"

The "Safety Integrated Functions" of the SINAMICS drive system are monitoring functions for fail-safe monitoring of the drive motion. The motion of the drives is controlled via technology objects and the programmed motion control jobs in the user program of the SIMATIC S7-1500.

When using the "Safety Integrated Functions", you must evaluate the status information of the SINAMICS "Safety Integrated Functions" and program your user program depending on this status information. You can implement an interaction between the SINAMICS "Safety Integrated Functions" and the motion control in the SIMATIC S7-1500.

The technology object does not contain any information on the states of the SINAMICS "Safety Integrated Functions". Evaluate the current status of the "Safety Integrated Functions" in the drive using one of the following options.

- "Safety Info Channel" (SIC)
- Status words of the PROFIsafe telegram (read access)

If you do not use a PROFIsafe telegram, create a telegram for the SIC.

Safety Info Channel

The "Safety Info Channel" is mapped in the telegrams 700 and 701.

Status word	Status information	Telegram 700	Telegram 701
S_ZSW1B	• Safe stopping process • Safe monitoring of motion	x	x
S_ZSW2B	Safe monitoring of position	-	x
S_ZSW3B	Status information on the brake test	-	x
S_V_LIMIT_B	• Necessary velocity setpoint limiting due to the selected SINAMICS "Safety Integrated Functions". • When selecting a "Safety Integrated Function" for safe shutdown or the "Safety Integrated Function" SDI, the necessary status word S_V_LIMIT_B takes on the value 0.	x	x

The free "LDrvSafe" library contains function blocks and a description for easy evaluation of the "Safety Info Channel" in your user program.
LDrvSafe (https://support.industry.siemens.com/cs/ww/en/view/109485794)

PROFIsafe telegram

When you control the SINAMICS "Safety Integrated Functions" via PROFIsafe, you have read access from the standard user program to the PROFIsafe status words.
With this information you can react with a Motion Control Instruction suitable for your machine when a "Safety Integrated Function" is triggered in the user program.

5.3.1 Safe stopping process (S7-1500, S7-1500T)

SINAMICS "Safety Integrated Functions" with drive-autonomous stop reaction

The "Safety Integrated Function" STO triggers a drive-autonomous stop reaction and the drive coasts down (OFF2). The technology object signals the technology alarm 421 (alarm response: remove enable).
The following "Safety Integrated Functions" trigger a drive-autonomous stop reaction and the drive decelerates at the OFF3 ramp.

- SS1
- SS2

The result is that the drive performs a motion that was not specified by the technology object. The technology object signals the technology alarm 550 (alarm response: follow up setpoints). Have the technology object enabled ("MC_Power.Enable" = TRUE) so that the drive-autonomous braking process is not interrupted.

Example - Pressing an emergency stop control device

Example:
After pressing the emergency stop button, all drives of the machine must be brought to a standstill as quickly as possible. Standstill drives must not accelerate unintentionally.
Solution:
To this end, the "Safety Integrated Function" SS1 is selected in the SINAMICS drive system and each selected drive is independently braked electrically until it is at standstill.

Enabling the technology object after a drive-autonomous stop reaction:

To enable the technology object again after triggering a drive-autonomous stop reaction, follow these steps:

1. Verify in the "Safety Info Channel" SIC, whether STO, SS1 or SS2 was triggered.
2. Eliminate the cause of the triggered "Safety-Integrated Function", for example, by unlocking the emergency stop button.
3. Safely acknowledge the pending safety messages in the drive.
4. Wait until STO, SS1 and SS2 are no longer active.
5. Acknowledge the technology alarms 421 and 550 with an "MC_Reset" job.

Drive-autonomous stop reaction with coupled axes

NOTICE
Machine damage caused by loss of synchronous operation coupling after drive-autonomous stop reaction For axes coupled by synchronous operation, a drive-autonomous stop reaction causes each axis to decelerate individually along its own OFF3 ramp. This means that the axes are no longer coupled after SS1 or SS2. This can damage the mechanical components or the workpiece. If permitted by the risk assessment, use the following "Safety Integrated Functions": • SS1E instead of SS1 • SS2E or SOS instead of SS2

When triggering SS1E, no drive-autonomous deceleration is started but a safe delay time is started instead. Motion control still takes place within the safe delay time from the user program of the SIMATIC S7-1500. You must set the axis group to a standstill within the delay time. To do so, stop the leading axis of the synchronous operation, for example, with an "MC_Halt" job to safely stop the entire axis group within the safe delay time. When the safe delay time expires, STO automatically takes effect.
The same behavior applies to SS2E and SOS.

5.3.2 Safe brake control (S7-1500, S7-1500T)

The drive-based function "Safe Brake Test" (SBT) is a diagnostic function and checks the required holding torque of a brake (operating or holding brake). After starting the brake test, the drive purposely generates a torque against the applied brake.
The brake test in combination with technology objects is usually controlled via the "Safety Control Channel".
The free "LDrvSafe" library provides you with function blocks and a description for easy control of the "Safety Control Channel" and to use the safe brake test.
LDrvSafe (https://support.industry.siemens.com/cs/ww/en/view/109485794)

5.3.3 Safe monitoring of motion (S7-1500, S7-1500T)

When you select the motion monitoring "Safety Integrated Functions" of the SINAMICS drive system, you must limit the speed and/or the acceleration of the axis to maintain the availability of the machine.
You have the following options to limit the velocity and the acceleration.

- Adapting the dynamic limits at the technology object
  - <TO>.DynamicLimits.Velocity
  - <TO>.DynamicLimits.Acceleration
- Limiting the dynamic parameters at the Motion Control instructions
- Limiting the velocity through the override "<TO>.Velocity.Override"

SLS

In SINAMICS, the necessary setpoint speed limiting is configured as follows:

S_V_LIMIT_B (r9733) = Selected SLS limit value (p9531) * evaluation factor (p9533
The setpoint speed limiting "S_V_LIMIT_B" is specified on the motor side in SINAMICS and calculated from the SLS limit value configured on the load side.

Parameter	Limit value	Unit
S_V_LIMIT_B (r9733)	Motor-side limit value	• Standard motor: 1/min • Linear motor: m/min
SLS limit value (p9531)	Load side limit value taking into account the mechanical parameters in SINAMICS	• Safety rotary axis: 1/min • Safety linear axis: mm/min

To recognize the necessary setpoint speed limiting after selection of SLS, evaluate the tag "S_V_LIMIT_B" from the "Safety Info Channel". "S_V_LIMIT_B" is transmitted in the SIC normalized via the parameter p2000. The parameter p2000 is saved in the tag "<TO>.Actor.DriveParameter.ReferenceSpeed" of the technology object.
To convert "S_V_LIMIT_B" into the maximum velocity setpoint (v_{max}) of the technology object, use the following formula for the following units of measurement.

- Linear axis with standard motor:

$$v_{max}\left[\frac{mm}{s}\right] = \frac{S_V_LIMIT_B}{16\#40000000} \cdot \text{<TO>.Actor.DriveParameter.ReferenceSpeed}\left[\frac{1}{min}\right] \cdot \frac{1}{60}\left[\frac{min}{s}\right]$$

$$\cdot \text{<TO>.Mechanics.LeadScrew}\,[mm] \cdot \frac{\text{<TO>.LoadGear.Denominator}}{\text{<TO>.LoadGear.Numerator}}$$

- Linear axis with linear motor:

$$v_{max}\left[\frac{mm}{s}\right] = \frac{S_V_LIMIT_B}{16\#40000000} \cdot \text{<TO>.Actor.DriveParameter.ReferenceSpeed}\left[\frac{m}{min}\right]$$

$$\cdot \frac{1000}{1}\left[\frac{mm}{m}\right] \cdot \frac{1}{60}\left[\frac{min}{s}\right]$$

- Rotary axis with standard motor:

$$v_{max}\left[\frac{\circ}{s}\right] = \frac{S_V_LIMIT_B}{16\#40000000} \cdot \text{<TO>.Actor.DriveParameter.ReferenceSpeed}\left[\frac{1}{min}\right] \cdot \frac{1}{60}\left[\frac{min}{s}\right]$$

$$\cdot 360[\circ] \cdot \frac{\text{<TO>.LoadGear.Denominator}}{\text{<TO>.LoadGear.Numerator}}$$

Alternatively, especially when using fewer SLS levels, you can define the necessary setpoint speed limiting yourself and save it permanently in a data block. See the procedure for SLA as a reference.

Example - Opening a protective door in setup mode

Example:

The machine operator must be able to enter the danger zone of a machine after the protective door has been opened and slowly move a horizontal conveyor in it with an acknowledgment button. The actual velocity of 250 mm/s must not be exceeded in this process.

The horizontal conveyor is implemented using the following technology:

- Technology object Positioning axis as linear axis in the SIMATIC S7-1500
- Safety linear axis axes with standard motor in SINAMICS

Solution:

Select the "Safety Integrated Function" SLS with the limit value 15000 mm/min (is equivalent to 250 mm/s) in SINAMICS. If the actual velocity (intentionally or unintentionally) exceeds the limit value of 250 mm/s, a drive-autonomous, user-defined stop reaction, such as SS1, is triggered.

1. In SINAMICS, you make the following parameter assignment for the drive:
   - SLS limit value Level 1 (p9531) = 15000 mm/min = 250 mm/s
   - Evaluation factor (p9533) = 80%

   Result: The parameter assignment results in the following value for the setpoint speed limiting: 250 mm/s * 0.8 = 200 mm/s

   In this example, this means that the velocity setpoint of the horizontal conveyor is 200 mm/s before the "Safety Integrated Function" SLS Level 1 with the actual speed limit value of 250 mm/s is active.
2. Evaluate the setpoint speed limiting from "S_V_LIMIT_B" in the SIC and convert the standardized value into the velocity value with the configured unit of measurement of the technology object.

   Alternatively, especially when using fewer SLS levels, you can save the setpoint speed limiting of 200 mm/s directly in a data block.
3. Evaluate "S_ZSW1B.Bit6" from SIC (SLS selected) cyclically in the user program. If SLS is selected ("S_ZSW1B.Bit6" = TRUE), execute step 4.
4. Specify the setpoint speed limiting of 200 mm/s as dynamic limitation "<TO>.DynamicLimits.Velocity" at the technology object and limit the setpoint velocity "Velocity" at the Motion Control instructions of the technology object. Alternatively, you can also reduce the setpoint velocity via the override "<TO>.Velocity.Override".

SLA

For SLA, the necessary setpoint speed limiting is not calculated by the drive system but must be calculated by the user instead. In this case, you must calculate the necessary setpoint speed limiting yourself and save it in the SIMATIC S7-1500, for example, in a data block. When selecting SLA, you limit the acceleration to this specific value.

SDI

You can recognize a corresponding direction of rotation limitation via the signals SDI negative/SDI positive. If the axis is currently moving in the direction that is no longer permissible after the delay time has expired, you stop or change the motion direction of the axis before the drive performs a drive-autonomous stop reaction.

5.3.4 Safe monitoring of position (S7-1500, S7-1500T)

When you select the position monitoring "Safety Integrated Functions" of the SINAMICS drive system, you must limit the position area of the axis to maintain the availability of the machine.

To recognize the permissible position area after selecting SLP, you calculate and save it in the SIMATIC S7-1500, for example, in a data block. When selecting SLP, you limit the setpoint positions of the technology object at the Motion Control instructions to this position area.

5.3.5 Overview of safety-oriented functions (S7-1500, S7-1500T)

Below you will find a description of the drive response and which corresponding user reactions you have to program in the SIMATIC user program.

Function	SIC STW	SIC Bit	Drive response		Recommended reaction in the user program
Safe stopping process					
STO	S_ZSW1-B	0	1	Drive switches off immediately (OFF2).	"MC_Power" can remain enabled (waiting).
			0	STO not active	None
SS1	S_ZSW1-B	1	1	Drive decelerates autonomously along the OFF3 ramp and then switches off (OFF2).	"MC_Power" remains enabled until STO
			0	SS1 not active	None
SS1E	S_ZSW1-B	1	1	Drive switches off after delay time has expired (OFF2).	Stop axis before delay time elapses, e.g. with "MC_Halt", and then switch off the drive with "MC_Power.Enable" = FALSE
			0	SS1E not active	None
SS2	S_ZSW1-B	2	1	Drive decelerates along OFF3 ramp and then monitors the standstill.	"MC_Power" remains enabled
			0	SS2 not active	None
SS2E	S_ZSW3-B	11	1	Drive monitors the standstill after delay time has expired.	Stop axis before delay time elapses with "MC_Halt" and hold drive in control with "MC_Power.Enable" = TRUE
			0	SS2E not active	None
SOS	S_ZSW1-B	3	1	Drive monitors the standstill after delay time has expired	Stop axis before delay time elapses with "MC_Stop" and hold drive in control with "MC_Power.Enable" = TRUE
			0	SOS not active	None
Safe brake control					
SBC	-	-	Drive switches off immediately (OFF2) and safely controls the outputs for the brake.		None
SBT	S_ZSW_-3	0..15	Drive is brought to a standstill and remains in control. Then, a drive-autonomous torque is generated against the applied brake.		Stop axis before selecting SBT, e.g. with "MC_Halt" and hold drive in control with "MC_Power.Enable" = TRUE
Safe monitoring of motion					
SLS	S_ZSW1-B	4	1	Drive monitors a maximum permissible velocity.	Limit the axis velocity
			0	SLS not active	None
		6	1	After expiration of a delay time, drive monitors a maximum permissible velocity.	Limit axis velocity within the delay time
			0	SLS deselected	None

Function	SIC STW	SIC Bit	Drive response		Recommended reaction in the user program
SSM	-	-	Drive transfers signal to the F-CPU whether the current velocity is below a defined velocity.		Reach positive velocity of the axis within the delay time and maintain or stop axis with "MC_Halt".
SDI	S_ZSW1-B	12	1	After expiration of a delay time, drive monitors the positive motion direction.	Reach positive velocity of the axis within the delay time and maintain or stop axis with "MC_Halt"
			0	SDI positive deselected	None
		13	1	After expiration of a delay time, drive monitors the negative motion direction.	Reach negative velocity of the axis within the delay time and maintain or stop axis with "MC_Halt"
			0	SDI negative deselected	None
Safe monitoring of position					
SLP	S_ZSW2-B	4	1	SLP area 2 selected	None
			0	SLP area 2 selected	None
		7	1	After expiration of delay time, drive monitors adherence to a defined position area.	Maintain position area of the axis according to the selected SLP area
			0	SLP not selected or no user approval	None
SP	-	-	Drive transfers actual position to the F-CPU.		None
SCA	-	-	Drive transfers safe cam information to the F-CPU.		None

5.4 Mechanics (S7-1500, S7-1500T)

For the display and processing of the technology object's position, the decisive factor is whether the position is represented as a unit of length (linear axis) or a unit of angle (rotary axis).

Examples of units of length: mm, m, km

Examples of units of angle: °, rad

For the determination of the physical position from an actual encoder value, the system must know the various properties and configurations of the mechanics.

5.4.1 Configuring the mechanics of the speed axis (S7-1500, S7-1500T)

In the mechanics of the speed axis technology object, you configure how the load side is connected mechanically to the drive.

Configuring the mechanics of a speed axis technology object is necessary for the correct display and processing of the technology object speed.

Configure the following parameters:

- Invert drive direction
- Load gear (Page 85)

Inverting the drive direction of the speed axis

By default, the technology object controls the drive with positive speed if the axis is to be moved in the positive direction. Invert the drive direction if the axis travels in positive direction at negative speed due to the mechanical design.

To invert the drive direction of the speed axis, follow these steps:

1. In the configuration of the technology object, navigate to "Extended parameters > Mechanics > Drive mechanism"
2. Select the "Invert drive direction" check box.

5.4.2 Configuring the mechanics of the positioning axis/synchronous axis (S7-1500, S7-1500T)

Configuring the mechanics of an axis technology object is necessary for the correct display and processing of the technology object position. The options for configuring the mechanics depend on the following configurations:

- "Axis type" under "Basic parameters"
- "Encoder mounting type" under "Extended parameters > Mechanics > Encoder"
- "Measuring system" under "Hardware interface > Data exchange with encoder > Encoder data"

Select encoder (S7-1500T)

With an S7-1500T, you can configure the mechanics of a positioning axis/synchronous axis for up to four encoders.

Select the encoder to be configured from the drop-down list under "Settings for". You can configure the encoders independently of each other.

"Linear" axis type with standard motor, encoder mounting type encoder on motor shaft

The encoder is connected to the motor shaft in a mechanically fixed manner. Motor and encoder form a unit.

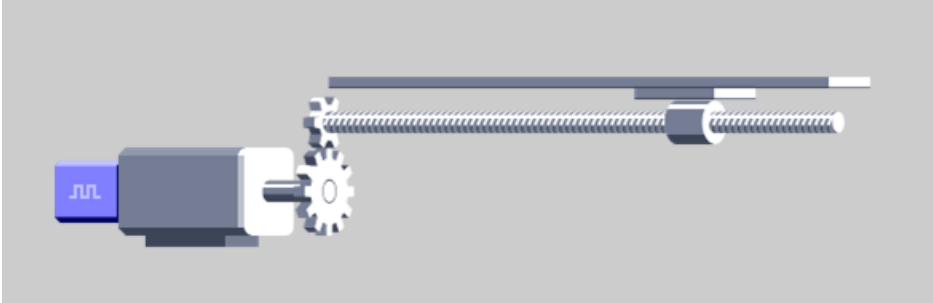

To configure the mechanics for this constellation of axis type and encoder mounting type, follow these steps:

1. Check that the axis type is configured as linear and "Standard motor" under Basic parameters.
2. Under "Extended parameters > Mechanics > Encoder", select the "On motor shaft" encoder mounting type.
3. Configure the following parameters:
   - Drive and encoder direction for positioning axis/synchronous axis (Page 83)
   - Backlash compensation (Page 86)
   - Load gear (Page 85)
   - Leadscrew pitch (Page 85)

Linear axis type with standard motor, encoder mounting type encoder on load side, measuring system rotary

The encoder is mechanically connected to the load side of the gear.

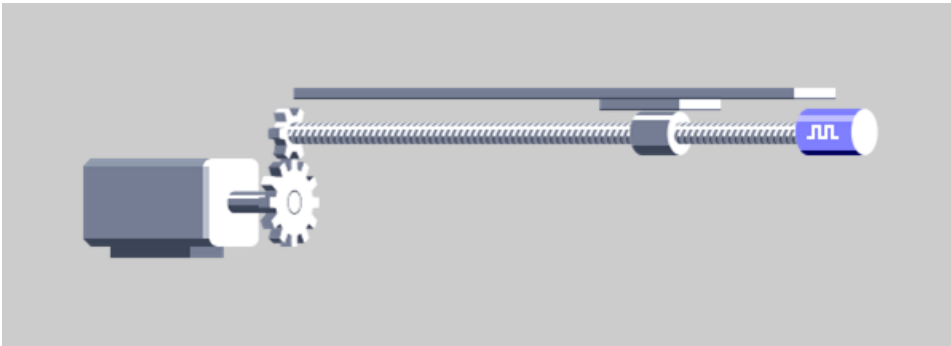

To configure the mechanics for this constellation of axis type and encoder mounting type, follow these steps:

1. Check that the axis type is configured as linear and standard motor under Basic parameters.
2. Under "Extended parameters > Mechanics > Encoder", select the "On load side" encoder mounting type.
3. Configure the following parameters:
   – Drive and encoder direction for positioning axis/synchronous axis (Page 83)
   – Load gear (Page 85)
   – Leadscrew pitch (Page 85)

Linear axis type with standard motor, encoder mounting type on load side, measuring system linear

The encoder is mechanically connected to the load side of the gear.

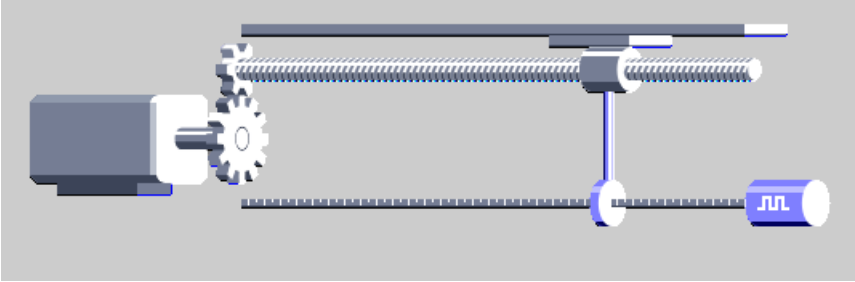

Figure 5-1 Encoder mounting type load side linear axis, measuring system linear

To configure the mechanics for this constellation of axis type and encoder mounting type, follow these steps:

1. Check that the axis type is configured as linear and standard motor under Basic parameters.
2. Under "Extended parameters > Mechanics > Encoder", select the "On load side" encoder mounting type.
3. Configure the following parameters:
   – Drive and encoder direction for positioning axis/synchronous axis (Page 83)
   – Load gear (Page 85)
   – Leadscrew pitch (Page 85)

Linear axis type with standard motor, encoder mounting type external measuring system

An external measuring system provides the position values of the linear load motion.

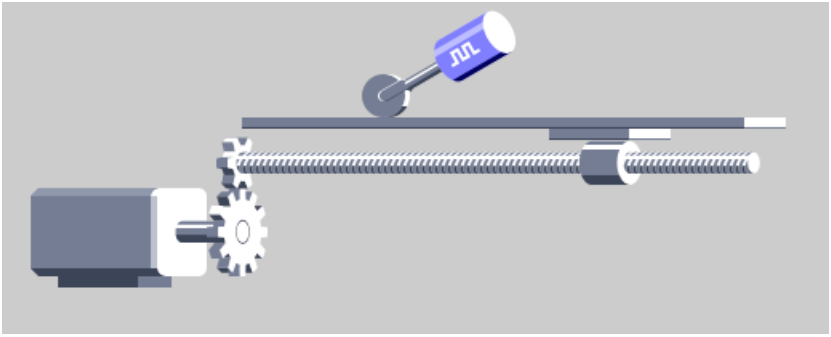

To configure the mechanics for this constellation of axis type and encoder mounting type, follow these steps:

1. Check that the axis type is configured as linear and standard motor under Basic parameters.
2. Under "Extended parameters > Mechanics > Encoder", select the "External measuring system" encoder mounting type.
3. Configure the linear load travel per encoder revolution under "Distance per encoder revolution".
4. Configure the following parameters:
   - Drive and encoder direction for positioning axis/synchronous axis (Page 83)
   - Load gear (Page 85)
   - Leadscrew pitch (Page 85)

Linear axis type with linear motor, encoder mounting type external measuring system, measuring system rotary

An external measuring system provides the position values of the linear load motion.

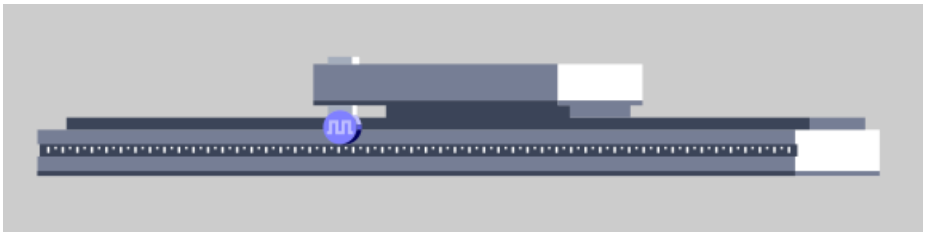

To configure the mechanics for this constellation of axis type and encoder mounting type, follow these steps:

1. Check that the axis type is configured as linear and linear motor under Basic parameters.
   With this constellation, "External measuring system" is automatically set permanently as encoder mounting type under "Extended parameters > Mechanics > Encoder".
2. Configure the linear load travel per encoder revolution under "Distance per encoder revolution".
3. Configure the following parameters:
   - Drive and encoder direction for positioning axis/synchronous axis (Page 83)

Linear axis type with linear motor, encoder mounting type encoder on motor shaft, measuring system linear

An external measuring system provides the position values of the linear load motion.

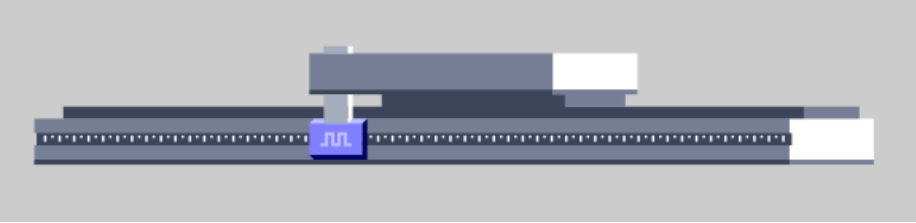

To configure the mechanics for this constellation of axis type and encoder mounting type, follow these steps:

1. Check that the axis type is configured as linear and linear motor under Basic parameters. With this constellation, "On motor shaft" is automatically set permanently as encoder mounting type under "Extended parameters > Mechanics > Encoder".
2. Configure the following parameters:
   – Drive and encoder direction for positioning axis/synchronous axis (Page 83)

Rotary axis type with standard motor, encoder mounting type encoder on motor shaft

The encoder is connected to the motor shaft in a mechanically fixed manner. Motor and encoder form a unit.

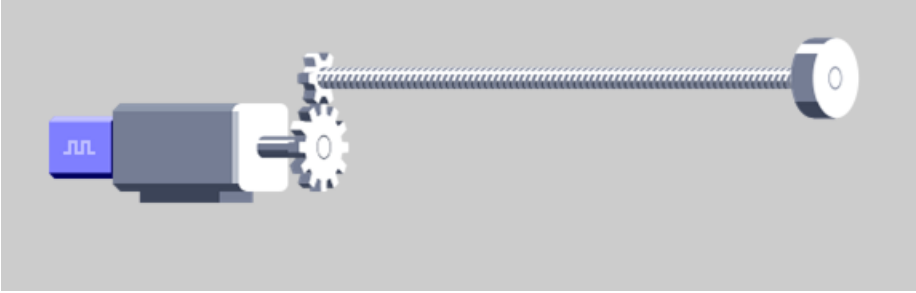

To configure the mechanics for this constellation of axis type and encoder mounting type, follow these steps:

1. Check that the axis type is configured as rotary and standard motor under Basic parameters.
2. Under "Extended parameters > Mechanics > Encoder", select the "On motor shaft" encoder mounting type.
3. Configure the following parameters:
   – Drive and encoder direction for positioning axis/synchronous axis (Page 83)
   – Backlash compensation (Page 86)
   – Load gear (Page 85)

Rotary axis type with standard motor, encoder mounting type encoder on load side

The encoder is mechanically connected to the load side of the gear.

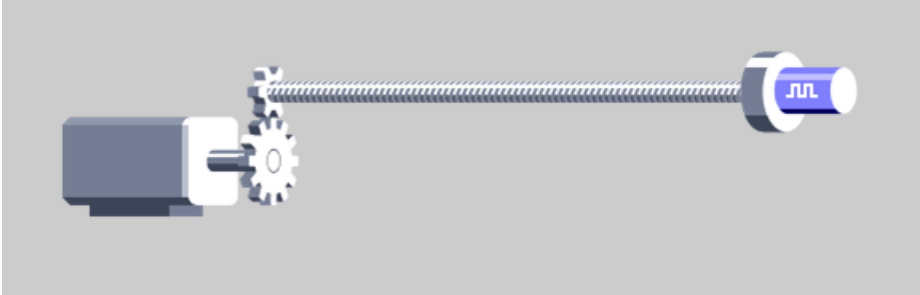

To configure the mechanics for this constellation of axis type and encoder mounting type, follow these steps:

1. Check that the axis type is configured as rotary and standard motor under Basic parameters.
2. Under "Extended parameters > Mechanics > Encoder", select the "On load side" encoder mounting type.
3. Configure the following parameters:
   - Drive and encoder direction for positioning axis/synchronous axis (Page 83)
   - Load gear (Page 85)

Rotary axis type with standard motor, encoder mounting type external measuring system

An external measuring system provides the position values of the rotary load motion.

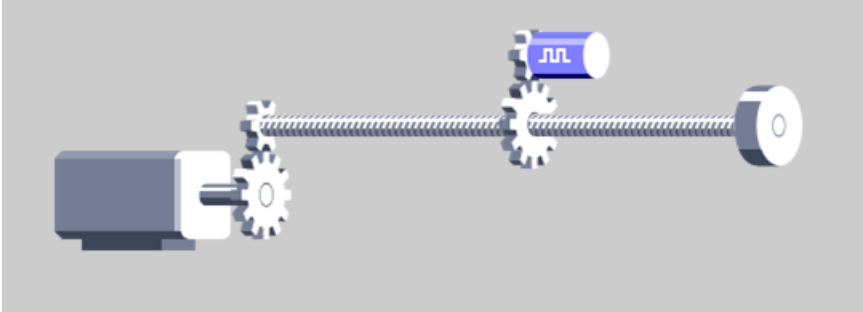

To configure the mechanics for this constellation of axis type and encoder mounting type, follow these steps:

1. Check that the axis type is configured as rotary and standard motor under Basic parameters.
2. Under "Extended parameters > Mechanics > Encoder", select the "External measuring system" encoder mounting type.
3. Configure the rotary load travel per encoder revolution under "Distance per encoder revolution".
4. Configure the following parameters:
   - Drive and encoder direction for positioning axis/synchronous axis (Page 83)
   - Load gear (Page 85)

5.4.3 Configuring the mechanics of the external encoder (S7-1500, S7-1500T)

In the mechanics of the external encoder technology object, you configure how the external encoder is connected mechanically to an axis.

Configuring the mechanics of an external encoder technology object is necessary for the correct display and processing of the technology object position. The options for configuring the mechanics depend on the following configurations:

- "External encoder type" under "Basic parameters"
- "Measuring system" under "Hardware interface > Data exchange with encoder > Encoder data"

Linear type, measuring system rotary

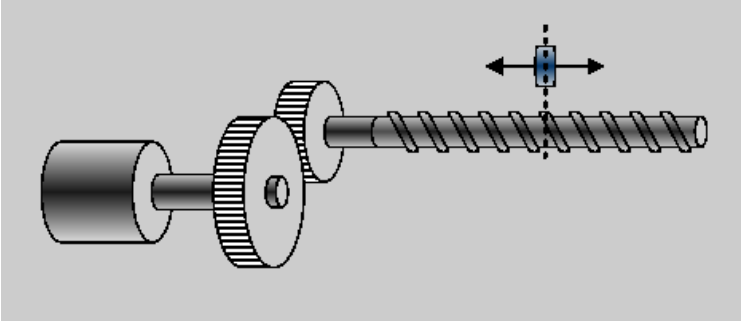

Configure the following parameters:

- Invert encoder direction
- Load gear (Page 85)
- Leadscrew pitch (Page 85)

Linear type, measuring system linear

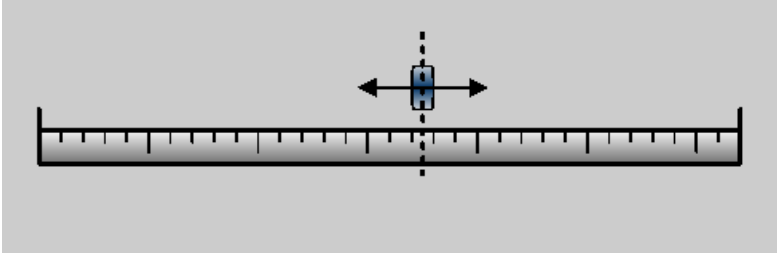

Configure the following parameters:

- Invert encoder direction
- In the "Distance between increments" field, configure the distance between the increments of the linear encoder.

Rotary type

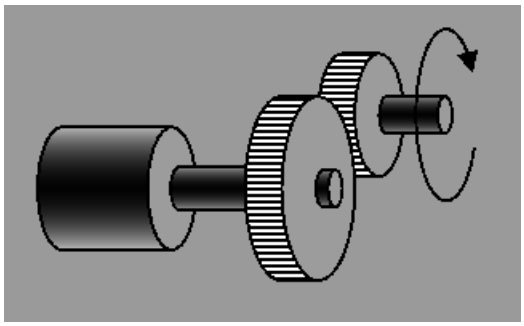

Configure the following parameters:

- Invert encoder direction
- Load gear (Page 85)

Inverting the encoder direction for external encoder

To invert the encoder direction for an external encoder, follow these steps:

1. In the configuration of the technology object, navigate to "Extended parameters > Mechanics > Encoder"
2. Select the "Invert encoder direction" check box.

Example: Inverting the encoder direction for an external encoder

In the following example, an external encoder with two different installation directions is shown. If the encoder rotates in the counter-clockwise direction or counts in the negative direction when the axis travels in the positive direction, you need to invert the encoder direction.

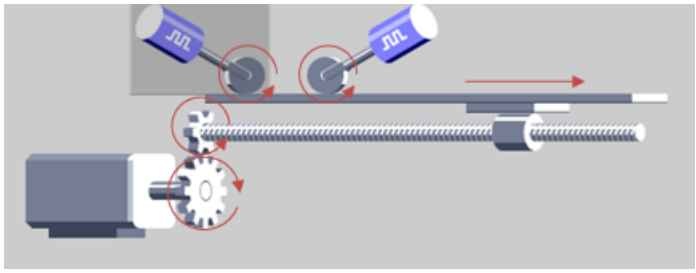

To check the direction of rotation, you can monitor the "Gx_XIst1" value from the PROFIdrive telegram in a trace.

Rotate the encoder shaft as it rotates when the axis travels in the positive direction:

- Value "Gx_XIst1" decreases: The encoder counts in the negative direction. Invert the encoder direction.
- Value "Gx_XIst1" increases: The encoder counts in the positive direction, no inversion necessary.

5.4.4 Configuring drive and encoder direction for positioning axis/synchronous axis (S7-1500, S7-1500T)

For the speed axis and positioning axis/synchronous axis technology objects, you can invert the drive and encoder direction.

Configuring drive and encoder direction on a positioning axis

By default, the technology object controls the drive with positive speed if the axis is to be moved in the positive direction. Invert the drive direction if the axis travels in positive direction at negative speed due to the mechanical design.

By default, an increasing actual encoder value is evaluated as positive direction of movement of the axis. Invert the encoder direction if the actual encoder value decreases when the axis travels in the positive direction.

With SINAMICS drives, the direction of the drive and the direction of the motor encoder are identical by default. If the axis travels in the positive direction at positive speeds, you do not need to invert either the drive direction or the encoder direction.

In the following figure, the drive direction, encoder direction and the real mechanical direction of movement are positive. This arrangement does not require inversion.

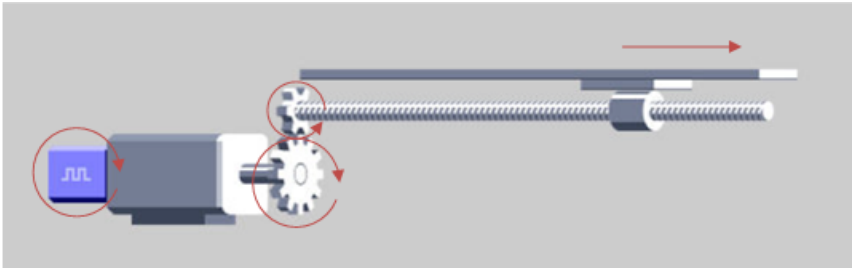

Invert the drive direction and the encoder direction if the axis travels in the mechanically negative direction with positive motor speed and increasing encoder increments.

An example of this is the linear axis in the following figure, which travels in the negative direction with positive speed.

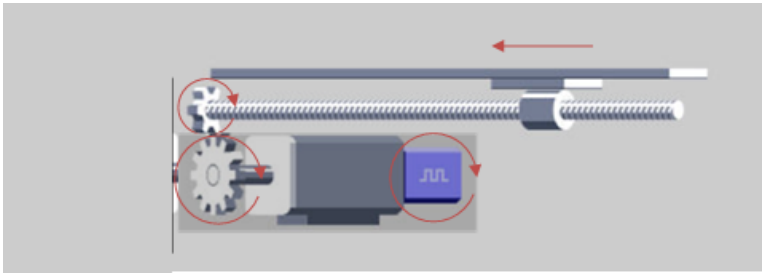

Through the inversion of the drive direction and the encoder direction, the motor travels with negative speed in the case of positively specified velocity, which results in movement in the correct direction. You also need to invert the encoder direction, because the motor encoder direction corresponds to the drive direction.

Invert drive direction

To invert the drive direction, follow these steps:

1. In the configuration of the technology object, navigate to "Extended parameters > Mechanics > Drive mechanism"
2. Select the "Invert drive direction" check box.

Invert encoder direction

To invert the encoder direction, follow these steps:

1. In the configuration of the technology object, navigate to "Extended parameters > Mechanics > Encoder"
2. Select the "Invert encoder direction" check box.

5.4.5 Configuring the load gear (S7-1500, S7-1500T)

If you use a load gear between motor shaft and load side, you need to configure the load gear at the technology object.

The gear ratio of the load gear is specified as the ratio between motor revolutions and load revolutions.

You can configure the load gear for the following technology objects:

- Speed axis
- Positioning axis/synchronous axis
- External encoder

Procedure

To configure the load gear, follow these steps:

1. In the configuration of the technology object, navigate to "Extended parameters > Mechanics > Drive mechanism > Load gear"
2. In the "Number of motor revolutions" configuration field, configure the integer number of motor revolutions.
3. In the "Number of load revolutions" configuration field, configure the integer number of load revolutions.

5.4.6 Configuring the leadscrew pitch (S7-1500, S7-1500T)

The leadscrew pitch indicates the distance by which the load is moved when the leadscrew makes one revolution.

You can configure the leadscrew pitch for the following technology objects:

- Positioning axis/synchronous axis
- External encoder

Example

Movement of the load [mm] = Leadscrew pitch * number of motor revolutions * (load gear denominator / load gear numerator)

Load gear denominator = 2

Load gear numerator = 1
Leadscrew pitch = 10 mm / load revolution
Motor revolutions = 50
1000 mm = 10 [mm/rot] * 50 [rot] * 2

Procedure

To configure the leadscrew pitch, follow these steps:

1. In the configuration of the technology object, navigate to "Extended parameters > Mechanics > Drive mechanism > Position parameters"
2. Enter the leadscrew pitch for the technology object in unit of measurement for position of the technology object per revolution in the "Leadscrew pitch" configuration field.

5.4.7 Backlash compensation (S7-1500, S7-1500T)

What is the backlash?

Backlash (also called play, mechanical play) is the distance or the angle that a motor must travel through when the direction of rotation reverses until the axis actually moves in the other direction.
The backlash of an axis is made up of the backlash of the gearbox and spindle.
The following figure shows the backlash on the spindle of a linear axis.

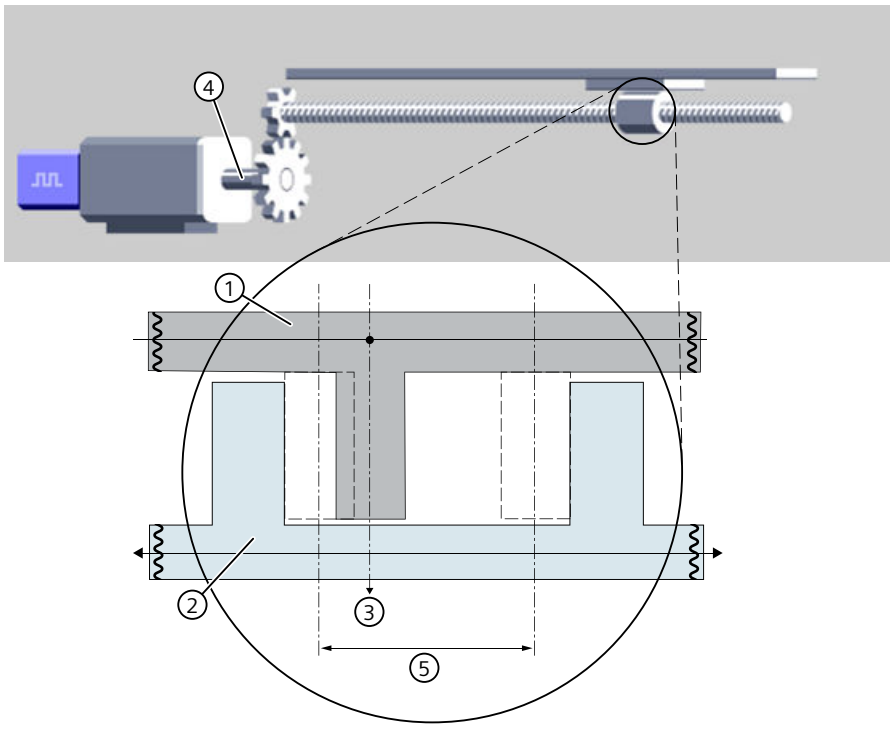

① Load side
② Drive side
③ Axis position
④ Motor position
⑤ Size of backlashes

An encoder with mounting type "on motor shaft" records the motor position. The technology object calculates the axis position from the motor position, taking the mechanics (gear unit, leadscrew pitch) into account.

If there is a backlash on the axis, then this backlash is traversed during a reversing motion at the reversal point. While the backlash is being traversed, the real mechanical position of axis does not change, but the motor position changes. Without backlash compensation, the technology object calculates a faulty axis position from the motor position, which means that the axis is not moved to the correct axis position during a reversing motion job.

Backlash compensation

If you enable backlash compensation for the motor encoder, the backlash is taken into account when calculating the axis position. The axis is always moved to the correct axis position even with a reversing motion job.

Setpoint operation

The setpoint mode is the standard mode of the axis in which motion jobs are accepted and executed.

When the direction of the position setpoint is reversed, the technology object automatically compensates for the backlash. When the motion job starts with a direction reversal, the actual position value of the technology object is adapted. The following settings are relevant for calculating the actual position value:

- Size of backlashes
- Velocity of backlash compensation

The resulting following error is compensated by the position controller and the backlash is traversed. The traversing of the backlash is therefore also dependent on the position controller gain (kv factor).

Follow-up mode

In follow-up mode the setpoint is followed up to the actual value. Actual position and actual velocity are updated. This means that it is possible to track when the axis is moved by external influence. Motion jobs are not executed.

Backlash compensation is required in follow-up mode if an axis is moved on the load side with a direction reversal. The same compensation model is used in follow-up mode as in setpoint mode. After the direction reversal of the actual encoder value has been recognized, the actual position value of the technology object is only coupled when the complete size of backlashes has been traversed.

Requirements

- Technology objects (V6.0 or higher)
  - Positioning axis
  - Synchronous axis
- Encoder mounting type: On motor shaft
  Backlash compensation is not relevant for a load-side encoder and external measuring systems. A load-side encoder records the axis position directly. After a direction reversal, the backlash on the load-side encoder is traversed using the position control.

NOTE

Excessive velocity if the backlash is too large

Do not set the backlashes larger than as the real existing backlashes. With direction reversal, note that the actual position value is adapted according to the set velocity of backlash compensation and the size of backlashes. A higher velocity of backlash compensation shortens the compensation time. The resulting control difference is output via the position controller.

Enable backlash compensation

To activate backlash compensation for an axis, proceed as follows:

1. In the configuration of the Axis technology object, navigate to "Extended parameters"> "Mechanics".
2. Select the "Enable backlash compensation" check box.

In case of axes with multiple encoders, you must activate backlash compensation for each encoder individually.

Backlash compensation settings

In the configuration of the technology object, set the following values for backlash compensation:

- Size of backlashes
- Velocity of backlash compensation. At 0.0, the actual value is modified in a servo cycle.
- Absolute homing direction (relevant for absolute encoders)

You have the option of changing the settings for the backlash compensation directly during runtime without restarting the technology object. Change the value of the tags in the technology object "<TO>.Sensor[1..4].Backlash".

After changing the settings for backlash compensation, you have to home the axis again.

You can find more detailed information on the tags of the technology objects in the section "Appendix (Page 346)".

Backlash compensation function chart

The function chart shows how the backlash compensation affects the movement of an axis when the direction changes.

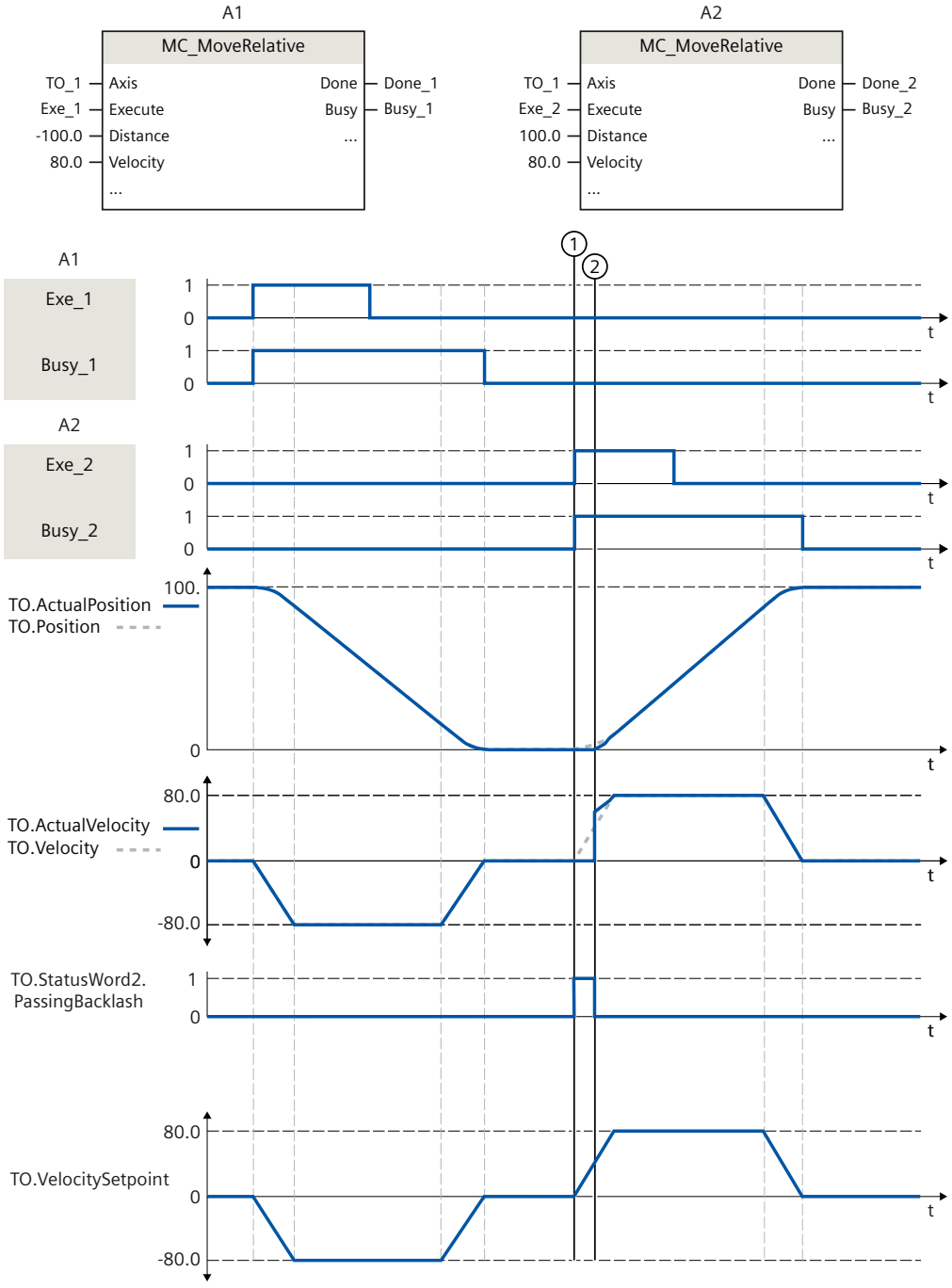

① The reversing motion job "MC_MoveRelative" is triggered. The actual motor value is modified by the backlash and the axis traverses the backlash via the position controller.

The "<TO>.StatusWord2.PassingBacklash" bit is set.

② The backlash is run through completely.

The "<TO>.StatusWord2.PassingBacklash" bit is reset.

② The axis position "<TO>.ActualPosition" is adjusted to the position setpoint "<TO>.Position" via the position control.

Homing when backlash compensation is enabled

Incremental encoder

- Direct homing "MC_Home" with "Mode" = 0.1
  Always move the axis in the same direction before or during direct homing. If you move the axis in another direction during direct homing, then the axis position is incorrect by the amount of the backlash.
- Passive and active homing "MC_Home" with "Mode" = 2,3,5,8,10
  Always move the axis in the same direction to the home position. Select either "positive" or "negative" as homing direction.

NOTE

Before reaching the homing mark, the backlash must have traversed completely in the homing direction.

Absolute encoder

- "MC_Home" absolute encoder adjustment with "Mode" = 6.7
  So that the actual encoder value can be clearly assigned to an axis position for an absolute encoder, the position of the backlash must also be taken into account when setting the absolute value offset during absolute encoder adjustment. The position of the backlash results from the direction of travel of the axis during or before the absolute encoder adjustment. Configure the direction of travel of axis using the "Absolute homing direction" parameter. After the controller is switched on again, the axis traverses the backlash if the first traversing motion is in the opposite direction to the absolute homing direction.
  If the absolute encoder adjustment has already been carried out, the axis position will only be displayed correctly after the controller has been switched off and on again if the position of the backlash at the time of switch-on corresponds to the position of the backlash of the axis position when the absolute encoder offset was set. Otherwise the axis position can deviate from the axis position displayed up to a maximum of the size of the backlash. The controller records the actual encoder value at the switch-on time, but cannot infer the position of the backlash without traversing the axis. After the axis has been traversed for the first time by at least the size of backlashes, the technology object again shows the real mechanical position.

Reversal of direction for non-homed axes

The backlash compensation when the direction is reversed is independent of the "Homed" status. In the first motion of the non-homed axis, the backlash compensation is not active. After the axis has completely passed through the backlash in one direction, the backlash compensation becomes active when the axis travels in the opposite direction.

What do you need to note in axes with multiple encoders?

- If the effective encoder is a load-side encoder, then the backlash is implicitly controlled via the position control.
- The position of the motor encoder is followed up accordingly during operation with the load-side encoder as an effective encoder and the backlash is taken into account.
- Switch from a load-side encoder to the motor encoder with "MC_SetSensor" with "Mode" = 0:
  - The backlash must be completely run through once in order that you can set the position of the motor encoder to the same as that of the encoder on the load side.
  - The homing status of the axis is maintained. A new homing is not required on the motor encoder.
- Switch the motor encoder to a load-side encoder with "MC_SetSensor" with "Mode" = 0:
  - The backlash must be completely run through once in order that you can match the position of the load-side encoder to the position of the motor encoder.

How large is the backlash?

The following basic options are available to determine the size of backlashes:

- Read the backlash from the data sheet, e.g. for a ball screw
- Measuring backlash

Example: Measuring the size of backlashes on a linear axis

Using a linear axis as example, the following section describes how you can determine the size of backlashes by measuring.

Requirements: Backlash compensation is not enabled.

1. Traverse the axis to an axis position A. Mark the axis position and write down the corresponding actual value from the technology object (<TO>.ActualPosition).
2. Continue to move the axis in the same direction at least around the expected size of backlashes.
3. Traverse the axis to the noted actual value from 1. or by the traveled distance from 2. Because of the backlash, the axis is now at of axis position B.
4. Measure the position difference of the axis positions Δ = A - B.

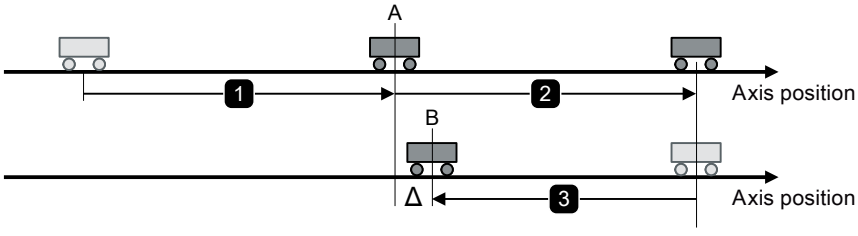

You have measured the backlash.

5. Activate backlash compensation and enter the measured size of backlashes.

See also

Homing when backlash compensation is enabled (Page 153)

5.4.8 Tags: Mechanics (S7-1500, S7-1500T)

The following technology object tags are relevant for the setting of the mechanics:

Type of motion		
Tag	**Description**	
<TO>.Properties.MotionType	Indication of linear or rotary motion	
	0	Linear motion
	1	Rotary motion

Load gear	
Tag	**Description**
<TO>.LoadGear.Numerator	Load gear numerator
<TO>.LoadGear.Denominator	Load gear denominator

Leadscrew pitch	
Tag	**Description**
<TO>.Mechanics.LeadScrew	Leadscrew pitch
<TO>.Actor.Efficiency	Efficiency of leadscrew pitch

Encoder mounting type	
Tag	**Description**
<TO>.Sensor[1..4].MountingMode	Encoder mounting type
<TO>.Sensor[1..4].Parameter.DistancePerRevolution	Load distance per encoder revolution with an externally mounted encoder

Inversion	
Tag	**Description**
<TO>.Actor.InverseDirection	Setpoint inversion
<TO>.Sensor[1..4].InverseDirection	Actual value inversion

Modulo	
Tag	**Description**
<TO>.Modulo.Enable	Enable modulo
<TO>.Modulo.Length	Modulo length
<TO>.Modulo.StartValue	Modulo start value

Backlash compensation	
Tag	**Description**
<TO>.Sensor[1..4].Backlash.Enable	Enable backlash compensation
<TO>.Sensor[1..4].Backlash.Size	Size of backlashes[1]
<TO>.Sensor[1..4].Backlash.Velocity	Velocity for traversing of backlashes At 0.0, the backlash is traversed in a servo cycle. (only with positioning axis and synchronous axis)
<TO>.Sensor[1..4].Backlash.DirectionAbsoluteHoming	Direction of movement during or before absolute encoder adjustment

[1] If you enable/disable backlash compensation or change the size of backlashes during runtime, you must home the axis again.

5.5 Motion control and limits for dynamics (S7-1500, S7-1500T)

Motion control of the axis occurs by means of velocity profiles (Page 98). The velocity profiles are calculated in accordance with the specifications for dynamics. A velocity profile defines the behavior of the axis during approach, braking and changes in velocity. During positioning a velocity profile is calculated, that moves the axis to the target point.

The configurable emergency stop deceleration (Page 102) is triggered by the Motion Control instructions "MC_Power" and "MC_Stop" or by a technology alarm.

The jerk limit reduces the mechanical load during a change in acceleration or deceleration. The result is a "smoothed" velocity profile.

Configuring dynamic defaults at the technology object

You can configure dynamic defaults for motion jobs for the axis technology object. You define values as dynamic defaults that can be used for motion jobs in most situations.

Configure the following dynamic defaults under "Extended parameters > Dynamic default":

- Velocity (<TO>.DynamicDefaults.Velocity)
  In the "Velocity" field, you configure the default value for the velocity of the axis.
- Acceleration (<TO>.DynamicDefaults.Acceleration)
  You configure the default value for acceleration in the "Ramp-up time" or "Acceleration" fields.
  Relationship between ramp-up time and acceleration:

$$\text{Ramp-up time} = \frac{\text{Velocity}}{\text{Acceleration}}$$

NOTE

A change in the velocity influences the acceleration value of the axis. The ramp-up time remains.

- Deceleration (<TO>.DynamicDefaults.Deceleration)
  You configure the default value for deceleration in the "Ramp-down time" or "Deceleration" fields.
  Relationship between ramp-down time and deceleration:

$$\text{Ramp-down time} = \frac{\text{Velocity}}{\text{Deceleration}}$$

NOTE

A change in the velocity influences the deceleration value of the axis. The ramp-down time remains.

- Jerk of the axis (<TO>.DynamicDefaults.Jerk)
  - You configure the jerk for the acceleration and deceleration ramp in the "Jerk" box. The value "0" means that jerk limiting is deactivated.
  - You configure the smoothing time for the acceleration ramp in the "Smoothing time" field.

NOTE

The jerk value is identical for the acceleration and deceleration ramps. The smoothing time in effect for the deceleration ramp results from the following relationships:

- **Acceleration > Deceleration**
  A shorter smoothing time is used for the deceleration ramp compared with the acceleration ramp.
- **Acceleration < Deceleration**
  A longer smoothing time is used for the deceleration ramp compared with the acceleration ramp.
- **Acceleration = Deceleration**
  The smoothing times of the acceleration and deceleration ramp are equal.

In case of a fault, the axis decelerates with the configured emergency stop deceleration. A configured jerk limit is not taken into account for this.

Relationship between the smoothing times and the jerk:

$$\text{Smoothing time (acceleration ramp)} = \frac{\text{Acceleration}}{\text{Jerk}}$$

$$\text{Smoothing time (deceleration ramp)} = \frac{\text{Deceleration}}{\text{Jerk}}$$

Motion jobs started in the user program are performed with the selected jerk.

The default values for acceleration and deceleration also act on the traversing motions of active homing.

Parameterizing dynamic values in Motion Control instruction

At the Motion Control instructions, you configure the dynamic values for a motion job at the parameters "Velocity", "Acceleration", "Deceleration" or "Jerk". You make the parameter assignment for each parameter individually.

Using dynamic defaults for a motion job

To use a dynamic default for a motion job, set a value of less than 0 at the parameter (default: -1.0).

The following table shows which dynamic defaults you can use with which Motion Control instruction.

Motion Control instruction	<TO>.DynamicDefaults.Velocity	<TO>.DynamicDefaults.Acceleration	<TO>.DynamicDefaults.Deceleration	<TO>.DynamicDefaults.Jerk
MC_MoveAbsolute	✓	✓	✓	✓
MC_MoveRelative	✓	✓	✓	✓
MC_MoveVelocity	-	✓	✓	✓
MC_MoveJog	-	✓	✓	✓
MC_MoveSuperimposed	✓[1)]	✓	✓	✓
MC_Halt	-	-	✓	✓
MC_HaltSuperimposed	-	-	✓	✓
MC_STOP."Mode" = 3	-	-	✓	✓

1) At the parameter MC_Superimposed.VelocityDiff

Parameterizing individual dynamic values for a motion job

To use an individual dynamic value for a motion job, set a value that is greater than 0 at the parameter.

Limiting the dynamics

Maximum values for velocity, acceleration, deceleration and jerk result from the properties of the drive and the mechanics.

Configure the following dynamic limits under "Extended parameters > Limits > Dynamic limits":

- Maximum velocity (<TO>.DynamicLimits.MaxVelocity)
  Configure the maximum permitted velocity of the axis in the "Maximum velocity" field.

- Maximum acceleration (<TO>.DynamicLimits.MaxAcceleration)
  Configure the maximum permitted acceleration in the "Ramp-up time" or "Maximum acceleration" fields.
  Relationship between ramp-up time and maximum acceleration:

$$\text{Ramp-up time} = \frac{\text{Maximum velocity}}{\text{Maximum acceleration}}$$

  NOTE

  A change in the maximum velocity influences the acceleration value of the axis. The ramp-up time remains.

- Maximum deceleration (<TO>.DynamicLimits.MaxDeceleration)
  Configure the maximum permitted deceleration in the "Ramp-down time" or "Maximum deceleration" fields.
  Relationship between ramp-down time and maximum deceleration:

$$\text{Ramp-down time} = \frac{\text{Maximum velocity}}{\text{Maximum deceleration}}$$

  NOTE

  The "maximum deceleration" for active homing with change of direction at the hardware limit switch must be set sufficiently high to brake the axis before it reaches the mechanical endstop.

  A change in the velocity influences the deceleration value of the axis. The ramp-down time remains.

- Jerk (<TO>.DynamicLimits.MaxJerk)
  You configure the jerk for the dynamic limits in the "Smoothing time" and "Jerk" fields. The same rules apply for the configuration as for the dynamic default of the jerk.

The limits for dynamics are in effect as limits for every motion generated by means of the technology object. The dynamic limits have no effect on a following axis in synchronous operation.

Interaction of dynamic defaults and dynamic limits

The following overview shows how the dynamic value for a motion job is formed from the dynamic defaults and the dynamic limits.

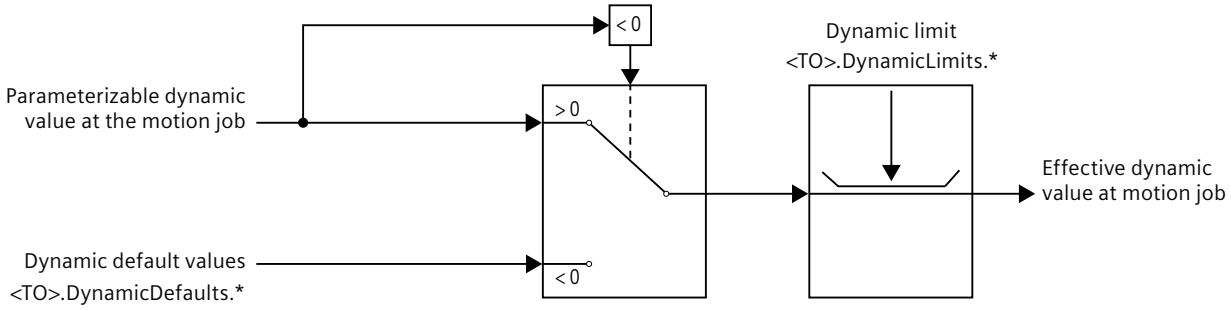

Examples

The following table shows examples for the formation of the dynamic value for the velocity at a job of the instruction MC_MoveAbsolute.

	Configured dynamic default <TO>.DynamicDefaults.Velocity	Parameterized value at the motion job MC_MoveAbsolute.Velocity	Dynamic limit <TO>.DynamicLimits.MaxVelocity	Dynamic value at the motion job
Example 1	2000.0	-1.0	4000.0	2000.0
Example 2	2000.0	-1.0	500.0	500.0
Example 3	2000.0	3000.0	4000.0	3000.0
Example 4	2000.0	6000.0	4000.0	4000.0

5.5.1 Dynamic defaults for modulo axes (S7-1500, S7-1500T)

Maximum permissible velocity of the modulo axis

Note the maximum permissible velocity for modulo axes.

- Modulo axis is not configured as a possible leading value for a TO following axis:

$$\text{Maximum permissible velocity} = \frac{\text{Modulo length}}{T_{Servo}}$$

  If the maximum permissible velocity is exceeded, alarm 412 is output and the axis is blocked.

- Modulo axis is configured as a possible leading value for a TO following axis:

$$\text{Maximum permissible velocity} = \frac{\text{Modulo length}}{2 \cdot T_{Servo}}$$

  When the limit is active, alarm 501 is output.

5.5.2 Velocity profile (S7-1500, S7-1500T)

Velocity profiles with or without jerk limitation are supported for motion control of the axis.

The dynamic values for the motion are specified in the Motion Control job. Alternatively, the values of the dynamics defaults can be used. The defaults and the limits for velocity, acceleration, deceleration and jerk are set in the configuration.

To influence velocity, a velocity override can override the current traversing velocity.

Velocity profile without jerk limitation

The following figure shows velocity, acceleration and jerk:

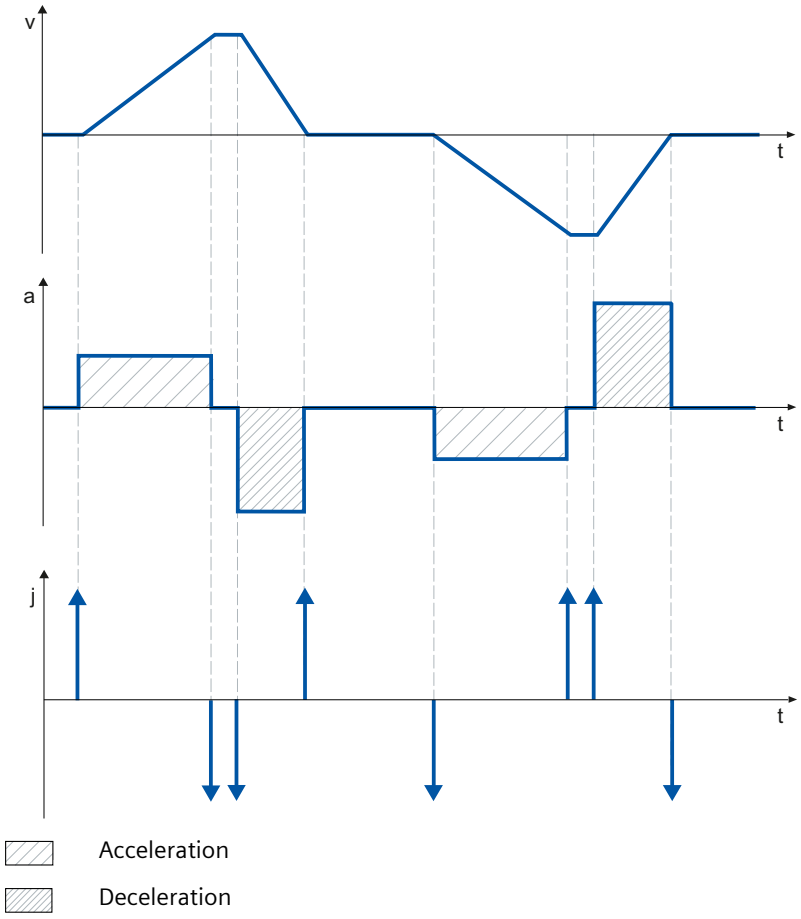

Velocity profile with jerk limitation

The following figure shows velocity, acceleration and jerk:

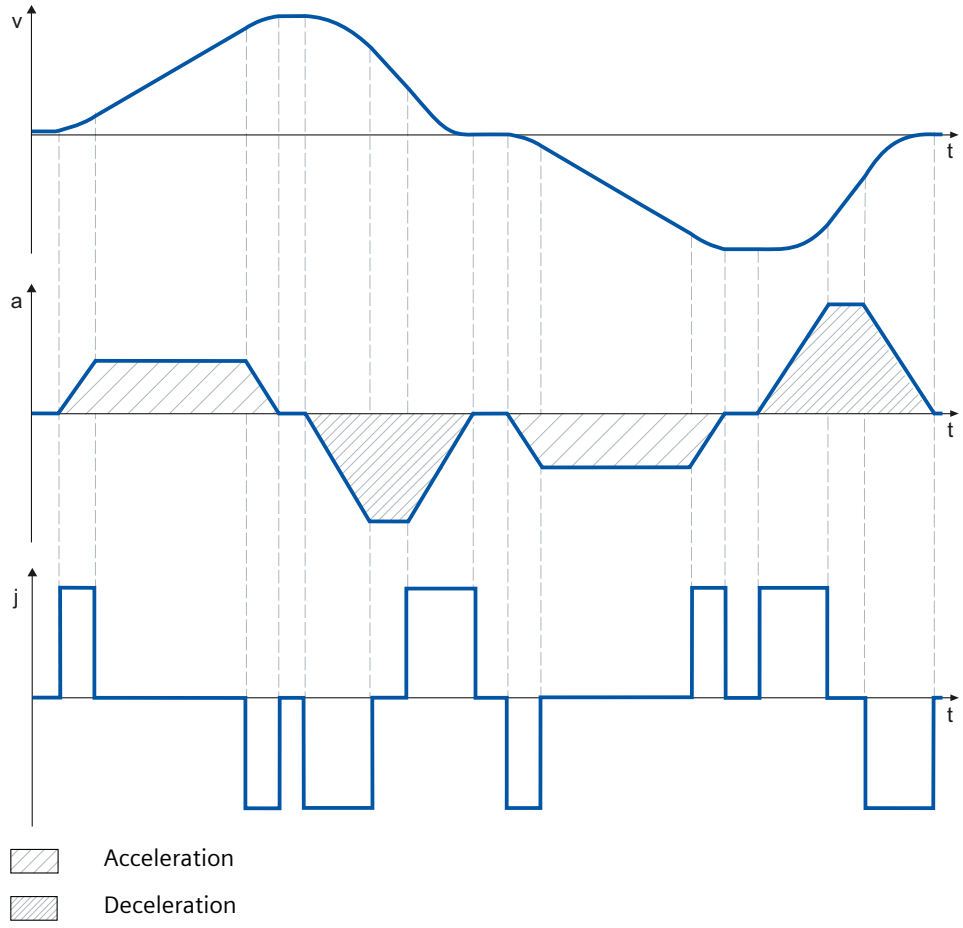

A velocity profile with jerk limitation is employed for a continuous acceleration and deceleration sequence. The jerk can be specified.

5.5.3 Override response with and without jerk limitation (S7-1500, S7-1500T)

When overriding the active job through a new jerk-limited motion, the current acceleration or deceleration is transitioned to the new acceleration/deceleration via the jerk. For overriding motions without jerk limitation, the acceleration/deceleration of the overriding job is effective immediately.

The following figure shows velocity, acceleration and jerk:

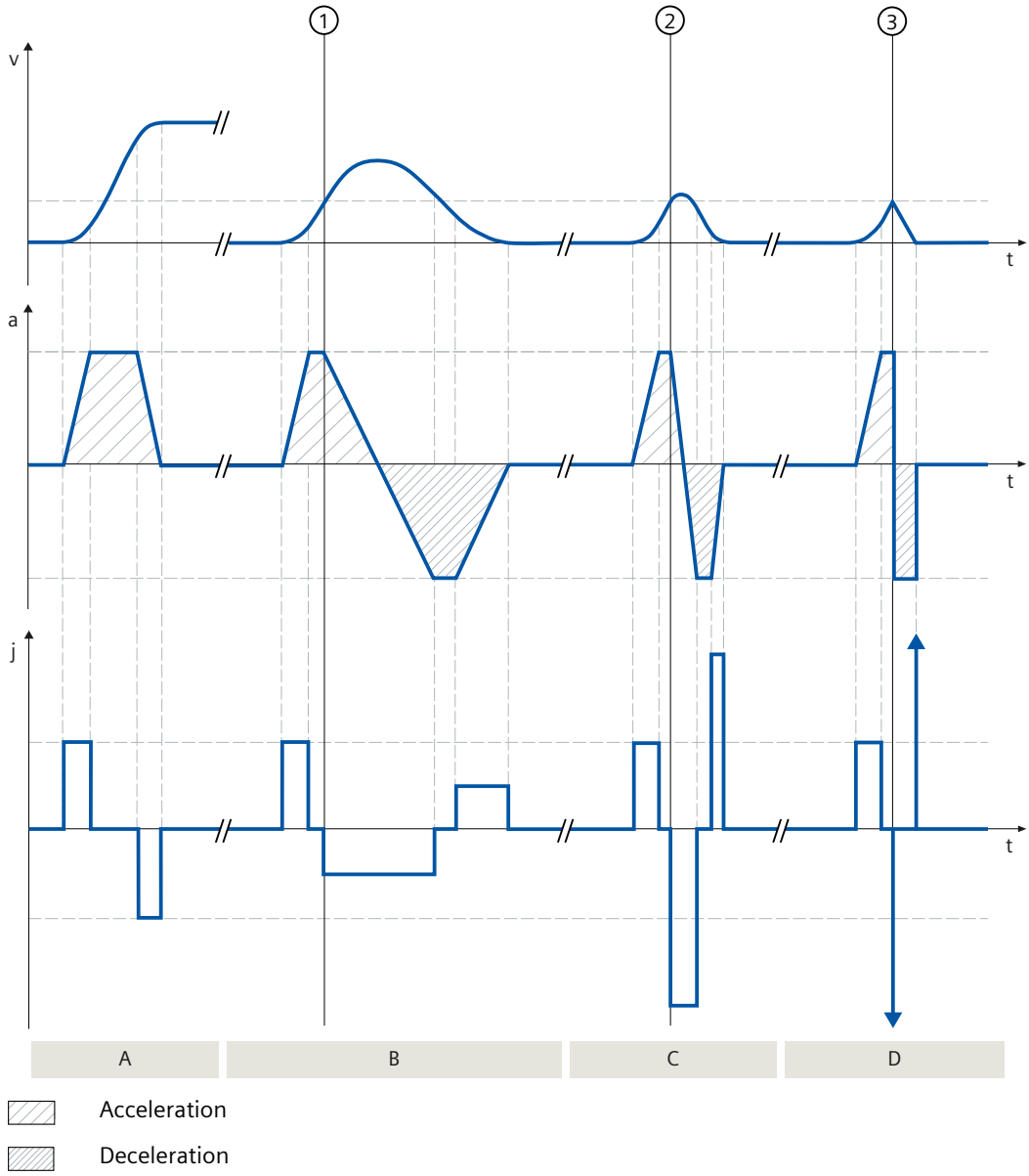

Section A

An "MC_MoveVelocity" job A1 is active.

In the following sections B, C and D, the job A1 is overridden by an additional "MC_MoveVelocity" job A2, A3, and A4 with "Velocity" = 0 each but with different jerk values.

Section B

At time ①, the active job A1 is overridden by a job A2 with low jerk. The acceleration is slowly transitioned via the jerk into the deceleration of the overriding job.

Section C

At time ②, the active job A1 is overridden by a job A3 with high jerk. The acceleration is quickly transitioned via the jerk into the deceleration of the overriding job.

Section D

At time ③, the active job A1 is overridden by a job A4 without jerk limitation. The deceleration of the overriding job is effective immediately.

5.5.4 Emergency stop deceleration (S7-1500, S7-1500T)

When stopping with the emergency stop ramp, the axis is braked from the current actual position and actual velocity to a standstill without a jerk limitation, using the configured emergency deceleration.

In the following cases the configured emergency stop deceleration is in effect:

- In case of an emergency stop ramp that has been enabled via the Motion Control instruction "MC_Power" or "MC_Stop".
- For a technology alarm with the local alarm response "Stop with emergency stop ramp".

This emergency stop deceleration can be set greater than the maximum deceleration. If the emergency stop deceleration is set lower than this, it may occur that the axis does not stop until after the limit switch in the case of "Stop at software limit switch" and the occurrence of a technology alarm with the local alarm response "Stop with emergency stop ramp".

Configuring emergency stop deceleration

Under "Extended parameters > Emergency stop", you configure the deceleration value for emergency stop in the "Emergency stop deceleration" or "Emergency stop ramp-down time" fields.

The following equation shows the relationship between emergency stop ramp-down time and emergency stop deceleration.

$$\text{Emergency stop ramp-down time} = \frac{\text{Maximum velocity}}{\text{Emergency stop deceleration}}$$

The configuration of the emergency stop deceleration is related to the configured maximum velocity of the axis. When the maximum velocity of the axis changes, then the value of the emergency stop deceleration also changes. The emergency stop ramp-down time remains unchanged.

5.5.5 Torque limits (S7-1500, S7-1500T)

5.5.5.1 Force/torque limiting (S7-1500, S7-1500T)

Adjustable force/torque limiting is available for the speed axis, positioning axis and synchronous axis technology objects. The force/torque limiting can be activated and deactivated before and during a motion job. To use force/torque limiting, the drive and the PROFIdrive telegram must support torque reduction. You can use, for example, a telegram 10x.

The limit value can be configured as a default value during configuration of the axis or it can be defined in the user program using motion control instruction "MC_TorqueLimiting".

You can specify the limiting values in the configured measurement unit for force or torque. The measurement units are defined in the "Basic parameters" configuration window.

The following configuration options are available for force/torque limiting:

- **"Linear" axis type**
  - Torque limiting active on motor side
  - Force limit active on load side
- **"Rotary" axis type**
  - Torque limiting active on load side or motor side

The force/torque limit defined by the user in accordance with the specification in the PROFIdrive telegrams 10x are transferred internally to the drive as a percentage torque reduction. The reference torque set in the "Data exchange with the drive" configuration dialog must match the reference torque set for the drive.

Linear axis type

With the rotary motor, a load-side force limit you have defined is converted by the technology into a torque reduction. If the limiting relates to the load side, the gear and leadscrew parameters defined in the "Mechanics" configuration dialog are taken into consideration. If the efficiency of the gear and leadscrew is crucial, you can set them in the "<TO>.Actor.Efficiency" tag.

With the linear motor, you specify the load-side force limit directly. The efficiency is not taken into account.

Rotary axis type

The torque is reduced on the load side with the rotary axis type. The gear parameters defined in the "Mechanics" configuration window are taken into consideration. If the efficiency of the gear is crucial, you can set it in the "<TO>.Actor.Efficiency" tag.

The defined limiting values act as an absolute value and thus in the same way for positive and negative forces/torques.

Positioning and following error monitoring with active force/torque limiting

As a result of force/torque limiting, a larger setpoint-actual value difference can build up for position-controlled axes, which may cause unwanted activation of the positioning and following error monitoring.

To deactivate the monitoring of the following error and the positioning monitoring during force/torque limiting, select the "Disable position-related monitoring" option. If you want to activate the position-related monitoring, select the option "Leave position-related monitoring enabled".

Typical behavior of a positioning or synchronous axis with active force/torque limiting

With active force/torque limiting, a larger setpoint-actual value difference can build up than during motion without force/torque limit.

Given a constant setpoint, the axis makes repeated attempts to reduce the following error.

When the limiting values are increased or limiting is deactivated during active closed loop position control, the axis can accelerate briefly to reduce the following error. If the axis is switched to non-position-controlled operation, e.g. using "MC_MoveVelocity" with "PositionControlled" = FALSE, the following error is no longer in effect.

Stopping an axis with active force/torque limiting

When stopping an axis in position-controlled mode with "MC_Halt" or "MC_Stop", the set position and the velocity setpoint are applied. Torque limiting still remains active and any accumulated following error is reduced. The axis is in standstill when the actual velocity "0.0" is reached and the minimum dwell time in the standstill window has expired. The axis remains enabled.

When stopping an axis with "MC_Power" and an emergency stop ramp, the actual position value and the actual velocity are used as a basis. The axis is braked with the configured emergency deceleration without any jerk limitation and brought to a standstill. The axis is then disabled when at a standstill.

Configuring force/torque limiting

You can configure the force/torque limit in the configuration of the positioning axis/synchronous axis technology object under "Extended parameters > Limits > Torque limiting".

Follow these steps:

1. In the "Effective" drop-down list, select whether the limit value is to be in effect "on load side" or "on motor side".

   If you have configured a linear motor, this setting has no effect.
2. Enter a default value in the specified measurement unit for "Torque limiting" or "Force limit".

   The default value is in effect when the torque limiting or force limit is specified using the motion control instruction "MC_TorqueLimiting", input parameter "Limit" < 0.

   Torque limiting applies to the following axis configurations:
   - Axis type is "Rotary" and limit value is in effect "On load side" or "On motor side"
   - Axis type is "Linear" and limit value is in effect "On motor side"

   Force limit applies to the following axis configuration:
   - "Standard motor", axis type "linear" and limiting value effective "on load side".

     If the efficiency of the gear and leadscrew is crucial, you can set them in the "<TO>.Actor.Efficiency" tag.
   - "Linear motor"

Interconnection in the SINAMICS drive

The following interconnection is required in the SINAMICS drive:

- P1522 to a fixed value of 100 %
- P1523 to a fixed value of -100% (e.g. through interconnection to fixed value parameter P2902[i])
- P1544 Torque/force reduction analysis during travel to fixed stop to 100% (default)
- P2194 Threshold value for the parameter "InLimitation" of < 100% (default 90%)

See also

Fixed stop detection (Page 104)

5.5.5.2 Fixed stop detection (S7-1500, S7-1500T)

With the Motion Control instruction "MC_TorqueLimiting", you activate and monitor a fixed stop detection. Together with a position-controlled motion job, a "Travel to fixed stop" can be realized. The operation is also referred to as clamping. "Travel to fixed stop" can be used, for example, to move quills against the workpiece with a specified torque.

The fixed stop detection is only possible in position-controlled operation of the axis. If the drive and telegram support force/torque limiting, this is active during travel to fixed stop and for clamping.

Detection of the fixed stop using following error

If the drive is stopped by a mechanical fixed stop during a motion job, the following error is increased. When the following error configured in the configuration window "Extended parameters > Limits > Fixed stop detection" is exceeded, this is regarded as the fixed stop having been reached.

When following error monitoring is activated, the configured following error must be greater than the following error for fixed stop detection.

Clamping at the mechanical endstop

When the fixed stop is reached, the active position-controlled motion job is canceled with "CommandAborted". The setpoint is no longer changed and the following error remains constant. The closed loop position control remains active and the monitoring of the configured "Positioning tolerance" is activated The drive is in "Clamping" state.

If the drive and telegram support force/torque limiting, this continues to be active with active fixed stop detection. During clamping, the clamping force or clamping torque can be changed. The value in input parameter "Limit" of the Motion Control instruction "MC_TorqueLimiting" can be changed for this.

Monitoring of the clamping

If the actual position changes by a value greater than the configured "Positioning tolerance" during active clamping, this is regarded as the break or push-back of the fixed stop. An alarm is triggered. The axis is disabled and the drive is stopped according to its configuration.

If the position setpoint is within the configured "Positioning tolerance", the breaking away or turning back of the fixed stop cannot be detected.

The configured position tolerance must be less than the configured following error for detection of clamping.

Retracting

Retracting from the fixed stop is only possible with a position-controlled motion job in the opposite direction to the fixed stop.

The "Travel to fixed stop" or "Clamping" function is ended when the "Positioning tolerance" is left in the retraction direction.

Configuring fixed stop detection

You configure the fixed stop detection in the configuration of the Positioning axis/synchronous axis technology object under "Extended parameters > Limits > Fixed stop detection".

- For "Following error", you configure the value of the following error starting from which the fixed stop detection is to take effect.

  NOTE

  If the following error monitoring was activated in the position monitoring configuration, the "Maximum following error" configured there must be greater than the "Following error" of the fixed stop detection.

- For "Positioning tolerance", you configure the positioning tolerance that is regarded as a breaking away or turning back of the fixed stop when exceeded. To detect the breaking away or turning back of the fixed stop, the position setpoint must be located outside the positioning tolerance.
  The configured position tolerance must be less than the configured following error.

See also

Force/torque limiting (Page 102)

MC_TorqueLimiting: Activate/deactivate force/torque limit / fixed stop detection V7 (Page 273-274)

5.5.5.3 Additive setpoint torque/additive setpoint force (S7-1500, S7-1500T)

The Motion Control instruction "MC_TorqueAdditive" allows you to apply an additional torque/an additional force in the drive.
The additive setpoint torque is used for example in torque feedforward control or the specification of the tensile torque for winding applications.
The following requirements are necessary for setting the additive setpoint torque/additive setpoint force:

- SINAMICS drive (see "compatibility list (https://support.industry.siemens.com/cs/ww/en/view/109750431)")
- SIEMENS supplementary telegram 750 for transmitting the torque data to the drive

The additive torque/additive setpoint force can be either positive or negative. The value specified in the instruction is a technological value, not a percentage. You set the unit of measure at the axis (default values: Nm, N).

See also

MC_TorqueAdditive: Specify additive torque V7 (Page 267-268)

5.5.5.4 Permissible torque range/force range (S7-1500, S7-1500T)

The Motion Control instruction "MC_TorqueRange" allows you to set torque limits/force limits for the drive.

The motion control instruction is used, for example, for winding applications in order to prevent the tearing of the material.

The following requirements must be fulfilled to set the torque data:

- SINAMICS drive (see "compatibility list (https://support.industry.siemens.com/cs/ww/en/view/109750431)")
- SIEMENS supplementary telegram 750 for transmitting the torque data to the drive

The value specified in the instruction is a technological value, not a percentage. You set the unit of measure at the axis (default values torque: Nm/force: N). If you invert the setpoints at the technology object of the axis, the values for the high and low torque limit are output inverted and reversed.

If the torque limitation is activated by specifying the high and low torque limit, the following monitorings and limits are deactivated:

- Following error monitoring
- Time limits for positioning monitoring
- Time limits for standstill monitoring

Monitoring remains in effect if you have selected the option "Leave position-related monitoring enabled" under "Technology object > Configuration > Extended parameters > Limits > Torque limiting".

See also

MC_TorqueRange: Set high and low torque limit V7 (Page 270)

5.5.6 Superimposed motions (S7-1500, S7-1500T)

With the motion control instructions "MC_MoveSuperimposed" and "MC_MotionInSuperimposed" you can start motions on the axis that additionally superimpose a position-controlled basic motion.

Use the motion control instruction "MC_HaltSuperimposed" to stop a superimposed motion on the axis independently of the basic motion.

You can superimpose the following motion control instructions with the "MC_MoveSuperimposed", "MC_MotionInSuperimposed", and "MC_HaltSuperimposed" motion control instructions:

- Single axis motion
  - MC_MoveAbsolute
  - MC_MoveRelative
  - MC_MoveVelocity
  - MC_MoveJog
- Synchronous operation
  - MC_GearIn
  - MC_GearInPos
  - MC_GearInVelocity
  - MC_CamIn
- MotionIn motion
  - MC_MotionInVelocity
  - MC_MotionInPosition

A kinematics motion is not permitted as a basic motion. If a kinematics motion is active, then the execution of a "MC_MoveSuperimposed" job or a "MC_MotionInSuperimposed" job is aborted with "Error" and the associated "ErrorID".

Superimposing a basic motion with a relative positioning motion

With the motion control instruction "MC_MoveSuperimposed (Page 235)" you can start a relative positioning motion by the "Distance" distance to superimpose a running basic motion.

The dynamic behavior during superimposed motion is defined with the parameters "VelocityDiff", "Jerk", "Acceleration", and "Deceleration". The basic motion is not affected by the superimposed motion.

The dynamic response of the total axis motion is the sum of the dynamic values of the basic motion and the superimposed motion.

The behavior of the overall motion depends on the type of basic motion:

- If the basic motion is a single-axis motion:
  - The maximum dynamic response of the superimposed motion is the difference between the current dynamic values of the basic motion and the dynamic limits.
  - The entire motion is limited to the configured dynamic limits.
- If the basic motion is a synchronous operation:
  - The synchronous operation of the following axis is not limited to the dynamic limits of the following axis.
  - An "MC_MoveSuperimposed" job on a leading axis in synchronous operation affects the leading axis and thus indirectly the following axis.
  - An "MC_MoveSuperimposed" job on a following axis in synchronous operation only affects the following axis.

  NOTE

  Setting synchronous operation with superimposed motions in simulation

  If superimposed movements by the motion control instructions "MC_MoveSuperimposed", "MC_MotionInSuperimposed" or "MC_HaltSuperimposed" are or were active on the following axis, do not set a synchronous operation in simulation. This is because after you end the simulation, the following axis follows the leading axis without the position shifted by the superimposed motion. This can cause a setpoint jump of the position on the following axis.

  If you are using synchronous operation, use the motion control instructions "MC_OffsetAbsolute" or "MC_OffsetRelative" to move the following axis position.

- If the basic motion is a MotionIn motion:
  - The dynamic response of the basic motion is not limited.
  - The maximum dynamic response of the superimposed motion is the difference between the current dynamic values of the basic motion and the dynamic limits.

The dynamic response of the overall motion is always displayed in the technology data block and in the diagnostics of the TIA Portal.

Starting superimposed positioning motion with "MC_MoveSuperimposed"

To start a superimposed positioning motion with the motion control instruction "MC_MoveSuperimposed", follow these steps:

1. Specify the additional distance to be moved in the "Distance" parameter.
2. Start the "MC_MoveSuperimposed" job with a positive edge at the "Execute" parameter.
   The "MC_MoveSuperimposed" job is executed with the set dynamic responses and superimposed on the basic motion.
   The processing status of the job is displayed at the "Busy", "Done", and "Error" parameters.

Superimposing basic motion with MotionIn motion specification

You can specify the cyclic, applicable motion setpoints for additional distance, velocity and acceleration, in addition to the basic motion for the axis with the motion control instruction "MC_MotionInSuperimposed (Page 263-264)". In this case no velocity profile is calculated and the values are directly active at the technology object.

The additional distance "Distance" is added to the set position of the basic motion. The summation of the two values corresponds to the set position of the axis.

The summation of the velocity setpoint "VelocityDiff" of the superimposed motion and the velocity setpoint of the basic motion are used as the precontroller value for the velocity precontrol.

The superimposed acceleration "AccelerationDiff" is only required for overriding the superimposed or overall motion.

The behavior of the overall motion depends on the type of basic motion:

- If the basic motion is a single-axis motion:
  - The dynamic responses of the superimposed and overall motions are not limited.
  - Only the basic motion is limited to the configured dynamic limits.
  - If the basic motion is completed then a job with "MC_MotionInSuperimposed" continues to be executed.
- If the basic motion is a synchronous operation:
  - The synchronous operation of the following axis is not limited to the dynamic limits of the following axis.
  - An "MC_MotionInSuperimposed" job on a leading axis in synchronous operation affects the leading axis and thus indirectly the following axis.
  - An "MC_MotionInSuperimposed" job on a following axis in synchronous operation only affects the following axis.

NOTE

Setting synchronous operation with superimposed motions in simulation

If superimposed movements by the motion control instructions "MC_MoveSuperimposed", "MC_MotionInSuperimposed" or "MC_HaltSuperimposed" are or were active on the following axis, do not set a synchronous operation in simulation. This is because after you end the simulation, the following axis follows the leading axis without the position shifted by the superimposed motion. This can cause a setpoint jump of the position on the following axis.

If you are using synchronous operation, use the motion control instructions "MC_OffsetAbsolute" or "MC_OffsetRelative" to move the following axis position.

- If the basic motion is a MotionIn motion:
  - The dynamic response of the superimposed motion and the dynamic response of the overall motion are not limited.
  - The dynamic response of the basic motion is not limited.
- No basic motion is active at the axis:
  - A job with "MC_MotionInSuperimposed" is also possible if no basic motion is active.

The dynamic response of the overall motion is always displayed in the technology data block and in the diagnostics of the TIA Portal.

Starting superimposed motion with "MC_MotionInSuperimposed"

To start a superimposed positioning motion with motion control instruction "MC_MotionInSuperimposed", follow these steps:

1. Specify the superimposed motion setpoints at the "Distance", "VelocityDiff", and "AccelerationDiff" parameters.
2. Start the "MC_MotionInSuperimposed" job with a positive edge at the "Enable" parameter.
   The "MC_MotionInSuperimposed" job is executed with the dynamic response specified at the "Distance" and "VelocityDiff" parameters and superimposed on the basic motion.
   The processing status of the job is displayed at the "Busy" and "Error" parameters.

Stopping superimposed motion independently of the basic motion

The motion control instruction "MC_HaltSuperimposed (Page 239)" stops a superimposed motion created with the instructions "MC_MoveSuperimposed", "MC_MotionInSuperimposed", or "MC_HaltSuperimposed".

With the "Jerk", "Deceleration" and "AbortAcceleration" parameters you can determine the dynamic behavior when stopping the superimposed motion.

The motion control instruction "MC_HaltSuperimposed" has no effect on the basic motion of the axis.

If no superimposed motion with "MC_MoveSuperimposed" or "MC_MotionInSuperimposed" is active, then the "MC_HaltSuperimposed" job is aborted immediately without effect. (MC_HaltSuperimposed.Done = true; MC_HaltSuperimposed.Busy = false)

Overriding of superimposed motions

The instructions of the superimposed motions are overridden according to the behavior described in the section "Override response V7: Homing and motion jobs (Page 279)". As a rule, the current dynamic responses are approximated to the new motion.

Status indicators of superimposed motions

The "<TO>.StatusWord.X23 (MoveSuperimposedCommand)" tag is set when the "MC_MoveSuperimposed" job is active.

The "<TO>.StatusWord2.X6 (MotionInSuperimposedCommand)" tag is set when the "MC_MotionInSuperimposed" job is active.

The "<TO>.StatusWord2.X7 (HaltSuperimposedCommand)" tag is set when the "MC_HaltSuperimposed" job is active.

The "<TO>.StatusPositioning.SuperimposedDistance" tag shows the distance traversed with the "MC_MoveSuperimposed", "MC_MotionInSuperimposed", and "MC_HaltSuperimposed" instructions. The value is reset when the basic motion and superimposed motion are completed or aborted.

5.5.7 Motion specification via "MotionIn" (S7-1500T)

In contrast to the motion control instructions such as "MC_MoveAbsolute" and "MC_MoveRelative", no motion profile is calculated by the system when "MC_MotionInVelocity", "MC_MotionInPosition", and "MC_MotionInSuperimposed" are used. Each individual setpoint of the motion profile (motion vector) must be specified with the "MotionIn" instruction in the application cycle. This allows you to calculate your own motion profile. You are responsible for the accuracy or your information.

The setpoints are typically adapted in the processing cycle of the technology object. Call the "MotionIn" instruction in the MC-PreInterpolator [OB68]. The setpoints will be effective directly at the axis in the next application cycle [OB91].

⚠ WARNING

Unexpected axis motions

When using the motion specification via the motion control instructions "MC_MotionInVelocity", "MC_MotionInPosition", and "MC_MotionInSuperimposed", the axis can perform unexpected motions.

Consider the current dynamic response of the axis when specifying the new motion vectors. The motion vectors must be consistent with each other.

Before operation with the motion control instructions "MC_MotionInVelocity", "MC_MotionInPosition", and "MC_MotionInSuperimposed", set up the following precautionary measures:

- Ensure that the EMERGENCY OFF switch is within the reach of the operator.
- Enable the hardware limit switches.
- Enable the software limit switches.
- Ensure that following error monitoring is enabled.

Note that a following axis that is coupled to the axis is also moved.

"MC_MotionInVelocity"

Use the "MC_MotionInVelocity (Page 255)" instruction to specify the velocity and acceleration of the motion. The instruction is applicable for speed, positioning and constant axes.

To execute the instruction, you must at least specify the velocity. Acceleration is usually only required for the substituting running motions. By default, the acceleration value is zero.

"MC_MotionInPosition"

Use the "MC_MotionInPosition (Page 259)" instruction to specify the position, velocity and acceleration of the motion. This instruction is used for velocity, positioning and synchronous axes.

To execute the instruction, you must at least specify the position and velocity. The acceleration is needed for the overriding of running motions. By default, the acceleration value is zero. The specified setpoints must be consistent with each other.

The position specification is position-controlled. If you use a velocity precontrol, the velocity specification is processed via the velocity precontrol.

"MC_MotionInSuperimposed"

With the "MC_MotionInSuperimposed (Page 279)" instruction you can specify the additional distance, and the velocity and the acceleration of a superimposed motion of the axis. This instruction is used for velocity, positioning and synchronous axes.

To execute the instruction, you must at least specify the position and velocity. The acceleration is needed for the overriding of running motions. By default, the acceleration value is zero. The specified setpoints must be consistent with each other.

The position specification is position-controlled. If you use a velocity precontrol, the velocity specification is processed via the velocity precontrol.

Overriding with "MotionIn" instructions

If a motion control instruction is overridden by a "MotionIn" instruction, the specified setpoints take immediate effect with the current application cycle. The dynamic response results exclusively through the setpoint value specifications of the user program. It is not limited and no smooth transition takes place from the current motion state. Consider the current dynamic response of the axis when specifying the new motion vectors. Note that dynamic limits set on the technology object are not effective. Only limits set on the drive side are in effect.

Stopping the "MotionIn" instructions

The "MotionIn" instructions can be canceled by the following means:

- Overriding them with another motion control instruction
  The "MotionIn" instructions are overridden according to the behavior described in the sectionOverride response V7: Homing and motion jobs (Page 279). As a rule, the current dynamic responses are approximated to the new motion.

  NOTE
  Deviating dynamic settings
  When overriding the active job with a new jerk-limited motion, the current acceleration or deceleration is transferred to the new acceleration/deceleration via the jerk. Depending on the dynamic settings, this may take several application cycles. When the new acceleration or deceleration deviates significantly from the acceleration/deceleration at the time of the override, the transition profile can result in an unexpected axis motion.
  If such transitions cannot be excluded during acceleration/deceleration, adjust the dynamic settings of your jobs. For example, add a motion that is not jerk-limited with a direct transition to the new acceleration/deceleration. As an alternative, use high jerk values.
  For MotionIn jobs, the specification of the acceleration is only relevant for overriding the job. When the currently active acceleration is not to be reduced via the jerk, enter the value "0.0" at the "Acceleration" parameter of the MotionIn job.

- Setting the parameter "Enable" to "FALSE"
  If you set "Enable" parameter to "FALSE", the setpoint is immediately set to zero. Note that the dynamic limits set on the technology object are not effective. Only limits set on the drive side are in effect.

MotionIn status indicators

The tag "<TO>.StatusMotionIn.FunctionState" = 1 indicates that an "MC_MotionInVelocity" job is active.
The tag "<TO>.StatusMotionIn.FunctionState" = 2 indicates that an "MC_MotionInPosition" job is active.
The tag "<TO>.StatusWord.X31 (MotionInCommand)" is set when a MotionIn job is active.
The "<TO>.StatusWord2.X6 (MotionInSuperimposedCommand)" tag is set when the "MC_MotionInSuperimposed" job is active.
The "<TO>.StatusMotionIn.StatusWord.X0 (MaxVelocityExcceeded)" tag indicates that the configured maximum velocity has been exceeded during a MotionIn job.
The "<TO>.StatusPositioning.SuperimposedDistance" tag shows the distance traversed with the "MC_MoveSuperimposed", "MC_MotionInSuperimposed", and "MC_HaltSuperimposed" instructions. This value is reset when the basic motion and the superimposed motion are completed or aborted.

See also

MC_MotionInSuperimposed: Specifying superimposed motion setpoints V7 (Page 263-264)

5.5.8 Tags: Motion control and limits for dynamics (S7-1500, S7-1500T)

The following technology object tags are relevant for motion control:

Status		
Tag	**Description**	
<TO>.StatusWord	Status indicator for an active motion	
<TO>.Position	Set position	
<TO>.Velocity	Velocity setpoint/speed setpoint	
<TO>.VelocitySetpoint	Specified velocity setpoint/speed setpoint	
<TO>.ActualPosition	Actual position	
<TO>.ActualVelocity	Actual velocity	
<TO>.ActualSpeed	Actual speed of the motor (only with PROFIdrive drive type)	
<TO>.Acceleration	Setpoint acceleration	
<TO>.ActualAcceleration	Actual acceleration	
<TO>.StatusPositioning.Superimposed-Distance	Distance traveled with the instructions "MC_MoveSuperimposed", "MC_MotionInSuperimposed", and "MC_HaltSuperimposed". The value is reset when the base motion and the superimposed motion are completed.	
<TO>.StatusMotionIn.FunctionState	Status of the "MotionIn" function	
	0	No "MotionIn" function active
	1	"MC_MotionInVelocity" active
	2	"MC_MotionInPosition" active
<TO>.StatusMotionIn.StatusWord.X0 (MaxVelocityExceeded)	The configured maximum velocity is exceeded during a MotionIn movement.	
<TO>.StatusSynchronizedMotion.Status-Word.X0 (MaxVelocityExceeded)	The tag is set to the value "TRUE" when the maximum velocity configured for the following axis is exceeded during synchronous operation.	
<TO>.StatusSynchronizedMotion.Status-Word.X1 (MaxAccelerationExceeded)	The tag is set to the value "TRUE" when the maximum acceleration configured for the following axis is exceeded during synchronous operation.	
<TO>.StatusSynchronizedMotion.Status-Word.X2 (MaxDecelerationExceeded)	The tag is set to the value "TRUE" when the maximum deceleration configured for the following axis is exceeded during synchronous operation.	
<TO>.StatusWord.X23 (MoveSuperimposedCommand)	An "MC_MoveSuperimposed" job is running.	
<TO>.StatusWord.X31 (MotionInCommand)	A "MotionIn" job is active.	
<TO>.StatusWord2.X6 (MotionInSuperimposedCommand)	An "MC_MotionInSuperimposed" job is running.	
<TO>.StatusWord2.X7 (HaltSuperimposedCommand)	An "MC_HaltSuperimposed" job is running.	

Override	
Tag	**Description**
<TO>.Override.Velocity	Velocity or speed override

Dynamic limit values	
Tag	**Description**
<TO>.DynamicLimits.MaxVelocity	Dynamic limitation for maximum velocity (mechanical)
<TO>.DynamicLimits.Velocity	Dynamic limitation for maximum velocity (programmable)
<TO>.DynamicLimits.MaxAcceleration	Dynamic limitation for maximum acceleration
<TO>.DynamicLimits.MaxDeceleration	Dynamic limitation for maximum deceleration
<TO>.DynamicLimits.MaxJerk	Dynamic limitation for maximum jerk

Dynamic response defaults	
Tag	**Description**
<TO>.DynamicDefaults.Velocity	Default velocity
<TO>.DynamicDefaults.Acceleration	Default acceleration
<TO>.DynamicDefaults.Deceleration	Default deceleration
<TO>.DynamicDefaults.Jerk	Default jerk
<TO>.DynamicDefaults.EmergencyDeceleration	Emergency deceleration

Torque limiting		
Tag	**Description**	
<TO>.TorqueLimiting.LimitDefaults.Torque	Limiting torque	
<TO>.TorqueLimiting.LimitDefaults.Force	Limiting force	
<TO>.TorqueLimiting.LimitBase	Torque limiting, motor or load side	
	0	Motor side
	1	Load side
<TO>.TorqueLimiting.PositionBasedMonitorings	Positioning and following error monitoring	
	0	Deactivated
	1	Enabled
<TO>.StatusTorqueData.CommandAdditiveTorqueActive	Additive setpoint torque/additive force function	
	0	Deactivated
	1	Enabled
<TO>.StatusTorqueData.CommandTorqueRangeActive	Torque limits/force limits function	
	0	Deactivated
	1	Enabled
<TO>.StatusTorqueData.ActualTorque	Actual torque of the axis (for standard motor)	
<TO>.StatusTorqueData.ActualForce	Actual force of axis (for linear motor)	

Fixed stop detection	
Tag	**Description**
<TO>.Clamping.FollowingErrorDeviation	Value of the following error starting from which the fixed stop is detected
<TO>.Clamping.PositionTolerance	Position tolerance for clamping monitoring

5.6 Traversing range limitation (S7-1500, S7-1500T)

Hardware and software limit switches limit the permissible traversing range and operating range of the positioning axis/synchronous axis. Before use, they must be enabled in the configuration or in the user program.

The following figure shows the relationship between the operating range, maximum traversing range and limit switches:

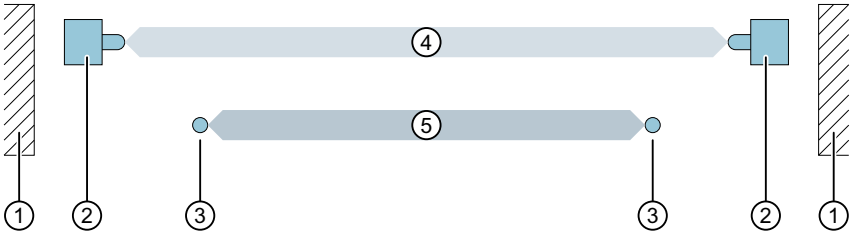

① Mechanical endstop
② Hardware limit switch (HW limit switch)
③ Software limit switch (SW limit switch)
④ Maximum traversing range
⑤ Operating range

Types of HW limit switches

The positioning axis/synchronous axis technology object supports the following types of HW limit switches.

- Switch traversable: Axis can move beyond HW limit switch. The HW limit switch is enabled when it is approached. When it is overtraveled, the HW limit switch is disabled once again.

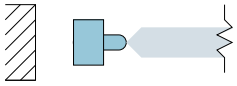

- Switch non-traversable: HW limit switch covers the entire range all the way to the mechanical endstop. The HW limit switch is enabled when it is approached and stays enabled up to the mechanical endstop.

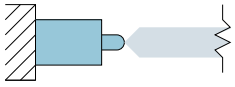

5.6.1 Behavior when approaching and retracting a HW limit switch (S7-1500, S7-1500T)

Hardware limit switches are limit position switches that limit the maximum permissible traversing range of the axis.

Select the mounting positions of the hardware limit switches so that there is adequate braking distance for the axis when needed. The axis should come to a standstill before a mechanical endstop.

Approaching the hardware limit switches

In the monitoring of range limitation, no distinction is made as to whether the switches are reached or crossed.

When approaching a traversable hardware limit switch, technology alarm 531 is output. The axis is disabled and stopped with the configured braking ramp.

When approaching a non-traversable hardware limit switch, technology alarm 531 is output and the configured alarm response is executed.

Using the hardware limit switches as reversing output cams during active homing

When hardware limit switches are used as reversing output cams during homing, monitoring of the hardware limit switches has no effect during active homing.

When hardware limit switches are used as reversing output cams, the axis is braked with the deceleration configured in the dynamic defaults.

When planning the distance between hardware limit switch and mechanical endstop during active homing, take into account the dynamic default of the deceleration and the approach velocity.

Direction reversal at the hardware limit switch (reversing cam) (Page 140)

Retracting the axis with a traversable HW limit switch

In case of a traversable HW limit switch, the position of the axis when the hardware limit switch is detected is stored internally on the CPU. The status of the reached hardware limit switch is reset only after the hardware limit switch is left and the axis is once again in the maximum traversing range.

To retract the axis after it reaches the hardware limit switch and to reset the status of the hardware limit switch, follow the steps below:

1. To enable motion in the retraction direction, acknowledge the technology alarm with "MC_Reset". A restart is not required.
2. Move the axis in the retraction direction until the hardware limit switch is exited.
   - Negative HW limit switch: For retracting, move in the direction of higher position values.
   - Positive HW limit switch: For retracting, move in the direction of lower position values.

   Afterwards, the axis must be within the maximum traversing range.
   If you move the axis opposite the retraction direction before the hardware limit switch is left, the monitoring is triggered again.

The following chart shows the behavior of the status word when the hardware limit switch is reached and when the axis is retracted:

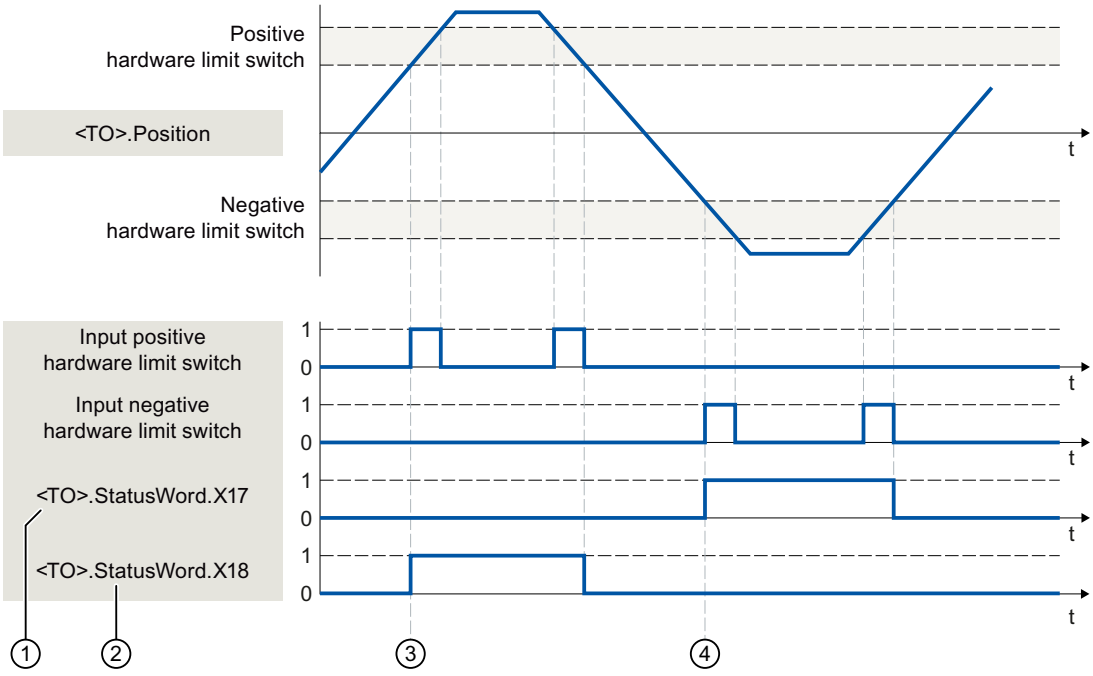

① <TO>.StatusWord.X17 (HWLimitMinActive)

0	Negative hardware limit switch not reached
1	Negative hardware limit switch reached or overtraveled

② <TO>.StatusWord.X18 (HWLimitMaxActive)

0	Positive hardware limit switch not reached
1	Positive hardware limit switch reached or overtraveled

③ The position of the axis when the **positive** hardware limit switch is detected is saved internally in the CPU. To reset the status of the hardware limit switch, the axis position must fall short of this position.

④ The position of the axis when the **negative** hardware limit switch is detected is saved internally in the CPU. To reset the status of the hardware limit switch, the axis position must go past this position.

NOTE

Retracting after technology alarm 531 with polarity reversed hardware limit switch or both hardware limit switches active:

To enable retracting, you can temporarily disable the hardware limit switch using the Motion Control instruction MC_WriteParameter (Page 252) via the parameter "PositionLimits_HW.Active" =FALSE.

Retracting the axis with a non-traversable HW limit switch

In case of a non-traversable HW limit switch, the position of the axis when the hardware limit switch is approached is not stored.

To retract the axis after it reaches the hardware limit switch and to reset the status of the hardware limit switch, follow the steps below:

1. To enable motion in the retraction direction, acknowledge the technology alarm with "MC_Reset". A restart is not required.
2. Move the axis in the retraction direction until the hardware limit switch is exited.
   - Negative HW limit switch: For retracting, move in the direction of higher position values.
   - Positive HW limit switch: For retracting, move in the direction of lower position values.

   The status of the approached HW limit switch is reset as soon as the configured level at the digital input of the HW limit switch is no longer present.
   If you move the axis opposite the retraction direction before the hardware limit switch is left, the monitoring is triggered again.

The following chart shows the behavior of the status word when the hardware limit switch is reached and when the axis is retracted:

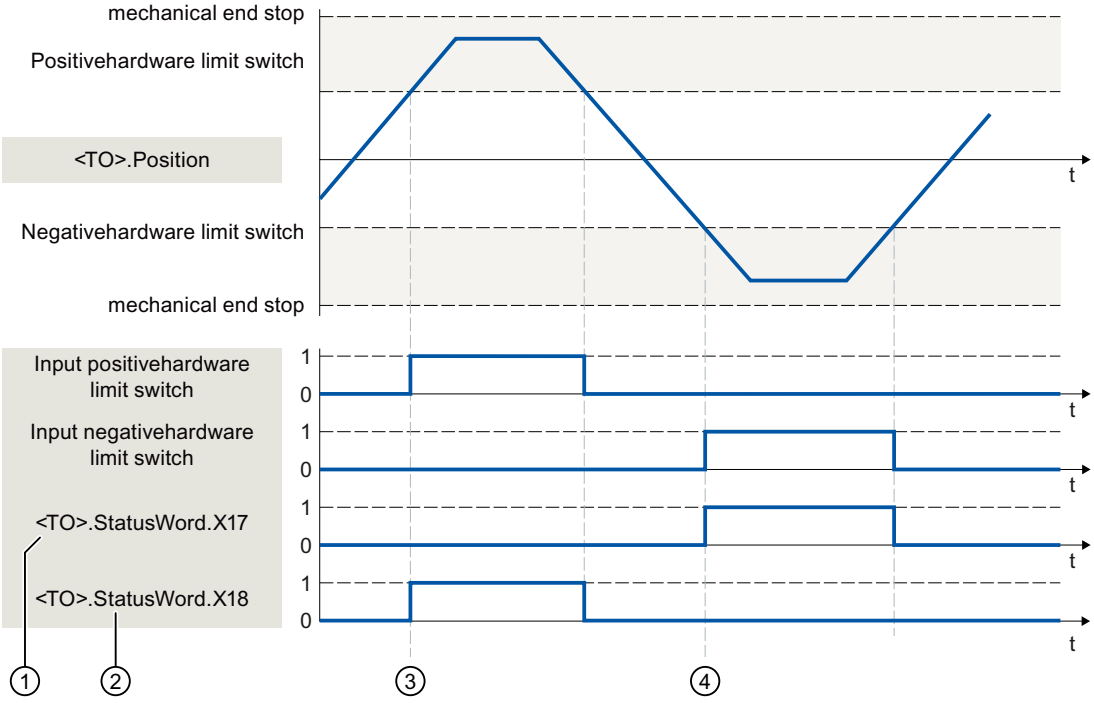

① <TO>.StatusWord.X17 (HWLimitMinActive)

- 0 Negative hardware limit switch not reached
- 1 Negative hardware limit switch reached or overtraveled

② <TO>.StatusWord.X18 (HWLimitMaxActive)

- 0 Positive hardware limit switch not reached
- 1 Positive hardware limit switch reached or overtraveled

③ When the **positive** hardware limit switch is detected, the status <TO>.StatusWord.X18 (HWLimitMaxActive) for the positive HW limit switch is set. The status is reset as soon as the configured level at the digital input of the HW limit switch is no longer present.

④ When the **negative** hardware limit switch is detected, the status <TO>.StatusWord.X17 (HWLimitMinActive) for the negative HW limit switch is set. The status is reset as soon as the configured level at the digital input of the HW limit switch is no longer present.

NOTE

Retracting after technology alarm 531 with polarity reversed hardware limit switch or both hardware limit switches active:

To enable retracting, you can temporarily disable the hardware limit switch using the Motion Control instruction MC_WriteParameter (Page 252) via the parameter "PositionLimits_HW.Active" =FALSE.

Deactivating the hardware limit switch

For example, to enable homing at the fixed stop, you can temporarily disable the hardware limit switch using the Motion Control instruction "MC_WriteParameter (Page 252)" via the parameter "PositionLimits_HW.Active" = FALSE.

See also

MC_WriteParameter: Write parameter V7 (Page 252)
Direct homing (Page 148)

5.6.2 Configuring HW limit switches (S7-1500, S7-1500T)

Configuring HW limit switches

To configure the HW limit switches for the positioning axis/synchronous axis technology object, follow these steps:

1. In the configuration, navigate to "Extended parameters > Limits > Position limits > HW limit switches".
2. Click on the "Enable HW limit switch" check box.
   The function of the negative and positive hardware limit switch is active.
3. Select the type of HW limit switch from the "Type of hardware limit switch" drop-down list:
   – Switch traversable
   – Switch non-traversable
4. If you have selected "Switch non-traversable", configure the alarm response of technology alarm 531 at "Reaction":
   – Keep emergency stop and axis enable: When approaching the HW limit switch, the axis brakes to a standstill with the emergency stop deceleration without jerk limitation. The axis remains enabled.
   – Disable axis: When approaching the HW limit switch, the axis is stopped with the braking ramp configured in the drive.
5. For "Input negative HW limit switch", select the PLC tag of the digital input for the negative hardware limit switch.
   To be able to select an input, a digital input module must have been added in the device configuration, and the PLC tag name for the digital input must be defined.

NOTE

Only use hardware limit switches that remain permanently switched after the approach. This switching state may only be canceled after the return to the permitted traversing range.

The digital inputs of the hardware limit switches are evaluated by default in cyclic data exchange. If the hardware limit switches are to be evaluated in the position control cycle clock of the drive, select the entry "MC-Servo" for "Organization block" and "PIP OB Servo" for "Process image" in the settings of the input module under "I/O addresses".

CAUTION

Filter times of the digital inputs

Pay attention to the filter times of the digital inputs when placing hardware limit switches.

Based on the time for one position control cycle clock and the filter time of the digital inputs, the resulting delay times must be taken into account.

The filter time is configurable in individual digital input modules in the device configuration.

The digital inputs are set to a filter time of 6.4 ms by default. If these are used as hardware limit switches, undesired decelerations may occur. If this occurs, reduce the filter time for the relevant digital inputs.

The filter time can be set under "Input filter" in the device configuration of the digital inputs.

6. For "Input positive HW limit switch", select the PLC tag of the digital input for the positive hardware limit switch.
   To be able to select an input, a digital input module must have been added in the device configuration, and the PLC tag name for the digital input must be defined.
7. In the "Level selection negative HW limit switch" drop-down list, select the triggering signal level for the negative HW limit switch.
   – High level: Input signal is "TRUE" when the hardware limit switch is approached.
   – Low level: Input signal is "FALSE" when the hardware limit switch is approached.
8. For "Level selection positive HW limit switch", select the triggering signal level for the positive HW limit switch from the drop-down list.

Interconnecting inputs for HW limit switches with Boolean tags

Instead of using digital inputs, you can also use Boolean tags to control the HW limit switches. For this, create a data block with the tags without the "Optimized block access" attribute.
Specify the addresses of these Boolean tags in the technology object data block.

Defining a data block for switching the HW limit switches

Proceed as follows to define the Boolean variables as HW limit switches:

1. Create a data block without the "Optimized block access" attribute, e.g. "HWLimitSwitches".
2. Define the following variables in the data block:

Name	Data type	Offset	Start value	Comment
UserData	DWord	0.0	16#0	Random data
HwLimitNeg	Bool	4.0	0	Variable for negative HW limit switch
HwLimitPos	Bool	4.1	0	Variable for positive HW limit switch

3. Use the "HwLimitPos" and "HwLimitNeg" tags in the user program to switch the HW limit switches.

Interconnecting the addresses of the Boolean tags in the technology object

To connect the HW limit switch to the address, follow these steps:

1. Open the Parameter view of the technology object.
2. Change the navigation structure to data structure.
3. Open the "PositionLimits_HW" structure.
4. Enter the values for the tags:

Name	Data type	Start value	Comment
MinSwitchAddressRid	DWord	33554433	RID for data type Boolean
MinSwitchAddressArea	Byte	132	DB memory area
MinSwitchAddressDbNumber	UInt	n	n = number of DB "HWLimitSwitches"
MinSwitchAddressOffset	UDint	32	Example in DB "HWLimitSwitches": Offset Boolean tag ("HwLimitNeg") = 4.0 Offset = (4 bytes x 8 bits/byte) + 0 bits = 32 bits
MaxSwitchAddressRid	DWord	33554433	RID for data type Boolean
MaxSwitchAddressArea	Byte	132	DB memory area
MaxSwitchAddressDbNumber	UInt	n	n = number of DB "HWLimitSwitches"
MaxSwitchAddressOffset	UDint	33	Example in DB "HWLimitSwitches" Offset Boolean tag ("HwLimitPos") = 4.1 Offset = (4 bytes x 8 bits/byte) + 1 bit = 33 bits

Result: The addresses of the HW limit switches are configured.

Writing addresses of the Boolean tags in the user program

To connect the HW limit switch to the address during runtime, follow these steps:

1. Create a data block with the "Optimized block access" attribute, e.g. "HWPositionLimitsAdress".
2. Define the following variables in the data block:

Name	Data type	Start value	Comment
MinSwitchAddressRid	DWord	16#0200_0001	RID for data type Boolean
MinSwitchAddressArea	Byte	16#84	DB memory area
MinSwitchAddressDbNumber	UInt	n	n = number of DB "HWLimitSwitches"
MinSwitchAddressOffset	UDint	32	Example in DB "HWLimitSwitches": Offset Boolean tag ("HwLimitNeg") = 4.0 Offset = (4 bytes x 8 bits/byte) + 0 bits = 32 bits
MaxSwitchAddressRid	DWord	16#0200_0001	RID for data type Boolean

Name	Data type	Start value	Comment
MaxSwitchAddressArea	Byte	16#84	DB memory area
MaxSwitchAddressDbNumber	UInt	n	n = number of DB "HWLimitSwitches"
MaxSwitchAddressOffset	UDint	33	Example in DB "HWLimitSwitches" Offset Boolean tag ("HwLimitPos") = 4.1 Offset = (4 bytes x 8 bits/byte) + 1 bit = 33 bits

3. Write the start values from the data block to the load memory of the "<TO>.PositionLimits_HW.MaxSwitchAddress" and "<TO>.PositionLimits_HW.MinSwitchAddress" tags with the "WRIT_DBL" instruction.
   You can find more information on changing restart-relevant data in the technology object in section "Changing restart-relevant data" of function manual "S7-1500/S7-1500T Motion Control Overview".
   Example of the tag "<TO>.PositionLimits_HW.MinSwitchAddress.RID":
   ```
   tempRetVal := WRIT_DBL
   (REQ := execute,
   SRCBLK := "HWPositionLimitsAdress".MinSwitchAddressRid,
   BUSY => busy,
   DSTBLK => <TO>.PositionLimits_HW.MinSwitchAddress.RID);
   ```
4. Perform a restart of the technology object.

Result: The Boolean variable is used as the input for the HW limit switch.

See also

MC_WriteParameter: Write parameter V7 (Page 252)
S7-1500 Motion Control Documentation Guide (Page 12)

5.6.3 Behavior when reaching the SW limit switch (S7-1500, S7-1500T)

The operating range of the axis is limited with software limit switches. Relative to the traversing range, always position the software limit switches within the hardware limit switches. Since the positions of the software limit switches can be flexibly configured, the operating range of the axis can be individually adapted in accordance with the current velocity profile.

When software switches are activated, an active motion comes to a stop at the position of the software limit switch. The technological object signals an error. After acknowledgment of the error, the axis can again be moved in the direction of its operating range.

Software limit switches are only in effect when there is a valid actual value after homing the technology object. The monitoring of the software limit switches is relative to the setpoint.

Approaching the software limit switches

When the software limit switch is approached, technology alarm 533 is output.

You can configure the alarm response for approaching the SW limit switches.

The technology object remains enabled.

Overrun of the software limit switches

If the software limit switches are overshot, technology alarm 534 is output.
You can configure the alarm response for crossing the SW limit switches.

Modulo function is enabled

When the modulo function is enabled, the modulo position is monitored.
The software limit switches are configured and activated in the axis configuration. The software limit switches can be activated or deactivated in the user program using the "<TO>.PositionLimits_SW.Active" tag. If the positions of both software limit switches are outside the modulo range, the monitoring has no effect. No check is made to determine whether the positions of the software limit switches are within the modulo range.

5.6.4 Retracting the SW limit switch (S7-1500, S7-1500T)

To retract the axis after violation of the software limit switch, follow the steps below:

1. Acknowledge the technology alarm.
2. Move the axis in the retraction direction into the permitted operating range.
   - Negative SW limit switch: For retracting, move in the direction of positive position values.
   - Positive SW limit switch: For retracting, move in the direction of negative position values.

   If the axis is outside the valid traversing range, e.g. due to homing, the current position is the effective SW limit switch. As soon as the axis has been moved back into the valid traversing range, the configured SW limit switch takes effect.
   If you overtravel the effective SW limit switch in the opposite retraction direction, technology alarm 533 or 534 is issued.

5.6.5 Configuring SW limit switches (S7-1500, S7-1500T)

To configure the HW limit switches for the positioning axis/synchronous axis technology object, follow these steps:

1. In the configuration, navigate to "Extended parameters > Limits > Position limits".
2. Click the check box "Enable SW limit switches".
   The function of the negative and positive SW limit switch is active.

   NOTE
   Activated software limit switches act only on a homed axis.

3. For "Position negative SW limit switch", configure the position of the SW limit switch with the smaller position value.
4. For "Position positive SW limit switch", configure the position of the SW limit switch with the higher position value.

5. For "Reaction when a SW limit switch is reached", configure the alarm response of the technology alarm 533.
   - Stop with maximum dynamic values: Axis stops when the SW limit switch is approached with maximum dynamic values
   - Stop with current dynamic values: Axis stops when the SW limit switch is approached with the programmed dynamic values of the active job.

   NOTE

   If the axis approaches the software limit switch as a following axis in synchronous operation or as a kinematics axis during a kinematic movement, the axis is stopped with maximum dynamic values regardless of the selected setting.

   The technology object remains enabled.
6. For "Reaction when a SW limit switch is exceeded", configure the alarm response of the technology alarm 534:
   - Keep emergency stop and axis enable: When the software limit switch is overtraveled, the axis brakes to a standstill with the emergency stop deceleration without jerk limitation. The axis remains enabled.
   - Disable axis: Axis is disabled when the SW limit switch is overtraveled and braked with the braking ramp configured in the drive.

5.6.6 Tags: Traversing range limitation (S7-1500, S7-1500T)

Software limit switches

The following technology object tags are relevant for software limit switches:

Status indicators	
Tag	**Description**
<TO>.StatusWord.X15 (SWLimitMinActive)	Negative software limit switch is active.
<TO>.StatusWord.X16 (SWLimitMaxActive)	Positive software limit switch is active.
<TO>.ErrorWord.X8 (SWLimit)	An alarm is pending, indicating that a software limit switch has been violated.

Control bits	
Tag	**Description**
<TO>.PositionLimits_SW.Active	Enables/disables the monitoring of the software limit switches.

Position values	
Tag	**Description**
<TO>.PositionLimits_SW.MinPosition	Position of the negative software limit switch
<TO>.PositionLimits_SW.MaxPosition	Position of the positive software limit switch

Position values		
Tag	**Description**	
<TO>.PositionLimits_SW.LimitReached-Behavior	Alarm response when a software limit switch is approached with a single axis job	
	0	Stop axis with maximum dynamics
	1	Stop axis with the programmed dynamic parameters
<TO>.PositionLimits_SW.LimitExceeded-Behavior	Alarm response when overrunning a software limit switch	
	0	Disable axis
	1	Brake the axis with the configured emergency stop deceleration without any jerk limitation and bring it to a standstill.

Hardware limit switches

The following technology object tags are relevant for hardware limit switches:

Status indicators	
Tag	**Description**
<TO>.StatusWord.X17 (HWLimitMinActive)	Negative hardware limit switch is active.
<TO>.StatusWord.X18 (HWLimitMaxActive)	Positive hardware limit switch is active.
<TO>.ErrorWord.X9 (HWLimit)	An alarm is pending. A hardware limit switch was reached.

Control bits	
Tag	**Description**
<TO>.PositionLimits_HW.Active	Enables/disables the monitoring of the hardware limit switches.

Parameters		
Tag	**Description**	
<TO>.PositionLimits_HW.MinSwitchLevel	Level selection for activation of the low hardware limit switch	
	FALSE	At low level, the signal is active.
	TRUE	At high level, the signal is active.
<TO>.PositionLimits_HW.MinSwitchAddress	Address for the negative hardware limit switch	
<TO>.PositionLimits_HW.MaxSwitch-Level	Level selection for activation of the high hardware limit switch	
	FALSE	At low level, the signal is active.
	TRUE	At high level, the signal is active.
<TO>.PositionLimits_HW.MaxSwitchAddress	Address for the positive hardware limit switch	

Parameters		
Tag	**Description**	
<TO>.PositionLimits_HW.Mode	Type of HW limit switch	
	0	The HW limit switches are non-traversable.
	1	The HW limit switches are mechanically traversable.
<TO>.PositionLimits_HW.ApproachBehavior	Alarm response when approaching a HW limit switch	
	0	Disable axis
	1	Keep emergency stop and axis enable

5.6.7 Long-term accuracy (S7-1500, S7-1500T)

Long-term accuracy means that the technological set and actual position can always be determined uniquely.

The maximum technological position depends on the selected unit of measure and the maximum display of 9.0E12 mm. At higher resolution the maximum display is reduced to 9.0E9 mm.

The maximum travel time in which the technological position is accurate without rounding error depends on the maximum position and the velocity. The maximum travel time applies likewise to axes with and without modulo setting.

You can use the following equation to estimate when the limit of long-term accuracy is reached:

$$\text{Travel time} = \frac{\text{Maximum position}}{\text{Velocity}}$$

Example of the maximum traversing time

Maximum position = 9.0E12 mm

Velocity = 20.0 m/min = 2.0E4 mm/min

$$\text{Travel time} = \frac{9.0\text{E}12\ \text{mm}}{2.0\text{E}4\ \text{mm/min}} = 4.5\text{E}8\ \text{min} \quad \triangleq 856\ \text{years}$$

Unit of measure	Maximum travel time
nm, µm, mm, m, km, in, ft, mi, rad, °	4.5E8 min ≙ 856 years
mm[1], °[1]	4.5E5 min ≙ 0.856 years

[1] Position values with higher resolution or six decimal places. The maximum position is reduced to 9.0E9 mm and thus also the travel time.

A change in the velocity has the consequence that the traversing time changes accordingly.

Measures to maintain long-term accuracy

To reset the travel time, carry out the following measures before the maximum travel time has expired or before reaching the maximum position:

- Incremental encoder: Home the incremental encoder again.
- Absolute encoder: Perform an absolute encoder adjustment with the default of the currently known position.

See also

Units of measure (Page 33)

5.7 Homing (S7-1500, S7-1500T)

With homing, you create the relationship between the position in the technology object and the mechanical position. The actual position value in the technology object is assigned to a homing mark at the same time. This homing mark represents a known mechanical position.

With incremental actual values this process is called homing; with absolute actual values it is called absolute encoder adjustment.

Homing is a requirement for display of the correct position for the technology object and for absolute positioning.

Type of homing

Homing can occur by means of an independent homing motion (active homing), the detection of a homing mark during a motion initiated (passive homing) or a direct position assignment.

You select the homing type via the "Mode" parameter of the "MC_Home (Page 209)" instruction.

A distinction is made between the following types of homing:

- **Active homing**
  Active homing initiates a homing movement and performs the necessary homing mark approach. When the homing mark is detected, the actual position is set to the value specified in "MC_Home". It is possible to specify a home position offset. Retraction to the home position offset occurs automatically during the home position approach.
  Active homing has an effect on the operative encoder.
  When active homing starts, current traversing movements are aborted.
  During active homing with absolute encoder, an absolute value offset is retentively saved beyond the switching on/off of the controller.
  Active homing (Page 133)
- **Passive homing**
  The homing job does not perform its own homing motion. When the homing mark is detected during a motion initiated on the user side, the actual position is set to the value specified in "MC_Home".
  Passive homing has an effect on the operative encoder.
  Passive homing is also called homing on the fly.
  Passive homing (Page 142)

- **Direct homing**
  With the homing job, the actual position is set directly to the value specified in "MC_Home" or is offset by this value.
  Direct homing (Page 148)
- **Set position setpoint**
  The set position of the technology object is set or offset directly to the value specified in "MC_Home". The following error remains.
  Set setpoint position (Page 150)
- **Absolute encoder adjustment**
  The supplied absolute value is assigned to the associated mechanical axis position by means of the absolute encoder adjustment. You carry out the absolute encoder adjustment once. The absolute value offset is retentively saved beyond the switching on/off of the controller.
  Absolute value adjustment (Page 150)
- **Incremental encoder adjustment**
  With the homing job, the actual position is set directly to the value specified in "MC_Home".
  Incremental encoder adjustment (Page 153)

Homing mode for active and passive homing

Various homing modes are available for the positioning axis/synchronous axis and external encoder technology objects.

Homing mode	Application	Description of the process
Reference cam and zero mark via PROFIdrive telegram.	Homing should take place on the zero mark, but the zero mark is present several times in the traversing range of the axis. High homing accuracy	The system checks for when the reference cam is reached. After the reference cam has been reached and left again in the assigned homing direction, zero mark detection is enabled via the PROFIdrive telegram. When the zero mark is reached in the pre-selected direction, then the actual position of the technology object is set to the homing mark position.
Use zero mark via PROFIdrive telegram	The encoder zero mark is only available once in the entire traversing range of the axis. An external zero mark is available in the traversing range of the axis. High homing accuracy	The system enables zero mark detection, as soon as the actual value of the technology object moves in the assigned homing direction. When the zero mark is reached in the specified homing direction, the actual position of the technology object is set to the homing mark position.
Digital input	Can be used without a zero mark. Hardware limit switch can be used as a digital input. Lower homing accuracy than when homing via zero marks. A low homing velocity increases the accuracy.	The system checks the state of the digital input, as soon as the actual value of the axis or encoder moves in the assigned homing direction. When the homing mark is reached (setting of the digital input) in the specified homing direction, the actual position of the technology

Homing mode	Application	Description of the process
		object is set to the homing mark position. Note: The digital inputs must be placed into the process image partition "PIP OB Servo". The filter time of the digital inputs must be set smaller than the duration of the input signal at the reference point switch.

Supported encoders and technology objects

The following table shows which homing types are possible with the respective technology objects:

Mode	Positioning axis/synchronous axis with incremental encoder	Positioning axis/synchronous axis with absolute encoder	External encoder incremental	External encoder absolute
Active homing ("Mode" = 3, 5)	✓	✓	-	-
Passive homing ("Mode" = 2, 8, 10)	✓	✓	✓	✓
Set actual position ("Mode" = 0) Relative offset to the actual position ("Mode" = 1)	✓	✓	✓	✓
Set position setpoint (direct absolute) ("Mode" = 11) Relative offset of the position setpoint ("Mode" = 12)	✓	✓	✓	✓
Absolute encoder adjustment ("Mode" = 6, 7)	-	✓	-	✓
Incremental encoder adjustment ("Mode" = 13)	✓	-	✓	-

Start homing job

To start the homing job, activate the Motion Control instruction "MC_Home".

Homing status

The "<TO>.StatusWord.X5 (HomingDone)" tag of the technology object indicates whether the technology object axis or external encoder is homed.

The "<TO>.StatusWord.X11 (HomingCommand)" tag of the technology object indicates that a homing job is active.

The "<TO>.ErrorWord.X10 (HomingFault)" tag of the technology object indicates an error during homing.
The "<TO>.StatusSensor[1..4].Adjusted" tag shows whether the encoder is homed with one of the following homing types:

- Active homing
- Passive homing
- Absolute encoder adjustment
- Incremental encoder adjustment

NOTE

Once the tag "<TO>.StatusSensor[1..4].Adjusted" is set for an absolute encoder, it remains set until you download new settings for the encoder.

Home the axis again when replacing the absolute encoder.

After homing with the homing types Direct homing ("Mode" = 0, 1) and set position setpoint ("Mode" = 11,12) is completed, the "<TO>.StatusWord.X5 (HomingDone)" tag of the axis or external encoder technology object is set, but not the "<TO>.StatusSensor[1..4].Adjusted" tag of the encoder.

See also

Homing SINAMICS drives with external zero marks (Page 153)

5.7.1 Terms for active and passive homing (S7-1500, S7-1500T)

Homing mark

A homing mark is an input signal, on whose occurrence a known mechanical position can be assigned to the actual values.
A homing mark can be:

- **A zero mark**
  The zero mark of an incremental encoder or an external zero mark is used as a homing mark.
  The zero mark is detected at the drive module or encoder module and transmitted in the PROFIdrive telegram. Perform the setting and evaluation as an encoder zero mark or external zero mark at the drive module and encoder module.
- **An edge at the digital input**
  The negative or positive edge at a digital input is used as a homing mark.

Reference cam

If there are several zero marks in the traversing range, the reference cam is used to select a specific zero mark before or after the reference cam.

Homing mark position

This is the position assigned to the homing mark.
With active homing, the homing mark position corresponds to the home position minus home position offset.
With passive homing, the homing mark position corresponds to the home position.

Home position

At the end of the active homing motion, the axis arrives at the home position.

Home position offset

The difference between the home position and the homing mark position is the home position offset.
A home position offset only has an effect with active homing. The offset is traversed after the synchronization of the axis using the Motion Control instruction "MC_Home". For axes with modulo setting, the home position offset is always traversed with the direction setting for the shortest path.

Direction reversal at the hardware limit switch (reversing cam)

Hardware limit switches can be used as reversing cams in active homing. If the homing mark was not detected or was approached from the wrong side, the motion continues in the opposite direction after the reversing cam.

Approach velocity

With active homing, the technology object approaches the reference cam/digital input at the approach velocity.
A home position offset is also retracted at the approach velocity.

Homing velocity

With active homing, the technology object approaches the homing mark at homing velocity.

5.7.2 Active homing (S7-1500, S7-1500T)

5.7.2.1 Active homing with homing output cam and zero mark (S7-1500, S7-1500T)

The following examples show homing motions in the positive and negative directions.

Example of homing in the positive direction

The approach to the homing mark and the home position occurs in the positive direction. The following figure shows the homing motion with the following settings:

- Active homing with reference cam and zero mark
- Approach in the positive direction
- Homing in the positive direction
- Positive home position offset

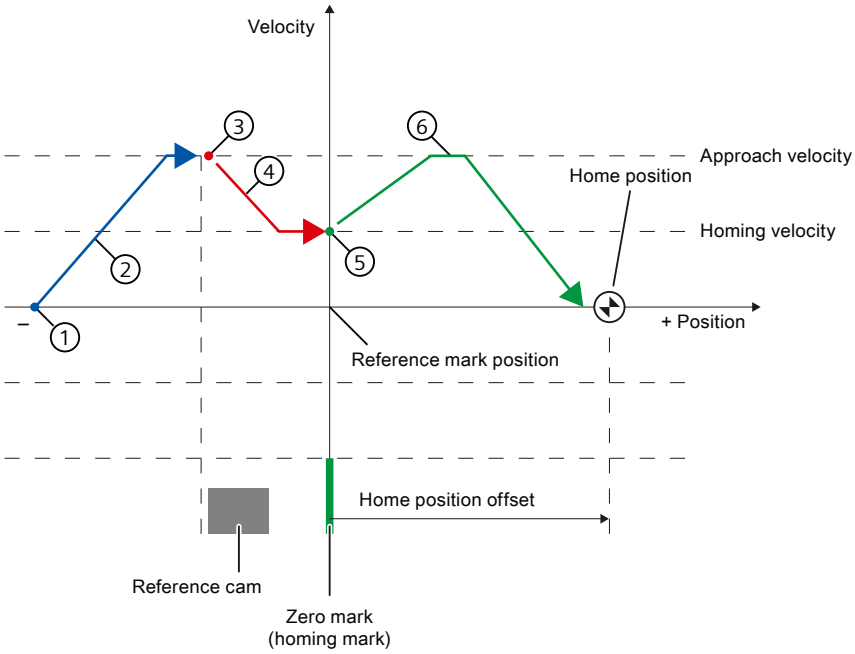

Motion sequence

① Start of active homing via the Motion Control instruction "MC_Home"

② Approach to the reference cam in approach direction with approach velocity

③ Enable detection of the reference cam and homing mark detection

④ Approach to the homing mark with homing velocity

⑤ Detection of the homing mark

⑥ Approach to the home position with approach velocity.

NOTE

If the velocity cannot be reduced to the homing velocity between detection of the reference cam and the zero mark, homing is performed at the velocity present when the zero mark is crossed.

Example of homing in the negative direction

The approach to the homing mark occurs in the negative direction by means of a direction reversal during the homing process. The approach to home position causes another direction reversal and occurs in the positive direction.

The following figure shows the homing motion with the following settings:

- Active homing with reference cam and zero mark
- Approach in the positive direction
- Homing in the negative direction
- Positive home position offset

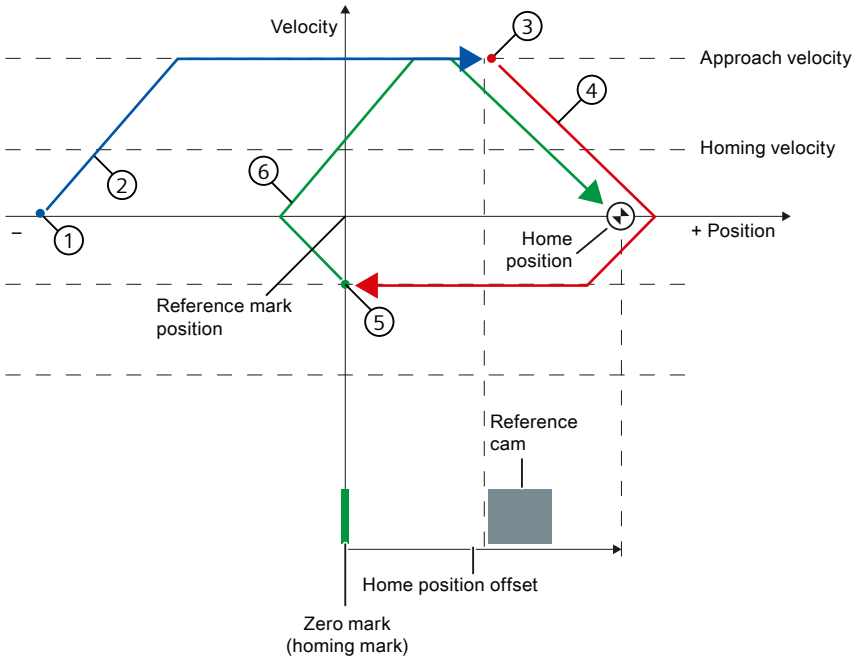

Motion sequence

① Start of active homing via the Motion Control instruction "MC_Home"

② Approach to the reference cam in approach direction with approach velocity

③ Enable detection of the reference cam and homing mark detection

④ Approach to the homing mark with homing velocity

⑤ Detection of the homing mark

⑥ Approach to the home position with approach velocity.

Requirements

- Digital input as PLC tag
- The technology object has been enabled.

Procedure

To make the technology object active with reference cam and zero mark homing, follow these steps:

1. In the project tree, in the configuration of the technology object, navigate to "Extended parameters > Homing > Active homing".
2. In the "Select the homing mode" field, select the "Use reference cam and zero mark via PROFIdrive telegram" option.

3. For "Digital input homing mark/cam", select the PLC tag of the digital input.
4. Select the appropriate signal level for the digital input under "Level selection".
5. In the "Approach direction" field, select the direction in which the reference cam is approached:
   - Positive: Approach direction in direction of positive position values
   - Negative: Approach direction in direction of negative position values
6. In the "Homing direction" field, select the direction in which the zero mark is approached for homing:
   - Positive: Homing direction in the direction of positive position values
   - Negative: Homing direction in the direction of negative position values
7. Under "Approach velocity", set the velocity with which the "reference cam" is approached. Any configured home position offset is traversed at the same velocity.
8. Under "Homing velocity", set the velocity with which the zero mark is approached for homing.
9. If the home position is different from the homing mark position, enter a corresponding home position offset under "Home position offset". The axis approaches the home position at approach velocity.
10. Configure the "Home position". The home position configured here is in effect when the Motion Control instruction "MC_Home" is executed with "Mode" = 5.
11. To home the technology object with the home position configured in the technology object, call the "MC_Home" instruction with "Mode" = 5.
    - When the homing mark is recognized, the position is set to:
      Position = value in tag "<TO>.Homing.HomePosition" minus "<TO>.Sensor[1..4].ActiveHoming.HomePositionOffset"
    - The "Homed" status of the technology object is set to TRUE.
    - The axis moves to the position that is specified in the "<TO>.Homing.HomePosition" tag.
    - The "Done" parameter in "MC_Home" is set to TRUE after moving to the home position.
12. To home the technology object and specify the home position directly on the homing job, call the "MC_Home" instruction with "Mode" = 3 and "Position" = <Home position>.
    - When the homing mark is recognized, the position is set to:
      Position = value in parameter "Position" minus "<TO>.Sensor[1..4].ActiveHoming.HomePositionOffset"
    - The "Homed" status of the technology object is set to TRUE.
    - The axis moves to the position that is specified in the "Position" parameter.
    - The "Done" parameter in "MC_Home" is set to TRUE after moving to the home position.

See also

Homing SINAMICS drives with external zero marks (Page 153)

5.7.2.2 Active homing with zero mark (S7-1500, S7-1500T)

Example of homing motion

The following figure shows an example of the homing motion with the following settings:

- Active homing with zero mark
- Homing in the positive direction
- Positive home position offset

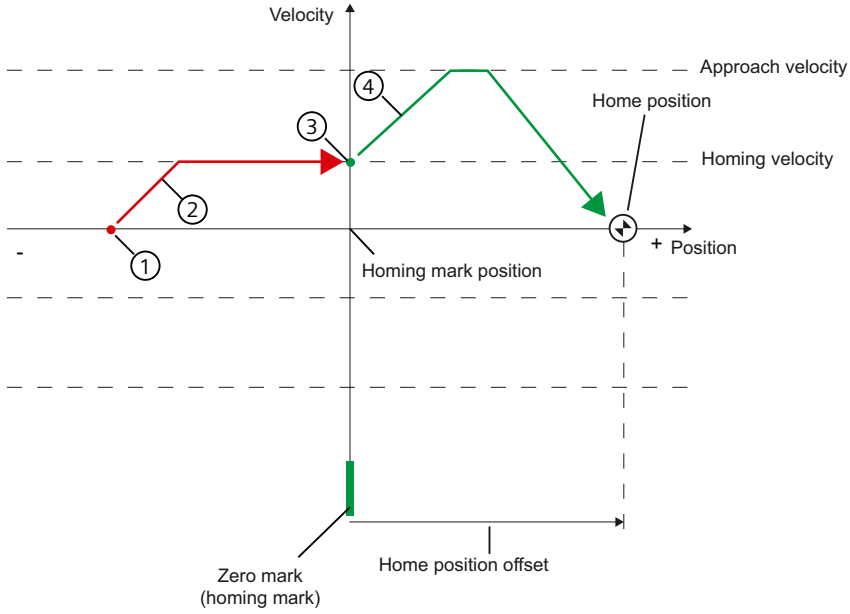

Motion sequence

① Start of active homing via the "MC_Home" Motion Control instruction

② Approach to the homing mark in the homing direction with homing velocity

③ Detection of the homing mark

④ Approach to the home position with approach velocity.

Requirement

- The technology object has been enabled.

Procedure

To home the technology object actively with zero mark, follow these steps:

1. In the project tree, in the configuration of the technology object, navigate to "Extended parameters > Homing > Active homing".
2. In the "Select the homing mode" field, select the "Use zero mark via PROFIdrive telegram" option.

3. In the "Approach direction" field, select the direction in which the zero mark is approached:
   - Positive: Homing direction in the direction of positive position values
   - Negative: Homing direction in direction of negative position values
4. Under "Approach velocity", set the velocity with which any set home position offset is retracted.
5. Under "Homing velocity", set the velocity with which the homing mark is approached.
6. If the home position is different from the homing mark position, enter a corresponding home position offset under "Home position offset". The axis approaches the home position at approach velocity.
7. For "Home position", configure the absolute home position coordinate of the home position. The home position configured here is in effect when the Motion Control instruction "MC_Home" is executed with "Mode" = 5.
8. To home the technology object with the home position configured in the technology object, call the "MC_Home" instruction with "Mode" = 5.
   - When the homing mark is recognized, the position is set to:
     Position = value in tag "<TO>.Homing.HomePosition" minus "<TO>.Sensor[1..4].ActiveHoming.HomePositionOffset"
   - The "Homed" status of the technology object is set to TRUE.
   - The axis moves to the position that is specified in the "<TO>.Homing.HomePosition" tag.
   - The "Done" parameter in "MC_Home" is set to TRUE after moving to the home position.
9. To home the technology object and specify the home position directly on the homing job, call the "MC_Home" instruction with "Mode" = 3 and "Position" = <Home position>.
   - When the homing mark is recognized, the position is set to:
     Position = value in parameter "Position" minus "<TO>.Sensor[1..4].ActiveHoming.HomePositionOffset"
   - The "Homed" status of the technology object is set to TRUE.
   - The axis moves to the position that is specified in the "Position" parameter.
   - The "Done" parameter in "MC_Home" is set to TRUE after moving to the home position.

See also

Homing SINAMICS drives with external zero marks (Page 153)

5.7.2.3 Active homing with digital input (S7-1500, S7-1500T)

Example of homing motion

The following figure shows an example of the homing motion with the following settings:

- Active homing with digital input
- Approach in the positive direction
- Homing mark on the positive side of the digital input

- Positive home position offset

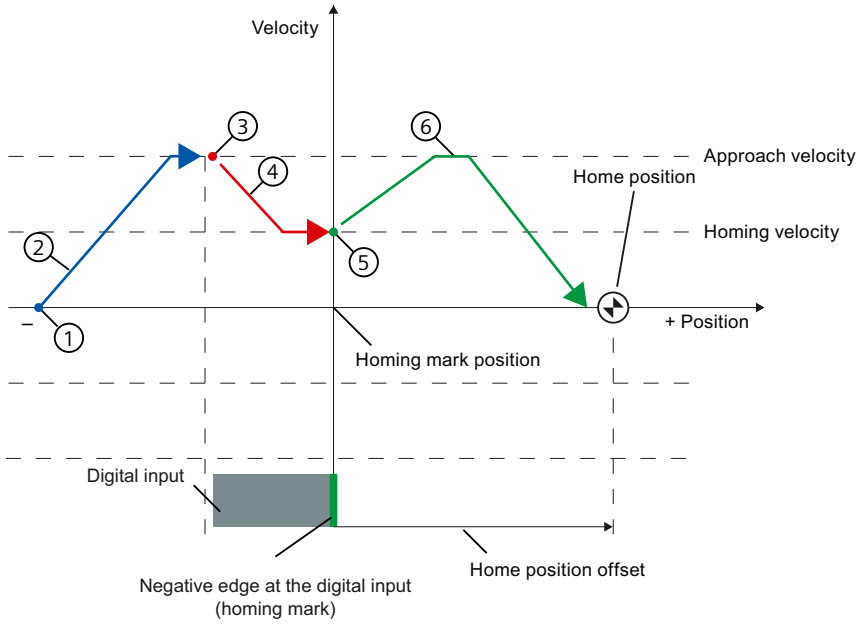

Motion sequence

① Start of active homing via the "MC_Home" Motion Control instruction

② Move on the positive edge at the digital input in the approach direction with approach velocity

③ Detection of the positive edge at the digital input

④ Approach to the homing mark in the homing direction with the homing velocity

⑤ Detection of the homing mark

⑥ Approach to the home position with approach velocity.

NOTE

If the velocity cannot be reduced to the homing velocity between detection of the reference cam and the zero mark, homing is performed at the velocity present when the zero mark is crossed.

Requirement

- Digital input as PLC tag
- The technology object has been enabled.

Procedure

To home the technology object actively with a digital input, follow these steps:

1. In the project tree, in the configuration of the technology object, navigate to "Extended parameters > Homing > Active homing".
2. In the "Select the homing mode" field, select the "Use homing mark via digital input" option.

3. For "Digital input homing mark/cam", select the PLC tag of the digital input.
4. Select the appropriate signal level for the digital input under "Level selection".
5. In the "Approach direction" field, select the direction in which the digital input is approached:
   – Positive: Approach direction in direction of positive position values
   – Negative: Approach direction in direction of negative position values
6. In the "Homing direction" field, select the direction in which the homing mark of the digital input is approached for homing:
   – Positive: Homing direction in the direction of positive position values
   – Negative: Homing direction in the direction of negative position values
7. In the "Homing mark" field, select which side of the digital input is to be used as the homing mark.
   – Positive side
   – Negative side
8. Under "Approach velocity", set the velocity with which the "digital input" is approached. Any configured home position offset is traversed at the same velocity.
9. Under "Homing velocity", set the velocity with which the homing mark is approached.
10. If the home position is different from the homing mark position, enter a corresponding home position offset under "Home position offset". The axis approaches the home position at approach velocity.
11. For "Home position", configure the absolute home position coordinate of the home position. The home position configured here is in effect when the Motion Control instruction "MC_Home" is executed with "Mode" = 5.
12. To home the technology object with the home position configured in the technology object, call the "MC_Home" instruction with "Mode" = 5.
    – When the homing mark is recognized, the position is set to:
      Position = value in tag "<TO>.Homing.HomePosition" minus "<TO>.Sensor[1..4].ActiveHoming.HomePositionOffset"
    – The "Homed" status of the technology object is set to TRUE.
    – The axis moves to the position that is specified in the "<TO>.Homing.HomePosition" tag.
    – The "Done" parameter in "MC_Home" is set to TRUE after moving to the home position.
13. To home the technology object and specify the home position directly on the homing job, call the "MC_Home" instruction with "Mode" = 3 and "Position" = <Home position>.
    – When the homing mark is recognized, the position is set to:
      Position = value in parameter "Position" minus "<TO>.Sensor[1..4].ActiveHoming.HomePositionOffset"
    – The "Homed" status of the technology object is set to TRUE.
    – The axis moves to the position that is specified in the "Position" parameter.
    – The "Done" parameter in "MC_Home" is set to TRUE after moving to the home position.

5.7.2.4 Direction reversal at the hardware limit switch (reversing cam) (S7-1500, S7-1500T)

During active homing, the hardware limit switch can optionally be used as a reversing cam. If the homing mark is not detected or the motion was not in the homing direction, the motion continues in the opposite direction with the approach velocity after the reversing cam.

When the hardware limit switch is reached, the default settings for dynamics take effect. Deceleration with the emergency deceleration does not hereby occur.

NOTICE
Avoid moving to a mechanical endstop Ensure by one of the following measures, that in a direction reversal the machine does not move to a mechanical endstop. • Keep the approach velocity low. • Increase the configured default acceleration/deceleration. • Increase the distance between the hardware limit switch and the mechanical endstop.

5.7.2.5 Active homing to a hardware limit switch (S7-1500, S7-1500T)

If only hardware limit switches are available on the axis and no separate digital inputs are available as homing marks, then you can home the axis to the hardware limit switches.

NOTICE
Avoid moving to a mechanical end stop Take one of the following measures to ensure that the machine does not hit a mechanical stop when homing is active with the hardware limit switch as the homing mark: • Keep the approach velocity low. • Increase the configured acceleration/deceleration. • Increase the distance between the hardware limit switch and the mechanical end stop. • Select a home position offset in direction of the traversing range of the axis against the mechanical stop.

Procedure

To use the signal of the hardware limit switch as a homing mark, follow these steps:

1. In the project tree, in the configuration of the technology object, navigate to "Extended parameters > Homing > Active homing".
2. In the "Select the homing mode" field, select the "Use homing mark via digital input" option.
3. For "Digital input homing mark/cam", select the PLC tag of the hardware limit switch, e.g. "HwLimitPos".
4. Select the appropriate signal level for the digital input under "Level selection".
5. In the "Approach direction" field, select the direction in which the digital input is approached:
   – Positive: Approach direction in direction of positive position values
   – Negative: Approach direction in direction of negative position values

6. In the "Homing direction" field, select the direction in which the homing mark of the digital input is approached for homing:
   - Positive: Homing direction in the direction of positive position values
   - Negative: Homing direction in the direction of negative position values
7. In the "Homing mark" field, select which side of the digital input is to be used as the homing mark. The following recommendation applies to hardware limit switches in order not to traverse the axis unnecessarily far in the direction of the mechanical stop.
   - Positive side of the negative hardware limit switch
   - Negative side of the positive hardware limit switch
8. Under "Approach velocity", set the velocity with which the hardware limit switch is approached. Any configured home position offset is traversed at the same velocity.
9. Under "Homing velocity", set the velocity with which the homing mark is approached.
10. If the home position is different from the homing mark position, enter a corresponding home position offset under "Home position offset". The axis approaches the home position with the approach velocity. When homing to the hardware limit switch, the following settings are recommended in order to move to the home position in the direction of the traversing range or against the mechanical stop.
    - Negative hardware limit switch: Home position offset ≥ 0
    - Positive hardware limit switch: Home position offset ≤ 0
11. For "Home position", configure the absolute home position coordinate of the home position. The home position configured here is in effect when the Motion Control instruction "MC_Home" is executed with "Mode" = 5.
12. Disable the existing hardware limit switch with the Motion Control instruction "MC_WriteParameter".
13. To start active homing, call the "MC_Home" instruction in the user program.
    - To home the technology object with the home position configured in the technology object, call the "MC_Home" instruction with "Mode" = 5.
    - To home the technology object with the home position at the parameter "Position" home position, call the "MC_Home" instruction with "Mode" = 3.
14. Move the axis back to the working area between the hardware limit switches.
15. Activate existing hardware limit switches with the "MC_WriteParameter" Motion Control instruction.

5.7.3 Passive homing (S7-1500, S7-1500T)

5.7.3.1 Passive homing with homing output cam and zero mark (S7-1500, S7-1500T)

Example of homing motion

The following figure shows an example of the homing motion with the following settings:

- Passive homing with reference cam and zero mark
- Homing in the positive direction

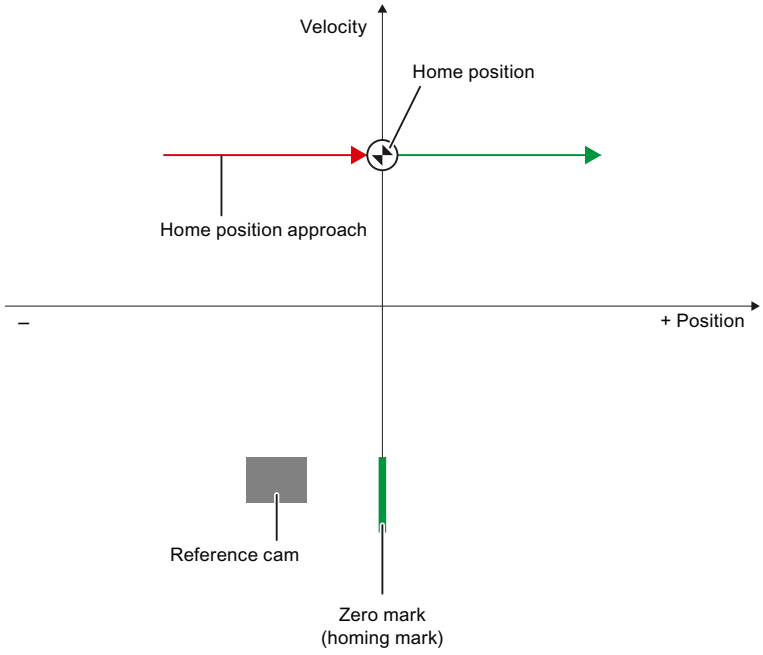

Motion sequence

① Activation of passive homing using the Motion Control instruction "MC_Home"

② Motion due to a Motion Control job from the user.
The detection of the reference cam and homing mark is enabled when the actual position value of the axis or encoder moves in the assigned homing direction.

③ Detection of the reference output cam

④ Departure from the reference output cam
The departure from the reference cam enables the detection of the homing mark.

⑤ Detection of the homing mark

NOTE

If the motion direction changes after departure from the reference cam and before detection of the homing mark, the reference cam must be detected again. The Motion Control instruction "MC_Home" remains enabled.

Requirements

- Digital input as PLC tag
- The technology object has been enabled.

Procedure

To home the technology object passively with reference cam and zero mark, follow these steps:

1. In the project tree, in the configuration of the technology object, navigate to "Extended parameters > Homing > Passive homing".
2. In the "Select the homing mode" field, select the "Use reference cam and zero mark via PROFIdrive telegram" option.
3. For "Digital input homing mark/cam", select the PLC tag of the digital input.
4. Select the appropriate signal level for the digital input under "Level selection".
5. In the "Homing direction" field, select the direction in which the next zero mark is to be approached for homing.
   - Positive: The axis moves in the direction of positive position values.
   - Negative: The axis moves in the direction of negative position values.
   - Current: The currently effective approach direction is used for homing.
6. For "Home position", configure the absolute home position coordinate of the home position. The home position configured here is in effect when the Motion Control instruction "MC_Home" is executed with "Mode" = 10.
7. To home the technology object with the home position configured in the technology object, call the "MC_Home" instruction with "Mode" = 10.
8. To home the technology object and specify the home position directly on the homing job, call the "MC_Home" instruction with "Mode" = 8 or "Mode" = 2 (without resetting the "homed" status).
9. Traverse the axis in the configured homing direction.
   - The detection of the zero mark/homing mark is enabled after the reference cam has been traversed.
   - When the homing mark is detected, the position of the axis or encoder is set depending on the mode:
     "Mode" = 10: Position = value in tag "<TO>.Homing.HomePosition"
     "Mode" = 8 or "Mode" = 2: Position = value in parameter "Position"
   - The axis is homed as soon as the zero mark/homing mark is reached or detected.

5.7.3.2 Passive homing with zero mark (S7-1500, S7-1500T)

Example of homing motion

The following figure shows an example of the homing motion with the following settings:

- Passive homing with zero mark
- Homing in the positive direction

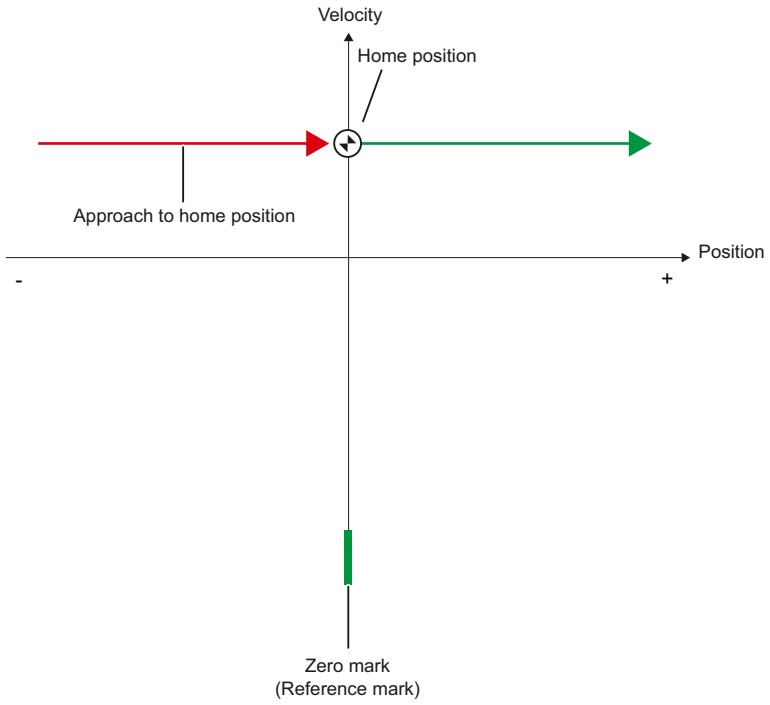

Motion sequence

① Activation of passive homing using the Motion Control instruction "MC_Home"

② Motion due to a Motion Control job from the user
The detection of the reference cam and homing mark is enabled when the actual position value of the axis or encoder moves in the assigned homing direction.

③ Detection of the homing mark

Requirement

- Technology object is enabled.

Procedure

To home the technology object passively with zero mark, follow these steps:

1. In the project tree, in the configuration of the technology object, navigate to "Extended parameters > Homing > Passive homing".
2. In the "Select the homing mode" field, select the "Use zero mark via PROFIdrive telegram" option.

3. In the "Homing direction" field, select the direction in which the next zero mark is to be approached for homing.
   - Positive: The axis moves in the direction of positive position values.
   - Negative: The axis moves in the direction of negative position values.
   - Current: The currently effective approach direction is used for homing.
4. For "Home position", configure the absolute home position coordinate of the home position. The home position configured here is in effect when the Motion Control instruction "MC_Home" is executed with "Mode" = 10.
5. To home the technology object with the home position configured in the technology object, call the "MC_Home" instruction with "Mode" = 10.
6. To home the technology object and specify the home position directly on the homing job, call the "MC_Home" instruction with "Mode" = 8 or "Mode" = 2 (without resetting the "homed" status).
7. Traverse the axis in the configured homing direction.
   - The detection of the zero mark/homing mark is enabled after the reference cam has been traversed.
   - When the homing mark is detected, the position of the axis or encoder is set depending on the mode:
     "Mode" = 10: Position = value in tag "<TO>.Homing.HomePosition"
     "Mode" = 8 or "Mode" = 2: Position = value in parameter "Position"
   - The axis is homed as soon as the zero mark/homing mark is reached or detected.

5.7.3.3 Passive homing with digital input (S7-1500, S7-1500T)

Example of homing motion

The following figure shows an example of the homing motion with the following settings:

- Passive homing with digital input
- Homing in the positive direction

- Homing mark on the positive side of the digital input

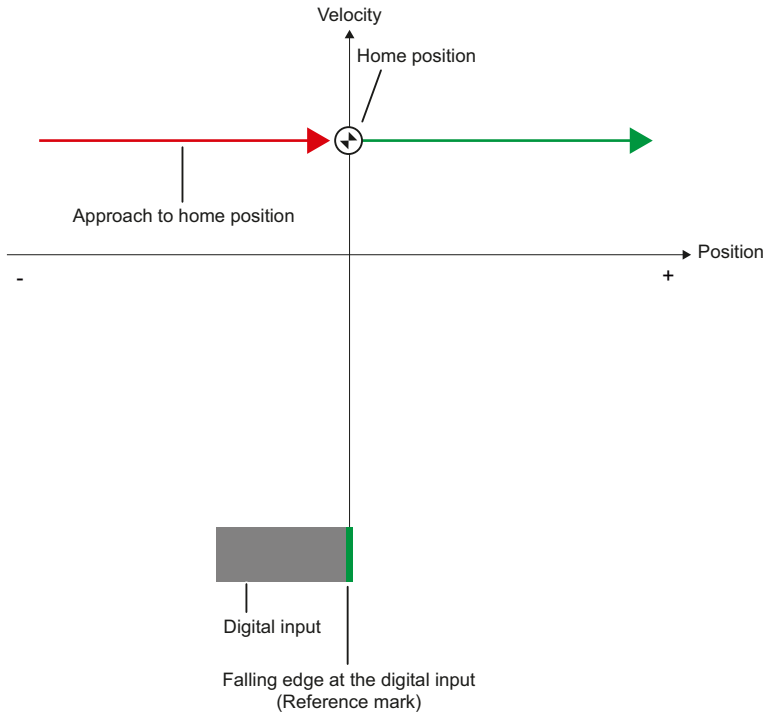

Motion sequence

① Activation of passive homing using the Motion Control instruction "MC_Home"

② Motion due to a Motion Control job from the user
The detection of the reference cam and homing mark is enabled when the actual position value of the axis or encoder moves in the assigned homing direction.

③ Detection of the homing mark
In the example, the negative edge of the switch at the digital input represents the homing mark.

Requirements

- Digital input as PLC tag
- The technology object has been enabled.

Procedure

To home the technology object passively with digital input, follow these steps:

1. In the project tree, in the configuration of the technology object, navigate to "Extended parameters > Homing > Passive homing".
2. In the "Select the homing mode" field, select the "Use homing mark via digital input" option.
3. For "Digital input homing mark/cam", select the PLC tag of the digital input.
4. Select the appropriate signal level for the digital input under "Level selection".

5. In the "Homing direction" field, select the direction in which the next zero mark is to be approached for homing.
   - Positive: The axis moves in the direction of positive position values.
   - Negative: The axis moves in the direction of negative position values.
   - Current: The currently effective approach direction is used for homing.
6. In the "Homing mark" field, select which side of the digital input is to be used as the homing mark.
   - Positive side
   - Negative side
7. For "Home position", configure the absolute home position coordinate of the home position. The home position configured here is in effect when the Motion Control instruction "MC_Home" is executed with "Mode" = 10.
8. To home the technology object with the home position configured in the technology object, call the "MC_Home" instruction with "Mode" = 10.
9. To home the technology object and specify the home position directly on the homing job, call the "MC_Home" instruction with "Mode" = 8 or "Mode" = 2 (without resetting the "homed" status).
10. Traverse the axis in the configured homing direction.
    - The detection of the zero mark/homing mark is enabled after the reference cam has been traversed.
    - When the homing mark is detected, the position of the axis or encoder is set depending on the mode:
      "Mode" = 10: Position = value in tag "<TO>.Homing.HomePosition"
      "Mode" = 8 or "Mode" = 2: Position = value in parameter "Position"
    - The axis is homed as soon as the zero mark/homing mark is reached or detected.

5.7.3.4 Cancel passive homing (S7-1500, S7-1500T)

Requirements

- A job for passive homing with the instruction "MC_Home" ("Mode" = 2, 8, 10) was started.
- The technology object has not yet been homed.

Procedure

To cancel an active job for passive homing, follow these steps:

- Call the "MC_Home" instruction with "Mode" = 9.
  - When the active "MC_Home" job for passive homing ("Mode" = 2, 8, 10) is overridden by another "MC_Home" job with "Mode" = 9, the running job is canceled with the parameter "CommandAborted" = TRUE.
  - The overriding job with "Mode" = 9 signals successful execution with parameter "Done" = TRUE.

5.7.4 Direct homing (S7-1500, S7-1500T)

Depending on the configured mode, the position of the positioning axis/synchronous axis or external encoder technology objects can be absolutely or relatively set with "MC_Home".

Requirement

- The technology object is in position-controlled mode.

Procedure

Set actual position absolutely

To set the actual position absolutely, proceed as follows:

1. In the "MC_Home" Motion Control instruction, enter the absolute actual position in the "Position" parameter.
2. Call the "MC_Home" Motion Control instruction with parameter "Mode" = 0.

The position is set to the value specified in the "Position" parameter.

Set actual position relatively

To set the actual position relatively, proceed as follows:

1. In the "MC_Home" Motion Control instruction, enter the relative actual position in the "Position" parameter.
2. Call the "MC_Home" Motion Control instruction with parameter "Mode" = 1.

The position is set to the current position plus the value specified in the "Position" parameter.

Direct homing at fixed stop

For direct homing at fixed stop, all motions must be programmed in the user program. Change the configuration data directly in the user program. The fixed stop is used as homing mark.

NOTICE
Too fast manual traversing to the fixed stop Too fast a manual traversing of the axis can lead to machine damage. Move the axis manually with low speed/velocity. Configure a suitable torque limit.

To set the position at the fixed stop absolutely or relatively, proceed as follows:

1. Activate a suitable fixed stop detection with the Motion Control instruction "MC_TorqueLimiting".
2. Deactivate the existing hardware limit switch with the Motion Control instruction "MC_WriteParameter".
3. Move the axis to the fixed stop using a suitable motion job. For example, use the Motion Control instructions "MC_MoveRelative" or "MC_MoveJog".
4. After the axis has reached the fixed stop, execute a direct homing using the Motion Control instruction "MC_Home".
5. Move the axis back to the working area between the hardware limit switches.

6. Activate the hardware limit switch with the Motion Control instruction "MC_WriteParameter".
7. Deactivate the fixed stop detection using the Motion Control instruction "MC_TorqueLimiting".

NOTE

In the case of an axis with several encoders, the offset of the position at the sensors of all encoders is also applied with a position correction with the parameter "Mode" = 0. This prevents the sensors from diverging.

See also

MC_TorqueLimiting V7 (Page 273)
MC_WriteParameter V7 (Page 252)
MC_MoveJog V7 (Page 230)
MC_MoveRelative V7 (Page 221)
MC_Home V7 (Page 209)

5.7.5 Set setpoint position (S7-1500, S7-1500T)

You can set the position setpoint of the axis or the encoder as absolute or relative.

Requirement

- Encoder values are valid (<TO>.StatusSensor[1..4].State = 2)

Procedure

Set position setpoint absolutely

To set the position setpoint absolutely, follow these steps:

1. In the "MC_Home" Motion Control instruction, enter the absolute position setpoint in the "Position" parameter.
2. Call the "MC_Home" Motion Control instruction with parameter "Mode" = 11.

The set position of the technology object is set to the value of the "Position" parameter. The following error remains.

Set position setpoint relatively

To set the position setpoint relatively, follow these steps:

1. In the "MC_Home" Motion Control instruction, enter the relative position setpoint in the "Position" parameter.
2. Call the "MC_Home" Motion Control instruction with parameter "Mode" = 12.

The set position of the technology object is shifted by the value of the "Position" parameter. The following error remains.

5.7.6 Absolute value adjustment (S7-1500, S7-1500T)

In absolute encoder adjustment, Motion Control determines an absolute value offset that is retentively stored on the CPU.
You can set the actual position of the axis or the encoder as absolute or relative.

Requirements

- The technology object is in position-controlled mode.
- The actual encoder values are valid ("<TO>.Statussensor[1..4].State" = 2).

Absolute specification of position

To perform absolute encoder adjustment with absolute specification of position, call the Motion Control instruction "MC_Home" with the parameters "Mode" = 7 and "Position" = absolute position setpoint.
To adjust the operative encoder, enter "Sensor" = 0 at the parameter.
To adjust a non-operative encoder, enter the number of the encoder at the "Sensor" parameter. (S7-1500T)
The current position is set to the value of parameter "Position".
The absolute encoder offset is retentively saved in the "<TO>.StatusSensor[1..4].AbsEncoderOffset" tag.

Relative specification of position

To perform absolute encoder adjustment with relative specification of position, call the Motion Control instruction "MC_Home" with the parameters "Mode" = 6 and "Position" = value by which the current position is to be shifted.
To adjust the operative encoder, enter "Sensor" = 0 at the parameter.
To adjust a non-operative encoder, enter the number of the encoder at the "Sensor" parameter. (S7-1500T)
The current position is shifted by the value of parameter "Position".
The absolute encoder offset is retentively saved in the "<TO>.StatusSensor[1..4].AbsEncoderOffset" tag.

Restoring the position after switching on the CPU

Absolute actual value with setting absolute (measuring range > traversing range)
The axis position results directly from the current actual encoder value. The traversing range must be within an encoder measuring range. This means that the zero crossing of the encoder must not be located in the traversing range.
When the controller is switched on, the axis position is determined from the absolute actual encoder value.
Absolute actual value with setting cyclic absolute (measuring range < traversing range)
The encoder supplies an absolute value within its measuring range. The controller includes the traversed measuring ranges and thus determines the correct axis position beyond the measuring range.

When the controller is switched off, the traversed measuring ranges are saved in the retentive memory area of the controller.
At the next power-on, the saved traversed measuring ranges are taken into account in the calculation of the actual position value.

NOTICE
Movements of the axis while the controller is switched off can skew the actual value If the axis or the encoder is moved by more than half of the encoder measuring range while the controller is switched off, the actual value in the controller is no longer in accord with the mechanical axis position.

Resetting the absolute value offset of an encoder

To reset an absolute value offset stored retentively in the CPU, follow these steps:

1. Change the encoder type to incremental.
2. Load the technology object to the CPU.
   The retentively stored absolute value offset is deleted.
3. Change the encoder type back to absolute encoder.
4. Load the technology object to the CPU.

Specify the position of the axis again.

Save absolute encoder adjustment for device replacement on SIMATIC Memory Card

With this "MC_SaveAbsoluteEncoderData" Motion Control instruction you can save the absolute encoder adjustment data on the SIMATIC Memory Card for all technology objects with "Absolute" or "Cyclic absolute" encoder type. The data is saved on the SIMATIC Memory Card in the "UserFiles" folder as "AbsEncoderData.dat". To transfer the data of the absolute encoder adjustment into the new SIMATIC CPU when replacing the device, insert the SIMATIC Memory Card into the new SIMATIC CPU.

Alternatively, you can copy the "AbsEncoderData.dat" file into the "UserFiles" folder of another SIMATIC Memory Card and use this SIMATIC Memory Card.

You can also copy the "AbsEncoderData.dat" file in the web server of the CPU. Note that the "UserFiles" folder is write-protected on the "Filebrowser" web page. The "AbsEncoderData.dat" file must be downloaded as a user file. The assignment to the "UserFiles" folder takes place automatically.

The following requirements must be met in the loaded project of the new CPU so that you can use the data saved with "MC_SaveAbsoluteEncoderData" when replacing a device:

- Identical encoder configuration
- Identical names of technology objects
- Identical numbers of technology object data blocks

The new CPU must not contain any valid absolute encoder adjustment values. You can remove the absolute encoder adjustment values, for example, by performing a reset to factory settings without the "Format memory card" option.

If the requirements are met in the loaded project and the new CPU, the absolute encoder adjustment data saved on the SIMATIC Memory Card is transferred during startup of the CPU when replacing the device. No new absolute encoder adjustment is then necessary.

After the device replacement and the transfer of the backed-up data from the SIMATIC Memory Card to the CPU, the backup on the SIMATIC Memory Card is renamed automatically ("AbsEncoderData.bak") and is not used further. "The data backup for the absolute encoder adjustment was successfully restored" is entered in the diagnostic buffer.

MC_SaveAbsoluteEncoderData V7 (Page 254)

5.7.7 Incremental encoder adjustment (S7-1500, S7-1500T)

With the incremental encoder adjustment, you can set the absolute position of an incremental encoder with "Mode" = 13 at "MC_Home".

If the selected encoder is the operative encoder, the setpoint is automatically adjusted to the calibrated actual value during homing. The axis does not perform a compensating motion. After homing, the actual value of the axis is equal to the actual value of the encoder.

In the case of an axis with several encoders: Unlike with "Mode" = 0, the position offset is not applied at all encoders with a position correction with the parameter "Mode" = 13. This means the actual position values can deviate between the encoders. When switching the encoder with MC_SetSensor with Mode=1 (without synchronizing the actual position) and active position control, an additional difference of the two encoders acts as additional control deviation and can trigger a compensating motion.

During incremental encoder adjustment, the position of the incremental encoder is not saved retentively in the CPU. The values are lost after POWER-OFF.

Requirements

- Incremental encoder
- Technology object enabled and position-controlled or technology object disabled
- No active alarms

Procedure

For incremental encoder adjustment, call the Motion Control instruction "MC_Home" with the parameters "Mode" = 13 and "Position" = absolute position setpoint.

To adjust the operative encoder, enter "0" at the parameter "Sensor".

To adjust a non-operative encoder, enter the number of the encoder at the parameter "Sensor". (S7-1500T)

The current position is set to the value of parameter "Position".

5.7.8 Homing SINAMICS drives with external zero marks (S7-1500, S7-1500T)

For SINAMICS drives with external zero mark, synchronization during homing must always occur on the left side of the external zero mark's signal. That is to say, with a positive direction of travel synchronization is done on a positive edge, and with a negative direction of travel synchronization is done on a negative edge.

By inverting the signal, synchronization can also be done on the right sight of the signal of the external zero mark. The inversion can be set on the drive with SINAMICS parameter p490.

Homing to an encoder zero mark or an external zero mark is set in SINAMICS parameter p495.

5.7.9 Homing when backlash compensation is enabled (S7-1500, S7-1500T)

Active and passive homing "MC_Home" with "Mode" = 2,3,5,8,10

Always move the axis in the same direction to the home position. Select either "positive" or "negative" as homing direction.

NOTE

Before reaching the homing mark, the backlash must have traversed completely in the homing direction.

Direct homing "MC_HOME" with "Mode" = 0.1

Always move the axis in the same direction before or during direct homing. If you move the axis in another direction during direct homing, then the axis position around the backlash is invalidated.

Absolute encoder adjustment "MC_Home" with "Mode" = 6.7

In order that the actual encoder value can be clearly assigned to an axis position for an absolute encoder, the position of the backlash must also be taken into account when setting the absolute value offset for the absolute encoder adjustment. The position of the backlash results from the direction of travel of the axis during or before the absolute encoder adjustment. Configure the direction of travel of axis using the "Absolute homing direction" parameter. After the controller is switched on again, the axis traverses the backlash if the first traversing motion is in the opposite direction to the absolute homing direction.

If the absolute encoder adjustment has already been carried out, the axis position will only be displayed correctly after the controller has been switched off and on again if the position of the backlash at the time of switch-on corresponds to the position of the backlash in relation to the axis position when the absolute encoder offset was set. Otherwise the axis position can deviate from the axis position displayed up to a maximum of the size of the backlash. The controller records the actual encoder value at the switch-on time, but cannot infer the position of the backlash without traversing the axis. After the axis has been traversed for the first time by at least the size of backlashes, the technology object again shows the real mechanical position.

Incremental encoder adjustment "MC_Home" with "Mode" = 13

((tbd V18))

See also

Backlash compensation (Page 86)

5.7.10 Resetting the "Homed" status (S7-1500, S7-1500T)

Incremental encoder

In the following cases, the "Homed" status is reset, and the technology object must be rehomed.

- Error in sensor system/encoder failure
- Starting an "MC_Home" job with "Mode" = 3, 5, 8, 10
  (As soon the homing mark has been approached, the status "Homed" is set to "TRUE".)
- Replacement of the CPU
- Replacement of the SIMATIC Memory Card
- POWER OFF
- Memory reset
- Modification of the encoder configuration
- Restart of the technology object
- Restoration of the CPU factory settings
- Transfer of a different project into the controller

When you use a new incremental encoder you need to home the incremental encoder once again.

Absolute encoder

In the following cases, the "Homed" status is reset, and the technology object must be rehomed.

- Replacement of the CPU
- Changing the encoder type to incremental encoder
- Restoration of the CPU factory settings
- Transfer of a different project into the controller

When you use a new absolute value encoder you need to home the absolute encoder once again.

Resetting the memory of the CPU or upgrading a project does not require another absolute encoder adjustment.

5.7.11 Tags: Homing (S7-1500, S7-1500T)

The following technology object tags are relevant for homing:

Status indicators	
Tag	**Description**
<TO>.StatusWord.X11 (HomingCommand)	Homing job running
<TO>.StatusWord.X5 (HomingDone)	Technology object homed
<TO>.ErrorWord.X10 (HomingFault)	Error occurred during homing
<TO>.StatusSensor[1..4].Adjusted	Encoder homed

NOTE

Evaluation of the bits in "StatusWord", "ErrorWord" and "WarningWord"

Note the information in section "Evaluating StatusWord, ErrorWord and WarningWord" of the "S7-1500/S7-1500T Motion Control overview" documentation (Page 12).

Approach to reference output cam	
Tag	**Description**
<TO>.Homing.ApproachDirection	Start direction or approach direction for the approach to the reference output cam
<TO>.Homing.ApproachVelocity	Velocity for the approach to the reference output cam

Approach to the homing mark	
Tag	**Description**
<TO>.Sensor[1..4].ActiveHoming.Direction	Homing direction
<TO>.Homing.ReferencingVelocity	Velocity for the approach to the homing mark

Approach to home position	
Tag	**Description**
<TO>.Homing.ApproachVelocity	Velocity for the move to homing point

Positions	
Tag	**Description**
<TO>.Homing.AutoReversal	Reversal at the hardware limit switches
<TO>.Homing.HomePosition	Home position
<TO>.StatusSensor[1..4].AbsEncoderOffset	Calculated offset after the absolute encoder adjustment

Parameters for active homing	
Tag	**Description**
<TO>.Sensor[1..4].ActiveHoming.Mode	Homing mode

Parameters for active homing	
Tag	**Description**
<TO>.Sensor[1..4].ActiveHoming.SideInput	Side of the digital input
<TO>.Sensor[1..4].ActiveHoming.Direction	Homing direction or approach direction
<TO>.Sensor[1..4].ActiveHoming.DigitalInputAddress	Address of digital input
<TO>.Sensor[1..4].ActiveHoming.HomePositionOffset	Offset of the homing mark from the home position

Parameters for passive homing	
Tag	**Description**
<TO>.Sensor[1..4].PassiveHoming.Mode	Homing mode
<TO>.Sensor[1..4].PassiveHoming.SideInput	Side of the digital input
<TO>.Sensor[1..4].PassiveHoming.Direction	Homing direction or approach direction
<TO>.Sensor[1..4].PassiveHoming.DigitalInputAddress	Address of digital input

5.8 Position monitoring functions (S7-1500, S7-1500T)

The following functions are available in the positioning axis/synchronous axis technology object for monitoring positioning and motion:

- Positioning monitoring (Page 157)
  The actual position value must reach a positioning window within a specified time, and remain in this positioning window for a minimum dwell time.
- Following error monitoring (Page 159)
  The following error is monitored based on a velocity-dependent following error limit. The permissible maximum following error depends on the velocity setpoint.
- Standstill signal (Page 160)
  When the actual velocity reaches the standstill window and remains there for the minimum dwell time, the standstill of the axis is indicated.

If monitored conditions are violated, then technology alarms are output. The technology object responds in accordance with the alarm response.

5.8.1 Positioning monitoring (S7-1500, S7-1500T)

Position monitoring monitors the behavior of the actual position at the end of the setpoint calculation.

As soon as the velocity setpoint reaches the value zero, the actual position value must be located in the positioning window within a tolerance time. The actual value must not exit the positioning window during the minimum dwell time.

If the actual position is reached at the end of a positioning motion within the tolerance time and remains in the positioning window for the minimum dwell time, then "<TO>.StatusWord.X6 (Done)" is set in the technology data block. After expiration of the minimum dwell time, the "Done" parameter of the corresponding Motion Control instruction is also set. This completes a motion job.

The following figure shows the chronological sequence and the positioning window:

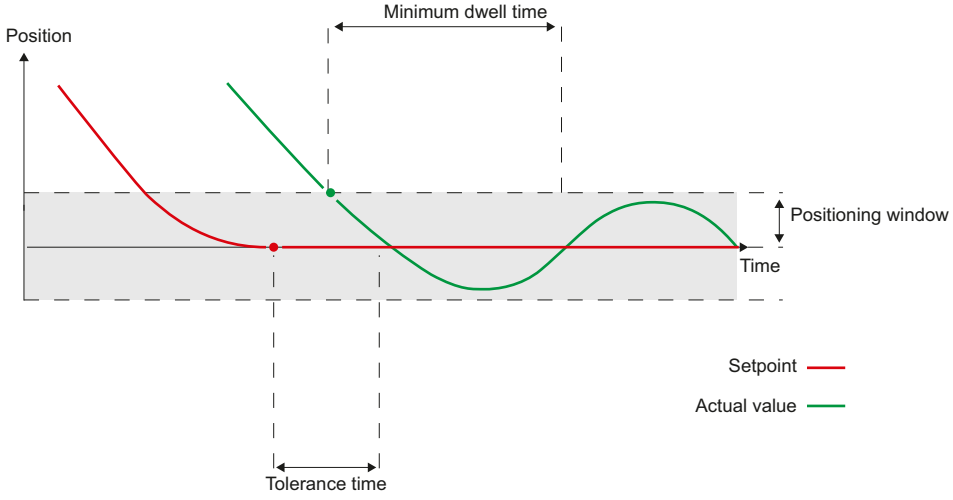

Positioning monitoring does not make any distinction between how the setpoint interpolation was completed. The end of setpoint interpolation can for example be reached as follows:

- By the setpoint reaching the target position
- By position-controlled stopping during motion by the Motion Control instruction "MC_Halt" or "MC_Stop"

Violation of positioning monitoring

In the following cases, technology alarm 541 is output by the positioning monitoring, and the technology object is disabled (alarm reaction: remove enable).

- The actual value does not reach the positioning window during the tolerance time.
- The actual value exits the positioning window during the minimum dwell time.

Configure positioning monitoring

You can find the positioning monitoring in the configuration of the positioning axis/synchronous axis under "Extended parameters > Position monitoring > Position monitoring".

Follow these steps:

1. In the "Positioning window" field, configure the size of the positioning window. If the axis is located within this window, the position is considered to be "reached".
2. In the "Tolerance time" field, configure the time within which the position value must reach the positioning window.
3. In the "Minimum dwell time" field, configure the time for which the current position value must be in the positioning window for at least the "minimum dwell time".

   Recommended setting: To avoid longer pauses, set values between 0 ms and 20 ms for dynamic positioning tasks.

5.8.2 Following error monitoring (S7-1500, S7-1500T)

The following error is the difference between the setpoint and actual position based on the connection of the axis at the drive. The leading behavior of the axis is contained in the following error. The size of the following error depends on the velocity. The following error also contains a portion that arises from the disturbance variables.

The following error in the positioning axis/synchronous axis technology object is monitored based on a velocity-dependent following error limit. The permissible following error depends on the velocity setpoint.

A constant permissible following error can be specified for velocities lower than an adjustable velocity low limit.

Above this low velocity limit, the permissible following error increases in proportion to the velocity setpoint. The configurable maximum permissible following error is the maximum velocity limit.

Calculation of the following error

When calculating the following error, the transmission times of the setpoint to the drive and of the actual position value to the controller are deducted. The transmission times of the setpoints from the controller to the drive and the actual position values from the drive to the controller are therefore not part of the following error. The value of the following error is thus not the same as the difference between the position setpoint available in the controller minus the existing actual position.

The following error is thus calculated from the delayed position setpoint by $T_i + T_o + T_{DC} + T_{Servo}$ minus the actual position in the controller.

The calculation of the following error is valid for the following conditions:

- Position control with and without DSC
- Configuration with and without precontrol of the position control loop
- Configuration of the drive coupling via a PROFIdrive telegram or via an analog output

Warning limit

A warning limit can be specified for the following error. The warning limit is input as a percentage value and operates relative to the current permissible following error. If the warning limit of the following error is reached, then technology alarm 522 is output. This is a warning and contains no alarm response.

Violation of the permissible following error

If the permissible following error is exceeded, then technology alarm 521 is output, and the technology object is disabled (alarm response: remove enable).

When force/torque limiting is activated, the monitoring of the permissible following error can be deactivated.

Enabling and configuring following error monitoring

You can find the following error monitoring in the configuration of the positioning axis/synchronous axis under "Extended parameters > Position monitoring > Following error".

Select the "Enable following error monitoring" check box.

To configure the following error monitoring, follow these steps:

1. In the "Following error" field, configure the permissible following error for low velocities (without dynamic adaptation of the following error) in the unit of measure for position of the axis.
2. In the "Maximum following error" field, enter the maximum permissible following error in the unit of measure for position of the axis.
3. In the "Start of dynamic adjustment" field, enter in the unit of measure for velocity of the axis the velocity from which the following error is to be adjusted dynamically. Starting from this velocity, the following error up to the maximum velocity will be adjusted to the maximum following error.
4. In the "Warning level" field, enter the percentage of the permitted following error as of which a warning is output.

   Example: The current maximum following error is 100 mm. The warning level is configured at 90%. If the current following error exceeds a value of 90 mm, the technology alarm 522 "Warning following error tolerance" is output. This is a warning and contains no alarm response.

Parameter assignment of the following error calculation with active dynamic filter

The following error is calculated from the delayed interpolated position setpoint by T_i, T_o, T_{DC} and T_{Servo} minus the current actual position value. The deceleration of the position setpoint by the dynamic filter in the technology object or through additional filters in the drive is not taken into account when calculating the following error. The calculated following error is therefore greater in reference to the position setpoint before the dynamic filter.

For correct calculation of the following error, configure an additional delay time <TO>.FollowingError.AdditionalSetpointDelayTime that delays the position setpoint when calculating the following error.

5.8.3 Standstill signal (S7-1500, S7-1500T)

When the actual velocity reaches the standstill window and remains there for the minimum dwell time, the standstill of the axis is indicated.

Configuring stationary state detection

You can find the stationary state detection in the configuration of the positioning axis/synchronous axis under "Extended parameters > Position monitoring > Standstill signal".

Follow these steps:

1. In the "Standstill window" field, configure the size of the standstill window in the measurement unit for the axis velocity.
   To avoid repeated toggling of the "<TO>.Statusword.X7 (Standstill)" bit, a hysteresis acts internally when the standstill window is exited. To exit the standstill window again, the actual velocity must be slightly higher than configured for "Standstill window".
2. In the "Minimum dwell time in standstill window" field, configure the duration in seconds for which the velocity of the axis must remain in the standstill window for stationary state detection.

5.8.4 Tags: Position monitoring functions (S7-1500, S7-1500T)

Standstill signal

The following technology object tags are relevant for position monitoring and for the standstill signal:

Status indicators	
Tag	**Description**
<TO>.StatusWord.X7 (Standstill)	Set to the value "TRUE" when the actual velocity reaches the standstill window and does not exit it within the minimum dwell time. The standstill signal is only present for the positioning axis/synchronous axis.
<TO>.StatusWord.X6 (Done)	**Positioning axis/synchronous axis** Set to the value "TRUE" when the actual velocity value reaches the positioning window within the tolerance time and remains in the window for the minimum dwell time.
	Speed axis Set to "TRUE" when the motion is complete and the speed set-point is therefore equal to zero.
<TO>.ErrorWord.X12 (PositioningFault)	A positioning error has occurred.

Positions and times	
Tag	**Description**
<TO>.PositioningMonitoring.Tolerance-Time	Maximum permissible time until positioning window is reached The time is started with the end of the setpoint interpolation.
<TO>.PositioningMonitoring.MinDwell-Time	Minimum dwell time in position window
<TO>.PositioningMonitoring.Window	Positioning window

Standstill signal	
Tag	**Description**
<TO>.StandstillSignal.VelocityThreshold	Velocity threshold for the standstill signal
<TO>.StandstillSignal.MinDwellTime	Minimum dwell time below the velocity threshold

Following error monitoring

The following technology object tags are relevant for following error monitoring:

Status indicators	
Tag	**Description**
<TO>.StatusPositioning.FollowingError	Current following error
<TO>.ErrorWord.X11 (FollowingError-Fault)	Status indication, that the following error is too large
<TO>.WarningWord.X11 (FollowingErrorWarning)	Status indication, that the following error warning limit has been reached

Control bits	
Tag	**Description**
<TO>.FollowingError.EnableMonitoring	Enable/disable following error monitoring

Timers	
Tag	**Description**
<TO>.FollowingError.AdditionalSetpoint-DelayTime	Time constant for additional deceleration of position setpoint to calculate the following error in the time unit of the axis

Limits	
Tag	**Description**
<TO>.FollowingError.MinVelocity	Lower velocity setpoint for the characteristic curve of the maximum following error
<TO>.FollowingError.MinValue	Permissible following error below the "<TO>.FollowingError.MinVelocity"
<TO>.FollowingError.MaxValue	Maximum permissible following error at maximum axis velocity
<TO>.FollowingError.WarningLevel	Warning limit as a percentage value relative to the maximum permissible following error (velocity-dependent in accordance with the characteristic curve)

5.9 Configuring a control loop (S7-1500, S7-1500T)

Together with the controller in the drive, the technology object forms a cascade control system. The innermost control cascade is the current control, the next cascade is the speed

control. Both are located in the drive. The position controller is the outermost cascade and is in the technology object.

The position controller of the positioning axis/synchronous axis is a closed-loop P controller with or without velocity precontrol. Use the servo gain factor to set the gain of the proportional-action controller.

When position control is enabled, encoder systems, actual value calculation, controllers and monitors are active.

If position control is inactive, encoder systems, actual value calculation and monitoring are active on the actual value side.

Position controller configuration

Configure the position controller of the positioning axis/synchronous axis technology object:

- Control methods
  - Position control in the drive with Dynamic Servo Control (DSC) (Page 163)
  - Position control in the PLC (Page 164)
- Where does the position controller get its values?
  - Configuring position controller in the PLC (Page 166)
  - Configuring position controller for drives with DSC (Page 165)
- Setpoint filter
  - Configuring a dynamic filter (Page 167)

Optimize the position controller during commissioning.

- Optimize position controller (Page 181)

Additional information

For more information about axis control and controller optimization, refer to Siemens Industry Online Support in the FAQ entry 109779884 (https://support.industry.siemens.com/cs/ww/en/view/109779884).

5.9.1 Position control in the drive with Dynamic Servo Control (DSC) (S7-1500, S7-1500T)

In drives that support Dynamic Servo Control (DSC), you can use the position controller in the drive. If you use telegrams that support DSC, DSC, and thus the position controller in the drive, is automatically activated.

The position controller is usually executed in the drive in the cycle clock of the speed control loop. In this way, you can set higher position controller gain (Kv factor) and increase the dynamic response for reference variable sequence and disturbance variable correction for highly dynamic drives.

When used with a SINAMICS drive, DSC is the standard case, since the faster control cycle in the drive (e.g. 125 µs) leads to even better control quality.

The following figure shows the effective control structure **with** DSC and with precontrol:

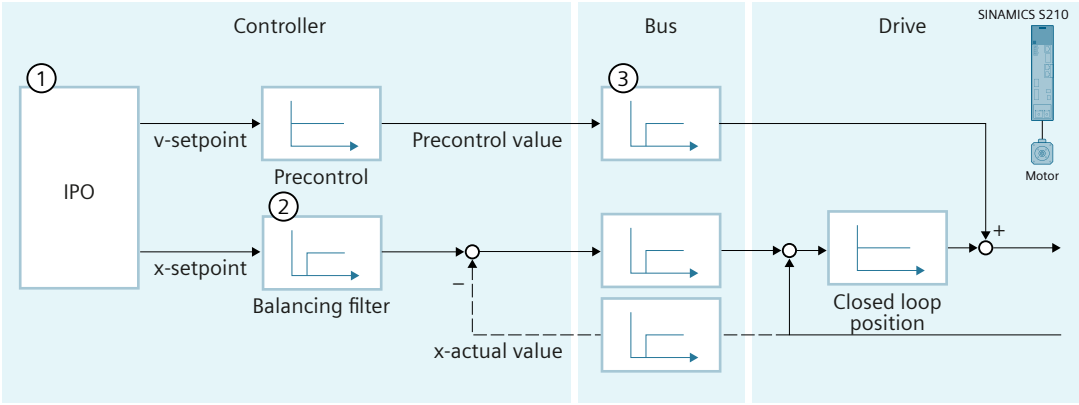

① Interpolator with motion control

② Internal consideration of speed control loop substitute time

③ Communication between controller and drive

Requirements

The following requirements must be met to use DSC:

- The motor encoder (first encoder in the telegram) of the drive is used as the first encoder for the technology object.
- One of the following PROFIdrive telegrams is configured on the drive:
  - Standard telegram 5 or 6
  - SIEMENS telegram 105 or 106

Procedure

To configure position control in the drive with DSC for a positioning axis/synchronous axis, follow these steps:

1. In the configuration of the technology object, navigate to "Extended parameters > Control loop > Dynamic Servo Control (DSC)".
2. Select the "Position control in the drive (DSC enabled)" option.
3. Apply the values from the drive.
   Configuring position controller for drives with DSC (Page 165)

Signal flow diagrams

For more information about the control structure in the form of signal flow diagrams for the positioning axis/synchronous axis technology object, refer to the appendix (Page 356).

5.9.2 Position control in the PLC (S7-1500, S7-1500T)

The position controller is executed in the Motion Control application cycle, for example, 4 ms in the MC-Servo [OB91].

With position control in the CPU, the drive can be connected either isochronously or non-isochronously. If the drive supports isochronous mode, you can also connect it isochronously. You can find a description on how to connect a drive isochronously in section "Adding and configuring drives (Page 39)".

The following figure shows the effective control structure in position control in the controller:

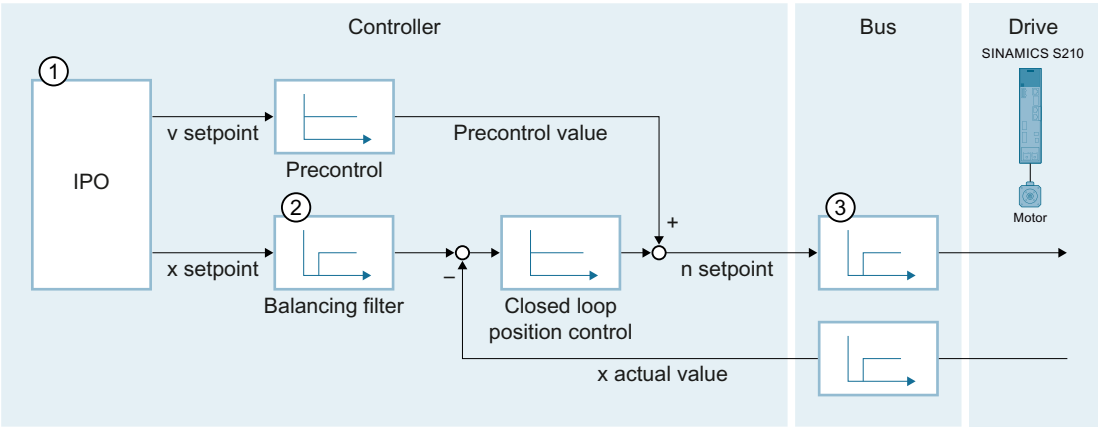

① Interpolator with motion control

② Internal consideration of the signal propagation times and the speed-control loop substitute time

③ Communication between controller and drive

Procedure

To configure position control in the CPU for a positioning axis/synchronous axis, follow these steps:

1. In the configuration of the technology object, navigate to "Extended parameters > Control loop > Dynamic Servo Control (DSC)".
2. Select the "Position control in the PLC" option.
3. Under "Position control", configure the values for precontrol, speed control loop substitute time and gain (Kv factor).
   Configuring position controller in the PLC (Page 166)

Signal flow diagrams

For more information about the control structure in the form of signal flow diagrams for the positioning axis/synchronous axis technology object, refer to the appendix (Page 356).

5.9.3 Configuring position controller for drives with DSC (S7-1500, S7-1500T)

You configure automatic adoption of the values for the positioning axis/synchronous axis in the configuration under "Extended parameters > Control loop > Position control".

A description of how to adapt the adopted values for the position controller to your axis is provided in section "Optimize position controller (Page 181)".

Automatic transfer from drive

If you have configured and optimized the assigned drive with SINAMICS Startdrive you can then apply the values for the Kv factor and the speed control loop substitute time from the drive.

Requirements:

- A drive is linked to the technology object.
- Dynamic Servo Control (DSC) is enabled.

Drive optimized

The display only applies if you have optimized the assigned drive with One Button Tuning (OBT).

- Display is green: Drive is optimized
- Display is gray: Drive is not optimized

Optimizing values on the drive

The green arrow takes you to the configuration of the drive in Startdrive. Optimize the drive there.

Taking values from the drive

When you click on this button you transfer the values from the drive to the technology object.

- Gain (Kv factor): The technology object adopts 50% of the value from the drive.
- Speed control loop substitute time: The technology object adopts the value from the drive.

	SINAMICS Startdrive offline	SINAMICS Startdrive online
Monitoring off	Offline values of the drive are applied. The values are transferred as start value to the technology object.	Online values of the drive are applied. The values are transferred as start value to the technology object.
Monitoring on	Offline values of the drive are applied. The values are transferred as actual values to the technology object.	Online values of the drive are applied. The values are transferred as actual values to the technology object.

5.9.4 Configuring position controller in the PLC (S7-1500, S7-1500T)

You configure the values for the position controller for the positioning axis/synchronous axis in the configuration under "Extended parameters > Control loop > Position control".

The basics on configuration values are explained below.

A description of how to set the suitable values for the position controller to your axis during commissioning is provided in section "Optimize position controller (Page 181)".

You need to optimize the speed controller separately on the drive.

Precontrol

Configure the percentage velocity precontrol in this field.

The velocity precontrol can be used to minimize the velocity-based following error during position control. As a result, faster positioning may be achieved because the reference variable acts faster.

When using the velocity precontrol, the velocity setpoint is additionally switched to the output of the position controller. You can weight this additional setpoint by a factor.

With digital drive coupling, the velocity precontrol should be at 100%.

Speed control loop substitute time

In this field, configure the speed control loop substitute time (T_{vtc}).

The speed control loop substitute time is included in the balancing filter.

The balancing filter is a simplified model of the closed speed control loop. The balancing filter is used to prevent the position controller from overriding the speed manipulated variable during the acceleration and deceleration phases. To accomplish this, the position setpoint of the position controller is delayed by the speed control loop substitute time in relation to the speed precontrol.

Note the following regarding the configuration of the speed control loop substitute time:

- If you do not use any speed precontrol (0%), the configuration of the speed control loop substitute time is not relevant.
- If you use speed precontrol (>0%) and set the speed control loop substitute time to 0.0 s (default value), the axis will overshoot. To find the right setting, optimize the position controller.

Gain (Kv factor)

In this field, you configure the gain Kv of the position control loop.

The Kv factor affects the following parameters:

- Positioning accuracy and stop control
- Uniformity of motion
- Positioning time

The better the mechanical conditions of the real axis (high stiffness), the higher the Kv factor can be configured. This reduces the following error, and a higher dynamic repsonse is achieved.

5.9.5 Configuring a dynamic filter (S7-1500, S7-1500T)

Applies to

- Positioning axis
- Synchronous axis

Use

Axes that act mostly independent of one another are usually optimized independent of one another. If necessary for the interaction in the overall system, a dynamic adjustment may be useful after optimizing the individual axes.

The axes involved in a machine often have different mechanics. When optimizing speed and position controllers of the individual axes, the axes will have different dynamics. Configure the dynamic filter to adapt the dynamic response of axes to one another.

For axes in a synchronous operation assembly with different speed control loop substitute times, we recommend a dynamic adjustment using the dynamic filter. You can precisely synchronize the real traversing movements between the leading axis and the following axis or two following axes because the same following error occurs in the axes involved.

For kinematics with different speed control loop substitute times T_{vtc} of the kinematics axes, a dynamic adaptation is required to travel the interpolated path motion with a high contour accuracy.

Description

The dynamic filter is a parameterizable PT2 setpoint filter with the time constants T_1, T_2 and an additional parameterizable dead time T_t. You use the filter to adjust axes with higher dynamic to the axis with the lowest dynamic. The dynamic filter is individually parameterizable for each positioning axis and synchronous axis.

The dynamic filter is disabled at the axis by default. To activate the dynamic filter at an axis, enable the dynamic filter in the configuration of the technology object and configure at least one of the timers T_1, T_2 or T_t to greater than 0.0.

T_t[1]	T_1	T_2	Active dynamic filter
0.0	0.0	0.0	Dynamic filter not active (default)
>0.0	0.0	0.0	Exact setpoint delay via dead time
0.0	>0.0	0.0	PT1 setpoint filter without additional dead time
>0.0	>0.0	0.0	PT1 setpoint filter with additional dead time
0.0	0.0	>0.0	PT1 setpoint filter without additional dead time
>0.0	0.0	>0.0	PT1 setpoint filter with additional dead time
0.0	>0.0	>0.0	PT2 setpoint filter without additional dead time
>0.0	>0.0	>0.0	PT2 setpoint filter with additional dead time

1) The dead time Tt is internally limited to sixteen times the value from the application cycle of the MC_Servo. No alarm is output at higher values.

The dynamic filter is effective for position control with and without DSC. The dynamic filter delays the calculated position and velocity setpoints of the interpolator.

The series connection of two PT1 filters creates a PT2 filter. PT1/PT2 filters act as a low pass. This smooths the interpolated position and velocity setpoints. For the damping filter D of PT2 filter, D >= 1. The PT2 filter cannot vibrate.

The damping degree D is calculated using the following equation.

$$D = \frac{T_1 + T_2}{2 \cdot (T_1 \cdot T_2)^{\frac{1}{2}}}$$

The angular frequency ω is calculated using the following equation.

$$\omega = \frac{1}{(T_1 \cdot T_2)^{\frac{1}{2}}}$$

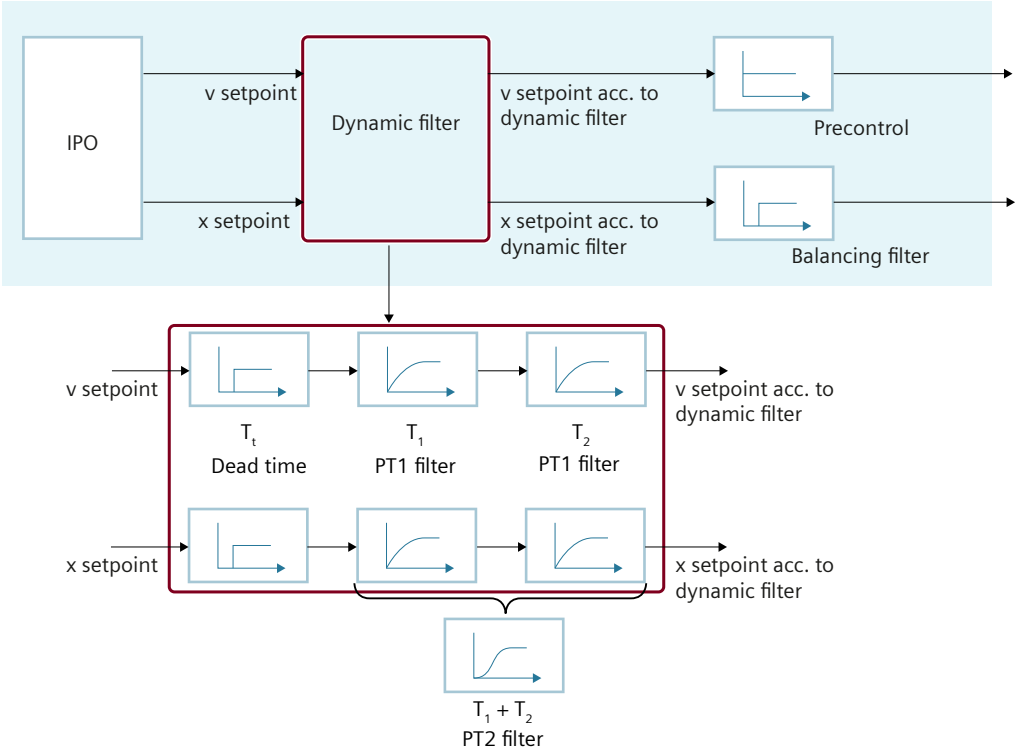

Procedure

1. First, optimize all axes.
2. Determine the speed control loop substitute times T_{vtc} (<TO>.DynamicAxisModel.VelocityTimeConstant) of all axes.
   Example:
   Axis 1: T_{vtc} = 0.004 s
   Axis 2: T_{vtc} = 0.006 s
   Axis 1 is the more dynamic axis. The difference is 0.002 s.
3. Enable the dynamic filter in the configuration of axis 1.
4. Configure the effective time constant of the dynamic filter (sum of the time constants T_1, T_2, T_t) at axis 1 to 0.002 s. Depending on the preferred filter behavior, set one of the following variants for parameter assignment of the dynamic filter. In the configuration of the technology object, you will see a graphic representation of the step response.
   – PT1: T_1 = 0.002 s
   – PT2: T_1 = 0.001 s, T_2 = 0.001 s
   – Exact setpoint delay without smoothing: T_t = 0.002 s
5. Parameterize the delay time of the dynamic filter for calculating the following error at axis 1. <TO>.FollowingError.AdditionalSetpointDelayTime = 0.002 s
   Following error monitoring (Page 159)

5.9.6 Switching the position control off and on (S7-1500, S7-1500T)

The position control of an axis can be switched off and on again with the following Motion Control instructions in the non-position-controlled mode:

- MC_Power
- MC_MoveVelocity
- MC_MoveJog
- MC_MotionInVelocity

The non-position-controlled mode is indicated in the tag of the technology object "<TO>.StatusWord.X28 (NonPositionControlled)" = TRUE.

MC_Power

The axis is enabled without position control with "MC_Power.Enable" = TRUE and the parameter "StartMode" = 0. The position control remains switched off until a different Motion Control instruction changes the status of the position control.

MC_MoveVelocity and MC_MoveJog

A "MC_MoveVelocity" or "MC_MoveJog" job with "PositionControlled" = FALSE forces non-position-controlled operation.
A "MC_MoveVelocity" or "MC_MoveJog" job with "PositionControlled" = TRUE forces position-controlled operation.
The selected mode remains in effect after the job is completed.

MC_MotionInVelocity and MC_MotionInPosition

A "MC_MotionInVelocity" job with "PositionControlled" = FALSE forces non-position-controlled operation.
A "MC_MotionInVelocity" job with "PositionControlled" = TRUE forces position-controlled operation.
The selected mode remains in effect after the job is completed.
A "MC_MotionInPosition" job forces position-controlled operation.

Influence of additional Motion Control instructions

Starting the following Motion Control instructions forces position-controlled operation of the axis:

- MC_Home with "Mode" = 3, 5
- MC_MoveAbsolute
- MC_MoveRelative
- MC_MoveSuperimposed
- MC_MotionInPosition
- MC_GearIn
- MC_GearInPos (S7-1500T)
- MC_CamIn (S7-1500T)

The position control remains active after completing the corresponding jobs.
The Motion Control instructions "MC_Halt" and "MC_Stop" are executed in position-controlled and also in non-position-controlled operation. The status of the position control is not changed by "MC_Halt"/"MC_Stop".
A torque limiting activated with "MC_TorqueLimiting" is in effect even with non-position-controlled operation.

5.9.7 Tags: Closed-loop control (S7-1500, S7-1500T)

The following technology object tags are relevant for the control loop:

Parameters		
Tag	**Description**	
<TO>.PositionControl.Kv	Proportional gain of the closed loop position control	
<TO>.PositionControl.Kpc	Velocity precontrol of the positioning system (in %)	
<TO>.PositionControl.EnableDSC	Enable DSC	
<TO>.DynamicAxisModel.VelocityTime-Constant	Speed control loop substitute time [s]	
<TO>.PositionControl.ControlDifference-Quantization.Mode	Type of quantification Configuration of a quantization when a drive with stepper motor interface is connected	
	0	No quantification
	1	Quantization corresponding to encoder resolution
	2	Quantization to a direct value (value input in "<TO>.PositionControl.ControlDifferenceQuantiza-tion.Value")
	Configuration is performed using the parameter view (data structure).	
<TO>.PositionControl.ControlDifference-Quantization.Value	Value of quantification Configuration of a value for quantization to a direct value ("<TO>.PositionControl.ControlDifferenceQuantization.Mode" = 2) The quantization value is specified in the position unit of the axis. Configuration is performed using the parameter view (data structure).	

The following technology object tags are relevant for the dynamic filter:

Parameters		
Tag	**Description**	
<TO>.SetpointFilter.DynamicFilter.Mode	Dynamic filter mode	
	0	Dynamic filter not active
	1	PT1/PT2 filter + dead time
<TO>.SetpointFilter.DynamicFilter.T1	First time constant of the PT2 filter in time unit of the axis	

Parameters	
Tag	**Description**
<TO>.SetpointFilter.DynamicFilter.T2	Second time constant of the PT2 filter in time unit of the axis
<TO>.SetpointFilter.DynamicFilter.Tt	Additional dead time of the dynamic filter in time unit of the axis
<TO>.StatusServo.PositionAfterDynamic-Filter	Position setpoint after the dynamic filter

Commissioning (S7-1500, S7-1500T) 6

The following guidelines describe the steps that you should note when commissioning the Motion Control-specific components of your equipment.

The commissioning of other components of your automation system depends on the particular equipment configuration. Commissioning (not Motion Control) is described in the "Automation System S7-1500" (https://support.industry.siemens.com/cs/ww/en/view/59191792) system manual.

6.1 Commissioning guidelines (S7-1500, S7-1500T)

These guidelines serve as recommendations for commissioning equipment with Motion Control. The procedure is described using the example of a positioning axis technology object.

Requirement

- The configuration of the following components is complete:
  - CPU
  - BUS communication
  - Drives
  - Technology objects
- The user program has been created.
- The wiring of the CPU and of the associated I/O is complete.
- The commissioning and optimization of the drive is complete.

Procedure

Proceed as follows to commission the Motion Control-specific components of your equipment:

Step	Action to be performed	Supported by TIA Portal
Turn on CPU	Turn on the power supply and the CPU.	-
"Disable" position controller	Set the gain (Kv factor) of the position control loop to zero. (This setting avoids unwanted drive movements that may be caused by incorrect parameterization of the position control loop.)	"Technology object > Configuration > Extended parameters > Settings of the control loop > Control loop"
Activate precontrol	Set the precontrol to 100 %.	"Technology object > Configuration > Extended parameters > Settings of the control loop > Control loop"
Load project into the CPU	Bring the CPU to the STOP mode. Download your project to the CPU (load hardware and software).	• "Toolbar > Stop CPU" • "Toolbar > Download to device"

Step	Action to be performed	Supported by TIA Portal
Create online connection to the CPU	Select the "Receive messages" check box under "Online & Diagnostics > Online Access". Configure the interface of the TIA Portal and create an online connection with the CPU.	• Device configuration • "Online & Diagnostics > Online Access"
Disable Motion Control specific user program	In order to avoid conflicts with the axis control panel, lock the enabling of technology objects in your user program ("MC_Power.Enable" = FALSE).	• PLC programming • Motion Control instructions
Evaluating pending messages	Evaluate the message display in the inspector window. Resolve the causes of pending technology alarms. Acknowledge the technology alarms.	"Inspector window > Diagnostics > Message display"
Check hardware limit switches	Click the hardware limit switches. Check for correct message display (technology alarm 531). Acknowledge the technology alarm.	"Inspector window > Diagnostics > Message display"
Check the connection and configuration of the drive (setpoint)	Bring the CPU into the RUN mode. Open the Axis control panel and take over master control (Page 175). Perform the following steps: • Enable the technology object. ⇒ The drive must turn itself on, and where applicable release the brake. The position is held. • Move the axis in jog mode (Page 179) at low velocity in the positive direction. ⇒ The drive must move. The actual position value must increase (positive direction). • Disable (Page 186) the technology object. ⇒ The drive must turn itself off, and where applicable apply the brake.	"Technology object > Commissioning > Axis control panel"
Check the connection and configuration of the encoder (actual value)	• Check the scaling of the actual values (rotation direction, distance evaluation, and resolution of the encoder) ⇒ The change in the actual mechanical position must match the change in the actual values. In case of deviations, correct the parameters assigned for mechanics under "Technology object > Extended parameters > Mechanics". • For absolute encoders, check the absolute encoder adjustment. To do this, move the axis to the start of the traversing range and switch the system off. After the restart, check the actual encoder values for correctness. Repeat this step likewise at the traversing range end. If there are deviations, correct the following: – Settings for fine resolution under "Technology object > Data exchange with encoder" – Zero-crossing position of the encoder The position of the zero crossing can be changed by rotating the encoder in the dismantled state. With programmable encoders, the zero crossing can be adjusted by parameter assignment. The zero crossing must be outside the traversing range.	• "Technology object > Diagnostics > PROFIdrive telegram" • "Technology object > Commissioning > Axis control panel"
Specify dynamic parameters	For each traversing motion of the axis, enter the dynamic parameters (Page 180) in the axis control panel.	

Step	Action to be performed	Supported by TIA Portal
Checking the reference speed	Traverse the axis in jog mode (Page 179) at low velocity in the positive direction. ⇒ The displayed current velocity must match the velocity setpoint. If the displayed current velocity deviates significantly from the velocity setpoint, adjust the reference speed.	• "Technology object > Hardware interface > Data exchange" • "Technology object > Commissioning > Axis control panel"
Homing axis	If necessary, you can home (Page 178) the axis or set the home position.	
Optimize position controller	Use the Optimization (Page 181) commissioning function to optimize the gain (Kv) of the position control loop. For this purpose, adapt following error limits as needed.	"Technology object > Commissioning > Optimization"
Transfer the gain Kv to the project.	Enter the gain Kv that you determined by means of the optimization function in your configuration data. Load your project into the CPU.	"Technology object > Configuration > Extended parameters > Control loop"
Enable Motion Control specific user program	Unlock the enabling technology objects lock in your user program ("MC_Power.Enable" = TRUE).	• PLC programming • Motion Control instructions
Check the functioning of the user program	Check the programmed functions of your user program.	• Watch and force tables • Online and diagnostic functions
Commissioning additional technology objects	To commission additional technology objects, perform the corresponding steps again.	See above.

6.2 Take over master control and enable axis (S7-1500, S7-1500T)

You traverse individual axes during commissioning. A user program is not required.

With the axis control panel, you assume master control for a technology object and control the motions of the axis.

The axis control panel is located in the project tree of the speed axis, positioning axis and synchronous axis technology objects under "Technology object > Commissioning".

With optimization, you take over the master control and optimize the gain and the speed control loop substitute time of the position controller.

You optimize the positioning axis and synchronous axis technology objects under "Technology object > Commissioning".

WARNING

Unexpected axis motions

During commissioning, the axis can execute unexpected motions (e.g. due to erroneous configuration of the drive or the technology object). Any synchronized following axis is moved as well when moving a leading axis with the axis control panel or during optimization.

Therefore, perform the following precautionary measures before operation with the axis control panel or during optimization:

- Ensure that the EMERGENCY OFF switch is within the reach of the operator.
- Enable the hardware limit switches.
- Enable the software limit switches.
- Ensure that following error monitoring is enabled.
- Make sure that no following axis is coupled to the axis to be moved.

Requirement

- The project has been created and downloaded to the CPU.
- The CPU must be in the RUN mode.
- The technology object is disabled by your user program ("MC_Power.Enable" = FALSE).
- The commissioning for the technology object is not used by another instance of the TIA Portal.

Procedure

Follow these steps to control the axis:

1. To assume master control of the technology object and to set up an online connection to the CPU, click "Activate" in the "Master control" area.
   A warning message is displayed.
2. If necessary, adapt the sign of life monitoring and click "OK".
3. To enable the technology object, click the "Enable" button in the "Axis" area.

Setting the sign-of-life monitoring time

Monitoring time	Effect
Too low	Master control is frequently returned due to violation of the monitoring time and the axis stops with maximum deceleration because the communication time between the TIA Portal and CPU is longer than the configured monitoring time.
Appropriate	Monitoring time is not exceeded and the axis is stopped in time when the online connection is lost or sign of life monitoring is exceeded. Recommendation: 1000 ms to 2000 ms
Too high	Axis continues moving with the last setpoints of the axis control panel even though the connection between TIA Portal and CPU is interrupted or the communication time between TIA Portal and CPU is too long. The axis is not stopped in time because the monitoring time is still running.

Result

An online connection to the CPU is established, the axis control panel or optimization takes over master control of the technology object, and the technology object is enabled.

Behavior while the axis control panel or optimization has the master control

The axis can only be traversed with the axis control panel or the optimization. Access to the axis is blocked by another instance of the TIA Portal.

The user program has no influence on the functions of the technology object. Motion Control jobs from the user program to the technology object are rejected with error ("ErrorID" = 16#8012: Axis control panel enabled).

Changes to the axis configuration will not become effective until the master control is taken over again.

In the following situations, the axis control panel or optimization will retain the master control and the axis keeps moving:

- The axis control panel/optimization is embedded in the TIA Portal, and you switch to a different window, for example, to the trace. Use the Split editor space option to use the axis control panel and the trace at the same time.

In the following situations, the axis control panel or optimization will retain the master control but stops the axis with maximum deceleration.

- The axis control panel or optimization is replaced in the TIA Portal, and you switch to a different window within the TIA Portal, for example, to the project tree. You change to a window outside of the TIA Portal.
- The "Stop" button is hidden by another dialog window or is no longer visible due to scrolling.

In the following situations, the axis is stopped with maximum deceleration and the axis control panel/optimization returns the master control to the user program.

- The online connection to the CPU fails and the time for sign of life monitoring has elapsed. The error message "ErrorID" = 16#8013 is displayed.
  Adapt the time for the sign-of-life monitoring in the warning.
- The online connection to the CPU is impaired by a communication load that is too high. The following message is entered in the alarm display log: "Commissioning error. Sign-of-life failure between controller and TIA Portal". Adapt the time for the sign-of-life monitoring in the warning.
- A dialog box (e.g. Save as) covers the axis control panel or optimization.

6.3 Homing with the axis control panel (S7-1500, S7-1500T)

With homing, you create the relationship between the position in the technology object and the mechanical position. The actual position value in the technology object is assigned to a homing mark at the same time. This homing mark represents a known mechanical position.

"Homing" mode corresponds to active homing with "Mode" = 3. The positioning axis/synchronous axis technology object performs a homing movement according to the configuration of the active homing (Page 133).

The "Set home position" operating mode in the axis control panel corresponds to direct homing (absolute) with "Mode" = 0.

For more detailed information on homing, refer to the section "Homing (Page 129)".

NOTE

Axis with absolute encoder

The absolute encoder adjustment is not available in the axis control panel. Perform the absolute encoder adjustment with the Motion Control instruction "MC_Home" with "Mode" = 6 or 7.

Actively homing the axis

Requirement

- The axis is enabled in the axis control panel.
- The parameters for active homing (Page 133) must be configured.

Procedure

1. Under "Operating mode", select "Homing" from the drop-down list.
2. Enter the home position in the Position text box.
3. Enter the setpoints for acceleration, deceleration and jerk.
4. Click the "Start" button. Homing movement is started.

Result

The axis executes the homing movement configured under "Active homing".

Setting the home position of an axis

Requirement

- The axis is enabled in the axis control panel.

Procedure

1. Under "Operating mode", select "Set home position" from the drop-down list.
2. Enter the position to which the axis is to be homed.
3. Click the "Start" button.

Result

The entered position is set as the actual position and the axis status is set to "Homed".

6.4 Traversing the axis with the axis control panel (S7-1500, S7-1500T)

Requirement

- The axis is enabled in the axis control panel.
- The setpoints for acceleration, deceleration and jerk have been entered in the control area.
- The axis is homed (position axis absolutely).

Jogging the axis

In "Jog" operating mode in the axis control panel, the motion commands are made by jogging.

1. Under "Operating mode", select "Jog" from the drop-down list.
2. To move the axis in the positive direction, keep the "Forward" button pressed.
3. To move the axis in the negative direction, keep the "Backward" button pressed.

Specify the velocity/speed in the axis control panel

For the "Velocity/speed setpoint" operating mode, the axis is moved at the specified velocity or speed until you stop the movement.

The motion commands are performed according to the setpoints assigned under "Controller".

1. Select the "Velocity/speed setpoint" entry in the "Operating mode" drop-down list.
2. Enter the velocity/speed setpoint in the "Velocity setpoint" text box.
3. To move the axis in the positive direction, click the "Forward" button.
4. To move the axis in the negative direction, click the "Backward" button.
5. Click the "Stop" button to stop the axis.

Position axis relatively

The positioning is executed as a controlled, relative traversing motion by the specified distance and the dynamic parameters assigned under "Control".

1. In the "Operating mode" drop-down list, select the entry "Relative positioning".
2. Specify the distance by which the axis is to be moved. A negative distance can be specified; it reverses the traversing direction. By clicking the "Forward" button, the axis travels in negative direction and vice versa.
3. Specify the dynamic parameters for the traversing motion.
4. To move the axis by the specified distance, click the "Forward" button. To move the axis by the specified distance in the opposite direction, click the "Backward" button.
5. Click the "Stop" button to stop the traversing motion.

Position axis absolutely

The positioning is executed as a controlled, absolute traversing motion by the specified distance and the dynamic parameters assigned under "Control".

1. In the "Operating mode" drop-down list, select "Absolute positioning".
2. Enter the target position.
3. Specify the dynamic parameters for the traversing motion.
4. Axes without modulo setting: To move the axis to the specified target position, click the "Start" button.
   Axes with modulo setting: To position the axis within the modulo range, click the "Forward" or "Backward" button. The axis is positioned within the modulo range. Position settings outside the modulo range are recalculated to the modulo range accordingly.
5. Click the "Stop" button to stop the traversing motion.

6.5 Specify the dynamics in the axis control panel (S7-1500, S7-1500T)

In the operating modes of the axis control panel, you can specify the dynamics for traversing the axis.

Configure the dynamic limits before you use the axis control panel so that the specified dynamic values from the axis control panel are limited and the default setting of the dynamic values takes place accordingly.

During the first commissioning, you should traverse the axis at low dynamics. Reduce the dynamic values to less than the default setting. Increase the dynamic values gradually when traversing of the axis meets your expectations.

Next, adapt the dynamic default and the dynamic limits in the configuration of the technology object. The dynamic values from the axis control panel are not automatically applied to the configuration of the technology object.

A velocity override or speed override set for the technology object is effective when operating the axis control panel.

Default setting of the dynamics values

The default setting of the dynamic values is as follows when calling the axis control panel:

Dynamic value	Default value
Velocity/ Velocity setpoint	Velocity or speed at which the axis is traversed when "Homing" operating mode is not selected. Default setting: 10% of the configured value in "Technology objects > Configuration > Extended parameters > Limits > Dynamics limits".
Acceleration	Acceleration with which the axis is traversed. Default setting: 10% of the configured value in "Technology objects > Configuration > Extended parameters > Limits > Dynamics limits".
Deceleration	Deceleration with which the axis is traversed. Default setting: 100% of the configured value in "Technology objects > Configuration > Extended parameters > Limits > Dynamic limits".
Jerk	Jerk with which the axis is traversed. Default setting: 100% of the configured value in "Technology objects > Configuration > Extended parameters > Limits > Dynamic limits".

6.6 Optimize position controller (S7-1500, S7-1500T)

The following section describes how to optimize the position controller of a drive with the axis control panel.
How you proceed depends on the assigned drive:

- SINAMICS drive with DSC configured with Startdrive
- SINAMICS drive with DSC configured without Startdrive
- Drive without DSC

Requirement

- The CPU must be in the RUN mode.
- The project has been created and downloaded to the CPU.
- The technology object is disabled by your user program ("MC_Power.Enable" = FALSE).
- The axis control panel for the technology object is not used by another installation of the TIA Portal.
- The axis has been enabled for commissioning.

Procedure for SINAMICS drives with DSC configured with Startdrive

To optimize the position controller, follow these steps:

1. Configure values for the distance, duration, and dynamics of a test step in the "Measurement configuration" area.
2. Click the green arrow at "Optimize values in drive".
   You go to the optimization of the drive in the Startdrive.
3. Optimize the controller automatically in Startdrive using One Button Tuning (OBT).

4. Navigate back to the optimization of the axis.
   The "Drive optimized" display is green.
5. Click the "Apply values from drive" button.
   The following valus are applied:
   – Gain (Kv factor): The technology object adopts 50% of the value from the drive (r5276).
   – Speed control loop substitute time: The technology object adopts the value from the drive (r5277).

   The online values of the drive are applied when they are connected to the drive online in SINAMICS Startdrive. The offline values of the drive are applied when they are not connected to the drive online in SINAMICS Startdrive.
6. Click the "Forward" or "Backward" button to start a test step for the optimization in positive or negative direction.
   A setpoint is output according to the specified distance for the specified duration. The axis moves by the specified distance. A trace recording of the motion (setpoint and actual values) is created automatically in the "Trace" area.
7. Evaluate the trace recording.
8. If you are not yet satisfied with the optimization result, continue to adjust the gain (KV).
9. Apply the optimized parameters in the project.

Procedure for SINAMICS drives with DSC configured without Startdrive

Requirements: You have carried out a One Button Tuning (OBT) controller optimization in the configuration of the drive. If you use an alternative method for controller optimization in drive, then proceed as with the other drives.

To optimize the position controller, follow these steps:

1. If necessary, configure values for the distance, duration, and dynamics of a test step in the "Measurement configuration" area.
2. Configure the following values as actual values in the "Optimize position controller" area:
   – Gain (Kv factor): Apply 50% of the value from the parameter r5276 of the drive in the technology object.
     Please note: Kv(TO)=0.5*16.66666*Kv(r5276)
   – Speed control loop substitute time: Apply the value from the parameters r5277 of the drive in the technology object.
     Please note: vtc(TO)=0.001*vtc(r5277)
3. Click the "Forward" or "Backward" button to start a test step for the optimization in positive or negative direction.
   A setpoint is output according to the specified distance for the specified duration. The axis moves by the specified distance. A trace recording of the motion (setpoint and actual values) is created automatically in the "Trace" area.
4. Evaluate the trace recording.
5. If you are not yet satisfied with the optimization result, continue to adjust the gain (KV).
6. Apply the optimized parameters in the project.

Procedure for other drives

You use the procedure described here for the following drives:

- SINAMICS drives with DSC that are not optimized with OBT
- SINAMICS drives without DSC
- Third-party drives

To optimize the position controller, follow these steps:

1. In the "Master control" area, click the "Activate" button to activate master control for the technology object, and to establish an online connection to the CPU.
   A warning message is displayed.
2. In the "Axis" area, click the "Enable" button to enable the technology object.
3. Configure values for the distance and dynamics of a test step in the "Measurement configuration" area. Select a sufficiently long measurement duration to record the entire measurement with the trace. If the measurement duration is too short, you will see a warning when entering the value.
4. Configure the following values as actual values in the "Optimize position controller" area:
   – Precontrol: 0.0
   – Speed control loop substitute time: 0.0
   – Gain (Kv factor): 10.0
5. Click the "Forward" or "Backward" button to start a test step for the optimization in positive or negative direction.
   To traverse the specified distance, a trapezoid velocity profile is used. The velocity profile is calculated from the specified dynamic parameters and the distance. A trace recording of the motion (setpoint and actual values) is created automatically in the "Trace" area.

   NOTE

   Check whether the current or torque limitation is active in the drive. To get a meaningful trace recording, both limitations should not be active during optimization. To do this, record the tag <TO>.StatusTorqueData.ActualTorque when using telegram 750 or check the limitations directly in the drive.

6. Evaluate the trace recording.
7. If required, increase in "measurement configuration" the values you use for "acceleration" and "deceleration".
8. Configure the following values as actual values in the "Optimize position controller" area:
   – Precontrol: 100.0
   – Speed control loop substitute time: 0.0
   – Gain (Kv factor): 90 % of the determined value
9. Adjust the speed control loop equivalent time until no more overshoots occur.
10. Apply the optimized parameter values as start values in the project.

Evaluating trace recordings

The trace recordings are not saved. Note the following properties of the curve:

- The curve shows a brief compensation time.
- The curve does not show any motion reversal of the actual position.
- When approaching the position setpoint, no overshoot occurs.
- The curve shows a stable overall behavior (oscillation-free curve).

The following trace recording shows a curve with a long settling time:

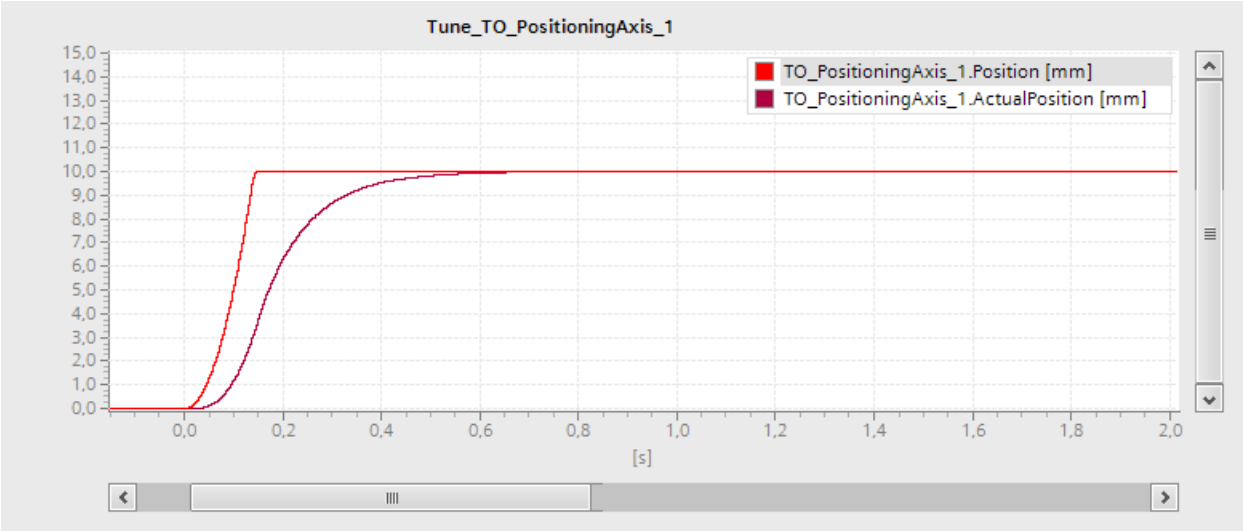

The following trace recording shows a curve with overshoot when approaching the setpoint:

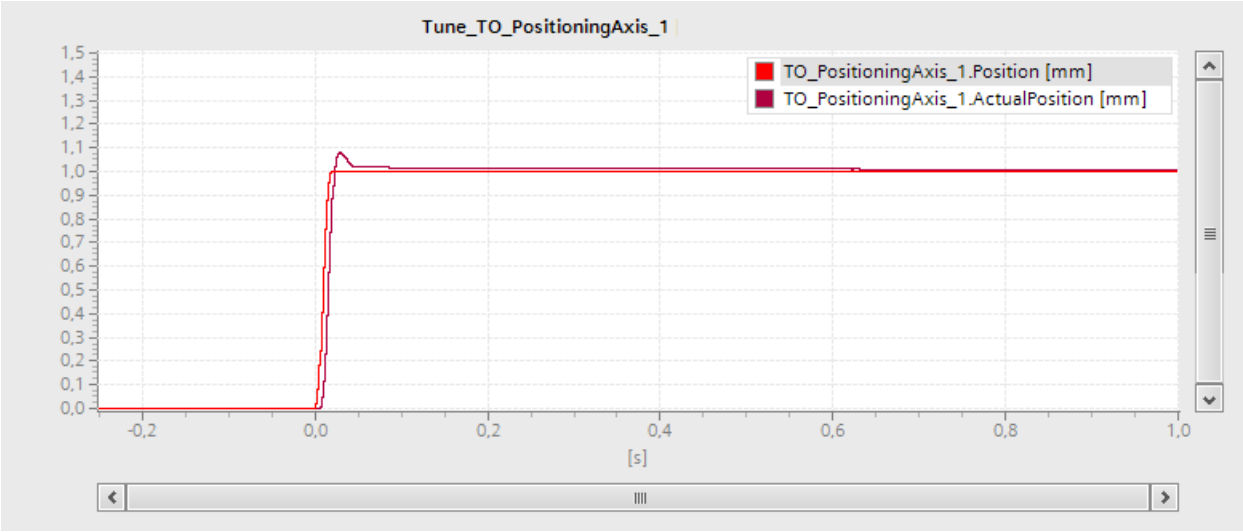

The following trace recording shows a curve in which the gain is optimal and the overall response is steady:

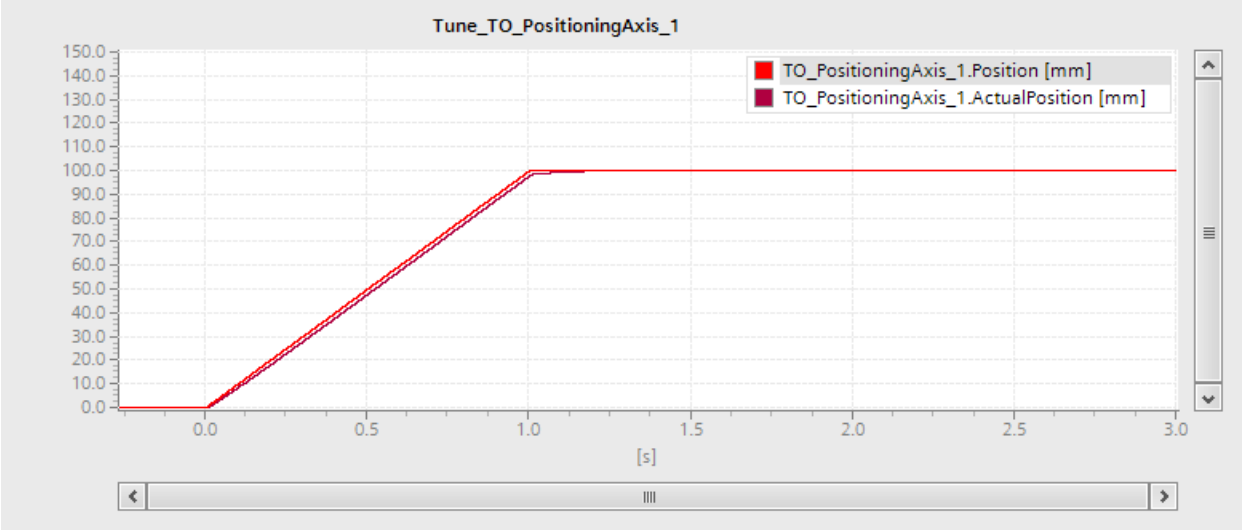

Adjust gain (Kv factor)

Proceed as follows to adapt the gain (Kv factor):

1. Increase the value with each test step, e.g. by 5%. If there is no major change in the control behavior, then select larger steps.
2. Click the "Forward" or "Backward" button to start another test step for optimization in the positive or negative direction.
3. Evaluate the trace recording.
4. Repeat steps 1-3 unit until no more overshoots occurs.

Adjust speed control loop substitute time

With velocity precontrol, a simplified speed control loop model can be generated using the speed control loop substitute time. This prevents the velocity variable being overridden by the position controller during the acceleration and deceleration phases. To accomplish this, the position setpoint of the position controller is delayed by the amount of the speed control loop substitute time in relation to the velocity precontrol. Proceed as follows to adapt the speed control loop equivalent time:

1. Increase the value with each test step, e.g. by 1 ms.
2. On "Forward" or "Backward", perform another test step.
3. Evaluate the trace recording.
4. Repeat steps 1-3 unit until no more overshoots occurs.

Transferring the optimized parameter values of the position controller to the project

To transfer the optimized parameter values of the position controller to your project, follow these steps:

1. Click the icon next to the field of the respective parameter.
   A list of values is displayed.
2. Enter the measured value in the "Project start value" field of the value list. This means the value is applied to the configuration of the technology object in the project.
3. In the "Axis" area, click the "Disable" button to disable the technology object.
4. In the "Master control" area, click the "Deactivate" button to return master control to your user program.
5. Load your project into the CPU.

Additional information

For more information about axis control and axis optimization, refer to Siemens Industry Online Support in the FAQ entry 109779884 (https://support.industry.siemens.com/cs/ww/en/view/109779884).

6.7 Disable axis and hand over master control (S7-1500, S7-1500T)

NOTE

No automatic transfer of the parameters to the technology object

The configured parameter values are discarded after master control is returned.

Transfer the values as needed into your configuration. You can apply the values for the gain, precontrol and speed control loop equivalent time in your configuration using the "Project start value" value.

Requirement

- The axis is enabled in the axis control panel/optimization.
- The enabled technology object accepts Motion Control jobs.
- Speed control and position control are active.
- The actual values of the technology object are valid.

Procedure

Follow these steps to disable the axis and hand over the master control using the axis control panel or optimization:

1. To disable the technology object, click the "Disable" button in the "Axis" area.
2. To return master control to your user program, click the "Deactivate" button in the "Master control" area.

Diagnostics (S7-1500, S7-1500T) 7

The description of Motion Control diagnostics is limited to the diagnostics view of the technology objects in TIA Portal, the technology alarms and the error detections on Motion Control instructions.

The following descriptions can be found in the "S7-1500/S7-1500T Motion Control alarms and error IDs" documentation (Page 12):

- Diagnostics concept
- Technology alarms
- Error IDs in Motion Control instructions

A comprehensive description of the system diagnostics of the S7-1500 CPU can be found in the "Diagnostics" function manual (https://support.industry.siemens.com/cs/ww/en/view/59192926).

7.1 Speed-controlled axis technology object (S7-1500, S7-1500T)

7.1.1 Status and error bits (S7-1500, S7-1500T)

You use the "Technology object > Diagnostics > Status and error bits" diagnostic function in the TIA Portal to monitor the status and error messages for the technology object. The diagnostics function is available in online operation.

The meaning of the status and error messages is described in the following tables. The associated technology object tag is given in parentheses.

Axis status

The following table shows the possible axis status values:

Status	Description
Simulation active	The axis is simulated in the CPU. Setpoints are not output to the drive.
Enabled	The technology object has been enabled. The axis can be moved with motion jobs. (<TO>.StatusWord.X0 (Enable))
Error	An error occurred at the technology object. Detailed information about the error is available in the "Error" area and in the "<TO>.ErrorDetail.Number" and "<TO>.ErrorDetail.Reaction" tags of the technology object. (<TO>.StatusWord.X1 (Error))
Restart active	The technology object is being reinitialized. (<TO>.StatusWord.X2 (RestartActive))

Status	Description
Axis control panel enabled	The axis control panel is active. The axis control panel has master control over the technology object. The axis cannot be controlled from the user program. (<TO>.StatusWord.X4 (ControlPanelActive))
Drive ready	Drive is ready to execute setpoints. (<TO>.StatusDrive.InOperation)
Restart required	Data relevant for the restart has been changed. The changes are applied only after a restart of the technology object. (<TO>.StatusWord.X3 (OnlineStartValuesChanged))

Motion status

The following table shows the possible axis motion status values:

Status	Description
Done (no job running)	There is no active motion job at the technology object. (<TO>.StatusWord.X6 (Done))
Jog	The axis is being moved with a job for jog mode of Motion Control instruction "MC_MoveJog" or from the axis control panel. (<TO>.StatusWord.X9 (JogCommand))
Speed setpoint	The axis is traversed with a job with speed setpoint of the Motion Control instruction "MC_MoveVelocity" or using the axis control panel. (<TO>.StatusWord.X10 (VelocityCommand))
Constant speed	The axis is moved with constant speed or is stationary. (<TO>.StatusWord.X12 (ConstantVelocity))
Accelerating	Axis is being accelerated. (<TO>.StatusWord.X13 (Accelerating))
Decelerating	The axis is being decelerated. (<TO>.StatusWord.X14 (Decelerating))
Torque limit active	At least the threshold value (default 90%) of the preset force/torque limitation acts on the axis. (<TO>.StatusWord.X27 (InLimitation))
Active stop job	The axis is stopped and disabled by Motion Control instruction "MC_Stop". (<TO>.StatusWord2.X0 (StopCommand))

Warnings

The following table shows the possible warnings:

Warning	Description
Configuration	One or several configuration parameters are adjusted internally at a certain time. (<TO>.WarningWord.X1 (ConfigWarning))
Job rejected	A job cannot be executed. A Motion Control instruction cannot be executed because the necessary conditions have not been met. (<TO>.WarningWord.X3 (CommandNotAccepted))
Dynamic limitation	The dynamic values are limited to the dynamic limits. (<TO>.WarningWord.X6 (DynamicWarning))

Error

The following table shows the possible errors:

Error	Description
System	A system-internal error has occurred. (<TO>.ErrorWord.X0 (SystemFault))
Configuration	A configuration error has occurred. One or more configuration parameters are inconsistent or invalid. The technology object was incorrectly configured, or editable configuration data was incorrectly modified during runtime of the user program. (<TO>.ErrorWord.X1 (ConfigFault))
User program	An error occurred in the user program with a Motion Control instruction or its use. (<TO>.ErrorWord.X2 (UserFault))
Drive	An error occurred in the drive. (<TO>.ErrorWord.X4 (DriveFault))
Data exchange	Communication with a connected device is faulty. (<TO>.ErrorWord.X7 (CommunicationFault))
I/O	An error occurred accessing a logical address. (<TO>.ErrorWord.X13 (PeripheralError))
Job rejected	A job cannot be executed. A Motion Control instruction cannot be executed because necessary requirements have not been met (e.g. technology object not homed). (<TO>.ErrorWord.X3 (CommandNotAccepted))
Dynamic limitation	The dynamic values are limited to the dynamic limits. (<TO>.ErrorWord.X6 (DynamicError))

Alarm display

For more information and to acknowledge the error, go to the Inspector window by clicking on the "Alarm display" link.

More information

An option for evaluating the individual status bits can be found in the section "Evaluating StatusWord, ErrorWord and WarningWord" of the "S7-1500/S7-1500T Motion Control overview" (Page 12) documentation.

See also

"StatusWord" tag (speed axis) (Page 294)
"ErrorWord" tag (speed axis) (Page 295)
"WarningWord" tag (speed axis) (Page 297)

7.1.2 Motion status (S7-1500, S7-1500T)

You use the "Technology object > Diagnostics > Motion status" diagnostic function in the TIA Portal to monitor the motion status of the axis. The Diagnostics function is available in online operation.

"Setpoints" area

The following table shows the meaning of the status data:

Status	Description
Speed setpoint	Speed setpoint of the axis (<TO>.Velocity)
Speed override	Speed setpoint correction as percentage The speed setpoint specified in motion control instructions or set by the axis control panel are superimposed with an override signal and corrected as a percentage. Valid speed correction values range from 0.0 % to 200.0 %. (<TO>.Override.Velocity)

"Current values" area

The following table shows the meaning of the status data:

Status	Description
Actual speed	Actual speed of the axis (<TO>.ActualSpeed)

"Dynamic limits" area

This area displays the limit values for the dynamic parameters.

The following table shows the meaning of the status data:

Status	Description
Speed	Configured maximum speed (<TO>.DynamicLimits.MaxVelocity)
Acceleration	Configured maximum acceleration (<TO>.DynamicLimits.MaxAcceleration)
Deceleration	Configured maximum deceleration (<TO>.DynamicLimits.MaxDeceleration)
Jerk	Configured maximum jerk (<TO>.DynamicLimits.MaxJerk)

7.1.3 PROFIdrive telegram (S7-1500, S7-1500T)

The "Technology object > Diagnostics > PROFIdrive telegram" diagnostics function is used in the TIA Portal to monitor the PROFIdrive telegram that the drive returns to the controller. The Diagnostics function is available in online operation.

"Drive" area

This area displays the following parameters contained in the PROFIdrive telegram from the drive to the controller:

- Status words "ZSW1" and "ZSW2"
- The speed setpoint (NSET) that was output to the drive
- The actual speed that was signaled from the drive (NACT)

7.2 Positioning axis technology object (S7-1500, S7-1500T)

7.2.1 Status and error bits (S7-1500, S7-1500T)

You use the "Technology object > Diagnostics > Status and error bits" diagnostic function in the TIA Portal to monitor the status and error messages for the technology object. The diagnostics function is available in online operation.
The meaning of the status and error messages is described in the following tables. The associated technology object tag is given in parentheses.

Axis status

The following table shows the possible axis status values:

Status	Description
Simulation active	The axis is simulated in the CPU. Setpoints are not output to the drive. (<TO>.StatusWord.X25 (AxisSimulation))

Status	Description
Enabled	The technology object has been enabled. You can move the axis with motion jobs. (<TO>.StatusWord.X0 (Enable))
Position-controlled mode	The axis is in position-controlled mode. (Inversion of <TO>.StatusWord.X28 (NonPositionControlled))
Homed	The technology object is homed. The relationship between the position in the technology object and the mechanical position was successfully created. (<TO>.StatusWord.X5 (HomingDone))
Error	An error occurred at the technology object. Detailed information about the error is available in the "Error" area and in the "<TO>.ErrorDetail.Number" and "<TO>.ErrorDetail.Reaction" tags of the technology object. (<TO>.StatusWord.X1 (Error))
Restart active	The technology object is being reinitialized. (<TO>.StatusWord.X2 (RestartActive))
Axis control panel enabled	The axis control panel is active. The axis control panel has master control over the technology object. You cannot control the axis from the user program. (<TO>.StatusWord.X4 (ControlPanelActive))
Drive ready	Drive is ready to execute setpoints. (<TO>.StatusDrive.InOperation)
Encoder values valid	The actual encoder values are valid. (<TO>.StatusSensor[1].State)
Encoder values valid (S7-1500T)	The actual encoder values of encoder 1, encoder 2, encoder 3 or encoder 4 are valid. (<TO>.StatusSensor[1..4].State)
Active encoder (S7-1500T)	The encoder in effect operationally is encoder 1, encoder 2, encoder 3 or encoder 4. (<TO>.OperativeSensor)
Encoder values homed	Encoder is homed with one of the following homing types: • Active homing • Passive homing • Absolute encoder adjustment • Incremental encoder adjustment (<TO>.StatusSensor[1].Adjusted)
Encoder homed (S7-1500T)	Encoder 1, encoder 2, encoder 3 or encoder 4 is homed with one of the following homing types: • Active homing • Passive homing • Absolute encoder adjustment • Incremental encoder adjustment (<TO>.StatusSensor[1..4].Adjusted)
Restart required	Data relevant for the restart has been changed. The changes are applied only after a restart of the technology object. (<TO>.StatusWord.X3 (OnlineStartValuesChanged))

Status limit switch

The following table shows the possibilities for enabling the software and hardware limit switches:

Status	Description
Negative SW limit switch approached.	The negative software limit switch has been approached. (<TO>.StatusWord.X15 (SWLimitMinActive))
Positive SW limit switch approached.	The positive software limit switch has been approached. (<TO>.StatusWord.X16 (SWLimitMaxActive))
Negative HW limit switch approached	The negative hardware limit switch has been approached or overtraveled. (<TO>.StatusWord.X17 (HWLimitMinActive))
Positive HW limit switch approached.	The positive hardware limit switch has been approached or overtraveled. (<TO>.StatusWord.X18 (HWLimitMaxActive))

Motion status

The following table shows the possible axis motion status values:

Status	Description
Done (no job running)	No job active at technology object. (<TO>.StatusWord.X6 (Done))
Homing job	The technology object executes a homing job of the Motion Control instruction "MC_Home" or from the axis control panel. (<TO>.StatusWord.X11 (HomingCommand))
Jog	The axis is being moved with a job for jog mode of Motion Control instruction "MC_MoveJog". (<TO>.StatusWord.X9 (JogCommand))
Velocity specification	The axis is traversed with a job with velocity specification of the Motion Control instruction "MC_MoveVelocity" or from the axis control panel. (<TO>.StatusWord.X10 (VelocityCommand))
Positioning job	The axis is traversed with a positioning job of Motion Control instruction "MC_MoveAbsolute" or "MC_MoveRelative" or from the axis control panel. (<TO>.StatusWord.X8 (PositioningCommand))
Constant velocity	The axis is moved with constant velocity or is stationary. (<TO>.StatusWord.X12 (ConstantVelocity))
Standstill	The axis is in standstill. (<TO>.StatusWord.X7 (StandStill))
Accelerating	Axis is being accelerated. (<TO>.StatusWord.X13 (Accelerating))
Decelerating	The axis is being decelerated. (<TO>.StatusWord.X14 (Decelerating))
Torque limit active	At least the threshold value (default 90%) of the preset force/torque limitation acts on the axis. (<TO>.StatusWord.X27 (InLimitation))
Active stop job	The axis is stopped and disabled by Motion Control instruction "MC_Stop". (<TO>.StatusWord2.X0 (StopCommand))

Status	Description
Superimposed motion	The motion of the axis is superimposed by at least one overlapping Motion Control instruction. (OR logic operation) (<TO>.StatusWord.X23 (MoveSuperimposedCommand)) (<TO>.StatusWord2.X6 (MotionInSuperimposedCommand)) (<TO>.StatusWord2.X7 (HaltSuperimposedCommand))

Warnings

The following table shows the possible warnings:

Warning	Description
Configuration	One or more configuration parameters are being internally adapted temporarily. (<TO>.WarningWord.X1 (ConfigWarning))
Job rejected	Job cannot be executed. You cannot execute a Motion Control instruction because necessary requirements are not fulfilled. (<TO>.WarningWord.X3 (CommandNotAccepted))
Dynamic limitation	The dynamic values are limited to the dynamic limits. (<TO>.WarningWord.X6 (DynamicWarning))

Error

The following table shows the possible errors:

Error	Description
System	A system-internal error has occurred. (<TO>.ErrorWord.X0 (SystemFault))
Configuration	A configuration error has occurred. One or more configuration parameters are inconsistent or invalid. The technology object was incorrectly configured, or editable configuration data was incorrectly modified during runtime of the user program. (<TO>.ErrorWord.X1 (ConfigFault))
User program	An error occurred in the user program with a Motion Control instruction or its use. (<TO>.ErrorWord.X2 (UserFault))
Drive	An error occurred in the drive. (<TO>.ErrorWord.X4 (DriveFault))
Encoder	An error occurred in the encoder system. (<TO>.StatusSensor[1].Error)
Encoder (S7-1500T)	An error has occurred in the encoder system of encoder 1, encoder 2, encoder 3 or encoder 4. (<TO>.StatusSensor[1..4].Error)
Data exchange	Communication with a connected device is faulty. (<TO>.ErrorWord.X7 (CommunicationFault))

Error	Description
I/O	An error occurred accessing a logical address. (<TO>.ErrorWord.X13 (PeripheralError))
Job rejected	A job cannot be executed. You cannot execute a Motion Control instruction because necessary requirements are not fulfilled (for example, technology object not homed). (<TO>.ErrorWord.X3 (CommandNotAccepted))
Homing	An error occurred during a homing process. (<TO>.ErrorWord.X10 (HomingFault))
Positioning	The positioning axis was not positioned correctly at the end of a positioning motion. (<TO>.ErrorWord.X12 (PositioningFault))
Dynamic limitation	The dynamic values are limited to the dynamic limits. (<TO>.ErrorWord.X6 (DynamicError))
Following error	The maximum permitted following error has been exceeded. (<TO>.ErrorWord.X11 (FollowingErrorFault))
SW limit switch	A software limit switch has been reached. (<TO>.ErrorWord.X8 (SwLimit))
HW limit switch	A hardware limit switch has been reached or overtraveled. (<TO>.ErrorWord.X9 (HWLimit))
Adaptation	An error occurred during data adaption. (<TO>.ErrorWord.X15 (AdaptionError))

Alarm display

For more information and to acknowledge the error, go to the Inspector window by clicking on the "Alarm display" link.

More information

An option for evaluating the individual status bits can be found in the section "Evaluating StatusWord, ErrorWord and WarningWord" of the "S7-1500/S7-1500T Motion Control overview" (Page 12) documentation.

See also

"StatusWord" tag (positioning axis) (Page 326)
"ErrorWord" tag (positioning axis) (Page 328)
"WarningWord" tag (positioning axis) (Page 330)

7.2.2 Motion status (S7-1500, S7-1500T)

You use the "Technology object > Diagnostics > Motion status" diagnostic function in the TIA Portal to monitor the motion status of the axis. The Diagnostics function is available in online operation.

"Setpoints" area

The following table shows the meaning of the status data:

Status	Description
Target position	Current target position of an active positioning job The target position value is only valid during execution of a positioning job. (<TO>.StatusPositioning.TargetPosition)
Position setpoint	Setpoint position of the axis (<TO>.Position)
Velocity setpoint	Velocity setpoint of the axis (<TO>.Velocity)
Velocity override	Percentage correction of the velocity specification The velocity setpoint specified in Motion Control instructions or set by the axis control panel is superimposed with an override signal and corrected as a percentage. Valid velocity correction values range from 0.0 % to 200.0 %. (<TO>.Override.Velocity)

"Current values" area

The following table shows the meaning of the status data:

Status	Description
Operative encoder	Operative encoder of the axis
Actual position	Actual position of the axis If the technology object is not homed, then the value is displayed relative to the position that existed when the technology object was enabled. (<TO>.ActualPosition)
Actual velocity	Actual velocity of the axis (<TO>.ActualVelocity)
Following error	Following error of the axis (<TO>.StatusPositioning.FollowingError)

"Dynamic limits" area

This area displays the limit values for the dynamic parameters.
The following table shows the meaning of the status data:

Status	Description
Velocity	Configured maximum velocity (<TO>.DynamicLimits.MaxVelocity)
Acceleration	Configured maximum acceleration (<TO>.DynamicLimits.MaxAcceleration)
Deceleration	Configured maximum deceleration (<TO>.DynamicLimits.MaxDeceleration)
Jerk	Configured maximum jerk (<TO>.DynamicLimits.MaxJerk)

7.2.3 PROFIdrive telegram (S7-1500, S7-1500T)

The "Technology object > Diagnostics > PROFIdrive telegram" diagnostics function is used in the TIA Portal to monitor the PROFIdrive telegrams returned by the drive and encoder. The display of the Diagnostics function is available in online operation.

"Drive" area

This area displays the following parameters contained in the PROFIdrive telegram from the drive to the controller:

- Status words "ZSW1" and "ZSW2"
- The speed setpoint (NSET) that was output to the drive
- The actual speed that was signaled from the drive (NACT)

"Encoder" area

in the areas "Encoder" for CPU S7-1500 or "Encoder 1" to "Encoder 4" for CPU S7-1500T, the following parameters from the PROFIdrive telegram are displayed by the encoder to the controller.

- Status word "Gx_ZSW"
- The actual position value "Gx_XIST1" (cyclic actual encoder value)
- The actual position value "Gx_XIST2" (absolute encoder value)

7.3 Technology object external encoder (S7-1500, S7-1500T)

7.3.1 Status and error bits (S7-1500, S7-1500T)

You use the "Technology object > Diagnostics > Status and error bits" diagnostic function in the TIA Portal to monitor the status and error messages for the technology object. The diagnostics function is available in online operation.
The meaning of the status and error messages is described in the following tables. The associated technology object tag is given in parentheses.

Encoder status

The following table shows the possible external encoder status values:

Status	Description
Encoder enabled	The technology object has been enabled. (<TO>.StatusWord.X0 (Enable))
Homed	The technology object is homed. The relationship between the position in the technology object and the mechanical position was successfully created. (<TO>.StatusWord.X5 (HomingDone))

Status	Description
Error	An error occurred at the technology object. Detailed information about the error is available in the "Error" area and in the "<TO>.ErrorDetail.Number" and "<TO>.ErrorDetail.Reaction" tags of the technology object. (<TO>.StatusWord.X1 (Error))
Restart active	The technology object is being reinitialized. (<TO>.StatusWord.X2 (RestartActive))
Encoder values valid	The actual encoder values are valid. (<TO>.StatusSensor[n].State)
Encoder values homed	Encoder is homed with one of the following homing types: • Active homing • Passive homing • Absolute encoder adjustment • Incremental encoder adjustment (<TO>.StatusSensor[n].Adjusted)
Restart required	Data relevant for the restart has been changed. The changes are applied only after a restart of the technology object. (<TO>.StatusWord.X3 (OnlineStartValuesChanged))

Motion status

The following table shows the possible states of the job execution:

Status	Description
Done (no job running)	There is no active Motion Control job for the technology object. (Enable by "MC_Power" job excepted) (<TO>.StatusWord.X6 (Done))
Homing job	The technology object executes a homing job of the Motion Control instruction "MC_Home". (<TO>.StatusWord.X11 (HomingCommand))

Error

The following table shows the possible errors:

Error	Description
System	A system-internal error has occurred. (<TO>.ErrorWord.X0 (SystemFault))
Configuration	A configuration error has occurred. One or more configuration parameters are inconsistent or invalid. The technology object was incorrectly configured, or editable configuration data was incorrectly modified during runtime of the user program. (<TO>.ErrorWord.X1 (ConfigFault))
User program	An error occurred in the user program with a Motion Control instruction or its use. (<TO>.ErrorWord.X2 UserFault))

Error	Description
Encoder	An error occurred in the encoder system. (<TO>.ErrorWord.X5 (SensorFault))
Data exchange	Missing or faulty communication. (<TO>.ErrorWord.X7 (CommunicationFault))
Adaptation	An error occurred during data adaption. (<TO>.ErrorWord.X15 (AdaptionError))

Alarm display

For more information and to acknowledge the error, go to the Inspector window by clicking on the "Alarm display" link.

More information

An option for evaluating the individual status bits can be found in the section "Evaluating StatusWord, ErrorWord and WarningWord" of the "S7-1500/S7-1500T Motion Control overview" (Page 12) documentation.

See also

"StatusWord" tag (external encoder) (Page 341)
"ErrorWord" tag (external encoder) (Page 342)
"WarningWord" tag (external encoder) (Page 344)

7.3.2 Motion status (S7-1500, S7-1500T)

You use the "Technology object > Diagnostics > Motion status" diagnostic function in the TIA Portal to monitor the actual encoder values. The diagnostics function is available in online operation.

"Current values" area

The following table shows the meaning of the status data:

Status	Description
Actual position	Actual position of the axis If the technology object is not homed, then the value is displayed relative to the position that existed when the technology object was enabled. (<TO>.ActualPosition)
Actual velocity	Actual velocity of the axis (<TO>.ActualVelocity)

7.3.3 PROFIdrive telegram (S7-1500, S7-1500T)

The "Technology object > Diagnostics > PROFIdrive telegram" diagnostic function is used in the TIA Portal to monitor the PROFIdrive telegram of the encoder. The display of the diagnostics function is available in technology object online mode.

"Encoder" area

This area displays the following parameters contained in the PROFIdrive telegram that the encoder returns to the controller:

- Status word "G1_ZSW"
- The actual position value "G1_XIST1" (cyclic actual encoder value)
- The actual position value "G1_XIST2" (absolute value of the encoder)

Instructions (S7-1500, S7-1500T) 8

8.1 MC_Power V7 (S7-1500, S7-1500T)

8.1.1 MC_Power: Enable, disable technology object V7 (S7-1500, S7-1500T)

Description

With the Motion Control instruction "MC_Power", a technology object is enabled or disabled and, if necessary, a configured drive is switched on or off.

NOTE

Multi-instance DBs

If you use multi-instances of the MC_Power instruction, create the multi-instances in a separate function block. This allows you to download program blocks from other sections of your user program without switching off the axes, including in RUN mode.

Applies to

- Speed axis
- Positioning axis
- Synchronous axis
- External encoder

Requirements

- The technology object has been configured correctly.
- The readiness of the drive is assumed for enabling the technology object. When using the SIEMENS telegram 10x, you can evaluate the bit "DriveReady" from the signal word "MELDW" of the receiving telegram "PD_TEL10x_IN".
- Cyclic bus communication is established between controller and encoder ("<TO>.StatusSensor[1..4].CommunicationOK" = TRUE).
- Cyclic bus communication is established between controller and drive ("<TO>.StatusDrive.CommunicationOK" = TRUE).
- The status of the active encoder is valid ("<TO>.StatusSensor[1..4].State" = 2).
- The optional data adaption (Page 61) has been completed ("<TO>.StatusDrive.AdaptionState" = 2 and "<TO>.StatusSensor[1..4].AdaptionState" = 2).

The requirements that must be met before a technology object can be released via "MC_Power" can be found in the Siemens Industry Online Support in the FAQ entry 109750297 (https://support.industry.siemens.com/cs/ww/en/view/109750297).

Override response

- An "MC_Power" job cannot be aborted by any other Motion Control job.
- An "MC_Power" job with parameter "Enable"TRUE enables a technology object but does not thereby abort any other Motion Control instructions.
- Disabling the technology object (parameter "Enable" = FALSE) aborts all Motion Control jobs on the corresponding technology object in accordance with the selected "StopMode". This process cannot be canceled by the user.

Parameters

The following table shows the parameters of the Motion Control instruction "MC_Power":

Parameter	Declaration	Data type	Default value	Description	
Axis	INPUT	TO_SpeedAxis TO_PositioningAxis TO_SynchronousAxis TO_ExternalEncoder	-	Technology object	
Enable	INPUT	BOOL	FALSE	TRUE	The technology object is enabled.
				FALSE	The technology object is disabled. All current jobs at the technology object are aborted in accordance with the configured "StopMode".
StartMode	INPUT	DINT	1	0	Enable positioning axis/synchronous axis not position-controlled
				1	Enable positioning axis/synchronous axis position-controlled
				The parameter initially takes effect when the positioning axis is enabled ("Enable" changes from "FALSE" to "TRUE") and when the axis is enabled after acknowledgment of an interrupt that caused the axis to be disabled. This parameter is ignored when a speed axis or an external encoder is used.	
StopMode	INPUT	INT	0	Not applicable to the technology object external encoder If you disable a technology object with a negative edge at parameter "Enable", the axis decelerates in accordance with the selected "StopMode".	
				0	Emergency stop When the technology object is disabled, the axis is braked to a standstill without jerk limit, using the emergency stop deceleration configured in "Technology object > Configuration > Extended parameters > Emergency stop". The drive is then switched off and the technology object is locked. (<TO>.DynamicDefaults.EmergencyDeceleration)

Parameter	Declaration	Data type	Default value	Description	
StopMode	INPUT	INT	0	1	Immediate stop When a technology object is disabled, the setpoint zero is output. The axis is braked to a standstill according to the configuration in the drive. The drive is then switched off and the technology object is locked.
				2	Stop with maximum dynamic values When the technology object is disabled, the axis is braked to a standstill using the maximum deceleration configured in "Technology object > Configuration > Extended parameters > Dynamic limits". The configured maximum jerk is hereby taken into account. The drive is then switched off and the technology object is locked. (<TO>.DynamicLimits.MaxDeceleration; <TO>.DynamicLimits.MaxJerk)
				3	Coasting down When the technology object is disabled, the drive is de-energized (pulse suppression) and switches to the closing lockout state. The drive then coasts to a stop. If you are using a drive with an analog setpoint interface, the enable output is disabled and the analog output signal is set to 0.0. **Note** Using drives with motor holding brake With pulse suppression, the drive gives the command to close the motor holding brake immediately and independently of the motor speed. If you do not want the brake to close, make sure to keep the brake open with the FB "LAxisCtrl_BrakeControl". "LAxisCtrl" library (https://support.industry.siemens.com/cs/ww/en/view/109749348)
Status	OUTPUT	BOOL	FALSE	Technology object enable status	
				FALSE	Disabled • The technology object does not accept any Motion Control jobs. • Speed control and positioning control are not active. • The actual values of the technology object are not checked for validity.

Parameter	Declaration	Data type	Default value	Description	
Status	OUTPUT	BOOL	FALSE	TRUE	Enabled • The enabled technology object accepts Motion Control jobs. • Speed control and positioning control are active. • The actual values of the technology object are valid.
Busy	OUTPUT	BOOL	FALSE	TRUE	The job is being processed.
Error	OUTPUT	BOOL	FALSE	TRUE	An error occurred in Motion Control instruction "MC_Power". The cause of the error can be found in the "ErrorID" parameter.
ErrorID	OUTPUT	WORD	16#0000	Error ID for parameter "ErrorID" You can find more detailed information in the "Error IDs" section of the "S7-1500/S7-1500T Motion Control alarms and error IDs" documentation (Page 12).	

Enabling technology objects

To enable a technology object, set the "Enable" parameter to "TRUE".
The following two cases are differentiated:

- Enable at a standstill
- Enable in motion of axis

Enable at a standstill

Depending on the "StartMode" parameter, the position is held ("StartMode" = 1) or the velocity setpoint zero is output ("StartMode" = 0). When the "Status" parameter shows the value "TRUE", the technology object is enabled.

Enable in motion of axis

If "StartMode" = 1, the position at the time of the setting of the "Enable" input takes effect as the position setpoint for the position controller. The axis is braked to a standstill and adjusted to the set position depending on the maximum deceleration configured under "Technology object > Configuration > Extended parameters > Dynamic limits". If monitoring operation or dynamic limits are hereby exceeded, this leads to corresponding alarm responses.

If "StartMode" = 0, the axis is braked as much as possible by the specification of the velocity setpoint zero. Monitoring operations and dynamic limits are not active in this case.

When the "Status" parameter shows the value "TRUE", the technology object is enabled.

NOTE

Automatic enable after acknowledgment of a technology alarm

If the technology object is disabled due to a technology alarm, the technology object will be enabled again automatically after the cause has been eliminated and the alarm has been acknowledged. This requires the "Enable" parameter to have retained the value "TRUE" during this process.

Enabling axes with noisy encoder signals

When the "Enable" input is set, the extrapolated actual position is applied as the position setpoint. For extrapolation, the current actual velocity and the timers $T_i + T_{ipo} + T_{servo}$ are taken into account.

Noisy encoder signals cause the detection of an actual velocity despite standstill of the axis. For encoders with low resolution, this detected actual velocity is greater than for encoders with high resolution. High actual velocities result in significant jumps of the position setpoint when enabling the axis.

To output the velocity setpoint zero when enabling the axis in "StartMode" = 1 and prevent jumps of the position setpoint and braking of the axis with maximum deceleration, set <TO>.PositionControl.VelocityModePowerOn = 1. Monitoring operations and dynamic limits are not active in this case.

Disabling technology objects

To disable a technology object, set the "Enable" parameter to "FALSE".

If an axis is in motion, it is braked to a standstill according to the selected "StopMode".

When the "Busy" and "Status" parameters show the value "FALSE", the disabling of the technology object is complete and, if necessary, a configured drive switched off.

Drive connection by means of PROFIdrive

When a drive is connected using PROFIdrive, the setpoint, enable and drive status are transmitted via the PROFIdrive telegram.

- **Enable technology object and activate drive**
  With "Enable" = TRUE parameter, the technology object is enabled. The drive is enabled according to the PROFIdrive standard.
  When the "<TO>.StatusDrive.InOperation" tag shows the value "TRUE", the drive is ready to execute setpoints. The "Status" parameter is set to the value "TRUE".
- **Disable technology object and deactivate drive**
  With the "Enable" = FALSE parameter, the "Status" parameter is set to the value "FALSE", and the axis is braked according to the selected "StopMode". The drive is disabled according to the PROFIdrive standard.

Analog drive connection

The setpoint is output via an analog output. Optionally, you can configure an enabling signal via digital output (<TO>.Actor.Interface.EnableDriveOutput), and a readiness signal via digital input (<TO>.Actor.Interface.DriveReadyInput).

- **Enable technology object and activate drive**
  With "Enable" = TRUE parameter, the enable output ("Enable drive output") is set.
  When the drive returns the readiness signal via the ready input ("Drive ready input"), the "Status" parameter and the technology object's "<TO>.StatusDrive.InOperation" tag are set to "TRUE", and the setpoint is switched to the analog output.
- **Disable technology object and deactivate drive**
  With the "Enable" = FALSE parameter, the "Status" parameter is set to the value "FALSE", and the axis is braked according to the selected "StopMode". When the setpoint zero is reached, the enable output is set to "FALSE".

More information

You can find more detailed information on enabling and disabling technology objects and drives in the section ""MC_Power" function diagrams (Page 346)".

See also

Transferring drive and encoder parameters automatically (Page 61)
Emergency stop deceleration (Page 102)

8.1.2 MC_Power: Function chart V7 (S7-1500, S7-1500T)

Function chart: Enabling a technology object and example of alarm response

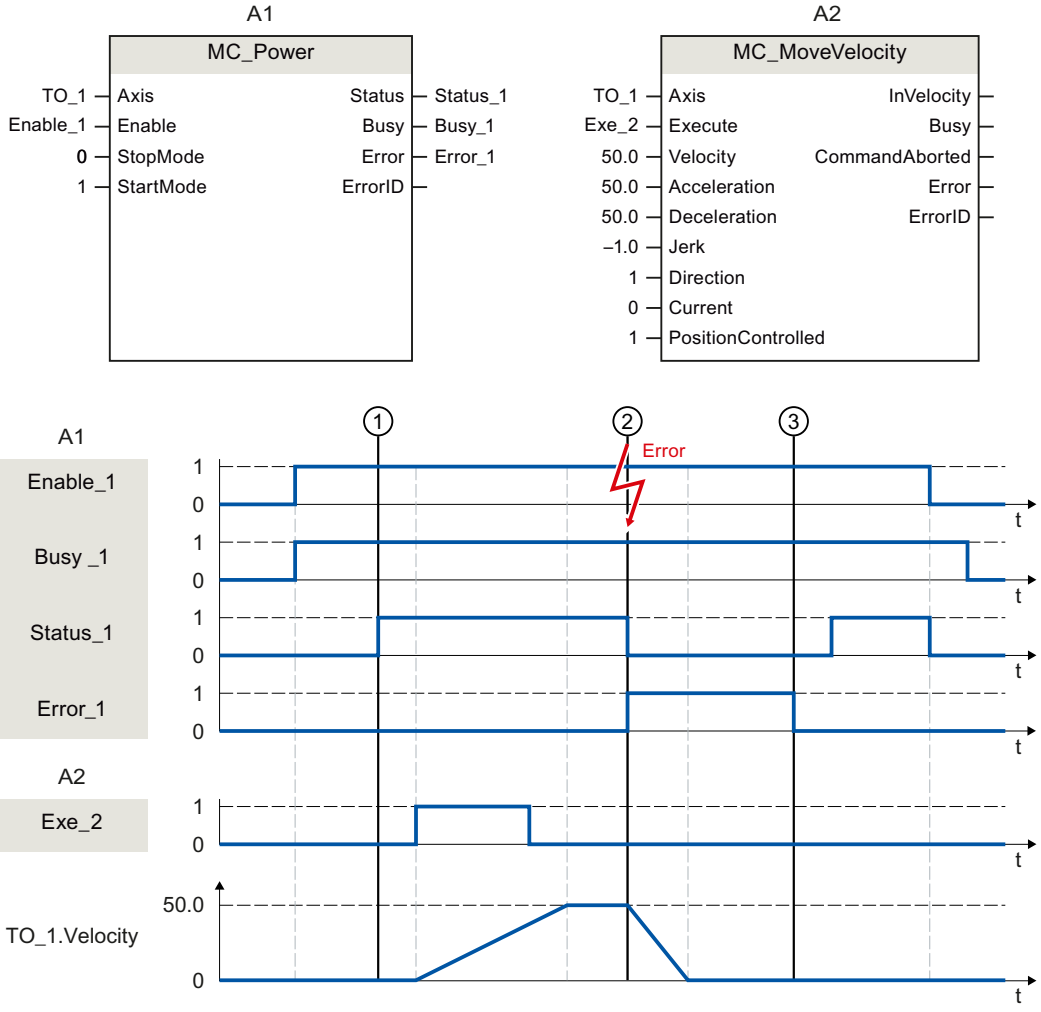

A technology object is enabled with "Enable_1" = TRUE. The successful enable can be read from "Status_1" at time ①. The axis will then move with an "MC_MoveVelocity" job (A2). The velocity profile of the axis can be read from "TO_1.Velocity".

At time ② an error occurs in the technology object, which results in the disabling of the technology object (alarm response: remove enable). The axis is braked to a standstill

according to the configuration in the drive. When the technology object is disabled, "Status_1" is reset. Since the axis was not disabled using "Enable_1" = FALSE, the selected "StopMode" does not apply. The cause of the error is corrected and the alarm is acknowledged at time ③.

Since "Enable_1" is still set, the technology object is enabled again. The successful enable can be read from "Status_1". Finally, the technology object is disabled with "Enable_1" = FALSE.

8.2 MC_Reset V7 (S7-1500, S7-1500T)

8.2.1 MC_Reset: Acknowledge alarms, restart technology object V7 (S7-1500, S7-1500T)

Description

With the Motion Control instruction "MC_Reset", you acknowledge all technology alarms that can be acknowledged in the user program. Acknowledgment also resets the "Error" and "Warning" bits in the technology object data block. An acknowledgment of alarms in the drive is also possible without a pending error at the technology object.

With "Restart" = TRUE, you start reinitialization (restart) of technology objects. Upon restart of the technology object, the new configuration data are applied in the technology object data block.

Applies to

- All technology objects

Requirement

- The technology objects speed axis, positioning axis, synchronous axis and external encoder.
  For a restart, the technology object must be disabled.
  ("MC_Power.Status" = FALSE and "MC_Power.Busy" = FALSE)
- Cyclic BUS communication is established between controller and encoder ("<TO>.StatusSensor[1..4].CommunicationOK" = TRUE).
- Cyclic BUS communication is established between controller and drive ("<TO>.StatusDrive.CommunicationOK" = TRUE).

Override response

- An "MC_Reset" job cannot be aborted by any other Motion Control job.
- A "MC_Reset" job with "Restart" = TRUE cancels all running Motion Control jobs.

Parameters

The following table shows the parameters of the Motion Control instruction "MC_Reset":

Parameter	Declaration	Data type	Default value	Description	
Axis	INPUT	TO_SpeedAxis TO_PositioningAxis TO_SynchronousAxis TO_ExternalEncoder TO_LeadingAxisProxy (S7-1500T) TO_OutputCam TO_CamTrack TO_MeasuringInput TO_Cam (S7-1500T) TO_Cam_10k (S7-1500T) TO_Kinematics (S7-1500T)	-	Technology object	
Execute	INPUT	BOOL	FALSE	TRUE	Start job with a positive edge
Restart	INPUT	BOOL	FALSE	TRUE	Reinitialization of the technology object and acknowledgment of pending technology alarms. The technology object is being reinitialized with the configured start values.
				FALSE	Acknowledgment of queued technology alarms
Done	OUTPUT	BOOL	FALSE	TRUE	Technology alarms have been acknowledged. The restart has been executed.
Busy	OUTPUT	BOOL	FALSE	TRUE	The job is being processed.
CommandAborted	OUTPUT	BOOL	FALSE	TRUE	The job was aborted by another job during execution.
Error	OUTPUT	BOOL	FALSE	TRUE	An error occurred while processing the job. The job is rejected. The cause of the error can be found in the "ErrorID" parameter.
ErrorID	OUTPUT	WORD	16#0000	Error ID for parameter "ErrorID" You can find more detailed information in the "Error IDs" section of the "S7-1500/S7-1500T Motion Control alarms and error IDs" documentation (Page 12).	

Acknowledging technology alarms

To acknowledge technology alarms, follow these steps:

1. Check the requirements indicated above.
2. Set the parameter "Restart" = FALSE.
3. Start the acknowledgment of the error with a positive edge at parameter "Execute".
   When the "Done" parameter shows the value "TRUE", the error has been acknowledged.

If you acknowledge multiple pending alarms, the pending alarms are displayed once more briefly in the "ErrorDetail.Number" tag without being signaled again. Check whether all alarms have been acknowledged after a restart with "MC_Reset.Done" = TRUE has been completely processed.

NOTE

Acknowledge technology alarms with "Restart" = FALSE

To acknowledge only the technology alarms, set "Restart" = FALSE. The technology object cannot be used during a restart. All technology alarms on axes and encoders are acknowledged, even if they are not enabled or not effective.

Restarting a technology object

To restart a technology object, follow these steps:

1. Check the requirements indicated above.
2. Set the parameter "Restart" = TRUE.
3. Perform the restart with a positive edge at parameter "Execute".
   When the "Done" parameter shows the value "TRUE", the restart of the technology object is complete.

You can find more information on restarting in the "Restarting technology objects" section of the "S7-1500/S7-1500T Motion Control overview" documentation (Page 12).

8.3 MC_Home V7 (S7-1500, S7-1500T)

8.3.1 MC_Home: Home technology object, set home position V7 (S7-1500, S7-1500T)

Description

With the Motion Control instruction "MC_Home", you create the relationship between the position in the technology object and the mechanical position. The actual position value in the technology object is assigned to a homing mark at the same time. This homing mark represents a known mechanical position.

With active homing, the default values under "Technology object > Configuration > Extended parameters > Dynamic default values" are used for the dynamic values acceleration, deceleration and jerk.

Applies to

- Positioning axis
- Synchronous axis
- External encoder

Requirement

- The technology object has been configured correctly.
- "Mode" = 2, 3, 5, 8, 10
  The technology object is enabled.
- "Mode" = 6, 7, 8, 11, 12, 13
  The encoder actual values are valid (<TO>.StatusSensor[1..4].State = 2).
- "Mode" = 0, 1, 6, 7
  The axis is in position-controlled mode.

Override response

The override response for "MC_Home" jobs is described in section "Override response V7: Homing and motion jobs (Page 279)".

Parameters

The following table shows the parameters of the Motion Control instruction "MC_Home":

Parameter	Declaration	Data type	Default value	Description	
Axis	INPUT	TO_PositioningAxis TO_SynchronousAxis TO_ExternalEncoder	-	Technology object	
Execute	INPUT	BOOL	FALSE	TRUE	Start job with a positive edge
Position	INPUT	LREAL	0.0	The specified value is used according to the selected "Mode".	
Mode	INPUT	INT	0	Type of homing See table below	
Sensor	INPUT	DINT	0	S7-1500: Not relevant	
				S7-1500T: Selection of the absolute encoder ("Mode" = 6, 7) or incremental encoder ("Mode" = 13) to be calibrated	
				0	Operative encoder
				1..4	Encoder 1..4 (S7-1500T)
ReferenceMarkPosition	OUTPUT	LREAL	0.0	Display of the position at which the technology object was homed. With active homing, the homing mark position corresponds to the home position minus home position offset. With passive homing, the homing mark position corresponds to the home position. (valid when "Done" = TRUE)	
Done	OUTPUT	BOOL	FALSE	TRUE	Job is completed.
Busy	OUTPUT	BOOL	FALSE	TRUE	The job is being processed.

Parameter	Declaration	Data type	Default value	Description	
CommandAborted	OUTPUT	BOOL	FALSE	TRUE	The job was aborted by another job during execution.
Error	OUTPUT	BOOL	FALSE	TRUE	An error occurred while processing the job. The job is rejected. The cause of the error can be found in the "ErrorID" parameter.
ErrorID	OUTPUT	WORD	16#0000	Error ID for parameter "ErrorID" You can find more detailed information in the "Error IDs" section of the "S7-1500/S7-1500T Motion Control alarms and error IDs" documentation (Page 12).	

More information

An option for evaluating the individual status bits can be found in the section "Evaluating StatusWord, ErrorWord and WarningWord" of the "S7-1500/S7-1500T Motion Control overview" (Page 12) documentation.

"Mode" parameter

Value	Description
0	Direct homing (absolute) The current position of the technology object is set to the value of parameter "Position". **Note** In the case of an axis with several encoders, the offset of the position at the sensors of all encoders is also applied with a position correction with the "Mode" parameter = 0. This prevents the sensors from diverging.
1	Direct homing (relative) The current position of the technology object is shifted by the value of parameter "Position". **Note** In the case of an axis with several encoders, the offset of the position at the sensors of all encoders is also applied with a position correction with the "Mode" parameter = 1. This prevents the sensors from diverging.
2	Passive homing (without reset) Function same as "Mode" = 8 with the difference that the "homed" status is **not** reset when the function is enabled.
3	Active homing The positioning axis/synchronous axis technology object performs a homing movement according to the configuration. After the completion of the motion, the axis is positioned at the value of the "Position" parameter.
4	Reserved
5	Active homing ("Position" parameter has no effect) The positioning axis/synchronous axis technology object performs a homing movement according to the configuration. After completion of the motion, the axis is positioned at the home position configured under "Technology object > Configuration > Extended parameters > Homing > Active homing". (<TO>.Homing.HomePosition)

Value	Description
6	Absolute encoder adjustment (relative) The current position is shifted by the value of parameter "Position". The calculated absolute value offset is stored retentively in the CPU. (<TO>.StatusSensor[1..4].AbsEncoderOffset)
7	Absolute encoder adjustment (absolute) The current position is set to the value of parameter "Position". The calculated absolute value offset is stored retentively in the CPU. (<TO>.StatusSensor[1..4].AbsEncoderOffset)
8	Passive homing When the homing mark is detected, the actual value is set to the value of the "Position" parameter.
9	Abort passive homing An active job for passive homing is aborted.
10	Passive homing ("Position" parameter has no effect) When the homing mark is detected, the actual value is set to the home position configured under "Technology object > Configuration > Extended parameters > Homing > Passive homing". (<TO>.Homing.HomePosition)
11	Set setpoint position (absolute) The set position of the technology object is set to the value of the "Position" parameter. The following error remains.
12	Shift the setpoint position (relative) The set position of the technology object is shifted by the value of the "Position" parameter. The following error remains.
13	Incremental encoder adjustment The current position is set to the value of parameter "Position".

See also

Homing (Page 129)

8.4 MC_Halt V7 (S7-1500, S7-1500T)

8.4.1 MC_Halt: Pause axis V7 (S7-1500, S7-1500T)

Description

With the Motion Control instruction "MC_Halt", you brake an axis until it comes to a standstill. You define the dynamic behavior of the braking operation with parameters "Jerk" and "Deceleration".

Applies to

- Speed axis
- Positioning axis
- Synchronous axis

Requirement

- The technology object has been configured correctly.
- The technology object has been enabled.

Override response

The override response for "MC_Halt" jobs is described in section "Override response V7: Homing and motion jobs (Page 279)".

Parameters

The following table shows the parameters of the Motion Control instruction "MC_Halt":

Parameters	Declaration	Data type	Default value	Description	
Axis	INPUT	TO_SpeedAxis TO_PositioningAxis TO_SynchronousAxis	-	Technology object	
Execute	INPUT	BOOL	FALSE	TRUE	Start job with a positive edge
Deceleration	INPUT	LREAL	-1.0	Deceleration	
				> 0.0	The specified value is used.
				= 0.0	Not permitted
				< 0.0	The deceleration configured in "Technology object > Configuration > Extended parameters > Dynamic default values" is used. (<TO>.DynamicDefaults.Deceleration)
Jerk	INPUT	LREAL	-1.0	Jerk	
				> 0.0	Constant-acceleration velocity profile; the specified jerk is used
				= 0.0	Trapezoid velocity profile
				< 0.0	The jerk configured in "Technology object > Configuration > Extended parameters > Dynamic default values" is used. (<TO>.DynamicDefaults.Jerk)
AbortAcceleration	INPUT	BOOL	FALSE	FALSE	The current acceleration at the start of the job is reduced using the configured jerk. Afterwards, the deceleration builds up.
				TRUE	The acceleration is set to 0.0 at the start of the job, and the deceleration immediately builds up.
Done	OUTPUT	BOOL	FALSE	TRUE	Velocity zero has been reached.
Busy	OUTPUT	BOOL	FALSE	TRUE	The job is being processed.

Parameters	Declaration	Data type	Default value	Description	
CommandAborted	OUTPUT	BOOL	FALSE	TRUE	The job was aborted by another job during execution.
Error	OUTPUT	BOOL	FALSE	TRUE	An error occurred while processing the job. The job is rejected. The cause of the error can be found in the "ErrorID" parameter.
ErrorID	OUTPUT	WORD	16#0000	Error ID for parameter "ErrorID" You can find more detailed information in the "Error IDs" section of the "S7-1500/S7-1500T Motion Control alarms and error IDs" documentation (Page 12).	

Braking an axis with "MC_Halt"

Proceed as follows to decelerate an axis to a standstill:

1. Check the requirements indicated above.
2. Set the necessary values for the parameters "Deceleration", "Jerk" and "AbortAcceleration".
3. Start the "MC_Halt" job with a positive edge at parameter "Execute".
   The current motion state is indicated in parameters "Busy", "Done" and "Error". The standstill of the axis is indicated under "Technology object > Diagnostics > Status and error bits > Motion status > Standstill" (<TO>.StatusWord.X7 (Standstill)).

Braking an axis with active force/torque limit

To brake an axis with active force/torque limiting, use the Motion Control instruction "MC_Stop" with "Emergency stop" mode ("Mode" = 0).

More information

Information on the evaluation of the individual bits can be found in the "Evaluating StatusWord, ErrorWord and WarningWord" section of the "S7-1500/S7-1500T Motion Control Overview" documentation (Page 12).

8.4.2 MC_Halt: Function chart V7 (S7-1500, S7-1500T)

Function chart: Pausing an axis and the overriding job characteristics

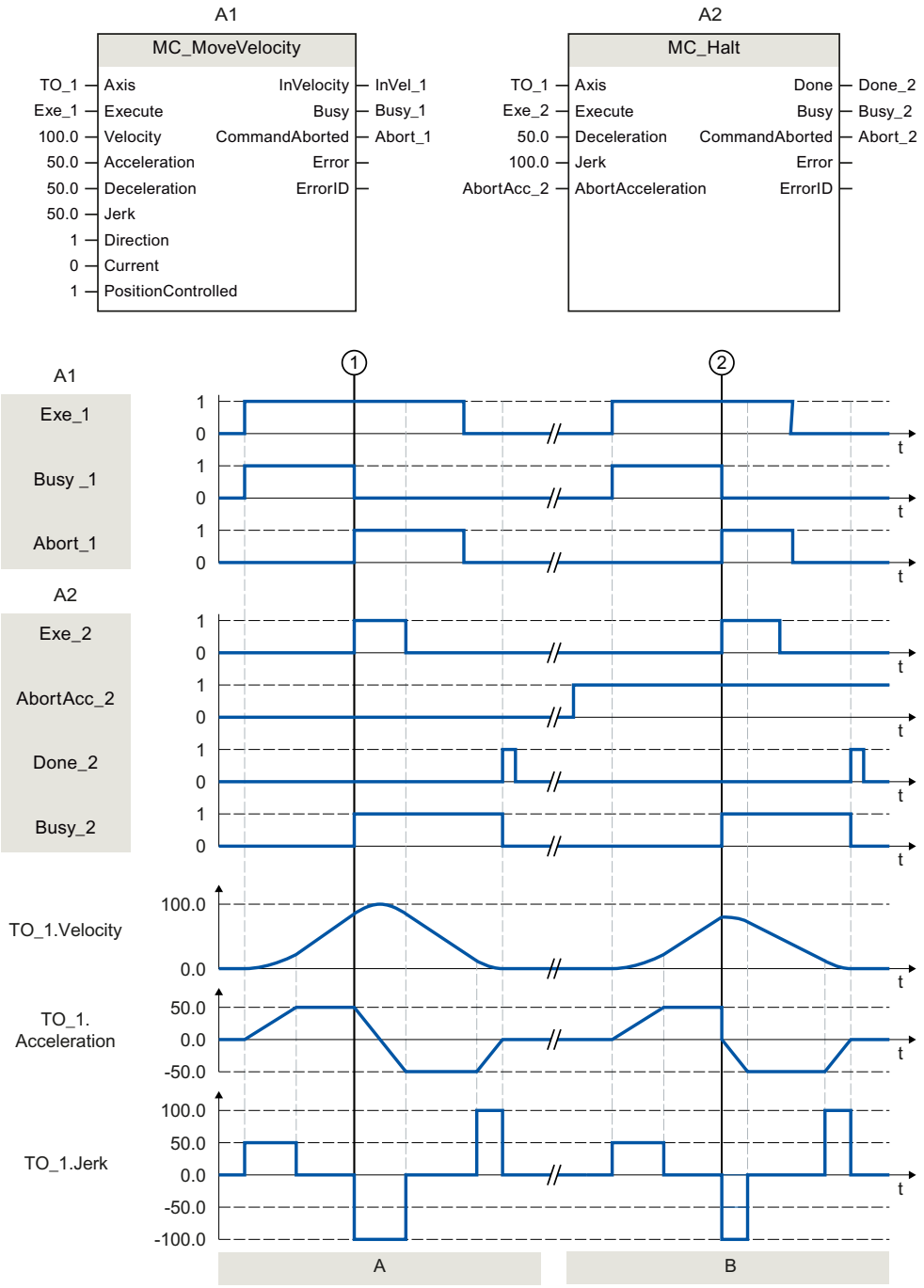

Section A

An axis is moved with an "MC_MoveVelocity" job (A1). At time ①, the "MC_MoveVelocity" job is overridden by an "MC_Halt" job (A2). The job abort is signaled via "Abort_1". With "AbortAcc_2" = FALSE, the current acceleration is reduced with the specified jerk. Afterward,

the deceleration builds up and the axis is braked to a standstill. The completion of the "MC_Halt" job is reported via "Done_2".

Section B

The axis is moved with an "MC_MoveVelocity" job (A1). At time ②, the "MC_MoveVelocity" job is overridden by an "MC_Halt" job (A2). The job abort is signaled via "Abort_1". With "AbortAcc_2" = TRUE, the current acceleration is set to zero immediately and the deceleration builds up. The axis is braked to a standstill. The completion of the "MC_Halt" job is reported via "Done_2".

8.5 MC_MoveAbsolute V7 (S7-1500, S7-1500T)

8.5.1 MC_MoveAbsolute: Position axis absolutely V7 (S7-1500, S7-1500T)

Description

With the Motion Control instruction "MC_MoveAbsolute", you can move an axis to an absolute position.

You define the dynamic behavior of the motion with parameters "Velocity", "Jerk", "Acceleration" and "Deceleration".

Applies to

- Positioning axis
- Synchronous axis

Requirement

- The technology object has been configured correctly.
- The technology object has been enabled.
- The technology object is homed.

Override response

The override response for "MC_MoveAbsolute" jobs is described in section "Override response V7: Homing and motion jobs (Page 279)".

NOTE

Deviating dynamic settings

When overriding the active job with a new jerk-limited motion, the current acceleration or deceleration is transferred to the new acceleration/deceleration via the jerk. Depending on the dynamic settings, this may take several application cycles. When the new acceleration or deceleration deviates significantly from the acceleration/deceleration at the time of the override, the transition profile can result in an unexpected motion of the axis.

If such transitions cannot be excluded during acceleration/deceleration, adjust the dynamic settings of your jobs. For example, add a motion that is not jerk-limited with a direct transition to the new acceleration/deceleration. As an alternative, use high jerk values.

Parameters

The following table shows the parameters of the Motion Control instruction "MC_MoveAbsolute":

Parameters	Declaration	Data type	Default value	Description	
Axis	INPUT	TO_PositioningAxis TO_SynchronousAxis	-	Technology object	
Execute	INPUT	BOOL	FALSE	TRUE	Start job with a positive edge
Position	INPUT	LREAL	0.0	Absolute target position	
Velocity	INPUT	LREAL	-1.0	Velocity setpoint for the positioning	
				> 0.0	The specified value is used.
				= 0.0	Not permitted
				< 0.0	The velocity configured in "Technology object > Configuration > Extended parameters > Dynamic default values" is used. (<TO>.DynamicDefaults.Velocity)
Acceleration	INPUT	LREAL	-1.0	Acceleration	
				> 0.0	The specified value is used.
				= 0.0	Not permitted
				< 0.0	The acceleration configured in "Technology object > Configuration > Extended parameters > Dynamic default values" is used. (<TO>.DynamicDefaults.Acceleration)

Parameters	Declaration	Data type	Default value	Description	
Deceleration	INPUT	LREAL	-1.0	Deceleration	
				> 0.0	The specified value is used.
				= 0.0	Not permitted
				< 0.0	The deceleration configured in "Technology object > Configuration > Extended parameters > Dynamic default values" is used. (<TO>.DynamicDefaults.Deceleration)
Jerk	INPUT	LREAL	-1.0	Jerk	
				> 0.0	Constant acceleration velocity profile The specified value is used.
				= 0.0	Trapezoid velocity profile
				< 0.0	The jerk configured in "Technology object > Configuration > Extended parameters > Dynamic default values" is used. (<TO>.DynamicDefaults.Jerk)
Direction	INPUT	INT	1	Motion direction of the axis This parameter is only evaluated when the modulo function is enabled. "Technology object > Configuration > Basic parameters > Enable modulo"	
				1	Positive direction
				2	Negative direction
				3	Shortest distance
Done	OUTPUT	BOOL	FALSE	TRUE	The target position has been reached. The minimum dwell time has expired (<TO>.PositioningMonitoring.MinDwellTime).
Busy	OUTPUT	BOOL	FALSE	TRUE	The job is being processed.
CommandAborted	OUTPUT	BOOL	FALSE	TRUE	The job was aborted by another job during execution.
Error	OUTPUT	BOOL	FALSE	TRUE	An error occurred while processing the job. The job is rejected. The cause of the error can be found in the "ErrorID" parameter.
ErrorID	OUTPUT	WORD	16#0000	Error ID for parameter "ErrorID" You can find more detailed information in the "Error IDs" section of the "S7-1500/S7-1500T Motion Control alarms and error IDs" documentation (Page 12).	

Moving an axis to an absolute position

Proceed as follows to move an axis to an absolute position:

1. Check the requirements indicated above.
2. Specify the desired target position in the "Position" parameter.
3. Start the "MC_MoveAbsolute" job with a positive edge at parameter "Execute".
   The current motion state is indicated in parameters "Busy", "Done" and "Error".

8.5.2 MC_MoveAbsolute: Function chart V7 (S7-1500, S7-1500T)

Function chart: Absolute positioning of an axis, and the response to an overriding job

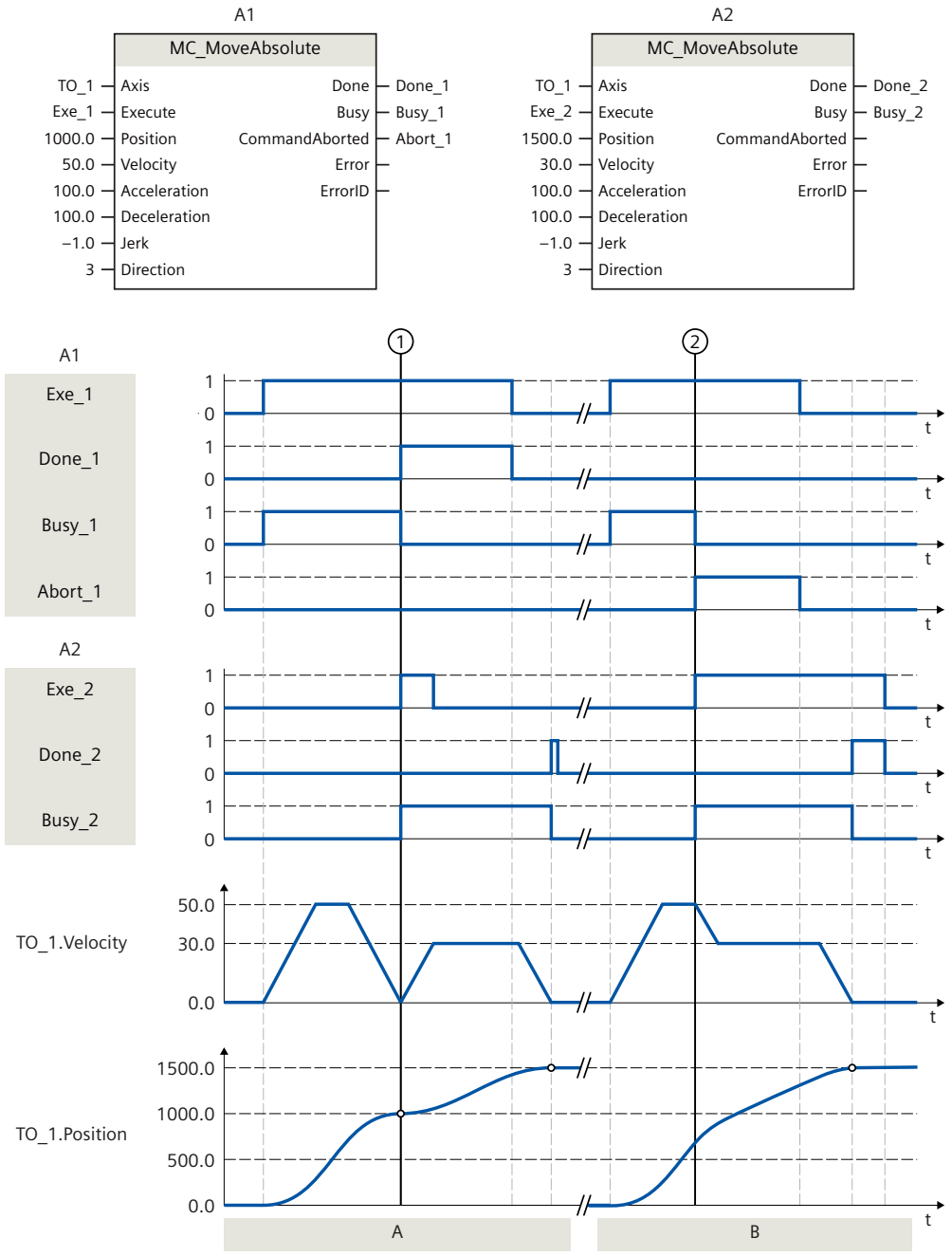

Section A

An axis is moved to absolute position 1000.0 with an "MC_MoveAbsolute" job (A1). When the axis reaches the target position, this is signaled at time ① via "Done_1". At this time ①, another "MC_MoveAbsolute" job (A2) with target position 1500.0 is started. When the axis

reaches the target position 1500.0, this is signaled via "Done_2". Since "Exe_2" was previously reset, "Done_2" is applied only to one cycle.

Section B

An active "MC_MoveAbsolute" job (A1) is overridden at time ② by another "MC_MoveAbsolute" job (A2). The abort is signaled via "Abort_1". The axis is braked to the changed velocity and moved to the new target position 1500.0. When the new target position is reached, this is signaled via "Done_2".

8.6 MC_MoveRelative V7 (S7-1500, S7-1500T)

8.6.1 MC_MoveRelative: Position axis relatively V7 (S7-1500, S7-1500T)

Description

With the Motion Control instruction "MC_MoveRelative", you move an axis relative to its position when execution of the job began.

You define the dynamic behavior of the motion with parameters "Velocity", "Jerk", "Acceleration" and "Deceleration".

Applies to

- Positioning axis
- Synchronous axis

Requirement

- The technology object has been configured correctly.
- The technology object has been enabled.

Override response

The override response for "MC_MoveRelative" jobs is described in section "Override response V7: Homing and motion jobs (Page 279)".

NOTE

Deviating dynamic settings

When overriding the active job with a new jerk-limited motion, the current acceleration or deceleration is transferred to the new acceleration/deceleration via the jerk. Depending on the dynamic settings, this may take several application cycles. When the new acceleration or deceleration deviates significantly from the acceleration/deceleration at the time of the override, the transition profile can result in an unexpected motion of the axis.

If such transitions cannot be excluded during acceleration/deceleration, adjust the dynamic settings of your jobs. For example, add a motion that is not jerk-limited with a direct transition to the new acceleration/deceleration. As an alternative, use high jerk values.

Parameters

The following table shows the parameters of the Motion Control instruction "MC_MoveRelative":

Parameter	Declaration	Data type	Default value	Description	
Axis	INPUT	TO_PositioningAxis TO_SynchronousAxis	-	Technology object	
Execute	INPUT	BOOL	FALSE	TRUE	Start job with a positive edge
Distance	INPUT	LREAL	0.0	Distance for the positioning process[1)] (negative or positive)	
Velocity	INPUT	LREAL	-1.0	Velocity setpoint for the positioning	
				> 0.0	The specified value is used.
				= 0.0	Not permitted
				< 0.0	The velocity configured in "Technology object > Configuration > Extended parameters > Dynamic default values" is used. (<TO>.DynamicDefaults.Velocity)
Acceleration	INPUT	LREAL	-1.0	Acceleration	
				> 0.0	The specified value is used.
				= 0.0	Not permitted
				< 0.0	The acceleration configured in "Technology object > Configuration > Extended parameters > Dynamic default values" is used. (<TO>.DynamicDefaults.Acceleration)

1) If you have set "nm" as the unit of measurement for an axis, enter a value with magnitude greater than or equal to 1000.0 at the "MC_MoveRelative.Distance" parameter. If the amount of the value of "MC_MoveRelative.Distance" is less than 1000.0, the axis will not move during a motion task.

Parameter	Declaration	Data type	Default value	Description	
Deceleration	INPUT	LREAL	-1.0	Deceleration	
				> 0.0	The specified value is used.
				= 0.0	Not permitted
				< 0.0	The deceleration configured in "Technology object > Configuration > Extended parameters > Dynamic default values" is used. (<TO>.DynamicDefaults.Deceleration)
Jerk	INPUT	LREAL	-1.0	Jerk	
				> 0.0	Constant acceleration velocity profile The specified value is used.
				= 0.0	Trapezoid velocity profile
				< 0.0	The jerk configured in "Technology object > Configuration > Extended parameters > Dynamic default values" is used. (<TO>.DynamicDefaults.Jerk)
Done	OUTPUT	BOOL	FALSE	TRUE	The target position has been reached. The minimum dwell time has expired (<TO>.PositioningMonitoring.MinDwellTime).
Busy	OUTPUT	BOOL	FALSE	TRUE	The job is being processed.
CommandAborted	OUTPUT	BOOL	FALSE	TRUE	The job was aborted by another job during execution.
Error	OUTPUT	BOOL	FALSE	TRUE	An error occurred while processing the job. The job is rejected. The cause of the error can be found in the "ErrorID" parameter.
ErrorID	OUTPUT	WORD	16#0000	Error ID for parameter "ErrorID" You can find more detailed information in the "Error IDs" section of the "S7-1500/S7-1500T Motion Control alarms and error IDs" documentation (Page 12).	

1) If you have set "nm" as the unit of measurement for an axis, enter a value with magnitude greater than or equal to 1000.0 at the "MC_MoveRelative.Distance" parameter. If the amount of the value of "MC_MoveRelative.Distance" is less than 1000.0, the axis will not move during a motion task.

Moving an axis relative to the start position

Proceed as follows to move an axis relative to the start position:

1. Check the requirements indicated above.
2. Specify distance to be moved in the "Distance" parameter.
3. Start the "MC_MoveRelative" job with a positive edge at parameter "Execute".
   The current motion state is indicated in parameters "Busy", "Done" and "Error".

8.6.2 MC_MoveRelative: Function chart V7 (S7-1500, S7-1500T)

Function chart: Relative positioning of an axis, and the overriding job characteristics

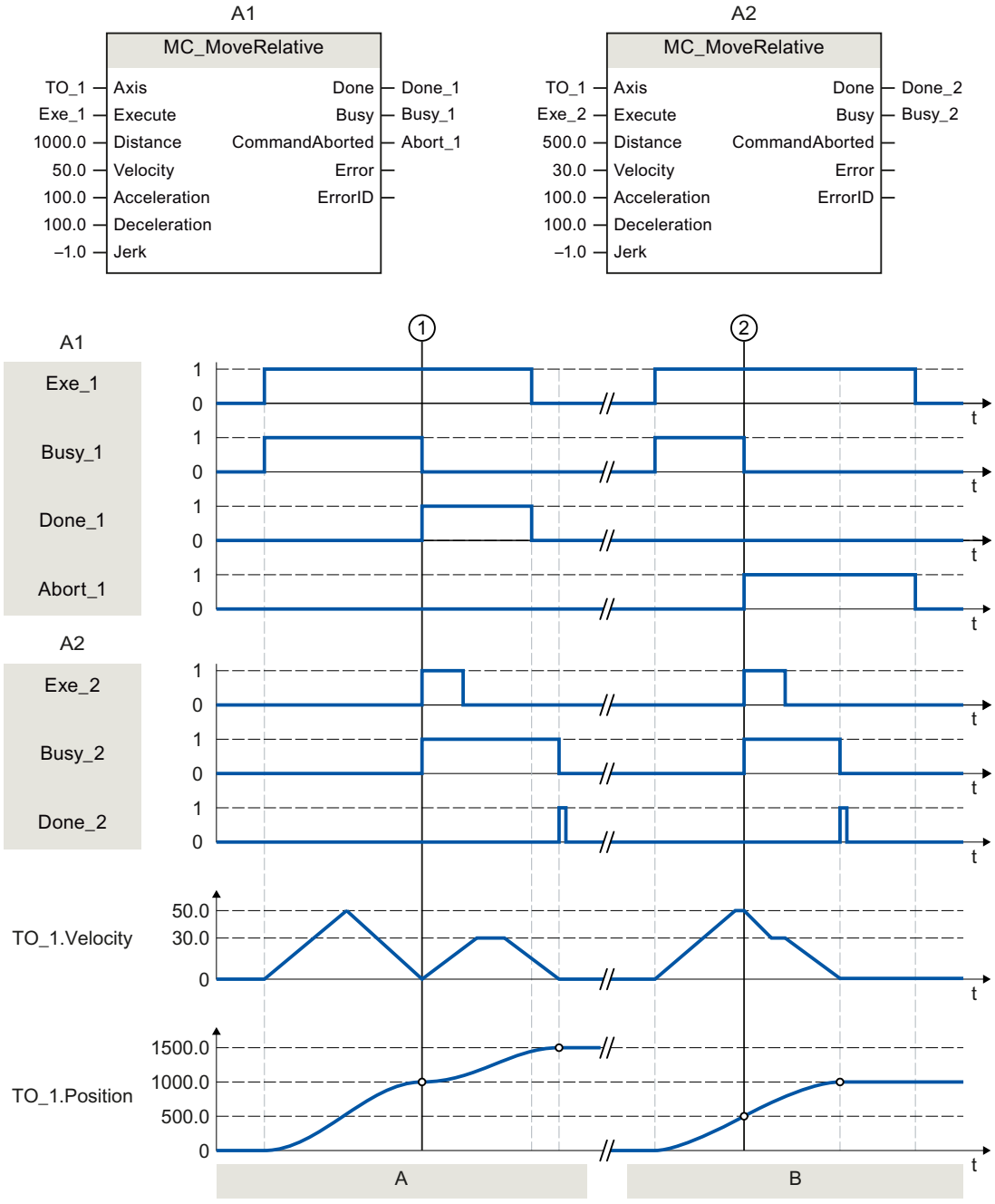

Section A

The axis is moved by an "MC_MoveRelative" job (A1) by the distance ("Distance") 1000.0 (the starting position here is 0.0). When the axis reaches the target position, this is signaled at time ① via "Done_1". At this time ①, another "MC_MoveRelative" job (A2) with distance 500.0 is started. When the new target position is reached, this is signaled via "Done_2". Since "Exe_2" was previously reset, "Done_2" is applied only to one cycle.

Section B

An active "MC_MoveRelative" job (A1) is overridden by another "MC_MoveRelative" job (A2). The abort is signaled at time ② via "Abort_1". The axis is then moved at the new velocity by the distance ("Distance") 500.0. When the new target position is reached, this is signaled via "Done_2".

8.7 MC_MoveVelocity V7 (S7-1500, S7-1500T)

8.7.1 MC_MoveVelocity: Move axis with velocity/speed setpoint V7 (S7-1500, S7-1500T)

Description

With the Motion Control instruction "MC_MoveVelocity", you move an axis at constant velocity/speed.

You define the dynamic behavior of the motion with parameters "Velocity", "Jerk", "Acceleration" and "Deceleration".

- Positioning axis/synchronous axis:
  A velocity is specified in the "Velocity" parameter.
- Speed axis:
  A speed is specified in the "Velocity" parameter.

Applies to

- Speed axis
- Positioning axis
- Synchronous axis

Requirement

- The technology object has been configured correctly.
- The technology object has been enabled.

Override response

The override response for "MC_MoveVelocity" jobs is described in section "Override response V7: Homing and motion jobs (Page 279)".

NOTE

Deviating dynamic settings

When overriding the active job with a new jerk-limited motion, the current acceleration or deceleration is transferred to the new acceleration/deceleration via the jerk. Depending on the dynamic settings, this may take several application cycles. When the new acceleration or deceleration deviates significantly from the acceleration/deceleration at the time of the override, the transition profile can result in an unexpected motion of the axis.

If such transitions cannot be excluded during acceleration/deceleration, adjust the dynamic settings of your jobs. For example, add a motion that is not jerk-limited with a direct transition to the new acceleration/deceleration. As an alternative, use high jerk values.

Parameters

The following table shows the parameters of the Motion Control instruction "MC_MoveVelocity":

Parameters	Declaration	Data type	Default value	Description	
Axis	INPUT	TO_SpeedAxis TO_PositioningAxis TO_SynchronousAxis	-	Technology object	
Execute	INPUT	BOOL	FALSE	TRUE	Start job with a positive edge
Velocity	INPUT	LREAL	100.0	Velocity setpoint/speed setpoint for the motion ("Velocity" = 0.0 is permitted)	
Acceleration	INPUT	LREAL	-1.0	Acceleration	
				> 0.0	The specified value is used.
				= 0.0	Not permitted
				< 0.0	The acceleration configured in "Technology object > Configuration > Extended parameters > Dynamic default values" is used. (<TO>.DynamicDefaults.Acceleration)
Deceleration	INPUT	LREAL	-1.0	Deceleration	
				> 0.0	The specified value is used.
				= 0.0	Not permitted
				< 0.0	The deceleration configured in "Technology object > Configuration > Extended parameters > Dynamic default values" is used. (<TO>.DynamicDefaults.Deceleration)

Parameters	Declaration	Data type	Default value	Description	
Jerk	INPUT	LREAL	-1.0	Jerk	
				> 0.0	Constant acceleration velocity profile The specified value is used.
				= 0.0	Trapezoid velocity profile
				< 0.0	The jerk configured in "Technology object > Configuration > Extended parameters > Dynamic default values" is used. (<TO>.DynamicDefaults.Jerk)
Direction	INPUT	INT	0	Direction of rotation of the axis	
				0	The sign of the velocity specified at the "Velocity" parameter defines the direction of rotation.
				1	Positive direction of rotation The value of "Velocity" is used.
				2	Negative direction of rotation The value of "Velocity" is used.
Current	INPUT	BOOL	FALSE	Maintain current velocity	
				FALSE	Disabled The values of parameters "Velocity" and "Direction" are taken into account.
				TRUE	Enabled The values at the parameters "Velocity" and "Direction" are not taken into account. The current velocity and direction at function start are retained. When the axis resumes motion at the velocity that was current at function start, the "InVelocity" parameter returns the value "TRUE".
PositionControlled	INPUT	BOOL	TRUE	FALSE	Non-position-controlled operation
				TRUE	Position-controlled mode
				The parameter applies as long as the "MC_MoveVelocity" job is being executed. After this, the setting of the following job applies. This parameter is ignored when a speed axis is used.	
InVelocity	OUTPUT	BOOL	FALSE	TRUE	The velocity setpoint/speed setpoint has been reached. A velocity setpoint/speed setpoint is output.
Busy	OUTPUT	BOOL	FALSE	TRUE	The job is being processed.
CommandAborted	OUTPUT	BOOL	FALSE	TRUE	The job was aborted by another job during execution.
Error	OUTPUT	BOOL	FALSE	TRUE	An error occurred while processing the job. The cause of the error can be found in the "ErrorID" parameter.

Parameters	Declaration	Data type	Default value	Description
ErrorID	OUTPUT	WORD	16#0000	Error ID for parameter "ErrorID" You can find more detailed information in the "Error IDs" section of the "S7-1500/S7-1500T Motion Control alarms and error IDs" documentation (Page 12).

Behavior with setpoint velocity/speed zero ("Velocity" = 0.0)

An "MC_MoveVelocity" job with "Velocity" = 0.0 stops the axis with the configured deceleration. When the velocity setpoint/speed setpoint zero is reached, the parameter "InVelocity" will indicate the value "TRUE".

Under "Technology object > Diagnostics > Status and error bits > Motion status", "constant velocity" and "standstill" will be displayed (<TO>.StatusWord.X12 (ConstantVelocity); <TO>.StatusWord.X7 (Standstill)).

The parameters "InVelocity" and "Busy" show the value "TRUE", until the "MC_MoveVelocity" job is overridden by another Motion Control job.

Moving an axis with constant velocity/speed

Proceed as follows to move an axis with constant velocity/speed:

1. Check the requirements indicated above.
2. At the "Velocity" parameter, specify the velocity/speed, with which the axis should be moved.
3. Start the "MC_MoveVelocity" job with a positive edge at parameter "Execute".
   The current motion state is indicated in parameters "Busy", "InVelocity" and "Error".
   If the "InVelocity" parameter shows the value "TRUE", the velocity/speed setpoint has been reached. The axis continues moving at this constant velocity. The parameters "InVelocity" and "Busy" show the value "TRUE", until the "MC_MoveVelocity" job is overridden by another Motion Control job.

NOTE

Response to a change in the override

If the velocity/speed is influenced during constant motion by a change in the override (<TO>.Override.Velocity), the "InVelocity" parameter is reset during the acceleration or deceleration. When the newly calculated velocity/speed is reached ("Velocity" × "Override" %), then "InVelocity" is set again.

More information

An option for evaluating the individual status bits can be found in the section "Evaluating StatusWord, ErrorWord and WarningWord" of the "S7-1500/S7-1500T Motion Control overview" (Page 12) documentation.

8.7.2 MC_MoveVelocity: Function chart V7 (S7-1500, S7-1500T)

Function chart: Moving an axis with velocity specification, and the response to an overriding job

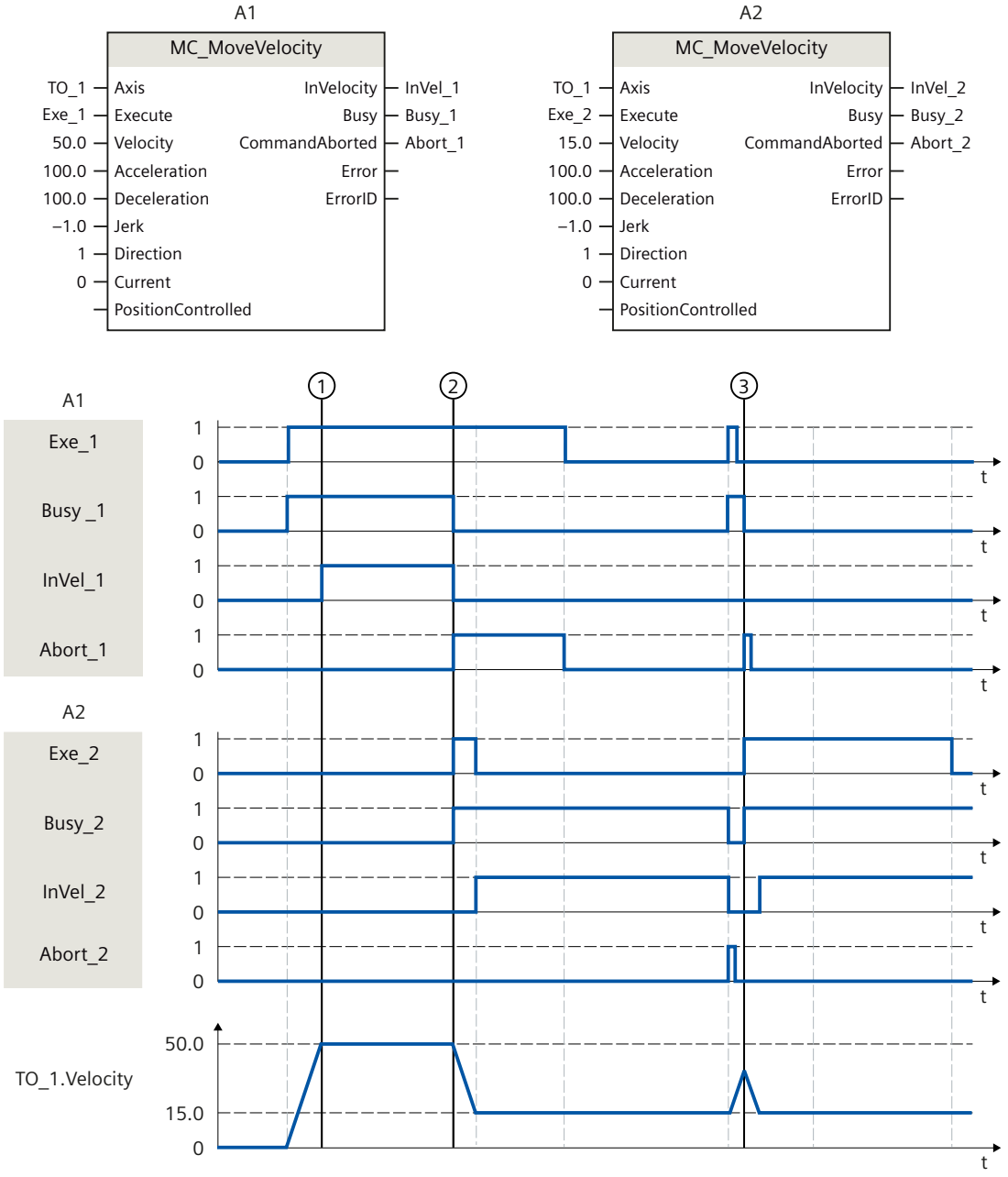

An "MC_MoveVelocity" job (A1) initiated via "Exe_1" accelerates the axis and signals at time ① via "InVel_1" that the velocity setpoint 50.0 has been reached.

At time ②, the job is overridden by another "MC_MoveVelocity" job (A2). The abort is signaled via "Abort_1". When the new velocity setpoint 15.0 is reached, this is signaled via "InVel_2". The axis then continues moving at the constant velocity 15.0.

The running "MC_MoveVelocity" job (A2) is overridden by another "MC_MoveVelocity" job (A1). The abort is signaled via "Abort_2". The axis is accelerated to the new velocity setpoint

50.0. Before the velocity setpoint is reached, the current "MC_MoveVelocity" job (A1) is overridden at time ③ by another "MC_MoveVelocity" job (A2). The abort is signaled via "Abort_1". When the new velocity setpoint 15.0 is reached, this is signaled via "InVel_2". The axis then continues moving at the constant velocity 15.0.

8.8 MC_MoveJog V7 (S7-1500, S7-1500T)

8.8.1 MC_MoveJog: Move axis in jog mode V7 (S7-1500, S7-1500T)

Description

With the Motion Control instruction "MC_MoveJog", you move an axis in jog mode. You define the dynamic behavior of the motion with parameters "Velocity", "Jerk", "Acceleration" and "Deceleration".

- Positioning axis/synchronous axis:
  A velocity is specified in the "Velocity" parameter.
- Speed axis:
  A speed is specified in the "Velocity" parameter.

Applies to

- Speed axis
- Positioning axis
- Synchronous axis

Requirement

- The technology object has been configured correctly.
- The technology object has been enabled.

Override response

The override response for "MC_MoveJog" jobs is described in section "Override response V7: Homing and motion jobs (Page 279)".

NOTE

Deviating dynamic settings

When overriding the active job with a new jerk-limited motion, the current acceleration or deceleration is transferred to the new acceleration/deceleration via the jerk. Depending on the dynamic settings, this may take several application cycles. When the new acceleration or deceleration deviates significantly from the acceleration/deceleration at the time of the override, the transition profile can result in an unexpected motion of the axis.

If such transitions cannot be excluded during acceleration/deceleration, adjust the dynamic settings of your jobs. For example, add a motion that is not jerk-limited with a direct transition to the new acceleration/deceleration. As an alternative, use high jerk values.

Parameters

The following table shows the parameters of the Motion Control instruction "MC_MoveJog":

Parameter	Declaration	Data type	Default value	Description	
Axis	INPUT	TO_SpeedAxis TO_PositioningAxis TO_SynchronousAxis	-	Technology object	
JogForward	INPUT	BOOL	FALSE	TRUE	As long as the parameter is "TRUE", the axis moves in the positive direction at the velocity specified in parameter "Velocity".
JogBackward	INPUT	BOOL	FALSE	TRUE	As long as the parameter is "TRUE", the axis moves in the negative direction at the velocity specified in parameter "Velocity".
Velocity	INPUT	LREAL	100.0	Velocity setpoint/speed setpoint for the motion	
				≥ 0.0	The specified value is used.
				< 0.0	The absolute value of the specified value is used.
Acceleration	INPUT	LREAL	-1.0	Acceleration	
				> 0.0	The specified value is used.
				= 0.0	Not permitted
				< 0.0	The acceleration configured in "Technology object > Configuration > Extended parameters > Dynamic default values" is used. (<TO>.DynamicDefaults.Acceleration)

Parameter	Declaration	Data type	Default value	Description	
Deceleration	INPUT	LREAL	-1.0	Deceleration	
				> 0.0	The specified value is used.
				= 0.0	Not permitted
				< 0.0	The deceleration configured in "Technology object > Configuration > Extended parameters > Dynamic default values" is used. (<TO>.DynamicDefaults.Deceleration)
Jerk	INPUT	LREAL	-1.0	Jerk	
				> 0.0	Constant acceleration velocity profile The specified value is used.
				= 0.0	Trapezoid velocity profile
				< 0.0	The jerk configured in "Technology object > Configuration > Extended parameters > Dynamic default values" is used. (<TO>.DynamicDefaults.Jerk)
PositionControlled	INPUT	BOOL	TRUE	FALSE	Non-position-controlled operation
				TRUE	Position-controlled mode
				The parameter applies as long as the "MC_MoveJog" job is being executed. After this, the setting of the following job applies. This parameter is ignored when a speed axis is used.	
InVelocity	OUTPUT	BOOL	FALSE	TRUE	The velocity setpoint/speed setpoint has been reached. A velocity setpoint/speed setpoint is output.
Busy	OUTPUT	BOOL	FALSE	TRUE	The job is being processed.
CommandAborted	OUTPUT	BOOL	FALSE	TRUE	The job was aborted by another job during execution.
Error	OUTPUT	BOOL	FALSE	TRUE	An error occurred while processing the job. The job is rejected. The cause of the error can be found in the "ErrorID" parameter.
ErrorID	OUTPUT	WORD	16#0000	Error ID for parameter "ErrorID" You can find more detailed information in the "Error IDs" section of the "S7-1500/S7-1500T Motion Control alarms and error IDs" documentation (Page 12).	

Behavior with setpoint velocity/speed zero ("Velocity" = 0.0)

An "MC_MoveJog" job with "Velocity" = 0.0 stops the axis with the configured deceleration. When the velocity setpoint/speed setpoint zero is reached, the parameter "InVelocity" will indicate the value "TRUE".

Under "Technology object > Diagnostics > Status and error bits > Motion status", "constant velocity" and "standstill" will be displayed (<TO>.StatusWord.X12 (ConstantVelocity); <TO>.StatusWord.X7 (Standstill)).

Moving an axis in jog mode

Proceed as follows to move an axis in jog mode:

1. Check the requirements indicated above.
2. Move the axis in the positive direction with "JogForward", or in the negative direction with "JogBackward".
   The current motion state is indicated in parameters "Busy", "InVelocity" and "Error".
   If both "JogForward" and "JogBackward" are set to TRUE, the axis is braked at the last valid deceleration. The error 16#8007 (incorrect direction specification) is output.

NOTE

Response to a change in the override

If the velocity/speed is influenced during constant motion by a change in the override (<TO>.Override.Velocity), the "InVelocity" parameter is reset during the acceleration or deceleration. When the newly calculated velocity is reached ("Velocity" × "Override" %), then "InVelocity" is set again.

More information

An option for evaluating the individual status bits can be found in the section "Evaluating StatusWord, ErrorWord and WarningWord" of the "S7-1500/S7-1500T Motion Control overview" (Page 12) documentation.

8.8.2 MC_MoveJog: Function chart V7 (S7-1500, S7-1500T)

Function chart: Moving an axis in jog mode

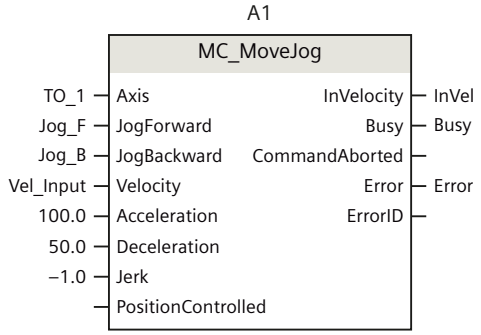

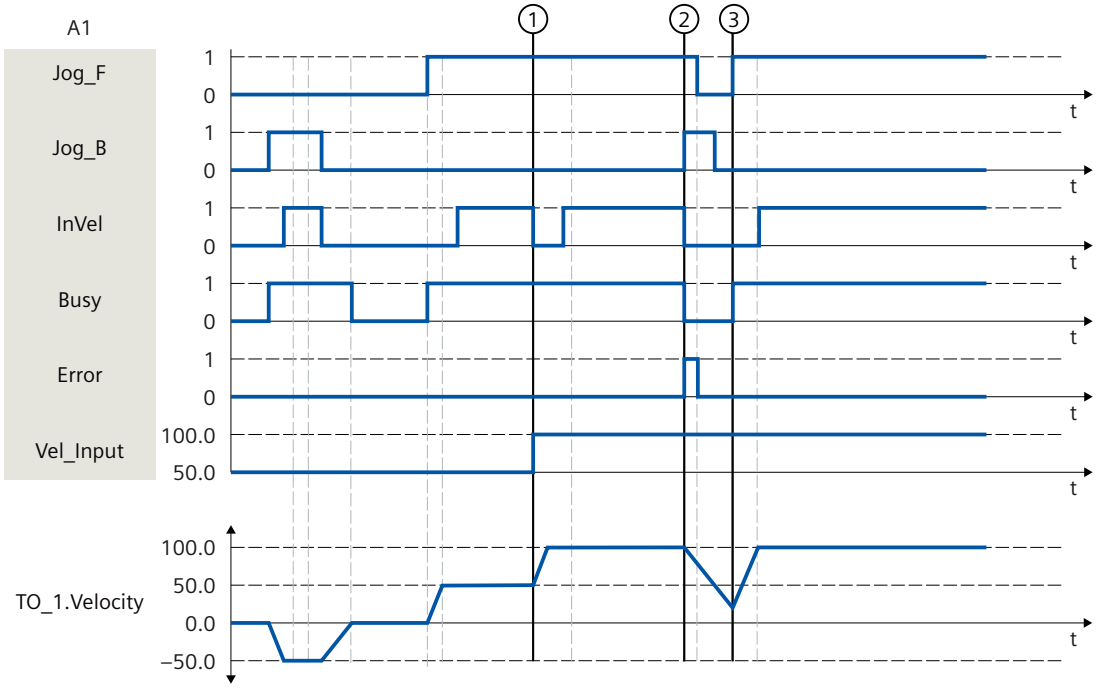

The axis is moved in the negative direction in jog mode via "Jog_B". When the velocity setpoint -50.0 is reached, this is signaled via "InVel" = TRUE. After "Jog_B" is reset, the axis is braked and brought to a standstill. Then the axis is moved in the positive direction via "Jog_F". When the velocity setpoint 50.0 is reached, this is signaled via "InVel" = TRUE.

At the time ①, if "Jog_F" is set, the velocity setpoint is changed to 100.0 by means of "Vel_Input". Alternatively, you can also change the velocity setpoint using the velocity override. "InVel" is reset. Axis is being accelerated. When the new velocity setpoint 100.0 is reached, this is signaled via "InVel" = TRUE.

If "Jog_F" is set, "Jog_B" is likewise set at time ②. If both "Jog_F" and "Jog_B" are set, then the axis is braked with the last applicable deceleration. An error is indicated via "Error", and the "ErrorID" of the error 16#8007 (incorrect direction specification) is output.

This error is resolved by resetting the two inputs "Jog_F" and "Jog_B".

During the braking ramp, "Jog_F" is set at time ③. The axis is accelerated to the last configured velocity. When the velocity setpoint 100.0 is reached, this is signaled via "InVel" = TRUE.

8.9 MC_MoveSuperimposed V7 (S7-1500, S7-1500T)

8.9.1 MC_MoveSuperimposed: Position axis overlapping V7 (S7-1500, S7-1500T)

Description

With the Motion Control instruction "MC_MoveSuperimposed", you can start a relative positioning motion which is superimposed on a running basic motion.

Applies to

- Positioning axis
- Synchronous axis

Requirement

- The technology object has been configured correctly.
- The technology object has been enabled.

Override response

The override response for "MC_MoveSuperimposed" jobs is described in section "Override response V7: Homing and motion jobs (Page 279)".

NOTE

Deviating dynamic settings

When overriding the active job with a new jerk-limited motion, the current acceleration or deceleration is transferred to the new acceleration/deceleration via the jerk. Depending on the dynamic settings, this may take several application cycles. When the new acceleration or deceleration deviates significantly from the acceleration/deceleration at the time of the override, the transition profile can result in an unexpected motion of the axis.

If such transitions cannot be excluded during acceleration/deceleration, adjust the dynamic settings of your jobs. For example, add a motion that is not jerk-limited with a direct transition to the new acceleration/deceleration. As an alternative, use high jerk values.

Parameters

The following table shows the parameters of the Motion Control instruction "MC_MoveSuperimposed":

Parameters	Declaration	Data type	Default value	Description	
Axis	INPUT	TO_PositioningAxis TO_SynchronousAxis	-	Axis technology object	
Execute	INPUT	BOOL	FALSE	TRUE	Start job with a positive edge
Distance	INPUT	LREAL	0.0	Additional distance for the overlapping positioning operation (negative or positive)	
VelocityDiff	INPUT	LREAL	-1.0	Maximum velocity deviation compared to the active motion	
				> 0.0	The specified value is used.
				= 0.0	Not permitted
				< 0.0	The velocity configured in "Technology object > Configuration > Extended parameters > Dynamic default values" is used. (<TO>.DynamicDefaults.Velocity)
Acceleration	INPUT	LREAL	-1.0	Acceleration	
				> 0.0	The specified value is used.
				= 0.0	Not permitted
				< 0.0	The acceleration configured in "Technology object > Configuration > Extended parameters > Dynamic default values" is used. (<TO>.DynamicDefaults.Acceleration)
Deceleration	INPUT	LREAL	-1.0	Deceleration	
				> 0.0	The specified value is used.
				= 0.0	Not permitted
				< 0.0	The deceleration configured in "Technology object > Configuration > Extended parameters > Dynamic default values" is used. (<TO>.DynamicDefaults.Deceleration)
Jerk	INPUT	LREAL	-1.0	Jerk	
				> 0.0	Constant acceleration velocity profile The specified value is used.
				= 0.0	Trapezoid velocity profile
				< 0.0	The jerk configured in "Technology object > Configuration > Extended parameters > Dynamic default values" is used. (<TO>.DynamicDefaults.Jerk)
Done	OUTPUT	BOOL	FALSE	TRUE	Superimposed positioning complete
Busy	OUTPUT	BOOL	FALSE	TRUE	The job is being processed.

Parameters	Declaration	Data type	Default value	Description	
CommandAborted	OUTPUT	BOOL	FALSE	TRUE	The job was aborted by another job during execution.
Error	OUTPUT	BOOL	FALSE	TRUE	An error occurred while processing the job. The job is rejected. The cause of the error can be found in the "ErrorID" parameter.
ErrorID	OUTPUT	WORD	0	Error ID for parameter "ErrorID" You can find more detailed information in the "Error IDs" section of the "S7-1500/S7-1500T Motion Control alarms and error IDs" documentation (Page 12).	

8.9.2 MC_MoveSuperimposed: Function chart V7 (S7-1500, S7-1500T)

Function chart: Positioning axes overlapping

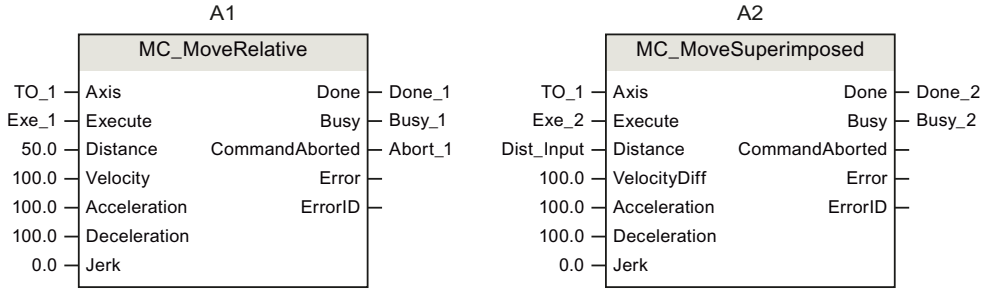

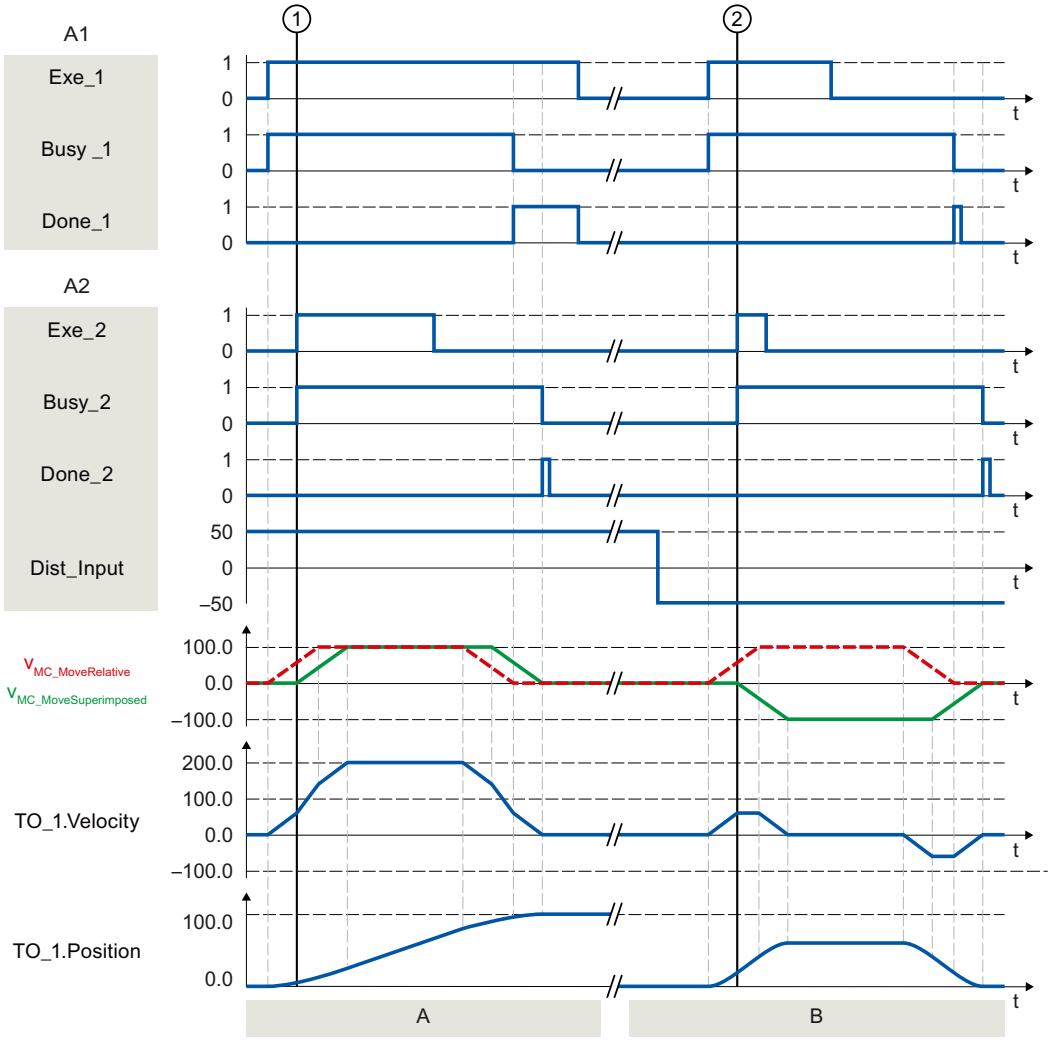

Section A

Using "Exe_1", an "MC_MoveRelative" job with a distance of 50.0 is initiated. At time ①, using "Exe_2", an "MC_MoveSuperimposed" job with a distance of 50.0 is initiated. The axis is

moved with the added dynamic values of both jobs by the distance 50 + 50 = 100.0. When the axis reaches the target position, this is signaled via "Done_2".

Section B

Using "Exe_1", an "MC_MoveRelative" job with a distance of 50.0 is initiated. At time ②, using "Exe_2", a MC_MoveSuperimposed job with a distance of -50.0 is initiated. The axis reverses and is moved with the added dynamic values of both jobs by the distance 50.0 - 50.0 = 0.0. When the axis reaches the target position, this is signaled via "Done_2".

8.10 MC_StopSuperimposed V7 (S7-1500, S7-1500T)

8.10.1 MC_HaltSuperimposed: Pause superimposed motions on axis V7 (S7-1500, S7-1500T)

Description

Use the Motion Control instruction "MC_HaltSuperimposed" to decelerate a superimposed motion created with the "MC_MoveSuperimposed", "MC_MotionInSuperimposed", or "MC_HaltSuperimposed" instructions on the axis to zero velocity. This instruction has no effect on the basic motion of the axis.

Applies to

- Positioning axis
- Synchronous axis

Requirement

- The technology object has been configured correctly.
- The technology object has been enabled.

Override response

The override response for "MC_HaltSuperimposed" jobs is described in section "Override response V7: Homing and motion jobs (Page 279)".

Parameters

The following table shows the parameters of the Motion Control instruction "MC_HaltSuperimposed":

Parameters	Declaration	Data type	Default value	Description	
Axis	INPUT	TO_PositioningAxis TO_SynchronousAxis	-	Technology object	
Execute	INPUT	BOOL	FALSE	TRUE	Start job with a positive edge
Deceleration	INPUT	LREAL	-1.0	Deceleration of the superimposed motion	
				> 0.0	The specified value is used.
				= 0.0	Not permitted
				< 0.0	The deceleration configured in "Technology object > Configuration > Extended parameters > Dynamic default values" is used. (<TO>.DynamicDefaults.Deceleration)
Jerk	INPUT	LREAL	-1.0	Jerk of the superimposed motion	
				> 0.0	Constant-acceleration velocity profile of the superimposed motion; the specified jerk is used
				= 0.0	Trapezoidal velocity profile of the superimposed motion
				< 0.0	The jerk configured in "Technology object > Configuration > Extended parameters > Dynamic default values" is used. (<TO>.DynamicDefaults.Jerk)
AbortAcceleration	INPUT	BOOL	FALSE	FALSE	The current acceleration of the superimposed motion at the start of the job is reduced using the configured jerk. Afterwards, the deceleration builds up.
				TRUE	The acceleration of the superimposed motion is set to 0.0 at the start of the job; the deceleration builds up immediately.
Done	OUTPUT	BOOL	FALSE	TRUE	The execution of the job is completed. The superimposed motion is stopped.
Busy	OUTPUT	BOOL	FALSE	TRUE	The job is being processed.
CommandAborted	OUTPUT	BOOL	FALSE	TRUE	The job was aborted by another job during execution.
Error	OUTPUT	BOOL	FALSE	TRUE	An error occurred while processing the job. The job is rejected. The cause of the error can be found in the "ErrorID" parameter.
ErrorID	OUTPUT	WORD	16#0000	Error ID for parameter "ErrorID" You can find more detailed information in the "Error IDs" section of the "S7-1500/S7-1500T Motion Control alarms and error IDs" documentation (Page 12).	

See also

Superimposed motions (Page 107)

8.10.2 MC_HaltSuperimposed: Function chart V7 (S7-1500, S7-1500T)

Function chart: Pause superimposed motions on the axis

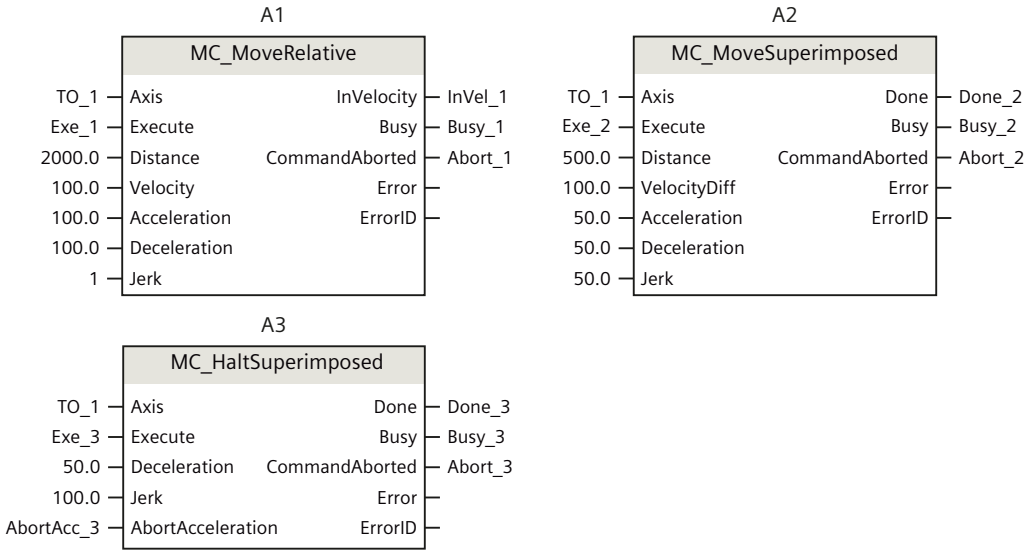

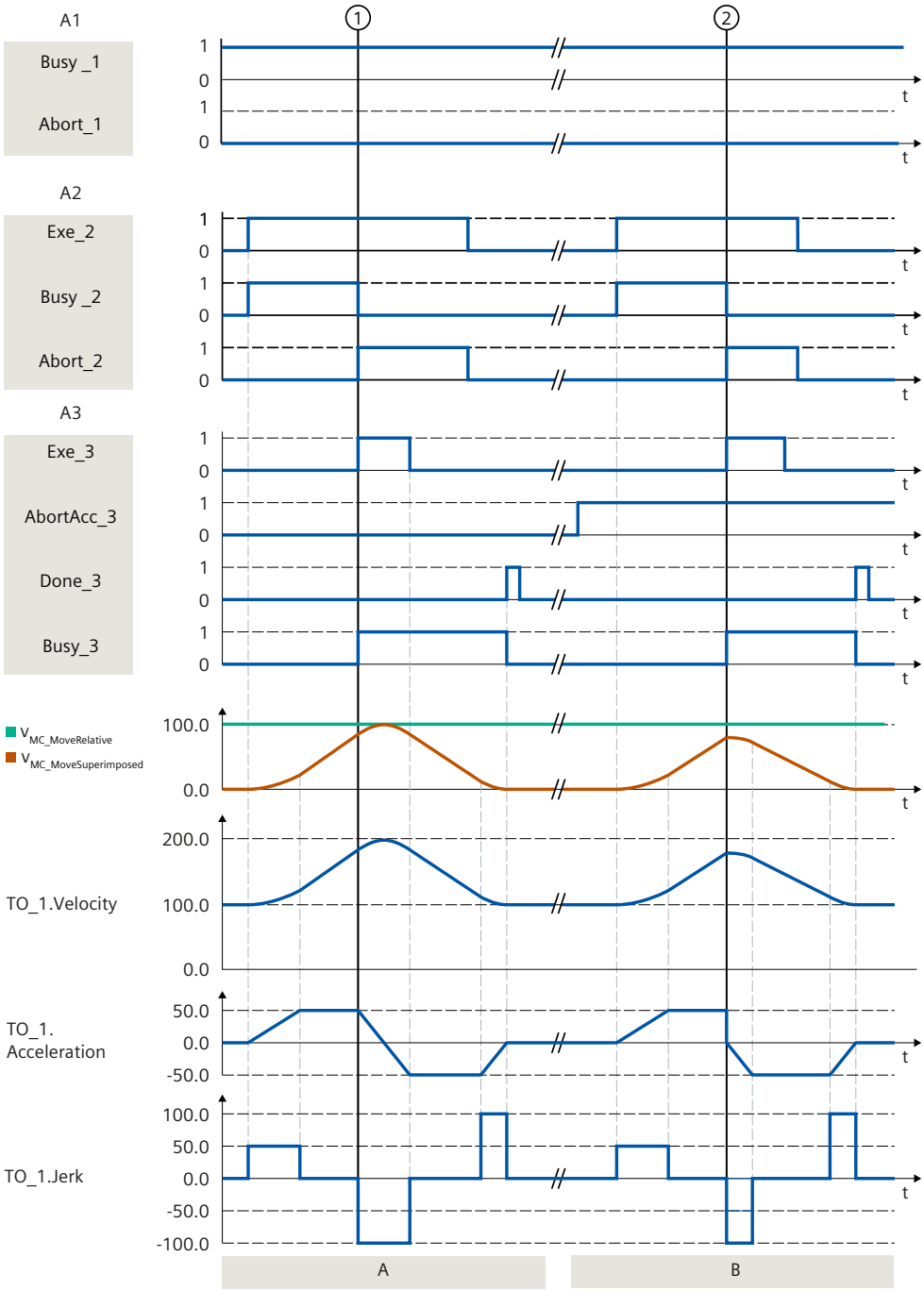

Section A

The axis is moved with an "MC_MoveRelative" job (A1) as the basic motion.
Via "Exe_2", a "MC_MoveSuperimposed" job (A2) is triggered as a superimposed motion. The <TO>.StatusWord.X23 bit is set. At time ①, the "MC_MoveSuperimposed" job is overridden by an "MC_HaltSuperimposed" job (A3). The job abort is signaled via "Abort_2". The <TO>.StatusWord2.X7 bit is set and the <TO>.StatusWord.X23 bit is reset. With "AbortAcc_3" = FALSE, the current acceleration is reduced with the specified jerk. After that, the deceleration is built up and the superimposed motion is decelerated to velocity = 0. The

completion of the "MC_HaltSuperimposed" job is reported via "Done_3". The <TO>.StatusWord2.X7 bit is reset.

Section B

The axis is moved with an "MC_MoveRelative" job (A1) as the basic motion.

Via "Exe_2", a "MC_MoveSuperimposed" job (A2) is triggered as a superimposed motion. The <TO>.StatusWord.X23 bit is set. At time ②, the "MC_MoveSuperimposed" job is overridden by an "MC_HaltSuperimposed" job (A3). The job abort is signaled via "Abort_2". The <TO>.StatusWord2.X7 bit is set and the <TO>.StatusWord.X23 bit is reset. With "AbortAcc_3" = TRUE, the current acceleration is set to zero immediately and the deceleration builds up. The superimposed motion is decelerated to velocity = 0. The completion of the "MC_HaltSuperimposed" job is reported via "Done_3". The <TO>.StatusWord2.X7 bit is reset.

8.11 MC_SetSensor V7 (S7-1500T)

8.11.1 MC_SetSensor: Switch alternative encoder to operative encoder V7 (S7-1500T)

Description

With the Motion Control instruction "MC_SetSensor", you switch over the encoder for closed loop position control of the axis.

The actual value of the addressed encoder can be adapted without switchover using parameter "Mode" = 2 and 3.

Applies to

- Positioning axis
- Synchronous axis

Requirement

- The technology object and the alternative encoder have been configured correctly.
- No restart command and no "MC-Home" job running.

Override response

- An "MC_SetSensor" job is not aborted by any other Motion Control job.
- A new "MC_SetSensor" job does not abort any active Motion Control jobs.

Parameters

The following table shows the parameters of the Motion Control instruction "MC_SetSensor":

Parameters	Declaration	Data type	Default value	Description	
Axis	INPUT	TO_PositioningAxis TO_SynchronousAxis	-	Technology object	
Execute	INPUT	BOOL	FALSE	TRUE	Start job with a positive edge
Sensor	INPUT	INT	1	Number of the new encoder (1 to 4).	
Mode	INPUT	DINT	0	The mode determines the position alignment between the old encoder and new encoder.	
				0	Switch over encoder and transfer actual position to the new encoder With this encoder switchover, step changes in the positioning control are prevented. Bumpless switchover of the encoders is possible.
				1	Switch over encoder without aligning the actual position **Note** When closed loop position control is active, an additional difference of the two encoders acts as additional control deviation and can trigger a compensating motion.
				2	Transfer actual value The actual position is transferred to the encoder specified in the "Sensor" parameter.
				3	Transfer actual value The actual position of the "Reference encoder" ("ReferenceSensor" parameter) is transferred to the encoder specified in the "Sensor" parameter.
ReferenceSensor	INPUT	INT	1	Number of the reference encoder (see parameter "Mode" = 3)	
Done	OUTPUT	BOOL	FALSE	TRUE	Encoder for closed loop position control of the axis was switched over.
Busy	OUTPUT	BOOL	FALSE	TRUE	The job is being processed.
CommandAborted	OUTPUT	BOOL	FALSE	TRUE	The job has been aborted.
Error	OUTPUT	BOOL	FALSE	TRUE	An error occurred while processing the job. The job is rejected. The cause of the error can be found in the "ErrorID" parameter.
ErrorID	OUTPUT	WORD	16#0000	Error ID for parameter "ErrorID" You can find more detailed information in the "Error IDs" section of the "S7-1500/S7-1500T Motion Control alarms and error IDs" documentation (Page 12).	

Changing to absolute encoder

When you switch the encoder to an absolute encoder and transfer the actual value ("Mode" = 2, 3), the actual value is calculated with the value of the absolute encoder and the absolute value offset. When switching to a different encoder, calculation of the actual value is canceled. The absolute encoder once again returns the absolute value + absolute value offset (<TO>.StatusSensor[1..4].AbsEncoderOffset) without calculation by the "MC_SetSensor" job.

8.12 MC_Stop V7 (S7-1500, S7-1500T)

8.12.1 MC_Stop: Stop axis and prevent new motion jobs V7 (S7-1500, S7-1500T)

Description

With the "MC_Stop" Motion Control instruction, you stop all movements of an axis and prevent new motion jobs for the technology object. The axis brakes to a standstill and remains switched on.

The standstill position is derived from the stop ramp. Three modes, which you define with the "Mode" parameter, are available for this purpose:

- "Mode" = 0: The dynamic response of the braking operation is determined by the configured emergency stop ramp.
- "Mode" = 2: The dynamic response of the braking operation is determined by the maximum dynamic values of the technology object.
- "Mode" = 3: The dynamic response of the braking operation is determined with parameters "Jerk" and "Decelaration" of the "MC_Stop" job.

Applies to

- Speed axis
- Positioning axis
- Synchronous axis

Requirements

- The technology object has been configured correctly.
- The technology object has been enabled.

Override response

- An "MC_Stop" job is not triggered by other movements.
- An "MC_Stop" job is aborted by an "MC_Power" job with "Enable" = FALSE.
- An "MC_Stop" job does not abort any synchronous operation function in simulation.
- An "MC_Stop" job is aborted by another "MC_Stop" job with a stop response that is the same or higher.
  Significance of stop responses (descending): "Mode" = 0 > "Mode" = 2 > "Mode" = 3

You can find more detailed information on the override response of an "MC_Stop" job in the section "Override response of Motion Control jobs V7 (Page 279)".

Override behavior between alarm responses and MC_Stop

"MC_Stop" jobs and alarm responses with "Stop" or "Remove enable" can override each other. An alarm response or a configured stop mode with higher significance overrides.

"MC_Stop" jobs are rejected or overridden by alarm responses with higher significance with "CommandAborted" = TRUE. Unlike other Motion Control instructions, "Error" = TRUE and "ErrorID" = 16#8001 is not output.

Alarm responses with stop can by overridden by "MC_Stop" jobs with higher significance.

The following table represents the significance of Stop mode at "MC_Stop" job and the alarm responses:

Stop mode	MC_Stop.Mode	<TO>.ErrorDetail.Reaction	Significance
Remove enable	-	4	4
Emergency stop	0	3	3
Stop with maximum dynamic values	2	2	2
Stop with current dynamic values/stop with specified dynamic response	3	2	1

Example 1

An alarm with "<TO>.ErrorDetail.Reaction" = 2 occurs. While the alarm is active, an "MC_Stop" job with "Mode" = 0 is sent.

Result: The stop with maximum dynamic values that was caused by the alarm is overridden by the emergency stop of the "MC_Stop" job. After the axis has been braked to a velocity of 0 by an emergency stop, the "MC_Stop" order outputs "Done" = TRUE.

Example 2

An MC_Stop job with Mode = 3 is active. During the active job, an alarm occurs with the alarm response "<TO>.ErrorDetail.Reaction" = 2.

Result: The stop of the "MC_Stop" job with specified dynamics is overridden by the alarm response with a stop with maximum dynamics. The "MC_Stop" job displays "CommandAborted" = TRUE.

NOTE

Check the configuration of the dynamic limits and the emergency stop. Because an emergency stop has a higher significance, configure the emergency stop delay higher or equal to the dynamic limits. In this way, you make sure that an overriding emergency stop does not reduce the dynamics of a stop with current or maximum dynamic values.

Parameters

The following table shows the parameters of the Motion Control instruction "MC_Stop":

Parameter	Declaration	Data type	Default value	Description	
Axis	INPUT	TO_SpeedAxis TO_PositioningAxis TO_SynchronousAxis	-	Technology object	
Execute	INPUT	BOOL	FALSE	TRUE	The motion is stopped and new motion jobs are prevented.
				FALSE	Motion jobs can be executed again.
Mode	INPUT	DINT	0	Mode for dynamic behavior	
				0	Emergency stop The technology object is braked to a standstill without jerk limit, using the emergency stop deceleration configured in "Technology object > Configuration > Extended parameters > Emergency stop". (<TO>.DynamicDefaults.EmergencyDeceleration)
				1	Not permitted
				2	Stop with maximum dynamic values The technology object is braked to a standstill using the maximum deceleration configured in "Technology object > Configuration > Extended parameters > Dynamics limits". The configured maximum jerk is hereby taken into account. (<TO>.DynamicLimits.MaxDeceleration, <TO>.DynamicLimits.MaxJerk)
				3	Stop with specified dynamic response The technology object is stopped with the specified values at the parameters "Deceleration" and "Jerk".

Parameter	Declaration	Data type	Default value	Description	
Deceleration	INPUT	LREAL	-1.0	When "Mode" = 3: Deceleration for the braking ramp	
				> 0.0	The specified value is used.
				= 0.0	Not permitted
				< 0.0	The deceleration configured in "Technology object > Configuration > Extended parameters > Dynamic default values" is used. (<TO>.DynamicDefaults.Deceleration)
Jerk	INPUT	LREAL	-1.0	When "Mode" = 3: Jerk for the braking ramp	
				> 0.0	The specified value is used.
				= 0.0	No jerk limitation
				< 0.0	The jerk configured in "Technology object > Configuration > Extended parameters > Dynamic default values" is used. (<TO>.DynamicDefaults.Jerk)
AbortAcceleration	INPUT	BOOL	FALSE	TRUE	Acceleration is set to 0.0. The configured deceleration is built up immediately.
				FALSE	The acceleration is reduced using the configured jerk. The configured deceleration then builds up.
Done	OUTPUT	BOOL	FALSE	TRUE	Standstill is reached.
Busy	OUTPUT	BOOL	FALSE	TRUE	The job is being processed.
CommandAborted	OUTPUT	BOOL	FALSE	TRUE	The job was aborted during execution either by "MC_Power" with "Enable" = FALSE, another "MC_Stop" job or an alarm response.
Error	OUTPUT	BOOL	FALSE	TRUE	An error occurred while processing the job. The job is rejected. The cause of the error can be found in the "ErrorID" parameter.
ErrorID	OUTPUT	WORD	16#0000	Error ID for parameter "ErrorID" You can find more detailed information in the "Error IDs" section of the "S7-1500/S7-1500T Motion Control alarms and error IDs" documentation (Page 12).	

Braking an axis with "MC_Stop"

Proceed as follows to decelerate an axis to a standstill:

1. Check the requirements indicated above.
2. Set the necessary values for the parameters "Mode", "Deceleration", "Jerk" and "AbortAcceleration".
3. Start the "MC_Stop" job with a positive edge at parameter "Execute".
   The current motion state is indicated in parameters "Busy", "Done" and "Error". The standstill of the axis is indicated under "Technology object > Diagnostics > Status and error bits > Motion status > Standstill" (<TO>.StatusWord.X7 (Standstill)).
   As long as "Execute" = TRUE, the technology object cannot execute motion jobs.

Braking an axis with active force/torque limiting

Use the "Emergency stop" mode ("Mode" = 0) to brake an axis with active force/torque limitation.

More information

Information on the evaluation of the individual bits can be found in the "Evaluating StatusWord, ErrorWord and WarningWord" section of the "S7-1500/S7-1500T Motion Control Overview" documentation (Page 12).

See also

Override response V7: Homing and motion jobs (Page 279)

Emergency stop deceleration (Page 102)

8.12.2 MC_Stop: Function chart V7 (S7-1500, S7-1500T)

Function chart: Braking an axis and the overriding job characteristics

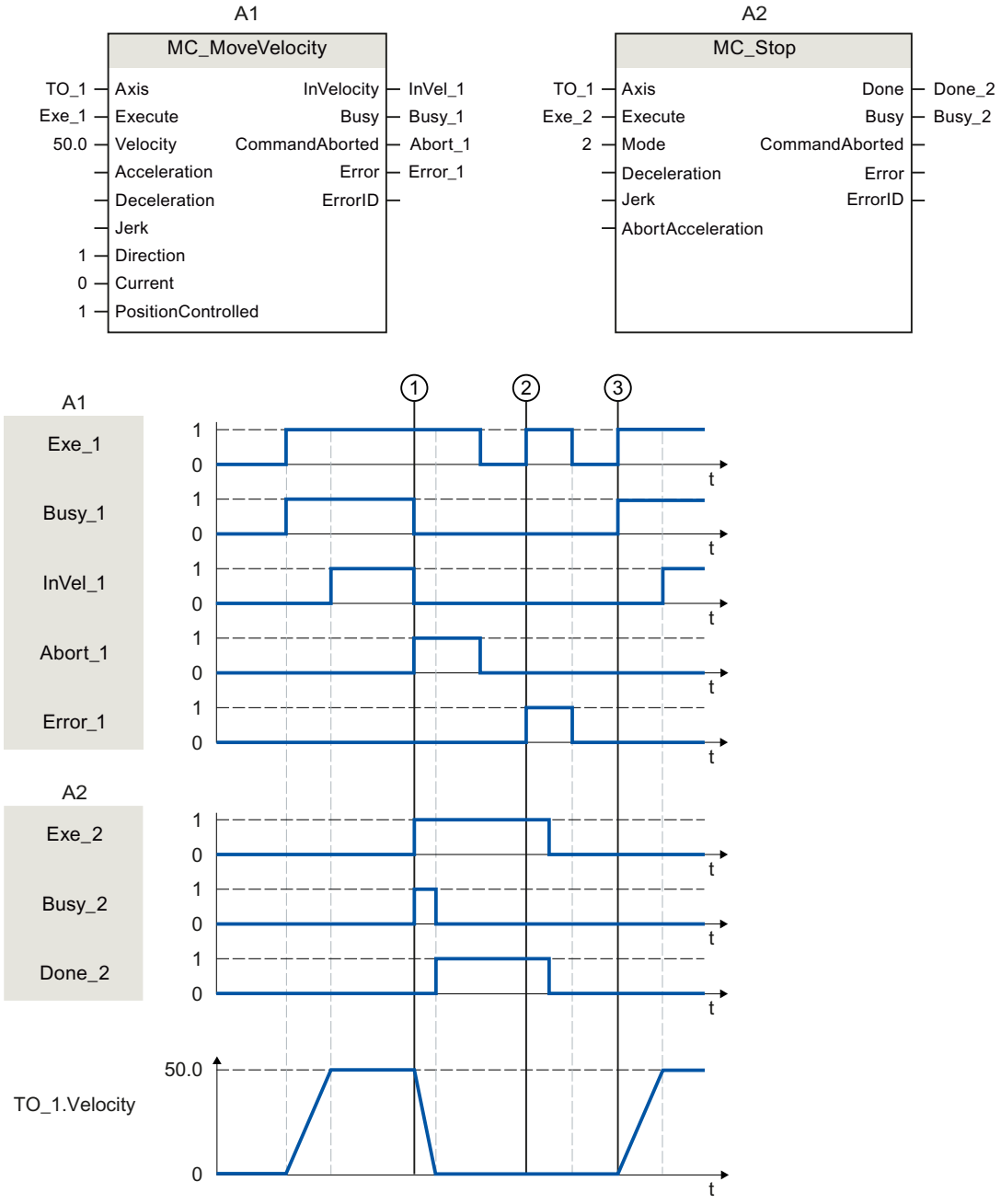

An axis is moved with an "MC_MoveVelocity" job (A1). At time ①, the "MC_MoveVelocity" job is overridden by an "MC_Stop" job (A2). The job abort is signaled via "Abort_1". Afterwards, the configured deceleration builds up and the axis is braked to a standstill. While the axis is braking, "Busy_2" = TRUE. The completion of the "MC_Stop" job is reported via "Done_2".

At time ②, with an active "MC_Stop" job (A1), an "MC_MoveVelocity" job (A2) is executed. Because the axis is disabled by an "MC_Stop" job, the "MC_MoveVelocity" job is rejected. The error is signaled by "Error_1". "Exe_2" is then reset to "FALSE".

At time ③, the axis is moved by an "MC_MoveVelocity" job (A1) with positive edge.

8.13 MC_SetAxisSTW V7 (S7-1500, S7-1500T)

8.13.1 MC_SetAxisSTW: Control bits of control word 1 and 2 V7 (S7-1500, S7-1500T)

Description

With the Motion Control instruction "MC_SetAxisSTW", you control selected bits in control word 1 (STW1) and control word 2 (STW2) of the PROFIdrive telegram. This provides the possibility of directly controlling bits not used by the technology object. The bits to be controlled are specified via the parameters "STW1" and "STW2". The controlled bits remain effective until an "MC_SetAxisSTW" job is reset, the technology object is restarted or the CPU transitions from "RUN" to "STOP".

The following bits can be controlled in STW1:

- 8
- 9
- 11 to 15

Bits 0 to 11 can be controlled in STW2.

For the meaning of the bits to be controlled, refer to the "SINAMICS S120/S150" list manual (https://support.industry.siemens.com/cs/ww/en/view/109763271).

Applies to

- Speed axis
- Positioning axis
- Synchronous axis

Requirement

- The technology object has been configured correctly.
- The technology object is interconnected with a drive telegram.
- The technology object is not in simulation.
- A permissible bit masking is set.

Override response

- A new "MC_SetAxisSTW" job does not abort any active Motion Control jobs.
- An "MC_SetAxisSTW" job is only aborted by another "MC_SetAxisSTW" job.

Parameters

The following table shows the parameters of the Motion Control instruction "MC_SetAxisSTW":

Parameter	Declaration	Data type	Default value	Description	
Axis	INPUT	TO_SpeedAxis TO_PositioningAxis TO_SynchronousAxis	-	Technology object	
Execute	INPUT	BOOL	FALSE	TRUE	Start job with a positive edge
STW1	INPUT	WORD	16#0000	Set bits for STW1	
STW1BitMask	INPUT	WORD	16#0000	Bit masking for STW1	
STW2	INPUT	WORD	16#0000	Set bits for STW2	
STW2BitMask	INPUT	WORD	16#0000	Bit masking for STW2	
Done	OUTPUT	BOOL	FALSE	TRUE	The job is completed.
Busy	OUTPUT	BOOL	FALSE	TRUE	The job is being processed.
CommandAborted	OUTPUT	BOOL	FALSE	TRUE	The job was aborted by another job during execution.
Error	OUTPUT	BOOL	FALSE	TRUE	An error occurred while processing the job. The job is rejected. The cause of the error can be found in the "ErrorID" parameter.
ErrorID	OUTPUT	WORD	16#0000	Error ID for parameter "ErrorID" You can find more detailed information in the "Error IDs" section of the "S7-1500/S7-1500T Motion Control alarms and error IDs" documentation (Page 12).	

See also

Override response V7: Homing and motion jobs (Page 279)

8.14 MC_WriteParameter V7 (S7-1500, S7-1500T)

8.14.1 MC_WriteParameter: Write parameter V7 (S7-1500, S7-1500T)

Description

With the Motion Control instruction "MC_WriteParameter", you can change selected parameters of the technology objects in runtime. The changes take effect directly or after a restart, depending on the corresponding parameter.

With a "RUN → STOP → RUN" transition of the CPU, the parameter value is retained. The changed parameter value is reset to the start value in the event of a POWER OFF or memory reset.

For parameters that are effective immediately, the changed parameter value is reset to the start value when the technology object is restarted. For parameters that become effective as the result of a restart, the parameter values are retained in the case of another restart.

Applies to

- Speed axis
- Positioning axis
- Synchronous axis
- External encoder

Requirement

- The technology object has been configured correctly.

Parameters

The following table shows the parameters of the Motion Control instruction "MC_WriteParameter":

Parameter	Declaration	Data type	Default value	Description	
Axis	INPUT	TO_SpeedAxis TO_PositioningAxis TO_SynchronousAxis TO_ExternalEncoder	-	Technology object	
Execute	INPUT	BOOL	FALSE	TRUE	Start job with a positive edge
ParameterNumber	INPUT	DINT	0	Index of the parameter to be changed	
Value	INPUT	Variant (BOOL, INT, DINT, UDINT, LREAL)	-	Variant pointer to the value to be written (source address)	
Done	OUTPUT	BOOL	FALSE	TRUE	Job is completed.
Busy	OUTPUT	BOOL	FALSE	TRUE	The job is being processed.
CommandAborted	OUTPUT	BOOL	FALSE	TRUE	The job was aborted by another job during execution.
Error	OUTPUT	BOOL	FALSE	TRUE	An error occurred during processing. The job is rejected. The cause of the error can be found in the "ErrorID" parameter.
ErrorID	OUTPUT	WORD	16#0000	Error ID for parameter "ErrorID" You can find more detailed information in the "Error IDs" section of the "S7-1500/S7-1500T Motion Control alarms and error IDs" documentation (Page 12).	

Modifiable parameters

The following table shows the parameters that can be changed with the Motion Control instruction "MC_WriteParameter":

Tag	Index	Technology object	Data type	Description		Effectiveness
PositionLimits_HW.Active	1000	Positioning axis Synchronous axis	BOOL	Enabling/disabling hardware limit switch The negative and the positive hardware limit switches (Page 148) are activated or deactivated with this parameter,		Direct
				FALSE	HW limit switch deactivated	
				TRUE	HW limit switch activated	
T_i	1010	Speed axis Positioning axis Synchronous axis External encoder	LREAL	Communication time T_i (read in process values)		After restart
T_o	1011	Speed axis Positioning axis Synchronous axis External encoder	LREAL	Communication time T_o (output process values)		After restart
T_{Pn}/T_{DP}	1012	Speed axis Positioning axis Synchronous axis External encoder	LREAL	PROFINET send clock or PROFIBUS send clock		After restart

See also

Override response V7: Homing and motion jobs (Page 279)
Direct homing (Page 148)
Tags of the positioning axis technology object (Page 299)
Tags of the speed axis technology object (Page 286)
Tags of the technology object external encoder (Page 331)

8.15 MC_SaveAbsoluteEncoderData V7 (S7-1500, S7-1500T)

8.15.1 MC_SaveAbsoluteEncoderData: Saving absolute adjustment for device replacement V7 (S7-1500, S7-1500T)

Description

With the Motion Control instruction "MC_SaveAbsoluteEncoderData" you can save the adjustment of an absolute encoder for the device replacement.

Requirement

Sufficient storage space is available on the SIMATIC Memory Card.

Parameters

The following table shows the parameters of the Motion Control instruction "MC_SaveAbsoluteEncoderData":

Parameter	Declaration	Data type	Default value	Description	
Execute	INPUT	BOOL	FALSE	TRUE	Start job with a positive edge
Done	OUTPUT	BOOL	FALSE	TRUE	The absolute encoder adjustment for all technology objects of the CPU with an absolute encoder is saved for device replacement.
Busy	OUTPUT	BOOL	FALSE	TRUE	The job is being processed.
Error	OUTPUT	BOOL	FALSE	TRUE	An error occurred while processing the job. The job is rejected. The cause of the error can be found in the "ErrorID" parameter.
ErrorID	OUTPUT	WORD	0	Error ID for parameter "ErrorID" You can find more detailed information in the "Error IDs" section of the "S7-1500/S7-1500T Motion Control alarms and error IDs" documentation (Page 12).	

8.16 MotionIn (S7-1500T)

8.16.1 MC_MotionInVelocity V7 (S7-1500T)

8.16.1.1 MC_MotionInVelocity: Specify motion setpoints V7 (S7-1500T)

Description

With the Motion Control instruction "MC_MotionInVelocity", you specify cyclically applicable calculated motion setpoints for velocity and acceleration as a basic motion for the axis. No velocity profile is calculated for this, the values are directly active at the technology object. The dynamic limits are not effective.

With the "Velocity" parameter, you can specify the velocity setpoint and with "Acceleration" the acceleration setpoint. The velocity setpoint and acceleration setpoint are effective when the parameter "Enable" = TRUE and at least one value is specified for the "Velocity" parameter.

Applies to

- Speed axis
- Positioning axis
- Synchronous axis

Requirement

- The technology object has been configured correctly.
- The technology object has been enabled.

Override response

The override response for "MC_MotionInVelocity" jobs is described in section "Override response V7: Homing and motion jobs (Page 279)".

NOTE

Deviating dynamic settings

When overriding the active job with a new jerk-limited motion, the current acceleration or deceleration is transferred to the new acceleration/deceleration via the jerk. Depending on the dynamic settings, this may take several application cycles. When the new acceleration or deceleration deviates significantly from the acceleration/deceleration at the time of the override, the transition profile can result in an unexpected motion of the axis.

If such transitions cannot be excluded during acceleration/deceleration, adjust the dynamic settings of your jobs. For example, add a motion that is not jerk-limited with a direct transition to the new acceleration/deceleration. As an alternative, use high jerk values.

For MotionIn jobs, the specification of the acceleration is only relevant for overriding the job. When the currently active acceleration is not to be slowed down via the jerk, enter the value "0.0" at the "Acceleration" parameter of the MotionIn job.

Parameters

The following table shows the parameters of the Motion Control instruction "MC_MotionInVelocity":

Parameter	Declaration	Data type	Default value	Description	
Axis	INPUT	TO_SpeedAxis TO_PositioningAxis TO_SynchronousAxis	-	Technology object	
Enable	INPUT	BOOL	FALSE	TRUE	Start job with a positive edge The specified setpoints are used as long as the parameter is set to "TRUE".
				FALSE	End of the job with negative edge If the parameter is set from "TRUE" to "FALSE", the setpoints are set to 0.0.
Velocity	INPUT	LREAL	0.0	Velocity setpoint Observe the dynamic limits.	
Acceleration	INPUT	LREAL	0.0	Setpoint acceleration Observe the dynamic limits.	
PositionControlled	INPUT	BOOL	TRUE	TRUE	Position-controlled mode
				FALSE	Controlled running
Busy	OUTPUT	BOOL	FALSE	TRUE	The job is being processed.

Parameter	Declaration	Data type	Default value	Description	
CommandAborted	OUTPUT	BOOL	FALSE	TRUE	The job was aborted by another job during execution.
Error	OUTPUT	BOOL	FALSE	TRUE	An error occurred while processing the job. The job is rejected. The cause of the error can be found in the "ErrorID" parameter.
ErrorID	OUTPUT	WORD	16#0000	Error ID for parameter "ErrorID" You can find more detailed information in the "Error IDs" section of the "S7-1500/S7-1500T Motion Control alarms and error IDs" documentation (Page 12).	

See also

Motion specification via "MotionIn" (Page 111)

8.16.1.2 MC_MotionInVelocity: Function chart V7 (S7-1500T)

Function chart: Specify motion setpoints

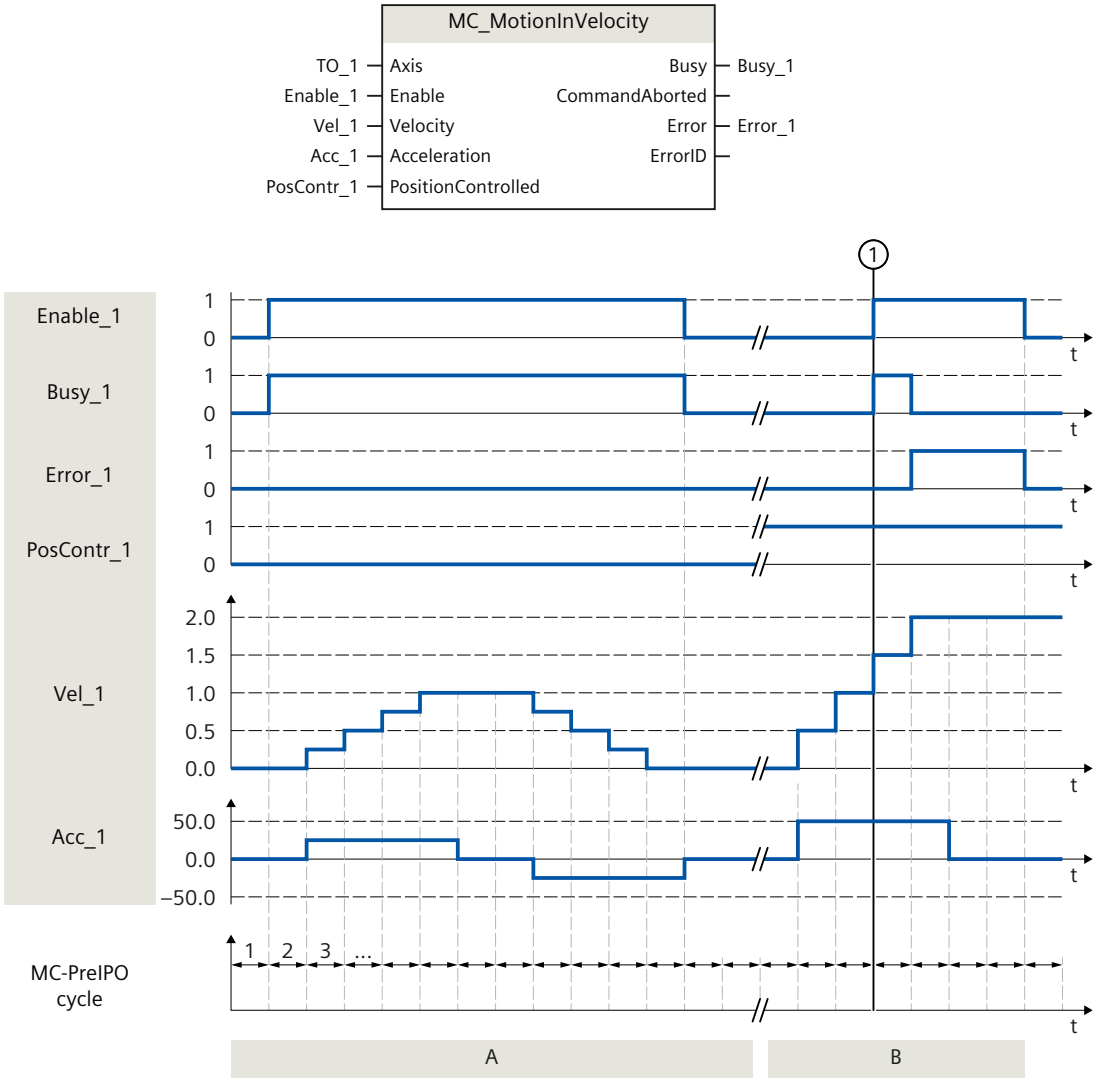

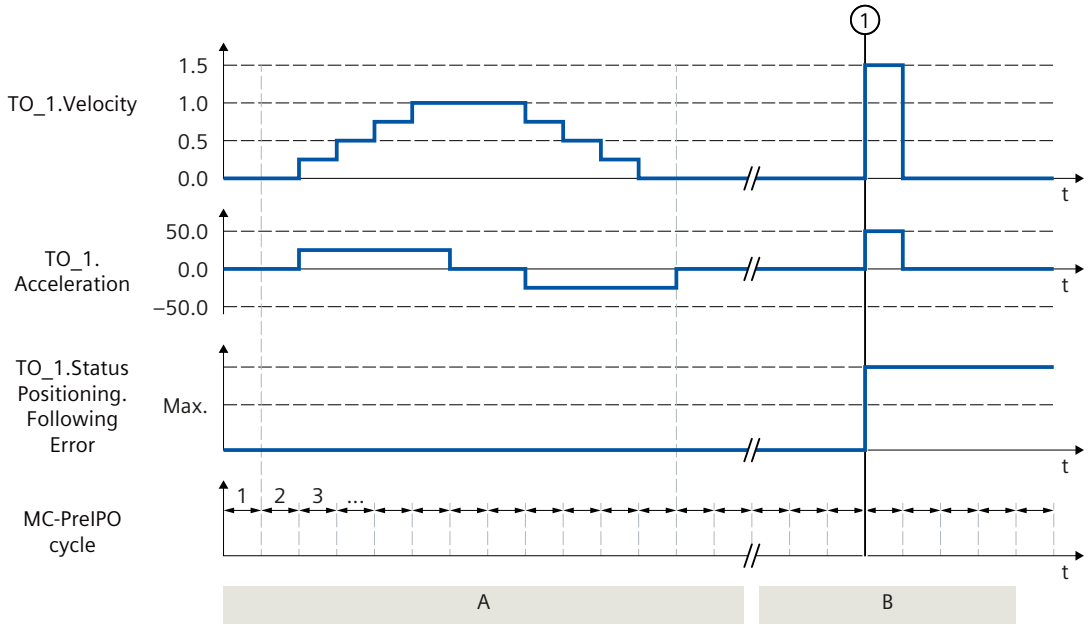

Section A

With "Enable_1 = TRUE" the technology object is specified cyclic in the MC-PreServo-clock velocity "Vel_1" and acceleration "Acc_1". These specifications are applied directly as setpoint velocity "TO_1.Velocity" and setpoint acceleration "TO_1.Acceleration", without hereby calculating a velocity profile.

As the position monitoring "PosContr_1" is set to "FALSE", no following error "TO_1.StatusPositioning.FollowingError" is determined.

Section B

The velocity and acceleration specifications are not effective as long as "Enable_1" is set to "FALSE".

At time ①, "Enable_1" is set to "TRUE". As the position monitoring "PosContr_1" is set to "TRUE", a following error "TO_1.StatusPositioning.FollowingError" is determined.

The velocity specification "Vel_1" and the acceleration default "Acc_1" cause a setpoint jump which exceeds the maximum permissible following error. With active position lag monitoring, the technology alarm 521 is output, and the technology object is disabled. With deactivated following error monitoring, the setpoint jump is executed with maximum dynamic.

8.16.2 MC_MotionInPosition V7 (S7-1500T)

8.16.2.1 MC_MotionInPosition: Specify motion setpoints V7 (S7-1500T)

Description

With the Motion Control instruction "MC_MotionInPosition", you specify the cyclic, applicable motion setpoints for position, velocity and acceleration as basic motion for the axis. No velocity profile is calculated for this, the values are directly active at the technology object. The dynamic limits are not effective.

With the "Position" parameter, you can specify the set position. With the "Velocity" parameter, you can specify the velocity setpoint. With the "Acceleration" parameter, you can specify the setpoint acceleration.
The velocity setpoint is used as the precontroller value when velocity feedforward control is activated. The set position, velocity setpoint and acceleration setpoint are effective when the parameter "Enable" = TRUE and at least the values for the "Position" and "Velocity" parameters are specified.

Applies to

- Positioning axis
- Synchronous axis

Requirement

- The technology object has been configured correctly.
- The technology object has been enabled.

Override response

The override response for "MC_MotionInPosition" jobs is described in section "Override response V7: Homing and motion jobs (Page 279)".

NOTE
Deviating dynamic settings
When overriding the active job with a new jerk-limited motion, the current acceleration or deceleration is transferred to the new acceleration/deceleration via the jerk. Depending on the dynamic settings, this may take several application cycles. When the new acceleration or deceleration deviates significantly from the acceleration/deceleration at the time of the override, the transition profile can result in an unexpected motion of the axis.

If such transitions cannot be excluded during acceleration/deceleration, adjust the dynamic settings of your jobs. For example, add a motion that is not jerk-limited with a direct transition to the new acceleration/deceleration. As an alternative, use high jerk values.

For MotionIn jobs, the specification of the acceleration is only relevant for overriding the job. When the currently active acceleration is not to be slowed down via the jerk, enter the value "0.0" at the "Acceleration" parameter of the MotionIn job.

Parameters

The following table shows the parameters of the Motion Control instruction "MC_MotionInPosition":

Parameter	Declaration	Data type	Default value	Description
Axis	INPUT	TO_PositioningAxis TO_SynchronousAxis	-	Technology object

Parameter	Declaration	Data type	Default value	Description	
Enable	INPUT	BOOL	FALSE	TRUE	Start job with a positive edge The specified setpoints are used as long as the parameter is set to "TRUE".
				FALSE	End of the job with negative edge If the parameter is set from "TRUE" to "FALSE", the setpoints are set to 0.0. The most recently specified value remains active for the set position.
Position	INPUT	LREAL	0.0	Position setpoint	
Velocity	INPUT	LREAL	0.0	Velocity setpoint Observe the dynamic limits.	
Acceleration	INPUT	LREAL	0.0	Setpoint acceleration Observe the dynamic limits.	
Busy	OUTPUT	BOOL	FALSE	TRUE	The job is being processed.
CommandAborted	OUTPUT	BOOL	FALSE	TRUE	The job was aborted by another job during execution.
Error	OUTPUT	BOOL	FALSE	TRUE	An error occurred while processing the job. The job is rejected. The cause of the error can be found in the "ErrorID" parameter.
ErrorID	OUTPUT	WORD	16#0000	Error ID for the parameter "ErrorID" You can find more detailed information in the "Error IDs" section of the "S7-1500/S7-1500T Motion Control alarms and error IDs" documentation (Page 12).	

See also

Motion specification via "MotionIn" (Page 111)

8.16.2.2 MC_MotionInPosition: Function chart V7 (S7-1500T)

Function chart: Specify motion setpoints

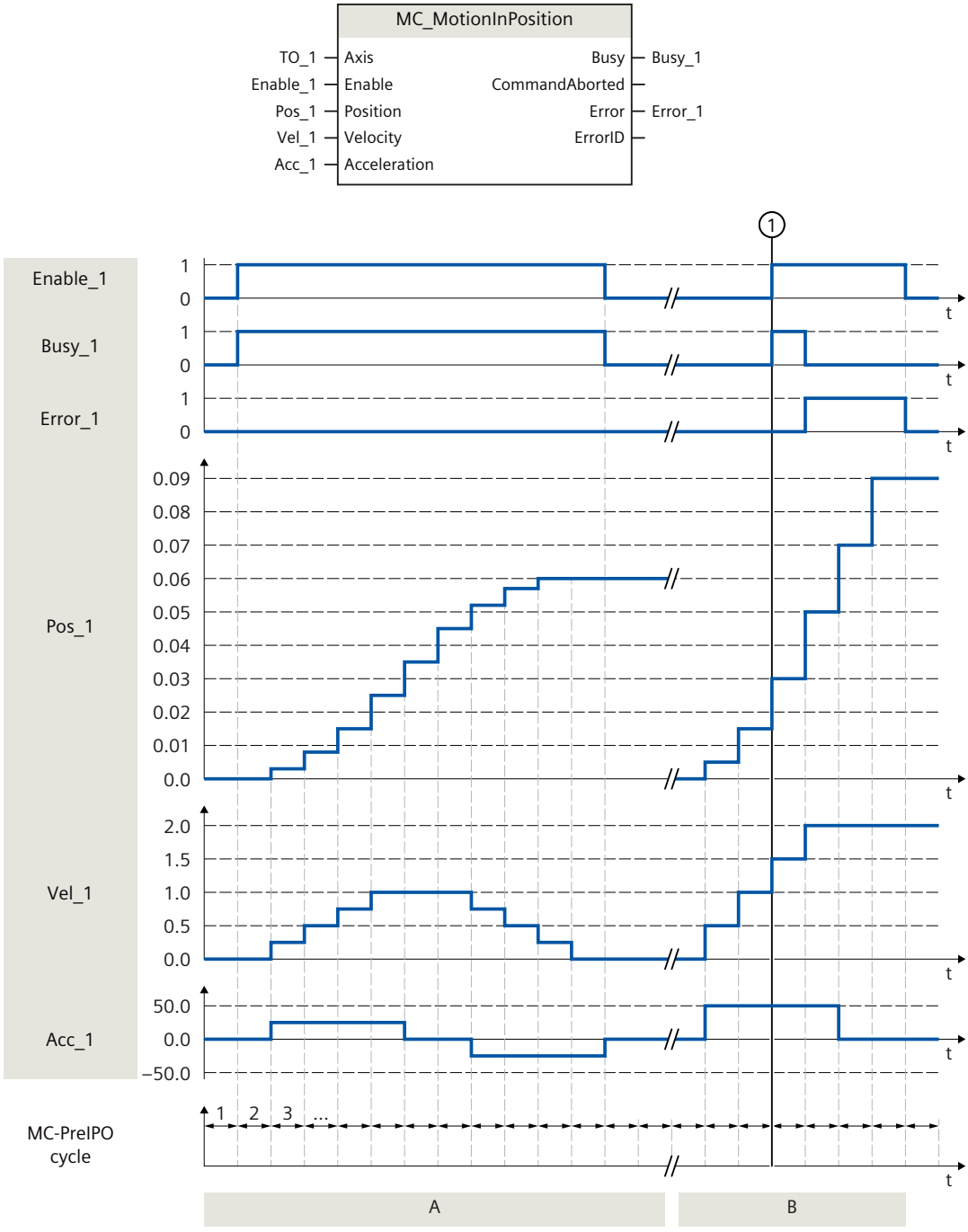

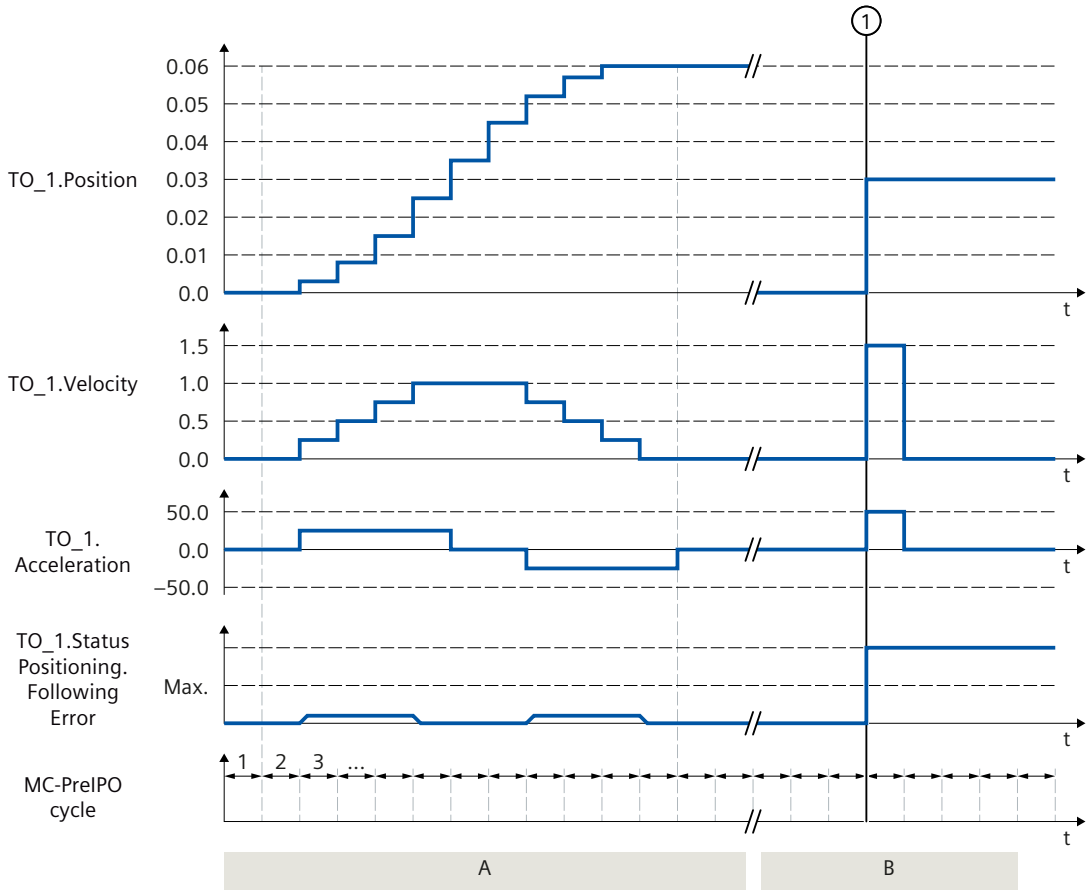

Section A

With "Enable_1 = TRUE" the technology object is specified cyclic in the MC-PreServo-clock position "Pos_1", velocity "Vel_1" and acceleration "Acc_1". These specifications are applied directly as set position "TO_1.Position", setpoint velocity "TO_1.Velocity" and setpoint acceleration "TO_1.Acceleration", without hereby calculating a velocity profile.

Section B

The position, velocity and acceleration specifications are not active as long as "Enable_1" is set to "FALSE".

At time ①, "Enable_1" is set to TRUE. The default position setting "Pos_1" causes a setpoint jump which exceeds the maximum permissible following error. With active position lag monitoring, the technology alarm 521 is output, and the technology object is disabled. With deactivated following error monitoring, the setpoint jump is executed with maximum dynamic.

8.16.3 MC_MotionInSuperimposed V7 (S7-1500T)

8.16.3.1 MC_MotionInSuperimposed: Specifying superimposed motion setpoints V7 (S7-1500T)

Description

With the Motion Control instruction "MC_MotionInSuperimposed", you specify the cyclic, applicable motion setpoints for position, velocity and acceleration in addition to the basic motion for the axis. No velocity profile is calculated for this, the values are directly active at the technology object. The dynamic limits are not effective.

Applies to

- Positioning axis
- Synchronous axis

Requirement

- The technology object has been configured correctly.
- The technology object has been enabled.

Override response

The override response for "MC_MotionInSuperimposed" jobs is described in section "Override response V7: Homing and motion jobs (Page 279)".

NOTE

Deviating dynamic settings

When overriding the active job with a new jerk-limited motion, the current acceleration or deceleration is transferred to the new acceleration/deceleration via the jerk. Depending on the dynamic settings, this may take several application cycles. When the new acceleration or deceleration deviates significantly from the acceleration/deceleration at the time of the override, the transition profile can result in an unexpected motion of the axis.

If such transitions cannot be excluded during acceleration/deceleration, adjust the dynamic settings of your jobs. For example, add a motion that is not jerk-limited with a direct transition to the new acceleration/deceleration. As an alternative, use high jerk values.

Parameters

The following table shows the parameters of the Motion Control instruction "MC_MotionInSuperimposed":

Parameter	Declaration	Data type	Default value	Description	
Axis	INPUT	TO_PositioningAxis TO_SynchronousAxis	-	Axis technology object	
Enable	INPUT	BOOL	FALSE	TRUE	Start job with a positive edge The specified setpoints are used as long as the parameter is set to "TRUE".
				FALSE	End of the job with negative edge If the parameter is set from "TRUE" to "FALSE", the setpoints are set to 0.0. The most recently specified value remains active for the set position.
Distance	INPUT	LREAL	0.0	Additional distance of the superimposed motion (negative or positive)	
VelocityDiff	INPUT	LREAL	0.0	Velocity setpoint of the superimposed motion (velocity difference) Observe the dynamic limits of the axis.	
AccelerationDiff	INPUT	LREAL	0.0	Setpoint acceleration of the superimposed motion (acceleration difference)[1] Observe the dynamic limits of the axis.	
Busy	OUTPUT	BOOL	FALSE	TRUE	The job is being processed.
CommandAborted	OUTPUT	BOOL	FALSE	TRUE	The job was aborted by another job during execution.
Error	OUTPUT	BOOL	FALSE	TRUE	An error occurred while processing the job. The job is rejected. The cause of the error can be found in the "ErrorID" parameter.
ErrorID	OUTPUT	WORD	0	Error ID for parameter "ErrorID" You can find more detailed information in the "Error IDs" section of the "S7-1500/S7-1500T Motion Control alarms and error IDs" documentation (Page 12).	

[1] The superimposed acceleration "AccelerationDiff" is only required for overriding the superimposed or entire motion. When braking the superimposed motion with a "MC_HaltSuperImposed" job with "AbortAcceleration" = FALSE, the specified acceleration is reduced via the jerk.

See also

Motion specification via "MotionIn" (Page 111)
Superimposed motions (Page 107)

8.16.3.2 MC_MotionInSuperimposed: Function chart V7 (S7-1500T)

Function chart: Specifying superimposed motion setpoints

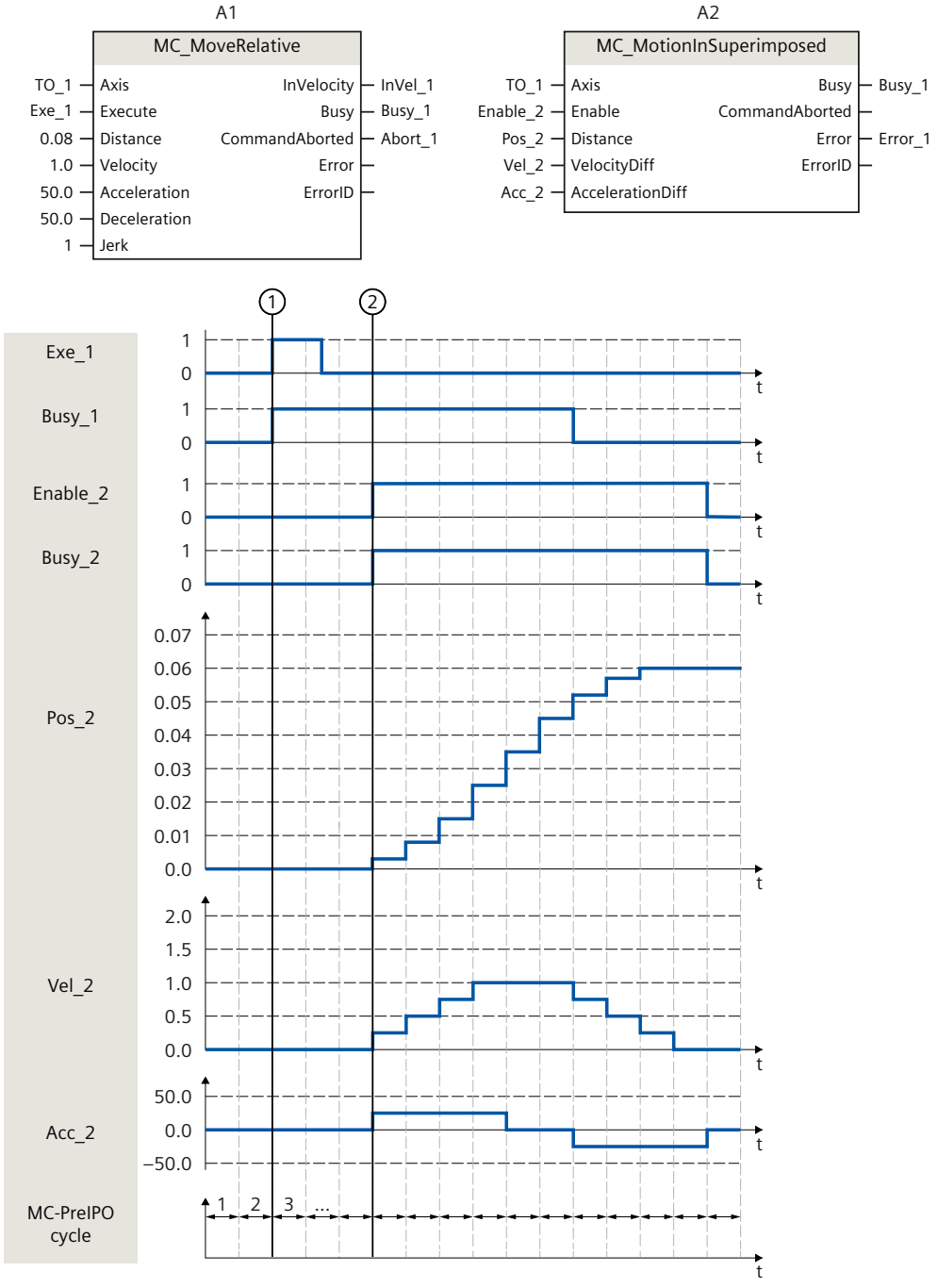

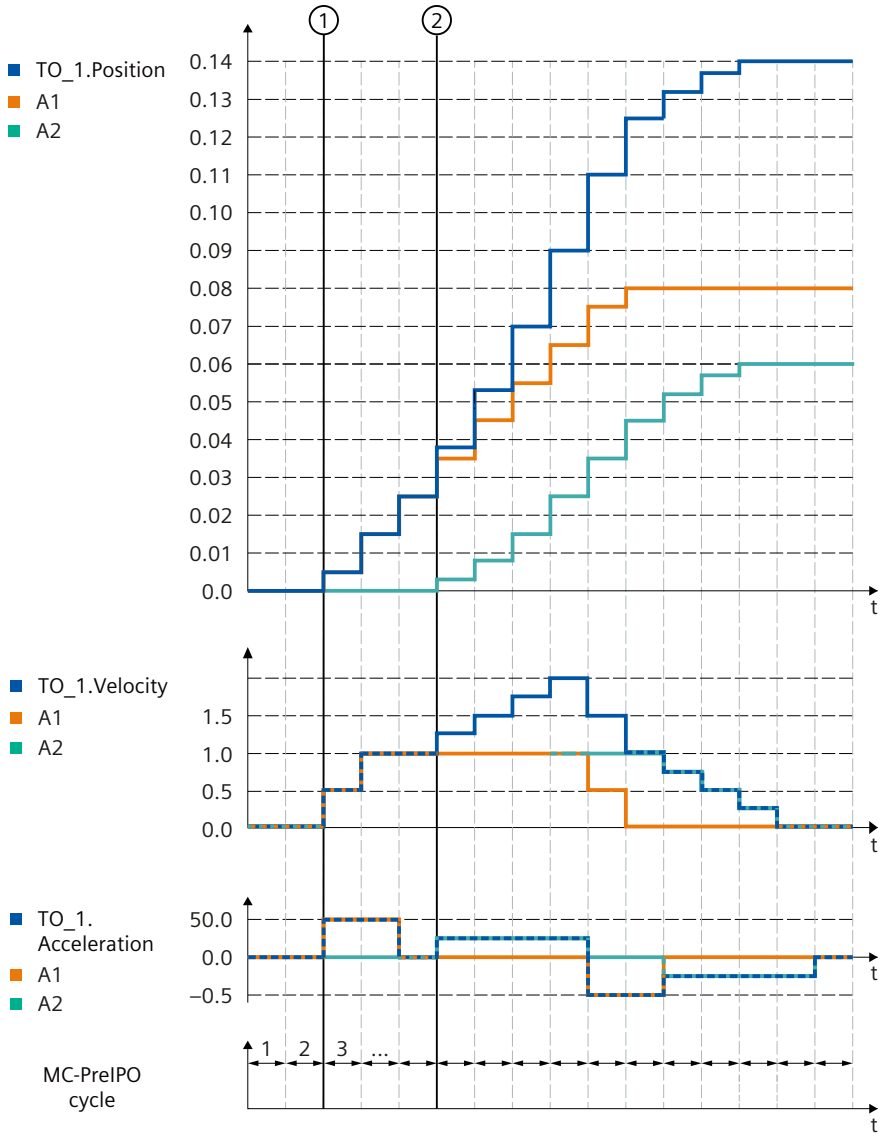

①

A "Exe_1" job is triggered via "MC_MoveRelative" with the distance 0.08 as the basic motion.

②

The "MC_MotionInSuperimposed" job is triggered. With the positive edge at "Enable_2", the setpoints "Pos_2", "Vel_2", and "Acc_2" become valid and superimpose the basic motion.

8.17 Torque data (S7-1500, S7-1500T)

8.17.1 MC_TorqueAdditive V7 (S7-1500, S7-1500T)

8.17.1.1 MC_TorqueAdditive: Specify additive torque V7 (S7-1500, S7-1500T)

Description

With the Motion Control instruction "MC_TorqueAdditive", you specify an additive torque for the drive to which the technology object is assigned. The torque data are transferred via the telegram 750.

With a linear motor, use the "MC_TorqueAdditive" instruction to specify an additive force.

With the "Value" parameter, you specify the additive setpoint torque. The specification of the additive torque setpoint is overriding. An additional torque may be positive or negative. If you invert the setpoint for the technology object, the value for the additive torque is also inverted and transferred inverted to the drive.

Applies to

- Speed axis
- Positioning axis
- Synchronous axis

Requirement

- The technology object has been configured correctly.
- The technology object has been enabled.
- The drive is connected via PROFIdrive telegram.
- Telegram 750 is configured.
  Telegram 750 is available for SINAMICS drives V4.9 and higher.

Override response

- An "MC_TorqueAdditive" job is not aborted by any other Motion Control job.
- A new "MC_TorqueAdditive" job does not abort any active Motion Control jobs.

Parameters

The following table shows the parameters of the Motion Control instruction "MC_TorqueAdditive":

Parameter	Declaration	Data type	Default value	Description	
Axis	INPUT	TO_SpeedAxis TO_PositioningAxis TO_SynchronousAxis	-	Technology object	
Enable	INPUT	BOOL	FALSE	TRUE	The specified setpoint is used as long as the parameter is set to TRUE.
				FALSE	The additive torque transferred to the drive is zero.
Value	INPUT	LREAL	0.0	With standard motor: Additive setpoint torque With linear motor: Additive setpoint force Permissible values: -1.0E12 to 1.0E12	
Busy	OUTPUT	BOOL	FALSE	TRUE	The job is being processed.
Error	OUTPUT	BOOL	FALSE	TRUE	An error occurred while processing the job. The job is rejected. The cause of the error can be found in the "ErrorID" parameter.
ErrorID	OUTPUT	WORD	16#0000	Error ID for parameter "ErrorID" You can find more detailed information in the "Error IDs" section of the "S7-1500/S7-1500T Motion Control alarms and error IDs" documentation (Page 12).	

See also

Additive setpoint torque/additive setpoint force (Page 106)

8.17.1.2 MC_TorqueAdditive: Function chart V7 (S7-1500, S7-1500T)

Function chart: Activate/deactivate additive setpoint torque

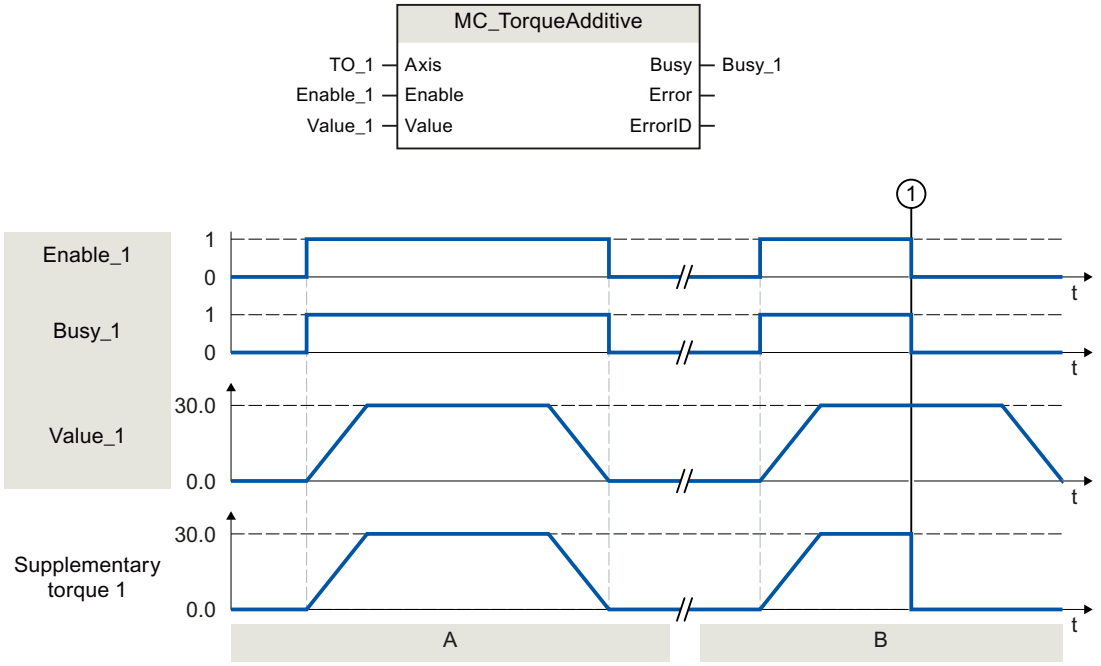

Section A

With "Enable_1" = TRUE, an additive setpoint torque "Value_1" is specified for the drive assigned to the technology object. This specification is transferred to the drive parameter "p1511" (Supplementary torque 1) using telegram 750.

Section B

With "Enable_1" = TRUE, an additive setpoint torque "Value_1" is specified for the drive assigned to the technology object. This specification is transferred to the drive parameter "p1511" (Supplementary torque 1) using telegram 750. The additive setpoint torque is first built up. At time ①, "Enable_1" is already set to "FALSE", before the additive setpoint torque is reduced again. The reduction of the torque setpoint is transmitted directly to the drive.

8.17.2 MC_TorqueRange V7 (S7-1500, S7-1500T)

8.17.2.1 MC_TorqueRange: Set high and low torque limit V7 (S7-1500, S7-1500T)

Description

With the Motion Control instruction "MC_TorqueRange", you can specify an upper and lower torque limit to the drive assigned to the technology object. The torque data are transferred via the telegram 750.

With a linear motor, use the "MC_TorqueRange" instruction to specify an upper and lower force limit.

With the "UpperLimit" parameter you specify the upper torque limit and with "LowerLimit" the lower torque limit. The specification of the torque limits has smoothing effect on the movements. If you invert the setpoints for the technology object, the values for the high and low torque limit are also inverted and transferred inverted to the drive.

If the high and low torque limits are active, the following monitors and limits are disabled by default:

- Following error monitoring
- Time limitations for positioning and standstill monitoring

Monitoring remains in effect if you have selected the option "Leave position-related monitoring enabled" under "Technology object > Configuration > Extended parameters > Limits > Torque limit".

Applies to

- Speed axis
- Positioning axis
- Synchronous axis

Requirement

- The technology object has been configured correctly.
- The drive is connected via PROFIdrive telegram.
- Telegram 750 is configured.
  Telegram 750 is available for SINAMICS drives V4.9 and higher.

Override response

- An "MC_TorqueRange" job is not aborted by any other Motion Control job.
- A new "MC_TorqueRange" job does not abort any active Motion Control jobs.
- If the torque limiting is active via the "MC_TorqueLimiting" job, the "MC_TorqueRange" job is rejected with an error message and vice versa. The functions do not override one another.

Parameters

The following table shows the parameters of the Motion Control instruction "MC_TorqueRange":

Parameter	Declaration	Data type	Default value	Description	
Axis	INPUT	TO_SpeedAxis TO_PositioningAxis TO_SynchronousAxis	-	Technology object	
Enable	INPUT	BOOL	FALSE	TRUE	The specified values are used as long as the TRUE parameter is set.

Parameter	Declaration	Data type	Default value	Description	
Enable	INPUT	BOOL	FALSE	FALSE	No values for the high and low torque limit are transferred to the drive.
UpperLimit	INPUT	LREAL	1.0 E12	With standard motor: Upper torque limit (in the configured unit) With linear motor: Upper force limit (in the configured unit) Permitted value range: -1.0 E12 to 1.0 E12 The value of the parameter "UpperLimit" must be greater than the value of the parameter "LowerLimit".	
LowerLimit	INPUT	LREAL	-1.0 E12	With standard motor: Lower torque limit (in the configured unit) With linear motor: Lower force limit (in the configured unit) Permitted value range: -1.0 E12 to 1.0 E12 The value of the parameter "LowerLimit" must be less than the value of the parameter "UpperLimit".	
Busy	OUTPUT	BOOL	FALSE	TRUE	The job is being processed.
Error	OUTPUT	BOOL	FALSE	TRUE	An error occurred while processing the job. The job is rejected. The cause of the error can be found in the "ErrorID" parameter.
ErrorID	OUTPUT	WORD	16#0000	Error ID for parameter "ErrorID" You can find more detailed information in the "Error IDs" section of the "S7-1500/S7-1500T Motion Control alarms and error IDs" documentation (Page 12).	

See also

Permissible torque range/force range (Page 106)

8.17.2.2 MC_TorqueRange: Function chart V7 (S7-1500, S7-1500T)

Function chart: Set high and low torque limits

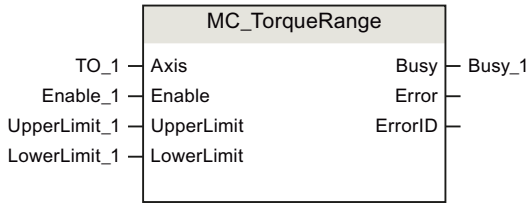

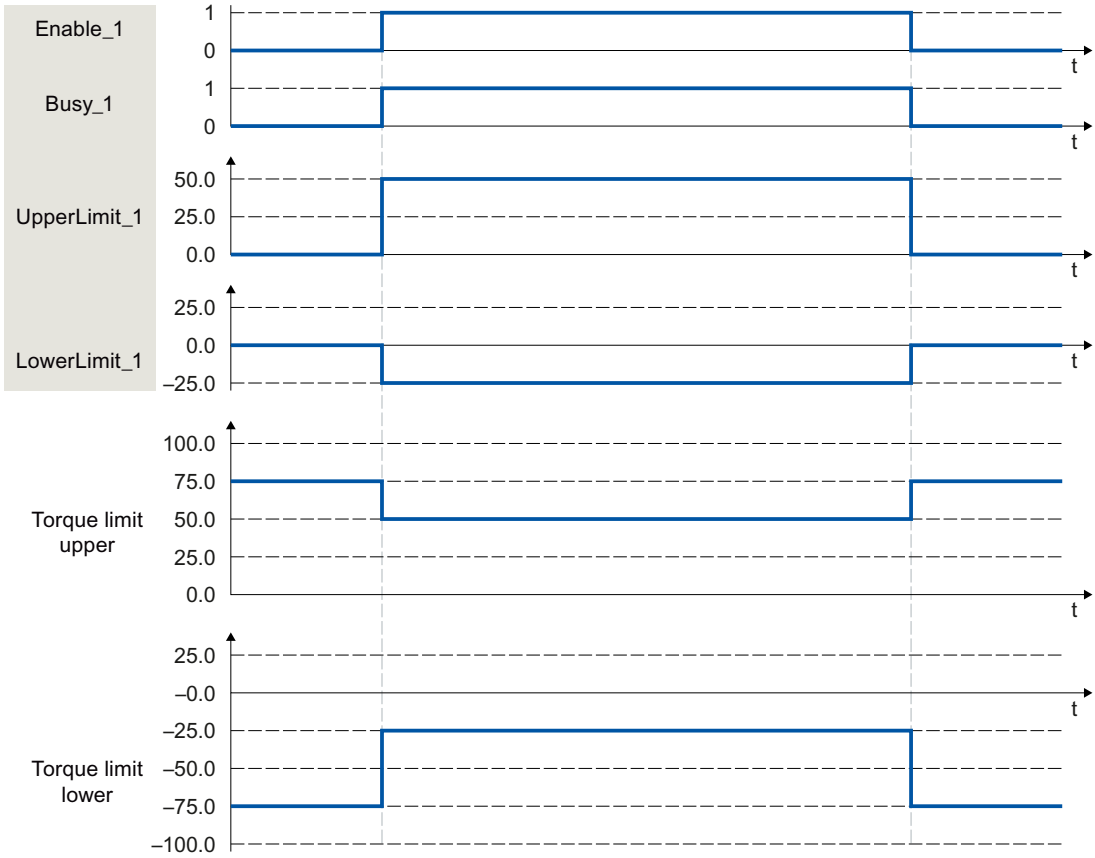

With "Enable_1" = TRUE, an upper torque limit "UpperLimit_1" and a lower torque limit "LowerLimit_1" are specified to the drive assigned to the technology object. These settings are transferred directly to the drive parameters "p1522" (Torque limit upper) and "p1523" (Torque limit lower) using telegram 750. If "Enable_1" is reset to "FALSE", the upper and lower torque limits are no longer active.

8.17.3 MC_TorqueLimiting V7 (S7-1500, S7-1500T)

8.17.3.1 MC_TorqueLimiting: Activate/deactivate force/torque limit / fixed stop detection V7 (S7-1500, S7-1500T)

Description

With the Motion Control instruction "MC_TorqueLimiting", you activate and assign parameters for force/torque limiting and fixed stop detection. Together with a position-controlled motion job, a "Travel to fixed stop" can be realized with the fixed stop detection. In the axis configuration, you can configure whether the force/torque limiting is to relate to the drive side or the load side.

The functions of the Motion Control instruction "MC_TorqueLimiting" can be activated and deactivated before and during a motion job.

NOTE

Multi-instance DBs

If you use multi-instances of the MC_TorqueLimiting instruction, create the multi-instances in a separate function block. This allows you to download program blocks from other sections of your user program without switching off the axes, including in RUN mode.

Force/torque limiting applies to

- Speed axis
- Positioning axis
- Synchronous axis

Requirements for force/torque limiting

- The technology object and the reference torque of the drive have been configured correctly.
- No errors that prevent enabling are pending for the technology object (the technology object must not be enabled).
- The drive must support force/torque reduction. Only PROFIdrive drives with SIEMENS telegram 10x support force/torque limiting.
- Interconnection in the SINAMICS drive:
  - P1522 to a fixed value of 100 %
  - P1523 to a fixed value of -100% (e.g. through interconnection to fixed value parameter P2902[i]).
  - P1544 Torque/force reduction analysis during travel to fixed stop to 100% (default)
  - P2194 Threshold value for the parameter "InLimitation" of < 100% (default 90%)

Fixed stop detection applies to

- Synchronous axis
- Positioning axis

Requirement for fixed stop detection

- The fixed stop detection can only be applied to position-controlled axes. For fixed stop detection, the axis must be enabled as position-controlled. Motion jobs must be executed as position-controlled.
- The technology object has been configured correctly.
- When a drive and telegram that support force/torque limiting are used, the reference torque of the drive must be correctly configured for the technology object.
- No errors that prevent enabling are pending for the technology object (the technology object must be enabled).

Override response

- An "MC_TorqueLimiting" job cannot be aborted by any other Motion Control job.
- A new "MC_TorqueLimiting" job does not abort any active Motion Control jobs.
- If the high and low torque limiting is active via the "MC_TorqueRange" job, the "MC_TorqueLimiting" job is rejected with an error message and vice versa. The functions do not override one another.

Parameters

The following table shows the parameters of the Motion Control instruction "MC_TorqueLimiting":

Parameter	Declaration	Data type	Default value	Description	
Axis	INPUT	TO_SpeedAxis TO_PositioningAxis TO_SynchronousAxis	-	Technology object	
Enable	INPUT	BOOL	FALSE	TRUE	Activate function corresponding to input parameter "Mode"
Limit	INPUT	LREAL	-1.0	Value of force/torque limiting (in the configured unit of measurement)[1] If the drive and telegram do not support force/torque limiting, the specified value is irrelevant.	
				≥ 0.0	The value specified at the parameter is used.

[1] Changes to input parameters "Limit" and "Mode" are also applied at the cyclic call of the Motion Control instruction when "Enable" = TRUE.

[2] If "InClamping" = TRUE, all motion and synchronization jobs are canceled.

Parameter	Declaration	Data type	Default value	Description	
Limit	INPUT	LREAL	-1.0	< 0.0	The value configured in the "Torque limiting" configuration window is used. Tag Torque Limit: <TO>.TorqueLimiting.LimitDefaults.Torque Tag Force Limit: <TO>.TorqueLimiting.LimitDefaults.Force
Mode	INPUT	DINT	0	0	Force/torque limiting[1)]
				1	Fixed stop detection[1)] If drive and telegram support force/torque limiting, this is applied.
InClamping	OUTPUT	BOOL	FALSE	TRUE	"Mode" = 1: The drive is kept at the fixed stop (clamping[2)]). The axis position is within the positioning tolerance.
InLimitation	OUTPUT	BOOL	FALSE	TRUE	"Mode" = 0 and 1: The drive operates at least at the threshold value (default 90%) of the torque limit/force limitation.
Busy	OUTPUT	BOOL	FALSE	TRUE	The job is being processed.
Error	OUTPUT	BOOL	FALSE	TRUE	An error occurred while processing the job. The job is rejected. The cause of the error can be found in the "ErrorID" parameter.
ErrorID	OUTPUT	WORD	16#0000	Error ID for parameter "ErrorID" You can find more detailed information in the "Error IDs" section of the "S7-1500/S7-1500T Motion Control alarms and error IDs" documentation (Page 12).	

1) Changes to input parameters "Limit" and "Mode" are also applied at the cyclic call of the Motion Control instruction when "Enable" = TRUE.

2) If "InClamping" = TRUE, all motion and synchronization jobs are canceled.

See also

Fixed stop detection (Page 104)
Force/torque limiting (Page 102)

8.17.3.2 MC_TorqueLimiting: Function chart V7 (S7-1500, S7-1500T)

Function chart: Pausing an axis when the torque limit is reached

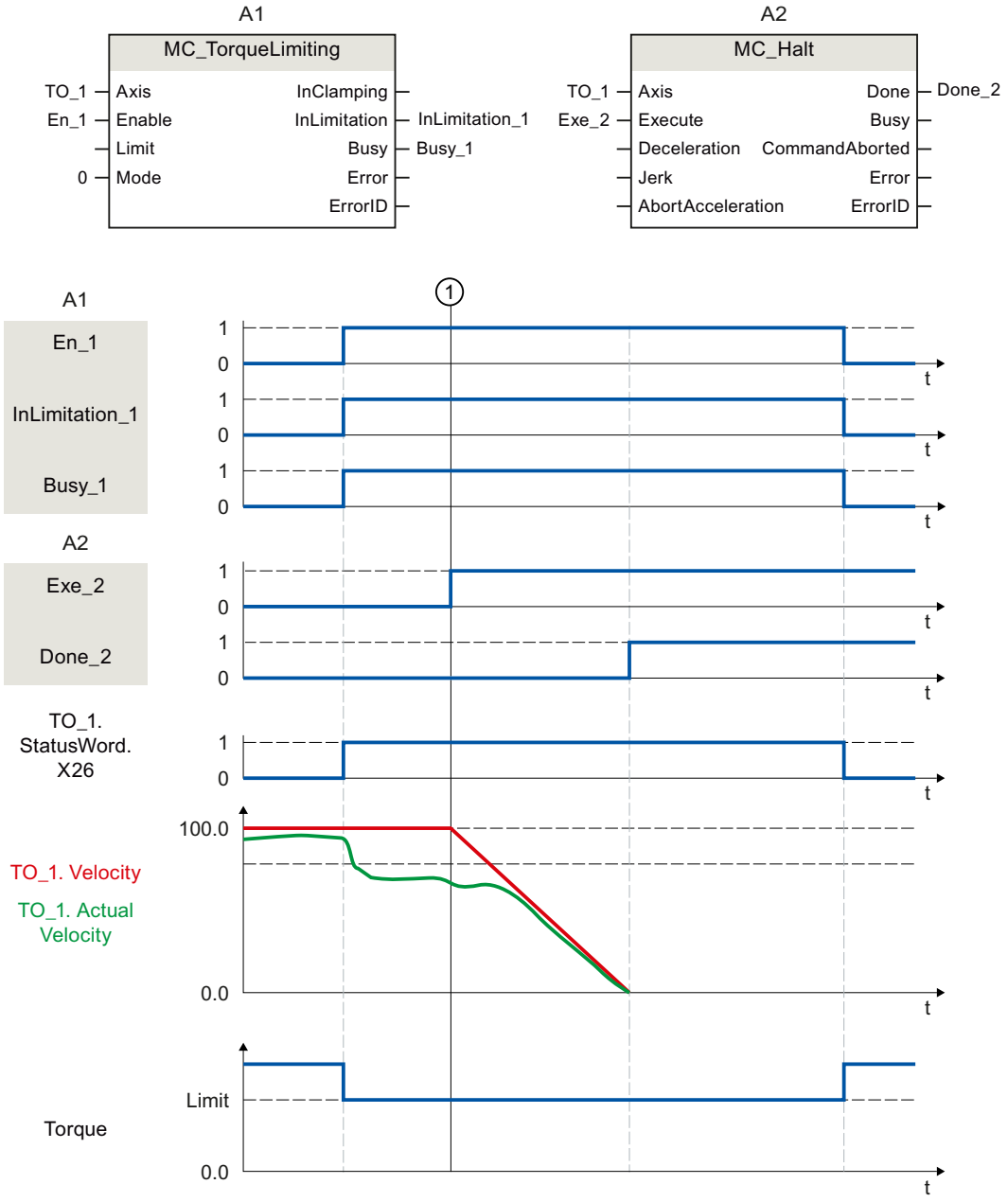

At time ①, an "MC_Halt" job (A2) is executed on an axis with active torque limiting "MC_TorqueLimiting" (A1). Torque limiting is still active ("MC_TorqueLimiting.Enable" = TRUE) and any accumulated following error is retained and will be reduced with the time.

When the actual velocity is "0.0" and the minimum dwell time in the standstill window has elapsed, the tag "MC_Halt.Done" shows = TRUE. When position monitoring is activated, reaching of the target position is also monitored.

Function chart: Torque limiting with fixed stop detection (mode = 1)

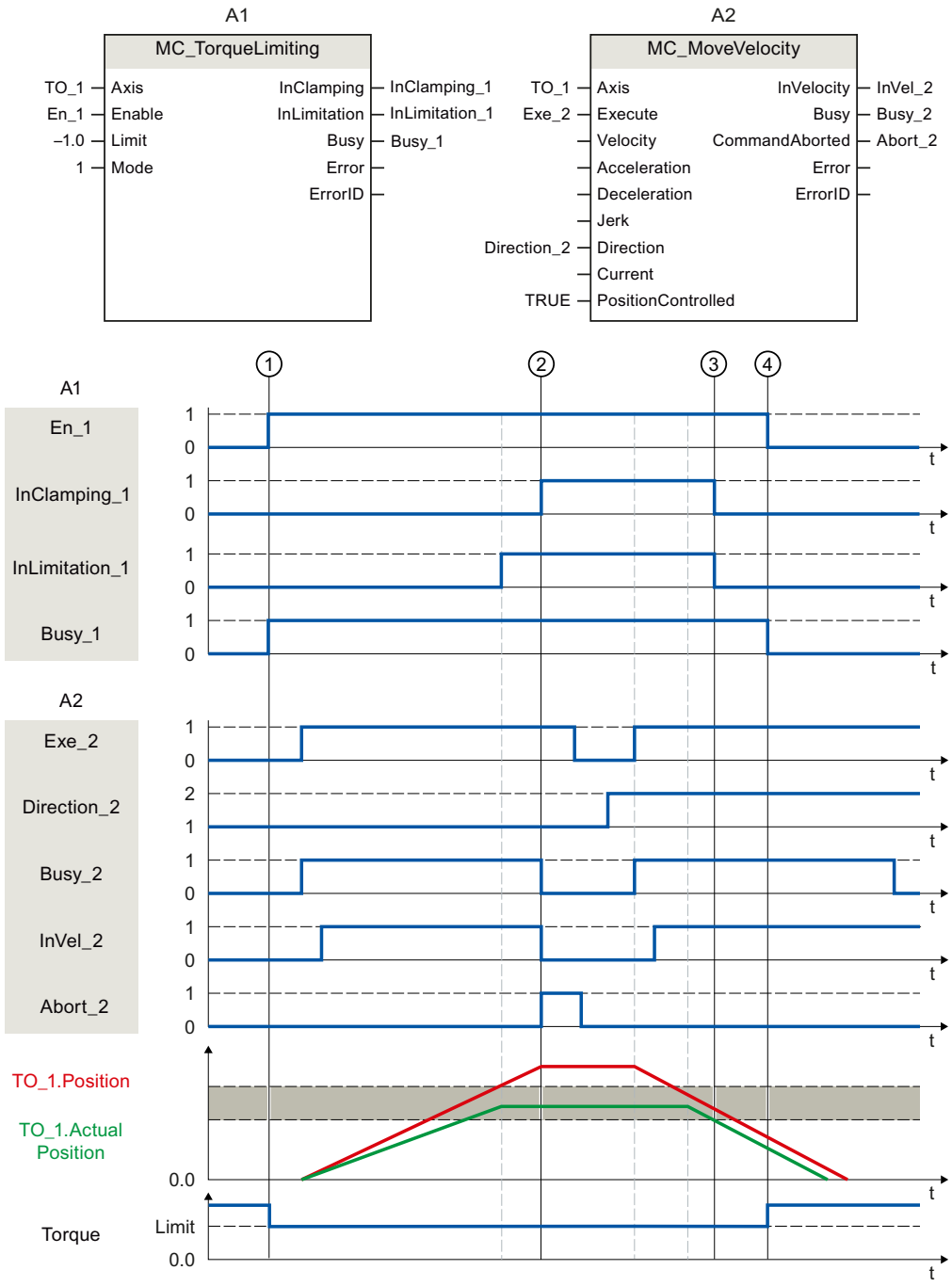

At time ①, a "MC_TorqueLimiting" job (A1) is initiated via "En_1". An "MC_MoveVelocity" job (A2) is executed on the axis with active torque limiting. The torque limiting is still active "MC_TorqueLimiting.Enable" = TRUE.

When the following error limit ② is reached, the "MC_MoveVelocity" job is aborted with "Abort" = TRUE. The drive is kept at the fixed stop (clamping). The actual position of the axis is within the positioning tolerance.
An "MC_MoveVelocity" job is once again called via the two tags "Execute" = TRUE and "Direction_2" = TRUE and the axis moves with constant velocity in the opposite direction. The clamping is hereby reduced when the positioning tolerance ③ is exited.
At time ④, the torque limiting is cancelled.

8.18 Override response of Motion Control jobs V7 (S7-1500, S7-1500T)

8.18.1 Override response V7: Homing and motion jobs (S7-1500, S7-1500T)

The following table shows how a new motion control job affects active homing and motion jobs:

⇒ **Active job** ⇓ **New job**	**MC_Home "Mode" = 2, 8, 10**	**MC_Home "Mode" = 3, 5**	**MC_Halt MC_MoveAbsolute MC_MoveRelative MC_MoveVelocity MC_MoveJog**	**MC_Stop**	**MC_MoveSuperimposed MC_MotionInSuperimposed MC_HaltSuperImposed**	**MC_MotionInVelocity MC_MotionInPosition**
MC_Home "Mode" = 3, 5	A	A	A	-	A	A
MC_Home "Mode" = 9	A	-	-	-	-	-
MC_Halt MC_MoveAbsolute MC_MoveRelative MC_MoveVelocity MC_MoveJog MC_MotionInVelocity MC_MotionInPosition	-	A	A	-	A	A
MC_MoveSuperimposed MC_MotionInSuperimposed MC_HaltSuperImposed	-	-	-	-	A	-

A The running job is aborted with "CommandAborted" = TRUE.

B An "MC_Stop" job is aborted by another "MC_Stop" job with a stop response that is the same or higher.

- No effect. Running job continues to be executed.

1) The status "Busy" = TRUE, "StartSync" = FALSE, "InSync" = FALSE corresponds to a waiting synchronous operation.

2) The status "Busy" = TRUE, "StartSync" or "InSync" = TRUE corresponds to an active synchronous operation.

3) The status "Busy" = TRUE, "StartSyncOut" = FALSE corresponds to a pending desynchronization job.

4) The status "Busy" = TRUE, "StartSyncOut" = TRUE corresponds to an active desynchronization job.

⇒ Active job ⇓ New job	MC_Home "Mode" = 2, 8, 10	MC_Home "Mode" = 3, 5	MC_Halt MC_MoveAbsolute MC_MoveRelative MC_MoveVelocity MC_MoveJog	MC_Stop	MC_MoveSuperimposed MC_MotionInSuperimposed MC_HaltSuperImposed	MC_MotionInVelocity MC_MotionInPosition
MC_Stop	A	A	A	B	A	A
MC_GearIn **MC_GearInVelocity**	-	A	A	-	A	-
MC_GearInPos **MC_CamIn** waiting[1]	-	-	-	-	-	-
MC_GearInPos **MC_CamIn** active[2]	-	A	A	-	A	-
MC_LeadingValueAdditive	-	-	-	-	-	-
MC_GearOut **MC_CamOut** waiting[3]	-	-	-	-	-	-
MC_GearOut **MC_CamOut** active[4]	-	-	-	-	A	-

A The running job is aborted with "CommandAborted" = TRUE.

B An "MC_Stop" job is aborted by another "MC_Stop" job with a stop response that is the same or higher.

- No effect. Running job continues to be executed.

1) The status "Busy" = TRUE, "StartSync" = FALSE, "InSync" = FALSE corresponds to a waiting synchronous operation.

2) The status "Busy" = TRUE, "StartSync" or "InSync" = TRUE corresponds to an active synchronous operation.

3) The status "Busy" = TRUE, "StartSyncOut" = FALSE corresponds to a pending desynchronization job.

4) The status "Busy" = TRUE, "StartSyncOut" = TRUE corresponds to an active desynchronization job.

NOTE

Override response with active fixed stop

With an active force and torque limiting with "MC_TorqueLimiting", running jobs are aborted if the drive is held at the fixed stop with "InClamping" = TRUE.

8.18.2 Override response V7: Synchronous operation jobs (S7-1500, S7-1500T)

The following table shows how a new motion control job affects the motion of the axis on active synchronous operation jobs:

⇒ Active job ⇓ New job	MC_GearIn	MC_GearInVelocity	MC_GearInPos MC_CamIn waiting[1]	MC_GearInPos MC_CamIn active[2]	MC_PhasingAbsolute MC_PhasingRelative	MC_OffsetAbsolute MC_OffsetRelative	MC_LeadingValueAdditive	MC_GearOut MC_CamOut waiting[3]	MC_GearOut MC_CamOut active[4]
MC_Home "Mode" = 3, 5	A	A	-	-	-	-	-	-	-
MC_Halt	A	A	-	A	A	A	-	A	A
MC_MoveAbsolute MC_MoveRelative MC_MoveVelocity MC_MoveJog	A	A	-	A	A	A	-	A	A
MC_MotionInVelocity MC_MotionInPosition	A	A	A	A	A	A	-	A	A
MC_MoveSuperimposed MC_MotionInSuperimposed MC_HaltSuperImposed	-	-/N[5]	-	-	-	-	-	-	-
MC_Stop	A	A	A	A	A	A	-	A	A
MC_GearIn MC_GearInVelocity	A	A	A	A	A	A	-	A	A

A The running job is aborted with "CommandAborted" = TRUE.

N Not permitted. Running job continues to be executed. The new job is rejected.

- No effect. Running job continues to be executed.

1) A waiting synchronous operation job ("Busy" = TRUE, "StartSync" = FALSE, "InSync" = FALSE) does not abort any active jobs. Abort with an "MC_Power" job is possible.

2) The status "Busy" = TRUE, "StartSync" or "InSync" = TRUE corresponds to an active synchronous operation.

3) A pending desynchronization job ("Busy" = TRUE, "StartSyncOut" = FALSE) does not abort any active jobs. Abort with an "MC_Power" job is possible.

4) The status "Busy" = TRUE, "StartSyncOut" = TRUE corresponds to an active desynchronization job.

5) When the following axis is in position-controlled mode, execution of the running job is continued. When the following axis is not in position-controlled mode, the new job is rejected.

6) An "MC_GearOut" job only terminates an "MC_Gear[...]" job. Correspondingly, an "MC_CamOut" job only cancels a "MC_Cam[...]" job.

7) A job with "SyncProfileReference" = 5 aborts a pending synchronous operation. Canceling a pending synchronous operation has no influence on an active synchronous operation.

⇒ Active job ⇓ New job	MC_GearIn	MC_GearInVelocity	MC_GearInPos MC_CamIn waiting[1]	MC_GearInPos MC_CamIn active[2]	MC_PhasingAbsolute MC_PhasingRelative	MC_OffsetAbsolute MC_OffsetRelative	MC_LeadingValueAdditive	MC_GearOut MC_CamOut waiting[3]	MC_GearOut MC_CamOut active[4]
MC_GearInPos MC_CamIn waiting[1]	-	-	A	-	-	-	-	A	-
MC_GearInPos MC_CamIn active[2]	A	A[5]	A	A	A	A	-	A	A
MC_PhasingAbsolute MC_PhasingRelative	-	N	-	-	A	N	-	-	-
MC_OffsetAbsolute MC_OffsetRelative	-	N	-	-	N	A	-	-	-
MC_LeadingValueAdditive	-	-	-	-	-	-	A	-	-
MC_GearOut MC_CamOut waiting[3]	-	N	A[6] [7]	-	-	-	-	A[6]	-
MC_GearOut MC_CamOut active[4]	A[6]	N	A[6] [7]	A[6]	A	A	-	A[6]	-

A The running job is aborted with "CommandAborted" = TRUE.

N Not permitted. Running job continues to be executed. The new job is rejected.

- No effect. Running job continues to be executed.

1) A waiting synchronous operation job ("Busy" = TRUE, "StartSync" = FALSE, "InSync" = FALSE) does not abort any active jobs. Abort with an "MC_Power" job is possible.

2) The status "Busy" = TRUE, "StartSync" or "InSync" = TRUE corresponds to an active synchronous operation.

3) A pending desynchronization job ("Busy" = TRUE, "StartSyncOut" = FALSE) does not abort any active jobs. Abort with an "MC_Power" job is possible.

4) The status "Busy" = TRUE, "StartSyncOut" = TRUE corresponds to an active desynchronization job.

5) When the following axis is in position-controlled mode, execution of the running job is continued. When the following axis is not in position-controlled mode, the new job is rejected.

6) An "MC_GearOut" job only terminates an "MC_Gear[...]" job. Correspondingly, an "MC_CamOut" job only cancels a "MC_Cam[...]" job.

7) A job with "SyncProfileReference" = 5 aborts a pending synchronous operation. Canceling a pending synchronous operation has no influence on an active synchronous operation.

NOTE

Override response with active fixed stop

With an active force and torque limiting with "MC_TorqueLimiting", running jobs are aborted if the drive is held at the fixed stop with "InClamping" = TRUE.

8.18.3 Override response V7: Measuring input jobs (S7-1500, S7-1500T)

The following table shows which new Motion Control jobs will override active measuring input jobs:

⇒ **Active job** ⇓ **New job**	**MC_MeasuringInput**	**MC_MeasuringInputCyclic**
MC_Home "Mode" = 2, 3, 5, 8, 9, 10	A	A
MC_Home "Mode" = 0, 1, 6, 7, 11, 12	-	-
MC_MeasuringInput **MC_MeasuringInputCyclic** **MC_AbortMeasuringInput**	A	A

A The running job is aborted with "CommandAborted" = TRUE.

- No effect. Running job continues to be executed.

8.18.4 Override response V7: Kinematics motion commands (S7-1500T)

Single axis jobs are not overridden by kinematics jobs.

The following table shows how a new Motion Control job affects active kinematics motion jobs:

⇒ **Active job** ⇓ **New job**	**MC_MoveLinearAbsolute** **MC_MoveLinearRelative** **MC_MoveCircularAbsolute** **MC_MoveCircularRelative** **MC_MoveDirectAbsolute** **MC_MoveDirectRelative** **MC_TrackConveyorBelt** **MC_DefineWorkspaceZone** **MC_DefineKinematicsZone** **MC_SetWorkspaceZoneActive** **MC_SetWorkspaceZoneInactive** **MC_SetKinematicsZoneActive** **MC_SetKinematicsZoneInactive** **MC_SetOcsFrame**	**MC_GroupInterrupt**	**MC_GroupStop**
MC_Home **MC_MoveSuperimposed** **MC_GearOut** **MC_CamOut**	N	N	N
MC_Halt **MC_MoveAbsolute** **MC_MoveRelative** **MC_MoveVelocity** **MC_MoveJog** **MC_Stop** **MC_GearIn** **MC_GearInPos** **MC_GearInVelocity** **MC_CamIn** **MC_MotionInVelocity** **MC_MotionInPosition**	A	A	A
MC_GroupStop	A	A	N
MC_GroupInterrupt **MC_GroupContinue**	B	A	N
MC_MoveLinearAbsolute **MC_MoveLinearRelative** **MC_MoveCircularAbsolute** **MC_MoveCircularRelative** **MC_MoveDirectAbsolute** **MC_MoveDirectRelative** **MC_TrackConveyorBelt** **MC_DefineWorkspaceZone** **MC_DefineKinematicsZone** **MC_SetWorkspaceZoneActive** **MC_SetWorkspaceZoneInactive** **MC_SetKinematicsZoneActive** **MC_SetKinematicsZoneInactive**	-	-	N

A The running job is aborted with "CommandAborted" = TRUE.

B Running job is interrupted or resumed.

C Synchronization of the OCS with the conveyor belt is aborted with "MC_SetOcsFrame" = TRUE.

N Not permitted. Running job continues to be executed. The new job is rejected.

- No effect. Running job continues to be executed. A new kinematics job is added to the job sequence.

⇒ **Active job** ⇓ **New job**	**MC_MoveLinearAbsolute** **MC_MoveLinearRelative** **MC_MoveCircularAbsolute** **MC_MoveCircularRelative** **MC_MoveDirectAbsolute** **MC_MoveDirectRelative** **MC_TrackConveyorBelt** **MC_DefineWorkspaceZone** **MC_DefineKinematicsZone** **MC_SetWorkspaceZoneActive** **MC_SetWorkspaceZoneInactive** **MC_SetKinematicsZoneActive** **MC_SetKinematicsZoneInactive** **MC_SetOcsFrame**	**MC_GroupInterrupt**	**MC_GroupStop**
MC_SetOcsFrame	C, -	-	N

A The running job is aborted with "CommandAborted" = TRUE.

B Running job is interrupted or resumed.

C Synchronization of the OCS with the conveyor belt is aborted with "MC_SetOcsFrame" = TRUE.

N Not permitted. Running job continues to be executed. The new job is rejected.

- No effect. Running job continues to be executed. A new kinematics job is added to the job sequence.

Tags of the technology object data blocks (S7-1500, S7-1500T) 9

9.1 Tags of the speed axis technology object (S7-1500, S7-1500T)

9.1.1 Legend (S7-1500, S7-1500T)

Tag	Name of the tag	
Data type	Data type of the tag	
Values	Value range of the tag - minimum value to maximum value If no specific value is shown, the value range limits of the relevant data type apply or the information under "Description".	
W	Effectiveness of changes in the technology data block	
	DIR	Direct: Values are changed via direct assignment and take effect at the start of the next MC-Servo [OB91].
	CAL	At call of Motion Control instruction: Values are changed directly and take effect at the start of the next MC-Servo [OB91] after the call of the corresponding Motion Control instruction in the user program.
	RES	Restart: Changes to the start value in the load memory are made using the extended instruction "WRIT_DBL" (write to DB in load memory). Changes will not take effect until after restart of the technology object.
	RON	Read only: The tag cannot and must not be changed during runtime of the user program.
Description	Description of the tag	

Access to the tags is with "<TO>.<tag name>". The placeholder <TO> represents the name of the technology object.

9.1.2 Actual values and setpoints (speed axis) (S7-1500, S7-1500T)

The following tags indicate the setpoint and actual values of the technology object.

Tags

Legend (Page 286)

Tag	Data type	Values	W	Description
Velocity	LREAL	-	RON	Velocity setpoint/speed setpoint
ActualSpeed	LREAL	-	RON	With analog setpoint = 0.0: Actual speed of motor in 1/min
Acceleration	LREAL	-	RON	Setpoint acceleration

Tag	Data type	Values	W	Description
VelocitySetpoint	LREAL	-1.0E12 to 1.0E-12	RON	Output velocity setpoint/speed setpoint

9.1.3 "Simulation" tag (speed axis) (S7-1500, S7-1500T)

The tag structure "<TO>.Simulation.<tag name>" contains the configuration of the simulation mode. In simulation mode, you can simulate axes without a real drive in the CPU.

Tags

Legend (Page 286)

Tag		Data type	Values	W	Description	
Simulation.		TO_Struct_AxisSimulation				
	Mode	UDINT	0, 1	RES[1]	Simulation mode	
					0	No simulation, normal operation
					1	Simulation mode

[1] Technology version V2.0: RON

9.1.4 "VirtualAxis" tag (speed axis) (S7-1500, S7-1500T)

The tag structure "<TO>.VirtualAxis.<tag name>" contains the configuration of the simulation mode. In simulation mode, you can simulate axes without a real drive in the CPU.

Tags

Legend (Page 286)

Tag		Data type	Values	W	Description	
VirtualAxis.		TO_Struct_VirtualAxis				
	Mode	UDINT	0, 1	RON	Virtual axis	
					0	No virtual axis
					1	Axis is always and exclusively operated as virtual axis

9.1.5 "Actor" tag (speed axis) (S7-1500, S7-1500T)

The tag structure "<TO>.Actor.<tag name>" contains the controller-side configuration of the drive.

Tags

Legend (Page 286)

Tag	Data type	Values	W	Description	
Actor.	TO_Struct_Actor				
Type	DINT	0, 1	RON	Drive connection	
				0	Analog output
				1	PROFIdrive telegram
InverseDirection	BOOL	-	RES	Inversion of the setpoint	
				FALSE	No
				TRUE	Yes
DataAdaption	DINT	0, 1	RES	Automatic transfer of the drive values reference speed, maximum speed and reference torque in the device	
				0	No automatic transfer, manual configuration of values
				1	Automatic transfer of values configured in the drive to the configuration of the technology object
Efficiency	LREAL	0.0 to 1.0	RES	Efficiency of gear	
Interface.	TO_Struct_ActorInterface				
AddressIn	VREF	0 to 65535	RON	Input address for the PROFIdrive telegram	
AddressOut	VREF	0 to 65535	RON	Output address for the PROFIdrive telegram or the analog setpoint	
EnableDriveOutput	BOOL	-	RES	"Enable output" for analog drives	
				FALSE	Disabled
				TRUE	Enabled
EnableDriveOutputAd-dress	VREF	0 to 65535	RON	Address for the "Enable output" for analog setpoint	
DriveReadyInput	BOOL	-	RES	"Ready input" for analog drives The analog drive signals its readiness to receive speed set-points.	
				FALSE	Disabled
				TRUE	Enabled
DriveReadyInputAd-dress	VREF	0 to 65535	RON	Address for the "Enable input" for analog setpoint	
EnableTorqueData	BOOL	-	RES	Torque data	
				FALSE	Disabled
				TRUE	Enabled
TorqueDataAddressIn	VREF	0 to 65535	RON	Input Address of the Telegram 750	
TorqueDataAddress-Out	VREF	0 to 65535	RON	Output address of the telegram 750	
DriveParameter.	TO_Struct_ActorDriveParameter				

Tag	Data type	Values	W	Description
ReferenceSpeed	LREAL	0.0 to 1.0E12	RES	Reference value (100%) for the speed setpoint (N-set) of the drive The speed setpoint is transferred in the PROFIdrive telegram as a normalized value from -200% to 200% of the "ReferenceSpeed". For setpoint specification via an analog output, the analog output can be operated in the range from -117% to 117%, provided the drive permits this.
MaxSpeed	LREAL	0.0 to 1.0E12	RES	Maximum value for the speed setpoint of the drive (N-set) (PROFIdrive: MaxSpeed ≤ 2 × ReferenceSpeed Analog setpoint: MaxSpeed ≤ 1.17 × ReferenceSpeed)
ReferenceTorque	LREAL	0.0 to 1.0E12	RES	Reference torque of drive (p2003) Valid for the standard motor setting.

9.1.6 "TorqueLimiting" tag (speed axis) (S7-1500, S7-1500T)

The tag structure "<TO>.TorqueLimiting.<tag name>" contains the configuration of the torque limiting.

Tags

Legend (Page 286)

Tag	Data type	Values	W	Description	
TorqueLimiting.	TO_Struct_TorqueLimiting				
LimitBase	DINT	0, 1	RES	Torque limiting	
				0	Motor side
				1	Load side
PositionBasedMonitorings	DINT	0, 1	RES	Positioning and following error monitoring	
				0	Monitoring deactivated
				1	Monitoring activated
LimitDefaults.	TO_Struct_TorqueLimitingLimitDefaults				
Torque	LREAL	0.0 to 1.0E12	CAL	Limiting torque	
Force	LREAL	0.0 to 1.0E12	CAL	Limiting force	

9.1.7 "LoadGear" tag (speed axis) (S7-1500, S7-1500T)

The tag structure "<TO>.LoadGear.<tag name>" contains the configuration of the load gear.

Tags

Legend (Page 286)

Tag	Data type	Value range	W	Description
LoadGear.	TO_Struct_LoadGear			
Numerator	UDINT	1 to 4294967295	RES	Load gear numerator
Denominator	UDINT	1 to 4294967295	RES	Load gear denominator

9.1.8 "Units" tag (speed axis) (S7-1500, S7-1500T)

The tag structure "<TO>.Units.<tag name>" shows the set technological units.

Tags

Legend (Page 286)

Tag	Data type	Values	W	Description	
Units.	TO_Struct_Units / TO_Struct_ExternalEncoder_Units				
VelocityUnit	UDINT	-	RON	Unit for velocity	
				1082	1/s
				1083	1/min
				1528	1/h
TimeUnit	UDINT	-	RON	Unit for time	
				1054	s
TorqueUnit	UDINT	-	RON	Unit for torque	
				1126	Nm
				1128	kNm
				1529	lbf in (pound-force-inch)
				1530	lbf ft
				1531	ozf in (ounce-force-inch)
				1532	ozf ft
				1533	pdl in (poundal-inch)
				1534	pdl ft
ForceUnit	UDINT	-	RON	Unit for force	
				1120	N
				1122	kN
				1094	lbf (pound-force)
				1093	ozf (ounce-force)
				1535	pdl (poundals)
UnitFactor	UDINT	-	RON	Factor for internal conversion in the high-resolution units.	

9.1.9 "DynamicLimits" tag (speed axis) (S7-1500, S7-1500T)

The tag structure "<TO>.DynamicLimits.<tag name>" contains the configuration of the dynamic limits. During Motion Control, no dynamic values greater than the dynamic limits are permitted. If you specify greater values in a Motion Control instruction, then motion is performed using the dynamic limits, and a warning is indicated (alarm 501 to 503 - Dynamic values are limited).

Tags

Legend (Page 286)

Tag		Data type	Values	W	Description
DynamicLimits.		TO_Struct_DynamicLimits			
	MaxVelocity	LREAL	0.0 ... 1.0E12	RES	Maximum permissible velocity of the axis
	Velocity	LREAL	0.0 ... 1.0E12	DIR	Current maximum velocity of the axis The minimum from "MaxVelocity" and "Velocity" is effective for motion control.
	MaxAcceleration	LREAL	0.0 ... 2.7777777777-7778E8	DIR	Maximum permissible acceleration of the axis
	MaxDeceleration	LREAL	0.0 ... 2.7777777777-7778E8	DIR	Maximum permissible deceleration of the axis
	MaxJerk	LREAL	0.0 ... 4629629.629	DIR	Maximum permissible jerk on the axis

9.1.10 "DynamicDefaults" tag (speed axis) (S7-1500, S7-1500T)

The tag structure "<TO>.DynamicDefaults.<tag name>" contains the configuration of the dynamic defaults. These settings will be used when you specify a dynamic value less than 0.0 in a Motion Control instruction (exceptions: "MC_MoveJog.Velocity", "MC_MoveVelocity.Velocity"). Changes to the default dynamic values will be applied at the next positive edge at the "Execute" parameter of a Motion Control instruction.

Tags

Legend (Page 286)

Tag		Data type	Values	W	Description
DynamicDefaults.		TO_Struct_DynamicDefaults			
	Velocity	LREAL	0.0 ... 1.0E12	CAL	Default velocity
	Acceleration	LREAL	0.0 ... 2.7777777777-7778E8	CAL	Default acceleration

Tag	Data type	Values	W	Description
Deceleration	LREAL	0.0 ... 2.7777777777-7778E8	CAL	Default deceleration
Jerk	LREAL	0.0 ... 2.7777777777-7778E8	CAL	Default jerk
EmergencyDeceleration	LREAL	0.0 ... 2.7777777777-7778E8	DIR	Emergency stop deceleration

9.1.11 "Override" tag (speed axis) (S7-1500, S7-1500T)

The tag structure "<TO>.Override.<tag name>" contains the configuration of override parameters. The override parameters are used to apply a correction percentage to default values. An override change takes effect immediately, and is performed with the dynamic settings in effect in the Motion Control instruction.

Tags

Legend (Page 286)

Tag	Data type	Values	W	Description
Override.	TO_Struct_Override			
Velocity	LREAL	0.0 to 200.0%	DIR	Velocity or speed override Percentage correction of the velocity/speed

9.1.12 "StatusDrive" tag (speed axis) (S7-1500, S7-1500T)

The tag structure "<TO>.StatusDrive.<tag name>" indicates the status of the drive.

Tags

Legend (Page 286)

Tag	Data type	Values	W	Description	
StatusDrive.	TO_Struct_StatusDrive				
InOperation	BOOL	-	RON	Operation status of the drive	
				FALSE	Drive not ready. Setpoints will not be executed.
				TRUE	Drive ready. Setpoints can be executed.
CommunicationOK	BOOL	-	RON	Cyclic BUS communication between controller and drive	

Tag	Data type	Values	W	Description	
CommunicationOK	BOOL	-	RON	FALSE	Cyclic communication not established. Fault ZSW1.X3 (FaultPresent) is present. Possible causes: • The CPU is in STOP. • The drive has failed. • The "ControlRequested" bit in the status word of the drive has the value "FALSE". • The drive signals an error using the status word. • For isochronous configuration, the dynamic sign of life in the telegram has failed or is not supplied by the drive.
				TRUE	Cyclic communication OK and no fault effective
Error	BOOL	-	RON	FALSE	No drive error
				TRUE	Drive error
AdaptionState	DINT	0 ... 4	RON	Status of automatic data transfer of drive parameters	
				0	"NOT_ADAPTED" Data not transferred
				1	"IN_ADAPTION" Data transfer in progress
				2	"ADAPTED" Data transfer complete
				3	"NOT_APPLICABLE" Data transfer not selected, not possible
				4	"ADAPTION_ERROR" Error during data transfer

9.1.13 "StatusTorqueData" tag (speed axis) (S7-1500, S7-1500T)

The tag structure "<TO>.StatusTorqueData.<tag name>" indicates the status of the torque.

Tags

Legend (Page 286)

Tag	Data type	Value range	W	Description	
StatusTorqueData.	TO_Struct_StatusTorqueData				
CommandAdditiveT-orqueActive	DINT	-	RON	Additive torque setpoint function	
				0	Disabled
				1	Enabled
CommandTorqueRange-Active	DINT	-	RON	Torque range above high and low limit of the torque function	
				0	Disabled
				1	Enabled
ActualTorque	LREAL	-1.0E12 to 1.0E-12	RON	Actual torque of the axis in the technological unit of the technology object for torque	

9.1.14 "StatusMotionIn" tag (speed axis) (S7-1500, S7-1500T)

The tag structure "<TO>.StatusMotionIn.<tag name>" indicates the motion status.

Tags

Legend (Page 286)

Tag	Data type	Value range	W	Description	
StatusMotionIn.	TO_Struct_StatusMotionIn				
FunctionState	DINT	0, 1	RON	0	No "MotionIn" function active
				1	"MotionInVelocity" function active

9.1.15 "StatusWord" tag (speed axis) (S7-1500, S7-1500T)

The "<TO>.StatusWord" tag contains the status information of the technology object. Information on the evaluation of the individual bits (e.g. bit 0 "Enable") can be found in the "Evaluating StatusWord, ErrorWord and WarningWord" section of the "S7-1500/S7-1500T Motion Control Overview" documentation (Page 12).

Tags

Legend (Page 286)

Tag	Data type	Values	W	Description
StatusWord	DWORD	-	RON	Status information of the technology object
Bit 0	-	-	-	"Enable" Enable status The technology object has been enabled.
Bit 1	-	-	-	"Error" An error is present.
Bit 2	-	-	-	"RestartActive" A restart is active. The technology object is being reinitialized.
Bit 3	-	-	-	"OnlineStartValuesChanged" The restart tags have been changed. For the changes to be applied, the technology object must be reinitialized.
Bit 4	-	-	-	"ControlPanelActive" The axis control panel is active.
Bit 5	-	-	-	Reserved
Bit 6	-	-	-	"Done" No motion job is in progress and the axis control panel is deactivated.
Bit 7	-	-	-	Reserved
Bit 8	-	-	-	Reserved
Bit 9	-	-	-	"JogCommand" An "MC_MoveJog" job is running.

Tag		Data type	Values	W	Description
	Bit 10	-	-	-	"VelocityCommand" An "MC_MoveVelocity" job is running.
	Bit 11	-	-	-	Reserved
	Bit 12	-	-	-	"ConstantVelocity" The velocity setpoint is reached. A constant velocity setpoint is output.
	Bit 13	-	-	-	"Accelerating" An acceleration operation is active.
	Bit 14	-	-	-	"Decelerating" A deceleration operation is active.
	Bit 15... Bit 24	-	-	-	Reserved
	Bit 25	-	-	-	"AxisSimulation" The simulation is active.
	Bit 26	-	-	-	"TorqueLimitingCommand" An "MC_TorqueLimiting" job is running.
	Bit 27	-	-	-	"InLimitation" The drive operates at least at the threshold value (default 90%) of the torque limit.
	Bit 28... Bit 31	-	-	-	Reserved

9.1.16 "StatusWord2" tag (speed axis) (S7-1500, S7-1500T)

The "<TO>.StatusWord2" tag contains the status information of the technology object. Information on the evaluation of the individual bits (e.g. bit 0 "StopCommand") can be found in the "Evaluating StatusWord, ErrorWord and WarningWord" section of the "S7-1500/S7-1500T Motion Control Overview" documentation (Page 12).

Tags

Legend (Page 286)

Tag		Data type	Value range	W	Description
StatusWord2		DWORD	-	RON	Status information of the technology object
	Bit 0	BOOL	-	RON	"StopCommand" An "MC_Stop" job is running. The technology object is disabled.
	Bit 1 to Bit 31	BOOL	-	RON	Reserved

9.1.17 "ErrorWord" tag (speed axis) (S7-1500, S7-1500T)

The "<TO>.ErrorWord" tag indicates technology object errors (technology alarms). Information on the evaluation of the individual bits (e.g. bit 3 "CommandNotAccepted") can be found in the "Evaluating StatusWord, ErrorWord and WarningWord" section of the "S7-1500/S7-1500T Motion Control Overview" documentation (Page 12).

Tags

Legend (Page 286)

Tag		Data type	Values	W	Description
ErrorWord		DWORD	-	RON	
	Bit 0	-	-	-	"SystemFault" System error
	Bit 1	-	-	-	"ConfigFault" Configuration error One or more configuration parameters are inconsistent or invalid.
	Bit 2	-	-	-	"UserFault" Error in user program at a Motion Control instruction or its use
	Bit 3	-	-	-	"CommandNotAccepted" Job cannot be executed A Motion Control instruction cannot be executed because the necessary conditions have not been met.
	Bit 4	-	-	-	"DriveFault" Error in drive
	Bit 5	-	-	-	Reserved
	Bit 6	-	-	-	"DynamicError" Specified dynamic values are limited to permissible values.
	Bit 7	-	-	-	"CommunicationFault" Communication error Missing or faulty communication.
	Bit 8... Bit 12	-	-	-	Reserved
	Bit 13	-	-	-	"PeripheralError" Error accessing a logical address
	Bit 14	-	-	-	Reserved
	Bit 15	-	-	-	"AdaptionError" Error during data transfer
	Bit 16 ... Bit 31	-	-	-	Reserved

9.1.18 "ErrorDetail" tag (speed axis) (S7-1500, S7-1500T)

The tag structure "<TO>.ErrorDetail.<tag name>" contains the alarm number and the effective local alarm response for the technology alarm that is currently pending on the technology object.

You can find a list of the technology alarms and alarm responses in the "Overview of the technology alarms" section of the "S7-1500/S7-1500T Motion Control alarms and error IDs" documentation (Page 12).

Tags

Legend (Page 286)

Tag	Data type	Values	W	Description	
ErrorDetail.	TO_Struct_ErrorDetail				
Number	UDINT	-	RON	Alarm number	
Reaction	DINT	0 ... 5	RON	Effective alarm response	
				0	No reaction
				1	Stop with current dynamic values
				2	Stop with maximum dynamic values
				3	Stop with emergency stop ramp
				4	Remove enable
				5	Track setpoints

9.1.19 "WarningWord" tag (speed axis) (S7-1500, S7-1500T)

The "<TO>.WarningWord" tag indicates pending warnings at the technology object. Information on the evaluation of the individual bits (e.g. bit 13 "PeripheralWarning") can be found in the "Evaluating StatusWord, ErrorWord and WarningWord" section of the "S7-1500/S7-1500T Motion Control Overview" documentation (Page 12).

Tags

Legend (Page 286)

Tag	Data type	Values	W	Description
WarningWord	DWORD	-	RON	
Bit 0	-	-	-	"SystemWarning" A system-internal error has occurred.
Bit 1	-	-	-	"ConfigWarning" Configuration error One or several configuration parameters are adjusted internally.
Bit 2	-	-	-	"UserWarning" Error in user program at a Motion Control instruction or its use
Bit 3	-	-	-	"CommandNotAccepted" Job cannot be executed A Motion Control instruction cannot be executed because the necessary conditions have not been met.
Bit 4	-	-	-	"DriveWarning" Warning of the drive When a warning message is pending at the drive that does not result in a TO alarm, this bit is not set. Evaluate the drive warnings directly using the status word of the drive.
Bit 5	-	-	-	Reserved

Tag	Data type	Values	W	Description
Bit 6	-	-	-	"DynamicWarning" Specified dynamic values are limited to permissible values.
Bit 7	-	-	-	"CommunicationWarning" Communication error Missing or faulty communication.
Bit 8... Bit 12	-	-	-	Reserved
Bit 13	-	-	-	"PeripheralWarning" Error accessing a logical address
Bit 14	-	-	-	Reserved
Bit 15	-	-	-	"AdaptionWarning" Error in automatic data transfer
Bit 16... Bit 31	-	-	-	Reserved

9.1.20 "ControlPanel" tag (speed axis) (S7-1500, S7-1500T)

The tag structure "<TO>.ControlPanel.<tag name>" contains no relevant data for you. This tag structure is internally used.

Tags

Legend (Page 286)

Tag	Data type	Values	W	Description
ControlPanel.	TO_Struct_ControlPanel			
Input.	TO_Struct_ControlPanelInput			
TimeOut	LREAL	100 to 60000	DIR	-
EsLifeSign	UDINT	-	DIR	-
Command[1..1].	ARRAY [1..1] OF TO_Struct_ControlPanelInputCmd			
ReqCounter	UDINT	-	DIR	-
Type	UDINT	-	DIR	-
Position	LREAL	-	DIR	-
Velocity	LREAL	-	DIR	-
Acceleration	LREAL	-	DIR	-
Deceleration	LREAL	-	DIR	-
Jerk	LREAL	-	DIR	-
Param	LREAL	-	DIR	-
Output.	TO_Struct_ControlPanelOutput			
RTLifeSign	UDINT	-	RON	-
Command[1..1].	ARRAY [1..1] OF TO_Struct_ControlPanelOutputCmd			

Tag	Data type	Values	W	Description
AckCounter	UDINT	-	RON	-
Error	BOOL	-	RON	-
ErrorID	UDINT	-	RON	-
Done	BOOL	-	RON	-
Aborted	BOOL	-	RON	-

9.1.21 "InternalToTrace[1..4]" tag (speed axis) (S7-1500, S7-1500T)

The tag structure "<TO>.InternalToTrace[1..4].<tag name>" contains no relevant data for you. This tag structure is internally used.

Tags

Legend (Page 286)

Tag	Data type	Values	W	Description
InternalToTrace[1..4].	ARRAY [1..4] OF TO_Struct_Internal			
Id	DINT	-	DIR	-
Value	LREAL	-	DIR	-

9.2 Tags of the positioning axis technology object (S7-1500, S7-1500T)

9.2.1 Legend (S7-1500, S7-1500T)

Tag	Name of the tag
Data type	Data type of the tag
Values	Value range of the tag - minimum value to maximum value (L - linear specification R - rotary specification) If no specific value is shown, the value range limits of the relevant data type apply or the information under "Description".

W	Effectiveness of changes in the technology data block	
	DIR	Direct: Values are changed via direct assignment and take effect at the start of the next MC-Servo [OB91].
	CAL	At call of Motion Control instruction: Values are changed directly and take effect at the start of the next MC-Servo [OB91] after the call of the corresponding Motion Control instruction in the user program.
	RES	Restart: Changes to the start value in the load memory are made using the extended instruction "WRIT_DBL" (write to DB in load memory). Changes will not take effect until after restart of the technology object.
	RON	Read only: The tag cannot and must not be changed during runtime of the user program.
Description	Description of the tag	

Access to the tags is with "<TO>.<tag name>". The placeholder <TO> represents the name of the technology object.

9.2.2 Actual values and setpoints (positioning axis) (S7-1500, S7-1500T)

The following tags indicate the setpoint and actual values of the technology object.

Tags

Legend (Page 299)

Tag	Data type	Values	W	Description	
Position	LREAL	-	RON	Position setpoint	
Velocity	LREAL	-	RON	Velocity setpoint/speed setpoint	
ActualPosition	LREAL	-	RON	Actual position	
ActualVelocity	LREAL	-	RON	Actual velocity	
ActualSpeed	LREAL	-	RON	For PROFIdrive drives	Actual speed of the motor
				For drives with analog setpoint interface	0.0
				For drives with linear motor	0.0
Acceleration	LREAL	-	RON	Setpoint acceleration	
ActualAcceleration	LREAL	-	RON	Actual acceleration	
OperativeSensor	UDINT	1 ... 4	RON	Operative encoder	
ModuloCycle	DINT	-2147483648 ... 2147483647	RON	Number of modulo cycles of the setpoint	
ActualModuloCycle	DINT	-2147483648 ... 2147483647	RON	Number of modulo cycles of the actual value	
VelocitySetpoint	LREAL	-1.0E12 ... 1.0E12	RON	Output velocity setpoint/speed setpoint	

9.2.3 "Simulation" tag (positioning axis) (S7-1500, S7-1500T)

The tag structure "<TO>.Simulation.<tag name>" contains the configuration of the simulation mode. In simulation mode, you can simulate axes without a real drive in the CPU.

Tags

Legend (Page 299)

Tag	Data type	Values	W	Description	
Simulation.	TO_Struct_AxisSimulation				
Mode	UDINT	0, 1	RES[1)]	Simulation mode	
				0	No simulation, normal operation
				1	Simulation mode

[1)] Technology version V2.0: RON

9.2.4 "VirtualAxis" tag (positioning axis) (S7-1500, S7-1500T)

The tag structure "<TO>.VirtualAxis.<tag name>" contains the configuration of the simulation mode. In simulation mode, you can simulate axes without a real drive in the CPU.

Tags

Legend (Page 299)

Tag	Data type	Values	W	Description	
VirtualAxis.	TO_Struct_VirtualAxis				
Mode	UDINT	0, 1	RON	Virtual axis	
				0	No virtual axis
				1	Axis is always and exclusively operated as virtual axis

9.2.5 "Actor" tag (positioning axis) (S7-1500, S7-1500T)

The tag structure "<TO>.Actor.<tag name>" contains the controller-side configuration of the drive.

Tags

Legend (Page 299)

Tag	Data type	Values	W	Description	
Actor.	TO_Struct_Actor				
Type	DINT	0, 1	RON	Drive connection	
				0	Analog output
				1	PROFIdrive telegram

Tag	Data type	Values	W	Description	
InverseDirection	BOOL	-	RES	Inversion of the setpoint	
				FALSE	No
				TRUE	Yes
DataAdaption	DINT	0, 1	RES	Automatic transfer of the drive values reference speed, maximum speed and reference torque	
				0	No automatic transfer, manual configuration of values
				1	Automatic transfer of values configured in the drive to the configuration of the technology object
Efficiency	LREAL	0.0 to 1.0	RES	Efficiency of mechanics (gear and leadscrew)	
MotorType	DINT	0.1	DL	Motor type	
				0	Round-frame motor (standard motor)
				1	Linear motor
Interface.	TO_Struct_ActorInterface				
AddressIn	VREF	0 to 65535	RON	Input address for the PROFIdrive telegram	
AddressOut	VREF	0 to 65535	RON	Output address for the PROFIdrive telegram or the analog setpoint	
EnableDriveOutput	BOOL	-	RES	"Enable output" for analog drives	
				FALSE	Disabled
				TRUE	Enabled
EnableDriveOutputAd-dress	VREF	0 to 65535	RON	Address for the "Enable output" for analog setpoint	
DriveReadyInput	BOOL	-	RES	"Ready input" for analog drives The analog drive signals its readiness to receive speed set-points.	
				FALSE	Disabled
				TRUE	Enabled
DriveReadyInputAd-dress	VREF	0 to 65535	RON	Address for the "Enable input" for analog setpoint	
EnableTorqueData	BOOL	-	RES	Torque data	
				FALSE	Disabled
				TRUE	Enabled
TorqueDataAddressIn	VREF	0 to 65535	RON	Input address of the supplemental telegram	
TorqueDataAddress-Out	VREF	0 to 65535	RON	Output address of the supplemental telegram	
DriveParameter.	TO_Struct_ActorDriveParameter			Valid when "<TO>.Actor.MotorType" = 0	

Tag	Data type	Values	W	Description
ReferenceSpeed	LREAL	0.0 to 1.0E12	RES	Reference value (100%) for the speed setpoint (N-set) of the drive The speed setpoint is transferred in the PROFIdrive telegram as a normalized value from -200% to 200% of the "ReferenceSpeed". For setpoint specification via an analog output, the analog output can be operated in the range from -117% to 117%, provided the drive permits this.
MaxSpeed	LREAL	0.0 to 1.0E12	RES	Maximum value for the speed setpoint of the drive (N-set) (PROFIdrive: MaxSpeed ≤ 2 × ReferenceSpeed Analog setpoint: MaxSpeed ≤ 1.17 × ReferenceSpeed)
ReferenceTorque	LREAL	0.0 to 1.0E12	RES	Reference value (100%) for the drive torque
LinearMotorDriveParameter.	TO_Struct_LinearMotorActorDriveParameter			Valid when "<TO>.Actor.MotorType" = 1
ReferenceVelocity	LREAL	0.0 ... 1.0E12	RES	Reference value (100%) for the velocity setpoint (N-set) of the drive The speed setpoint is transferred in the PROFIdrive telegram as a normalized value from -200% to 200% of the "ReferenceVelocity". For setpoint specification via an analog output, the analog output can be operated in the range from -117% to 117%, provided the drive permits this.
MaxVelocity	LREAL	0.0 ... 1.0E12	RES	Maximum value for the velocity setpoint of the drive (N-set) (PROFIdrive: MaxVelocity ≤ 2 × ReferenceVelocity Analog setpoint: MaxVelocity ≤ 1.17 × ReferenceVelocity)
ReferenceForce	LREAL	0.0 ... 1.0E12	RES	Reference value (100%) for the force of the drive

9.2.6 "TorqueLimiting" tag (positioning axis) (S7-1500, S7-1500T)

The tag structure "<TO>.TorqueLimiting.<tag name>" contains the configuration of the torque limit/force limit.

Tags

Legend (Page 299)

Tag	Data type	Values	W	Description	
TorqueLimiting.	TO_Struct_TorqueLimiting				
LimitBase	DINT	0, 1	RES	Torque limit/force limit	
				0	Motor side
				1	Load side
				Setting is not relevant for linear motors.	
PositionBasedMonitorings	DINT	0, 1	RES	Positioning and following error monitoring	
				0	Monitoring deactivated
				1	Monitoring activated

Tag	Data type	Values	W	Description
LimitDefaults.	TO_Struct_TorqueLimitingLimitDefaults			
Torque	LREAL	0.0 to 1.0E12	CAL	Limiting torque
Force	LREAL	0.0 to 1.0E12	CAL	Limiting force

9.2.7 "Clamping" tag (positioning axis) (S7-1500, S7-1500T)

The tag structure "<TO>.Clamping.<tag name>" contains the configuration of the fixed stop detection.

Tags

Legend (Page 299)

Tag	Data type	Values	W	Description
Clamping.	TO_Struct_Clamping			
FollowingErrorDeviation	LREAL	0.001 to 1.0E12	DIR	Value of the following error starting from which the fixed stop is detected.
PositionTolerance	LREAL	0.001 to 1.0E12	DIR	Position tolerance for the clamping monitoring

9.2.8 Sensor[1..4] tags (positioning axis) (S7-1500, S7-1500T)

The tag structure "<TO>.Sensor[1..4].<tag name>" contains the controller-end configuration for the encoder, and the configuration for active and passive homing.

Tags

Legend (Page 299)

Tag	Data type	Values	W	Description	
Sensor[1..4].	ARRAY [1..4] OF TO_Struct_Sensor				
Existent	BOOL	-	RON	Displaying created encoders	
Type	DINT	0 ... 2	RON	Encoder type	
				0	"INCREMENTAL" Incremental
				1	"ABSOLUTE" Absolute
				2	"CYCLIC_ABSOLUTE" Cyclic absolute
InverseDirection	BOOL	-	RES	Inversion of the actual value	
				FALSE	No
				TRUE	Yes
System	DINT	0, 1	RES	Encoder system	

Tag	Data type	Values	W	Description	
System	DINT	0, 1	RES	0	"LINEAR" Linear encoder
				1	"ROTATORY" Rotary encoder
MountingMode	DINT	0 ... 2	RES	Mounting type of encoder	
				0	On motor shaft
				1	On load side
				2	External measuring system
DataAdaption	DINT	0, 1	RES	Automatic transfer of the drive values reference speed, maximum speed and reference torque in the device	
				0	No automatic transfer, manual configuration of values
				1	Automatic transfer of values configured in the drive to the configuration of the technology object
ActualVelocityMode	DINT	0, 1	RES	Type of calculation for actual speed value or actual velocity value	
				0	Actual value calculation from differentiation of the position change
				1	Actual value calculation with NACT value from the PROFIdrive telegram
Interface.	TO_Struct_SensorInterface				
AddressIn	VREF	0 ... 65535	RON	Input address for the PROFIdrive telegram	
AddressOut	VREF	0 ... 65535	RON	Output address for the PROFIdrive telegram	
Number	UDINT	1 ... 2	RON	Number of the encoder in the telegram	
Parameter.	TO_Struct_SensorParameter				
Resolution	LREAL	1.0E-12 ... 1.0E12	RES	Resolution of a linear encoder (offset between two encoder pulses)	
StepsPerRevolution	UDINT	1 ... 8388608	RES	Increments per rotary encoder revolution	
FineResolutionXist1	UDINT	0 ... 31	RES	Number of bits for fine resolution "Gx_XIST1" (cyclic actual encoder value)	
FineResolutionXist2	UDINT	0 ... 31	RES	Number of bits for fine resolution "Gx_XIST2" (absolute value of the encoder)	
DeterminableRevolu-tions	UDINT	0 ... 8388608	RES	Number of differentiable encoder revolutions for a multi-turn absolute encoder (For a single-turn absolute encoder = 1; for an incremental encoder = 0)	
DistancePerRevolution	LREAL	0.0 ... 1.0E12	RES	Load distance per revolution of an externally mounted encoder	
BehaviorGx_XIST1	DINT	0, 1	RES	Evaluation of "Gx_XIST1" bits.	

Tag	Data type	Values	W	Description	
BehaviorGx_XIST1	DINT	0, 1	RES	0	Based on the bits of the encoder resolution. The incremental actual value "Gx_XIST1" is transmitted with less than 32 bits in the PROFIdrive telegram. For example: At 16 bits, the value ranges from 0 to 65,535.
				1	32-bit value of the encoder value The "Gx_XIST1" incremental actual value is transferred with 32 bits of 0 to 4,294,967,295 in the PROFIdrive telegram.
ReferenceSpeed	LREAL	0.0 ... 1.0E12	RES	Reference speed for NACT in PROFIdrive telegram with rotary encoder Only relevant for "ActualVelocityMode" = 1	
ReferenceVelocity	LREAL	0.0 ... 1.0E12	RES	Reference velocity for NACT in the PROFIdrive telegram with linear encoder Only relevant for "ActualVelocityMode" = 1	
Backlash.	TO_Struct_Backlash				
Enable	BOOL	-	DIR	Enable backlash compensation	
				FALSE	Disabled
				TRUE	Enabled
				If you enable/disable backlash compensation during runtime, then you have to home the axis again.	
Size	LREAL	0.0 ... 1.0E12	DIR	Size of backlashes	
				If you change the size of backlashes during runtime, you have to home the axis again.	
Velocity	LREAL	0.0 ... 1.0E12	DIR	Velocity for traversing of backlashes	
				0.0	Motor traverses backlashes within one servo cycle.
				> 0.0	Motor traverses backlash with the specified velocity.
DirectionAbsolute-Homing	DINT	0, 1	DIR	Direction of movement during or before absolute encoder adjustment	
				0	Positive
				1	Negative
ActiveHoming.	TO_Struct_SensorActiveHoming				
Mode	DINT	0 ... 2	RES	Homing mode	
				0	Use zero mark via PROFIdrive telegram
				1	Zero mark via PROFIdrive telegram and reference cam
				2	Use homing mark via digital input
SideInput	BOOL	-	CAL	Side of the digital input for active homing	
				FALSE	Negative side
				TRUE	Positive side
Direction	DINT	0, 1	CAL	Homing direction/approach direction to homing mark	

Tag	Data type	Values	W	Description	
Direction	DINT	0, 1	CAL	0	Positive homing direction
				1	Negative homing direction
DigitalInputAddress	VREF	0 ... 65535	RON	Address of digital input	
HomePositionOffset	LREAL	-1.0E12 ... 1.0E12	CAL	Home position offset	
SwitchLevel	BOOL	-	RES	Signal level that is present at the digital input when homing mark is approached	
				FALSE	Low level
				TRUE	High level
PassiveHoming.	TO_Struct_SensorPassiveHoming				
Mode	DINT	0 ... 2	RES	Homing mode	
				0	Use zero mark via PROFIdrive telegram
				1	Zero mark via PROFIdrive telegram and reference cam
				2	Use homing mark via digital input
SideInput	BOOL	-	CAL	Side of the digital input for passive homing	
				FALSE	Negative side
				TRUE	Positive side
Direction	DINT	0 ... 2	CAL	Homing direction/approach direction to homing mark	
				0	Positive homing direction
				1	Negative homing direction
				2	Current homing direction
DigitalInputAddress	VREF	0 to 65535	RON	Address of digital input	
SwitchLevel	BOOL	-	RES	Signal level that is present at the digital input when homing mark is approached	
				FALSE	Low level
				TRUE	High level

9.2.9 "CrossPlcSynchronousOperation" tag (positioning axis) (S7-1500, S7-1500T)

The tag structure "<TO>.CrossPlcSynchronousOperation.<tag name>" contains the configuration of the cross-PLC synchronous operation.

Tags

Legend (Page 299)

Tag	Data type	Values	W	Description
CrossPlcSynchronousOperation.	TO_Struct_CrossPlcSynchronousOperation			
Interface[1..8].	ARRAY [1..8] of TO_Struct_CrossPlcLeadingValueInterface			
EnableLeadingValueOutput	BOOL	-	RON	Provide cross-PLC leading value FALSE: No TRUE: Yes
AddressOut	VREF	-	RON	Output address for the leading value telegram
LocalLeadingValueDelayTime	LREAL	0.0 ... 1.0E9	RES	Delay time of leading value output on the local following axes

9.2.10 "Extrapolation" tag (positioning axis) (S7-1500, S7-1500T)

The tag structure "<TO>.Extrapolation.<tag name>" contains the configuration of the actual value extrapolation.

Tags

Legend (Page 299)

Tag	Data type	Values	W	Description
Extrapolation.	TO_Struct_Extrapolation			
LeadingAxisDependentTime	LREAL	-	RON	Extrapolation time component (caused by leading axis) Results from the following times: • Time of actual value acquisition for the leading axis • Interpolator cycle clock • Time of position filter of actual value extrapolation (T1 + T2)
FollowingAxisDependentTime	LREAL	0.0 to 1.0E12	DIR	Extrapolation time component (caused by following axis) Results from the following times: • For a following axis with set velocity precontrol: – Communication cycle – Interpolator cycle clock – Speed control loop substitute time for the following axis – Output delay time of the setpoint at the following axis • For a following axis without velocity precontrol: – Communication cycle – Interpolator cycle clock – Position control loop equivalent time (1/Kv from "<TO>.PositionControl.Kv") – Output delay time of the setpoint at the following axis

Tag	Data type	Values	W	Description	
Settings.	TO_Struct_ExtrapolationSettings				
SystemDefinedExtrapolation	DINT	0, 1	RES	Leading axis dependent time	
				0	Not effective
				1	Effective
ExtrapolatedVelocityMode	DINT	0, 1	RES	Effective velocity value for the synchronization function	
				0	"FilteredVelocity" Leading value velocity from filtered actual velocity
				1	"VelocityByDifferentiation" The leading value velocity results from the differentiation of the extrapolated leading value position
PositionFilter.	TO_Struct_ExtrapolationPositionFilter				
T1	LREAL	0.0 to 1.0E12	DIR	Position filter time constant T1	
T2	LREAL	0.0 to 1.0E12	DIR	Position filter time constant T2	
VelocityFilter.	TO_Struct_ExtrapolationVelocityFilter				
T1	LREAL	0.0 to 1.0E12	DIR	Velocity filter time constant T1	
T2	LREAL	0.0 to 1.0E12	DIR	Velocity filter time constant T2	
VelocityTolerance.	TO_Struct_ExtrapolationVelocityTolerance				
Range	LREAL	0.0 to 1.0E12	DIR	Tolerance band width for velocity	
Hysteresis.	TO_Struct_ExtrapolationHysteresis				
Value	LREAL	0.0 to 1.0E12	DIR	Hysteresis of the extrapolated actual position value	

9.2.11 "LoadGear" tag (positioning axis) (S7-1500, S7-1500T)

The tag structure "<TO>.LoadGear.<tag name>" contains the configuration of the load gear.

Tags

Legend (Page 299)

Tag	Data type	Value range	W	Description
LoadGear.	TO_Struct_LoadGear			
Numerator	UDINT	1 to 4294967295	RES	Load gear counter
Denominator	UDINT	1 to 4294967295	RES	Load gear denominator

9.2.12 "Properties" tag (positioning axis) (S7-1500, S7-1500T)

The tag structure "<TO>.Properties.<tag name>" contains the configuration of the type of axis or motion.

Tags

Legend (Page 299)

Tag	Data type	Value range	W	Description	
Properties.	TO_Struct_Properties				
MotionType	DINT	0, 1	RON	Indication of axis type or motion type	
				0	Linear axis or motion
				1	Rotary axis or motion

9.2.13 "Units" tag (positioning axis) (S7-1500, S7-1500T)

The tag structure "<TO>.Units.<tag name>" shows the set technological units.

Tags

Legend (Page 299)

Tag	Data type	Values	W	Description	
Units.	TO_Struct_Units / TO_Struct_ExternalEncoder_Units				
LengthUnit	UDINT	-	RON	Unit for position	
				1010	m
				1013	mm
				1536	mm[1)]
				1011	km
				1014	µm
				1015	nm
				1019	in
				1018	ft
				1021	mi
				1004	rad
				1005	°
				1537	°[1)]
VelocityUnit	UDINT	-	RON	Unit for velocity	
				1521	°/s
				1539	°/s[1)]
				1522	°/min

1) Position values with higher resolution or six decimal places

Tag	Data type	Values	W	Description	
VelocityUnit	UDINT	-	RON	1086	rad/s
				1523	rad/min
				1062	mm/s
				1538	mm/s[1)]
				1061	m/s
				1524	mm/min
				1525	m/min
				1526	mm/h
				1063	m/h
				1527	km/min
				1064	km/h
				1066	in/s
				1069	in/min
				1067	ft/s
				1070	ft/min
				1075	mi/h
TimeUnit	UDINT	-	RON	Unit for time	
				1054	s
TorqueUnit	UDINT	-	RON	Unit for torque	
				1126	Nm
				1128	kNm
				1529	lbf in (pound-force-inch)
				1530	lbf ft
				1531	ozf in (ounce-force-inch)
				1532	ozf ft
				1533	pdl in (poundal-inch)
				1534	pdl ft
ForceUnit	UDINT	-	RON	Unit for force	
				1120	N
				1122	kN
				1094	lbf (pound-force)
				1093	ozf (ounce-force)
				1535	pdl (poundals)
UnitFactor	UDINT	-	RON	Factor for internal conversion in the high-resolution units.	

1) Position values with higher resolution or six decimal places

See also

Units of measure (Page 33)

9.2.14 "Mechanics" tag (positioning axis) (S7-1500, S7-1500T)

The tag structure "<TO>.Mechanics.<tag name>" contains the configuration of the mechanics.

Tags

Legend (Page 299)

Tag	Data type	Value range	W	Description
Mechanics.	TO_Struct_Mechanics			
LeadScrew	LREAL	1.0E-12 ... 1.0E12	RES	Leadscrew pitch

9.2.15 "Modulo" tag (positioning axis) (S7-1500, S7-1500T)

The tag structure "<TO>.Modulo.<tag name>" contains the configuration of the modulo function.

Tags

Legend (Page 299)

Tag	Data type	Values	W	Description	
Modulo.	TO_Struct_Modulo				
Enable	BOOL	-	RES	FALSE	Modulo conversion disabled
				TRUE	Modulo conversion enabled
				When modulo conversion is enabled, a check is made for modulo length > 0.0	
Length	LREAL	0.001 to 1.0E12	RES	Modulo length	
StartValue	LREAL	-1.0E12 to 1.0E-12	RES	Modulo start value	

9.2.16 "DynamicLimits" tag (positioning axis) (S7-1500, S7-1500T)

The tag structure "<TO>.DynamicLimits.<tag name>" contains the configuration of the dynamic limits. During Motion Control, no dynamic values greater than the dynamic limits are permitted. If you specify greater values in a Motion Control instruction, then motion is performed using the dynamic limits, and a warning is indicated (alarm 501 to 503 - Dynamic values are limited).

Tags

Legend (Page 299)

Tag	Data type	Values	W	Description
DynamicLimits.	TO_Struct_DynamicLimits			
MaxVelocity	LREAL	0.0 ... 1.0E12	RES	Maximum permissible velocity of the axis

Tag	Data type	Values	W	Description
Velocity	LREAL	0.0 ... 1.0E12	DIR	Current maximum velocity of the axis The minimum from "MaxVelocity" and "Velocity" is effective for motion control.
MaxAcceleration	LREAL	0.0 ... 2.7777777777-7778E8	DIR	Maximum permissible acceleration of the axis
MaxDeceleration	LREAL	0.0 ... 2.7777777777-7778E8	DIR	Maximum permissible deceleration of the axis
MaxJerk	LREAL	0.0 ... 4629629.629	DIR	Maximum permissible jerk on the axis

9.2.17 "DynamicDefaults" tag (positioning axis) (S7-1500, S7-1500T)

The tag structure "<TO>.DynamicDefaults.<tag name>" contains the configuration of the dynamic defaults. These settings will be used when you specify a dynamic value less than 0.0 in a Motion Control instruction (exceptions: "MC_MoveJog.Velocity", "MC_MoveVelocity.Velocity"). Changes to the default dynamic values will be applied at the next positive edge at the "Execute" parameter of a Motion Control instruction.

Tags

Legend (Page 299)

Tag	Data type	Values	W	Description
DynamicDefaults.	TO_Struct_DynamicDefaults			
Velocity	LREAL	0.0 ... 1.0E12	CAL	Default velocity
Acceleration	LREAL	0.0 ... 2.7777777777-7778E8	CAL	Default acceleration
Deceleration	LREAL	0.0 ... 2.7777777777-7778E8	CAL	Default deceleration
Jerk	LREAL	0.0 ... 4629629.629	CAL	Default jerk
EmergencyDeceleration	LREAL	0.0 ... 2.7777777777-7778E8	DIR	Emergency stop deceleration

9.2.18 "PositionLimits_SW" tag (positioning axis) (S7-1500, S7-1500T)

The tag structure "<TO>.PositionLimits_SW.<tag name>" contains the configuration of position monitoring with software limit switches. Software limit switches are used to limit the operating range of a positioning axis.

Tags

Legend (Page 299)

Tag	Data type	Values	W	Description	
PositionLimits_SW.	TO_Struct_PositionLimitsSW				
Active	BOOL	-	DIR	FALSE	Monitoring deactivated
				TRUE	Monitoring enabled
MinPosition	LREAL	-1.0E12 to 1.0E-12	DIR	Position of negative software limit switches	
MaxPosition	LREAL	-1.0E12 to 1.0E-12	DIR	Position of positive software limit switches ("MaxPosition" > "MinPosition")	
LimitReachedBehavior	DINT	0 ... 1	RES	Alarm response when a software limit switch is approached with a single axis job	
				0	Stop with maximum dynamic values
				1	Stop with current dynamic values
LimitExceededBehavior	DINT	0 ... 1	RES	Alarm response when overrunning a software limit switch	
				0	Disable axis
				1	Keep emergency stop and axis enable

9.2.19 "PositionLimits_HW" tag (positioning axis) (S7-1500, S7-1500T)

The tag structure "<TO>.PositionLimits_HW.<tag name>" contains the configuration of position monitoring with hardware limit switches. Hardware limit switches are used to limit the traversing range of a positioning axis.

Tags

Legend (Page 299)

Tag	Data type	Values	W	Description	
PositionLimits_HW.	TO_Struct_PositionLimitsHW				
Active	BOOL	-	RES	FALSE	Monitoring deactivated
				TRUE	Monitoring enabled
				With "Active", both (negative and positive) hardware limit switches are activated or deactivated.	
MinSwitchLevel	BOOL	-	RES	Level selection for activation of the negative hardware limit switch	
				FALSE	Low level (Low active)
				TRUE	High level (high-enabled)
MinSwitchAddress	VREF	0 to 65535	RES	Address for the negative hardware limit switch	
MaxSwitchLevel	BOOL	-	RES	Level selection for activation of the positive hardware limit switch	
				FALSE	Low level (Low active)
				TRUE	High level (high-enabled)

Tag	Data type	Values	W	Description	
MaxSwitchAddress	VREF	0 to 65535	RES	Address for the positive hardware limit switch	
Mode	DINT	0 ... 1	RES	Type of HW limit switch	
				0	Switch non-traversable
				1	Switch traversable
AppoachBehavior	DINT	0 ... 1	RES	Alarm response when approaching a HW limit switch	
				0	Disable axis
				1	Keep emergency stop and axis enable

9.2.20 "Homing" tag (positioning axis) (S7-1500, S7-1500T)

The tag structure "<TO>.Homing.<tag name>" contains the configuration for homing the TO.

Tags

Legend (Page 299)

Tag	Data type	Values	W	Description	
Homing.	TO_Struct_Homing / TO_Struct_ExternalEncoder_Homing				
AutoReversal	BOOL	-	RES	Reversal at the hardware limit switches	
				FALSE	No
				TRUE	Yes
ApproachDirection	BOOL	-	CAL	Direction of approach to the homing position switch	
				FALSE	Positive direction
				TRUE	Negative direction
ApproachVelocity	LREAL	Linear: 0.0 to 10000.0 - mm/s Rotary: 0.0 ... 360000.0 °/s	CAL	Approach velocity Velocity during active homing at which the reference output cam and home position are approached.	
ReferencingVelocity	LREAL	Linear: 0.0 to 1000.0 m-m/s Rotary: 0.0 ... 36000.0 °/s	CAL	Homing velocity Velocity during active homing at which the home position is approached.	
HomePosition	LREAL	-1.0E12 to 1.0E-12	CAL	Home position	

9.2.21 "Override" tag (positioning axis) (S7-1500, S7-1500T)

The tag structure "<TO>.Override.<tag name>" contains the configuration of override parameters. The override parameters are used to apply a correction percentage to default

values. An override change takes effect immediately, and is performed with the dynamic settings in effect in the Motion Control instruction.

Tags

Legend (Page 299)

Tag	Data type	Values	W	Description
Override.	TO_Struct_Override			
Velocity	LREAL	0.0 to 200.0%	DIR	Velocity or speed override Percentage correction of the velocity/speed

9.2.22 "PositionControl" tag (positioning axis) (S7-1500, S7-1500T)

The tag structure "<TO>.PositionControl.<tag name>" contains the settings of position control.

Tags

Legend (Page 299)

Tag	Data type	Values	W	Description
PositionControl.	TO_Struct_PositionControl			
Kv	LREAL	0.0 ... 2147480.0	DIR	Proportional gain of the closed loop position control ("Kv" > 0.0)
Kpc	LREAL	0.0 ... 150.0%	DIR	Velocity precontrol of the position control Recommended setting: • Isochronous drive connection via PROFIdrive: 100.0% • Non-isochronous drive connection via PROFIdrive: 0.0 to 100.0% • Analog drive connection: 0.0 to 100.0%
EnableDSC	BOOL	-	RES	Dynamic Servo Control (DSC) FALSE: DSC disabled TRUE: DSC activated DSC is only possible with one of the following PROFIdrive telegrams: • Standard telegram 5 or 6 • SIEMENS telegram 105 or 106
SmoothingTimeByChangeDifference	LREAL	0.0 ... 1.0E12 s	DIR	Smoothing time for the manipulated variable for switching operations, for example: • Encoder switchover • Change in P-gain ("Kv") • Switchover to emergency stop ramp

Tag	Data type	Values	W	Description	
InitialOperativeSensor	UDINT	1 ... 4	RES	Active sensor after initialization of the axis (sensor number 1 to 4) This encoder is used after startup of the CPU and after a restart of the technology object. At an operating mode transition from STOP → RUN of the CPU (without restart of the technology object), the encoder that was also active before the STOP is still being used.	
ControlDifferenceQuant-ization.	TO_Struct_PositionDifferenceQuanti-fication				
Mode	DINT	-	RES	Type of quantification Configuration of a quantization when a drive with stepper motor interface is connected	
				0	No quantification
				1	Quantization corresponding to encoder resolu-tion
				2	Quantization to a direct value
				(configuration is performed using the parameter view (data structure))	
Value	LREAL	0.001 ... 1.0E12	RES	Value of quantification Configuration of a value for quantization to a direct value ("<TO>.PositionControl.ControlDifferenceQuantiza-tion.Mode" = 2) (configuration is performed using the parameter view (data structure))	
VelocityModePowerOn	DINT	0 ... 1	RES	Behavior of the velocity setpoint when the axis is enabled	
				0	Velocity is set to "0" with maximum dynamic val-ues of the axis (ramp).
				1	Velocity is immediately set to "0" without ramp.

9.2.23 "SetpointFilter" tag (positioning axis) (S7-1500, S7-1500T)

The tag structure "<TO>.SetpointFilter.<tag name>" contains the settings of the setpoint filter.

Tags

Legend (Page 299)

Tag	Data type	Values	W	Description	
SetpointFilter.	TO_Struct_SetpointFilter				
DynamicFilter.	TO_Struct_DynamicFilter				
Mode	DINT	-	RES	Dynamic filter mode	
				0	Dynamic filter not active
				1	PT1/PT2 filter + dead time

[1] The dead time T

Tag			Data type	Values	W	Description
		T1	LREAL	0.0 ... 1.0E12	DIR	First time constant of the PT2 filter in time unit of the axis
		T2	LREAL	0.0 ... 1.0E12	DIR	Second time constant of the PT2 filter in time unit of the axis
		Tt	LREAL	0.0 ... 1.0E12[1]	DIR	Additional dead time of the dynamic filter in time unit of the axis

[1] The dead time T

9.2.24 "DynamicAxisModel" tag (positioning axis) (S7-1500, S7-1500T)

The tag structure "<TO>.DynamicAxisModel.<tag name>" contains the balancing filter settings.

Tags

Legend (Page 299)

Tag		Data type	Values	W	Description
DynamicAxisModel.		TO_Struct_DynamicAxisModel			
	VelocityTimeConstant	LREAL	0.0 to 1.0E12	DIR	Speed control loop substitute time [s]
	AdditionalPositionTime-Constant	LREAL	0.0 to 1.0E12	DIR	Additive position control loop substitute time [s]

9.2.25 "FollowingError" tag (positioning axis) (S7-1500, S7-1500T)

The tag structure "<TO>.FollowingError.<tag name>" contains the configuration of the dynamic following error monitoring.

If the permissible following error is exceeded, then technology alarm 521 is output, and the technology object is disabled (alarm reaction: remove enable).

When the warning level is reached, a warning is output (technology alarm 522).

Tags

Legend (Page 299)

Tag		Data type	Values	W	Description	
FollowingError.		TO_Struct_FollowingError				
	EnableMonitoring	BOOL	-	RES	FALSE	Following error monitoring deactivated
					TRUE	Following error monitoring enabled
	MinValue	LREAL	Linear: 0.0 ... 1.0E12	DIR	Permissible following error at velocities below the value of "MinVelocity"	
			Rotary: 0.001 to 1.0E12			
	MaxValue	LREAL	Linear: 0.0 to 1.0E12	DIR	Maximum permissible following error, which may be reached at the maximum velocity.	

Tag	Data type	Values	W	Description
MaxValue	LREAL	Rotary: 0.002 ... 1.0E12	DIR	Maximum permissible following error, which may be reached at the maximum velocity.
MinVelocity	LREAL	0.0 ... 1.0E12	DIR	"MinValue" is permissible below this velocity and is held constant.
WarningLevel	LREAL	0.0 to 100.0	DIR	Warning level Percentage value relative to the valid maximum following error
AdditionalSetpointDelay-Time	LREAL	0.0 ... 1.0E12	DIR	Time constant for additional deceleration of position set-point to calculate the following error in the time unit of the axis

9.2.26 "PositioningMonitoring" tag (positioning axis) (S7-1500, S7-1500T)

The tag structure "<TO>.PositioningMonitoring.<tag name>" contains the configuration of position monitoring at the end of a positioning motion.

If the actual position value at the end of a positioning motion is reached within the tolerance time and remains in the positioning window for the minimum dwell time, then "<TO>.StatusWord.X5 (Done)" is set in the technology data block. This completes a Motion Control job.

If the tolerance time is exceeded, then technology alarm 541 "Positioning monitoring" with supplemental value 1: "Target range not reached" is displayed.

If the minimum dwell time is not met, then technology alarm 541 "Positioning monitoring" with supplemental value 2: "Exit target range again" is displayed.

Tags

Legend (Page 299)

Tag	Data type	Values	W	Description
PositioningMonitoring.	TO_Struct_PositionMonitoring			
ToleranceTime	LREAL	0.0 to 1.0E12	DIR	Tolerance time Maximum permitted duration from reaching of velocity setpoint zero until entrance into the positioning window
MinDwellTime	LREAL	0.0 to 1.0E12	DIR	Minimum dwell time in positioning window
Window	LREAL	0.0 to 1.0E12	DIR	Positioning window

9.2.27 "StandstillSignal" tag (positioning axis) (S7-1500, S7-1500T)

The tag structure "<TO>.StandstillSignal.<tag name>" contains the configuration of the standstill signal.

If the actual velocity value is below the velocity threshold, and does not exceed it during the minimum dwell time, then the standstill signal "<TO>.StatusWord.X7 (Standstill)" is set.

Tags

Legend (Page 299)

Tag	Data type	Values	W	Description
StandstillSignal.	TO_Struct_StandstillSignal			Configuration for the standstill signal
VelocityThreshold	LREAL	0.0 to 1.0E12	DIR	Velocity threshold If velocity is below this threshold, the minimum dwell time begins.
MinDwellTime	LREAL	0.0 to 1.0E12	DIR	Minimum dwell time

9.2.28 "StatusPositioning" tag (positioning axis) (S7-1500, S7-1500T)

The tag structure "<TO>.StatusPositioning.<tag name>" indicates the status of a positioning motion.

Tags

Legend (Page 299)

Tag	Data type	Values	W	Description
StatusPositioning.	TO_Struct_StatusPositioning			
Distance	LREAL	-1.0E12 ... 1.0E12	RON	Distance to target position
TargetPosition	LREAL	-1.0E12 ... 1.0E12	RON	Target position
TargetPositionModulo-Cycle	DINT	-2147483648 ... 2147483647	RON	Number of modulo cycles to target position with positioning motions
FollowingError	LREAL	-1.0E12 ... 1.0E12	RON	Current following error
SetpointExecutionTime	LREAL	0 ... 1.0E12	RON	Setpoint execution time of the axis (Results from T_{lpo}, T_{vtc} or 1/kv, T_{Send} and T_O of the axis)
SuperimposedDistance	LREAL	0 ... 1.0E12	RON	Distance traveled with the instructions "MC_MoveSuperimposed", "MC_MotionInSuperimposed", and "MC_HaltSuperimposed". The value is reset when the base motion and the superimposed motion are completed.

9.2.29 "StatusDrive" tag (positioning axis) (S7-1500, S7-1500T)

The tag structure "<TO>.StatusDrive.<tag name>" indicates the status of the drive.

Tags

Legend (Page 299)

Tag	Data type	Values	W	Description
StatusDrive.	TO_Struct_StatusDrive			

Tag	Data type	Values	W	Description	
Disabled	BOOL	-	RON	FALSE	Drive not switched off
				TRUE	Drive switched off
InOperation	BOOL	-	RON	Operation status of the drive	
				FALSE	Drive not ready Setpoints will not be executed.
				TRUE	Drive ready Setpoints can be executed.
CommunicationOK	BOOL	-	RON	Cyclic BUS communication between controller and drive	
				FALSE	Cyclic communication not established. Fault ZSW1.X3 (FaultPresent) is present. Possible causes: • The CPU is in STOP. • The drive has failed. • The "ControlRequested" bit in the status word of the drive has the value "FALSE". • The drive signals an error using the status word. • For isochronous configuration, the dynamic sign of life in the telegram has failed or is not supplied by the drive.
				TRUE	Cyclic communication OK and no fault effective
Error	BOOL	-	RON	FALSE	No drive error
				TRUE	Drive error
AdaptionState	DINT	0 ... 4	RON	Status of automatic data transfer of drive parameters	
				0	"NOT_ADAPTED" Data not transferred
				1	"IN_ADAPTION" Data transfer in progress
				2	"ADAPTED" Data transfer complete
				3	"NOT_APPLICABLE" Data transfer not selected, not possible
				4	"ADAPTION_ERROR" Error during data transfer

9.2.30 "StatusServo" tag (positioning axis) (S7-1500, S7-1500T)

The tag structure "<TO>.StatusServo.<tag name>" indicates the status for the balancing filter.

Tags

Legend (Page 299)

Tag	Data type	Values	W	Description
StatusServo.	TO_Struct_StatusServo			
BalancedPosition	LREAL	-	RON	Position setpoint after the balancing filter
ControlDifference	LREAL	-	RON	Control deviation
PositionAfterDynamicFilter	LREAL	-	RON	Position setpoint after the dynamic filter

9.2.31 "StatusProvidedLeadingValue" tag (positioning axis) (S7-1500, S7-1500T)

The tag structure "<TO>.StatusProvidedLeadingValue.<tag name>" contains the provided leading value with leading value delay of the cross-PLC synchronous operation.

Tags

Legend (Page 299)

Tag	Data type	Values	W	Description
StatusProvidedLeadingValue.	TO_Struct_StatusProvidedLeadingValue			Provided leading value
DelayedLeadingValue	TO_Struct_ProvidedLeadingValue			Leading value with leading value delay
Position	LREAL	-1.0E12 to 1.0E-12	RON	Position
Velocity	LREAL	-1.0E12 to 1.0E-12	RON	Velocity
Acceleration	LREAL	-1.0E12 to 1.0E-12	RON	Acceleration

9.2.32 StatusSensor[1..4] Tags (positioning axis) (S7-1500, S7-1500T)

The tag structure "<TO>.StatusSensor[1..4].<tag name>" indicates the status of the measuring system.

Tags

Legend (Page 299)

Tag	Data type	Values	W	Description	
StatusSensor[1..4].	Array [1..4] OF TO_Struct_StatusSensor				
State	DINT	0 to 2	RON	Status of the actual encoder value	
				0	"NOT_VALID" Invalid
				1	"WAITING_FOR_VALID" Waiting for "Valid" status

Tag	Data type	Values	W	Description	
State	DINT	0 to 2	RON	2	"VALID" Valid
CommunicationOK	BOOL	-	RON	Cyclic BUS communication between controller and encoder	
				FALSE	Not established
				TRUE	Established
Error	BOOL	-	RON	FALSE	No error in the measuring system
				TRUE	Error in the measuring system.
AbsEncoderOffset	LREAL	-	RON	Home position offset for value of an absolute value encoder. The value will be retentively stored in the CPU.	
Control	BOOL	-	RON	FALSE	Encoder is not active
				TRUE	Encoder is active
Position	LREAL	-	RON	Encoder position	
Velocity	LREAL	-	RON	Encoder velocity	
AdaptionState	DINT	0 to 4	RON	Status of automatic data transfer of encoder parameters	
				0	"NOT_ADAPTED" Data not transferred
				1	"IN_ADAPTION" Data transfer in progress
				2	"ADAPTED" Data transfer complete
				3	"NOT_APPLICABLE" Data transfer not selected, not possible
				4	"ADAPTION_ERROR" Error during data transfer
ModuloCycle	DINT	-2147483648 to 2147483647	RON	Number of modulo cycles	
Adjusted	DINT	0 ... 1	RON	Homing status of the encoder	
				0	Encoder not homed
				1	Encoder homed with one of the following homing types: • Active homing • Passive homing • Absolute encoder adjustment • Incremental encoder adjustment

9.2.33 "StatusExtrapolation" tag (positioning axis) (S7-1500, S7-1500T)

The tag structure "<TO>.StatusExtrapolation.<tag name>" indicates the status of the actual value extrapolation.

Tags

Legend (Page 299)

Tag	Data type	Values	W	Description
StatusExtrapolation.	TO_Struct_StatusExtrapolation			
FilteredPosition	LREAL	-1.0E12 to 1.0E-12	RON	Position after position filter
FilteredVelocity	LREAL	-1.0E12 to 1.0E-12	RON	Velocity after velocity filter and tolerance band
ExtrapolatedPosition	LREAL	-1.0E12 to 1.0E-12	RON	Extrapolated position
ExtrapolatedVelocity	LREAL	-1.0E12 to 1.0E-12	RON	Extrapolated velocity

9.2.34 "StatusKinematicsMotion" tag (positioning axis) (S7-1500, S7-1500T)

The "<TO>.StatusKinematicsMotion" tag contains status information of the technology object with regard to usage as kinematics axis.
Information on the evaluation of the individual bits (e.g. bit 2 "MaxDecelerationExceeded") can be found in the "Evaluating StatusWord, ErrorWord and WarningWord" section of the "S7-1500/S7-1500T Motion Control Overview" documentation (Page 12).

Tag

Legend (Page 299)

Tag	Data type	Values	W	Description	
StatusKinematicsMotion	DWORD	-	RON	Status information of the technology object	
Bit 0	-	-	-	"MaxVelocityExceeded"	
				0	The kinematics technology object calculated a lower velocity setpoint than the maximum velocity on the axis.
				1	The kinematics technology object calculated a higher velocity setpoint than the maximum velocity on the axis.
Bit 1	-	-	-	"MaxAccelerationExceeded"	
				0	The kinematics technology object calculated a lower setpoint acceleration calculated than the maximum acceleration of the axis.
				1	The kinematics technology object calculated a higher setpoint acceleration than the maximum acceleration of the axis.
Bit 2	-	-	-	"MaxDecelerationExceeded"	
				0	The kinematics technology object calculated a lower setpoint deceleration than the maximum deceleration of the axis.

Tag	Data type	Values	W	Description	
Bit 2	-	-	-	1	The kinematics technology object calculated a lower setpoint deceleration than the maximum deceleration of the axis.

9.2.35 "StatusTorqueData" tag (positioning axis) (S7-1500, S7-1500T)

The tag structure "<TO>.StatusTorqueData.<tag name>" indicates the status of the torque data/force data.

Tags

Legend (Page 299)

Tag	Data type	Value range	W	Description	
StatusTorqueData.	TO_Struct_StatusTorqueData				
CommandAdditiveT-orqueActive	DINT	0, 1	RON	Additive setpoint torque/additive setpoint force	
				0	Inactive
				1	Active
CommandTorqueRange-Active	DINT	0, 1	RON	Torque limits/force limits B +, B-	
				0	Inactive
				1	Active
ActualTorque	LREAL	-1.0E12 to 1.0E-12	RON	Actual torque of the axis	
ActualForce	LREAL	-1.0E12 ... 1.0E12	RON	Actual force of the axis	

9.2.36 "StatusMotionIn" tag (positioning axis) (S7-1500, S7-1500T)

The tag structure "<TO>.StatusMotionIn.<tag name>" indicates the status of the "MotionIn" function.

Tags

Legend (Page 299)

Tag	Data type	Value range	W	Description	
StatusMotionIn.	TO_Struct_StatusMotionIn				
FunctionState	DINT	0 ... 2	RON	0	No "MotionIn" function active
				1	"MC_MotionInVelocity" active
				2	"MC_MotionInPosition" active
StatusWord.	DWORD	-	RON	-	
Bit 0	Bool	-	RON	"MaxVelocityExceeded" The configured maximum velocity is exceeded during a MotionIn movement.	

Tag	Data type	Value range	W	Description
Bit 1 ... Bit 31	Bool	-	RON	Reserved

9.2.37 "StatusWord" tag (positioning axis) (S7-1500, S7-1500T)

The "<TO>.StatusWord" tag contains the status information of the technology object.

Information on the evaluation of the individual bits (e.g. bit 5 "HomingDone") can be found in the "Evaluating StatusWord, ErrorWord and WarningWord" section of the "S7-1500/S7-1500T Motion Control Overview" documentation (Page 12).

Tags

Legend (Page 299)

Tag	Data type	Values	W	Description
StatusWord	DWORD	-	RON	Status information of the technology object
Bit 0	-	-	-	"Enable" Enable status The technology object has been enabled.
Bit 1	-	-	-	"Error" An error is present.
Bit 2	-	-	-	"RestartActive" A restart is active. The technology object will be reinitialized.
Bit 3	-	-	-	"OnlineStartValuesChanged" The restart tags have been changed. For the changes to be applied, the technology object must be reinitialized.
Bit 4	-	-	-	"ControlPanelActive" The axis control panel is active.
Bit 5	-	-	-	"HomingDone" Homing status The technology object is homed.
Bit 6	-	-	-	"Done" No motion job is in progress and the axis control panel is deactivated.
Bit 7	-	-	-	"Standstill" Standstill signal The axis is at a standstill.
Bit 8	-	-	-	"PositioningCommand" A positioning command is active ("MC_MoveRelative","MC_MoveAbsolute").
Bit 9	-	-	-	"JogCommand" An "MC_MoveJog" job is running.
Bit 10	-	-	-	"VelocityCommand" An "MC_MoveVelocity" job is running.
Bit 11	-	-	-	"HomingCommand" An "MC_Home" job is being processed.

Tag	Data type	Values	W	Description
Bit 12	-	-	-	"ConstantVelocity" The velocity setpoint is reached. A constant velocity set-point is output.
Bit 13	-	-	-	"Accelerating" An acceleration operation is active.
Bit 14	-	-	-	"Decelerating" A deceleration operation is active.
Bit 15	-	-	-	"SWLimitMinActive" A negative software limit switch has been approached or exceeded.
Bit 16	-	-	-	"SWLimitMaxActive" A positive software limit switch has been approached or exceeded.
Bit 17	-	-	-	"HWLimitMinActive" A negative hardware limit switch has been approached or exceeded.
Bit 18	-	-	-	"HWLimitMaxActive" A positive hardware limit switch has been approached or exceeded.
Bit 19 ... Bit 22	-	-	-	Reserved
Bit 23	-	-	-	"MoveSuperimposedCommand" An "MC_MoveSuperimposed" job is running.
Bit 24	-	-	-	Reserved
Bit 25	-	-	-	"AxisSimulation" The technology object is in simulation.
Bit 26	-	-	-	"TorqueLimitingCommand" An "MC_TorqueLimiting" job is running.
Bit 27	-	-	-	"InLimitation" The drive operates at least at the threshold value (default 90%) of the torque limit/force limitation.
Bit 28	-	-	-	"NonPositionControlled" The axis is not in position-controlled mode.
Bit 29	-	-	-	"KinematicsMotionCommand" The axis is used for a kinematics job.
Bit 30	-	-	-	"InClamping" The axis is clamped at a fixed stop.
Bit 31	-	-	-	"MotionInCommand" A "MotionIn" job is running.

9.2.38 "StatusWord2" tag (positioning axis) (S7-1500, S7-1500T)

The "<TO>.StatusWord2" tag contains the status information of the technology object. Information on the evaluation of the individual bits (e.g. bit 0 "StopCommand") can be found in the "Evaluating StatusWord, ErrorWord and WarningWord" section of the "S7-1500/S7-1500T Motion Control Overview" documentation (Page 12).

Tags

Legend (Page 299)

Tag	Data type	Value range	W	Description
StatusWord2	DWORD	-	RON	Status information of the technology object
Bit 0	BOOL	-	RON	"StopCommand" An "MC_Stop" job is running. The technology object is disabled.
Bit 1	BOOL	-	RON	Reserved
Bit 2	BOOL	-	RON	"PassingBacklash" The backlash is traversed. "<TO>.ActualPosition" does not hereby change.
Bit 3 ... Bit 5	BOOL	-	RON	Reserved
Bit 6	BOOL	-	RON	"MotionInSuperimposedCommand" An "MC_MotionInSuperimposed" job is running.
Bit 7	BOOL	-	RON	"HaltSuperimposedCommand" An "MC_HaltSuperimposed" job is running.
Bit 8 ... Bit 31	BOOL	-	RON	Reserved

9.2.39 "ErrorWord" tag (positioning axis) (S7-1500, S7-1500T)

The "<TO>.ErrorWord" tag indicates technology object errors (technology alarms).

Information on the evaluation of the individual bits (e.g. bit 3 "CommandNotAccepted") can be found in the "Evaluating StatusWord, ErrorWord and WarningWord" section of the "S7-1500/S7-1500T Motion Control Overview" documentation (Page 12).

Tags

Legend (Page 299)

Tag	Data type	Values	W	Description
ErrorWord	DWORD	-	RON	
Bit 0	-	-	-	"SystemFault" A system-internal error has occurred.
Bit 1	-	-	-	"ConfigFault" Configuration error One or more configuration parameters are inconsistent or invalid.
Bit 2	-	-	-	"UserFault" Error in user program at a Motion Control instruction or its use
Bit 3	-	-	-	"CommandNotAccepted" Job cannot be executed A Motion Control instruction cannot be executed because the necessary conditions have not been met.

Tag	Data type	Values	W	Description
Bit 4	-	-	-	"DriveFault" Error in drive
Bit 5	-	-	-	"SensorFault" Error in encoder system
Bit 6	-	-	-	"DynamicError" Specified dynamic values are limited to permissible values.
Bit 7	-	-	-	"CommunicationFault" Communication error Missing or faulty communication.
Bit 8	-	-	-	"SWLimit" Software limit switch reached or overtraveled.
Bit 9	-	-	-	"HWLimit" Hardware limit switch reached or overtraveled.
Bit 10	-	-	-	"HomingError" Error during homing operation The homing cannot be completed.
Bit 11	-	-	-	"FollowingErrorFault" Following error limits exceeded
Bit 12	-	-	-	"PositioningFault" Positioning error
Bit 13	-	-	-	"PeripheralError" Error accessing a logical address
Bit 14	-	-	-	Reserved
Bit 15	-	-	-	"AdaptionError" Error in automatic data transfer
Bit 16 ... Bit 31	-	-	-	Reserved

9.2.40 "ErrorDetail" tag (positioning axis) (S7-1500, S7-1500T)

The tag structure "<TO>.ErrorDetail.<tag name>" contains the alarm number and the effective local alarm response for the technology alarm that is currently pending on the technology object.

You can find a list of the technology alarms and alarm responses in the "Overview of the technology alarms" section of the "S7-1500/S7-1500T Motion Control alarms and error IDs" documentation (Page 12).

Tags

Legend (Page 299)

Tag	Data type	Values	W	Description	
ErrorDetail.	TO_Struct_ErrorDetail				
Number	UDINT	-	RON	Alarm number	
Reaction	DINT	0 ... 5	RON	Effective alarm response	
				0	No reaction

Tag	Data type	Values	W	Description	
Reaction	DINT	0 ... 5	RON	1	Stop with current dynamic values
				2	Stop with maximum dynamic values
				3	Stop with emergency stop ramp
				4	Remove enable
				5	Track setpoints

9.2.41 "WarningWord" tag (positioning axis) (S7-1500, S7-1500T)

The "<TO>.WarningWord" tag indicates pending warnings at the technology object.
Information on the evaluation of the individual bits (e.g. bit 13 "PeripheralWarning") can be found in the "Evaluating StatusWord, ErrorWord and WarningWord" section of the "S7-1500/S7-1500T Motion Control Overview" documentation (Page 12).

Tags

Legend (Page 299)

Tag	Data type	Values	W	Description
WarningWord	DWORD	-	RON	
Bit 0	-	-	-	"SystemWarning" A system-internal error has occurred.
Bit 1	-	-	-	"ConfigWarning" Configuration error One or several configuration parameters are adjusted internally.
Bit 2	-	-	-	"UserWarning" Error in user program at a Motion Control instruction or its use
Bit 3	-	-	-	"CommandNotAccepted" Job cannot be executed A Motion Control instruction cannot be executed because the necessary conditions have not been met.
Bit 4	-	-	-	"DriveWarning" Warning of the drive When a warning message is pending at the drive that does not result in a TO alarm, this bit is not set. Evaluate the drive warnings directly using the status word of the drive.
Bit 5	-	-	-	"SensorWarning" Error in encoder system
Bit 6	-	-	-	"DynamicWarning" Specified dynamic values are limited to permissible values.
Bit 7	-	-	-	"CommunicationWarning" Communication error Missing or faulty communication.
Bit 8	-	-	-	"SWLimitMin" The negative software limit switch has been approached.

Tag		Data type	Values	W	Description
	Bit 9	-	-	-	"SWLimitMax" The positive software limit switch has been approached.
	Bit 10	-	-	-	"HomingWarning" Error during homing operation The homing cannot be completed.
	Bit 11	-	-	-	"FollowingErrorWarning" Warning limit of following error monitoring reached/exceeded
	Bit 12	-	-	-	"PositioningWarning" Positioning error
	Bit 13	-	-	-	"PeripheralWarning" Error accessing a logical address
	Bit 14	-	-	-	Reserved
	Bit 15	-	-	-	"AdaptionWarning" Error in automatic data transfer
	Bit 16... Bit 31	-	-	-	Reserved

9.2.42 "ControlPanel" tag (positioning axis) (S7-1500, S7-1500T)

The tag structure "<TO>.ControlPanel.<tag name>" contains no relevant data for you. This tag structure is internally used.

9.2.43 "InternalToTrace" tag (positioning axis) (S7-1500, S7-1500T)

The tag structure "<TO>.InternalToTrace.<tag name>" contains no relevant data for you. This tag structure is internally used.

9.3 Tags of the technology object external encoder (S7-1500, S7-1500T)

9.3.1 Legend (S7-1500, S7-1500T)

Tag	Name of the tag
Data type	Data type of the tag
Values	Value range of the tag - minimum value to maximum value If no specific value is shown, the value range limits of the relevant data type apply or the information under "Description".

W	Effectiveness of changes in the technology data block	
	DIR	Direct: Values are changed via direct assignment and take effect at the start of the next MC-Servo [OB91].
	CAL	At call of Motion Control instruction: Values are changed directly and take effect at the start of the next MC-Servo [OB91] after the call of the corresponding Motion Control instruction in the user program.
	RES	Restart: Changes to the start value in the load memory are made using the extended instruction "WRIT_DBL" (write to DB in load memory). Changes will not take effect until after restart of the technology object.
	RON	Read only: The tag cannot and must not be changed during runtime of the user program.
Description	Description of the tag	

Access to the tags is with "<TO>.<tag name>". The placeholder <TO> represents the name of the technology object.

9.3.2 Actual values and setpoints (external encoder) (S7-1500, S7-1500T)

The following tags indicate the setpoint and actual values of the technology object.

Tags

Legend (Page 331)

Tag	Data type	Values	W	Description
ActualPosition	LREAL	-	RON	Actual position
ActualVelocity	LREAL	-	RON	Actual velocity
ActualAcceleration	LREAL	-	RON	Actual acceleration
ActualModuloCycle	DINT	-2147483648 to 2147483647	RON	Number of modulo cycles of the actual value

9.3.3 "Sensor" tag (external encoder) (S7-1500, S7-1500T)

The tag structure "<TO>.Sensor.<tag name>" contains the controller-side configuration for the encoder, and the configuration for passive homing.

Tags

Legend (Page 331)

Tag	Data type	Values	W	Description	
Sensor.	TO_Struct_ExternalEncoder_Sensor				
Type	DINT	0 ... 2	RON	Encoder type	
				0	"INCREMENTAL" Incremental

Tag	Data type	Values	W	Description	
Type	DINT	0 ... 2	RON	1	"ABSOLUTE" Absolute
				2	"CYCLIC_ABSOLUTE" Cyclic absolute
InverseDirection	BOOL	-	RES	Inversion of the actual value	
				FALSE	No
				TRUE	Yes
System	DINT	0, 1	RES	Encoder system	
				0	"LINEAR" Linear encoder
				1	"ROTATORY" Rotary encoder
MountingMode	DINT	0 ... 2	RES	Mounting type of encoder	
				0	On motor shaft
				1	On load side
				2	External measuring system
DataAdaption	DINT	0, 1	RES	Automatic transfer of the drive values reference speed, maximum speed and reference torque in the device	
				0	No automatic transfer, manual configuration of values
				1	Automatic transfer of values configured in the drive to the configuration of the technology object
ActualVelocityMode	DINT	0, 1	RES	Type of calculation for actual speed value or actual velocity value	
				0	Actual value calculation from differentiation of the position change
				1	Actual value calculation with NACT value from the telegram
Interface.					
AddressIn	VREF	0 ... 65535	RON	Input address for the PROFIdrive telegram	
AddressOut	VREF	0 ... 65535	RON	Output address for the PROFIdrive telegram	
Number	UDINT	1 ... 2	RON	Number of the encoder in the telegram	
Parameter.					
Resolution	LREAL	-1.0E12 ... 1.0E12	RES	Resolution of a linear encoder (offset between two encoder pulses)	
StepsPerRevolution	UDINT	1 ... 8388608	RES	Increments per rotary encoder revolution	
FineResolutionXist1	UDINT	0 ... 31	RES	Number of bits for fine resolution "Gx_XIST1" (cyclic actual encoder value)	
FineResolutionXist2	UDINT	0 ... 31	RES	Number of bits for fine resolution "Gx_XIST2" (absolute value of the encoder)	

Tag	Data type	Values	W	Description	
DeterminableRevolutions	UDINT	0 ... 8388608	RES	Number of differentiable encoder revolutions for a multi-turn absolute encoder (For a single-turn absolute encoder = 1; for an incremental encoder = 0)	
DistancePerRevolution	LREAL	0.0 ... 1.0E12	RES	Load distance per revolution of an externally mounted encoder	
BehaviorGx_XIST1	DINT	0, 1	RES	Evaluation of "Gx_XIST1" bits.	
				0	Based on the bits of the encoder resolution. The incremental actual value "Gx_XIST1" is transmitted with less than 32 bits in the PROFIdrive telegram. For example: At 16 bits, the value ranges from 0 to 65,535.
				1	32-bit value of the encoder value The "Gx_XIST1" incremental actual value is transferred with 32 bits of 0 to 4,294,967,295 in the PROFIdrive telegram.
ReferenceSpeed	LREAL	0.0 ... 1.0E12	RES	Reference speed for NACT in PROFIdrive telegram with rotary encoder Only relevant for "ActualVelocityMode" = 1	
ReferenceVelocity	LREAL	0.0 ... 1.0E12	RES	Reference velocity for NACT in the PROFIdrive telegram with linear encoder Only relevant for "ActualVelocityMode" = 1	
PassiveHoming.	TO_Struct_SensorPassiveHoming				
Mode	DINT	0 ... 2	RES	Homing mode	
				0	Use zero mark via PROFIdrive telegram
				1	Zero mark via PROFIdrive telegram and reference cam
				2	Use homing mark via digital input
SideInput	BOOL	-	CAL	Side of the digital input for passive homing	
				FALSE	Negative side
				TRUE	Positive side
Direction	DINT	0 ... 2	CAL	Homing direction/approach direction to homing mark	
				0	Positive homing direction
				1	Negative homing direction
				2	Current homing direction
DigitalInputAddress	VREF	0 ... 65535	RON	Address of the digital input	
SwitchLevel	BOOL	-	RON	Signal level that is present at the digital input when homing mark is approached	
				FALSE	Low level
				TRUE	High level

9.3.4 "CrossPlcSynchronousOperation" tag (external encoder) (S7-1500, S7-1500T)

The tag structure "<TO>.CrossPlcSynchronousOperation.<tag name>" contains the configuration of the cross-PLC synchronous operation.

Tags

Legend (Page 331)

Tag	Data type	Values	W	Description
CrossPlcSynchronousOperation.	TO_Struct_CrossPlcSynchronousOperation			
Interface[1..8].	ARRAY [1..8] of TO_Struct_CrossPlcLeadingValueInterface			
EnableLeadingValueOutput	BOOL	-	RON	Provide cross-PLC leading value
				FALSE: No
				TRUE: Yes
AddressOut	VREF	-	RON	Output address for the leading value telegram
LocalLeadingValueDelayTime	LREAL	0.0 ... 1.0E9	RES	Delay time of leading value output on the local following axes

9.3.5 "Extrapolation" tag (external encoder) (S7-1500, S7-1500T)

The tag structure "<TO>.Extrapolation.<tag name>" contains the configuration of the actual value extrapolation.

Tags

Legend (Page 331)

Tag	Data type	Values	W	Description
Extrapolation.	TO_Struct_Extrapolation			
LeadingAxisDependentTime	LREAL	-	RON	Extrapolation time component (caused by leading axis) Results from the following times: • Time of actual value acquisition for the leading axis • Interpolator cycle clock • Time of position filter of actual value extrapolation (T1 + T2)
FollowingAxisDependentTime	LREAL	0.001 to 1.0E12	DIR	Extrapolation time component (caused by following axis)

Tag	Data type	Values	W	Description
				Results from the following times: • For a following axis with set velocity precontrol: – Communication cycle – Interpolator cycle clock – Speed control loop substitute time for the following axis – Output delay time of the setpoint at the following axis • For a following axis without velocity precontrol: – Communication cycle – Interpolator cycle clock – Position control loop equivalent time (1/Kv from "<TO>.PositionControl.Kv") – Output delay time of the setpoint at the following axis
Settings.	TO_Struct_ExtrapolationSettings			
SystemDefinedExtrapolation	DINT	0, 1	RES	Leading axis dependent time 0 Not effective 1 Effective
ExtrapolatedVelocityMode	DINT	0, 1	RES	Effective velocity value for the synchronization function 0 "FilteredVelocity" Leading value velocity from filtered actual velocity 1 "VelocityByDifferentiation" The leading value velocity results from the differentiation of the extrapolated leading value position
PositionFilter.	TO_Struct_ExtrapolationPositionFilter			
T1	LREAL	0.0 to 1.0E12	DIR	Position filter time constant T1
T2	LREAL	0.0 to 1.0E12	DIR	Position filter time constant T2
VelocityFilter.	TO_Struct_ExtrapolationVelocityFilter			
T1	LREAL	0.0 to 1.0E12	DIR	Velocity filter time constant T1
T2	LREAL	0.0 to 1.0E12	DIR	Velocity filter time constant T2
VelocityTolerance.	TO_Struct_ExtrapolationVelocityTolerance			
Range	LREAL	0.0 to 1.0E12	DIR	Tolerance band width for velocity
Hysteresis.	TO_Struct_ExtrapolationHysteresis			
Value	LREAL	0.0 to 1.0E12	DIR	Hysteresis of the extrapolated actual position value

9.3.6 "LoadGear" tag (external encoder) (S7-1500, S7-1500T)

The tag structure "<TO>.LoadGear.<tag name>" contains the configuration of the load gear.

Tags

Legend (Page 331)

Tag	Data type	Value range	W	Description
LoadGear.	TO_Struct_LoadGear			
Numerator	UDINT	1 to 4294967295	RES	Load gear counter
Denominator	UDINT	1 to 4294967295	RES	Load gear denominator

9.3.7 "Properties" tag (external encoder) (S7-1500, S7-1500T)

The tag structure "<TO>.Properties.<tag name>" contains the configuration of the type of axis or motion.

Tags

Legend (Page 331)

Tag	Data type	Value range	W	Description	
Properties.	TO_Struct_Properties				
MotionType	DINT	0, 1	RON	Display of axis type or motion type	
				0	Linear axis or motion
				1	Rotary axis or motion

9.3.8 "Units" tag (external encoder) (S7-1500, S7-1500T)

The tag structure "<TO>.Units.<tag name>" shows the set technological units.

Tags

Legend (Page 331)

Tag	Data type	Values	W	Description	
Units.	TO_Struct_Units / TO_Struct_ExternalEncoder_Units				
LengthUnit	UDINT	-	RON	Unit for position	
				1010	m
				1013	mm
				1536	mm[1]
				1011	km
				1014	µm
				1015	nm
				1019	in

[1] Position values with higher resolution or six decimal places

Tag	Data type	Values	W	Description	
LengthUnit	UDINT	-	RON	1018	ft
				1021	mi
				1004	rad
				1005	°
				1537	°[1]
VelocityUnit	UDINT	-	RON	Unit for velocity	
				1521	°/s
				1539	°/s[1]
				1522	°/min
				1086	rad/s
				1523	rad/min
				1062	mm/s
				1538	mm/s[1]
				1061	m/s
				1524	mm/min
				1525	m/min
				1526	mm/h
				1063	m/h
				1527	km/min
				1064	km/h
				1066	in/s
				1069	in/min
				1067	ft/s
				1070	ft/min
				1075	mi/h
TimeUnit	UDINT	-	RON	Unit for time	
				1054	s
UnitFactor	UDINT	-	RON	Factor for internal conversion in the high-resolution units.	

[1] Position values with higher resolution or six decimal places

9.3.9 "Mechanics" tag (external encoder) (S7-1500, S7-1500T)

The tag structure "<TO>.Mechanics.<tag name>" contains the configuration of the mechanics.

Tags

Legend (Page 331)

Tag	Data type	Value range	W	Description
Mechanics.	TO_Struct_Mechanics			

Tag	Data type	Value range	W	Description
LeadScrew	LREAL	1.0E-12 ... 1.0E12	RES	Leadscrew pitch

9.3.10 "Modulo" tag (external encoder) (S7-1500, S7-1500T)

The tag structure "<TO>.Modulo.<tag name>" contains the configuration of the modulo function.

Tags

Legend (Page 331)

Tag	Data type	Values	W	Description	
Modulo.	TO_Struct_Modulo				
Enable	BOOL	-	RES	FALSE	Modulo conversion disabled
				TRUE	Modulo conversion enabled
Length	LREAL	0.001 to 1.0E12	RES	Modulo length When modulo conversion is enabled, a check is made for modulo length > 0.0	
StartValue	LREAL	-1.0E12 to 1.0E-12	RES	Modulo start value	

9.3.11 "Homing" tag (external encoder) (S7-1500, S7-1500T)

The tag structure "<TO>.Homing.<tag name>" contains the configuration for homing the TO.

Tags

Legend (Page 331)

Tag	Data type	Values	W	Description
Homing.	TO_Struct_Homing / TO_Struct_ExternalEncoder_Homing			
HomePosition	LREAL	-1.0E12 to 1.0E-12	CAL	Home position

9.3.12 "StatusProvidedLeadingValue" tag (external encoder) (S7-1500, S7-1500T)

The tag structure "<TO>.StatusProvidedLeadingValue.<tag name>" contains the provided leading value with leading value delay of the cross-PLC synchronous operation.

Tags

Legend (Page 331)

Tag	Data type	Values	W	Description
StatusProvidedLeadingValue.	TO_Struct_StatusProvidedLeadingValue			Provided leading value
DelayedLeadingValue	TO_Struct_ProvidedLeadingValue			Leading value with leading value delay
Position	LREAL	-1.0E12 to 1.0E12	RON	Position
Velocity	LREAL	-1.0E12 to 1.0E12	RON	Velocity
Acceleration	LREAL	-1.0E12 to 1.0E12	RON	Acceleration

9.3.13 "StatusSensor" tag (external encoder) (S7-1500, S7-1500T)

The tag structure "<TO>.StatusSensor.<tag name>" indicates the status of the measuring system.

Tags

Legend (Page 331)

Tag	Data type	Values	W	Description	
StatusSensor.	TO_Struct_StatusSensor				
State	DINT	0 to 2	RON	Status of the actual encoder value	
				0	"NOT_VALID" Invalid
				1	"WAITING_FOR_VALID" Waiting for "Valid" status
				2	"VALID" Valid
CommunicationOK	BOOL	-	RON	Cyclic BUS communication between controller and encoder	
				FALSE	Not established
				TRUE	Established
Error	BOOL	-	RON	FALSE	No error in the measuring system
				TRUE	Error in the measuring system.
AbsEncoderOffset	LREAL	-	RON	Home position offset for value of an absolute value encoder. The value will be retentively stored in the CPU.	
Control	BOOL	-	RON	FALSE	Encoder is not active
				TRUE	Encoder is active
Position	LREAL	-	RON	Encoder position	

Tag	Data type	Values	W	Description	
Velocity	LREAL	-	RON	Encoder velocity	
AdaptionState	DINT	-	RON	Status of automatic data transfer of encoder parameters	
				0	"NOT_ADAPTED" Data not transferred
				1	"IN_ADAPTION" Data transfer in progress
				2	"ADAPTED" Data transfer complete
				3	"NOT_APPLICABLE" Data transfer not selected, not possible
				4	"ADAPTION_ERROR" Error during data transfer
ModuloCycle	DINT	-2147483648 to 2147483647	RON	Number of modulo cycles	
Adjusted	DINT	0 ... 1	RON	Homing status of the encoder	
				0	Encoder not homed
				1	Encoder homed with one of the following homing types: • Passive homing • Absolute encoder adjustment • Incremental encoder adjustment

9.3.14 "StatusExtrapolation" tag (external encoder) (S7-1500, S7-1500T)

The tag structure "<TO>.StatusExtrapolation.<tag name>" indicates the status of the actual value extrapolation.

Tags

Legend (Page 331)

Tag	Data type	Values	W	Description
StatusExtrapolation.	TO_Struct_StatusExtrapolation			
FilteredPosition	LREAL	-1.0E12 to 1.0E-12	RON	Position after position filter
FilteredVelocity	LREAL	-1.0E12 to 1.0E-12	RON	Velocity after velocity filter and tolerance band
ExtrapolatedPosition	LREAL	-1.0E12 to 1.0E-12	RON	Extrapolated position
ExtrapolatedVelocity	LREAL	-1.0E12 to 1.0E-12	RON	Extrapolated velocity

9.3.15 "StatusWord" tag (external encoder) (S7-1500, S7-1500T)

The "<TO>.StatusWord" tag contains the status information of the technology object.

Information on the evaluation of the individual bits (e.g. bit 5 "HomingDone") can be found in the "Evaluating StatusWord, ErrorWord and WarningWord" section of the "S7-1500/S7-1500T Motion Control Overview" documentation (Page 12).

Tag

Legend (Page 331)

Tag	Data type	Values	W	Description
StatusWord	DWORD	-	RON	Status information of the technology object
Bit 0	-	-	-	"Enable" Enable status The technology object has been enabled.
Bit 1	-	-	-	"Error" An error is present.
Bit 2	-	-	-	"RestartActive" A restart is active. The technology object is being reinitialized.
Bit 3	-	-	-	"OnlineStartValuesChanged" The restart tags have been changed. For the changes to be applied, the technology object must be reinitialized.
Bit 4	-	-	-	Reserved
Bit 5	-	-	-	"HomingDone" Homing status The technology object is homed.
Bit 6	-	-	-	"Done" No motion job is in progress and the axis control panel is deactivated.
Bit 7 ... Bit 10	-	-	-	Reserved
Bit 11	-	-	-	"HomingCommand" An "MC_Home" job is being processed.
Bit 12... Bit 31	-	-	-	Reserved

9.3.16 "ErrorWord" tag (external encoder) (S7-1500, S7-1500T)

The "<TO>.ErrorWord" tag indicates technology object errors (technology alarms).

Information on the evaluation of the individual bits (e.g. bit 3 "CommandNotAccepted") can be found in the "Evaluating StatusWord, ErrorWord and WarningWord" section of the "S7-1500/S7-1500T Motion Control Overview" documentation (Page 12).

Tags

Legend (Page 331)

Tag	Data type	Values	W	Description
ErrorWord	DWORD	-	RON	

Tag	Data type	Values	W	Description
Bit 0	-	-	-	"SystemFault" A system-internal error has occurred.
Bit 1	-	-	-	"ConfigFault" Configuration error One or more configuration parameters are inconsistent or invalid.
Bit 2	-	-	-	"UserFault" Error in user program at a Motion Control instruction or its use
Bit 3	-	-	-	"CommandNotAccepted" Job cannot be executed A Motion Control instruction cannot be executed because the necessary conditions have not been met.
Bit 4	-	-	-	Reserved
Bit 5	-	-	-	"SensorFault" Error in encoder system
Bit 6	-	-	-	Reserved
Bit 7	-	-	-	"CommunicationFault" Communication error Missing or faulty communication.
Bit 8	-	-	-	Reserved
Bit 9	-	-	-	Reserved
Bit 10	-	-	-	"HomingError" Error during homing operation The homing cannot be completed.
Bit 11	-	-	-	Reserved
Bit 12	-	-	-	Reserved
Bit 13	-	-	-	"PeripheralError" Error accessing a logical address
Bit 14	-	-	-	Reserved
Bit 15	-	-	-	"AdaptionError" Error in automatic data transfer
Bit 16 ... Bit 31	-	-	-	Reserved

9.3.17 "ErrorDetail" tag (external encoder) (S7-1500, S7-1500T)

The tag structure "<TO>.ErrorDetail.<tag name>" contains the alarm number and the effective local alarm response for the technology alarm that is currently pending on the technology object.

You can find a list of the technology alarms and alarm responses in the "Overview of the technology alarms" section of the "S7-1500/S7-1500T Motion Control alarms and error IDs" documentation (Page 12).

Tags

Legend (Page 331)

Tag	Data type	Values	W	Description	
ErrorDetail.	TO_Struct_ErrorDetail				
Number	UDINT	-	RON	Alarm number	
Reaction	DINT	0, 10	RON	Effective alarm response	
				0	No reaction
				10	Remove enable

9.3.18 "WarningWord" tag (external encoder) (S7-1500, S7-1500T)

The "<TO>.WarningWord" tag indicates pending warnings at the technology object. Information on the evaluation of the individual bits (e.g. bit 13 "PeripheralWarning") can be found in the "Evaluating StatusWord, ErrorWord and WarningWord" section of the "S7-1500/S7-1500T Motion Control Overview" documentation (Page 12).

Tags

Legend (Page 331)

Tag	Data type	Values	W	Description
WarningWord	DWORD	-	RON	
Bit 0	-	-	-	"SystemWarning" A system-internal error has occurred.
Bit 1	-	-	-	"ConfigWarning" Configuration error One or several configuration parameters are adjusted internally.
Bit 2	-	-	-	"UserWarning" Error in user program at a Motion Control instruction or its use
Bit 3	-	-	-	"CommandNotAccepted" Job cannot be executed A Motion Control instruction cannot be executed because the necessary conditions have not been met.
Bit 4	-	-	-	Reserved
Bit 5	-	-	-	"SensorWarning" Error in encoder system
Bit 6	-	-	-	Reserved
Bit 7	-	-	-	"CommunicationWarning" Communication error Missing or faulty communication.
Bit 8	-	-	-	Reserved
Bit 9	-	-	-	Reserved

Tag		Data type	Values	W	Description
	Bit 10	-	-	-	"HomingWarning" Error during homing operation The homing cannot be completed.
	Bit 11	-	-	-	Reserved
	Bit 12	-	-	-	Reserved
	Bit 13	-	-	-	"PeripheralWarning" Error accessing a logical address
	Bit 14	-	-	-	Reserved
	Bit 15	-	-	-	"AdaptionWarning" Error in automatic data transfer
	Bit 16... Bit 31	-	-	-	Reserved

9.3.19 "InternalToTrace[1..4]" tag (external encoder) (S7-1500, S7-1500T)

The tag structure "<TO>.InternalToTrace[1..4].<tag name>" contains no relevant data for you. This tag structure is internally used.

Tags

Legend (Page 331)

Tag		Data type	Values	W	Description
InternalToTrace[1..4].		ARRAY [1..4] OF TO_Struct_Internal			
	Id	DINT	-	DIR	-
	Value	LREAL	-	RON	-

Appendix (S7-1500, S7-1500T) A

A.1 "MC_Power" function diagrams (S7-1500, S7-1500T)

A.1.1 Drive connection via PROFIdrive (S7-1500, S7-1500T)

A.1.1.1 PROFIdrive State Machine (S7-1500, S7-1500T)

An axis controls the PROFIdrive state machine in the drive through the control word in the PROFIdrive telegram. The PROFIdrive state machine shows the state of the drive.
The following table shows the states of the PROFIdrive state machine:

Status	Description
S1	Switching on inhibited (drive off, brake closed if necessary)
S2	Ready for power-up
S3	Switched on (drive switched on, release brake if necessary)
S4	Operation (drive released, brakes released if necessary)
S5	Switching off (braking with drive-defined ramp)

Additional information

For more information about the PROFIdrive state machine, refer to Siemens Industry Online Support in the FAQ entry 109770665 (https://support.industry.siemens.com/cs/ww/en/view/109770665).

A.1.1.2 "StopMode" = 0, 2 (S7-1500, S7-1500T)

Function chart: Enabling a technology object and disabling with "StopMode" = 0, 2

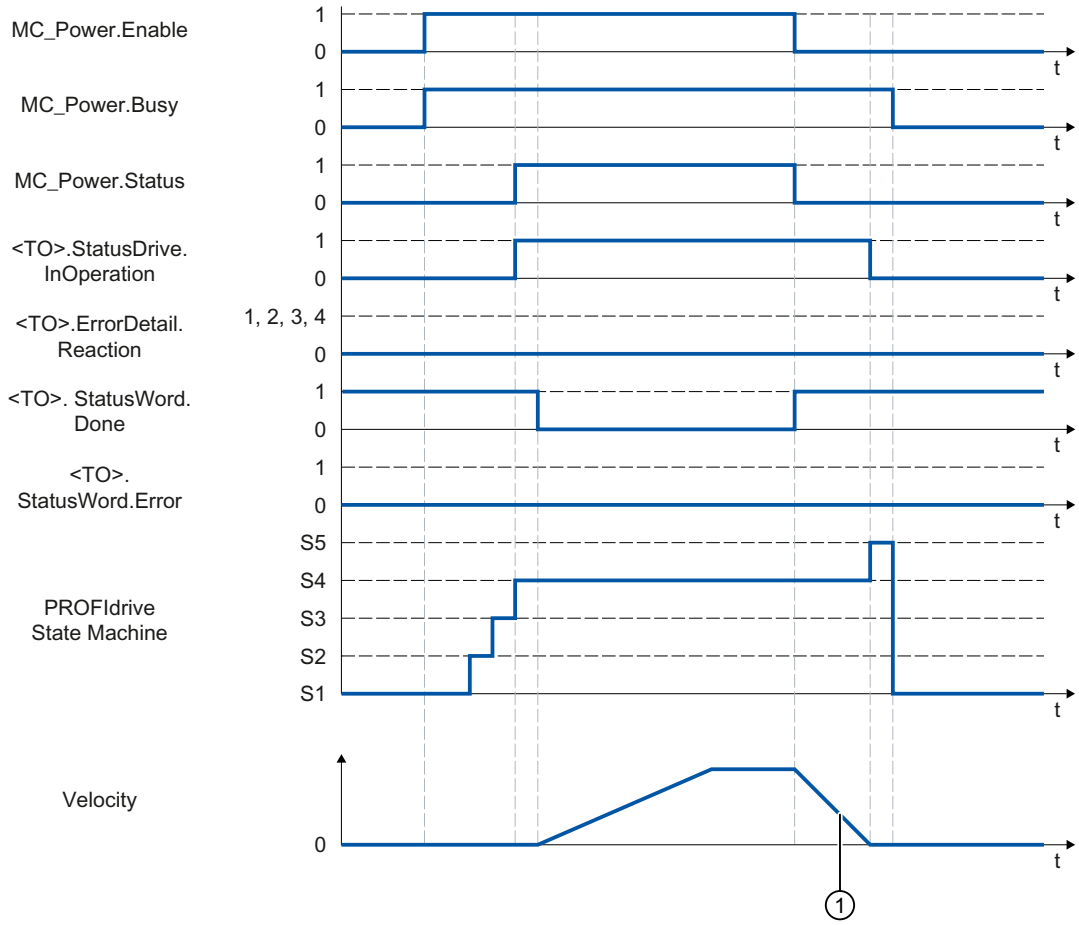

①
- "StopMode" = 0
  The axis is braked with the configured emergency stop deceleration.
- "StopMode" = 2
  The axis decelerates with the configured maximum deceleration.

A.1.1.3 "StopMode" = 1 (S7-1500, S7-1500T)

Function chart: Enabling a technology object and disabling with "StopMode" = 1

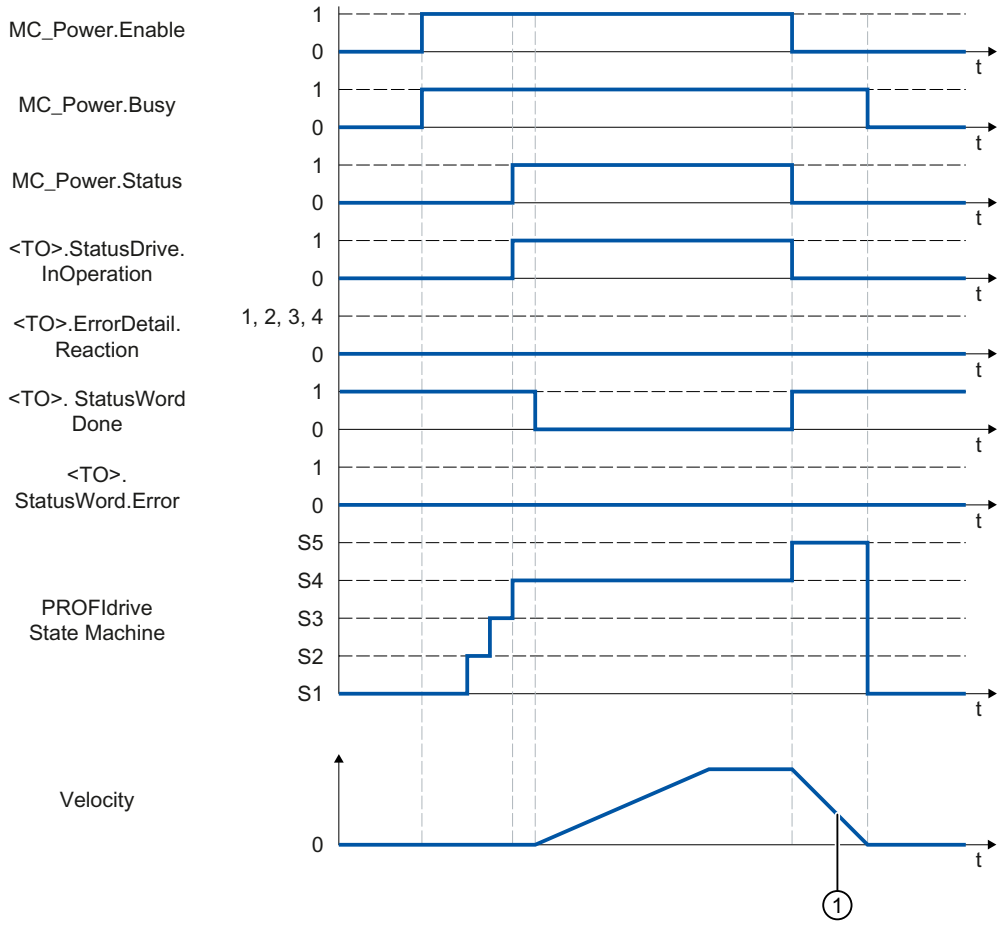

① The deceleration ramp depends on the configuration in the drive.

A.1.1.4 "StopMode" = 3 (S7-1500, S7-1500T)

Function chart: Enabling a technology object and disabling with "StopMode" = 3

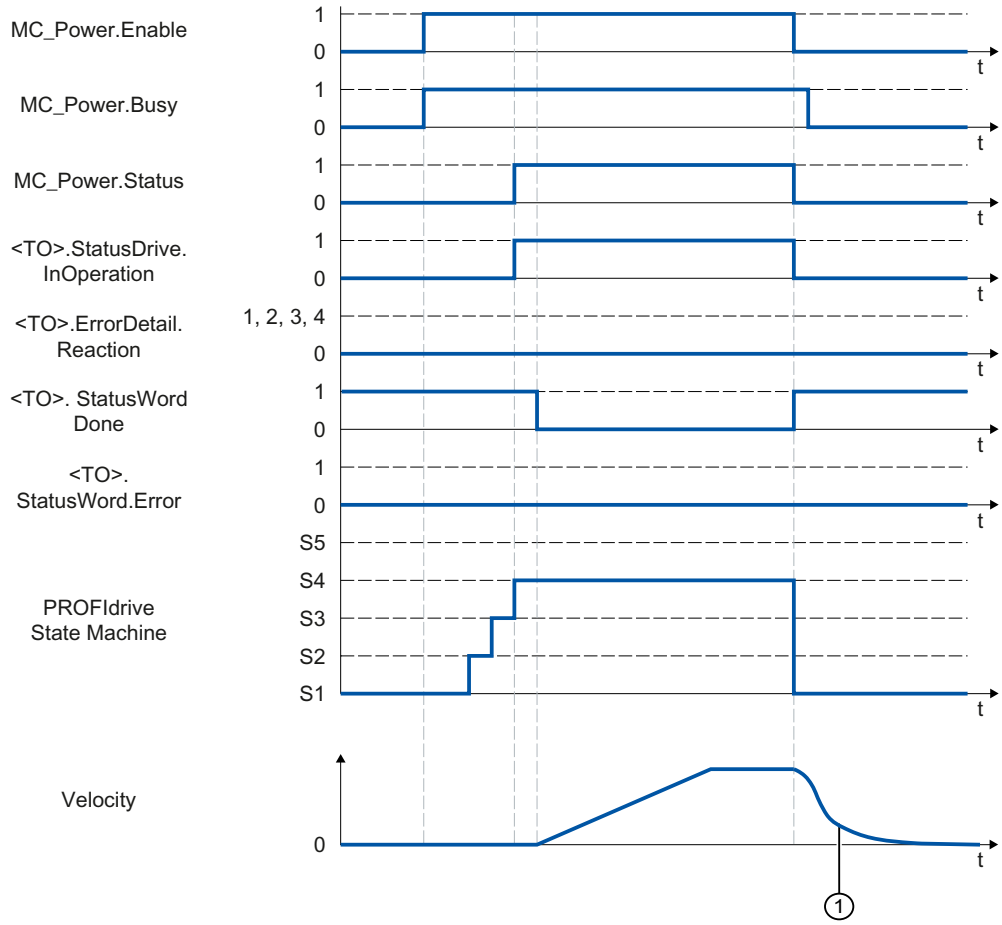

① The drive coasts down. The behavior depends on the mechanical circumstances.

A.1.1.5 Alarm reactions with braking ramp via the technology object (S7-1500, S7-1500T)

Function chart: Enabling a technology object and occurrence of a technology alarm with braking ramp via the technology object

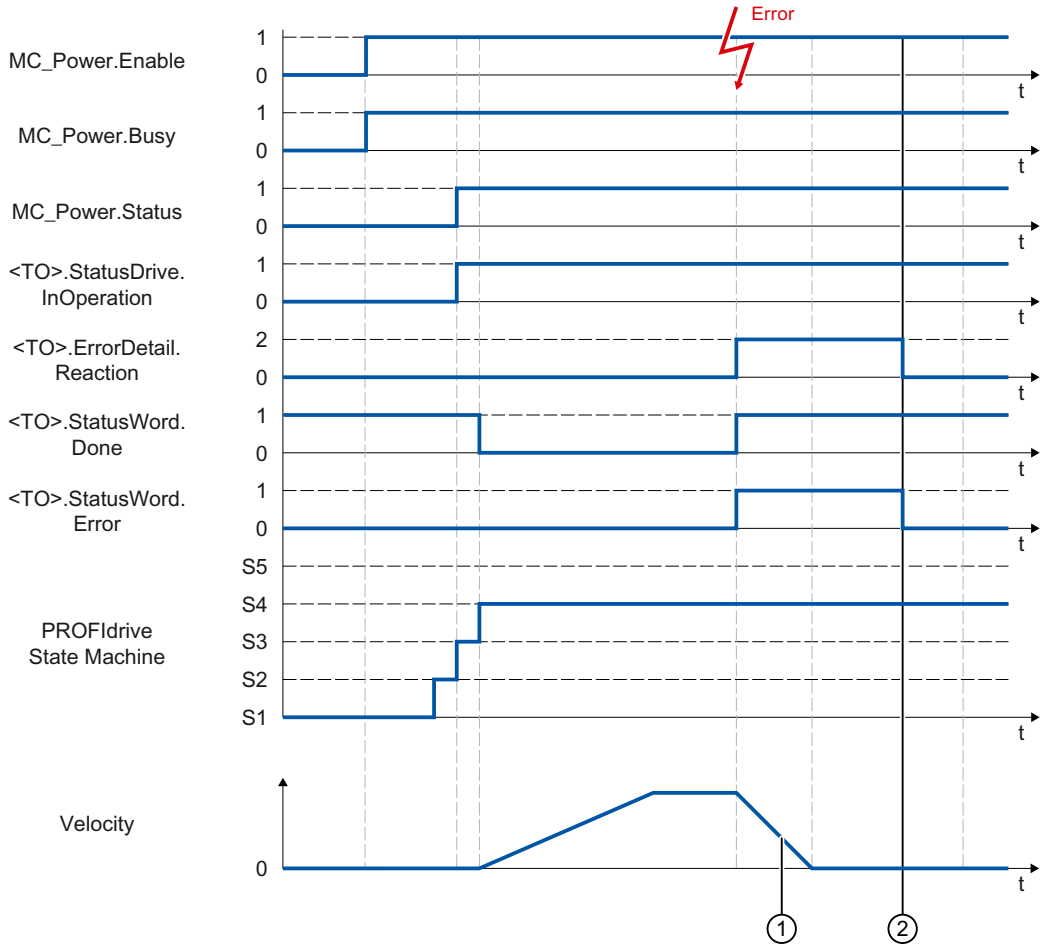

① The axis is braked based on the alarm reaction:
- Stop with current dynamic values (<TO>.ErrorDetail.Reaction = 1)
  The axis is braked with the deceleration in the Motion Control instruction.
- Stop with maximum dynamic values (<TO>.ErrorDetail.Reaction = 2)
  The axis decelerates with the configured maximum deceleration.
- Stop with emergency stop ramp (<TO>.ErrorDetail.Reaction = 3)
  The axis is braked with the configured emergency stop deceleration.

② The technology alarm is acknowledged.

A.1.1.6 Alarm response "Remove enable" (S7-1500, S7-1500T)

Function chart: Enabling a technology object and occurrence of a technology alarm with alarm reaction "Remove enable"

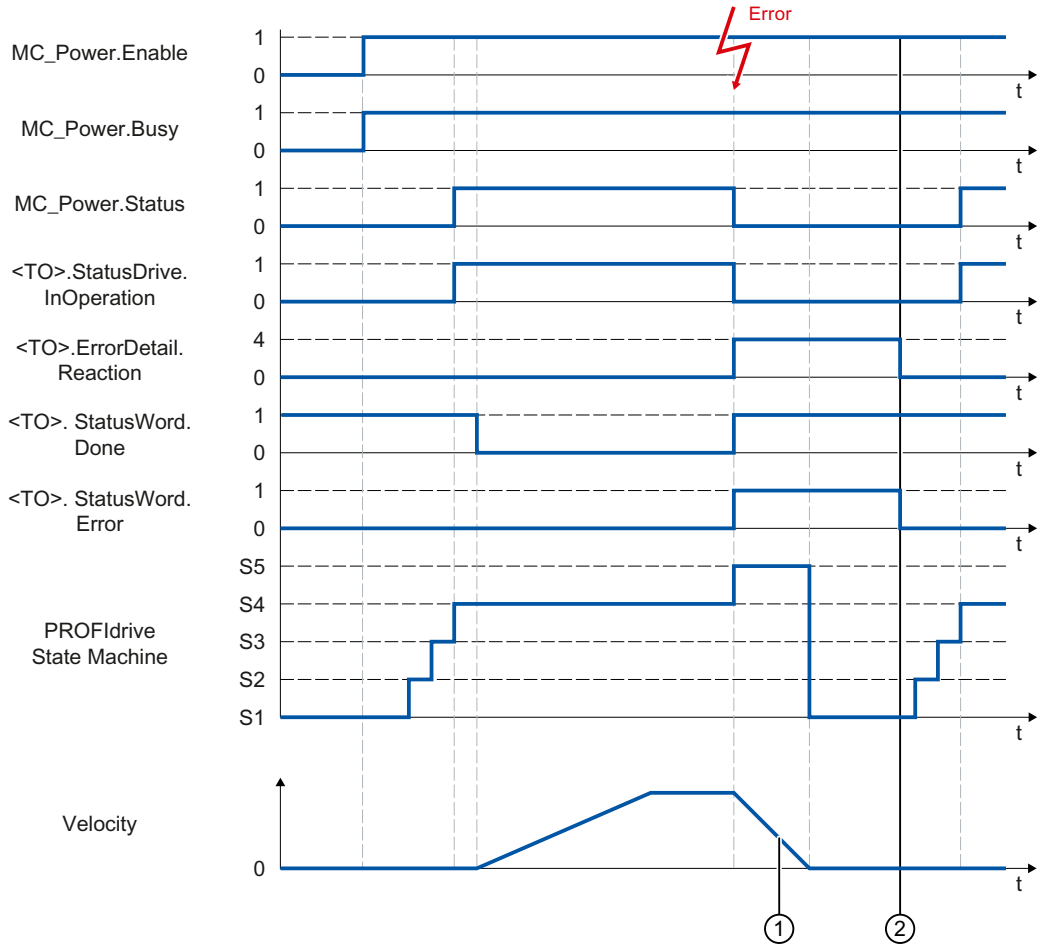

① The deceleration ramp depends on the configuration in the drive.

② The technology alarm is acknowledged at time ②.

A.1.2 Analog drive connection (S7-1500, S7-1500T)

A.1.2.1 "StopMode" = 0, 2 (S7-1500, S7-1500T)

Function chart: Enabling a technology object and disabling with "StopMode" = 0, 2

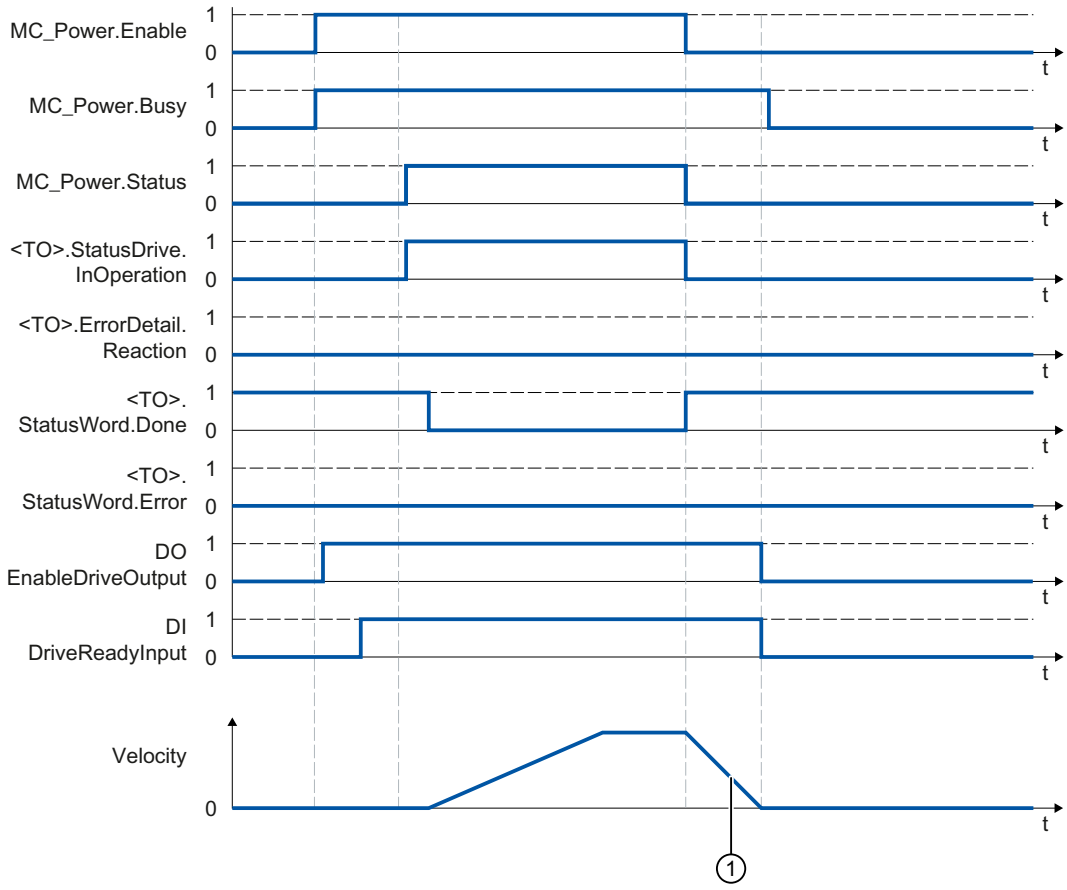

①
- "StopMode" = 0
  The axis is braked with the configured emergency stop deceleration.
- "StopMode" = 2
  The axis decelerates with the configured maximum deceleration.

A.1.2.2 "StopMode" = 1 (S7-1500, S7-1500T)

Function chart: Enabling a technology object and disabling with "StopMode" = 1

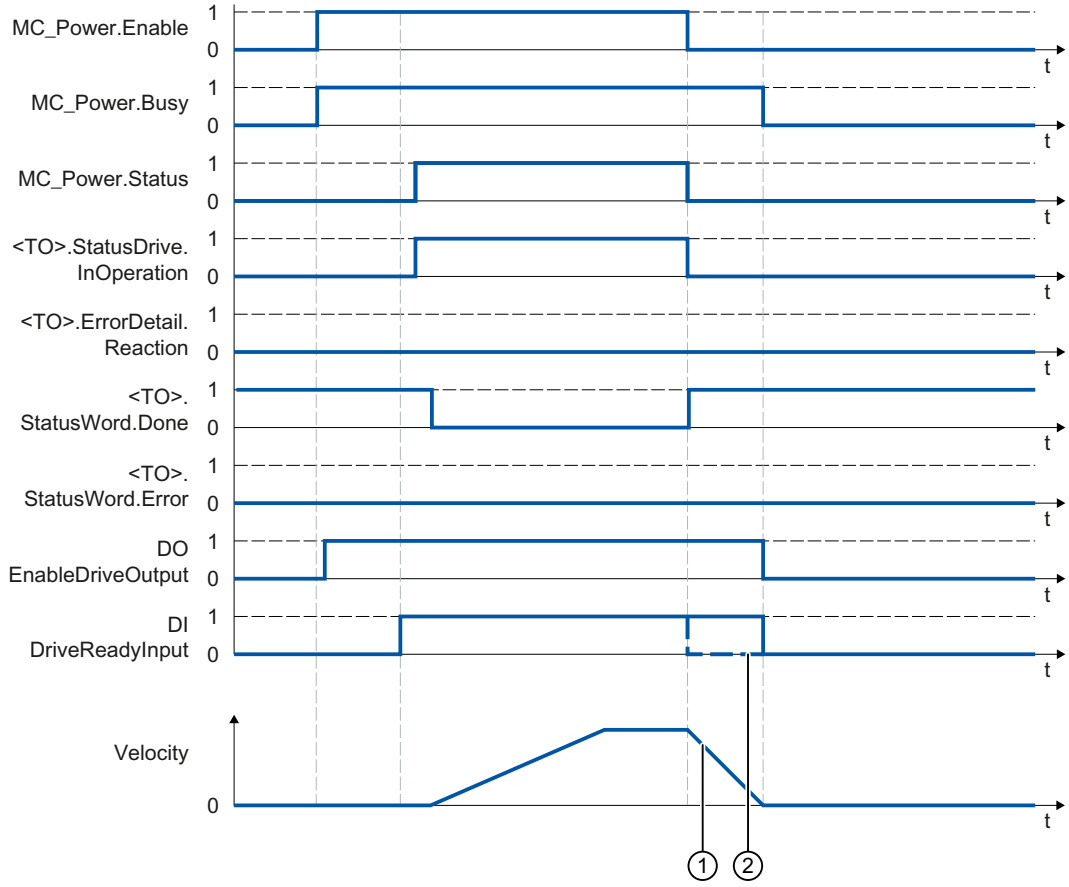

① The deceleration ramp depends on the configuration in the drive.

② The behavior of the ready signal of the drive "DI DriveReadyInput" is manufacturer-specific.

A.1.2.3 "StopMode" = 3 (S7-1500, S7-1500T)

Function chart: Enabling a technology object and disabling with "StopMode" = 3

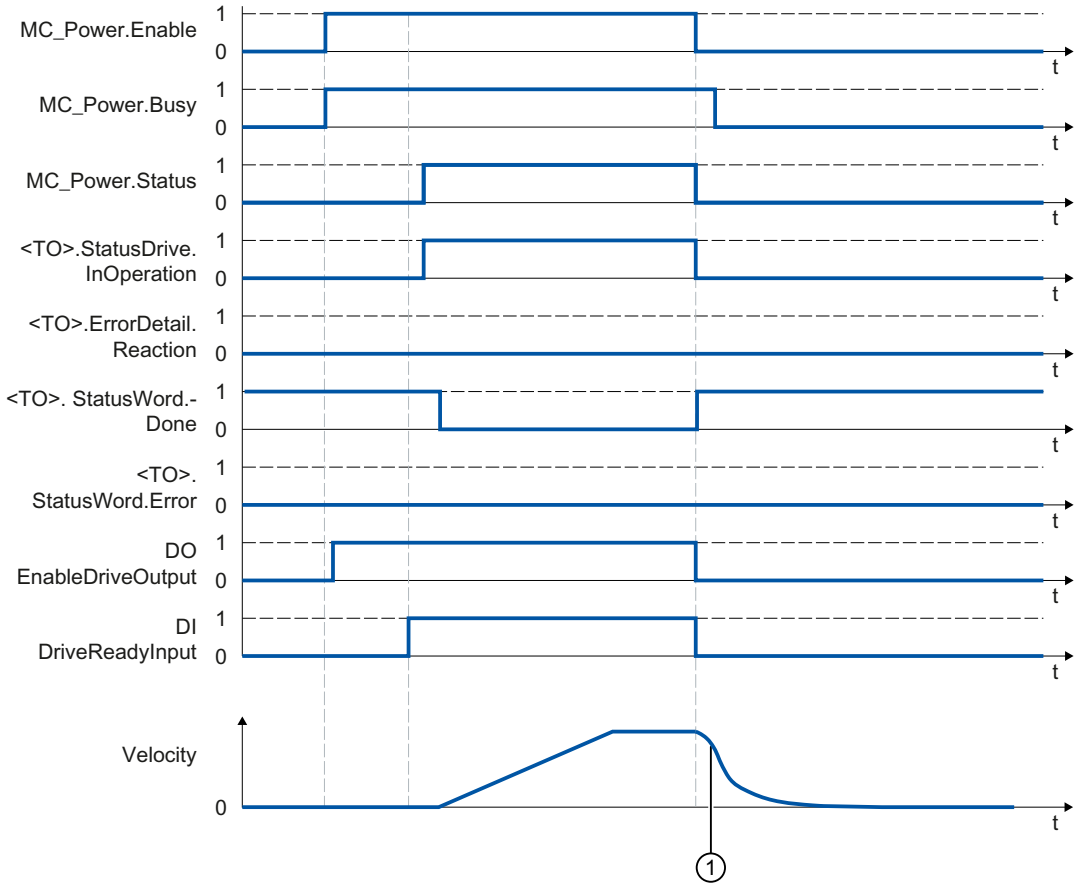

① The drive coasts down. The behavior depends on the mechanical circumstances.

A.1.2.4 Alarm reactions with braking ramp via the technology object (S7-1500, S7-1500T)

Function chart: Enabling a technology object and occurrence of a technology alarm with braking ramp via the technology object

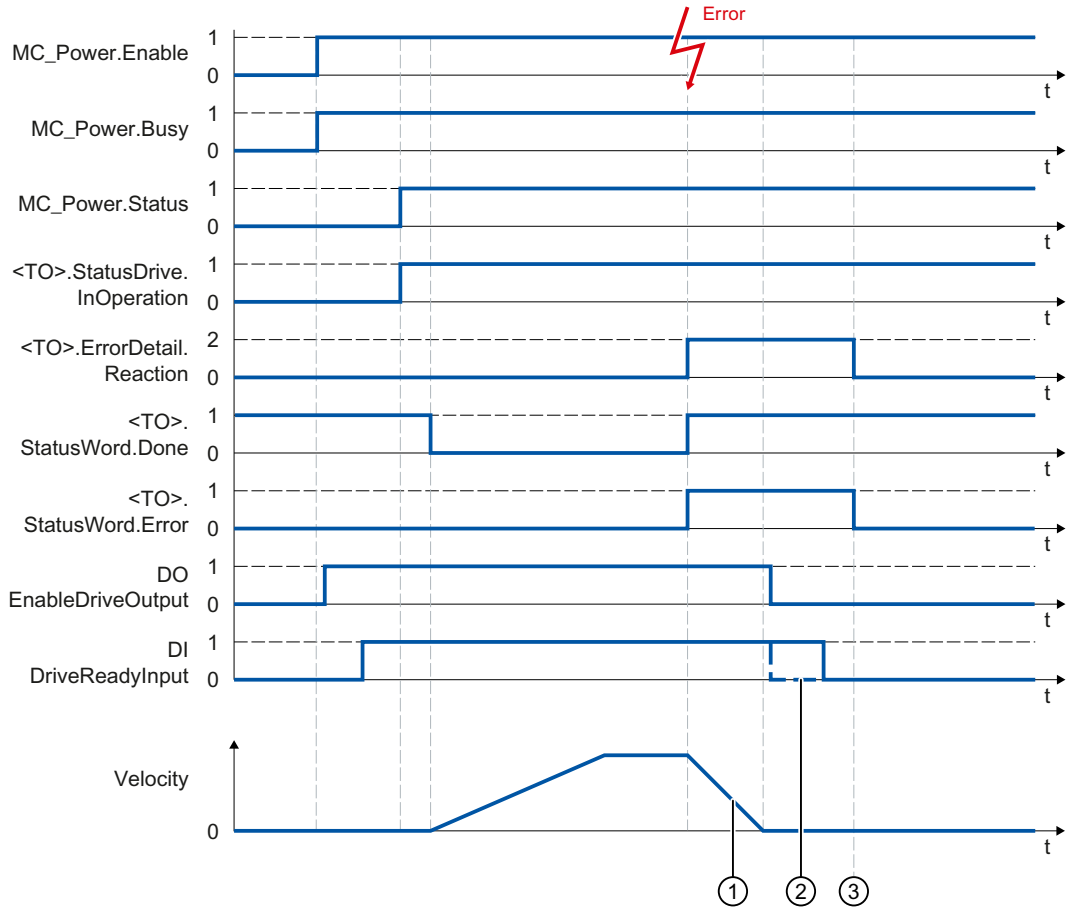

① The axis is braked based on the alarm reaction:
- Stop with current dynamic values (<TO>.ErrorDetail.Reaction = 1)
  The axis is braked with the deceleration in the Motion Control instruction.
- Stop with maximum dynamic values (<TO>.ErrorDetail.Reaction = 2)
  The axis decelerates with the configured maximum deceleration.
- Stop with emergency stop ramp (<TO>.ErrorDetail.Reaction = 3)
  The axis is braked with the configured emergency stop deceleration.

② The behavior of the ready signal of the drive "DI DriveReadyInput" is manufacturer-specific.

③ The technology alarm is acknowledged at time ③.

A.1.2.5 Alarm response "Remove enable" (S7-1500, S7-1500T)

Function chart: Enabling a technology object and occurrence of a technology alarm with alarm reaction "Remove enable"

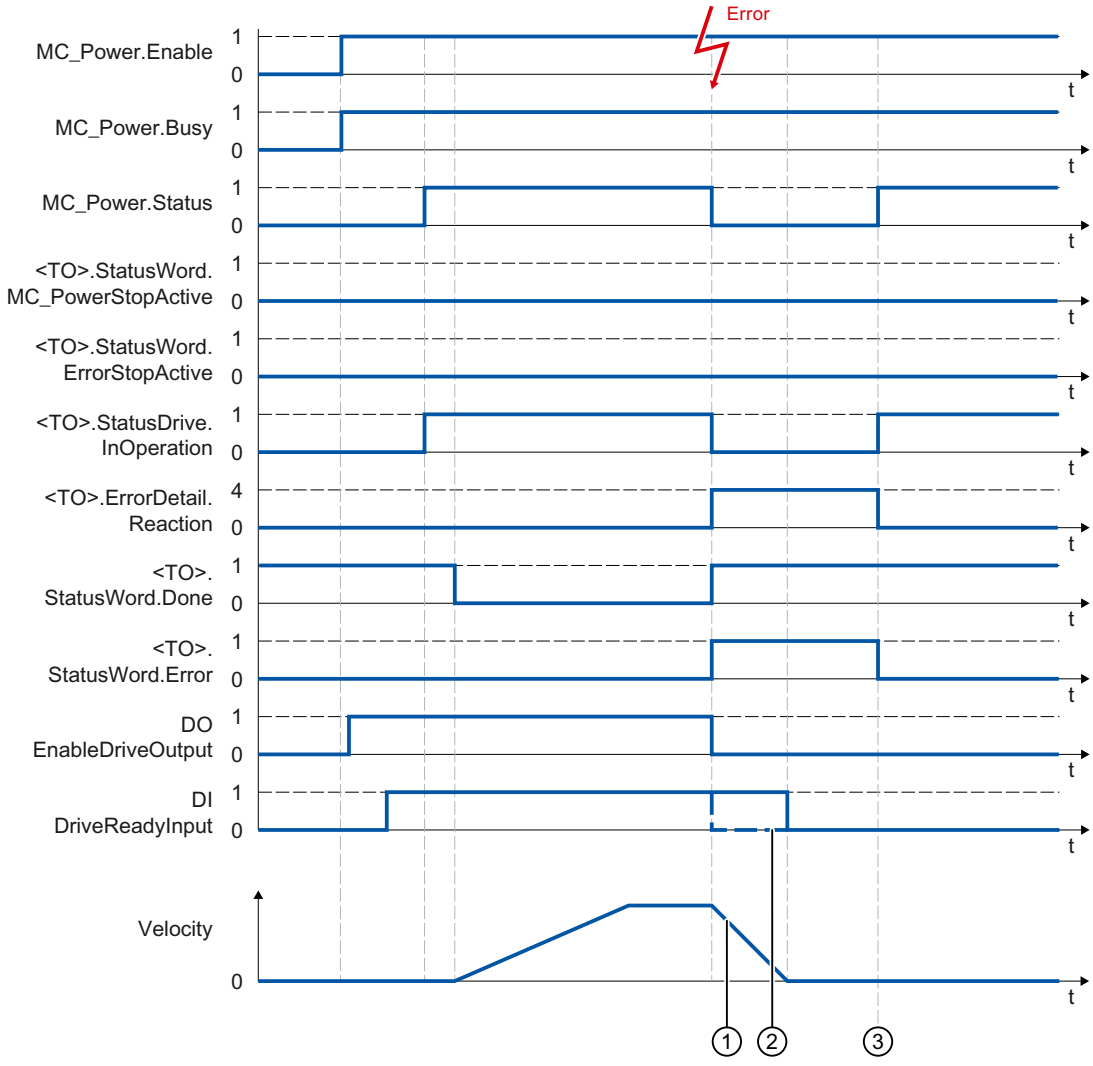

① The deceleration ramp depends on the configuration in the drive.

② The behavior of the ready signal of the drive "DI DriveReadyInput" is manufacturer-specific.

③ The technology alarm is acknowledged at time ③.

A.2 Signal flow diagrams position control (S7-1500, S7-1500T)

Signal flow diagrams position control

Position control in the drive with DSC

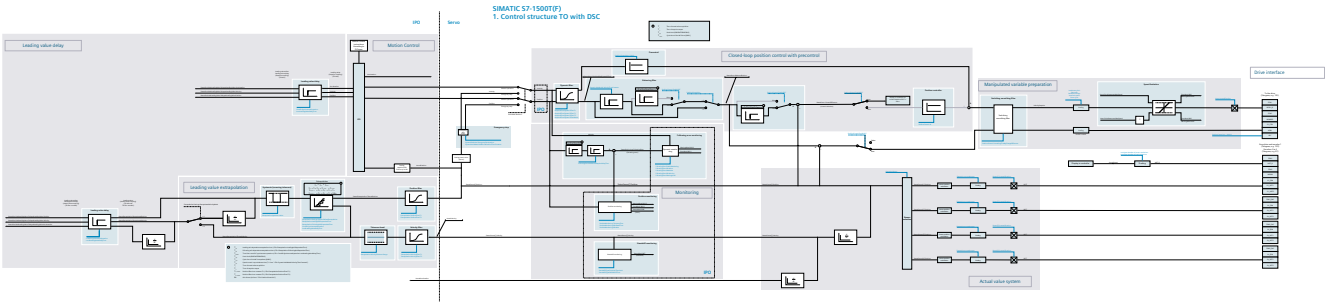

Position control in the CPU

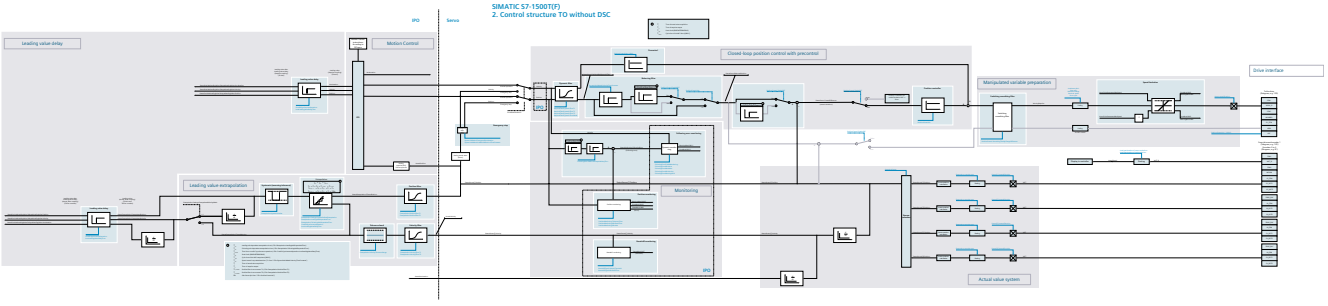

Glossary

(S7-1500, S7-1500T)

Absolute synchronous operation

Function corresponds to the Motion Control instruction MC_GearInPos or MC_CamIn.

Absolute value encoder

Position encoder which outputs the position in the form of a digital numerical value. This numerical value is unique within the entire measuring range of the absolute value encoder.

Axis control panel

The axis control panel allows you to move the axis in manual mode, optimize the axis settings, and test the operation of the axis in your system.

Axis type

The axis type differs depending on the unit of measurement according to which the axis is positioned.
Depending on the execution of the mechanics, an axis is implemented as a linear axis or rotary axis:

- For linear axes, the position of the axis is specified as a linear measure, e.g. millimeters (mm).
- For rotary axes, the position of the axis is specified as an angular measure, e.g. degrees (°).

Communication processor (CP)

Module for expanded communications tasks covering special applications, for example in the area of security.

Communications module (CM)

Module for communications tasks which is used as an interface expansion of the CPU (for example PROFIBUS) or provides additional communications options (e.g. PtP) in an automation system.

Drive

The combination of motor (electric or hydraulic), actuator (converter, valve), control system, measuring system and supply (infeed, accumulator).

Dynamic Servo Control (DSC)

In drives that support DSC, you can optionally use the position controller in the drive. The position controller in the drive is usually implemented with a rapid speed-control cycle. This improves the control performance for digitally coupled drives.

Following error

The following error is the difference between the position setpoint and the actual position value. The transmission times of the setpoint to the drive, and of the actual position value to the controller, are taken into account in the calculation of the following error.

GSD file

As a Generic Station Description, this file contains all properties of a PROFINET or PROFIBUS device that are necessary for its configuration.

Hardware limit switch

Mechanical limit position switch that limits the maximum permissible traversing range of the axis.

Homing

With homing, you create the relationship between the position in the technology object and the mechanical position of the axis. The position value in the technology object is assigned to a homing mark at the same time. This homing mark represents a known mechanical position.

Incremental encoder

Position encoder which outputs the position change incrementally in the form of a digital numerical value.

Kv factor

Gain factor of the position controller

Master value

Input value for synchronous operation

Motion Control instruction

Use the Motion Control instructions to start Motion Control jobs at technology objects in your user program and thus execute the desired functionality at the technology objects. You track the status of running jobs with the output parameters of the Motion Control instructions.

Override

Percentage correction of the velocity/speed

Processing cycle clock

The processing of a technology object in the servo cycle clock.

PROFIdrive

PROFIdrive is a profile specified by the PNO (PROFIBUS user organization) for PROFIBUS DP and PROFINET IO for speed- and position-controlled drives.

PROFIdrive frame

Frame for communication according to PROFIdrive.

Relative gearing

Function corresponds to the Motion Control instruction MC_GearIn.

Restart

The technology object is reinitialized with the current configuration parameters.

Safe Stop 1 (SS1)

The Safe Stop 1 (SS1) safety function brings a drive to standstill quickly and safely via an internal rapid stop ramp. Safe Torque Off (STO) is activated after standstill. STO ensures that no more torque generating energy acts on a drive. This prevents unintended startup of the drive.

You can use the SS1 safety function when a fast stop of the drive with a subsequent transition to STO is required. SS1 is used, for example, to quickly stop high inertia loads or to brake drives quickly and safely at high speeds

Safe Stop 2 (SS2)

The Safe Stop 2 (SS2) safety function brings a drive to standstill quickly and safely via an internal rapid stop ramp. After standstill is reached, the standstill position is monitored on the drive side. The drive can deliver full torque to maintain the standstill.

SS2, for example, is used for processing machines and machine tools.

Safe Torque Off (STO)

The Safe Torque Off (STO) safety function is the most commonly used and most basic drive-internal safety function. STO ensures that no more torque generating energy acts on a drive. This prevents unintended startup of the drive. The pulses of the drive are eliminated. The drive is reliably torque-free. This state is monitored internally in the drive.

You can use STO when the drive comes to a standstill in a sufficiently short time on its own due to the load torque or due to friction. Other areas of use are where "coasting" of the drive has no relevance for safety.

Software limit switch

A programmable position which limits the traversing range of an axis.

Synchronization

The phase of the following axis to reach synchronous movement.

Synchronous operation

Defined synchronous movement after synchronization of a following axis to a leading axis.

Technology alarm

If an error occurs at a technology object (e.g. approaching a hardware limit switch), a technology alarm is triggered and indicated.
The impact of a technology alarm on the technology object is specified by the alarm reaction (e.g. remove enable). The alarm reaction is specified by the system.

Technology data block

The technology data block represents the technology object and contains all configuration data, setpoint and actual values, and status information of the technology object.

Technology module (TM)

Module for technological tasks, e.g. counting, measuring and positioning.

Zero mark

Position reference for the movement of rotary and linear incremental encoders. The zero mark of an incremental encoder is used as a homing mark, for example.

Index

A

Absolute actual value, 56
Absolute encoder adjustment, 130, 151
Active homing, 129, 137, 138
Active homing to hardware limit switch, 141
Additive setpoint torque, 106
Axis control panel, 175, 176
Axis type, 32

C

Closed-loop control, 163, 165, 166, 171

D

Direct homing, 130, 149
Direction reversal at the hardware limit switch, 133, 140
Disable axis
  Stop, 245
Drives compatibility list, 39
DSC (Dynamic Servo Control), 165, 166, 171
Dynamic default values, 98
Dynamic limits, 93
Dynamic Servo Control (DSC), 165, 171

E

Emergency stop deceleration, 102
Encoder mounting type, 76, 92
External encoder
  Basics, 27
  Functions, 29
  Diagnostics, 197
  Diagnostics, 199
  Diagnostics, 200
  Tags, 332

F

Fixed stop, 149
Following error monitoring, 157, 159, 161

G

Gain (Kv factor), 167

H

Hardware limit switches, 116, 121
Hardware limit switches , 117
Home position, 133
Homing, 149
Homing mark, 132

I

Incremental actual value, 56
Incremental encoder adjustment, 130, 153

J

Jerk limit, 98

L

Leadscrew pitch, 92
Limit switches, 116, 117, 121, 124
Linear axis, 32
Load gear, 92

M

Master control, 175
MC_Halt, 212, 215
MC_HaltSuperimposed, 239
MC_HaltSuperimposed:, 241
MC_Home, 209
MC_MotionInPosition, 259, 262
MC_MotionInSuperimposed, 264, 266
MC_MotionInVelocity, 255, 258
MC_MoveAbsolute, 216, 220
MC_MoveJog, 230, 234
MC_MoveRelative, 221, 224
MC_MoveSuperimposed, 235, 238
MC_MoveVelocity, 225, 229
MC_Power, 201, 206
MC_Reset, 207
MC_SaveAbsoluteEncoderData, 254
MC_SetAxisSTW, 251
MC_SetSensor, 243
MC_Stop, 245, 250
MC_TorqueAdditive, 106, 268, 270
MC_TorqueLimiting, 274, 277
MC_TorqueRange, 106, 270, 273
MC_WriteParameter, 252
Mechanics
  Speed axis, 76
  Positioning axis/synchronous axis, 76
  External encoder, 82
Modulo, 34

O

Optimize position controller, 181

P

Passive homing, 129, 143, 145, 146
Position control, 163, 165, 166, 171
Positioning axis
  Basics, 22
  Functions, 29
  Diagnostics, 191
  Diagnostics, 195
  Diagnostics, 197
  Tags, 300
Positioning monitoring, 157
Position limits, 116, 117, 121, 124, 126
Position monitoring, 157, 161
PROFIdrive, 45, 61

R

Reference cam, 132
Reversing cam, 133, 140
Rotary axis, 33

S

S7-1500 motion control, 29
  Motion control instruction, 29
  Technology object, 29
  Drive and encoder connection, 39
  Dynamic settings, 114
  Position monitoring, 157

S7-1500 Motion Control
Technology object, 21
Technology object, 22
Technology object, 25
Technology object, 27
Axis type, 32
Unit of measure, 34
Modulo, 34
Drive and encoder connection, 38
Drive and encoder connection, 41
Drive and encoder connection, 43
PROFIdrive, 45
Telegram, 46
Drive and encoder connection, 46
Actual value, 56
PROFIdrive, 61
Telegram, 61
Drive and encoder connection, 61
Telegram, 67
Drive and encoder connection, 67
Mechanics, 92
Dynamic settings, 93
Dynamic settings, 98
Dynamic settings, 102
Position limits, 116
Position limits, 117
Position limits, 121
Position limits, 124
Position limits, 125
Position limits, 126
Homing, 132
Homing, 135
Homing, 140
Homing, 141
Homing, 143
Homing, 149
Homing, 151
Homing, 155
Homing, 156
Position monitoring, 157
Position monitoring, 159
Position monitoring, 161
Closed-loop control, 163
Closed-loop control, 165
Closed-loop control, 166
Closed-loop control, 171
Commissioning, 173
Commissioning, 173
Commissioning, 175
Commissioning, 176
Commissioning, 181

S7-1500 Motion Control actual value, 56

S7-1500 Motion Control commissioning, 173, 173, 175, 176, 181

S7-1500 motion control drive connection, 39

S7-1500 Motion Control drive connection, 38, 41, 43, 46, 61, 67

S7-1500 Motion Control encoder connection, 38, 41, 43, 46, 61, 67

S7-1500 Motion Control homing
Active, 129
Passive, 129
On the fly, 129
Direct, 130
Set position setpoint, 130
Absolute encoder adjustment, 130
Incremental encoder adjustment, 130
Homing mode, 130
Homing mark, 132
Zero mark, 132
Reference cam, 132
Home position, 133
Reversing cam, 133
Active, 135
Active, 137
active, 138
Reversing cam, 140
Passive, 143
On the fly, 143
Passive, 145
On the fly, 145
Passive, 146
On the fly, 146
Direct, 149
Absolute encoder adjustment, 151
Incremental encoder adjustment, 153

S7-1500 motion control instruction
Overview, 29

S7-1500 Motion Control mechanics, 92

S7-1500 Motion Control optimization, 181

S7-1500 Motion Control telegram, 46, 61, 67

S7-1500T motion control
Technology object, 29
Motion control instruction, 29

Set position setpoint, 130

SINAMICS V90 PN, 39

Software limit switches, 116, 124, 125
Speed axis
  Basics, 21
  Functions, 29
  Diagnostics, 187
  Diagnostics, 190
  Diagnostics, 191
  Tags, 286
Speed control loop substitute time, 167
Standstill signal, 157
Startdrive, 39
Synchronous axis
  Basics, 25
  Diagnostics, 195
  Diagnostics, 197

T

Tags
  Drive and encoder connection, 67
  Mechanics, 92
  Motion control and dynamic limits, 114
  Traversing range limitation, 126
  Homing, 156
  Position monitoring functions, 161
  Closed-loop control, 171
  Speed axis technology object, 286
  Positioning axis technology object, 300
  Technology object external encoder, 332
T-CPU, 29
Technology data block
  Tags of the speed axis technology object, 286
  Tags of the positioning axis technology object, 300
  Tags of the technology object external encoder, 332
Technology object
  Speed axis, 21
  Positioning axis, 22
  Synchronous axis, 25
  External encoder, 27
  External encoder, 29
  Positioning axis, 29
  Speed axis, 29
  Speed axis, 187
  Speed axis, 190
  Speed axis, 191
  Positioning axis, 191
  Positioning axis, 195
  Synchronous axis, 195
  Positioning axis, 197
  Synchronous axis, 197
  External encoder, 197
  External encoder, 199
  External encoder, 200
Torque limits, 106
Torque setpoint, 106
Traversing range limitation, 116, 117, 121, 124, 125, 126

U

Unit of measure, 34

V

Velocity precontrol, 166
Velocity profile, 98

Z

Zero mark, 132

SIEMENS

Edition 11/2022

FUNCTION MANUAL

SIMATIC

S7-1500

S7-1500/S7-1500T Measuring input and cam functions V7.0 as of STEP 7 V18

support.industry.siemens.com

SIEMENS

SIMATIC

S7-1500
S7-1500/S7-1500T Measuring input and cam functions V7.0 as of STEP 7 V18

Function Manual

Introduction (S7-1500, S7-1500T) 1

Safety instructions (S7-1500, S7-1500T) 2

Basics (S7-1500, S7-1500T) 3

Configuring (S7-1500, S7-1500T) 4

Diagnostics (S7-1500, S7-1500T) 5

Instructions (S7-1500, S7-1500T) 6

Tags of the technology object data blocks (S7-1500, S7-1500T) 7

S7-1500/S7-1500T Motion Control

11/2022
A5E47009899-AC

Legal information

Warning notice system

This manual contains notices you have to observe in order to ensure your personal safety, as well as to prevent damage to property. The notices referring to your personal safety are highlighted in the manual by a safety alert symbol, notices referring only to property damage have no safety alert symbol. These notices shown below are graded according to the degree of danger.

⚠ DANGER
indicates that death or severe personal injury **will** result if proper precautions are not taken.

⚠ WARNING
indicates that death or severe personal injury **may** result if proper precautions are not taken.

⚠ CAUTION
indicates that minor personal injury can result if proper precautions are not taken.

NOTICE
indicates that property damage can result if proper precautions are not taken.

If more than one degree of danger is present, the warning notice representing the highest degree of danger will be used. A notice warning of injury to persons with a safety alert symbol may also include a warning relating to property damage.

Qualified Personnel

The product/system described in this documentation may be operated only by **personnel qualified** for the specific task in accordance with the relevant documentation, in particular its warning notices and safety instructions. Qualified personnel are those who, based on their training and experience, are capable of identifying risks and avoiding potential hazards when working with these products/systems.

Proper use of Siemens products

Note the following:

⚠ WARNING
Siemens products may only be used for the applications described in the catalog and in the relevant technical documentation. If products and components from other manufacturers are used, these must be recommended or approved by Siemens. Proper transport, storage, installation, assembly, commissioning, operation and maintenance are required to ensure that the products operate safely and without any problems. The permissible ambient conditions must be complied with. The information in the relevant documentation must be observed.

Trademarks

All names identified by ® are registered trademarks of Siemens AG. The remaining trademarks in this publication may be trademarks whose use by third parties for their own purposes could violate the rights of the owner.

Disclaimer of Liability

We have reviewed the contents of this publication to ensure consistency with the hardware and software described. Since variance cannot be precluded entirely, we cannot guarantee full consistency. However, the information in this publication is reviewed regularly and any necessary corrections are included in subsequent editions.

Siemens AG
Digital Industries
Postfach 48 48
90026 NÜRNBERG
GERMANY

A5E47009899-AC
Ⓟ 10/2022 Subject to change

Copyright © Siemens AG 2019 - 2022.
All rights reserved

Table of contents

1 Introduction (S7-1500, S7-1500T) ... 7

1.1 S7-1500 Motion Control Documentation Guide (S7-1500, S7-1500T) ... 8

1.2 Function Manuals documentation guide (S7-1500, S7-1500T) ... 9
1.2.1 Information classes Function Manuals (S7-1500, S7-1500T) ... 9
1.2.2 Basic tools (S7-1500, S7-1500T) ... 10
1.2.3 SIMATIC Technical Documentation (S7-1500, S7-1500T) ... 12

2 Safety instructions (S7-1500, S7-1500T) ... 14

3 Basics (S7-1500, S7-1500T) ... 15

3.1 Functions (S7-1500, S7-1500T) ... 15

3.2 Measuring input technology object (S7-1500, S7-1500T) ... 16
3.2.1 Measuring (S7-1500, S7-1500T) ... 19
3.2.1.1 One-time measurement (S7-1500, S7-1500T) ... 19
3.2.1.2 Cyclic measuring (S7-1500, S7-1500T) ... 20
3.2.2 Measuring with measuring range (S7-1500, S7-1500T) ... 23
3.2.3 Time-related boundary conditions (S7-1500, S7-1500T) ... 25
3.2.4 Tags: Measuring input technology object (S7-1500, S7-1500T) ... 26

3.3 Output cam technology object (S7-1500, S7-1500T) ... 29
3.3.1 Distance output cam (S7-1500, S7-1500T) ... 31
3.3.2 Time-based output cam (S7-1500, S7-1500T) ... 34
3.3.3 Activation direction of cam (S7-1500, S7-1500T) ... 35
3.3.4 Hysteresis (S7-1500, S7-1500T) ... 37
3.3.5 Compensation of actuator switching times (S7-1500, S7-1500T) ... 39
3.3.6 Tags: Output cam technology object (S7-1500, S7-1500T) ... 40

3.4 Cam track technology object (S7-1500, S7-1500T) ... 43
3.4.1 Modulo function (S7-1500, S7-1500T) ... 47
3.4.2 Effective direction (S7-1500, S7-1500T) ... 48
3.4.3 Changing the cam track data during operation (S7-1500, S7-1500T) ... 50
3.4.4 Activation behavior (S7-1500, S7-1500T) ... 50
3.4.5 Hysteresis (S7-1500, S7-1500T) ... 53
3.4.6 Time offset of cam switching points (S7-1500, S7-1500T) ... 53
3.4.7 Tags: Cam track technology object (S7-1500, S7-1500T) ... 53

4 Configuring (S7-1500, S7-1500T) ... 56

4.1 Configuring the technology object measuring input (S7-1500, S7-1500T) ... 56
4.1.1 Configuration - Basic parameters (S7-1500, S7-1500T) ... 56
4.1.2 Configuration - Hardware interface (S7-1500, S7-1500T) ... 56
4.1.3 Configuration - Extended parameters (S7-1500, S7-1500T) ... 58

4.2 Configuring the output cam technology object (S7-1500, S7-1500T) ... 59

4.2.1 Configuration - Basic parameters (S7-1500, S7-1500T) 59
4.2.2 Configuration - Hardware interface (S7-1500, S7-1500T) 60
4.2.3 Extended parameters (S7-1500, S7-1500T) 60
4.2.3.1 Configuration - Activation time (S7-1500, S7-1500T) 60
4.2.3.2 Configuration - Hysteresis (S7-1500, S7-1500T) 61

4.3 Configuring the cam track technology object (S7-1500, S7-1500T) 61
4.3.1 Configuration - Basic parameters (S7-1500, S7-1500T) 61
4.3.2 Configuration - Hardware interface (S7-1500, S7-1500T) 62
4.3.3 Extended parameters (S7-1500, S7-1500T) 62
4.3.3.1 Track data (S7-1500, S7-1500T) 62
4.3.3.2 Configuration - Output cam data (S7-1500, S7-1500T) 63

5 Diagnostics (S7-1500, S7-1500T) 65

5.1 Measuring input technology object (S7-1500, S7-1500T) 65
5.1.1 Status and error bits (S7-1500, S7-1500T) 65

5.2 Output cam technology object (S7-1500, S7-1500T) 67
5.2.1 Status and error bits (S7-1500, S7-1500T) 67

5.3 Cam track technology object (S7-1500, S7-1500T) 68
5.3.1 Status and error bits (S7-1500, S7-1500T) 68
5.3.2 Cam track status (S7-1500, S7-1500T) 70

6 Instructions (S7-1500, S7-1500T) 72

6.1 MC_MeasuringInput V7 (S7-1500, S7-1500T) 72
6.1.1 MC_MeasuringInput: Start measuring once V7 (S7-1500, S7-1500T) 72
6.1.2 MC_MeasuringInput: Function chart V7 (S7-1500, S7-1500T) 75

6.2 MC_MeasuringInputCyclic V7 (S7-1500, S7-1500T) 75
6.2.1 MC_MeasuringInputCyclic: Start cyclic measuring V7 (S7-1500, S7-1500T) 75
6.2.2 MC_MeasuringInputCyclic: Function chart V7 (S7-1500, S7-1500T) 78

6.3 MC_AbortMeasuringInput V7 (S7-1500, S7-1500T) 80
6.3.1 MC_AbortMeasuringInput: Cancel active measuring job V7 (S7-1500, S7-1500T) 80

6.4 MC_OutputCam V7 (S7-1500, S7-1500T) 81
6.4.1 MC_OutputCam: Activate/deactivate output cam V7 (S7-1500, S7-1500T) 81
6.4.2 MC_OutputCam: Function chart V7 (S7-1500, S7-1500T) 84

6.5 MC_CamTrack V7 (S7-1500, S7-1500T) 85
6.5.1 MC_CamTrack: Activate/deactivate cam track V7 (S7-1500, S7-1500T) 85
6.5.2 MC_CamTrack: Function chart V7 (S7-1500, S7-1500T) 87

6.6 Override response of Motion Control jobs V7 (S7-1500, S7-1500T) 88
6.6.1 Override response V7: Homing and motion jobs (S7-1500, S7-1500T) 88
6.6.2 Override response V7: Synchronous operation jobs (S7-1500, S7-1500T) 90
6.6.3 Override response V7: Measuring input jobs (S7-1500, S7-1500T) 92
6.6.4 Override response V7: Kinematics motion commands (S7-1500T) 92

7 Tags of the technology object data blocks (S7-1500, S7-1500T)..... 95

7.1 Tags of the measuring input technology object (S7-1500, S7-1500T)..... 95
7.1.1 Legend (S7-1500, S7-1500T)..... 95
7.1.2 Display data (measuring input) (S7-1500, S7-1500T)..... 95
7.1.3 "Parameter" tag (measuring input) (S7-1500, S7-1500T)..... 96
7.1.4 "Interface" tag (measuring input) (S7-1500, S7-1500T)..... 96
7.1.5 "Units" tag (measuring input) (S7-1500, S7-1500T)..... 97
7.1.6 "MeasuredValues" tag (measuring input) (S7-1500, S7-1500T)..... 97
7.1.7 "StatusWord" tag (measuring input) (S7-1500, S7-1500T)..... 98
7.1.8 "ErrorWord" tag (measuring input) (S7-1500, S7-1500T)..... 99
7.1.9 "ErrorDetail" tag (measuring input) (S7-1500, S7-1500T)..... 99
7.1.10 "WarningWord" tag (measuring input) (S7-1500, S7-1500T)..... 100

7.2 Tags of the output cam technology object (S7-1500, S7-1500T)..... 100
7.2.1 Legend (S7-1500, S7-1500T)..... 100
7.2.2 Display data (output cam) (S7-1500, S7-1500T)..... 101
7.2.3 "Parameter" tag (output cam) (S7-1500, S7-1500T)..... 101
7.2.4 "Interface" tag (output cam) (S7-1500, S7-1500T)..... 102
7.2.5 "Units" tag (output cam) (S7-1500, S7-1500T)..... 102
7.2.6 "StatusWord" tag (output cam) (S7-1500, S7-1500T)..... 103
7.2.7 "ErrorWord" tag (output cam) (S7-1500, S7-1500T)..... 104
7.2.8 "ErrorDetail" tag (output cam) (S7-1500, S7-1500T)..... 104
7.2.9 "WarningWord" tag (output cam) (S7-1500, S7-1500T)..... 105

7.3 Tags of the cam track technology object (S7-1500, S7-1500T)..... 106
7.3.1 Legend (S7-1500, S7-1500T)..... 106
7.3.2 Display data (cam track) (S7-1500, S7-1500T)..... 106
7.3.3 "Parameter" tag (cam track) (S7-1500, S7-1500T)..... 107
7.3.4 "Interface" tag (cam track) (S7-1500, S7-1500T)..... 108
7.3.5 "Units" tag (cam track) (S7-1500, S7-1500T)..... 108
7.3.6 "StatusWord" tag (cam track) (S7-1500, S7-1500T)..... 109
7.3.7 "ErrorWord" tag (cam track) (S7-1500, S7-1500T)..... 109
7.3.8 "ErrorDetail" tag (cam track) (S7-1500, S7-1500T)..... 110
7.3.9 "WarningWord" tag (cam track) (S7-1500, S7-1500T)..... 111

Index..... 112

Introduction (S7-1500, S7-1500T) 1

Purpose of the documentation

This documentation provides important information that you need to configure and commission the integrated Motion Control functionality of the S7-1500 Automation systems.

Required basic knowledge

In order to understand this documentation, the following knowledge is required:

- General knowledge in the field of automation
- General knowledge in the field of drive engineering and motion control

Validity of the documentation

This documentation is valid for the S7-1500 product range.

Conventions

- For the path settings in the project navigation it is presumed that the "Technology objects" object is opened in the CPU subtree. The "Technology object" placeholder represents the name of the technology object.
  Example: "Technology object > Configuration > Basic parameters".
- The <TO> placeholder represents the name set in tags for the respective technology object.
  Example: <TO>.Actor.Type
- This documentation contains pictures of the devices described. The pictures may differ in minor details from the devices supplied.

You should also observe the notes that are marked as follows:

NOTE

A note contains important information about the product described in the documentation, about the handling of the product, and about sections in this documentation demanding your particular attention.

Industry Mall

The Industry Mall is the catalog and ordering system of Siemens AG for automation and drive solutions on the basis of Totally Integrated Automation (TIA) and Totally Integrated Power (TIP).

You can find catalogs for all automation and drive products on the Internet (https://mall.industry.siemens.com).

1.1 S7-1500 Motion Control Documentation Guide (S7-1500, S7-1500T)

Product information

Please also note the supplementary information on the Motion Control documentation:

- Product information on the S7-1500/1500T Motion Control documentation
  https://support.industry.siemens.com/cs/ww/en/view/109794046
  (https://support.industry.siemens.com/cs/ww/en/view/109794046)

Documentation

The documentation of the Motion Control functions is divided into the following documents:

- S7-1500/S7-1500T Motion Control Overview
  https://support.industry.siemens.com/cs/ww/en/view/109812056
  (https://support.industry.siemens.com/cs/ww/en/view/109812056)
  This document describes the innovations in the technology versions, functions that are used for all technology objects, and the process response of Motion Control applications.
- S7-1500/S7-1500T Motion Control alarms and error IDs
  https://support.industry.siemens.com/cs/ww/en/view/109812061
  (https://support.industry.siemens.com/cs/ww/en/view/109812061)
  This document describes the technology alarms of the technology objects and the error identifications of the Motion Control instructions.
- S7-1500/S7-1500T Axis functions
  https://support.industry.siemens.com/cs/ww/en/view/109812057
  (https://support.industry.siemens.com/cs/ww/en/view/109812057)
  This document describes the drive and encoder connection and functions for single-axis movements.
- S7-1500/S7-1500T Synchronous operation functions
  https://support.industry.siemens.com/cs/ww/en/view/109812059
  (https://support.industry.siemens.com/cs/ww/en/view/109812059)
  This document describes gearing, velocity synchronous operation and camming as well as cross-PLC synchronous operation.
- S7-1500/S7-1500T Measuring input and cam functions
  https://support.industry.siemens.com/cs/ww/en/view/109812060
  (https://support.industry.siemens.com/cs/ww/en/view/109812060)
  This document describes the detection of the actual position via a measuring input and the output of switching signals via output cam or cam track.
- S7-1500/S7-1500T Kinematics functions
  https://support.industry.siemens.com/cs/ww/en/view/109812058
  (https://support.industry.siemens.com/cs/ww/en/view/109812058)
  This document describes the control of kinematics with up to 6 interpolating axes.

See also

Topic page "SIMATIC Technology - Motion Control: Overview and Important Links"
https://support.industry.siemens.com/cs/ww/en/view/109751049
(https://support.industry.siemens.com/cs/ww/en/view/109751049)

1.2 Function Manuals documentation guide (S7-1500, S7-1500T)

1.2.1 Information classes Function Manuals (S7-1500, S7-1500T)

The documentation for the SIMATIC S7-1500 automation system, for the 1513/1516pro-2 PN, SIMATIC Drive Controller CPUs based on SIMATIC S7-1500 and the SIMATIC ET 200MP, ET 200SP, ET 200AL and ET 200eco PN distributed I/O systems is arranged into three areas.
This arrangement enables you to access the specific content you require.
You can download the documentation free of charge from the Internet (https://support.industry.siemens.com/cs/ww/en/view/109742705).

Basic information

The system manuals and Getting Started describe in detail the configuration, installation, wiring and commissioning of the SIMATIC S7-1500, SIMATIC Drive Controller, ET 200MP, ET 200SP, ET 200AL and ET 200eco PN systems. Use the corresponding operating instructions for 1513/1516pro-2 PN CPUs.
The STEP 7 online help supports you in the configuration and programming.
Examples:

- Getting Started S7-1500
- System manuals
- Operating instructions ET 200pro and 1516pro-2 PN CPU
- Online help TIA Portal

Device information

Equipment manuals contain a compact description of the module-specific information, such as properties, wiring diagrams, characteristics and technical specifications.
Examples:

- Equipment manuals for CPUs
- Equipment manuals for interface modules
- Equipment manuals for digital modules
- Equipment manuals for analog modules
- Equipment manuals for communication modules
- Equipment manuals for technology modules
- Equipment manuals for power supply modules
- Equipment manuals for BaseUnits

General information

The function manuals contain detailed descriptions on general topics relating to the SIMATIC Drive Controller and the S7-1500 automation system.
Examples:

- Function Manual Diagnostics
- Function Manual Communication
- Function Manuals Motion Control
- Function Manual Web Server
- Function Manual Cycle and Response Times
- PROFINET Function Manual
- PROFIBUS Function Manual

Product Information

Changes and supplements to the manuals are documented in a Product Information. The Product Information takes precedence over the device and system manuals.
You will find the latest Product Information on the Internet:

- S7-1500/ET 200MP (https://support.industry.siemens.com/cs/de/en/view/68052815)
- SIMATIC Drive Controller (https://support.industry.siemens.com/cs/de/en/view/109772684/en)
- Motion Control (https://support.industry.siemens.com/cs/de/en/view/109794046/en)
- ET 200SP (https://support.industry.siemens.com/cs/de/en/view/73021864)
- ET 200eco PN (https://support.industry.siemens.com/cs/ww/en/view/109765611)

Manual Collections

The Manual Collections contain the complete documentation of the systems put together in one file.
You will find the Manual Collections on the Internet:

- S7-1500/ET 200MP/SIMATIC Drive Controller (https://support.industry.siemens.com/cs/ww/en/view/86140384)
- ET 200SP (https://support.industry.siemens.com/cs/ww/en/view/84133942)
- ET 200AL (https://support.industry.siemens.com/cs/ww/en/view/95242965)
- ET 200eco PN (https://support.industry.siemens.com/cs/ww/en/view/109781058)

1.2.2 Basic tools (S7-1500, S7-1500T)

The tools described below support you in all steps: from planning, over commissioning, all the way to analysis of your system.

TIA Selection Tool

The TIA Selection Tool tool supports you in the selection, configuration, and ordering of devices for Totally Integrated Automation (TIA).
As successor of the SIMATIC Selection Tools , it assembles the configuration editors for automation technology already familiar into a single tool.

With the TIA Selection Tool , you can generate a complete order list from your product selection or product configuration.
You can find the TIA Selection Tool on the Internet.
(https://support.industry.siemens.com/cs/ww/en/view/109767888)

SIMATIC Automation Tool

You can use the SIMATIC Automation Tool to perform commissioning and maintenance activities on various SIMATIC S7 stations as bulk operations independent of TIA Portal.
The SIMATIC Automation Tool offers a wide range of functions:

- Scanning of a PROFINET/Ethernet system network and identification of all connected CPUs
- Assignment of addresses (IP, subnet, Gateway) and device name (PROFINET device) to a CPU
- Transfer of the date and the programming device/PC time converted to UTC time to the module
- Program download to CPU
- RUN/STOP mode switchover
- CPU localization through LED flashing
- Reading out of CPU error information
- Reading the CPU diagnostic buffer
- Reset to factory settings
- Firmware update of the CPU and connected modules

You can find the SIMATIC Automation Tool on the Internet.
(https://support.industry.siemens.com/cs/ww/en/view/98161300)

PRONETA

SIEMENS PRONETA (PROFINET network analysis) is a commissioning and diagnostic tool for PROFINET networks. PRONETA Basic has two core functions:

- The "Network analysis" offers a quick overview of the PROFINET topology. It is possible to make simple parameter changes (for example, to the names and IP addresses of the devices). In addition, a quick and convenient comparison of the real configuration with a reference system is also possible.
- The "IO test" is a simple and rapid test of the wiring and the module configuration of a plant, including documentation of the test results.

You can find SIEMENS PRONETA Basic on the Internet:
(https://support.industry.siemens.com/cs/ww/en/view/67460624)
SIEMENS PRONETA Professional is a licensed product that offers you additional functions. It offers you simple asset management in PROFINET networks and supports operators of automation systems in automatic data collection/acquisition of the components used through various functions:

- The user interface (API) offers an access point to the automation cell to automate the scan functions using MQTT or a command line.
- With PROFIenergy diagnostics, you can quickly detect the current pause mode or the readiness for operation of devices that support PROFIenergy and change these as needed.
- The data record wizard supports PROFINET developers in reading and writing acyclic PROFINET data records quickly and easily without PLC and engineering.

You can find SIEMENS PRONETA Professional on the Internet.
(https://www.siemens.com/proneta-professional)

SINETPLAN

SINETPLAN, the Siemens Network Planner, supports you in planning automation systems and networks based on PROFINET. The tool facilitates professional and predictive dimensioning of your PROFINET installation as early as in the planning stage. In addition, SINETPLAN supports you during network optimization and helps you to exploit network resources optimally and to plan reserves. This helps to prevent problems in commissioning or failures during productive operation even in advance of a planned operation. This increases the availability of the production plant and helps improve operational safety.

The advantages at a glance

- Network optimization thanks to port-specific calculation of the network load
- Increased production availability thanks to online scan and verification of existing systems
- Transparency before commissioning through importing and simulation of existing STEP 7 projects
- Efficiency through securing existing investments in the long term and the optimal use of resources

You can find SINETPLAN on the Internet
(https://new.siemens.com/global/en/products/automation/industrial-communication/profinet/sinetplan.html).

1.2.3 SIMATIC Technical Documentation (S7-1500, S7-1500T)

Additional SIMATIC documents will complete your information. You can find these documents and their use at the following links and QR codes.

The Industry Online Support gives you the option to get information on all topics. Application examples support you in solving your automation tasks.

Overview of the SIMATIC Technical Documentation

Here you will find an overview of the SIMATIC documentation available in Siemens Industry Online Support:

Industry Online Support International
(https://support.industry.siemens.com/cs/ww/en/view/109742705)

Watch this short video to find out where you can find the overview directly in Siemens Industry Online Support and how to use Siemens Industry Online Support on your mobile device:

Quick introduction to the technical documentation of automation products per video (https://support.industry.siemens.com/cs/us/en/view/109780491)

YouTube video: Siemens Automation Products - Technical Documentation at a Glance (https://youtu.be/TwLSxxRQQsA)

mySupport

With "mySupport" you can get the most out of your Industry Online Support.

Registration	You must register once to use the full functionality of "mySupport". After registration, you can create filters, favorites and tabs in your personal workspace.
Support requests	Your data is already filled out in support requests, and you can get an overview of your current requests at any time.
Documentation	In the Documentation area you can build your personal library.
Favorites	You can use the "Add to mySupport favorites" to flag especially interesting or frequently needed content. Under "Favorites", you will find a list of your flagged entries.
Recently viewed articles	The most recently viewed pages in mySupport are available under "Recently viewed articles".
CAx data	The CAx data area gives you access to the latest product data for your CAx or CAe system. You configure your own download package with a few clicks: • Product images, 2D dimension drawings, 3D models, internal circuit diagrams, EPLAN macro files • Manuals, characteristics, operating manuals, certificates • Product master data

You can find "mySupport" on the Internet. (https://support.industry.siemens.com/My/ww/en)

Application examples

The application examples support you with various tools and examples for solving your automation tasks. Solutions are shown in interplay with multiple components in the system - separated from the focus on individual products.
You can find the application examples on the Internet.
(https://support.industry.siemens.com/cs/ww/en/ps/ae)

Safety instructions (S7-1500, S7-1500T) 2

Siemens provides products and solutions with industrial security functions that support the secure operation of plants, systems, machines and networks.

In order to protect plants, systems, machines and networks against cyber threats, it is necessary to implement – and continuously maintain – a holistic, state-of-the-art industrial security concept. Siemens' products and solutions constitute one element of such a concept.

Customers are responsible for preventing unauthorized access to their plants, systems, machines and networks. Such systems, machines and components should only be connected to an enterprise network or the internet if and to the extent such a connection is necessary and only when appropriate security measures (e.g. firewalls and/or network segmentation) are in place.

For additional information on industrial security measures that may be implemented, please visit (https://www.siemens.com/industrialsecurity).

Siemens' products and solutions undergo continuous development to make them more secure. Siemens strongly recommends that product updates are applied as soon as they are available and that the latest product versions are used. Use of product versions that are no longer supported, and failure to apply the latest updates may increase customers' exposure to cyber threats.

To stay informed about product updates, subscribe to the Siemens Industrial Security RSS Feed visit (https://www.siemens.com/cert).

Basics (S7-1500, S7-1500T) 3

3.1 Functions (S7-1500, S7-1500T)

You execute the functions of the measuring input, output cam and cam track technology objects via the Motion Control instructions in your user program.

The following table shows the Motion Control instructions that are supported by the technology objects:

Motion Control instruction	Validity		Technology object		
	S7-1500	S7-1500T	Measuring input (Page 15)	Output cam (Page 28)	Cam track (Page 42)
"MC_Reset" Acknowledge alarms, restart technology objects	✓	✓	✓	✓	✓
"MC_MeasuringInput" Start measuring once	✓	✓	✓	-	-
"MC_MeasuringInputCyclic" Start cyclic measuring	✓	✓	✓	-	-
"MC_AbortMeasuringInput" Cancel active measuring job	✓	✓	✓	-	-
"MC_OutputCam" Activate/deactivate output cam	✓	✓	-	✓	-
"MC_CamTrack" Activate/deactivate cam track	✓	✓	-	-	✓

3.2 Measuring input technology object (S7-1500, S7-1500T)

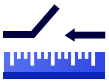

The measuring input technology object acquires the actual position of an axis or external encoder at a signal change at the measuring input.
You can find an overview of the functions of the measuring input technology object in the "Functions (Page 15)" section.
The following figure shows the basic principle of operation of the measuring input technology object:

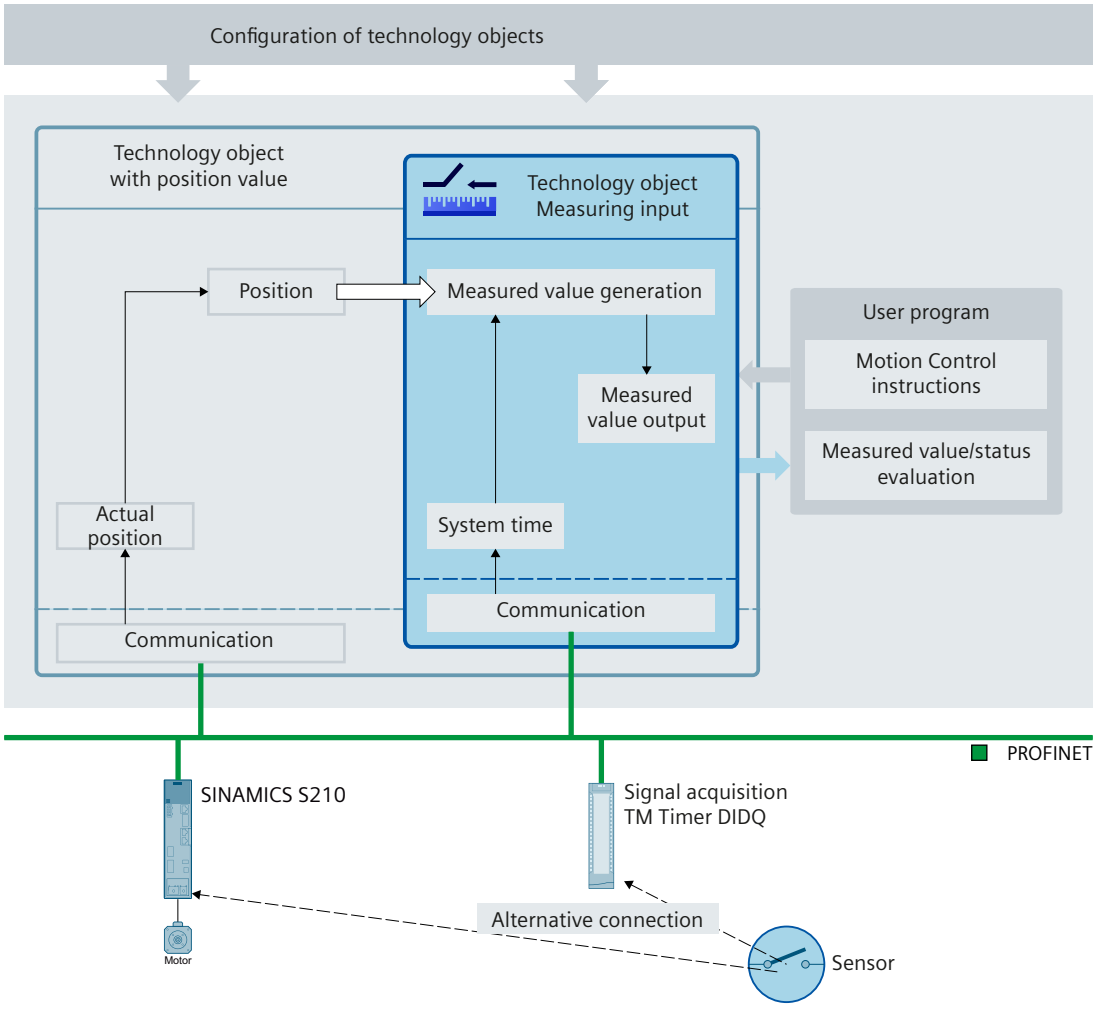

Measurement types

The following types of measurement can be performed:

- One-time measurement (Page 19)
  Up to two measured values are acquired with edge accuracy with one measuring job. A one-time measuring job is started with "MC_MeasuringInput".
- Cyclic measuring (Page 20)
  With cyclic measuring, up to two measured values are acquired with edge accuracy in each position control cycle.
  A cyclic measuring job is started with "MC_MeasuringInputCyclic". The measurements are continued cyclically until they are ended per command.

The edges to be detected are selected when starting the measurement using Motion Control instruction "MC_MeasuringInput" or "MC_MeasuringInputCyclic".

Assignment

The measuring input technology object must always be assigned to another technology object whose position will be evaluated by the measuring input.
The measuring input technology object can be assigned to the following technology objects:

- Synchronous axis
- Positioning axis
- External encoder

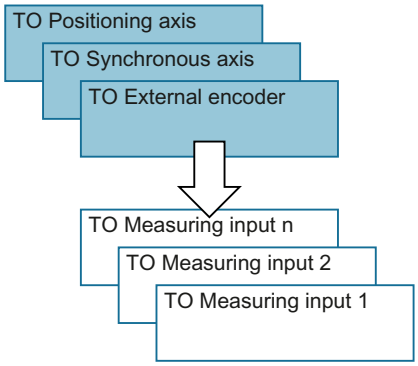

Exactly one axis or one external encoder can be assigned to a measuring input technology object.
An axis or external encoder can be assigned multiple measuring input technology objects.

Measured value determination

The position can be detected using support from the hardware in one of the following ways:

- **Measurement using Timer DI**
  With measured value acquisition via time value, the time points of the signal changes are recorded precisely. The time stamps are then transferred to the controller and the associated actual positions are determined in the technology object.
  Measurement using Timer DI requires isochronous mode.
- **Measurement using SINAMICS (central probe)**
  With central measuring inputs, the time points of the signal changes are recorded precisely. The time stamps are then transferred to the controller via telegram 39x and the associated actual positions are determined in the technology object.
  Measurements via a central measuring input are only possible for SINAMICS drives, see "Compatibility list (https://support.industry.siemens.com/cs/ww/en/view/109750431)". The maximum usable cycle time on the bus is limited, see "Time-related boundary conditions (Page 25)".
  Measurement using SINAMICS (central probe) requires isochronous mode.
  You can find more information on the telegrams in the "PROFIdrive telegrams configuration" section of the "S7-1500/S7-1500T Axis functions" documentation (Page 8).
- **Measurement using PROFIdrive telegram (drive or external encoder)**
  With measurement using PROFIdrive telegram, the measurement input is connected to the drive device and measurement takes place directly in the drive. The position value is determined on a signal change at the measurement input. The drive or encoder module communicates the determined position value to the technology object via the PROFIdrive telegram.
  With measurement using PROFIdrive telegram, only one measurement input at a time can be active on an actual value or encoder in the PROFIdrive telegram. A maximum of two measuring inputs can be configured on an actual value or encoder in the PROFIdrive telegram via PROFIdrive; see section "Automatic transfer of drive and encoder parameters in the device" of the "S7-1500/S7-1500T Axis functions" documentation (Page 8).

Measuring job

A measuring job is started using the Motion Control instruction "MC_MeasuringInput" (one-time measuring) or "MC_MeasuringInputCyclic" (cyclic measuring). Cyclic measuring is only available at selected measurement inputs. You can find an overview in the "Configuration - Hardware interface (Page 56)" section. One-time measuring is always possible.

The resulting measured value is indicated at the respective output of the Motion Control instruction "MC_MeasuringInput" or "MC_MeasuringInputCyclic".

Use with SIMATIC S7-PLCSIM

The measuring input technology object cannot be used with SIMATIC S7-PLCSIM. The measuring input technology object and the measuring input jobs used in the user program can be loaded into SIMATIC S7-PLCSIM, but have no function. Measured values are not shown.

Correction time

The time of the measurement can be corrected by setting a correction time (<TO>.Parameter.CorrectionTime) for the measuring input technology object.

Corrections may be required for the following examples:

- Times for mechanical displacement of the measuring input
- Times for the generation of the measured signal before the input at the measurement module
- Filter times at measurement input

The correction time is included in the calculation for all measuring input types of the measuring input technology object.

Also note the time delay when measuring on a virtual axis, see section "Virtual axis (Page 8)" of the "S7-1500/S7-1500T Axis functions" documentation.

3.2.1 Measuring (S7-1500, S7-1500T)

3.2.1.1 One-time measurement (S7-1500, S7-1500T)

With one-time measurement, up to two edges can be detected with one measuring job. The associated actual positions are signaled back in the function block and in the technology data block and can be further processed in the user program.

Measuring job

A measuring job is started using the Motion Control instruction "MC_MeasuringInput". The "<TO>.Status" tag in the technology data block changes to "WAITING_FOR_TRIGGER". The technology object activates the measurement when the selected edge is detected.

- The measurement occurs at the measurement input in the form of up to two system times. Based on the times, the associated position is determined and output, taking into consideration a correction time, if present.
- With direct position detection, the detected position value is supplied directly from the drive or encoder module to the technology object via the PROFIdrive telegram.

The measurement is then finished. An additional measurement must be restarted using Motion Control instruction "MC_MeasuringInput".

Configured "Mode" parameter in Motion Control instruction "MC_MeasuringInput"	Output of Motion Control instruction "MC_MeasuringInput"	
	"MeasuredValue1"	"MeasuredValue2"
Measure positive edge only	Actual position at the time of the edge	–
Measure negative edge only		
Measure the next two edges	Actual position at the time of the first edge	Actual position at the time of the second edge
Measure the next two edges starting with the positive edge	Actual position at the time of the positive edge	Actual position at the time of the negative edge
Measure the next two edges starting with the negative edge	Actual position at the time of the negative edge	Actual position at the time of the positive edge

The last detected values are set in the technology data block. If a new job is initiated with the function block, the outputs of the function block are initialized. The technology data block is not initialized. After detecting the first valid measuring cycle, the values in the technology data block and function block are consistent with one another.

The finished measuring job is indicated in the function block in "MC_MeasuringInput.DONE" = TRUE or in the technology data block in "<TO>.Status" = "TRIGGER_OCCURRED".

Temporal requirements for measuring jobs via "MC_MeasuringInput"

The hardware-related restrictions to measuring via the PROFIdrive telegram (drive or encoder) or measuring via SINAMICS (central probe) result in time requirements for the period until the measuring event can be recorded.

When measuring once via "MC_MeasuringInput" with "Mode" = 3 (measurement at both edges, beginning with the rising edge) or "Mode" = 4 (measurement at both edges, beginning with the falling edge), a minimum interval of several servo cycles is therefore required between the first edge to be measured and the previous edge, so that the first edge to be measured can be recorded.

You can find information on the temporal boundary conditions in the section Time-related boundary conditions (Page 25).

See also

Time-related boundary conditions (Page 25)

MC_MeasuringInput: Start measuring once V7 (Page 72)

3.2.1.2 Cyclic measuring (S7-1500, S7-1500T)

With cyclic measuring, up to two measuring events can be acquired by the system in each position control cycle of the technology object and the associated measuring positions can be displayed. The measurements are continued cyclically until they are ended per command.

The determined measured values are displayed and can be read by the user program.

Cyclic measuring requires the measured value to be determined using hardware support of the type "Measurement using Timer DI".

Measuring edges at which a measured value could not be determined are indicated in a lost edge counter in the technology data block as well as in function block "MC_MeasuringInputCyclic".

Measuring job

A cyclic measuring job is started with Motion Control instruction "MC_MeasuringInputCyclic" and the measuring job is issued to the corresponding measuring hardware. Depending on the functionality of the hardware, up to two measuring events and thus measuring times can be recorded with edge reference per position control cycle and then forwarded to the technology object. The technology object determines the measuring positions for the measuring times taking into consideration any specified correction times.

The technology data block tag "<TO>.Status" changes from "INACTIVE" to "WAITING_FOR_TRIGGER" and remains in this status as long as additional events are awaited.

The mode set in the Motion Control instruction specifies the edges for which the measured values are to be acquired. At most, the following edges can be detected in each position control cycle:

- Two positive edges when detecting positive edges
- Two negative edges when detecting negative edges
- One positive edge and one negative edge when detecting positive and negative edges

Measured values and counters

With a positive edge at the input "MC_MeasuringInputCyclic.Execute", outputs "MeasuredValue1Counter" and "MeasuredValue2Counter" are reset to "0". As a result, new events can be tracked immediately and new measured value entries can be detected.

All measuring event occurrences of the measuring job are incremented by "1" in the corresponding event counters "<TO>.MeasuredValues.MeasuredValue1Counter" and "<TO>.MeasuredValues.MeasuredValue2Counter" of the technology data block.

The acquired measured values are continuously captured in the technology data block irrespective of individual jobs and the values are only reset to "0" at power-up or restart of the technology object.

After a completed measurement, the measured values are output in the function block. The counters of the function block are set to "0" at a new measuring job. The measured value output in the technology data block always indicates the last acquired measured value.

Lost edge counter (LEC)

If more than two edges to be detected occur within one position control cycle, a measured value cannot be evaluated for the other edges to be detected. The number of lost edges is recorded in the LEC.

The lost edges that are recorded in the LEC depend on the mode set in the Motion Control instruction. For example, if only positive edges are to be measured, the LEC records only the non-measured positive edges.

A maximum of seven lost edges can be counted and displayed in the LEC.

The number of lost edges is indicated in the function block and in the technology data block in:

- "LostEdgeCounter1"
  Lost cleared edges from the position control cycle in which "MeasuredValue1" was acquired.
  ⇒ The displayed value in "LostEdgeCounter1" is updated when counter "MeasuredValueCounter1" is incremented.
- "LostEdgeCounter2"
  Lost cleared edges from the position control cycle in which "MeasuredValue2" was acquired.
  ⇒ The displayed value in "LostEdgeCounter2" is updated when counter "MeasuredValueCounter2" is incremented.

Display of measurement results when using cyclic measuring

Edges selected in the command	Display per position control cycle			
	"MeasuredValue1"	"MeasuredValue2"	"LostEdgeCounter1"	"LostEdgeCounter2"
Detect positive edges only "MC_MeasuringInputCyclic.Mode" = 0	Actual position at the time of the first positive edge	Actual position at the time of the second positive edge	Number of positive or negative edges in excess of two in the position control cycle of	

Edges selected in the command	Display per position control cycle			
	"MeasuredValue1"	"MeasuredValue2"	"LostEdgeCounter1"	"LostEdgeCounter2"
Detect negative edges only "MC_MeasuringInputCyclic.Mode" = 1	Actual position at the time of the first negative edge	Actual position at the time of the second negative edge	acquisition of "MeasuredValue1" and "MeasuredValue2". The following applies here: • If a "MeasuredValue1" and a "MeasuredValue2" are acquired, the number of acquired and lost edges indicated in "LostEdgeCounter1" and "LostEdgeCounter2" are the same. • If only one "MeasuredValue1" is acquired, the "LostEdgeCounter1" is reset to "0". The value in "LostEdgeCounter2" remains changed.	
Detect positive and negative edges "MC_MeasuringInputCyclic.Mode" = 2	Actual position at the time of the first positive edge in the position control cycle	Actual position at the time of the first negative edge in the position control cycle	Number of edges in excess of two in the position control cycle of acquisition of "MeasuredValue1" and "MeasuredValue2". The following applies here: • If a "MeasuredValue1" and a "MeasuredValue2" are acquired, the number of acquired and lost edges indicated in "LostEdgeCounter1" and "LostEdgeCounter2" are the same. • If only one "MeasuredValue1" is acquired, the "LostEdgeCounter1" is reset to "0". The value in "LostEdgeCounter2" remains changed. • If only one "MeasuredValue2" is acquired, the "LostEdgeCounter2" is reset to "0". The value in "LostEdgeCounter1" remains changed.	

Examples

The following figures show examples of divergence of "MeasuredValue1Counter" and "MeasuredValue2Counter" as a result of lost edges.

Example: Measurement at positive edges (Mode = 0)

Processing cycle clock TO Measuring input	N	N+1	N+2	N+3	N+4	N+5	N+6	N+7	N+8	N+9	N+10
Measuring input											
MeasuredValue1Counter	…	6	7	7	8	9	9	10	11	12	13
LostEdgeCounter1	…	0	0	0	0	0	0	1	0	1	0
MeasuredValue2Counter	…	6	7	7	7	7	7	8	8	9	9
LostEdgeCounter2	…	0	0	0	0	0	0	1	1	1	1

Example: Measurement at negative edges (Mode = 1)

Processing cycle clock TO Measuring input	N	N+1	N+2	N+3	N+4	N+5	N+6	N+7	N+8	N+9	N+10
Measuring input											
MeasuredValue1Counter	...	6	7	8	9	10	10	11	11	12	13
LostEdgeCounter1	...	0	0	0	1	0	0	1	1	1	0
MeasuredValue2Counter	...	6	7	7	8	8	8	9	9	10	10
LostEdgeCounter2	...	0	0	0	1	1	1	1	1	1	1

Example: Measurement at positive and negative edges (Mode = 2)

Processing cycle clock TO Measuring input	N	N+1	N+2	N+3	N+4	N+5	N+6	N+7	N+8	N+9	N+10
Measuring input											
MeasuredValue1Counter	...	6	7	7	8	9	9	10	11	12	13
LostEdgeCounter1	...	0	2	2	0	0	0	3	0	4	0
MeasuredValue2Counter	...	6	7	8	8	9	10	11	12	13	14
LostEdgeCounter2	...	0	2	0	0	0	0	3	0	4	0

See also

MC_MeasuringInputCyclic: Start cyclic measuring V7 (Page 75)

3.2.2 Measuring with measuring range (S7-1500, S7-1500T)

A measuring job can be activated directly or restricted to a defined measuring range.

The following graphic shows an example of measuring with measuring range in "Mode" = 0 (measurement of next positive edge):

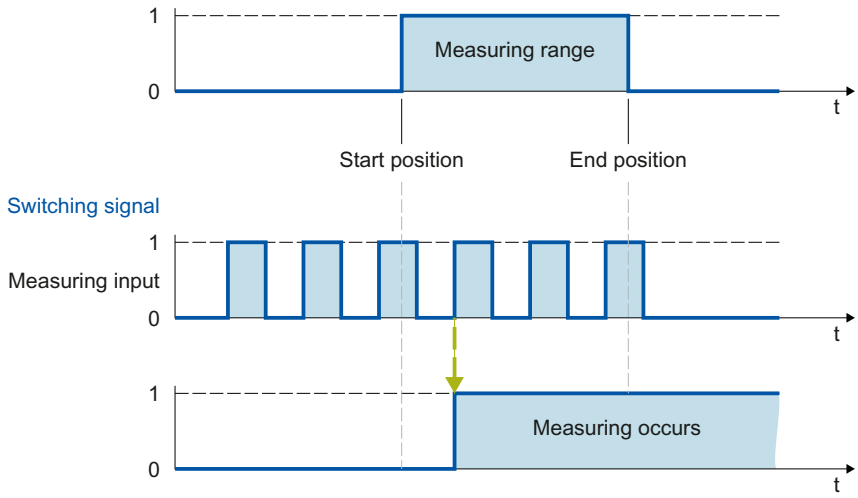

Only measured values within the measuring range are displayed for the technology object.

- If no measuring edge within the measuring range is detected during a one-time measurement, the measuring job is canceled and an alarm is triggered.
- Cyclic measuring remains active even if no measuring edge within the measuring range was detected.

For axes without modulo function, it is immaterial in which order the start and end positions are specified. If the start position is greater than the end position, the two values are interchanged in the application. If the start position for an axis with modulo function is greater than the end position, the measuring range is extended from the start position past the modulo transition of the axis to the end position.

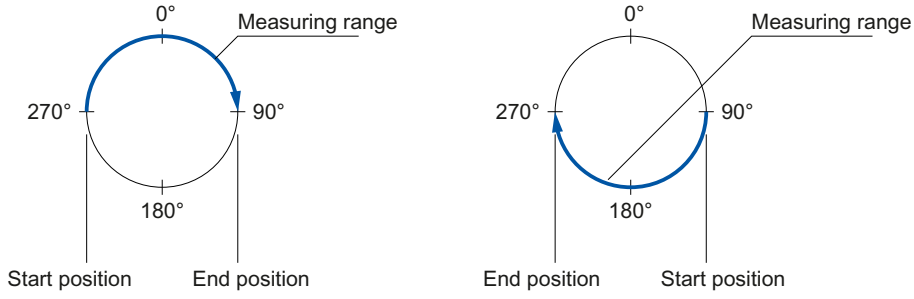

The measuring range positions are specified in the Motion Control instruction "MC_MeasuringInput" or "MC_MeasuringInputCyclic".

Activation time for the measuring range

The measuring function must be active at the measurement input when the start of the measuring range is reached. To compensate for the communication time for activation in the Timer DI or drive, for example, the activation of the measurement in the technology object begins earlier then the measuring range start by the amount of the activation time.

The activation time for measuring with measuring range is divided up as follows:

- The activation time allocation defined and active on the system side is indicated in the "<TO>.Parameter.MeasuringRangeActivationTime" tag.
- An additional activation time can also be set by the user with the "<TO>.Parameter.MeasuringRangeAdditionalActivationTime" tag.

3.2.3 Time-related boundary conditions (S7-1500, S7-1500T)

Depending on the hardware configuration and selection of edges to be detected, different system-inherent requirements apply to the time allowed after calling the Motion Control instruction "MC_MeasuringInput" or "MC_MeasuringInputCyclic" until a measurement occurs and the results are displayed.

The following times must be distinguished here:

- Time until the measuring event can be captured
- Time until the measurement result is displayed or the measurement is finished.

The times calculated taking into account the current settings are indicated in configuration window "Extended parameters" of a measuring input.

Measurement using Timer DI/measurement using SINAMICS (central probe)

- Time from output of an "MC_MeasuringInput" job until measuring event detection becomes effective:
  - "MeasuringRangeActivationTime": 2 x T_{servo}
- Time after measuring event until measured value is available in the controller:
  - One-time measurement: 2 x T_{servo} + T_{Send}
  - Cyclic measuring: T_{servo} + T_{Send}
- Activation time for a measurement with measuring range:
  - "MeasuringRangeActivationTime" + "MeasuringRangeAdditionalActivationTime"

NOTE

Maximum bus clock cycle

With the use of SINAMICS measuring inputs, the maximum bus clock cycle T_{Send} can be up to 8 ms.

Measurement using PROFIdrive telegram (drive or external encoder)

- "MeasuringRangeActivationTime":
  - T_{Send} and T_{servo} equal to: 3 x T_{servo}
  - T_{Send} and T_{servo} not equal to: 2 x T_{servo}
- Time from output of an "MC_MeasuringInput" job until measuring event detection becomes effective:
  - Measuring a positive/negative edge or two edges:
    "MeasuringRangeActivationTime" + 2 x T_{servo}
  - Measuring two dedicated edges:
    "MeasuringRangeActivationTime" + 3 x T_{servo}
- Time after measuring event until measured value is available in the controller:
  - Measuring an edge: 7 x T_{servo}
  - Measuring two edges: 13 x T_{servo}
- Activation time for a measurement with measuring range:
  - Measuring a positive/negative edge or two edges:
    "MeasuringRangeActivationTime" + "MeasuringRangeAdditionalActivationTime" + 2 x T_{servo}
  - Measuring two dedicated edges:
    "MeasuringRangeActivationTime" + "MeasuringRangeAdditionalActivationTime" + 3 x T_{servo}

Definition of tags

- T_{servo} = Call interval of the technology object in the servo cycle clock [ms]
- T_{Send} = Send clock [ms]
- "MeasuringRangeActivationTime" = See section Measuring with measuring range (Page 23)

To prevent asynchronous processing from overwriting a measured value that was just determined, a new one-time measuring job cannot be started until the active measurement has concluded. The sum of the activation time and the time until display or conclusion must be taken into account for this.

In the case of cyclic measuring, evaluation or temporary storage of the measurement results in the synchronous MC-PreInterpolator [OB68] is recommended from the user perspective.

3.2.4 Tags: Measuring input technology object (S7-1500, S7-1500T)

The following technology object tags are relevant for measuring:

Status indicator		
Tag	**Description**	
<TO>.Status	Status of the measuring input function	
	0	Measurement is not active ("INACTIVE")
	1	The measuring input is waiting for a measuring event ("WAITING_FOR_TRIGGER")

Status indicator		
Tag	**Description**	
<TO>.Status	2	The measuring input has acquired one or more measured values ("TRIGGER_OCCURRED").
	3	Error during the measurement ("MEASURING_ERROR")
<TO>.InputState	Status of measuring input	

Parameters	
Tag	**Description**
<TO>.Parameter.MeasuringInputType	Measuring input type
<TO>.Parameter.PROFIdriveProbeNumber	Number of the measuring input to be used for a measurement via PROFIdrive telegram
<TO>.Parameter.MeasuringRangeActivationTime	System-defined activation time allocation [ms]
<TO>.Parameter.MeasuringRangeAdditionalActivationTime	Additional user-defined activation time allocation [ms]
<TO>.Parameter.CorrectionTime	User-defined correction time for the measurement result [ms]

Interface	
Tag	**Description**
<TO>.Interface.Address	I/O address for the digital measuring input

Units	
Tag	**Description**
<TO>.Units.LengthUnit	Unit of the length data
<TO>.Units.TimeUnit	Unit of the time data

MeasuredValues	
Tag	**Description**
<TO>.MeasuredValues.MeasuredValue1	First measured value
<TO>.MeasuredValues.MeasuredValue2	Second measured value (when measuring two or more edges in one position control cycle)
<TO>.MeasuredValues.MeasuredValue1Counter	Count value for the first measured value
<TO>.MeasuredValues.MeasuredValue2Counter	Count value for the second measured value
<TO>.MeasuredValues.LostEdgeCounter1	Lost edges in the cycle clock of the first measured value acquisition (zero in the case of one-time measurement)
<TO>.MeasuredValues.LostEdgeCounter2	Lost edges in the cycle clock of the second measured value acquisition (zero in the case of one-time measurement)

StatusWord	
Tag	**Description**
<TO>.StatusWord.X0 (Control)	The technology object is in operation.
<TO>.StatusWord.X1 (Error)	An error occurred at the technology object.

StatusWord	
Tag	**Description**
<TO>.StatusWord.X2 (RestartActive)	The technology object is being reinitialized. The tags of the technology data block are not updated with active restart.
<TO>.StatusWord.X3 (OnlineStartVal-uesChanged)	Data relevant for the restart has been changed. The changes are applied only after a restart of the technology object.
<TO>.StatusWord.X5 (CommunicationOk)	The measuring input is synchronized with the measuring module and can be used.

ErrorWord	
Tag	**Description**
<TO>.ErrorWord.X0 (SystemFault)	A system-internal error has occurred.
<TO>.ErrorWord.X1 (ConfigFault)	Configuration error One or more configuration parameters are inconsistent or invalid. The technology object was incorrectly configured, or editable configura-tion data was incorrectly modified during runtime of the user program.
<TO>.ErrorWord.X2 (UserFault)	Error in user program at a Motion Control instruction or its use
<TO>.ErrorWord.X3 (CommandNotAccepted)	Command cannot be executed A Motion Control instruction cannot be executed because the necessary conditions have not been met.
<TO>.ErrorWord.X13 (PeripheralError)	Error accessing a logical address

ErrorDetail		
Tag	**Description**	
<TO>.ErrorDetail.Number	Alarm number You can find a list of the technology alarms and alarm responses in the "Technology alarms" section in the "S7-1500/S7-1500T Motion Control alarms and error IDs" documentation (Page 8).	
<TO>.ErrorDetail.Reaction	Effective alarm response	
	0	No reaction
	6	End measuring input processing

3.3 Output cam technology object (S7-1500, S7-1500T)

The output cam technology object generates switching signals depending on the position of an axis or external encoder. The switching states can be evaluated in the user program and fed to digital outputs.

You can find an overview of the functions of the output cam technology object in the "Functions (Page 15)" section.

The following figure shows the basic operating principle of the output cam technology object:

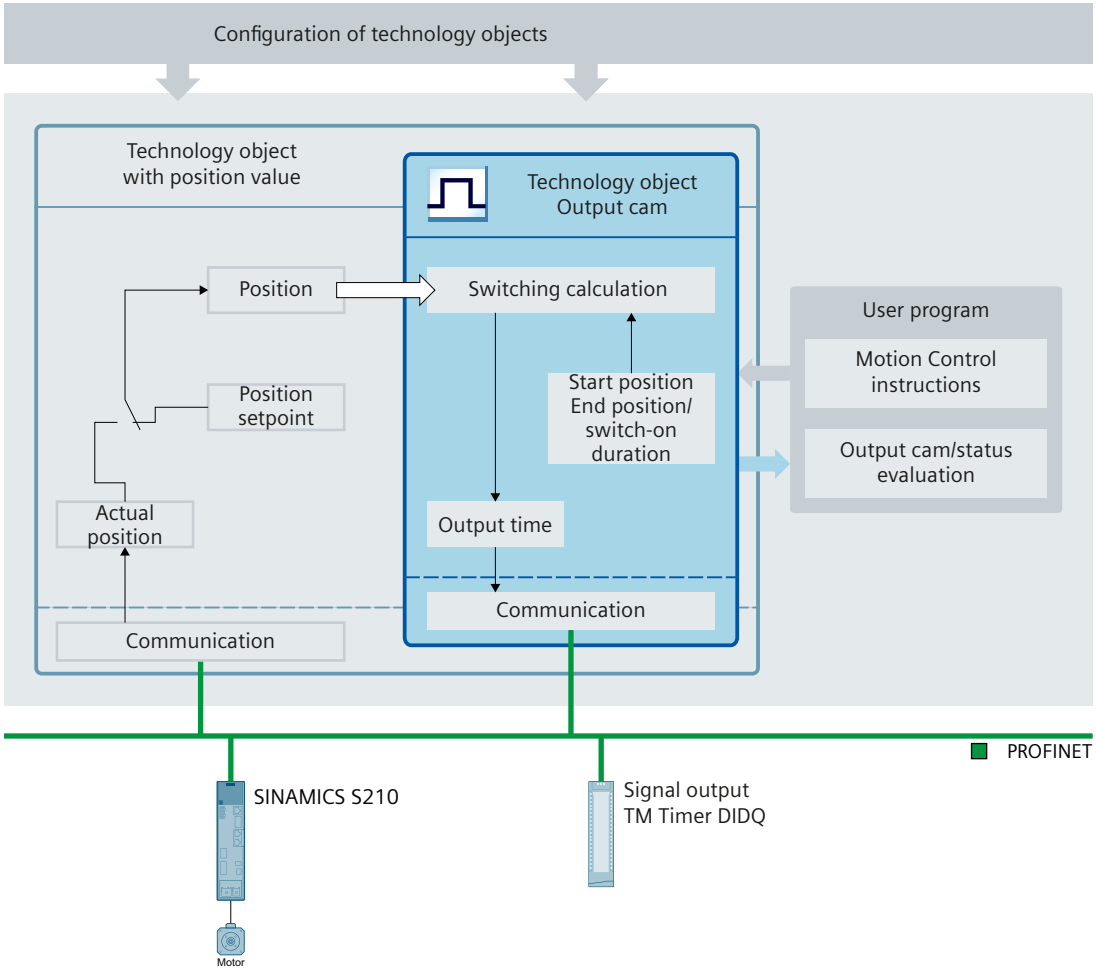

Output cam types

The following output cam types can be used:

- Distance output cam (Page 31)
  Distance output cams switch on between the start position and end position. Outside this range, the distance output cam is switched off.
- Time-based output cam (Page 33)
  Time-based output cams switch on for a defined time period when the start position is reached.

Assignment

The output cam technology object must always be assigned to another technology object whose position will be evaluated.
The output cam technology object can be assigned to the following technology objects:

- Synchronous axis
- Positioning axis
- External encoder

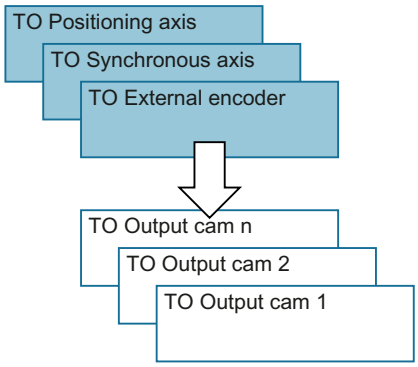

Exactly one axis or one external encoder can be assigned to an output cam.
Multiple output cams can be assigned to one axis or external encoder.

Output cam calculation and output cam output

The output cam technology object calculates the exact switching time, thereby ensuring exact adherence to the switching positions. The switching time is calculated two position control cycles before the output.
The following output options are available for the digital output cam output:

- Timer-DQ
  Digital output with high degree of accuracy and reproducibility in the microsecond range on time-based IO modules basis. In the case of signal output via time value, the times of the signal changes are determined by the technology object. The time stamps are then transferred to the hardware of the digital output and the edges are output with high precision.
  Output via Timer DQ requires isochronous mode.
- Digital output module
  Digital output with switching accuracy depending on the output cycle of the I/O used

When output is deactivated, the output cam status is not output at the hardware output. The output cam status can be used internally in the user program by evaluating the relevant "<TO>.CamOutput" tag.

Inverted output

In the case of inverted output, the range in which the output cam output is switched on and the range in which it is switched off are swapped.
The inverted output is set in Motion Control instruction "MC_OutputCam" and is active when the instruction is enabled.
The inverted output can be used for both distance output cams and time-based output cams.

Output of multiple output cams to one output

The output of multiple output cams to one output is performed with either an AND or OR logic operation of the output cam signals to the output.

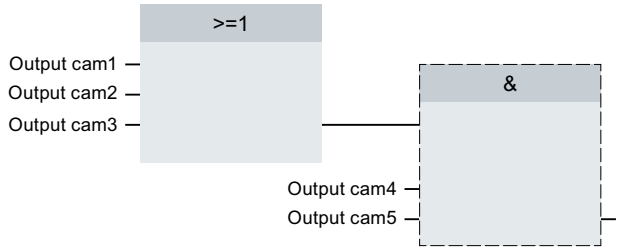

Display of the switching state

The switching state of the output cam is displayed in the associated technology data block in "<TO>.CamOutput".

Position reference

The switching points of the output cams can be referenced to the following positions, depending on the interconnected technology object.

- Actual position of a synchronous axis/positioning axis
- Position setpoint of a synchronous axis/positioning axis
- Position of an external encoder

Homing the interconnected technology object

A change to the position of an axis or external encoder using Motion Control instruction "MC_Home" is regarded as a sudden position change.

- Distance output cams are either skipped or correspondingly output.
- Time-based output cams are skipped. A time-based output cam is switched on only when the start position is overtraveled and remains switched on for the switch-on duration.
- Switched time-based output cams are not canceled by a homing operation.

Trace recording of output cam with reference to setpoint position

The CPU calculates the output time of the output cam in such a way that the output cam is switched when the position setpoint has been transferred from the PLC to the drive.

The communication time is not considered in the trace.

3.3.1 Distance output cam (S7-1500, S7-1500T)

Switch-on range

The switch-on range of distance output cams is basically defined by the start position and end position.

Start position smaller than end position

When the start position is less than the end position, the switch-on range begins with the start position and ends with the end position.

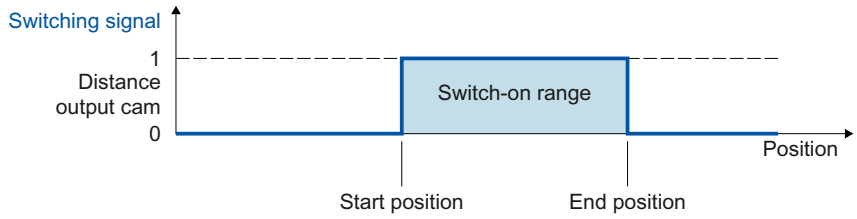

Start position greater than end position

When the start position is greater than the end position, there are two switch-on ranges as follows:

- Switch-on range beginning with the start position and ending with the positive range end (e.g. positive software limit switch, end of modulo range)
- Switch-on range beginning with the negative range end (e.g. negative software limit switch, start of modulo range) and ending with the end position

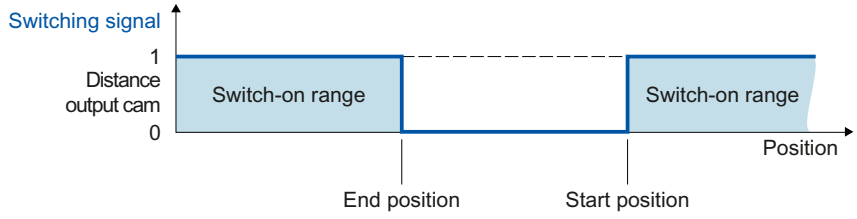

Mapping to an axis with modulo function

With active modulo function of the interconnected technology object, the start and end positions of the output cam are automatically mapped to values within the modulo range.

Example

- Modulo range = 0° to 50°
- Output cam start position = 80°
- Output cam end position = 220°

⇒ The specified start and end position of the output cam are outside the modulo range. The values are therefore mapped onto the modulo range. The start position is at 30° (80° mod 50° = 30°) and the end position is at 20° (220° mod 50° = 20°). The output cam remains switched on over two consecutive modulo lengths and switches off at 20° in every second modulo length.

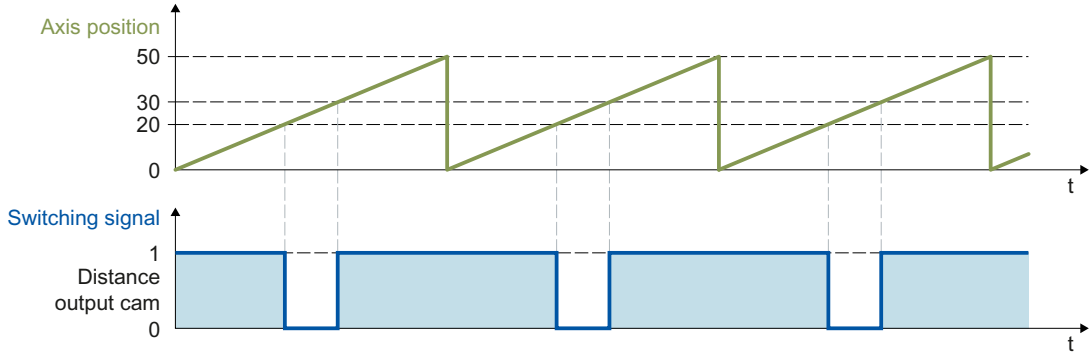

Switching characteristics

After activation, a distance output cam switches on in the following cases:

- The position of the interconnected technology object reaches the start or end position in the activation direction configured in Motion Control instruction "MC_OutputCam".
- The position of the interconnected technology object is moved into the switch-on range of the output cam (e.g. during homing) in the activation direction configured in Motion Control instruction "MC_OutputCam". If both activation directions are enabled in Motion Control instruction "MC_OutputCam", the output cam switches on even when the interconnected technology object is at a standstill.
- The output cam is switched on permanently using Motion Control instruction "MC_OutputCam" with "Mode" = 3.

An active distance output cam switches off in the following cases:

- The position is outside the switch-on range of the output cam.
- The position value is moved outside the switch-on range of the output cam.
- Motion Control instruction "MC_OutputCam" is set to "Enable" = FALSE.
- The motion direction of the interconnected technology object is reversed and no longer agrees with the enabled activation direction.

3.3.2 Time-based output cam (S7-1500, S7-1500T)

A time-based output cam switches on at the start position and remains set for the on-load factor.

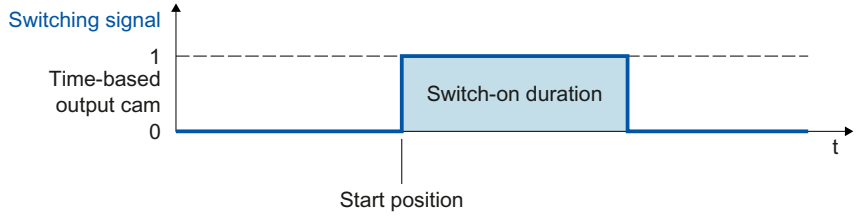

Mapping to an axis with modulo function

In the case of active modulo function of the interconnected technology object, the start position of the output cam is automatically mapped to the value within the modulo range.

Example

- Modulo range = 0° to 50°
- Output cam start positions:
  - Output cam 1 = 20°
  - Output cam 2 = 30°
  - Output cam 3 = 80°

⇒ The time-based output cam 1 switches on at 20°, the time-based output cam 2 switches on at 30°. The specified start position of time-based output cam 3 is outside the modulo range. The value for the start position is therefore mapped onto the modulo range so that the time-based output cam 3 switches on at 30°. All three output cams remain active the set on-load factor in each case.

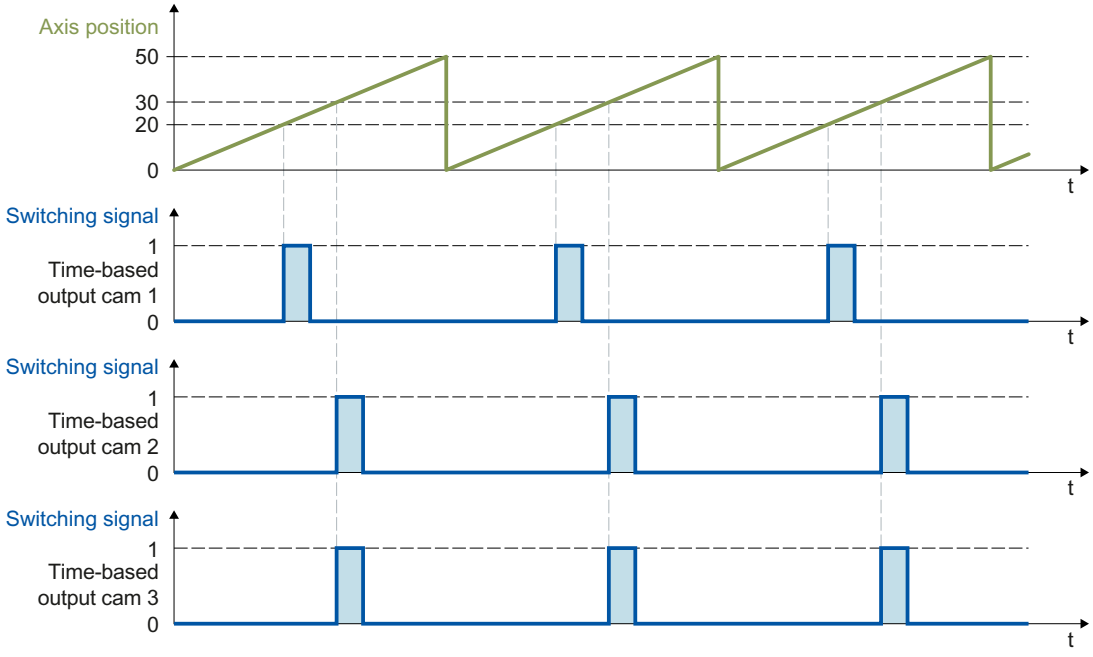

Switching characteristics

A time-based output cam switches on in the following cases:

- The start position has been reached and the motion direction of the interconnected technology object corresponds to the effective direction enabled by the instruction.

NOTE

– If the start position is reached again while an output cam is switched on, the on-load factor is not re-triggered.

– If due to the Motion Control instruction "MC_Home", the position value of the interconnected technology object is placed directly on or behind the start position of the output cam during the motion, the output cam does not switch on.

A time-based output cam switches off in the following cases:

- The configured on-load factor has expired.
- Motion Control instruction "MC_OutputCam" is set to "Enable" = FALSE.

3.3.3 Activation direction of cam (S7-1500, S7-1500T)

An output cam can be switched depending on the motion direction of the interconnected technology object. An output of the output cam in positive or negative motion direction or independent of direction is possible.

The effective direction is set in "MC_OutputCam.Direction".

The following examples show the behavior of the output cam as a function of the effective direction setting.

Example of "positive" effective direction ("Direction" = 1)

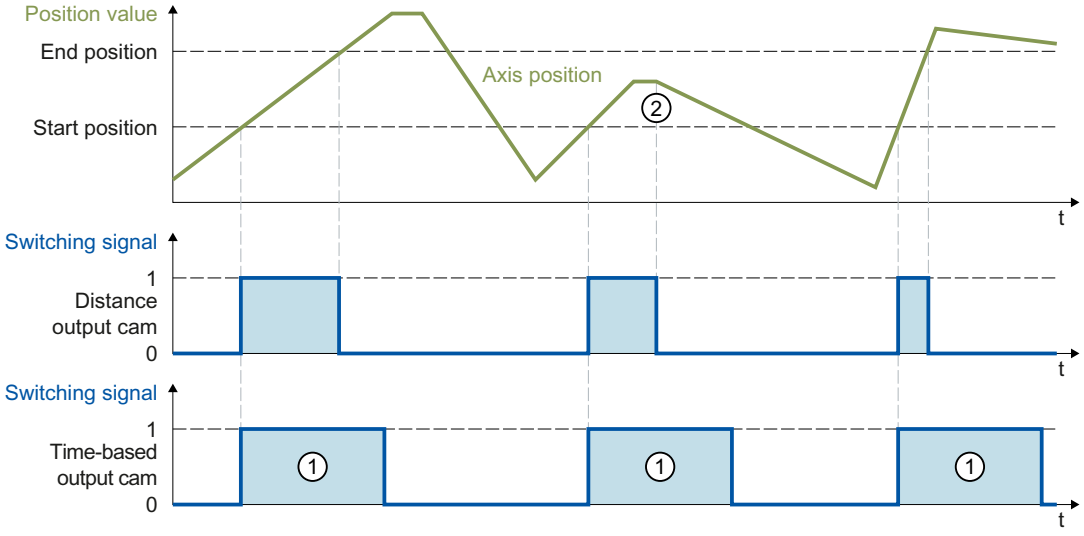

Distance output cam

The output cam switches on when the switch-on range is reached in the **positive** direction. At a direction reversal ②, the output cam switches off.

If the position value is moved into the switch-on range of the output cam, the cam switches on when there is positive motion direction of the interconnected technology object. The output cam remains switched off when the interconnected technology object is at a standstill.

Time-based output cam

The output cam switches on when the start position is reached in the **positive** direction. At a direction reversal, the output cam remains switched on for the specified on-load factor ①.

If during the homing motion, the position value of the interconnected technology object is directly on or behind the start position of the output cam, the output cam does not switch on.

Example of "negative" effective direction ("Direction" = 2)

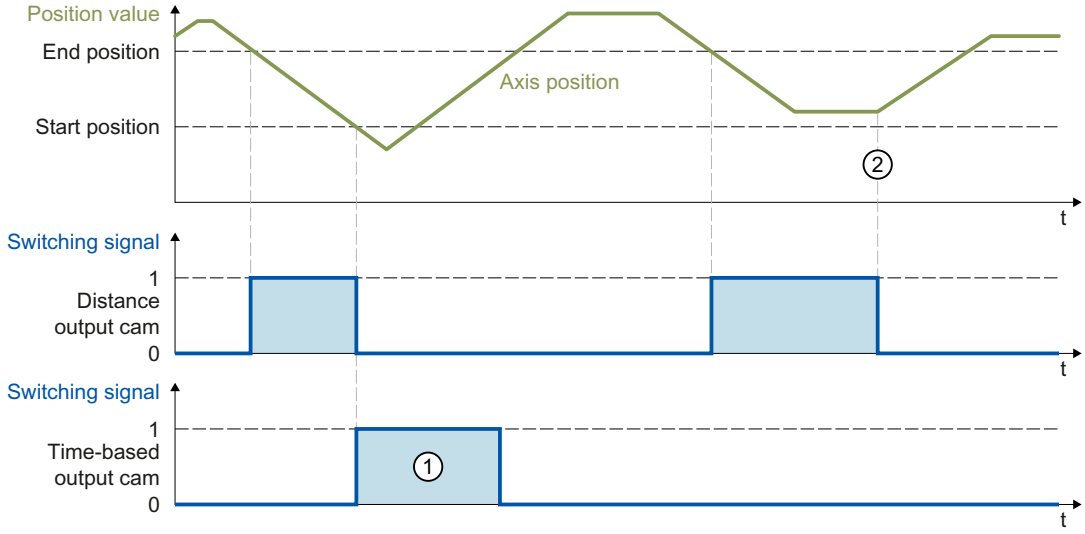

Distance output cam

The output cam switches on when the switch-on range is reached in the **negative** direction. At a direction reversal ②, the output cam switches off.

If the position value is moved into the switch-on range of the output cam, the output cam switches on when there is negative motion direction of the interconnected technology object. The output cam remains switched off when the interconnected technology object is at a standstill.

Time-based output cam

The output cam switches on when the start position is reached in the **negative** direction. At a direction reversal, the output cam remains switched on for the specified on-load factor ①.

If during the homing motion, the position value of the interconnected technology object is directly on or behind the start position of the output cam, the output cam does not switch on.

Example of "both directions" effective direction ("Direction" = 3)

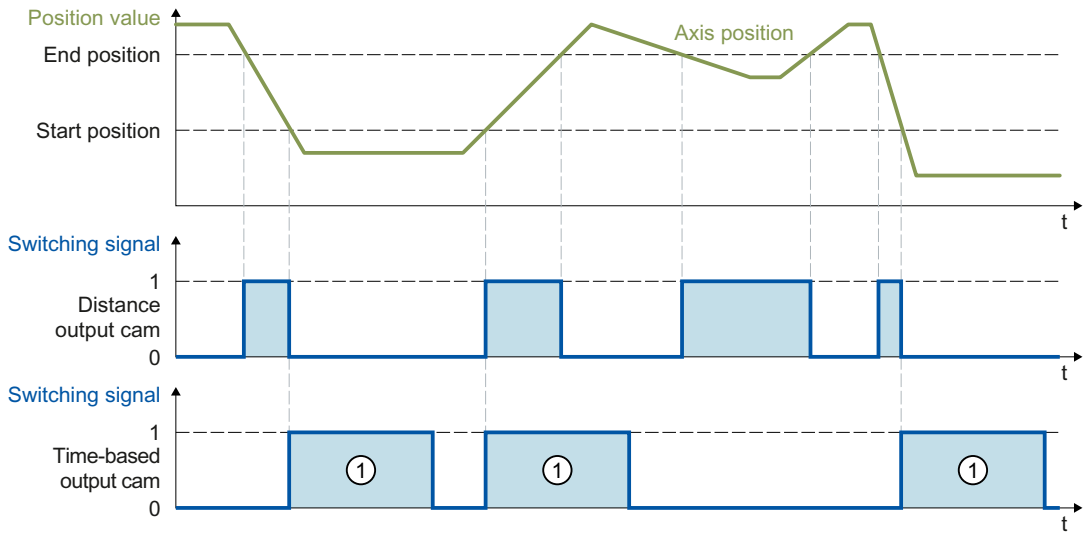

Distance output cam

The output cam switches on when the position of the interconnected technology object is within the switch-on range.

If the position value of the interconnected technology object is moved into the switch-on range of the output cam, the cam switches on even when the interconnected technology object is at a standstill.

Time-based output cam

The output cam switches on when the start position is reached. At a direction reversal, the output cam remains switched on for the specified on-load factor ①.

If during the homing motion, the position value of the interconnected technology object is directly on or behind the start position of the output cam, the output cam does not switch on.

3.3.4 Hysteresis (S7-1500, S7-1500T)

Possible variations in the actual position/position setpoint can result in unwanted switch-on and switch-off of cams.

Minimal changes of the actual value of an axis in standstill can result in the switching on or off of an actual value output cam with preset positive or negative effective direction. Even minimal changes of the setpoints of a switched-off axis in follow-up mode can result in switch-on or switch-off of an actual value output cam with specified positive or negative effective direction. Such unwanted switching states can be prevented by configuring a hysteresis (> 0.0). The configuration of a hysteresis value (> 0.0) is recommended in particular with reference to the actual position.

The hysteresis is a position tolerance within which the position values may vary without changing the switching state of the output cam. Changes of direction detected within the hysteresis are ignored.

The hysteresis is set for the technology object in "<TO>.Parameter.Hysteresis".

Behavior

- The hysteresis is activated at a direction reversal.
- The following applies within the hysteresis:
  - The switching state of distance output cams is not changed.
  - The motion direction is not determined again.
  - If the start position of a time-based output cam is within the hysteresis, the time-based output cam is switched on when leaving the hysteresis with the corresponding effective direction.
  - The on-load factor of time-based output cams remains unchanged.
- After the hysteresis range is exited, distance output cams are set according to the output cam settings.

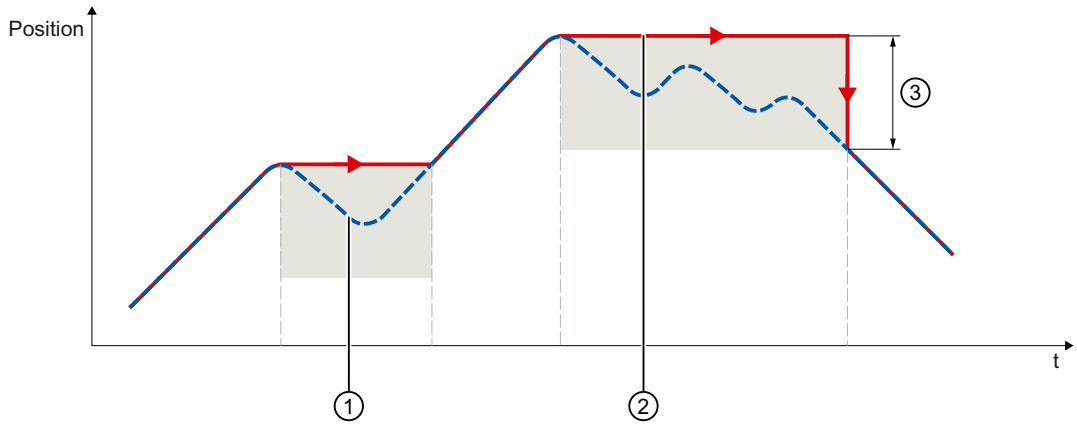

① Actual position

② Effective position

③ Hysteresis range

The following examples show the effects of the hysteresis on the switching behavior of output cams with positive activation direction.

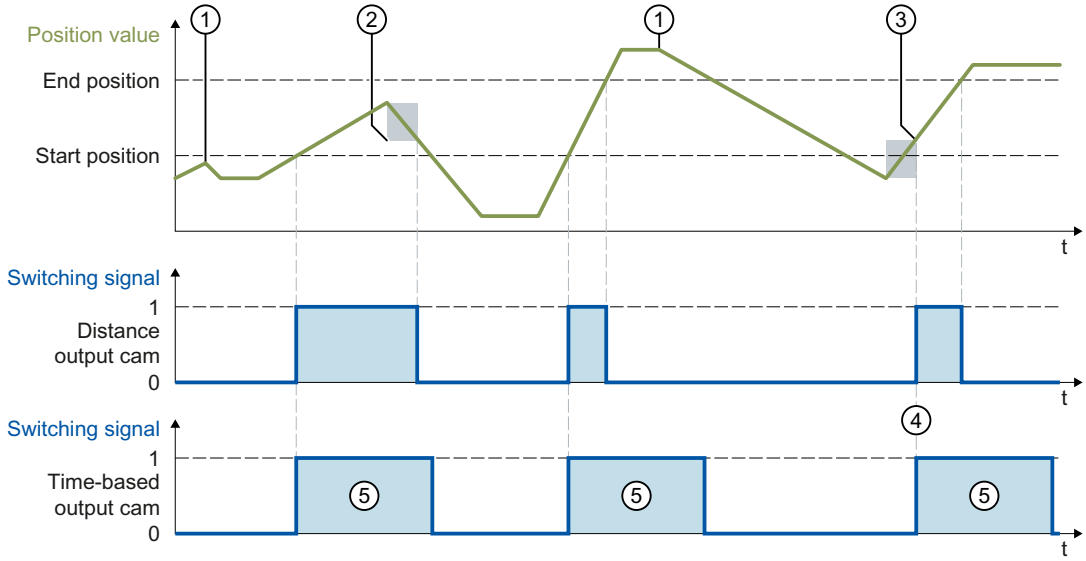

① Direction reversal without hysteresis effect

② Hysteresis in effect

③ The switch-on position of the distance output cam is influenced according to the direction reversal and hysteresis.

④ The start position of the time-based output cam is located within the hysteresis. The time-based output cam is switched on when leaving the hysteresis with the corresponding effective direction.

⑤ Switch-on duration

Hysteresis range

The maximum size of the hysteresis range in the system is as follows: for an axis with modulo function, one quarter of the modulo range; for an axis without modulo function, one quarter of the operating range.

3.3.5 Compensation of actuator switching times (S7-1500, S7-1500T)

You can compensate for communication times, switching times of the output and the connected actuator using the activation time or deactivation time of the output cam technology object.

The activation time is specified as the lead time for the switch-on edge, and the deactivation time as the lead time for the switch-off edge.

For the timers, the following must apply:

Switch on duration > deactivation time - activation time

The activation time is set in the technology object via the "<TO>.Parameter.OnCompensation" tag, the deactivation time via "<TO>.Parameter.OffCompensation".

If the output cam has been switched with consideration of the derivative-action times and the current velocity changes afterwards, the output cam will not be switched again.

Influence of the digital outputs used

- When the output cam is output via timer DQ, the communication times are automatically taken into account.
  When the output cam is output via digital output, the communication times are not automatically taken into account.

Time-based output cam

For time-based cams, you indicate the switch-on duration at the "Duration" parameter of the "MC_OutputCam" instruction.

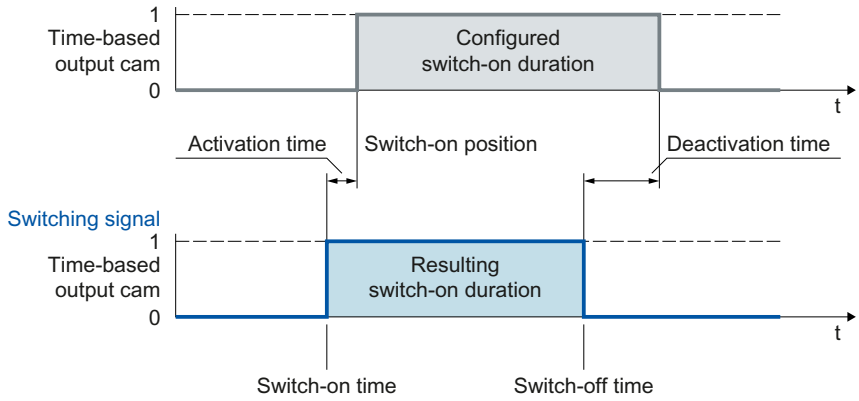

The derivative-action time dynamically shifts the switch-on and switch-off times of the time-based cam depending on the velocity of the axis.

Example

An actuator (e.g. valve) should open at position 200°and the derivative-action time is 0.5s.

- With a velocity of 10°/s, the switch-on time is already at 195°.
- With a velocity of 20°/s, the switch-on time is already at 190°.

The switch-off time shifts accordingly.

Distance output cam

The switch-on duration for distance output cams is determined by the switching positions and the current velocity.

3.3.6 Tags: Output cam technology object (S7-1500, S7-1500T)

The following technology object tags are relevant:

Status indicator	
Tag	**Description**
<TO>.CamOutput	The output cam is switched.

Parameters		
Tag	**Description**	
<TO>.Parameter.OutputCamType	Output cam type	
	0	Distance output cam
	1	Time-based output cam

Parameters		
Tag	**Description**	
<TO>.Parameter.PositionType	Position reference	
	0	Position setpoint
	1	Actual position
<TO>.ParameterOnCompensation	Activation time (lead time for the switch-on edge)	
<TO>.Parameter.OffCompensation	Deactivation time (lead time for the switch-off edge)	
<TO>.Parameter.Hysteresis	Hysteresis value	

Interface		
Tag	**Description**	
<TO>.Interface.EnableOutput	Activation of the output cam output	
	FALSE	No output
	TRUE	Output
<TO>.Interface.Address	I/O address of the output cam	
<TO>.Interface.LogicOperation	Logical operation of the output cam signals at the output	
	0	OR logic operation
	1	AND logic operation

Units	
Tag	**Description**
<TO>.Units.LengthUnit	Unit of the length data
<TO>.Units.TimeUnit	Unit of the time data

StatusWord	
Tag	**Description**
<TO>.StatusWord.X0 (Control)	The technology object is in operation.
<TO>.StatusWord.X1 (Error)	An error occurred at the technology object.
<TO>.StatusWord.X2 (RestartActive)	The technology object is being reinitialized. The tags of the technology data block are not updated with active restart.
<TO>.StatusWord.X3 (OnlineStartVal-uesChanged)	Data relevant for the restart has been changed. The changes are applied only after a restart of the technology object.
<TO>.StatusWord.X4 (OutputInverted)	The output cam output is inverted.
<TO>.StatusWord.X5 (CommunicationOk)	The output cam is synchronized with the output module and available for use.

ErrorWord	
Tag	**Description**
<TO>.ErrorWord.X0 (SystemFault)	A system-internal error has occurred.
<TO>.ErrorWord.X1 (ConfigFault)	Configuration error One or more configuration parameters are inconsistent or invalid. The technology object was incorrectly configured, or editable configura-tion data was incorrectly modified during runtime of the user program.

ErrorWord	
Tag	**Description**
<TO>.ErrorWord.X2 (UserFault)	Error in user program at a Motion Control instruction or its use
<TO>.ErrorWord.X3 (CommandNotAccepted)	Command cannot be executed A Motion Control instruction cannot be executed because the necessary conditions have not been met.
<TO>.ErrorWord.X13 (PeripheralError)	Error accessing a logical address

ErrorDetail		
Tag	**Description**	
<TO>.ErrorDetail.Number	Alarm number You can find a list of the technology alarms and alarm responses in the "Technology alarms" section in the "S7-1500/S7-1500T Motion Control alarms and error IDs" documentation (Page 8).	
<TO>.ErrorDetail.Reaction	Effective alarm response	
	0	No reaction
	6	Output cam processing is complete.

3.4 Cam track technology object (S7-1500, S7-1500T)

The cam track technology object generates a switching signal sequence dependent on the position of an axis or external encoder. A cam track can consist of up to 32 individual output cams and be output to one output. The switching states can be evaluated in the user program or fed to digital outputs.

You can find an overview of the functions of the cam track technology object in the "Functions (Page 15)" section.

The following figure shows the basic principle of operation of the cam track technology object:

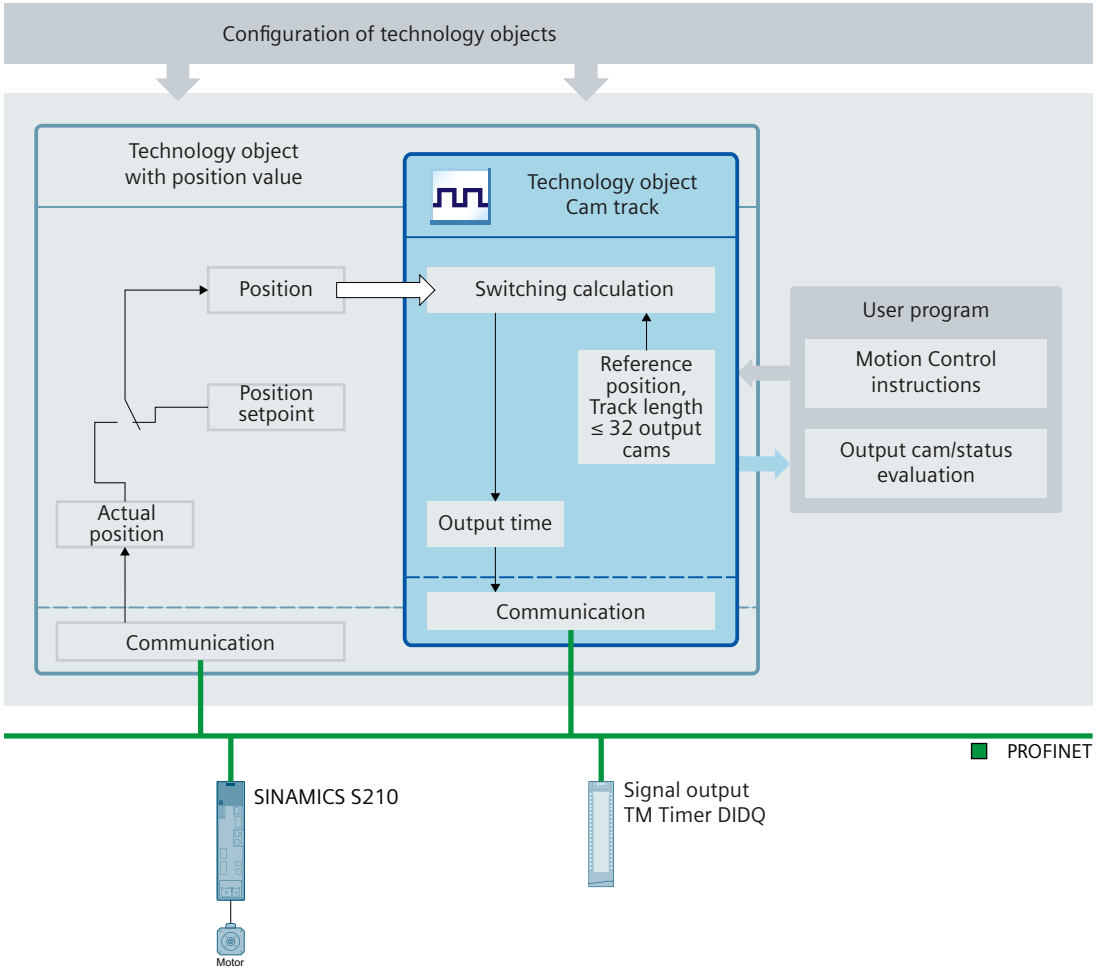

Definition of cam track

A cam track consists of up to 32 individual output cams that are specified within an adjustable track length.

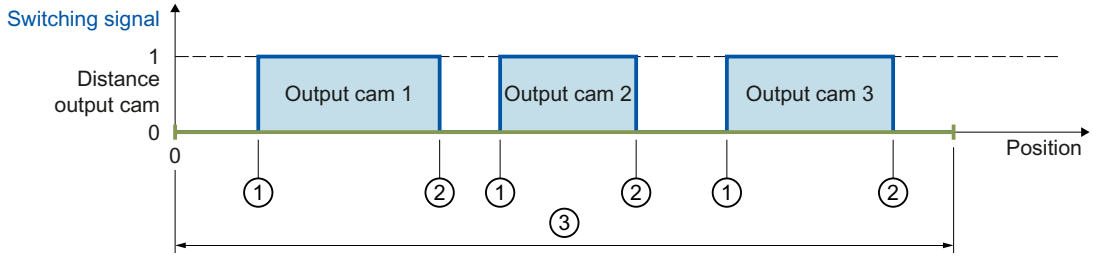

① Start position

② End position

③ Cam track length

The output cam positions are defined relative to the cam track. The start of the cam track is always 0.0. The output cam positions on the cam track are thus always positive.

When the cam track is processed, the output cams with start position within the track length are taken into consideration.

The output cams of the cam track can be set as distance output cams or time-based output cams, whereby only one of the two output cam types can be used in a cam track.

If the end of a cam track is crossed, connected output cams behave as follows within the cam track:

- Time-based output cams remain switched on for the set on-load factor.
- Distance output cams whose end position lies outside the cam track are switched off when the cam track is left.

Cams whose start and end positions lie outside the cam track length are ignored. They become active only if the cam track length is increased so that at least the respective start position of an output cam is within the new track length.

Assignment

The cam track technology object must always be assigned to another technology object whose position is evaluated.

The cam track technology object can be assigned to the following technology objects:

- Synchronous axis
- Positioning axis
- External encoder

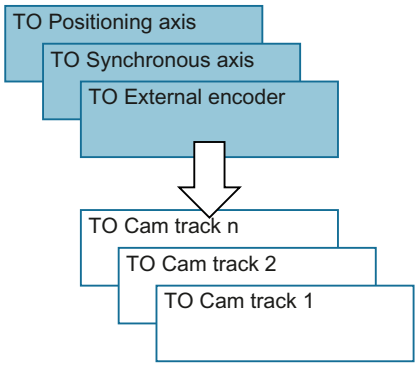

Exactly one axis or one external encoder can be assigned to a cam track.
Multiple cam tracks can be assigned to one axis or external encoder.

Position reference

The switching points of the output cams of a cam track can be referenced to the following positions, depending on the interconnected technology object.

- Actual position of a synchronous axis/positioning axis
- Position setpoint of a synchronous axis/positioning axis
- Position of an external encoder

Mapping of the cam track to the position of the technology object

The start of the cam track is placed at the specified reference position of the interconnected technology object. Thus, the switching positions result from the cam track positions mapped onto the interconnected technology object starting from the reference position. The cam track is continued in both directions of the interconnected technology object.
The setting for the reference position can be either positive or negative.

Example

- Axis range = -1000 mm to +1000 mm
- Desired switching points of the output cam with reference to axis position:
  - Start position = -200 mm
  - End position = -100 mm
- Cam track length = 2000 mm
- Definition of output cam on the track:
  - Start position = 800 mm
  - End position = 900 mm

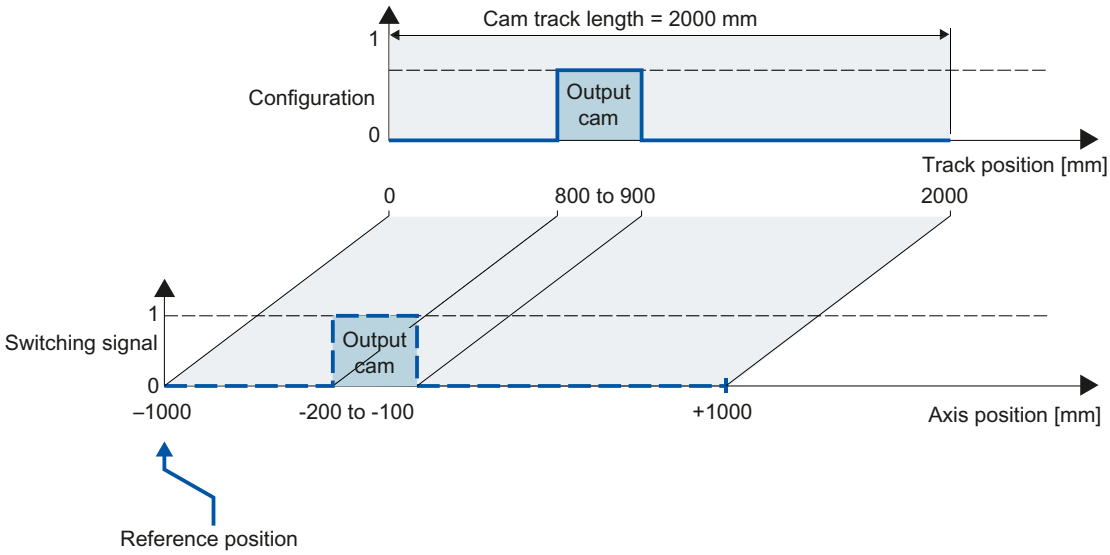

Processing of a cam track

The processing of a cam track occurs cyclically.

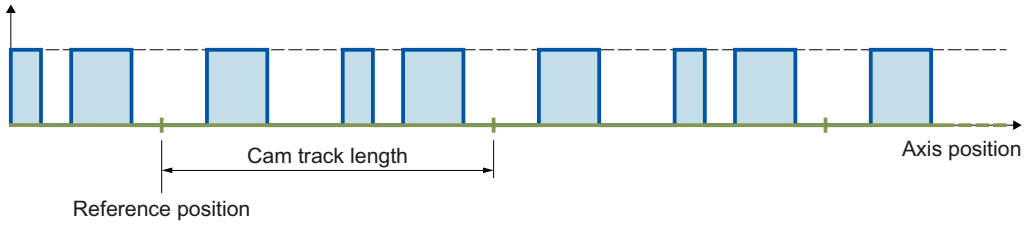

The cam track is mapped onto the position of the interconnected technology object starting from the reference position and is continued cyclically in both directions.

Output of a cam track

The following output options are available for the digital cam track output:

- Timer-DQ
  Digital output with high degree of accuracy and reproducibility in the microsecond range on time-based IO modules basis. In the case of signal output via time value, the times of the signal changes are determined by the technology object. The time stamps are then transferred to the hardware of the digital output and the edges are output with high precision.
  Output via Timer DQ requires isochronous mode.
- Digital output module
  Digital output with switching accuracy depending on the output cycle of the I/O used

A maximum of two edges (via Timer DQ, positive and negative) or one edge (via digital output module, positive or negative) can be output per position control cycle. If multiple switch-on edges or switch-off edges are transmitted in one position control cycle clock, the last written values in each case are valid.

Masking of individual output cams of a cam track

In order for output cams to be processed, they must be configured as valid in the technology data block with "<TO>.Parameter.Cam[1..32].Existent" = TRUE. In addition, output cams of a cam track configured as valid can be defined as valid in the user program using bit masking ("<TO>.Parameter.CamMasking"). In the default setting, all valid output cams are enabled ("<TO>.Parameter.CamMasking" = 0xFFFFFFFF). The cam track itself is activated/deactivated using the Motion Control instruction "MC_CamTrack".

3.4.1 Modulo function (S7-1500, S7-1500T)

Track length and mapping to an axis or encoder with modulo function

When a cam track is mapped onto an axis with modulo function, a reference position specified outside the modulo range is mapped within the modulo range.

The track length can be less than or greater than the modulo length of the axis. In order for the cam track to be mapped without offset in the modulo range and to prevent unwanted overrides, an integer ratio of modulo length to track length, and vice versa, is required.

Example Mapping without offset

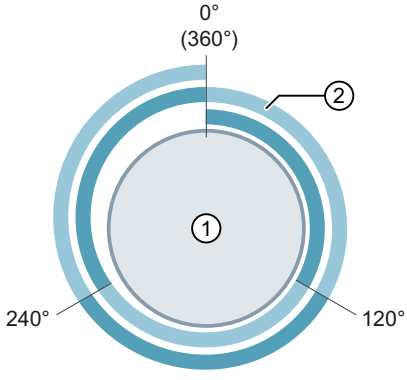

① Axis with modulo length 360°

② Cam track with track length 120°

⇒ Ratio = 360° / 120° = **3**
The cam track is output 3 times on a modulo length.

Example Mapping with offset

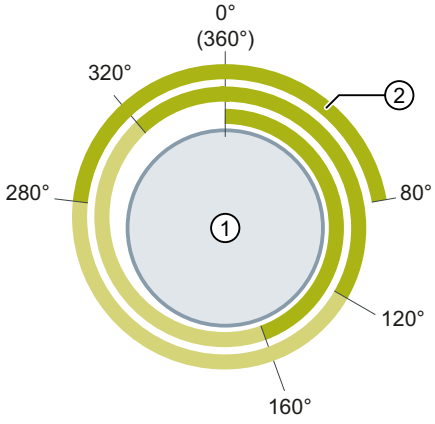

① Axis with modulo length 360°

② Cam track with track length 160°

⇒ Ratio = 360° / 160° = **2.25**
The cam track is output 2.25 times on the first modulo length and continued correspondingly in the other modulo lengths.

During cyclic processing of the cam track, the continued reference position of the current cam track is displayed in the "<TO>.MatchPosition" tag. The continued reference position is independent of direction and always the position of the left boundary of the cam track. The unique detection and output of the position is only possible when the assigned technology object is in motion. The distance to the current reference position of the current cam track (<TO>.MatchPosition) is displayed in the "<TO>.TrackPosition" tag.

When the cam track is enabled by a "MC_CamTrack" job, the position of the cam track (<TO_CamTrack>.MatchPosition) is set as if the current position had been reached by a motion in the positive direction starting from the reference position (<TO_CamTrack>.ReferencePosition).

Homing of an axis or an encoder without modulo function

A change to the position of an axis or external encoder using Motion Control instruction "MC_Home" is regarded as a sudden position change. An enabled cam track is referenced to the changed position and processed further from there.

- Homing also has an effect on the current position of the cam track (<TO>.TrackPosition). The position is formed again as quickly as possible due to the offset.
- Distance output cams are either skipped or correspondingly output.
- Time-based output cams are skipped. A time-based output cam is switched on only when the start position is overtraveled and remains switched on for the switch-on duration.
- Switched time-based output cams are not canceled by a homing operation.

Recommendation:
Disable the cam track before or during homing.

Homing of an axis or an encoder with modulo function

- Homing also has an effect on the current position of the cam track (<TO>.TrackPosition).
  The homing of the assigned technology object influences the position of the subsequently active cam track on a direction-dependent basis. This is dependent on the position difference, the difference between the new position minus the original position. If the position difference is negative, you add the modulo length (<TO_Axis/TO_ExternalEncoder>.Modulo.Length).
  If this position difference is less than or equal to half the modulo length, the new position of the cam track (<TO_CamTrack>.MatchPosition) is set as if the new position had been reached by a motion in the positive direction starting from the original position.
  If this position difference is greater than half the modulo length, the new position of the cam track (<TO_CamTrack>.MatchPosition) is set as if the new position had been reached by a motion in the negative direction starting from the original position.
- Distance output cams are either skipped or correspondingly output.
- Time-based output cams are skipped. A time-based output cam is switched on only when the start position is overtraveled and remains switched on for the switch-on duration.
- Switched time-based output cams are not canceled by a homing operation.

Recommendation:
Disable the cam track before or during homing.

3.4.2 Effective direction (S7-1500, S7-1500T)

The cam track is always active for both directions of the position of the interconnected technology object.

Output of a cam track with distance output cams

Distance output cams are switched when the switch-on range is overtraveled.

The following graphic shows the execution of a cam track with distance output cam depending on the motion direction of the axis.

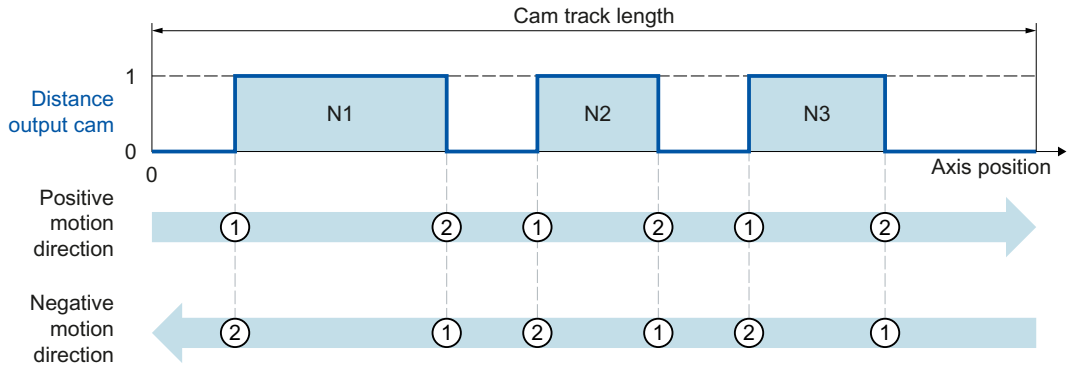

With positive motion direction, the output cams of the cam track are output in the order Output Cam N1, Output Cam N2, Output Cam N3. In the case of negative motion direction, the output cams of the cam track are output in the order Output Cam N3, Output Cam N2, Output Cam N1. The distance output cams switch on at ① and switch off at ②.

Output of a cam track with time-based output cams

The time-based output cams are switched when the start position is crossed.
The following graphic shows the execution of a cam track with time-based output cam depending on the motion direction of the axis.

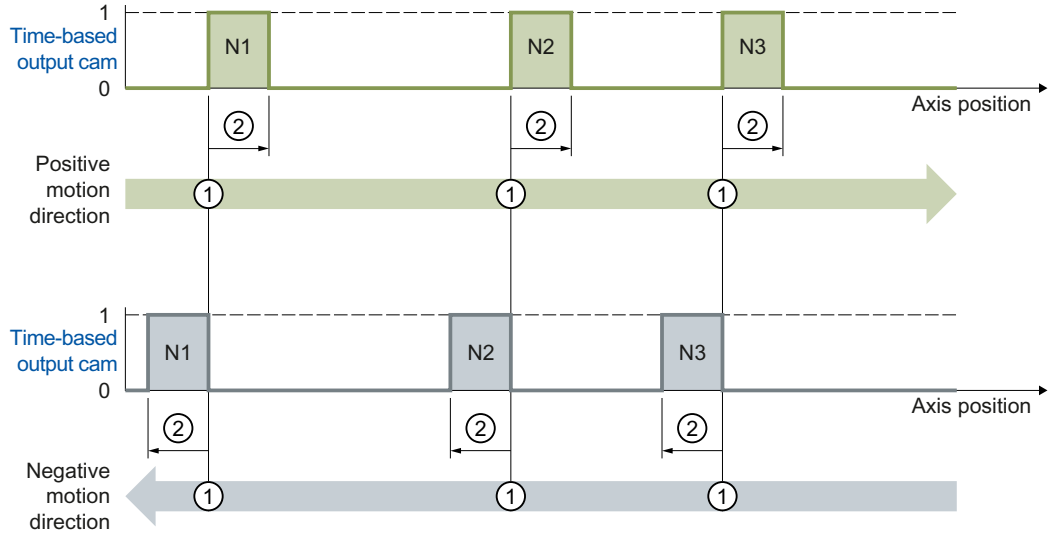

With positive motion direction, the output cams of the cam track are output in the order Output Cam N1, Output Cam N2, Output Cam N3. In the case of negative motion direction, the output cams of the cam track are output in the order Output Cam N3, Output Cam N2, Output Cam N1. The time-based output cams switch on at ① and remain switched on for the set switch-on duration ②.

3.4.3 Changing the cam track data during operation (S7-1500, S7-1500T)

The data of a cam track and the parameters of the associated Motion Control instruction "MC_CamTrack" can be changed while track processing is enabled. The active Motion Control instruction "MC_CamTrack" is not aborted. The modified parameters, however, only take effect at the next call of the Motion Control instruction "MC_CamTrack".

The following parameters can be changed during operation and are in effect after another call of Motion Control instruction "MC_CamTrack".

- Cam track data in technology data block
  - Reference position (<TO>.Parameter.ReferencePosition)
  - Track length (<TO>.Parameter.CamTrackLength)
  - Bit masking of individual output cams (<TO>.Parameter.CamMasking)
  - Activation time (<TO>.Parameter.OnCompensation)
  - Deactivation time (<TO>.Parameter.OffCompensation)
  - Hysteresis value (<TO>.Parameter.Hysteresis)
  - Output cam data (<TO>.Parameter.Cam[1..32])
- Parameters in the function block
  - Enable (MC_CamTrack.Enable)
  - Mode (MC_CamTrack.Mode)
  - Inverted output (MC_CamTrack.InvertOutput)

Note the different activation behavior (Page 50) when changing the cam track data.

3.4.4 Activation behavior (S7-1500, S7-1500T)

A cam track is activated by the call of Motion Control instruction "MC_CamTrack" with "Enable" = TRUE. A distinction must be made here between:

- First-time activation of the cam track
- Call after a change of the cam track data during active cam track processing

The difference relates to how the cam track data is applied. Depending on the set mode ("MC_CamTrack.Mode"), the configuration (cam track data, data in the function block) is applied at different times.

- **First-time switch-on of a cam track**
  Calling the Motion Control instruction "MC_CamTrack" with "Enable" = TRUE activates the cam track immediately ("<TO>.Status" changes to 1) and configured cam track data takes effect immediately. This behavior is the same when "MC_CamTrack.Mode" = 0 and "MC_CamTrack.Mode" = 1.
- **Change of cam track data of an already activated cam track** ("<TO>.Status" = 1)
  - With the call of Motion Control instruction "MC_CamTrack" with "Enable" = TRUE and "Mode" = 0, the modified cam track data takes effect immediately.
    Previously activated distance output cams are aborted if their track signals are not still set due to the changed cam track data. Previously activated time-based output cams are always aborted.

- With the call of Motion Control instruction "MC_CamTrack" with "Enable" = TRUE and "Mode" = 1, the cam track continues to be output with the prior configuration up to the cam track end. Modified cam track data takes effect at the end of the current track cycle.

  If you change a cam track with "MC_CamTrack.Mode" = 1 during runtime of the user program, keep in mind the lead time of the cam track as reserve for the first output cam. Define the first output cam position in the cam track only after the following position:

  Position of first output cam > velocity of axis x lead time of the cam track (<TO>.Parameter.OnCompensation)

  Also keep in mind the internal system time for output cam calculation, even if you set the lead time 0.0.

Changing cam track data when modulo length is not a multiple of the track length

For the switching times to be set correctly, we recommend the following procedure for changes:

- Enter changes as soon as possible after start of a new cam track
- Enter a new reference position (<TO>.Parameter.ReferencePosition) for the changed cam track. The new reference position is composed as follows depending on the direction:
  - Positive effective direction: Current reference position (<TO>.MatchPosition) + cam track length (<TO>.Parameter.CamTrackLength)
  - Negative effective direction: Current reference position (<TO>.MatchPosition) - cam track length (<TO>.Parameter.CamTrackLength)
- Output the changes of the cam track when calling the Motion Control instruction "MC_CamTrack" and "Mode" = 1.

Example

The following figure shows an example of the differences in the activation behavior.

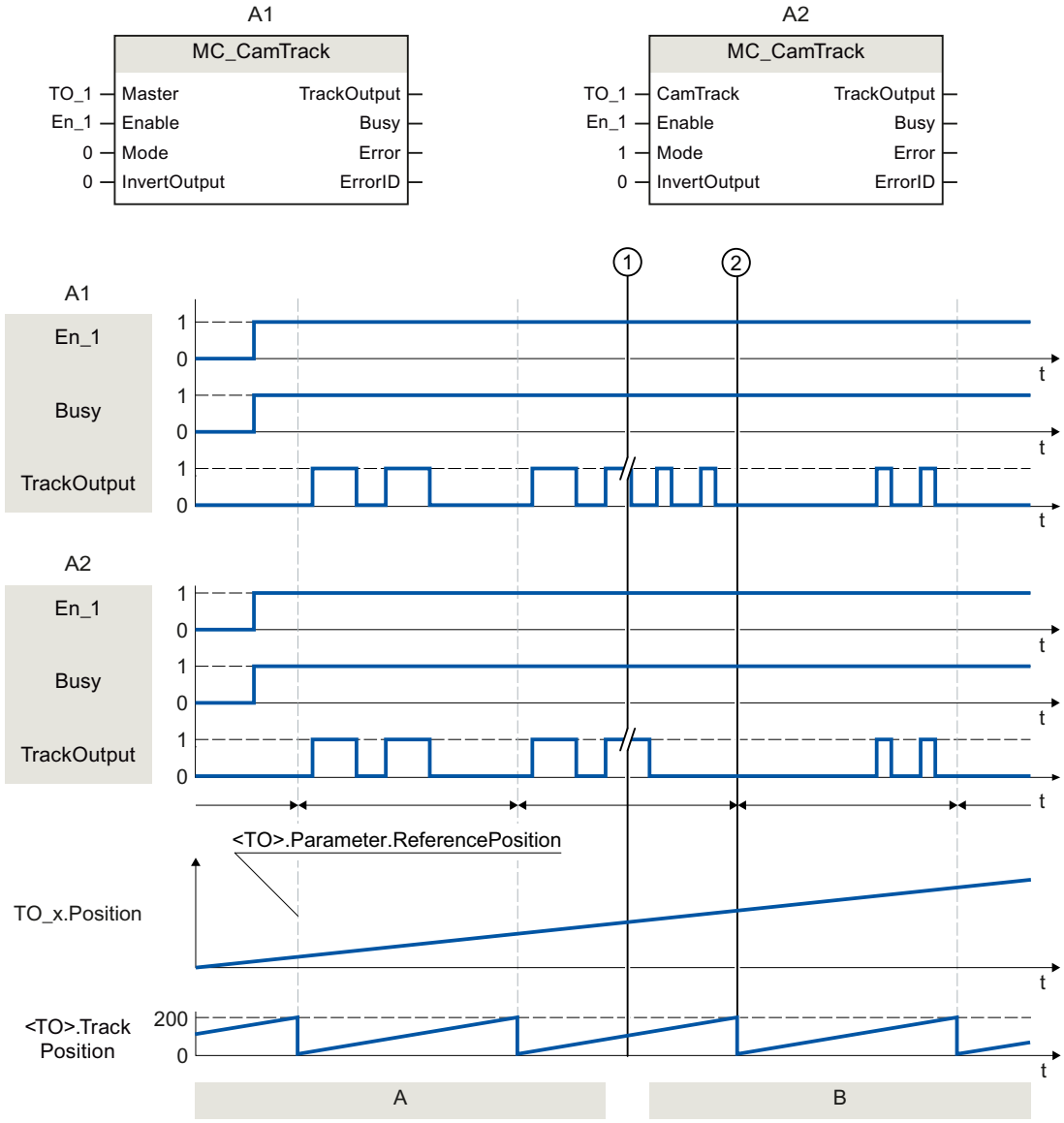

A1	A	The cam track is activated the first time with "MC_CamTrack.Enable" = TRUE and the output cams are output immediately with set "MC_CamTrack.Mode" = 0.
	B	After cam track data were changed (①), the cam track is activated by calling Motion Control instruction "MC_CamTrack" with "Enable" = TRUE and the modified data takes effect immediately (①) with set "MC_CamTrack.Mode" = 0.
A2	A	The cam track is activated the first time with "MC_CamTrack.Enable" = TRUE and the output cams are output immediately with set "MC_CamTrack.Mode" = 1.
	B	After cam track data were changed (①), the cam track is activated by calling Motion Control instruction "MC_CamTrack" with "Enable" = TRUE and the modified data takes effect at the end of the current track cycle (②) with set "MC_CamTrack.Mode" = 1.

3.4.5 Hysteresis (S7-1500, S7-1500T)

The hysteresis is set in the cam track technology object. The behavior and effect of the hysteresis setting corresponds to the hysteresis (Page 37) for the cam technology object.

3.4.6 Time offset of cam switching points (S7-1500, S7-1500T)

Switching times of the output and the connected actuator (e.g. valve) can be compensated for using the activation time or deactivation time of the cam track technology object.

The time offset of cam switching points corresponds to the activation time or deactivation time (Page 39) for the cam technology object.

3.4.7 Tags: Cam track technology object (S7-1500, S7-1500T)

The following technology object tags are relevant:

Status indicator		
Tag	**Description**	
<TO>.Status	Status of the cam track function	
	0	Inactive
	1	Active
	2	Active and waiting for next track
<TO>.TrackOutput	An output cam of cam track is switched.	
<TO>.SingleCamState	Switched on output cam (bit-masked)	
<TO>.TrackPosition	Display of the current position within the cam track The distance to the current reference position of the current cam track (<TO>.MatchPosition) is displayed.	
<TO>.MatchPosition	Reference position of the current cam track During cyclic processing of the cam track, the continued reference position of the current cam track is displayed. The unique detection and output of the position is only possible when the assigned technology object is in motion.	

Parameters		
Tag	**Description**	
<TO>.Parameter.CamTrackType	Output cam type	
	0	Distance output cam
	1	Time-based output cam
<TO>.Parameter.PositionType	Position reference	
	0	Position setpoint
	1	Actual position
<TO>.Parameter.ReferencePosition	Reference position	
<TO>.Parameter.CamTrackLength	Track length	
<TO>.Parameter.CamMasking	Bit masking of individual output cams	
<TO>.Parameter.OnCompensation	Activation time (lead time for the switch-on edge)	

Parameters		
Tag	**Description**	
<TO>.Parameter.OffCompensation	Deactivation time (lead time for the switch-off edge)	
<TO>.Parameter.Hysteresis	Hysteresis value	
<TO>.Parameter.Cam[1..32].OnPosition	Start position (distance output cams and time-based output cams)	
<TO>.Parameter.Cam[1..32].OffPosition	End position (distance output cam)	
<TO>.Parameter.Cam[1..32].Duration	Switch-on duration (time-based output cam)	
<TO>.Parameter.Cam[1..32].Existent	Validity of an output cam	
	FALSE	Output cam is not used.
	TRUE	Output cam is used.

Interface		
Tag	**Description**	
<TO>.Interface.EnableOutput	Output cam output at the bit specified under "Address"	
	FALSE	No output
	TRUE	Output
<TO>.Interface.Address	I/O address for digital output cam output	

Units	
Tag	**Description**
<TO>.Units.LengthUnit	Unit of the length data
<TO>.Units.TimeUnit	Unit of the time data

StatusWord	
Tag	**Description**
<TO>.StatusWord.X0 (Control)	The technology object is in operation.
<TO>.StatusWord.X1 (Error)	An error occurred at the technology object.
<TO>.StatusWord.X2 (RestartActive)	The technology object is being reinitialized. The tags of the technology data block are not updated with active restart.
<TO>.StatusWord.X3 (OnlineStartVal-uesChanged)	Data relevant for the restart has been changed. The changes are applied only after a restart of the technology object.
<TO>.StatusWord.X4 (OutputInverted)	The output cam output is inverted.
<TO>.StatusWord.X5 (CommunicationOk)	The cam track is synchronized with the output module and available for use.
<TO>.StatusWord.X6 (CamDataChanged)	The data of individual output cams has been changed but not yet taken effect with Motion Control instruction "MC_CamTrack".

ErrorWord	
Tag	**Description**
<TO>.ErrorWord.X0 (SystemFault)	A system-internal error has occurred.
<TO>.ErrorWord.X1 (ConfigFault)	Configuration error One or more configuration parameters are inconsistent or invalid. The technology object was incorrectly configured, or editable configura-tion data was incorrectly modified during runtime of the user program.

ErrorWord	
Tag	**Description**
<TO>.ErrorWord.X2 (UserFault)	Error in user program at a Motion Control instruction or its use.
<TO>.ErrorWord.X3 (CommandNotAccepted)	Command cannot be executed A Motion Control instruction cannot be executed because the necessary conditions have not been met.
<TO>.ErrorWord.X13 (PeripheralError)	Error accessing a logical address.

ErrorDetail		
Tag	**Description**	
<TO>.ErrorDetail.Number	Alarm number You can find a list of the technology alarms and alarm responses in the "Technology alarms" section in the "S7-1500/S7-1500T Motion Control alarms and error IDs" documentation (Page 8).	
<TO>.ErrorDetail.Reaction	Effective alarm response	
	0	No reaction
	5	Cam track processing is complete.

Configuring (S7-1500, S7-1500T) 4

4.1 Configuring the technology object measuring input (S7-1500, S7-1500T)

4.1.1 Configuration - Basic parameters (S7-1500, S7-1500T)

Configure the basic properties of the technology object in the "Basic parameters" configuration window.

Name

Define the name of the measuring input in this field. The technology object is listed under this name in the project tree. The tags of the measuring input can be used in the user program under this name.

Assigned axis or external encoder

The axis or external encoder assigned to the measuring input is displayed. You can use the button to directly access the configuration of the basic parameters of the higher-level technology object.

Unit of measure

The indicated unit of measure for the position of the measuring input corresponds to the unit of measure of the higher-level technology object.

To use six decimal places in the selected unit, select the check box "Use position values with higher resolution" in the higher-level technology object.

See also

Measuring input technology object (Page 15)

4.1.2 Configuration - Hardware interface (S7-1500, S7-1500T)

Measuring input type

Select the measuring input type.

- Measurement using Timer DI
- Measurement using SINAMICS (central probe)
- Measurement using PROFIdrive telegram (drive or external encoder)

You can only operate a measuring input with a technology object measuring input.

Overview of possible measurement inputs and measuring types

Measuring input type	Possible measurement inputs	Possible measuring types
Measurement using Timer DI ("STANDARD")	With Timer DI • ET 200SP or ET 200MP TM Timer DIDQ • SIMATIC Drive Controller (X142)	• "MC_MeasuringInput" (One-time measuring) • "MC_MeasuringInputCyclic" (Cyclic measuring)
(central probe)Measurement using SINAMICS ("STANDARD")	Using telegram 39x of the drive control: • SINAMICS S120 CU320-2 (X122/X132) • SINAMICS S120 CU310-2 (X121/X131) • SIMATIC Drive Controller (X122/X132)	"MC_MeasuringInput" (One-time measuring)
Measurement using PROFIdrive telegrams ("PROFIDRIVE")	Using PROFIdrive telegram of the drive axis: • SINAMICS S210 (X130) • SINAMICS S120 CU320-2 (X122/X132) • SINAMICS S120 CU310-2 (X121/X131) • SIMATIC Drive Controller (X122/X132)	"MC_MeasuringInput" (One-time measuring)

Measurement using Timer DI

Select a measurement input for a measurement using a Timer DI. The selection box shows all channels that are configured correctly. For this purpose, you need to have configured the I/O channels as Timer DI beforehand.

Measurement using SINAMICS (central probe)

Select a measuring input for a measurement via SINAMICS measurement sensing input. The selection box shows all compatible telegram types. You are shown all terminals that can potentially be used as measuring inputs. For this purpose, you need to have configured the necessary central measuring inputs on the drive side beforehand.

For SINAMICS drives that are not configured via Startdrive, you need to assign the inputs to the measuring inputs (p680) in the telegram without gaps and in ascending order.

With p728.8 to p728.15, you configure as input all DI/DQs used as measurement input on the control unit. Use p680 of the control unit to specify the terminals for the global measuring inputs.

You need to configure telegram 391, 392 or 393 on the control unit. Telegrams 394 and 395 must be configured as free telegrams.

Measurement using PROFIdrive telegram (drive or external encoder)

For a measurement via PROFIdrive telegram, select the number of the measuring input in the telegram in the "Number of the measuring input" drop-down list. The input field is preset with the value "1".

Two communication channels are available for the transmission of measured values in the PROFIdrive telegram. These communication channels are assigned to one measurement input/digital input each in the drive. Use the PROFIdrive parameters to configure the digital input on the drive that is to be used for the configured communication channel.

- Measurement input for the first communication channel
  ("<TO>.Parameter.PROFIdriveProbeNumber" = 1)
  If you use two encoders, you must select the associated DI in the SINAMICS for each encoder. Various results are then transferred to the technology object depending on the selected encoder. The encoders are configured using the parameters p488[0] and p488[1].
- Measurement input for the second communication channel
  ("<TO>.Parameter.PROFIdriveProbeNumber" = 2)
  If you use two encoders, you must select the associated DI in the SINAMICS for each encoder. Various results are then transferred to the technology object depending on the selected encoder. The encoders are configured using the parameters p489[0] and p489[1].

Correction time for the measuring signal

Specify a correction time if possible delay times in the measurement signal are to be compensated.

See also

Measuring input technology object (Page 15)

4.1.3 Configuration - Extended parameters (S7-1500, S7-1500T)

Adjustment for activation time of the measuring range

To adjust the activation time defined on the system side, enter an additional activation time here.

The configuration window also displays the following times calculated on the system side:

- Time after the measuring job request until the measuring event can be recoreded
- Time after the measuring event until the measurement result is displayed (for measuring of one or two edges)

See also

Measuring with measuring range (Page 23)

Time-related boundary conditions (Page 25)

Measuring input technology object (Page 15)

4.2 Configuring the output cam technology object (S7-1500, S7-1500T)

4.2.1 Configuration - Basic parameters (S7-1500, S7-1500T)

Configure the basic properties of the technology object in the "Basic parameters" configuration window.

Name

Define the name of the output cam in this field. The technology object is listed under this name in the project tree. The tags of the output cam can be used in the user program under this name.

Assigned axis or external encoder

The axis or external encoder assigned to the output cam is displayed. You can use the button to directly access the configuration of the basic parameters of the higher-level technology object.

Output cam type

Select based on the desired switching behavior of an output cam type:

- Distance output cam (position-dependent switch-on/switch-off)
- Time-based output cam (position-dependent switch-on and position-independent or time-dependent switch-off)

Output cam reference

Configure in this selection whether the switching points of the output cam are to reference the actual position or the position setpoint.

Unit of measure

The indicated unit of measure for the position of the output cam corresponds to the unit of measure of the higher-level technology object.
To use six decimal places in the selected unit, select the check box "Use position values with higher resolution" in the higher-level technology object.
When a time-based output cam is selected as the output cam type, the unit of measure for the switch-on duration and other times is also indicated. For output cams, this is always ms.

See also

Output cam technology object (Page 28)

4.2.2 Configuration - Hardware interface (S7-1500, S7-1500T)

Output cam output

Select whether the generated switching signals are to be output at the digital output.

- **Activate output**
  Select one of the following two output options for the output cam output:
  - **Output via Timer DQ**
    With output via a Timer DQ, you select a suitable channel in the "Output" field. The selection box shows all channels that are configured as Timer DQ. For this purpose, you need to have configured the I/O channels as Timer DQ beforehand.
    Timer DQs are supported by:
    - ET 200MP TM Timer DIDQ 16x24V
    - ET 200SP TM Timer DIDQ 10x24V
    - SIMATIC Drive Controller (X142)
  - **Output by digital output module**
    For output by a digital output module, select this in the "Output cam output" field. Only the digital outputs with previously defined PLC tags are displayed for selection.

  Select the logical operation of the output cam signal at the output. The logic operation relates to the last signal to be output after the set inversion, if any.
  All output cams that use the selected output are shown graphically.
- **Output deactivated**
  When the output is deactivated, the output cam is evaluated only in the software.

See also

Output cam technology object (Page 28)

4.2.3 Extended parameters (S7-1500, S7-1500T)

4.2.3.1 Configuration - Activation time (S7-1500, S7-1500T)

The specified output cam type is indicated in the upper area of the "Activation time" configuration window.

Activation time and deactivation time

For a time shift of the switch-on and switch-off times of an output cam, enter an activation time and a deactivation time.

See also

Compensation of actuator switching times (Page 39)
Output cam technology object (Page 28)

4.2.3.2 Configuration - Hysteresis (S7-1500, S7-1500T)

To prevent unwanted changes in the switching state of the output cams of a cam track, enter a hysteresis value.
When using an output cam with reference to actual position, always enter a hysteresis value (> 0.0).

See also

Hysteresis (Page 37)
Output cam technology object (Page 28)

4.3 Configuring the cam track technology object (S7-1500, S7-1500T)

4.3.1 Configuration - Basic parameters (S7-1500, S7-1500T)

Configure the basic properties of the technology object in the "Basic parameters" configuration window.

Name

Define the name of the cam track in this field. The technology object is listed under this name in the project tree. The tags of the cam track can be used in the user program under this name.

Assigned axis or external encoder

The axis or external encoder assigned to the cam track is displayed. You can use the button to directly access the configuration of the basic parameters of the higher-level technology object.

Output cam type

Select based on the desired switching behavior of an output cam type for the cam track:

- Distance output cam (position-dependent switch-on/switch-off)
- Time-based output cam (position-dependent switch-on and position-independent or time-dependent switch-off)

Output cam reference

In this selection, configure whether the switching points of the cam track are to reference the actual position or the position setpoint.

Unit of measure

The indicated unit of measure for the position of the cam track corresponds to the unit of measure of the higher-level technology object.
To use six decimal places in the selected unit, select the check box "Use position values with higher resolution" in the higher-level technology object.
When a time-based output cam is selected as the output cam type, the unit of measure for the switch-on duration and other times is also indicated. For output cams, this is always ms.

See also

Cam track technology object (Page 42)

4.3.2 Configuration - Hardware interface (S7-1500, S7-1500T)

Output cam track

Select whether the generated switching signals are to be output at the digital output.

- **Activate output**
  Select one of the following two output options for the output track:
  – Output via Timer DQ
    With output via a Timer DQ, you select a suitable channel in the "Output" field. The selection box shows all channels that are configured as Timer DQ. For this purpose, you need to have configured the I/O channels as Timer DQ beforehand.
    Timer DQs are supported by:
    - ET 200MP TM Timer DIDQ 16x24V
    - ET 200SP TM Timer DIDQ 10x24V
    - SIMATIC Drive Controller (X142)
  – Output by digital output module
    For output by a digital output module, select this in the "Output cam output" field. Only the digital outputs with previously defined PLC tags are displayed for selection.
- **Deactivate output**
  When the output is deactivated, the cam track is evaluated only in the software.

See also

Cam track technology object (Page 42)

4.3.3 Extended parameters (S7-1500, S7-1500T)

4.3.3.1 Track data (S7-1500, S7-1500T)

The set output cam type is displayed.

Activation time and deactivation time

Enter the activation time and the deactivation time.

For a time shift of the switch-on and switch-off times of the output cam of a cam track, enter an activation time and a deactivation time.

See also

Time offset of cam switching points (Page 53)
Cam track technology object (Page 42)

To prevent unwanted changes in the switching state of the output cams of a cam track, enter a hysteresis value.
When using an output cam with reference to actual position, always enter a hysteresis value (> 0.0).

See also

Hysteresis (Page 52)
Cam track technology object (Page 42)

Track length

Enter the corresponding track length.
Also take into account the output cam data of the individual output cams when defining the track length. Output cams whose start position lies outside the cam track length are not included. They become active only if the cam track length is increased so that at least the respective start position of an output cam is within the new track length.

Axis reference position

Enter the position of an axis or external encoder starting from which the output of the cam track is to occur. The start of the cam track is placed at the entered position.
You can enter a negative or positive value for the reference position.

Modulo length of the axis

When an axis with modulo function is used, the modulo length of the axis is displayed.

See also

Cam track technology object (Page 42)

4.3.3.2 Configuration - Output cam data (S7-1500, S7-1500T)

The set output cam type is displayed.
Enter the properties for the output cams of the cam track that are to be output. You can set up to 32 individual output cams on a cam track.
Also take into account any previously defined track length when defining the output cam data. Output cams whose start position lies outside the cam track length are not included.

They become active only if the cam track length is increased so that at least the respective start position of an output cam is within the new track length.
The input options described below are displayed in the Output cam data configuration window according to the configured output cam type.

- **Valid**
  Only output cams set as "valid" are output and have a status display.
- **Start position**
  - The start position may not be greater than the end position for distance output cams.
  - If the start position is equal to the end position, the distance output cam does not switch.
  - The switching ranges of individual output cams are permitted to overlap.
- **End position**
  - The "End position" column is only displayed when distance output cam is set for the output cam type.
  - The end position must not be less than the start position.
- **Switch-on duration**
  The "Switch-on duration" column is only displayed when time-based output cam is set for the cam type.

See also

Cam track technology object (Page 42)

Diagnostics (S7-1500, S7-1500T) 5

The description of Motion Control diagnostics is limited to the diagnostics view of the technology objects in TIA Portal, the technology alarms and the error detections on Motion Control instructions.

The following descriptions can be found in the "S7-1500/S7-1500T Motion Control alarms and error IDs" documentation (Page 8):

- Diagnostics concept
- Technology alarms
- Error IDs in Motion Control instructions

A comprehensive description of the system diagnostics of the S7-1500 CPU can be found in the "Diagnostics" function manual (https://support.industry.siemens.com/cs/ww/en/view/59192926).

5.1 Measuring input technology object (S7-1500, S7-1500T)

5.1.1 Status and error bits (S7-1500, S7-1500T)

You use the "Technology object > Diagnostics > Status and error bits" diagnostic function in the TIA Portal to monitor the status and error messages for the technology object. The diagnostics function is available in online operation.

The meaning of the status and error messages is described in the following tables. The associated technology object tag is given in parentheses.

Measuring input status

The following table shows the possible states of the measuring input:

Status	Description
Active	The technology object is in operation. (<TO>.StatusWord.X0 (Control))
Waiting for measuring event	The measuring input is waiting for a measuring event. The technology data block tag "<TO>.Status" has the value "1" ("WAITING_FOR_TRIGGER").
Measured value present	The measuring input has acquired one or more measured values. The technology data block tag "<TO>.Status" has the value "2" ("TRIGGER_OCCURRED").
Error	An error occurred at the technology object. Detailed information about the error is available in the "Error" area and in the "<TO>.ErrorDetail.Number" and "<TO>.ErrorDetail.Reaction" tags of the technology object. (<TO>.StatusWord.X1 (Error))

Status	Description
Restart active	The technology object is being reinitialized. The tags of the technology data block are not updated with active restart. (<TO>.StatusWord.X2 (RestartActive))
Measuring input ready	The measuring input is synchronized with the measuring module and can be used. (<TO>.StatusWord.X5 (CommunicationOK))
Restart required	Data relevant for the restart has been changed. The changes are applied only after a restart of the technology object. (<TO>.StatusWord.X3 (OnlineStartValuesChanged))

Error

The following table shows the possible errors:

Error	Description
System	A system-internal error has occurred. (<TO>.ErrorWord.X0 (SystemFault))
Configuration	A configuration error has occurred. One or more configuration parameters are inconsistent or invalid. The technology object was incorrectly configured, or editable configuration data was incorrectly modified during runtime of the user program. (<TO>.ErrorWord.X1 (ConfigFault))
User program	An error occurred in the user program with a Motion Control instruction or its use. (<TO>.ErrorWord.X2 (UserFault))
Job rejected	A job cannot be executed. A Motion Control instruction cannot be executed because the necessary conditions have not been met (e.g. axis assigned to the measuring input is not homed). (<TO>.ErrorWord.X3 (CommandNotAccepted))
I/O	An error occurred accessing a logical address. (<TO>.ErrorWord.X13 (PeripheralError))

Alarm display

For more information and to acknowledge the error, go to the Inspector window by clicking on the "Alarm display" link.

More information

An option for evaluating the individual status bits can be found in the section "Evaluating StatusWord, ErrorWord and WarningWord" of the "S7-1500/S7-1500T Motion Control overview" (Page 8) documentation.

See also

"StatusWord" tag (measuring input) (Page 98)
"ErrorWord" tag (measuring input) (Page 98)
"WarningWord" tag (measuring input) (Page 100)

5.2 Output cam technology object (S7-1500, S7-1500T)

5.2.1 Status and error bits (S7-1500, S7-1500T)

You use the "Technology object > Diagnostics > Status and error bits" diagnostic function in the TIA Portal to monitor the status and error messages for the technology object. The diagnostics function is available in online operation.

The meaning of the status and error messages is described in the following tables. The associated technology object tag is given in parentheses.

Output cam status

The following table shows the possible states of the output cam:

Status	Description
Active	The technology object is in operation. (<TO>.StatusWord.X0 (Control))
Switched	The output cam is switched. (<TO>.CamOutput)
Inverted output for output cam	The output cam output is inverted. (<TO>.StatusWord.X4 (OutputInverted))
Error	An error occurred at the technology object. Detailed information about the error is available in the "Error" area and in the "<TO>.ErrorDetail.Number" and "<TO>.ErrorDetail.Reaction" tags of the technology object. (<TO>.StatusWord.X1 (Error))
Restart active	The technology object is being reinitialized. The tags of the technology data block are not updated with active restart. (<TO>.StatusWord.X2 (RestartActive))
Output cam output ready	The output cam is synchronized with the output module and available for use. (<TO>.StatusWord.X5 (CommunicationOk))
Restart required	Data relevant for the restart has been changed. The changes are applied only after a restart of the technology object. (<TO>.StatusWord.X3 (OnlineStartValuesChanged))

Error

The following table shows the possible errors:

Error	Description
System	A system-internal error has occurred. (<TO>.ErrorWord.X0 (SystemFault))
Configuration	A configuration error has occurred. One or more configuration parameters are inconsistent or invalid. The technology object was incorrectly configured, or editable configuration data was incorrectly modified during runtime of the user program. (<TO>.ErrorWord.X1 (ConfigFault))
User program	An error occurred in the user program with a Motion Control instruction or its use. (<TO>.ErrorWord.X2 (UserFault))
Job rejected	A job cannot be executed. A Motion Control instruction cannot be executed because the necessary conditions have not been met (e.g. axis assigned to the output cam is not homed). (<TO>.ErrorWord.X3 (CommandNotAccepted))
I/O	An error occurred accessing a logical address. (<TO>.ErrorWord.X13 (PeripheralError))

Alarm display

For more information and to acknowledge the error, go to the Inspector window by clicking on the "Alarm display" link.

More information

An option for evaluating the individual status bits can be found in the section "Evaluating StatusWord, ErrorWord and WarningWord" of the "S7-1500/S7-1500T Motion Control overview" (Page 8) documentation.

See also

"StatusWord" tag (output cam) (Page 103)
"ErrorWord" tag (output cam) (Page 104)
"WarningWord" tag (output cam) (Page 105)

5.3 Cam track technology object (S7-1500, S7-1500T)

5.3.1 Status and error bits (S7-1500, S7-1500T)

You use the "Technology object > Diagnostics > Status and error bits" diagnostic function in the TIA Portal to monitor the status and error messages for the technology object. The diagnostics function is available in online operation.

The meaning of the status and error messages is described in the following tables. The associated technology object tag is given in parentheses.

Cam track status

The following table shows the possible states of the cam track:

Status	Description
Active	The technology object is in operation. (<TO>.StatusWord.X0 (Control))
Switched	An output cam of cam track is switched. (<TO>.TrackOutput)
Inverted output for output cam	The output cam output is inverted. (<TO>.StatusWord.X4 (OutputInverted))
Error	An error occurred at the technology object. Detailed information about the error is available in the "Error" area and in the "<TO>.ErrorDetail.Number" and "<TO>.ErrorDetail.Reaction" tags of the technology object. (<TO>.StatusWord.X1 (Error))
Restart active	The technology object is being reinitialized. The tags of the technology data block are not updated with active restart. (<TO>.StatusWord.X2 (RestartActive))
Cam track output ready	The cam track is synchronized with the output module and available for use. (<TO>.StatusWord.X5 (CommunicationOk))
Restart required	Data relevant for the restart has been changed. The changes are applied only after a restart of the technology object. (<TO>.StatusWord.X3 (OnlineStartValuesChanged))

Error

The following table shows the possible errors:

Error	Description
System	A system-internal error has occurred. (<TO>.ErrorWord.X0 (SystemFault))
Configuration	A configuration error has occurred. One or more configuration parameters are inconsistent or invalid. The technology object was incorrectly configured, or editable configuration data was incorrectly modified during runtime of the user program. (<TO>.ErrorWord.X1 (ConfigFault))
User program	An error occurred in the user program with a Motion Control instruction or its use. (<TO>.ErrorWord.X2 (UserFault))
Job rejected	A job cannot be executed. A Motion Control instruction cannot be executed because the necessary conditions have not been met (e.g. axis assigned to the cam track is not homed). (<TO>.ErrorWord.X3 (CommandNotAccepted))
I/O	An error occurred accessing a logical address. (<TO>.ErrorWord.X13 (PeripheralError))

Alarm display

For more information and to acknowledge the error, go to the Inspector window by clicking on the "Alarm display" link.

More information

An option for evaluating the individual status bits can be found in the section "Evaluating StatusWord, ErrorWord and WarningWord" of the "S7-1500/S7-1500T Motion Control overview" (Page 8) documentation.

See also

"StatusWord" tag (cam track) (Page 109)
"ErrorWord" tag (cam track) (Page 109)
"WarningWord" tag (cam track) (Page 110)

5.3.2 Cam track status (S7-1500, S7-1500T)

You use the "Technology object > Diagnostics > Cam track status" diagnostics function in the TIA Portal to monitor the status of the cam track. The diagnostics function is available in online operation.

"Validity and masking of the output cams" area

The individual cams of a cam track are shown in this area along with the status for the following properties:

Status	Description
Valid	Validity of the individual cams of the cam track (<TO>.Parameter.Cam[1..32].Existent)
Masked	Bit masking of the individual cams of the cam track (<TO>.Parameter.CamMasking)
Effective	Switched on output cam (bit-masked) (<TO>.SingleCamState)

"Positions" area

The following status values are displayed in this area:

Status	Description
Current position in the cam track	Position during cam track processing within a cam track cycle The distance to the current reference position of the current cam track (<TO>.MatchPosition) is displayed. (<TO>.TrackPosition)

Status	Description
Current cam track start	Reference position of the current cam track During cyclic processing of the cam track, the continued reference position of the current cam track is displayed. The unique detection and output of the position is only possible when the assigned technology object is in motion. (<TO>.MatchPosition)

Instructions (S7-1500, S7-1500T) 6

6.1 MC_MeasuringInput V7 (S7-1500, S7-1500T)

6.1.1 MC_MeasuringInput: Start measuring once V7 (S7-1500, S7-1500T)

Description

With the Motion Control instruction "MC_MeasuringInput", a one-time measuring is started.
With the one-time measuring, one or two edges can be detected with one measuring job. The position of the respective technology object axis or external encoder is assigned to the measuring event. The measurement result is indicated in the function block and in the technology data block and can be further processed in the user program. This completes the measuring job.
Another measuring job must be started again using "MC_MeasuringInput.Execute" = TRUE.

Applies to

- Measuring input

Requirement

- The technology object has been configured correctly.
- The encoder of the axis must have "valid" status ("<TO>.StatusSensor[1..4].State" = valid). Otherwise, the measuring job is rejected in the function block with an error indication.
- The communication between measuring input and measuring module is established ("<TO>.StatusWord.CommunicationOK" = TRUE).
- Measurement using PROFIdrive is not possible during active or passive homing.

Override response

The override response for "MC_MeasuringInput" jobs is described in section "Override response V7: Measuring input jobs (Page 92)".

Parameters

The following table shows the parameters of the Motion Control instruction "MC_MeasuringInput":

Parameters	Declaration	Data type	Default value	Description	
MeasuringInput	INPUT	TO_MeasuringInput	-	Technology object	
Execute	INPUT	BOOL	FALSE	TRUE	Start job with a positive edge
Mode	INPUT	DINT	0	Type of measurement	
				0	Measurement of next positive edge
				1	Measurement of next negative edge
				2	Measurement of next two edges
				3	Measurement of two edges, beginning with the positive edge • Rising edge = "MeasuredValue1" (measured value 1) • Falling edge = "MeasuredValue2" (measured value 2)
				4	Measurement of two edges, beginning with the negative edge • Falling edge = "MeasuredValue1" • Rising edge = "MeasuredValue2"
MeasuringRange	INPUT	BOOL	FALSE	Acquisition of measured values Observe the time-related boundary conditions (Page 25).	
				FALSE	Always acquire measured values
				TRUE	Acquire measured values only within the measuring range
StartPosition	INPUT	LREAL	0.0	Start position of the measuring range For an axis or external encoder with active modulo function, position data outside the modulo range is mirrored in the modulo range.	
EndPosition	INPUT	LREAL	0.0	End position of the measuring range For an axis or external encoder with active modulo function, position data outside the modulo range is mirrored in the modulo range.	
Done	OUTPUT	BOOL	FALSE	TRUE	The block has been completely processed. Measured values are valid.
Busy	OUTPUT	BOOL	FALSE	TRUE	The job is being processed.
CommandAborted	OUTPUT	BOOL	FALSE	TRUE	The measuring job has been aborted.
Error	OUTPUT	BOOL	FALSE	TRUE	An error occurred while processing the job. The cause of the error can be found in the "ErrorID" parameter.

Parameters	Declaration	Data type	Default value	Description
ErrorID	OUTPUT	WORD	16#0000	Error ID for parameter "ErrorID" You can find more detailed information in the "Error IDs" section of the "S7-1500/S7-1500T Motion Control alarms and error IDs" documentation (Page 8).
MeasuredValue1	OUTPUT	LREAL	0.0	First measured value
MeasuredValue2	OUTPUT	LREAL	0.0	Second measured value (for measurement of two edges)

See also

One-time measurement (Page 19)

6.1.2 MC_MeasuringInput: Function chart V7 (S7-1500, S7-1500T)

Function chart: Start measuring job once

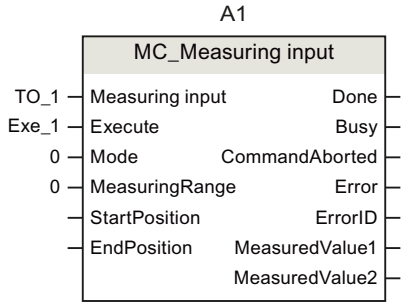

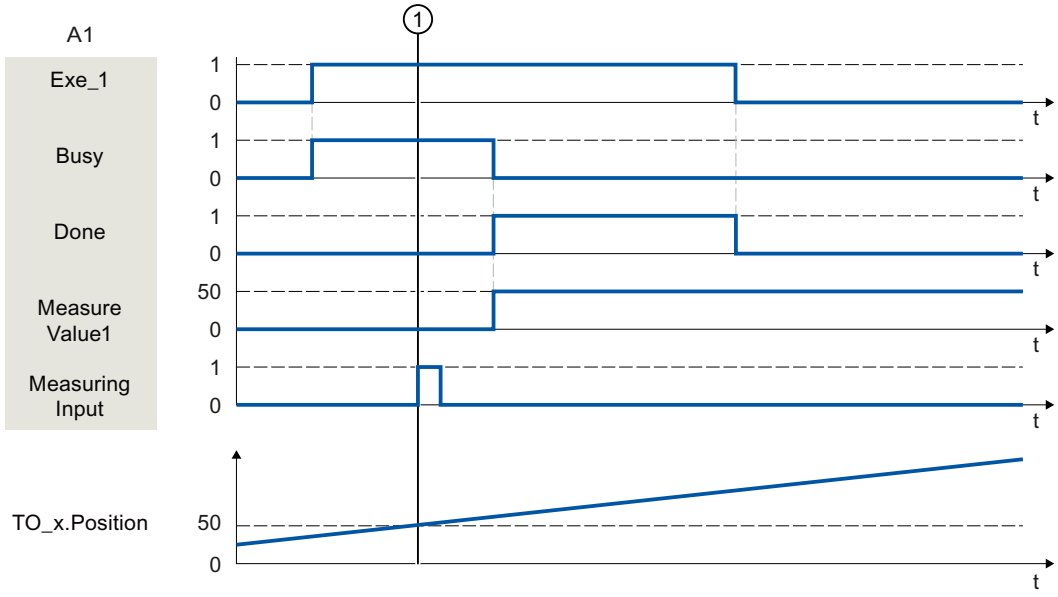

A "MC_MeasuringInput" job with "Mode" = 0 initiated using "Execute" performs a measurement of the next positive edge. A successfully completed measurement is signaled with "Done" = TRUE. The determined measured value ① (in example: 50) is output using "MeasuredValue1".

6.2 MC_MeasuringInputCyclic V7 (S7-1500, S7-1500T)

6.2.1 MC_MeasuringInputCyclic: Start cyclic measuring V7 (S7-1500, S7-1500T)

Description

With the Motion Control instruction "MC_MeasuringInputCyclic", a cyclic measuring is started.

With cyclic measuring, up to two measuring events are detected by the system and the associated measuring positions displayed. The measurements are continued cyclically until they are ended per command.

Applies to

- Measuring input

Requirement

- The technology object has been configured correctly.
- Cyclic measuring is only possible when measuring using Timer DI.
- The communication between measuring input and measuring module is established ("<TO>.StatusWord.CommunicationOK" = TRUE).
- The encoder of the axis operationally in effect must have "valid" status "valid" ("<TO>.StatusSensor[1..4].State" = valid). Otherwise, the measuring job is rejected in the function block with an error indication.

Override response

The override response for "MC_MeasuringInputCyclic" jobs is described in section "Override response V7: Measuring input jobs (Page 92)".

Parameters

The following table shows the parameters of the Motion Control instruction "MC_MeasuringInputCyclic":

Parameters	Declaration	Data type	Default value	Description	
MeasuringInput	INPUT	TO_MeasuringInput	-	Technology object	
Execute	INPUT	BOOL	FALSE	TRUE	Start job with a positive edge
Mode	INPUT	DINT	0	Type of measurement	
				0	Measurement of positive edges
				1	Measurement of negative edges
				2	Measurement of both edges
MeasuringRange	INPUT	BOOL	FALSE	Acquisition of measured values Observe the time-related boundary conditions (Page 25).	
				FALSE	Always acquire measured values
				TRUE	Acquire measured values only within the measuring range
StartPosition	INPUT	LREAL	0.0	Start position of the measuring range For an axis or external encoder with active modulo function, position data outside the modulo range is mirrored in the modulo range.	

Parameters	Declaration	Data type	Default value	Description	
EndPosition	INPUT	LREAL	0.0	End position of the measuring range For an axis or external encoder with active modulo function, position data outside the modulo range is mirrored in the modulo range.	
Busy	OUTPUT	BOOL	FALSE	TRUE	The job is being processed.
CommandAborted	OUTPUT	BOOL	FALSE	TRUE	The measuring job has been aborted.
Error	OUTPUT	BOOL	FALSE	TRUE	An error occurred while processing the job. The cause of the error can be found in the "ErrorID" parameter.
ErrorID	OUTPUT	WORD	16#0000	Error ID for parameter "ErrorID" You can find more detailed information in the "Error IDs" section of the "S7-1500/S7-1500T Motion Control alarms and error IDs" documentation (Page 8).	
MeasuredValue1	OUTPUT	LREAL		First measured value	
MeasuredValue2	OUTPUT	LREAL		Second measured value (when measuring multiple edges in one position control cycle)	
MeasuredValue1Counter	OUTPUT	UDINT	0	Count value for the first measured value	
MeasuredValue2Counter	OUTPUT	UDINT	0	Count value for the second measured value	
LostEdgeCounter1	OUTPUT	UDINT	0	Count value for the lost edges in the cycle clock of the first measured value acquisition	
LostEdgeCounter2	OUTPUT	UDINT	0	Count value for the lost edges in the cycle clock of the second measured value acquisition	

See also

Cyclic measuring (Page 20)

6.2.2 MC_MeasuringInputCyclic: Function chart V7 (S7-1500, S7-1500T)

Function chart: Start cyclic measuring job

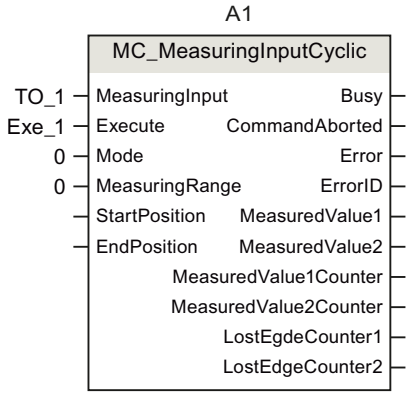

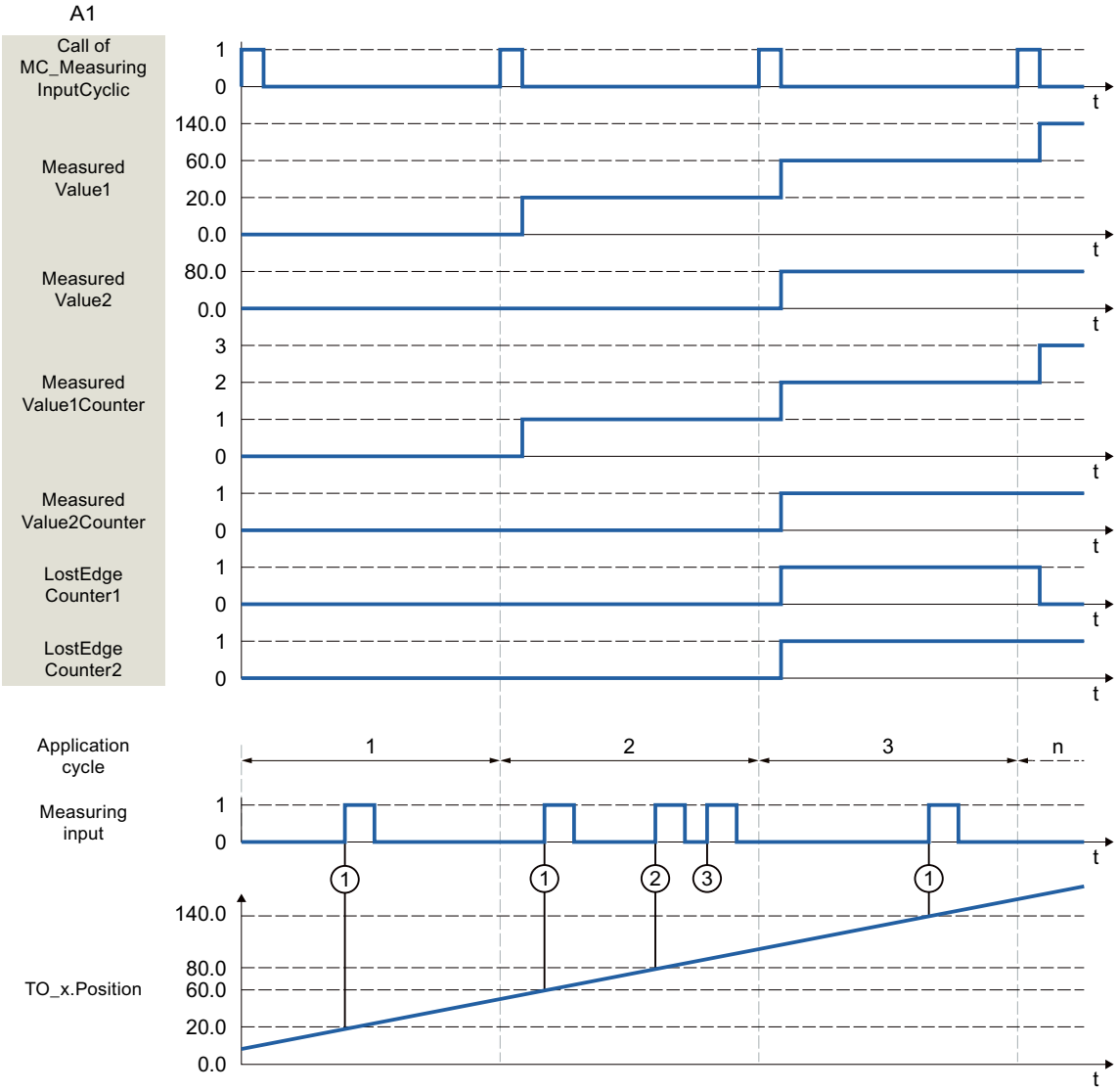

A "MC_MeasuringInputCyclic" command initiated using "Execute" (signal and start point not shown) (e.g. call in MC-PreServo [OB67]) with "Mode" = 0 and without specified measuring range "MeasuringRange = FALSE" performs a measurement of the positive edges.

The actual position determined at the time of the first positive edge ① in the position control cycle is output using "MeasuredValue1", and count tag "MeasuredValue1Counter" is incremented by "1".

The actual position determined at the time of the second positive edge ② in the position control cycle is output using "MeasuredValue2", and count tag "MeasuredValue2Counter" is incremented by "1".

If additional positive edges occur in the same position control cycle ③, these are recorded in LostEdgeCounter1 and LostEdgeCounter2.

6.3 MC_AbortMeasuringInput V7 (S7-1500, S7-1500T)

6.3.1 MC_AbortMeasuringInput: Cancel active measuring job V7 (S7-1500, S7-1500T)

Description

With the Motion Control instruction "MC_AbortMeasuringInput", an active one-time or cyclic measuring job is aborted.

Applies to

- Measuring input

Requirement

- The technology object has been configured correctly.

Override response

The override response for "MC_AbortMeasuringInput" jobs is described in section "Override response V7: Measuring input jobs (Page 92)".

Parameters

The following table shows the parameters of the Motion Control instruction "MC_AbortMeasuringInput":

Parameters	Declaration	Data type	Default value	Description	
MeasuringInput	INPUT	TO_MeasuringInput	-	Technology object	
Execute	INPUT	BOOL	FALSE	TRUE	Start job with a positive edge
Done	OUTPUT	BOOL	0	The function block has been processed. The measuring job has been deactivated.	
Busy	OUTPUT	BOOL	FALSE	TRUE	The job is being processed.
CommandAborted	OUTPUT	BOOL	FALSE	TRUE	The job has been aborted.
Error	OUTPUT	BOOL	FALSE	TRUE	An error occurred while processing the job. The cause of the error can be found in the "ErrorID" parameter.
ErrorID	OUTPUT	WORD	16#0000	Error ID for parameter "ErrorID" You can find more detailed information in the "Error IDs" section of the "S7-1500/S7-1500T Motion Control alarms and error IDs" documentation (Page 8).	

6.4 MC_OutputCam V7 (S7-1500, S7-1500T)

6.4.1 MC_OutputCam: Activate/deactivate output cam V7 (S7-1500, S7-1500T)

Description

You use Motion Control instruction "MC_OutputCam" to activate the specified output cam.
Depending on the output cam type, the following input parameters are in effect:

- Distance output cam
  - "OnPosition"
  - "OffPosition"
- Time-based output cam
  - "OnPosition"
  - "Duration"

You define the operating mode and the effective direction of the output cam with parameters "Mode" and "Direction".
A setpoint output cam with the setting "MC_OutputCam.OnPosition" = 0 switches at position setpoint = 0.
When "MC_OutputCam.Enable" = TRUE, the input parameters are always read and take effect at the next position control cycle.
When a technological alarm occurs, the output cam is processed again after error acknowledgment.

NOTE
Enabling output cams
To guarantee precise switching, an output cam must be enabled for at least two application cycles before the output cam start is reached. Otherwise, distance output cams are imprecise and time-based output cams do not switch on.
Observe the switching behavior of the distance output cams (Page 31) and time-based output cams (Page 33).

Applies to

- Output cam

Requirement

- The technology object has been configured correctly.
- The higher-level technology object must have a valid position.
- The communication between output cam and output module is established ("<TO>.StatusWord.CommunicationOK" = TRUE).
- Setpoint output cams are not output for an axis in non-position-controlled operation.

Override response

The "MC_OutputCam" job is canceled by:

- Disabling the output cam with "MC_OutputCam.Enable" = FALSE.
- Only one instance of the "MC_OutputCam" function block can be active on an output cam in the user program. A second instance of the "MC_OutputCam" function block on a currently active output cam is rejected with an error.

Parameters

The following table shows the parameters of the Motion Control instruction "MC_OutputCam":

Parameters	Declaration	Data type	Default value	Description	
OutputCam	INPUT	TO_OutputCam	-	Technology object	
Enable	INPUT	BOOL	FALSE	FALSE	Output cam is disabled.
				TRUE	Output cam is being processed.
OnPosition	INPUT	LREAL	0.0	Start position of the output cam [unit of measurement of the interconnected technology object] For an axis or external encoder with active modulo function, position data outside the modulo range is mirrored in the modulo range.	
OffPosition	INPUT	LREAL	0.0	End position of the distance output cam [unit of measurement of the interconnected technology object] For an axis or external encoder with active modulo function, position data outside the modulo range is mirrored in the modulo range.	
Duration	INPUT	LREAL	0.0	Switch-on duration of the time-based output cam [unit of measurement: ms] The value for the switch-on duration of a time-based output cam must be greater than 0.0.	
Mode	INPUT	DINT	1	Operating mode	
				1	Standard Output cam functionality (output not inverted)
				2	Output cam functionality with inverted output
				3	Output cam always ON (while "Enable" = TRUE)
Direction	INPUT	DINT	1	Activation direction of the output cam	
				1	Positive direction
				2	Negative direction
				3	Both directions
CamOutput	OUTPUT	BOOL	-	Status display based on last call of Motion Control instruction "MC_OutputCam"	

Parameters	Declaration	Data type	Default value	Description	
Busy	OUTPUT	BOOL	FALSE	TRUE	The processing of the output cam is active.
Error	OUTPUT	BOOL	FALSE	TRUE	An error occurred while processing the job. The cause of the error can be found in the "ErrorID" parameter.
ErrorID	OUTPUT	WORD	16#0000	Error ID for parameter "ErrorID" You can find more detailed information in the "Error IDs" section of the "S7-1500/S7-1500T Motion Control alarms and error IDs" documentation (Page 8).	

6.4.2 MC_OutputCam: Function chart V7 (S7-1500, S7-1500T)

Function chart: Activate the specified output cam type

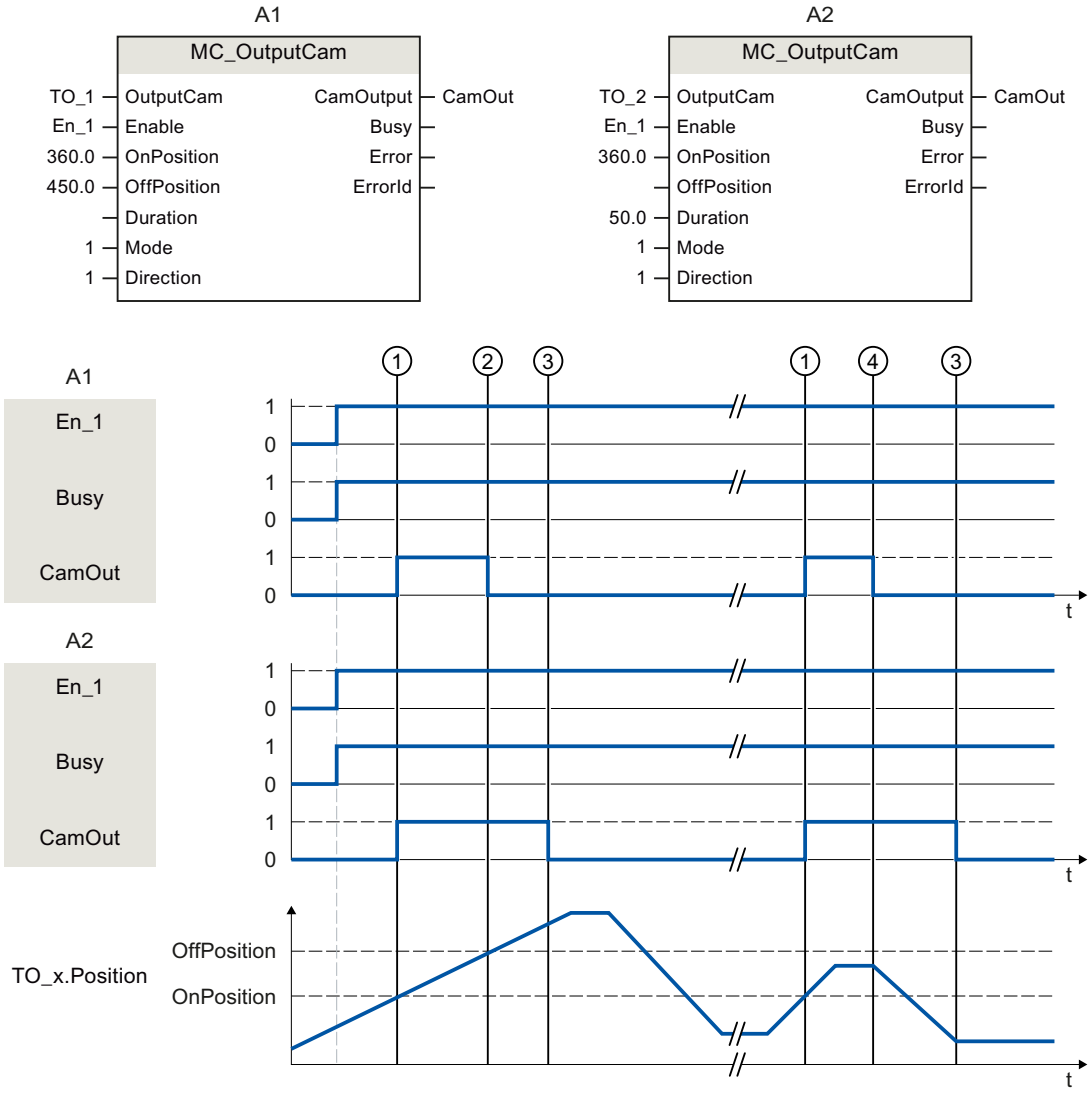

A1 Distance output cam

A2 Time-based output cam

An output cam is activated with "Enable" = TRUE. The output cam is output corresponding to the parameters.

The processing of the output cam is indicated with "Busy" = TRUE.

When activation direction "Direction" = 1 (positive) is set, the output cam behaves as follows, regardless of the output cam type setting:

- The distance output cam switches on at "OnPosition" ① and switches off again at "OffPosition" ②. At a direction reversal the output cam is switched off ④.
- The time-based output cam switches on at "OnPosition" ① and switches off again after expiration of the specified time "Duration" ③. A switched on time-based output cam remains active for the specified switch-on duration "Duration", even if overtravel of the start position occurs again in the reverse direction.

The switching state of the output cam is output using "CamOutput".
With "Enable" = FALSE, the specified output cam type is deactivated. "Busy" = FALSE shows that the output cam is not being processed.

6.5 MC_CamTrack V7 (S7-1500, S7-1500T)

6.5.1 MC_CamTrack: Activate/deactivate cam track V7 (S7-1500, S7-1500T)

Description

With the Motion Control instruction "MC_CamTrack", the processing of a cam track is enabled.

Applies to

- Cam track

Requirement

- The technology object has been configured correctly.
- The higher-level technology object must have a valid position.
- The communication between output cam and output module is established ("<TO>.StatusWord.CommunicationOK" = TRUE).
- Setpoint output cams are not output for an axis in non-position-controlled operation.

Override response

- The "MC_CamTrack" job is canceled by disabling the cam track with "MC_CamTrack.Enable" = FALSE.
- Only one instance of the "MC_CamTrack" function block can be active on a cam track in the user program. A second instance of the "MC_CamTrack" function block on a currently active cam track is rejected with an error.
- The cam track is recalculated at a change of the parameters of the Motion Control instruction "MC_CamTrack" or in the technology data block. The cam track is processed in accordance with all parameter settings.

Parameters

The following table shows the parameters of the Motion Control instruction "MC_CamTrack":

Parameters	Declaration	Data type	Default value	Description	
CamTrack	INPUT	TO_CamTrack	-	Technology object	
Enable	INPUT	BOOL	FALSE	TRUE	The cam track is processed.
				FALSE	The cam track is disabled.
Mode	INPUT	DINT	1	0	When "Enable" = TRUE: The cam track processing is activated immediately. Cam track data takes effect immediately Previously activated distance output cams are canceled if their track signal is not still set due to the changed cam track data. Previously activated time-based output cams are always canceled.
					When "Enable" = FALSE: The cam track processing is ended immediately. Distance output cams/time-based output cams are canceled immediately.
				1	When "Enable" = TRUE: The cam track processing is activated immediately/with the next track cycle: • When a cam track is activated for the first time, the cam track processing begins immediately. • If the cam track processing is already active, the current cam track is output up to the end of the track cycle. The new cam track data then takes effect.
					When "Enable" = FALSE: The cam track processing is ended at the end of the cam track
				2	When "Enable" = TRUE: The cam track output is switched on immediately and remains switched on
					When "Enable" = FALSE: The cam track output is switched off immediately.
InvertOutput	INPUT	BOOL	FALSE	Inverted output	
				TRUE	The track output is output inverted.
				FALSE	The track output is output non-inverted.
TrackOutput	OUTPUT	BOOL	-	Indicates the switching state of the cam track.	
Busy	OUTPUT	BOOL	FALSE	TRUE	The processing of the cam track is active.
Error	OUTPUT	BOOL	FALSE	TRUE	An error occurred while processing the job. The cause of the error can be found in the "ErrorID" parameter.

Parameters	Declaration	Data type	Default value	Description
ErrorID	OUTPUT	WORD	16#0000	Error ID for parameter "ErrorID" You can find more detailed information in the "Error IDs" section of the "S7-1500/S7-1500T Motion Control alarms and error IDs" documentation (Page 8).

6.5.2 MC_CamTrack: Function chart V7 (S7-1500, S7-1500T)

Function chart: Activate cam track

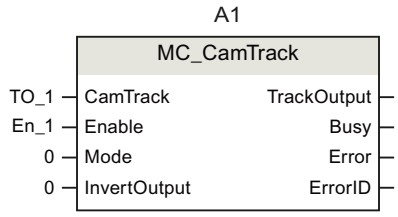

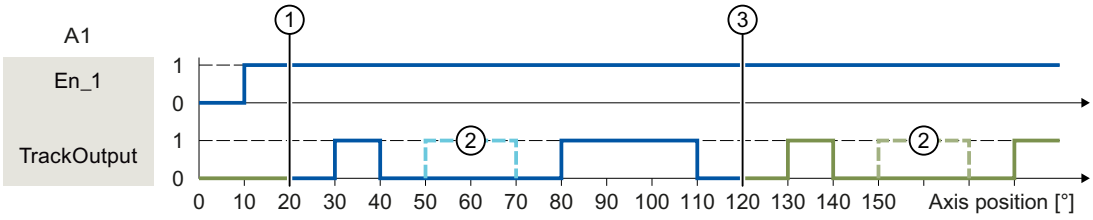

① Axis reference position

② Output cam configured as invalid

③ Start of cyclically continued cam track

A cam track is activated with "Enable" = TRUE. The cam track is output in accordance with the parameters set in the technology data block.

Tag		Value	Description
<TO>Parameter.			
	CamTrackType	0	Specified output cam type for the cam track is distance output cam
	ReferencePosition	20.0	Specified axis reference position for the cam track
	CamTrackLength	100.0	Specified length of the cam track
	CamTrack[1].Existent	TRUE	The first distance output cam of the cam track is specified as valid
	CamTrack[1].OnPosition	10.0	Start position for the first output cam of the cam track
	CamTrack[1].OffPosition	20.0	End position for the first output cam of the cam track
	CamTrack[2].Existent	FALSE	The second distance output cam of the cam track is specified as invalid
	CamTrack[2].OnPosition	30.0	Start position for the second output cam of the cam track
	CamTrack[2].OffPosition	50.0	End position for the second output cam of the cam track
	CamTrack[3].Existent	TRUE	The third distance output cam of the cam track is specified as valid
	CamTrack[3].OnPosition	60.0	Start position for the third output cam of the cam track

Tag		Value	Description
	CamTrack[3].OffPosition	90.0	End position for the third output cam of the cam track

6.6 Override response of Motion Control jobs V7 (S7-1500, S7-1500T)

6.6.1 Override response V7: Homing and motion jobs (S7-1500, S7-1500T)

The following table shows how a new motion control job affects active homing and motion jobs:

⇒ Active job ⇓ New job	MC_Home "Mode" = 2, 8, 10	MC_Home "Mode" = 3, 5	MC_Halt MC_MoveAbsolute MC_MoveRelative MC_MoveVelocity MC_MoveJog	MC_Stop	MC_MoveSuperimposed MC_MotionInSuperimposed MC_HaltSuperImposed	MC_MotionInVelocity MC_MotionInPosition
MC_Home "Mode" = 3, 5	A	A	A	-	A	A
MC_Home "Mode" = 9	A	-	-	-	-	-
MC_Halt MC_MoveAbsolute MC_MoveRelative MC_MoveVelocity MC_MoveJog MC_MotionInVelocity MC_MotionInPosition	-	A	A	-	A	A
MC_MoveSuperimposed MC_MotionInSuperimposed MC_HaltSuperImposed	-	-	-	-	A	-
MC_Stop	A	A	A	B	A	A
MC_GearIn MC_GearInVelocity	-	A	A	-	A	-

A The running job is aborted with "CommandAborted" = TRUE.

B An "MC_Stop" job is aborted by another "MC_Stop" job with a stop response that is the same or higher.

- No effect. Running job continues to be executed.

1) The status "Busy" = TRUE, "StartSync" = FALSE, "InSync" = FALSE corresponds to a waiting synchronous operation.

2) The status "Busy" = TRUE, "StartSync" or "InSync" = TRUE corresponds to an active synchronous operation.

3) The status "Busy" = TRUE, "StartSyncOut" = FALSE corresponds to a pending desynchronization job.

4) The status "Busy" = TRUE, "StartSyncOut" = TRUE corresponds to an active desynchronization job.

⇒ Active job ⇓ New job	MC_Home "Mode" = 2, 8, 10	MC_Home "Mode" = 3, 5	MC_Halt MC_Move-Absolute MC_MoveRel-ative MC_MoveVelo-city MC_MoveJog	MC_Stop	MC_Move-Superimposed MC_MotionIn-Superimposed MC_HaltSuper-Imposed	MC_MotionIn-Velocity MC_MotionIn-Position
MC_GearInPos **MC_CamIn** waiting[1]	-	-	-	-	-	-
MC_GearInPos **MC_CamIn** active[2]	-	A	A	-	A	-
MC_LeadingValue-Additive	-	-	-	-	-	-
MC_GearOut **MC_CamOut** waiting[3]	-	-	-	-	-	-
MC_GearOut **MC_CamOut** active[4]	-	-	-	-	A	-

A The running job is aborted with "CommandAborted" = TRUE.

B An "MC_Stop" job is aborted by another "MC_Stop" job with a stop response that is the same or higher.

- No effect. Running job continues to be executed.

1) The status "Busy" = TRUE, "StartSync" = FALSE, "InSync" = FALSE corresponds to a waiting synchronous operation.

2) The status "Busy" = TRUE, "StartSync" or "InSync" = TRUE corresponds to an active synchronous operation.

3) The status "Busy" = TRUE, "StartSyncOut" = FALSE corresponds to a pending desynchronization job.

4) The status "Busy" = TRUE, "StartSyncOut" = TRUE corresponds to an active desynchronization job.

NOTE

Override response with active fixed stop

With an active force and torque limiting with "MC_TorqueLimiting", running jobs are aborted if the drive is held at the fixed stop with "InClamping" = TRUE.

6.6.2 Override response V7: Synchronous operation jobs (S7-1500, S7-1500T)

The following table shows how a new motion control job affects the motion of the axis on active synchronous operation jobs:

⇒ Active job ⇓ New job	MC_GearIn	MC_GearInVelocity	MC_GearInPos MC_CamIn waiting[1]	MC_GearInPos MC_CamIn active[2]	MC_PhasingAbsolute MC_PhasingRelative	MC_OffsetAbsolute MC_OffsetRelative	MC_LeadingValueAdditive	MC_GearOut MC_CamOut waiting[3]	MC_GearOut MC_CamOut active[4]
MC_Home "Mode" = 3, 5	A	A	-	-	-	-	-	-	-
MC_Halt	A	A	-	A	A	A	-	A	A
MC_MoveAbsolute MC_MoveRelative MC_MoveVelocity MC_MoveJog	A	A	-	A	A	A	-	A	A
MC_MotionInVelocity MC_MotionInPosition	A	A	A	A	A	A	-	A	A
MC_MoveSuperimposed MC_MotionInSuperimposed MC_HaltSuperImposed	-	-/N[5]	-	-	-	-	-	-	-
MC_Stop	A	A	A	A	A	A	-	A	A
MC_GearIn MC_GearInVelocity	A	A	A	A	A	A	-	A	A

A The running job is aborted with "CommandAborted" = TRUE.

N Not permitted. Running job continues to be executed. The new job is rejected.

- No effect. Running job continues to be executed.

1) A waiting synchronous operation job ("Busy" = TRUE, "StartSync" = FALSE, "InSync" = FALSE) does not abort any active jobs. Abort with an "MC_Power" job is possible.

2) The status "Busy" = TRUE, "StartSync" or "InSync" = TRUE corresponds to an active synchronous operation.

3) A pending desynchronization job ("Busy" = TRUE, "StartSyncOut" = FALSE) does not abort any active jobs. Abort with an "MC_Power" job is possible.

4) The status "Busy" = TRUE, "StartSyncOut" = TRUE corresponds to an active desynchronization job.

5) When the following axis is in position-controlled mode, execution of the running job is continued. When the following axis is not in position-controlled mode, the new job is rejected.

6) An "MC_GearOut" job only terminates an "MC_Gear[...]" job. Correspondingly, an "MC_CamOut" job only cancels a "MC_Cam[...]" job.

7) A job with "SyncProfileReference" = 5 aborts a pending synchronous operation. Canceling a pending synchronous operation has no influence on an active synchronous operation.

⇒ Active job ⇓ New job	MC_GearIn	MC_GearInVelocity	MC_GearInPos MC_CamIn waiting[1]	MC_GearInPos MC_CamIn active[2]	MC_PhasingAbsolute MC_PhasingRelative	MC_OffsetAbsolute MC_OffsetRelative	MC_LeadingValueAdditive	MC_GearOut MC_CamOut waiting[3]	MC_GearOut MC_CamOut active[4]
MC_GearInPos MC_CamIn waiting[1]	-	-	A	-	-	-	-	A	-
MC_GearInPos MC_CamIn active[2]	A	A[5]	A	A	A	A	-	A	A
MC_PhasingAbsolute MC_PhasingRelative	-	N	-	-	A	N	-	-	-
MC_OffsetAbsolute MC_OffsetRelative	-	N	-	-	N	A	-	-	-
MC_LeadingValueAdditive	-	-	-	-	-	-	A	-	-
MC_GearOut MC_CamOut waiting[3]	-	N	A[6] [7]	-	-	-	-	A[6]	-
MC_GearOut MC_CamOut active[4]	A[6]	N	A[6] [7]	A[6]	A	A	-	A[6]	-

A The running job is aborted with "CommandAborted" = TRUE.

N Not permitted. Running job continues to be executed. The new job is rejected.

- No effect. Running job continues to be executed.

1) A waiting synchronous operation job ("Busy" = TRUE, "StartSync" = FALSE, "InSync" = FALSE) does not abort any active jobs. Abort with an "MC_Power" job is possible.

2) The status "Busy" = TRUE, "StartSync" or "InSync" = TRUE corresponds to an active synchronous operation.

3) A pending desynchronization job ("Busy" = TRUE, "StartSyncOut" = FALSE) does not abort any active jobs. Abort with an "MC_Power" job is possible.

4) The status "Busy" = TRUE, "StartSyncOut" = TRUE corresponds to an active desynchronization job.

5) When the following axis is in position-controlled mode, execution of the running job is continued. When the following axis is not in position-controlled mode, the new job is rejected.

6) An "MC_GearOut" job only terminates an "MC_Gear[...]" job. Correspondingly, an "MC_CamOut" job only cancels a "MC_Cam[...]" job.

7) A job with "SyncProfileReference" = 5 aborts a pending synchronous operation. Canceling a pending synchronous operation has no influence on an active synchronous operation.

NOTE

Override response with active fixed stop

With an active force and torque limiting with "MC_TorqueLimiting", running jobs are aborted if the drive is held at the fixed stop with "InClamping" = TRUE.

6.6.3 Override response V7: Measuring input jobs (S7-1500, S7-1500T)

The following table shows which new Motion Control jobs will override active measuring input jobs:

⇒ **Active job** ⇓ **New job**	**MC_MeasuringInput**	**MC_MeasuringInputCyclic**
MC_Home "Mode" = 2, 3, 5, 8, 9, 10	A	A
MC_Home "Mode" = 0, 1, 6, 7, 11, 12	-	-
MC_MeasuringInput **MC_MeasuringInputCyclic** **MC_AbortMeasuringInput**	A	A

A The running job is aborted with "CommandAborted" = TRUE.

- No effect. Running job continues to be executed.

6.6.4 Override response V7: Kinematics motion commands (S7-1500T)

Single axis jobs are not overridden by kinematics jobs.

The following table shows how a new Motion Control job affects active kinematics motion jobs:

⇒ **Active job** ⇓ **New job**	**MC_MoveLinearAbsolute** **MC_MoveLinearRelative** **MC_MoveCircularAbsolute** **MC_MoveCircularRelative** **MC_MoveDirectAbsolute** **MC_MoveDirectRelative** **MC_TrackConveyorBelt** **MC_DefineWorkspaceZone** **MC_DefineKinematicsZone** **MC_SetWorkspaceZoneActive** **MC_SetWorkspaceZoneInactive** **MC_SetKinematicsZoneActive** **MC_SetKinematicsZoneInactive** **MC_SetOcsFrame**	**MC_GroupInterrupt**	**MC_GroupStop**
MC_Home **MC_MoveSuperimposed** **MC_GearOut** **MC_CamOut**	N	N	N
MC_Halt **MC_MoveAbsolute** **MC_MoveRelative** **MC_MoveVelocity** **MC_MoveJog** **MC_Stop** **MC_GearIn** **MC_GearInPos** **MC_GearInVelocity** **MC_CamIn** **MC_MotionInVelocity** **MC_MotionInPosition**	A	A	A
MC_GroupStop	A	A	N
MC_GroupInterrupt **MC_GroupContinue**	B	A	N
MC_MoveLinearAbsolute **MC_MoveLinearRelative** **MC_MoveCircularAbsolute** **MC_MoveCircularRelative** **MC_MoveDirectAbsolute** **MC_MoveDirectRelative** **MC_TrackConveyorBelt** **MC_DefineWorkspaceZone** **MC_DefineKinematicsZone** **MC_SetWorkspaceZoneActive** **MC_SetWorkspaceZoneInactive** **MC_SetKinematicsZoneActive** **MC_SetKinematicsZoneInactive**	-	-	N

A The running job is aborted with "CommandAborted" = TRUE.

B Running job is interrupted or resumed.

C Synchronization of the OCS with the conveyor belt is aborted with "MC_SetOcsFrame" = TRUE.

N Not permitted. Running job continues to be executed. The new job is rejected.

- No effect. Running job continues to be executed. A new kinematics job is added to the job sequence.

⇒ **Active job** ⇓ **New job**	**MC_MoveLinearAbsolute** **MC_MoveLinearRelative** **MC_MoveCircularAbsolute** **MC_MoveCircularRelative** **MC_MoveDirectAbsolute** **MC_MoveDirectRelative** **MC_TrackConveyorBelt** **MC_DefineWorkspaceZone** **MC_DefineKinematicsZone** **MC_SetWorkspaceZoneActive** **MC_SetWorkspaceZoneInactive** **MC_SetKinematicsZoneActive** **MC_SetKinematicsZoneInactive** **MC_SetOcsFrame**	**MC_GroupInterrupt**	**MC_GroupStop**
MC_SetOcsFrame	C, -	-	N

A The running job is aborted with "CommandAborted" = TRUE.

B Running job is interrupted or resumed.

C Synchronization of the OCS with the conveyor belt is aborted with "MC_SetOcsFrame" = TRUE.

N Not permitted. Running job continues to be executed. The new job is rejected.

- No effect. Running job continues to be executed. A new kinematics job is added to the job sequence.

Tags of the technology object data blocks (S7-1500, S7-1500T) 7

7.1 Tags of the measuring input technology object (S7-1500, S7-1500T)

7.1.1 Legend (S7-1500, S7-1500T)

Tag	Name of the tag	
Data type	Data type of the tag	
Values	Value range of the tag - minimum value to maximum value If no specific value is shown, the value range limits of the relevant data type apply or the information under "Description".	
W	Effectiveness of changes in the technology data block	
	DIR	Direct: Values are changed directly and take effect at the start of the next MC-Servo [OB91].
	CAL	At call of Motion Control instruction: Values are changed directly and take effect at the start of the next MC-Servo [OB91] after the call of the corresponding Motion Control instruction in the user program.
	RES	Restart: Changes to the start value in the load memory are made using the extended instruction "WRIT_DBL" (write to DB in load memory). Changes will not take effect until after restart of the technology object.
	RON	Read only: The tag cannot and must not be changed during runtime of the user program.
Description	Description of the tag	

Access to the tags is with "<TO>.<tag name>". The placeholder <TO> represents the name of the technology object.

7.1.2 Display data (measuring input) (S7-1500, S7-1500T)

The "<TO>.Status" and "<TO>.InputState" tags show the status of the measuring function and the measuring input.

Tags

Legend (Page 95)

Tag	Data type	Values	W	Description	
Status	DINT	-	RON	Status of the measuring input function	
				0	"INACTIVE" No measurement is active.

Tag	Data type	Values	W	Description	
Status	DINT	-	RON	1	"WAITING_FOR_TRIGGER" The measuring input is waiting for the measuring event.
				2	"TRIGGER_OCCURRED" One or more measured values have been captured.
				3	"MEASURING_ERROR" Error during the measurement
InputState	BOOL	-	RON	Status of measuring input	
				FALSE	Measuring input inactive
				TRUE	Input of measuring input active

7.1.3 "Parameter" tag (measuring input) (S7-1500, S7-1500T)

The tag structure "<TO>.Parameter.<tag name>" contains the configuration of the basic parameters of the measuring input technology object.

Tags

Legend (Page 95)

Tag	Data type	Values	W	Description	
Parameter.	TO_MeasuringInput_Struct_Parameter				
MeasuringInputType	DINT	0, 1	RON	Measuring input type	
				0	"STANDARD" Measurement using time stamp
				1	"PROFIDRIVE" Measuring event using PROFIdrive telegram
PROFIdriveProbeNumber	UDINT	1, 2	RES	Number of the measuring input to be used for a measurement via PROFIdrive telegram	
MeasuringRangeActivationTime	LREAL	0.0 ... 1.0E12	RON	System share for activation time of measuring range	
MeasuringRangeAdditionalActivationTime	LREAL	0.0 ... 1.0E12	RES	Additional activation time when using measuring range limits [ms]	
CorrectionTime	LREAL	0.0 ... 1.0E12	RES	Correction time for the measurement result [ms]	

7.1.4 "Interface" tag (measuring input) (S7-1500, S7-1500T)

The tag structure "<TO>.Interface.<tag name>" contains the configuration of the input properties for the measuring input technology object.

Tags

Legend (Page 95)

Tag		Data type	Values	W	Description
Interface.		TO_MeasuringInput_Struct_Interface			
	Address	VREF	-	RON	I/O address for the digital measurement input

7.1.5 "Units" tag (measuring input) (S7-1500, S7-1500T)

The tag structure "<TO>.Units.<tag name>" shows the set technological units.

Tags

Legend (Page 95)

Tag		Data type	Values	W	Description	
Units.		TO_MeasuringInput_Struct_Units				
	LengthUnit	UDINT	-	RON	Unit for position	
					1010	m
					1013	mm
					1536	mm[1)]
					1011	km
					1014	µm
					1015	nm
					1019	in
					1018	ft
					1021	mi
					1004	rad
					1005	°
					1537	°[1)]
	TimeUnit	UDINT	-	RON	Unit for time	
					1056	ms

[1)] Position values with higher resolution or six decimal places.

7.1.6 "MeasuredValues" tag (measuring input) (S7-1500, S7-1500T)

The tag structure "<TO>.MeasuredValues.<tag name>" displays the measurement results.

Tags

Legend (Page 95)

Tag	Data type	Values	W	Description
MeasuredValues.	TO_MeasuringInput_Struct_MeasuringValues			
MeasuredValue1	LREAL	-1.0E12 ... 1.0E12	RON	First measured value
MeasuredValue2	LREAL	-1.0E12 ... 1.0E12	RON	Second measured value
MeasuredValue1Counter	UDINT	0 ... 2147483647	RON	Count value for the first measured value
MeasuredValue2Counter	UDINT	0 ... 2147483647	RON	Count value for the second measured value
LostEdgeCounter1	UDINT	0 ... 7	RON	LEC for measured value 1 (Zero in the case of one-time measurement)
LostEdgeCounter2	UDINT	0 ... 7	RON	LEC for measured value 2 (Zero in the case of one-time measurement)

7.1.7 "StatusWord" tag (measuring input) (S7-1500, S7-1500T)

The "<TO>.StatusWord" tag contains the status information of the technology object.

Information on the evaluation of the individual bits (e.g. bit 2 "RestartActive") can be found in the "Evaluating StatusWord, ErrorWord and WarningWord" section of the "S7-1500/S7-1500T Motion Control Overview" documentation (Page 8).

Tags

Legend (Page 95)

Tag	Data type	Values	W	Description
StatusWord	DWORD	-	RON	Status information of the technology object
Bit 0	-	-	-	"Control" The technology object is in operation.
Bit 1	-	-	-	"Error" An error is present.
Bit 2	-	-	-	"RestartActive" A restart is active. The technology object is being reinitialized.
Bit 3	-	-	-	"OnlineStartValuesChanged" The restart tags have been changed. For the changes to be applied, the technology object must be reinitialized.
Bit 4	-	-	-	Reserved
Bit 5	-	-	-	"CommunicationOK" The communication between measuring input and measuring module is established.
Bit 6... Bit 31	-	-	-	Reserved

7.1.8 "ErrorWord" tag (measuring input) (S7-1500, S7-1500T)

The "<TO>.ErrorWord" tag indicates technology object errors (technology alarms).
Information on the evaluation of the individual bits (e.g. bit 3 "CommandNotAccepted") can be found in the "Evaluating StatusWord, ErrorWord and WarningWord" section of the "S7-1500/S7-1500T Motion Control Overview" documentation (Page 8).

Tags

Legend (Page 95)

Tag		Data type	Values	W	Description
ErrorWord		DWORD	-	RON	
	Bit 0	-	-	-	"SystemFault" A system-internal error has occurred.
	Bit 1	-	-	-	"ConfigFault" Configuration error One or more configuration parameters are inconsistent or invalid.
	Bit 2	-	-	-	"UserFault" Error in user program at a Motion Control instruction or its use
	Bit 3	-	-	-	"CommandNotAccepted" Job cannot be executed A Motion Control instruction cannot be executed because the necessary conditions have not been met.
	Bit 4... Bit 12	-	-	-	Reserved
	Bit 13	-	-	-	"PeripheralError" Error accessing a logical address
	Bit 14... Bit 31	-	-	-	Reserved

7.1.9 "ErrorDetail" tag (measuring input) (S7-1500, S7-1500T)

The tag structure "<TO>.ErrorDetail.<tag name>" contains the alarm number and the effective local alarm response for the technology alarm that is currently pending on the technology object.
You can find a list of the technology alarms and alarm responses in the "Overview of the technology alarms" section of the "S7-1500/S7-1500T Motion Control alarms and error IDs" documentation (Page 8).

Tags

Legend (Page 95)

Tag		Data type	Values	W	Description
ErrorDetail.		TO_Struct_ErrorDetail			
	Number	UDINT	-	RON	Alarm number

Tag	Data type	Values	W	Description	
Reaction	DINT	0, 6	RON	Effective alarm response	
				0	No reaction
				6	End measuring input processing

7.1.10 "WarningWord" tag (measuring input) (S7-1500, S7-1500T)

The "<TO>.WarningWord" tag indicates pending warnings at the technology object.
Information on the evaluation of the individual bits (e.g. bit 1 "ConfigWarning") can be found in the "Evaluating StatusWord, ErrorWord and WarningWord" section of the "S7-1500/S7-1500T Motion Control Overview" documentation (Page 8).

Tags

Legend (Page 95)

Tag	Data type	Values	W	Description
WarningWord	DWORD	-	RON	
Bit 0	-	-	-	"SystemWarning" A system-internal error has occurred.
Bit 1	-	-	-	"ConfigWarning" Configuration error One or several configuration parameters are adjusted internally.
Bit 2	-	-	-	"UserWarning" Error in user program at a Motion Control instruction or its use
Bit 3	-	-	-	"CommandNotAccepted" Job cannot be executed A Motion Control instruction cannot be executed because the necessary conditions have not been met.
Bit 4... Bit 12	-	-	-	Reserved
Bit 13				"PeripheralWarning" Error accessing a logical address
Bit 14... Bit 31	-	-	-	Reserved

7.2 Tags of the output cam technology object (S7-1500, S7-1500T)

7.2.1 Legend (S7-1500, S7-1500T)

Tag	Name of the tag
Data type	Data type of the tag

Values	Value range of the tag - minimum value to maximum value If no specific value is shown, the value range limits of the relevant data type apply or the information under "Description".	
W	Effectiveness of changes in the technology data block	
	DIR	Direct: Values are changed directly and take effect at the start of the next MC-Servo [OB91].
	CAL	At call of Motion Control instruction: Values are changed directly and take effect at the start of the next MC-Servo [OB91] after the call of the corresponding Motion Control instruction in the user program.
	RES	Restart: Changes to the start value in the load memory are made using the extended instruction "WRIT_DBL" (write to DB in load memory). Changes will not take effect until after restart of the technology object.
	RON	Read only: The tag cannot and must not be changed during runtime of the user program.
Description	Description of the tag	

Access to the tags is with "<TO>.<tag name>". The placeholder <TO> represents the name of the technology object.

7.2.2 Display data (output cam) (S7-1500, S7-1500T)

The "<TO>.CamOutput" tag indicates the switching state of the output cam.

Tags

Legend (Page 100)

Tag	Data type	Values	W	Description	
CamOutput	BOOL	-	RON	Switching state of output cam	
				FALSE	Not switched
				TRUE	Switched

7.2.3 "Parameter" tag (output cam) (S7-1500, S7-1500T)

The tag structure "<TO>.Parameter.<tag name>" contains the configuration of the basic parameters of the output cam technology object.

Tags

Legend (Page 100)

Tag	Data type	Values	W	Description	
Parameter.	TO_OutputCam_Struct_Parameter				
OutputCamType	DINT	0 ... 2	RES	Output cam type	
				0	Distance output cam
				1	Time-based output cam

Tag	Data type	Values	W	Description	
OutputCamType	DINT	0 ... 2	RES	2	Switching output cam
PositionType	DINT	0, 1	RES	Position reference	
				0	Position setpoint
				1	Actual position
OnCompensation	LREAL	0.0 ... 1.0E12	DIR	Activation time Lead time for the switch-on edge	
OffCompensation	LREAL	0.0 ... 1.0E12	DIR	Deactivation time Lead time for the switch-off edge	
Hysteresis	LREAL	0.0 ... 1.0E12	DIR	Hysteresis value For output cams with reference to actual position, always enter a hysteresis value (> 0.0).	

7.2.4 "Interface" tag (output cam) (S7-1500, S7-1500T)

The tag structure "<TO>.Interface.<tag name>" contains the configuration of the output properties for the output cam technology object.

Tags

Legend (Page 100)

Tag	Data type	Values	W	Description	
Interface.	TO_OutputCam_Struct_Interface				
EnableOutput	BOOL	-	RES	Activation of the output cam output	
				FALSE	Output is deactivated
				TRUE	Output is activated
Address	VREF	-	RON	I/O address of the output cam	
LogicOperation	DINT	0, 1	RON	Logical operation of the output cam signals at the output	
				0	OR logic operation
				1	AND logic operation

7.2.5 "Units" tag (output cam) (S7-1500, S7-1500T)

The tag structure "<TO>.Units.<tag name>" shows the set technological units.

Tags

Legend (Page 100)

Tag	Data type	Values	W	Description
Units.	TO_OutputCam_Struct_Units			
LengthUnit	UDINT	-	RON	Unit for position

1) Position values with higher resolution or six decimal places.

Tag	Data type	Values	W	Description	
LengthUnit	UDINT	-	RON	1010	m
				1013	mm
				1536	mm[1)]
				1011	km
				1014	µm
				1015	nm
				1019	in
				1018	ft
				1021	mi
				1004	rad
				1005	°
				1537	°[1)]
TimeUnit	UDINT	-	RON	Unit for time	
				1056	ms

1) Position values with higher resolution or six decimal places.

7.2.6 "StatusWord" tag (output cam) (S7-1500, S7-1500T)

The "<TO>.StatusWord" tag contains the status information of the technology object.

Information on the evaluation of the individual bits (e.g. bit 2 "RestartActive") can be found in the "Evaluating StatusWord, ErrorWord and WarningWord" section of the "S7-1500/S7-1500T Motion Control Overview" documentation (Page 8).

Tags

Legend (Page 100)

Tag	Data type	Values	W	Description
StatusWord	DWORD	-	RON	Status information of the technology object
Bit 0	-	-	-	"Control" The technology object is in operation.
Bit 1	-	-	-	"Error" An error is present.
Bit 2	-	-	-	"RestartActive" A restart is active. The technology object is being reinitialized.
Bit 3	-	-	-	"OnlineStartValuesChanged" The restart tags have been changed. For the changes to be applied, the technology object must be reinitialized.
Bit 4	-	-	-	"OutputInverted" The output cam output is inverted.
Bit 5	-	-	-	"CommunicationOK" The communication between output cam and output module is established.

Tag	Data type	Values	W	Description
Bit 6... Bit 31	-	-	-	Reserved

7.2.7 "ErrorWord" tag (output cam) (S7-1500, S7-1500T)

The "<TO>.ErrorWord" tag indicates technology object errors (technology alarms).

Information on the evaluation of the individual bits (e.g. bit 3 "CommandNotAccepted") can be found in the "Evaluating StatusWord, ErrorWord and WarningWord" section of the "S7-1500/S7-1500T Motion Control Overview" documentation (Page 8).

Tags

Legend (Page 100)

Tag	Data type	Values	W	Description
ErrorWord	DWORD	-	RON	
Bit 0	-	-	-	"SystemFault" A system-internal error has occurred.
Bit 1	-	-	-	"ConfigFault" Configuration error One or more configuration parameters are inconsistent or invalid.
Bit 2	-	-	-	"UserFault" Error in user program at a Motion Control instruction or its use
Bit 3	-	-	-	"CommandNotAccepted" Job cannot be executed A Motion Control instruction cannot be executed because the necessary conditions have not been met.
Bit 4... Bit 12	-	-	-	Reserved
Bit 13	-	-	-	"PeripheralError" Error accessing a logical address
Bit 14... Bit 31	-	-	-	Reserved

7.2.8 "ErrorDetail" tag (output cam) (S7-1500, S7-1500T)

The tag structure "<TO>.ErrorDetail.<tag name>" contains the alarm number and the effective local alarm response for the technology alarm that is currently pending on the technology object.

You can find a list of the technology alarms and alarm responses in the "Overview of the technology alarms" section of the "S7-1500/S7-1500T Motion Control alarms and error IDs" documentation (Page 8).

Tags

Legend (Page 100)

Tag		Data type	Values	W	Description	
ErrorDetail.		TO_Struct_ErrorDetail				
	Number	UDINT	-	RON	Alarm number	
	Reaction	DINT	0, 6	RON	Effective alarm response	
					0	No reaction
					6	Output cam processing is complete.

7.2.9 "WarningWord" tag (output cam) (S7-1500, S7-1500T)

The "<TO>.WarningWord" tag indicates pending warnings at the technology object. Information on the evaluation of the individual bits (e.g. bit 1 "ConfigWarning") can be found in the "Evaluating StatusWord, ErrorWord and WarningWord" section of the "S7-1500/S7-1500T Motion Control Overview" documentation (Page 8).

Tags

Legend (Page 100)

Tag		Data type	Values	W	Description
WarningWord		DWORD	-	RON	
	Bit 0	-	-	-	"SystemWarning" A system-internal error has occurred.
	Bit 1	-	-	-	"ConfigWarning" Configuration error One or several configuration parameters are adjusted internally.
	Bit 2	-	-	-	"UserWarning" Error in user program at a Motion Control instruction or its use
	Bit 3	-	-	-	"CommandNotAccepted" Job cannot be executed A Motion Control instruction cannot be executed because the necessary conditions have not been met.
	Bit 4... Bit 12	-	-	-	Reserved
	Bit 13				"PeripheralWarning" Error accessing a logical address
	Bit 14... Bit 31	-	-	-	Reserved

7.3 Tags of the cam track technology object (S7-1500, S7-1500T)

7.3.1 Legend (S7-1500, S7-1500T)

Tag	Name of the tag	
Data type	Data type of the tag	
Values	Value range of the tag - minimum value to maximum value If no specific value is shown, the value range limits of the relevant data type apply or the information under "Description".	
W	Effectiveness of changes in the technology data block	
	DIR	Direct: Values are changed directly and take effect at the start of the next MC-Servo [OB91].
	CAL	At call of Motion Control instruction: Values are changed directly and take effect at the start of the next MC-Servo [OB91] after the call of the corresponding Motion Control instruction in the user program.
	RES	Restart: Changes to the start value in the load memory are made using the extended instruction "WRIT_DBL" (write to DB in load memory). Changes will not take effect until after restart of the technology object.
	RON	Read only: The tag cannot and must not be changed during runtime of the user program.
Description	Description of the tag	

Access to the tags is with "<TO>.<tag name>". The placeholder <TO> represents the name of the technology object.

7.3.2 Display data (cam track) (S7-1500, S7-1500T)

The following tags indicate the status of the cam track:

Tags

Legend (Page 105-106)

Tag	Data type	Values	W	Description	
Status	DINT	0 ... 2	RON	0	"INACTIVE" Inactive
				1	"ACTIVE" Active
				2	"ACTIVE_WAITING_FOR_NEXT_CYCLE" Active and waiting for next track
TrackOutput	BOOL	-	RON	FALSE	Cam track is not output.
				TRUE	Cam track is output.

Tag	Data type	Values	W	Description	
SingleCamState	DWORD	16#0 ... 16#FFFF_FFFF	RON	Switched on output cam (bit-masked)	
				0	Output cam is not switched on
				1	Output cam is switched on
TrackPosition	LREAL	-1.0E12 ... 1.0E12	RON	Display of the current position within the cam track	
MatchPosition	LREAL	-1.0E12 ... 1.0E12	RON	Reference position of the current cam track During cyclic processing of the cam track, the continued reference position of the current cam track is displayed. The unique detection and output of the position is only possible when the assigned technology object is in motion.	

7.3.3 "Parameter" tag (cam track) (S7-1500, S7-1500T)

The tag structure "<TO>.Parameter.<tag name>" contains the configuration of the basic parameters of the cam track technology object.

Tags

Legend (Page 105-106)

Tag	Data type	Values	W	Description	
Parameter.	TO_CamTrack_Struct_Parameter				
CamTrackType	DINT	0, 1	RES	Output cam type	
				0	Distance output cam
				1	Time-based output cam
PositionType	DINT	0, 1	RES	Position reference	
				0	Position setpoint
				1	Actual position
ReferencePosition	LREAL	-1.0E12 ... 1.0E12	DIR	Reference position	
CamTrackLength	LREAL	0.001 ... 1.0E12	DIR	Track length	
CamMasking	DWORD	16#0 ... 16#FFFF_FFFF	DIR	Bit masking of individual output cams	
OnCompensation	LREAL	0.0 ... 1.0E12	DIR	Activation time Lead time for the switch-on edge	
OffCompensation	LREAL	0.0 ... 1.0E12	DIR	Deactivation time Lead time for the switch-off edge	
Hysteresis	LREAL	0.0 ... 1.0E12	DIR	Hysteresis value For output cams with reference to actual position, always enter a hysteresis value (> 0.0).	
Cam[1..32].	ARRAY[1..32] OF TO_CamTrack_Struct_CamData				
OnPosition	LREAL	0.0 ... 1.0E12	CAL	With distance output cams and time-based output cams: Start position	
Offposition	LREAL	0.0 ... 1.0E12	CAL	With distance output cams: End position	

Tag	Data type	Values	W	Description	
Duration	LREAL	0.001 ... 1.0E12	CAL	With time-based output cams: Switch-on duration	
Existent	BOOL	-	CAL	FALSE	Output cam is not used.
				TRUE	Output cam is used.

7.3.4 "Interface" tag (cam track) (S7-1500, S7-1500T)

The tag structure "<TO>.Interface.<tag name>" contains the configuration of the output properties for the cam track technology object.

Tags

Legend (Page 105-106)

Tag	Data type	Values	W	Description	
Interface.	TO_CamTrack_Struct_Interface				
EnableOutput	BOOL	-	RES	Output cam output at the bit specified under "<TO>.Interface.Address"	
				FALSE	No output
				TRUE	Output
Address	VREF	-	RON	I/O address for digital output cam output	

7.3.5 "Units" tag (cam track) (S7-1500, S7-1500T)

The tag structure "<TO>.Units.<tag name>" shows the set technological units.

Tags

Legend (Page 105-106)

Tag	Data type	Values	W	Description	
Units.	TO_CamTrack_Struct_Units				
LengthUnit	UDINT	-	RON	Unit for position	
				1010	m
				1013	mm
				1536	mm[1)]
				1011	km
				1014	µm
				1015	nm
				1019	in
				1018	ft
				1021	mi

1) Position values with higher resolution or six decimal places.

Tag	Data type	Values	W	Description	
LengthUnit	UDINT	-	RON	1004	rad
				1005	°
				1537	°[1]
TimeUnit	UDINT	-	RON	Unit for time	
				1056	ms

[1] Position values with higher resolution or six decimal places.

7.3.6 "StatusWord" tag (cam track) (S7-1500, S7-1500T)

The "<TO>.StatusWord" tag contains the status information of the technology object. Information on the evaluation of the individual bits (e.g. bit 2 "RestartActive") can be found in the "Evaluating StatusWord, ErrorWord and WarningWord" section of the "S7-1500/S7-1500T Motion Control Overview" documentation (Page 8).

Tags

Legend (Page 105-106)

Tag	Data type	Values	W	Description
StatusWord	DWORD	-	RON	Status information of the technology object
Bit 0	-	-	-	"Control" The technology object is in operation.
Bit 1	-	-	-	"Error" An error is present.
Bit 2	-	-	-	"RestartActive" A restart is active. The technology object is being reinitialized.
Bit 3	-	-	-	"OnlineStartValuesChanged" The restart tags have been changed. For the changes to be applied, the technology object must be reinitialized.
Bit 4	-	-	-	"OutputInverted" The output cam output is inverted.
Bit 5	-	-	-	"CommunicationOK" The communication between cam track and output module is established.
Bit 6... Bit 31	-	-	-	Reserved

7.3.7 "ErrorWord" tag (cam track) (S7-1500, S7-1500T)

The "<TO>.ErrorWord" tag indicates technology object errors (technology alarms). Information on the evaluation of the individual bits (e.g. bit 3 "CommandNotAccepted") can be found in the "Evaluating StatusWord, ErrorWord and WarningWord" section of the "S7-1500/S7-1500T Motion Control Overview" documentation (Page 8).

Tags

Legend (Page 105-106)

Tag	Data type	Values	W	Description
ErrorWord	DWORD	-	RON	
Bit 0	-	-	-	"SystemFault" A system-internal error has occurred.
Bit 1	-	-	-	"ConfigFault" Configuration error One or more configuration parameters are inconsistent or invalid.
Bit 2	-	-	-	"UserFault" Error in user program at a Motion Control instruction or its use
Bit 3	-	-	-	"CommandNotAccepted" Command cannot be executed A Motion Control instruction cannot be executed because the necessary conditions have not been met.
Bit 4... Bit 12	-	-	-	Reserved
Bit 13	-	-	-	"PeripheralError" Error accessing a logical address
Bit 14... Bit 31	-	-	-	Reserved

7.3.8 "ErrorDetail" tag (cam track) (S7-1500, S7-1500T)

The tag structure "<TO>.ErrorDetail.<tag name>" contains the alarm number and the effective local alarm response for the technology alarm that is currently pending on the technology object.

You can find a list of the technology alarms and alarm responses in the "Overview of the technology alarms" section of the "S7-1500/S7-1500T Motion Control alarms and error IDs" documentation (Page 8).

Tags

Legend (Page 105-106)

Tag	Data type	Values	W	Description	
ErrorDetail.	TO_Struct_ErrorDetail				
Number	UDINT	-	RON	Alarm number	
Reaction	DINT	0, 6	RON	Effective alarm response	
				0	No reaction
				6	Cam track processing is complete.

7.3.9 "WarningWord" tag (cam track) (S7-1500, S7-1500T)

The "<TO>.WarningWord" tag indicates pending warnings at the technology object.
Information on the evaluation of the individual bits (e.g. bit 1 "ConfigWarning") can be found in the "Evaluating StatusWord, ErrorWord and WarningWord" section of the "S7-1500/S7-1500T Motion Control Overview" documentation (Page 8).

Tags

Legend (Page 95)

Tag		Data type	Values	W	Description
WarningWord		DWORD	-	RON	
	Bit 0	-	-	-	"SystemWarning" A system-internal error has occurred.
	Bit 1	-	-	-	"ConfigWarning" Configuration error One or several configuration parameters are adjusted internally.
	Bit 2	-	-	-	"UserWarning" Error in user program at a Motion Control instruction or its use
	Bit 3	-	-	-	"CommandNotAccepted" Command cannot be executed A Motion Control instruction cannot be executed because the necessary conditions have not been met.
	Bit 4... Bit 12	-	-	-	Reserved
	Bit 13	-	-	-	"PeripheralWarning" Error accessing a logical address
	Bit 14... Bit 31	-	-	-	Reserved

Index

C

Cam track
- Functions, 15
- Basics, 43
- Configuration, 61
- Diagnostics, 68
- Diagnostics, 70
- Tags, 106

M

MC_AbortMeasuringInput, 80

MC_CamTrack, 85, 87

MC_MeasuringInput, 72, 75

MC_MeasuringInputCyclic, 75, 78

MC_OutputCam, 81, 84

Measuring input
- Functions, 15
- Basics, 16
- Configuration, 56
- Diagnostics, 65
- Tags, 95

O

Output cam
- Functions, 15
- Basics, 29
- Configuration, 59
- Diagnostics, 67
- Tags, 101

S

S7-1500 Motion Control
- Motion Control instruction, 15
- Technology object, 15
- Technology object, 16
- Technology object, 29
- Technology object, 43

S7-1500 Motion Control instruction
- Overview, 15

S7-1500T Motion Control
- Technology object, 15
- Motion Control instruction, 15

T

Tags
- Technology object measuring input, 95
- Output cam technology object, 101
- Cam track technology object, 106

Technology data block
- Tags of the technology object measuring input, 95
- Tags of the output cam technology object, 101
- Tags of the cam track technology object, 106

Technology object
- Measuring input, 15
- Output cam, 15
- Cam track, 15
- Measuring input, 16
- Output cam, 29
- Cam track, 43
- Measuring input, 56
- Output cam, 59
- Cam track, 61
- Measuring input, 65
- Output cam, 67
- Cam track, 68
- Cam track, 70

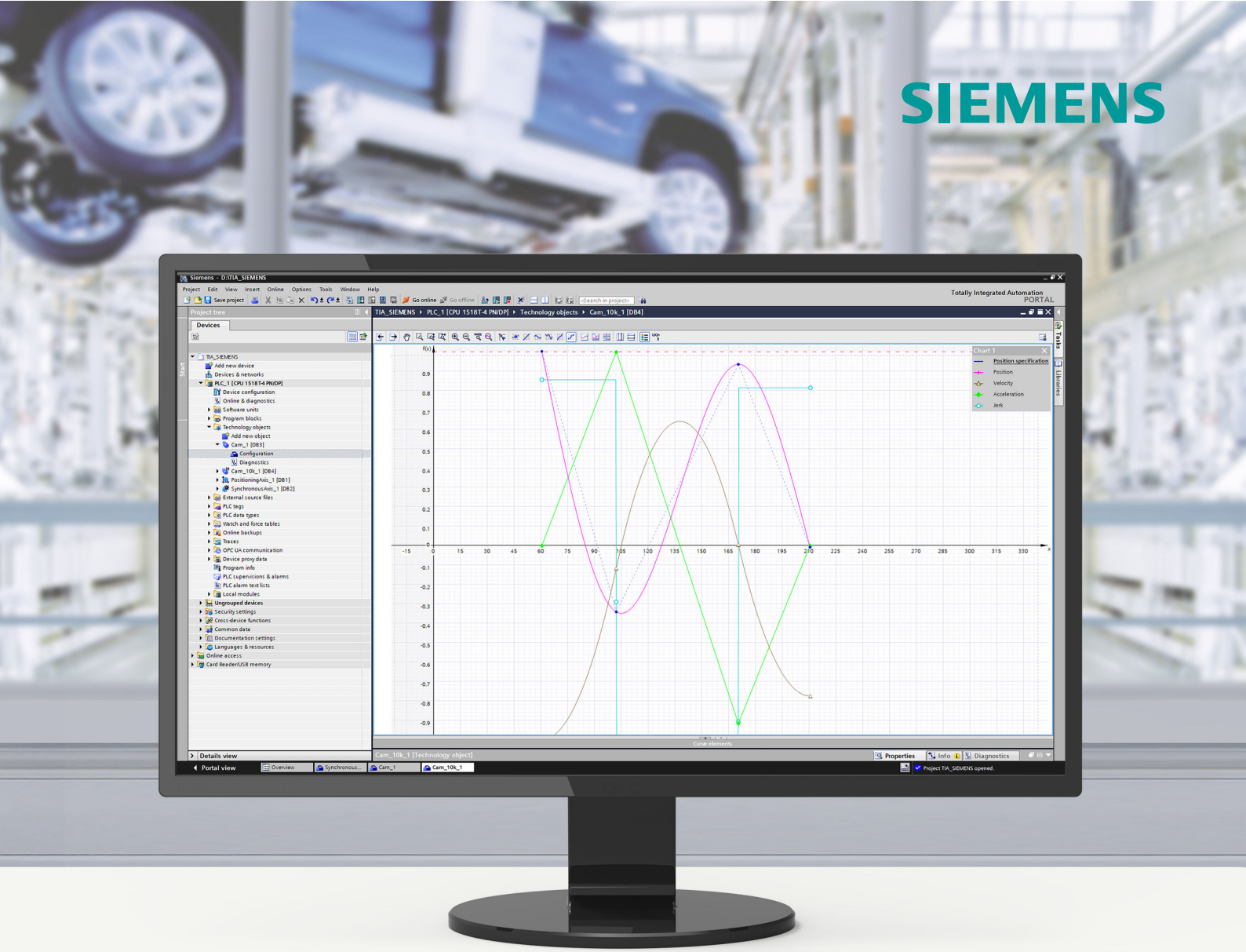

Edition 11/2022

FUNCTION MANUAL

SIMATIC

S7-1500

S7-1500/S7-1500T Synchronous operation functions V7.0 as of STEP 7 V18

support.industry.siemens.com

SIEMENS

SIMATIC

S7-1500
S7-1500/S7-1500T Synchronous operation functions V7.0 as of STEP 7 V18

Function Manual

Introduction (S7-1500, S7-1500T) 1

Safety instructions (S7-1500, S7-1500T) 2

New features V7.0 (S7-1500, S7-1500T) 3

Overview of functions (S7-1500, S7-1500T) 4

Preparing synchronous operation (S7-1500, S7-1500T) 5

Gearing (S7-1500, S7-1500T) 6

Velocity synchronous operation (S7-1500T) 7

Camming (S7-1500T) 8

Other synchronous operation functions (S7-1500T) 9

Cross-PLC synchronous operation (S7-1500T) 10

Diagnostics (S7-1500, S7-1500T) 11

Instructions (S7-1500, S7-1500T) 12

Tags of the technology object data blocks (S7-1500, S7-1500T) 13

S7-1500/S7-1500T Motion Control

11/2022
A5E47011129-AC

Legal information

Warning notice system

This manual contains notices you have to observe in order to ensure your personal safety, as well as to prevent damage to property. The notices referring to your personal safety are highlighted in the manual by a safety alert symbol, notices referring only to property damage have no safety alert symbol. These notices shown below are graded according to the degree of danger.

⚠ DANGER
indicates that death or severe personal injury **will** result if proper precautions are not taken.

⚠ WARNING
indicates that death or severe personal injury **may** result if proper precautions are not taken.

⚠ CAUTION
indicates that minor personal injury can result if proper precautions are not taken.

NOTICE
indicates that property damage can result if proper precautions are not taken.

If more than one degree of danger is present, the warning notice representing the highest degree of danger will be used. A notice warning of injury to persons with a safety alert symbol may also include a warning relating to property damage.

Qualified Personnel

The product/system described in this documentation may be operated only by **personnel qualified** for the specific task in accordance with the relevant documentation, in particular its warning notices and safety instructions. Qualified personnel are those who, based on their training and experience, are capable of identifying risks and avoiding potential hazards when working with these products/systems.

Proper use of Siemens products

Note the following:

⚠ WARNING
Siemens products may only be used for the applications described in the catalog and in the relevant technical documentation. If products and components from other manufacturers are used, these must be recommended or approved by Siemens. Proper transport, storage, installation, assembly, commissioning, operation and maintenance are required to ensure that the products operate safely and without any problems. The permissible ambient conditions must be complied with. The information in the relevant documentation must be observed.

Trademarks

All names identified by ® are registered trademarks of Siemens AG. The remaining trademarks in this publication may be trademarks whose use by third parties for their own purposes could violate the rights of the owner.

Disclaimer of Liability

We have reviewed the contents of this publication to ensure consistency with the hardware and software described. Since variance cannot be precluded entirely, we cannot guarantee full consistency. However, the information in this publication is reviewed regularly and any necessary corrections are included in subsequent editions.

Siemens AG
Digital Industries
Postfach 48 48
90026 NÜRNBERG
GERMANY

A5E47011129-AC
Ⓟ 10/2022 Subject to change

Copyright © Siemens AG 2019 - 2022.
All rights reserved

Table of contents

1 Introduction (S7-1500, S7-1500T) ... 12

1.1 S7-1500 Motion Control Documentation Guide (S7-1500, S7-1500T) ... 13

1.2 Function Manuals documentation guide (S7-1500, S7-1500T) ... 14
1.2.1 Information classes Function Manuals (S7-1500, S7-1500T) ... 14
1.2.2 Basic tools (S7-1500, S7-1500T) ... 15
1.2.3 SIMATIC Technical Documentation (S7-1500, S7-1500T) ... 17

2 Safety instructions (S7-1500, S7-1500T) ... 19

3 New features V7.0 (S7-1500, S7-1500T) ... 20

4 Overview of functions (S7-1500, S7-1500T) ... 21

4.1 Synchronous axis technology object (S7-1500, S7-1500T) ... 23

4.2 Cam technology object (S7-1500T) ... 25

4.3 Leading axis proxy technology object (S7-1500T) ... 28

4.4 Motion Control instructions for synchronous operation (S7-1500, S7-1500T) ... 29

4.5 Mode of operation of the instructions in synchronous operation (S7-1500, S7-1500T) ... 31

5 Preparing synchronous operation (S7-1500, S7-1500T) ... 33

5.1 Creating technology objects (S7-1500, S7-1500T) ... 33

5.2 Defining leading value interconnection (S7-1500, S7-1500T) ... 33
5.2.1 Interconnecting the leading value (S7-1500, S7-1500T) ... 33
5.2.2 Setpoint coupling (S7-1500, S7-1500T) ... 34
5.2.3 Actual value coupling and actual value extrapolation (S7-1500T) ... 35
5.2.4 Tags: Actual value extrapolation (S7-1500T) ... 39

5.3 Position control in synchronous operation (S7-1500, S7-1500T) ... 40

6 Gearing (S7-1500, S7-1500T) ... 41

6.1 Gearing with "MC_GearIn" (S7-1500, S7-1500T) ... 41
6.1.1 Defining gear ratio (S7-1500, S7-1500T) ... 42
6.1.2 Dynamic limits of the following axis in gearing with "MC_GearIn" (S7-1500, S7-1500T) ... 43
6.1.3 Synchronizing following axis using dynamic parameters with "MC_GearIn" (S7-1500, S7-1500T) ... 43
6.1.4 Synchronous travel in gearing with "MC_GearIn" (S7-1500, S7-1500T) ... 44

6.2 Gearing with "MC_GearInPos" (S7-1500T) ... 45
6.2.1 Defining gear ratio (S7-1500T) ... 46
6.2.2 Dynamic limits of the following axis in gearing with "MC_GearInPos" (S7-1500T) ... 47
6.2.3 Synchronizing gearing (S7-1500T) ... 48
6.2.3.1 Parameter overview for synchronizing with "MC_GearInPos" (S7-1500T) ... 48

6.2.3.2 Defining direction of synchronization with "MC_GearInPos" (S7-1500T) 48
6.2.3.3 Synchronizing following axis in advance using dynamic parameters with "MC_GearInPos" (S7-1500T) 51
6.2.3.4 Synchronizing following axis in advance using leading value distance with "MC_GearInPos" (S7-1500T) 53
6.2.3.5 Subsequent synchronizing of following axis using leading value distance with "MC_GearInPos" (S7-1500T) 55
6.2.4 Synchronous travel in gearing with "MC_GearInPos" (S7-1500T) 56
6.2.5 Leading value offset during gearing (S7-1500T) 57
6.2.5.1 Leading value offset on the following axis during gearing using dynamic parameters (S7-1500T) 57
6.2.5.2 Leading value offset on the following axis during gearing using leading value distance as of current leading value position (S7-1500T) 58
6.2.5.3 Leading value offset on the following axis during gearing using leading value distance as of specific leading value position (S7-1500T) 59
6.2.5.4 Defining the direction of the leading value distance of a leading value offset on the following axis during gearing (S7-1500T) 61
6.2.5.5 Only cancel a pending leading value offset in the gearing (S7-1500T) 62
6.2.6 Following value offset during gearing (S7-1500T) 62
6.2.6.1 Following value offset on the following axis during gearing using leading value distance as of current leading value position (S7-1500T) 62
6.2.6.2 Following value offset on the following axis during gearing using leading value distance as of specific leading value position (S7-1500T) 64
6.2.6.3 Defining the direction of the leading value distance of a following value offset on the following axis during gearing (S7-1500T) 65
6.2.6.4 Only cancel a pending following value offset in the gearing (S7-1500T) 66

6.3 Desynchronize gearing (S7-1500T) 66
6.3.1 Desynchronizing following axis using dynamic parameters with "MC_GearOut" (S7-1500T) 66
6.3.2 Desynchronizing following axis using leading value distance with "MC_GearOut" (S7-1500T) 68
6.3.3 Defining direction of desynchronization with "MC_GearOut" (S7-1500T) 69
6.3.4 Only cancel a pending gearing with "MC_GearOut" (S7-1500T) 71

6.4 Tags: Gearing (S7-1500, S7-1500T) 71

7 Velocity synchronous operation (S7-1500T) 74

7.1 Defining gear ratio (S7-1500T) 74

7.2 Specify gear ratio once or dynamically (S7-1500T) 75

7.3 Define position control of the following axis (S7-1500T) 76

7.4 Dynamic limits of the following axis in velocity synchronous operation (S7-1500T) 77

7.5 Synchronizing following axis using dynamic parameters with "MC_GearInVelocity" (S7-1500T) 78

7.6 Synchronous travel in velocity synchronous operation with "MC_GearInVelocity" (S7-1500T) 79

7.7 Tags: Velocity synchronous operation (S7-1500T) 80

8 Camming (S7-1500T) 82

8.1 Configuring the synchronous operation function of the cam (S7-1500T) 83
8.1.1 Structure and operation of the cam editor (S7-1500T) 83
8.1.1.1 Structure of the graphical editor (S7-1500T) 86
8.1.1.2 Shortcut menu in the graphical editor (S7-1500T) 88

8.1.1.3 Structure of the tabular editor (S7-1500T) ... 89
8.1.1.4 Shortcut menu in the tabular editor (S7-1500T) ... 90
8.1.1.5 Operating the cam editor (S7-1500T) ... 90
8.1.2 Configure the profile and display of the cam (S7-1500T) ... 92
8.1.2.1 Properties and display in the inspector window (S7-1500T) ... 92
8.1.2.2 Configuration of profile - General (S7-1500T) ... 92
8.1.2.3 Configuration of profile - Effective runtime curves (S7-1500T) ... 93
8.1.2.4 Configuration of profile - Check (S7-1500T) ... 94
8.1.2.5 Configuration charts - Charts and curves (S7-1500T) ... 94
8.1.2.6 Configuration charts - Snap grid (S7-1500T) ... 95
8.1.2.7 Configuration - Decimal places (S7-1500T) ... 96
8.1.3 Inserting and configuring cam elements (S7-1500T) ... 96
8.1.3.1 Inserting and configuring a point (S7-1500T) ... 96
8.1.3.2 Inserting and configuring a point group (S7-1500T) ... 97
8.1.3.3 Inserting and configuring the line (S7-1500T) ... 100
8.1.3.4 Inserting and configuring a sine (S7-1500T) ... 101
8.1.3.5 Inserting and configuring a polynomial (S7-1500T) ... 103
8.1.3.6 Inserting and configuring an inverse sine (S7-1500T) ... 105
8.1.3.7 Inserting elements from the clipboard (S7-1500T) ... 107
8.1.3.8 Move elements (S7-1500T) ... 108
8.1.3.9 Scale elements (S7-1500T) ... 108
8.1.3.10 Deleting elements (S7-1500T) ... 108
8.1.3.11 Show elements used (S7-1500T) ... 108
8.1.4 Importing/exporting cam (S7-1500T) ... 111

8.2 Changing the synchronous operation function of the cam online (S7-1500T) ... 113
8.2.1 Changing the synchronous operation function of the cam manually (S7-1500T) ... 114
8.2.2 Copy calculated cam elements (S7-1500T) ... 115
8.2.3 Creating the synchronous operation function of the cam with the "LCamHdl" library (S7-1500T) ... 116

8.3 Interpolating a cam (S7-1500T) ... 116
8.3.1 Configuring transitions (S7-1500T) ... 116
8.3.2 System interpolation (S7-1500T) ... 119
8.3.3 Interpolation according to VDI Guideline 2143 (S7-1500T) ... 122
8.3.4 Interpolate cam with "MC_InterpolateCam" (S7-1500T) ... 125

8.4 Scaling and shifting cam (S7-1500T) ... 125

8.5 Defining application mode of the cam (S7-1500T) ... 127

8.6 Dynamic limits of the following axis in camming (S7-1500T) ... 129

8.7 Synchronizing camming (S7-1500T) ... 130
8.7.1 Parameter overview for synchronizing with "MC_CamIn" (S7-1500T) ... 130
8.7.2 Defining direction of synchronization with "MC_CamIn" (S7-1500T) ... 131
8.7.3 Synchronizing following axis in advance using dynamic parameters with "MC_CamIn" (S7-1500T) ... 133
8.7.4 Synchronizing following axis in advance using leading value distance with "MC_CamIn" (S7-1500T) ... 134
8.7.5 Synchronize the following axis in advance via the leading value path from the current leading value position with "MC_CamIn" (S7-1500T) ... 137
8.7.6 Subsequent synchronizing of following axis using leading value distance with "MC_CamIn" (S7-1500T) ... 139
8.7.7 Subsequent synchronizing of following axis using leading axis value starting from the current leading value position with "MC_CamIn" (S7-1500T) ... 142

8.7.8 Directly set following axis synchronously with "MC_CamIn" (S7-1500T) 144
8.7.9 Directly set following axis synchronously at end of the cam with "MC_CamIn" (S7-1500T) 144
8.8 Synchronous travel in camming with "MC_CamIn" (S7-1500T) 146
8.9 Reading the leading value in camming (S7-1500T) 146
8.10 Reading the following value in camming (S7-1500T) 146
8.11 Leading value offset during camming (S7-1500T) 147
8.11.1 Leading value offset on the following axis during camming using leading value distance as of current leading value position (S7-1500T) 147
8.11.2 Leading value offset on the following axis during camming using leading value distance as of specific leading value position (S7-1500T) 148
8.11.3 Defining the direction of the leading value distance of a leading value offset on the following axis during camming (S7-1500T) 150
8.11.4 Only cancel a pending leading value offset in the camming (S7-1500T) 151
8.12 Following value offset during camming (S7-1500T) 151
8.12.1 Following value offset on the following axis during camming using leading value distance as of current leading value position (S7-1500T) 151
8.12.2 Following value offset on the following axis during camming using leading value distance as of specific leading value position (S7-1500T) 153
8.12.3 Defining the direction of the leading value distance of a following value offset on the following axis during camming (S7-1500T) 154
8.12.4 Only cancel a pending following value offset in the camming (S7-1500T) 156
8.13 Desynchronize camming (S7-1500T) 156
8.13.1 Desynchronizing following axis using dynamic parameters with "MC_CamOut" (S7-1500T) 156
8.13.2 Desynchronizing following axis using leading value distance with "MC_CamOut" (S7-1500T) 158
8.13.3 Defining direction of desynchronization with "MC_CamOut" (S7-1500T) 160
8.13.4 Only cancel a pending camming with "MC_CamOut" (S7-1500T) 161
8.14 Tags: Camming (S7-1500T) 161

9 Other synchronous operation functions (S7-1500T) 164
9.1 Simulate synchronous operation (S7-1500T) 164
9.1.1 Tags: Synchronous operation is being simulated (S7-1500T) 165
9.2 Specify additive leading value (S7-1500T) 166
9.2.1 Tags: Additive leading value (S7-1500T) 167

10 Cross-PLC synchronous operation (S7-1500T) 168
10.1 Interconnection possibilities (S7-1500T) 169
10.2 Preparing cross-PLC synchronous operation (S7-1500T) 171
10.3 Setting up communication via direct data exchange (S7-1500T) 172
10.4 Configuring the provision of leading value and interconnecting axes (S7-1500T) 174
10.5 Configuring the tolerance time (S7-1500T) 177
10.6 Working with the interconnection overview table (S7-1500T) 177
10.6.1 Opening the interconnection overview (S7-1500T) 177

10.6.2 Interconnection overview (S7-1500T) ... 178
10.6.3 Showing routes (S7-1500T) ... 180
10.6.4 Setting the delay times (S7-1500T) ... 180

10.7 Tags: Cross-PLC synchronous operation (S7-1500T) ... 181

11 Diagnostics (S7-1500, S7-1500T) ... 183

11.1 Synchronous axis technology object (S7-1500, S7-1500T) ... 183
11.1.1 Status and error bits (S7-1500, S7-1500T) ... 183
11.1.2 Motion status (S7-1500, S7-1500T) ... 188
11.1.3 PROFIdrive telegram (S7-1500, S7-1500T) ... 189

11.2 Cam technology object (S7-1500T) ... 190
11.2.1 Applications of the cam diagnostics (S7-1500T) ... 190
11.2.2 Structure of the diagnostics (S7-1500T) ... 191
11.2.3 Online view (S7-1500T) ... 195
11.2.4 Status and error bits (S7-1500T) ... 195
11.2.5 "Definition changed" and "Interpolated" status bits (S7-1500T) ... 197
11.2.6 Filter by segments and points (S7-1500T) ... 198
11.2.7 Comparing elements (S7-1500T) ... 199
11.2.8 Managing snapshots (S7-1500T) ... 201
11.2.9 Exporting and importing snapshots (S7-1500T) ... 201
11.2.10 Printing curve diagram (S7-1500T) ... 202

11.3 Leading axis proxy technology object (S7-1500T) ... 203
11.3.1 Status and error bits (S7-1500T) ... 203
11.3.2 Motion status (S7-1500T) ... 205

12 Instructions (S7-1500, S7-1500T) ... 206

12.1 Synchronous motion (S7-1500, S7-1500T) ... 206
12.1.1 MC_GearIn V7 (S7-1500, S7-1500T) ... 206
12.1.1.1 MC_GearIn: Start gearing V7 (S7-1500, S7-1500T) ... 206
12.1.1.2 MC_GearIn: Function chart V7 (S7-1500, S7-1500T) ... 209
12.1.2 MC_GearInPos V7 (S7-1500T) ... 210
12.1.2.1 MC_GearInPos: Start gearing with specified synchronous positions V7 (S7-1500T) ... 210
12.1.2.2 MC_GearInPos: Function chart V7 (S7-1500T) ... 214
12.1.3 MC_GearInVelocity V7 (S7-1500T) ... 217
12.1.3.1 MC_GearInVelocity: Start velocity synchronous operation V7 (S7-1500T) ... 217
12.1.3.2 MC_GearInVelocity: Function chart V7 (S7-1500T) ... 220
12.1.4 MC_PhasingRelative V7 (S7-1500T) ... 221
12.1.4.1 MC_PhasingRelative: Relative shift of leading value on the following axis V7 (S7-1500T) ... 221
12.1.4.2 MC_PhasingRelative: Function chart V7 (S7-1500T) ... 225
12.1.5 MC_PhasingAbsolute V7 (S7-1500T) ... 228
12.1.5.1 MC_PhasingAbsolute: Absolute shift of leading value on the following axis V7 (S7-1500T) ... 228
12.1.5.2 MC_PhasingAbsolute: Function chart V7 (S7-1500T) ... 232
12.1.6 MC_OffsetRelative V7 (S7-1500T) ... 235
12.1.6.1 MC_OffsetRelative: Relative shift of following value on the following axis V7 (S7-1500T) ... 235
12.1.6.2 MC_OffsetRelative: Function chart V7 (S7-1500T) ... 237
12.1.7 MC_OffsetAbsolute V7 (S7-1500T) ... 241
12.1.7.1 MC_OffsetAbsolute: Absolute shift of following value on the following axis V7 (S7-1500T) ... 241

12.1.7.2 MC_OffsetAbsolute: Function chart V7 (S7-1500T) 243
12.1.8 MC_CamIn V7 (S7-1500T) 247
12.1.8.1 MC_CamIn: Start camming V7 (S7-1500T) 247
12.1.8.2 MC_CamIn: Function chart V7 (S7-1500T) 253
12.1.9 MC_SynchronizedMotionSimulation V7 (S7-1500T) 261
12.1.9.1 MC_SynchronizedMotionSimulation: Simulate synchronous operation V7 (S7-1500T) 261
12.1.10 MC_GearOut V7 (S7-1500T) 262
12.1.10.1 MC_GearOut: Desynchronize gearing V7 (S7-1500T) 262
12.1.10.2 MC_GearOut: Function chart V7 (S7-1500T) 265
12.1.11 MC_CamOut V7 (S7-1500T) 267
12.1.11.1 MC_CamOut: Desynchronize camming V7 (S7-1500T) 267
12.1.11.2 MC_CamOut: Function chart V7 (S7-1500T) 269
12.1.12 MC_LeadingValueAdditive V7 (S7-1500T) 271
12.1.12.1 MC_LeadingValueAdditive: Specify additive leading value V7 (S7-1500T) 271
12.1.12.2 MC_LeadingValueAdditive: Function chart V7 (S7-1500T) 272

12.2 Cam (S7-1500T) 274
12.2.1 MC_InterpolateCam V7 (S7-1500T) 274
12.2.1.1 MC_InterpolateCam: Interpolate cam disc V7 (S7-1500T) 274
12.2.2 MC_GetCamLeadingValue V7 (S7-1500T) 276
12.2.2.1 MC_GetCamLeadingValue: Read out leading value of a cam V7 (S7-1500T) 276
12.2.3 MC_GetCamFollowingValue V7 (S7-1500T) 277
12.2.3.1 MC_GetCamFollowingValue: Read out following value of a cam disc V7 (S7-1500T) 277
12.2.4 MC_CopyCamData V7 (S7-1500T) 279
12.2.4.1 MC_CopyCamData: Copy calculated cam elements V7 (S7-1500T) 279

12.3 Override response of Motion Control jobs V7 (S7-1500, S7-1500T) 282
12.3.1 Override response V7: Homing and motion jobs (S7-1500, S7-1500T) 282
12.3.2 Override response V7: Synchronous operation jobs (S7-1500, S7-1500T) 284
12.3.3 Override response V7: Measuring input jobs (S7-1500, S7-1500T) 286
12.3.4 Override response V7: Kinematics motion commands (S7-1500T) 286

13 Tags of the technology object data blocks (S7-1500, S7-1500T) 289

13.1 Tags of the synchronous axis technology object (S7-1500, S7-1500T) 289
13.1.1 Legend (S7-1500, S7-1500T) 289
13.1.2 Actual values and setpoints (synchronous axis) (S7-1500, S7-1500T) 289
13.1.3 "Simulation" tag (synchronous axis) (S7-1500, S7-1500T) 290
13.1.4 "VirtualAxis" tag (synchronous axis) (S7-1500, S7-1500T) 290
13.1.5 "Actor" tag (synchronous axis) (S7-1500, S7-1500T) 291
13.1.6 "TorqueLimiting" tag (synchronous axis) (S7-1500, S7-1500T) 292
13.1.7 "Clamping" tag (synchronous axis) (S7-1500, S7-1500T) 293
13.1.8 "Sensor[1..4]" tags (synchronous axis) (S7-1500, S7-1500T) 293
13.1.9 "CrossPlcSynchronousOperation" tag (synchronous axis) (S7-1500, S7-1500T) 297
13.1.10 "Extrapolation" tag (synchronous axis) (S7-1500, S7-1500T) 297
13.1.11 "LoadGear" tag (synchronous axis) (S7-1500, S7-1500T) 298
13.1.12 "Properties" tag (synchronous axis) (S7-1500, S7-1500T) 299
13.1.13 "Units" tag (synchronous axis) (S7-1500, S7-1500T) 299
13.1.14 "Mechanics" tag (synchronous axis) (S7-1500, S7-1500T) 301
13.1.15 "Modulo" tag (synchronous axis) (S7-1500, S7-1500T) 301
13.1.16 "DynamicLimits" tag (synchronous axis) (S7-1500, S7-1500T) 301
13.1.17 "DynamicDefaults" tag (synchronous axis) (S7-1500, S7-1500T) 302
13.1.18 "PositionLimits_SW" tag (synchronous axis) (S7-1500, S7-1500T) 303

13.1.19 "PositionLimits_HW" tag (synchronous axis) (S7-1500, S7-1500T) 303
13.1.20 "Homing" tag (synchronous axis) (S7-1500, S7-1500T) 304
13.1.21 "Override" tag (synchronous axis) (S7-1500, S7-1500T) 305
13.1.22 "PositionControl" tag (synchronous axis) (S7-1500, S7-1500T) 305
13.1.23 "SetpointFilter" tag (synchronous axis) (S7-1500, S7-1500T) 306
13.1.24 "DynamicAxisModel" tag (synchronous axis) (S7-1500, S7-1500T) 307
13.1.25 "FollowingError" tag (synchronous axis) (S7-1500, S7-1500T) 307
13.1.26 "PositioningMonitoring" tag (synchronous axis) (S7-1500, S7-1500T) 308
13.1.27 "StandstillSignal" tag (synchronous axis) (S7-1500, S7-1500T) 308
13.1.28 "StatusPositioning" tag (synchronous axis) (S7-1500, S7-1500T) 309
13.1.29 "StatusDrive" tag (synchronous axis) (S7-1500, S7-1500T) 309
13.1.30 "StatusServo" tag (synchronous axis) (S7-1500, S7-1500T) 310
13.1.31 "StatusProvidedLeadingValue" tag (synchronous axis) (S7-1500, S7-1500T) 311
13.1.32 "StatusSensor[1..4]" tags (synchronous axis) (S7-1500, S7-1500T) 311
13.1.33 "StatusExtrapolation" tag (synchronous axis) (S7-1500, S7-1500T) 312
13.1.34 "StatusSynchronizedMotion" tag (synchronous axis) (S7-1500, S7-1500T) 313
13.1.35 "StatusKinematicsMotion" tag (synchronous axis) (S7-1500, S7-1500T) 315
13.1.36 "StatusTorqueData" tag (synchronous axis) (S7-1500, S7-1500T) 316
13.1.37 "StatusMotionIn" tag (synchronous axis) (S7-1500, S7-1500T) 316
13.1.38 "StatusWord" tag (synchronous axis) (S7-1500, S7-1500T) 317
13.1.39 "StatusWord2" tag (synchronous axis) (S7-1500, S7-1500T) 319
13.1.40 "ErrorWord" tag (synchronous axis) (S7-1500, S7-1500T) 319
13.1.41 "ErrorDetail" tag (synchronous axis) (S7-1500, S7-1500T) 321
13.1.42 "WarningWord" tag (synchronous axis) (S7-1500, S7-1500T) 321
13.1.43 "ControlPanel" tag (synchronous axis) (S7-1500, S7-1500T) 322
13.1.44 "InternalToTrace" tag (synchronous axis) (S7-1500, S7-1500T) 323

13.2 Tags of the cam technology object (S7-1500T) 323
13.2.1 Legend (S7-1500T) 323
13.2.2 "Point[1..1000]" tag (cam of type "TO_Cam") (S7-1500T) 323
13.2.3 "Point[1..10000]" tag (cam of type "TO_Cam_10k") (S7-1500T) 324
13.2.4 "ValidPoint[1..1000]" tag (cam of the "TO_Cam" type) (S7-1500T) 324
13.2.5 "ValidPoint[1..10000]" tag (cam of the "TO_Cam_10k" type) (S7-1500T) 324
13.2.6 "Segment[1..50]" tag (cam) (S7-1500T) 325
13.2.7 "ValidSegment[1..50]" tag (cam) (S7-1500T) 325
13.2.8 "InterpolationSettings" tag (cam) (S7-1500T) 326
13.2.9 "StatusCam" tag (cam of the "TO_Cam" type) (S7-1500T) 326
13.2.10 "StatusCam" tag (cam of the "TO_Cam_10k" type) (S7-1500T) 327
13.2.11 "StatusWord" tag (cam) (S7-1500T) 327
13.2.12 "ErrorWord" tag (cam) (S7-1500T) 328
13.2.13 "ErrorDetail" tag (cam) (S7-1500T) 329
13.2.14 "WarningWord" tag (cam) (S7-1500T) 329

13.3 Tags of the leading axis proxy technology object (S7-1500T) 330
13.3.1 Legend (S7-1500T) 330
13.3.2 Leading value (leading axis proxy) (S7-1500T) 330
13.3.3 "Interface" tag (leading axis proxy) (S7-1500T) 330
13.3.4 "Parameter" tag (leading axis proxy) (S7-1500T) 331
13.3.5 "StatusExternalLeadingValue" tag (leading axis proxy) (S7-1500T) 331
13.3.6 "StatusWord" tag (leading axis proxy) (S7-1500T) 332

13.3.7 "'ErrorWord" tag (leading axis proxy) (S7-1500T) 332
13.3.8 "ErrorDetail" tag (leading axis proxy) (S7-1500T) 333
13.3.9 "WarningWord" tag (leading axis proxy) (S7-1500T) 333

Index 335

Introduction (S7-1500, S7-1500T) 1

Purpose of the documentation

This documentation provides important information that you need to configure and commission the integrated Motion Control functionality of the S7-1500 Automation systems.

Required basic knowledge

In order to understand this documentation, the following knowledge is required:

- General knowledge in the field of automation
- General knowledge in the field of drive engineering and motion control

Validity of the documentation

This documentation is valid for the S7-1500 product range.

Conventions

- For the path settings in the project navigation it is presumed that the "Technology objects" object is opened in the CPU subtree. The "Technology object" placeholder represents the name of the technology object.
  Example: "Technology object > Configuration > Basic parameters".
- The <TO> placeholder represents the name set in tags for the respective technology object.
  Example: <TO>.Actor.Type
- This documentation contains pictures of the devices described. The pictures may differ in minor details from the devices supplied.

You should also observe the notes that are marked as follows:

NOTE

A note contains important information about the product described in the documentation, about the handling of the product, and about sections in this documentation demanding your particular attention.

Industry Mall

The Industry Mall is the catalog and ordering system of Siemens AG for automation and drive solutions on the basis of Totally Integrated Automation (TIA) and Totally Integrated Power (TIP).

You can find catalogs for all automation and drive products on the Internet (https://mall.industry.siemens.com).

1.1 S7-1500 Motion Control Documentation Guide (S7-1500, S7-1500T)

Product information

Please also note the supplementary information on the Motion Control documentation:

- Product information on the S7-1500/1500T Motion Control documentation
  https://support.industry.siemens.com/cs/ww/en/view/109794046
  (https://support.industry.siemens.com/cs/ww/en/view/109794046)

Documentation

The documentation of the Motion Control functions is divided into the following documents:

- S7-1500/S7-1500T Motion Control Overview
  https://support.industry.siemens.com/cs/ww/en/view/109812056
  (https://support.industry.siemens.com/cs/ww/en/view/109812056)
  This document describes the innovations in the technology versions, functions that are used for all technology objects, and the process response of Motion Control applications.
- S7-1500/S7-1500T Motion Control alarms and error IDs
  https://support.industry.siemens.com/cs/ww/en/view/109812061
  (https://support.industry.siemens.com/cs/ww/en/view/109812061)
  This document describes the technology alarms of the technology objects and the error identifications of the Motion Control instructions.
- S7-1500/S7-1500T Axis functions
  https://support.industry.siemens.com/cs/ww/en/view/109812057
  (https://support.industry.siemens.com/cs/ww/en/view/109812057)
  This document describes the drive and encoder connection and functions for single-axis movements.
- S7-1500/S7-1500T Synchronous operation functions
  https://support.industry.siemens.com/cs/ww/en/view/109812059
  (https://support.industry.siemens.com/cs/ww/en/view/109812059)
  This document describes gearing, velocity synchronous operation and camming as well as cross-PLC synchronous operation.
- S7-1500/S7-1500T Measuring input and cam functions
  https://support.industry.siemens.com/cs/ww/en/view/109812060
  (https://support.industry.siemens.com/cs/ww/en/view/109812060)
  This document describes the detection of the actual position via a measuring input and the output of switching signals via output cam or cam track.
- S7-1500/S7-1500T Kinematics functions
  https://support.industry.siemens.com/cs/ww/en/view/109812058
  (https://support.industry.siemens.com/cs/ww/en/view/109812058)
  This document describes the control of kinematics with up to 6 interpolating axes.

See also

Topic page "SIMATIC Technology - Motion Control: Overview and Important Links"
https://support.industry.siemens.com/cs/ww/en/view/109751049
(https://support.industry.siemens.com/cs/ww/en/view/109751049)

1.2 Function Manuals documentation guide (S7-1500, S7-1500T)

1.2.1 Information classes Function Manuals (S7-1500, S7-1500T)

The documentation for the SIMATIC S7-1500 automation system, for the 1513/1516pro-2 PN, SIMATIC Drive Controller CPUs based on SIMATIC S7-1500 and the SIMATIC ET 200MP, ET 200SP, ET 200AL and ET 200eco PN distributed I/O systems is arranged into three areas.
This arrangement enables you to access the specific content you require.
You can download the documentation free of charge from the Internet (https://support.industry.siemens.com/cs/ww/en/view/109742705).

Basic information

The system manuals and Getting Started describe in detail the configuration, installation, wiring and commissioning of the SIMATIC S7-1500, SIMATIC Drive Controller, ET 200MP, ET 200SP, ET 200AL and ET 200eco PN systems. Use the corresponding operating instructions for 1513/1516pro-2 PN CPUs.
The STEP 7 online help supports you in the configuration and programming.
Examples:

- Getting Started S7-1500
- System manuals
- Operating instructions ET 200pro and 1516pro-2 PN CPU
- Online help TIA Portal

Device information

Equipment manuals contain a compact description of the module-specific information, such as properties, wiring diagrams, characteristics and technical specifications.
Examples:

- Equipment manuals for CPUs
- Equipment manuals for interface modules
- Equipment manuals for digital modules
- Equipment manuals for analog modules
- Equipment manuals for communication modules
- Equipment manuals for technology modules
- Equipment manuals for power supply modules
- Equipment manuals for BaseUnits

General information

The function manuals contain detailed descriptions on general topics relating to the SIMATIC Drive Controller and the S7-1500 automation system.
Examples:

- Function Manual Diagnostics
- Function Manual Communication
- Function Manuals Motion Control
- Function Manual Web Server
- Function Manual Cycle and Response Times
- PROFINET Function Manual
- PROFIBUS Function Manual

Product Information

Changes and supplements to the manuals are documented in a Product Information. The Product Information takes precedence over the device and system manuals.
You will find the latest Product Information on the Internet:

- S7-1500/ET 200MP (https://support.industry.siemens.com/cs/de/en/view/68052815)
- SIMATIC Drive Controller (https://support.industry.siemens.com/cs/de/en/view/109772684/en)
- Motion Control (https://support.industry.siemens.com/cs/de/en/view/109794046/en)
- ET 200SP (https://support.industry.siemens.com/cs/de/en/view/73021864)
- ET 200eco PN (https://support.industry.siemens.com/cs/ww/en/view/109765611)

Manual Collections

The Manual Collections contain the complete documentation of the systems put together in one file.
You will find the Manual Collections on the Internet:

- S7-1500/ET 200MP/SIMATIC Drive Controller (https://support.industry.siemens.com/cs/ww/en/view/86140384)
- ET 200SP (https://support.industry.siemens.com/cs/ww/en/view/84133942)
- ET 200AL (https://support.industry.siemens.com/cs/ww/en/view/95242965)
- ET 200eco PN (https://support.industry.siemens.com/cs/ww/en/view/109781058)

1.2.2 Basic tools (S7-1500, S7-1500T)

The tools described below support you in all steps: from planning, over commissioning, all the way to analysis of your system.

TIA Selection Tool

The TIA Selection Tool tool supports you in the selection, configuration, and ordering of devices for Totally Integrated Automation (TIA).
As successor of the SIMATIC Selection Tools , it assembles the configuration editors for automation technology already familiar into a single tool.

With the TIA Selection Tool , you can generate a complete order list from your product selection or product configuration.
You can find the TIA Selection Tool on the Internet.
(https://support.industry.siemens.com/cs/ww/en/view/109767888)

SIMATIC Automation Tool

You can use the SIMATIC Automation Tool to perform commissioning and maintenance activities on various SIMATIC S7 stations as bulk operations independent of TIA Portal.
The SIMATIC Automation Tool offers a wide range of functions:

- Scanning of a PROFINET/Ethernet system network and identification of all connected CPUs
- Assignment of addresses (IP, subnet, Gateway) and device name (PROFINET device) to a CPU
- Transfer of the date and the programming device/PC time converted to UTC time to the module
- Program download to CPU
- RUN/STOP mode switchover
- CPU localization through LED flashing
- Reading out of CPU error information
- Reading the CPU diagnostic buffer
- Reset to factory settings
- Firmware update of the CPU and connected modules

You can find the SIMATIC Automation Tool on the Internet.
(https://support.industry.siemens.com/cs/ww/en/view/98161300)

PRONETA

SIEMENS PRONETA (PROFINET network analysis) is a commissioning and diagnostic tool for PROFINET networks. PRONETA Basic has two core functions:

- The "Network analysis" offers a quick overview of the PROFINET topology. It is possible to make simple parameter changes (for example, to the names and IP addresses of the devices). In addition, a quick and convenient comparison of the real configuration with a reference system is also possible.
- The "IO test" is a simple and rapid test of the wiring and the module configuration of a plant, including documentation of the test results.

You can find SIEMENS PRONETA Basic on the Internet:
(https://support.industry.siemens.com/cs/ww/en/view/67460624)
SIEMENS PRONETA Professional is a licensed product that offers you additional functions. It offers you simple asset management in PROFINET networks and supports operators of automation systems in automatic data collection/acquisition of the components used through various functions:

- The user interface (API) offers an access point to the automation cell to automate the scan functions using MQTT or a command line.
- With PROFIenergy diagnostics, you can quickly detect the current pause mode or the readiness for operation of devices that support PROFIenergy and change these as needed.
- The data record wizard supports PROFINET developers in reading and writing acyclic PROFINET data records quickly and easily without PLC and engineering.

You can find SIEMENS PRONETA Professional on the Internet.
(https://www.siemens.com/proneta-professional)

SINETPLAN

SINETPLAN, the Siemens Network Planner, supports you in planning automation systems and networks based on PROFINET. The tool facilitates professional and predictive dimensioning of your PROFINET installation as early as in the planning stage. In addition, SINETPLAN supports you during network optimization and helps you to exploit network resources optimally and to plan reserves. This helps to prevent problems in commissioning or failures during productive operation even in advance of a planned operation. This increases the availability of the production plant and helps improve operational safety.

The advantages at a glance

- Network optimization thanks to port-specific calculation of the network load
- Increased production availability thanks to online scan and verification of existing systems
- Transparency before commissioning through importing and simulation of existing STEP 7 projects
- Efficiency through securing existing investments in the long term and the optimal use of resources

You can find SINETPLAN on the Internet
(https://new.siemens.com/global/en/products/automation/industrial-communication/profinet/sinetplan.html).

1.2.3 SIMATIC Technical Documentation (S7-1500, S7-1500T)

Additional SIMATIC documents will complete your information. You can find these documents and their use at the following links and QR codes.

The Industry Online Support gives you the option to get information on all topics. Application examples support you in solving your automation tasks.

Overview of the SIMATIC Technical Documentation

Here you will find an overview of the SIMATIC documentation available in Siemens Industry Online Support:

Industry Online Support International
(https://support.industry.siemens.com/cs/ww/en/view/109742705)

Watch this short video to find out where you can find the overview directly in Siemens Industry Online Support and how to use Siemens Industry Online Support on your mobile device:

Quick introduction to the technical documentation of automation products per video (https://support.industry.siemens.com/cs/us/en/view/109780491)

YouTube video: Siemens Automation Products - Technical Documentation at a Glance (https://youtu.be/TwLSxxRQQsA)

mySupport

With "mySupport" you can get the most out of your Industry Online Support.

Registration	You must register once to use the full functionality of "mySupport". After registration, you can create filters, favorites and tabs in your personal workspace.
Support requests	Your data is already filled out in support requests, and you can get an overview of your current requests at any time.
Documentation	In the Documentation area you can build your personal library.
Favorites	You can use the "Add to mySupport favorites" to flag especially interesting or frequently needed content. Under "Favorites", you will find a list of your flagged entries.
Recently viewed articles	The most recently viewed pages in mySupport are available under "Recently viewed articles".
CAx data	The CAx data area gives you access to the latest product data for your CAx or CAe system. You configure your own download package with a few clicks: • Product images, 2D dimension drawings, 3D models, internal circuit diagrams, EPLAN macro files • Manuals, characteristics, operating manuals, certificates • Product master data

You can find "mySupport" on the Internet. (https://support.industry.siemens.com/My/ww/en)

Application examples

The application examples support you with various tools and examples for solving your automation tasks. Solutions are shown in interplay with multiple components in the system - separated from the focus on individual products.
You can find the application examples on the Internet.
(https://support.industry.siemens.com/cs/ww/en/ps/ae)

Safety instructions (S7-1500, S7-1500T) 2

Siemens provides products and solutions with industrial security functions that support the secure operation of plants, systems, machines and networks.

In order to protect plants, systems, machines and networks against cyber threats, it is necessary to implement – and continuously maintain – a holistic, state-of-the-art industrial security concept. Siemens' products and solutions constitute one element of such a concept.

Customers are responsible for preventing unauthorized access to their plants, systems, machines and networks. Such systems, machines and components should only be connected to an enterprise network or the internet if and to the extent such a connection is necessary and only when appropriate security measures (e.g. firewalls and/or network segmentation) are in place.

For additional information on industrial security measures that may be implemented, please visit (https://www.siemens.com/industrialsecurity).

Siemens' products and solutions undergo continuous development to make them more secure. Siemens strongly recommends that product updates are applied as soon as they are available and that the latest product versions are used. Use of product versions that are no longer supported, and failure to apply the latest updates may increase customers' exposure to cyber threats.

To stay informed about product updates, subscribe to the Siemens Industrial Security RSS Feed visit (https://www.siemens.com/cert).

New features V7.0 (S7-1500, S7-1500T) 3

Technology version V7.0 contains the following new features:

Velocity gearing (S7-1500T)

- The "MC_GearInVelocity" instruction is available. With an "MC_GearInVelocity" job, you can start velocity gearing between a leading axis and a following axis.
- Continuous changing of the gear ratio during operation is possible. While that is happening, the following axis remains in the status "Synchronous".

Camming (S7-1500T)

- The "MC_CamIn" instruction has been expanded to include the synchronization profile "SyncProfileReference" = 6. With this setting, the following axis synchronizes in advance over a pre-definable leading value path, starting from the current leading value position. The cam is offset accordingly in the master value range.
- For interpolating the cam technology object, you can improve the system performance using the properties of MC-Interpolator [OB92]. This is possible with the modular S7-1500T(F) CPUs and the SIMATIC Drive Controller as of firmware version V3.0.

Overview of functions (S7-1500, S7-1500T) 4

Synchronous operation enables a following axis to be linked to a leading axis and move synchronously with it. The synchronous operation relationship between the leading and following axes is specified by a synchronous operation function.

Gearing

During gearing (Page 41), the position of the following axis results from the position of the leading axis multiplied by the gear ratio. You specify the gear ratio as a ratio of two integers. The result is a linear synchronous operation function.

Gearing (S7-1500T)

The following axis can be pre-synchronized or post-synchronized via the leading value path or dynamic parameters. For this purpose, you can specify corresponding reference positions of leading and following axis that define the relation of the axes to each other.

As an alternative to the setpoint, the extrapolated actual value can be interconnected as a leading value for synchronous operation. As a result, you can use an external encoder technology object as the leading value.

In addition, the following axis can be desynchronized to a presettable stop position via the leading value path or dynamic parameters.

Velocity synchronous operation (S7-1500T)

During velocity synchronous operation (Page 74), the velocity of the following axis results from the velocity of the leading axis multiplied by the gear ratio, regardless of the position. You specify the gear ratio as a ratio of two integers either once or variably during synchronization.

Camming (S7-1500T)

During camming (Page 82), the leading axis and following axis are coupled by a synchronous operation function, which you specify using a cam technology object. The cam technology object (TO_Cam, TO_Cam_10k) defines a function f(x) by means of interpolation points and/or segments. Gaps between the defined interpolation points and segments of the cam are closed by interpolation during runtime of the user program. The transmission behavior during camming is expressed by the cam curve.

Synchronous operation phases

A synchronous operation runs in the following phases:

- Pending synchronous operation (S7-1500T)
  The following axis waits for the starting conditions of the synchronizing motion to be fulfilled.
- Synchronization
  The following axis is synchronized to the leading value.
- Synchronous motion
  The following axis follows the position of the leading axis according to the synchronous operation function.
- Synchronous operation override
  An active synchronous operation is overridden by motion jobs, e.g. "MC_Halt" on the following axis.
- Waiting synchronization job (S7-1500T)
  The following axis waits for the starting conditions of the desynchronization motion to be fulfilled.
- Desynchronize synchronous operation (S7-1500T)
  The following axis is desynchronized from the leading value. The following axis stops at a defined position and synchronous operation is ended.

Cross-PLC synchronous operation (S7-1500T)

Cross-PLC synchronous operation (Page 168) enables synchronous operation over multiple controllers. You can configure leading and following axes on different controllers.

The synchronous operation function, e.g. a gearing, is executed on the CPU of the following axis. The leading axis proxy technology object (TO_LeadingAxisProxy) represents the leading axis for the local synchronous operation within a CPU. The leading axis proxy evaluates the leading value telegram and provides the external leading value for the local following axes.

4.1 Synchronous axis technology object (S7-1500, S7-1500T)

The synchronous axis technology object includes all functions of the positioning axis technology object.

A synchronous axis can also follow the motions of a leading axis. The synchronous operation relationship between the leading and following axes is specified by a synchronous operation function.

You can find an overview of the supported instructions of the synchronous axis technology object in the section "Motion Control instructions for synchronous operation (Page 28)".

The figure below shows the basic principle of operation of the synchronous axis technology object:

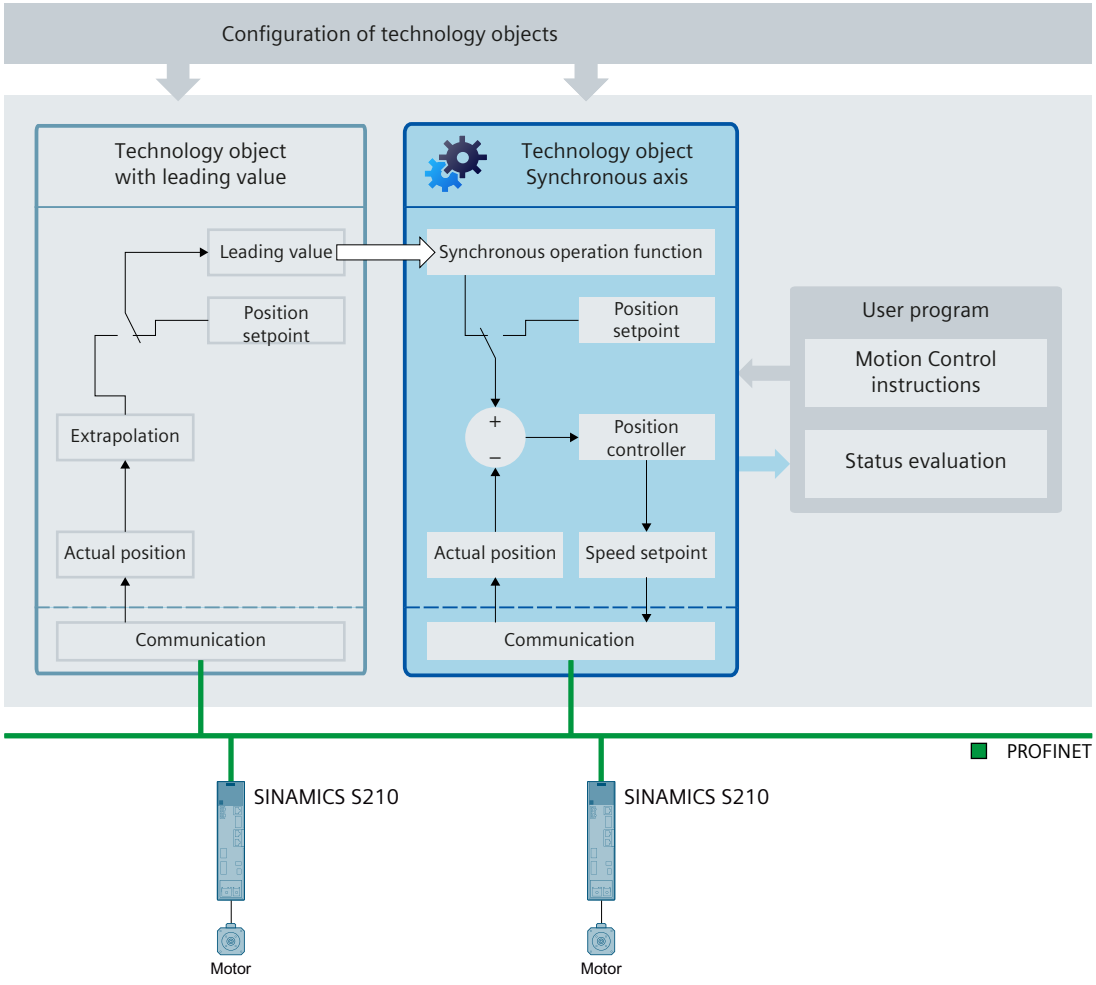

Configuration

The following non-isochronous specific configurations correspond to the positioning axis technology object:

- Basic parameters
  - Axis or encoder type
  - Units of measure
  - Modulo setting
  - Virtual axis
  - Axis in simulation
- Hardware interface
  - Connecting PROFIdrive drives
  - Connecting encoders via PROFIdrive
  - Transferring drive and encoder parameters automatically
  - Connecting stepper motors
  - Connecting drives with analog setpoint interface
  - Connecting force/torque data via SIEMENS additional telegram 750
- Mechanics
  - Configuring drive and encoder direction for positioning axis/synchronous axis
  - Configuring the load gear
  - Configuring the leadscrew pitch
  - Configuring backlash compensation
- Dynamic default values
- Emergency stop
- Limits
  - Position limits
  - Dynamic limits
  - Torque limits
  - Fixed stop detection
- Homing
  - Active homing
  - Passive homing
- Position monitoring functions
  - Position monitoring
  - Following error
  - Standstill signal
- Control loop
  - Configuring position controller in the PLC
  - Configuring position controller for drives with DSC
  - Configuring a dynamic filter
  - Switching the position control off and on

You can find a description of the configuration parameters in the "S7-1500/S7-1500T Axis functions" documentation (Page 13).

The following configurations of the synchronous axis technology object are specific to synchronous operation:

- Leading value interconnections (Page 33)
- Leading value settings
  - Configuring provision of the leading value (Page 174)
  - Configuring the delay time (Page 180)
- Actual value extrapolation (Page 34)

You can find a description of the configuration parameters in the "S7-1500/S7-1500T synchronous operation functions" documentation (Page 13).

4.2 Cam technology object (S7-1500T)

Term definition

The following section discusses the "Cam technology object" in general. This refers to both the cam technology object of type "TO_Cam" and of type "TO_Cam_10k". If a specific cam technology object is meant, the type is explicitly mentioned.

Cam technology object

The cam technology object defines a transfer function y = f(x). The dependency of an output value on an input value is described in this transfer function in a unit-neutral manner. A cam technology object can be used multiple times.

You can find an overview of the supported instructions of the cam technology object in the section "Motion Control instructions for synchronous operation (Page 28)".

You define the function y = f(x) in the configuration of the technology object (Page 83) using interpolation points and/or segments. The cam technology object of the type "TO_Cam" can contain up to 1000 points. The cam technology object of the type "TO_Cam_10k" can contain up to 10 000 points. Both technology objects can contain up to 50 segments.

Ranges between interpolation points and segments are interpolated using the Motion Control instruction "MC_InterpolateCam (Page 274)". During runtime of the user program, the settings can be changed/redefined via the technology data block as described in the section "Changing the synchronous operation function of the cam online (Page 113)".

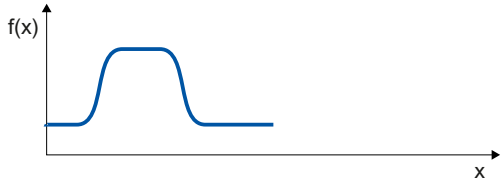

An interpolated cam can be applied as a synchronous operation function for camming (Page 82).

The figure below shows the basic operating principle of the cam technology object:

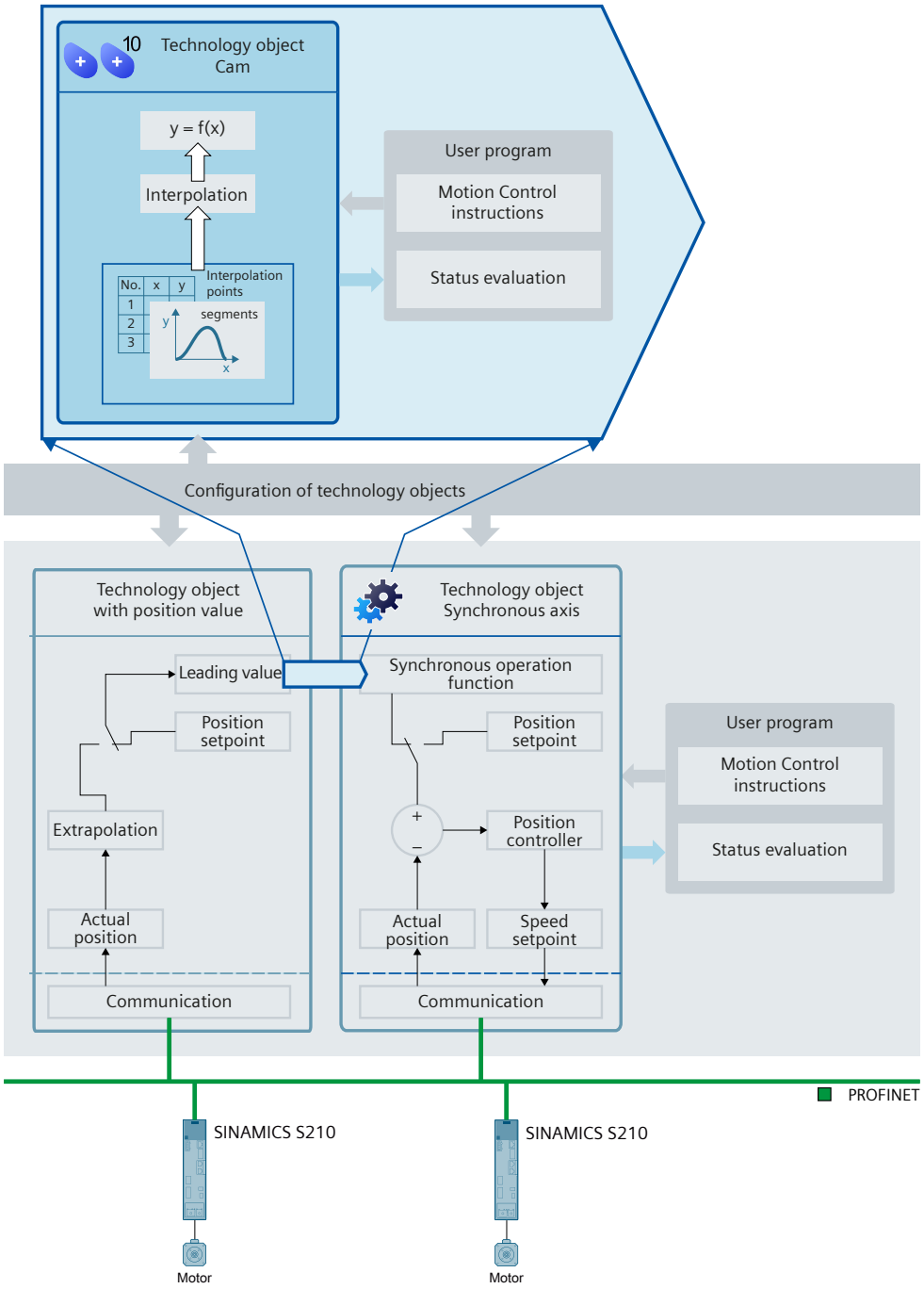

Configuration

The following configurations are available in the cam technology object:

- Configuring the synchronous operation function of the cam (Page 83)

4.3 Leading axis proxy technology object (S7-1500T)

With cross-PLC synchronous operation, the leading axis proxy technology object represents the leading axis for local synchronous operation within a CPU. The leading axis proxy adjust the time of the leading value so that the following axes on the different CPUs are synchronous, and it provides the leading value for the local following axes.

You can find an overview of the supported instructions of the leading axis proxy technology object in the section "Motion Control instructions for synchronous operation (Page 28)".

The figure below shows the basic principle of operation of the leading axis proxy technology object:

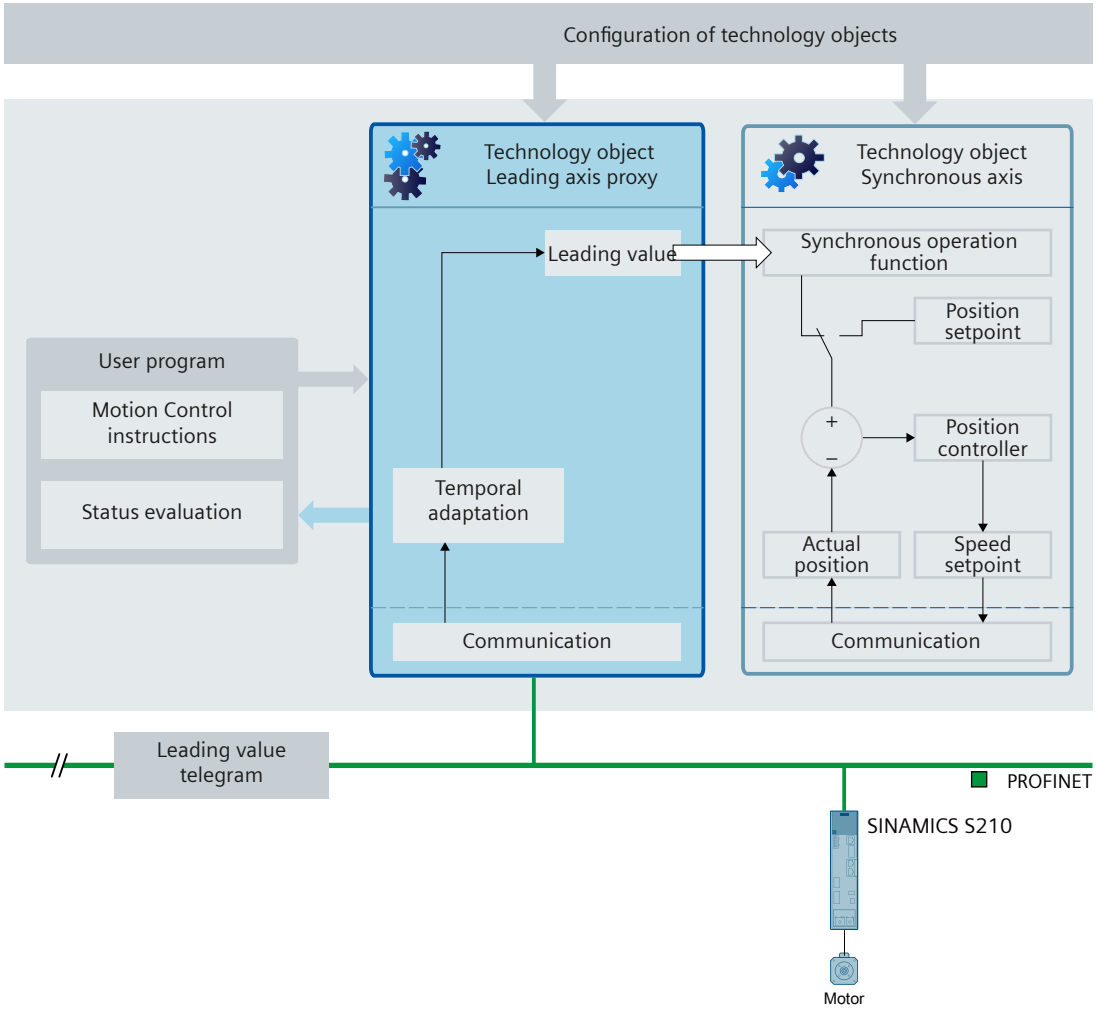

Configuration

The following configurations are available in the leading axis proxy technology object:

- Basic parameters
- Leading value settings
  - Configuring provision of the leading value (Page 174)
  - Configuring the tolerance time (Page 177)
  - Configuring the delay time (Page 180)

4.4 Motion Control instructions for synchronous operation (S7-1500, S7-1500T)

You execute the functions of the synchronous axis, cam and leading axis proxy technology objects using Motion Control instructions in your user program or using the TIA Portal (under "Technology object > Commissioning").

The following table shows the additional Motion Control instructions for synchronous operation that are supported by the technology objects in addition to the axis functions:

Motion Control instruction	Validity		Technology object		
	S7-1500	S7-1500T	Synchronous axis (Page 22)	Cam (Page 25)[1]	Leading axis proxy (Page 27)
"MC_Reset" Acknowledge alarms, restart technology objects	✓	✓	✓	✓	✓
"MC_GearIn" Start gearing	✓	✓	✓	-	✓
"MC_GearInPos" Start gearing with specified synchronous positions	-	✓	✓	-	✓
"MC_GearInVelocity" Start velocity synchronous operation	-	✓	✓	-	✓
"MC_PhasingRelative" Relative shift of leading value on the following axis	-	✓	✓	-	✓
"MC_PhasingAbsolute" Absolute shift of leading value on the following axis	-	✓	✓	-	✓
"MC_OffsetRelative" Relative shift of following value on the following axis.	-	✓	✓	-	-
"MC_OffsetAbsolute" Absolute shift of following value on the following axis.	-	✓	✓	-	-
"MC_CamIn" Start camming	-	✓	✓	✓	✓
"MC_SynchronizedMotionSimulation" Simulate synchronous operation	-	✓	✓	-	-
"MC_LeadingValueAdditive" Specify additive leading value	-	✓	✓	-	-
"MC_GearOut" Desynchronize gearing	-	✓	✓	-	-
"MC_CamOut" Desynchronize camming	-	✓	✓	-	-
"MC_InterpolateCam" Interpolate cam disc	-	✓	-	✓	-

[1] Applies to both the cam technology object of the type "TO_Cam" and to the type "TO_Cam_10k".

Motion Control instruction	Validity		Technology object		
	S7-1500	S7-1500T	Synchronous axis (Page 22)	Cam (Page 25)[1]	Leading axis proxy (Page 27)
"MC_GetCamLeadingValue" Read out leading value of a cam	-	✓	-	✓	-
"MC_GetCamFollowingValue" Read out following value of a cam disc	-	✓	-	✓	-
"MC_CopyCamData" Copy calculated cam elements	-	✓	-	✓	-

[1] Applies to both the cam technology object of the type "TO_Cam" and to the type "TO_Cam_10k".

4.5 Mode of operation of the instructions in synchronous operation (S7-1500, S7-1500T)

The following graphic shows the general influence of the Motion Control instructions on the following axis in synchronous operation:

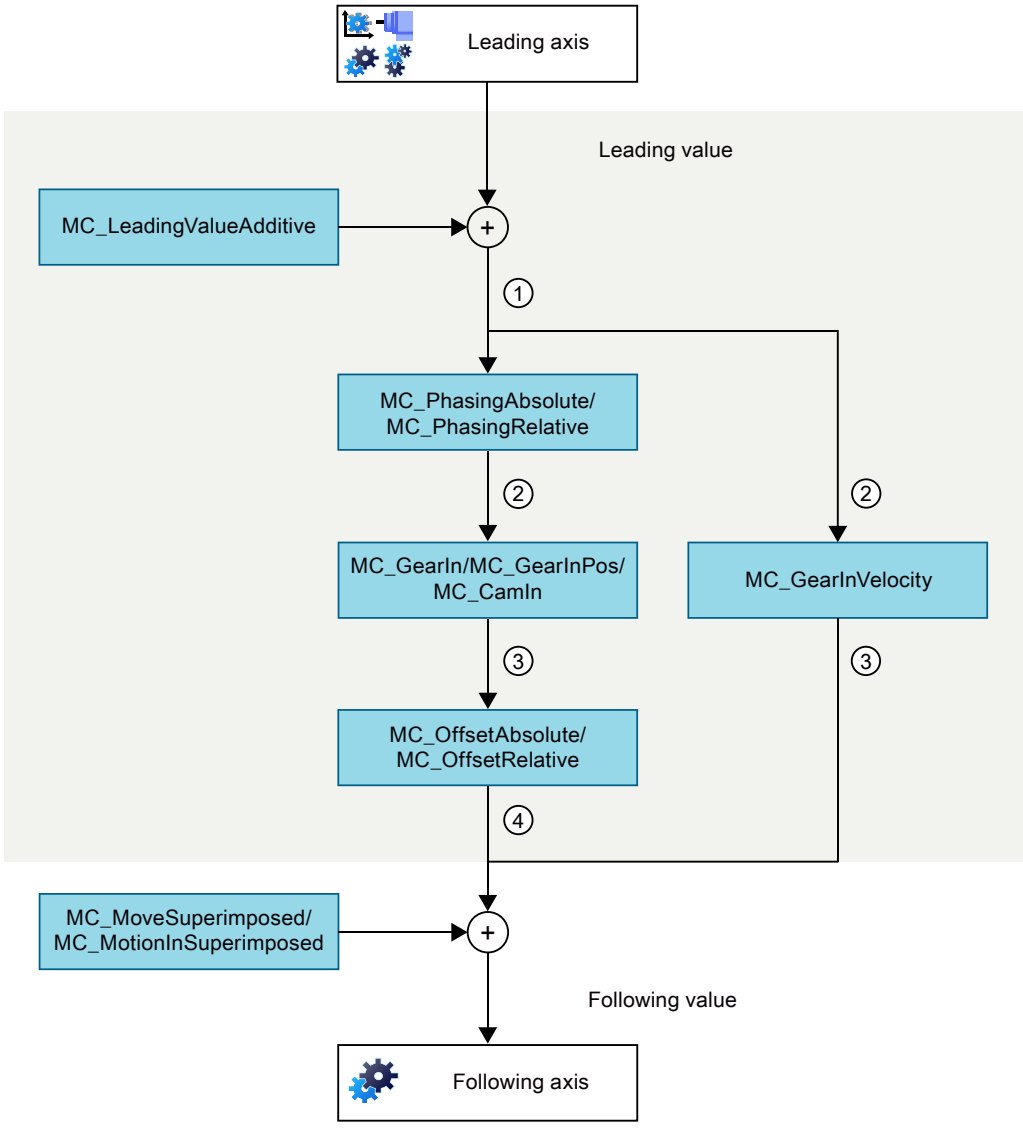

① Effective leading value (<TO>.StatusSynchronizedMotion.EffectiveLeadingValue)

② Leading value of the synchronous operation function (<TO>.StatusSynchronizedMotion.FunctionLeadingValue)

③ Following value of the synchronous operation function (<TO>.StatusSynchronizedMotion.FunctionFollowingValue)

④ Following value after following value offset (<TO>.StatusSynchronizedMotion.FunctionFollowingValue.Position + <TO>.StatusSynchronizedMotion.Offset)

Additive leading value

With an "MC_LeadingValueAdditive (Page 271)" job, you specify an additive leading value (Page 165) cyclically in addition to the active leading value of a following axis.

Leading value offset

With a "MC_PhasingAbsolute (Page 228)" or "MC_PhasingRelative (Page 221)" job you shift the effective leading value on a following axis in gearing (Page 57) or in camming (Page 147).

A simultaneous following value offset is not permitted. You can only start a new job for leading value offset once a previous job for following value offset has been completed.

Synchronous operation function

With an "MC_GearIn (Page 206)" or "MC_GearInPos (Page 210)" job, you start a gearing (Page 41) between a leading axis and a following axis.

With an "MC_CamIn (Page 247)" job, you start a camming (Page 82) between a leading axis and a following axis.

With an "MC_GearInVelocity (Page 217)" job, you start velocity synchronous operation (Page 74) between a leading axis and a following axis.

Following value offset

With an "MC_OffsetAbsolute (Page 241)" or "MC_OffsetRelative (Page 235)" job, you move the following value on a following axis in gearing (Page 62) or in camming (Page 151).

A simultaneous leading value offset is not permitted. You can only start a new job for following value offset once a previous job for leading value offset has been completed.

Superimposed motion

With a "MC_MoveSuperimposed" job, you superimpose the following value with a relative positioning motion independent of the motion of the leading axis.

With a "MC_MotionInSuperimposed" job, you superimpose the subsequent value by specifying values for position, velocity and acceleration for each application cycle. The superimposed motion is independent of the motion of the leading axis.

In velocity synchronous operation with "MC_GearInVelocity", a superimposed motion is only possible if the following axis is in position-controlled mode.

With a "MC_HaltSuperimposed" job, you stop a superimposed motion independently of the base motion.

Preparing synchronous operation (S7-1500, S7-1500T) 5

5.1 Creating technology objects (S7-1500, S7-1500T)

For synchronous operation, you need technology objects for the leading and following axes. You can also create multiple following axes for one leading axis. For a camming, you also need a cam technology object (S7-1500T).

Requirement

- You have created an S7-1500 CPU for gearing with "MC_GearIn (Page 206)".
  Note that an actual value coupling is only possible with an S7-1500T CPU.
- You have created an S7-1500T CPU for one of the following synchronous operation types:
  - Gearing with specified synchronous position with "MC_GearInPos (Page 210)"
  - Velocity synchronous operation with "MC_GearInVelocity (Page 217)"
  - Camming with "MC_CamIn (Page 247)"

Procedure

To create technology objects for synchronous operation, follow these steps:

1. As leading axis, create one of the technology objects:
   - Positioning axis
   - Synchronous axis
   - External encoder (S7-1500T)
2. As following axis, create a synchronous axis technology object.
3. Configure the configuration parameters of the leading and following axes that are not specific for synchronous operation. You can find a description of the configuration parameters in the "S7-1500/S7-1500T Axis functions" documentation (Page 13).
4. For a camming, create a cam technology object (S7-1500T).

5.2 Defining leading value interconnection (S7-1500, S7-1500T)

5.2.1 Interconnecting the leading value (S7-1500, S7-1500T)

A leading value for a synchronous operation is provided by a leading axis or an external encoder (S7-1500T). The leading value is specified and coupled in the user program with the call of the corresponding Motion Control instruction for synchronous operation. The leading value is switched when you call the Motion Control instruction again, specifying a different leading axis.

The following rules apply to the master value coupling:

- A leading axis or an external encoder (S7-1500T) can output the leading value for multiple following axes.
- You can interconnect a following axis with multiple leading value-capable technology objects. The following technology objects are leading value-capable:
  - Positioning axis
  - Synchronous axis (Page 22)
  - External encoder (S7-1500T)

  The Leading axis proxy technology object is only relevant for a cross-PLC synchronous operation (Page 168) (S7-1500T).
  All interconnections required during operation must be set up during the configuration of the synchronous axis technology object.
- You can select only one leading value at a time to be coupled and evaluated during the runtime of your user program.
- The leading values and following values are coupled without conversion in the respective configured unit of measure. If, for example, a linear leading axis moves by 10 mm, a rotary following axis moves by 10° with a gear ratio of 1:1.

Procedure

To interconnect the required leading values of a following axis, follow these steps:

1. Open the "Technology object > Configuration > Leading value interconnections" configuration window of the synchronous axis.
2. In the "Possible leading values" table column, add all leading value-capable technology objects that you need during operation as leading values for the following axis.
   You can use the technology objects added to the table with the corresponding Motion Control instruction as leading values for the following axis. All configured leading value interconnections for the technology object are displayed in the cross-reference list of the technology object.
3. Select the coupling type of the leading value in the "Type of coupling" table column:
   - Setpoint coupling (Page 34)
   - Actual value coupling (Page 34) (S7-1500T)

   The "Delayed" selection is only relevant for a cross-PLC synchronous operation (Page 168) (S7-1500T).

5.2.2 Setpoint coupling (S7-1500, S7-1500T)

With a setpoint coupling, the setpoints of the leading axis are used as the leading value for the synchronous operation.
The setpoints of the following technology objects can be connected as leading value for the synchronous operation:

- Positioning axis
- Synchronous axis
- Leading axis proxy (S7-1500T)

5.2.3 Actual value coupling and actual value extrapolation (S7-1500T)

For applications in which setpoint coupling is not possible, e.g. when using an external encoder, or does not make sense from a technical perspective, the S7-1500T CPU also offers actual value coupling for synchronous operation. In actual value coupling, the extrapolated actual values of a technology object are used as the leading value.

The actual values of the following technology objects can be used as a leading value for the synchronous operation:

- Positioning axis
- Synchronous axis
- External encoder

Actual value extrapolation of the leading value

With an actual value coupling, delay times result from the processing of the actual values. To compensate for these delay times, the actual value is extrapolated on the leading value side. This means that the leading value is extrapolated based on previously known values.

Delay times at constant velocity or at constant acceleration or deceleration can be compensated for with the extrapolation. For technical reasons, changes of acceleration or deceleration (jerk) during extrapolation always cause a displacement of the following axis relative to the leading value.

The effective extrapolation time consists of a leading axis-dependent part, a configured following axis-dependent part and, optionally, the time from the cross-PLC synchronous operation:

- **Leading axis-dependent part**
  The leading axis-dependent part is calculated automatically and displayed at the leading axis in the "<TO>.Extrapolation.LeadingAxisDependentTime" tag of the technology object. You can disable the leading axis-dependent part using the tag "<TO>.Extrapolation.Settings.SystemDefinedExtrapolation" = 0.
- **Following axis-caused part**
  The part caused by the leading axis is calculated automatically and displayed at the following axis in the "<TO>.StatusPositioning.SetpointExecutionTime" tag of the technology object. You configure the value under "Technology object > Configuration > Extended parameters > Actual value extrapolation" (<TO>.Extrapolation.FollowingAxisDependentTime).
- **Time from the cross-PLC synchronous operation**
  For cross-PLC synchronous operation, the output delay of the leading value at the locally coupled following axes is automatically taken into account. The displayed value is equal to the leading value delay and corresponds to the delay time entered at the leading axis or at the external encoder. You configure the delay time under "Technology object > Configuration > Leading value settings" (<TO>.CrossPlcSynchronousOperation.LocalLeadingValueDelayTime).

The extrapolated actual value is evaluated with a configurable hysteresis before it is output as the leading value. The hysteresis evaluation prevents an inversion of the leading value, which may result from extrapolation of a noisy value.

NOTICE
Machine damage If you change the extrapolation time during user program runtime in increments that are too large, damage to the machine may occur. Change the extrapolation time only by a small amount.

The following diagram shows the sequence of the actual value extrapolation.

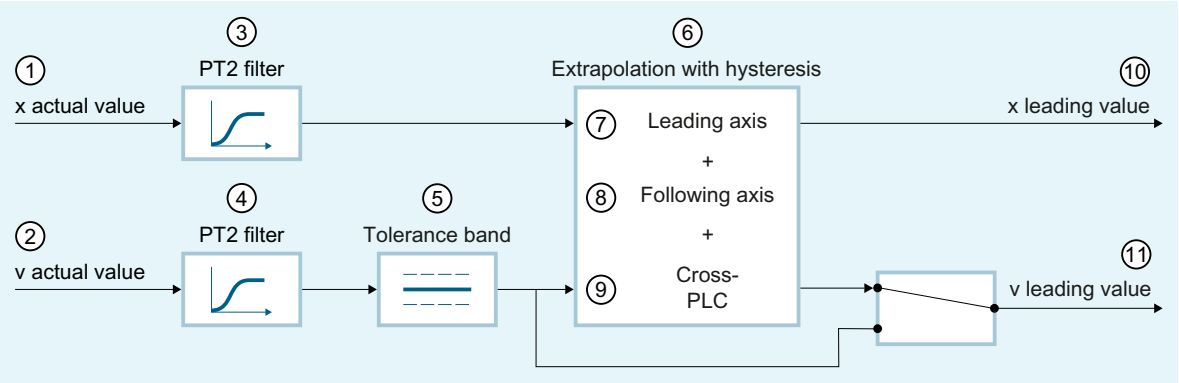

① Actual position value

② Actual velocity value

③ Position filter T1 (<TO>.Extrapolation.PositionFilter.T1) and T2 (<TO>.Extrapolation.PositionFilter.T2)

④ Velocity filters T1 (<TO>.Extrapolation.VelocityFilter.T1) and T2 (<TO>.Extrapolation.VelocityFilter.T2)

⑤ Tolerance band width for velocity (<TO>.Extrapolation.VelocityTolerance.Range)

⑥ Hysteresis value in the configured unit of length (<TO>.Extrapolation.Hysteresis.Value)

⑦ Extrapolation time component caused by the leading axis (<TO>.Extrapolation.LeadingAxisDependentTime)

⑧ Extrapolation time component caused by the following axis (<TO>.Extrapolation.FollowingAxisDependentTime)

⑨ Portion of the extrapolation time from the cross-PLC synchronous operation (<TO>.CrossPlcSynchronousOperation.LocalLeadingValueDelayTime)

⑩ Extrapolated leading value position

⑪ Extrapolated leading value velocity, depending on the switch position:
- Leading value velocity from the extrapolation with hysteresis ("<TO>.Extrapolation.Settings.ExtrapolatedVelocityMode" = 1)
- Leading value velocity from the filtered actual velocity value ("<TO>.Extrapolation.Settings.ExtrapolatedVelocityMode" = 0)

Filtering the actual values

Noisy encoder signals lead to high velocity step changes, which also affect the extrapolation. These step changes can be reduced or compensated for by using suitable filter settings. The position filter is a PT2 filter. The velocity filter is a PT2 filter with configurable tolerance bandwidth.

The actual position value is blended by the actual position filter. The actual velocity value is blended by the velocity filter and further "stabilized" by the tolerance band. The filtered position value is then extrapolated taking into account the filtered velocity value.

The leading value velocity results from the extrapolated leading value position or from the filtered velocity value without extrapolation ("<TO>.Extrapolation.Settings.ExtrapolatedVelocityMode" = 0).

Recommended settings.

Set the total of the time constants T1 and T2 of the position filter significantly smaller than the time constants T1 and T2 of the velocity filter.

Tolerance band

The tolerance band acts on the filtered velocity value in the interpolation cycle. The position of the tolerance band is automatically shifted in the direction of the velocity value as soon as it changes in one direction by more than half of the tolerance band from the last output value.

A new output value is simultaneously formed with the shift of the tolerance band. This corresponds to the filtered velocity value minus half the tolerance band. As long as the velocity value remains within the tolerance band, no new output value is formed.

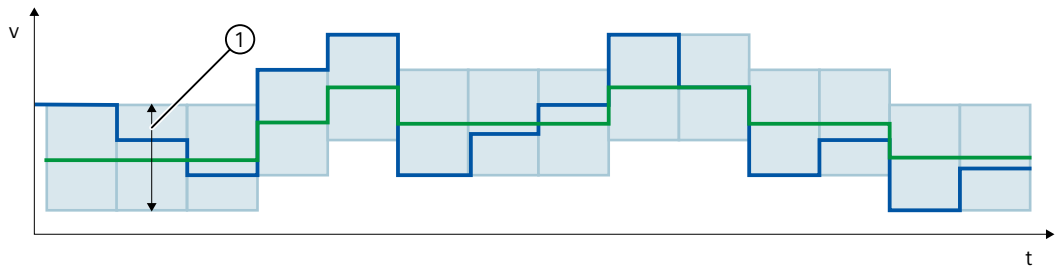

① Tolerance band

Filtered velocity before tolerance band

Filtered velocity according to tolerance band

Hysteresis

The hysteresis acts on the filtered extrapolated position value in the interpolation cycle. A change of direction only takes effect when the position value changes in the direction opposite at least by the hysteresis value. The hysteresis/reversal tolerance prevents undesired reversing of the leading value on a position reversal within the tolerance band.

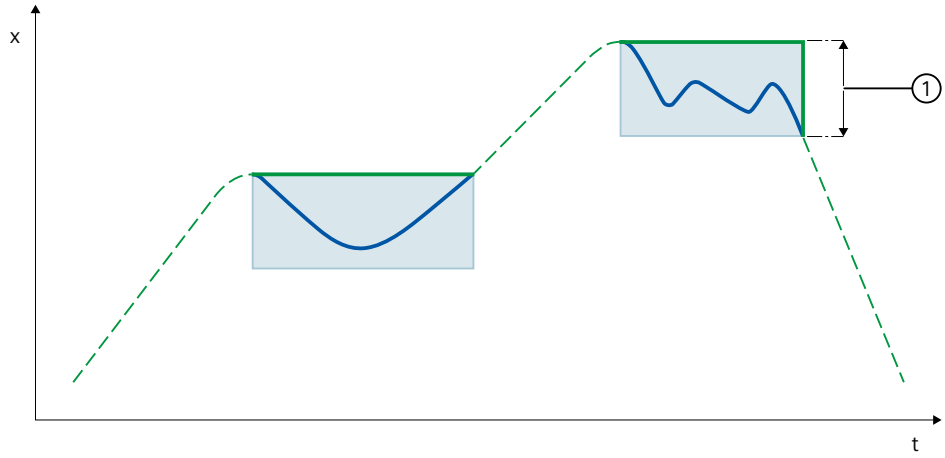

① Hysteresis/reversal tolerance

Extrapolated position before hysteresis/reversal tolerance

Extrapolated position after hysteresis/reversal tolerance

Configuring actual value extrapolation

To configure the actual value extrapolation of the leading value, follow these steps:

1. Open the "Technology object > Configuration > Extended parameters > Actual value extrapolation" configuration window of the leading axis.
2. In the "Position filter T1" and "Position filter T2" input fields, enter the time constants of the PT2 filter for smoothing the position.
3. In the "Hysteresis value" input field, enter a value for applying the hysteresis function to the extrapolated actual value of the position. The specification is made in the configured length unit.
4. In the "Velocity filter T1" and "Velocity filter T2" input fields, enter the time constants of the PT2 filter for smoothing the actual velocity.
5. In the "Tolerance band width" input field, enter the tolerance band width of the smoothed actual velocity. For optimized application of the tolerance band, enter the same bandwidth for the tolerance band as the width of the noise signal.
6. In the "Following axis" input field, specify the following axis proportion for the extrapolation of the leading value. The value (unchanged or offset against user-specific runtimes) from the "<TO>.StatusPositioning.SetpointExecutionTime" tag of the following axis is used as the basis.

   The leading axis-dependent extrapolation is displayed in the "Leading axis" field. The leading axis-dependent extrapolation time is calculated from the sum of the actual value acquisition time at the leading axis, (T_i), the interpolator time (T_{Ipo}) and the sum of position filters T1 and T2:

   Leading axis-dependent extrapolation time = $T_i + T_{Ipo} + T1 + T2$

The time from a cross-PLC synchronous operation is displayed in the "cross-PLC" field. The time from the cross-PLC synchronous operation corresponds to the set delay time in the configuration window "Technology object > Configuration > Leading value settings".

7. To apply the leading value velocity from the differentiation of the extrapolated leading value position, select the "Activate differentiation" check box. Otherwise, the filtered actual value velocity is applied.
8. To take the leading axis-dependent extrapolation into account when calculating the effective extrapolation time, select the "Consider leading axis" check box. Otherwise, the leading axis-dependent extrapolation is not taken into account when calculating the effective extrapolation time.
   In the "Effective extrapolation time" field, the sum of the leading-axis time, the following axis- dependent time and the delay time of the cross-PLC synchronization is displayed.

A guideline to configuring the actual value extrapolation can be found in Siemens Industry Online Support in FAQ entry 109763337 (https://support.industry.siemens.com/cs/ww/en/view/109763337).

5.2.4 Tags: Actual value extrapolation (S7-1500T)

The following technology object tags are relevant for the actual value extrapolation:

Configuration		
Tag	**Description**	
<TO>.CrossPlcSynchronousOperation.LocalLeadingValueDelayTime	For cross-PLC synchronous operation: The delay time of leading value output to the local following axes	
<TO>.Extrapolation.LeadingAxisDependentTime	On the leading axis: Leading axis-dependent portion of the extrapolation time, which results from T_i, T_{lpo}, and T_{Filter}.	
<TO>.Extrapolation.FollowingAxisDependentTime	On the leading axis: Following-axis dependent portion of the extrapolation time Enter the value from the "<TO>.StatusPositioning.SetpointExecutionTime" tag of the following axis (unchanged or compensated with user-specific times).	
<TO>.Extrapolation.Settings.SystemDefinedExtrapolation	Effectiveness of the leading axis-dependent portion of the extrapolation time (<TO>.Extrapolation.LeadingAxisDependentTime)	
	0	Not effective
	1	Effective
<TO>.Extrapolation.Settings.ExtrapolatedVelocityMode	0	"FilteredVelocity" Leading value velocity from filtered actual velocity
	1	"VelocityByDifferentiation" Leading value velocity from differentiation of the extrapolated leading value position
<TO>.Extrapolation.PositionFilter.T1	Position filter time constant T1	
<TO>.Extrapolation.PositionFilter.T2	Position filter time constant T2	
<TO>.Extrapolation.VelocityFilter.T1	Velocity filter time constant T1	
<TO>.Extrapolation.VelocityFilter.T2	Velocity filter time constant T2	
<TO>.Extrapolation.VelocityTolerance.Range	Tolerance band width for velocity	
<TO>.Extrapolation.Hysteresis.Value	Hysteresis value (in the configured unit of length)	

Status indicators	
Tag	**Description**
<TO>.StatusPositioning.SetpointExecutionTime	Setpoint execution time of the axis Results from T_{Ipo}, T_{vtc} or 1/kv, T_{Send} and T_O of the axis.

5.3 Position control in synchronous operation (S7-1500, S7-1500T)

Gearing/camming with setpoint coupling

A following axis is set into position-controlled operation with the start of a synchronous operation job. If the leading axis is in non-position-controlled operation at the start of the synchronous operation job, the technology alarm 603 is output and the technology object is disabled (alarm response: remove enable). Synchronization is started only after the position control has been activated and the start position of the synchronization has been reached.

NOTE

Switching the operating mode of the leading axis

If the leading axis is set to non-position-controlled operation during active synchronous operation, the setpoint of the leading axis is set to zero.

The coupling gives the setpoint of the following axis a setpoint step-change. The setpoint step-change is compensated according to the constant function. The only limiting factor is the maximum speed of the drive. A following error may occur on the following axis.

Gearing/camming with actual value coupling (S7-1500T)

A following axis is set into position-controlled operation with the start of a synchronous operation job. If the leading axis is in non-position-controlled operation at the start of the synchronous operation and the actual values are valid, the following axis is synchronized.

If the leading axis is set to the non-position-controlled mode during active synchronization, the synchronization remains active.

Velocity synchronous operation (S7-1500T)

A following axis can be operated in position-controlled or non-position-controlled mode during active synchronous operation (Page 76). You specify the operating mode of the following axis at the "MC_GearInVelocity" job.

The operating mode of the leading axis is irrelevant during an active synchronous operation.

Gearing (S7-1500, S7-1500T) 6

6.1 Gearing with "MC_GearIn" (S7-1500, S7-1500T)

With the Motion Control instruction "MC_GearIn (Page 206)", you start gearing between a leading axis and a following axis. During gearing, the position of the following axis results from the position of the leading axis multiplied by the gear ratio. You specify the gear ratio as a ratio of two integers. The result is a linear synchronous operation function.

You can start synchronous operation when the leading axis is at a standstill or when it is in motion. Synchronous travel begins after synchronization when the following axis has reached the velocity and acceleration of the leading axis, taking into account the gear ratio.

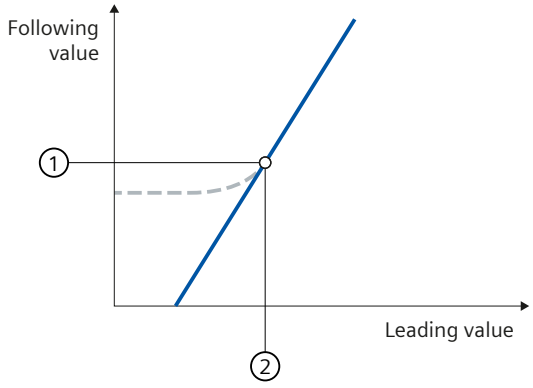

Slope of line/transmission ratio
Gear ratio = "MC_GearIn.RatioNumerator"/"MC_GearIn.RatioDenominator"

Synchronization

① Synchronous position of leading axis starting at which the leading and following axes move synchronously

② Synchronous position of following axis starting at which the leading and following axes move synchronously

You have the following options for gearing with "MC_GearIn":

- Defining gear ratio (Page 41)
- Synchronizing following axis using dynamic parameters (Page 43)
- Synchronous travel in gearing (Page 44)
- Specify additive leading value with "MC_LeadingValueAdditive" (Page 165) (S7-1500T)
- Set gearing to simulation mode with "MC_SynchronizedMotionSimulation" (Page 164) (S7-1500T)
- Desynchronize following axis with "MC_GearOut" (Page 66) (S7-1500T)

Also note the dynamic limits of the following axis in gearing with "MC_GearIn" (Page 42).

6.1.1 Defining gear ratio (S7-1500, S7-1500T)

During gearing, the position of the following axis results from the position of the leading axis multiplied by the gear ratio. You specify the gear ratio at the Motion Control instruction "MC_GearIn (Page 206)" as the relationship between two integers (numerator/denominator). The result is a linear synchronous operation function.

Numerator of the gear ratio

With the "RatioNumerator" parameter, you define the numerator of the gear ratio. You can define the numerator of the gear ratio as positive or negative. This yields the following behavior:

- Positive gear ratio:
  The leading and following axes move in the same direction.
- Negative gear ratio:
  The following axis moves in the opposite direction of the leading axis.

The value "0" is not permitted for the numerator of the gear ratio.

Denominator of the gear ratio

With the "RatioDenominator" parameter, you define the denominator of the gear ratio. Only positive values are permitted for the denominator of the gear ratio.

Example 1: Positive gear ratio

Leading axis and following axis are rotary axes and each has a traversing range from 0 ° to 360 ° with enabled "Modulo" setting.

Parameter inputs:

- "RatioNumerator" = 5
- "RatioDenominator" = 1

When the leading axis moves by 10 °, the following axis moves by 50 ° in the "Synchronous" status of the gearing.

Example 2: Negative gear ratio

Leading axis and following axis are rotary axes and each has a traversing range from 0 ° to 360 ° with enabled "Modulo" setting.

Parameter inputs:

- "RatioNumerator" = -3
- "RatioDenominator" = 1

When the leading axis moves by 10 °, the following axis moves by -30 ° in the "Synchronous" status of the gearing.

6.1.2 Dynamic limits of the following axis in gearing with "MC_GearIn" (S7-1500, S7-1500T)

If a synchronous axis is operated as a following axis in the gearing with the Motion Control instruction "MC_GearIn (Page 206)", the following dynamic limits apply, depending on the phase of the synchronous operation:

Synchronization

During the synchronizing phase, dynamic limits configured for the technology object apply to the following axis.

Synchronous motion/desynchronization (S7-1500T)

During synchronous travel and desynchronization (Page 262), the dynamics of the following axis are only limited to the maximum speed of the drive (<TO>.Actor.DriveParameter.MaxSpeed). The dynamics of the following axis results from the synchronous operation function.

If the dynamic limits configured for the following axis are exceeded, this is indicated in the "<TO>.StatusSynchronizedMotion.StatusWord.X0 ... X2" tags of the technology object. The SW limit switches continue to be monitored with the configured dynamic limits of the following axis.

If the following axis cannot follow the leading value, this results in a following error, which is monitored by the following error monitoring.

Synchronous operation override

As soon as synchronous operation has been overridden (Page 283), the dynamic limits configured for the technology object apply to the following axis again. With the start of the overriding job, the active dynamics are transitioned (smoothed) to the configured dynamic limits and the specifications for the Motion Control instruction.

6.1.3 Synchronizing following axis using dynamic parameters with "MC_GearIn" (S7-1500, S7-1500T)

During gearing (Page 41), synchronization establishes the relationship between the leading axis and following axis. Synchronization begins immediately after the "MC_GearIn" job starts.

Parameter inputs

You define the dynamic behavior of the following axis for synchronization with the following parameters of the Motion Control instruction "MC_GearIn (Page 206)":

- With the "Acceleration" parameter, you specify the acceleration of the following axis.
- With the "Deceleration" parameter, you specify the deceleration of the following axis.
- With the "Jerk" parameter, you specify the jerk of the following axis.

Observe the dynamic limits (Page 42) of the following axis during synchronization.

During synchronization

Synchronization begins after the "MC_GearIn" job starts. Active motion jobs are overridden. The synchronization duration and distance are dependent on the following parameters:

- Dynamics of the following axis at the start time of the "MC_GearIn" job
- Dynamic settings for synchronization
- Dynamics of the leading axis

The synchronization is indicated in the "<TO>.StatusWord.X21 (Synchronizing)" tag of the following axis. The leading value must not reverse during synchronization.

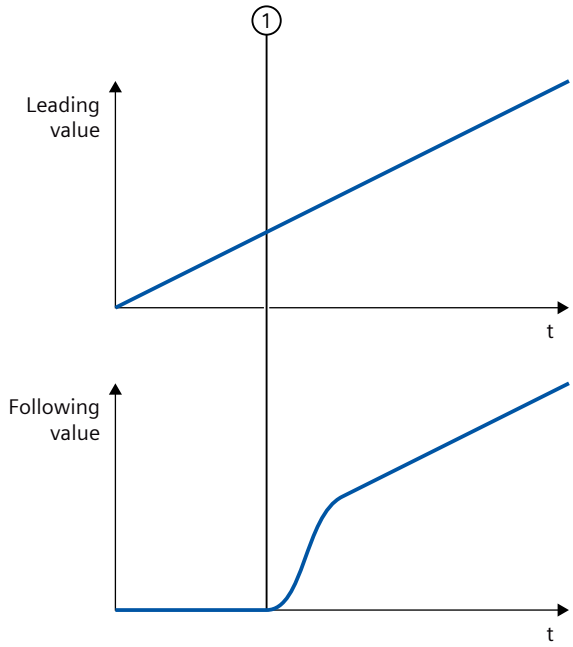

① Time when synchronization starts

After synchronization

If the following axis has reached the velocity and the acceleration of the leading axis, taking into account the gear ratio, the following axis is synchronized. The following axis travels synchronously with the leading axis.

6.1.4 Synchronous travel in gearing with "MC_GearIn" (S7-1500, S7-1500T)

As soon as the following axis is synchronized to a leading value, the following axis follows the dynamics of the leading axis according to the gear ratio. The transmission behavior during gearing is expressed by a linear relationship between the leading value and the following value.

The following value is calculated as follows:

Position of following axis (following value) = Synchronous position of following axis + gear ratio × (Position of leading axis - Synchronous position of leading axis)

The "Synchronous" status is indicated in the Motion Control instruction "MC_GearIn (Page 206)" with the parameter "InGear" = TRUE and in the "<TO>.StatusWord.X22 (Synchronous)" tag of the technology object.

NOTE

Avoid homing the leading axis in synchronous operation

Avoid homing the leading axis during an active synchronous operation. Homing the leading axis during synchronous operation corresponds to a setpoint step-change on the following axis. The following axis compensates for the jump according to the synchronous operation function and limited only to the maximum speed of the drive.

6.2 Gearing with "MC_GearInPos" (S7-1500T)

With the Motion Control instruction "MC_GearInPos (Page 210)", you start gearing between a leading axis and a following axis. During gearing, the position of the following axis results from the position of the leading axis multiplied by the gear ratio depending on the synchronous positions. You specify the gear ratio as a ratio of two integers. The result is a linear synchronous operation function.

In contrast to the gearing with "MC_GearIn" (Page 41), for gearing with "MC_GearInPos" you also specify the synchronous positions of the leading and following axes, which define the reference of the axes to one another.

You can start synchronous operation when the leading axis is at a standstill or when it is in motion. Synchronous travel begins after synchronization when the following axis has reached the velocity and acceleration of the leading axis, taking into account the gear ratio.

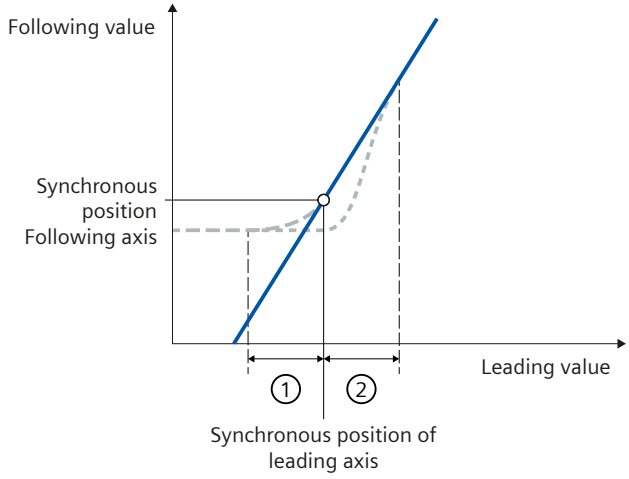

——	Slope of line/transmission ratio Gear ratio = "MC_GearInPos.RatioNumerator"/"MC_GearInPos.RatioDenominator"
– – –	Synchronization in advance
- - -	Subsequent synchronization
①	Leading value distance with synchronization in advance
②	Leading value distance with subsequent synchronization

You have the following options for gearing with "MC_GearInPos":

- Defining gear ratio (Page 46)
- Defining direction of synchronization (Page 48)
- Defining synchronous positions and type of synchronization:
  - Synchronizing following axis in advance using dynamic parameters (Page 51)
  - Synchronizing following axis in advance using leading value distance (Page 53)
  - Subsequent synchronizing of following axis using leading value distance (Page 55)
- Synchronous travel in gearing (Page 56)
- Specify additive leading value with "MC_LeadingValueAdditive" (Page 165)
- Offset leading value absolute or relative with "MC_PhasingAbsolute" or "MC_PhasingRelative" (Page 57)
- Absolute or relative following value offset with "MC_OffsetAbsolute" or "MC_OffsetRelative" (Page 62)
- Set gearing to simulation mode with "MC_SynchronizedMotionSimulation" (Page 164)
- Desynchronize following axis with "MC_GearOut" (Page 66)
- Cancel a pending gearing with "MC_GearOut" (Page 71)

Also note the dynamic limits of the following axis in gearing with "MC_GearInPos" (Page 47).

6.2.1 Defining gear ratio (S7-1500T)

During gearing, the position of the following axis results from the position of the leading axis multiplied by the gear ratio depending on the synchronous positions. You specify the gear ratio at the Motion Control instruction "MC_GearInPos (Page 210)" as the relationship between two integers (numerator/denominator). The result is a linear synchronous operation function.

Numerator of the gear ratio

With the "RatioNumerator" parameter, you define the numerator of the gear ratio. You can define the numerator of the gear ratio as positive or negative. This yields the following behavior:

- Positive gear ratio:
  The leading and following axes move in the same direction.
- Negative gear ratio:
  The following axis moves in the opposite direction of the leading axis.

The value "0" is not permitted for the numerator of the gear ratio.

Denominator of the gear ratio

With the "RatioDenominator" parameter, you define the denominator of the gear ratio. Only positive values are permitted for the denominator of the gear ratio.

Example 1: Positive gear ratio

Leading axis and following axis are rotary axes and each has a traversing range from 0 ° to 360 ° with enabled "Modulo" setting.

Parameter inputs:

- "RatioNumerator" = 5
- "RatioDenominator" = 1

When the leading axis moves by 10 °, the following axis moves by 50 ° in the "Synchronous" status of the gearing.

Example 2: Negative gear ratio

Leading axis and following axis are rotary axes and each has a traversing range from 0 ° to 360 ° with enabled "Modulo" setting.
Parameter inputs:

- "RatioNumerator" = -3
- "RatioDenominator" = 1

When the leading axis moves by 10 °, the following axis moves by -30 ° in the "Synchronous" status of the gearing.

6.2.2 Dynamic limits of the following axis in gearing with "MC_GearInPos" (S7-1500T)

If a synchronous axis is operated as a following axis in the gearing with the Motion Control instruction "MC_GearInPos (Page 210)", the following dynamic limits apply, depending on the phase of the synchronous operation:

Pending synchronous operation

If synchronous operation is not active, the configured dynamic limits of the following axis apply. If synchronous operation is already active, the description in section "Synchronization/synchronous motion/desynchronization" applies.

Synchronization/synchronous motion/desynchronization

During synchronization, synchronous travel and desynchronization (Page 262), the dynamics of the following axis are only limited to the maximum speed of the drive (<TO>.Actor.DriveParameter.MaxSpeed). The dynamics of the following axis results from the synchronous operation function.
If the dynamic limits configured for the following axis are exceeded, this is indicated in the "<TO>.StatusSynchronizedMotion.StatusWord.X0 ... X2" tags of the technology object. The SW limit switches continue to be monitored with the configured dynamic limits of the following axis.
If the following axis cannot follow the leading value, this results in a following error, which is monitored by the following error monitoring.

Synchronous operation override

As soon as synchronous operation has been overridden (Page 283), the dynamic limits configured for the technology object apply to the following axis again. With the start of the

overriding job, the active dynamics are transitioned (smoothed) to the configured dynamic limits and the specifications for the Motion Control instruction.

6.2.3 Synchronizing gearing (S7-1500T)

6.2.3.1 Parameter overview for synchronizing with "MC_GearInPos" (S7-1500T)

During gearing (Page 45), synchronization establishes the relationship between the leading axis and following axis. With the parameter "SyncProfileReference" you define the type of synchronization:

SyncProfileReference	Synchronization profile
0	Synchronization in advance using dynamic parameters (Page 51)
1	Synchronization in advance using leading value distance (Page 53)
3	Subsequent synchronization using leading value distance (Page 55)

Depending on the synchronization profile, different parameters of the Motion Control instruction "MC_GearInPos (Page 210)" are relevant:

Parameters	SyncProfileReference		
	0	1	3
RatioNumerator	✓	✓	✓
RatioDenominator	✓	✓	✓
MasterSyncPosition	✓	✓	✓
SlaveSyncPosition	✓	✓	✓
MasterStartDistance	-	✓	✓
Velocity	✓	-	-
Acceleration	✓	-	-
Deceleration	✓	-	-
Jerk	✓	-	-
SyncDirection	✓	✓	✓

6.2.3.2 Defining direction of synchronization with "MC_GearInPos" (S7-1500T)

During gearing (Page 45), synchronization establishes the relationship between the leading axis and following axis. If you have activated the "Modulo" setting for the following axis, you can define the direction of the synchronization with the "SyncDirection" parameter of the Motion Control instruction "MC_GearInPos (Page 210)".

In the examples below, the transformation ratio is 1:1.

Positive direction

With "SyncDirection" = 1, the following axis may only travel in positive direction during synchronization. In this example, the synchronous position is 360.0.

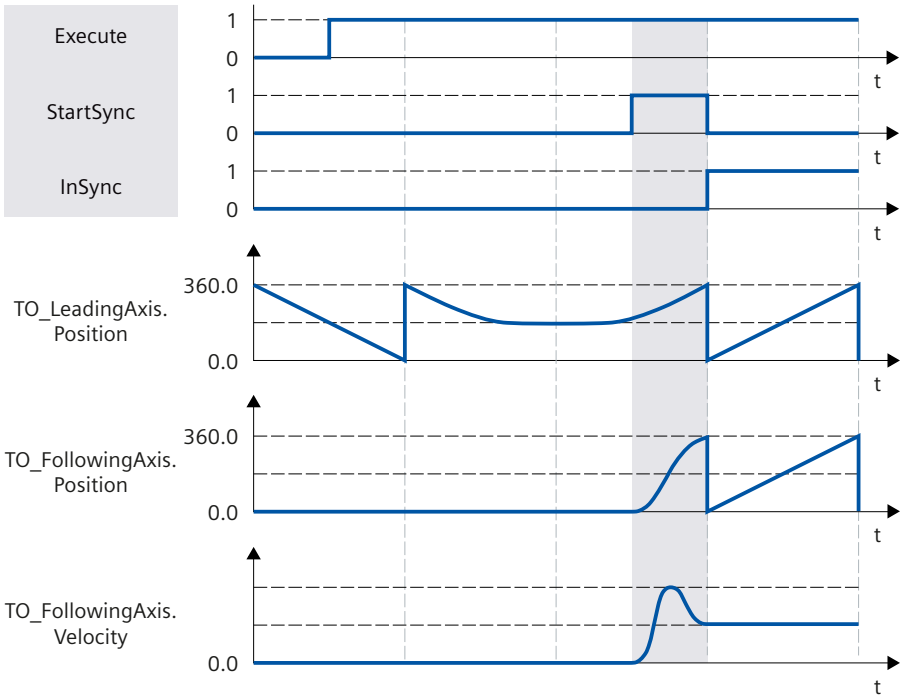

Negative direction

With "SyncDirection" = 2, the following axis may only travel in negative direction during synchronization. In this example, the synchronous position is 0.0.

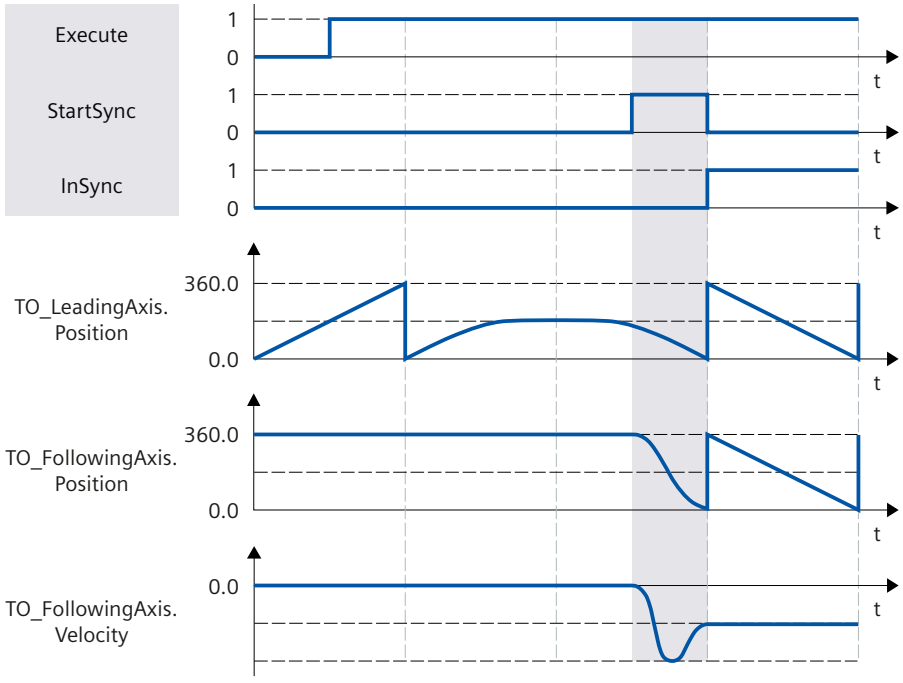

Shortest distance

With "SyncDirection" = 3, changes in direction of the following axis are permitted during synchronization. In this example, the synchronous position is 0.0.

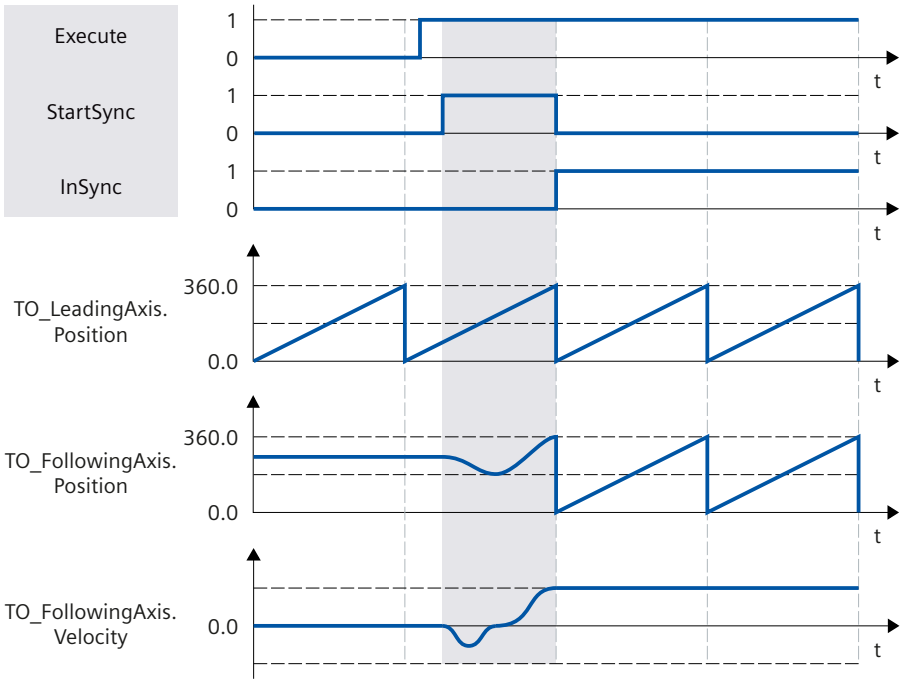

6.2.3.3 Synchronizing following axis in advance using dynamic parameters with "MC_GearInPos" (S7-1500T)

During gearing (Page 45), synchronization establishes the relationship between the leading axis and following axis. During synchronization in advance using dynamic parameters, synchronization begins in such a way that the leading and following axis are synchronous when the synchronous positions are reached.

Parameter inputs

You can define the behavior of the following axis for synchronization with the following parameters of the Motion Control instruction "MC_GearInPos (Page 210)":

- With the parameter "SyncProfileReference" = 0, you define the type of synchronization as synchronization in advance using dynamic parameters.
- With the parameters "MasterSyncPosition" and "SlaveSyncPosition", you define the synchronous positions of the leading and following axis which determine the relationship of the axes to each other. For synchronization in advance, the synchronous position is the position starting from which the leading axis and following axis travel synchronously.
- With the parameters "Velocity", "Acceleration", "Deceleration" and "Jerk" you define the dynamics for the synchronization of the following axis.

Until synchronization

After the start of the "MC_GearInPos" job, a motion profile for the following axis is calculated continuously. The motion profile is calculated based on the following parameters:

- Specified synchronous positions of the leading and following axis at the Motion Control instruction
- Specified dynamics of the Motion Control instruction
- Current position and dynamics of the leading and following axes
- Synchronous operation function

The calculation determines the synchronization length and thus the start position of the leading axis for the synchronization.

The start position of the leading axis is derived in the following way:

Start position = Synchronous position of leading axis - Synchronization length

The status "Waiting" is displayed at the following axis until the leading value has reached the start position (<TO>.StatusSynchronizedMotion.WaitingFunctionState = 2).

If the leading axis is already in its synchronous position before synchronization, the following axis must also be moved to its synchronous position, for example, with a "MC_MoveAbsolute" job. If the leading and following axes are already at their synchronous positions when the "MC_GearInPos" job is started, synchronous operation immediately has "Synchronous" status.

During synchronization

The following axis begins to synchronize as soon as the leading value has reached the start position. The synchronization is indicated in the Motion Control instruction "MC_GearInPos" with the parameter "StartSync" = TRUE and in the "<TO>.StatusWord.X21 (Synchronizing)" tag of the following axis. The leading value must not reverse during synchronization.

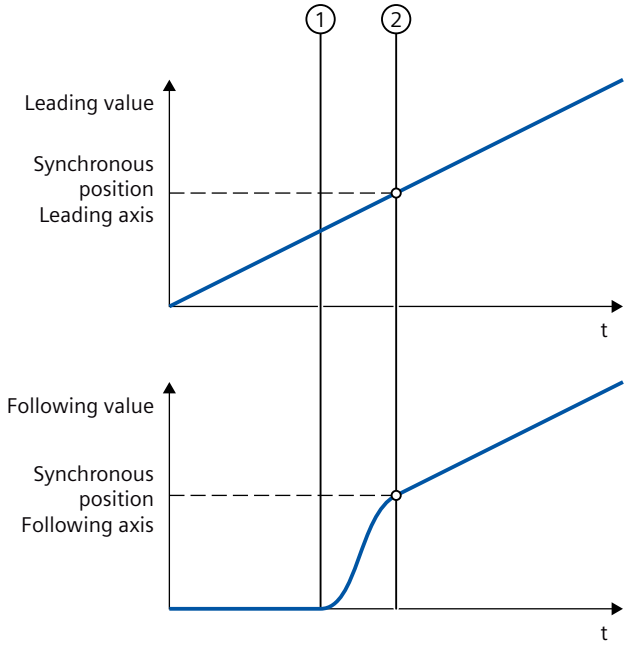

① Time when synchronization starts

② Time when synchronization is complete

The dynamics of the following axis during synchronization is obtained from the calculated motion profile and the current dynamics of the leading axis. Changes in the dynamics of the leading axis during synchronization are superimposed with the calculated motion profile in accordance with the synchronous operation function. This can have the result that the configured dynamic limits at the following axis are violated. This scenario is indicated in the "<TO>.StatusSynchronizedMotion.StatusWord.X0 ... X2" variables of the technology object.

After synchronization

The following axis is synchronized as soon as the leading axis has reached the synchronous position. The following axis travels synchronously with the leading axis (Page 56).

6.2.3.4 Synchronizing following axis in advance using leading value distance with "MC_GearInPos" (S7-1500T)

During gearing (Page 45), synchronization establishes the relationship between the leading axis and following axis. During synchronization in advance using the leading value distance, synchronization begins in such a way that the leading and following axis are synchronous when the synchronous positions are reached.

Parameter inputs

You can define the behavior of the following axis for synchronization with the following parameters of the Motion Control instruction "MC_GearInPos (Page 210)":

- With the parameter "SyncProfileReference" = 1, you define the type of synchronization as synchronization in advance using the leading value distance.
- With the parameters "MasterSyncPosition" and "SlaveSyncPosition", you define the synchronous positions of the leading and following axis which determine the relationship of the axes to each other. For synchronization in advance, the synchronous position is the position starting from which the leading axis and following axis travel synchronously.
- With the "MasterStartDistance" parameter, you specify the leading value distance (synchronization length).

Until synchronization

After the start of the "MC_GearInPos" job, a motion profile is calculated for the following axis depending on the specified leading value distance. The calculation determines the required dynamic response and thus the start position of the leading axis for the synchronization.

The start position of the leading axis is derived in the following way:

Start position = Synchronous position of leading axis - Synchronization length

The leading axis must be at least the leading value distance away from the synchronous position. The status "Waiting" is displayed at the following axis until the leading value has reached the start position (<TO>.StatusSynchronizedMotion.WaitingFunctionState = 2).

NOTE

Dynamic jumps

If the following axis is in motion and the leading value is at standstill when the "MC_GearInPos" job is started, dynamic jumps can occur at the following axis as soon as the leading axis is set in motion and the following axis starts synchronizing.

If the leading and following axes are already at their synchronous positions when the "MC_GearInPos" job is started, synchronous operation immediately has "Synchronous" status.

During synchronization

The following axis begins to synchronize as soon as the leading value has reached the start position. The synchronization is indicated in the Motion Control instruction "MC_GearInPos" with the parameter "StartSync" = TRUE and in the "<TO>.StatusWord.X21 (Synchronizing)" tag of the following axis. The leading value must not reverse during synchronization.

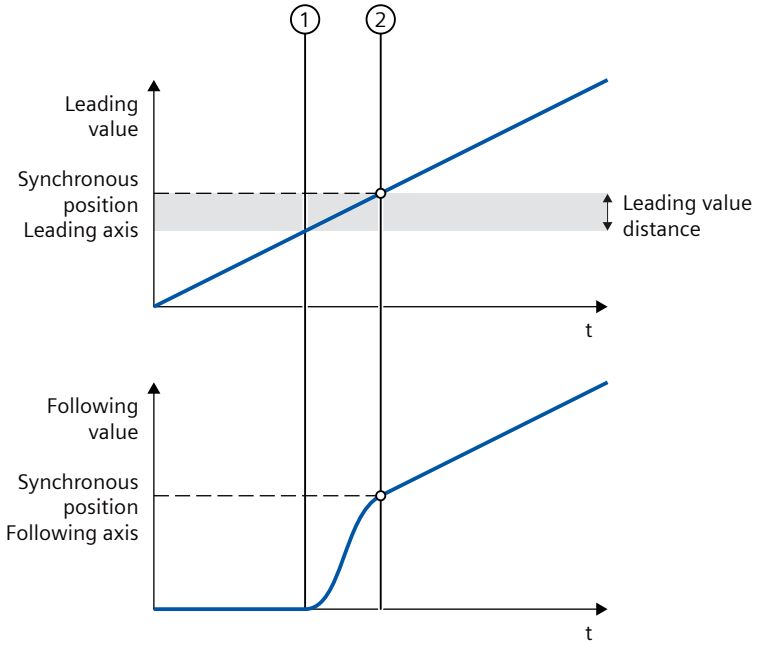

① Time when synchronization starts

② Time when synchronization is complete

The dynamics of the following axis during synchronization is obtained from the calculated motion profile and the current dynamics of the leading axis. Changes in the dynamics of the leading axis during synchronization are superimposed with the calculated motion profile in accordance with the synchronous operation function. This can have the result that the configured dynamic limits at the following axis are violated. This scenario is indicated in the "<TO>.StatusSynchronizedMotion.StatusWord.X0 ... X2" variables of the technology object.

After synchronization

The following axis is synchronized as soon as the leading axis has reached the synchronous position. The following axis travels synchronously with the leading axis (Page 56).

6.2.3.5 Subsequent synchronizing of following axis using leading value distance with "MC_GearInPos" (S7-1500T)

During gearing (Page 45), synchronization establishes the relationship between the leading axis and following axis. With subsequent synchronization using the leading value distance, synchronization begins as soon as the leading value has reached the synchronous position of the leading axis.

Parameter inputs

You can define the behavior of the following axis for synchronization with the following parameters of the Motion Control instruction "MC_GearInPos (Page 210)":

- With the parameter "SyncProfileReference" = 3, you define the type of synchronization as subsequent synchronization using the leading value distance.
- With the parameters "MasterSyncPosition" and "SlaveSyncPosition", you define the synchronous positions of the leading and following axis which determine the relationship of the axes to each other. For subsequent synchronization, the synchronous position of the leading axis is the start position for synchronization. The synchronous position of the following axis is a theoretical position which is assigned to the synchronous position of the leading axis.
- With the "MasterStartDistance" parameter, you specify the leading value distance (synchronization length).

Until synchronization

After starting the "MC_GearInPos" job, a motion profile for the slave axis is calculated depending on the start position and the synchronous position of the following axis as well as on the specified leading value distance. The calculation determines the required dynamic response and the position of the leading axis as of which the leading axis and the following axis travel synchronously.
The status "Waiting" is displayed at the following axis until the leading value has reached the synchronous position of the leading axis
(<TO>.StatusSynchronizedMotion.WaitingFunctionState = 2).

NOTE

Dynamic jumps

If the following axis is in motion and the leading value is at standstill when the "MC_GearInPos" job is started, dynamic jumps can occur at the following axis as soon as the leading axis is set in motion and the following axis starts synchronizing.

If the leading and following axes are already at their synchronous positions when the "MC_GearInPos" job is started, synchronous operation immediately has "Synchronous" status.

During synchronization

The following axis begins to synchronize as soon as the leading value has reached the synchronous position. The synchronization is indicated in the Motion Control instruction "MC_GearInPos" with the parameter "StartSync" = TRUE and in the "<TO>.StatusWord.X21 (Synchronizing)" tag of the following axis. The leading value must not reverse during synchronization.

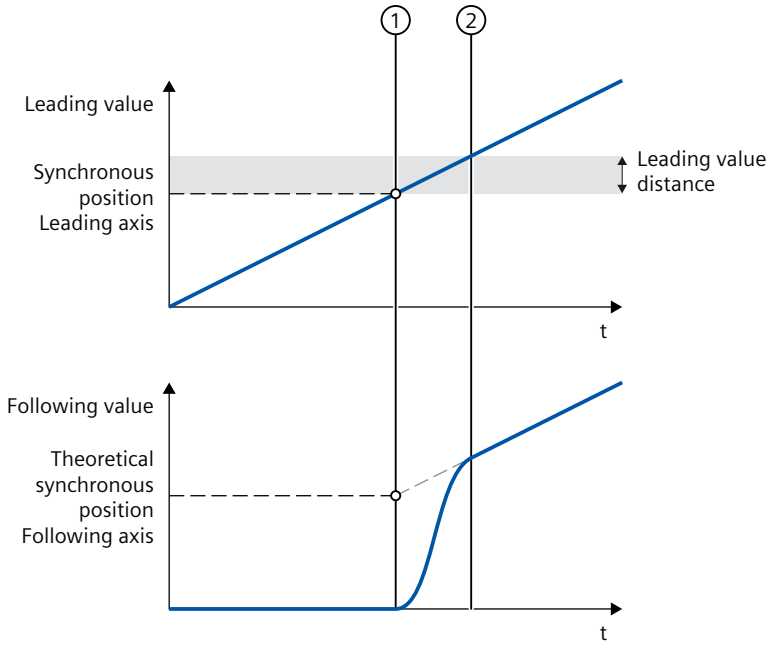

① Time when synchronization starts

② Time when synchronization is complete

The dynamics of the following axis during synchronization is obtained from the calculated motion profile and the current dynamics of the leading axis. Changes in the dynamics of the leading axis during synchronization are superimposed with the calculated motion profile in accordance with the synchronous operation function. This can have the result that the configured dynamic limits at the following axis are violated. This scenario is indicated in the "<TO>.StatusSynchronizedMotion.StatusWord.X0 ... X2" variables of the technology object.

After synchronization

The position of the leading axis from which the leading axis and following axis travel synchronously is derived in the following way:

Position axes synchronous = Synchronous position of leading axis + Synchronization length

As soon as the leading axis has reached this position, the following axis is synchronized. The following axis travels synchronously with the leading axis (Page 56).

6.2.4 Synchronous travel in gearing with "MC_GearInPos" (S7-1500T)

As soon as the following axis is synchronized to a leading value, the following axis follows the position of the leading axis according to the synchronous positions and the gear ratio. The

transmission behavior during gearing is expressed by a linear relationship between the leading value and the following value.

The following value is calculated as follows:

Position of following axis (following value) = Synchronous position of following axis + gear ratio × (Position of leading axis - Synchronous position of leading axis)

The "Synchronous" status is indicated in the Motion Control instruction "MC_GearInPos (Page 210)" with the parameter "InSync" = TRUE and in the "<TO>.StatusWord.X22 (Synchronous)" tag of the technology object.

NOTE

Avoid homing the leading axis in synchronous operation

Avoid homing the leading axis during an active synchronous operation. Homing the leading axis during synchronous operation corresponds to a setpoint step-change on the following axis. The following axis compensates for the jump according to the synchronous operation function and limited only to the maximum speed of the drive.

6.2.5 Leading value offset during gearing (S7-1500T)

6.2.5.1 Leading value offset on the following axis during gearing using dynamic parameters (S7-1500T)

With a leading value offset, you offset the effective leading value on the following axis during gearing with "MC_GearIn (Page 206)" or "MC_GearInPos (Page 210)". You can move the effective leading value absolutely or relatively. The leading value of the leading value source and the position of the leading axis are not influenced by the leading value offset.

The leading value offset always refers to the effective leading value. The effective leading value is made up of the leading value of the leading value source and the additive leading value. If you do not use an additive leading value via "MC_LeadingValueAdditive (Page 271)", the effective leading value corresponds to the leading value of the leading value source. You can find an overview in the "Mode of operation of the instructions in synchronous operation (Page 30)" section. In the following, "leading value" refers to the effective leading value.

Parameter inputs

You define the behavior of the following axis during leading value offset with the following parameters of the Motion Control instruction "MC_PhasingAbsolute (Page 228)" or "MC_PhasingRelative (Page 221)":

- With the parameter "ProfileReference" = 0, you specify the type of leading value offset as offset using dynamic parameters.
- With the "PhaseShift" parameter, you specify the leading value offset on the following axis.
- With the "Velocity" parameter, you specify the additive velocity of the following axis during the leading value offset.
- With the "Acceleration" parameter, you specify the additive acceleration of the following axis during the leading value offset.

- With the "Deceleration" parameter, you specify the additive deceleration of the following axis during the leading value offset.
- With the "Jerk" parameter, you specify the additive jerk of the following axis during the leading value offset.

During the leading value offset

The leading value offset via dynamic parameters is effective immediately, regardless of the leading value position. The leading value is offset on the following axis. The dynamic values are added to the values of the synchronous operation motion. The required travel distance of the following axis to offset the leading value is calculated by the system.

The leading value offset is indicated in the Motion Control instruction with the parameter "StartPhasing" = TRUE and in the "<TO>.StatusWort.X24 (PhasingCommand)" tag of the technology object. The "AbsolutePhaseShift" or "CoveredPhaseShift" parameter shows the absolute leading value portion already shifted.

After the leading value offset

As soon as the following axis has offset the leading value, the leading value offset is active on the following axis. The status is indicated in the Motion Control instruction with the parameter "Done" = TRUE and in the "<TO>.StatusSynchronizedMotion.PhaseShift" tag of the technology object.

The leading value offset only has an effect in the "Synchronous" status of the gearing. When the gearing is overridden, the leading value offset is reset to zero.

6.2.5.2 Leading value offset on the following axis during gearing using leading value distance as of current leading value position (S7-1500T)

With a leading value offset, you offset the effective leading value on the following axis during gearing with "MC_GearIn (Page 206)" or "MC_GearInPos (Page 210)". You can move the effective leading value absolutely or relatively. The leading value of the leading value source and the position of the leading axis are not influenced by the leading value offset.

The leading value offset always refers to the effective leading value. The effective leading value is made up of the leading value of the leading value source and the additive leading value. If you do not use an additive leading value via "MC_LeadingValueAdditive (Page 271)", the effective leading value corresponds to the leading value of the leading value source. You can find an overview in the "Mode of operation of the instructions in synchronous operation (Page 30)" section. In the following, "leading value" refers to the effective leading value.

Parameter inputs

You define the behavior of the following axis during leading value offset with the following parameters of the Motion Control instruction "MC_PhasingAbsolute (Page 228)" or "MC_PhasingRelative (Page 221)":

- With the parameter "ProfileReference" = 1, you specify the type of leading value offset as offset using leading value distance as of the current leading value position.
- With the "PhaseShift" parameter, you specify the leading value offset on the following axis.

- With the "PhasingDistance" parameter, you specify the leading value distance (traversing distance of the leading axis) during the leading value offset.
- With the "Direction" parameter, you specify the direction of the leading value distance in relation to the direction of motion of the leading value (Page 60).

During the leading value offset

After starting the jobs, the following axis begins with the leading value offset starting from the current position. Within the traversing distance of the leading axis, the following axis offsets the leading value at continuous velocity and acceleration. The required dynamics of the following axis to offset the leading value is calculated by the system. The resulting dynamic response of the following axis is not limited.

The leading value offset is indicated in the Motion Control instruction with the parameter "StartPhasing" = TRUE and in the "<TO>.StatusWort.X24 (PhasingCommand)" tag of the technology object. The "AbsolutePhaseShift" or "CoveredPhaseShift" parameter shows the absolute leading value portion already shifted.

The leading value must not reverse during the leading value offset on the following axis. When the leading value reverses, the "MC_PhasingAbsolute" job or "MC_PhasingRelative" job is canceled with "ErrorID" = 16#808C.

After the leading value offset

As soon as the following axis has offset the leading value, the leading value offset is active on the following axis. The status is indicated in the Motion Control instruction with the parameter "Done" = TRUE and in the "<TO>.StatusSynchronizedMotion.PhaseShift" tag of the technology object.

The leading value offset only has an effect in the "Synchronous" status of the gearing. When the gearing is overridden, the leading value offset is reset to zero.

6.2.5.3 Leading value offset on the following axis during gearing using leading value distance as of specific leading value position (S7-1500T)

With a leading value offset, you offset the effective leading value on the following axis during gearing with "MC_GearIn (Page 206)" or "MC_GearInPos (Page 210)". You can move the effective leading value absolutely or relatively. The leading value of the leading value source and the position of the leading axis are not influenced by the leading value offset.

The leading value offset always refers to the effective leading value. The effective leading value is made up of the leading value of the leading value source and the additive leading value. If you do not use an additive leading value via "MC_LeadingValueAdditive (Page 271)", the effective leading value corresponds to the leading value of the leading value source. You can find an overview in the "Mode of operation of the instructions in synchronous operation (Page 30)" section. In the following, "leading value" refers to the effective leading value.

Parameter inputs

You define the behavior of the following axis during leading value offset with the following parameters of the Motion Control instruction "MC_PhasingAbsolute (Page 228)" or "MC_PhasingRelative (Page 221)":

- With the parameter "ProfileReference" = 2, you specify the type of leading value offset as offset using leading value distance as of a specific leading value position.
- With the "PhaseShift" parameter, you specify the leading value offset on the following axis.
- With the "PhasingDistance" parameter, you specify the leading value distance (traversing distance of the leading axis) during the leading value offset.
- With the "StartPosition" parameter, you specify the leading value position from which the leading value offset starts.
- With the "Direction" parameter, you specify the direction of the leading value distance in relation to the direction of motion of the leading value (Page 60).

Until the leading value offset

After starting the job, the status "Waiting" is displayed at the following axis when the leading value is at standstill and until the leading value has reached the leading value position (<TO>.StatusWord2.X3 = TRUE (PhasingCommandWaiting)).

During the leading value offset

As soon as the leading value has reached the leading value position, the following axis begins to offset the leading value. Within the traversing distance of the leading axis, the following axis offsets the leading value at continuous velocity and acceleration. The required dynamics of the following axis to offset the leading value is calculated by the system. The resulting dynamic response of the following axis is not limited.

The leading value offset is indicated in the Motion Control instruction with the parameter "StartPhasing" = TRUE and in the "<TO>.StatusWort.X24 (PhasingCommand)" tag of the technology object. The "AbsolutePhaseShift" or "CoveredPhaseShift" parameter shows the absolute leading value portion already shifted.

The leading value must not reverse during the leading value offset on the following axis. When the leading value reverses, the "MC_PhasingAbsolute" job or "MC_PhasingRelative" job is canceled with "ErrorID" = 16#808C. The waiting job is not canceled.

After the leading value offset

As soon as the following axis has offset the leading value, the leading value offset is active on the following axis. The status is indicated in the Motion Control instruction with the parameter "Done" = TRUE and in the "<TO>.StatusSynchronizedMotion.PhaseShift" tag of the technology object.

The leading value offset only has an effect in the "Synchronous" status of the gearing. When the gearing is overridden, the leading value offset is reset to zero.

6.2.5.4 Defining the direction of the leading value distance of a leading value offset on the following axis during gearing (S7-1500T)

With a leading value offset, you offset the effective leading value on the following axis during gearing with "MC_GearIn (Page 206)" or "MC_GearInPos (Page 210)". With the "Direction" parameter of the Motion Control instruction "MC_PhasingAbsolute (Page 228)" or "MC_PhasingRelative (Page 221)", you specify the direction of the leading value distance in relation to the direction of motion of the effective leading value.

Defining leading value distance in the positive direction of motion of the effective leading value

With "Direction" = 1, the following axis only offsets the leading value when the leading axis travels in the positive direction.

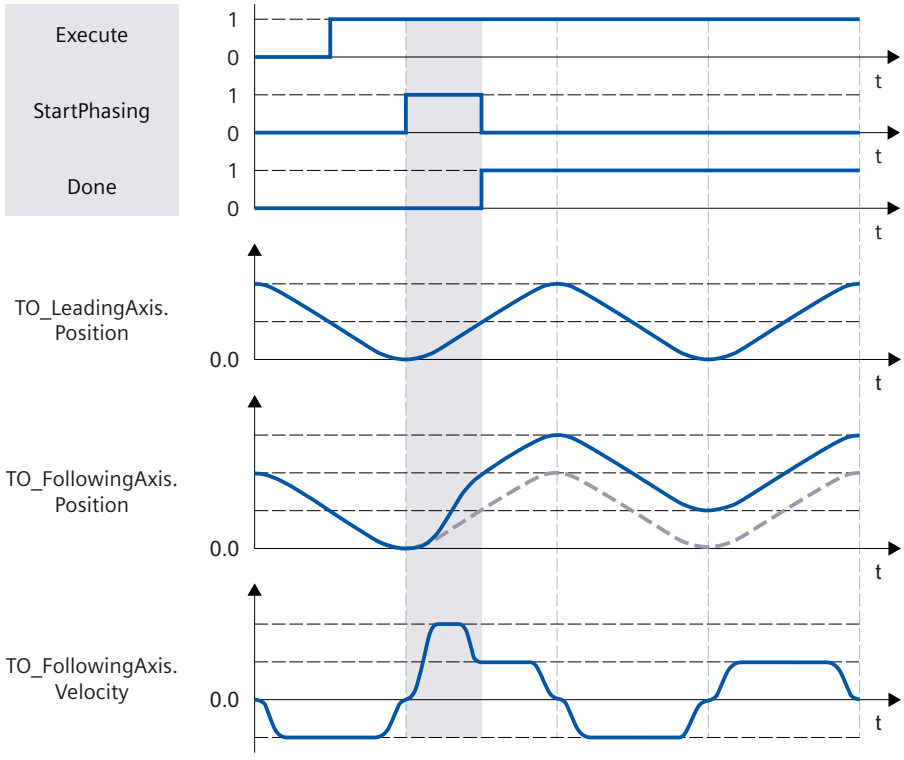

Defining leading value distance in the negative direction of motion of the effective leading value

With "Direction" = 2, the following axis only offsets the leading value when the leading axis travels in the negative direction.

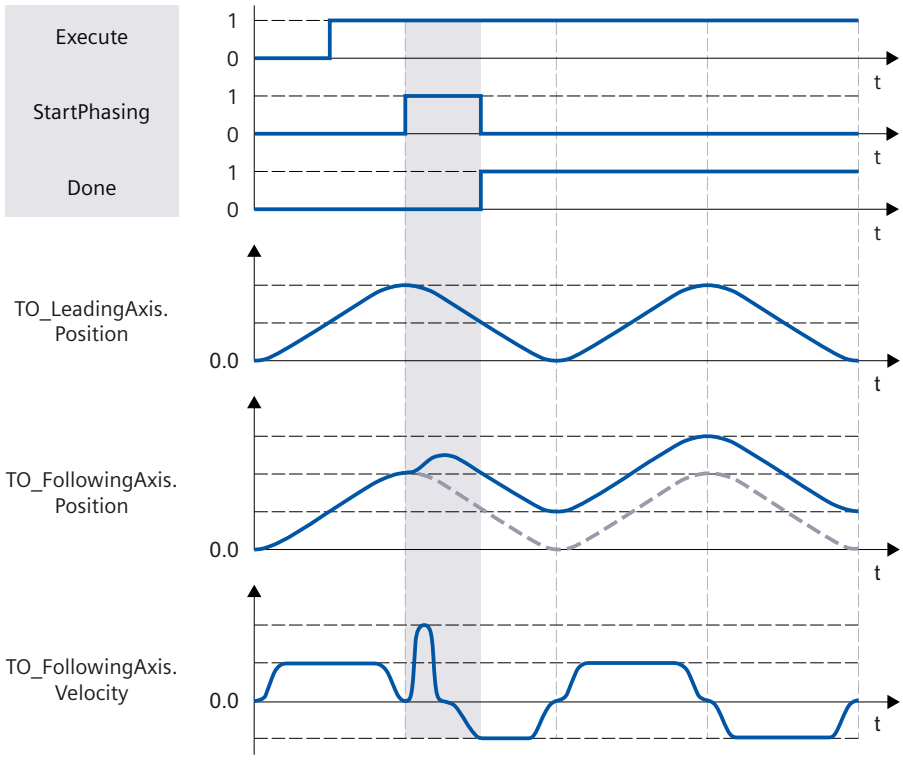

Defining leading value distance in the current direction of motion of the effective leading value

With "Direction" = 3, the following axis offsets the leading value regardless of the direction in which the leading axis is currently traveling.

6.2.5.5 Only cancel a pending leading value offset in the gearing (S7-1500T)

With an "MC_PhasingAbsolute (Page 228)" or "MC_PhasingRelative (Page 221)" job with "ProfileReference" = 5, you cancel a pending "MC_PhasingAbsolute" or "MC_PhasingRelative" job. Canceling a waiting job has no effect on an active leading value offset.

6.2.6 Following value offset during gearing (S7-1500T)

6.2.6.1 Following value offset on the following axis during gearing using leading value distance as of current leading value position (S7-1500T)

With a following value offset, you offset the following value on the following axis during gearing with "MC_GearIn (Page 206)" or "MC_GearInPos (Page 210)". You can move the

following value absolutely or relatively. The leading value of the leading value source and the position of the leading axis are not influenced by the following value offset.

The following value offset always refers to the effective leading value. The effective leading value is made up of the leading value of the leading value source and the additive leading value. If you do not use an additive leading value via "MC_LeadingValueAdditive (Page 271)", the effective leading value corresponds to the leading value of the leading value source. You can find an overview in the "Mode of operation of the instructions in synchronous operation (Page 30)" section. In the following, "leading value" refers to the effective leading value.

Parameter inputs

You define the behavior of the following axis during following value offset with the following parameters of the Motion Control instruction "MC_OffsetAbsolute (Page 241)" or "MC_OffsetRelative (Page 235)":

- With the parameter "ProfileReference" = 1, you specify the type of following value offset as offset using leading value distance as of the current leading value position.
- With the "Offset" parameter, you specify the following value offset on the following axis.
- With the "OffsetDistance" parameter, you specify the leading value distance (traversing distance of the leading axis) during the following value offset.
- With the "Direction" parameter, you specify the direction of the leading value distance in relation to the direction of motion of the leading value (Page 65).

During the following value offset

After starting the job, the following axis begins with the following value offset starting from the current position. Within the traversing distance of the leading axis, the following axis offsets the following value at continuous velocity and acceleration. The required dynamics of the following axis for the following value offset is calculated by the system. The resulting dynamic response of the following axis is not limited.

The following value offset is indicated in the Motion Control instruction with the parameter "StartOffset" = TRUE and in the "<TO>.StatusWort2.X4 (OffsetCommand)" tag of the technology object. The "AbsoluteOffset" or "CoveredOffset" parameter shows the absolute following value portion already shifted.

The leading value must not reverse during the following value offset on the following axis. When the leading value reverses, the "MC_OffsetAbsolute" job or "MC_OffsetRelative" job is canceled with "ErrorID" = 16#808C.

After the following value offset

As soon as the following axis has offset the following value, the following value offset is active on the following axis. The status is indicated in the Motion Control instruction with the parameter "Done" = TRUE and in the "<TO>.StatusSynchronizedMotion.Offset" tag of the technology object.

The following value offset only has an effect in the "Synchronous" status of the gearing. When the gearing is overridden, the following value offset is reset to zero.

6.2.6.2 Following value offset on the following axis during gearing using leading value distance as of specific leading value position (S7-1500T)

With a following value offset, you offset the following value on the following axis during gearing with "MC_GearIn (Page 206)" or "MC_GearInPos (Page 210)". You can move the following value absolutely or relatively. The leading value of the leading value source and the position of the leading axis are not influenced by the following value offset.

The following value offset always refers to the effective leading value. The effective leading value is made up of the leading value of the leading value source and the additive leading value. If you do not use an additive leading value via "MC_LeadingValueAdditive (Page 271)", the effective leading value corresponds to the leading value of the leading value source. You can find an overview in the "Mode of operation of the instructions in synchronous operation (Page 30)" section. In the following, "leading value" refers to the effective leading value.

Parameter inputs

You define the behavior of the following axis during following value offset with the following parameters of the Motion Control instruction "MC_OffsetAbsolute (Page 241)" or "MC_OffsetRelative (Page 235)":

- With the parameter "ProfileReference" = 2, you specify the type of following value offset as offset using leading value distance as of a specific leading value position.
- With the "Offset" parameter, you specify the following value offset on the following axis.
- With the "OffsetDistance" parameter, you specify the leading value distance (traversing distance of the leading axis) during the following value offset.
- With the "StartPosition" parameter, you specify the leading value position from which the following value offset starts.
- With the "Direction" parameter, you specify the direction of the leading value distance in relation to the direction of motion of the leading value (Page 65).

Until the following value offset

After starting the job, the status "Waiting" is displayed at the following axis when the leading value is at standstill and until the leading value has reached the leading value position (<TO>.StatusWord2.X5 = TRUE (OffsetCommandWaiting)).

During the following value offset

As soon as the leading value has reached the leading value position, the following axis begins to offset the following value. Within the traversing distance of the leading axis, the following axis offsets the following value at continuous velocity and acceleration. The required dynamics of the following axis for the following value offset is calculated by the system. The resulting dynamic response of the following axis is not limited.

The following value offset is indicated in the Motion Control instruction with the parameter "StartOffset" = TRUE and in the "<TO>.StatusWort2.X4 (OffsetCommand)" tag of the technology object. The "AbsoluteOffset" or "CoveredOffset" parameter shows the absolute following value portion already shifted.

The leading value must not reverse during the following value offset on the following axis. When the leading value reverses, the "MC_OffsetAbsolute" job or "MC_OffsetRelative" job is canceled with "ErrorID" = 16#808C. The waiting job is not canceled.

After the following value offset

As soon as the following axis has offset the following value, the following value offset is active on the following axis. The status is indicated in the Motion Control instruction with the parameter "Done" = TRUE and in the "<TO>.StatusSynchronizedMotion.Offset" tag of the technology object.
The following value offset only has an effect in the "Synchronous" status of the gearing. When the gearing is overridden, the following value offset is reset to zero.

6.2.6.3 Defining the direction of the leading value distance of a following value offset on the following axis during gearing (S7-1500T)

With a following value offset, you offset the following value on the following axis during gearing with "MC_GearIn (Page 206)" or "MC_GearInPos (Page 210)". With the "Direction" parameter of the Motion Control instruction "MC_OffsetAbsolute (Page 241)" or "MC_OffsetRelative (Page 235)", you specify the direction of the leading value distance in relation to the direction of motion of the effective leading value.

Defining leading value distance in the positive direction of motion of the effective leading value

With "Direction" = 1, the following axis only offsets the following value when the leading axis travels in the positive direction.

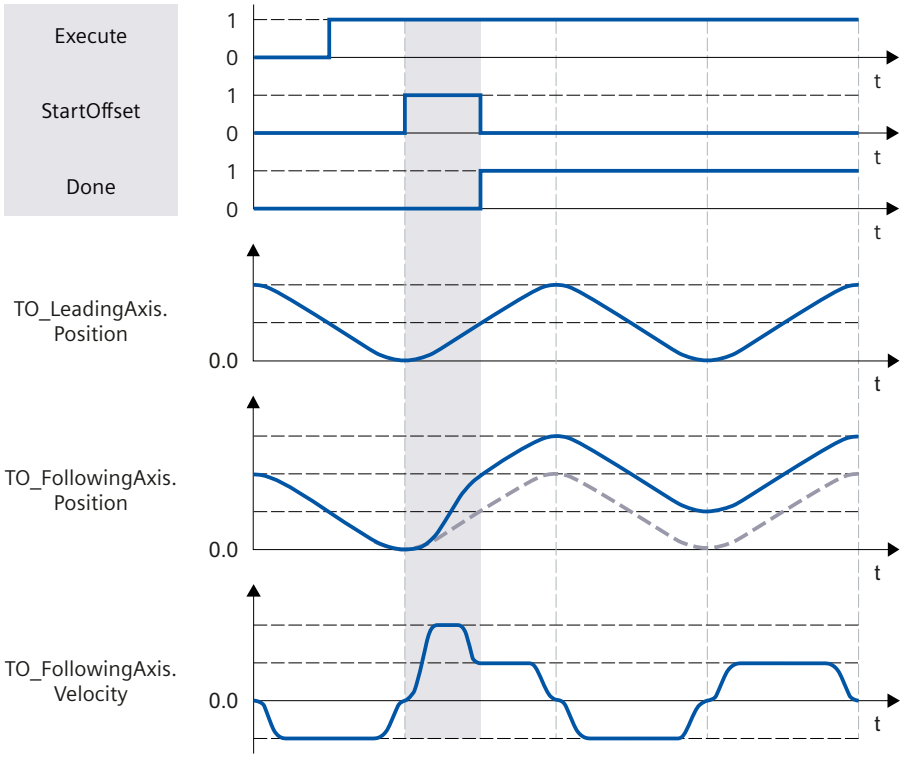

Defining leading value distance in the negative direction of motion of the effective leading value

With "Direction" = 2, the following axis only offsets the following value when the leading axis travels in the negative direction.

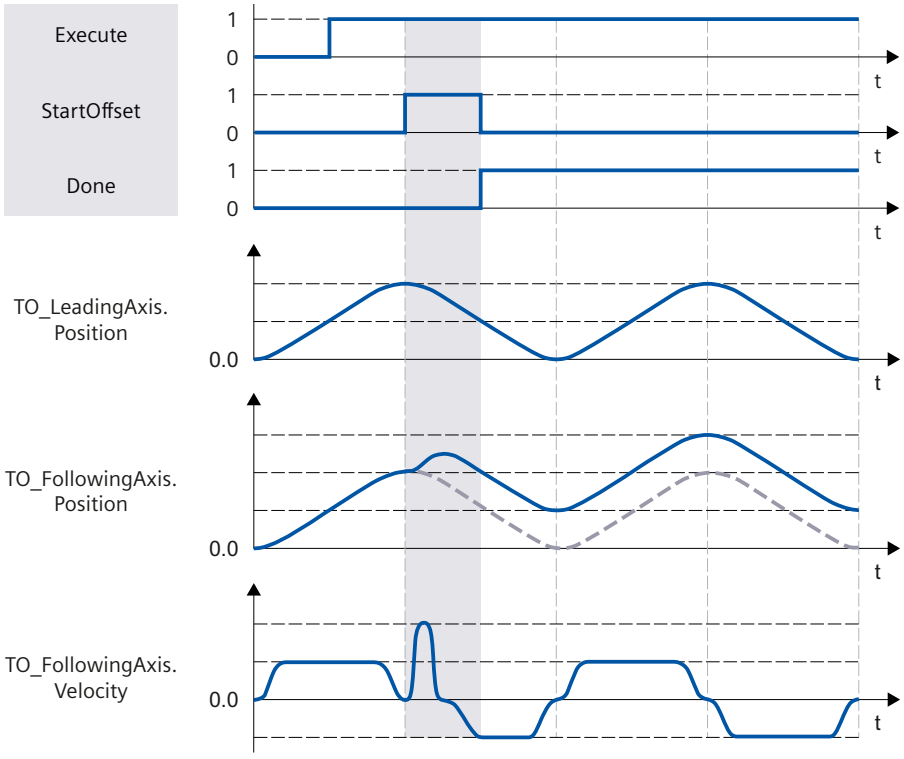

Defining leading value distance in the current direction of motion of the effective leading value

With "Direction" = 3, the following axis offsets the following value regardless of the direction in which the leading axis is currently traveling.

6.2.6.4 Only cancel a pending following value offset in the gearing (S7-1500T)

With an "MC_OffsetAbsolute (Page 241)" or "MC_OffsetRelative (Page 235)" job with "ProfileReference" = 5, you cancel a pending "MC_OffsetAbsolute" or "MC_OffsetRelative" job. Canceling a pending job has no effect on an active following value offset.

6.3 Desynchronize gearing (S7-1500T)

6.3.1 Desynchronizing following axis using dynamic parameters with "MC_GearOut" (S7-1500T)

Desynchronization ends the synchronous operation relationship between the leading and following axis and gearing is ended. For desynchronization using dynamic parameters,

desynchronization begins in such a way that the following axis comes to a standstill when the stop position is reached.

With the Motion Control instruction "MC_GearOut" you can desynchronize a gearing which you have started either with a "MC_GearIn (Page 206)" job or with a "MC_GearInPos (Page 210)" job.

Parameter inputs

You define the behavior of the following axis for desynchronization with the following parameters of the Motion Control instruction "MC_GearOut (Page 262)":

- With the parameter "SyncProfileReference" = 0, you specify the type of desynchronization as desynchronization using dynamic parameters.
- With the parameter "SlavePosition", you specify the stop positions of the following axis. The stop position of the following axis is the position at which the following axis comes to a standstill and the desynchronization is completed.
- With the "Deceleration" parameter, you specify the deceleration of the following axis.
- With the "Jerk" parameter, you specify the jerk of the following axis.
- With the "SyncOutDirection" parameter, you specify the direction of the desynchronization (Page 69).

Until desynchronization

After the start of the "MC_GearOut" job, a motion profile for the following axis is calculated continuously. The motion profile is calculated based on the following parameters:

- Specified stop position of the following axis in the Motion Control instruction
- Specified dynamics of the Motion Control instruction
- Current position and dynamics of the leading and following axes
- Synchronous operation function
- Superimposed motion of the following axis
- Additive leading value of the following axis

The distance of the following axis and thus the starting position of the following axis for desynchronization results from the calculation.

The start position of the following axis is derived in the following way:

Start position = stop position of the following axis - travel distance of the following axis

The status "Waiting" is displayed at the following axis until the following value has reached the start position (<TO>.StatusSynchronizedMotion.WaitingFunctionState = 4).

During desynchronization

The following axis begins to desynchronize as soon as the following value has reached the start position. Desynchronization is indicated in the Motion Control instruction "MC_GearOut" with the parameter "StartSyncOut" = TRUE and in the "<TO>.StatusWord2.X1 (DesynchronizingCommand)" tag of the technology object. The synchronous operation is no longer in the "Synchronous" status. Superimposed jobs of the following axis are canceled.

The following axis moves to the stop position with the specified dynamics, independent of the leading value. During desynchronization, several modulo revolutions of both axes are generally possible.

After desynchronization

As soon as the following axis reaches the stop position, the following axis is desynchronized. The following axis is at a standstill. The status is indicated in the Motion Control instruction "MC_GearOut" with the parameter "Done" = TRUE and in the "<TO>.StatusWord.X7 (Standstill)" tag of the technology object.

6.3.2 Desynchronizing following axis using leading value distance with "MC_GearOut" (S7-1500T)

Desynchronization ends the synchronous operation relationship between the leading and following axis and gearing is ended. For desynchronization using the leading value distance, desynchronization begins in such a way that the following axis comes to a standstill when the stop position is reached.

With the Motion Control instruction "MC_GearOut" you can desynchronize a gearing which you have started either with a "MC_GearIn (Page 206)" job or with a "MC_GearInPos (Page 210)" job.

Parameter inputs

You define the behavior of the following axis for desynchronization with the following parameters of the Motion Control instruction "MC_GearOut (Page 262)":

- With the parameter "SyncProfileReference" = 1, you specify the type of desynchronization as desynchronization using the leading value distance.
- With the parameter "SlavePosition", you specify the stop positions of the following axis. The stop position of the following axis is the position at which the following axis comes to a standstill and the desynchronization is completed.
- With the "MasterStopDistance" parameter, you define the leading value distance (desynchronization length).
- With the "SyncOutDirection" parameter, you specify the direction of the desynchronization (Page 69).

Until desynchronization

After the start of the "MC_GearOut" job, a motion profile is calculated depending on the specified leading value distance. The calculation determines the required dynamics and thus the start position of the leading axis for the desynchronization.

The start position of the leading axis is derived in the following way:

Start position = leading value position when the stop position of the following axis is reached - leading value distance

The status "Waiting" is displayed at the following axis until the leading value has reached the start position (<TO>.StatusSynchronizedMotion.WaitingFunctionState = 4).

During desynchronization

The following axis begins to desynchronize as soon as the leading value has reached the start position. Desynchronization is indicated in the Motion Control instruction "MC_GearOut" with the parameter "StartSyncOut" = TRUE and in the "<TO>.StatusWord2.X1

(DesynchronizingCommand)" tag of the technology object. The synchronous operation is no longer in the "Synchronous" status. Superimposed jobs of the following axis are canceled.

The following axis moves to the stop position with the specified dynamics, independent of the leading value. The leading value must not reverse during desynchronization. During desynchronization, several modulo revolutions of both axes are generally possible.

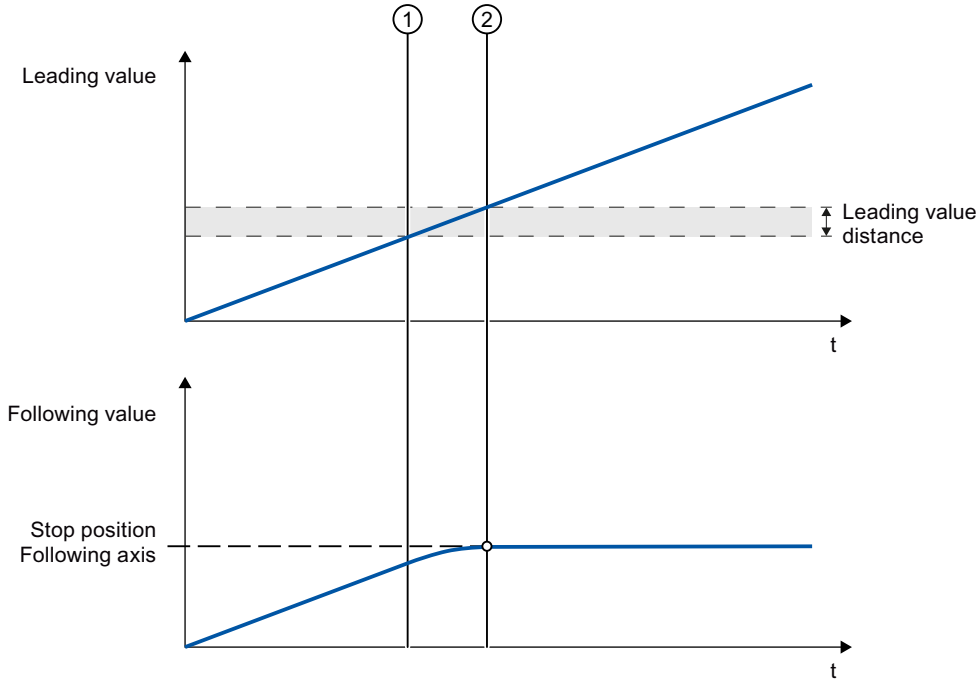

① Time when desynchronization starts

② Time when desynchronization is complete

The dynamics of the following axis during desynchronization is obtained from the calculated motion profile and the current dynamics of the leading axis. Changes in the dynamics of the leading axis during desynchronization are superimposed with the calculated motion profile in accordance with the synchronous operation function. This can have the result that the configured dynamic limits at the following axis are violated. This scenario is indicated in the "<TO>.StatusSynchronizedMotion.StatusWord.X0 ... X2" variables of the technology object.

After desynchronization

As soon as the following axis reaches the stop position, the following axis is desynchronized. The following axis is at a standstill. The status is indicated in the Motion Control instruction "MC_GearOut" with the parameter "Done" = TRUE and in the "<TO>.StatusWord.X7 (Standstill)" tag of the technology object.

6.3.3 Defining direction of desynchronization with "MC_GearOut" (S7-1500T)

Desynchronization ends the synchronous operation relationship between the leading and following axis and gearing is ended. You can specify the desynchronization direction with the "SyncOutDirection" parameter of the Motion Control instruction "MC_GearOut (Page 262)".

Desynchronizing the following axis in positive traversing direction

With "SyncOutDirection" = 1, the following axis is only desynchronized when the following axis moves in the positive direction.

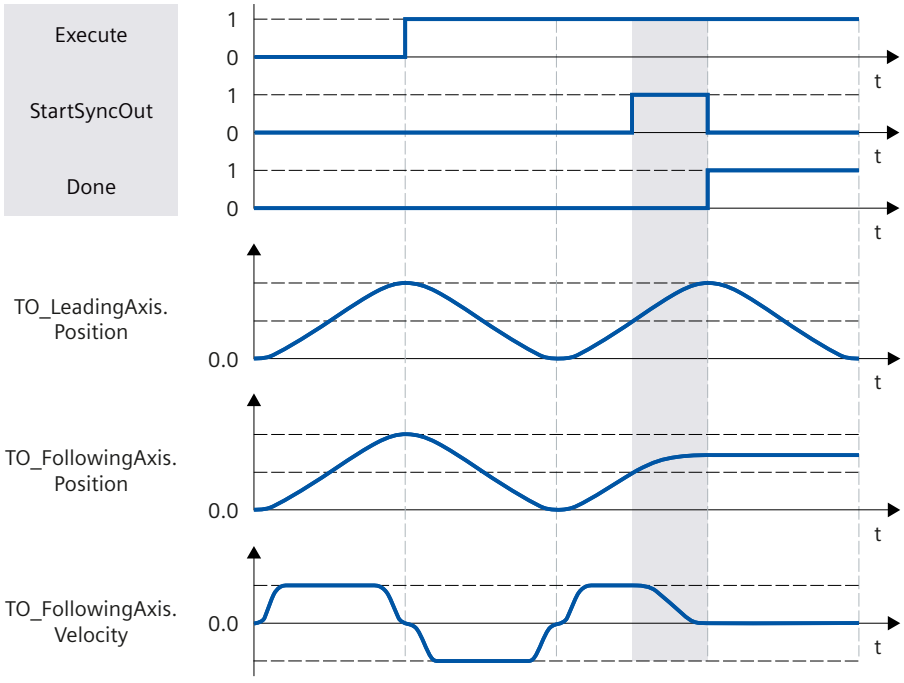

Desynchronizing the following axis in negative traversing direction

With "SyncOutDirection" = 2, the following axis is only desynchronized when the following axis moves in the negative direction.

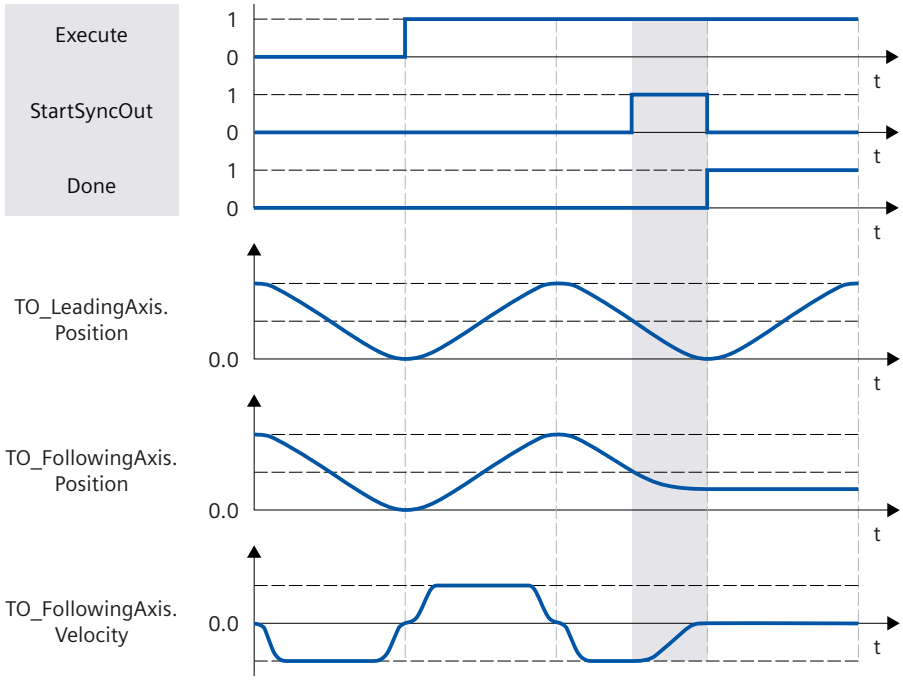

Desynchronizing the following axis in the current traversing direction

With "SyncOutDirection" = 3, the following axis is desynchronized in the direction in which the following axis is currently moving.

6.3.4 Only cancel a pending gearing with "MC_GearOut" (S7-1500T)

With a "MC_GearOut (Page 262)" job with "SyncProfileReference" = 5, you cancel a pending gearing. Canceling a pending gearing has no influence on an active gearing.

6.4 Tags: Gearing (S7-1500, S7-1500T)

The following technology object tags are relevant for gearing:

Status indicators		
Tag	**Description**	
<TO>.StatusSynchronizedMotion.FunctionState	Indication of which synchronous operation function is active	
	0	No synchronous operation active
	1	Gearing ("MC_GearIn")
	2	Gearing with specified synchronous positions ("MC_GearInPos")

Status indicators		
Tag	**Description**	
<TO>.StatusSynchronizedMotion.FunctionState	3	Camming ("MC_CamIn")
	4	Desynchronization of gearing ("MC_GearOut")
	5	Desynchronization of camming ("MC_CamOut")
	6	Velocity gearing ("MC_GearInVelocity")
<TO>.StatusSynchronizedMotion.WaitingFunctionState	Indication of which synchronous operation function is waiting	
	0	No synchronous operation waiting
	1	Reserved
	2	Gearing with specified synchronous positions waiting ("MC_GearInPos")
	3	Camming waiting ("MC_CamIn")
	4	Desynchronization of gearing waiting ("MC_GearOut")
	5	Desynchronization of camming waiting ("MC_CamOut")
<TO>.StatusSynchronizedMotion.ActualMaster	When a synchronous operation job is started, the number of the technology data block of the currently used leading axis is displayed.	
	0	Synchronous operation inactive
<TO>.Position	Setpoints of the axis	
<TO>.Velocity		
<TO>.Acceleration		
<TO>.StatusSynchronizedMotion.EffectiveLeadingValue.Position	Effective leading value including an additive leading value with an "MC_LeadingValueAdditive" job	
<TO>.StatusSynchronizedMotion.EffectiveLeadingValue.Velocity		
<TO>.StatusSynchronizedMotion.EffectiveLeadingValue.Acceleration		
<TO>.StatusSynchronizedMotion.PhaseShift	Current absolute leading value offset with an "MC_PhasingAbsolute" or "MC_PhasingRelative" job	
<TO>.StatusSynchronizedMotion.FunctionLeadingValue.Position	Leading value of the synchronous operation function after a leading value offset with an "MC_PhasingAbsolute" job or "MC_PhasingRelative" job including an additive leading value with a "MC_LeadingValueAdditive" job	
<TO>.StatusSynchronizedMotion.FunctionFollowingValue.Position	Following value of the synchronous operation function before a following value offset with an "MC_OffsetAbsolute" job or "MC_OffsetRelative" job	
<TO>.StatusSynchronizedMotion.FunctionFollowingValue.Velocity		
<TO>.StatusSynchronizedMotion.FunctionFollowingValue.Acceleration		
<TO>.StatusSynchronizedMotion.Offset	Current absolute following value offset with an "MC_OffsetAbsolute" or "MC_OffsetRelative" job	
<TO>.StatusSynchronizedMotion.StatusWord.X0 (MaxVelocityExceeded)	Set to the value "TRUE" when the maximum velocity configured for the following axis is exceeded during synchronous operation.	
<TO>.StatusSynchronizedMotion.StatusWord.X1 (MaxAccelerationExceeded)	Set to the value "TRUE" when the maximum acceleration configured for the following axis is exceeded during synchronous operation.	
<TO>.StatusSynchronizedMotion.StatusWord.X2 (MaxDecelerationExceeded)	Set to the value "TRUE" when the maximum deceleration configured for the following axis is exceeded during synchronous operation.	

Status indicators	
Tag	**Description**
<TO>.StatusWord.X21 (Synchronizing)	Set to the value "TRUE" when the synchronous axis synchronizes to a leading value.
<TO>.StatusWord.X22 (Synchronous)	Set to the value "TRUE" when the synchronous axis is synchronized and moves synchronously to the leading axis.
<TO>.StatusWord2.X1 (DesynchronizingCommand)	Set to the value "TRUE" when the synchronous axis desynchronizes.
<TO>.StatusWord.X24 (PhasingCommand)	Is set to the value "TRUE" if a job for leading value offset is active ("MC_PhasingAbsolute", "MC_PhasingRelative").
<TO>.StatusWord2.X3 (PhasingCommandWaiting)	Is set to the value "TRUE" if a job for leading value offset is pending ("MC_PhasingAbsolute", "MC_PhasingRelative").
<TO>.StatusWord2.X4 (OffsetCommand)	Is set to the value "TRUE" if a job for following value offset is active ("MC_OffsetAbsolute", "MC_OffsetRelative").
<TO>.StatusWord2.X5 (OffsetCommandWaiting)	Is set to the value "TRUE" if a job for following value offset is waiting ("MC_OffsetAbsolute", "MC_OffsetRelative").
<TO>.ErrorWord.X14 (SynchronousError)	Error during synchronous operation The leading axis specified in the motion control instruction was not configured as a possible leading axis.

Velocity synchronous operation (S7-1500T) 7

With the Motion Control instruction "MC_GearInVelocity (Page 217)" you start a velocity synchronous operation between a leading axis and a following axis. During velocity synchronous operation , the velocity of the following axis results from the velocity of the leading axis multiplied by the gear ratio, regardless of the position. You specify the gear ratio as a ratio of two integers either once or variably during synchronization. This results in a linear transformation ratio.

You can start synchronous operation when the leading axis is at a standstill or when it is in motion. Synchronous travel begins after synchronization when the following axis has reached the velocity and acceleration of the leading axis, taking into account the gear ratio.

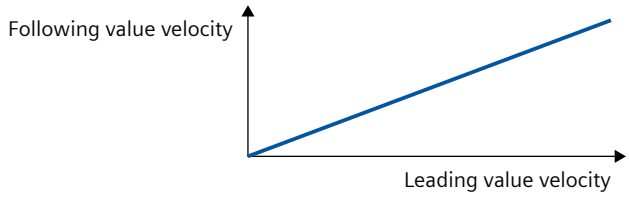

Slope of line/transmission ratio
Gear ratio = "MC_GearInVelocity.RatioNumerator"/"MC_GearInVelocity.RatioDenominator"

For velocity synchronous operation with "MC_GearInVelocity", you have the following options:

- Defining gear ratio (Page 74)
- Specify gear ratio once or dynamically (Page 75)
- Define position control of the following axis (Page 76)
- Synchronize following axis using dynamic parameters (Page 78)
- Synchronous travel in velocity synchronous operation (Page 79)
- Specify additive leading value with "MC_LeadingValueAdditive" (Page 165)
- Set velocity synchronous operation with "MC_SynchronizedMotionSimulation" in simulation (Page 164)

Also note the Dynamic limits of the following axis in velocity synchronous operation (Page 77).

7.1 Defining gear ratio (S7-1500T)

During velocity synchronous operation , the velocity of the following axis results from the velocity of the leading axis multiplied by the gear ratio, regardless of the position. You specify the gear ratio at the Motion Control instruction "MC_GearInVelocity (Page 217)" as the relationship between two integers (numerator/denominator).

Numerator of the gear ratio

With the "RatioNumerator" parameter, you define the numerator of the gear ratio. You can define the numerator of the gear ratio as positive or negative. This yields the following behavior:

- Positive gear ratio:
  The leading and following axes move in the same direction.
- Negative gear ratio:
  The following axis moves in the opposite direction of the leading axis.

The value "0" is not permitted for the numerator of the gear ratio.

Denominator of the gear ratio

With the "RatioDenominator" parameter, you define the denominator of the gear ratio. Only positive values are permitted for the denominator of the gear ratio.

Example 1: Positive gear ratio

Leading axis and following axis are rotary axes.
Parameter inputs:

- "RatioNumerator" = 5
- "RatioDenominator" = 1

If the leading axis moves at 100 °/s, the following axis moves at 500 °/s in the "Synchronous" status of the velocity synchronous operation .

Example 2: Negative gear ratio

The leading axis is a linear axis. The following axis is a rotary axis.
Parameter inputs:

- "RatioNumerator" = -3
- "RatioDenominator" = 1

If the leading axis moves at 100 mm/s, the following axis moves at -300 °/s in the "Synchronous" status of the velocity synchronous operation .

7.2 Specify gear ratio once or dynamically (S7-1500T)

For a velocity synchronous operation , you can either preset the gear ratio once at the start of the job or change it continuously during an active synchronous operation.

Parameter inputs

You define the behavior with the following parameters of the Motion Control instruction "MC_GearInVelocity (Page 217)":

- You define the mode for presetting the gear ratio (Page 74) with the parameter "ContinuousUpdate" .

Specify gear ratio once

With "ContinuousUpdate" = FALSE, the gear ratio specified at the start time of the "MC_GearInVelocity" job is used as long as the job is active.

To change the gear ratio if necessary, you must start the job again with a rising edge of the parameter "Execute" = TRUE. The following axis then synchronizes again.

Specify gear ratio dynamically

With "ContinuousUpdate" = TRUE you can change the gear ratio dynamically while the "MC_GearInVelocity" job is active. Changes of the parameter values "RatioNumerator" and "RatioDenominator" are effective immediately.

NOTE

Dynamic limits

In "Synchronous" status the dynamics of the following axis is limited only to the maximum speed of the drive. Make sure that the dynamic limits of the following axis are not exceeded by the changed gear ratios.

That the mode for dynamic presetting of the gear ratio is active is indicated at the motion control instruction "MC_GearInVelocity" with the parameter "ContinuousUpdateActive" = TRUE.

Recommendation

You can specify only integer values as numerator ("RatioNumerator") and denominator ("RatioDenominator") of the gear ratio.

To achieve as continuous a change as possible in the gear ratio, multiply the numerator and denominator by a high factor. This increases the resolution of the gear ratio and reduces the quantization error.

Example

The gear ratio should change gradually from 1.0 to 1.1.

Parameter assignment 1:

"RatioNumerator" = 100 ... 110

"RatioDenominator" = 100 ... 100

Increasing the counter in steps of 1 increases the gear ratio by 0.01 each time.

Parameter assignment 2:

"RatioNumerator" = 1 000 000 ... 1 100 000

"RatioDenominator" = 1 000 000 ... 1 000 000

Increasing the counter in steps of 1 increases the gear ratio by 0.000001 each time.

With parameter assignment 2 you get a higher resolution and can change the gear ratio in smaller steps than with parameter assignment 1.

7.3 Define position control of the following axis (S7-1500T)

During a velocity synchronous operation , the following axis can be operated in position-controlled or non-position-controlled mode. You specify the operating mode of the following axis independently of the operating mode of the leading axis at the motion control instruction "MC_GearInVelocity".

Parameter inputs

You define the behavior of the following axis with the following parameters of the Motion Control instruction "MC_GearInVelocity (Page 217)":

- You define the operating mode of the following axis with the parameter "PositionControlled".

Position-controlled mode

As soon as the "MC_GearInVelocity" job with "PositionControlled" = TRUE becomes effective, the following axis is switched to position-controlled operation. The configured position monitorings of the following axis are active.

Superimposed motion, e.g. with a "MC_MoveSuperimposed" job, and travel to a fixed stop is only possible in position-controlled operation.

Non-position-controlled mode

As soon as the "MC_GearInVelocity" job with "PositionControlled" = FALSE becomes effective, the following axis is switched to non-position-controlled operation. The configured position monitorings of the following axis are deactivated.

The position setpoint of the following axis is irrelevant in non-position-controlled operation. The zero position setpoint is displayed in "<TO>.Position" tag of the technology object.

7.4 Dynamic limits of the following axis in velocity synchronous operation (S7-1500T)

If a synchronous axis is operated as a following axis in velocity synchronous operation with the Motion Control instruction "MC_GearInVelocity (Page 217)", the following dynamic limits apply depending on the phase of the synchronous operation:

Synchronization

During the synchronizing phase, dynamic limits configured for the technology object apply to the following axis.

Synchronous motion

During synchronous travel, the dynamics of the following axis is limited only to the maximum speed of the drive (<TO>.Actor.DriveParameter.MaxSpeed). The dynamics of the following axis results from the synchronous operation function.

If the dynamic limits configured for the following axis are exceeded, this is indicated in the "<TO>.StatusSynchronizedMotion.StatusWord.X0 ... X2" tags of the technology object. The SW limit switches continue to be monitored with the configured dynamic limits of the following axis.

Synchronous operation override

As soon as synchronous operation has been overridden (Page 283), the dynamic limits configured for the technology object apply to the following axis again. With the start of the overriding job, the active dynamics are transitioned (smoothed) to the configured dynamic limits and the specifications for the Motion Control instruction.

7.5 Synchronizing following axis using dynamic parameters with "MC_GearInVelocity" (S7-1500T)

During velocity synchronous operation , the synchronization establishes the relationship between the leading and following axes. Synchronization begins immediately after the "MC_GearInVelocity" job starts.

Parameter inputs

You define the dynamic behavior of the following axis for synchronization with the following parameters of the Motion Control instruction "MC_GearInVelocity (Page 217)":

- With the "Acceleration" parameter, you specify the acceleration of the following axis.
- With the "Deceleration" parameter, you specify the deceleration of the following axis.
- With the "Jerk" parameter, you specify the jerk of the following axis.

Observe the dynamic limits (Page 77) of the following axis during synchronization.

During synchronization

Synchronization begins after the "MC_GearInVelocity" job starts. Active motion jobs are overridden.

The synchronization duration and distance are dependent on the following parameters:

- Dynamics of the following axis at the start time of the "MC_GearInVelocity" job
- Dynamic settings for synchronization
- Preset gear ratio at the start time of the "MC_GearInVelocity" job
- Dynamics of the leading axis

The synchronization is indicated in the Motion Control instruction "MC_GearInVelocity" with the parameter "StartSync" = TRUE and in the "<TO>.StatusWord.X21 (Synchronizing)" tag of the following axis.

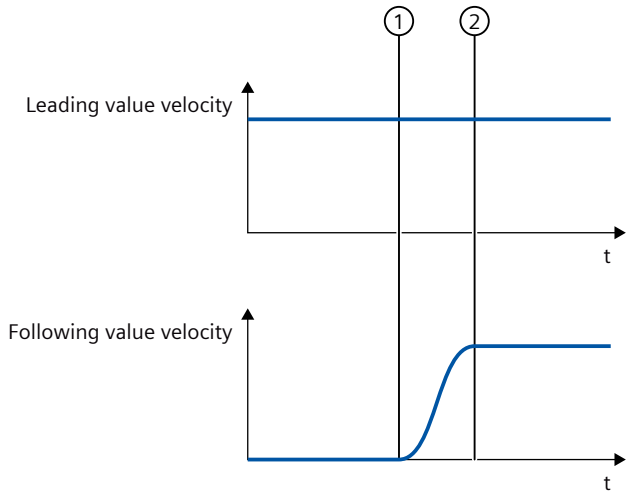

① Time when synchronization starts

② Time when synchronization is complete

The specified gear ratio at the start time of the "MC_GearInVelocity" job is used for the synchronization. If you use a variable gear ratio with "ContinuousUpdate" = TRUE, changes to the gear ratio are only taken into account after synchronization.

After synchronization

The following axis is synchronized when the following axis has reached the velocity of the leading axis, taking into account the gear ratio. The following axis travels synchronously with the leading axis.

7.6 Synchronous travel in velocity synchronous operation with "MC_GearInVelocity" (S7-1500T)

As soon as the following axis is synchronized, it follows the velocity of the leading axis depending on the specified gear ratio.

The following value velocity is obtained as follows:

Following value velocity = leading value velocity × gear ratio

The "Synchronous" status is indicated in the Motion Control instruction "MC_GearInVelocity (Page 217)" with the parameter "InSync" = TRUE and in the "<TO>.StatusWord.X22 (Synchronous)" tag of the technology object.

If the gear ratio changes when "ContinuousUpdateActive" = TRUE, the "Synchronous" status is retained.

7.7 Tags: Velocity synchronous operation (S7-1500T)

The following tags of the technology object are relevant for the velocity synchronous operation :

Status indicators		
Tag	**Description**	
<TO>.StatusSynchronizedMotion.FunctionState	Indication of which synchronous operation function is active	
	0	No synchronous operation active
	1	Gearing ("MC_GearIn")
	2	Gearing with specified synchronous positions ("MC_GearInPos")
	3	Camming ("MC_CamIn")
	4	Desynchronization of gearing ("MC_GearOut")
	5	Desynchronization of camming ("MC_CamOut")
	6	Velocity synchronous operation ("MC_GearInVelocity")
<TO>.StatusSynchronizedMotion.ActualMaster	When a synchronous operation job is started, the number of the technology data block of the currently used leading axis is displayed.	
	0	Synchronous operation inactive
<TO>.Position	Setpoints of the axis	
<TO>.Velocity		
<TO>.Acceleration		
<TO>.StatusSynchronizedMotion.EffectiveLeadingValue.Position	Effective leading value including an additive leading value with an "MC_LeadingValueAdditive" job	
<TO>.StatusSynchronizedMotion.EffectiveLeadingValue.Velocity		
<TO>.StatusSynchronizedMotion.EffectiveLeadingValue.Acceleration		
<TO>.StatusSynchronizedMotion.FunctionFollowingValue.Position	Following value of the synchronous operation function	
<TO>.StatusSynchronizedMotion.FunctionFollowingValue.Velocity		
<TO>.StatusSynchronizedMotion.FunctionFollowingValue.Acceleration		
<TO>.StatusSynchronizedMotion.StatusWord.X0 (MaxVelocityExceeded)	Set to the value "TRUE" when the maximum velocity configured for the following axis is exceeded during synchronous operation.	
<TO>.StatusSynchronizedMotion.StatusWord.X1 (MaxAccelerationExceeded)	Set to the value "TRUE" when the maximum acceleration configured for the following axis is exceeded during synchronous operation.	
<TO>.StatusSynchronizedMotion.StatusWord.X2 (MaxDecelerationExceeded)	Set to the value "TRUE" when the maximum deceleration configured for the following axis is exceeded during synchronous operation.	
<TO>.StatusWord.X21 (Synchronizing)	Set to the value "TRUE" when the synchronous axis synchronizes to a leading value.	
<TO>.StatusWord.X22 (Synchronous)	Set to the value "TRUE" when the synchronous axis is synchronized and moves synchronously to the leading axis.	

Status indicators	
Tag	**Description**
<TO>.ErrorWord.X14 (SynchronousError)	Error during synchronous operation The leading axis specified in the Motion Control instruction was not configured as a possible leading axis.

Camming (S7-1500T) 8

With the Motion Control instruction "MC_CamIn (Page 247)", you start a camming operation between a leading axis and a following axis. You specify the synchronous operation function with a cam (Page 25). To use a cam for camming, the cam must be interpolated. The utilized cam can be scaled on a job-related basis and applied shifted.

You can start synchronous operation when the leading axis is at a standstill or when it is in motion. Synchronous travel begins after synchronization of the following axis.

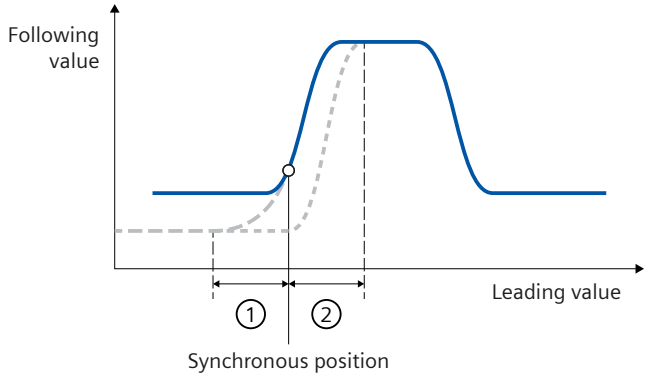

Transfer function:
Following value = f(leading value)

Synchronization in advance

Subsequent synchronization

① Leading value distance with synchronization in advance

② Leading value distance with subsequent synchronization

You have the following options for camming with "MC_CamIn":

- Defining the synchronous operation function (Page 83)
- Interpolate cam with "MC_InterpolateCam" (Page 116)
- Scaling and shifting cam (Page 125)
- Defining application mode of the cam (Page 127)
- Defining direction of synchronization (Page 130)
- Define synchronous position and type of synchronization:
  - Synchronizing following axis in advance using dynamic parameters (Page 133)
  - Synchronizing following axis in advance using leading value distance (Page 134)
  - Synchronize the following axis in advance via the leading value path from the current leading value position (Page 136)
  - Subsequent synchronizing of following axis using leading value distance (Page 139)
  - Subsequent synchronizing of following axis using leading axis value starting at current leading value position (Page 142)
  - Directly set the following axis synchronously (Page 143)
  - Directly set following axis synchronously at end of the cam (Page 144)
- Synchronous travel in camming (Page 146)
- Reading a leading value with "MC_GetCamLeadingValue" (Page 146)

- Reading a following value with "MC_GetCamFollowingValue" (Page 146)
- Specify additive leading value with "MC_LeadingValueAdditive" (Page 165)
- Offset leading value absolute or relative with "MC_PhasingAbsolute" or "MC_PhasingRelative" (Page 147)
- Absolute or relative following value offset with "MC_OffsetAbsolute" or "MC_OffsetRelative" (Page 151)
- Changing synchronous operation function during Runtime (Page 113)
- Set camming to simulation mode with "MC_SynchronizedMotionSimulation" (Page 164)
- Desynchronize following axis with "MC_CamOut" (Page 156)
- Cancel a pending camming with "MC_CamOut" (Page 161)

Also note the dynamic limits of the following axis in camming with "MC_CamIn" (Page 129).

NOTE

Using "DB_ANY" data type with the cam technology object

In Motion Control instructions with technology version ≥ V6.0, direct assignment of the "DB_ANY" data type at the "Cam" parameter leads to an access error. Due to this access error, the CPU changes to the "STOP" state.

Use a data type conversion function for the cam technology object of the type "TO_Cam" or "TO_Cam_10k". A description of the procedure can be found in the section "Parameter transfer for function blocks" of the "S7-1500/S7-1500T Motion Control Overview documentation" (Page 13).

8.1 Configuring the synchronous operation function of the cam (S7-1500T)

8.1.1 Structure and operation of the cam editor (S7-1500T)

You configure a cam technology object (Page 25) using the cam editor.

You create the cam function using a chart a table containing the elements of the curve and the properties of the elements. Transitions are calculated between the individual elements of the curve (e.g. points, lines, polynomials). The curve reflects the path-related dependency between the leading axis (leading values, abscissa in the chart) and following axis (following values, ordinate in the chart).

The cam editor offers you the following support when creating a cam:

- Optimization of the curve form
- Generation of continuous and jerk-free transitions between curve elements
- Velocity-optimized design of the cam

The following figure shows the layout of the editor:

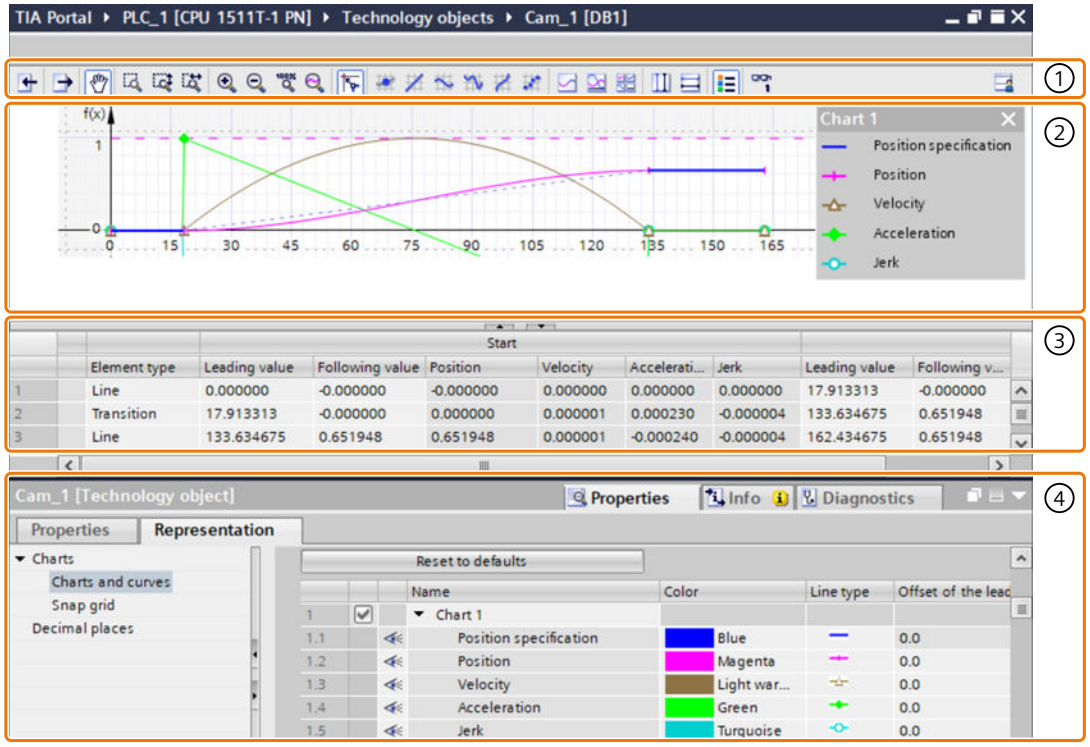

① Toolbar

② Curve diagram
The leading value range (definition range) is displayed on the abscissa (x axis).
The following value range (value range) is displayed on the ordinate (y axis).

①+② Graphical editor

③ Tabular editor

④ Inspector window (properties and display)

Toolbar

You use the toolbar to operate the graphical editor and to import/export cams.

Graphical editor

In the graphical editor, you edit the elements of the curve graphically. The elements can be added, edited and deleted. Up to four charts can be created one above the other with synchronized abscissa. The setpoint curve as well as the curves for the effective position, velocity, acceleration and the jerk can be displayed in the charts.

The definition of the cam starts with the first defined interpolation point or the first segment and ends with the last interpolation point or the last segment. In contrast, the configurable display range of the leading value and the following value is used in the properties of the cam editor (Inspector window) only for display in the graphical editor.

Tabular editor

All elements of the curve are listed in the tabular editor. Existing elements can be edited. New elements can be added.

Inspector window

In the Inspector window, you configure the properties of the curve and of the selected element in the "Properties" tab. You configure the graphic view in the "Display" tab:

- Profile (e.g. leading and following value range, optimization and interpolation of the profile, number of elements used)
- Element (e.g. derivatives, polynomial coefficients, optimization of the element)
- Graphical view (e.g. line type, line color, scaling of the view)

Elements of the curve

The following table shows the elements that can be used to define the curve:

Element	Description
Point	A point assigns a following value to a leading value. Depending on the interpolation type, the curve runs through the point with these coordinates or only uses the point for orientation. The velocity, acceleration and jerk can be defined in this point using the first, second and third derivative.
Point group	A point group combines two or more points into an commonly interpolated element and allows precise interpolation between these points.
Line	A line describes a motion with constant velocity from the start point of the line to the end point. The incline of the line specifies the constant velocity.
Sine	A sine element describes a motion according to the sine function. The sine function can be adjusted with the phase angle in the start point and end point, the period length, the amplitude as well as the oscillation zero point (offset).
Polynomial	A polynomial describes a motion according to a polynomial function of the 7th degree maximum. Polynomials can be defined by entering the boundary conditions or the polynomial coefficients. Optionally, you can configure a trigonometric polynomial component.
Inverse sine (approximated)	An inverse sine describes a motion according to the arcsine function. An inverse sine is approximated using interpolation points of the arcsine function.
Transition	Transitions interpolate the range between two elements. The ranges are automatically interpolated by the controller or using a configurable optimization according to VDI Guideline 2143. Transitions are added automatically.

Additional information

You can find more information about working with the cam editor in FAQ entry 109749820 (https://support.industry.siemens.com/cs/ww/en/view/109749820) in the Siemens Industry Online Support.

8.1.1.1 Structure of the graphical editor (S7-1500T)

The graphical editor is divided into the following areas:

- Toolbar
- Curve diagram

Toolbar

The toolbar at the top of the graphical editor provides you with icons for the following functions:

Symbol	Function	Description
	Importing cam from file	See section "Importing/exporting cam (Page 111)"
	Exporting cam to file	See section "Importing/exporting cam (Page 111)"
	Edit elements/Move view	• Selecting and moving of individual elements • Moving the view using the drag-and-drop feature To switch from any tool to the "Edit elements/Move view" tool, press the <Esc> key.
	Activate zoom selection	Zoom into selected area
	Activate vertical zoom	Vertical zoom into selected area without horizontal scaling Alternative: <Ctrl> +drag to ordinate keeping mouse button pressed
	Activate horizontal zoom	Horizontal zoom into selected area without vertical scaling Alternative: <Ctrl> +drag to abscissa keeping mouse button pressed
	Zoom in	Enlargement of the display Alternative: <Ctrl> + mouse wheel up in curve diagram
	Zoom out	Reduction of the display Alternative: <Ctrl> + mouse wheel down in curve diagram
	Show all	Display of entire definition and value range
	Zoom into curve	Zoom to the following value range of the curve that you selected in the legend of the chart
	Activate snap grid	Alignment of inputs and element end points to the configurable snap grid and to other element end points
	Inserting a point	Adding a point to the chart
	Inserting a line	Adding a line to the chart
	Inserting a sine	Adding a sine element to the chart
	Inserting a polynomial	Adding a polynomial to the chart
	Inserting an inverse sine	Adding an inverse sine to the chart
	Insert point group	Add a point group to the chart

Symbol	Function	Description
	View: A chart with positions	Display of one chart with the following curves of the cam opened in the editor: • Preset curve • Effective position
	View: A chart with all curves	Display of one chart with the following curves of the cam opened in the editor: • Preset curve • Effective position • Effective velocity • Effective acceleration • Effective jerk
	View: Four charts with all curves	Display of four charts with the following curves of the cam opened in the editor: • Chart with setpoint curve and effective position • Chart with effective velocity • Chart with effective acceleration • Chart with effective jerk
	Vertical measuring lines	Displaying and moving of vertical measuring lines Hold down the left mouse button and drag to draw a measuring range. The vertical position of the measuring lines can be moved. The function values for the measuring line positions are displayed in the chart. The difference of the measuring lines is displayed between the measuring lines.
	Horizontal measuring lines	Displaying and moving of horizontal measuring lines Hold down the left mouse button and drag to draw a measuring range. The horizontal position of the measuring lines can be moved. The function values for the measuring line positions are displayed in the chart. The difference of the measuring lines is displayed between the measuring lines.
	Show legend	Showing or hiding of the legend in the curve diagram. To display values for a specific curve on the ordinate, click on the name of the corresponding curve in the legend.
	Read out and display online curve one time	Display of the position values of the cam read back from the CPU (orange) The cam editor reads out the cam that was already loaded into the CPU. The read out "Online curve" is displayed in the graphical editor.

Curve diagram

In the curve diagram, you enter the elements of the curve and adjust the curve by selecting and moving elements.

Chart areas outside of the leading value/following value range configured in "Profile > General (Page 92)" are grayed out. Elements outside the leading value/following value range are displayed with a warning ("Element is outside the definition range").

You can display various curves (position, velocity, acceleration and jerk) one above the other in up to four charts by configuring the graphical view accordingly. When multiple charts are displayed, you can adapt the graphs to match the separator lines.

The view can be zoomed in the manual mode by pressing <Ctrl > + Mouse wheel and <Ctrl > + while pressing the mouse button on the abscissa/ordinate.

The editor shows messages for checking the entered curve via warning triangles . The tooltip of the waring triangle shows the message text. Configure the checking of the curve in the "Check (Page 93)" configuration window.

Display of the online curve

When you click the icon, the cam editor reads the data from the technology object data block and displays the curve in the graphical editor:

Cam status	Interpolation status	Description
Data not modified (CamDataChanged = 0)	Not interpolated (Interpolated = 0)	Only the points and segments of the cam are displayed.
	Interpolated (Interpolated = 1)	The interpolated cam is displayed.
Data modified (CamDataChanged = 1)	Not interpolated (Interpolated = 0)	Only the points and segments of the cam are displayed.
	Interpolated (Interpolated = 1)	The interpolated cam as well as changed points and segments are displayed.

8.1.1.2 Shortcut menu in the graphical editor (S7-1500T)

Use the shortcut menu in the graphical editor to call up the following functions:

Function	Description
Show all	Displaying the entire definition range and value range
Zoom into curve	Displaying the curve selected in the legend of the chart
Zoom in	Enlargement of the display
Zoom out	Reduction of the display
Open charts and curves	Opening of the "Charts and curves (Page 94)" dialog
Cut	Removing the selected elements and copying them to the clipboard
Copy	Copying of the selected elements to the clipboard
Insert	Pasting of the elements from the clipboard to the last element
Delete	Deletion of the selected elements Transitions to existing elements are also deleted.
Insert special	Open the "Insert elements (Page 106)" dialog
Group points	Combine the selected points into a group of points The entry is displayed under the following conditions: • Only points are selected in the graphic/tabular editor. • There are no other elements between the selected points.
Dissolve point group	Ungrouping the selected point group into individual points
Show/hide measuring point labels	Showing or hiding the measuring points The entry is displayed under the following conditions: • Measuring lines are displayed. • Measuring points are hidden/shown.

Function	Description
Move	Open the "Move elements (Page 107)" dialog
Scale	Open the "Scale elements (Page 108)" dialog

8.1.1.3 Structure of the tabular editor (S7-1500T)

The tabular editor shows all elements of the curve, sorted by their leading values. The elements can be adjusted. New elements can be added.

The following properties are displayed in the corresponding column for each element of the curve:

Column/Property	Description
First column	Sequential number of the element
Second column	Display of calculation problems that might occur with warning triangle ⚠ The alarm text is displayed in the tooltip of the warning triangle.
Element type	• Display/change of element type • Adding elements Possible element types: • Point • Point group • Line • Sine • Polynomial • Inverse sine • Transition
Start	Parameter values at start point of the element
Leading value	Leading values at start point of the element
Following value	Following values at start point of the element
Position[1)]	Calculated effective position at start point of the element
Velocity[1)]	Calculated effective velocity at start point of the element
Acceleration[1)]	Calculated effective acceleration at start point of the element
Jerk[1)]	Calculated effective jerk at start point of the element
End	Parameter values at end point of the element
Leading value	Leading values at end point of the element
Following value	Following values at end point of the element
Position[1)]	Calculated effective position at end point of the element
Velocity[1)]	Calculated effective velocity at end point of the element
Acceleration[1)]	Calculated effective acceleration at end point of the element
Jerk[1)]	Calculated effective jerk at end point of the element
Comment	Optional comment for element.

1) Displayed according to the configuration in "Properties (Inspector window) > Graphical view > Charts and curves".

8.1.1.4 Shortcut menu in the tabular editor (S7-1500T)

Use the shortcut menu in the tabular editor to call up the following functions:

Function	Description
Insert row above	Insert a table row/element before the selected row/element If no transition exists before the element, the selected element and the adjoining elements are changed.
Insert row below	Insert a table row/element after the selected row/element If no transition exists after the element, the selected element and the adjoining elements are changed.
Cut	Removing the selected elements and copying them to the clipboard
Copy	Copying of the selected elements to the clipboard
Insert	Pasting of the elements from the clipboard to the last element
Delete	Deletion of the selected elements Transitions to existing elements are also deleted.
Insert special	Open the "Insert elements (Page 106)" dialog
Group points	Combine the selected points into a group of points The entry is displayed under the following conditions: • Only points are selected in the graphic/tabular editor. • There are no other elements between the selected points.
Dissolve point group	Ungroups the selected point group into individual points
Move	Open the "Move elements (Page 107)" dialog
Scale	Open the "Scale elements (Page 108)" dialog

8.1.1.5 Operating the cam editor (S7-1500T)

The procedure described here shows the basic operation of the cam editor. This procedure serves as a recommendation.
The basic operation can include the follow tasks:

- Adapting defaults
- Creating and adapting the curve
- Interpolation/optimization of the transitions (Page 122)

Adapting defaults

To adjust the leading and following value range of the cam profile as well as the graphical view, follow these steps:

1. In the properties (Inspector window), open the "Profile > General (Page 92)" configuration window.
2. Configure the leading value range and the following value range of the curve definition.
   The graphical view is automatically adapted to the inputs.

3. In the area navigation of the Inspector window, open the "Display (Page 91)" tab.
4. Configure the following configuration windows:
   - The display of the charts and curves
   - The grid spacing for aligning inputs in the graphical editor
   - The decimal places displayed in the cam editor.

Creating and adapting the curve

To create and adapt the curve, follow these steps:

1. Use the graphical editor and/or the tabular editor to add the elements of the cam:
   - On the toolbar, click the icon for inserting the corresponding element. Place the element at the required position in the graphical editor.
   - Use <Add> to insert the corresponding elements in the "Element type" column of the tabular editor. Adjust the position of the elements using the start and end values.

   Transitions between the elements are added automatically.
2. To edit an element, select it in the graphical or tabular editor.

   The element is highlighted in the graphical and in the tabular editor. The "Element > Parameter" configuration window is displayed in the properties (Inspector window), or in case of a transition, "Element > Characteristic".
3. The elements can be adjusted as follows:
   - Move the element or the drag handles of the element in the graphical editor.
   - Adjust the start and end values in the tabular editor.
   - Configure additional element-specific parameters in the properties (Inspector window) in the "Element > Parameter" configuration window.
   - Set the interpolation of the transitions with the properties (Inspector window).

The number of elements used is displayed in the properties (Inspector window) in the "Profile > Statistics (Page 108)" properties window.

See also

System interpolation (Page 119)

Configuring transitions (Page 116)

Configuration charts - Charts and curves (Page 94)

Interpolate cam with "MC_InterpolateCam" (Page 124)

8.1.2 Configure the profile and display of the cam (S7-1500T)

8.1.2.1 Properties and display in the inspector window (S7-1500T)

You configure further element-specific parameters in the inspector window in the following tabs:

- The parameters for the profile of the cam as well as for the elements are displayed in the "properties" tab. The corresponding parameters are displayed depending on the selected element:
  - If no element of the curve is selected, only the settings for the profile of the cam are displayed.
  - If an element of the curve is selected, the parameters of the element are additionally displayed.
- In the "Display" tab you can configure the graphic view of the charts and curves.

8.1.2.2 Configuration of profile - General (S7-1500T)

Configure the display range of the graphical editor in the "General" configuration window.

The inputs of the leading value range and following value range only effect the display in the graphical editor. The cam is interpolated in the definition range between the following values:

- First defined interpolation point/start of the first segment of the cam (<TO>.StatusCam.StartLeadingValue)
- Last defined interpolation point/end of the last segment of the cam (<TO>.StatusCam.EndLeadingValue)

Leading value display range

In this area, configure the leading value display range in the graphical editor:

Parameters	Description
Start	In this field you configure the initial value of the display range of the leading value.
End	In this field you configure the full-scale value of the display range of the leading value.

Following value display range

In this area, you can configure the limitation of the following value range in the graphical editor:

Parameters	Description
Minimum	In this field you configure the lowest permissible value for the following value display range.
Maximum	In this field you configure the greatest permissible value for the following value display range.

8.1.2.3 Configuration of profile - Effective runtime curves (S7-1500T)

Configure the values for the leading axis and following axis that are applied to the effective curve In the "Effective runtime curves" configuration window. The runtime emulation calculates the effective curve with these applied values and displays the curve in the graphical editor with the applied limits.

The inputs are not downloaded into the CPU. This means the cam is interpolated without these inputs. You can use these applied values to test and visualize how the cam behaves during operation, for example, when entering a scaling at an "MC_CamIn" job.

Settings of the leading axis

Configure the calculation and display of the curve on the leading value end in this area:

Parameters	Description
Copy from axis	Using the button and the "Copy leading value settings of axis" dialog, select an axis whose maximum velocity is applied as the velocity for the leading axis.
Scaling factor	Configure a leading value-side scaling factor in this field. This visualizes a scaled curve. You enter a scaling during runtime with an "MC_CamIn" job.
Unit of measure	In the selection list, select the unit of measure for the leading value.
Unit of measure for the first derivative	In the selection list, select the unit of measure for the first derivative of the leading value.
Velocity	Configure the velocity of the leading axis applied for the runtime emulation of the curve in this field.

Settings of the following axis

Configure the calculation and display of the curve on the following value side in this area:

Parameters	Description
Copy from axis	Using the button and the "Copy following value settings of axis" dialog, select an axis whose maximum dynamic values are applied as the limits to be checked during calculation and display of the curve.
Scaling factor	Configure a following value-side scaling factor in this field. This visualizes a scaled curve. You enter a scaling during runtime with an "MC_CamIn" job.
Unit of measure	In the selection list, select the unit of measure for the following value.
Unit of measure for the first derivative	In the selection list, select the unit of measure for the first derivative of the following value.
Maximum velocity	Configure the maximum velocity for the following axis in this field.
Maximum acceleration	Configure the maximum acceleration for the following axis in this field.
Maximum jerk	Configure the maximum jerk for the following axis in this field.

8.1.2.4 Configuration of profile - Check (S7-1500T)

In the "Verification" configuration window, you configure which criteria the cam editor checks when entering the curve. When you activate a check, the graphical and the tabular editor display corresponding messages via a warning triangle on the element. Use the tooltip at the warning triangle to display the message text.

NOTE

Use the checking options for the final check of the cam and enable all checks before completing the cam. Make any required adjustments to the cam profile.

Examination of limit violations

Configure the checks for compliance with the configured limits in this area:

Check/Element	Description
Check curve definition of the leading and following value ranges	Select this check box to have the cam editor check the curve accordingly.
Check adherence to the maximum values of the derivatives of the effective runtime curve	Select this check box to have the cam editor check the curve accordingly.

Verification of VDI suitability

Select the "Check the suitability of transitions in accordance with VDI" check box to have the cam editor check the VDI suitability of the curve.
The cam editor checks the following with this:

- Support of the transition classification of the currently selected VDI transition
- Boundary value adjustment according to VDI

Verification of continuity

In the "Required continuity" list, select which parameter the cam editor checks for continuity:

- Position
- Velocity
- Acceleration
- Jerk

If a function or a derivative is discontinuous, all higher derivatives are also discontinuous.

8.1.2.5 Configuration charts - Charts and curves (S7-1500T)

In the "Charts and curves" configuration window, configure the display of the graphical editor.

"Reset to defaults" button

Use this button to reset all settings of the view of charts and curves to the default settings.

Configuration table

Configure the display of the graphical editor in the table:

Column	Description
Show	Displaying/hiding of charts 1 to 4
Visible	Displaying/hiding of curves in the chart You can show or hide online curves already offline. The curve becomes visible when you have shown the curve, established an online connection and read out the online curve.
Name	Name of chart or curve New curves can be added. Existing curves can be removed. Curves of other cams can also be displayed. The name of the other cam is also displayed in the table and in the legend of the chart. A curve can be inserted multiple times in a chart, e.g. in order to display it with different scalings.
Color	Line color of the curve
Line type	Line type of the curve
Offset of the leading values[1)]	Movement of the curve on the abscissa
Multiplier for leading values[1)]	Scaling of abscissa
Offset of the following values[1)]	Movement of the curve on the ordinate
Multiplier for following values[1)]	Scaling of ordinate

1) Only affects the display of the curve in the chart. You specify the scaling and shifting of the cam during camming in the Motion Control instruction "MC_CamIn".

8.1.2.6 Configuration charts - Snap grid (S7-1500T)

In the "Snap grid" configuration window, you configure the grid spacing for aligning inputs to the grid in the graphical editor. When "Snap" is activated, inputs and element end points are aligned to this grid and to other element end points.

Snap grid spacing

In this area, configure the grid spacing of the snap grid:

Parameter	Description
Grid spacing leading value	Configure the grid spacing on the abscissa (leading values) in this field.

Parameter	Description
Grid spacing following value	Configure the grid spacing on the ordinate (following values) in this field.

8.1.2.7 Configuration - Decimal places (S7-1500T)

In the "Decimal places" configuration window, you configure how many decimal places are used to represent the values in the graphical and tabular editor as well as in the configuration windows. The values are rounded in the displays. The settings do not affect the calculation of the curves. The curves are calculated with higher accuracy regardless of the settings.

Displayed decimal places

In this area, configure the displayed decimal places:

Parameter	Description
Tabular editor and configuration window	In this field, configure the number of decimal places for displaying values in the tabular editor and in the configuration windows.
Graphical editor	In this field, configure the number of decimal places for displaying values in the graphical editor.

8.1.3 Inserting and configuring cam elements (S7-1500T)

8.1.3.1 Inserting and configuring a point (S7-1500T)

A point assigns a following value to a leading value. The curve runs through the point with these coordinates.
By means of the first, second and third derivatives, the velocity, acceleration and jerk can be defined in this point. The derivative are only taken into consideration during VDI-based optimization of transitions of the point to other elements.

Inserting a point

To add a point to the curve, follow these steps:

1. On the toolbar, click the "Insert point" icon.
2. In Chart 1, click on the desired position.
   The point is inserted. The coordinates are displayed for the point. The tabular editor and the view of the properties (Inspector window) are updated. A transition to any element is inserted automatically.

Moving a point

To move a point in the graphical editor, follow these steps:

1. On the toolbar, click the icon "Edit elements/Move view".
2. Select the point in chart 1.
3. Use the drag-and-drop feature to move the point to the desired position.

Adapting parameters

The parameters of the point can be adjusted in the tabular editor as well as in the inspector window under "Properties > Element > Parameter".
Configure the parameters of the selected point in this area:

Parameter/Option	Description
Leading value of the point	
Leading value	In this field, configure the leading value of the point (value in the definition area).
Following values of the point	
Following value	Configure the following value of the point (value in the range of the function) in this field.
Use first derivative	By selecting the check box, you can specify the first derivative at the selected point and include it in the interpolation of the cam.
First derivative	Configure the value of the first derivative in the selected point in this field.
Use second derivative	By selecting the check box, you can specify the second derivative at the selected point and include it in the interpolation of the cam.
Second derivative	Configure the value of the second derivative in the selected point in this field.
Use third derivative	By selecting the check box, you can specify the third derivative at the selected point and include it in the interpolation of the cam.
Third derivative	Configure the value of the third derivative in the selected point in this field.

The derivative are only taken into consideration during VDI-based optimization of transitions of the point to other elements.

8.1.3.2 Inserting and configuring a point group (S7-1500T)

A point group combines two or more points into a commonly interpolated element and allows precise interpolation between the points.

Insert point group

To add a point group to the curve, proceed as follows:

1. On the toolbar, click the "Insert point group" icon.
2. In Chart 1, click on the desired position at which you want to insert the point group.
   The point group is inserted. The coordinates of the start point and the end point are displayed at the point group. The tabular editor and the view of the properties (Inspector window) are updated. If a different element already exists, a transition to the existing element is automatically inserted.

Adapt point group

To adapt a point group in the graphical editor, proceed as follows:

1. On the toolbar, click the icon "Edit elements/Move view".
2. Select the point group in chart 1.
   The point group is highlighted graphically with drag handles. The following drag handles are displayed:
   – Start point of the point group
   – End point of the point group
3. Use the drag-and-drop feature to move the handles or the whole point group to the desired position.
   If further interpolation points are configured between the start point and the end point in the point group, the cam editor handles the interpolation points as follows:
   – Definition type of the leading value "Relative to segment"
     The interpolation points are shifted relative to the start and end points.
   – Definition type of the leading value "Absolute in the profile"
     The interpolation points are not moved.

Adapting parameters

You can adjust the parameters of the point group in the graphical editor, in the tabular editor as well as in the inspector window under "Properties > Element > Parameter".
Configure the parameters of the selected point group in this area:

Parameter/Option	Description
Leading values of the point group	
Start	In this field, configure the start point of the point group in the leading value range (definition area).
End	In this field, configure the end point of the point group in the leading value area (definition area).
Interpolation points	

Parameter/Option	Description
Definition type of the leading values	In the drop-down list, select how the leading values of the interpolation points are specified: • Relative to segment You specify the leading values of the interpolation points relative to the group of points from 0.0 to 1.0. The value 0.0 corresponds to the beginning of the point group. The value 1.0 corresponds to the end of the point group. • Absolute in the profile You specify the leading values of the interpolation points as absolute values.
Definition type of the following values	In the drop-down list, select how the following values of the interpolation points are specified: • Relative to segment You specify the following values of the interpolation points relative to the following value range of the point group from 0.0 to 1.0. The value 0.0 corresponds to the configured minimum following value of the point group. The value 1.0 corresponds to the configured maximum following value of the point group. • Absolute in the profile You specify the following values of the interpolation points as absolute values.
Minimum following value	In this field, configure the minimum following value for the point group in the following value range.
Maximum following value	In this field, configure the maximum following value of the point group in the following value range (value range).
	Use this "Insert interpolation point" icon to add an interpolation point to the point group.
Interpolation points	This table shows the configured interpolation points sorted by increasing leading value. Add interpolation points using the icon. Delete interpolation points by marking a row and pressing the <Delete> key. If you delete all points except one, the element type is changed from "Point group" to "Point".
Leading value	In this field, configure the leading value of the interpolation point (value in the definition area).
Following value	In this field, configure the following value of the interpolation point (value in the value range).
Interpolation	
Interpolation type	In the drop-down list, select the interpolation type to be used for interpolating the point group: • Interpolation with cubic splines • Interpolation with Bézier splines
Approximation	
Mapping method	Select the mapping method in the drop-down list: • Point approximation • Segment approximation
Number of interpolation points	Configure the number of interpolation points for the point approximation in this field.

Parameter/Option	Description
Maximum following value tolerance	In this field, enter the maximum permissible deviation (absolute) of the approximation from the interpolation points. If the configured value is exceeded, a warning is displayed in the graphical editor at the point group.

8.1.3.3 Inserting and configuring the line (S7-1500T)

A line describes a motion with constant velocity from the start point to the end point of the line. The incline of the line specifies the constant velocity.

Inserting a line

To add a line to the curve, follow these steps:

1. On the toolbar, click the "Insert line" icon.
2. Use the drag-and-drop feature in chart 1 to draw the line from the start position to the end position.
   The straight line is inserted. The coordinates of the start point and end point are displayed for the line. The tabular editor and the view of the properties (Inspector window) are updated. A transition to any element is inserted automatically.

Moving a line

To move a line in the graphical editor, follow these steps:

1. On the toolbar, click the icon "Edit elements/Move view".
2. Select the line in chart 1.
   The line is graphically highlighted with drag handles. The following drag handles are displayed:
   – Start point of the line
   – End point of the line
3. Use the drag-and-drop feature to move the handles or the entire line to the desired position.

Adapting parameters

The parameters of the line can be adjusted in the graphical editor, in the tabular editor as well as in the inspector window under "Properties > Element > Parameter".

Configure the parameters of the selected line in this area:

Parameters	Description
Leading values of the line	
Start	Configure the start point of the line in the leading value range (definition range) in this field.
End	Configure the end point of the line in the leading value range (definition range) in this field.

Parameters	Description
Following values of the line	
Definition by	In the selection list, select the parameters to be used to define the line: • Following values at start and end • Following value at the start and incline • Incline and following value at end The corresponding parameters are displayed based on the selection.
Start	Configure the start point of the line in the following value range (value range) in this field.
End	Configure the end point of the line in the following value range (value range) in this field.
Incline	Configure the incline of the line in this field.

8.1.3.4 Inserting and configuring a sine (S7-1500T)

A sine element describes a motion according to the sine function. The sine function can be adjusted with the phase angle in the start point and end point, the period length, the amplitude as well as the oscillation zero point (offset).

Inserting a sine

To add a sine to the curve, follow these steps:

1. On the toolbar, click the "Insert sine" icon .
2. In Chart 1, click on the position desired position. The mouse pointer points to the start position of the sine here.
   The sine is inserted. The coordinates of the start point and end point are displayed for the sine. The tabular editor and the view of the properties (Inspector window) are updated. A transition to any element is inserted automatically.

Adjusting a sine

To adjust a sine in the graphical editor, follow these steps:

1. On the toolbar, click the icon "Edit elements/Move view".
2. Select the sine in chart 1.
   The sine is graphically highlighted with drag handles and guide lines for the zero line and the amplitude. The following drag handles are displayed:
   – Leading value/shift at left/right boundary
     These drag handles can also be used to adjust the inclination of an inclined sine.
   – Leading value at left/right boundary
   – Phase at left/right boundary
   – Amplitude
3. Use the drag-and-drop feature to move the handles or the entire sine to the desired position.

Adapting parameters

The parameters of the sine can be adjusted in the graphical editor, in the tabular editor as well as in the inspector window under "Properties > Element > Parameter".
Configure the parameters of the selected sine element in this area:

Parameters	Description
Leading values of the sine	
Start	Configure the start point of the sine element in the leading value range (definition range) in this field.
End	Configure the end point of the sine element in the leading value range (definition range) in this field.
Trigonometric parameters	
Amplitude	Configure the amplitude of the sine element in this field.
Definition by	In the drop-down list, select how the sine element is defined: • Phase at start and at end • Phase at start and period length • Phase at start and frequency • Period length and phase at end • Frequency and phase at end The corresponding parameters are displayed based on the selection.
Phase angle at start	Configure the phase angle at the start of the sine element in this field.
Phase angle at end	Configure the phase angle at the end of the sine element in this field.
Period length	Configure the period length of the sine element in this field.
Frequency	Configure the frequency of the sine element in this field.
Extended parameters	
Segment type	Select the variant of the sine element in the drop-down list. • Sine • Inclined sine If you have configured an inclined sine, additional orientation lines are displayed in the graphical editor for the amplitude and center position. The corresponding parameters are displayed based on the selection.
Offset	Configure the oscillation midpoint of the sine element in this field.
Definition of inclination as a function of:	In the drop-down list, select how the inclined sine element is defined: • Offset at start and end • Offset at start and inclination • Inclination and offset at end The corresponding parameters are displayed based on the selection.
Offset at start	Configure the center of oscillation at the start of the sine element in this field.
Offset at end	Configure the center of oscillation at the end of the sine element in this field.
Inclination	Configure the inclination of the sine element in this field.

8.1.3.5 Inserting and configuring a polynomial (S7-1500T)

A polynomial describes a motion according to a polynomial function of the 7th degree maximum. Polynomials can be defined by entering the boundary conditions or the polynomial coefficients. Optionally, you can configure a trigonometric polynomial component.

Inserting a polynomial

To add a polynomial to the curve, follow these steps:

1. On the toolbar, click the "Insert polynomial" icon.
2. In Chart 1, click on the position desired position. In so doing, the mouse pointer points to the start position of the polynomial.
   The polynomial is inserted. The coordinates of the start point and end point are displayed for the polynomial. The tabular editor and the view of the properties (Inspector window) are updated. If a different element already exists, a transition to the existing element is automatically inserted.

Adjusting a polynomial

To adjust a polynomial in the graphical editor, follow these steps:

1. On the toolbar, click the icon "Edit elements/Move view".
2. Select the polynomial in chart 1.
   The polynomial is graphically highlighted with drag handles. The following drag handles are displayed:
   – Leading value/following value at left/right boundary
   – Position of point of inflection (lambda: relative to the element or absolute in the profile)
3. Use the drag-and-drop feature to moves sizing handles or the entire polynomial to the required position.

Adapting parameters

You can adjust the parameters of the polynomial in the graphical editor, in the tabular editor as well as in the inspector window under "Properties > Element > Parameter".

Configure the parameters of the selected polynomial in this area:

Parameters	Description
Leading values of the polynomial	
Start	Configure the start point of the polynomial in the leading value range (definition range) in this field.
End	Configure the end point of the polynomial in the leading value range (definition range) in this field.
Polynomial parameters	

Parameters	Description
Definition by	In the selection list, select how the polynomial is defined: • Coefficients • Boundary values The corresponding parameters are displayed based on the selection.
Coefficients	Configure the coefficients of the 6th degree polynomial function in these fields: $P(x) = a_6x^6 + a_5x^5 + a_4x^4 + a_3x^3 + a_2x^2 + a_1x + a_0$ The coefficients are shown in scientific notation, e.g. "9.6450617283e-11".
Following value - Left boundary value	Configure the following value at the start of the polynomial in this field.
Following value - Right boundary value	Configure the following value at the end of the polynomial in this field.
Use first derivative	Select the check box to specify the first derivative (velocity) in the left/right boundary value of the polynomial and to include it in the interpolation of the cam.
First derivative - left boundary value	Configure the first derivative (velocity) for the following value at the start of the polynomial in this field.
First derivative - right boundary value	Configure the first derivative (velocity) for the following value at the end of the polynomial in this field.
Use second derivative	Select the check box to specify the second derivative (acceleration) in the left/right boundary value of the polynomial and to include it in the interpolation of the cam.
Second derivative - left boundary value	Configure the second derivative (acceleration) for the following value at the start of the polynomial in this field.
Second derivative - right boundary value	Configure the second derivative (acceleration) for the following value at the end of the polynomial in this field.
Use third derivative	Select the check box to specify the third derivative (jerk) in the left/right boundary value of the polynomial and to include it in the interpolation of the cam.
Third derivative - left boundary value	Configure the third derivative (jerk) for the following value at the start of the polynomial in this field.
Third derivative - right boundary value	Configure the third derivative (jerk) for the following value at the end of the polynomial in this field.
Lambda	In the selection list, select how the turning point of the polynomial is specified in the "Lambda position" field: • No lambda Do not enter any value. The position of the point of inflection is calculated automatically. • Relative to the element You specify the leading value of the turning point relative to the polynomial from 0.0 to 1.0. The value 0.0 corresponds to the beginning of the polynomial. The value 1.0 corresponds to the end of the polynomial. • Absolute in the profile You specify the leading value of the point of inflection as an absolute value.
	In this field, configure the leading value of the point of inflection for the polynomial according to the selection in the selection list.
Extended parameters	

Parameters	Description
Segment type	In the selection list, select whether or not the polynomial is to have a trigonometric component. When "Polynomial with trigonometric portion" is selected, the corresponding trigonometric parameters are displayed, as they are with sine. When a sine element is converted to a polynomial, the sine element is configured as a polynomial with trigonometric portion. The shape of the element is retained. You have the option to define the trigonometric portion of the polynomial using the following formula: $Y(x) = a_6x^6 + a_5x^5 + a_4x^4 + a_3x^3 + a_2x^2 + a_1x + a_0 + b_0\sin((b_1x) + b_2)$ $a_{0...6}$: Coefficient of order 0 to 6 of the polynomial b_0: Amplitude of the trigonometric portion b_1: Period of the trigonometric portion b_2: Phase offset of the trigonometric portion
Amplitude	Configure the amplitude of the trigonometric component in this field.
Definition by	In the selection list, select how the trigonometric component is defined: • Phase at start and at end • Phase at start and period length • Phase at start and frequency • Period length and phase at end • Frequency and phase at end The corresponding parameters are displayed based on the selection.
Phase angle at start	Configure the phase angle at the start of the trigonometric component in this field.
Phase angle at end	Configure the phase angle at the end of the trigonometric component in this field.
Period length	Configure the period length of the trigonometric component in this field.
Frequency	Configure the frequency of the trigonometric component in this field.

8.1.3.6 Inserting and configuring an inverse sine (S7-1500T)

An inverse sine describes a motion according to the arcsine function. The arcsine function is the inverse function of the sine function. An inverse sine is approximated using interpolation points of the arcsine function.
The inverse sine is defined within the definition range [-1, 1]. The inverse sine can be calculated for the entire definition range or a restricted definition range of the arcsine function.

Inserting an inverse sine

To add an inverse sine to the curve, follow these steps:

1. On the toolbar, click the "Insert inverse sine" icon.
2. In Chart 1, click on the position desired position. In so doing, the mouse pointer points to the start position of the inverse sine.
   The sine is inserted. The coordinates are displayed for the point. The tabular editor and the view of the properties (Inspector window) are updated. A transition to any element is inserted automatically.

Adjusting an inverse sine

To adjust an inverse sine in the graphical editor, follow these steps:

1. On the toolbar, click the icon "Edit elements/Move view".
2. Select the inverse sine in chart 1.
   The inverse sine is graphically highlighted with drag handles. The following drag handles are displayed:
   – Start point of the inverse sine
   – End point of the inverse sine
3. Use the drag-and-drop feature to move the handles or the entire inverse sine to the desired position.

Adapting parameters

The parameters of the inverse sine can be adjusted in the graphical editor, in the tabular editor as well as in the inspector window under "Properties > Element > Parameter".
Configure the parameters of the selected inverse sine in this area:

Parameters	Description
Leading values of the inverse sine	
Start	Configure the start point of the inverse sine in the leading value range (definition range) in this field.
End	Configure the end point of the inverse sine in the leading value range (definition range) in this field.
Following values of the inverse sine	
Minimum	Configure the minimum value of the inverse sine in the following value range (value range) in this field.
Maximum	Configure the maximum value of the inverse sine in the following value range (value range) in this field.
Definition range	
Not mirrored/mirrored	Select whether or not the inverse sine is to be mirrored about the abscissa.
Start	Configure the start point in the definition range of the arcsine function that is to be used in this field.
End	Configure the end point in the definition range of the arcsine function that is to be used in this field.
Approximation	
Number of interpolation points	Configure the number of interpolation points for the approximation in this field.
Maximum following value tolerance	In this field, specify the maximum permitted deviation (absolute) of the approximation from the arcsine function. If the configured value is exceeded, a warning is displayed in the graphical editor for the arcsine element.

8.1.3.7 Inserting elements from the clipboard (S7-1500T)

Insert element after the last element

To insert an element from the clipboard after the last element, follow these steps:

1. Open the shortcut menu in graphic or tabular editor.
2. Select "Insert" from the shortcut menu entry.
   The element from the clipboard is inserted after the last element.

Insert element using insert mode

To insert an element from the clipboard using a selected insert mode, follow these steps:

1. If necessary, select the elements to be overwritten.
2. Open the shortcut menu in graphic or tabular editor.
3. Select the "Insert special" entry from the shortcut menu.
   The "Insert elements" dialog opens.
4. In the "Insert mode" selection list, select the desired insert mode:

Insert mode	Description
Overwrite from the end to the left	You overwrite the selected elements with the elements from the clipboard starting from the end in the direction of smaller leading values. The end of the inserted elements then lies at the end of the selected elements. Elements that are located in the leading value range of the elements in the clipboard are overwritten or truncated.
Overwrite from the start to the right	You overwrite the selected elements with the elements from the clipboard starting from the start in the direction of bigger leading values. The start of the inserted elements then lies at the start of the selected elements. Elements that are located in the leading value range of the elements in the clipboard are overwritten or truncated.
Overwrite from the middle	Starting from the center, you overwrite the selected elements with the elements from the clipboard. The center of the inserted elements then lies at the center of the selected elements. Elements that are located in the leading value range of the elements in the clipboard are overwritten or truncated.
Scale selection to the leading value range	The elements in the clipboard are scaled to the leading value range of selected elements. The start and end of the inserted elements then lie at the start and end of the selected elements.
Apply leading values from the clipboard	The elements in the clipboard are inserted with the leading values at the start and end. Elements that are located in the leading value range of the elements in the clipboard are overwritten or truncated.

5. Click "OK".
   The element from the clipboard is inserted using the selected insert mode.

8.1.3.8 Move elements (S7-1500T)

To move an element, follow these steps:

1. In the graphical or tabular editor, open the shortcut menu of the element that is to be moved.
2. Select the "Move" shortcut menu entry.
   The "Move elements" dialog opens.
3. In the "Horizontal distance" field, enter the shift of the selection on the abscissa (x-axis).
4. In the "Vertical distance" field, enter the shift of the selection on the ordinate (y-axis).
5. Click "OK".
   The element is moved the entered distance.

8.1.3.9 Scale elements (S7-1500T)

To scale an element, follow these steps:

1. In the graphical or tabular editor, open the shortcut menu of the element that is to be scaled.
2. Select the "Scale" shortcut menu entry.
   The "Scale elements" dialog opens.
3. In the "Leading value range" field, enter the scaling length (leading value side) to which you want to scale the selection.
4. Select the direction of scaling in the "Anchor point" selection list:

Direc-tion	Description
Links	The selection is adjusted by the left boundary point to the scaling length.
Center	The selection is adjusted by the center point to the scaling length.
Right	The selection is adjusted by the right boundary point to the scaling length.

5. Click "OK".
   The element is scaled using the selected parameter values.

8.1.3.10 Deleting elements (S7-1500T)

To delete an element in the graphical editor, follow these steps:

1. Select the element that is to be deleted.
2. Press the <Del> key.
   The element is deleted. The graphical editor and the view of the properties (Inspector window) are updated. A transition to any element present is also deleted.

8.1.3.11 Show elements used (S7-1500T)

The "Statistics" properties window shows an overview of the number of elements of the cam, as well as the minimum and maximum values of the effective curves for the slave value and the derivatives.

Used elements

In the statistics, a distinction is made between points and segments:

- Point
  A following value/leading value coordinate on the cam through which the curve runs
- Segments
  All elements and transitions that are calculated by a 6th degree polynomial with a trigonometric component

The "Elements used" area shows the number of curve elements used:

Parameters	Description
Points	This field shows the number of used points of the cam. A cam of the type "TO_Cam" consists of a maximum of 1000 points. A cam of the type "TO_Cam_10k" consists of a maximum of 10 000 points.
Segments	This field shows the number of used segments of the cam. A cam consists of a maximum of 50 segments.

The use of points and segments depends on the compilation and configuration of the elements.

If an element or a transition is defined via a point or several interpolation points, the number of specified interpolation points determines the number of points used. The following elements or transitions are calculated using interpolation points:

- "Point" element
- "Inverse sine" element
- "Point group" element with "Point approximation" mapping option
- "Double-harmonic transition" motion rule according to VDI Guideline

All other elements and transitions according to the VDI guideline are defined using 6th degree polynomials with a trigonometric component and thus count as segments in the statistics.

The following table shows the use of points and segments per element:

Element	Number of used points	Number of used segments
Point	1	0
Point at a transition with VDI-based optimization	0	0
Point group with point approximation mapping method	Number of interpolation points configured. ("Properties (Inspector window) > Element > Parameter > Approximation > Number of interpolation points") Default setting: 32	0
Point group with segment approximation mapping method	0	Number of interpolation points configured - 1
Line	0	1
Sine	0	1
Polynomial		
< of the 7th degree	0	1
of the 7th degree	0	2

Lambda = turning point of the curve

Element	Number of used points	Number of used segments
Inverse sine	Number of interpolation points configured. ("Properties (Inspector window) > Element > Parameter > Approximation > Number of interpolation points") Default setting: 32	0
Inverse sine to the right of a transition with VDI-based optimization	Number of interpolation points configured - 1	0
Transition with system interpolation	0	0
Transition with VDI-based optimization		
Motion rule		
Sine	0	1
Sine with relative Lambda ≠ 0.5	0	2
Inclined sine	0	1
Inclined sine with relative Lambda ≠ 0.5	0	2
Polynomial	0	1
Sinus with relative Lambda ≠ 0.5	0	2
Modified acceleration trapezoid		
Motion task		
Dwell-in-reverse	0	5
Reverse-in-dwell	0	5
Dwell-in-dwell	0	6
Modified sine		
Motion task		
Dwell-in-dwell	0	3
Constant velocity-in-constant velocity	0	4
Constant-velocity-in-dwell	0	4
Dwell-in-constant velocity	0	4
Sine line combination	0	3
Harmonic combination	0	3
Double-harmonic transition	Number of interpolation points configured. ("Properties (Inspector window) > Element > Parameter > Approximation > Number of interpolation points") Default setting: 32	0
Quadratic parabola	0	2

Lambda = turning point of the curve

Value ranges

This area shows the minimum and maximum values of the effective curves for the following value and the derivatives.

Boundary conditions

The following boundary conditions apply to the input and use of points and segments:

- **Points**
  With points with the same leading values, the point that you have entered last or which is listed in the tabular editor is active.
- **Segments**
  - Gaps between segments are filled with a transition segment.
  - For gaps in the leading value range of less than 1.0E-4, segment end points and segment start points are pulled together.
  - For gaps in the leading value range greater than 1.0E-4, a new transition segment is inserted.
  - For overlaps, the new segment is inserted from the start point and used completely. When the previous segment is defined in excess of the new segment, the previous segment continues to be used after the end point of the new segment.
- **Interpolation points and segments** (mixed cams)
  The segment is used when points are defined in the same range.

8.1.4 Importing/exporting cam (S7-1500T)

Use the toolbar to export cams from the cam editor and import cams into the cam editor.
In the cam diagnostics you export and import snapshots of cams.
You can do the following jobs via export and import:

- Archive cams
- Generate cam in the cam editor from an exported snapshot of a cam generated during runtime
- Exchange cams between TIA Portal and external software tools

Importing cam

NOTICE
Machine damage Importing corrupt files (*.txt, *.csv) can result in unwanted behavior of the axes. Each time you import a cam from a file, check the integrity of the imported data.

Import formats

The following table shows the supported file formats for importing a cam:

File format	Comment
SIMOTION SCOUT CamTool format[1)]/MCD *.txt	MCD exchange format is automatically detected, imported data: • Interpolated points • Lines • Sine elements • Inverse sine elements • Polynomials • Transitions
SIMOTION SCOUT CamTool format[1)]/MCD *.csv	
Binary format *.bin	The binary format is used for exchanging cams between multiple TIA Portal installations.

1) Export the geometry "as polynomials" in SIMOTION SCOUT.

Procedure

To import a cam, follow these steps:

1. On the toolbar, click the "Import cam from file" icon.
   The "Cam import" dialog opens.
2. Select the file type of the file to be imported.
3. From the file directory, select the file to be imported.
4. Click the "Open" button.
   The cam is imported into the cam editor and opened. All previous entries in the editor are discarded.

Exporting cam

Export formats

The table below shows the supported export formats, their use and special features:

Format	Comment
MCD exchange format	Exchange of cams between the TIA Portal and the NX Mechatronics Concept Designer The following elements are exported in a different form, while maintaining the profile of the cam: • Polynomial of the 7th degree The format does not support 7th degree polynomials. You can define polynomials of the 7th degree using boundary values in the cam editor. If you configure all three derivatives at the right and left boundary values, which corresponds to a 7th degree polynomial. A 7th degree polynomial is mapped into two 6th degree polynomials during export. • Point group With the "Point group" element, the export depends on the mapping method. With the "Point approximation" mapping method, the interpolation points are exported and the transitions between the points are interpolated with the system interpolation. With the "Segment approximation" mapping method, the point group is exported in segments. • Inverted sine The "Inverted sine" element is exported using interpolation points.

Format	Comment
SIMOTION SCOUT CamTool format	Exchange of cams between the TIA Portal and the SIMOTION SCOUT CamTool The same special features apply to this format as to the MCD Exchange format.
Point list	Export cams as x and y values for processing in, for example, spreadsheet or word processing programs With the point list, you export points at isochronous distances from the leading value. In addition to the following values, you also have the option to export velocity, acceleration and jerk. Select as many points as possible in order to export the cam with a high degree of accuracy.
Binary format	Exchange of cams between multiple TIA Portal projects. With the binary format you export all configuration data of the cam without restrictions. In addition, your settings for the displaying the charts, such as colors of the curves, are exported.

Procedure

To export a cam, follow these steps:

1. On the toolbar, click the "Cam file exporting" icon.
   The "Export cam" dialog opens.
2. Select the desired export format from the "Export as" drop-down list.
3. Select the desired delimiter:
   – When you select the "Comma" delimiter, a CSV file is created.
   – When you select the "Tabulator" delimiter, a TXT file is created.
   – This selection is not possible for the binary format.
4. If you export the cam as a point list, enter the number of points and optionally activate the curves to be exported for velocity, acceleration and jerk.
   The more points you export, the more accurately the point list maps the configured cam.
5. Enter a file name in the "File name" box.
6. Select the directory to which the file is written.
7. Click the "Export" button.

8.2 Changing the synchronous operation function of the cam online (S7-1500T)

You can configure the y = f(x) function of the cam using the cam editor in the configuration of the technology object (Page 83). Alternatively, for dynamic cam plate calculations, you can define or change the synchronous operation function of the cam during the runtime of the user program. The cam technology object must already be created for this.

To change the synchronous operation function of a cam online, you have the following options:

- Changing the synchronous operation function of the cam manually (Page 113)
- Copy calculated cam elements (Page 115)
- Creating the synchronous operation function of the cam with the "LCamHdl" library (Page 116)

8.2.1 Changing the synchronous operation function of the cam manually (S7-1500T)

The following tags of the technology object data block (Page 323) of the cam are relevant for defining the synchronous operation function of a cam manually in runtime:

- <TO>.Point[i]
- <TO>.ValidPoint[i]
- <TO>.Segment[i]
- <TO>.ValidSegment[i]
- <TO>.InterpolationSettings

You can adapt the tags in runtime via the user program. You can use the "<TO>.ValidPoint[i]" and "<TO>.ValidSegment[i]" tags to determine which cam elements included for the interpolation. If the value is "TRUE", the element "<TO>.Point[i]" or "<TO>.Segment[i]" with the corresponding index "i" is included in the interpolation. You can determine the interpolation type (Page 124) using the "<TO>.InterpolationSettings" tag.

Requirement

- The cam technology object has been created. Configuration via the cam editor is not required.
- The project is downloaded to the CPU.
- The cam elements to be adapted should not be edited by an active copy operation of an "MC_CopyCamData (Page 279)" job.

Procedure

To manually change the synchronous operation function of a cam in runtime, follow these steps:

1. Calculate the points and segments of the cam depending on your application.
2. Define the calculated points in the technology object data block of the cam.
   ```
   <TO>.Point[i] := Point; // data type TO_Cam_Struct_PointData
   ```
3. Set the defined points to valid.
   ```
   <TO>.ValidPoint[i] := TRUE;
   ```
4. Set all undefined points to invalid.
   ```
   <TO>.ValidPoint[i] := FALSE;
   ```
5. Define the calculated segments in the technology object data block of the cam.
   ```
   <TO>.Segment[i] := Segment; // data type TO_Cam_Struct_SegmentData
   ```
6. Set the defined segments to valid.
   ```
   <TO>.ValidSegment[i] := TRUE;
   ```
7. Set all undefined segments to invalid.
   ```
   <TO>.ValidSegment[i] := FALSE;
   ```
8. Make the interpolation settings of the cam.
   ```
   <TO>.InterpolationSettings.InterpolationMode := 1;
   <TO>.InterpolationSettings.BoundaryConditions := 0;
   ```
   The values "1" and "0" are only used as examples. Adapt them as needed.
9. Interpolate the cam with a "MC_InterpolateCam (Page 274)" job.

Check the synchronous operation function of the cam

Use the cam diagnostics (Page 190) to analyze and check the generated cam. This provides you with a graphical view of the cam, a list of all valid cam elements and the interpolation type.

8.2.2 Copy calculated cam elements (S7-1500T)

You use an "MC_CopyCamData (Page 279)" job to copy calculated cam elements to a cam. You can use the same job to copy points and segments to the technology object data block of the cam.

Cam elements to be copied

Save or calculate the cam elements in a data block. Create an array for points of the "TO_Cam_Struct_PointData" type and an array for segments of the "TO_Cam_Struct_Segment-Data" type. The size of the arrays depends on the use case and is variable.

The consistency of the cam elements in the data block is your responsibility. The cam elements must not change during an active copy operation of an "MC_CopyCamData" job.

Specify the arrays for points and segments at the "ArrayOfPoints" and "ArrayOfSegments" parameters of the "MC_CopyCamData" job. Define the number of elements to be copied at the "NumberOfPoints" and "NumberOfSegments" parameters.

Use the "StartPointArray" and "StartSegmentArray" parameters to define the index of the first element to be copied in the array, respectively. Use the "StartPointCam" and "StartSegmentCam" parameters to define the respective index in the cam starting at which the elements to be copied are to be inserted.

Copy mode

Following the copy operation, the inserted cam elements are set as valid ("ValidPoint" = TRUE, "ValidSegment" = TRUE).

With copy mode "Mode" = 0, you specify that all defined elements already present in the cam are set as invalid before the copy operation ("ValidPoint" = FALSE, "ValidSegment" = FALSE). This results in only the inserted elements being valid after the copy operation. Use this copy mode to completely regenerate the cam and overwrite its previous synchronous operation function.

Use copy mode "Mode" = 1 to specify that all defined elements already present in the cam remain valid ("ValidPoint" = TRUE, "ValidSegment" = TRUE). This results in both the inserted elements and the still existing elements not overwritten being valid after the copy operation. Use this copy mode to append cam elements to the previous synchronous operation function of the cam, or to partially overwrite the synchronous operation function of cam.

Copy operation

Copying of cam elements is possible during active cam synchronization.

An active copy operation is indicated by the "MC_CopyCamData.Busy" = TRUE parameter, in the "<TO>.StatusWord.X7 (CopyCamDataActive)" tag as well as in the status and error bits of the diagnostics of the technology object. Only one active "MC_CopyCamData" job is possible at a given time on a cam.

As soon as the cam elements have been copied and set to valid, the copy operation is complete. The status is indicated in the Motion Control instruction with the parameter "Done" = TRUE. The "<TO>.StatusWord.X4 (CamDataChanged)" tag of the technology object is set to "TRUE".

Before you can use the cam with the inserted elements, the cam must be interpolated. To do this, start an "MC_InterpolateCam" job.

8.2.3 Creating the synchronous operation function of the cam with the "LCamHdl" library (S7-1500T)

The "LCamHdl" library provides function blocks that support you in creating jerkless cams in accordance with VDI guideline 2143. The function blocks perform the required calculations of the segments for different profile types, e.g. the polynomial coefficients.

In addition, you can use the optimized "Basic" function block with a simplified user interface to define the synchronous operation function of the cam in terms of points and associated dynamic values. From this, the function block calculates the corresponding segments according to a 5th degree polynomial function.

More information

You can find additional information about the "LCamHdl" library in the Siemens Industry Online Support under entry ID 105644659 (https://support.industry.siemens.com/cs/ww/en/view/105644659).

An application example shows the creation of cams with the "LCamHdl" library and switching of two cams using the example of a press. The application example can be found in the Siemens Industry Online Support under entry ID 109749460 (https://support.industry.siemens.com/cs/ww/en/view/109749460).

8.3 Interpolating a cam (S7-1500T)

8.3.1 Configuring transitions (S7-1500T)

To use a cam in the user program, you must interpolate the cam after downloading to the CPU or after adapting the technology object data block. The interpolation closes the gaps between the defined interpolation points and segments of the cam. These missing ranges are called transitions. The interpolation type defines how the transitions are interpolated.

Configuring interpolation

You specify the interpolation type in the configuration of the technology object. You can set the interpolation separately for each transition in the cam. The following methods are possible:

- System interpolation (Page 119):
  The system interpolation is the default for interpolation of the transitions. You configure the system interpolation for all transitions in the properties (Inspector window) in the "Profile > System interpolation" configuration window.
- Interpolation according to VDI Guideline 2143 (Page 122):
  You can adapt each transition separately according to the VDI Guideline 2143. The settings in the properties (Inspector window) in the "Profile > Default optimization settings" configuration window are hereby taken into consideration.

"Characteristic" configuration window

In the "Characteristic" configuration window, you configure the parameters for optimizing the selected transition in the properties (Inspector window):

Parameters	Description
Interpolation settings of the transition	
Optimization method	Select the optimization method in the drop-down list: • System interpolation (Page 119) The CPU defines the optimization parameters automatically according to the settings of the system interpolation. • VDI-based optimization (Page 122) Adjust the optimization manually. The inputs are applied automatically according to the VDI Guideline 2143.
Motion task	The transition type is determined from the properties of the adjacent elements of the transition and displayed in this field.
Continuity at start/end	In the drop-down lists, select which parameter is continuous in the boundary points and is to be included for optimization: • Default optimization setting (setting under "Profile > Default optimization settings") • Position • Velocity (bumpless) • Acceleration (jerkless) • Jerk (jerk continuity permitted on one side only)
Optimization target	In the drop-down list, select the optimization target: • Default optimization setting (setting under "Profile > Default optimization settings") • Not specified • Velocity (Cv) • Acceleration (Ca) • Jerk (Cj) • Dynamic torque (Cmdyn)
Selection of motion rule	

Parameters	Description
Motion rule	In the drop-down list, select the motion rule according to which optimization is to occur: • Line • Quadratic parabola • Sine • Polynomial • Inclined sine • Modified acceleration trapezoid • Modified sine • Harmonic combination • Double-harmonic transition • Sine line combination The selection is automatically limited to the motion rules that can be applied according to the motion task and the selected boundary conditions. Additional parameters are displayed depending on the selected motion rule. If you have changed the motion task in such a way that the motion rule can no longer be applied, a notice is displayed. In this case, you need to select a motion rule that can be applied.
Parameter used	In the drop-down list, select the parameters to be included in the optimization: • Lambda • Maximum acceleration (Ca) • Maximum deceleration (Ca*) The selection is automatically limited to the parameters that can be applied according to the motion rule.
Lambda	In the drop-down list, select the transition point in the "Lambda position" field: • No lambda Do not enter any value. The position of the point of inflection is calculated automatically. • Relative to segment Specify the leading value of the point of inflection relative to the transition from 0.0 to 1.0. The value 0.0 corresponds to the beginning of the transition. The value 1.0 corresponds to the end of the transition. • Absolute in the profile You specify the leading value of the point of inflection as an absolute value.
Lambda position	In this field, configure the leading value of the point of inflection for the transition according to the selection in the "Lambda" drop-down list.
Maximum acceleration (Ca)	Configure the maximum acceleration (Ca) for the transition in this field.
Maximum deceleration (Ca*)	Configure the maximum deceleration (Ca*) for the transition in this field.
Approximation	
Number of interpolation points	In this field, configure the number of interpolation points for the transition.
Maximum following value tolerance	In this field, enter the maximum permitted deviation (absolute) of the approximation from the motion rule. If the configured value is exceeded, a warning is displayed in the graphical editor at the transition.

Parameters	Description
Characteristic values of the transition	The characteristic values of the transition that are relevant according to VDI 2143 are displayed in this area. The maximum value and the standardized value are displayed for the following characteristic values: • Velocity (Cv) • Acceleration (Ca) • Deceleration (Ca*) • Jerk (Cj) • Dynamic torque (Cmdyn)

8.3.2 System interpolation (S7-1500T)

With system interpolation, the transitions are interpolated according to the interpolation type and the response in the boundary points of the transition segment. The following interpolation methods are possible:

- **Linear interpolation**
  Gaps in the curve are closed with a straight line.

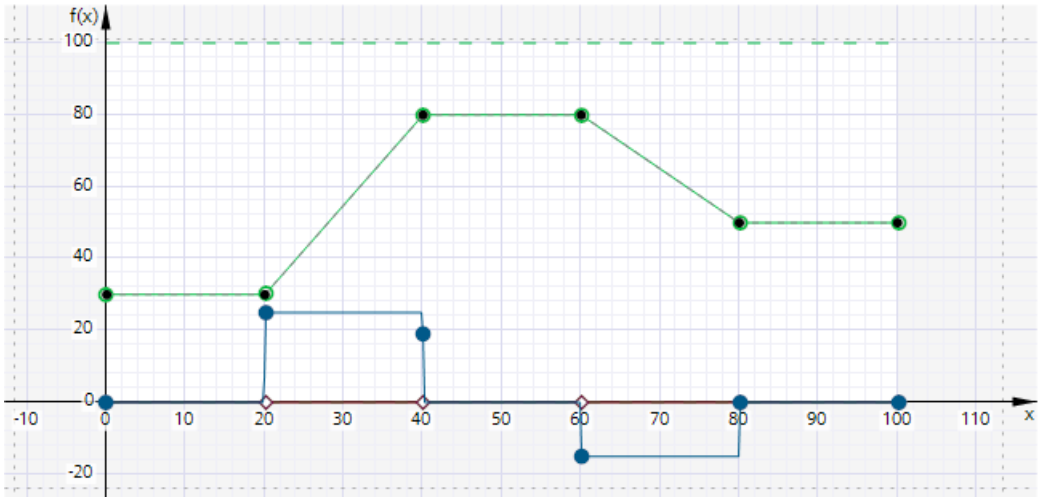

Specified position (point)
Interpolated position
Resulting velocity (scaled)
Resulting acceleration
Resulting jerk

- **Interpolation with cubic splines**
  The interpolated curve runs through the interpolation points and the segments of the curve.
  After interpolation has been completed, the value range of the following value of the cam can be greater than before interpolation.

Specified position (point)
Interpolated position
Resulting velocity (scaled)
Resulting acceleration (scaled)
Resulting jerk (scaled)

- **Interpolation with Bézier splines**
  The interpolated curve runs along the interpolation points and through the segments of the curve.
  The range of the cam is not changed by interpolation.

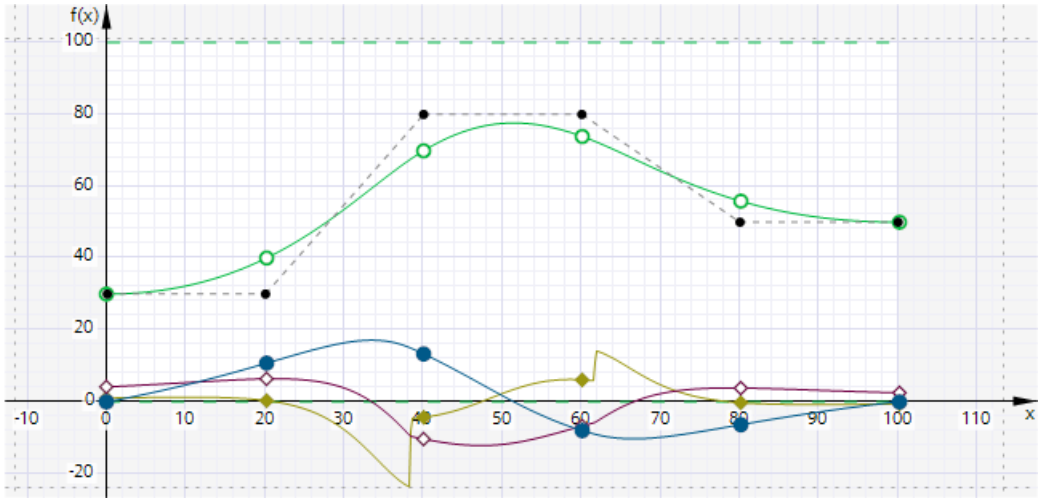

Specified position (point)
Interpolated position
Resulting velocity (scaled)
Resulting acceleration (scaled)
Resulting jerk (scaled)

NOTE

Differences in the interpolation types

Depending on the definition of the cam, high dynamic responses can result when interpolating with cubic splines, as the interpolated curve always runs through the specified points. The course of the curve for interpolation via cubic splines runs through all specified points, while the course of the curve for interpolation via Bézier splines is only based on the points and thus results in lower dynamic values.

If required, select an interpolation using Bézier splines in order to obtain a smooth, slower interpolated curve.

"System interpolation" configuration window

In the "System interpolation" configuration window, configure the interpolation of transitions according to the system specifications in the properties (Inspector window). These settings are used when the "System interpolation" optimization method is used for a transition (Page 116) (default setting).

Configure the interpolation type and the behavior of the boundary points in this area:

Parameter	Description
Interpolation type	In the drop-down list, select the interpolation type by which the transitions in the curve are interpolated: • Linear interpolation In linear interpolation, the transitions (magenta) between the cam elements (blue) are defined by a straight line. • Interpolation with cubic splines In the interpolation with cubic splines, the transitions (magenta) between the cam elements (blue) are defined so that the interpolated curve runs through all the cam elements. The acceleration (green) in the transition is linear. • Interpolation with Bézier splines In the interpolation with Bézier splines, the transitions (magenta) between the cam elements (blue) are defined so that the interpolated curve is based on specified points and the curve runs through other cam element types.
Behavior at boundary	In the drop-down list, select which behavior of the interpolation applies to a cyclic use of the cam in the boundary points: • No restrictions The areas between the elements are closed. • First derivative continuous (velocity continuous) The cam is interpolated in such a way that the first derivative (velocity) is equal at the start and end of the cam.

See also

MC_InterpolateCam: Interpolate cam disc V7 (Page 274)

8.3.3 Interpolation according to VDI Guideline 2143 (S7-1500T)

The VDI Guideline 2143 deals with motion rules for cam gears. The aim of these motion rules is to achieve high running quality and to avoid jolts and jerks.

The VDI Guideline 2143 distinguishes between areas of usage and motion transitions:

- Areas of usage correspond to the sequences in a process, which means the inserted elements of the cam.
- Motion transitions are transitions between areas of usage that are not directly relevant to the process but must meet specific boundary conditions, for example, velocity consistency.

The following motion tasks are defined based on VDI Guideline 2143:

Motion task	Designation	Properties
Dwell	R	Velocity = 0 Acceleration = 0
Constant velocity	G	Velocity ≠ 0 Acceleration = 0
Reverse	U	Velocity = 0 Acceleration ≠ 0

Motion task	Designation	Properties
Motion	B	Velocity ≠ 0 Acceleration ≠ 0

The graphic below shows an example of the motion jobs:

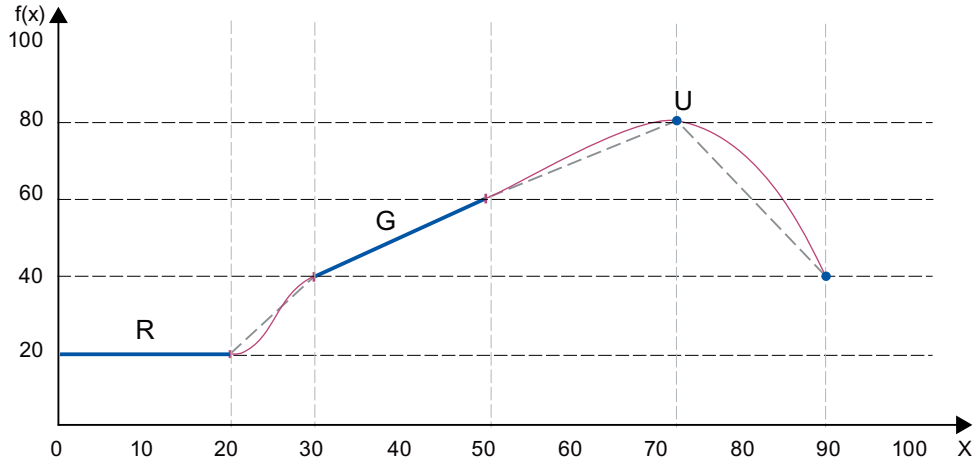

The following graphic shows the possible combinations of motion jobs:

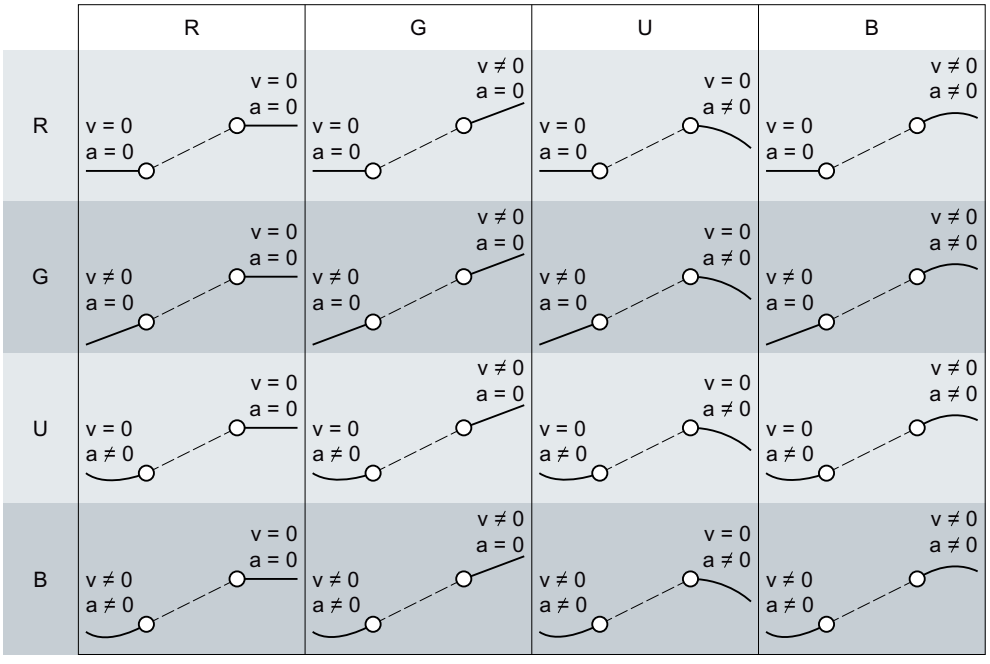

Adjust the optimization of a transition

To adapt the optimization of a transition according to the VDI Guideline 2143, follow these steps:

1. Select the transition in the graphical or tabular editor.
2. In the properties (Inspector window), open the "Element > Characteristic (Page 116)" configuration window.
3. Select the optimization method "VDI-based optimization" in the "Optimization method" drop-down list.
4. If necessary, change the default settings.
   The selection of the parameters is automatically limited to the settings that can be applied according to VDI Guideline 2143.

You interpolate the cam with the Motion Control instruction "MC_InterpolateCam (Page 274)" according to the settings for the VDI optimization. Note that, in contrast to system interpolation, the optimization of transitions according to VDI Guideline 2143 directly occupies segments in the technology object data block. This optimization type is thus not possible via "MC_InterpolateCam" during runtime.

"Default optimization settings" configuration window

You configure the default values for optimization of transitions according to VDI Guideline 2143 in the "Profile > Default optimization settings" configuration window in the properties (Inspector window). The default values are used when the "VDI-based optimization" optimization method is selected for a transition (Page 116) and when the setting "Default optimization setting" is selected for the continuity or the optimization target.

Configure the default settings for continuity requirement and optimization target in this area:

Parameter	Description
Continuity	In the drop-down list, select which parameter is continuous in the boundary points and is to be taken into consideration for optimization: • Position • Velocity • Acceleration • Jerk
Optimization target	In the drop-down list, select the optimization target according to the VDI Guideline: • Not specified • Velocity (Cv) • Acceleration (Ca) • Jerk (Cj) • Dynamic torque (Cmdyn)

8.3.4 Interpolate cam with "MC_InterpolateCam" (S7-1500T)

To use a cam in the user program, you must interpolate the cam after downloading to the CPU or after adapting the technology object data block. The interpolation closes the gaps between the defined interpolation points and segments of the cam. The interpolation type defines how missing ranges are interpolated.

NOTE

Improving system performance

To improve the system performance for interpolating the cam technology object, select the "Improve system performance" check box in the properties of MC-Interpolator [OB92] under "General > Multi-core processor".

After you have configured the interpolation type (Page 116), you interpolate a cam in the user program with the Motion Control instruction "MC_InterpolateCam (Page 274)". After starting the "MC_InterpolateCam" job, the cam is interpolated in the definition range from the minimum to the maximum value in the leading value range:

- The minimum value in the leading value range is the first defined interpolation point or start of the first segment of the cam (<TO>.StatusCam.StartLeadingValue).
- The maximum value in the leading value range is the last defined interpolation point or end of the last segment of the cam (<TO>.StatusCam.EndLeadingValue).

As soon as the cam has been interpolated, this is indicated on Motion Control instruction "MC_InterpolateCam" with parameter "Done" = TRUE and in tag "<TO>.StatusWord.X5 (Interpolated)" = 1 of the technology object. After interpolation, an explicit value in the value range is assigned to each value in the definition range.

8.4 Scaling and shifting cam (S7-1500T)

You can scale and shift the utilized cam for camming (Page 82) at the Motion Control instruction "MC_CamIn" in the leading and following value range. The configured cam is not changed by this. In contrast, the specification for leading and following value range in the configuration of the technology object only effect the display in the graphical editor.

The following diagram shows the general sequence of scaling and shifting the cam:

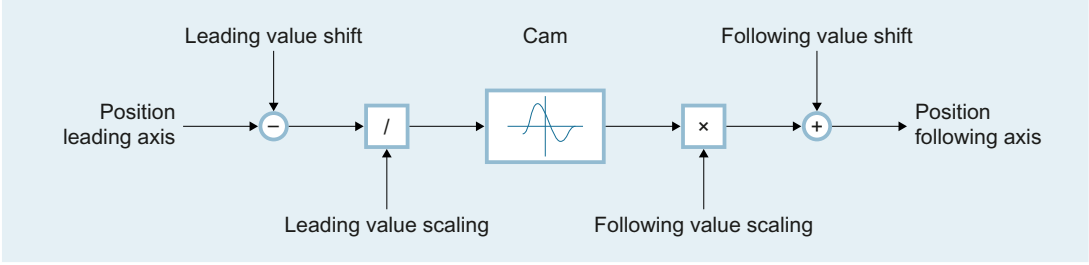

Position following axis = f[(Position leading axis - Leading value shift) / Leading value scaling] × Following value scaling + Following value shift

Parameter inputs

You define the use of the cam with the following parameters of the Motion Control instruction "MC_CamIn (Page 247)":

- With the "MasterScaling" parameter, you specify the scaling of the cam in the leading value range.
- With the "SlaveScaling" parameter, you specify the scaling of the cam in the following value range.
- You define the offset of the cam in the leading value range with the parameter "MasterOffset".
- You define the offset of the cam in the following value range with the parameter "SlaveOffset".

Scaling of the cam

The figure below shows the basic effect of scaling the cam with the parameters "MasterScaling" and "SlaveScaling":

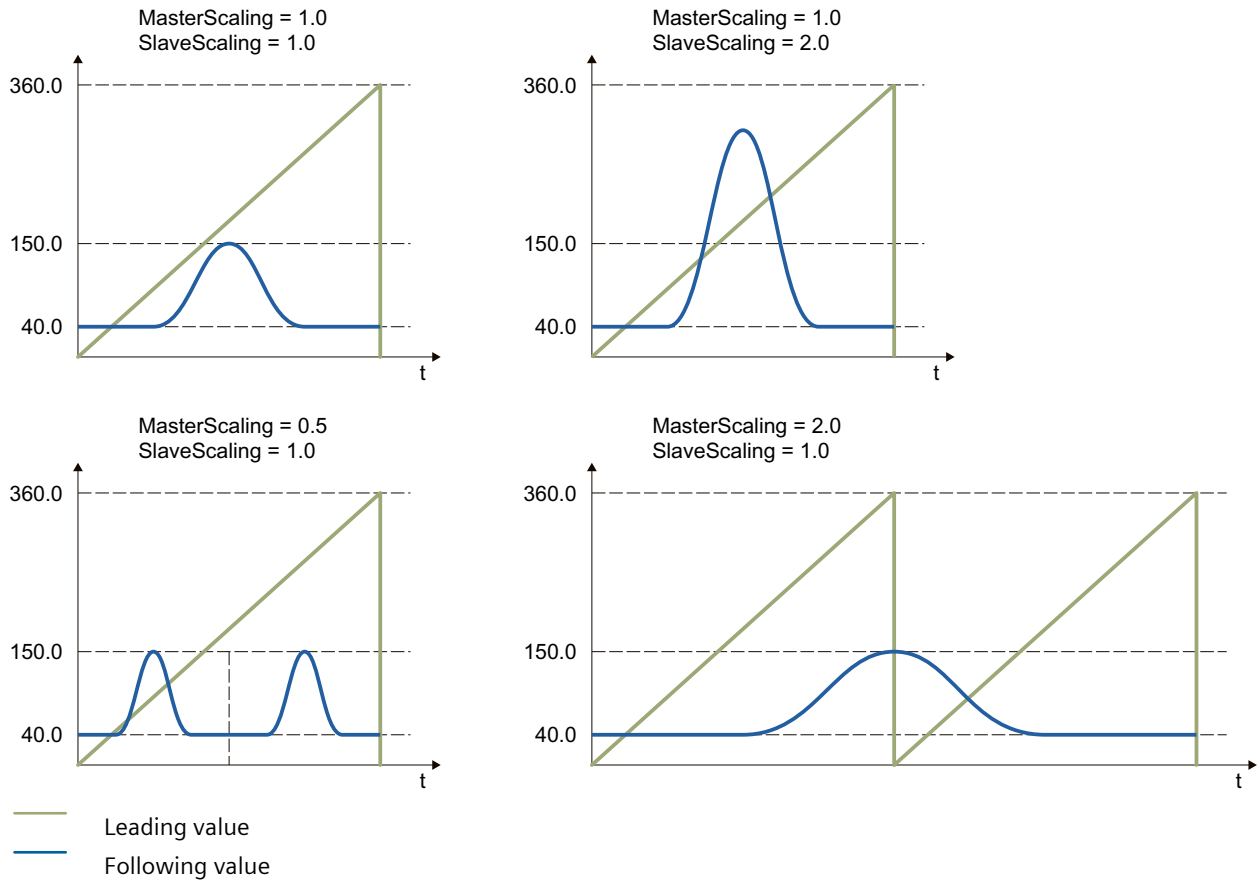

Shifting of the cam

The following figure shows the basic effect of the leading value and following value offset as well as the position of the cam with the following parameter values:

- "MasterOffset" > 0
- "SlaveOffset" > 0
- Start position of the cam > 0
- "MasterSyncPosition" > 0

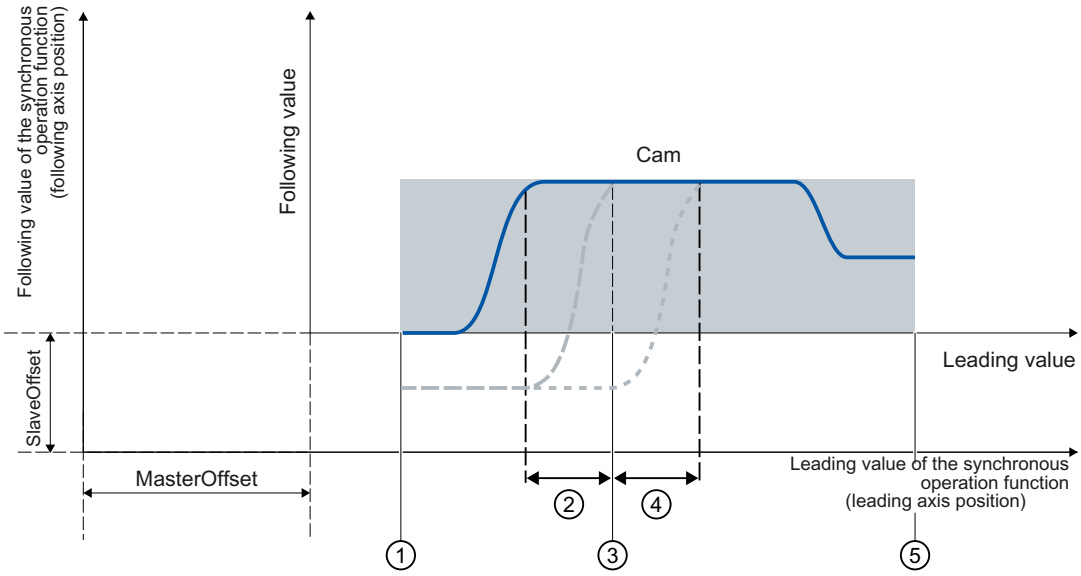

① Start position of the cam
First defined interpolation point/start of the first segment of the cam (<TO>.StatusCam.StartLeadingValue)

② Leading value distance with synchronization in advance ("MasterStartDistance")

③ Synchronous position of the leading axis relative to the starting position of the cam ("MasterSyncPosition")

④ Leading value distance with subsequent synchronization ("MasterStartDistance")

⑤ End position of the cam
Last defined interpolation point/end of the last segment of the cam (<TO>.StatusCam.EndLeadingValue)

8.5 Defining application mode of the cam (S7-1500T)

For camming (Page 82), you can define the application mode of the cam. The following modes are available:

- Not cyclic
- Cyclical
- Cyclic appending

A cam is defined between the start position (<TO>.StatusCam.StartLeadingValue) and end position (<TO>.StatusCam.EndLeadingValue) after the interpolation.

Parameter inputs

You define the use of the cam with the following parameters of the Motion Control instruction "MC_CamIn (Page 247)":

- With the "ApplicationMode" parameter, you define the application mode of the cam.

Not cyclic

With the "ApplicationMode" = 0 parameter, you define the application mode of the cam as "Not cyclic".

The cam is run exactly once. When the cam is run through in the positive direction, synchronous operation is ended when the end position of the cam is reached. When the cam is run through in the negative direction, synchronous operation is ended when the start position of the cam is reached.

To prevent step changes in the dynamic values, the velocity of the following axis must be zero at the start and end position of the cam.

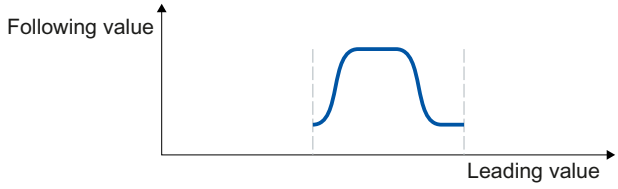

Cyclical

With the "ApplicationMode" = 1 parameter, you define the application mode of the cam as "Cyclical".

The cam is run cyclically. When the cam is run through in the positive direction, the cam is repeated from the start position when the end position of the cam is reached. When the cam is run through in the negative direction, the cam is repeated from the end position when the start position of the cam is reached.

To prevent step changes in the dynamic values, the start and end positions of the cam must be match, and the velocity at the start and end position must be identical. For a velocity continuous transition, use the setting "First derivative continuous (velocity continuous)" under "Properties (Inspector window) > System interpolation > Behavior at boundary" (<TO>.InterpolationSettings.BoundaryConditions = 1) for interpolation of the cam.

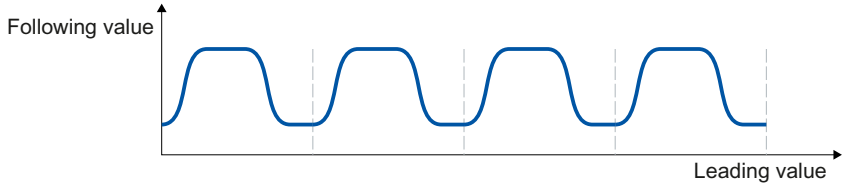

Cyclic appending

With the "ApplicationMode" = 2 parameter, you define the application mode of the cam as "Cyclic appending".

The cam is run cyclically. When the cam is run through in the positive direction, the end position of the cam is used as the start position for the next run. When the cam is run through in the negative direction, the start position of the cam is used as the start position for the next run. The position difference between the start and end position on the following value side is added up.

To prevent step changes in the dynamic values, the velocity at the start and end position must be identical. For a velocity continuous transition, use the setting "First derivative continuous (velocity continuous)" under "Properties (Inspector window) > System interpolation > Behavior at boundary" (<TO>.InterpolationSettings.BoundaryConditions = 1) for interpolation of the cam.

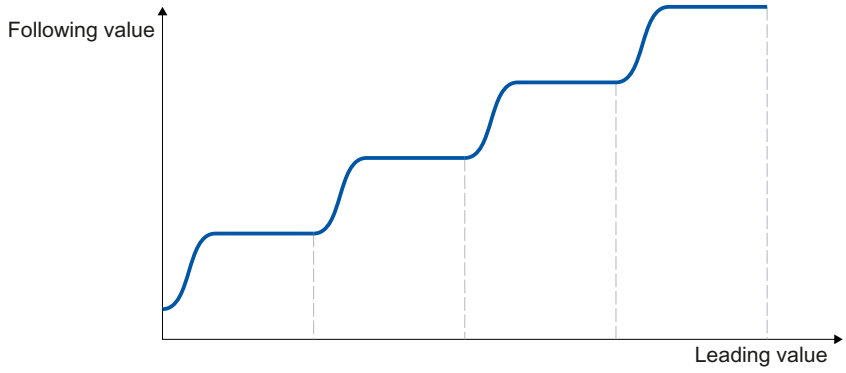

8.6 Dynamic limits of the following axis in camming (S7-1500T)

If a synchronous axis is operated as a following axis in camming with the Motion Control instruction "MC_CamIn (Page 247)", the following dynamic limits apply depending on the phase of the synchronous operation:

Pending synchronous operation

If synchronous operation is not active, the configured dynamic limits of the following axis apply. If synchronous operation is already active, the description in section "Synchronization/synchronous motion/desynchronization" applies.

Synchronization/synchronous motion/desynchronization

During synchronization, synchronous travel and desynchronization (Page 267), the dynamics of the following axis are only limited to the maximum speed of the drive (<TO>.Actor.DriveParameter.MaxSpeed). The dynamics of the following axis results from the synchronous operation function.

If the dynamic limits configured for the following axis are exceeded, this is indicated in the "<TO>.StatusSynchronizedMotion.StatusWord.X0 ... X2" tags of the technology object. The SW limit switches continue to be monitored with the configured dynamic limits of the following axis.

If the following axis cannot follow the leading value, this results in a following error, which is monitored by the following error monitoring.

Synchronous operation override

As soon as synchronous operation has been overridden (Page 283), the dynamic limits configured for the technology object apply to the following axis again. With the start of the overriding job, the active dynamics are transitioned (smoothed) to the configured dynamic limits and the specifications for the Motion Control instruction.

8.7 Synchronizing camming (S7-1500T)

8.7.1 Parameter overview for synchronizing with "MC_CamIn" (S7-1500T)

During camming (Page 82), synchronization establishes the relationship between the leading axis and following axis. With the parameter "SyncProfileReference" you define the type of synchronization:

SyncProfileReference	Synchronization profile
0	Synchronization in advance using dynamic parameters (Page 133)
1	Synchronization in advance using leading value distance (Page 134)
2	Direct synchronous setting (Page 143)
3	Subsequent synchronization using leading value distance (Page 139)
4	Subsequent synchronization using leading value distance starting from current leading value position (Page 142)
5	Direct synchronous setting at the end of the cam (Page 144)
6	Synchronization in advance using leading value distance starting from current leading value position (Page 136)

Depending on the synchronization profile, different parameters of the Motion Control instruction "MC_CamIn (Page 247)" are relevant:

Parameters	SyncProfileReference						
	0	1	2	3	4	5	6
MasterOffset	✓	✓	-	✓	✓	-	-
SlaveOffset	✓	✓	-	✓	✓	-	✓
MasterScaling	✓	✓	✓	✓	✓	✓	✓
SlaveScaling	✓	✓	✓	✓	✓	✓	✓
MasterSyncPosition	✓	✓	✓	✓	-	✓	✓
MasterStartDistance	-	✓	-	✓	✓	-	✓
Velocity	✓	-	-	-	-	-	-
Acceleration	✓	-	-	-	-	-	-
Deceleration	✓	-	-	-	-	-	-
Jerk	✓	-	-	-	-	-	-
ApplicationMode	✓	✓	✓	✓	✓	✓	✓
SyncDirection	✓	✓	-	✓	✓	-	✓

8.7.2 Defining direction of synchronization with "MC_CamIn" (S7-1500T)

During camming (Page 82), synchronization establishes the relationship between the leading axis and following axis. If you have activated the "Modulo" setting for the following axis, you can define the direction of the synchronization with the "SyncDirection" parameter of the Motion Control instruction "MC_CamIn (Page 247)".

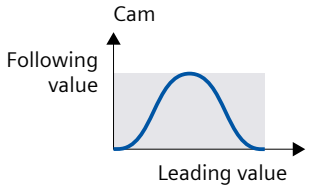

Positive direction

With "SyncDirection" = 1, the following axis may only travel in positive direction during synchronization. In this example, the synchronous position is 0.0.

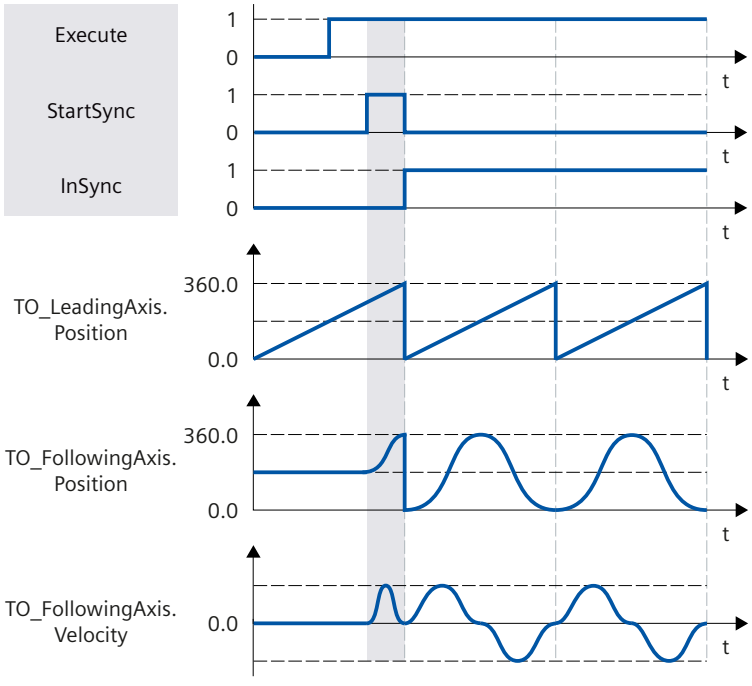

Negative direction

With "SyncDirection" = 2, the following axis may only travel in negative direction during synchronization. In this example, the synchronous position is 0.0.

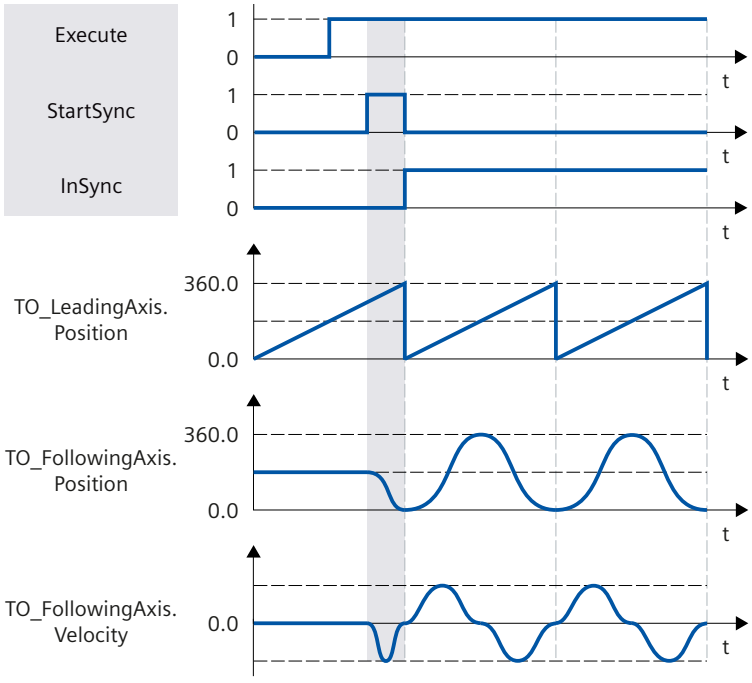

Shortest distance

With "SyncDirection" = 3, changes in direction of the following axis are permitted during synchronization. In this example, the synchronous position is 90.0.

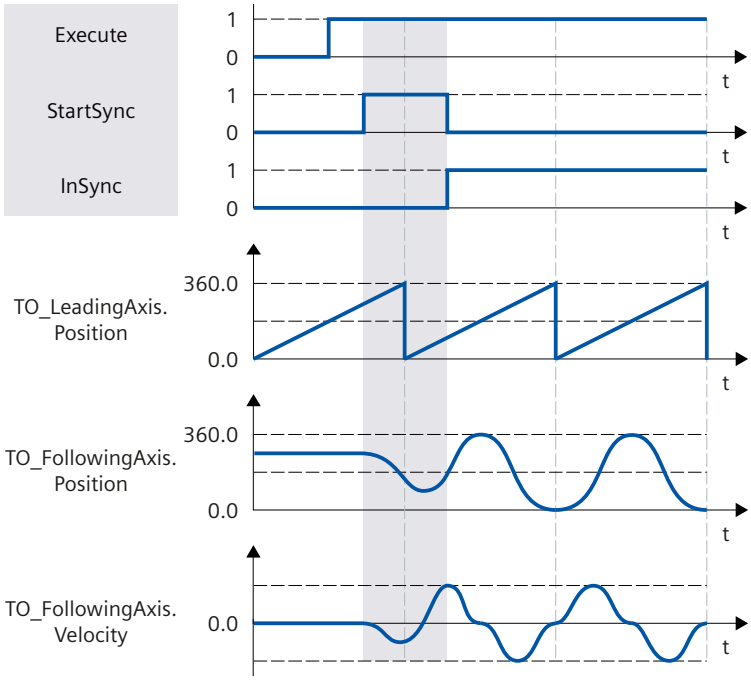

8.7.3 Synchronizing following axis in advance using dynamic parameters with "MC_CamIn" (S7-1500T)

During camming (Page 82), synchronization establishes the relationship between the leading axis and following axis. During synchronization in advance using dynamic parameters, synchronization begins in such a way that the leading and following axis are synchronous when the synchronous position is reached.

Parameter inputs

You define the behavior of the following axis for synchronization with the following parameters of the Motion Control instruction "MC_CamIn (Page 247)":

- With the parameter "SyncProfileReference" = 0, you define the type of synchronization as synchronization in advance using dynamic parameters.
- With the parameter "MasterSyncPosition", you define the synchronous position of the leading axis relative to the start position of the cam. The synchronous position establishes the relationship between leading value and following value. The synchronous position must be within the definition of the cam. With "MasterSyncPosition" ≠ 0.0, you move the synchronous position within the cam without changing the position of the cam. For synchronization in advance, the synchronous position is the position starting from which the leading and following axes are synchronous.
- With the parameters "Velocity", "Acceleration", "Deceleration" and "Jerk" you define the dynamics for the synchronization of the following axis.

Until synchronization

After the start of the "MC_CamIn" job, a motion profile for the following axis is calculated continuously. The motion profile is calculated based on the following parameters:

- Specified synchronous position of the Motion Control instruction
- Specified dynamics of the Motion Control instruction
- Current position and dynamics of the leading and following axes
- Synchronous operation specified via cam

The calculation determines the synchronization length and thus the start position of the leading axis for the synchronization.

The start position of the leading axis is derived in the following way:

Start position = Synchronous position of leading axis - Synchronization length

The status "Waiting" is displayed at the following axis until the leading value has reached the start position (<TO>.StatusSynchronizedMotion.WaitingFunctionState = 3).

If the leading axis is already in its synchronous position when the "MC_CamIn" job is started, the leading axis must first cross the start position to start synchronization. If the leading and following axes are already at their synchronous positions when the "MC_CamIn" job is started, synchronous operation immediately has "Synchronous" status.

During synchronization

The following axis begins to synchronize as soon as the leading value has reached the start position. The synchronization is indicated in the Motion Control instruction "MC_CamIn" with the parameter "StartSync" = TRUE and in the "<TO>.StatusWord.X21 (Synchronizing)" tag of the following axis. The leading value must not reverse during synchronization.

The dynamics of the following axis during synchronization is obtained from the calculated motion profile and the current dynamics of the leading axis. Changes in the dynamics of the leading axis during synchronization are superimposed with the calculated motion profile in accordance with the synchronous operation function. This can have the result that the configured dynamic limits at the following axis are violated. This scenario is indicated in the "<TO>.StatusSynchronizedMotion.StatusWord.X0 ... X2" tags.

After synchronization

The following axis is synchronized as soon as the leading axis has reached the synchronous position. The following axis travels synchronously with the leading axis in accordance with the cam profile (Page 146).

8.7.4 Synchronizing following axis in advance using leading value distance with "MC_CamIn" (S7-1500T)

During camming (Page 82), synchronization establishes the relationship between the leading axis and following axis. During synchronization in advance using the leading value distance, synchronization begins in such a way that the leading and following axis are synchronous when the synchronous position is reached.

Parameter inputs

You can define the behavior of the following axis for synchronization with the following parameters of the Motion Control instruction "MC_CamIn (Page 247)":

- With the parameter "SyncProfileReference" = 1, you define the type of synchronization as synchronization in advance using the leading value distance.
- With the parameter "MasterSyncPosition", you define the synchronous position of the leading axis relative to the start position of the cam. The synchronous position establishes the relationship between leading value and following value. The synchronous position must be within the definition of the cam. With "MasterSyncPosition" ≠ 0.0, you move the synchronous position within the cam without changing the position of the cam. For synchronization in advance, the synchronous position is the position starting from which the leading and following axes are synchronous.
- With the "MasterStartDistance" parameter, you specify the leading value distance (synchronization length).

Until synchronization

After the start of the "MC_CamIn" job, a motion profile is calculated for the following axis depending on the specified leading value distance. The calculation determines the required dynamic response and thus the start position of the leading axis for the synchronization.

The start position of the leading axis is derived in the following way:

Start position = Synchronous position of leading axis - Synchronization length

The leading axis must be at least the leading value distance away from the synchronous position. The status "Waiting" is displayed at the following axis until the leading value has reached the start position (<TO>.StatusSynchronizedMotion.WaitingFunctionState = 3).

NOTE

Dynamic jumps

If the following axis is in motion and the leading value is at standstill when the "MC_CamIn" job is started, dynamic jumps can occur at the following axis as soon as the leading axis is set in motion and the following axis starts synchronizing.

If the leading and following axes are already at their synchronous positions when the "MC_CamIn" job is started, synchronous operation immediately has "Synchronous" status.

During synchronization

The following axis begins to synchronize as soon as the leading value has reached the start position. The synchronization is indicated in the Motion Control instruction "MC_CamIn" with the parameter "StartSync" = TRUE and in the "<TO>.StatusWord.X21 (Synchronizing)" tag of the following axis. The leading value must not reverse during synchronization.

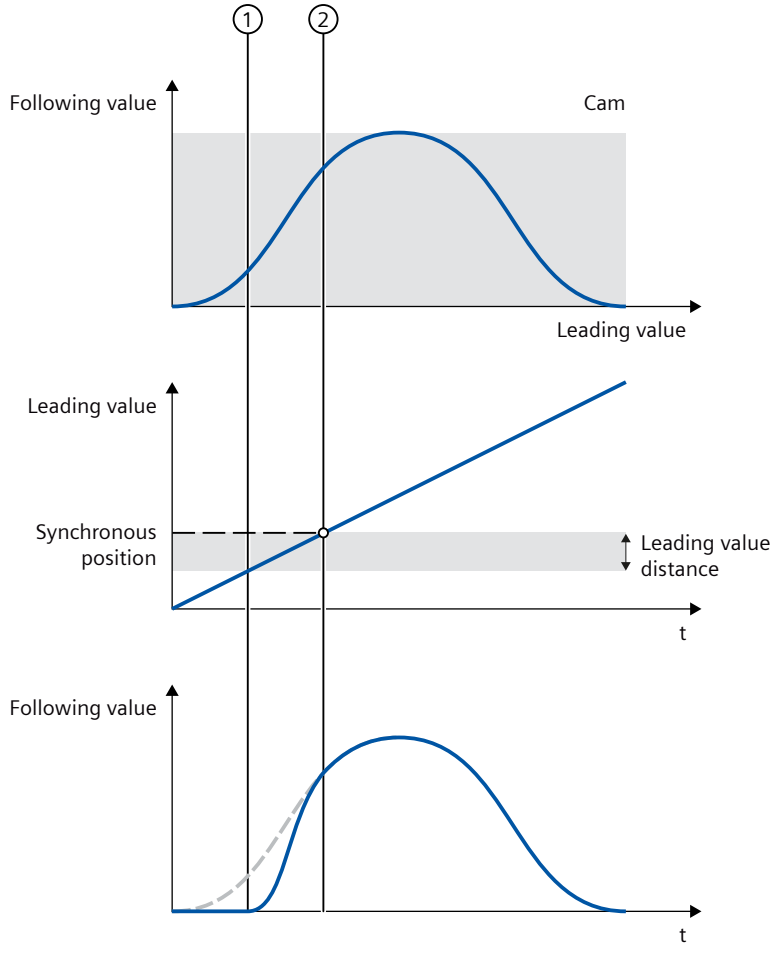

① Time when synchronization starts

② Time when synchronization is complete

The dynamics of the following axis during synchronization is obtained from the calculated motion profile and the current dynamics of the leading axis. Changes in the dynamics of the leading axis during synchronization are superimposed with the calculated motion profile in accordance with the synchronous operation function. This can have the result that the configured dynamic limits at the following axis are violated. This scenario is indicated in the "<TO>.StatusSynchronizedMotion.StatusWord.X0 ... X2" variables of the technology object.

After synchronization

The following axis is synchronized as soon as the leading axis has reached the synchronous position. The following axis travels synchronously with the leading axis in accordance with the cam profile (Page 146).

8.7.5 Synchronize the following axis in advance via the leading value path from the current leading value position with "MC_CamIn" (S7-1500T)

During camming (Page 82), synchronization establishes the relationship between the leading axis and following axis. For synchronization in advance, the leading value path from the current leading value position begins as soon as the "MC_CamIn" job becomes effective and the leading axis is in motion.

Parameter inputs

You define the behavior of the following axis for synchronization with the following parameters of the Motion Control instruction "MC_CamIn (Page 247)":

- With the parameter "SyncProfileReference" = 6, you define the type of synchronization as synchronization in advance via the leading value path from the current leading value position.
- With the parameter "MasterSyncPosition", you define the synchronous position of the leading axis relative to the start position of the cam. The synchronous position establishes the relationship between leading value and following value. The synchronous position must be within the definition of the cam. With "MasterSyncPosition" ≠ 0.0, you move the synchronous position within the cam without changing the position of the cam. For synchronization in advance, the synchronous position is the position starting from which the leading and following axes are synchronous.
- With the "MasterStartDistance" parameter, you specify the leading value distance (synchronization length).
- With the parameter "SlaveOffset" you define the offset of the cam in the following value range (Page 125). The offset of the cam in the leading value range is calculated automatically.

Until synchronization

After the start of the "MC_CamIn" job, a motion profile is calculated for the following axis depending on the specified leading value distance. The calculation results in the required dynamics and the offset of the cam in the leading value range.

If the leading axis is at a standstill when the job starts, the status "Waiting" is displayed on the following axis (<TO>.StatusSynchronizedMotion.WaitingFunctionState = 3) until the leading axis starts moving.

NOTE

Dynamic jumps

If the following axis is in motion and the leading value is at standstill when the "MC_CamIn" job is started, dynamic jumps can occur at the following axis as soon as the leading axis is set in motion and the following axis starts synchronizing.

If the leading and following axes are already at their synchronous positions when the "MC_CamIn" job is started, synchronous operation immediately has "Synchronous" status.

During synchronization

The following axis begins to synchronize as soon as the "MC_CamIn" job takes effect and the leading axis is moving. The synchronization is indicated in the Motion Control instruction "MC_CamIn" with the parameter "StartSync" = TRUE and in the "<TO>.StatusWord.X21 (Synchronizing)" tag of the following axis. The leading value must not reverse during synchronization.

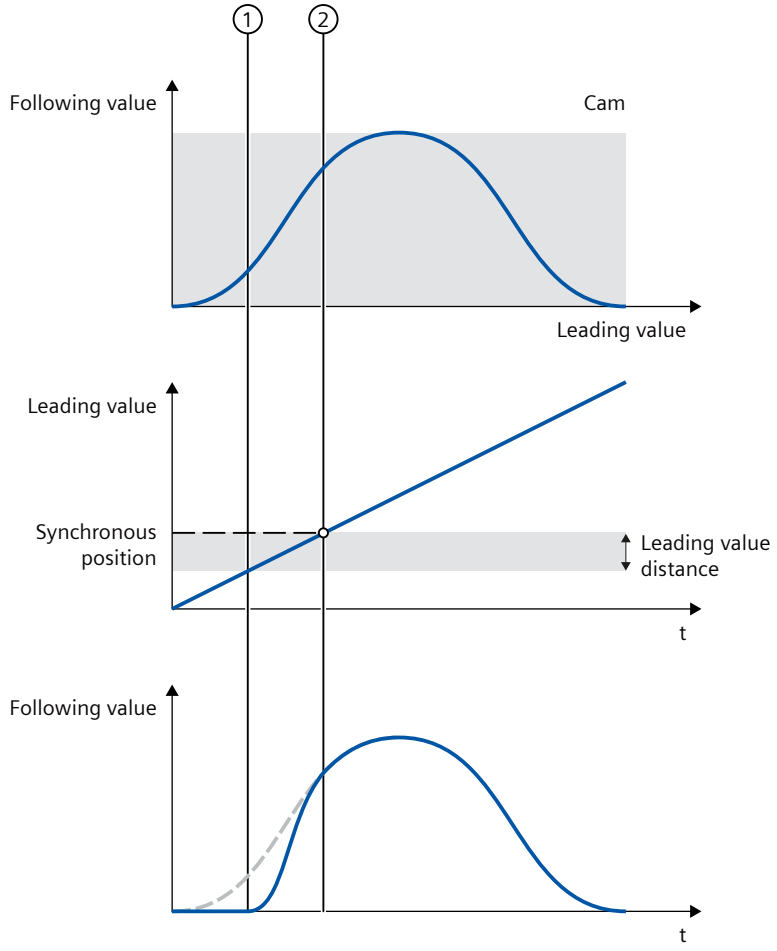

① Time at which the job becomes effective and the synchronization begins.

② Time when synchronization is complete

The dynamics of the following axis during synchronization is obtained from the calculated motion profile and the current dynamics of the leading axis. Changes in the dynamics of the leading axis during synchronization are superimposed with the calculated motion profile in accordance with the synchronous operation function. This can have the result that the configured dynamic limits at the following axis are violated. This scenario is indicated in the "<TO>.StatusSynchronizedMotion.StatusWord.X0 ... X2" variables of the technology object.

After synchronization

The cam is offset accordingly in the master value range. The offset results from the current leading value position and the default values of the parameters "MasterSyncPosition",

"MasterStartDistance" and "SlaveOffset". The offset in the leading value range is displayed in the "<TO>.StatusSynchronizedMotion.MasterOffset" tag of the technology object.

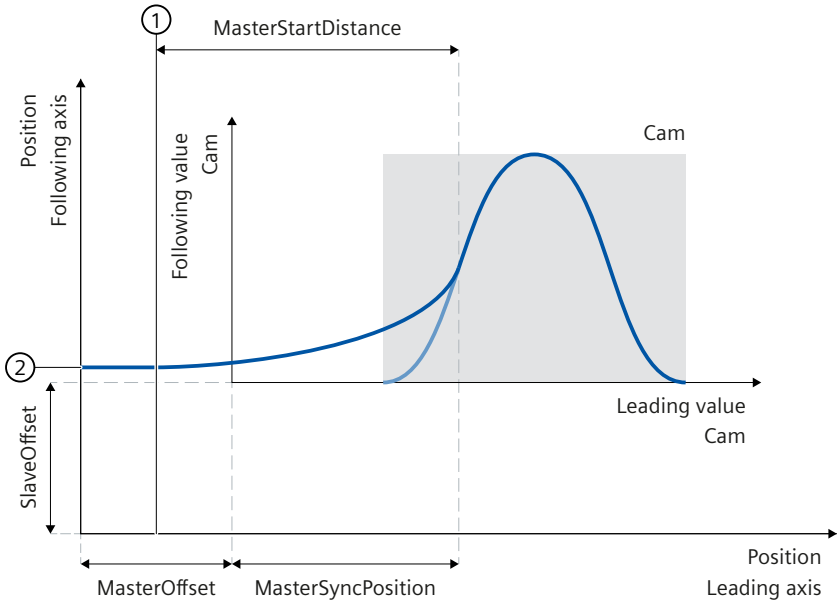

① Current leading value position

② Current following value position

The following axis is synchronized as soon as the leading axis has reached the synchronous position. The following axis travels synchronously with the leading axis in accordance with the cam profile (Page 146).

8.7.6 Subsequent synchronizing of following axis using leading value distance with "MC_CamIn" (S7-1500T)

During camming (Page 82), synchronization establishes the relationship between the leading axis and following axis. With subsequent synchronization using the leading value distance, synchronization begins as soon as the leading value has reached the synchronous position of the leading axis.

Parameter inputs

You can define the behavior of the following axis for synchronization with the following parameters of the Motion Control instruction "MC_CamIn (Page 247)":

- With the parameter "SyncProfileReference" = 3, you define the type of synchronization as subsequent synchronization using the leading value distance.
- With the parameter "MasterSyncPosition", you define the synchronous position of the leading axis relative to the start position of the cam. The synchronous position establishes the relationship between leading value and following value. The synchronous position must be within the definition of the cam. With "MasterSyncPosition" ≠ 0.0, you move the synchronous position within the cam without changing the position of the cam. For subsequent synchronization, the synchronous position of the leading axis is the start position from which synchronization starts.

- With the "MasterStartDistance" parameter, you specify the leading value distance (synchronization length).

Until synchronization

After the start of the "MC_CamIn" job, a motion profile is calculated for the following axis depending on the specified leading value distance. The calculation determines the required dynamic response and the position of the leading axis as of which the leading axis and the following axis travel synchronously.

The status "Waiting" is displayed at the following axis until the leading value has reached the synchronous position of the leading axis (<TO>.StatusSynchronizedMotion.WaitingFunctionState = 3).

NOTE

Dynamic jumps

If the following axis is in motion and the leading value is at standstill when the "MC_CamIn" job is started, dynamic jumps can occur at the following axis as soon as the leading axis is set in motion and the following axis starts synchronizing.

If the leading and following axes are already at their synchronous positions when the "MC_CamIn" job is started, synchronous operation immediately has "Synchronous" status.

During synchronization

The following axis begins to synchronize as soon as the leading value has reached the synchronous position. The synchronization is indicated in the Motion Control instruction "MC_CamIn" with the parameter "StartSync" = TRUE and in the "<TO>.StatusWord.X21 (Synchronizing)" tag of the following axis. The leading value must not reverse during synchronization.

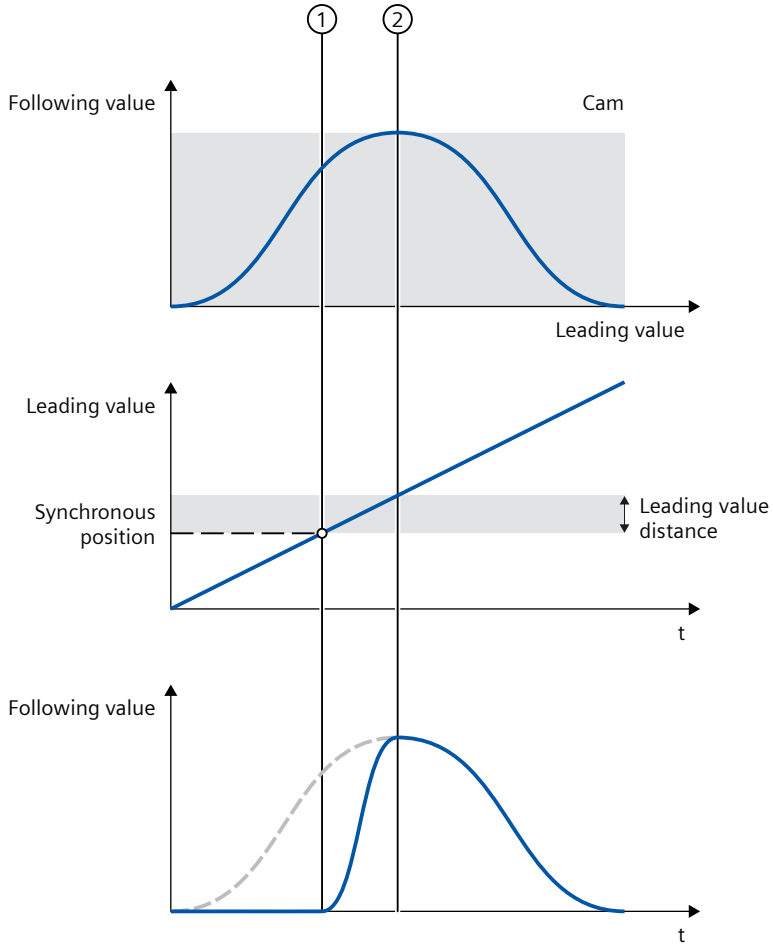

① Time when synchronization starts

② Time when synchronization is complete

The dynamics of the following axis during synchronization is obtained from the calculated motion profile and the current dynamics of the leading axis. Changes in the dynamics of the leading axis during synchronization are superimposed with the calculated motion profile in accordance with the synchronous operation function. This can have the result that the configured dynamic limits at the following axis are violated. This scenario is indicated in the "<TO>.StatusSynchronizedMotion.StatusWord.X0 ... X2" variables of the technology object.

After synchronization

The position of the leading axis from which the leading axis and following axis travel synchronously is derived in the following way:

Position axes synchronous = Synchronous position of leading axis + Synchronization length

As soon as the leading axis has reached this position, the following axis is synchronized. The following axis travels synchronously with the leading axis in accordance with the cam profile (Page 146).

8.7.7 Subsequent synchronizing of following axis using leading axis value starting from the current leading value position with "MC_CamIn" (S7-1500T)

During camming (Page 82), synchronization establishes the relationship between the leading axis and following axis. With subsequent synchronization using the leading value distance from the current leading value position, synchronization begins as soon as the "MC_CamIn" job takes effect and the leading axis is set in motion.

Parameter inputs

You define the behavior of the following axis for synchronization with the following parameters of the Motion Control instruction "MC_CamIn (Page 247)":

- With the parameter "SyncProfileReference" = 4, you define the type of synchronization as subsequent synchronization using the leading value distance from the current leading value position. The position of the leading axis must be within the definition of the cam, which may be scaled or shifted.
- With the "MasterStartDistance" parameter, you specify the leading value distance (synchronization length).

Until synchronization

After the start of the "MC_CamIn" job, a motion profile is calculated for the following axis depending on the specified leading value distance. The calculation determines the required dynamic response and the position of the leading axis as of which the leading axis and the following axis travel synchronously.

If the leading axis is at a standstill when the job starts, the status "Waiting" is displayed on the following axis (<TO>.StatusSynchronizedMotion.WaitingFunctionState = 3) until the leading axis is set in motion.

NOTE

Dynamic jumps

If the following axis is in motion and the leading value is at standstill when the "MC_CamIn" job is started, dynamic jumps can occur at the following axis as soon as the leading axis is set in motion and the following axis starts synchronizing.

If the leading and following axes are already at their synchronous positions when the "MC_CamIn" job is started, synchronous operation immediately has "Synchronous" status.

During synchronization

The following axis begins to synchronize as soon as the "MC_CamIn" job takes effect and the leading axis is moving. The synchronization is indicated in the Motion Control instruction "MC_CamIn" with the parameter "StartSync" = TRUE and in the "<TO>.StatusWord.X21

(Synchronizing)" tag of the following axis. The leading value must not reverse during synchronization.

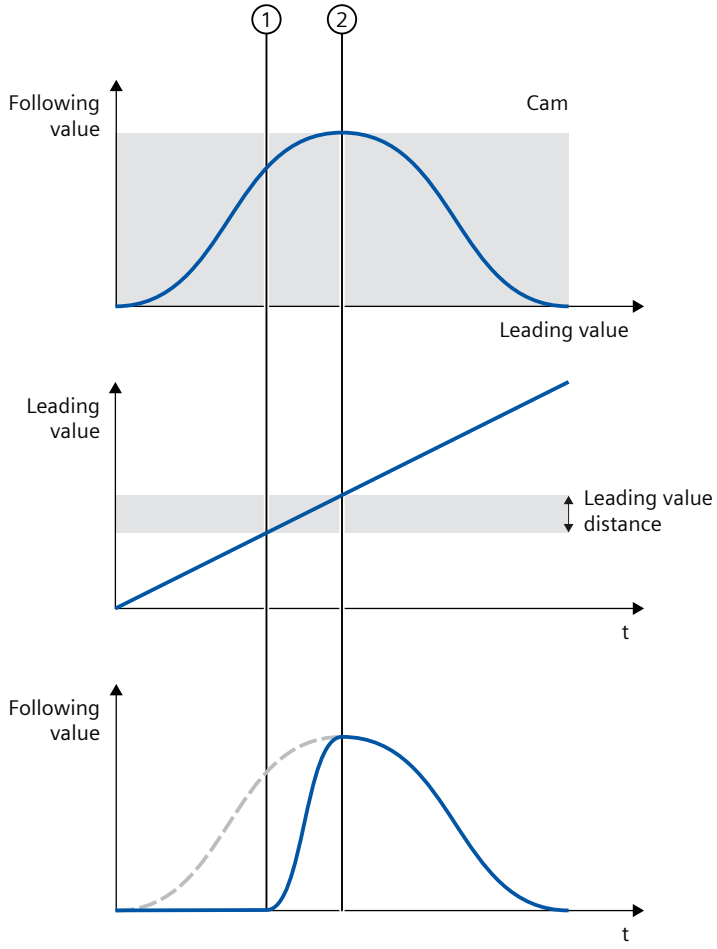

① Time at which the job becomes effective and the synchronization begins.

② Time when synchronization is complete

The dynamics of the following axis during synchronization is obtained from the calculated motion profile and the current dynamics of the leading axis. Changes in the dynamics of the leading axis during synchronization are superimposed with the calculated motion profile in accordance with the synchronous operation function. This can have the result that the configured dynamic limits at the following axis are violated. This scenario is indicated in the "<TO>.StatusSynchronizedMotion.StatusWord.X0 ... X2" variables of the technology object.

After synchronization

The position of the leading axis from which the leading axis and following axis travel synchronously is derived in the following way:

Position axes synchronous = Current leading value position at job start + synchronization length

As soon as the leading axis has reached this position, the following axis is synchronized. The following axis travels synchronously with the leading axis in accordance with the cam profile (Page 146).

8.7.8 Directly set following axis synchronously with "MC_CamIn" (S7-1500T)

During camming (Page 82), synchronization establishes the relationship between the leading axis and following axis. With directly set synchronously, the leading and following axes move synchronously immediately without synchronization motion.

This type of synchronization is mainly suitable for synchronizing at a standstill.

Parameter inputs

You define the behavior of the following axis for synchronization with the following parameters of the Motion Control instruction "MC_CamIn (Page 247)":

- With the parameter "SyncProfileReference" = 2, you specify the type of synchronization as directly set synchronously.
- With the parameter "MasterSyncPosition", you define the synchronous position of the leading axis relative to the start position of the cam. The synchronous position must be within the definition of the cam. With directly set synchronously, the synchronous position is the position in the cam via which the relation between leading axis and following axis is established.

After the "MC_CamIn" job has started

After the "MC_CamIn" job has started, the status "Synchronous" is set directly at the current leading value position and at the current following value position.

The synchronous position specified in the cam is assigned to the position setpoint of the leading axis in the leading value range and to the position setpoint of the following axis in the following value range. The cam is offset accordingly. The current offset results from the cam and is displayed at the "<TO>.StatusSynchronizedMotion.MasterOffset" and "<TO>.StatusSynchronizedMotion.SlaveOffset" tags of the technology object.
The following axis travels synchronously with the leading axis in accordance with the cam profile (Page 146).

Additional information

For more information on direct synchronous setting, refer to the FAQ entry 109758886 (https://support.industry.siemens.com/cs/ww/en/view/109758886) in the Siemens Industry Online Support.

8.7.9 Directly set following axis synchronously at end of the cam with "MC_CamIn" (S7-1500T)

During camming (Page 82), synchronization establishes the relationship between the leading axis and following axis. With directly set synchronously at the end of the cam, you change another cam or the current cam with a new scaling at the end of the active cam. Camming must already be active for this ("MC_CamIn.InSync" = TRUE). The synchronous operation remains in "synchronous" status without a synchronous operation of the following axis.

Parameter inputs

You define the behavior of the following axis for synchronization with the following parameters of the Motion Control instruction "MC_CamIn (Page 247)":

- With the parameter "SyncProfileReference" = 5, you specify the type of synchronization as directly set synchronously.
- With the parameter "MasterSyncPosition", you define the synchronous position to the cam to be changed. The synchronous position must be within the definition of the cam. With directly set synchronously at the end of the cam, the specified synchronous position of the cam to be changed is automatically moved to the end position of the active cam. To do this, the cam to be inserted is moved in the leading value range and in the following value range. This means that there is no setpoint jump in the following value.

NOTE

Dynamic jumps

Note that dynamic jumps on the following axis can occur in the transition between the two cams if the velocity and acceleration are discontinuous.

Dynamic jumps on the following axis

To determine dynamic jumps on the following axis, use the "MC_GetCamFollowingValue (Page 277)" instruction, for example, to check the following values for velocity and acceleration in the following positions:

- End position of the active cam (<TO>.StatusCam.EndLeadingValue)
- Synchronous position of the ("MasterSyncPosition") cam to be changed

If the parameter values "MC_GetCamFollowingValue.FirstDerivative" of both jobs match, the transition between the cams is constant in velocity. If the parameter values "MC_GetCamFollowingValue.SecondDerivative" of both jobs match, the transition between the cams is constant in acceleration.

To avoid dynamic jumps on the following axis when changing the active cam with new scaling with the start position as synchronous position, use the setting "<TO>.InterpolationSettings.BoundaryConditions" = 1 for theinterpolation of the cam (Page 116). This gives you a steady velocity transition.

After the "MC_CamIn" job has started

The status "Waiting" is displayed at the following axis until the leading value has reached the end of the active cam or the active cam cycle ("<TO>.StatusSynchronizedMotion.WaitingFunctionState" = 3).

When reaching the end of the cam

When the end of the cam is reached ("EndOfProfile" = TRUE), the replaced cam becomes active directly at the current leading value position and at the current following value position starting from the specified synchronous position. The cam is offset accordingly. The offset is displayed in the "<TO>.StatusSynchronizedMotion.MasterOffset" and "<TO>.StatusSynchronizedMotion.SlaveOffset" tags of the technology object.

The synchronous operation remains in "synchronous" status. The following axis travels synchronously with the leading axis in accordance with the cam profile.

8.8 Synchronous travel in camming with "MC_CamIn" (S7-1500T)

As soon as the following axis is synchronized to a leading value, the following axis follows the position of the leading axis according to the cam profile. The transmission behavior during camming is expressed by the cam curve.

The "Synchronous" status is indicated in the Motion Control instruction "MC_CamIn (Page 247)" with the parameter "InSync" = TRUE and in the "<TO>.StatusWord.X22 (Synchronous)" tag of the technology object.

NOTE

Avoid homing the leading axis in synchronous operation

Avoid homing the leading axis during an active synchronous operation. Homing the leading axis during synchronous operation corresponds to a setpoint step-change on the following axis. The following axis compensates for the jump according to the synchronous operation function and limited only to the maximum speed of the drive.

8.9 Reading the leading value in camming (S7-1500T)

With the Motion Control instruction "MC_GetCamLeadingValue", you read the leading value that is defined for a following value from a cam.

Parameter inputs

You define the settings with the following parameters of the Motion Control instruction "MC_GetCamLeadingValue (Page 275-276)":

- With the parameter "FollowingValue", you define the following value for which the leading value is to be read.
- Because the same following values can be defined for different leading values, specify an approximation of the searched leading value in the "ApproachLeadingValue" parameter. If the following value is used multiple times in the cam, it can be used to limit the searched leading value.

After the "MC_GetCamLeadingValue" job has started

The leading value is read after the "MC_GetCamLeadingValue" job has started. As soon as the job is completed with "Done" = TRUE, the parameter "Value" contains the read leading value.

8.10 Reading the following value in camming (S7-1500T)

With the Motion Control instruction "MC_GetCamFollowingValue", you read the following value that is defined for a leading value from a cam.

Parameter inputs

You define the settings with the following parameters of the Motion Control instruction "MC_GetCamFollowingValue (Page 277)":

- With the parameter "LeadingValue", you define the leading value for which the following value is to be read.

After the "MC_GetCamFollowingValue" job has started

The following value is read after the "MC_GetCamFollowingValue" job has started. As soon as the job is completed with "Done" = TRUE, the following parameters contain the read following value:

- The "Value" parameter contains the position.
- The "FirstDerivative" parameter contains the velocity.
- The "SecondDerivative" parameter contains the acceleration.

8.11 Leading value offset during camming (S7-1500T)

8.11.1 Leading value offset on the following axis during camming using leading value distance as of current leading value position (S7-1500T)

With a leading value offset, you offset the effective leading value on the following axis during camming with "MC_CamIn (Page 247)". You can move the effective leading value absolutely or relatively. The leading value of the leading value source and the position of the leading axis are not influenced by the leading value offset.

The leading value offset always refers to the effective leading value. The effective leading value is made up of the leading value of the leading value source and the additive leading value. If you do not use an additive leading value via "MC_LeadingValueAdditive (Page 271)", the effective leading value corresponds to the leading value of the leading value source. You can find an overview in the "Mode of operation of the instructions in synchronous operation (Page 30)" section. In the following, "leading value" refers to the effective leading value.

Parameter inputs

You define the behavior of the following axis during leading value offset with the following parameters of the Motion Control instruction "MC_PhasingAbsolute (Page 228)" or "MC_PhasingRelative (Page 221)":

- With the parameter "ProfileReference" = 1, you specify the type of leading value offset as offset using leading value distance as of the current leading value position.
- With the "PhaseShift" parameter, you specify the leading value offset on the following axis.
- With the "PhasingDistance" parameter, you specify the leading value distance (traversing distance of the leading axis) during the leading value offset.
- With the "Direction" parameter, you specify the direction of the leading value distance in relation to the direction of motion of the leading value (Page 149).

During the leading value offset

After starting the jobs, the following axis begins with the leading value offset starting from the current position. Within the traversing distance of the leading axis, the following axis offsets the leading value at continuous velocity and acceleration. The required dynamics of the following axis to offset the leading value is calculated by the system. The resulting dynamic response of the following axis is not limited.

The leading value offset is indicated in the Motion Control instruction with the parameter "StartPhasing" = TRUE and in the "<TO>.StatusWort.X24 (PhasingCommand)" tag of the technology object. The "AbsolutePhaseShift" or "CoveredPhaseShift" parameter shows the absolute leading value portion already shifted.

The leading value must not reverse during the leading value offset on the following axis. When the leading value reverses, the "MC_PhasingAbsolute" job or "MC_PhasingRelative" job is canceled with "ErrorID" = 16#808C.

After the leading value offset

As soon as the following axis has offset the leading value, the leading value offset is active on the following axis. The status is indicated in the Motion Control instruction with the parameter "Done" = TRUE and in the "<TO>.StatusSynchronizedMotion.PhaseShift" tag of the technology object.

The leading value offset only has an effect in the "Synchronous" status of the camming. When the camming is overridden, the leading value offset is reset to zero.

8.11.2 Leading value offset on the following axis during camming using leading value distance as of specific leading value position (S7-1500T)

With a leading value offset, you offset the effective leading value on the following axis during camming with "MC_CamIn (Page 247)". You can move the effective leading value absolutely or relatively. The leading value of the leading value source and the position of the leading axis are not influenced by the leading value offset.

The leading value offset always refers to the effective leading value. The effective leading value is made up of the leading value of the leading value source and the additive leading value. If you do not use an additive leading value via "MC_LeadingValueAdditive (Page 271)", the effective leading value corresponds to the leading value of the leading value source. You can find an overview in the "Mode of operation of the instructions in synchronous operation (Page 30)" section. In the following, "leading value" refers to the effective leading value.

Parameter inputs

You define the behavior of the following axis during leading value offset with the following parameters of the Motion Control instruction "MC_PhasingAbsolute (Page 228)" or "MC_PhasingRelative (Page 221)":

- With the parameter "ProfileReference" = 2, you specify the type of leading value offset as offset using leading value distance as of a specific leading value position.
- With the "PhaseShift" parameter, you specify the leading value offset on the following axis.
- With the "PhasingDistance" parameter, you specify the leading value distance (traversing distance of the leading axis) during the leading value offset.

- With the "StartPosition" parameter, you specify the leading value position from which the leading value offset starts.
- With the "Direction" parameter, you specify the direction of the leading value distance in relation to the direction of motion of the leading value (Page 149).

Until the leading value offset

After starting the job, the status "Waiting" is displayed at the following axis when the leading value is at standstill and until the leading value has reached the leading value position (<TO>.StatusWord2.X3 = TRUE (PhasingCommandWaiting)).

During the leading value offset

As soon as the leading value has reached the leading value position, the following axis begins to offset the leading value. Within the traversing distance of the leading axis, the following axis offsets the leading value at continuous velocity and acceleration. The required dynamics of the following axis to offset the leading value is calculated by the system. The resulting dynamic response of the following axis is not limited.

The leading value offset is indicated in the Motion Control instruction with the parameter "StartPhasing" = TRUE and in the "<TO>.StatusWort.X24 (PhasingCommand)" tag of the technology object. The "AbsolutePhaseShift" or "CoveredPhaseShift" parameter shows the absolute leading value portion already shifted.

The leading value must not reverse during the leading value offset on the following axis. When the leading value reverses, the "MC_PhasingAbsolute" job or "MC_PhasingRelative" job is canceled with "ErrorID" = 16#808C. The waiting job is not canceled.

After the leading value offset

As soon as the following axis has offset the leading value, the leading value offset is active on the following axis. The status is indicated in the Motion Control instruction with the parameter "Done" = TRUE and in the "<TO>.StatusSynchronizedMotion.PhaseShift" tag of the technology object.

The leading value offset only has an effect in the "Synchronous" status of the camming. When the camming is overridden, the leading value offset is reset to zero.

8.11.3 Defining the direction of the leading value distance of a leading value offset on the following axis during camming (S7-1500T)

With a leading value offset, you offset the effective leading value on the following axis during camming with "MC_CamIn (Page 247)". With the "Direction" parameter of the Motion Control instruction "MC_PhasingAbsolute (Page 228)" or "MC_PhasingRelative (Page 221)", you specify the direction of the leading value distance in relation to the direction of motion of the effective leading value.

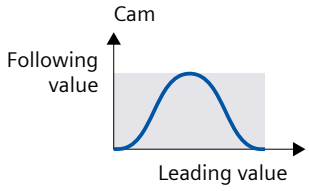

Defining leading value distance in the positive direction of motion of the effective leading value

With "Direction" = 1, the following axis only offsets the leading value when the leading axis travels in the positive direction.

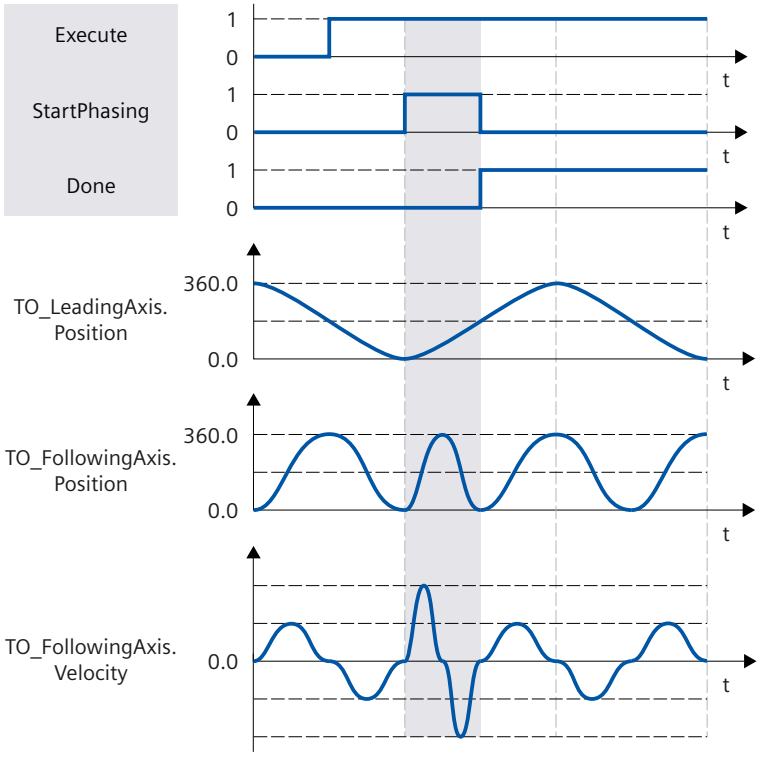

Defining leading value distance in the negative direction of motion of the effective leading value

With "Direction" = 2, the following axis only offsets the leading value when the leading axis travels in the negative direction.

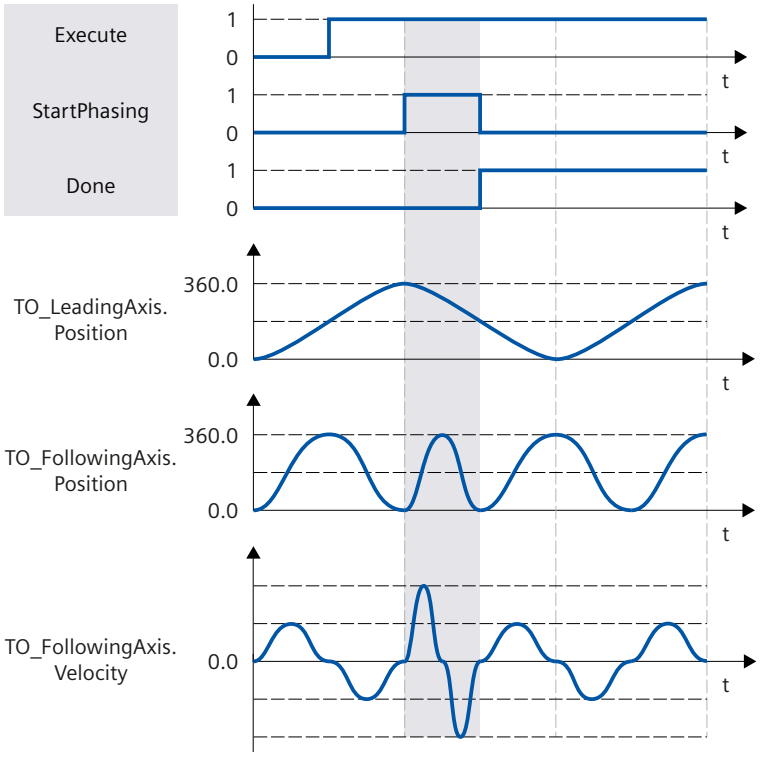

Defining leading value distance in the current direction of motion of the effective leading value

With "Direction" = 3, the following axis offsets the leading value regardless of the direction in which the leading axis is currently traveling.

8.11.4 Only cancel a pending leading value offset in the camming (S7-1500T)

With an "MC_PhasingAbsolute (Page 228)" or "MC_PhasingRelative (Page 221)" job with "ProfileReference" = 5, you cancel a pending "MC_PhasingAbsolute" or "MC_PhasingRelative" job. Canceling a waiting job has no effect on an active leading value offset.

8.12 Following value offset during camming (S7-1500T)

8.12.1 Following value offset on the following axis during camming using leading value distance as of current leading value position (S7-1500T)

With a following value offset, you offset the following value on the following axis during camming with "MC_CamIn (Page 247)". You can move the following value absolutely or

relatively. The leading value of the leading value source and the position of the leading axis are not influenced by the following value offset.

The following value offset always refers to the effective leading value. The effective leading value is made up of the leading value of the leading value source and the additive leading value. If you do not use an additive leading value via "MC_LeadingValueAdditive (Page 271)", the effective leading value corresponds to the leading value of the leading value source. You can find an overview in the "Mode of operation of the instructions in synchronous operation (Page 30)" section. In the following, "leading value" refers to the effective leading value.

For camming, the offset of the following value with an "MC_OffsetAbsolute" or "MC_OffsetRelative" job (<TO>.StatusSynchronizedMotion.Offset) starts at the start value "<TO>.StatusSynchronizedMotion.SlaveOffset".

Parameter inputs

You define the behavior of the following axis during following value offset with the following parameters of the Motion Control instruction "MC_OffsetAbsolute (Page 241)" or "MC_OffsetRelative (Page 235)":

- With the parameter "ProfileReference" = 1, you specify the type of following value offset as offset using leading value distance as of the current leading value position.
- With the "Offset" parameter, you specify the following value offset on the following axis.
- With the "OffsetDistance" parameter, you specify the leading value distance (traversing distance of the leading axis) during the following value offset.
- With the "Direction" parameter, you specify the direction of the leading value distance in relation to the direction of motion of the leading value (Page 154).

During the following value offset

After starting the job, the following axis begins with the following value offset starting from the current position. Within the traversing distance of the leading axis, the following axis offsets the following value at continuous velocity and acceleration. The required dynamics of the following axis for the following value offset is calculated by the system. The resulting dynamic response of the following axis is not limited.

The following value offset is indicated in the Motion Control instruction with the parameter "StartOffset" = TRUE and in the "<TO>.StatusWort2.X4 (OffsetCommand)" tag of the technology object. The "AbsoluteOffset" or "CoveredOffset" parameter shows the absolute following value portion already shifted.

The leading value must not reverse during the following value offset on the following axis. When the leading value reverses, the "MC_OffsetAbsolute" job or "MC_OffsetRelative" job is canceled with "ErrorID" = 16#808C.

After the following value offset

As soon as the following axis has offset the following value, the following value offset is active on the following axis. The status is indicated in the Motion Control instruction with the parameter "Done" = TRUE and in the "<TO>.StatusSynchronizedMotion.Offset" tag of the technology object.

The following value offset only has an effect in the "Synchronous" status of the camming. When the camming is overridden, the following value offset is reset to zero.

8.12.2 Following value offset on the following axis during camming using leading value distance as of specific leading value position (S7-1500T)

With a following value offset, you offset the following value on the following axis during camming with "MC_CamIn (Page 247)". You can move the following value absolutely or relatively. The leading value of the leading value source and the position of the leading axis are not influenced by the following value offset.

The following value offset always refers to the effective leading value. The effective leading value is made up of the leading value of the leading value source and the additive leading value. If you do not use an additive leading value via "MC_LeadingValueAdditive (Page 271)", the effective leading value corresponds to the leading value of the leading value source. You can find an overview in the "Mode of operation of the instructions in synchronous operation (Page 30)" section. In the following, "leading value" refers to the effective leading value.

For camming, the offset of the following value with an "MC_OffsetAbsolute" or "MC_OffsetRelative" job (<TO>.StatusSynchronizedMotion.Offset) starts at the start value "<TO>.StatusSynchronizedMotion.SlaveOffset".

Parameter inputs

You define the behavior of the following axis during following value offset with the following parameters of the Motion Control instruction "MC_OffsetAbsolute (Page 241)" or "MC_OffsetRelative (Page 235)":

- With the parameter "ProfileReference" = 2, you specify the type of following value offset as offset using leading value distance as of a specific leading value position.
- With the "Offset" parameter, you specify the following value offset on the following axis.
- With the "OffsetDistance" parameter, you specify the leading value distance (traversing distance of the leading axis) during the following value offset.
- With the "StartPosition" parameter, you specify the leading value position from which the following value offset starts.
- With the "Direction" parameter, you specify the direction of the leading value distance in relation to the direction of motion of the leading value (Page 154).

Until the following value offset

After starting the job, the status "Waiting" is displayed at the following axis when the leading value is at standstill and until the leading value has reached the leading value position (<TO>.StatusWord2.X5 = TRUE (OffsetCommandWaiting)).

During the following value offset

As soon as the leading value has reached the leading value position, the following axis begins to offset the following value. Within the traversing distance of the leading axis, the following axis offsets the following value at continuous velocity and acceleration. The required dynamics of the following axis for the following value offset is calculated by the system. The resulting dynamic response of the following axis is not limited.

The following value offset is indicated in the Motion Control instruction with the parameter "StartOffset" = TRUE and in the "<TO>.StatusWort2.X4 (OffsetCommand)" tag of the technology object. The "AbsoluteOffset" or "CoveredOffset" parameter shows the absolute following value portion already shifted.

The leading value must not reverse during the following value offset on the following axis. When the leading value reverses, the "MC_OffsetAbsolute" job or "MC_OffsetRelative" job is canceled with "ErrorID" = 16#808C. The waiting job is not canceled.

After the following value offset

As soon as the following axis has offset the following value, the following value offset is active on the following axis. The status is indicated in the Motion Control instruction with the parameter "Done" = TRUE and in the "<TO>.StatusSynchronizedMotion.Offset" tag of the technology object.
The following value offset only has an effect in the "Synchronous" status of the camming. When the camming is overridden, the following value offset is reset to zero.

8.12.3 Defining the direction of the leading value distance of a following value offset on the following axis during camming (S7-1500T)

With a following value offset, you offset the following value on the following axis during camming with "MC_CamIn (Page 247)". With the "Direction" parameter of the Motion Control instruction "MC_OffsetAbsolute (Page 241)" or "MC_OffsetRelative (Page 235)", you specify the direction of the leading value distance in relation to the direction of motion of the effective leading value.

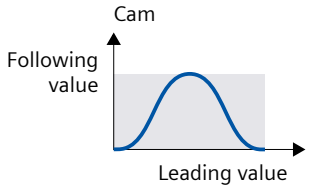

Defining leading value distance in the positive direction of motion of the effective leading value

With "Direction" = 1, the following axis only offsets the following value when the leading axis travels in the positive direction.

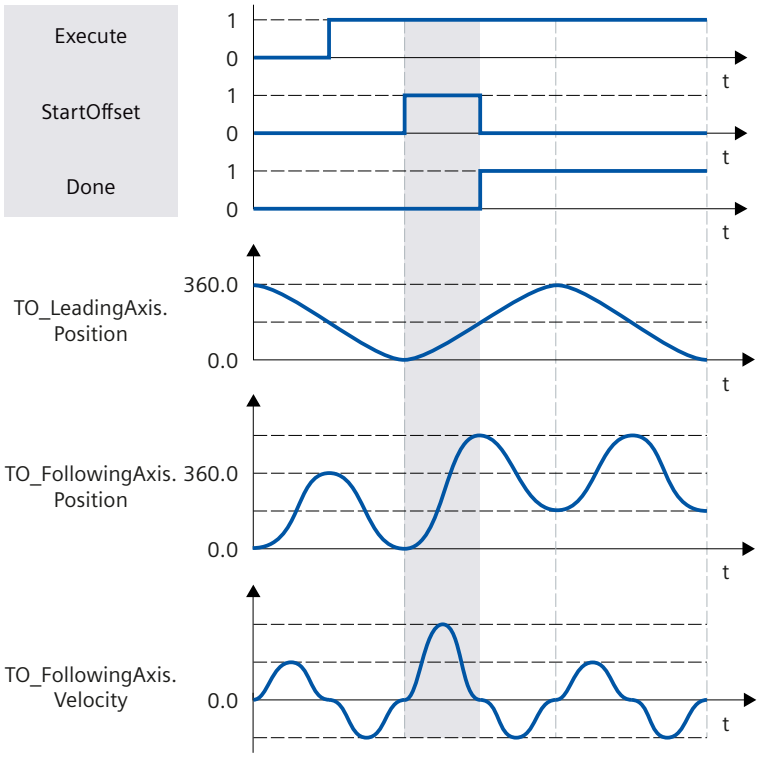

Defining leading value distance in the negative direction of motion of the effective leading value

With "Direction" = 2, the following axis only offsets the following value when the leading axis travels in the negative direction.

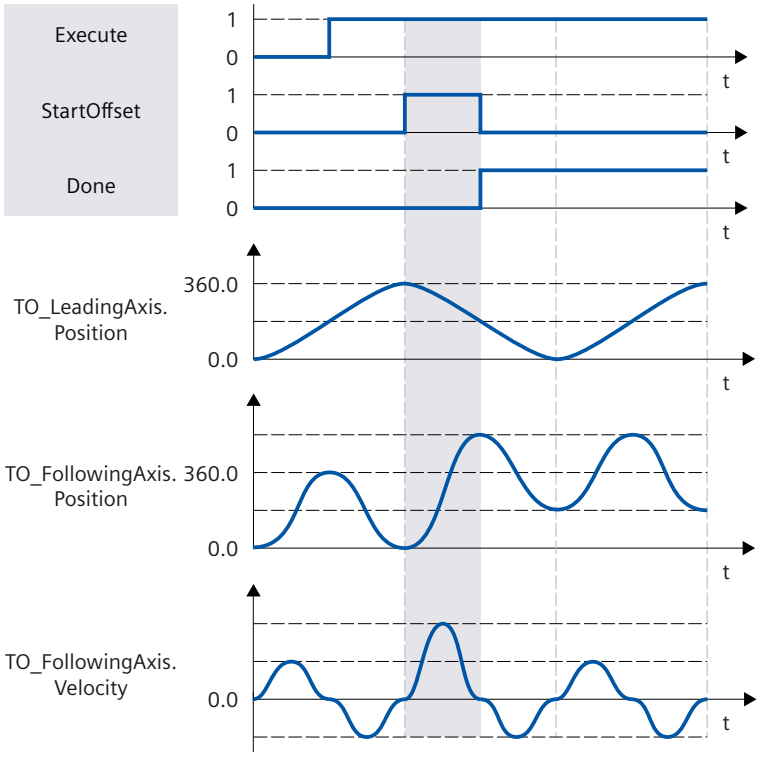

Defining leading value distance in the current direction of motion of the effective leading value

With "Direction" = 3, the following axis offsets the following value regardless of the direction in which the leading axis is currently traveling.

8.12.4 Only cancel a pending following value offset in the camming (S7-1500T)

With an "MC_OffsetAbsolute (Page 241)" or "MC_OffsetRelative (Page 235)" job with "ProfileReference" = 5, you cancel a pending "MC_OffsetAbsolute" or "MC_OffsetRelative" job. Canceling a pending job has no effect on an active following value offset.

8.13 Desynchronize camming (S7-1500T)

8.13.1 Desynchronizing following axis using dynamic parameters with "MC_CamOut" (S7-1500T)

Desynchronization ends the synchronous operation relationship between the leading and following axis and camming is ended. For desynchronization using dynamic parameters,

desynchronization begins in such a way that the following axis comes to a standstill when the stop position is reached.
With the Motion Control instruction "MC_CamOut" you can desynchronize a camming which you have started either with a "MC_CamIn (Page 247)" job.

Parameter inputs

You define the behavior of the following axis for desynchronization with the following parameters of the Motion Control instruction "MC_CamOut (Page 267)":

- With the parameter "SyncProfileReference" = 0, you specify the type of desynchronization as desynchronization using dynamic parameters.
- With the parameter "SlavePosition", you specify the stop positions of the following axis. The stop position of the following axis is the position at which the following axis comes to a standstill and the desynchronization is completed.
- With the "Deceleration" parameter, you specify the deceleration of the following axis.
- With the "Jerk" parameter, you specify the jerk of the following axis.
- With the "SyncOutDirection" parameter, you specify the direction of the desynchronization (Page 160).

Until desynchronization

After the start of the "MC_CamOut" job, a motion profile for the following axis is calculated continuously. The motion profile is calculated based on the following parameters:

- Specified stop position of the following axis in the Motion Control instruction
- Specified dynamics of the Motion Control instruction
- Current position and dynamics of the leading and following axes
- Synchronous operation function
- Superimposed motion of the following axis
- Additive leading value of the following axis

The distance of the following axis and thus the starting position of the following axis for desynchronization results from the calculation.
The start position of the following axis is derived in the following way:
Start position = stop position of the following axis - travel distance of the following axis
The status "Waiting" is displayed at the following axis until the following value has reached the start position (<TO>.StatusSynchronizedMotion.WaitingFunctionState = 5).

During desynchronization

The following axis begins to desynchronize as soon as the following value has reached the start position. Desynchronization is indicated in the Motion Control instruction "MC_CamOut" with the parameter "StartSyncOut" = TRUE and in the "<TO>.StatusWord2.X1 (DesynchronizingCommand)" tag of the technology object. The synchronous operation is no longer in the "Synchronous" status. Superimposed jobs of the following axis are canceled.
The following axis moves to the stop position with the specified dynamics, independent of the leading value. During desynchronization, several modulo revolutions of both axes are generally possible.

After desynchronization

As soon as the following axis reaches the stop position, the following axis is desynchronized. The following axis is at a standstill. The status is indicated in the Motion Control instruction "MC_CamOut" with the parameter "Done" = TRUE and in the "<TO>.StatusWord.X7 (Standstill)" tag of the technology object.

8.13.2 Desynchronizing following axis using leading value distance with "MC_CamOut" (S7-1500T)

Desynchronization ends the synchronous operation relationship between the leading and following axis and camming is ended. For desynchronization using the leading value distance, desynchronization begins in such a way that the following axis comes to a standstill when the stop position is reached.

With the Motion Control instruction "MC_CamOut" you can desynchronize a camming which you have started either with a "MC_CamIn (Page 247)" job.

Parameter inputs

You define the behavior of the following axis for desynchronization with the following parameters of the Motion Control instruction "MC_CamOut (Page 267)":

- With the parameter "SyncProfileReference" = 1, you specify the type of desynchronization as desynchronization using the leading value distance.
- With the parameter "SlavePosition", you specify the stop positions of the following axis. The stop position of the following axis is the position at which the following axis comes to a standstill and the desynchronization is completed.
- With the "MasterStopDistance" parameter, you define the leading value distance (desynchronization length).
- With the "SyncOutDirection" parameter, you specify the direction of the desynchronization (Page 160).

Until desynchronization

After the start of the "MC_CamOut" job, a motion profile is calculated depending on the specified leading value distance. The calculation determines the required dynamics and thus the start position of the leading axis for the desynchronization.

The start position of the leading axis is derived in the following way:

Start position = leading value position when the stop position of the following axis is reached - leading value distance

The status "Waiting" is displayed at the following axis until the leading value has reached the start position (<TO>.StatusSynchronizedMotion.WaitingFunctionState = 5).

During desynchronization

The following axis begins to desynchronize as soon as the leading value has reached the start position. Desynchronization is indicated in the Motion Control instruction "MC_CamOut" with the parameter "StartSyncOut" = TRUE and in the "<TO>.StatusWord2.X1

(DesynchronizingCommand)" tag of the technology object. The synchronous operation is no longer in the "Synchronous" status. Superimposed jobs of the following axis are canceled. The following axis moves to the stop position with the specified dynamics, independent of the leading value. The leading value must not reverse during desynchronization. During desynchronization, several modulo revolutions of both axes are generally possible.

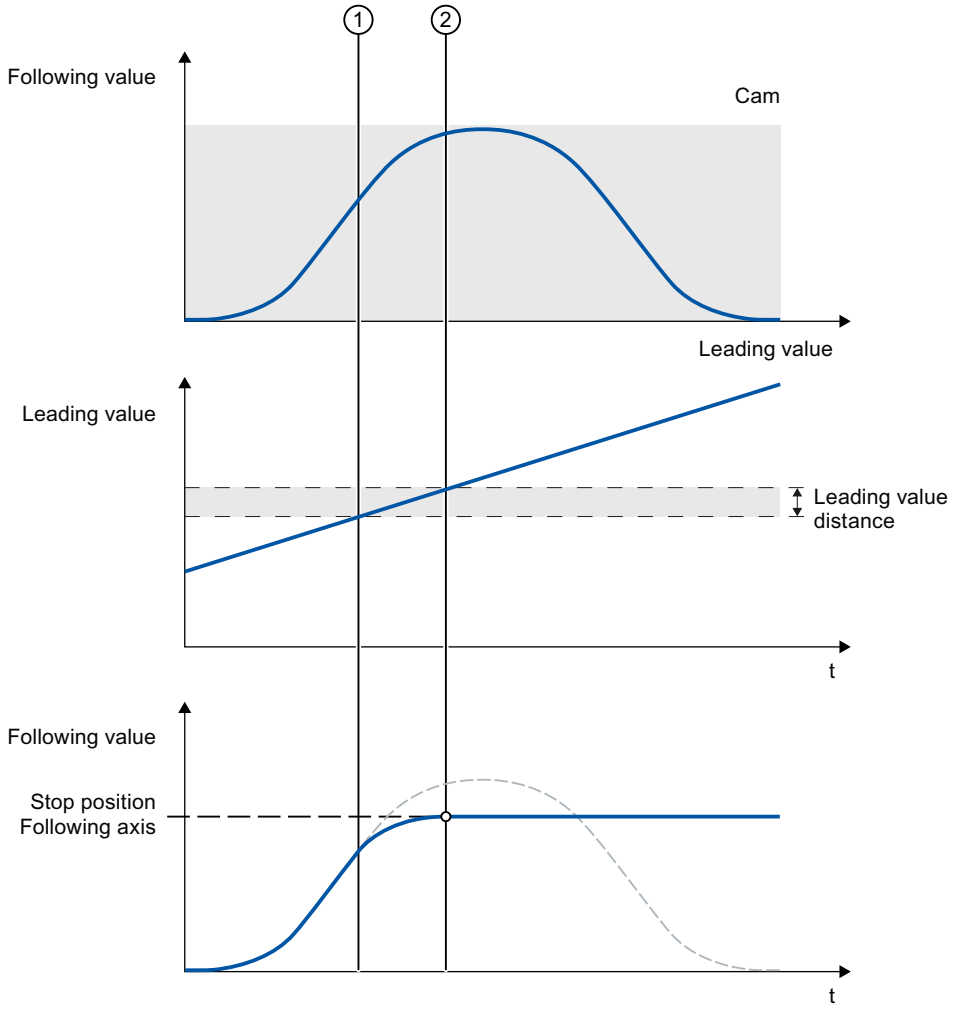

① Time when desynchronization starts

② Time when desynchronization is complete

The dynamics of the following axis during desynchronization is obtained from the calculated motion profile and the current dynamics of the leading axis. Changes in the dynamics of the leading axis during desynchronization are superimposed with the calculated motion profile in accordance with the synchronous operation function. This can have the result that the configured dynamic limits at the following axis are violated. This scenario is indicated in the "<TO>.StatusSynchronizedMotion.StatusWord.X0 ... X2" variables of the technology object.

After desynchronization

As soon as the following axis reaches the stop position, the following axis is desynchronized. The following axis is at a standstill. The status is indicated in the Motion Control instruction

"MC_CamOut" with the parameter "Done" = TRUE and in the "<TO>.StatusWord.X7 (Standstill)" tag of the technology object.

8.13.3 Defining direction of desynchronization with "MC_CamOut" (S7-1500T)

Desynchronization ends the synchronous operation relationship between the leading and following axis and camming is ended. You can specify the desynchronization direction with the "SyncOutDirection" parameter of the Motion Control instruction "MC_CamOut (Page 267)".

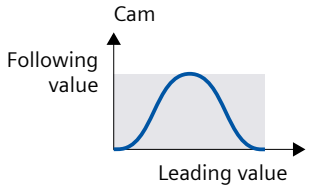

Desynchronizing the following axis in positive traversing direction

With "SyncOutDirection" = 1, the following axis is only desynchronized when the following axis moves in the positive direction.

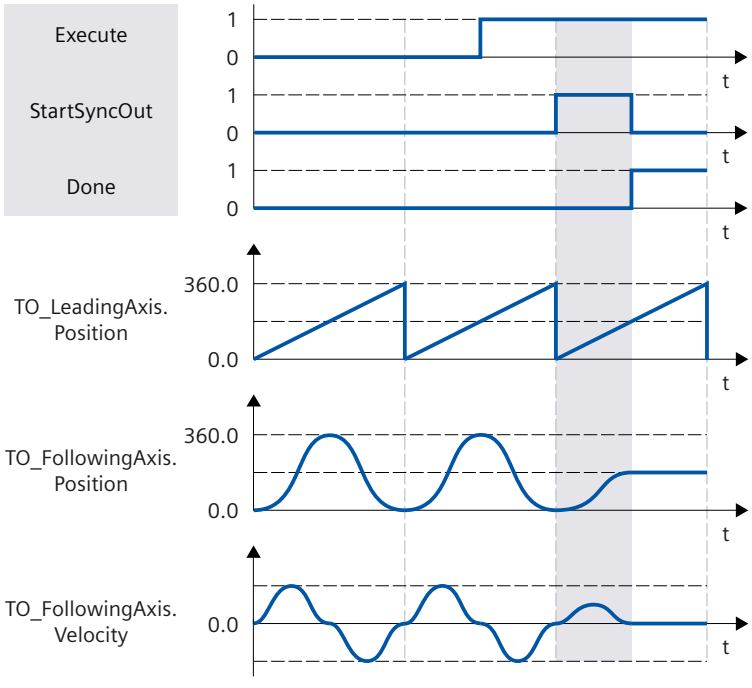

Desynchronizing the following axis in negative traversing direction

With "SyncOutDirection" = 2, the following axis is only desynchronized when the following axis moves in the negative direction.

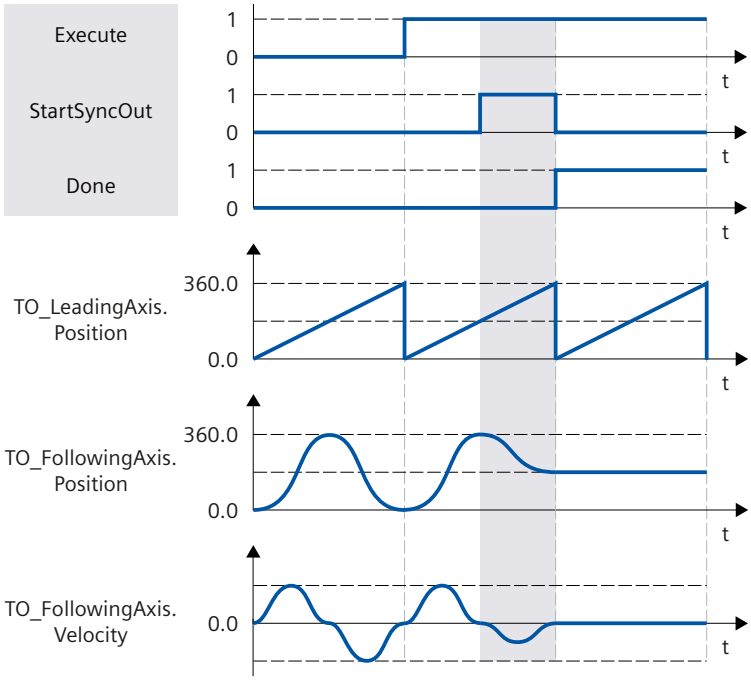

Desynchronizing the following axis in the current traversing direction

With "SyncOutDirection" = 3, the following axis is desynchronized in the direction in which the following axis is currently moving.

8.13.4 Only cancel a pending camming with "MC_CamOut" (S7-1500T)

With a "MC_CamOut (Page 267)" job with "SyncProfileReference" = 5 you cancel a pending camming. Canceling a pending camming has no effect on an active cam camming.

8.14 Tags: Camming (S7-1500T)

The following technology object tags are relevant for camming:

Status indicators		
Tag	**Description**	
<TO>.StatusSynchronizedMotion.FunctionState	Indication of which synchronous operation function is active	
	0	No synchronous operation active
	1	Gearing ("MC_GearIn")
	2	Gearing with specified synchronous positions ("MC_GearInPos")

Status indicators		
Tag	**Description**	
<TO>.StatusSynchronizedMotion.FunctionState	3	Camming ("MC_CamIn")
	4	Desynchronization of gearing ("MC_GearOut")
	5	Desynchronization of camming ("MC_CamOut")
	6	Velocity gearing ("MC_GearInVelocity")
<TO>.StatusSynchronizedMotion.WaitingFunctionState	Indication of which synchronous operation function is waiting	
	0	No synchronous operation waiting
	1	Reserved
	2	Gearing with specified synchronous positions waiting ("MC_GearInPos")
	3	Camming waiting ("MC_CamIn")
	4	Desynchronization of gearing waiting ("MC_GearOut")
	5	Desynchronization of camming waiting ("MC_CamOut")
<TO>.StatusSynchronizedMotion.ActualMaster	When a synchronous operation job is started, the number of the technology data block of the currently used leading axis is displayed.	
	0	Synchronous operation inactive
<TO>.StatusSynchronizedMotion.ActualCam	Currently used for cyclic cam for camming	
<TO>.StatusSynchronizedMotion.MasterOffset	Current offset of the leading value range of the cyclic cam	
<TO>.StatusSynchronizedMotion.MasterScaling	Current scaling of the leading value range of the cyclic cam	
<TO>.StatusSynchronizedMotion.SlaveOffset	Current offset of the following value range of the cyclic cam	
<TO>.StatusSynchronizedMotion.SlaveScaling	Current scaling of the following value range of the cyclic cam	
<TO>.Position	Setpoints of the axis	
<TO>.Velocity		
<TO>.Acceleration		
<TO>.StatusSynchronizedMotion.EffectiveLeadingValue.Position	Effective leading value including an additive leading value with an "MC_LeadingValueAdditive" job	
<TO>.StatusSynchronizedMotion.EffectiveLeadingValue.Velocity		
<TO>.StatusSynchronizedMotion.EffectiveLeadingValue.Acceleration		
<TO>.StatusSynchronizedMotion.PhaseShift	Current absolute leading value offset with an "MC_PhasingAbsolute" or "MC_PhasingRelative" job	
<TO>.StatusSynchronizedMotion.FunctionLeadingValue.Position	Leading value of the synchronous operation function after a leading value offset with an "MC_PhasingAbsolute" job or "MC_PhasingRelative" job including an additive leading value with a "MC_LeadingValueAdditive" job	
<TO>.StatusSynchronizedMotion.FunctionFollowingValue.Position	Following value of the synchronous operation function before a following value offset with an "MC_OffsetAbsolute" job or "MC_OffsetRelative" job	
<TO>.StatusSynchronizedMotion.FunctionFollowingValue.Velocity		
<TO>.StatusSynchronizedMotion.FunctionFollowingValue.Acceleration		
<TO>.StatusSynchronizedMotion.Offset	Current absolute following value offset with an "MC_OffsetAbsolute" or "MC_OffsetRelative" job	

Status indicators	
Tag	**Description**
<TO>.StatusSynchronizedMotion.StatusWord.X0 (MaxVelocityExceeded)	Set to the value "TRUE" when the maximum velocity configured for the following axis is exceeded during synchronous operation.
<TO>.StatusSynchronizedMotion.StatusWord.X1 (MaxAccelerationExceeded)	Set to the value "TRUE" when the maximum acceleration configured for the following axis is exceeded during synchronous operation.
<TO>.StatusSynchronizedMotion.StatusWord.X2 (MaxDecelerationExceeded)	Set to the value "TRUE" when the maximum deceleration configured for the following axis is exceeded during synchronous operation.
<TO>.StatusWord.X21 (Synchronizing)	Set to the value "TRUE" when the synchronous axis synchronizes to a leading value.
<TO>.StatusWord.X22 (Synchronous)	Set to the value "TRUE" when the synchronous axis is synchronized and moves synchronously to the leading axis.
<TO>.StatusWord2.X1 (DesynchronizingCommand)	Set to the value "TRUE" when the synchronous axis desynchronizes.
<TO>.StatusWord.X24 (PhasingCommand)	Is set to the value "TRUE" if a job for leading value offset is active ("MC_PhasingAbsolute", "MC_PhasingRelative").
<TO>.StatusWord2.X3 (PhasingCommandWaiting)	Is set to the value "TRUE" if a job for leading value offset is pending ("MC_PhasingAbsolute", "MC_PhasingRelative").
<TO>.StatusWord2.X4 (OffsetCommand)	Is set to the value "TRUE" if a job for following value offset is active ("MC_OffsetAbsolute", "MC_OffsetRelative").
<TO>.StatusWord2.X5 (OffsetCommandWaiting)	Is set to the value "TRUE" if a job for following value offset is waiting ("MC_OffsetAbsolute", "MC_OffsetRelative").
<TO>.ErrorWord.X14 (SynchronousError)	Error during synchronous operation The leading axis specified in the motion control instruction was not configured as a possible leading axis.

Other synchronous operation functions (S7-1500T) 9

9.1 Simulate synchronous operation (S7-1500T)

An active synchronous operation connection is triggered when access enables are removed or four motion jobs on a following axis. By simulating synchronous operation, you can keep the synchronous operation active without canceling the synchronous operation relationship. You can set an active synchronous operation with the motion control instruction "MC_SynchronizedMotionSimulation (Page 260-261)" in simulation.

The synchronous operation only acts on the following axis. Setpoint changes from the synchronous operation are no longer taken into consideration at the axis and no longer forwarded to the drive. The setpoints output to the drive continue to come from any active superimposed motions of the following axis. This also applies to single-axis jobs on the following axis, while synchronous operation is in simulation mode.

NOTE

Setting synchronous operation with superimposed motions in simulation

If superimposed movements by the motion control instructions "MC_MoveSuperimposed", "MC_MotionInSuperimposed" or "MC_HaltSuperimposed" are or were active on the following axis, do not set a synchronous operation in simulation. This is because after you end the simulation, the following axis follows the leading axis without the position shifted by the superimposed motion. This can cause a setpoint jump of the position on the following axis.

If you are using synchronous operation, use the motion control instructions "MC_OffsetAbsolute" or "MC_OffsetRelative" to move the following axis position.

Starting the simulation

Requirement

- The technology object has been configured correctly.
- The following axis is a synchronous axis.
- Synchronous operation is active on the technology object in status "Synchronous" (<TO>.StatusWord.X22 = TRUE).

Procedure

To set a synchronous operation on a following axis in simulation mode, follow these steps:

1. At the "Slave" parameter of the "MC_SynchronizedMotionSimulation" job, specify the following axis on which the synchronous operation is active.
2. Bring the leading axis to a standstill, e.g. with an "MC_Halt" job.
3. Start the simulation of the synchronous operation on the following axis with "Enable" = TRUE parameter. The leading axis must be stopped at this time.

   As soon as the synchronous operation is active, this is indicated in the motion control instruction by the parameter "InSimulation" = TRUE and in the "<TO>.StatusSynchronizedMotion.StatusWord.X3 (InSimulation)" tag of the technology object.

The synchronous operation remains active during the simulation, including the motions through single axis jobs or with disabling the leading axis and/or following axis with "MC_Power.Enable" = FALSE or a "MC_Stop" job, for example by opening a protective door. The synchronous operation in "synchronous" status ("MC_GearIn.InGear" = TRUE, "MC_GearInPos.InSync" = TRUE or "MC_CamIn.InSync" = TRUE, but "<TO>.StatusWord.X22" = FALSE).

End simulation

WARNING

Machine damage

If the position of the following axis at the end of the simulation differs from the position at the start of the simulation, this triggers a setpoint step-change which can lead to machine damage.

Therefore, make sure that the setpoints of the following axis correspond to the setpoints from the synchronous operation relationship when simulation is ended.

Requirement

- The set position of the following axis coincides with the setpoint from the synchronous relationship.
- The technology object has been enabled ("MC_Power.Enable" = TRUE).

Procedure

To end a synchronous operation on a following axis, follow these steps:

1. End the synchronous operation with the parameter "Enable" = FALSE of the "MC_SynchronizedMotionSimulation" job.
   The setpoints of the synchronous operation are directly effective on the following axis. The following axis does not have to be synchronized again after the synchronous operation has been completed.

9.1.1 Tags: Synchronous operation is being simulated (S7-1500T)

The following tags of the technology object are relevant for simulation:

Status indicators		
Tag	**Description**	
<TO>.StatusSynchronizedMotion.StatusWord.X3 (InSimulation)	Simulation of synchronous operation on a following axis with a "MC_SynchronizedMotionSimulation" job	
	FALSE	Not simulated
	TRUE	Simulated

9.2 Specify additive leading value (S7-1500T)

To superimpose the leading value of a synchronous operation from the application, use the Motion Control instruction "MC_LeadingValueAdditive" in addition to the active leading value to cyclically specify an additive leading value on the following axis. The additive leading value consists of position, velocity and acceleration.

You can find an overview in the section "Mode of operation of the instructions in synchronous operation (Page 30)".

Parameter inputs

With the following parameters of the Motion Control instruction "MC_LeadingValueAdditive (Page 271)" you can determine the additive leading value:

- At the "Axis" parameter, specify the following axis on which the additive leading value acts.
- With the "Position" parameter, you can define the additive position value.
- With the "Velocity" parameter, you can define the additive velocity value.
- With the "Acceleration" parameter, you can define the additive acceleration value.

Start additive leading value specification

With the "Enable" parameter = TRUE of the "MC_LeadingValueAdditive" job, set the additive leading value to effective. The additive leading value becomes effective directly and without dynamic limitation on the following axis.

You can start an "MC_LeadingValueAdditive" job independently of the synchronous operation job. Only one "MC_LeadingValueAdditive" job can be active on a following axis at any time.

During the additive leading value specification

The default values for position, velocity and acceleration are valid as long as the "Busy" parameter = TRUE. Changes in the specified values are directly effective without consideration of the dynamic limits. The active additive leading value specification is displayed in of the "<TO>.StatusSynchronizedMotion.StatusWord.X4 (LeadingValueAdditiveCommand)" tag of the technology object.

The effect of a "MC_LeadingValueAdditive" job depends on the status of the synchronous operation:

Status of synchronous operation	Effect on:
Not active or pending	• Start position of synchronization • Following axis dynamic response
Synchronization	• Synchronous position • Phase position • Following axis dynamic response
Synchronous motion	• Phase position • Following axis dynamic response

Status of synchronous operation	Effect on:
Desynchronization	• Stop position of following axis • Phase position • Following axis dynamic response

With a leading value switchover, the additive leading value still remains effective.

Ending the additive leading value specification

As soon as you end the leading value specification with the parameter "Enable" = FALSE of the "MC_LeadingValueAdditive" job, the additive leading value directly becomes ineffective.

9.2.1 Tags: Additive leading value (S7-1500T)

The following technology object tags are relevant for the additive leading value:

Status indicators		
Tag	**Description**	
<TO>.StatusSynchronizedMotion.StatusWord.X4 (LeadingValueAdditiveCommand)	Additive leading value with a "MC_LeadingValueAdditive" job	
	FALSE	Additive leading value not active
	TRUE	Additive leading value active
<TO>.StatusSynchronizedMotion.EffectiveLeadingValue.Position	Effective leading value position of the synchronous operation function	
<TO>.StatusSynchronizedMotion.EffectiveLeadingValue.Velocity	Effective leading value velocity of the synchronous operation function	
<TO>.StatusSynchronizedMotion.EffectiveLeadingValue.Acceleration	Effective leading value acceleration of the synchronous operation function	

Cross-PLC synchronous operation (S7-1500T) 10

With cross-PLC synchronous operation, you realize synchronous operations (gearing or camming) between axes that are on different CPUs. All following axes of a leading value are hereby synchronous to one another with consideration of the respective synchronous operation function. All following axes receive the same leading value at the same time. You can configure and operate the following axes on different CPUs within a project. You can also configure the leading axis on any CPU of the same project.

The figure below shows the operating principle based on an example with two following axes on two CPUs:

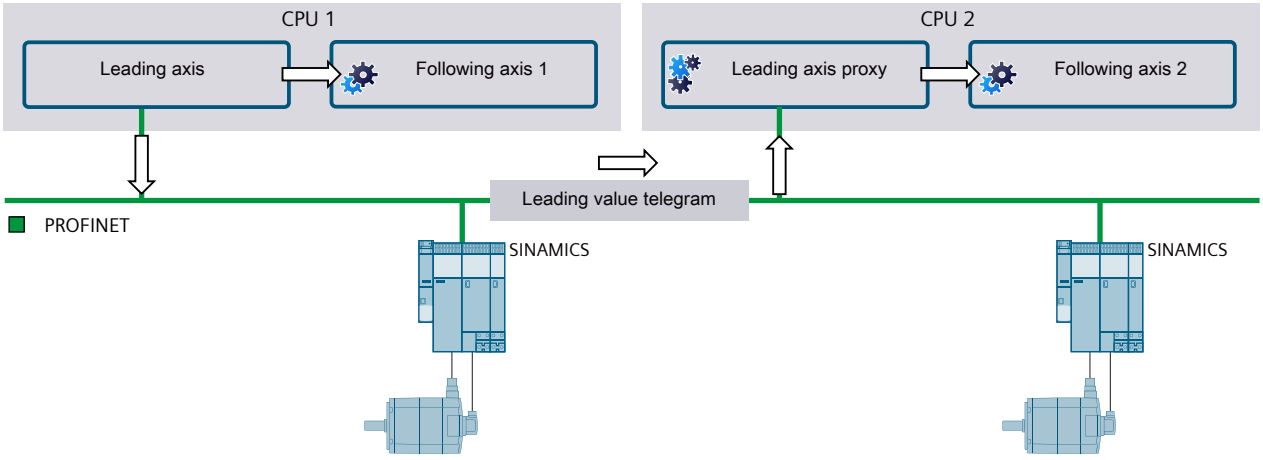

⇨ Leading value

The leading axis and a local following axis 1 are located on CPU 1. The leading axis and the following axis 1 are interconnected to a synchronous operation.

The leading axis makes the leading value available for cross-PLC synchronous operation. The leading value is transferred to CPU 2 by means of a leading value telegram via PROFINET IO with IRT.

On CPU 2, a leading axis proxy reads the leading value. A following axis 2 is interconnected locally with the leading axis proxy as leading axis.

The following axes 1 and 2 are synchronous and follow the same leading value.

The S7-1500 and S7-1500T CPUs can make the leading value available for a cross-PLC synchronous operation. You need to use an S7-1500T CPU as the CPU that receives the leading value via a leading value proxy. A cross-PLC synchronous operation between technology objects with different technology versions ≥ V5.0 on CPUs with different firmware versions ≥ V2.8 is possible.

More information

For more information on the setup and diagnostics of a cross-PLC synchronous operation including sample projects, refer to the Siemens Industry Online Support FAQ entry 109770938 (https://support.industry.siemens.com/cs/ww/en/view/109770938).

10.1 Interconnection possibilities (S7-1500T)

The figure below shows the schematic structure of synchronous following axes with different synchronous operation functions that are distributed over multiple CPUs:

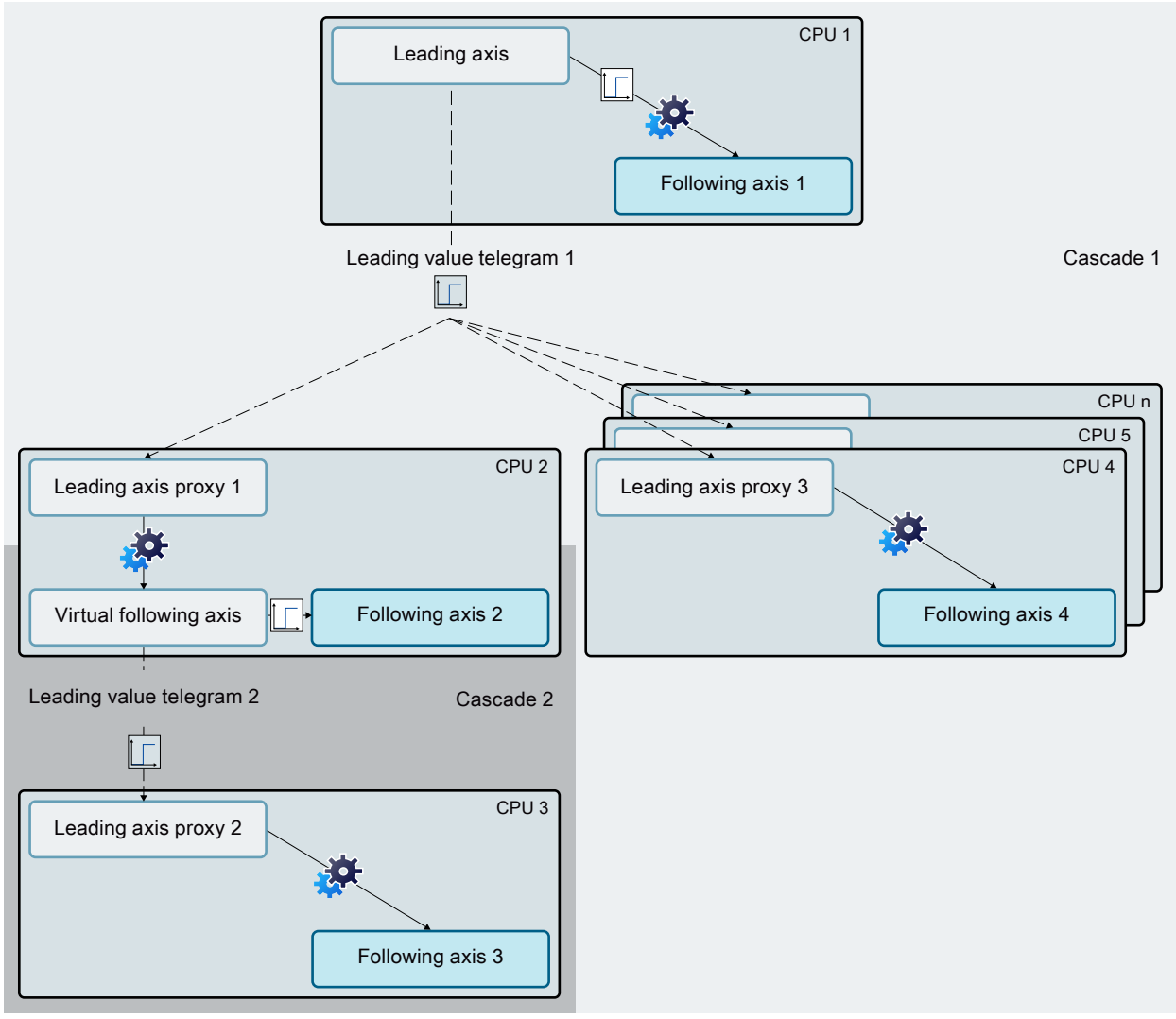

Leading value delay that can be configured at the leading axis (delay time)

Delay time caused by the processing and transfer of the leading value

Gearing (example)

You can interconnect a positioning axis, external encoder or synchronous axis technology object as the leading axis on CPU 1.

Cascaded interconnection

With a cascaded interconnection, a following axis makes a cross-PLC leading value available to a leading axis proxy again. Use a virtual axis for this purpose.

The figure above shows two cascades: The interconnection between the leading axis and the following axes 2 and 4 is the first cascade. The interconnection between the virtual following axis and the following axes 3 is the second cascade.

Communication and time response

In the processing and transfer of the leading value, a delay time occurs between the generation of the leading value on the leading axis one on CPU and the provision of the leading value for the following axes at the leading axis proxy on the other CPUs. The following axes of the other CPUs receive the leading value with a time delay.

In principle, the delay time per cascade is:

Delay time = 2 x application cycle of the CPU of the leading axis proxy

To achieve synchronicity between the local following axes of the CPU of the leading axis and the following axes of other CPUs without extrapolating the leading value at the leading axis proxy, the leading value can be delayed at the leading axis for the local following axes. The delay time can be compensated for with these configurable delay times.

Therefore, in the figure above, a delay time is set at the leading axis on CPU 1, which delays the leading value output to the local following axis 1. In addition, a delay time at the virtual following axis on CPU 2 is set, because CPU 3 is present in a cascade. All following axes thus receive the same leading value at the same time.

During configuration of the following axis under "Leading value interconnections", you select the entry "Delayed" as type of coupling so that the leading value is delayed for local synchronous operation.

Recommendation: Use a virtual axis as leading axis.

Delay time

You can calculate and view the delay times in the interconnection overview (Page 178). The application cycles of the leading axis proxy and any cascading present are included in the calculation of the delay times.

Alternatively, you can manually configure the delay times on the leading axis and on the virtual following axis. In this way, you can consider additional requirements from your specific application, for example.

Depending on the set delay time, the leading value at the leading axis proxy is automatically interpolated or extrapolated. The automatic interpolation and extrapolation guarantees the synchronicity of all following axes. In the interconnection overview, an indication of whether the leading value is interpolated or extrapolated is provided for each route of a leading value (Page 180).

NOTE

Deviations in the following values

With an extrapolation, deviations in the following values can occur in the event of velocity changes. With an interpolation, no deviations of the following values occur in the event of velocity changes.

If you increase the delay time of the leading axis in the leading value settings, this leads to a lower extrapolation time at the leading axis proxy or to a higher interpolation time of the leading value at the leading axis proxy. This reduces the deviations in the following values that arise during extrapolation in the acceleration and deceleration phases.

If the delay time at the leading axis proxy is increased, this results in a higher extrapolation time or to a lower interpolation time.

Recursive interconnection

When all axes are active, the leading axis becomes the following axis of its own leading value with a recursive interconnection. During the configuration, recursive interconnections are displayed in the interconnection overview. No delay times can be calculated for recursive interconnections.

Even if different synchronized groups are active at different times, recursive interconnections may still occur during interconnection. Recursive interconnections over multiple CPUs are not detected during runtime.

A recursive interconnection that is in effect during runtime is not permitted.

10.2 Preparing cross-PLC synchronous operation (S7-1500T)

For a cross-PLC synchronous operation, a leading axis proxy technology object on each additional CPU is required in addition to the technology objects for leading and following axes.

When you create a technology object, an "MC-Servo [OB91]" organization block is automatically created. This is required when you set up communication via direct data exchange on each CPU.

Requirement

- You have created a CPU S7-1500 or S7-1500T for the leading axis.
- You have created one or more CPUs S7-1500T for additional following axes.

Procedure

To prepare the cross-PLC synchronous operation, follow these steps:

1. On the first CPU, create one of the following technology objects as the leading axis.
   - Positioning axis
   - Synchronous axis
   - External encoder (S7-1500T)
2. If necessary, create one or more synchronous axis technology objects as local following axes on the first CPU.
3. Create a leading axis proxy technology object on each additional CPU.
4. Create one or more synchronous axis technology objects as following axes on each additional CPU.
5. For each additional cascade, create a synchronous axis technology object as a virtual following axis that will serve as the leading axis for the next cascade.
6. Configure the configuration parameters of the leading and following axes that are not specific for synchronous operation. You can find a description of the configuration parameters in the "S7-1500/S7-1500T Axis functions" documentation (Page 13).
7. Set up the communication via the direct data exchange (Page 172).

8. Configure the provision of leading value. (Page 174)
9. Configure the tolerance time (Page 177).
10. Set the delay times (Page 180).

10.3 Setting up communication via direct data exchange (S7-1500T)

In a cross-PLC synchronous operation, the leading value is transferred via PROFINET IO with IRT. Direct data exchange is used for the communication between the CPUs within a project. With communication by means of direct data exchange, the leading value is made available once within a project and can then by received by multiple CPUs on the same bus. Leading axis proxies that are interconnected with the same leading value can be configured on different CPUs. In addition, it is possible to make multiple leading values of different leading axes available on different CPUs via the same bus. The CPUs must be on a bus and belong to the same sync domain.

For the required communication directions between the connected CPUs, you must first set up transfer areas. A leading value can be provided over up to eight different transfer areas. You then create input and output tags for the CPUs which reference the relevant transfer areas. You can then select these tags for the transfer area when configuring the leading axis and the leading axis proxy.

Hereafter, the sender CPU is the CPU on which a leading axis provides a leading value. The receiver CPU is the CPU on which a leading axis proxy reads the leading value.

Requirement

- You have set up a network via PROFINET IO with IRT.
- You have connected the IRT ports of the CPUs in the network view and in the topology view.
- You have assigned the same sync domain to all CPUs.
- You have configured a CPU as sync master.
- You have configured all other CPUs as sync slaves.
- You have created at least one technology object on all CPUs.

  NOTE
  "MC-Servo [OB91]" organization block
  When you create a technology object, an MC-Servo OB is created automatically.

- You have configured the property "Synchronous to the bus" with "PROFINET IO-System (100)" as the source of the send clock on all CPUs for the "MC-Servo [OB91]" under "General > Cycle time".

Adding communication directions

To add the communication directions, proceed as follows:

1. Open the "I/O communication" tab in the network view.
2. To create a communication direction from the sender CPU to the receiver CPU, select the sender CPU.

3. Drag-and-drop the receiver CPU into the "Drop or select the device here" field of the "Partner 2" table column of the corresponding PROFINET interface.
   The communication direction from sender CPU to receiver CPU is created.
4. Repeat steps 2 and 3 for all communication directions required between the interconnected CPUs.

NOTE
Communication direction from the receiver CPU to the sender CPU
If necessary, also set up a communication direction from the receiver CPU to the sender CPU, e.g. to transfer application-specific status information.

Configuring transfer areas

To configure the transfer areas, follow these steps:

1. In the "I/O communication" tab in the network view, select a communication direction of a selected CPU.
2. Add a transfer area in the Inspector window under "Properties > General > Direct data exchange" by entering a name.
3. Repeat steps 1 and 2 for all created configuration directions.
4. Configure the created transfer area in the Inspector window "Properties > General > Direct data exchange > <Name of transfer area>":
   – In the "Start address" fields, define the start address of the assigned logical address area of the sender and of the receiver.

     NOTE
     Multiple receiver CPUs in the same cascade (1:n relationship)
     If multiple receiver CPUs receive the same leading value of the sender CPU, select in each case for the receiver CPU the same address area for the transfer area between the sender CPU and the receiver CPU n that you defined between the sender CPU and the receiver CPU 1 under "Properties > General > Direct data exchange" in the "Partner address" table column.

   – In the "Organization block" fields, select the MC-Servo OB of the respective CPU.
   – Define a data length of 48 bytes in the "Data length [byte]" field.
5. Repeat step 4 for all created transfer areas.
6. If you use a SIMATIC Drive Controller, set the clock system of the SINAMICS Integrated:
   – Select PROFIdrive Integrated in the network view.
   – In the Inspector window, select the entry "Send clock of the PROFINET interface [X150]" under "Properties > General > Constant bus cycle time" in the "Cycle time" drop-down list.

Creating tags

To create the output tag of a sender CPU and the input tag of a receiver CPU, proceed as follows:

1. Open the PLC tags of a CPU via the project tree "<Name of CPU> > PLC tags > Show all tags".
   The "PLC tags" table opens.
2. Enter the name of the new tag in the "Name" column.
3. In the "Data type" column, manually enter the "DX_TEL_SyncOp" data type.

   NOTE
   Data type "DX_TEL_SyncOp"
   If the data type "DX_TEL_SyncOp" is not available, it was deleted with the last compilation.
   To restore the "DX_TEL_SyncOp" data type, add a ≥ V5.0 technology object. After you have used the data type in the "PLC tags" table, you can delete the technology object again.

4. Enter the configured start address of the transfer area in the "Address" column with the following prefix:
   – "%Q" for an output tag on the sender CPU
   – "%I" for an input tag on the receiver CPU
5. Repeat steps 1 to 4 for the respective sender and receiver CPUs of all configured transfer areas.

Result

You have set up communication via direct data exchange. During the configuration of the leading axis and the leading axis proxy, you can now select the configured tags for the transfer areas in the table column or in the "Transfer area" drop-down list under "Technology object > Configuration > Leading value settings".
If no technology object is created on a CPU, the MC-Servo OB is deleted when the software is compiled. To be able to check the set communication in this case, compile the hardware only.

More information

For more information on the subject of "Direct data exchange" refer to the "SIMATIC PROFINET with STEP 7" function manual (https://support.industry.siemens.com/cs/ww/en/view/49948856).

10.4 Configuring the provision of leading value and interconnecting axes (S7-1500T)

The following describes how to connect the leading value and the axes involved for a cross-PLC synchronous operation via one or more cascades.

Requirement

- You have set up the direct data exchange between the CPUs.
- You have created one of the following technology objects as the leading axis on the first CPU (S7-1500, S7-1500T):
  - Positioning axis
  - Synchronous axis
  - External encoder

  Recommendation: You have configured the leading axis as virtual axis.
- You may have created one or more synchronous axis technology objects as local following axes on the first CPU.
- You have created a leading axis proxy technology object on each additional CPU (S7-1500T).
- You have created one or more synchronous axis technology objects as following axes on each additional CPU.
- For each additional cascade you have created a technology object synchronous axis as a virtual following axis that is used as the leading axis for the next cascade.
- The technology objects are configured correctly.

Provide cross-PLC leading value

To make the leading value of the leading axis available cross-PLC, proceed as follows:

1. Open the configuration window "Technology object > Configuration > Leading value settings" of the leading axis.
2. To show rows 2 to 8 in the table in the "Provision of leading value" area, select the "Show all transfer areas" check box.
3. In the "Provide leading value" table column, select the check box of the corresponding transfer area.
4. In the "Transfer area" table column, select in the drop-down list the CPU output tag created for the direct data exchange.

Interconnect local following axes

To interconnect the local following axes on the CPU of the leading axis, follow these steps:

1. Open the configuration window "Technology object > Configuration > Leading value interconnections" of a local following axis.
2. In the "Possible leading values" table column, select the leading axis.
3. In the "Type of coupling" table column, select the entry "Delayed".
4. Repeat steps 1 to 3 for all local following axes.

Interconnecting leading axis proxies

To interconnect the leading axis proxies to other CPUs, follow these steps:

1. Open the configuration window "Technology object > Configuration > Leading value settings" of a leading axis proxy.
2. In the "Provision of leading value" area in the "Transfer area" drop-down list, select the input tag of the CPU created for the direct data exchange.
3. Repeat steps 1 and 2 for all leading axis proxies of the same cascade.

Interconnecting following axes of the other CPUs

To interconnect the following axes that are not configured on the CPU of the leading axis, proceed as follows:

1. Open the configuration window "Technology object > Configuration > Leading value interconnections" of a following axis.
2. In the "Possible leading values" table column, select the alternate leading axis of the CPU.
   In the table column "Leading value source", the leading axis is displayed which provides the leading value (<Name of the CPU>.<Name of the technology object>). The "Setpoint" entry is preset in the "Type of coupling" table column.
3. In the table column with the icon , select whether this leading value interconnection should be taken into consideration when calculating the delay time in the interconnection overview (Page 177).
4. Repeat steps 1 to 3 for all following axes of the same cascade.

Interconnecting virtual following axis as leading axis for the next cascade

To interconnect a virtual following axis that is used as leading axis for the next cascade, proceed as follows:

1. Open the configuration window "Technology object > Configuration > Leading value interconnections" of the virtual following axis.
2. In the "Possible leading values" table column, select the alternate leading axis of the CPU.
   In the table column "Leading value source", the leading axis is displayed which provides the leading value (<Name of the CPU>.<Name of the technology object>). The "Setpoint" entry is preset in the "Type of coupling" table column.
3. In the table column with the icon , select whether this leading value interconnection should be taken into consideration when calculating the delay time in the interconnection overview.
4. Switch to the configuration window "Technology object > Configuration > Leading value settings" of the virtual following axis.
5. To show rows 2 to 8 in the table in the "Provision of leading value" area, select the "Show all transfer areas" check box.
6. In the "Provide leading value" table column, select the check box of the corresponding transfer area.
7. In the "Transfer area" table column, select in the drop-down list the CPU output tag created for the direct data exchange.
8. Repeat the steps in the section "Interconnecting leading axis proxies" for all leading axis proxy of the next cascade.

9. Repeat the steps "Interconnecting following axes of the other CPUs" for all following axes of the next cascade.
10. Repeat steps 1 to 9 for all other cascades.

10.5 Configuring the tolerance time (S7-1500T)

If an external leading value becomes invalid during a cross-PLC synchronous operation or a communication error occurs, technology alarm 900 ("Leading values invalid") is output after a tolerance time. You can configure this tolerance time on the leading axis proxy technology object.

Procedure

To configure the tolerance time, follow these steps:

1. Open the configuration window "Technology object > Configuration > Leading value settings" of a leading axis proxy.
2. In the "Leading value monitoring" area, enter the tolerance time within which a valid leading value is expected in the "Tolerance time invalid leading value" input field.

   NOTE
   Extrapolation of the leading value
   Note that the leading value is still being extrapolated during the tolerance time and that the following axis continues to move.
   Therefore, set the tolerance time as brief as possible.

3. Repeat steps 1 and 2 for all other leading axis proxies.

10.6 Working with the interconnection overview table (S7-1500T)

10.6.1 Opening the interconnection overview (S7-1500T)

The interconnection overview contains an overview of the interconnected leading and following axes and their CPU assignment. In the interconnection overview, you also trigger the system calculation of the delay time.

Requirement

- You have created technology objects in the project for:
  - Leading axis
  - Following axis
  - Leading axis proxy
- You have interconnected the CPUs and technology objects with one another.

Procedure

To open the interconnection overview, follow these steps:

1. Select one of the following technology objects in the project navigation:
   - Positioning axis
   - Synchronous axis
   - External encoder
   - Leading axis proxy
2. Select the "Interconnection overview" command from the shortcut menu.

Result

The interconnection overview opens.

10.6.2 Interconnection overview (S7-1500T)

The interconnection overview contains an overview of the interconnected leading and following axes and their CPU assignment in tabular form.

Toolbar

The toolbar at the top of the interconnection overview provides the following functions via buttons:

Button	Description
	You update the view of the interconnection overview with this icon.
Calculate delay times	You trigger calculation of delay times with this button. The delay time is only calculated if the check box "Allow system calculation" is selected under "Leading value settings" during configuration of the technology objects. You can only trigger the calculation of the delay times if the values are not current and the technology objects are not recursively connected.

Filtering the view

You have the following options above the table to filter the view of the interconnection overview:

Field	Description
Enter text filter	In this field, enter a term by which the view should be filtered.
Show delay times	Select this check box to show the "Delay time" columns which contain the delay times.
Show local synchronous operations	Select this check box to display the local leading value interconnections in addition to the cross-PLC leading value interconnections.

Interconnection overview table

The interconnection overview table contains the following information and functions:

Column		Description	
Leading value source			
	PLC	This column displays the CPU of the leading axis.	
	Leading axis	This column displays the name of the leading axis. You open the configuration of the technology object via the link.	
			If this icon is displayed in the "Leading axis" column, the interconnection is excluded from the system calculation of the delay time. In the configuration of the leading axis, the check box "Allow system calculation" is not selected under "Leading value settings".
	DT	This column displays the delay time in ms. This column is only displayed when the "Show delay times" check box is selected.	
	Leading value output	This column displays the type of the leading value output and the number of the transfer area.	
Recipient			
	PLC	This column displays the CPU of the following axis.	
	Following axis	This column displays the name of the following axis. You open the configuration of the technology object via the link.	
	Routes	When you select a row, the icon is displayed in this column. You open the "Routes" area with this icon.	
	Leading axis proxy	The name of the leading axis proxy is displayed in this column. You open the configuration of the technology object via the link.	
			If this icon is displayed in the "Leading axis proxy" column, the interconnection is excluded from the system calculation of the delay time. In the configuration of the leading axis proxy, the check box "Allow system calculation" is not selected under "Leading value settings".
	DT	This column displays the delay time in ms. This column is only displayed when the "Show delay times" check box is selected.	
Interconnection			If this icon is displayed in the "Interconnection" column, the interconnection is affected by a recursion.
			If this icon is displayed in the "Interconnection" column, the interconnection is affected by a recursion, but at least one interconnection is excluded from the calculation of the delay time.
			If this icon is displayed in the "Interconnection" column, the interconnection is excluded from the system calculation of the delay time.
			With this icon, you open the configuration of the following axis.
		If the configured delay time corresponds to the calculated delay time, the icon is displayed in this column.	

In the "Leading value source cannot be clearly determined" area, interconnections are displayed where, for example, several leading axes are connected for a leading axis proxy and the leading value source is therefore not unique. The range is only displayed if there are interconnections without a unique leading value source.

10.6.3 Showing routes (S7-1500T)

The routes of the leading value of a selected following axis are shown in the interconnection overview in the area underneath the table. The leading value is tracked back from the following axis to the leading axis source. If there are multiple routes, they are displayed next to one another.

Procedure

To display the existing routes of a following axis, follow these steps:

1. Select the row of the corresponding following axis in the table.
2. To show the routes, click the icon in the "Routes" column.

Result

All routes are displayed in the area below the table for the selected following axis. Routes affected by a recursion are not displayed.
It is indicated underneath a route whether the leading value is interpolated or extrapolated:

- If all cascades interpolate, "Interpolated" is displayed.
- If at least one cascade extrapolates, "Extrapolated" is displayed.

10.6.4 Setting the delay times (S7-1500T)

You can calculate and view the delay times in the interconnection overview. Alternatively, you can manually configure the delay times on the leading axis and on the virtual following axes. Depending on the set delay time, the leading value at the leading axis proxy is automatically interpolated or extrapolated.

Requirement

- You have interconnected the CPUs and technology objects with one another.
- Except for the delay time, the technology objects are fully configured.

Calculating delay times

To calculate the delay times, follow these steps:

1. Open the configuration window "Technology object > Configuration > Leading value settings" of the leading axis.
2. In the "Delay time of local leading value" area, select the "Allow system calculation" check box.
3. Repeat steps 1 and 2 for all leading axis proxies and for all virtual following axes that are used as leading axis for additional cascades.
4. Open the configuration window "Technology object > Configuration > Leading value interconnections" of a non-local following axis.
5. For a leading axis proxy technology object of the table column with the symbol , select whether this leading value interconnection should be taken into account when calculating the delay time.

6. Repeat steps 4 and 5 for all other non-local following axes.
7. To open the interconnection overview, click on the link "Interconnection overview".
8. To calculate the delay times, click the "Calculate delay times" button in the interconnection overview.
9. Check the calculated delay times in the columns "DT" of the interconnection overview.
10. In the routes, check whether a leading value is interpolated or extrapolated at the leading axis proxy (<TO>.StatusExternalLeadingValue.AdjustmentTime).

Configuring delay times

To adjust the delay time and, for example, take into account additional requirements from your special application, follow these steps:

1. Open the configuration window "Technology object > Configuration > Leading value settings" of the leading axis.
2. Clear the "Allow system calculation" check box in the "Delay time of local leading value" area.
3. Enter the corresponding value in the "Delay time" input field.
   The entered delay time determines the output delay of the leading value for the local following axes (<TO>.CrossPlcSynchronousOperation.LocalLeadingValueDelayTime).
4. Repeat steps 1 to 3 for all virtual following axes that are used as the leading axis for additional cascades.
5. Open the configuration window "Technology object > Configuration > Leading value settings" of a leading axis proxy.
6. Clear the "Allow system calculation" check box in the "Delay time of local leading value" area.
7. In the "Delay time" (<TO>.Parameter.LocalLeadingValueDelayTime) input field, enter the same delay time that is set on the local virtual following axis that is used as the leading axis for an additional cascade.
   The entered delay time determines the output delay of the leading value for the local following axes (<TO>.CrossPlcSynchronousOperation.LocalLeadingValueDelayTime).
8. To open the interconnection overview, click on the link "Interconnection overview".
9. Check the delay times in the "DT" columns of the interconnection overview.
10. In the routes, check whether a leading value is interpolated or extrapolated at the leading axis proxy (<TO>.StatusExternalLeadingValue.AdjustmentTime).

10.7 Tags: Cross-PLC synchronous operation (S7-1500T)

Positioning axis/synchronous axis/external encoder

The following tags of the positioning axis, synchronous axis and external encoder are relevant for cross-PLC synchronous operation:

Tag	Description	
<TO>.CrossPlcSynchronousOperation.Interface[1..8].EnableLeadingValueOutput	Provide cross-PLC leading value	
	FALSE	No

Tag	Description	
<TO>.CrossPlcSynchronousOperation.Interface[1..8].EnableLeadingValueOutput	TRUE	Yes
<TO>.CrossPlcSynchronousOperation.Interface[1..8].AddressOut	Output address for the telegram of cross-PLC synchronous operation	
<TO>.CrossPlcSynchronousOperation.LocalLeadingValueDelayTime	Delay time for setpoint coupling with delayed leading value	
<TO>.StatusProvidedLeadingValue.DelayedLeadingValue.Position	Position of the provided leading value	
<TO>.StatusProvidedLeadingValue.DelayedLeadingValue.Velocity	Velocity of the provided leading value	
<TO>.StatusProvidedLeadingValue.DelayedLeadingValue.Acceleration	Acceleration of the provided leading value	

Leading axis proxy

The following leading axis proxy technology object tags are relevant for cross-PLC synchronous operation:

Tag	Description	
<TO>.Position	Position of the leading value for local synchronous operation	
<TO>.Velocity	Velocity of the leading value for local synchronous operation	
<TO>.Acceleration	Acceleration of the leading value for local synchronous operation	
<TO>.Interface.AddressIn	Input address for the telegram of the external leading value	
<TO>.Parameter.LocalLeadingValueDelayTime	Delay time of leading value output on the local following axis which, in turn, provides a leading value	
<TO>.Parameter.ToleranceTimeExternalLeadingValueInvalid	Tolerance time until a technology alarm is triggered when the external leading value becomes invalid	
<TO>.StatusExternalLeadingValue.ModuloLength	Modulo length of the external leading value	
<TO>.StatusExternalLeadingValue.ModuloStartValue	Modulo start value of the external leading value	
<TO>.StatusExternalLeadingValue.AdjustmentTime	Time by which the external leading value is adjusted	
	< 0	The external leading value is interpolated by this time.
	> 0	The external leading value is extrapolated by this time.
<TO>.StatusWord.X4 (LeadingValueValid)	Validity of the external leading value	
	0	Leading value does not exist or is not valid
	1	Leading value exists and is valid
<TO>.StatusWord.X5 (LeadingValueModulo)	Modulo functionality	
	0	Leading value without modulo functionality
	1	Leading value with modulo functionality
<TO>.StatusWord.X6 (LeadingAxisControl)	Follow-up mode	
	0	Leading axis in follow-up mode
	1	Leading axis not in follow-up mode

Diagnostics (S7-1500, S7-1500T) 11

The description of Motion Control diagnostics is limited to the diagnostics view of the technology objects in TIA Portal, the technology alarms and the error detections on Motion Control instructions.

The following descriptions can be found in the "S7-1500/S7-1500T Motion Control alarms and error IDs" documentation (Page 13):

- Diagnostics concept
- Technology alarms
- Error IDs in Motion Control instructions

A comprehensive description of the system diagnostics of the S7-1500 CPU can be found in the "Diagnostics" function manual (https://support.industry.siemens.com/cs/ww/en/view/59192926).

11.1 Synchronous axis technology object (S7-1500, S7-1500T)

11.1.1 Status and error bits (S7-1500, S7-1500T)

You use the "Technology object > Diagnostics > Status and error bits" diagnostic function in the TIA Portal to monitor the status and error messages for the technology object. The diagnostics function is available in online operation.

The meaning of the status and error messages is described in the following tables. The associated technology object tag is given in parentheses.

Axis status

The following table shows the possible axis status values:

Status	Description
Simulation active	The axis is simulated in the CPU. Setpoints are not output to the drive. (<TO>.StatusWord.X25 (AxisSimulation))
Enabled	The technology object has been enabled. You can move the axis with motion jobs. (<TO>.StatusWord.X0 (Enable))
Position-controlled mode	The axis is in position-controlled mode. (Inversion of <TO>.StatusWord.X28 (NonPositionControlled))
Homed	The technology object is homed. The relationship between the position in the technology object and the mechanical position was successfully created. (<TO>.StatusWord.X5 (HomingDone))
Error	An error occurred at the technology object. Detailed information about the error is available in the "Error" area and in the "<TO>.ErrorDetail.Number" and "<TO>.ErrorDetail.Reaction" tags of the technology object. (<TO>.StatusWord.X1 (Error))

Status	Description
Restart active	The technology object is being reinitialized. (<TO>.StatusWord.X2 (RestartActive))
Axis control panel enabled	The axis control panel is active. The axis control panel has master control over the technology object. You cannot control the axis from the user program. (<TO>.StatusWord.X4 (ControlPanelActive))
Drive ready	Drive is ready to execute setpoints. (<TO>.StatusDrive.InOperation)
Encoder values valid	The actual encoder values are valid. (<TO>.StatusSensor[1].State)
Encoder values valid (S7-1500T)	The actual encoder values of encoder 1, encoder 2, encoder 3 or encoder 4 are valid. (<TO>.StatusSensor[1..4].State)
Active encoder (S7-1500T)	The encoder in effect operationally is encoder 1, encoder 2, encoder 3 or encoder 4. (<TO>.OperativeSensor)
Encoder values homed	Encoder is homed with one of the following homing types: • Active homing • Passive homing • Absolute encoder adjustment • Incremental encoder adjustment (<TO>.StatusSensor[1].Adjusted)
Encoder homed (S7-1500T)	Encoder 1, encoder 2, encoder 3 or encoder 4 is homed with one of the following homing types: • Active homing • Passive homing • Absolute encoder adjustment • Incremental encoder adjustment (<TO>.StatusSensor[1..4].Adjusted)
Restart required	Data relevant for the restart has been changed. The changes are applied only after a restart of the technology object. (<TO>.StatusWord.X3 (OnlineStartValuesChanged))

Status limit switch

The following table shows the possibilities for enabling the software and hardware limit switches:

Status	Description
Negative SW limit switch approached	The negative software limit switch has been approached. (<TO>.StatusWord.X15 (SWLimitMinActive))
Positive SW limit switch approached	The positive software limit switch has been approached. (<TO>.StatusWord.X16 (SWLimitMaxActive))
Negative HW limit switch approached	The negative hardware limit switch has been approached or overtraveled. (<TO>.StatusWord.X17 (HWLimitMinActive))
Positive HW limit switch approached	The positive hardware limit switch has been approached or overtraveled. (<TO>.StatusWord.X18 (HWLimitMaxActive))

Motion status

The following table shows the possible axis motion status values:

Status	Description
Done (no job running)	No job active at technology object. (<TO>.StatusWord.X6 (Done))
Homing job	The technology object executes a homing job of the Motion Control instruction "MC_Home" or from the axis control panel. (<TO>.StatusWord.X11 (HomingCommand))
Jog	The axis is being moved with a job for jog mode of Motion Control instruction "MC_MoveJog". (<TO>.StatusWord.X9 (JogCommand))
Velocity specification	The axis is traversed with a job with velocity specification of the Motion Control instruction "MC_MoveVelocity" or from the axis control panel. (<TO>.StatusWord.X10 (VelocityCommand))
Positioning job	The axis is traversed with a positioning job of Motion Control instruction "MC_MoveAbsolute" or "MC_MoveRelative" or from the axis control panel. (<TO>.StatusWord.X8 (PositioningCommand))
Constant velocity	The axis is moved with constant velocity or is stationary. (<TO>.StatusWord.X12 (ConstantVelocity))
Standstill	The axis is in standstill. (<TO>.StatusWord.X7 (StandStill))
Accelerating	Axis is being accelerated. (<TO>.StatusWord.X13 (Accelerating))
Decelerating	The axis is being decelerated. (<TO>.StatusWord.X14 (Decelerating))
Torque limit active	At least the threshold value (default 90%) of the preset force/torque limitation acts on the axis. (<TO>.StatusWord.X27 (InLimitation))
Stop job active	The axis is stopped and disabled by Motion Control instruction "MC_Stop". (<TO>.StatusWord2.X0 (StopCommand))
Superimposed motion	The motion of the axis is superimposed by at least one overlapping Motion Control instruction. (OR logic operation) (<TO>.StatusWord.X23 (MoveSuperimposedCommand)) (<TO>.StatusWord2.X6 (MotionInSuperimposedCommand)) (<TO>.StatusWord2.X7 (HaltSuperimposedCommand))

Synchronous operation status

Status	Description
Synchronization	The axis is synchronized to the leading value of a leading axis. (<TO>.StatusWord.X21 (Synchronizing))
Synchronous	The axis is synchronized and moves synchronously to the leading axis. (<TO>.StatusWord.X22 (Synchronous))
Desynchronization (S7-1500T)	The axis is desynchronized from the leading value of a leading axis. (<TO>.StatusWord2.X1 (DesynchronizingCommand))

Status	Description
Synchronization pending (S7-1500T)	A synchronous operation is pending until the leading value reaches the start position for synchronization. (<TO>.StatusSynchronizedMotion.WaitingFunctionState.X2 (GearInPosWaiting); <TO>.StatusSynchronizedMotion.WaitingFunctionState.X3 (CamInWaiting))
Desynchronization pending (S7-1500T)	A desynchronization job is pending until the leading value reaches the start position for desynchronization. (<TO>.StatusSynchronizedMotion.WaitingFunctionState.X4 (GearOutWaiting); <TO>.StatusSynchronizedMotion.WaitingFunctionState.X5 (CamOutWaiting))
Additive leading value active (S7-1500T)	The axis receives an additive leading value with the Motion Control instruction "MC_LeadingValueAdditive". (<TO>.StatusSynchronizedMotion.StatusWord.X4 (LeadingValueAdditiveCommand))
Leading value offset (S7-1500T)	The leading value is shifted with the Motion Control instruction "MC_PhasingAbsolute" or "MC_PhasingRelative". (<TO>.StatusWord.X24 (PhasingCommand))
Leading value offset pending (S7-1500T)	A job for leading value offset is waiting. (<TO>.StatusWord2.X3 (PhasingCommandWaiting))
Following value offset (S7-1500T)	The following value is shifted with the Motion Control instruction "MC_OffsetAbsolute" or "MC_OffsetRelative". (<TO>.StatusWord2.X4 (OffsetCommand))
Following value offset is pending (S7-1500T)	A job for following value offset is waiting. (<TO>.StatusWord2.X5 (OffsetCommandWaiting))

Error

The following table shows the possible errors:

Error	Description
System	A system-internal error has occurred. (<TO>.ErrorWord.X0 (SystemFault))
Configuration	A configuration error has occurred. One or more configuration parameters are inconsistent or invalid. The technology object was incorrectly configured, or editable configuration data was incorrectly modified during runtime of the user program. (<TO>.ErrorWord.X1 (ConfigFault))
User program	An error occurred in the user program with a Motion Control instruction or its use. (<TO>.ErrorWord.X2 (UserFault))
Drive	An error occurred in the drive. (<TO>.ErrorWord.X4 (DriveFault))
Encoder	An error occurred in the encoder system. (<TO>.StatusSensor[1].Error)
Encoder (S7-1500T)	An error has occurred in the encoder system of encoder 1, encoder 2, encoder 3 or encoder 4. (<TO>.StatusSensor[1..4].Error)

Error	Description
Data exchange	Communication with a connected device is faulty. (<TO>.ErrorWord.X7 (CommunicationFault))
I/O	An error occurred accessing a logical address. (<TO>.ErrorWord.X13 (PeripheralError))
Job rejected	A job cannot be executed. You cannot execute a Motion Control instruction because necessary requirements are not fulfilled (for example, technology object not homed). (<TO>.ErrorWord.X3 (CommandNotAccepted))
Homing	An error occurred during a homing process. (<TO>.ErrorWord.X10 (HomingFault))
Positioning	The positioning axis was not positioned correctly at the end of a positioning motion. (<TO>.ErrorWord.X12 (PositioningFault))
Dynamic limitation	The dynamic values are limited to the dynamic limits. (<TO>.ErrorWord.X6 (DynamicError))
Following error	The maximum permitted following error has been exceeded. (<TO>.ErrorWord.X11 (FollowingErrorFault))
SW limit switch	A software limit switch has been reached. (<TO>.ErrorWord.X8 (SWLimit))
HW limit switch	A hardware limit switch has been reached or overtraveled. (<TO>.ErrorWord.X9 (HWLimit))
Adapt	An error occurred during data adaption. (<TO>.ErrorWord.X15 (AdaptionError))
Synchronization	An error occurred during synchronization. The leading axis specified for the corresponding Motion Control instruction was not configured as a possible leading axis. (<TO>.ErrorWord.X14 (SynchronousError))

Warnings

The following table shows the possible warnings:

Warning	Description
Configuration	One or several configuration parameters are adjusted internally at a certain time. (<TO>.WarningWord.X1 (ConfigWarning))
Job rejected	Job cannot be executed. You cannot execute a Motion Control instruction because necessary requirements are not fulfilled. (<TO>.WarningWord.X3 (CommandNotAccepted))
Dynamic limitation	The dynamic values are limited to the dynamic limits. (<TO>.WarningWord.X6 (DynamicWarning))
Synchronization	An error occurred during synchronization. The leading axis specified for the corresponding Motion Control instruction was not configured as a possible leading axis. (<TO>.WarningWord.X14 (SynchronousWarning))

Alarm display

For more information and to acknowledge the error, go to the Inspector window by clicking on the "Alarm display" link.

More information

An option for evaluating the individual status bits can be found in the section "Evaluating StatusWord, ErrorWord and WarningWord" of the "S7-1500/S7-1500T Motion Control overview" (Page 13) documentation.

11.1.2 Motion status (S7-1500, S7-1500T)

You use the "Technology object > Diagnostics > Motion status" diagnostic function in the TIA Portal to monitor the motion status of the axis. The diagnostics function is available in online operation.

"Setpoints" area

The following table shows the meaning of the status data:

Status	Description
Target position	Current target position of an active positioning job The target position value is only valid during execution of a positioning job. (<TO>.StatusPositioning.TargetPosition)
Position setpoint	Setpoint position of the axis (<TO>.Position)
Velocity setpoint	Velocity setpoint of the axis (<TO>.Velocity)
Velocity override	Percentage correction of the velocity specification The velocity setpoint specified in Motion Control instructions or set by the axis control panel is superimposed with an override signal and corrected as a percentage. Valid velocity correction values range from 0.0 % to 200.0 %. (<TO>.Override.Velocity)

"Current values" area

The following table shows the meaning of the status data:

Status	Description
Operative encoder	Operative encoder of the axis (<TO>.OperativeSensor)
Actual position	Actual position of the axis If the technology object is not homed, then the value is displayed relative to the position that existed when the technology object was enabled. (<TO>.ActualPosition)
Actual velocity	Actual velocity of the axis (<TO>.ActualVelocity)

Status	Description
Following error	Following error of the axis (<TO>.StatusPositioning.FollowingError)

"Dynamic limits" area

This area displays the limit values for the dynamic parameters.
The following table shows the meaning of the status data:

Status	Description
Velocity	Configured maximum velocity (<TO>.DynamicLimits.MaxVelocity)
Acceleration	Configured maximum acceleration (<TO>.DynamicLimits.MaxAcceleration)
Deceleration	Configured maximum deceleration (<TO>.DynamicLimits.MaxDeceleration)
Jerk	Configured maximum jerk (<TO>.DynamicLimits.MaxJerk)

11.1.3 PROFIdrive telegram (S7-1500, S7-1500T)

The "Technology object > Diagnostics > PROFIdrive telegram" diagnostics function is used in the TIA Portal to monitor the PROFIdrive telegrams returned by the drive and encoder. The display of the Diagnostics function is available in online operation.

"Drive" area

This area displays the following parameters contained in the PROFIdrive telegram from the drive to the controller:

- Status words "ZSW1" and "ZSW2"
- The speed setpoint (NSET) that was output to the drive
- The actual speed that was signaled from the drive (NACT)

"Encoder" area

This area displays the following parameters contained in the PROFIdrive telegram from the encoder to the controller:

- Status word "Gx_ZSW"
- The actual position value "Gx_XIST1" (cyclic actual encoder value)
- The actual position value "Gx_XIST2" (absolute encoder value)

Areas "Encoder 1" to "Encoder 4" (S7-1500T)

The "Encoder 1" to "Encoder 4" areas display the following parameters from the PROFIdrive telegram of the corresponding encoder to the controller:

- Status word "Gx_ZSW"
- The actual position value "Gx_XIST1" (cyclic actual encoder value)
- The actual position value "Gx_XIST2" (absolute encoder value)

11.2 Cam technology object (S7-1500T)

11.2.1 Applications of the cam diagnostics (S7-1500T)

In the cam diagnostics you can monitor and analyze valid points and segments of a cam from the offline and online technology object data block. The values are shown in tables and graphics and correspond to the interpolated offline or online parameters of the technology object data block.

The cam diagnostics in TIA Portal interpolates the current technology object data block parameters independently. In contrast to the cam editor, the diagnostics does not depend on the interpolation in the SIMATIC S7-1500T. The interpolation always refers to the current values in the technology object data block, the so-called snapshot.

The following parameters are taken into account during interpolation.

- <TO>.Point[i]
- <TO>.Segment[i]
- <TO>.VaildPoint[i]
- <TO>.ValidSegment[i]
- <TO>.InterpolationSettings

NOTE

The term "cam" used in this chapter applies to the technology objects of the "TO_Cam" and "TO_Cam_10k" types.

Calling the diagnostics

You can call the diagnostics as follows:

- Project tree > Project> Technology objects > Cam > Diagnostics

Possible offline applications

Valid start values of the cam in the project are displayed in a list and represented graphically.

NOTE

After you have changed values in the cam editor, you must compile the cam. The cam is automatically interpolated, even without a controller or PLCSIM.

Offline, you can:

- Check the interpolation of cams
- Identify points and segments for the same leading value
- Check the calculated velocity, acceleration and jerk
- View and compare saved snapshots
- Check transitions between cams, such as the continuity when changing cams

Possible online applications

Valid start values of the cam from the project and the actual values are displayed in a list and graphically represented online.
Online you can also:

- Check the algorithms for calculating the cams in the user program, e.g. the calculation of the coefficients for segments
- Compare a curve generated during runtime with the expected curve
- Monitor status bits and error bits
- Sort points and segments according to the leading value range, even if they are not defined in ascending order according to index in the technology object data block.
- Take, save and compare snapshots. You can use the snapshots later for documentation and additional diagnostics, when you close the TIA Portal project or change the elements of the cam.

11.2.2 Structure of the diagnostics (S7-1500T)

The cam diagnostics consists of four areas:

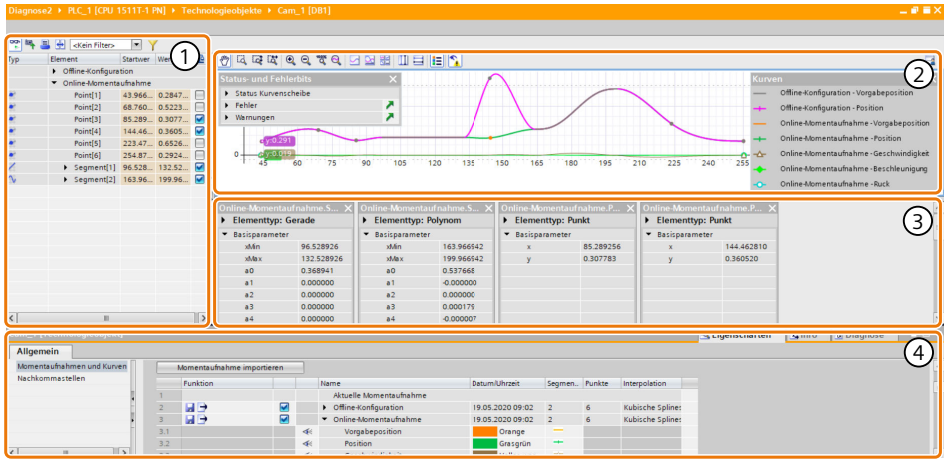

① List of valid points and segments with toolbar

② Curve diagram with toolbar

③ Element comparison

④ Inspector window

List of valid points and segments

In the list you can find all valid points and segments from the offline and online DB and the saved snapshots. Since you can display the values of the offline configuration and several snapshots, they are provided with expandable headers.
The list consists of the following columns:

Table column	Description
Type	In this column, the type of symbol is displayed with a symbol that corresponds to the symbol in the cam editor. The following element types are recognized: • Point • Line • Sine • Polynomial
Element	points or segments are shown in this column.
Start value	The x values for points and the x min. values for segments are shown in this column.
Value	The y values for points are shown in this column. When you expand the segments, the following details are shown: • x min. • x max. • a0 • a1 • a2 • a3 • a4 • a5 • a6 • sineAmplitude • sinePeriod • sinePhase
	In this column you can select points/segments for comparison (Page 199).

Sorting

You can sort the points and segments in ascending or descending order using the "Element" and "Start value" columns.

Toolbar

The toolbar at the top of the list of valid points and segments provides the following functions via buttons:

Symbol	Function	Description
	Monitoring On/Off	Monitoring of the cam is started/completed.
	Update online curve	The online snapshot is updated.
	Print	The "Print (Page 202)" dialog will open.

Symbol	Function	Description
	Link list and graphic display for the selected objects	If coupling is enabled and an element is selected in the curve diagram, this element is automatically scrolled to in the list of valid points and segments. Note: This is only relevant if the list has so many entries that they are not all visible.
<No filter>	Select filter	You can select a defined filter.
	Defining filter	The "Define filter (Page 197)" dialog opens.

Curve diagram

Offline, online and saved snapshots are displayed in the curve diagram.
All valid data from the technology object data block are graphically displayed as a curve. In the curve diagram you can display curves that reflect the position specification, position, velocity, acceleration and jerk. You set the parameters of the displayed curves in the inspector window. You can show or hide the legend using the icon on the toolbar.

NOTE

Refresh the curve displayed in the offline view

If you change the values in the offline technology object data block, the offline snapshot is automatically reloaded. After you have changed parameters in the cam editor, you must compile the cam. The parameters are then automatically transferred to the technology object data block.

Toolbar

The toolbar at the top of the curve diagram provides the following functions via buttons:

Symbol	Function	Description
	Move view	Moving the view using the drag-and-drop feature To switch from any tool to the "Move view" tool, press the <Esc> key.
	Activate zoom selection	Zoom into selected area
	Activate vertical zoom	Vertical zoom into selected area without horizontal scaling Alternative: <Ctrl> +drag to ordinate keeping mouse button pressed
	Activate horizontal zoom	Horizontal zoom into selected area without vertical scaling Alternative: <Ctrl> +drag to abscissa keeping mouse button pressed
	Zoom in	Enlargement of the display Alternative: <Ctrl> + mouse wheel up in curve diagram

Symbol	Function	Description
	Zoom out	Reduction of the display Alternative: <Ctrl> + mouse wheel down in curve diagram
	Show all	Display of entire definition and value range
	Zoom into curve	Zoom to the following value range of the curve that you selected in the legend of the chart
	View: A chart with positions	Display of one chart with the following curves of the cam opened in the diagnostics: • Position specification • Effective position
	View: A chart with all curves	Display of one chart with the following curves of the cam opened in the diagnostics: • Position specification • Effective position • Effective velocity • Effective acceleration • Effective jerk
	View: Four charts with all curves	Display of four charts with the following curves of the cam opened in the diagnostics: • Chart with position specification and effective position • Chart with effective velocity • Chart with effective acceleration • Chart with effective jerk
	Vertical measuring lines	Displaying and moving of vertical measuring lines Hold down the left mouse button and drag to draw a measuring range. The vertical position of the measuring lines can be moved. The function values for the positions of the measuring lines are displayed in the chart. The difference is displayed between the measuring lines.
	Horizontal measuring lines	Displaying and moving of horizontal measuring lines Hold down the left mouse button and drag to draw a measuring range. The horizontal position of the measuring lines can be moved. The function values for the positions of the measuring lines are displayed in the chart. The difference is displayed between the measuring lines.
	Show legend	Showing or hiding of the legend in the curve diagram. To display values for a specific curve on the ordinate, click on the name of the corresponding curve in the legend.
	Show status and error bits	Show and hide the diagnostics window "Status and error bits (Page 195)" You monitor the status of the technology object using the "Status and error bits" diagnostics window.
	Save window settings	Saves of the display settings.

Element comparison

The element comparison is located below the curve diagram. You can select individual points and segments and thus Analyze and compare elements (Page 199):

Inspector window

In the inspector window you can manage the Manage snapshots (Page 200) in the "General" tab. You can set the decimal places separately in the list of valid points and segments and in the curve diagram.

11.2.3 Online view (S7-1500T)

Use the "Monitoring on/off" icon on the toolbar of the cam diagnostics to switch to the online view.

Online view of the list with valid points and segments

In the list with valid points and segments you can find the current online values under "Online snapshot". The start values and values of the elements are highlighted in orange.

Online view of the curve diagram

In the curve diagram you can monitor changes to the status of the online cam in the "Status and error bits (Page 195)" diagnostics window. You can show and hide the window using the icon.

Online view of the Inspector window

In the list of the current snapshots you can see the online snapshot, whose display you can manage and save under "Saved snapshots" (Page 200).

11.2.4 Status and error bits (S7-1500T)

You monitor the status of the technology object using the "Status and error bits" diagnostics window. The diagnostics function is available in online operation.
You can show and hide the diagnostics window using the icon on the toolbar. You can move the window to a desired position within the curve diagram using drag-and-drop.
The meaning of the status and error bits is described in the following tables.

Cam status

The following table shows the possible statuses of the cam:

Status	Description
In use	The cam is used. (<TO>.StatusWord.X0 (Control))

Status	Description
Error	An error occurred at the technology object. Detailed information about the error is available in the "Error" area and in the "<TO>.ErrorDetail.Number" and "<TO>.ErrorDetail.Reaction" tags of the technology object. (<TO>.StatusWord.X1 (Error))
Restart active	The technology object is being reinitialized. (<TO>.StatusWord.X2 (RestartActive))
Copy operation active	A copy operation of an "MC_CopyCamData" job is active. (<TO>.StatusWord.X7 (CopyCamDataActive))
Definition changed	The definition range of the cam has changed in the technology data block. (<TO>.StatusWord.X4 (CamDataChanged))
Interpolated	The cam is interpolated. (<TO>.StatusWord.X5 (Interpolated))
In interpolation	The cam is interpolated. (<TO>.StatusWord.X6 (InInterpolation))
Restart required	Data relevant for the restart has been changed. The changes are applied only after a restart of the technology object. (<TO>.StatusWord.X3 (OnlineStartValuesChanged))

Error

The following table shows the possible errors:

Error	Description
System	A system-internal error has occurred. (<TO>.ErrorWord.X0 (SystemFault))
Configuration	A configuration error has occurred. One or more configuration parameters are inconsistent or invalid. The technology object was incorrectly configured, or editable configuration data was incorrectly modified during runtime of the user program. (<TO>.ErrorWord.X1 (ConfigFault))
User program	An error in a Motion Control instruction or during its use has occurred in the user program. (<TO>.ErrorWord.X2 (UserFault))
Job rejected	A job cannot be executed. You cannot execute a Motion Control instruction because necessary requirements are not fulfilled. (<TO>.ErrorWord.X3 (CommandNotAccepted))

You can access the alarm display via the icon.

Warnings

The following table shows the possible warnings:

Warning	Description
System	A system-internal error has occurred. (<TO>.WarningWord.X0 (SystemWarning))
Configuration	One or more configuration parameters will be temporarily adjusted internally. (<TO>.WarningWord.X1 (ConfigWarning))
User program	An error in a Motion Control instruction or during its use has occurred in the user program. (<TO>.WarningWord.X2 (UserWarning))
Job rejected	Job cannot be executed. You cannot execute a Motion Control instruction because necessary requirements are not fulfilled. (<TO>.WarningWord.X3 (CommandNotAccepted))

You can access the alarm display via the icon.

11.2.5 "Definition changed" and "Interpolated" status bits (S7-1500T)

Depending on the change in the online technology object data block, the associated status bits are displayed in green.

If you change values in the online technology object data block and they do not match the interpolated values displayed in the curve diagram, the "Definition changed" status bit is displayed in green.

The following message is displayed in the upper part of the cam diagnostics:

"The online values do not correspond to the active interpolated curve. Interpolate the cam and then reload the curve in the graphic display."

Refresh graphic display

To display the current values, follow these steps:

1. Interpolate the curve.
   After the interpolation, the "Definition changed" bit is no longer set.
   The "Interpolated" bit is set.
   The note in the banner changes:
   "The curve shown is not current. Update."
2. Click on the "Refresh" icon on the toolbar or, alternatively, on the "Refresh" link in the message.
   The online snapshot is updated. You can save the online snapshots under "Saved snapshots (Page 200)".

NOTE

You can also update the diagnostics without re-interpolating the cam after making changes in the technology object data block. The last interpolated cam then remains active in the controller and during camming. The "Interpolated" bit remains set. Before interpolation, you can then analyze the interpolated cam with the new technology object data block parameters in the controller. The "Definition changed" bit then remains TRUE.

11.2.6 Filter by segments and points (S7-1500T)

To analyze the relevant elements in extensive cams, you can filter them according to the following criteria:

- Filter segments by index in the technology data block
- Filter segments by segment type
- Filter points by index in the technology data block
- Filter the displayed leading value range

Elements that do not meet the filter criteria are hidden in the list of points and segments and displayed in a lighter shade in the curve diagram than elements that meet the criteria. The filter criteria are applied to all displayed snapshots.

Defining and saving filters

To define and save a filter, follow these steps:

1. Click on the icon in the cam diagnostics toolbar.
   The "Define filter" dialog opens.
2. Set the desired filter criteria.
3. Name the filter in the drop-down list.
4. Click "OK".
   The filter is saved and applied.

Adding other filters

To add additional filters, proceed as follows:

1. Click on the icon in the cam diagnostics toolbar.
   The "Define filter" dialog opens.
2. Click the symbol .
3. Set the desired filter criteria.
4. Name the filter in the drop-down list.
5. Click "OK".
   The additional filter is saved, applied and displayed with existing filters in the drop-down list of the toolbar.

Adapting existing filters

To adjust existing filters, follow these steps:

1. Click on the icon in the cam diagnostics toolbar.
   The "Define filter" dialog opens.
2. Select the filter to be adjusted from the drop-down list.
3. Adjust the filter criteria.
4. Click "OK".
   The changes are saved and applied.

Delete filter

Proceed as follows to delete filter:

1. Click on the icon in the cam diagnostics toolbar.
   The "Define filter" dialog opens.
2. In the drop-down list, select the filter to deleted.
3. Click the symbol .
4. Click "OK".
   The filter is deleted.

Cancel filter

To cancel a filter, select the "No filter" entry in the drop-down list in the toolbar.
The filter settings are terminated.

11.2.7 Comparing elements (S7-1500T)

You can select individual points and segments from various snapshots and compare them in detail.

Select elements to compare

You can select items to compare in the following two ways:

- In the " " column, select valid points or segments.
- In the curve diagram in the shortcut menu, select the element "Show in element comparison".

Parameters in the element comparison

For each selected element, the parameters are displayed in a separate window.

NOTE

You can change the order of the window using the drag-and-drop feature.

Each window contains three expandable areas:

- Element type with mapping in the upper part
  You can expand and collapse the image of the element with the arrow next to the element type.
- Basic parameters
  The basic parameters are read out directly from the technology object data block of the cam.
  For points, the x and y values are displayed.
  The following values are displayed for segments:
  - x min.
  - x max.
  - a0

  - a1
  - a2
  - a3
  - a4
  - a5
  - a6
  - sineAmplitude
  - sinePeriod
  - sinePhase
- Extended parameters
  The extended parameters are not saved directly in the technology object data block. They are calculated by the diagnostics in the TIA Portal.
  For points, the values are displayed depending on the interpolation:
  - With linear interpolation, the velocity in the points is discontinuous. The velocity is displayed to the left (v left) and right (v right) of the point. Acceleration and jerk are not displayed.
  - With cubic interpolation, the jerk in the points is discontinuous. The jerk is displayed to the left (j left) and right (j right) of the point.
  - When interpolating with Bézier splines, the values "y", "v", "a" and "j" from the interpolation result are displayed.

  The following values are displayed for segments:
  - x start
  - x end
  - y min.
  - y max.
  - v start
  - v end
  - v min.
  - v max.
  - a start
  - a end
  - a min.
  - a max.
  - j start
  - j end
  - j min.
  - j max.

NOTE

The expanding and collapsing of the individual areas and the scrolling are synchronized for all segments and points.

11.2.8 Managing snapshots (S7-1500T)

You can manage the displayed curves and snapshots in the inspector window under "Properties > General> Snapshots and curves". In the "Current snapshot" area you can see snapshots that contain valid points and segments from the technology object data block in the following order:

1. Offline configuration
2. Online configuration
3. Saved snapshot

Settings of the snapshots

You can expand the snapshots and make the following settings:

Control element/display element	Meaning
	Show and hide the respective snapshot in the curve diagram and in the list of valid points and segments
	Save the snapshot under "Saved snapshot"
	Export the snapshot (Page 201)
	Delete the saved snapshot
	Show and hide individual curves in the curve diagram and in the legend You can select the color and line shape for each curve.

The date and time of the recording, the number of segments and points and the type of interpolation are displayed for each snapshot.

You can change the name of saved snapshots.

11.2.9 Exporting and importing snapshots (S7-1500T)

You can export and import snapshots.

A list with all snapshots and the "Import snapshot" button can be found in the Inspector window > General tab > Snapshots and curves.

The following formats are supported:

- MCD exchange format
- SIMOTION SCOUT CamTool format
- Binary format

A description of the individual formats can be found in the "Import/export cam (Page 111)" section.

Export snapshot

To export snapshots, follow these steps:

1. For the snapshot you want to export, click the icon.
   The "Export snapshot" dialog opens.
2. Select the export format and the delimiter.
   – When you select the "Comma" delimiter, the snapshot is exported as CSV file.
   – When you select the "Tabulator" delimiter, the snapshot is exported as TXT file.
3. Enter a file name.
4. Select the target directory.
5. Click the "Export" button.

NOTE

You can import into the cam configuration a snapshot exported in binary format.

Import snapshot

To import snapshots, follow these steps:

1. Click "Import snapshot".
   The "Cam import" dialog opens.
2. Select the format.
3. Select the file.
4. Click the "Open" button.
   The snapshot is displayed in the "Saved snapshots" area.
5. To display the snapshot in the list of valid points and segments and in the curve diagram, select the check box.
6. For the display in the curve diagram, select the color and line shape for the curves.

NOTE

Exports from the cam configuration can contain elements that are not supported in the cam diagnostics (see "Structure of the diagnostics (Page 191)" section). These elements are then displayed as a group of points.

11.2.10 Printing curve diagram (S7-1500T)

You have the possibility to print the displayed curves.

Procedure

To print the curves displayed in the curve diagram, follow these steps:

1. Show all curves to be printed out.
2. On the toolbar, click the icon .
3. Select the printer and the document layout.
   To preview the resulting document, click the "Preview" button.
4. Click "Press".

11.3 Leading axis proxy technology object (S7-1500T)

11.3.1 Status and error bits (S7-1500T)

You use the "Technology object > Diagnostics > Status and error bits" diagnostic function in the TIA Portal to monitor the status and error messages for the technology object. The diagnostics function is available in online operation.
The meaning of the status and error messages is described in the following tables. The associated technology object tag is given in parentheses.

Leading axis proxy status

The following table shows the possible states of the leading axis proxy:

Status	Description
In operation	The technology object is in operation. (<TO>.StatusWord.X0 (Control))
Error	An error occurred at the technology object. Detailed information about the error is available in the "Error" area and in the "<TO>.ErrorDetail.Number" and "<TO>.ErrorDetail.Reaction" tags of the technology object. (<TO>.StatusWord.X1 (Error))
Restart active	The technology object is being reinitialized. (<TO>.StatusWord.X2 (RestartActive))
Restart required	Data relevant for the restart has been changed. The changes are applied only after a restart of the technology object. (<TO.>StatusWord.X3 (OnlineStartValuesChanged))
External leading value valid	The external leading value exists and is valid. (<TO>.StatusWord.X4 (LeadingValueValid))
External leading value with modulo	The external leading value has modulo functionality. (<TO>.StatusWord.X5 (LeadingValueModulo))
Leading axis in setpoint operation	The leading axis is in setpoint operation. (<TO>.StatusWord.X6 (LeadingAxisControl))

Warnings

The following table shows the possible warnings:

Warning	Description
System	A system-internal error has occurred. (<TO>.WarningWord.X0 (SystemWarning))
Configuration	One or more configuration parameters are being internally adapted temporarily. (<TO>.WarningWord.X1 (ConfigWarning))
User program	An error has occurred in the user program. (<TO>.WarningWord.X2 (UserWarning))
Job rejected	Job cannot be executed. You cannot execute a Motion Control instruction because necessary requirements are not fulfilled. (<TO>.WarningWord.X3 (CommandNotAccepted))
Data exchange	An error in the communication has occurred. (<TO>.WarningWord.X7 (CommunicationWarning))

Error

The following table shows the possible errors:

Error	Description
System	A system-internal error has occurred. (<TO>.ErrorWord.X0 (SystemFault))
Configuration	A configuration error has occurred. One or more configuration parameters are inconsistent or invalid. The technology object was incorrectly configured, or editable configuration data was incorrectly modified during runtime of the user program. (<TO>.ErrorWord.X1 (ConfigFault))
User program	An error occurred in the user program at a Motion Control instruction or its use. (<TO>.ErrorWord.X2 (UserFault))
Job rejected	A job cannot be executed. You cannot execute a Motion Control instruction because necessary requirements are not fulfilled (for example, technology object not homed). (<TO>.ErrorWord.X3 (CommandNotAccepted))
Data exchange	Communication with a connected device is faulty. (<TO>.ErrorWord.X7 (CommunicationFault))

Alarm display

For additional information and to acknowledge the error, go to the Inspector window by clicking on the "Alarm display" link.

11.3.2 Motion status (S7-1500T)

You use the "Technology object > Diagnostics > Motion status" diagnostic function in the TIA Portal to monitor the leading value of the leading axis proxy. The diagnostics function is available in online operation.

Leading value for local synchronous operation

The following table shows the meaning of the status data:

Status	Description
Position	Adapted leading value for local synchronous operation (<TO>.Position)
Velocity	Leading value velocity for local synchronous operation (<TO>.Velocity)
Acceleration	Leading value acceleration for local synchronous operation (<TO>.Acceleration)

External leading value

The following table shows the meaning of the status data:

Status	Description
Modulo length	Modulo length of the external leading value (<TO>.StatusExternalLeadingValue.ModuloLength)
Modulo start value	Modulo start value of the external leading value (<TO>.StatusExternalLeadingValue.ModuloStartValue)
Adjustment time	Time by which the external leading value is adapted (<TO>.StatusExternalLeadingValue.AdjustmentTime)

Instructions (S7-1500, S7-1500T) 12

12.1 Synchronous motion (S7-1500, S7-1500T)

12.1.1 MC_GearIn V7 (S7-1500, S7-1500T)

12.1.1.1 MC_GearIn: Start gearing V7 (S7-1500, S7-1500T)

Description

With the Motion Control instruction "MC_GearIn", you start a gearing (Page 41) operation between a leading axis and a following axis. You can start synchronous operation when the leading axis is at a standstill or when it is in motion.

The Motion Control instruction offers you the following:

- Defining gear ratio (Page 41)
- Synchronizing following axis using dynamic parameters (Page 43)
- Synchronous travel in gearing (Page 44)

Applies to

- Synchronous axis

Requirement

- The technology objects of the leading axis and the following axis have been configured correctly.
- The leading axis is a positioning axis, a synchronous axis, an external encoder or a leading axis proxy.
- The following axis is a synchronous axis.
- The leading axis is specified as possible leading axis in the configuration of the following axis under "Technology object > Configuration > Leading value interconnections".
- The following axis is enabled.

Override response

The override response for "MC_GearIn" jobs is described in section "Override response V7: Synchronous operation jobs (Page 283)".

With a "MC_GearOut" job, the following axis is desynchronized, and synchronous operation is terminated (S7-1500T).

Disabling the following axis with "MC_Power.Enable" = FALSE aborts the synchronous operation in every status.
Disabling the leading axis with an "MC_Power" job, in contrast, does not abort synchronous operation. The following axis follows the leading axis even during the braking ramp and after the leading axis is enabled and traversing again.

Parameters

The following table shows the parameters of the Motion Control instruction "MC_GearIn":

Parameters	Declaration	Data type	Default value	Description	
Master	INPUT	TO_PositioningAxis TO_SynchronousAxis TO_ExternalEncoder (S7-1500T) TO_LeadingAxisProxy (S7-1500T)	-	Leading axis technology object	
Slave	INPUT	TO_SynchronousAxis	-	Following axis technology object	
Execute	INPUT	BOOL	FALSE	TRUE	Start job with a positive edge
RatioNumerator	INPUT	DINT	1	Gear ratio numerator (Page 41) Permitted integer values: -2147483648 to 2147483647 (value 0 not permitted)	
RatioDenominator	INPUT	DINT	1	Gear ratio denominator (Page 41) Permitted integer values: 1 to 2147483647	
Acceleration	INPUT	LREAL	-1.0	Acceleration (Page 43)	
				> 0.0	The specified value is used.
				= 0.0	Not permitted
				< 0.0	The acceleration configured in "Technology object > Configuration > Extended parameters > Dynamic default values" is used. (<TO>.DynamicDefaults.Acceleration)
Deceleration	INPUT	LREAL	-1.0	Deceleration (Page 43)	
				> 0.0	The specified value is used.
				= 0.0	Not permitted
				< 0.0	The deceleration configured in "Technology object > Configuration > Extended parameters > Dynamic default values" is used. (<TO>.DynamicDefaults.Deceleration)

Parameters	Declaration	Data type	Default value	Description	
Jerk	INPUT	LREAL	-1.0	Jerk (Page 43)	
				> 0.0	Constant acceleration velocity profile The specified value is used.
				= 0.0	Trapezoid velocity profile
				< 0.0	The jerk configured in "Technology object > Configuration > Extended parameters > Dynamic default values" is used. (<TO>.DynamicDefaults.Jerk)
InGear	OUTPUT	BOOL	FALSE	TRUE	Synchronous operation reached The following axis is synchronized and moves synchronously to the leading axis.
Busy	OUTPUT	BOOL	FALSE	TRUE	The job is being processed.
CommandAborted	OUTPUT	BOOL	FALSE	TRUE	The job was aborted by another job during execution.
Error	OUTPUT	BOOL	FALSE	TRUE	An error occurred while processing the job. The job is rejected. The cause of the error can be found in the "ErrorID" parameter.
ErrorID	OUTPUT	WORD	0	Error ID for parameter "ErrorID" You can find more detailed information in the "Error IDs" section of the "S7-1500/S7-1500T Motion Control alarms and error IDs" documentation (Page 13).	

12.1.1.2 MC_GearIn: Function chart V7 (S7-1500, S7-1500T)

Function chart: Synchronizing and switching the leading value

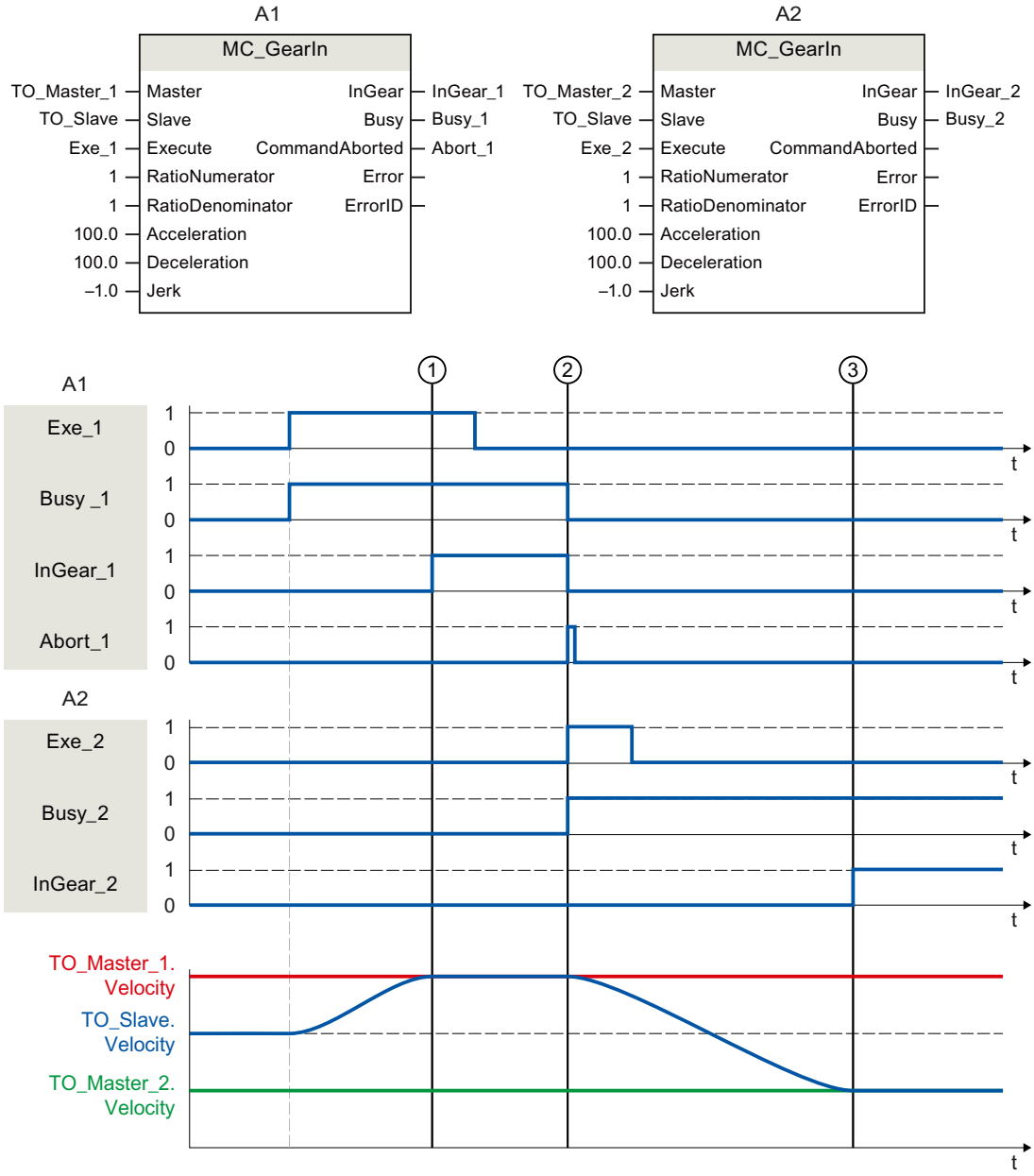

Using "Exe_1", an "MC_GearIn" job (A1) is initiated. The following axis (TO_Slave) is synchronized to the leading axis (TO_Master_1). "InGear_1" signals at time ① that the following axis is synchronized and moves synchronously to the leading axis.

At time ②, synchronous operation is overridden by another "MC_GearIn" job (A2). The abort is signaled via "Abort_1". The following axis is synchronized to the new leading axis (TO_Master_2). "InGear_2" signals at time ③ that the following axis is synchronized and moves synchronously to the leading axis.

12.1.2 MC_GearInPos V7 (S7-1500T)

12.1.2.1 MC_GearInPos: Start gearing with specified synchronous positions V7 (S7-1500T)

Description

With the Motion Control instruction "MC_GearInPos", you start a gearing (Page 45) operation between a leading axis and a following axis. The following axis is synchronized depending on the specified synchronous positions for the leading and following axis. You can start synchronous operation when the leading axis is at a standstill or when it is in motion.

The Motion Control instruction offers you the following:

- Defining gear ratio (Page 46)
- Defining direction of synchronization (Page 48)
- Define synchronous positions and type of synchronization:
  - Synchronization in advance using dynamic parameters (Page 51)
  - Synchronization in advance using leading value distance (Page 53)
  - Subsequent synchronization using leading value distance (Page 55)
- Synchronous travel in gearing (Page 56)

Different parameters are relevant depending on the synchronization profile. You can find an overview in the "Parameter overview for synchronizing with "MC_GearInPos" (Page 48)" section.

Applies to

- Synchronous axis

Requirement

- The technology objects of the leading axis and the following axis have been configured correctly.
- The leading axis is a positioning axis, a synchronous axis, an external encoder or a leading axis proxy.
- The following axis is a synchronous axis.
- The leading axis is specified as possible leading axis in the configuration of the following axis under "Technology object > Configuration > Leading value interconnections".
- The following axis is enabled.
- The following axis is homed.
- With synchronization in advance using leading value distance, the leading axis must be at least the specified distance ("MasterStartDistance") from the synchronization position ("MasterSyncPosition") when starting the job.

Override response

The override response for "MC_GearInPos" jobs is described in section "Override response V7: Synchronous operation jobs (Page 283)".

With a "MC_GearOut" job, the following axis is desynchronized and synchronous operation is terminated.
Disabling the following axis with "MC_Power.Enable" = FALSE aborts the synchronous operation in every status.
Disabling the leading axis with "MC_Power", in contrast, does not abort synchronous operation. The following axis follows the leading axis even during the braking ramp and after the leading axis is enabled again.

Parameters

The following table shows the parameters of the Motion Control instruction "MC_GearInPos":

Parameters	Declaration	Data type	Default value	Description	
Master	INPUT	TO_PositioningAxis TO_SynchronousAxis TO_ExternalEncoder TO_LeadingAxisProxy	-	Leading axis technology object	
Slave	INPUT	TO_SynchronousAxis	-	Following axis technology object	
Execute	INPUT	BOOL	FALSE	TRUE	Start job with a positive edge
RatioNumerator	INPUT	DINT	1	Gear ratio numerator (Page 46) Permitted integer values: -2147483648 to 2147483647 (value 0 not permitted)	
RatioDenominator	INPUT	DINT	1	Gear ratio denominator (Page 46) Permitted integer values: 1 to 2147483647	
MasterSyncPosition	INPUT	LREAL	0.0	Synchronous position of leading axis	
				When "SyncProfileReference" = 0, 1: Position of the leading axis from which the axes are synchronous and the synchronization is completed.	
				When "SyncProfileReference" = 3: Position of the leading axis from which synchronization starts	
SlaveSyncPosition	INPUT	LREAL	0.0	Synchronous position of following axis	
				When "SyncProfileReference" = 0, 1: Position of the following axis from which the axes are synchronous and the synchronization is completed.	
				When "SyncProfileReference" = 3: Position of the following axis, which is assigned to the synchronous position of the leading axis.	
SyncProfileReference	INPUT	DINT	1	Type of synchronization	
				0	Synchronization in advance using dynamic parameters (Page 51)
				1	Synchronization in advance using leading value distance (Page 53)
				2	Reserved

Parameters	Declaration	Data type	Default value	Description	
SyncProfileReference	INPUT	DINT	1	3	Subsequent synchronization using leading value distance (Page 55)
				4	Reserved
MasterStartDistance	INPUT	LREAL	1.0	When "SyncProfileReference" = 1, 3: Leading value distance	
				When "SyncProfileReference" = 0: Not relevant	
Velocity	INPUT	LREAL	-1.0	When "SyncProfileReference" = 0: Velocity	
				> 0.0	The specified value is used.
				= 0.0	Not permitted
				< 0.0	The velocity configured in "Technology object > Configuration > Extended parameters > Dynamic default values" is used. (<TO>.DynamicDefaults.Velocity)
				When "SyncProfileReference" = 1, 3: Not relevant	
Acceleration	INPUT	LREAL	-1.0	When "SyncProfileReference" = 0: Acceleration	
				> 0.0	The specified value is used.
				= 0.0	Not permitted
				< 0.0	The acceleration configured in "Technology object > Configuration > Extended parameters > Dynamic default values" is used. (<TO>.DynamicDefaults.Acceleration)
				When "SyncProfileReference" = 1, 3: Not relevant	
Deceleration	INPUT	LREAL	-1.0	When "SyncProfileReference" = 0: Deceleration	
				> 0.0	The specified value is used.
				= 0.0	Not permitted
				< 0.0	The deceleration configured in "Technology object > Configuration > Extended parameters > Dynamic default values" is used. (<TO>.DynamicDefaults.Deceleration)
				When "SyncProfileReference" = 1, 3: Not relevant	
Jerk	INPUT	LREAL	-1.0	When "SyncProfileReference" = 0: Jerk	
				> 0.0	Constant acceleration velocity profile The specified value is used.
				= 0.0	Trapezoid velocity profile

Parameters	Declaration	Data type	Default value	Description	
Jerk	INPUT	LREAL	-1.0	< 0.0	The jerk configured in "Technology object > Configuration > Extended parameters > Dynamic default values" is used. (<TO>.DynamicDefaults.Jerk)
				When "SyncProfileReference" = 1, 3: Not relevant	
SyncDirection	INPUT	DINT	3	Direction of synchronization (Page 48) (in effect for following axes with activated Modulo setting)	
				1	Positive direction The following axis may only travel in positive direction during synchronization.
				2	Negative direction The following axis may only travel in negative direction during synchronization.
				3	Shortest distance Changes in direction are permitted for the following axis during synchronization.
StartSync	OUTPUT	BOOL	FALSE	TRUE	The following axis is synchronized to the leading axis.
InSync	OUTPUT	BOOL	FALSE	TRUE	Synchronous operation reached The following axis is synchronized and moves synchronously to the leading axis.
Busy	OUTPUT	BOOL	FALSE	TRUE	The job is being processed.
CommandAborted	OUTPUT	BOOL	FALSE	TRUE	The job was aborted by another job during execution.
Error	OUTPUT	BOOL	FALSE	TRUE	An error occurred while processing the job. The job is rejected. The cause of the error can be found in the "ErrorID" parameter.
ErrorID	OUTPUT	WORD	0	Error ID for parameter "ErrorID" You can find more detailed information in the "Error IDs" section of the "S7-1500/S7-1500T Motion Control alarms and error IDs" documentation (Page 13).	

12.1.2.2 MC_GearInPos: Function chart V7 (S7-1500T)

Function chart: Synchronization in advance using dynamic parameters/leading value distance

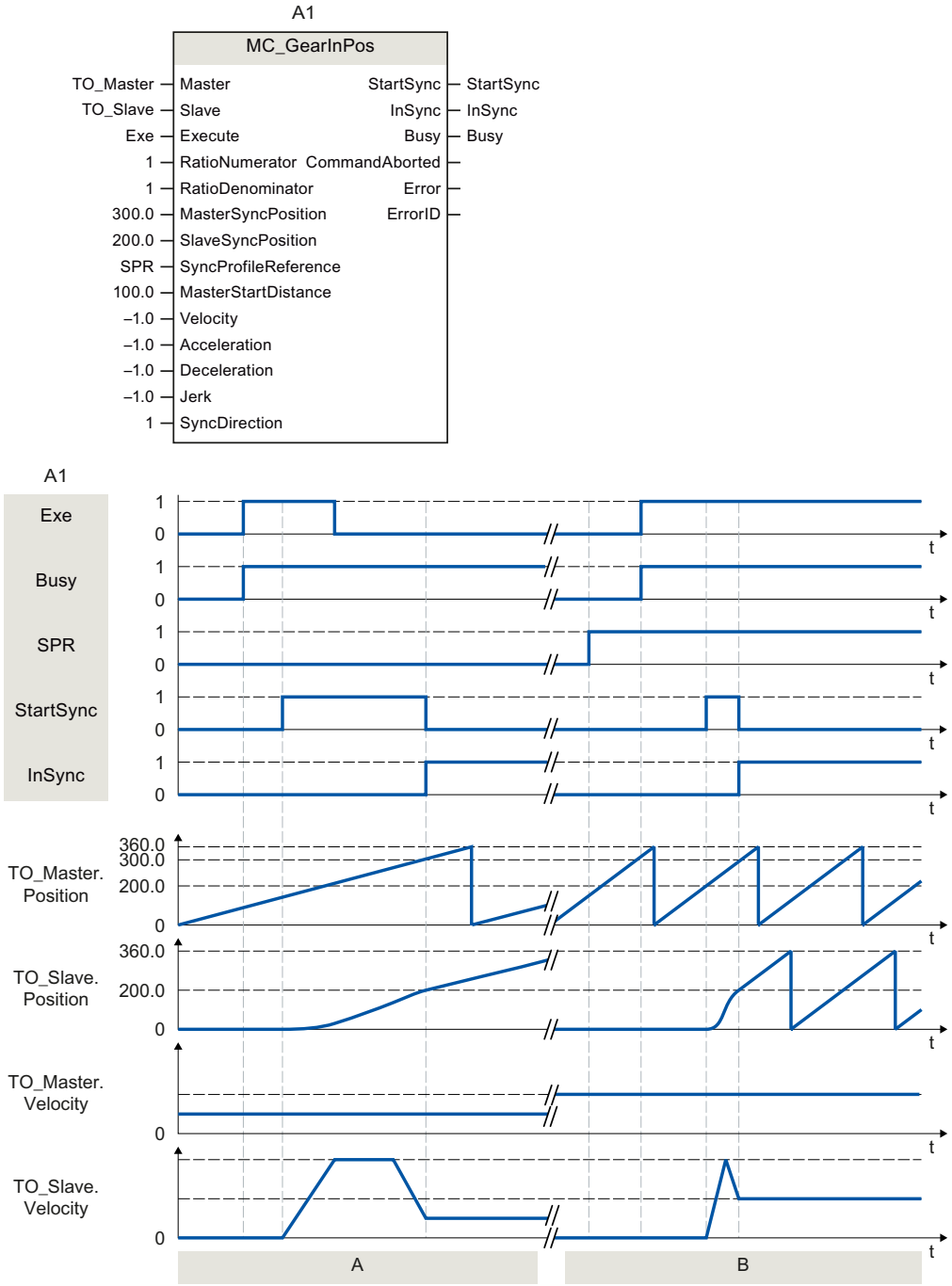

Section A

Using "Exe", an "MC_GearInPos" job (A1) is initiated. The start of the synchronization is displayed with "StartSync". The following axis (TO_Slave) is synchronized in advance to the leading axis (TO_Master) by means of the specified dynamic parameters. The distance

required for synchronization is calculated by the system. When the specified reference positions "MasterSyncPosition" and "SlaveSyncPosition" are reached, "InSync" signals that the following axis is synchronized and moving synchronously to the leading axis.

Section B

Using "Exe", an "MC_GearInPos" job (A1) is initiated. The start of the synchronization is displayed with "StartSync". The following axis (TO_Slave) is synchronized to the leading axis (TO_Master) by means of the specified leading value distance "MasterStartDistance". The dynamic response required for synchronization is calculated by the system. When the specified reference positions "MasterSyncPosition" and "SlaveSyncPosition" are reached, "InSync" signals that the following axis is synchronized and moving synchronously to the leading axis.

Function chart: Synchronization in advance/subsequent synchronization via leading value distance

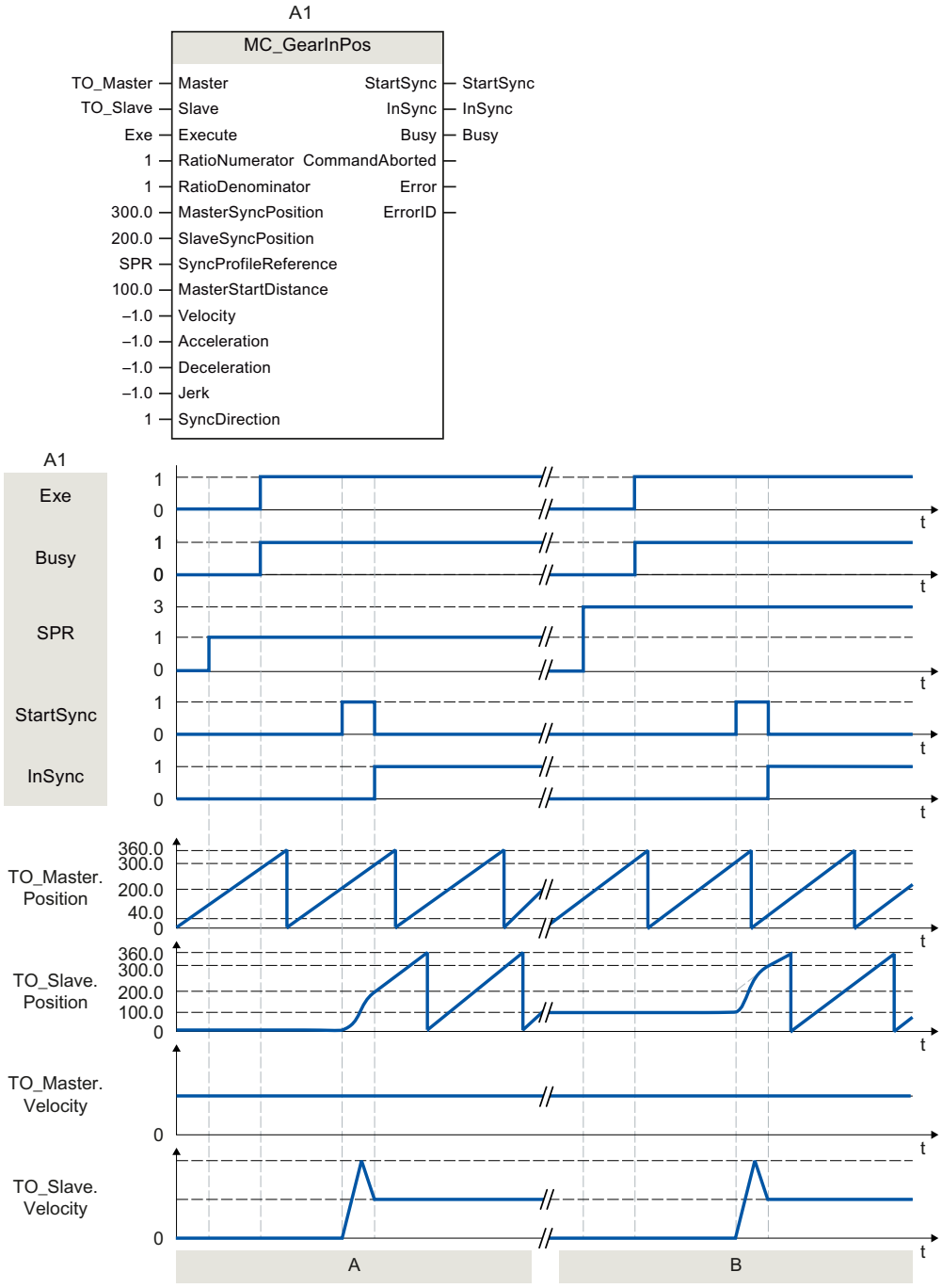

Section A

Using "Exe", an "MC_GearInPos" job (A1) is initiated. The start of the synchronization is displayed with "StartSync". The following axis (TO_Slave) is synchronized to the leading axis (TO_Master) by means of the specified leading value distance "MasterStartDistance". The dynamic response required for synchronization is calculated by the system. When the specified reference positions "MasterSyncPosition" and "SlaveSyncPosition" are reached,

"InSync" signals that the following axis is synchronized and moving synchronously to the leading axis.

Section B

Using "Exe", an "MC_GearInPos" job (A1) is initiated. When the specified reference position "MasterSyncPosition" is reached, the start of synchronization is indicated via "StartSync". The following axis (TO_Slave) is synchronized subsequently to the leading axis (TO_Master) by means of the specified leading value distance "MasterStartDistance". The dynamic response required for synchronization is calculated by the system. "InSync" signals that the following axis is synchronized and moving synchronously to the leading axis.

12.1.3 MC_GearInVelocity V7 (S7-1500T)

12.1.3.1 MC_GearInVelocity: Start velocity synchronous operation V7 (S7-1500T)

Description

With the Motion Control instruction "MC_GearInVelocity", you can start velocity synchronous operation (Page 74) between a leading axis and a following axis. The following axis is synchronized to the velocity of the leading axis depending on the specified gear ratio. You can start velocity synchronous operation when the leading axis is at a standstill or when it is in motion.

The Motion Control instruction offers you the following:

- Defining gear ratio (Page 74)
- Specify gear ratio once or dynamically (Page 75)
- Define position control of the following axis (Page 76)
- Synchronize following axis using dynamic parameters (Page 78)
- Synchronous travel in velocity gearing (Page 79)

Applies to

- Synchronous axis

Requirement

- The technology objects of the leading axis and the following axis have been configured correctly.
- The leading axis is a positioning axis, a synchronous axis, an external encoder or a leading axis proxy.
- The following axis is a synchronous axis.
- The leading axis is specified as possible leading axis in the configuration of the following axis under "Technology object > Configuration > Leading value interconnections".
- The following axis is enabled.
- The leading value is valid.

Override response

The override response for "MC_GearInVelocity" jobs is described in section "Override response V7: Synchronous operation jobs (Page 283)".

Disabling the following axis with "MC_Power.Enable" = FALSE aborts the synchronous operation in every status.

Disabling the leading axis with "MC_Power", in contrast, does not abort synchronous operation. The following axis follows the leading axis even during the braking ramp and after the leading axis is enabled again.

Homing jobs on the following axis are rejected in the non-position-controlled mode of the following axis. Active homing of the following axis with "MC_Home.Mode" = 3 or 5 aborts synchronous operation in every status.

Jobs for leading value or following value offset are rejected.

Parameters

The following table shows the parameters of the Motion Control instruction "MC_GearInVelocity":

Parameter	Declaration	Data type	Default value	Description	
Master	INPUT	TO_PositioningAxis TO_SynchronousAxis TO_ExternalEncoder TO_LeadingAxisProxy	-	Leading axis technology object	
Slave	INPUT	TO_SynchronousAxis	-	Following axis technology object	
Execute	INPUT	BOOL	FALSE	TRUE	Start job with a positive edge
ContinuousUpdate	INPUT	BOOL	FALSE	Mode for specifying the gear ratio (Page 75)	
				TRUE	Specify gear ratio continuously
				FALSE	Specify gear ratio once at the start of the job with a positive edge
RatioNumerator	INPUT	DINT	1	Gear ratio numerator (Page 74) Permitted integer values: -2147483648 to 2147483647 (value 0 not permitted)	
RatioDenominator	INPUT	DINT	1	Gear ratio denominator (Page 74) Permitted integer values: 1 to 2147483647	
Acceleration	INPUT	LREAL	-1.0	Acceleration for the synchronization (Page 78)	
				> 0.0	The specified value is used.
				= 0.0	Not permitted
				< 0.0	The acceleration configured in "Technology object > Configuration > Extended parameters > Dynamic default values" is used. (<TO>.DynamicDefaults.Acceleration)

Parameter	Declaration	Data type	Default value	Description	
Deceleration	INPUT	LREAL	-1.0	Deceleration for the synchronization (Page 78)	
				> 0.0	The specified value is used.
				= 0.0	Not permitted
				< 0.0	The deceleration configured in "Technology object > Configuration > Extended parameters > Dynamic default values" is used. (<TO>.DynamicDefaults.Deceleration)
Jerk	INPUT	LREAL	-1.0	Jerk for the synchronization (Page 78)	
				> 0.0	The specified value is used.
				= 0.0	No jerk limitation
				< 0.0	The jerk configured in "Technology object > Configuration > Extended parameters > Dynamic default values" is used. (<TO>.DynamicDefaults.Jerk)
PositionControlled	INPUT	BOOL	FALSE	Position control of the following axis (Page 76)	
				TRUE	Position-controlled mode
				FALSE	Non-position-controlled operation
StartSync	OUTPUT	BOOL	FALSE	TRUE	The following axis is synchronized to the leading axis.
InSync	OUTPUT	BOOL	FALSE	TRUE	Synchronous operation reached The following axis is synchronized and moves synchronously to the leading axis.
ContinuousUpdateActive	OUTPUT	BOOL	FALSE	TRUE	The gear ratio is transferred continuously. Changes of the parameter values "RatioNumerator" and "RatioDenominator" are effective immediately.
				FALSE	The gear ratio is transferred once at the start of the job with a positive edge.
Busy	OUTPUT	BOOL	FALSE	TRUE	The job is being processed.
CommandAborted	OUTPUT	BOOL	FALSE	TRUE	The job was aborted by another job during execution.
Error	OUTPUT	BOOL	FALSE	TRUE	An error occurred while processing the job. The job is rejected. The cause of the error can be found in the "ErrorID" parameter.
ErrorID	OUTPUT	WORD	16#0000	Error ID for parameter "ErrorID" You can find more detailed information in the "Error IDs" section of the "S7-1500/S7-1500T Motion Control alarms and error IDs" documentation (Page 13).	

12.1.3.2 MC_GearInVelocity: Function chart V7 (S7-1500T)

Function chart: Synchronization and adjustment of the gear ratio

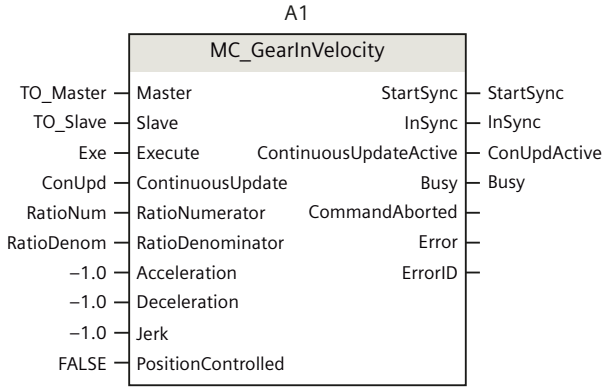

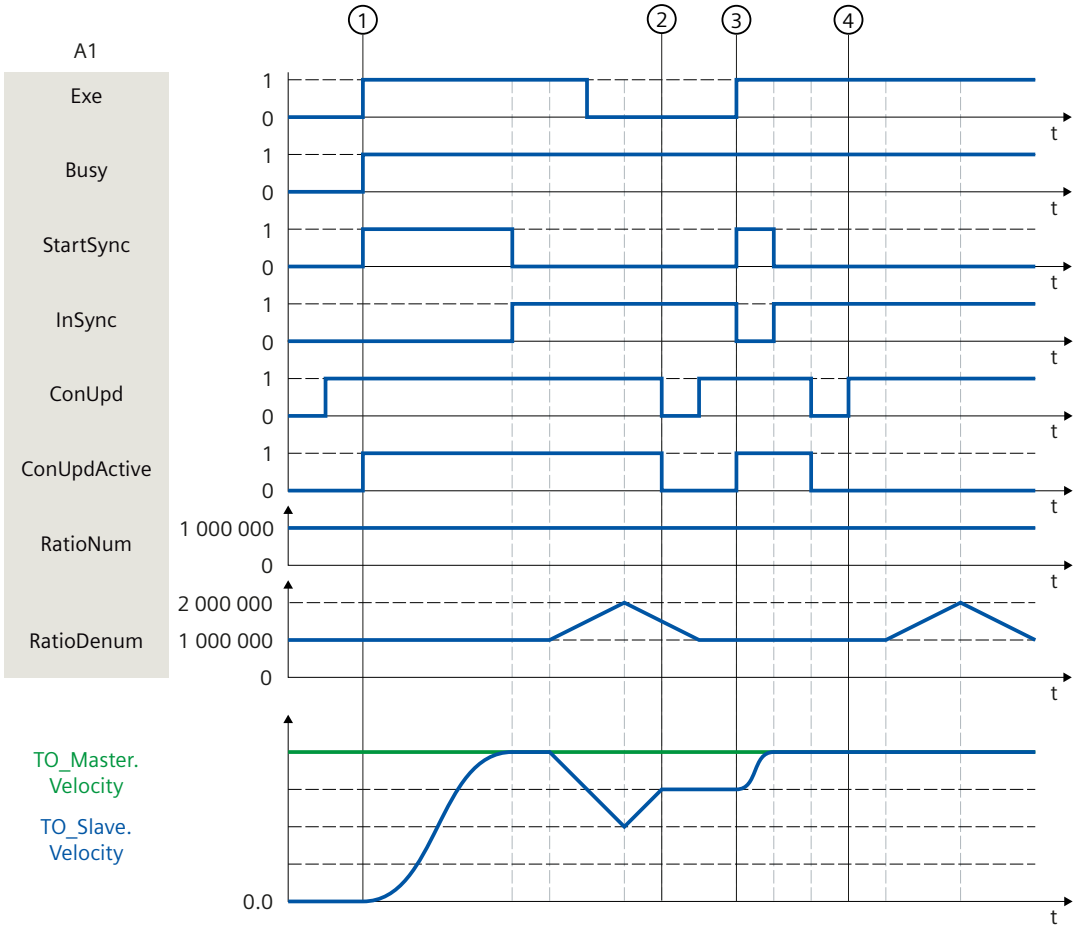

At time ①, an "MC_GearInVelocity" job (A1) with "ContinuousUpdate" = TRUE is initiated via "Exe". The start of the synchronization is displayed with "StartSync". The following axis (TO_Slave) is synchronized to the leading axis (TO_Master) by means of the specified dynamic parameters. When reaching the velocity of the leading axis multiplied by the

specified gear ratio, "InSync" signals that the following axis is synchronized and moving synchronously to the leading axis.
The denominator of the gear ratio is changed continuously after that. Because "ContinuousUpdateActive" = TRUE, the velocity of the following axis changes immediately.

At time ②, "ContinuousUpdate" is set to FALSE. "ContinuousUpdateActive" = FALSE is displayed. The gear ratio specified last is still valid. The changes of the gear ratio are no longer effective.
"ContinuousUpdate" is once again set to TRUE. For this change to become effective, job A1 is once again triggered with "Exe" at time ③. "ContinuousUpdateActive" = TRUE is displayed. The renewed synchronization of the following axis is displayed via "StartSync".

"ContinuousUpdate" is reset to FALSE. At time ④, "ContinuousUpdate" is once again set to TRUE. Because job A1 is not triggered again via "Exe", the changes of the gear ratio are not taken into account.

12.1.4 MC_PhasingRelative V7 (S7-1500T)

12.1.4.1 MC_PhasingRelative: Relative shift of leading value on the following axis V7 (S7-1500T)

Description

With the Motion Control instruction "MC_PhasingRelative", you offset the effective leading value relative on a following axis. A relative leading value offset is added to an already existing leading value offset. A relative leading value offset is possible in gearing with "MC_GearIn" or "MC_GearInPos" or in camming with "MC_CamIn". The position of the leading axis is not affected. A simultaneous following value offset is not permitted.

Gearing

The Motion Control instruction offers you the following in gearing:

- Shift leading value on the following axis
  - Using dynamic parameters (Page 57)
  - Leading value offset using leading value distance starting at current leading value position (Page 58)
  - Using leading value distance starting at specific leading value position (Page 59)
- Defining the direction of the leading value distance (Page 60)
- Only cancel a pending leading value offset (Page 62)

Camming

The Motion Control instruction offers you the following in camming:

- Shift leading value on the following axis
  - Leading value offset using leading value distance starting at current leading value position (Page 147)
  - Using leading value distance starting at specific leading value position (Page 148)
- Defining the direction of the leading value distance (Page 149)
- Only cancel a pending leading value offset (Page 151)

Applies to

- Synchronous axis

Requirement

- The technology objects of the leading axis and the following axis have been configured correctly.
- The leading axis is a positioning axis, a synchronous axis, an external encoder or a leading axis proxy.
- The following axis is a synchronous axis.
- The leading axis is specified as possible leading axis in the configuration of the following axis in "Technology object > Configuration > Leading value interconnections".
- The following axis is enabled.
- By means of the Motion Control instruction "MC_GearIn", "MC_GearInPos" or "MC_CamIn", the following axis is synchronized to the leading axis ("MC_GearIn.InGear" = TRUE, "MC_GearInPos.InSync" = TRUE or "MC_CamIn.InSync" = TRUE).
- No "MC_OffsetAbsolute" or "MC_OffsetRelative" job is active or waiting.

Override response

The override response for "MC_PhasingRelative" jobs is described in section "Override response V7: Synchronous operation jobs (Page 283)".

Disabling the leading axis with "MC_Power.Enable" = FALSE does not abort the leading value offset. The following axis follows the leading axis even during the braking ramp and after the leading axis is enabled again.

Parameters

The following table shows the parameters of the Motion Control instruction "MC_PhasingRelative":

Parameters	Declaration	Data type	Default value	Description	
Master	INPUT	TO_PositioningAxis TO_SynchronousAxis TO_ExternalEncoder TO_LeadingAxisProxy	-	Leading axis technology object	
Slave	INPUT	TO_SynchronousAxis	-	Following axis technology object	
Execute	INPUT	BOOL	FALSE	TRUE	Start job with a positive edge
PhaseShift	INPUT	LREAL	0.0	Relative leading value offset	

Parameters	Declaration	Data type	Default value	Description	
Velocity	INPUT	LREAL	-1.0	Velocity of the following axis during leading value offset (added to synchronous operation motion)	
				> 0.0	The specified value is used.
				= 0.0	Not permitted
				< 0.0	The velocity configured in "Technology object > Configuration > Extended parameters > Dynamic default values" is used. (<TO>.DynamicDefaults.Velocity)
Acceleration	INPUT	LREAL	-1.0	Acceleration of the following axis during leading value offset (added to synchronous operation motion)	
				> 0.0	The specified value is used.
				= 0.0	Not permitted
				< 0.0	The acceleration configured in "Technology object > Configuration > Extended parameters > Dynamic default values" is used. (<TO>.DynamicDefaults.Acceleration)
Deceleration	INPUT	LREAL	-1.0	Deceleration of the following axis during leading value offset (added to synchronous operation motion)	
				> 0.0	The specified value is used.
				= 0.0	Not permitted
				< 0.0	The deceleration configured in "Technology object > Configuration > Extended parameters > Dynamic default values" is used. (<TO>.DynamicDefaults.Deceleration)
Jerk	INPUT	LREAL	-1.0	Jerk of the following axis during leading value offset (added to synchronous operation motion)	
				> 0.0	Constant acceleration velocity profile The specified value is used.
				= 0.0	Trapezoid velocity profile
				< 0.0	The jerk configured in "Technology object > Configuration > Extended parameters > Dynamic default values" is used. (<TO>.DynamicDefaults.Jerk)
ProfileReference	INPUT	DINT	0	Type of the leading value offset	
				0	Only with gearing: Leading value offset using dynamic parameters
				1	Leading value offset using leading value distance as of current leading value position

Parameters	Declaration	Data type	Default value	Description	
ProfileReference	INPUT	DINT	0	2	Leading value offset using leading value distance as of leading value position "StartPosition"
				3 ... 4	Reserved
				5	Only cancel a pending job for the leading value offset
PhasingDistance	INPUT	LREAL	0.0	When "ProfileReference" = 1, 2: Leading value distance Distance of the leading axis during leading value offset	
StartPosition	INPUT	LREAL	0.0	When "ProfileReference" = 2: Leading value position as of which the leading value is offset	
Direction	INPUT	DINT	3	When "ProfileReference" = 1, 2: Direction of the leading value distance	
				1	The leading value distance is in the positive direction of motion of the leading value.
				2	The leading value distance is in the negative direction of motion of the leading value.
				3	The leading value distance is in the current direction of motion of the leading value.
Done	OUTPUT	BOOL	FALSE	TRUE	The leading value offset is finished.
Busy	OUTPUT	BOOL	FALSE	TRUE	The job is being processed.
CommandAborted	OUTPUT	BOOL	FALSE	TRUE	The job was aborted by another job during execution.
Error	OUTPUT	BOOL	FALSE	TRUE	An error occurred while processing the job. The job is rejected. The cause of the error can be found in the "ErrorID" parameter.
ErrorID	OUTPUT	WORD	0	Error ID for parameter "ErrorID" You can find more detailed information in the "Error IDs (Page 13)" section of the "S7-1500/S7-1500T Motion Control alarms and error IDs" documentation.	
CoveredPhaseShift	OUTPUT	LREAL	0.0	Display of the absolute leading value share that has already been offset	
StartPhasing	OUTPUT	BOOL	FALSE	TRUE	The following axis offsets the effective leading value.

12.1.4.2 MC_PhasingRelative: Function chart V7 (S7-1500T)

Function chart: Relative shift of the leading value in gearing

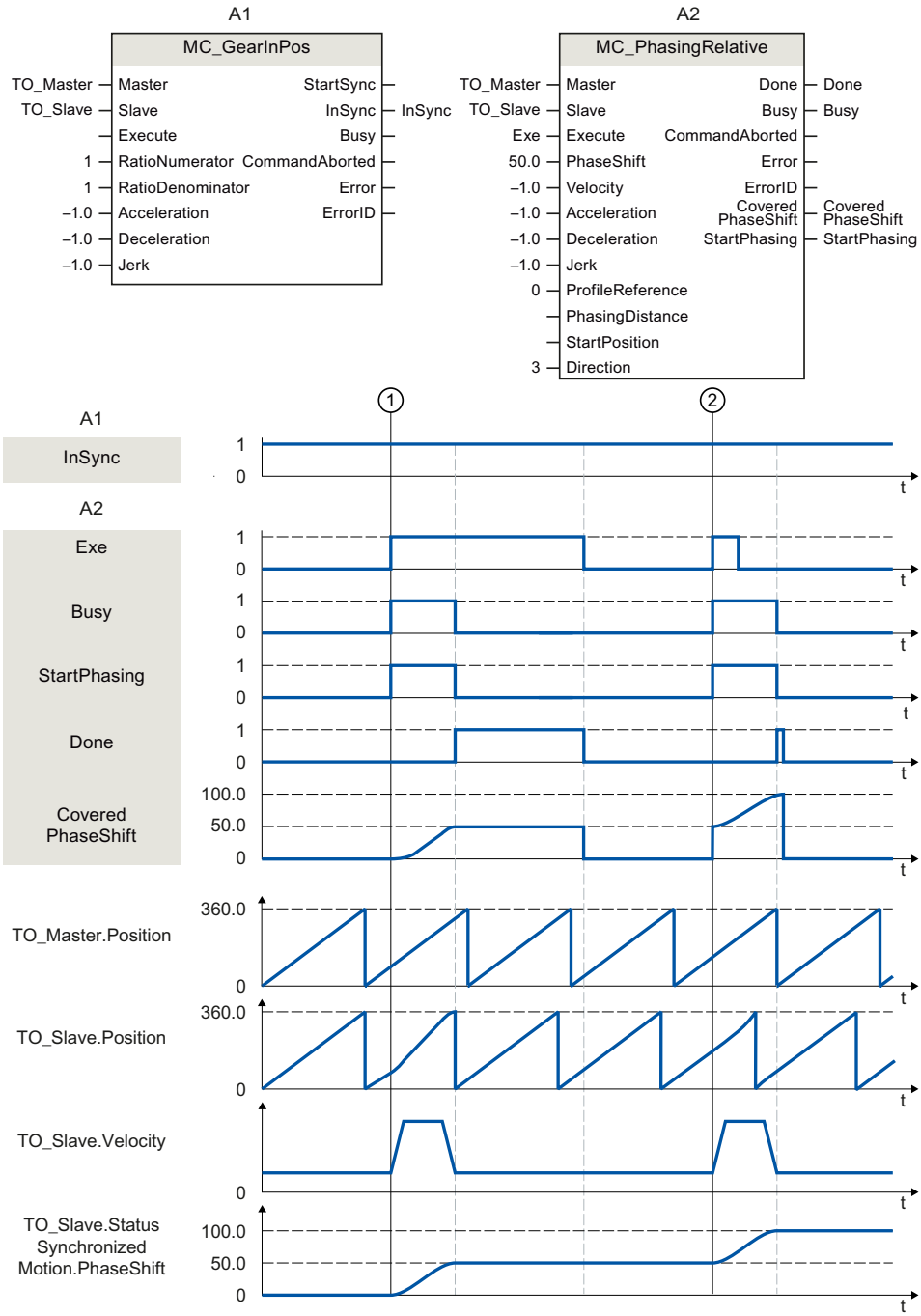

At time ①, an "MC_PhasingRelative" job (A2) is initiated with "ProfileReference" = 0 via "Exe" during an active gearing with "MC_GearInPos" (A1) . The "StartPhasing" parameter shows that the following axis traverses the leading value offset with the dynamics specified additively to the synchronous operation motion. The absolute leading value offset traversed via the job is

indicated in "CoveredPhaseShift". "Done" indicates that the leading value was successfully shifted. The motion of the leading axis is not affected.

At time ② the "MC_PhasingRelative" job (A2) is initiated again via "Exe". The leading value offset via dynamic parameters is moved out again with the dynamics specified in addition to the synchronous movement. The absolute leading value offset traversed via the job is indicated in "CoveredPhaseShift". "Done" indicates that the leading value was successfully shifted.

The absolute leading value offset is indicated in the "<TO>.StatusSynchronizedMotion.PhaseShift" tag of the technology object.

Function chart: Relative shift of the leading value in camming

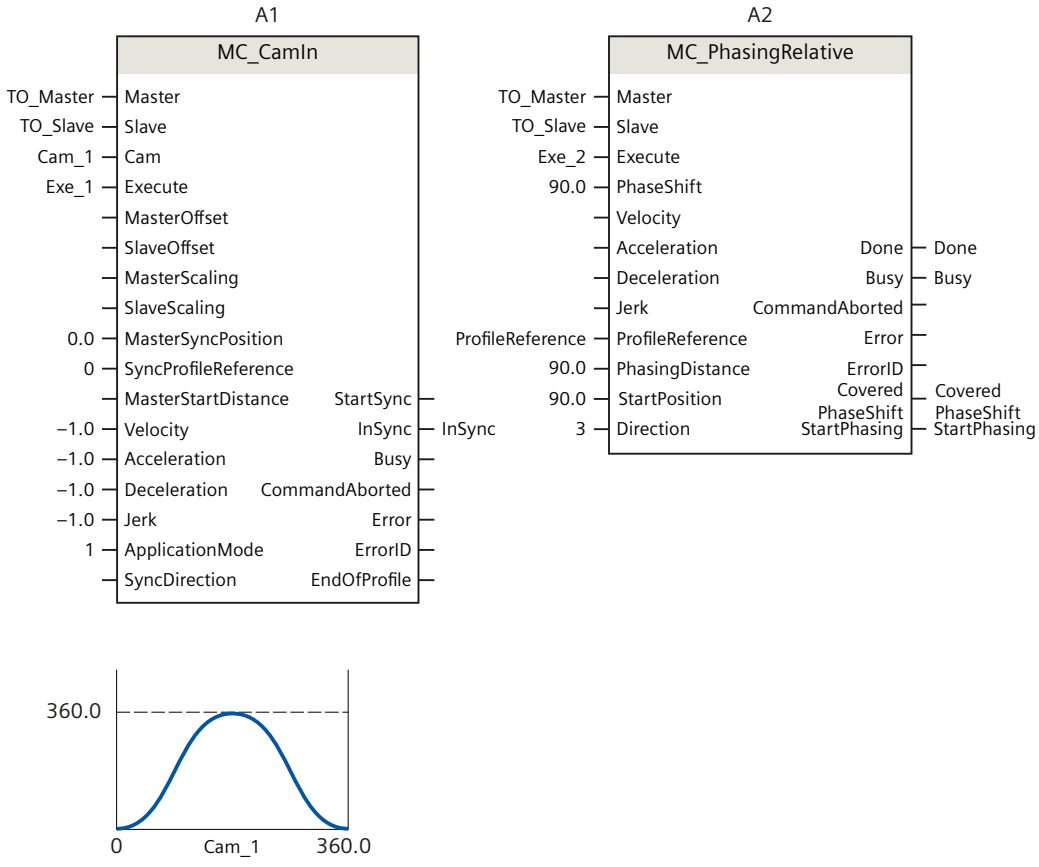

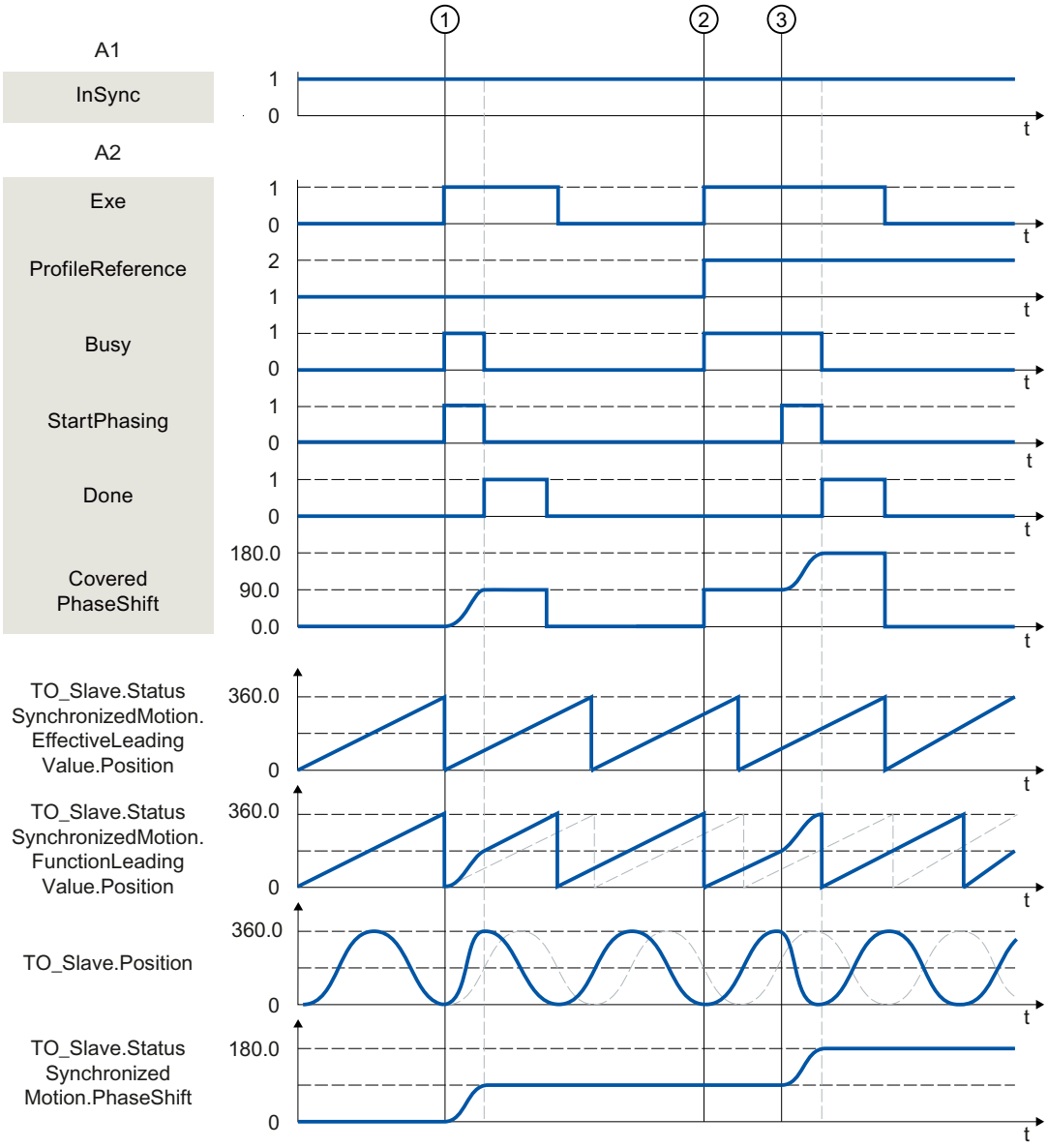

At time ①, an "MC_PhasingRelative" job (A2) is triggered with "ProfileReference" = 1 via "Exe" during an active camming with "MC_CamIn" (A1) . The "StartPhasing" parameter shows that the leading value offset traverses from the current position via the specified leading value distance. The required dynamic response is calculated by the system. The absolute leading value offset traversed via the job is indicated in "CoveredPhaseShift". "Done" indicates that the leading value was successfully shifted. The motion of the leading axis is not affected.

At time ② the "MC_PhasingRelative" job (A2) is initiated again via "Exe" with "ProfileReference" = 2. The status "Waiting" is displayed at the following axis until the leading value reaches the start position (<TO>.StatusWord2.X3 = TRUE (PhasingCommandWaiting)).

At time ③ the leading value reaches the specified start position. The "StartPhasing" parameter shows that the following axis traverses the leading value offset via the specified leading value distance. The required dynamic response is calculated by the system. The absolute leading value offset traversed via the job is indicated in "CoveredPhaseShift". "Done" indicates that the leading value was successfully shifted.

The absolute leading value offset is indicated in the "<TO>.StatusSynchronizedMotion.PhaseShift" tag of the technology object.

12.1.5 MC_PhasingAbsolute V7 (S7-1500T)

12.1.5.1 MC_PhasingAbsolute: Absolute shift of leading value on the following axis V7 (S7-1500T)

Description

With the Motion Control instruction "MC_PhasingAbsolute", you perform an absolute shift of the effective leading value on the following axis. An absolute leading value offset is possible in gearing with "MC_GearIn" or "MC_GearInPos" or in camming with "MC_CamIn". The position of the leading axis is not affected by this. A simultaneous following value offset is not permitted.

Gearing

The Motion Control instruction offers you the following in gearing:

- Shift leading value on the following axis
  - Using dynamic parameters (Page 57)
  - Leading value offset using leading value distance starting at current leading value position (Page 58)
  - Using leading value distance starting at specific leading value position (Page 59)
- Defining the direction of the leading value distance (Page 60)
- Only cancel a pending leading value offset (Page 62)

Camming

The Motion Control instruction offers you the following in camming:

- Shift leading value on the following axis
  - Leading value offset using leading value distance starting at current leading value position (Page 147)
  - Using leading value distance starting at specific leading value position (Page 148)
- Defining the direction of the leading value distance (Page 149)
- Only cancel a pending leading value offset (Page 151)

Applies to

- Synchronous axis

Requirement

- The technology objects of the leading axis and the following axis have been configured correctly.
- The leading axis is a positioning axis, a synchronous axis, an external encoder or a leading axis proxy.

- The following axis is a synchronous axis.
- The leading axis is specified as possible leading axis in the configuration of the following axis in "Technology object > Configuration > Leading value interconnections".
- The following axis is enabled.
- By means of the Motion Control instruction "MC_GearIn", "MC_GearInPos" or "MC_CamIn", the following axis is synchronized to the leading axis ("MC_GearIn.InGear" = TRUE, "MC_GearInPos.InSync" = TRUE or "MC_CamIn.InSync" = TRUE).
- No "MC_OffsetAbsolute" or "MC_OffsetRelative" job is active or waiting.

Override response

The override response for "MC_PhasingAbsolute" jobs is described in section "Override response V7: Synchronous operation jobs (Page 283)".

Disabling the leading axis with "MC_Power.Enable" = FALSE does not abort the leading value offset. The following axis follows the leading axis even during the braking ramp and after the leading axis is enabled again.

Parameters

The following table shows the parameters of the Motion Control instruction "MC_PhasingAbsolute":

Parameters	Declaration	Data type	Default value	Description	
Master	INPUT	TO_PositioningAxis TO_SynchronousAxis TO_ExternalEncoder TO_LeadingAxisProxy	-	Leading axis technology object	
Slave	INPUT	TO_SynchronousAxis	-	Following axis technology object	
Execute	INPUT	BOOL	FALSE	TRUE	Start job with a positive edge
PhaseShift	INPUT	LREAL	0.0	Absolute leading value offset	
Velocity	INPUT	LREAL	-1.0	Velocity of the following axis during leading value offset (added to synchronous operation motion)	
				> 0.0	The specified value is used.
				= 0.0	Not permitted
				< 0.0	The velocity configured in "Technology object > Configuration > Extended parameters > Dynamic default values" is used. (<TO>.DynamicDefaults.Velocity)
Acceleration	INPUT	LREAL	-1.0	Acceleration of the following axis during leading value offset (added to synchronous operation motion)	
				> 0.0	The specified value is used.
				= 0.0	Not permitted

Parameters	Declaration	Data type	Default value	Description	
Acceleration	INPUT	LREAL	-1.0	< 0.0	The acceleration configured in "Technology object > Configuration > Extended parameters > Dynamic default values" is used. (<TO>.DynamicDefaults.Acceleration)
Deceleration	INPUT	LREAL	-1.0	Deceleration of the following axis during leading value offset (added to synchronous operation motion)	
				> 0.0	The specified value is used.
				= 0.0	Not permitted
				< 0.0	The deceleration configured in "Technology object > Configuration > Extended parameters > Dynamic default values" is used. (<TO>.DynamicDefaults.Deceleration)
Jerk	INPUT	LREAL	-1.0	Jerk of the following axis during leading value offset (added to synchronous operation motion)	
				> 0.0	Constant acceleration velocity profile The specified value is used.
				= 0.0	Trapezoid velocity profile
				< 0.0	The jerk configured in "Technology object > Configuration > Extended parameters > Dynamic default values" is used. (<TO>.DynamicDefaults.Jerk)
ProfileReference	INPUT	DINT	0	Type of the leading value offset	
				0	Only with gearing: Leading value offset using dynamic parameters
				1	Leading value offset using leading value distance as of current leading value position
				2	Leading value offset using leading value distance as of leading value position "StartPosition"
				3 ... 4	Not permitted
				5	Only cancel a pending job for the leading value offset
PhasingDistance	INPUT	LREAL	0.0	When "ProfileReference" = 1, 2: Leading value distance Distance of the leading axis during leading value offset	
StartPosition	INPUT	LREAL	0.0	When "ProfileReference" = 2: Leading value position as of which the leading value is offset	

Parameters	Declaration	Data type	Default value	Description	
Direction	INPUT	DINT	3	When "ProfileReference" = 1, 2: Direction of the leading value distance	
				1	The leading value distance is in the positive direction of motion of the leading value.
				2	The leading value distance is in the negative direction of motion of the leading value.
				3	The leading value distance is in the current direction of motion of the leading value.
Done	OUTPUT	BOOL	FALSE	TRUE	The leading value offset is finished.
Busy	OUTPUT	BOOL	FALSE	TRUE	The job is being processed.
CommandAborted	OUTPUT	BOOL	FALSE	TRUE	The job was aborted by another job during execution.
Error	OUTPUT	BOOL	FALSE	TRUE	An error occurred while processing the job. The job is rejected. The cause of the error can be found in the "ErrorID" parameter.
ErrorID	OUTPUT	WORD	0	Error ID for parameter "ErrorID" You can find more detailed information in the "Error IDs" section of the "S7-1500/S7-1500T Motion Control alarms and error IDs" documentation (Page 13).	
AbsolutePhaseShift	OUTPUT	LREAL	0.0	Display of the absolute leading value share that has already been offset	
StartPhasing	OUTPUT	BOOL	FALSE	TRUE	The following axis offsets the effective leading value.

12.1.5.2 MC_PhasingAbsolute: Function chart V7 (S7-1500T)

Function chart: Absolute shift of the leading value in gearing

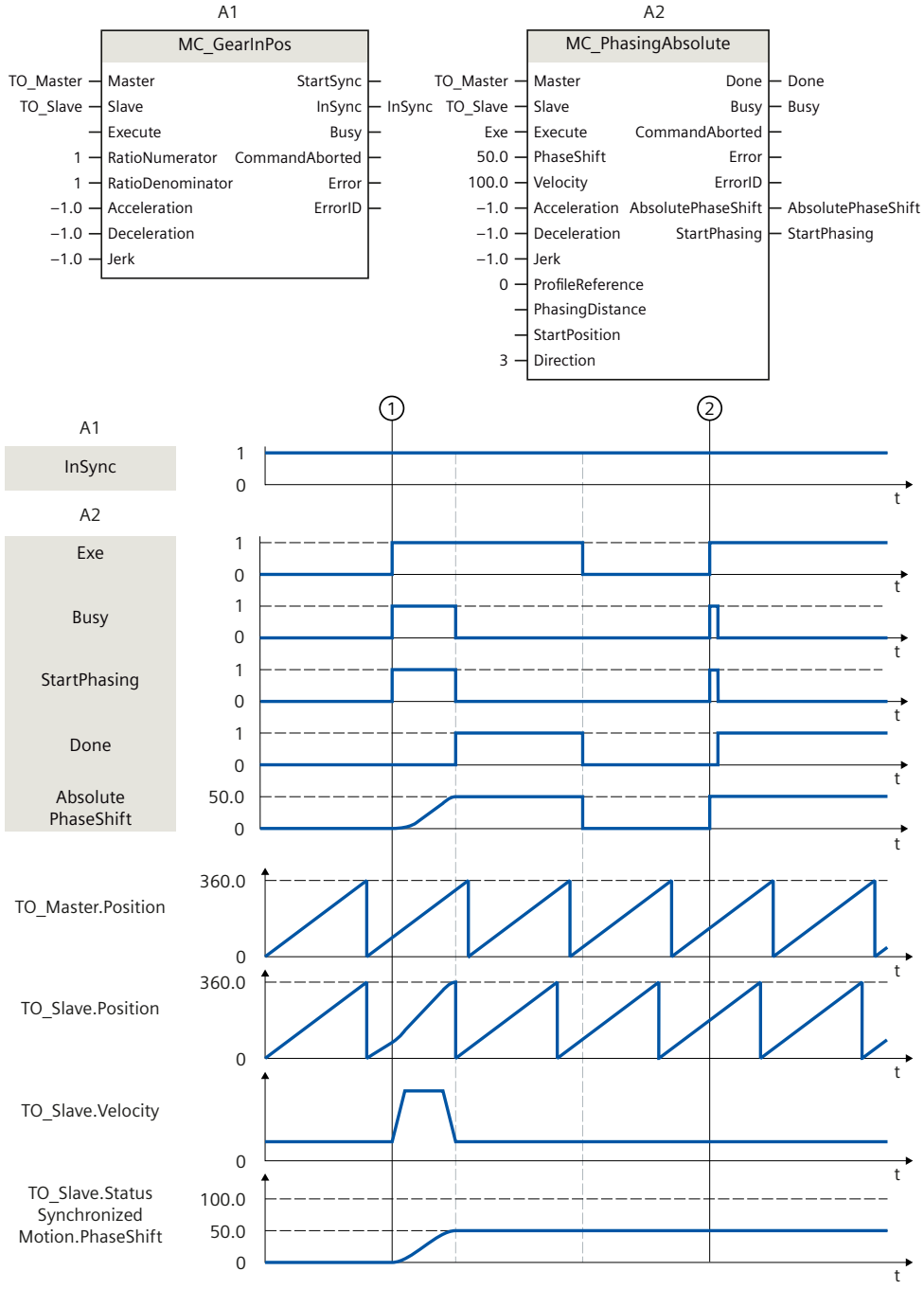

At time ①, an "MC_PhasingAbsolute" job (A2) is initiated with "ProfileReference" = 0 via "Exe" during an active gearing with "MC_GearInPos" (A1). The "StartPhasing" parameter shows that the following axis traverses the leading value offset with the dynamics specified additively to the synchronous operation motion. The absolute leading value offset traversed via the job is

indicated in "AbsolutePhaseShift". "Done" indicates that the leading value was successfully shifted. The motion of the leading axis is not affected.

At time ② the "MC_PhasingAbsolute" job (A2) is initiated again via "Exe". Because the absolute leading value offset (<TO>.StatusSynchronizedMotion.PhaseShift) is already 50.0, the leading value is not shifted.

The absolute leading value offset is indicated in the "<TO>.StatusSynchronizedMotion.PhaseShift" tag of the technology object.

Function chart: Absolute shift of the leading value in camming

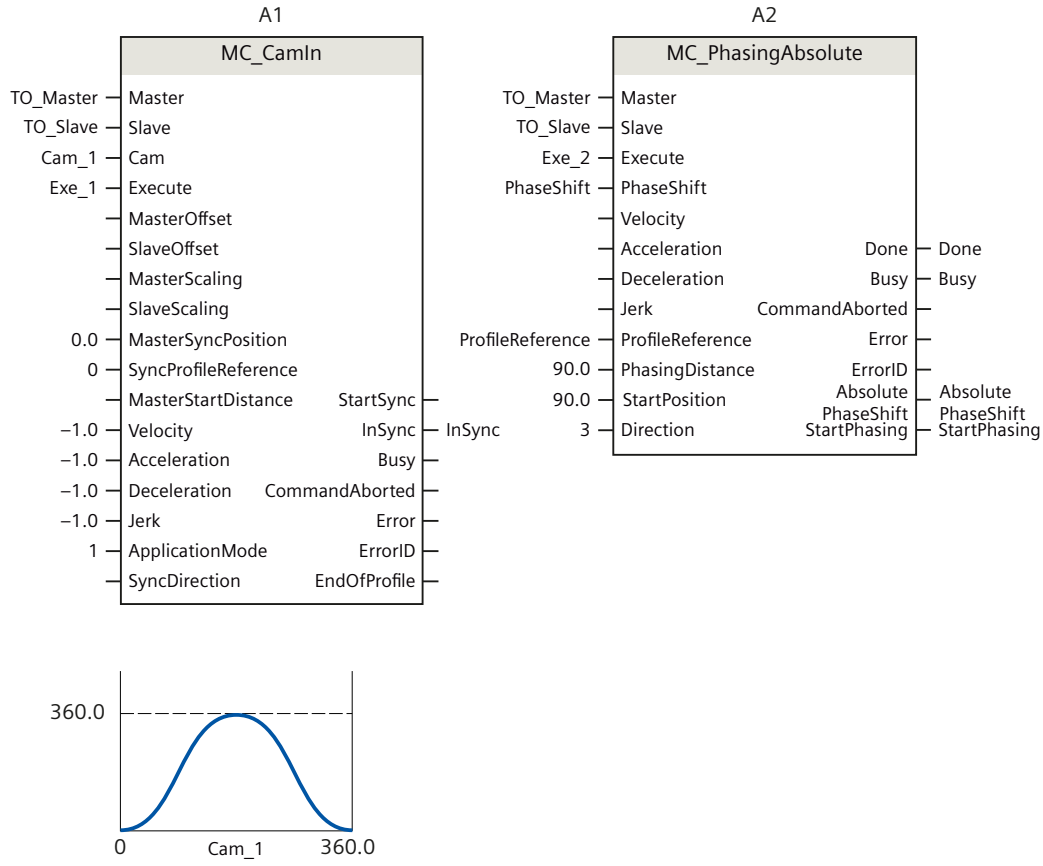

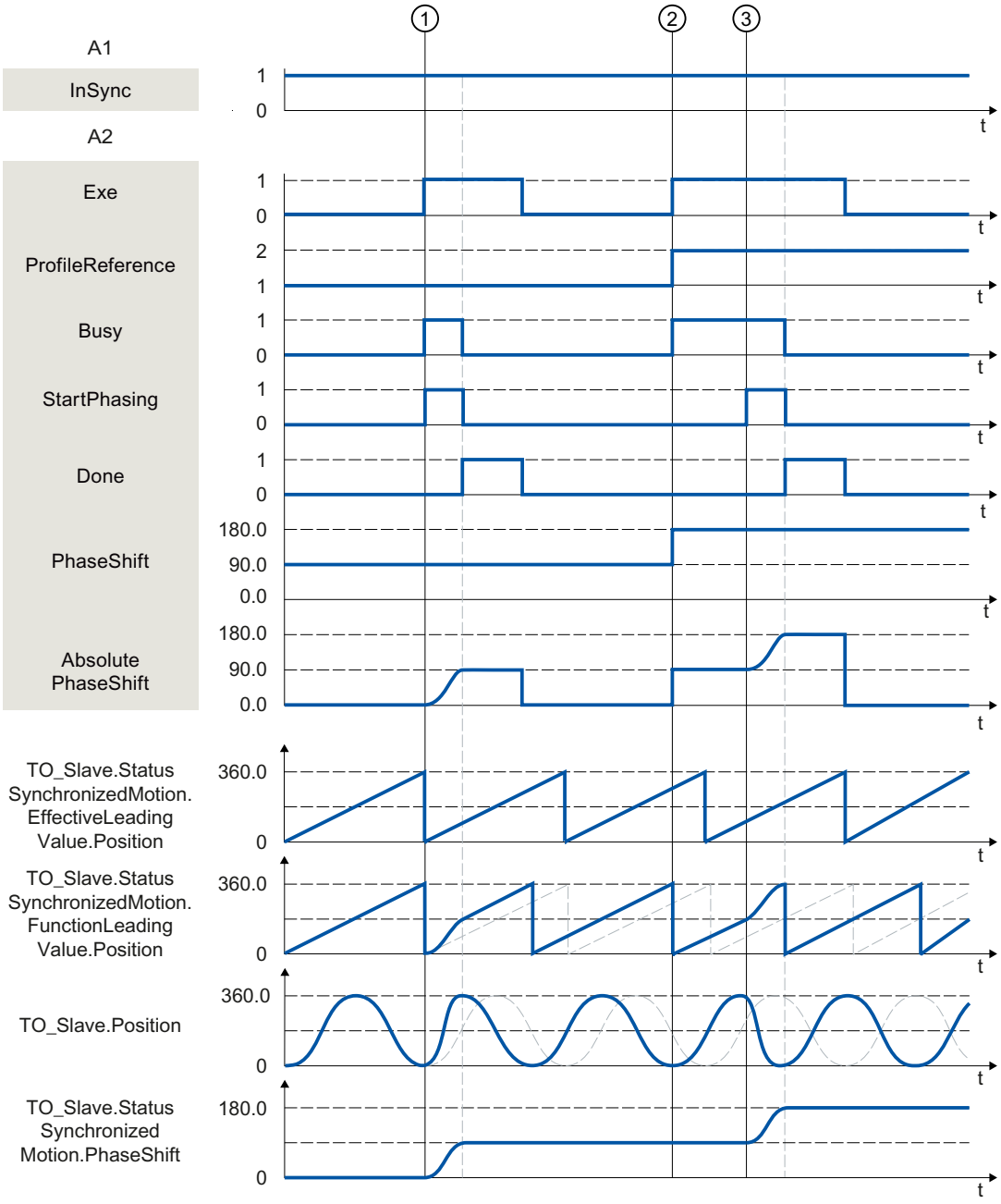

At time ①, an "MC_PhasingAbsolute" job (A2) is triggered with "ProfileReference" = 1 via "Exe" during an active camming with "MC_CamIn" (A1) . The "StartPhasing" parameter shows that the leading value offset traverses from the current position via the specified leading value distance. The required dynamic response is calculated by the system. The absolute leading value offset traversed via the job is indicated in "AbsolutePhaseShift". "Done" indicates that the leading value was successfully shifted. The motion of the leading axis is not affected.

At time ② the "MC_PhasingAbsolute" job (A2) is initiated again via "Exe" with "ProfileReference" = 2. The status "Waiting" is displayed at the following axis until the leading value reaches the start position (<TO>.StatusWord2.X3 = TRUE (PhasingCommandWaiting)).

At time ③ the leading value reaches the specified start position. The "StartPhasing" parameter shows that the following axis traverses the leading value offset via the specified

leading value distance. The required dynamic response is calculated by the system. The absolute leading value offset traversed via the job is indicated in "AbsolutePhaseShift". "Done" indicates that the leading value was successfully shifted.
The absolute leading value offset is indicated in the "<TO>.StatusSynchronizedMotion.PhaseShift" tag of the technology object.

12.1.6 MC_OffsetRelative V7 (S7-1500T)

12.1.6.1 MC_OffsetRelative: Relative shift of following value on the following axis V7 (S7-1500T)

Description

With the Motion Control instruction "MC_OffsetRelative", you shift the following value on a following axis relative to the existing following value offset. A relative following value offset is possible in gearing with "MC_GearIn" or "MC_GearInPos" or in camming with "MC_CamIn". The position of the leading axis is not affected by this. A simultaneous leading value offset is not permitted.

Gearing

The Motion Control instruction offers you the following in gearing:

- Shift following value on the following axis:
  - Leading value offset using leading value distance starting at current leading value position (Page 62)
  - Using leading value distance starting at specific leading value position (Page 63)
- Defining the direction of the leading value distance (Page 65)
- Only cancel a pending following value offset (Page 66)

Camming

The Motion Control instruction offers you the following in camming:

- Shift following value on the following axis:
  - Leading value offset using leading value distance starting at current leading value position (Page 151)
  - Using leading value distance starting at specific leading value position (Page 152)
- Defining the direction of the leading value distance (Page 154)
- Only cancel a pending following value offset (Page 156)

Applies to

- Synchronous axis

Requirements

- The technology object of following axis has been configured correctly.
- The following axis is a synchronous axis.
- The following axis is enabled.
- By means of the Motion Control instruction "MC_GearIn", "MC_GearInPos" or "MC_CamIn", the following axis is synchronized to the leading axis ("MC_GearIn.InGear" = TRUE, "MC_GearInPos.InSync" = TRUE or "MC_CamIn.InSync" = TRUE).
- No "MC_PhasingAbsolute" or "MC_PhasingRelative" job is active or waiting.

Override response

The override response for "MC_OffsetRelative" jobs is described in section "Override response V7: Synchronous operation jobs (Page 283)".

Parameter

The following table shows the parameters of the Motion Control instruction "MC_OffsetRelative":

Parameter	Declaration	Data type	Default value	Description	
Slave	INPUT	TO_SynchronousAxis	-	Following axis technology object	
Execute	INPUT	BOOL	FALSE	TRUE	Start job with a positive edge
Offset	INPUT	LREAL	0.0	Relative following value offset	
ProfileReference	INPUT	DINT	1	Type of the following value offset	
				0	Reserved
				1	Following value offset using leading value distance as of current effective leading value position
				2	Following value offset using leading value distance as of effective leading value position "StartPosition"
				3 ... 4	Reserved
				5	Only cancel a pending job for the following value offset
OffsetDistance	INPUT	LREAL	0.0	When "ProfileReference" = 1, 2: Leading value distance Effective leading value distance during following value offset	
StartPosition	INPUT	LREAL	0.0	When "ProfileReference" = 2: Effective leading value position as of which the following value is offset	

Parameter	Declaration	Data type	Default value	Description	
Direction	INPUT	DINT	3	When "ProfileReference" = 1, 2: Direction of the leading value distance	
				1	The leading value distance is in the positive direction of motion of the effective leading value.
				2	The leading value distance is in the negative direction of motion of the effective leading value.
				3	The leading value distance is in the current direction of motion of the effective leading value.
Done	OUTPUT	BOOL	FALSE	TRUE	The leading value offset is finished.
Busy	OUTPUT	BOOL	FALSE	TRUE	The job is being processed.
CommandAborted	OUTPUT	BOOL	FALSE	TRUE	The job was aborted by another job during execution.
Error	OUTPUT	BOOL	FALSE	TRUE	An error occurred while processing the job. The job is rejected. The cause of the error can be found in the "ErrorID" parameter.
ErrorID	OUTPUT	WORD	0	Error ID for the parameter "ErrorID" You can find more detailed information in the "Error IDs" section of the "S7-1500/S7-1500T Motion Control alarms and error IDs" documentation (Page 13).	
CoveredOffset	OUTPUT	LREAL	0.0	Display of the absolute following value share that has already been offset	
StartOffset	OUTPUT	BOOL	FALSE	TRUE	The following axis offsets the following value.

12.1.6.2 MC_OffsetRelative: Function chart V7 (S7-1500T)

Function chart: Relative shift of the following value in gearing

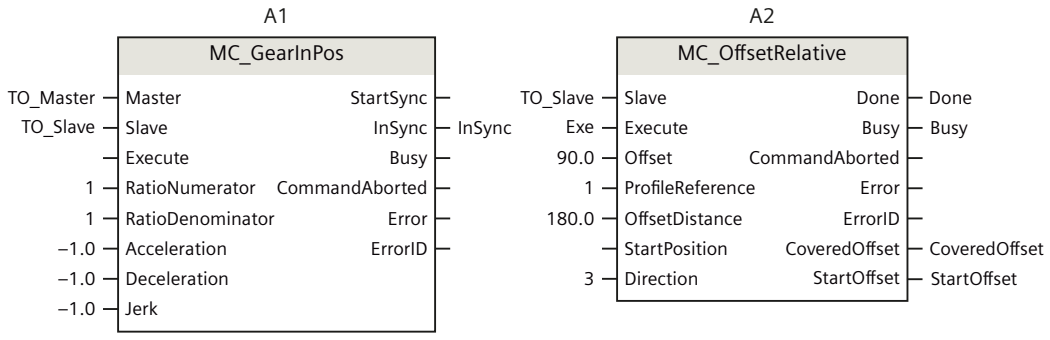

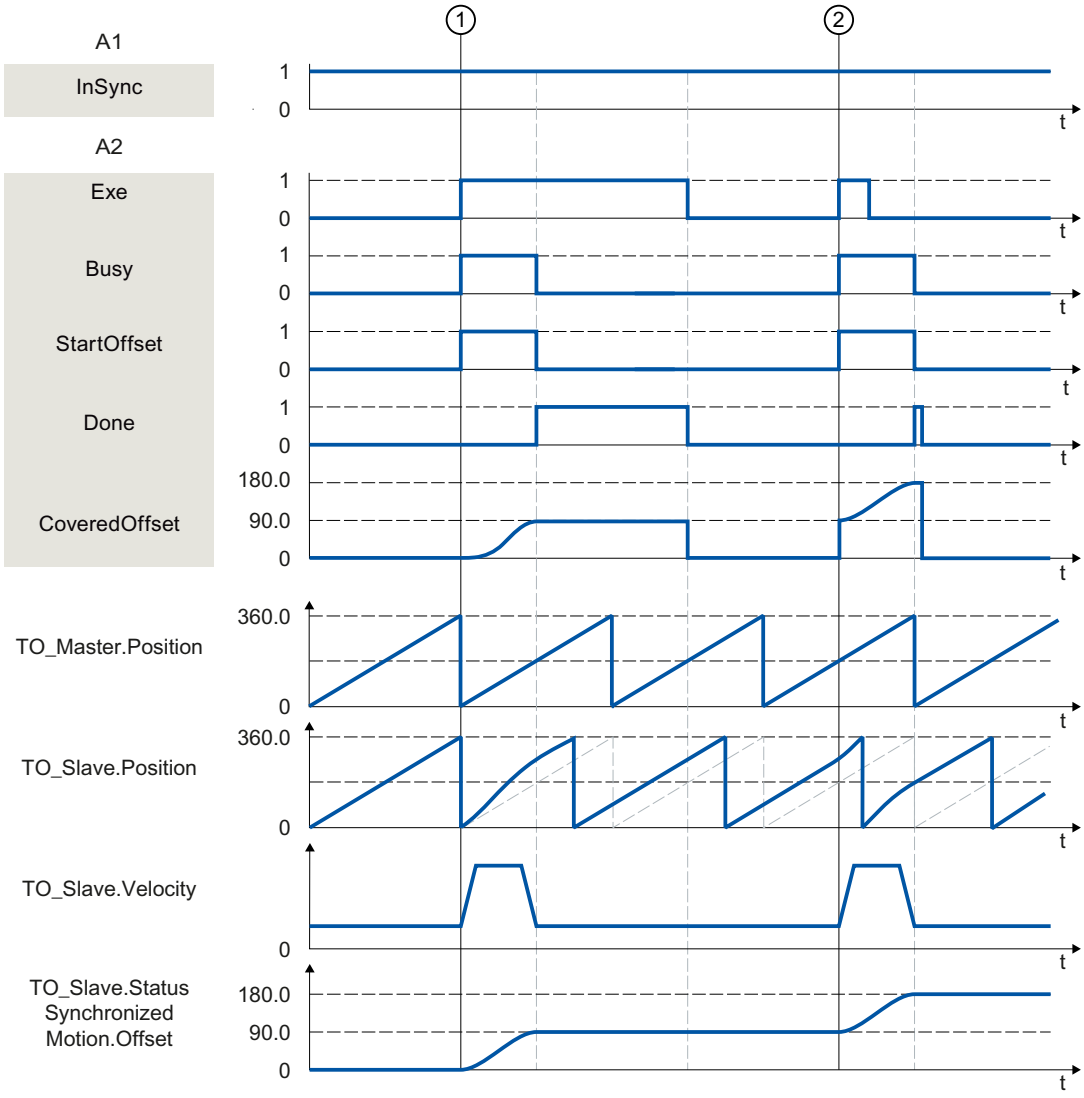

At time ①, an "MC_OffsetRelative" job (A2) is initiated with "ProfileReference" = 1 via "Exe" during an active gearing with "MC_GearInPos" (A1). The "StartOffset" parameter shows that the following axis traverses the following value offset from the current position via the specified leading value distance. The required dynamic response is calculated by the system. The absolute following value offset traversed via the job is indicated In "CoveredOffset". "Done" indicates that the following value was successfully shifted. The motion of the leading axis is not affected.

At time ② the "MC_OffsetRelative" job (A2) is initiated again via "Exe". The "StartOffset" parameter shows that the following axis traverses the following value offset via the specified leading value distance. The required dynamic response is calculated by the system. The absolute following value offset traversed via the job is indicated In "CoveredOffset". "Done" indicates that the following value was successfully shifted.

The absolute following value offset is indicated in the "<TO>.StatusSynchronizedMotion.Offset" tag of the technology object.

Function chart: Relative shift of the following value in camming

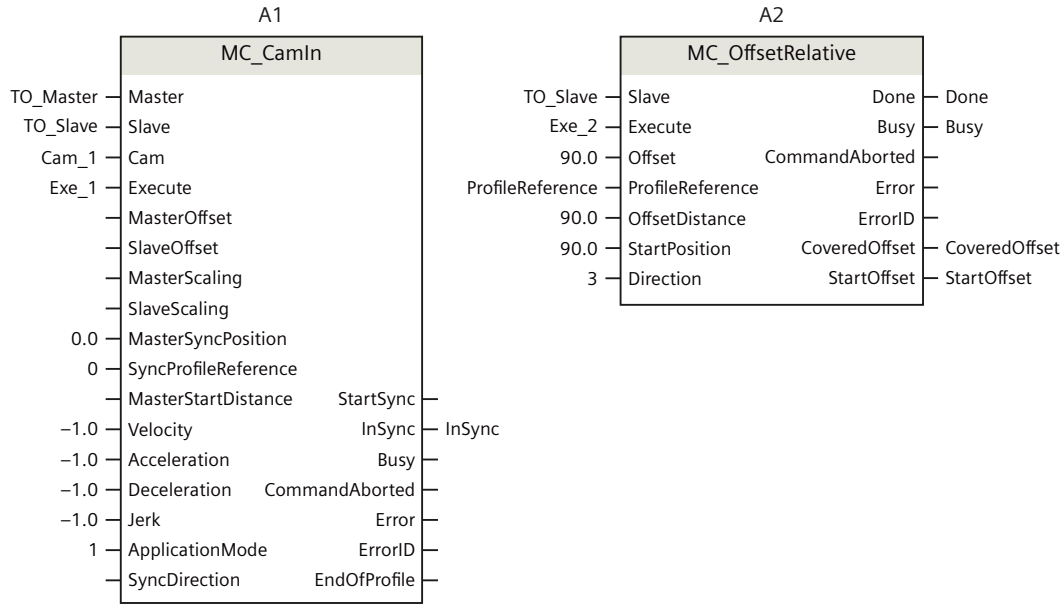

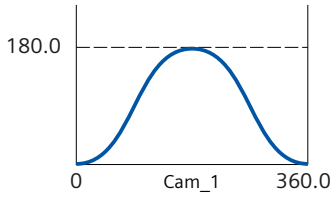

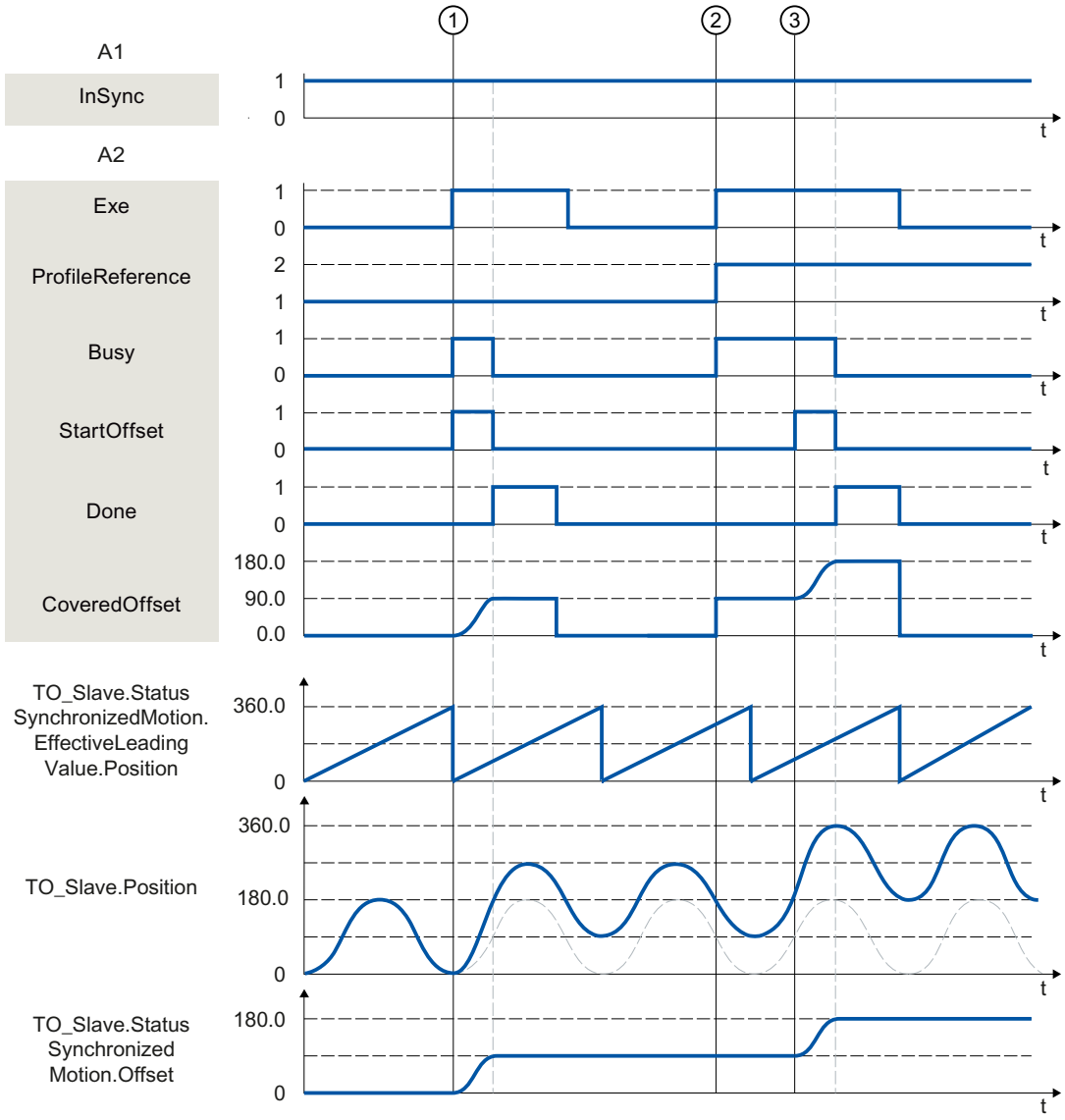

At time ①, an "MC_OffsetRelative" job (A2) is triggered with "ProfileReference" = 1 via "Exe" during an active camming with "MC_CamIn" (A1) . The "StartOffset" parameter shows that the following axis traverses the following value offset from the current position via the specified leading value distance. The required dynamic response is calculated by the system. The absolute following value offset traversed via the job is indicated In "CoveredOffset". "Done" indicates that the following value was successfully shifted. The motion of the leading axis is not affected.

At time ② the "MC_OffsetRelative" job (A2) is initiated again via "Exe" with "ProfileReference" = 2. The status "Waiting" is displayed at the following axis until the leading value reaches the start position (<TO>.StatusWord2.X5 = TRUE (OffsetCommandWaiting)).

At time ③ the leading value reaches the specified start position. The "StartOffset" parameter shows that the following axis traverses the following value offset via the specified leading value distance. The required dynamic response is calculated by the system. The absolute following value offset traversed via the job is indicated In "CoveredOffset". "Done" indicates that the leading value was successfully shifted.

The absolute following value offset is indicated in the "<TO>.StatusSynchronizedMotion.Offset" tag of the technology object.

12.1.7 MC_OffsetAbsolute V7 (S7-1500T)

12.1.7.1 MC_OffsetAbsolute: Absolute shift of following value on the following axis V7 (S7-1500T)

Description

With the Motion Control instruction "MC_OffsetAbsolute", you shift the following value on a following axis with an absolute offset. An absolute following value offset is possible in gearing with "MC_GearIn" or "MC_GearInPos" or in camming with "MC_CamIn". The position of the leading axis is not affected by this. A simultaneous leading value offset is not permitted.

Gearing

The Motion Control instruction offers you the following in gearing:

- Shift following value on the following axis:
  - Leading value offset using leading value distance starting at current leading value position (Page 62)
  - Using leading value distance starting at specific leading value position (Page 63)
- Defining the direction of the leading value distance (Page 65)
- Only cancel a pending following value offset (Page 66)

Camming

The Motion Control instruction offers you the following in camming:

- Shift following value on the following axis:
  - Leading value offset using leading value distance starting at current leading value position (Page 151)
  - Using leading value distance starting at specific leading value position (Page 152)
- Defining the direction of the leading value distance (Page 154)
- Only cancel a pending following value offset (Page 156)

Applies to

- Synchronous axis

Requirements

- The technology object of following axis has been configured correctly.
- The following axis is a synchronous axis.
- The following axis is enabled.
- By means of the Motion Control instruction "MC_GearIn", "MC_GearInPos" or "MC_CamIn", the following axis is synchronized to the leading axis ("MC_GearIn.InGear" = TRUE, "MC_GearInPos.InSync" = TRUE or "MC_CamIn.InSync" = TRUE).
- No "MC_PhasingAbsolute" or "MC_PhasingRelative" job is active or waiting.

Override response

The override response for "MC_OffsetAbsolute" jobs is described in section "Override response V7: Synchronous operation jobs (Page 283)".

Parameter

The following table shows the parameters of the Motion Control instruction "MC_OffsetAbsolute":

Parameter	Declaration	Data type	Default value	Description	
Slave	INPUT	TO_SynchronousAxis	-	Following axis technology object	
Execute	INPUT	BOOL	FALSE	TRUE	Start job with a positive edge
Offset	INPUT	LREAL	0.0	Absolute following value offset	
ProfileReference	INPUT	DINT	1	Type of the following value offset	
				0	Reserved
				1	Following value offset using leading value distance as of current effective leading value position
				2	Following value offset using leading value distance as of effective leading value position "StartPosition"
				3 ... 4	Reserved
				5	Only cancel a pending job for the following value offset
OffsetDistance	INPUT	LREAL	0.0	When "ProfileReference" = 1, 2: Leading value distance Effective leading value distance during following value offset	
StartPosition	INPUT	LREAL	0.0	When "ProfileReference" = 2: Effective leading value position as of which the following value is offset	

Parameter	Declaration	Data type	Default value	Description	
Direction	INPUT	DINT	3	When "ProfileReference" = 1, 2: Direction of the leading value distance	
				1	The leading value distance is in the positive direction of motion of the effective leading value.
				2	The leading value distance is in the negative direction of motion of the effective leading value.
				3	The leading value distance is in the current direction of motion of the effective leading value.
Done	OUTPUT	BOOL	FALSE	TRUE	The leading value offset is finished.
Busy	OUTPUT	BOOL	FALSE	TRUE	The job is being processed.
CommandAborted	OUTPUT	BOOL	FALSE	TRUE	The job was aborted by another job during execution.
Error	OUTPUT	BOOL	FALSE	TRUE	An error occurred while processing the job. The job is rejected. The cause of the error can be found in the "ErrorID" parameter.
ErrorID	OUTPUT	WORD	0	Error ID for the parameter "ErrorID" You can find more detailed information in the "Error IDs" section of the "S7-1500/S7-1500T Motion Control alarms and error IDs" documentation (Page 13).	
AbsoluteOffset	OUTPUT	LREAL	0.0	Display of the absolute following value share that has already been offset	
StartOffset	OUTPUT	BOOL	FALSE	TRUE	The following axis offsets the following value.

12.1.7.2 MC_OffsetAbsolute: Function chart V7 (S7-1500T)

Function chart: Absolute shift of the following value in gearing

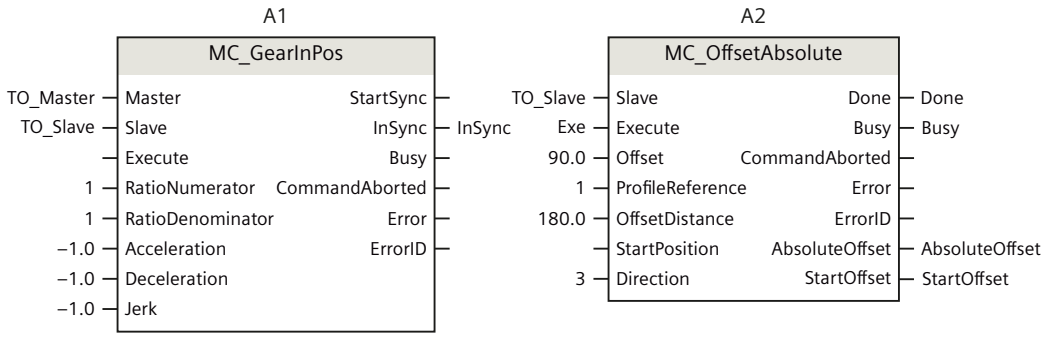

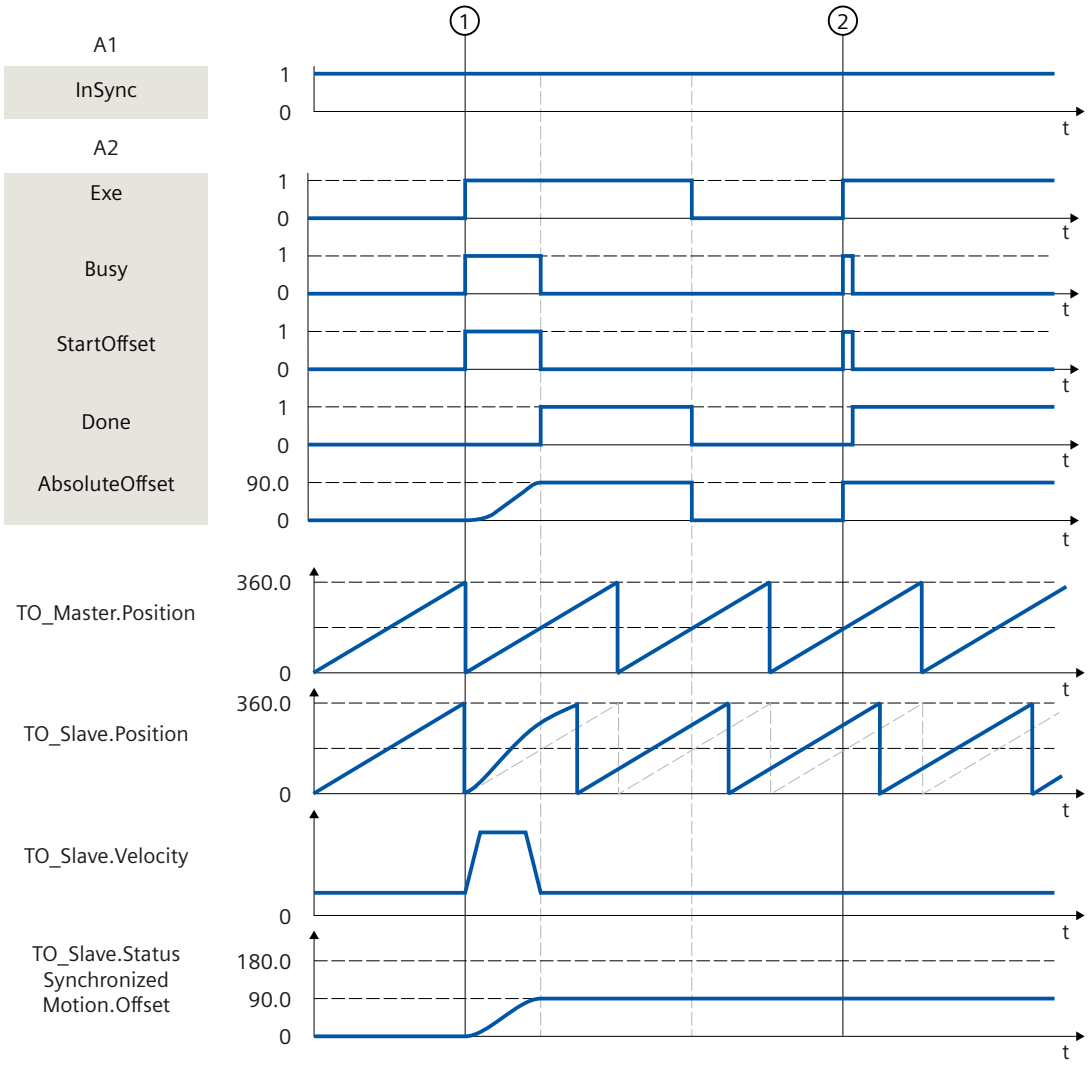

At time ①, an "MC_OffsetAbsolute" job (A2) is initiated with "ProfileReference" = 1 via "Exe" during an active gearing with "MC_GearInPos" (A1). The "StartOffset" parameter shows that the following axis traverses the following value offset from the current position via the specified leading value distance. The required dynamic response is calculated by the system. The absolute following value offset traversed via the job is indicated in "AbsoluteOffset". "Done" indicates that the following value was successfully shifted. The motion of the leading axis is not affected.

At time ② the "MC_OffsetAbsolute" job (A2) is initiated again via "Exe". Because the absolute following value offset (<TO>.StatusSynchronizedMotion.Offset) is already 90.0, the following value is not shifted.

The absolute following value offset is indicated in the "<TO>.StatusSynchronizedMotion.Offset" tag of the technology object.

Function chart: Absolute shift of the following value in camming

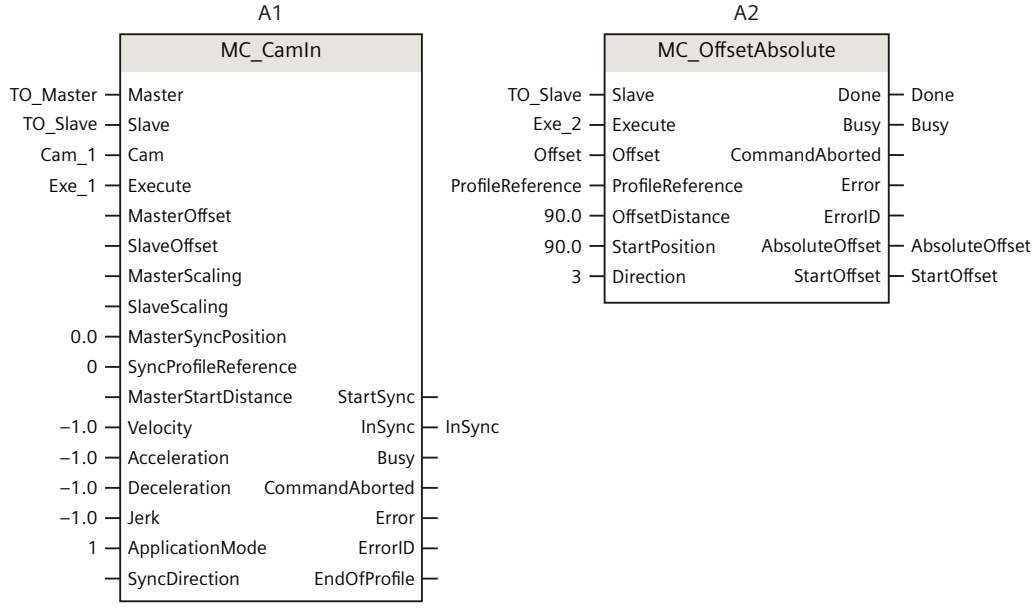

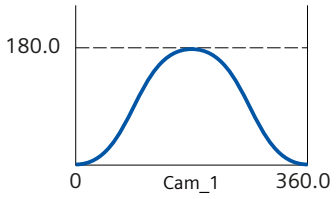

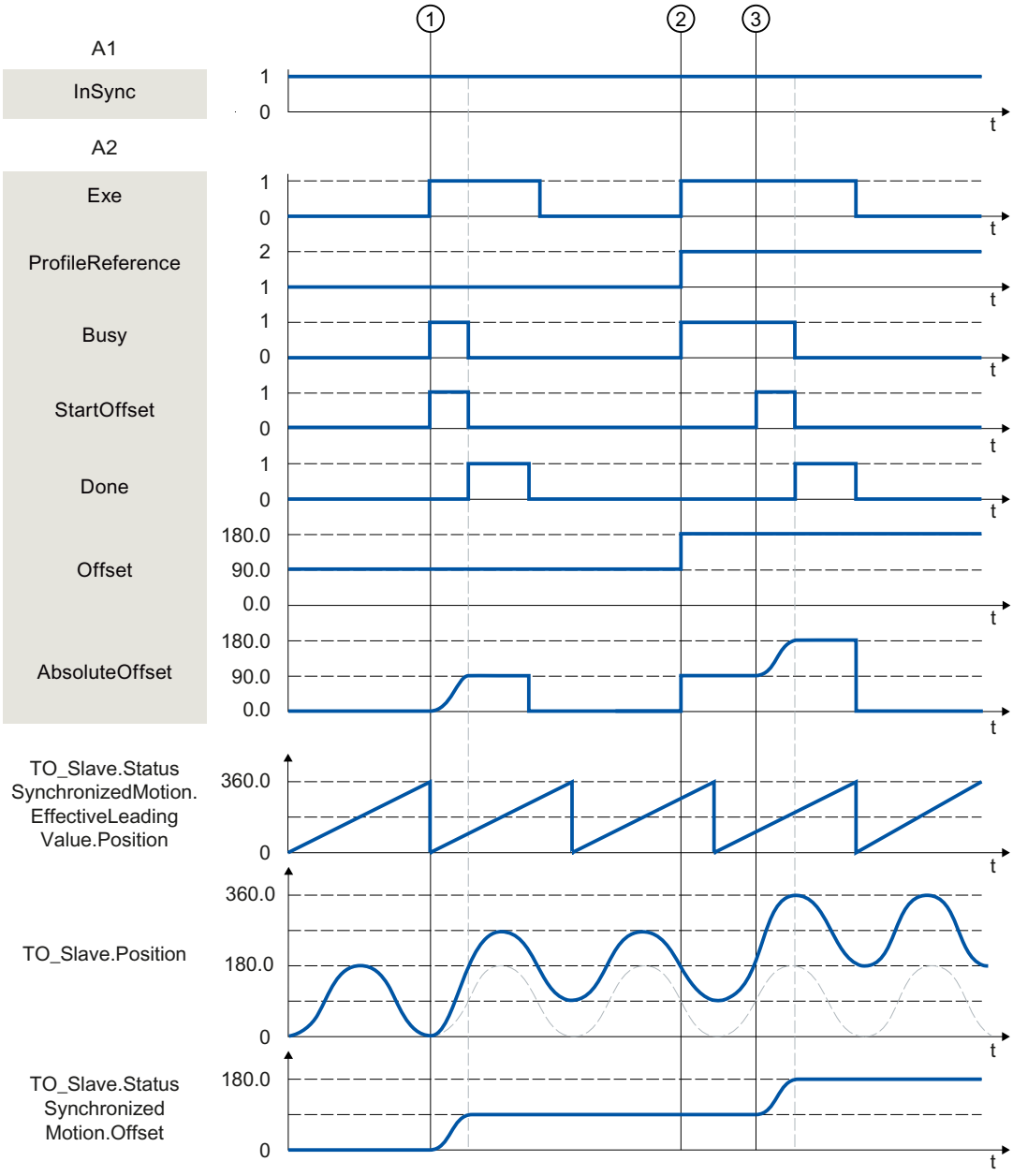

At time ①, an "MC_OffsetAbsolute" job (A2) is triggered with "ProfileReference" = 1 via "Exe" during an active camming with "MC_CamIn" (A1) . The "StartOffset" parameter shows that the following axis traverses the following value offset from the current position via the specified leading value distance. The required dynamic response is calculated by the system. The absolute following value offset traversed via the job is indicated in "AbsoluteOffset". "Done" indicates that the following value was successfully shifted. The motion of the leading axis is not affected.

At time ② the "MC_OffsetAbsolute" job (A2) is initiated again via "Exe" with "ProfileReference" = 2. The status "Waiting" is displayed at the following axis until the leading value reaches the start position (<TO>.StatusWord2.X5 = TRUE (OffsetCommandWaiting)).

At time ③ the leading value reaches the specified start position. The "StartOffset" parameter shows that the following axis traverses the following value offset via the specified leading

value distance. The required dynamic response is calculated by the system. The absolute following value offset traversed via the job is indicated in "AbsoluteOffset". "Done" indicates that the following value was successfully shifted.
The absolute following value offset is indicated in the "<TO>.StatusSynchronizedMotion.Offset" tag of the technology object.

12.1.8 MC_CamIn V7 (S7-1500T)

12.1.8.1 MC_CamIn: Start camming V7 (S7-1500T)

Description

With the Motion Control instruction "MC_CamIn", you start a camming (Page 82) operation between a leading axis and a following axis. The following axis is synchronized depending on the specified synchronous position of the leading axis.
The synchronous position of the leading axis and the corresponding position of the following axis from the cam represent the relationship of the two axes to one another. The synchronous position of the leading axis is determined by the following parameters:

- Start position of the cam (<TO_Cam>.StatusCam.StartLeadingValue)
- Scaling the leading values of the cam ("MasterScaling")
- Offset/position of the cam ("MasterOffset")
- Start point within the cam ("MasterSyncPosition")

The synchronous position is calculated as follows:
Synchronous position = (Start position of the cam "MasterScaling") + "MasterOffset" + "MasterSyncPosition"
The start of movement of the following axis is defined depending on the selected synchronization mode.
The Motion Control instruction offers you the following:

- Scaling and shifting cam (Page 125)
- Defining application mode of the cam (Page 127)
- Defining direction of synchronization (Page 130)
- Define synchronous position and type of synchronization:
  - Synchronization in advance using dynamic parameters (Page 133)
  - Synchronization in advance using leading value distance (Page 134)
  - Synchronization in advance using leading value distance starting from current leading value position (Page 136)
  - Subsequent synchronization using leading value distance (Page 139)
  - Subsequent synchronization using leading value distance starting from current leading value position (Page 142)
  - Directly set the following axis synchronously (Page 143)
  - Directly set following axis synchronously at end of the cam (Page 144)
- Synchronous travel in camming (Page 146)

Different parameters are relevant depending on the synchronization profile. You can find an overview in the "Parameter overview for synchronizing with "MC_CamIn" (Page 130)" section.

Applies to

- Cam
- Synchronous axis

Requirement

- The technology objects of the leading axis, following axis, and cam have been configured correctly.
- The leading axis is a positioning axis, a synchronous axis, an external encoder or a leading axis proxy.
- The following axis is a synchronous axis.
- The leading axis is specified as possible leading axis in the configuration of the following axis under "Technology object > Configuration > Leading value interconnections".
- The following axis is enabled.
- The following axis is homed.
- The cam is interpolated with "MC_InterpolateCam".
- With synchronization in advance using leading value distance, the leading axis must be at least the specified distance ("MasterStartDistance") from the synchronization position ("MasterSyncPosition") when starting the job.
- With direct synchronous setting at the end of the cam, camming must already be active ("InSync" = TRUE).

Override response

The override response for "MC_CamIn" jobs is described in section "Override response V7: Synchronous operation jobs (Page 283)".

With a "MC_CamOut" job, the following axis is desynchronized and synchronous operation is terminated.

Disabling the following axis with "MC_Power.Enable" = FALSE aborts the synchronous operation in every status.

Disabling the leading axis with "MC_Power", in contrast, does not abort synchronous operation. The following axis follows the leading axis even during the braking ramp and after the leading axis is enabled again.

Parameters

The following table shows the parameters of the Motion Control instruction "MC_CamIn":

Parameter	Declaration	Data type	Default value	Description
Master	INPUT	TO_PositioningAxis TO_SynchronousAxis TO_ExternalEncoder TO_LeadingAxisProxy	-	Leading axis technology object
Slave	INPUT	TO_SynchronousAxis	-	Following axis technology object

Parameter	Declaration	Data type	Default value	Description	
Cam	INPUT	TO_Cam TO_Cam_10k	-	Cam technology object	
Execute	INPUT	BOOL	FALSE	TRUE	Start job with a positive edge
MasterOffset	INPUT	LREAL	0.0	When "SyncProfileReference" = 0, 1, 3, 4: Offset of the leading values of the cam (Page 125) The cam technology object is not changed.	
				When "SyncProfileReference" = 2, 5, 6: Not relevant	
SlaveOffset	INPUT	LREAL	0.0	When "SyncProfileReference" = 0, 1, 3, 4, 6: Offset of the following values of the cam (Page 125) The cam technology object is not changed.	
				When "SyncProfileReference" = 2, 5: Not relevant	
MasterScaling	INPUT	LREAL	1.0	Scaling the leading values of the cam (Page 125) The cam technology object is not changed.	
SlaveScaling	INPUT	LREAL	1.0	Scaling the following values of the cam (Page 125) The cam technology object is not changed.	
MasterSyncPosition	INPUT	LREAL	0.0	Synchronous position of leading axis	
				When "SyncProfileReference" = 0, 1, 6: Position of the leading axis (relative to the start position of the cam), from which the axes are synchronous and synchronization is complete. The value must be within the definition of the cam.	
				When "SyncProfileReference" = 3: Position of the leading axis (relative to the start position of the cam) from which the synchronization begins The value must be within the definition of the cam.	
				When "SyncProfileReference" = 4: Not relevant	
				When "SyncProfileReference" = 2, 5: Position of the leading axis (relative to the start position of the cam to be changed), from which the axes are synchronous. The value must be within the definition of the cam to be changed.	
SyncProfileReference	INPUT	DINT	1	Synchronization profile	
				0	Synchronization in advance using dynamic parameters (Page 133)
				1	Synchronization in advance using leading value distance (Page 134)
				2	Direct synchronous setting (Page 143)
				3	Subsequent synchronization using leading value distance (Page 139)

Parameter	Declaration	Data type	Default value	Description	
SyncProfileReference	INPUT	DINT	1	4	Subsequent synchronization using leading value distance starting from current leading value position (Page 142)
				5	Direct synchronous setting at the end of the cam (Page 144)
				6	Synchronization in advance using leading value distance starting from current leading value position (Page 136)
MasterStartDistance	INPUT	LREAL	0.0	When "SyncProfileReference" = 1, 3, 4, 6: Leading value distance Distance of the leading axis during the synchronization	
				> 0.0	The specified value is used.
				≤ 0.0	Not permitted
				When "SyncProfileReference" = 0, 2, 5: Not relevant	
Velocity	INPUT	LREAL	-1.0	When "SyncProfileReference" = 0: Velocity	
				> 0.0	The specified value is used.
				= 0.0	Not permitted
				< 0.0	The velocity configured in "Technology object > Configuration > Extended parameters > Dynamic default values" is used. (<TO>.DynamicDefaults.Velocity)
				When "SyncProfileReference" = 1, 2, 3, 4, 5, 6: Not relevant	
Acceleration	INPUT	LREAL	-1.0	When "SyncProfileReference" = 0: Acceleration	
				> 0.0	The specified value is used.
				= 0.0	Not permitted
				< 0.0	The acceleration configured in "Technology object > Configuration > Extended parameters > Dynamic default values" is used. (<TO>.DynamicDefaults.Acceleration)
				When "SyncProfileReference" = 1, 2, 3, 4, 5, 6: Not relevant	
Deceleration	INPUT	LREAL	-1.0	When "SyncProfileReference" = 0: Deceleration	
				> 0.0	The specified value is used.
				= 0.0	Not permitted
				< 0.0	The deceleration configured in "Technology object > Configuration > Extended parameters > Dynamic default values" is used. (<TO>.DynamicDefaults.Deceleration)

Parameter	Declaration	Data type	Default value	Description	
Deceleration	INPUT	LREAL	-1.0	When "SyncProfileReference" = 1, 2, 3, 4, 5, 6: Not relevant	
Jerk	INPUT	LREAL	-1.0	When "SyncProfileReference" = 0: Jerk	
				> 0.0	Constant acceleration velocity profile The specified value is used.
				= 0.0	Trapezoid velocity profile
				< 0.0	The jerk configured in "Technology object > Configuration > Extended parameters > Dynamic default values" is used. (<TO>.DynamicDefaults.Jerk)
				When "SyncProfileReference" = 1, 2, 3, 4, 5, 6: Not relevant	
ApplicationMode	INPUT	DINT	0	Application of the cam (Page 127)	
				0	Once/not cyclic
				1	Cyclic (absolute application on the following value side)
				2	Cyclic appending (continuously appending on the following value side)
SyncDirection	INPUT	DINT	3	When "SyncProfileReference" = 0, 1, 3, 4, 6: Direction of synchronization (Page 130) In effect for following axes with activated Modulo setting.	
				1	Positive direction The following axis may only travel in positive direction during synchronization.
				2	Negative direction The following axis may only travel in negative direction during synchronization.
				3	Shortest distance Changes in direction are permitted for the following axis during synchronization.
				When "SyncProfileReference" = 2, 5: Not relevant	
StartSync	OUTPUT	BOOL	FALSE	TRUE	The following axis is synchronized to the leading axis.
InSync	OUTPUT	BOOL	FALSE	TRUE	Synchronous operation reached The following axis is synchronized and moves synchronously to the leading axis.
Busy	OUTPUT	BOOL	FALSE	TRUE	The job is being processed.
CommandAborted	OUTPUT	BOOL	FALSE	TRUE	The job was aborted by another job during execution.

Parameter	Declaration	Data type	Default value	Description	
Error	OUTPUT	BOOL	FALSE	TRUE	An error occurred while processing the job. The job is rejected. The cause of the error can be found in the "ErrorID" parameter.
ErrorID	OUTPUT	WORD	16#0000	Error ID for parameter "ErrorID" You can find more detailed information in the "Error IDs" section of the "S7-1500/S7-1500T Motion Control alarms and error IDs" documentation (Page 13).	
EndOfProfile	OUTPUT	BOOL	FALSE	TRUE	The end of the cam has been reached. Displayed for at least one call of "MC_CamIn" in the user program when the cam is used cyclically.

12.1.8.2 MC_CamIn: Function chart V7 (S7-1500T)

Function chart: Synchronization in advance via dynamic parameters/leading value distance and switching of the cam

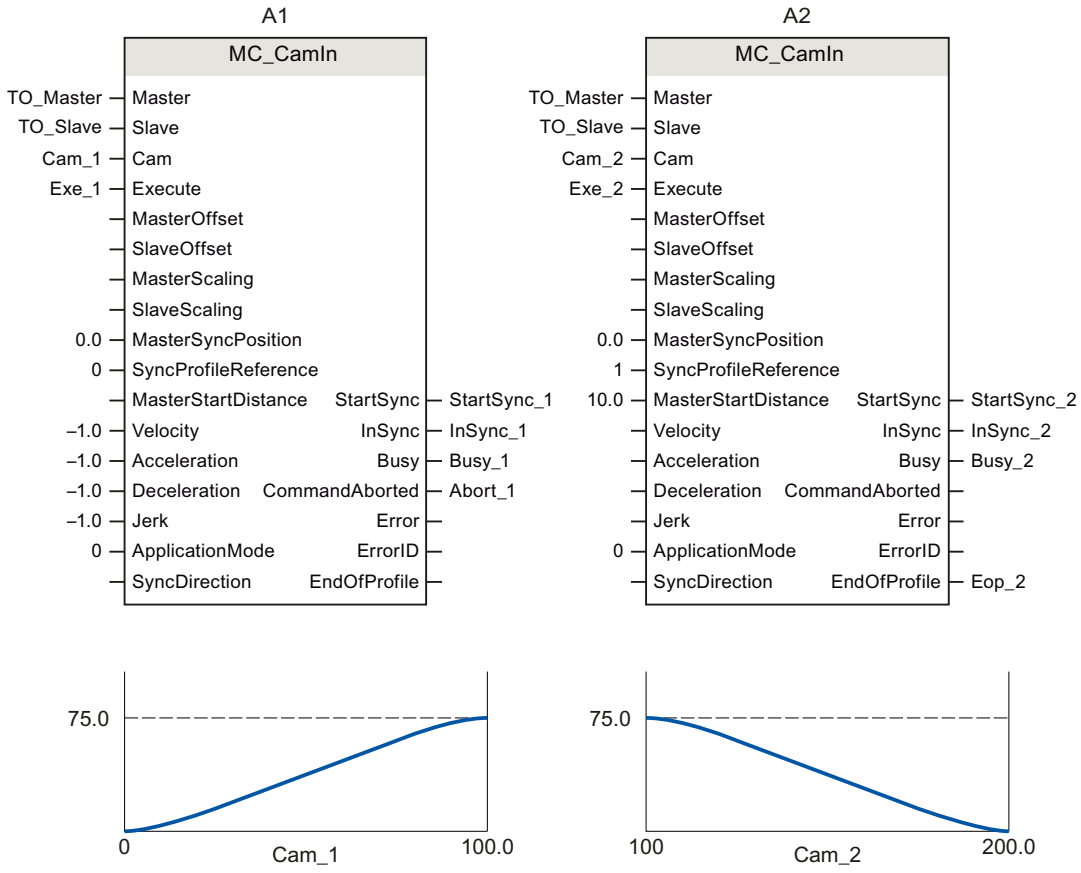

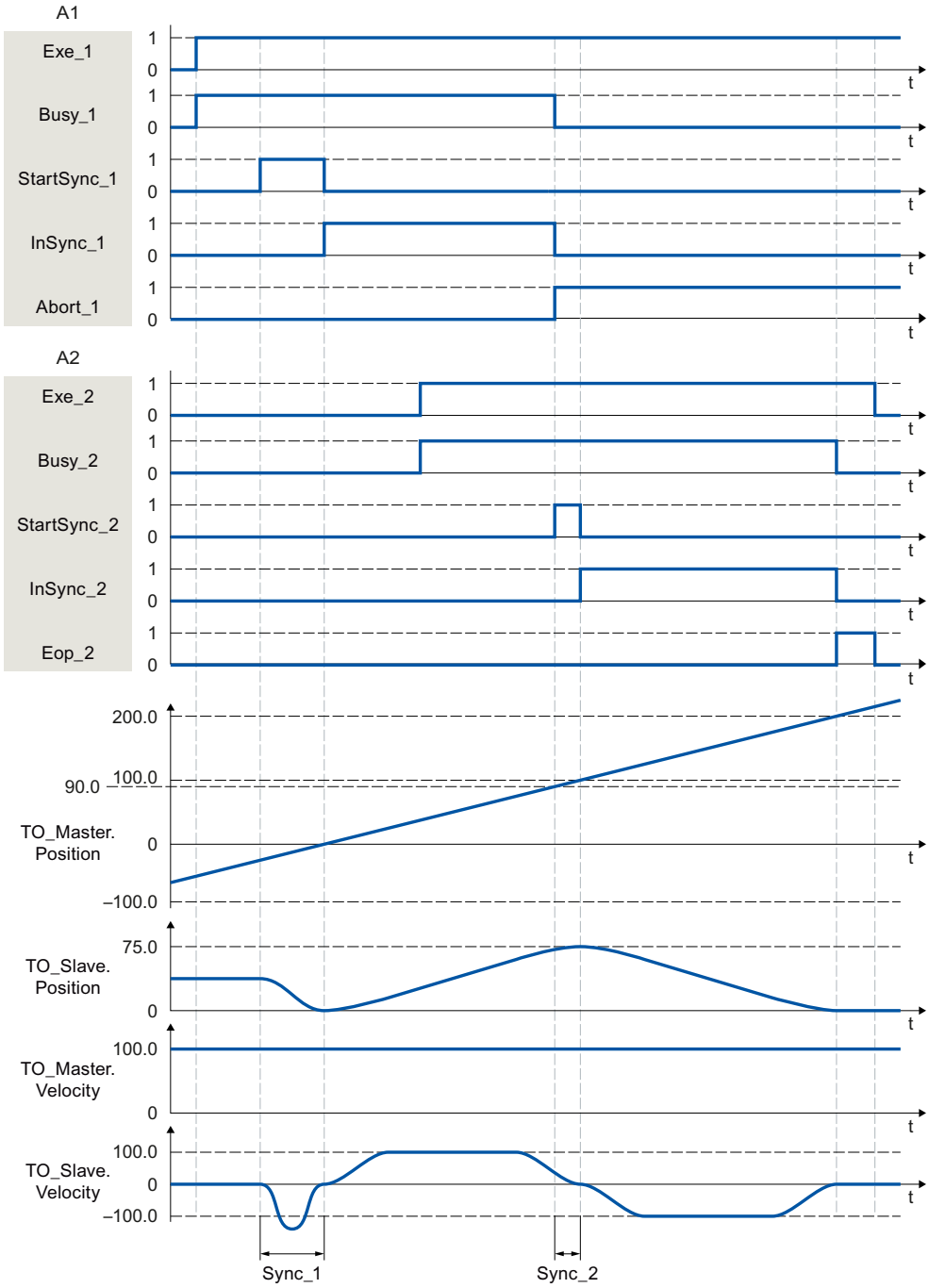

Using "Exe_1", an "MC_CamIn" job (A1) is initiated. The start of the synchronization is displayed with "StartSync_1". The following axis (TO_Slave) is synchronized in advance to the cam (Cam_1) within the range "Sync_1" by means of the specified dynamic parameters. The distance required for synchronization is calculated by the system. When the specified reference position "MasterSyncPosition" relative to the start of the cam is reached, "InSync_1" signals that the following axis is synchronized and moves synchronously to the leading axis. The synchronous operation is overridden by another "MC_CamIn" job (A2). The abort is signaled via "Abort_1". The start of the synchronization is displayed with "StartSync_2". The following axis is synchronized in advance to the new cam (Cam_2) within the range "Sync_2"

by means of the specified leading value distance "MasterStartDistance". Within the range "Sync_2", the axis does not follow the cam "Cam_1" The dynamic response required for synchronization is calculated by the system. When the specified reference position "MasterSyncPosition" relative to the start of the cam is reached, "InSync_2" signals that the following axis is synchronized and moves synchronously to the leading axis.

Function chart: Synchronization in advance/subsequent synchronization via leading value distance and switching the cam

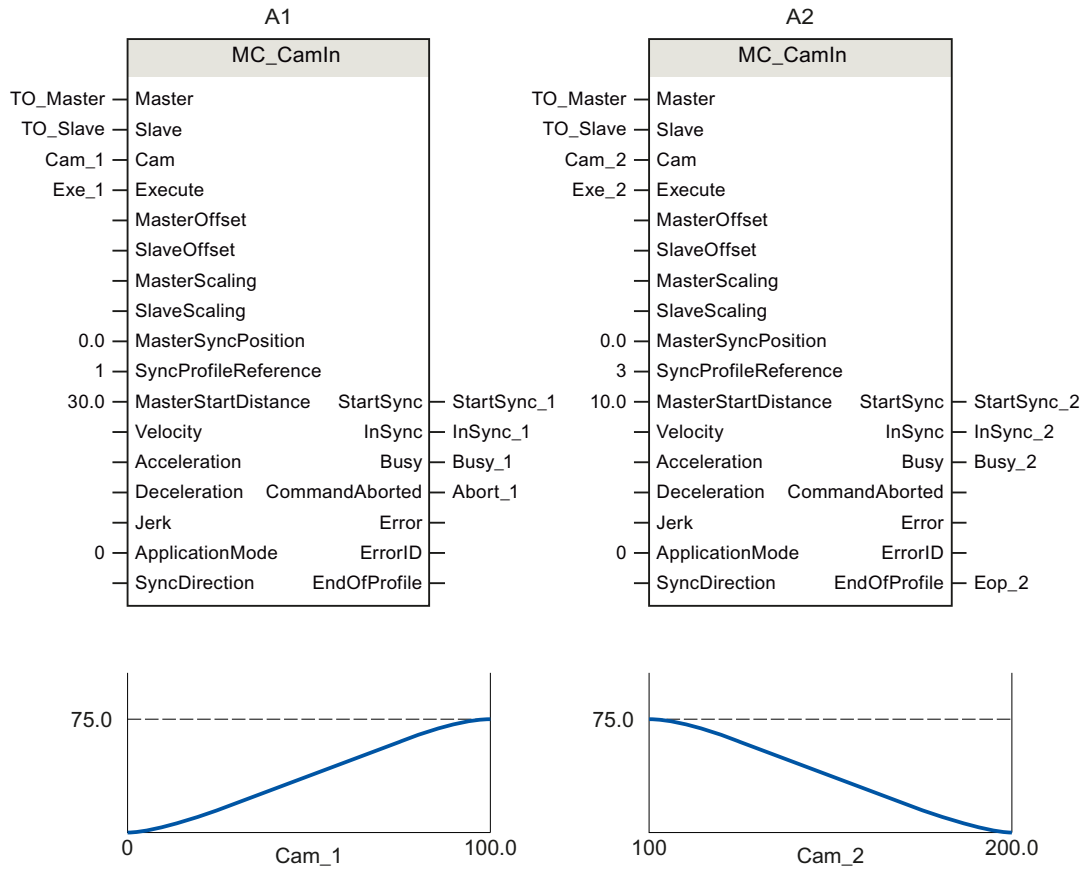

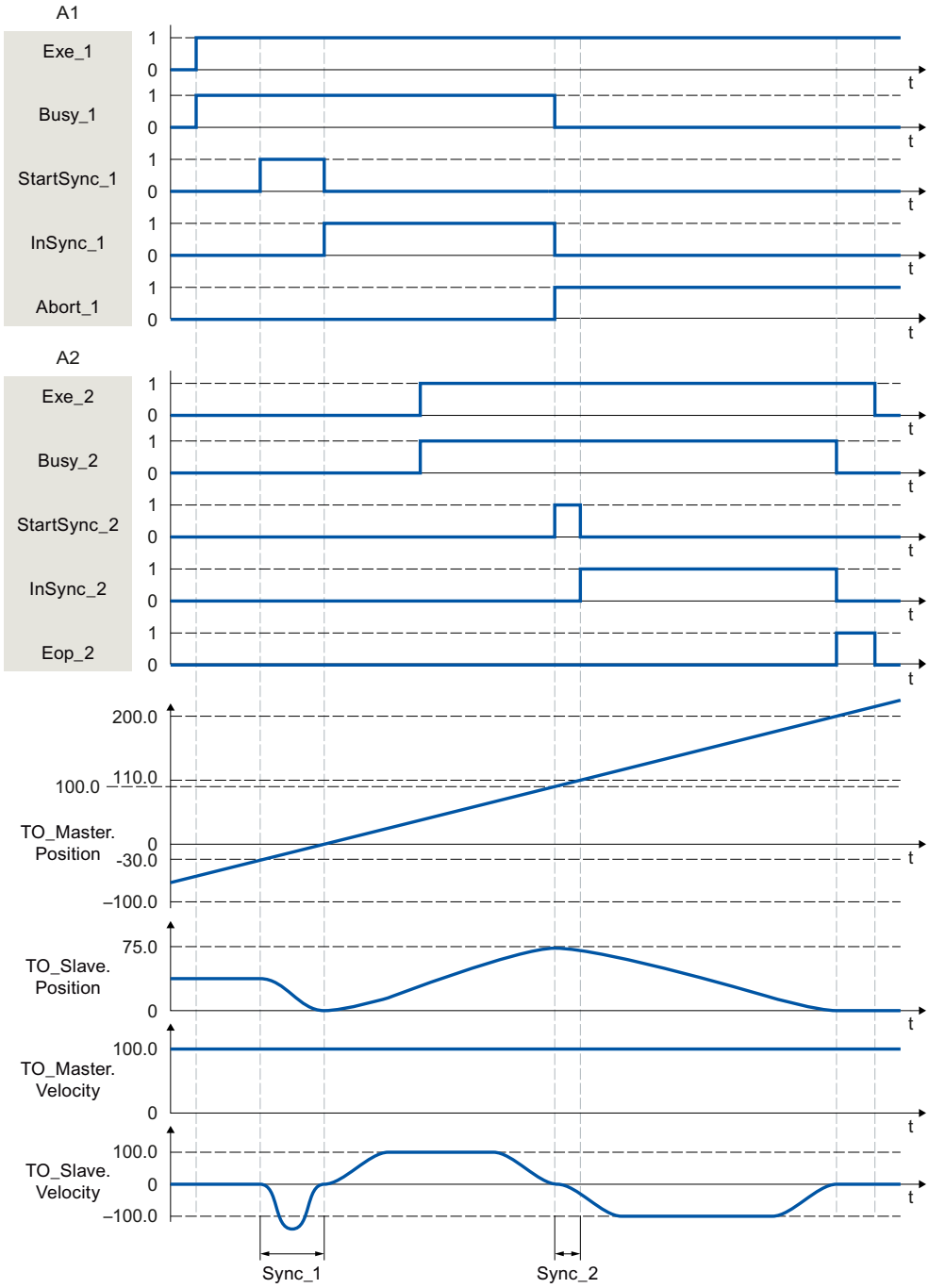

Using "Exe_1", an "MC_CamIn" job (A1) is initiated. The start of the synchronization is displayed with "StartSync_1". The following axis (TO_Slave) is synchronized in advance to the cam (Cam_1) within the range "Sync_1" by means of the specified leading value distance "MasterStartDistance". The dynamic response required for synchronization is calculated by the system. When the specified reference position "MasterSyncPosition" relative to the start of the cam is reached, "InSync_1" signals that the following axis is synchronized and moves synchronously to the leading axis.

The synchronous operation is overridden by another "MC_CamIn" job (A2). The abort is signaled via "Abort_1". When the specified reference position "MasterSyncPosition" in relation

to the start of the cam disk is reached, the start of synchronization is indicated via "StartSync_2". The following axis is synchronized subsequently to the new cam (Cam_2) within the range "Sync_2" by means of the specified leading value distance "MasterStartDistance". Within the range "Sync_2", the axis does not follow the cam "Cam_1" The dynamic response required for synchronization is calculated by the system. "InSync_2" signals that the following axis is synchronized and moving synchronously to the leading axis.

Function chart: Synchronization in advance/subsequent synchronization via leading value distance starting from current leading value position

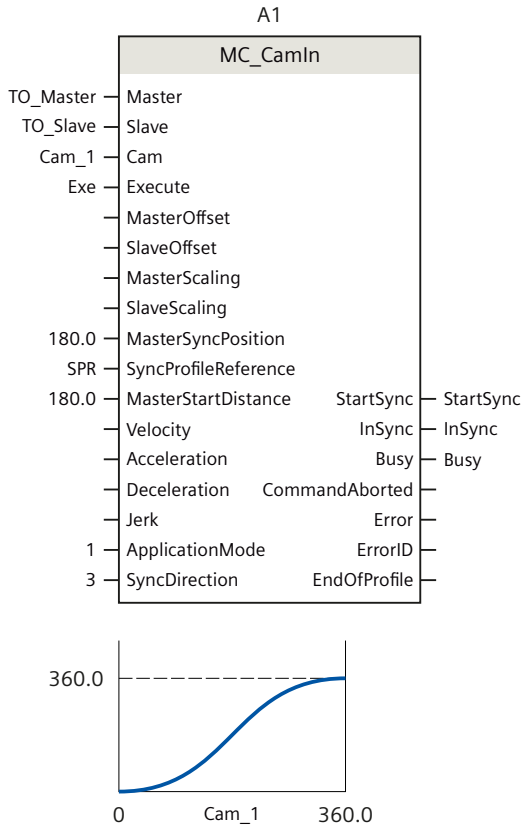

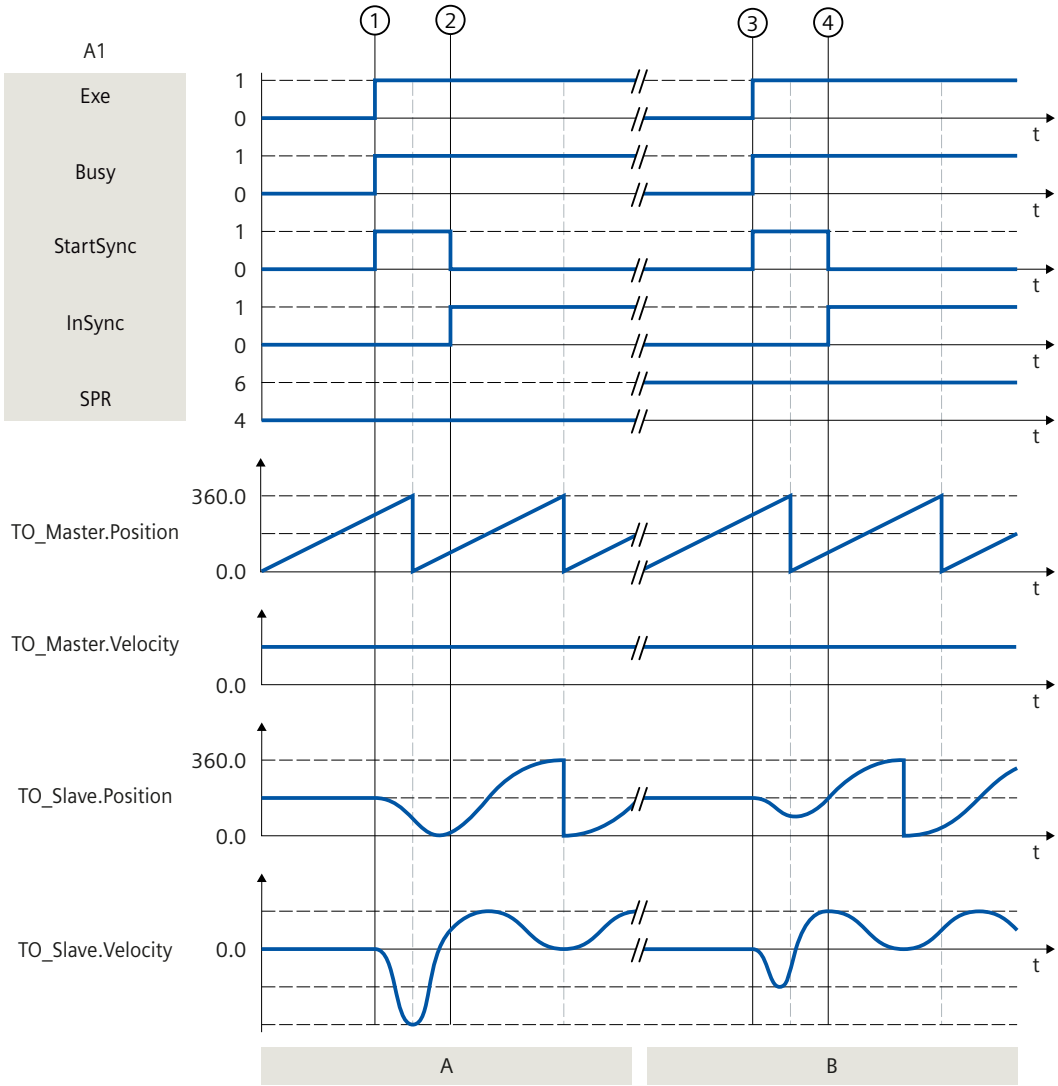

Section A

At time ①, an "MC_CamIn" job (A1) with "SyncProfileReference" = 4 is initiated via "Exe". The start of the synchronization is displayed with "StartSync". The following axis (TO_Slave) is synchronized subsequently as of the current leading value position 270° to the cam (Cam_1) by means of the specified leading value distance "MasterStartDistance" = 180°. The dynamic response required for synchronization is calculated by the system.

At time ②, "InSync" signals at the leading value position 90° that the following axis is synchronized and moves synchronously to the leading axis.

Section B

At time ③, the "MC_CamIn" job (A1) with "SyncProfileReference" = 6 is initiated via "Exe". The start of the synchronization is displayed with "StartSync". The following axis (TO_Slave) is synchronized in advance as of the current leading value position 270° to the cam (Cam_1) by means of the specified leading value distance "MasterStartDistance" = 180°. The dynamic response required for synchronization is calculated by the system.

At time ④, the following axis reaches the following value of the specified reference position "MasterSyncPosition" = 180° at the leading value position 90° in relation to the start of the

cam. The cam disc is automatically offset by -90° in the leading value area (<TO>.StatusSynchronizedMotion.MasterOffset). "InSync" signals that the following axis is synchronized and moving synchronously to the leading axis.

Function chart: Togging and direct synchronous setting at the end of the cam

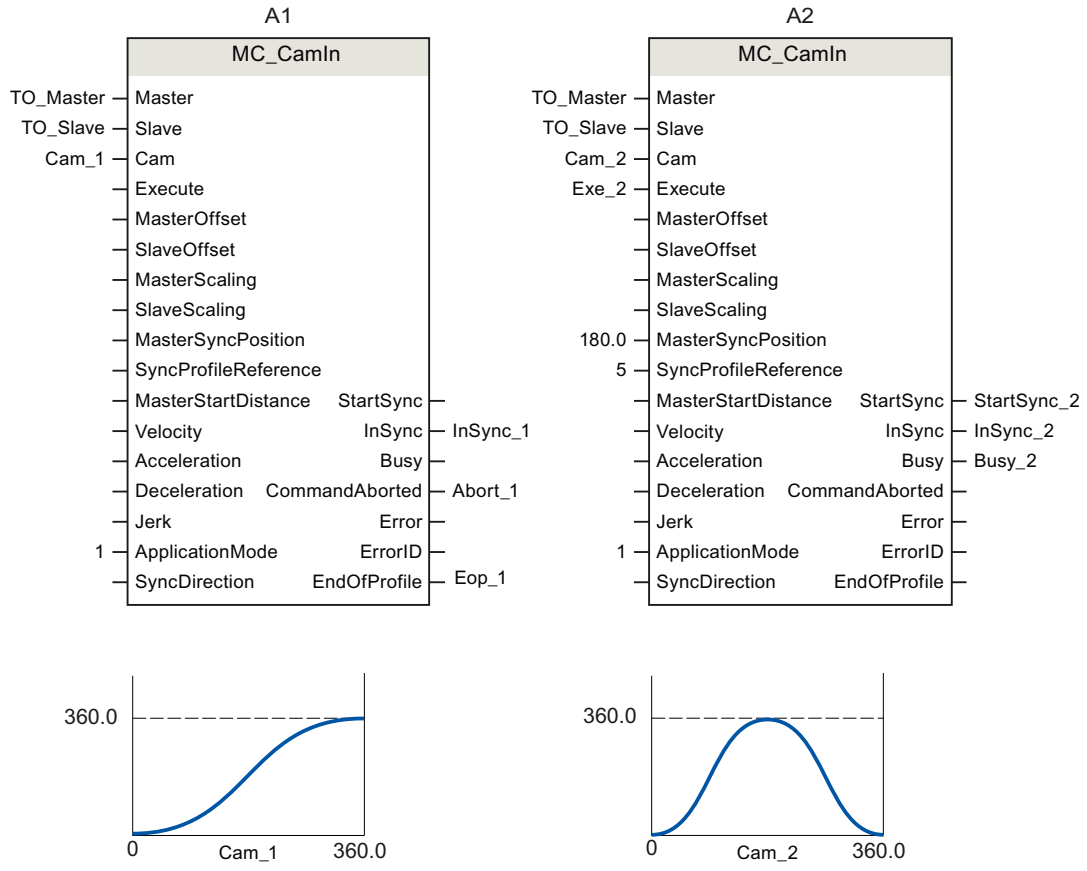

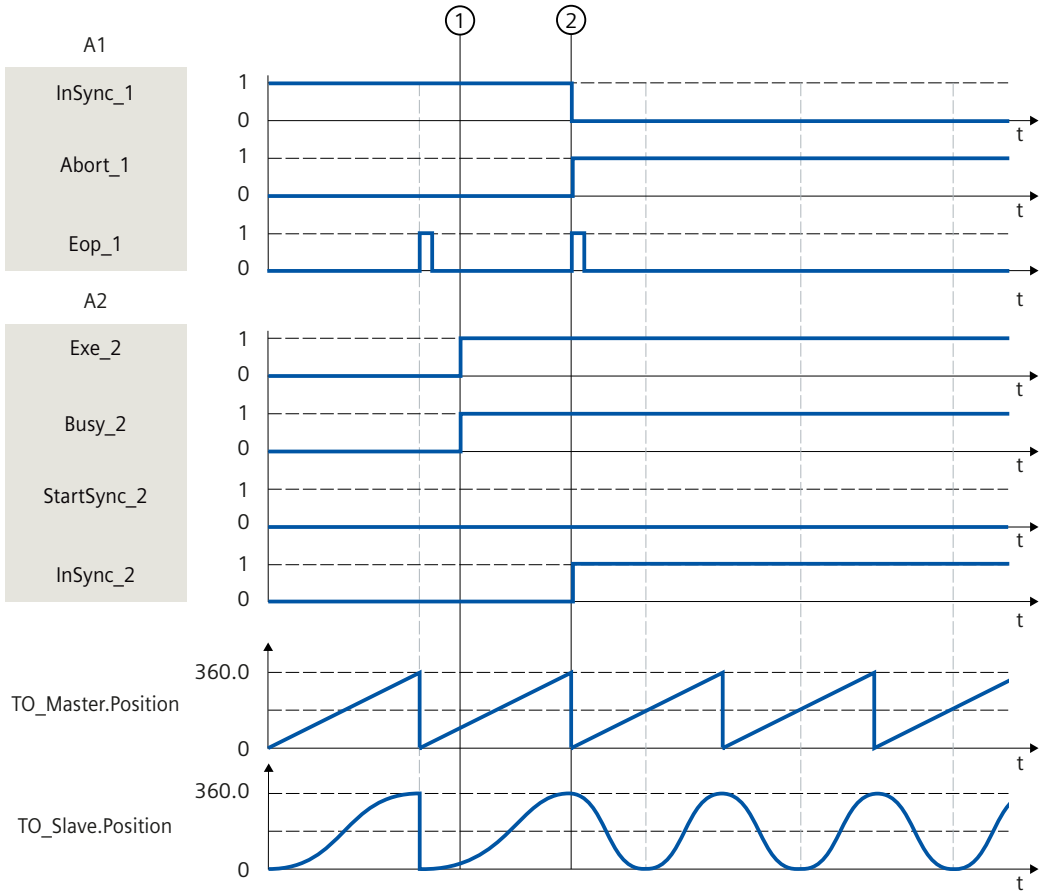

An "MC_CamIn" job (A1) is active.

At time ① another "MC_CamIn" job (A2) is initiated via "Exe_2". The status "Waiting" is displayed at the following axis until the end of the active cam "Cam_1" has been reached (<TO>.StatusSynchronizedMotion.WaitingFunctionState = 3).

At time ② the end of the cam is reached ("Eop_1"). The cam is switched over. Since no synchronization takes place, the "Synchronous" status is retained.

12.1.9 MC_SynchronizedMotionSimulation V7 (S7-1500T)

12.1.9.1 MC_SynchronizedMotionSimulation: Simulate synchronous operation V7 (S7-1500T)

Description

With the Motion Control instruction "MC_SynchronizedMotionSimulation", you can simulate an active synchronous operation on a following axis. This means that a synchronous operation remains active e.g. when the following axis is disabled. The following axis does not have to be synchronized again after being enabled again.

> **WARNING**
>
> **Machine damage**
>
> If the position of the following axis at the end of the simulation differs from the position at the start of the simulation, this leads to a setpoint jump which can result in damage to the machine.
>
> Therefore, make sure that the setpoints of the following axis correspond to the setpoints from the synchronous operation relationship when simulation is ended.

The Motion Control instruction offers you the following:

- Simulate synchronous operation (Page 164)

Applies to

- Synchronous axis

Requirement

- The technology object has been configured correctly.
- The following axis is a synchronous axis.
- Synchronous operation is active on the technology object in status "Synchronous" (<TO>.StatusWord.X22 = TRUE).

Override response

An "MC_SynchronizedMotionSimulation" job is not aborted by any other Motion Control job. The simulated synchronous operation remains active even when the following axis is disabled with an "MC_Power" or "MC_Stop job.

A restart of the technology object stops the simulation and aborts the synchronous operation.

A new "MC_SynchronizedMotionSimulation" job does not abort any other Motion Control jobs. With "MC_SynchronizedMotionSimulation.Enable" = TRUE, synchronous operation jobs are rejected.

Parameters

The following table shows the parameters of the Motion Control instruction "MC_SynchronizedMotionSimulation":

Parameter	Declaration	Data type	Default value	Description	
Slave	INPUT	TO_SynchronousAxis	-	Following axis technology object	
Enable	INPUT	BOOL	FALSE	TRUE	Simulation of synchronous operation is started.
				FALSE	Simulation of the synchronous operation is stopped.
InSimulation	OUTPUT	BOOL	FALSE	TRUE	The synchronous operation is in simulation.
Busy	OUTPUT	BOOL	FALSE	TRUE	The job is being processed.
Error	OUTPUT	BOOL	FALSE	TRUE	An error occurred while processing the job. The job is rejected. The cause of the error can be found in the "ErrorID" parameter.
ErrorID	OUTPUT	WORD	0	Error ID for parameter "ErrorID" You can find more detailed information in the "Error IDs" section of the "S7-1500/S7-1500T Motion Control alarms and error IDs" documentation (Page 13).	

12.1.10 MC_GearOut V7 (S7-1500T)

12.1.10.1 MC_GearOut: Desynchronize gearing V7 (S7-1500T)

Description

With the Motion Control instruction "MC_GearOut" end gearing (Page 41) operation between a leading axis and a following axis. With an active gearing, the following axis is desynchronized and comes to a standstill at the specified stop position. A pending gearing is canceled.

The Motion Control instruction offers you the following:

- Defining direction of desynchronization (Page 69)
- Define the stop position of the following axis and the type of desynchronization:
  - Desynchronizing following axis using dynamic parameters (Page 66)
  - Desynchronizing following axis using leading value distance (Page 68)
- Only cancel a pending gearing (Page 71)

Applies to

- Synchronous axis

Requirement

- The following axis is enabled.
- Gearing with "MC_GearIn" or "MC_GearInPos" is active or pending on the following axis.
- No "MC_Stop" job is active on the following axis.

Override response

The override response for "MC_GearOut" jobs is described in section "Override response V7: Synchronous operation jobs (Page 283)".

An "MC_GearOut" job with "SyncProfileReference" = 5 only aborts a pending "MC_GearInPos" or a pending "MC_GearOut" job.

Parameters

The following table shows the parameters of the Motion Control instruction "MC_GearOut":

Parameter	Declaration	Data type	Default value	Description	
Slave	INPUT	TO_SynchronousAxis	-	Technology object	
Execute	INPUT	BOOL	FALSE	TRUE	Start job with a positive edge
SlavePosition	INPUT	LREAL	0.0	Stop position of following axis	
SyncProfileReference	INPUT	DINT	1	Type of desynchronization	
				0	Desynchronize using dynamic parameters (Page 66)
				1	Desynchronize using leading value distance (Page 68)
				2 ... 4	Reserved
				5	Only cancel a pending gearing (Page 71)
MasterStopDistance	INPUT	LREAL	0.0	When "SyncProfileReference" = 1: Leading value distance (Page 68)	
Deceleration	INPUT	LREAL	-1.0	When "SyncProfileReference" = 0: Deceleration (Page 66)	
				> 0.0	The specified value is used.
				= 0.0	Not permitted
				< 0.0	The deceleration configured in "Technology object > Configuration > Extended parameters > Dynamic default values" is used. (<TO>.DynamicDefaults.Deceleration)
Jerk	INPUT	LREAL	-1.0	When "SyncProfileReference" = 0: Jerk (Page 66)	
				> 0.0	The specified value is used.
				= 0.0	No jerk limitation

Parameter	Declaration	Data type	Default value	Description	
Jerk	INPUT	LREAL	-1.0	< 0.0	The jerk configured in "Technology object > Configuration > Extended parameters > Dynamic default values" is used. (<TO>.DynamicDefaults.Jerk)
SyncOutDirection	INPUT	DINT	3	Desynchronization direction (Page 69)	
				1	Positive direction The following axis may only travel in positive direction during desynchronization.
				2	Negative direction The following axis may only travel in negative direction during desynchronization.
				3	Current direction The following axis is desynchronized in the direction in which the following axis is currently traveling.
StartSyncOut	OUTPUT	BOOL	FALSE	TRUE	The following axis is desynchronized.
Done	OUTPUT	BOOL	FALSE	TRUE	Job is completed.
Busy	OUTPUT	BOOL	FALSE	TRUE	The job is being processed.
CommandAborted	OUTPUT	BOOL	FALSE	TRUE	The job was aborted by another job during execution.
Error	OUTPUT	BOOL	FALSE	TRUE	An error occurred while processing the job. The job is rejected. The cause of the error can be found in the "ErrorID" parameter.
ErrorID	OUTPUT	WORD	16#0000	Error ID for parameter "ErrorID" You can find more detailed information in the "Error IDs" section of the "S7-1500/S7-1500T Motion Control alarms and error IDs" documentation (Page 13).	

12.1.10.2 MC_GearOut: Function chart V7 (S7-1500T)

Function chart: Desynchronization using dynamic parameters/leading value distance

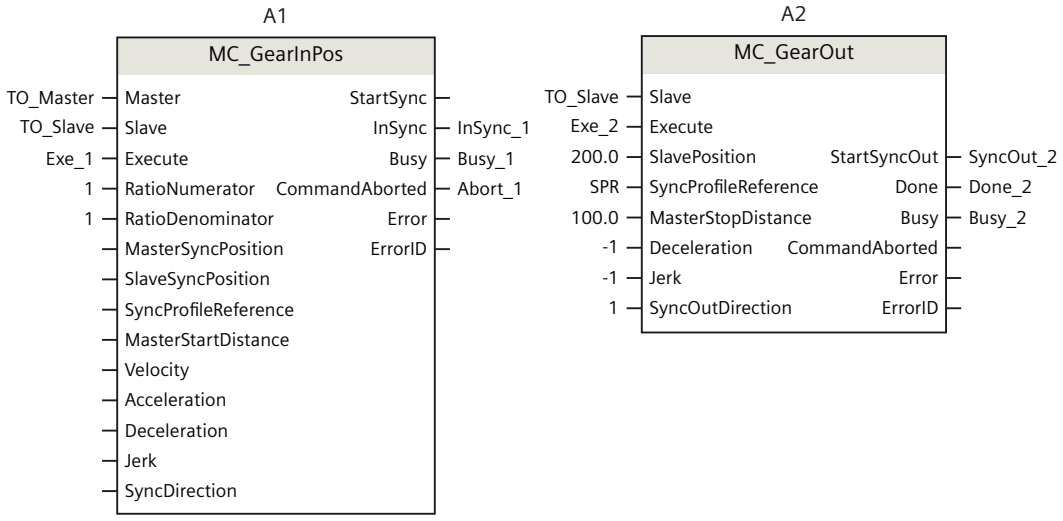

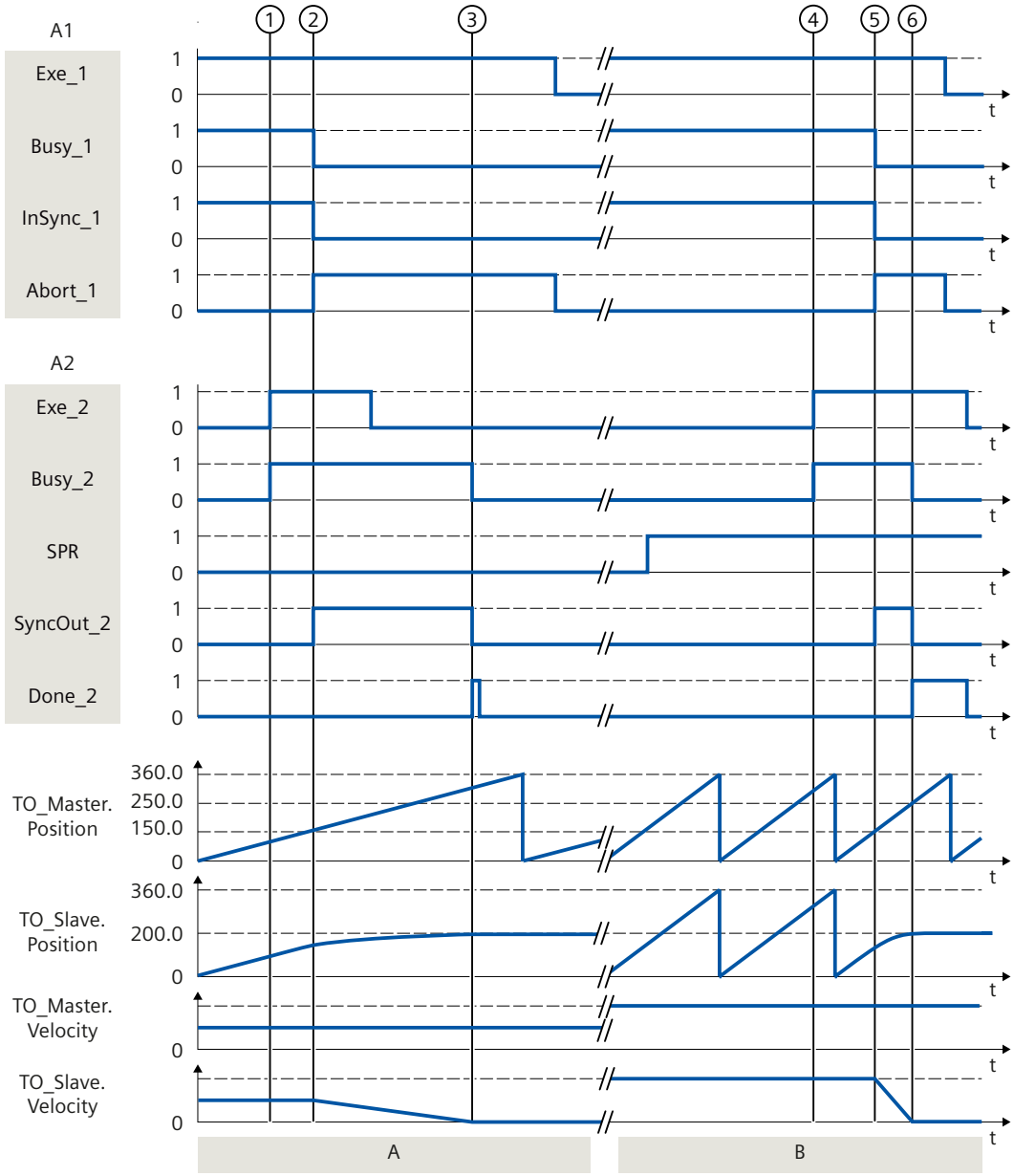

Section A

With an "MC_GearInPos" job (A1) the following axis (TO_Slave) travels synchronously to the leading axis (TO_Master). "Synchronous" status is displayed via "InSync_1".

At time ① an "MC_GearOut" job (A2) is initiated via "Exe_2". The start of the desynchronization is displayed with "SyncOut_2" ②. The following axis is desynchronized using the specified dynamic parameters. The distance required for desynchronization is calculated by the system. When the specified stop position "SlavePosition" is reached, "Done_2" signals that the following axis is desynchronized and at standstill ③.

Section B

With an "MC_GearInPos" job (A1) the following axis (TO_Slave) travels synchronously to the leading axis (TO_Master). "Synchronous" status is displayed via "InSync_1".

At time ④ an "MC_GearOut" job (A2) is initiated via "Exe_2". The start of the desynchronization is displayed with "SyncOut_2" ⑤. The following axis is desynchronized using the specified leading value distance "MasterStopDistance". The dynamics required for desynchronization is calculated by the system. When the specified stop position "SlavePosition" is reached, "Done_2" signals that the following axis is desynchronized and at standstill ⑥.

12.1.11 MC_CamOut V7 (S7-1500T)

12.1.11.1 MC_CamOut: Desynchronize camming V7 (S7-1500T)

Description

With the Motion Control instruction "MC_CamOut" end a Camming (Page 82) operation between a leading axis and a following axis. With an active camming, the following axis is desynchronized and comes to a standstill at the specified stop position. A pending camming is canceled.
The Motion Control instruction offers you the following:

- Defining direction of desynchronization (Page 160)
- Define the stop position of the following axis and the type of desynchronization:
  - Desynchronizing following axis using dynamic parameters (Page 156)
  - Desynchronizing following axis using leading value distance (Page 158)
- Only cancel a pending camming (Page 161)

Applies to

- Synchronous axis

Requirement

- The following axis is enabled.
- A camming with "MC_CamIn" is active or pending on the following axis.
- No "MC_Stop" job is active on the following axis.

Override response

The override response for "MC_CamOut" jobs is described in section "Override response V7: Synchronous operation jobs (Page 283)".
An "MC_CamOut" job with "SyncProfileReference" = 5 only aborts a pending "MC_CamIn" or a pending "MC_CamOut" job.

Parameters

The following table shows the parameters of the Motion Control instruction "MC_CamOut":

Parameter	Declaration	Data type	Default value	Description	
Slave	INPUT	TO_SynchronousAxis	-	Technology object	
Execute	INPUT	BOOL	FALSE	TRUE	Start job with a positive edge
SlavePosition	INPUT	LREAL	0.0	Stop position of following axis	
SyncProfileReference	INPUT	DINT	1	Type of desynchronization	
				0	Desynchronize using dynamic behavior (Page 156)
				1	Desynchronize using leading value distance (Page 158)
				2 ... 4	Reserved
				5	Only cancel a pending camming (Page 161)
MasterStopDistance	INPUT	LREAL	0.0	When "SyncProfileReference" = 1: Leading value distance (Page 158)	
Deceleration	INPUT	LREAL	-1.0	When "SyncProfileReference" = 0: Deceleration (Page 156)	
				> 0.0	The specified value is used.
				= 0.0	Not permitted
				< 0.0	The deceleration configured in "Technology object > Configuration > Extended parameters > Dynamic default values" is used. (<TO>.DynamicDefaults.Deceleration)
Jerk	INPUT	LREAL	-1.0	When "SyncProfileReference" = 0: Jerk (Page 156)	
				> 0.0	The specified value is used.
				= 0.0	No jerk limitation
				< 0.0	The jerk configured in "Technology object > Configuration > Extended parameters > Dynamic default values" is used. (<TO>.DynamicDefaults.Jerk)
SyncOutDirection	INPUT	DINT	3	Desynchronization direction (Page 160)	
				1	Positive direction The following axis may only travel in positive direction during desynchronization.
				2	Negative direction The following axis may only travel in negative direction during desynchronization.
				3	Current direction The following axis is desynchronized in the direction in which the following axis is currently traveling.
StartSyncOut	OUTPUT	BOOL	FALSE	TRUE	The following axis is desynchronized.

Parameter	Declaration	Data type	Default value	Description	
Done	OUTPUT	BOOL	FALSE	TRUE	Job is completed.
Busy	OUTPUT	BOOL	FALSE	TRUE	The job is being processed.
CommandAborted	OUTPUT	BOOL	FALSE	TRUE	The job was aborted by another job during execution.
Error	OUTPUT	BOOL	FALSE	TRUE	An error occurred while processing the job. The job is rejected. The cause of the error can be found in the "ErrorID" parameter.
ErrorID	OUTPUT	WORD	16#0000	Error ID for parameter "ErrorID" You can find more detailed information in the "Error IDs" section of the "S7-1500/S7-1500T Motion Control alarms and error IDs" documentation (Page 13).	

12.1.11.2 MC_CamOut: Function chart V7 (S7-1500T)

Function chart: Desynchronization using leading value distance

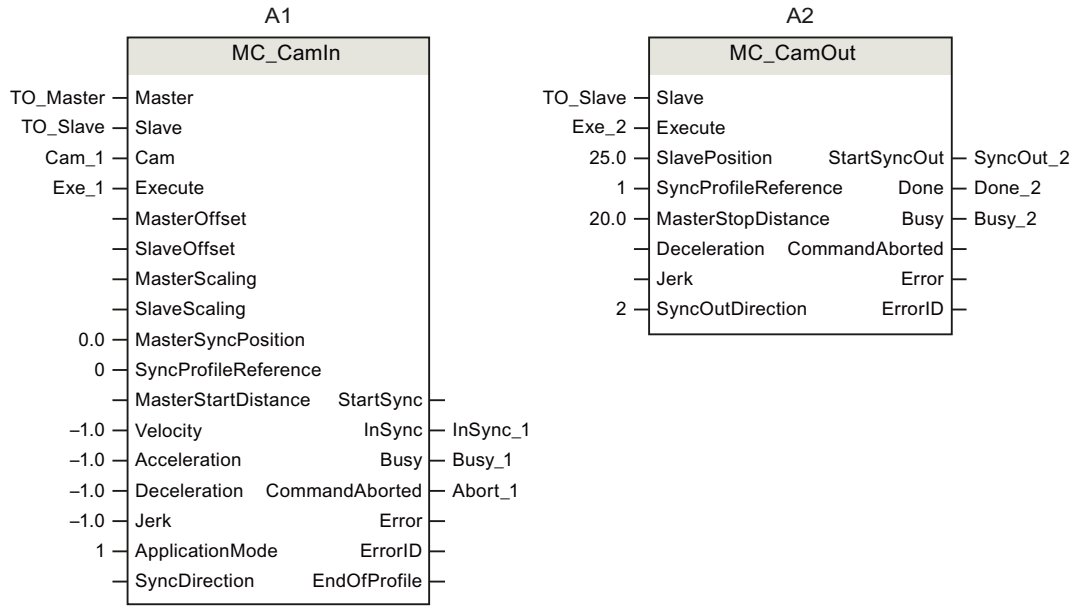

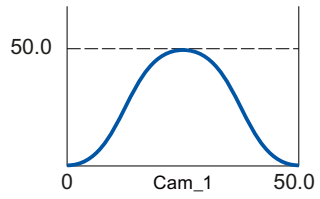

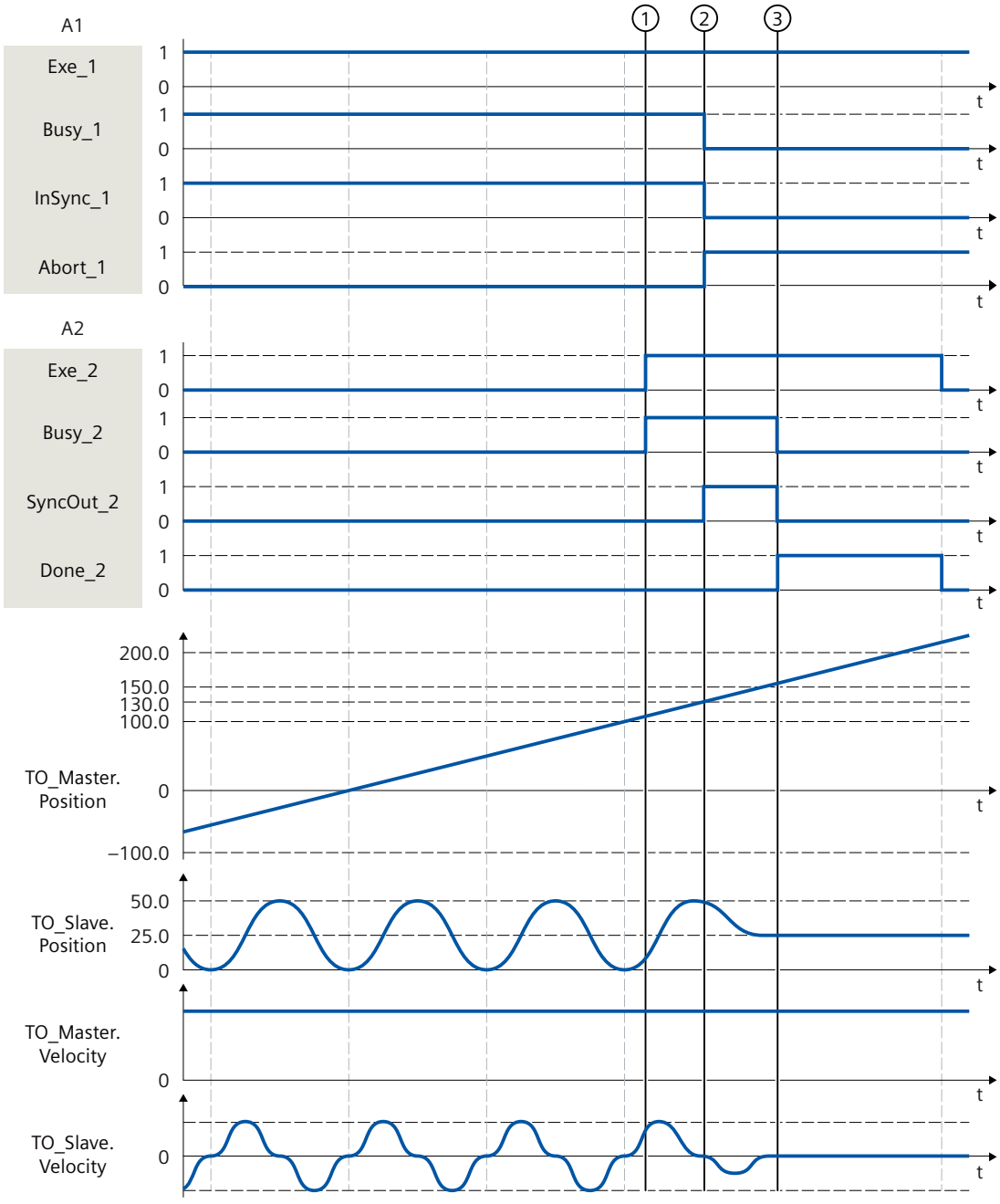

With am "MC_CamIn" job (A1) the following axis (TO_Slave) moves over a continuous cyclic cam (Cam_1) synchronous to the leading axis (TO_Master). "Synchronous" status is displayed via "InSync_1".

At time ① an "MC_CamOut" job (A2) is initiated via "Exe_2". The following axis should only be desynchronized in negative direction ("SyncOutDirection" = 2). The start of the desynchronization is displayed with "SyncOut_2" ②. The following axis is desynchronized using the specified leading value distance "MasterStopDistance". The dynamics required for desynchronization is calculated by the system. When the specified stop position "SlavePosition" or the configured position window is reached, "Done_2" signals following setpoint interpolation that the following axis is desynchronized and at standstill ③.

12.1.12 MC_LeadingValueAdditive V7 (S7-1500T)

12.1.12.1 MC_LeadingValueAdditive: Specify additive leading value V7 (S7-1500T)

Description

With the Motion Control instruction "MC_LeadingValueAdditive", you specify an additive leading value cyclically in addition to the active leading value of a following axis. The additive leading value consists of position, velocity and acceleration. Changes to the specified values are effective immediately without consideration of the dynamic limits.

The Motion Control instruction offers you the following:

- Specify additive leading value (Page 165)

Applies to

- Synchronous axis

Requirement

- The technology object has been configured correctly.
- The technology object is enabled or is in simulation with an "MC_SynchronizedMotionSimulation" job.

Override response

The override response for "MC_LeadingValueAdditive" jobs is described in section "Override response V7: Synchronous operation jobs (Page 283)".

If a synchronous operation is overridden by another synchronous operation, the additive leading value remains valid.

If a synchronous operation is desynchronized, the additive leading value remains valid. Desynchronization refers to the effective leading value.

An "MC_LeadingValueAdditive" job is aborted by an "MC_Reset" job with "Restart" = TRUE.

Parameters

The following table shows the parameters of the Motion Control instruction "MC_LeadingValueAdditive":

Parameter	Declaration	Data type	Default value	Description	
Axis	INPUT	TO_SynchronousAxis	-	Technology object on which the additive values act.	
Enable	INPUT	BOOL	FALSE	TRUE	The leading value is adapted.
				FALSE	The leading value is not adapted.

Parameter	Declaration	Data type	Default value	Description	
Position	INPUT	LREAL	0.0	Additive position value Recommendation: To avoid setpoint jumps, only change the additive position value during an active job in small steps.	
Velocity	INPUT	LREAL	0.0	Additive velocity value Observe the dynamic limits.	
Acceleration	INPUT	LREAL	0.0	Additive acceleration value Observe the dynamic limits.	
Busy	OUTPUT	BOOL	FALSE	TRUE	The additive values are valid.
Error	OUTPUT	BOOL	FALSE	TRUE	An error occurred while processing the job. The job is rejected. The cause of the error can be found in the "ErrorID" parameter.
ErrorID	OUTPUT	WORD	16#0000	Error ID for parameter "ErrorID" You can find more detailed information in the "Error IDs" section of the "S7-1500/S7-1500T Motion Control alarms and error IDs" documentation (Page 13).	

12.1.12.2 MC_LeadingValueAdditive: Function chart V7 (S7-1500T)

Function chart: Specify additive leading value

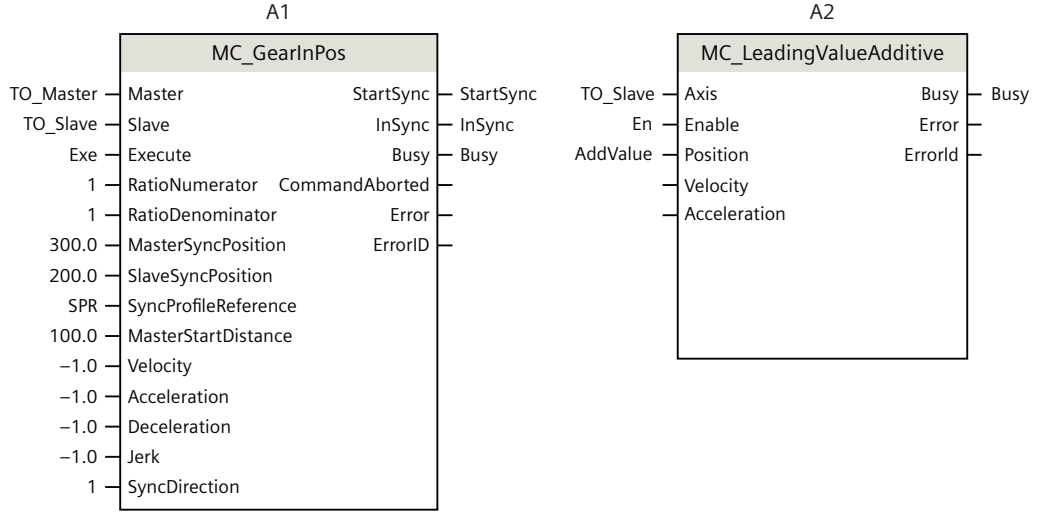

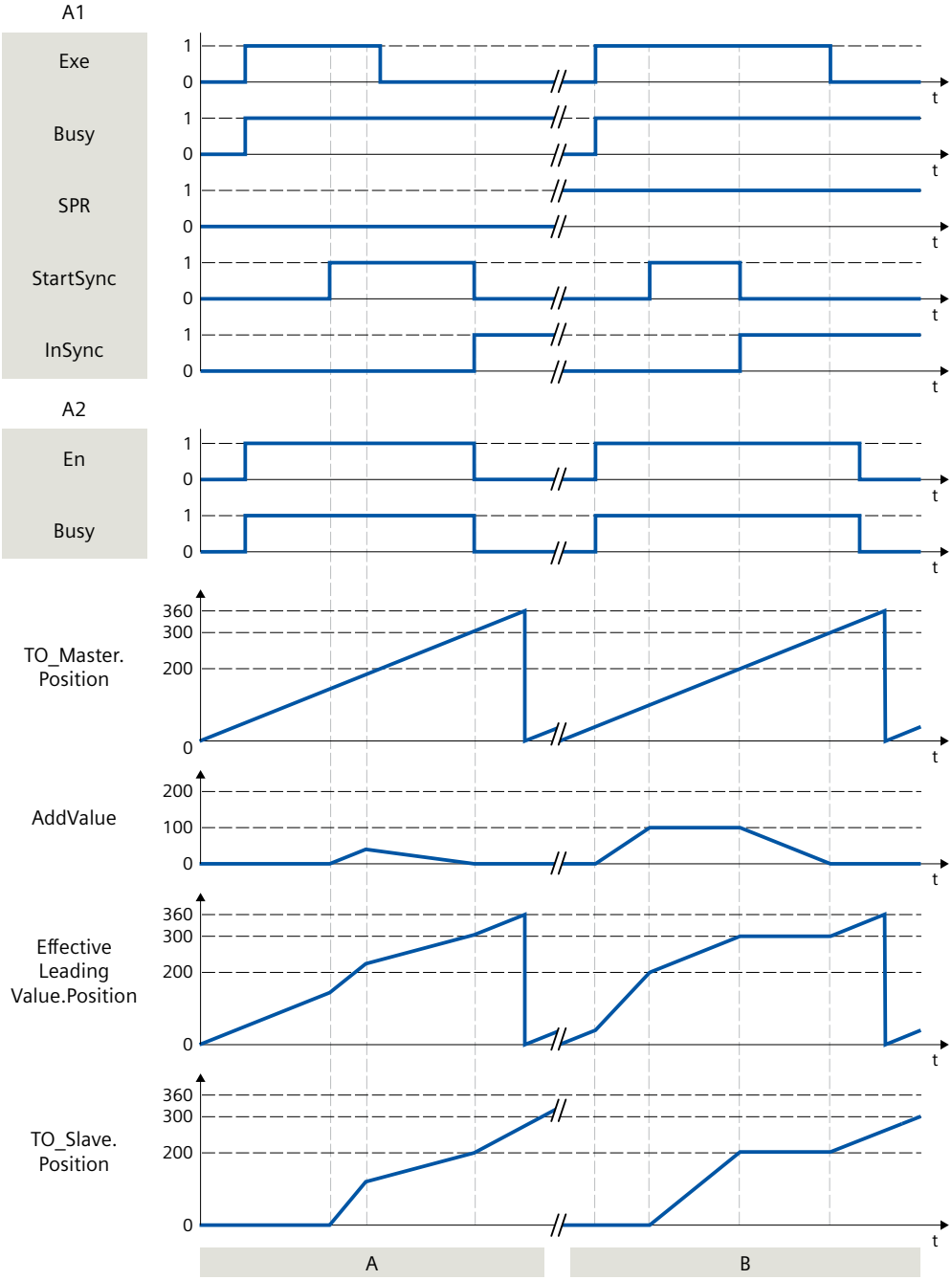

Section A

Via "Exe" = TRUE, a "MC_GearInPos" job (A1) is started with synchronization in advance via dynamic parameters. At the same time, a "MC_LeadingValueAdditive" job (A2) is started via "En" = TRUE.

The leading axis (TO_Master) calculates the effective leading value (EffectiveLeadingValue.Position) and the time for starting the synchronization. When the A1 job displays "StartSync" = TRUE, the following axis (TO_Slave) synchronizes with the given specified dynamic parameters.

The additive leading value is continuously increased in the user program, added to the effective leading value and has the effect of increased dynamic response of the following

axis. When the additive leading value is reduced, the dynamic response of the following axis is also reduced. If the additive leading value is 0.0, the effective leading value follows the leading value of the leading axis.

The following axis synchronizes to the original synchronous position and the job A1 shows "InSync" = TRUE. The job A2 is terminated with "En" = FALSE.

Section B

Via "En" = TRUE, a "MC_LeadingValueAdditive" job (A2) is started before a synchronous operation job. The user program continuously increases the additive leading value to the value "100.0". With "Exe" = TRUE a "MC_GearInPos" job (A1) is started with synchronization in advance via leading value distance.

The leading axis calculates the effective leading value (EffectiveLeadingValue.Position). When the effective leading value reaches "200.0", synchronization starts and the A1 job shows "StartSync" = TRUE. At this point the leading axis has reached the value "100.0". The following axis is synchronized. The synchronous position is moved by the additive leading value.

As soon as "InSync" = TRUE, the additive leading value is continuously reduced. While the leading value (TO_Master.Position) increases from 200.0 to 300.0, the additive leading value (AddValue) decreases from 100.0 to 0.0. The effective leading value remains at 200.0 and the following axis does not move.

If the additive leading value is 0.0, the effective leading value follows the leading value of the leading axis. The shift is canceled and the motion of the following axis is continued. The job A2 is terminated with "En" = FALSE.

12.2 Cam (S7-1500T)

12.2.1 MC_InterpolateCam V7 (S7-1500T)

12.2.1.1 MC_InterpolateCam: Interpolate cam disc V7 (S7-1500T)

Description

With the Motion Control instruction "MC_InterpolateCam", you interpolate a cam. The interpolation closes the gaps between the defined interpolation points and segments of the cam.

The Motion Control instruction offers you the following:

- Interpolating a cam (Page 124)

The cam is interpolated based on the configured settings of the technology object:

- Configuring transitions (Page 116)
- System interpolation (Page 119)
- Interpolation according to VDI Guideline 2143 (Page 122)

Applies to

- Cam

Requirement

- The technology object has been configured correctly.
- The cam is not currently being used, e.g. for camming.

Override response

- An "MC_InterpolateCam" job is not aborted by any other Motion Control job.
- A new "MC_InterpolateCam" job does not abort any active Motion Control jobs.

Parameters

The following table shows the parameters of the Motion Control instruction "MC_InterpolateCam":

Parameters	Declaration	Data type	Default value	Description	
Cam	INPUT	TO_Cam TO_Cam_10k	-	Cam technology object	
Execute	INPUT	BOOL	FALSE	TRUE	Start job with a positive edge
Done	OUTPUT	BOOL	FALSE	TRUE	The cam is interpolated.
Busy	OUTPUT	BOOL	FALSE	TRUE	The job is being processed.
Error	OUTPUT	BOOL	FALSE	TRUE	An error occurred while processing the job. The job is rejected. The cause of the error can be found in the "ErrorID" parameter.
ErrorID	OUTPUT	WORD	16#0000	Error ID for parameter "ErrorID" You can find more detailed information in the "Error IDs" section of the "S7-1500/S7-1500T Motion Control alarms and error IDs" documentation (Page 13).	

Interpolating a cam

To interpolate a cam with the "MC_InterpolateCam" Motion Control instruction, follow these steps:

1. Check the requirements indicated above.
2. Specify the cam to be interpolated in the "Cam" parameter.
3. Start the "MC_InterpolateCam" job with a positive edge at parameter "Execute".
   The cam is interpolated. When the "Done" parameter shows the value "TRUE", the interpolation is finished.

12.2.2 MC_GetCamLeadingValue V7 (S7-1500T)

12.2.2.1 MC_GetCamLeadingValue: Read out leading value of a cam V7 (S7-1500T)

Description

With the Motion Control instruction "MC_GetCamLeadingValue", you read the leading value that is defined for a following value from a cam.
The Motion Control instruction offers you the following:

- Reading a leading value (Page 146)

Applies to

- Cam

Requirement

- The technology object has been configured correctly.
- The cam is interpolated.

Override response

- An "MC_GetCamLeadingValue" job is not aborted by any other Motion Control job.
- A new "MC_GetCamLeadingValue" job does not abort any active Motion Control jobs.

Parameters

The following table shows the parameters of the Motion Control instruction "MC_GetCamLeadingValue":

Parameter	Declaration	Data type	Default value	Description	
Cam	INPUT	TO_Cam TO_Cam_10k	-	Cam technology object	
Execute	INPUT	BOOL	FALSE	TRUE	Start job with a positive edge
FollowingValue	INPUT	LREAL	0.0	Following value for which the leading value is read	
ApproachLeadingValue	INPUT	LREAL	0.0	Approximation value for the searched for leading value If the following value is used multiple times in the cam, it can be used to limit the searched leading value.	
Done	OUTPUT	BOOL	FALSE	TRUE	The leading value was read.
Busy	OUTPUT	BOOL	FALSE	TRUE	The job is being processed.

Parameter	Declaration	Data type	Default value	Description	
Error	OUTPUT	BOOL	FALSE	TRUE	An error occurred while processing the job. The job is rejected. The cause of the error can be found in the "ErrorID" parameter.
ErrorID	OUTPUT	WORD	16#0000	Error ID for parameter "ErrorID" You can find more detailed information in the "Error IDs" section of the "S7-1500/S7-1500T Motion Control alarms and error IDs" documentation (Page 13).	
Value	OUTPUT	LREAL	-	Read leading value (position) (valid when "Done" = TRUE)	

Reading a leading value

To read a leading value from a cam with the "MC_GetCamLeadingValue" Motion Control instruction, follow these steps:

1. Check the requirements indicated above.
2. Specify the cam, the following value, and the approximation value for the searched-for leading value in the corresponding parameters.
3. Start the "MC_GetCamLeadingValue" job with a positive edge at parameter "Execute".
   When the "Done" parameter shows the value "TRUE", the leading value has been determined. The calculation of the leading value can take several cycles. The leading value is output in the "Value" parameter.

12.2.3 MC_GetCamFollowingValue V7 (S7-1500T)

12.2.3.1 MC_GetCamFollowingValue: Read out following value of a cam disc V7 (S7-1500T)

Description

With the Motion Control instruction "MC_GetCamFollowingValue", you read the following value and the first and second derivative of the following value for a leading value from a cam.

The Motion Control instruction offers you the following:

- Reading a following value (Page 146)

Applies to

- Cam

Requirement

- The technology object has been configured correctly.
- The cam is interpolated.

Override response

- An "MC_GetCamFollowingValue" job is not aborted by any other Motion Control job.
- A new "MC_GetCamFollowingValue" job does not abort any active Motion Control jobs.

Parameters

The following table shows the parameters of the Motion Control instruction "MC_GetCamFollowingValue":

Parameters	Declaration	Data type	Default value	Description	
Cam	INPUT	TO_Cam TO_Cam_10k	-	Cam technology object	
Execute	INPUT	BOOL	FALSE	TRUE	Start job with a positive edge
LeadingValue	INPUT	LREAL	0.0	Leading value for which the following value is read	
Done	OUTPUT	BOOL	FALSE	TRUE	The following value was read.
Busy	OUTPUT	BOOL	FALSE	TRUE	The job is being processed.
Error	OUTPUT	BOOL	FALSE	TRUE	An error occurred while processing the job. The job is rejected. The cause of the error can be found in the "ErrorID" parameter.
ErrorID	OUTPUT	WORD	16#0000	Error ID for parameter "ErrorID" You can find more detailed information in the "Error IDs" section of the "S7-1500/S7-1500T Motion Control alarms and error IDs" documentation (Page 13).	
Value	OUTPUT	LREAL	-	Read following value (position) (valid when "Done" = TRUE)	
FirstDerivative	OUTPUT	LREAL	-	First derivative of read following value (valid when "Done" = TRUE)	
SecondDerivative	OUTPUT	LREAL	-	Second derivative of read following value (valid when "Done" = TRUE)	

Reading a following value

To read a following value from a cam with the "MC_GetCamFollowingValue" Motion Control instruction, follow these steps:

1. Check the requirements indicated above.
2. Specify the cam and the leading value in the corresponding parameters.
3. Start the "MC_GetCamFollowingValue" job with a positive edge at parameter "Execute".
   When the "Done" parameter shows the value "TRUE", the following value has been read.
   The following value and the derivatives are output in the "Value", "FirstDerivative" and "SecondDerivative" parameters.

12.2.4 MC_CopyCamData V7 (S7-1500T)

12.2.4.1 MC_CopyCamData: Copy calculated cam elements V7 (S7-1500T)

Description

You use the instruction "MC_CopyCamData" to copy calculated cam elements from one array each for points and segments to the data block technology object of the cam. You use the copy mode to specify whether the existing defined cam elements remain valid or are set as invalid.

The Motion Control instruction offers you the following:

- Changing the synchronous operation function of the cam online (Page 113)
- Copy calculated cam elements (Page 115)

Applies to

- Cam

Requirement

- The technology object has been configured correctly.
- The data to be copied is available in a data block with one array each for points and segments:
  - For points: ARRAY[*] OF TO_Cam_Struct_PointData
  - For segments: ARRAY[*] OF TO_Cam_Struct_SegmentData
- The "Optimized block access" option is activated in the properties of the data block under "General > Attributes".

Override response

- An "MC_CopyCamData" job is not aborted by any other motion control job.
- A new "MC_CopyCamData" job does not abort any active motion control job.
  Cam elements can also be copied during active camming.

Parameters

The following table shows the parameters of motion control instruction "MC_CopyCamData":

Parameter	Declaration	Data type	Default value	Description	
Cam	INPUT	TO_Cam TO_Cam_10k	-	Cam technology object	
Execute	INPUT	BOOL	FALSE	TRUE	Start job with a positive edge
Mode	INPUT	DINT	0	Copy mode	
				0	All existing defined cam elements are set as invalid before the copying procedure. ("ValidPoint" = FALSE, "ValidSegment" = FALSE)
				1	All existing defined cam elements remain valid. ("ValidPoint" = TRUE, "ValidSegment" = TRUE)
StartPointCam	INPUT	DINT	1	Index of the start point of the points to be copied in the cam	
				Permitted values for "TO_Cam": 1 ≤ "StartPointCam" ≤ 1 000	
				Permitted values for "TO_Cam_10k": 1 ≤ "StartPointCam" ≤ 10 000	
StartSegmentCam	INPUT	DINT	1	Index of the start segment of the segments to be copied in the cam	
				Permitted values: 1 ≤ "StartSegmentCam" ≤ 50	
StartPointArray	INPUT	DINT	1	Index of the start point of the points to be copied from "ArrayOfPoints"	
				Permitted values: Low limit of "ArrayOfPoints" ≤ "StartPointArray" ≤ high limit of "ArrayOfPoints"	
StartSegmentArray	INPUT	DINT	1	Index of the start segment of the segments to be copied from "ArrayOfSegments"	
				Permitted values: Low limit of "ArrayOfSegments" ≤ "StartSegmentArray" ≤ high limit of "ArrayOfSegments"	
NumberOfPoints	INPUT	DINT	0	Number of points to be copied	
				Permitted values for "TO_Cam": "NumberOfPoints" ≤ number of points from "ArrayOfPoints" and 0 ≤ "NumberOfPoints" ≤ 1 001 - "StartPointCam"	
				Permitted values for "TO_Cam_10k": "NumberOfPoints" ≤ number of points from "ArrayOfPoints" and 0 ≤ "NumberOfPoints" ≤ 10 001 - "StartPointCam"	

[1] The size of the array depends on your application.

Parameter	Declaration	Data type	Default value	Description	
NumberOfSegments	INPUT	DINT	0	Number of segments to be copied	
				Permitted values: "NumberOfSegments" ≤ number of segments in the "ArrayOfSegments" and 0 ≤ "NumberOfSegments" ≤ 51 - "StartSegment-Cam"	
ArrayOfPoints	INOUT	ARRAY[*] OF TO_Cam-_Struct_PointData[1]	-	Array that contains the points to be copied	
ArrayOfSegments	INOUT	ARRAY[*] OF TO_Cam-_Struct_SegmentData[1]	-	Array that contains the segments to be copied	
Done	OUTPUT	BOOL	FALSE	TRUE	Job is completed.
Busy	OUTPUT	BOOL	FALSE	TRUE	The job is being processed.
Error	OUTPUT	BOOL	FALSE	TRUE	An error occurred while processing the job. The job is rejected. The cause of the error can be found in the "ErrorID" parameter.
ErrorID	OUTPUT	WORD	16#0000	Error ID for parameter "ErrorID" You can find more detailed information in the "Error IDs" section of the "S7-1500/S7-1500T Motion Control alarms and error IDs (Page 13)" documentation.	

[1] The size of the array depends on your application.

12.3 Override response of Motion Control jobs V7 (S7-1500, S7-1500T)

12.3.1 Override response V7: Homing and motion jobs (S7-1500, S7-1500T)

The following table shows how a new motion control job affects active homing and motion jobs:

⇒ **Active job** ⇓ **New job**	**MC_Home "Mode" = 2, 8, 10**	**MC_Home "Mode" = 3, 5**	**MC_Halt MC_MoveAbsolute MC_MoveRelative MC_MoveVelocity MC_MoveJog**	**MC_Stop**	**MC_MoveSuperimposed MC_MotionInSuperimposed MC_HaltSuperImposed**	**MC_MotionInVelocity MC_MotionInPosition**
MC_Home "Mode" = 3, 5	A	A	A	-	A	A
MC_Home "Mode" = 9	A	-	-	-	-	-
MC_Halt **MC_MoveAbsolute** **MC_MoveRelative** **MC_MoveVelocity** **MC_MoveJog** **MC_MotionInVelocity** **MC_MotionInPosition**	-	A	A	-	A	A
MC_MoveSuperimposed **MC_MotionInSuperimposed** **MC_HaltSuperImposed**	-	-	-	-	A	-
MC_Stop	A	A	A	B	A	A
MC_GearIn **MC_GearInVelocity**	-	A	A	-	A	-
MC_GearInPos **MC_CamIn** waiting[1)]	-	-	-	-	-	-
MC_GearInPos **MC_CamIn** active[2)]	-	A	A	-	A	-
MC_LeadingValueAdditive	-	-	-	-	-	-
MC_GearOut **MC_CamOut** waiting[3)]	-	-	-	-	-	-

⇒ Active job ⇓ New job	MC_Home "Mode" = 2, 8, 10	MC_Home "Mode" = 3, 5	MC_Halt MC_MoveAbsolute MC_MoveRelative MC_MoveVelocity MC_MoveJog	MC_Stop	MC_MoveSuperimposed MC_MotionInSuperimposed MC_HaltSuperImposed	MC_MotionInVelocity MC_MotionInPosition
MC_GearOut **MC_CamOut** active[4]	-	-	-	-	A	-

A The running job is aborted with "CommandAborted" = TRUE.

B An "MC_Stop" job is aborted by another "MC_Stop" job with a stop response that is the same or higher.

- No effect. Running job continues to be executed.

1) The status "Busy" = TRUE, "StartSync" = FALSE, "InSync" = FALSE corresponds to a waiting synchronous operation.

2) The status "Busy" = TRUE, "StartSync" or "InSync" = TRUE corresponds to an active synchronous operation.

3) The status "Busy" = TRUE, "StartSyncOut" = FALSE corresponds to a pending desynchronization job.

4) The status "Busy" = TRUE, "StartSyncOut" = TRUE corresponds to an active desynchronization job.

NOTE

Override response with active fixed stop

With an active force and torque limiting with "MC_TorqueLimiting", running jobs are aborted if the drive is held at the fixed stop with "InClamping" = TRUE.

12.3.2 Override response V7: Synchronous operation jobs (S7-1500, S7-1500T)

The following table shows how a new motion control job affects the motion of the axis on active synchronous operation jobs:

⇒ Active job ⇓ New job	MC_GearIn	MC_GearInVelocity	MC_GearInPos MC_CamIn waiting[1]	MC_GearInPos MC_CamIn active[2]	MC_PhasingAbsolute MC_PhasingRelative	MC_OffsetAbsolute MC_OffsetRelative	MC_LeadingValueAdditive	MC_GearOut MC_CamOut waiting[3]	MC_GearOut MC_CamOut active[4]
MC_Home "Mode" = 3, 5	A	A	-	-	-	-	-	-	-
MC_Halt	A	A	-	A	A	A	-	A	A
MC_MoveAbsolute MC_MoveRelative MC_MoveVelocity MC_MoveJog	A	A	-	A	A	A	-	A	A
MC_MotionInVelocity MC_MotionInPosition	A	A	A	A	A	A	-	A	A
MC_MoveSuperimposed MC_MotionInSuperimposed MC_HaltSuperImposed	-	-/N[5]	-	-	-	-	-	-	-
MC_Stop	A	A	A	A	A	A	-	A	A
MC_GearIn MC_GearInVelocity	A	A	A	A	A	A	-	A	A

A The running job is aborted with "CommandAborted" = TRUE.

N Not permitted. Running job continues to be executed. The new job is rejected.

- No effect. Running job continues to be executed.

1) A waiting synchronous operation job ("Busy" = TRUE, "StartSync" = FALSE, "InSync" = FALSE) does not abort any active jobs. Abort with an "MC_Power" job is possible.

2) The status "Busy" = TRUE, "StartSync" or "InSync" = TRUE corresponds to an active synchronous operation.

3) A pending desynchronization job ("Busy" = TRUE, "StartSyncOut" = FALSE) does not abort any active jobs. Abort with an "MC_Power" job is possible.

4) The status "Busy" = TRUE, "StartSyncOut" = TRUE corresponds to an active desynchronization job.

5) When the following axis is in position-controlled mode, execution of the running job is continued. When the following axis is not in position-controlled mode, the new job is rejected.

6) An "MC_GearOut" job only terminates an "MC_Gear[...]" job. Correspondingly, an "MC_CamOut" job only cancels a "MC_Cam[...]" job.

7) A job with "SyncProfileReference" = 5 aborts a pending synchronous operation. Canceling a pending synchronous operation has no influence on an active synchronous operation.

⇒ Active job ⇓ New job	MC_GearIn	MC_GearInVelocity	MC_GearInPos MC_CamIn waiting[1]	MC_GearInPos MC_CamIn active[2]	MC_PhasingAbsolute MC_PhasingRelative	MC_OffsetAbsolute MC_OffsetRelative	MC_LeadingValueAdditive	MC_GearOut MC_CamOut waiting[3]	MC_GearOut MC_CamOut active[4]
MC_GearInPos MC_CamIn waiting[1]	-	-	A	-	-	-	-	A	-
MC_GearInPos MC_CamIn active[2]	A	A[5]	A	A	A	A	-	A	A
MC_PhasingAbsolute MC_PhasingRelative	-	N	-	-	A	N	-	-	-
MC_OffsetAbsolute MC_OffsetRelative	-	N	-	-	N	A	-	-	-
MC_LeadingValueAdditive	-	-	-	-	-	-	A	-	-
MC_GearOut MC_CamOut waiting[3]	-	N	A[6] [7]	-	-	-	-	A[6]	-
MC_GearOut MC_CamOut active[4]	A[6]	N	A[6] [7]	A[6]	A	A	-	A[6]	-

A The running job is aborted with "CommandAborted" = TRUE.

N Not permitted. Running job continues to be executed. The new job is rejected.

- No effect. Running job continues to be executed.

1) A waiting synchronous operation job ("Busy" = TRUE, "StartSync" = FALSE, "InSync" = FALSE) does not abort any active jobs. Abort with an "MC_Power" job is possible.

2) The status "Busy" = TRUE, "StartSync" or "InSync" = TRUE corresponds to an active synchronous operation.

3) A pending desynchronization job ("Busy" = TRUE, "StartSyncOut" = FALSE) does not abort any active jobs. Abort with an "MC_Power" job is possible.

4) The status "Busy" = TRUE, "StartSyncOut" = TRUE corresponds to an active desynchronization job.

5) When the following axis is in position-controlled mode, execution of the running job is continued. When the following axis is not in position-controlled mode, the new job is rejected.

6) An "MC_GearOut" job only terminates an "MC_Gear[...]" job. Correspondingly, an "MC_CamOut" job only cancels a "MC_Cam[...]" job.

7) A job with "SyncProfileReference" = 5 aborts a pending synchronous operation. Canceling a pending synchronous operation has no influence on an active synchronous operation.

NOTE

Override response with active fixed stop

With an active force and torque limiting with "MC_TorqueLimiting", running jobs are aborted if the drive is held at the fixed stop with "InClamping" = TRUE.

12.3.3 Override response V7: Measuring input jobs (S7-1500, S7-1500T)

The following table shows which new Motion Control jobs will override active measuring input jobs:

⇒ **Active job** ⇓ **New job**	**MC_MeasuringInput**	**MC_MeasuringInputCyclic**
MC_Home "Mode" = 2, 3, 5, 8, 9, 10	A	A
MC_Home "Mode" = 0, 1, 6, 7, 11, 12	-	-
MC_MeasuringInput **MC_MeasuringInputCyclic** **MC_AbortMeasuringInput**	A	A

A The running job is aborted with "CommandAborted" = TRUE.

- No effect. Running job continues to be executed.

12.3.4 Override response V7: Kinematics motion commands (S7-1500T)

Single axis jobs are not overridden by kinematics jobs.

The following table shows how a new Motion Control job affects active kinematics motion jobs:

⇒ **Active job** ⇓ **New job**	**MC_MoveLinearAbsolute** **MC_MoveLinearRelative** **MC_MoveCircularAbsolute** **MC_MoveCircularRelative** **MC_MoveDirectAbsolute** **MC_MoveDirectRelative** **MC_TrackConveyorBelt** **MC_DefineWorkspaceZone** **MC_DefineKinematicsZone** **MC_SetWorkspaceZoneActive** **MC_SetWorkspaceZoneInactive** **MC_SetKinematicsZoneActive** **MC_SetKinematicsZoneInactive** **MC_SetOcsFrame**	**MC_GroupInterrupt**	**MC_GroupStop**
MC_Home **MC_MoveSuperimposed** **MC_GearOut** **MC_CamOut**	N	N	N
MC_Halt **MC_MoveAbsolute** **MC_MoveRelative** **MC_MoveVelocity** **MC_MoveJog** **MC_Stop** **MC_GearIn** **MC_GearInPos** **MC_GearInVelocity** **MC_CamIn** **MC_MotionInVelocity** **MC_MotionInPosition**	A	A	A
MC_GroupStop	A	A	N
MC_GroupInterrupt **MC_GroupContinue**	B	A	N
MC_MoveLinearAbsolute **MC_MoveLinearRelative** **MC_MoveCircularAbsolute** **MC_MoveCircularRelative** **MC_MoveDirectAbsolute** **MC_MoveDirectRelative** **MC_TrackConveyorBelt** **MC_DefineWorkspaceZone** **MC_DefineKinematicsZone** **MC_SetWorkspaceZoneActive** **MC_SetWorkspaceZoneInactive** **MC_SetKinematicsZoneActive** **MC_SetKinematicsZoneInactive**	-	-	N

A The running job is aborted with "CommandAborted" = TRUE.

B Running job is interrupted or resumed.

C Synchronization of the OCS with the conveyor belt is aborted with "MC_SetOcsFrame" = TRUE.

N Not permitted. Running job continues to be executed. The new job is rejected.

- No effect. Running job continues to be executed. A new kinematics job is added to the job sequence.

⇒ **Active job** ⇓ **New job**	**MC_MoveLinearAbsolute** **MC_MoveLinearRelative** **MC_MoveCircularAbsolute** **MC_MoveCircularRelative** **MC_MoveDirectAbsolute** **MC_MoveDirectRelative** **MC_TrackConveyorBelt** **MC_DefineWorkspaceZone** **MC_DefineKinematicsZone** **MC_SetWorkspaceZoneActive** **MC_SetWorkspaceZoneInactive** **MC_SetKinematicsZoneActive** **MC_SetKinematicsZoneInactive** **MC_SetOcsFrame**	**MC_GroupInterrupt**	**MC_GroupStop**
MC_SetOcsFrame	C, -	-	N

A The running job is aborted with "CommandAborted" = TRUE.

B Running job is interrupted or resumed.

C Synchronization of the OCS with the conveyor belt is aborted with "MC_SetOcsFrame" = TRUE.

N Not permitted. Running job continues to be executed. The new job is rejected.

- No effect. Running job continues to be executed. A new kinematics job is added to the job sequence.

Tags of the technology object data blocks (S7-1500, S7-1500T) 13

13.1 Tags of the synchronous axis technology object (S7-1500, S7-1500T)

13.1.1 Legend (S7-1500, S7-1500T)

Tag	Name of the tag	
Data type	Data type of the tag	
Values	Value range of the tag - minimum value to maximum value (L - linear specification R - rotary specification) If no specific value is shown, the value range limits of the relevant data type apply or the information under "Description".	
W	Effectiveness of changes in the technology data block	
	DIR	Direct: Values are changed directly and take effect at the start of the next MC-Servo [OB91].
	CAL	At call of Motion Control instruction: Values are changed directly and take effect at the start of the next MC-Servo [OB91] after the call of the corresponding Motion Control instruction in the user program.
	RES	Restart: Changes to the start value in the load memory are made using the extended instruction "WRIT_DBL" (write to DB in load memory). Changes will not take effect until after restart of the technology object.
	RON	Read only: The tag cannot and must not be changed during runtime of the user program.
Description	Description of the tag	

Access to the tags is with "<TO>.<tag name>". The placeholder <TO> represents the name of the technology object.

13.1.2 Actual values and setpoints (synchronous axis) (S7-1500, S7-1500T)

The following tags indicate the setpoint and actual values of the technology object.

Tags

Legend (Page 289)

Tag	Data type	Values	W	Description
Position	LREAL	-	RON	Position setpoint
Velocity	LREAL	-	RON	Velocity setpoint/speed setpoint
ActualPosition	LREAL	-	RON	Actual position
ActualVelocity	LREAL	-	RON	Actual velocity

Tag	Data type	Values	W	Description	
ActualSpeed	LREAL	-	RON	For PROFIdrive drives	Actual speed of the motor
				For drives with analog setpoint interface	0.0
				For drives with linear motor	0.0
Acceleration	LREAL	-	RON	Setpoint acceleration	
ActualAcceleration	LREAL	-	RON	Actual acceleration	
OperativeSensor	UDINT	1 ... 4	RON	Operative encoder	
ModuloCycle	DINT	-2147483648 ... 2147483647	RON	Number of modulo cycles of the setpoint	
ActualModuloCycle	DINT	-2147483648 ... 2147483647	RON	Number of modulo cycles of the actual value	
VelocitySetpoint	LREAL	-1.0E12 ... 1.0E12	RON	Output velocity setpoint/speed setpoint	

13.1.3 "Simulation" tag (synchronous axis) (S7-1500, S7-1500T)

The tag structure "<TO>.Simulation.<tag name>" contains the configuration of the simulation mode. In simulation mode, you can simulate axes without a real drive in the CPU.

Tags

Legend (Page 289)

Tag	Data type	Values	W	Description	
Simulation.	TO_Struct_AxisSimulation				
Mode	UDINT	0, 1	RES[1]	Simulation mode	
				0	No simulation, normal operation
				1	Simulation mode

[1] Technology version V2.0: RON

13.1.4 "VirtualAxis" tag (synchronous axis) (S7-1500, S7-1500T)

The tag structure "<TO>.VirtualAxis.<tag name>" contains the configuration of the simulation mode. In simulation mode, you can simulate axes without a real drive in the CPU.

Tags

Legend (Page 289)

Tag	Data type	Values	W	Description	
VirtualAxis.	TO_Struct_VirtualAxis				
Mode	UDINT	0, 1	RON	Virtual axis	
				0	No virtual axis

Tag	Data type	Values	W	Description	
Mode	UDINT	0, 1	RON	1	Axis is always and exclusively operated as virtual axis

13.1.5 "Actor" tag (synchronous axis) (S7-1500, S7-1500T)

The tag structure "<TO>.Actor.<tag name>" contains the controller-side configuration of the drive.

Tags

Legend (Page 289)

Tag	Data type	Values	W	Description	
Actor.	TO_Struct_Actor				
Type	DINT	0, 1	RON	Drive connection	
				0	Analog output
				1	PROFIdrive telegram
InverseDirection	BOOL	-	RES	Inversion of the setpoint	
				FALSE	No
				TRUE	Yes
DataAdaption	DINT	0, 1	RES	Automatic transfer of the drive values reference speed, maximum speed and reference torque	
				0	No automatic transfer, manual configuration of values
				1	Automatic transfer of values configured in the drive to the configuration of the technology object
Efficiency	LREAL	0.0 ... 1.0	RES	Efficiency of mechanics (gear and leadscrew)	
MotorType	DINT	0.1	DL	Motor type	
				0	Round-frame motor (standard motor)
				1	Linear motor
Interface.	TO_Struct_ActorInterface				
AddressIn	VREF	0 ... 65535	RON	Input address for the PROFIdrive telegram	
AddressOut	VREF	0 ... 65535	RON	Output address for the PROFIdrive telegram or the analog setpoint	
EnableDriveOutput	BOOL	-	RES	"Enable output" for analog drives	
				FALSE	Disabled
				TRUE	Enabled
EnableDriveOutputAd-dress	VREF	0 ... 65535	RON	Address for the "Enable output" for analog setpoint	
DriveReadyInput	BOOL	-	RES	"Ready input" for analog drives The analog drive signals its readiness to receive speed set-points.	

Tag	Data type	Values	W	Description	
DriveReadyInput	BOOL	-	RES	FALSE	Disabled
				TRUE	Enabled
DriveReadyInputAd-dress	VREF	0 ... 65535	RON	Address for the "Enable input" for analog setpoint	
EnableTorqueData	BOOL	-	RES	Torque data	
				FALSE	Disabled
				TRUE	Enabled
TorqueDataAddressIn	VREF	0 ... 65535	RON	Input address of the supplemental telegram	
TorqueDataAddress-Out	VREF	0 ... 65535	RON	Output address of additional telegram	
DriveParameter.	TO_Struct_ActorDriveParameter			Valid when "<TO>.Actor.MotorType" = 0	
ReferenceSpeed	LREAL	0.0 ... 1.0E12	RES	Reference value (100%) for the speed setpoint (N-set) of the drive The speed setpoint is transferred in the PROFIdrive tele-gram as a normalized value from -200% to 200% of the "ReferenceSpeed". For setpoint specification via an analog output, the analog output can be operated in the range from -117% to 117%, provided the drive permits this.	
MaxSpeed	LREAL	0.0 ... 1.0E12	RES	Maximum value for the speed setpoint of the drive (N-set) (PROFIdrive: MaxSpeed ≤ 2 × ReferenceSpeed Analog setpoint: MaxSpeed ≤ 1.17 × ReferenceSpeed)	
ReferenceTorque	LREAL	0.0 ... 1.0E12	RES	Reference value (100%) for the drive torque	
LinearMotorDrivePara-meter.	TO_Struct_LinearMotorActorDrivePa-rameter			Valid when "<TO>.Actor.MotorType" = 1	
ReferenceVelocity	LREAL	0.0 ... 1.0E12	RES	Reference value (100%) for the velocity setpoint (N-set) of the drive The speed setpoint is transferred in the PROFIdrive tele-gram as a normalized value from -200% to 200% of the "ReferenceVelocity". For setpoint specification via an analog value, the analog output can be operated in the range from -117% to 117%, provided the drive permits this.	
MaxVelocity	LREAL	0.0 ... 1.0E12	RES	Maximum value for the velocity setpoint of the drive (N-set) (PROFIdrive: MaxVelocity ≤ 2 × ReferenceVelocity Analog setpoint: MaxVelocity ≤ 1.17 × ReferenceVelocity)	
ReferenceForce	LREAL	0.0 ... 1.0E12	RES	Reference value (100%) for the force of the drive	

13.1.6 "TorqueLimiting" tag (synchronous axis) (S7-1500, S7-1500T)

The tag structure "<TO>.TorqueLimiting.<tag name>" contains the configuration of the torque limiting.

Tags

Legend (Page 289)

Tag	Data type	Values	W	Description	
TorqueLimiting.	TO_Struct_TorqueLimiting				
LimitBase	DINT	0, 1	RES	Torque limiting	
				0	Motor side
				1	Load side
PositionBasedMonitor-ings	DINT	0, 1	RES	Positioning and following error monitoring	
				0	Monitoring deactivated
				1	Monitoring activated
LimitDefaults.	TO_Struct_TorqueLimitingLimitDefa-ults				
Torque	LREAL	0.0 ... 1.0E12	CAL	Limiting torque	
Force	LREAL	0.0 ... 1.0E12	CAL	Limiting force	

13.1.7 "Clamping" tag (synchronous axis) (S7-1500, S7-1500T)

The tag structure "<TO>.Clamping.<tag name>" contains the configuration of the fixed stop detection.

Tags

Legend (Page 289)

Tag	Data type	Values	W	Description
Clamping.	TO_Struct_Clamping			
FollowingErrorDeviation	LREAL	0.001 ... 1.0E12	DIR	Value of the following error starting from which the fixed stop is detected.
PositionTolerance	LREAL	0.001 ... 1.0E12	DIR	Position tolerance for the clamping monitoring

13.1.8 "Sensor[1..4]" tags (synchronous axis) (S7-1500, S7-1500T)

The tag structure "<TO>.Sensor[1..4].<tag name>" contains the controller-end configuration of the encoder and the configuration of active and passive homing.

Tags

Legend (Page 289)

Tag	Data type	Values	W	Description
Sensor[1..4].	ARRAY [1..4] OF TO_Struct_Sensor			
Existent	BOOL	-	RON	Displaying created encoders
Type	DINT	0 ... 2	RON	Encoder type

Tag	Data type	Values	W	Description	
Type	DINT	0 ... 2	RON	0	"INCREMENTAL" Incremental
				1	"ABSOLUTE" Absolute
				2	"CYCLIC_ABSOLUTE" Cyclic absolute
InverseDirection	BOOL	-	RES	Inversion of the actual value	
				FALSE	No
				TRUE	Yes
System	DINT	0, 1	RES	Encoder system	
				0	"LINEAR" Linear encoder
				1	"ROTATORY" Rotary encoder
MountingMode	DINT	0 ... 2	RES	Mounting type of encoder	
				0	On motor shaft
				1	On load side
				2	External measuring system
DataAdaption	DINT	0, 1	RES	Automatic transfer of the drive values reference speed, maximum speed and reference torque in the device	
				0	No automatic transfer, manual configuration of values
				1	Automatic transfer of values configured in the drive to the configuration of the technology object
ActualVelocityMode	DINT	0, 1	RES	Type of calculation for actual speed value or actual velocity value	
				0	Actual value calculation from differentiation of the position change
				1	Actual value calculation with NACT value from the telegram
Interface.	TO_Struct_SensorInterface				
AddressIn	VREF	0 ... 65535	RON	Input address for the PROFIdrive telegram	
AddressOut	VREF	0 ... 65535	RON	Output address for the PROFIdrive telegram	
Number	UDINT	1 ... 2	RON	Number of the encoder in the telegram	
Parameter.	TO_Struct_SensorParameter				
Resolution	LREAL	1.0E-12 ... 1.0E12	RES	Resolution of a linear encoder (offset between two encoder pulses)	
StepsPerRevolution	UDINT	1 ... 8388608	RES	Increments per rotary encoder revolution	
FineResolutionXist1	UDINT	0 ... 31	RES	Number of bits for fine resolution "Gx_XIST1" (cyclic actual encoder value)	

Tag	Data type	Values	W	Description	
FineResolutionXist2	UDINT	0 ... 31	RES	Number of bits for fine resolution "Gx_XIST2" (absolute value of the encoder)	
DeterminableRevolutions	UDINT	0 ... 8388608	RES	Number of differentiable encoder revolutions for a multi-turn absolute encoder (For a single-turn absolute encoder = 1; for an incremental encoder = 0)	
DistancePerRevolution	LREAL	0.0 ... 1.0E12	RES	Load distance per revolution of an externally mounted encoder	
BehaviorGx_XIST1	DINT	-	RES	Evaluation of "Gx_XIST1" bits.	
				0	Based on the bits of the encoder resolution. The incremental actual value "Gx_XIST1" is transmitted with less than 32 bits in the PROFIdrive telegram. For example: At 16 bits, the value ranges from 0 to 65,535.
				1	32-bit value of the encoder value The "Gx_XIST1" incremental actual value is transferred with 32 bits of 0 to 4,294,967,295 in the PROFIdrive telegram.
ReferenceSpeed	LREAL	0.0 ... 1.0E12	RES	Reference speed for NACT in PROFIdrive telegram with rotary encoder Only relevant for "ActualVelocityMode" = 1	
ReferenceVelocity	LREAL	0.0 ... 1.0E12	RES	Reference velocity for NACT in the PROFIdrive telegram with linear encoder Only relevant for "ActualVelocityMode" = 1	
Backlash.	TO_Struct_Backlash			u	
Enable	BOOL	-	DIR	Enable backlash compensation	
				FALSE	Disabled
				TRUE	Enabled
				If you enable/disable backlash compensation during runtime, then you have to home the axis again.	
Size	LREAL	0.0 ... 1.0E12	DIR	Size of backlashes	
				If you change the size of backlashes during runtime, you have to home the axis again.	
Velocity	LREAL	0.0 ... 1.0E12	DIR	Velocity for traversing of backlashes	
				0.0	Motor traverses backlashes within one servo cycle.
				> 0.0	Motor traverses backlash with the specified velocity.
DirectionAbsoluteHoming	DINT	0, 1	DIR	Direction of movement during or before absolute encoder adjustment	
				0	Positive
				1	Negative
ActiveHoming.	TO_Struct_SensorActiveHoming				
Mode	DINT	0 ... 2	RES	Homing mode	
				0	Use zero mark via PROFIdrive telegram

Tag	Data type	Values	W	Description	
Mode	DINT	0 ... 2	RES	1	Zero mark via PROFIdrive telegram and reference cam
				2	Use homing mark via digital input
SideInput	BOOL	-	CAL	Side of the digital input for active homing	
				FALSE	Negative side
				TRUE	Positive side
Direction	DINT	0, 1	CAL	Homing direction/approach direction to homing mark	
				0	Positive homing direction
				1	Negative homing direction
DigitalInputAddress	VREF	0 ... 65535	RON	Address of digital input	
HomePositionOffset	LREAL	-1.0E12 ... 1.0E12	CAL	Home position offset	
SwitchLevel	BOOL	-	RES	Signal level that is present at the digital input when homing mark is approached	
				FALSE	Low level
				TRUE	High level
PassiveHoming.	TO_Struct_SensorPassiveHoming				
Mode	DINT	0 ... 2	RES	Homing mode	
				0	Use zero mark via PROFIdrive telegram
				1	Zero mark via PROFIdrive telegram and reference cam
				2	Use homing mark via digital input
SideInput	BOOL	-	CAL	Side of the digital input for passive homing	
				FALSE	Negative side
				TRUE	Positive side
Direction	DINT	0 ... 2	CAL	Homing direction/approach direction to homing mark	
				0	Positive homing direction
				1	Negative homing direction
				2	Current homing direction
DigitalInputAddress	VREF	0 to 65535	RON	Address of digital input	
SwitchLevel	BOOL	-	RES	Signal level that is present at the digital input when homing mark is approached	
				FALSE	Low level
				TRUE	High level

13.1.9 "CrossPlcSynchronousOperation" tag (synchronous axis) (S7-1500, S7-1500T)

The tag structure "<TO>.CrossPlcSynchronousOperation.<tag name>" contains the configuration of the cross-PLC synchronous operation.

Tags

Legend (Page 289)

Tag	Data type	Values	W	Description
CrossPlcSynchronousOperation.	TO_Struct_CrossPlcSynchronousOperation			
Interface[1..8].	ARRAY [1..8] of TO_Struct_CrossPlcLeadingValueInterface			
EnableLeadingValueOutput	BOOL	-	RON	Provide cross-PLC leading value FALSE: No TRUE: Yes
AddressOut	VREF	-	RON	Output address for the leading value telegram
LocalLeadingValueDelayTime	LREAL	0.0 ... 1.0E9	RES	Delay time of leading value output at the local following axes

13.1.10 "Extrapolation" tag (synchronous axis) (S7-1500, S7-1500T)

The tag structure "<TO>.Extrapolation.<tag name>" contains the configuration of the actual value extrapolation.

Tags

Legend (Page 289)

Tag	Data type	Values	W	Description
Extrapolation.	TO_Struct_Extrapolation			
LeadingAxisDependentTime	LREAL	-	RON	Extrapolation time component (caused by leading axis) Results from the following times: • Time of actual value acquisition for the leading axis • Interpolator cycle clock • Time of position filter of actual value extrapolation (T1 + T2)
FollowingAxisDependentTime	LREAL	0.0 ... 1.0E12	DIR	Extrapolation time component (caused by following axis)

Tag	Data type	Values	W	Description
				Results from the following times: • For a following axis with set velocity precontrol: – Communication cycle – Interpolator cycle clock – Speed control loop substitute time for the following axis – Output delay time of the setpoint at the following axis • For a following axis without velocity precontrol: – Communication cycle – Interpolator cycle clock – Position control loop equivalent time (1/Kv from "<TO>.PositionControl.Kv") – Output delay time of the setpoint at the following axis
Settings.	TO_Struct_ExtrapolationSettings			
SystemDefinedExtrapolation	DINT	0, 1	RES	Leading axis dependent time 0 Not effective 1 Effective
ExtrapolatedVelocityMode	DINT	0, 1	RES	Effective velocity value for the synchronization function 0 "FilteredVelocity" Leading value velocity from filtered actual velocity 1 "VelocityByDifferentiation" The leading value velocity results from the differentiation of the extrapolated leading value position
PositionFilter.	TO_Struct_ExtrapolationPositionFilter			
T1	LREAL	0.0 ... 1.0E12	DIR	Position filter time constant T1
T2	LREAL	0.0 ... 1.0E12	DIR	Position filter time constant T2
VelocityFilter.	TO_Struct_ExtrapolationVelocityFilter			
T1	LREAL	0.0 ... 1.0E12	DIR	Velocity filter time constant T1
T2	LREAL	0.0 ... 1.0E12	DIR	Velocity filter time constant T2
VelocityTolerance.	TO_Struct_ExtrapolationVelocityTolerance			
Range	LREAL	0.0 ... 1.0E12	DIR	Tolerance band width for velocity
Hysteresis.	TO_Struct_ExtrapolationHysteresis			
Value	LREAL	0.0 ... 1.0E12	DIR	Hysteresis of the extrapolated actual position value

13.1.11 "LoadGear" tag (synchronous axis) (S7-1500, S7-1500T)

The tag structure "<TO>.LoadGear.<tag name>" contains the configuration of the load gear.

Tags

Legend (Page 289)

Tag	Data type	Value range	W	Description
LoadGear.	TO_Struct_LoadGear			
Numerator	UDINT	1 ... 4294967295	RES	Load gear counter
Denominator	UDINT	1 ... 4294967295	RES	Load gear denominator

13.1.12 "Properties" tag (synchronous axis) (S7-1500, S7-1500T)

The tag structure "<TO>.Properties.<tag name>" contains the configuration of the type of axis or motion.

Tags

Legend (Page 289)

Tag	Data type	Value range	W	Description	
Properties.	TO_Struct_Properties				
MotionType	DINT	0, 1	RON	Indication of axis type or motion type	
				0	Linear axis or motion
				1	Rotary axis or motion

13.1.13 "Units" tag (synchronous axis) (S7-1500, S7-1500T)

The tag structure "<TO>.Units.<tag name>" shows the set technological units.

Tags

Legend (Page 289)

Tag	Data type	Values	W	Description	
Units.	TO_Struct_Units/TO_Struct_External-Encoder_Units				
LengthUnit	UDINT	-	RON	Unit for position	
				1010	m
				1013	mm
				1536	mm[1]
				1011	km
				1014	µm
				1015	nm
				1019	in

[1] Position values with higher resolution or six decimal places

Tag	Data type	Values	W	Description	
LengthUnit	UDINT	-	RON	1018	ft
				1021	mi
				1004	rad
				1005	°
				1537	°[1]
VelocityUnit	UDINT	-	RON	Unit for velocity	
				1521	°/s
				1539	°/s[1]
				1522	°/min
				1086	rad/s
				1523	rad/min
				1062	mm/s
				1538	mm/s[1]
				1061	m/s
				1524	mm/min
				1525	m/min
				1526	mm/h
				1063	m/h
				1527	km/min
				1064	km/h
				1066	in/s
				1069	in/min
				1067	ft/s
				1070	ft/min
				1075	mi/h
TimeUnit	UDINT	-	RON	Unit for time	
				1054	s
TorqueUnit	UDINT	-	RON	Unit for torque	
				1126	Nm
				1128	kNm
				1529	lbf in (pound-force-inch)
				1530	lbf ft
				1531	ozf in (ounce-force-inch)
				1532	ozf ft
				1533	pdl in (poundal-inch)
				1534	pdl ft
ForceUnit	UDINT	-	RON	Unit for force	
				1120	N

[1] Position values with higher resolution or six decimal places

Tag		Data type	Values	W	Description	
	ForceUnit	UDINT	-	RON	1122	kN
					1094	lbf (pound-force)
					1093	ozf (ounce-force)
					1535	pdl (poundals)
	UnitFactor	UDINT	-	RON	Factor for internal conversion in the high-resolution units.	

1) Position values with higher resolution or six decimal places

13.1.14 "Mechanics" tag (synchronous axis) (S7-1500, S7-1500T)

The tag structure "<TO>.Mechanics.<tag name>" contains the configuration of the mechanics.

Tags

Legend (Page 289)

Tag		Data type	Value range	W	Description
Mechanics.		TO_Struct_Mechanics			
	LeadScrew	LREAL	1.0E-12 ... 1.0E12	RES	Leadscrew pitch

13.1.15 "Modulo" tag (synchronous axis) (S7-1500, S7-1500T)

The tag structure "<TO>.Modulo.<tag name>" contains the configuration of the modulo function.

Tags

Legend (Page 289)

Tag		Data type	Values	W	Description	
Modulo.		TO_Struct_Modulo				
	Enable	BOOL	-	RES	FALSE	Modulo conversion disabled
					TRUE	Modulo conversion enabled
					When modulo conversion is enabled, a check is made for modulo length > 0.0	
	Length	LREAL	0.001 ... 1.0E12	RES	Modulo length	
	StartValue	LREAL	-1.0E12 ... 1.0E12	RES	Modulo start value	

13.1.16 "DynamicLimits" tag (synchronous axis) (S7-1500, S7-1500T)

The tag structure "<TO>.DynamicLimits.<tag name>" contains the configuration of the dynamic limits. During Motion Control, no dynamic values greater than the dynamic limits are

permitted. If you specify greater values in a Motion Control instruction, then motion is performed using the dynamic limits, and a warning is indicated (alarms 501 to 503 - dynamic values are limited).

Tags

Legend (Page 289)

Tag	Data type	Values	W	Description
DynamicLimits.	TO_Struct_DynamicLimits			
MaxVelocity	LREAL	0.0 ... 1.0E12	RES	Maximum permissible velocity of the axis
Velocity	LREAL	0.0 ... 1.0E12	DIR	Current maximum velocity of the axis The minimum from "MaxVelocity" and "Velocity" is effective for motion control.
MaxAcceleration	LREAL	0.0 ... 2.7777777777-7778E8	DIR	Maximum permissible acceleration of the axis
MaxDeceleration	LREAL	0.0 ... 2.7777777777-7778E8	DIR	Maximum permissible deceleration of the axis
MaxJerk	LREAL	0.0 ... 4629629.629	DIR	Maximum permissible jerk on the axis

13.1.17 "DynamicDefaults" tag (synchronous axis) (S7-1500, S7-1500T)

The tag structure "<TO>.DynamicDefaults.<tag name>" contains the configuration of the dynamic defaults. These settings will be used when you specify a dynamic value less than 0.0 in a Motion Control instruction (exceptions: "MC_MoveJog.Velocity", "MC_MoveVelocity.Velocity"). Changes to the default dynamic values will be applied at the next positive edge at the "Execute" parameter of a Motion Control instruction.

Tags

Legend (Page 289)

Tag	Data type	Values	W	Description
DynamicDefaults.	TO_Struct_DynamicDefaults			
Velocity	LREAL	0.0 ... 1.0E12	CAL	Default velocity
Acceleration	LREAL	0.0 ... 2.7777777777-7778E8	CAL	Default acceleration
Deceleration	LREAL	0.0 ... 2.7777777777-7778E8	CAL	Default deceleration
Jerk	LREAL	0.0 ... 4629629.629	CAL	Default jerk
EmergencyDeceleration	LREAL	0.0 ... 2.7777777777-7778E8	DIR	Emergency stop deceleration

13.1.18 "PositionLimits_SW" tag (synchronous axis) (S7-1500, S7-1500T)

The tag structure "<TO>.PositionLimits_SW.<tag name>" contains the configuration of position monitoring with software limit switches. Software limit switches are used to limit the operating range of a synchronous axis.

Tags

Legend (Page 289)

Tag	Data type	Values	W	Description	
PositionLimits_SW.	TO_Struct_PositionLimitsSW				
Active	BOOL	-	DIR	FALSE	Monitoring deactivated
				TRUE	Monitoring activated
MinPosition	LREAL	-1.0E12 ... 1.0E12	DIR	Position of negative software limit switches	
MaxPosition	LREAL	-1.0E12 ... 1.0E12	DIR	Position of positive software limit switches ("MaxPosition" > "MinPosition")	
LimitReachedBehavior	DINT	0 ... 1	RES	Alarm response when a software limit switch is approached with a single axis job	
				0	Stop with maximum dynamic values
				1	Stop with current dynamic values
LimitExceededBehavior	DINT	0 ... 1	RES	Alarm response when overrunning a software limit switch	
				0	Lock axis
				1	Keep emergency stop and axis enable

13.1.19 "PositionLimits_HW" tag (synchronous axis) (S7-1500, S7-1500T)

The tag structure "<TO>.PositionLimits_HW.<tag name>" contains the configuration of position monitoring with hardware limit switches. Hardware limit switches are used to limit the traversing range of a synchronous axis.

Tags

Legend (Page 289)

Tag	Data type	Values	W	Description	
PositionLimits_HW.	TO_Struct_PositionLimitsHW				
Active	BOOL	-	RES	FALSE	Monitoring deactivated
				TRUE	Monitoring activated
				With "Active", both (negative and positive) hardware limit switches are activated or deactivated.	
MinSwitchLevel	BOOL	-	RES	Level selection for activation of the negative hardware limit switch	
				FALSE	Low level (Low active)
				TRUE	High level (High active)

Tag	Data type	Values	W	Description	
MinSwitchAddress	VREF	0 ... 65535	RES	Address for the negative hardware limit switch	
MaxSwitchLevel	BOOL	-	RES	Level selection for activation of the positive hardware limit switch	
				FALSE	Low level (Low active)
				TRUE	High level (High active)
MaxSwitchAddress	VREF	0 ... 65535	RES	Address for the positive hardware limit switch	
Mode	DINT	0 ... 1	RES	Type of HW limit switch	
				0	Switch non-traversable
				1	Switch traversable
AppoachBehavior	DINT	0 ... 1	RES	Alarm response when approaching a HW limit switch	
				0	Disable axis
				1	Keep emergency stop and axis enable

13.1.20 "Homing" tag (synchronous axis) (S7-1500, S7-1500T)

The tag structure "<TO>.Homing.<tag name>" contains the configuration for homing the TO.

Tags

Legend (Page 289)

Tag	Data type	Values	W	Description	
Homing.	TO_Struct_Homing / TO_Struct_ExternalEncoder_Homing				
AutoReversal	BOOL	-	RES	Reversal at the hardware limit switches	
				FALSE	No
				TRUE	Yes
ApproachDirection	BOOL	-	CAL	Direction of approach to the homing position switch	
				FALSE	Positive direction
				TRUE	Negative direction
ApproachVelocity	LREAL	Linear: 0.0 ... 10000.0 mm/s	CAL	Approach velocity Velocity during active homing at which the reference cam and home position are approached.	
		Rotary: 0.0 ... 360000.0 °/s			
ReferencingVelocity	LREAL	Linear: 0.0 ... 1000.0 mm/s	CAL	Homing velocity Velocity during active homing at which the home position is approached.	
		Rotary: 0.0 ... 36000.0 °/s			
HomePosition	LREAL	-1.0E12 ... 1.0E12	CAL	Home position	

13.1.21 "Override" tag (synchronous axis) (S7-1500, S7-1500T)

The tag structure "<TO>.Override.<tag name>" contains the configuration of override parameters. The override parameters are used to apply a correction percentage to default values. An override change takes effect immediately, and is performed with the dynamic settings in effect in the Motion Control instruction.

Tags

Legend (Page 289)

Tag	Data type	Values	W	Description
Override.	TO_Struct_Override			
Velocity	LREAL	0.0 ... 200.0%	DIR	Velocity or speed override Percentage correction of the velocity/speed

13.1.22 "PositionControl" tag (synchronous axis) (S7-1500, S7-1500T)

The tag structure "<TO>.PositionControl.<tag name>" contains the settings of position control.

Tags

Legend (Page 289)

Tag	Data type	Values	W	Description
PositionControl.	TO_Struct_PositionControl			
Kv	LREAL	0.0 ... 2147480.0	DIR	Proportional gain of the closed loop position control ("Kv" > 0.0)
Kpc	LREAL	0.0 ... 150.0%	DIR	Velocity precontrol of the position control Recommended setting: • Isochronous drive connection via PROFIdrive: 100.0% • Non-isochronous drive connection via PROFIdrive: 0.0 to 100.0% • Analog drive connection: 0.0 to 100.0%
EnableDSC	BOOL	-	RES	Dynamic Servo Control (DSC) FALSE: DSC disabled TRUE: DSC activated DSC is only possible with one of the following PROFIdrive telegrams: • Standard telegram 5 or 6 • SIEMENS telegram 105 or 106
SmoothingTimeByChangeDifference	LREAL	0.0 ... 1.0E12 s	DIR	Smoothing time for the manipulated variable for switching operations, for example: • Encoder switchover • Change in P-gain ("Kv") • Switchover to emergency stop ramp

Tag	Data type	Values	W	Description	
InitialOperativeSensor	UDINT	1 ... 4	RES	Active sensor after initialization of the axis (sensor number 1 to 4) This encoder is used after startup of the CPU and after a restart of the technology object. At an operating mode transition from STOP → RUN of the CPU (without restart of the technology object), the encoder that was also active before the STOP is still being used.	
ControlDifferenceQuantization.	TO_Struct_PositionDifferenceQuantification				
Mode	DINT	-	RES	Type of quantification Configuration of a quantization when a drive with stepper motor interface is connected	
				0	No quantification
				1	Quantization corresponding to encoder resolution
				2	Quantization to a direct value
				(configuration is performed using the parameter view (data structure))	
Value	LREAL	0.001 ... 1.0E12	RES	Value of quantification Configuration of a value for quantization to a direct value ("<TO>.PositionControl.ControlDifferenceQuantization.Mode" = 2) (configuration is performed using the parameter view (data structure))	
VelocityModePowerOn	DINT	0 ... 1	RES	Behavior of the velocity setpoint when the axis is enabled	
				0	Velocity is set to "0" with maximum dynamic values of the axis (ramp).
				1	Velocity is immediately set to "0" without ramp.

13.1.23 "SetpointFilter" tag (synchronous axis) (S7-1500, S7-1500T)

The tag structure "<TO>.SetpointFilter.<tag name>" contains the settings of the setpoint filter.

Tags

Legend (Page 289)

Tag	Data type	Values	W	Description	
SetpointFilter.	TO_Struct_SetpointFilter				
DynamicFilter.	TO_Struct_DynamicFilter				
Mode	DINT	-	RES	Dynamic filter mode	
				0	Dynamic filter not effective
				1	PT1/PT2 filter + dead time

1) The dead time T

Tag			Data type	Values	W	Description
		T1	LREAL	0.0 ... 1.0E12	DIR	First time constant of the PT2 filter [s]
		T2	LREAL	0.0 ... 1.0E12	DIR	Second time constant of the PT2 filter [s]
		Tt	LREAL	0.0 ... 1.0E12[1)]	DIR	Additional dead time of the dynamic filter [s]

1) The dead time T

13.1.24 "DynamicAxisModel" tag (synchronous axis) (S7-1500, S7-1500T)

The tag structure "<TO>.DynamicAxisModel.<tag name>" contains the balancing filter settings.

Tags

Legend (Page 289)

Tag		Data type	Values	W	Description
DynamicAxisModel.		TO_Struct_DynamicAxisModel			Time constants for braking ramp generation with alarm response "Brake with emergency stop ramp"
	VelocityTimeConstant	LREAL	0.0 ... 1.0E12	DIR	Speed control loop substitute time [s]
	AdditionalPositionTime-Constant	LREAL	0.0 ... 1.0E12	DIR	Additive position control loop substitute time [s]

13.1.25 "FollowingError" tag (synchronous axis) (S7-1500, S7-1500T)

The tag structure "<TO>.FollowingError.<tag name>" contains the configuration of the dynamic following error monitoring.

If the permissible following error is exceeded, then technology alarm 521 is output, and the technology object is disabled (alarm reaction: remove enable).

When the warning level is reached, a warning is output (technology alarm 522).

Tags

Legend (Page 289)

Tag		Data type	Values	W	Description	
FollowingError.		TO_Struct_FollowingError				
	EnableMonitoring	BOOL	-	RES	FALSE	Following error monitoring deactivated
					TRUE	Following error monitoring enabled
	MinValue	LREAL	Linear: 0.0 ... 1.0E12	DIR	Permissible following error at velocities below the value of "MinVelocity"	
			Rotary: 0.001 ... 1.0E12			
	MaxValue	LREAL	Linear: 0.0 ... 1.0E12	DIR	Maximum permissible following error, which may be reached at the maximum velocity.	
			Rotary: 0.002 ... 1.0E12			

Tag	Data type	Values	W	Description
MinVelocity	LREAL	0.0 ... 1.0E12	DIR	"MinValue" is permissible below this velocity and is held constant.
WarningLevel	LREAL	0.0 ... 100.0	DIR	Warning level Percentage value relative to the valid maximum following error
AdditionalSetpointDelay-Time	LREAL	0.0 ... 1.0E12	DIR	Time constant for additional deceleration of position set-point to calculate the following error [s]

13.1.26 "PositioningMonitoring" tag (synchronous axis) (S7-1500, S7-1500T)

The tag structure "<TO>.PositioningMonitoring.<tag name>" contains the configuration of position monitoring at the end of a positioning motion.

If the actual position value at the end of a positioning motion is reached within the tolerance time and remains in the positioning window for the minimum dwell time, then "<TO>.StatusWord.X5 (Done)" is set in the technology data block. This completes a Motion Control job.

If the tolerance time is exceeded, then technology alarm 541 "Positioning monitoring" with supplemental value 1: "Target range not reached" is displayed.

If the minimum dwell time is not met, then technology alarm 541 "Positioning monitoring" with supplemental value 2: "Exit target range again" is displayed.

Tags

Legend (Page 289)

Tag	Data type	Values	W	Description
PositioningMonitoring.	TO_Struct_PositionMonitoring			
ToleranceTime	LREAL	0.0 ... 1.0E12	DIR	Tolerance time Maximum permitted duration from reaching of velocity setpoint zero until entrance into the positioning window
MinDwellTime	LREAL	0.0 ... 1.0E12	DIR	Minimum dwell time in positioning window
Window	LREAL	0.0 ... 1.0E12	DIR	Positioning window

13.1.27 "StandstillSignal" tag (synchronous axis) (S7-1500, S7-1500T)

The tag structure "<TO>.StandstillSignal.<tag name>" contains the configuration of the standstill signal.

If the actual velocity value is below the velocity threshold, and does not exceed it during the minimum dwell time, then the standstill signal "<TO>.StatusWord.X7 (Standstill)" is set.

Tags

Legend (Page 289)

Tag	Data type	Values	W	Description
StandstillSignal.	TO_Struct_StandstillSignal			Configuration for the standstill signal
VelocityThreshold	LREAL	0.0 ... 1.0E12	DIR	Velocity threshold If velocity is below this threshold, the minimum dwell time begins.
MinDwellTime	LREAL	0.0 ... 1.0E12	DIR	Minimum dwell time

13.1.28 "StatusPositioning" tag (synchronous axis) (S7-1500, S7-1500T)

The tag structure "<TO>.StatusPositioning.<tag name>" indicates the status of a positioning motion.

Tags

Legend (Page 289)

Tag	Data type	Values	W	Description
StatusPositioning.	TO_Struct_StatusPositioning			
Distance	LREAL	-1.0E12 ... 1.0E12	RON	Distance to the target position
TargetPosition	LREAL	-1.0E12 ... 1.0E12	RON	Target position
TargetPositionModulo-Cycle	DINT	-2147483648 ... 2147483647	RON	Number of modulo cycles to target position with positioning motions
FollowingError	LREAL	-1.0E12 ... 1.0E12	RON	Current following error
SetpointExecutionTime	LREAL	0 to 1.0E12	RON	Setpoint execution time of the axis (Results from T_{lpo}, T_{vtc} or 1/kv, T_{Send} and T_O of the axis)
SuperimposedDistance	LREAL	0 to 1.0E12	RON	With the instructions "MC_MoveSuperimposed", "MC_MotionInSuperimposed" and "MC_HaltSuperimposed" distance traveled. The value is reset when the base motion and the superimposed motion are completed.

13.1.29 "StatusDrive" tag (synchronous axis) (S7-1500, S7-1500T)

The tag structure "<TO>.StatusDrive.<tag name>" indicates the status of the drive.

Tags

Legend (Page 289)

Tag	Data type	Values	W	Description
StatusDrive.	TO_Struct_StatusDrive			

Tag	Data type	Values	W	Description	
Disabled	BOOL	-	RON	FALSE	Drive not switched off
				TRUE	Drive switched off
InOperation	BOOL	-	RON	Operation status of the drive	
				FALSE	Drive not ready Setpoints will not be executed.
				TRUE	Drive ready Setpoints can be executed.
CommunicationOK	BOOL	-	RON	Cyclic BUS communication between controller and drive	
				FALSE	Cyclic communication not established. Fault ZSW1.X3 (FaultPresent) is present. Possible causes: • The CPU is in STOP. • The drive has failed. • The "ControlRequested" bit in the status word of the drive has the value "FALSE". • The drive signals an error using the status word. • For isochronous configuration, the dynamic sign of life in the telegram has failed or is not supplied by the drive.
				TRUE	Cyclic communication OK and no fault effective
Error	BOOL	-	RON	FALSE	No drive error
				TRUE	Drive error
AdaptionState	DINT	0 ... 4	RON	Status of automatic data transfer of drive parameters	
				0	"NOT_ADAPTED" Data not transferred
				1	"IN_ADAPTION" Data transfer in progress
				2	"ADAPTED" Data transfer complete
				3	"NOT_APPLICABLE" Data transfer not selected, not possible
				4	"ADAPTION_ERROR" Error during data transfer

13.1.30 "StatusServo" tag (synchronous axis) (S7-1500, S7-1500T)

The tag structure "<TO>.StatusServo.<tag name>" indicates the status for the balancing filter.

Tags

Legend (Page 289)

Tag	Data type	Values	W	Description
StatusServo.	TO_Struct_StatusServo			
BalancedPosition	LREAL	-	RON	Position setpoint after the balancing filter
ControlDifference	LREAL	-	RON	Control deviation
PositionAfterDynamicFilter	LREAL	-	RON	Position setpoint after the dynamic filter

13.1.31 "StatusProvidedLeadingValue" tag (synchronous axis) (S7-1500, S7-1500T)

The tag structure "<TO>.StatusProvidedLeadingValue.<tag name>" contains the provided leading value with leading value delay of the cross-PLC synchronous operation.

Tags

Legend (Page 289)

Tag	Data type	Values	W	Description
StatusProvidedLeadingValue.	TO_Struct_StatusProvidedLeadingValue			Provided leading value
DelayedLeadingValue	TO_Struct_ProvidedLeadingValue			Leading value with leading value delay
Position	LREAL	-1.0E12 ... 1.0E12	RON	Position
Velocity	LREAL	-1.0E12 ... 1.0E12	RON	Velocity
Acceleration	LREAL	-1.0E12 ... 1.0E12	RON	Acceleration

13.1.32 "StatusSensor[1..4]" tags (synchronous axis) (S7-1500, S7-1500T)

The tag structure "<TO>.StatusSensor[1..4].<tag name>" indicates the status of the measuring system.

Tags

Legend (Page 289)

Tag	Data type	Values	W	Description	
StatusSensor[1..4].	Array [1..4] OF TO_Struct_StatusSensor				
State	DINT	0 ... 2	RON	Status of the actual encoder value	
				0	"NOT_VALID" Invalid
				1	"WAITING_FOR_VALID" Waiting for "Valid" status

Tag	Data type	Values	W	Description	
State	DINT	0 ... 2	RON	2	"VALID" Valid
CommunicationOK	BOOL	-	RON	Cyclic BUS communication between controller and encoder	
				FALSE	Not established
				TRUE	Established
Error	BOOL	-	RON	FALSE	No error in the measuring system
				TRUE	Error in the measuring system.
AbsEncoderOffset	LREAL	-	RON	Home point offset to the value of an absolute value encoder. The value will be retentively stored in the CPU.	
Control	BOOL	-	RON	FALSE	Encoder is not active
				TRUE	Encoder is active
Position	LREAL	-	RON	Encoder position	
Velocity	LREAL	-	RON	Encoder velocity	
AdaptionState	DINT	0 ... 4	RON	Status of automatic data transfer of encoder parameters	
				0	"NOT_ADAPTED" Data not transferred
				1	"IN_ADAPTION" Data transfer in progress
				2	"ADAPTED" Data transfer complete
				3	"NOT_APPLICABLE" Data transfer not selected, not possible
				4	"ADAPTION_ERROR" Error during data transfer
ModuloCycle	DINT	-2147483648 ... 2147483647	RON	Number of modulo cycles	
Adjusted	DINT	0 ... 1	RON	Status of the encoder adjustment	
				0	Encoder not homed
				1	Encoder adjusted with one of the following homing types: • Active homing • Passive homing • Absolute encoder adjustment • Incremental encoder adjustment

13.1.33 "StatusExtrapolation" tag (synchronous axis) (S7-1500, S7-1500T)

The tag structure "<TO>.StatusExtrapolation.<tag name>" indicates the actual value extrapolation status.

Tags

Legend (Page 289)

Tag	Data type	Values	W	Description
StatusExtrapolation.	TO_Struct_StatusExtrapolation			
FilteredPosition	LREAL	-1.0E12 ... 1.0E12	RON	Position after position filter
FilteredVelocity	LREAL	-1.0E12 ... 1.0E12	RON	Velocity after velocity filter and tolerance band
ExtrapolatedPosition	LREAL	-1.0E12 ... 1.0E12	RON	Extrapolated position
ExtrapolatedVelocity	LREAL	-1.0E12 ... 1.0E12	RON	Extrapolated velocity

13.1.34 "StatusSynchronizedMotion" tag (synchronous axis) (S7-1500, S7-1500T)

The tag structure "<TO>.StatusSynchronizedMotion.<tag name>" indicates the status of synchronous operation.

Tags

Legend (Page 289)

Tag	Data type	Value range	W	Description	
StatusSynchronizedMotion.	TO_Struct_StatusSynchronizedMotion				
FunctionState	DINT	0 ... 6	RON	Indication of which synchronous operation function is active	
				0	No synchronous operation active
				1	Gearing ("MC_GearIn")
				2	Gearing with specified synchronous positions ("MC_GearInPos")
				3	Camming ("MC_CamIn")
				4	Desynchronization of gearing ("MC_GearOut")
				5	Desynchronization of camming ("MC_CamOut")
				6	Velocity gearing ("MC_GearInVelocity")
WaitingFunctionState	DINT	0 ... 5	RON	Indication of which synchronous operation function is waiting	
				0	No synchronous operation waiting
				1	Reserved
				2	Gearing with specified synchronous positions waiting ("MC_GearInPos")
				3	Camming waiting ("MC_CamIn")
				4	Desynchronization of gearing waiting ("MC_GearOut")

Tag	Data type	Value range	W	Description	
WaitingFunctionState	DINT	0 ... 5	RON	5	Desynchronization of camming waiting ("MC_CamOut")
PhaseShift	LREAL	-1.0E12 ... 1.0E12	RON	Current absolute leading value offset with an "MC_PhasingAbsolute" or "MC_PhasingRelative" job.	
ActualMaster	DB_ANY	0 ... 65535	RON	When a synchronous operation job is started, the number of the technology data block of the currently used leading axis is displayed.	
				0	Synchronous operation inactive
ActualCam	DB_ANY	0 ... 65535	RON	Cyclic cam currently used for camming	
MasterOffset	LREAL	-1.0E12 ... 1.0E12	RON	Current offset of the leading value range of the cam with an "MC_CamIn" job	
MasterScaling	LREAL	-1.0E12 ... 1.0E12	RON	Current scaling of the leading value range of the cam with an "MC_CamIn" job	
SlaveOffset	LREAL	-1.0E12 ... 1.0E12	RON	Current offset of the following value range of the cam with an "MC_CamIn" job	
SlaveScaling	LREAL	-1.0E12 ... 1.0E12	RON	Current scaling of the following value range of the cam with an "MC_CamIn" job	
Offset	LREAL	-1.0E12 ... 1.0E12	RON	Current absolute following value offset with an "MC_OffsetAbsolute" or "MC_OffsetRelative" job, including the following value offset of an "MC_CamIn" job (<TO>.StatusSynchronizedMotion.SlaveOffset)	
EffectiveLeadingValue.	TO_Struct_EffectiveLeadingValue			Effective leading value of the synchronous operation function	
Position	LREAL	-1.0E12 ... 1.0E12	RON	Position	
Velocity	LREAL	-1.0E12 ... 1.0E12	RON	Velocity	
Acceleration	LREAL	-1.0E12 ... 1.0E12	RON	Acceleration	
FunctionLeadingValue.	TO_Struct_FunctionLeadingValue			Leading value of the synchronous operation function after a leading value offset with a "MC_PhasingAbsolute" or "MC_PhasingRelative" job	
Position	LREAL	-1.0E12 ... 1.0E12	RON	Position	
FunctionFollowingValue.	TO_Struct_FunctionFollowingValue			Following value of the synchronous operation function before a following value offset with an "MC_OffsetAbsolute" job or "MC_OffsetRelative" job	
Position	LREAL	-1.0E12 ... 1.0E12	RON	Position	
Velocity	LREAL	-1.0E12 ... 1.0E12	RON	Velocity	
Acceleration	LREAL	-1.0E12 ... 1.0E12	RON	Acceleration	
StatusWord.	DWORD	-	RON	Status information of synchronous operation	
Bit 0	BOOL	-	RON	"MaxVelocityExceeded" Configured maximum velocity is exceeded during synchronous operation.	

Tag	Data type	Value range	W	Description
Bit 1	BOOL	-	RON	"MaxAccelerationExceeded" Configured maximum acceleration is exceeded during synchronous operation.
Bit 2	BOOL	-	RON	"MaxDecelerationExceeded" Configured maximum deceleration is exceeded during synchronous operation.
Bit 3	BOOL	-	RON	"InSimulation" Simulation of synchronous operation FALSE: Not simulated TRUE: Simulated
Bit 4	BOOL	-	RON	"LeadingValueAdditiveCommand" Additive leading value via "MC_LeadingValueAdditive" FALSE: No additive leading value active TRUE: Additive leading value active
Bit 5 ... Bit 31	BOOL	-	RON	Reserved

13.1.35 "StatusKinematicsMotion" tag (synchronous axis) (S7-1500, S7-1500T)

The "<TO>.StatusKinematicsMotion" tag contains the status information of the technology object.

Information on the evaluation of the individual bits (e.g. bit 2 "MaxDecelerationExceeded") can be found in the "Evaluating StatusWord, ErrorWord and WarningWord" section of the "S7-1500/S7-1500T Motion Control Overview" documentation (Page 13).

Tags

Legend (Page 289)

Tag	Data type	Values	W	Description
StatusKinematicsMotion	DWORD	-	RON	Status information of the technology object
Bit 0	-	-	-	"MaxVelocityExceeded" 0: The kinematics technology object calculated a lower velocity setpoint than the maximum velocity on the axis. 1: The kinematics technology object calculated a higher velocity setpoint than the maximum velocity on the axis.
Bit 1	-	-	-	"MaxAccelerationExceeded" 0: The kinematics technology object calculated a lower setpoint acceleration calculated than the maximum acceleration of the axis. 1: The kinematics technology object calculated a higher setpoint acceleration than the maximum acceleration of the axis.

Tag	Data type	Values	W	Description	
Bit 2	-	-	-	"MaxDecelerationExceeded"	
				0	The kinematics technology object calculated a lower setpoint deceleration than the maximum deceleration of the axis.
				1	The kinematics technology object calculated a lower setpoint deceleration than the maximum deceleration of the axis.

13.1.36 "StatusTorqueData" tag (synchronous axis) (S7-1500, S7-1500T)

The tag structure "<TO>.StatusTorqueData.<tag name>" indicates the status of the torque data.

Tags

Legend (Page 289)

Tag	Data type	Value range	W	Description	
StatusTorqueData.	TO_Struct_StatusTorqueData				
CommandAdditiveT-orqueActive	DINT	0, 1	RON	Additive setpoint torque	
				0	Inactive
				1	Active
CommandTorqueRange-Active	DINT	0, 1	RON	Torque limits B +, B-	
				0	Inactive
				1	Active
ActualTorque	LREAL	-1.0E12 ... 1.0E12	RON	Actual torque of the axis	

13.1.37 "StatusMotionIn" tag (synchronous axis) (S7-1500, S7-1500T)

The tag structure "<TO>.StatusMotionIn.<tag name>" indicates the status of the "MotionIn" function.

Tags

Legend (Page 289)

Tag	Data type	Value range	W	Description	
StatusMotionIn.	TO_Struct_StatusMotionIn				
FunctionState	DINT	0 ... 2	RON	0	No "MotionIn" function active
				1	"MC_MotionInVelocity" active
				2	"MC_MotionInPosition" active

Tag	Data type	Value range	W	Description
StatusWord.	DWORD	-	RON	-
Bit 0	Bool	-	RON	"MaxVelocityExceeded" The configured maximum velocity is exceeded during a MotionIn movement.
Bit 1 ... Bit 31	Bool	-	RON	Reserved

13.1.38 "StatusWord" tag (synchronous axis) (S7-1500, S7-1500T)

The "<TO>.StatusWord" tag contains the status information of the technology object. Information on the evaluation of the individual bits (e.g. bit 5 "HomingDone") can be found in the "Evaluating StatusWord, ErrorWord and WarningWord" section of the "S7-1500/S7-1500T Motion Control Overview" documentation (Page 13).

Tags

Legend (Page 289)

Tag	Data type	Values	W	Description
StatusWord	DWORD	-	RON	Status information of the technology object
Bit 0	-	-	-	"Enable" Enable status The technology object has been enabled.
Bit 1	-	-	-	"Error" An error is present.
Bit 2	-	-	-	"RestartActive" A restart is active. The technology object is being reinitialized.
Bit 3	-	-	-	"OnlineStartValuesChanged" The restart tags have been changed. For the changes to be applied, the technology object must be reinitialized.
Bit 4	-	-	-	"ControlPanelActive" The axis control panel is active.
Bit 5	-	-	-	"HomingDone" Homing status The technology object is homed.
Bit 6	-	-	-	"Done" No motion job is in progress and the axis control panel is deactivated.
Bit 7	-	-	-	"Standstill" Standstill signal The axis is at a standstill.
Bit 8	-	-	-	"PositioningCommand" A positioning command is active ("MC_MoveRelative","MC_MoveAbsolute").
Bit 9	-	-	-	"JogCommand" An "MC_MoveJog" job is running.

Tag	Data type	Values	W	Description
Bit 10	-	-	-	"VelocityCommand" An "MC_MoveVelocity" job is running.
Bit 11	-	-	-	"HomingCommand" An "MC_Home" job is being processed.
Bit 12	-	-	-	"ConstantVelocity" The velocity setpoint is reached. A constant velocity set-point is output.
Bit 13	-	-	-	"Accelerating" An acceleration operation is active.
Bit 14	-	-	-	"Decelerating" A deceleration operation is active.
Bit 15	-	-	-	"SWLimitMinActive" A negative software limit switch has been approached or exceeded.
Bit 16	-	-	-	"SWLimitMaxActive" A positive software limit switch has been approached or exceeded.
Bit 17	-	-	-	"HWLimitMinActive" A negative hardware limit switch has been approached or exceeded.
Bit 18	-	-	-	"HWLimitMaxActive" A positive hardware limit switch has been approached or exceeded.
Bit 19	-	-	-	Reserved
Bit 20	-	-	-	Reserved
Bit 21	-	-	-	"Synchronizing" The axis synchronizes to a leading value.
Bit 22	-	-	-	"Synchronous" The axis moves synchronously to a leading value.
Bit 23	-	-	-	"MoveSuperimposedCommand" An "MC_MoveSuperimposed" job is running.
Bit 24	-	-	-	"PhasingCommand" An "MC_PhasingAbsolute" or "MC_PhasingRelative" job for the leading value offset is active.
Bit 25	-	-	-	"AxisSimulation" The technology object is in simulation.
Bit 26	-	-	-	"TorqueLimitingCommand" An "MC_TorqueLimiting" job is running.
Bit 27	-	-	-	"InLimitation" The drive operates at least at the threshold value (default 90%) of the torque limit/force limitation.
Bit 28	-	-	-	"NonPositionControlled" The axis is not in position-controlled mode.
Bit 29	-	-	-	"KinematicsMotionCommand" The axis is used for a kinematics job.
Bit 30	-	-	-	"InClamping" The axis is clamped at a fixed stop.

Tag	Data type	Values	W	Description
Bit 31	-	-	-	"MotionInCommand" An "MotionIn" job is running.

13.1.39 "StatusWord2" tag (synchronous axis) (S7-1500, S7-1500T)

The "<TO>.StatusWord2" tag contains the status information of the technology object. Information on the evaluation of the individual bits (e.g. bit 0 "StopCommand") can be found in the "Evaluating StatusWord, ErrorWord and WarningWord" section of the "S7-1500/S7-1500T Motion Control Overview" documentation (Page 13).

Tags

Legend (Page 289)

Tag	Data type	Value range	W	Description
StatusWord2	DWORD	-	RON	Status information of the technology object
Bit 0	BOOL	-	RON	"StopCommand" An "MC_Stop" job is running. The technology object is disabled.
Bit 1	BOOL	-	RON	"DesynchronizingCommand" An "MC_GearOut" job or "MC_CamOut" job is active. The following axis is desynchronized.
Bit 2	BOOL	-	RON	"PassingBacklash" The backlash is traversed. "<TO>.ActualPosition" does not hereby change.
Bit 3	BOOL	-	RON	"PhasingCommandWaiting" An "MC_PhasingAbsolute" or "MC_PhasingRelative" job for leading value offset is waiting.
Bit 4	BOOL	-	RON	"OffsetCommand" An "MC_OffsetAbsolute" or "MC_OffsetRelative" job for following value offset is active.
Bit 5	BOOL	-	RON	"OffsetCommandWaiting" An "MC_OffsetAbsolute" or "MC_OffsetRelative" job for following value offset is waiting.
Bit 6	BOOL	-	RON	"MotionInSuperimposedCommand" An "MC_MotionInSuperimposed" job is running.
Bit 7	BOOL	-	RON	"HaltSuperimposedCommand" An "MC_HaltSuperimposed" job is running.
Bit 8 ... Bit 31	BOOL	-	RON	Reserved

13.1.40 "ErrorWord" tag (synchronous axis) (S7-1500, S7-1500T)

The "<TO>.ErrorWord" tag indicates technology object errors (technology alarms). Information on the evaluation of the individual bits (e.g. bit 3 "CommandNotAccepted") can be found in the "Evaluating StatusWord, ErrorWord and WarningWord" section of the "S7-1500/S7-1500T Motion Control Overview" documentation (Page 13).

Tags

Legend (Page 289)

Tag	Data type	Values	W	Description
ErrorWord	DWORD	-	RON	
Bit 0	-	-	-	"SystemFault" A system-internal error has occurred.
Bit 1	-	-	-	"ConfigFault" Configuration error One or more configuration parameters are inconsistent or invalid.
Bit 2	-	-	-	"UserFault" Error in user program at a Motion Control instruction or its use
Bit 3	-	-	-	"CommandNotAccepted" Job cannot be executed A Motion Control instruction cannot be executed because the necessary conditions have not been met.
Bit 4	-	-	-	"DriveFault" Error in drive
Bit 5	-	-	-	"SensorFault" Error in encoder system
Bit 6	-	-	-	"DynamicError" Specified dynamic values are limited to permissible values.
Bit 7	-	-	-	"CommunicationFault" Communication error Missing or faulty communication.
Bit 8	-	-	-	"SWLimit" Software limit switch reached or overtraveled.
Bit 9	-	-	-	"HWLimit" Hardware limit switch reached or overtraveled.
Bit 10	-	-	-	"HomingError" Error during homing operation The homing cannot be completed.
Bit 11	-	-	-	"FollowingErrorFault" Following error limits exceeded
Bit 12	-	-	-	"PositioningFault" Positioning error
Bit 13	-	-	-	"PeripheralError" Error accessing a logical address
Bit 14	-	-	-	"SynchronousError" Error during synchronous operation The leading axis specified in the Motion Control instruction was not configured as a possible leading axis.
Bit 15	-	-	-	"AdaptionError" Error in automatic data transfer
Bit 16 ... Bit 31	-	-	-	Reserved

13.1.41 "ErrorDetail" tag (synchronous axis) (S7-1500, S7-1500T)

The tag structure "<TO>.ErrorDetail.<tag name>" contains the alarm number and the effective local alarm response for the technology alarm that is currently pending on the technology object.

You can find a list of the technology alarms and alarm responses in the "Overview of the technology alarms" section of the "S7-1500/S7-1500T Motion Control alarms and error IDs" documentation (Page 13).

Tags

Legend (Page 289)

Tag		Data type	Values	W	Description	
ErrorDetail.		TO_Struct_ErrorDetail				
	Number	UDINT	-	RON	Alarm number	
	Reaction	DINT	0 ... 5	RON	Effective alarm response	
					0	No reaction
					1	Stop with current dynamic values
					2	Stop with maximum dynamic values
					3	Stop with emergency stop ramp
					4	Remove enable
					5	Track setpoints

13.1.42 "WarningWord" tag (synchronous axis) (S7-1500, S7-1500T)

The "<TO>.WarningWord" tag indicates pending warnings at the technology object.

Information on the evaluation of the individual bits (e.g. bit 13 "PeripheralWarning") can be found in the "Evaluating StatusWord, ErrorWord and WarningWord" section of the "S7-1500/S7-1500T Motion Control Overview" documentation (Page 13).

Tags

Legend (Page 289)

Tag		Data type	Values	W	Description
WarningWord		DWORD	-	RON	
	Bit 0	-	-	-	"SystemWarning" A system-internal error has occurred.
	Bit 1	-	-	-	"ConfigWarning" Configuration error One or several configuration parameters are adjusted internally.
	Bit 2	-	-	-	"UserWarning" Error in user program at a Motion Control instruction or its use

Tag	Data type	Values	W	Description
Bit 3	-	-	-	"CommandNotAccepted" Job cannot be executed A Motion Control instruction cannot be executed because the necessary conditions have not been met.
Bit 4	-	-	-	"DriveWarning" Warning of the drive When a warning message is pending at the drive that does not result in a TO alarm, this bit is not set. Evaluate the drive warnings directly using the status word of the drive.
Bit 5	-	-	-	"SensorWarning" Error in encoder system
Bit 6	-	-	-	"DynamicWarning" Specified dynamic values are limited to permissible values.
Bit 7	-	-	-	"CommunicationWarning" Communication error Missing or faulty communication.
Bit 8	-	-	-	"SWLimitMin" The negative software limit switch has been approached.
Bit 9	-	-	-	"SWLimitMax" The positive software limit switch has been approached.
Bit 10	-	-	-	"HomingWarning" Error during homing operation The homing cannot be completed.
Bit 11	-	-	-	"FollowingErrorWarning" Warning limit of following error monitoring reached/exceeded
Bit 12	-	-	-	"PositioningWarning" Positioning error
Bit 13	-	-	-	"PeripheralWarning" Error accessing a logical address
Bit 14	-	-	-	"SynchronousWarning" Error during synchronous operation The leading axis specified in the Motion Control instruction was not configured as a possible leading axis.
Bit 15	-	-	-	"AdaptionWarning" Error in automatic data transfer
Bit 16... Bit 31	-	-	-	Reserved

13.1.43 "ControlPanel" tag (synchronous axis) (S7-1500, S7-1500T)

The tag structure "<TO>.ControlPanel.<tag name>" contains no relevant data for you. This tag structure is internally used.

13.1.44 "InternalToTrace" tag (synchronous axis) (S7-1500, S7-1500T)

The tag structure "<TO>.InternalToTrace.<tag name>" contains no relevant data for you. This tag structure is internally used.

13.2 Tags of the cam technology object (S7-1500T)

13.2.1 Legend (S7-1500T)

Tag	Name of the tag	
Data type	Data type of the tag	
Values	Value range of the tag - minimum value to maximum value If no specific value is shown, the value range limits of the relevant data type apply or the information under "Description".	
W	Effectiveness of changes in the technology data block	
	DIR	Direct: Values are changed directly and take effect at the start of the next MC-Servo [OB91].
	CAL	At call of Motion Control instruction: Values are changed directly and take effect at the start of the next MC-Servo [OB91] after the call of the corresponding Motion Control instruction in the user program.
	RES	Restart: Changes to the start value in the load memory are made using the extended instruction "WRIT_DBL" (write to DB in load memory). Changes will not take effect until after restart of the technology object.
	RON	Read only: The tag cannot and must not be changed during runtime of the user program.
Description	Description of the tag	

Access to the tags is with "<TO>.<tag name>". The placeholder <TO> represents the name of the technology object.

13.2.2 "Point[1..1000]" tag (cam of type "TO_Cam") (S7-1500T)

The tag structure "<TO>.Point[1..1000].<tag name>" contains the defined points of the cam of type "TO_Cam".

Tags

Legend (Page 323)

Tag		Data type	Values	W	Description
Point[1..1000].		ARRAY [1..1000] OF TO_Cam_Struct_PointData			
	x	LREAL	-1.0E12 ... 1.0E12	CAL	Value of the point in the definition range
	y	LREAL	-1.0E12 ... 1.0E12	CAL	Value of the point in the range of the function

13.2.3 "Point[1..10000]" tag (cam of type "TO_Cam_10k") (S7-1500T)

The tag structure "<TO>.Point[1..10000].<tag name>" contains the defined points of the cam of type "TO_Cam_10k".

Tags

Legend (Page 323)

Tag	Data type	Values	W	Description
Point[1..10000].	ARRAY [1..10000] OF TO_Cam_Struct_PointData			
x	LREAL	-1.0E12 ... 1.0E12	CAL	Value of the point in the definition range
y	LREAL	-1.0E12 ... 1.0E12	CAL	Value of the point in the range of the function

13.2.4 "ValidPoint[1..1000]" tag (cam of the "TO_Cam" type) (S7-1500T)

The tag structure "<TO>.ValidPoint[1..1000]" shows the validity of the defined points of the cam of type "TO_Cam".

Tags

Legend (Page 323)

Tag	Data type	Values	W	Description	
ValidPoint[1..1000]	ARRAY [1..1000] OF BOOL	-	CAL	Indicates whether the defined point is valid.	
				FALSE	Invalid
				TRUE	Valid

13.2.5 "ValidPoint[1..10000]" tag (cam of the "TO_Cam_10k" type) (S7-1500T)

The tag structure "<TO>.ValidPoint[1..10000]" shows the validity of the defined points of the cam of type "TO_Cam_10k".

Tags

Legend (Page 323)

Tag	Data type	Values	W	Description	
ValidPoint[1..10000]	ARRAY [1..10000] OF BOOL	-	CAL	Indicates whether the defined point is valid.	
				FALSE	Invalid
				TRUE	Valid

13.2.6 "Segment[1..50]" tag (cam) (S7-1500T)

The tag structure "<TO>.Segment[1..50].<tag name>" contains the defined segments of the cam.

Tags

Legend (Page 323)

Tag		Data type	Values	W	Description
Segment[1..50].		ARRAY [1..50] OF TO_Cam_Struct_SegmentData			
	xmin	LREAL	-1.0E12 ... 1.0E12	CAL	Start coordinates of the segment
	xmax	LREAL	-1.0E12 ... 1.0E12	CAL	End coordinates of the segment
	a0	LREAL	-1.0E12 ... 1.0E12	CAL	Coefficient A0 for x^0 of the polynomial for the segment
	a1	LREAL	-1.0E12 ... 1.0E12	CAL	Coefficient A1 for x^1 of the polynomial for the segment
	a2	LREAL	-1.0E12 ... 1.0E12	CAL	Coefficient A2 for x^2 of the polynomial for the segment
	a3	LREAL	-1.0E12 ... 1.0E12	CAL	Coefficient A3 for x^3 of the polynomial for the segment
	a4	LREAL	-1.0E12 ... 1.0E12	CAL	Coefficient A4 for x^4 of the polynomial for the segment
	a5	LREAL	-1.0E12 ... 1.0E12	CAL	Coefficient A5 for x^5 of the polynomial for the segment
	a6	LREAL	-1.0E12 ... 1.0E12	CAL	Coefficient A6 for x^6 of the polynomial for the segment
	sineAmplitude	LREAL	-1.0E12 ... 1.0E12	CAL	Amplitude of the sine element
	sinePeriod	LREAL	-1.0E12 ... 1.0E12	CAL	Period length of the sine element [rad]
	sinePhase	LREAL	-1.0E12 ... 1.0E12	CAL	Phase offset of the sine element [rad]

13.2.7 "ValidSegment[1..50]" tag (cam) (S7-1500T)

The "<TO>.ValidSegment[1..50]" variable structure indicates the validity of the defined segments of the cam.

Tags

Legend (Page 323)

Tag	Data type	Values	W	Description	
ValidSegment[1..50]	ARRAY [1..50] OF BOOL	-	CAL	Indicates whether the defined segment is valid.	
				FALSE	Invalid
				TRUE	Valid

13.2.8 "InterpolationSettings" tag (cam) (S7-1500T)

The tag structure "<TO>.InterpolationSettings.<tag name>" contains the configuration for the interpolation of the cam.

Tags

Legend (Page 323)

Tag	Data type	Values	W	Description	
InterpolationSettings.	TO_Cam_Struct_InterpolationSettings				
InterpolationMode	DINT	0 ... 2	CAL	Interpolation type	
				0	Linear
				1	C splines
				2	B splines
BoundaryConditions	DINT	0, 1	CAL	Characteristics of the boundary points	
				0	No profile start or profile end conditions
				1	First derivative equal at profile start and end

13.2.9 "StatusCam" tag (cam of the "TO_Cam" type) (S7-1500T)

The tag structure "<TO>.StatusCam.<tag name>" indicates the status of the cam.

Tags

Legend (Page 323)

Tag	Data type	Values	W	Description
StatusCam.	TO_Cam_Struct_StatusCam			
StartLeadingValue	LREAL	-1.0E12 ... 1.0E12	RON	First defined interpolation point/start of the first segment of the cam (Start value of the definition range of the cam)
EndLeadingValue	LREAL	-1.0E12 ... 1.0E12	RON	Last defined interpolation point/end of the last segment of the cam (End value of the definition range of the cam)
NumberOfValidPoints	DINT	0 ... 1 000	RON	Number of valid points ("ValidPoint" = TRUE)

Tag	Data type	Values	W	Description
NumberOfValidSegments	DINT	0 ... 50	RON	Number of valid segments ("ValidSegment" = TRUE)

13.2.10 "StatusCam" tag (cam of the "TO_Cam_10k" type) (S7-1500T)

The tag structure "<TO>.StatusCam.<tag name>" indicates the status of the cam.

Tags

Legend (Page 323)

Tag	Data type	Values	W	Description
StatusCam.	TO_Cam_Struct_StatusCam			
StartLeadingValue	LREAL	-1.0E12 ... 1.0E12	RON	First defined interpolation point/start of the first segment of the cam (Start value of the definition range of the cam)
EndLeadingValue	LREAL	-1.0E12 ... 1.0E12	RON	Last defined interpolation point/end of the last segment of the cam (End value of the definition range of the cam)
NumberOfValidPoints	DINT	0 ... 10 000	RON	Number of valid points ("ValidPoint" = TRUE)
NumberOfValidSegments	DINT	0 ... 50	RON	Number of valid segments ("ValidSegment" = TRUE)

13.2.11 "StatusWord" tag (cam) (S7-1500T)

The "<TO>.StatusWord" tag contains the status information of the technology object. Information on the evaluation of the individual bits (e.g. bit 4 "CamDataChanged") can be found in the "Evaluating StatusWord, ErrorWord and WarningWord" section of the "S7-1500/S7-1500T Motion Control Overview" documentation (Page 13).

Tags

Legend (Page 323)

Tag	Data type	Values	W	Description
StatusWord	DWORD	-	RON	Status information of the technology object
Bit 0	-	-	-	"Control" Use status The cam is in use.
Bit 1	-	-	-	"Error" An error is present.
Bit 2	-	-	-	"RestartActive" A restart is active. The technology object is being reinitialized.

Tag		Data type	Values	W	Description
	Bit 3	-	-	-	"OnlineStartValuesChanged" The restart tags have been changed. For the changes to be applied, the technology object must be reinitialized.
	Bit 4	-	-	-	"CamDataChanged" The definition range of the cam has changed in the technology data block.
	Bit 5	-	-	-	"Interpolated" The cam is interpolated.
	Bit 6	-	-	-	"InInterpolation" The cam is in interpolation.
	Bit 7	-	-	-	"CopyCamDataActive" A copy operation of an "MC_CopyCamData" job is active.
	Bit 8 ... Bit 31	-	-	-	Reserved

13.2.12 "ErrorWord" tag (cam) (S7-1500T)

The "<TO>.ErrorWord" tag indicates technology object errors (technology alarms). Information on the evaluation of the individual bits (e.g. bit 3 "CommandNotAccepted") can be found in the "Evaluating StatusWord, ErrorWord and WarningWord" section of the "S7-1500/S7-1500T Motion Control Overview" documentation (Page 13).

Tags

Legend (Page 323)

Tag		Data type	Values	W	Description
ErrorWord		DWORD	-	RON	
	Bit 0	-	-	-	"SystemFault" A system-internal error has occurred.
	Bit 1	-	-	-	"ConfigFault" Configuration error One or more configuration parameters are inconsistent or invalid.
	Bit 2	-	-	-	"UserFault" Error in user program at a Motion Control instruction or its use
	Bit 3	-	-	-	"CommandNotAccepted" Job cannot be executed A Motion Control instruction cannot be executed because the necessary conditions have not been met.
	Bit 4 ... Bit 31	-	-	-	Reserved

13.2.13 "ErrorDetail" tag (cam) (S7-1500T)

The tag structure "<TO>.ErrorDetail.<tag name>" contains the alarm number and the effective local alarm response for the technology alarm that is currently pending on the technology object.

You can find a list of the technology alarms and alarm responses in the "Overview of the technology alarms" section of the "S7-1500/S7-1500T Motion Control alarms and error IDs" documentation (Page 13).

Tags

Legend (Page 323)

Tag	Data type	Values	W	Description	
ErrorDetail.	TO_Struct_ErrorDetail				
Number	UDINT	-	RON	Alarm number	
Reaction	DINT	0, 9	RON	Effective alarm response	
				0	No reaction
				9	Terminate processing of the technology object

13.2.14 "WarningWord" tag (cam) (S7-1500T)

The "<TO>.WarningWord" tag indicates pending warnings at the technology object.

Information on the evaluation of the individual bits (e.g. bit 3 "CommandNotAccepted") can be found in the "Evaluating StatusWord, ErrorWord and WarningWord" section of the "S7-1500/S7-1500T Motion Control Overview" documentation (Page 13).

Tags

Legend (Page 323)

Tag	Data type	Values	W	Description
WarningWord	DWORD	-	RON	
Bit 0	-	-	-	"SystemWarning" A system-internal error has occurred.
Bit 1	-	-	-	"ConfigWarning" Configuration error One or more configuration parameters are inconsistent or invalid.
Bit 2	-	-	-	"UserWarning" Error in user program at a Motion Control instruction or its use
Bit 3	-	-	-	"CommandNotAccepted" Job cannot be executed A Motion Control instruction cannot be executed because the necessary conditions have not been met.
Bit 4 ... Bit 31	-	-	-	Reserved

13.3 Tags of the leading axis proxy technology object (S7-1500T)

13.3.1 Legend (S7-1500T)

Tag	Name of the tag	
Data type	Data type of the tag	
Values	Value range of the tag - minimum value to maximum value If no specific value is shown, the value range limits of the relevant data type apply or the information under "Description".	
W	Effectiveness of changes in the technology data block	
	DIR	Direct: Values are changed directly and take effect at the start of the next MC-Servo [OB91].
	CAL	At call of Motion Control instruction: Values are changed directly and take effect at the start of the next MC-Servo [OB91] after the call of the corresponding Motion Control instruction in the user program.
	RES	Restart: Changes to the start value in the load memory are made using the extended instruction "WRIT_DBL" (write to DB in load memory). Changes will not take effect until after restart of the technology object.
	RON	Read only: The tag cannot and must not be changed during runtime of the user program.
Description	Description of the tag	

Access to the tags is with "<TO>.<tag name>". The placeholder <TO> represents the name of the technology object.

13.3.2 Leading value (leading axis proxy) (S7-1500T)

The following tags indicate the leading value parameters of the technology object for local synchronous operation.

Tags

Legend (Page 330)

Tag	Data type	Values	W	Description
Position	LREAL	-	RON	Adapted leading value for local synchronous operation
Velocity	LREAL	-	RON	Leading value velocity for local synchronous operation
Acceleration	LREAL	-	RON	Leading value velocity for local synchronous operation

13.3.3 "Interface" tag (leading axis proxy) (S7-1500T)

The tag structure "<TO>.Interface.<Tag name>" contains the input address of the telegram.

Tags

Legend (Page 330)

Tag		Data type	Values	W	Description
Interface.		TO_Struct_LeadingAxisProxy_Interface			
	AddressIn	VRef	-	RON	Input address for the telegram of the external leading value

13.3.4 "Parameter" tag (leading axis proxy) (S7-1500T)

The tag structure "<TO>.Parameter.<tag name>" contains parameters for leading value adaptation.

Tags

Legend (Page 330)

Tag		Data type	Values	W	Description
Parameter.		TO_Struct_LeadingAxisProxy_Parameter			
	LocalLeadingValueDelayTime	LREAL	0.0 ... 1.0E9	DIR	Delay time of virtual local following axis which, in turn, provides a cross-PLC leading value with a cascade (<TO>.CrossPlcSynchronousOperation.LocalLeadingValueDelayTime)
	ToleranceTimeExternalLeadingValueInvalid	LREAL	0.0 ... 1.0E12	DIR	Tolerance time until a technology alarm is triggered when the external leading value becomes invalid

13.3.5 "StatusExternalLeadingValue" tag (leading axis proxy) (S7-1500T)

The tag structure "<TO>.StatusExternalLeadingValue.<Tag name>" contains the parameter values of the external leading value.

Tags

Legend (Page 330)

Tag		Data type	Values	W	Description	
StatusExternalLeadingValue.		TO_Struct_LeadingAxisProxy_StatusData				
	ModuloLength	LREAL	0.0 ... 1.0E12	RON	Modulo length of the external leading value	
	ModuloStartValue	LREAL	-1.0E12 ... 1.0E12	RON	Modulo start value of the external leading value	
	AdjustmentTime	LREAL	-1.0E12 ... 1.0E12	RON	Time by which the external leading value is adjusted	
					< 0	The external leading value is interpolated by this time.
					> 0	The external leading value is extrapolated by this time.

13.3.6 "StatusWord" tag (leading axis proxy) (S7-1500T)

The "<TO>.StatusWord" tag contains the status information of the technology object. Information on the evaluation of the individual bits (e.g. bit 4 "LeadingValueValid") can be found in the "Evaluating StatusWord, ErrorWord and WarningWord" section of the "S7-1500/S7-1500T Motion Control Overview" documentation (Page 13).

Tags

Legend (Page 330)

Tag	Data type	Values	W	Description
StatusWord	DWORD	-	RON	Status information of the technology object
Bit 0	-	-	-	"Control" Use status The leading axis proxy is in operation.
Bit 1	-	-	-	"Error" An error is present.
Bit 2	-	-	-	"RestartActive" A restart is active. The technology object is being reinitialized.
Bit 3	-	-	-	"OnlineStartValuesChanged" The restart tags have been changed. For the changes to be applied, the technology object must be reinitialized.
Bit 4	-	-	-	"LeadingValueValid" The leading value exists and is valid.
Bit 5	-	-	-	"LeadingValueModulo" The leading value is with modulo functionality.
Bit 6	-	-	-	"LeadingAxisControl" The leading axis is in setpoint operation.
Bit 7 ... Bit 31	-	-	-	Reserved

13.3.7 "ErrorWord" tag (leading axis proxy) (S7-1500T)

The "<TO>.ErrorWord" tag indicates technology object errors (technology alarms). Information on the evaluation of the individual bits (e.g. bit 3 "CommandNotAccepted") can be found in the "Evaluating StatusWord, ErrorWord and WarningWord" section of the "S7-1500/S7-1500T Motion Control Overview" documentation (Page 13).

Tags

Legend (Page 330)

Tag	Data type	Values	W	Description
ErrorWord	DWORD	-	RON	
Bit 0	-	-	-	"SystemFault" System error

Tag	Data type	Values	W	Description
Bit 1	-	-	-	"ConfigFault" Configuration error One or more configuration parameters are inconsistent or invalid.
Bit 2	-	-	-	"UserFault" Error in user program at a Motion Control instruction or its use
Bit 3	-	-	-	"CommandNotAccepted" Job cannot be executed A Motion Control instruction cannot be executed because the necessary conditions have not been met.
Bit 4 ... Bit 7	-	-	-	Reserved
Bit 7	-	-	-	"CommunicationFault" Communication error Missing or faulty communication.
Bit 8 ... Bit 31	-	-	-	Reserved

13.3.8 "ErrorDetail" tag (leading axis proxy) (S7-1500T)

The tag structure "<TO>.ErrorDetail.<tag name>" contains the alarm number and the effective local alarm response for the technology alarm that is currently pending on the technology object.

You can find a list of the technology alarms and alarm responses in the "Overview of the technology alarms" section of the "S7-1500/S7-1500T Motion Control alarms and error IDs" documentation (Page 13).

Tags

Legend (Page 330)

Tag	Data type	Values	W	Description	
ErrorDetail.	TO_Struct_ErrorDetail				
Number	UDINT	-	RON	Alarm number	
Reaction	DINT	0, 13	RON	Effective alarm response	
				0	No reaction
				13	Invalid leading value

13.3.9 "WarningWord" tag (leading axis proxy) (S7-1500T)

The "<TO>.WarningWord" tag indicates pending warnings at the technology object.

Information on the evaluation of the individual bits (e.g. bit 1 "ConfigWarning") can be found in the "Evaluating StatusWord, ErrorWord and WarningWord" section of the "S7-1500/S7-1500T Motion Control Overview" documentation (Page 13).

Tags

Legend (Page 330)

Tag	Data type	Values	W	Description
WarningWord	DWORD	-	RON	
Bit 0	-	-	-	"SystemWarning" A system-internal error has occurred.
Bit 1	-	-	-	"ConfigWarning" Configuration error One or several configuration parameters are adjusted internally.
Bit 2	-	-	-	"UserWarning" Error in user program at a Motion Control instruction or its use
Bit 3	-	-	-	"CommandNotAccepted" Job cannot be executed A Motion Control instruction cannot be executed because the necessary conditions have not been met.
Bit 4 ... Bit 6	-	-	-	Reserved
Bit 7	-	-	-	"CommunicationWarning" Communication error Missing or faulty communication.
Bit 8 ... Bit 31	-	-	-	Reserved

Index

A

Additive leading value, 166
  Tags, 167

C

Cam, 25
  Basics, 25
  Functions, 29
  Configuration, 83
  Configuration, 90
  Configuration, 111
  Import/export, 111
  Interpolation, 125
  Tags, 323

Cam editor, 83, 90, 111

Camming, 82
  Tags, 161

Cross-PLC synchronous operation, 168
  Interconnection possibilities, 169
  Cascading, 169
  Time response, 170
  Delay time, 170
  Recursive interconnection, 171
  Communication, 172
  Tolerance time, 177
  Interconnection overview, 177
  Interconnection overview, 178
  Routes, 180
  Delay time, 180
  Tags, 181

D

Direct data exchange
  Setting up, 172
  Setting up, 172

E

External encoder
  Delay time, 170

G

Gearing, 41
  Gear ratio, 42
  Gear ratio, 46
  Tags, 71

I

Interconnection overview, 177
  Configuration, 178

L

Leading axis proxy
  Basics, 28
  Functions, 29
  Delay time, 170
  Diagnostics, 203
  Diagnostics, 205
  Tags, 330

Leading value
  Routes, 180

M

Master value coupling, 33

MC_CamIn, 247, 253

MC_CamOut, 267, 269

MC_CopyCamData, 279

MC_GearIn, 206, 209

MC_GearInPos, 210, 214

MC_GearInVelocity, 217, 220

MC_GearOut, 262, 265

MC_GetCamFollowingValue, 277

MC_GetCamLeadingValue, 276

MC_InterpolateCam, 274
MC_LeadingValueAdditive, 271, 272
MC_OffsetAbsolute, 241, 243
MC_OffsetRelative, 235, 237
MC_PhasingAbsolute, 228, 232
MC_PhasingRelative, 221, 225
MC_SynchronizedMotionSimulation, 261

P

Positioning axis
  Delay time, 170

R

Routes
  Show, 180

S

S7-1500 Motion Control, 23
  Technology object, 23
  Technology object, 25
  Technology object, 28
  Motion Control instruction, 29
  Technology object, 29
  Synchronous operation, 33
  Synchronous operation, 41
  Synchronous operation, 45
  Synchronous operation, 74
  Synchronous operation, 82
  Technology object, 83
  Configuration, 83
S7-1500 Motion Control instruction
  Overview, 29
S7-1500T Motion Control
  Motion Control instruction, 29
Synchronous axis
  Basics, 23
  Functions, 29
  Delay time, 170
  Diagnostics, 183
  Diagnostics, 188
  Diagnostics, 189
  Tags, 289
Synchronous operation, 22
  Phases, 22
Synchronous operation is being simulated, 164
  Tags, 165

T

Tags
  Gearing, 71
  Velocity synchronous operation, 80
  Camming, 161
  Synchronous operation is being simulated, 165
  Additive leading value, 167
  Cross-PLC synchronous operation, 181
  Synchronous axis technology object, 289
  Cam technology object, 323
  Leading axis proxy technology object, 330
Technology data block
  Tags of the synchronous axis technology object, 289
  Tags of the cam technology object, 323
  Tags of the leading axis proxy technology object, 330
Technology object
  Synchronous axis, 23
  Cam, 25
  Leading axis proxy, 28
  Cam, 29
  Leading axis proxy, 29
  Synchronous axis, 29
  Cam, 83
  Cam, 111
  Cam, 125
  Synchronous axis, 183
  Synchronous axis, 188
  Synchronous axis, 189
  Leading axis proxy, 203
  Leading axis proxy, 205
Tolerance time, 177
Transfer area
  Setting up, 172

V

Velocity synchronous operation, 74
Gear ratio, 74
Tags, 80

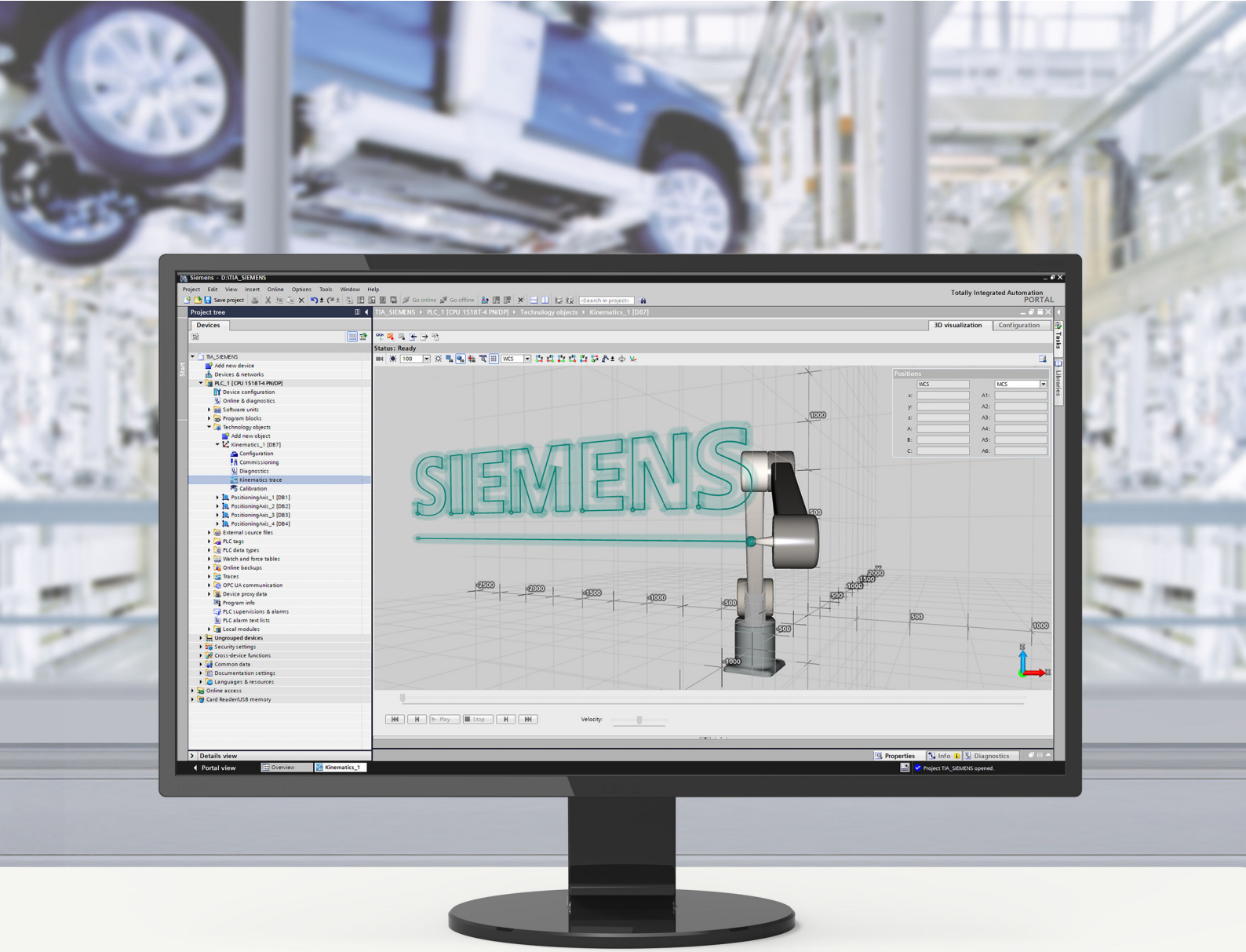

Edition 11/2022

FUNCTION MANUAL

SIMATIC

S7-1500

S7-1500T Kinematics functions V7.0 as of STEP 7 V18

support.industry.siemens.com

SIEMENS

SIMATIC

S7-1500
S7-1500T Kinematics functions
V7.0 as of STEP 7 V18

Function Manual

Introduction (S7-1500T) 1

Safety instructions (S7-1500T) 2

New features V7.0 (S7-1500T) 3

Overview of functions (S7-1500T) 4

S7-1500T Motion Control KinPlus (S7-1500T) 5

Mapping kinematics in the project (S7-1500T) 6

Kinematics functions (S7-1500T) 7

3D visualization (S7-1500T) 8

Commissioning (S7-1500T) 9

Diagnostics (S7-1500T) 10

Kinematics trace (S7-1500T) 11

Calibration (S7-1500T) 12

Instructions (S7-1500T) 13

Tags of the technology object data blocks (S7-1500T) 14

S7-1500T Motion Control

11/2022
A5E42062707-AD

Legal information

Warning notice system

This manual contains notices you have to observe in order to ensure your personal safety, as well as to prevent damage to property. The notices referring to your personal safety are highlighted in the manual by a safety alert symbol, notices referring only to property damage have no safety alert symbol. These notices shown below are graded according to the degree of danger.

⚠ DANGER
indicates that death or severe personal injury **will** result if proper precautions are not taken.

⚠ WARNING
indicates that death or severe personal injury **may** result if proper precautions are not taken.

⚠ CAUTION
indicates that minor personal injury can result if proper precautions are not taken.

NOTICE
indicates that property damage can result if proper precautions are not taken.

If more than one degree of danger is present, the warning notice representing the highest degree of danger will be used. A notice warning of injury to persons with a safety alert symbol may also include a warning relating to property damage.

Qualified Personnel

The product/system described in this documentation may be operated only by **personnel qualified** for the specific task in accordance with the relevant documentation, in particular its warning notices and safety instructions. Qualified personnel are those who, based on their training and experience, are capable of identifying risks and avoiding potential hazards when working with these products/systems.

Proper use of Siemens products

Note the following:

⚠ WARNING
Siemens products may only be used for the applications described in the catalog and in the relevant technical documentation. If products and components from other manufacturers are used, these must be recommended or approved by Siemens. Proper transport, storage, installation, assembly, commissioning, operation and maintenance are required to ensure that the products operate safely and without any problems. The permissible ambient conditions must be complied with. The information in the relevant documentation must be observed.

Trademarks

All names identified by ® are registered trademarks of Siemens AG. The remaining trademarks in this publication may be trademarks whose use by third parties for their own purposes could violate the rights of the owner.

Disclaimer of Liability

We have reviewed the contents of this publication to ensure consistency with the hardware and software described. Since variance cannot be precluded entirely, we cannot guarantee full consistency. However, the information in this publication is reviewed regularly and any necessary corrections are included in subsequent editions.

Siemens AG
Digital Industries
Postfach 48 48
90026 NÜRNBERG
GERMANY

A5E42062707-AD
Ⓟ 10/2022 Subject to change

Copyright © Siemens AG 2017 - 2022.
All rights reserved

Table of contents

1 Introduction (S7-1500T) ... 12

1.1 S7-1500 Motion Control Documentation Guide (S7-1500T) ... 13

1.2 Function Manuals documentation guide (S7-1500T) ... 14
1.2.1 Information classes Function Manuals (S7-1500T) ... 14
1.2.2 Basic tools (S7-1500T) ... 15
1.2.3 SIMATIC Technical Documentation (S7-1500T) ... 17

2 Safety instructions (S7-1500T) ... 19

3 New features V7.0 (S7-1500T) ... 20

3.1 Upgrading to technology version V7.0 (S7-1500T) ... 22

4 Overview of functions (S7-1500T) ... 24

4.1 Kinematics systems for handling tasks (S7-1500T) ... 24

4.2 Kinematics technology object with up to 4 interpolating kinematics axes (S7-1500T) ... 24

4.3 Motion control instructions for kinematics control (S7-1500T) ... 26

4.4 Functions in STEP 7 (S7-1500T) ... 27

4.5 Configuration limits for kinematics systems (S7-1500T) ... 28

5 S7-1500T Motion Control KinPlus (S7-1500T) ... 29

5.1 Product description of S7-1500T Motion Control KinPlus (S7-1500T) ... 29

5.2 Kinematics technology object with more than 4 interpolating kinematics axes (S7-1500T) ... 30

5.3 SIMATIC Memory Card S7-1500T Motion Control KinPlus (S7-1500T) ... 33

6 Mapping kinematics in the project (S7-1500T) ... 36

6.1 Term definition (S7-1500T) ... 36

6.2 Legend for representation of the kinematics (S7-1500T) ... 37

6.3 Coordinate systems and frames (S7-1500T) ... 38
6.3.1 Kinematics types with up to four interpolating kinematics axes. (S7-1500T) ... 40
6.3.2 Kinematics types with more than four kinematics axes (S7-1500T) ... 42

6.4 Adding, copying and deleting a kinematics technology object (S7-1500T) ... 45
6.4.1 Adding a kinematics technology object (S7-1500T) ... 45
6.4.2 Copying a kinematics technology object (S7-1500T) ... 46
6.4.3 Deleting a kinematics technology object (S7-1500T) ... 47

6.5 Supported kinematics types (S7-1500T) ... 47

6.6 Units of measure (S7-1500T) ... 48

6.7 Configuring and interconnecting kinematics axes (S7-1500T) ... 50
6.7.1 Configuring kinematics axes (S7-1500T) ... 50

6.7.2 Interconnecting kinematics axes (S7-1500T) ... 51

6.8 Mechanical axis coupling (S7-1500T) ... 52
6.8.1 Mechanical axis coupling for kinematics types with up to four interpolating kinematics axes. (S7-1500T) ... 52
6.8.2 Mechanical axis coupling for kinematics types with more than four interpolating kinematics axes. (S7-1500T) ... 52
6.8.3 Tags: Mechanical axis coupling (S7-1500T) ... 54

6.9 Joints (S7-1500T) ... 54
6.9.1 Joint coordinate system (JCS) (S7-1500T) ... 54
6.9.2 Configuring joints (S7-1500T) ... 55
6.9.2.1 Inverting the joint direction (S7-1500T) ... 55
6.9.2.2 Define joint traversing range (S7-1500T) ... 56
6.9.2.3 Monitoring of the joint traversing range (S7-1500T) ... 57
6.9.2.4 Defining an offset (S7-1500T) ... 57
6.9.3 Tags: Joints (S7-1500T) ... 58

6.10 Kinematics types (S7-1500T) ... 59
6.10.1 Cartesian portal (S7-1500T) ... 59
6.10.1.1 Cartesian portal 2D (S7-1500T) ... 59
6.10.1.2 Cartesian portal 2D with orientation (S7-1500T) ... 61
6.10.1.3 Cartesian portal 3D (S7-1500T) ... 63
6.10.1.4 Cartesian portal 3D with orientation (S7-1500T) ... 66
6.10.1.5 Cartesian portal 3D with 2 orientations A, B (S7-1500T) ... 69
6.10.1.6 Tags: Cartesian portal (S7-1500T) ... 72
6.10.2 Roller picker (S7-1500T) ... 73
6.10.2.1 Roller picker 2D (S7-1500T) ... 73
6.10.2.2 Roller picker 2D with orientation (S7-1500T) ... 75
6.10.2.3 Roller picker 3D (vertical) (S7-1500T) ... 78
6.10.2.4 Roller picker 3D with orientation (vertical) (S7-1500T) ... 81
6.10.2.5 Roller picker 3D with orientation (horizontal) (S7-1500T) ... 84
6.10.2.6 Tags: Roller picker (S7-1500T) ... 87
6.10.3 SCARA (S7-1500T) ... 88
6.10.3.1 SCARA 2D with orientation (S7-1500T) ... 88
6.10.3.2 SCARA 3D with orientation (S7-1500T) ... 91
6.10.3.3 Tags: SCARA (S7-1500T) ... 96
6.10.4 Articulated arm (S7-1500T) ... 97
6.10.4.1 Articulated arm 2D (S7-1500T) ... 97
6.10.4.2 Articulated arm 2D with orientation (S7-1500T) ... 100
6.10.4.3 Articulated arm 3D (S7-1500T) ... 103
6.10.4.4 Articulated arm 3D with orientation (S7-1500T) ... 109
6.10.4.5 6-axis articulated arm with central hand (S7-1500T) ... 115
6.10.4.6 Tags: Articulated arm (S7-1500T) ... 125
6.10.5 Delta picker (S7-1500T) ... 127
6.10.5.1 Delta picker 2D (S7-1500T) ... 127
6.10.5.2 Delta picker 2D with orientation (S7-1500T) ... 129
6.10.5.3 Delta picker 3D (S7-1500T) ... 132
6.10.5.4 Delta picker 3D with orientation (S7-1500T) ... 135
6.10.5.5 Delta picker 3D with 2 orientations A, B (S7-1500T) ... 138
6.10.5.6 Permissible joint position for delta picker (S7-1500T) ... 143
6.10.5.7 Tags: Delta picker (S7-1500T) ... 143
6.10.6 Cylindrical robot (S7-1500T) ... 144
6.10.6.1 Cylindrical robot 3D (S7-1500T) ... 144

6.10.6.2 Cylindrical robot 3D with orientation (S7-1500T) ... 149
6.10.6.3 Tags: Cylindrical robot (S7-1500T) ... 153
6.10.7 Tripod (S7-1500T) ... 154
6.10.7.1 Tripod 3D (S7-1500T) ... 154
6.10.7.2 Tripod 3D with orientation (S7-1500T) ... 157
6.10.7.3 Tags: Tripod (S7-1500T) ... 161
6.10.8 User-defined kinematics systems (S7-1500T) ... 162
6.10.8.1 Tags: User-defined kinematics systems (S7-1500T) ... 162

6.11 Kinematics transformation (S7-1500T) ... 162
6.11.1 Transformation for predefined kinematics systems (S7-1500T) ... 163
6.11.1.1 Reference points (S7-1500T) ... 163
6.11.1.2 Traversing range and transformation area (S7-1500T) ... 163
6.11.1.3 Joint position spaces (kinematics-dependent) (S7-1500T) ... 164
6.11.1.4 Singularities (S7-1500T) ... 167
6.11.2 Transformation for user-defined kinematics systems (S7-1500T) ... 174
6.11.2.1 User transformation without JCS (S7-1500T) ... 174
6.11.2.2 User transformation with JCS (S7-1500T) ... 176
6.11.2.3 MC-Transformation [OB98] (S7-1500T) ... 178
6.11.2.4 Program example for a user-defined kinematics systems (S7-1500T) ... 181
6.11.3 Tags: Kinematics transformation (S7-1500T) ... 185

7 Kinematics functions (S7-1500T) ... 186

7.1 Offset and rotation of the coordinate system (S7-1500T) ... 186
7.1.1 Define KCS/OCS frame (S7-1500T) ... 188
7.1.2 Define tool frames (S7-1500T) ... 189
7.1.3 Tags: Coordinate systems and frames (S7-1500T) ... 191

7.2 Zone monitoring (S7-1500T) ... 192
7.2.1 Configuring zones (S7-1500T) ... 193
7.2.1.1 Configuring a workspace zone offline (S7-1500T) ... 195
7.2.1.2 Configuring kinematics zones offline (S7-1500T) ... 195
7.2.1.3 Defining the zone geometry (S7-1500T) ... 197
7.2.1.4 Defining the offset and rotation in the reference coordinate system (S7-1500T) ... 200
7.2.1.5 Activating zone monitoring (S7-1500T) ... 200
7.2.2 Zone violation (S7-1500T) ... 201
7.2.3 Retracting after a zone violation (S7-1500T) ... 201
7.2.4 Tags: Zone monitoring (S7-1500T) ... 202

7.3 Overview of kinematics motions (S7-1500T) ... 202
7.3.1 Introduction to the programming of the kinematics motions (S7-1500T) ... 203
7.3.2 Define target position (S7-1500T) ... 204
7.3.3 Motion status and remaining distance (S7-1500T) ... 207
7.3.4 Interrupting, continuing and stopping kinematics motions (S7-1500T) ... 212
7.3.5 Motion dynamics (S7-1500T) ... 213
7.3.5.1 Configuring dynamics for the kinematics and the orientation motion (S7-1500T) ... 213
7.3.5.2 Configuring dynamics for the sPTP motion (S7-1500T) ... 214
7.3.5.3 Dynamic adaptation (S7-1500T) ... 215
7.3.5.4 Override (S7-1500T) ... 216
7.3.6 Motion preparation using multiple jobs (S7-1500T) ... 217
7.3.6.1 Job sequence (S7-1500T) ... 217
7.3.6.2 Blending kinematics motions with maximum rounding clearance (S7-1500T) ... 219
7.3.6.3 Dynamic behavior when motions are appended/blended (S7-1500T) ... 222

7.3.6.4 Preliminary motion preparation (S7-1500T) ... 223
7.3.6.5 Setting the motion preparation (S7-1500T) ... 223
7.3.7 Interaction of kinematics motions and single axis motions (S7-1500T) ... 224
7.3.8 Tags: Kinematics motions (S7-1500T) ... 225

7.4 Moving a kinematics in a linear manner (S7-1500T) ... 226
7.4.1 Defining the target position of the linear motion (S7-1500T) ... 227
7.4.2 Defining the dynamic response of the linear motion (S7-1500T) ... 228
7.4.3 Defining the transition of linear motion (S7-1500T) ... 229
7.4.4 Starting a linear motion job (S7-1500T) ... 231
7.4.5 Tags: Linear motion (S7-1500T) ... 231

7.5 Moving a kinematics in a circular manner (S7-1500T) ... 233
7.5.1 Defining the circular path of the circular motion (S7-1500T) ... 233
7.5.1.1 Defining the circular path via intermediate point and target position (S7-1500T) ... 233
7.5.1.2 Defining the circular path via center point and angle (S7-1500T) ... 235
7.5.1.3 Define circular path via radius and target position (S7-1500T) ... 237
7.5.2 Define the dynamic response of the circular motion (S7-1500T) ... 240
7.5.3 Define the transition of circular motion (S7-1500T) ... 241
7.5.4 Starting a circular motion job (S7-1500T) ... 243
7.5.5 Tags: Circular motion (S7-1500T) ... 244

7.6 Moving a kinematics with a synchronous "point-to-point" motion (S7-1500T) ... 245
7.6.1 Defining the target position of the sPTP motion (S7-1500T) ... 246
7.6.1.1 Defining the axis target position of the sPTP motion (S7-1500T) ... 246
7.6.1.2 Define joint target positions of the sPTP motion (S7-1500T) ... 247
7.6.1.3 Defining the Cartesian target coordinates of the sPTP motion (S7-1500T) ... 248
7.6.2 Defining the dynamics factors of the sPTP motion (S7-1500T) ... 250
7.6.3 Defining the transition of the sPTP motion (S7-1500T) ... 250
7.6.4 Starting the sPTP motion job (S7-1500T) ... 253
7.6.5 Tags: sPTP motion (S7-1500T) ... 253

7.7 Conveyor Tracking (S7-1500T) ... 255
7.7.1 Configuring and starting conveyor tracking (S7-1500T) ... 256
7.7.2 Phases of conveyor tracking (S7-1500T) ... 256
7.7.3 Behavior of the "TrackingState" tag (S7-1500T) ... 261
7.7.4 Motion between two tracked OCS (S7-1500T) ... 263
7.7.5 Dynamics in the conveyor tracking phases (S7-1500T) ... 264
7.7.6 Stopping behavior with "MC_GroupStop" and "MC_GroupInterrupt" (S7-1500T) ... 265
7.7.7 Blending behavior (S7-1500T) ... 265

7.8 Set kinematics to simulation mode (S7-1500T) ... 266
7.8.1 Tags: Kinematics to simulation (S7-1500T) ... 267

8 3D visualization (S7-1500T) ... 268

8.1 Structure of the 3D visualization (S7-1500T) ... 268

8.2 Working with the 3D display (S7-1500T) ... 269

8.3 Operating the zone display (S7-1500T) ... 271

8.4 Operating the directional pad (S7-1500T) ... 271

8.5 Monitoring and comparing position values (S7-1500T) ... 272

9 Commissioning (S7-1500T) ... 275

9.1 Control panel status (S7-1500T) ... 275

9.2 Taking over master control and enabling kinematics (S7-1500T) ... 276

9.3 Selecting an active tool (S7-1500T) ... 280

9.4 Operator controls for jogging and homing (S7-1500T) ... 280

9.5 Setting the home position of a kinematics axis (S7-1500T) ... 283

9.6 Active homing of the kinematics axis (S7-1500T) ... 283

9.7 Specifying dynamics in the kinematics control panel (S7-1500T) ... 284

9.8 Jogging the kinematics (S7-1500T) ... 285
9.8.1 Jogging the kinematics axes in the MCS (S7-1500T) ... 286
9.8.2 Jogging joints in the JCS (S7-1500T) ... 287
9.8.3 Cartesian kinematics jogging in WCS/OCS (S7-1500T) ... 287

9.9 Disabling kinematics and handing over master control (S7-1500T) ... 289

10 Diagnostics (S7-1500T) ... 290

10.1 Kinematics technology object (S7-1500T) ... 290
10.1.1 Structure of the diagnostics (S7-1500T) ... 290
10.1.2 Status and error bits (S7-1500T) ... 291
10.1.3 Zones status (S7-1500T) ... 293
10.1.4 Motion and tools (S7-1500T) ... 293
10.1.5 Positions (S7-1500T) ... 296

11 Kinematics trace (S7-1500T) ... 298

11.1 Defining parameter values for recording (S7-1500T) ... 298

11.2 List of recordings (S7-1500T) ... 300

11.3 Recording and playing kinematics motions (S7-1500T) ... 301

11.4 Saving and deleting recordings (S7-1500T) ... 303

11.5 Importing and exporting recordings (S7-1500T) ... 303

12 Calibration (S7-1500T) ... 305

12.1 Using 3D display for the calibration (S7-1500T) ... 305

12.2 Moving the kinematics for calibration (S7-1500T) ... 306

12.3 Display progress and status (S7-1500T) ... 306

12.4 Setting points (S7-1500T) ... 307

12.5 Apply or reset values (S7-1500T) ... 308

12.6 Calibrate object coordinate systems (S7-1500T) ... 308
12.6.1 Configuring calibration of an object coordinate system (S7-1500T) ... 308
12.6.2 Move OCS with the "Two-point" calibration method (S7-1500T) ... 309
12.6.3 Move OCS and rotate around the y axis (S7-1500T) ... 310
12.6.4 Move OCS with the "One-point" calibration method (S7-1500T) ... 310
12.6.5 Move OCS and rotate around one axis or two axes (S7-1500T) ... 310

12.6.6 Move OCS and rotate around the z axis (S7-1500T) ... 312
12.6.7 Examples (S7-1500T) ... 312
12.6.7.1 Introduction (S7-1500T) ... 312
12.6.7.2 Move OCS 1 (S7-1500T) ... 316
12.6.7.3 Move OCS 1 and rotate around the y axis (S7-1500T) ... 318
12.6.7.4 Move OCS 1 and rotate around z axis. (S7-1500T) ... 320
12.6.7.5 Move OCS 1 and rotate it around the z axis and y axis (S7-1500T) ... 322

12.7 Calibrate workspace zones (S7-1500T) ... 325
12.7.1 Configuring calibration of a workspace zone (S7-1500T) ... 325
12.7.2 Calibrate cuboid zone with corner points (S7-1500T) ... 326
12.7.3 Calibrate cylindrical zone with surface line (S7-1500T) ... 327
12.7.4 Calibrate cylindrical zone with circular plane (S7-1500T) ... 328
12.7.5 Calibrate spherical zone with diameter (S7-1500T) ... 329
12.7.6 Calibrate spherical zone with radius (S7-1500T) ... 330

13 Instructions (S7-1500T) ... 332

13.1 Kinematics motions (S7-1500T) ... 332
13.1.1 MC_GroupInterrupt V7 (S7-1500T) ... 332
13.1.1.1 MC_GroupInterrupt: Interrupt motion execution V7 (S7-1500T) ... 332
13.1.2 MC_GroupContinue V7 (S7-1500T) ... 333
13.1.2.1 MC_GroupContinue: Continue motion execution V7 (S7-1500T) ... 333
13.1.2.2 MC_GroupContinue: Function chart V7 (S7-1500T) ... 335
13.1.3 MC_GroupStop V7 (S7-1500T) ... 337
13.1.3.1 MC_GroupStop: Stop motion V7 (S7-1500T) ... 337
13.1.3.2 MC_GroupStop: Function chart V7 (S7-1500T) ... 339
13.1.4 MC_MoveLinearAbsolute V7 (S7-1500T) ... 340
13.1.4.1 MC_MoveLinearAbsolute: Position kinematics with linear path motion V7 (S7-1500T) ... 340
13.1.4.2 MC_MoveLinearAbsolute: Function chart V7 (S7-1500T) ... 344
13.1.5 MC_MoveLinearRelative V7 (S7-1500T) ... 345
13.1.5.1 MC_MoveLinearRelative: Relative positioning of kinematics with linear path motion V7 (S7-1500T) ... 345
13.1.5.2 MC_MoveLinearRelative: Function chart V7 (S7-1500T) ... 349
13.1.6 MC_MoveCircularAbsolute V7 (S7-1500T) ... 350
13.1.6.1 MC_MoveCircularAbsolute: Position kinematics with circular path motion V7 (S7-1500T) ... 350
13.1.6.2 MC_MoveCircularAbsolute: Function chart V7 (S7-1500T) ... 355
13.1.7 MC_MoveCircularRelative V7 (S7-1500T) ... 356
13.1.7.1 MC_MoveCircularRelative: Relative positioning of kinematics with circular path motion V7 (S7-1500T) ... 356
13.1.7.2 MC_MoveCircularRelative: Function chart V7 (S7-1500T) ... 361
13.1.8 MC_MoveDirectAbsolute V7 (S7-1500T) ... 363
13.1.8.1 MC_MoveDirectAbsolute: Absolute movement of kinematics with synchronous "point-to-point" motion V7 (S7-1500T) ... 363
13.1.8.2 MC_MoveDirectAbsolute: Function diagram V7 (S7-1500T) ... 369
13.1.9 MC_MoveDirectRelative V7 (S7-1500T) ... 371
13.1.9.1 MC_MoveDirectRelative: Relative movement of kinematics with synchronous "point-to-point" motion V7 (S7-1500T) ... 371
13.1.9.2 MC_MoveDirectRelative: Function chart V7 (S7-1500T) ... 376
13.1.10 MC_TrackConveyorBelt V7 (S7-1500T) ... 378
13.1.10.1 MC_TrackConveyorBelt: Start conveyor tracking V7 (S7-1500T) ... 378
13.1.10.2 MC_TrackConveyorBelt: Function chart V7 (S7-1500T) ... 380
13.1.11 MC_KinematicsMotionSimulation V7 (S7-1500T) ... 382

13.1.11.1 MC_KinematicsMotionSimulation: Start/end simulation of kinematics V7 (S7-1500T)..... 382

13.2 Zones (S7-1500T)..... 384
13.2.1 MC_DefineWorkspaceZone V7 (S7-1500T)..... 384
13.2.1.1 MC_DefineWorkspaceZone: Define workspace zone V7 (S7-1500T)..... 384
13.2.2 MC_DefineKinematicsZone V7 (S7-1500T)..... 386
13.2.2.1 MC_DefineKinematicsZone: Define kinematics zone V7 (S7-1500T)..... 386
13.2.3 MC_SetWorkspaceZoneActive V7 (S7-1500T)..... 388
13.2.3.1 MC_SetWorkspaceZoneActive: Activate workspace zone V7 (S7-1500T)..... 388
13.2.4 MC_SetWorkspaceZoneInactive V7 (S7-1500T)..... 389
13.2.4.1 MC_SetWorkspaceZoneInactive: Deactivate workspace zone V7 (S7-1500T)..... 389
13.2.5 MC_SetKinematicsZoneActive V7 (S7-1500T)..... 391
13.2.5.1 MC_SetKinematicsZoneActive: Activate kinematics zone V7 (S7-1500T)..... 391
13.2.6 MC_SetKinematicsZoneInactive V7 (S7-1500T)..... 392
13.2.6.1 MC_SetKinematicsZoneInactive: Deactivate kinematics zone V7 (S7-1500T)..... 392

13.3 Tools (S7-1500T)..... 394
13.3.1 MC_DefineTool V7 (S7-1500T)..... 394
13.3.1.1 MC_DefineTool: Redefine tool V7 (S7-1500T)..... 394
13.3.2 MC_SetTool V7 (S7-1500T)..... 396
13.3.2.1 MC_SetTool: Change active tool V7 (S7-1500T)..... 396

13.4 Coordinate systems (S7-1500T)..... 397
13.4.1 MC_SetOcsFrame V7 (S7-1500T)..... 397
13.4.1.1 MC_SetOcsFrame: Redefine object coordinate systems V7 (S7-1500T)..... 397
13.4.2 MC_KinematicsTransformation V7 (S7-1500T)..... 399
13.4.2.1 MC_KinematicsTransformation: Convert axis coordinates to Cartesian coordinates V7 (S7-1500T) 399
13.4.3 MC_InverseKinematicsTransformation V7 (S7-1500T)..... 401
13.4.3.1 MC_InverseKinematicsTransformation: Convert Cartesian coordinates to axis coordinates V7 (S7-1500T) 401

13.5 Override response of Motion Control jobs V7 (S7-1500T)..... 405
13.5.1 Override response V7: Homing and motion jobs (S7-1500T)..... 405
13.5.2 Override response V7: Synchronous operation jobs (S7-1500T)..... 407
13.5.3 Override response V7: Measuring input jobs (S7-1500T)..... 409
13.5.4 Override response V7: Kinematics motion commands (S7-1500T)..... 409

14 Tags of the technology object data blocks (S7-1500T)..... 412

14.1 Tags of the kinematics technology object (S7-1500T)..... 412
14.1.1 Legend (S7-1500T)..... 412
14.1.2 "Tcp" tag (kinematics) (S7-1500T)..... 412
14.1.3 "Kinematics" tag (kinematics) (S7-1500T)..... 413
14.1.4 "KcsFrame" tag (kinematics) (S7-1500T)..... 414
14.1.5 "OcsFrame[1..3]" tag (kinematics) (S7-1500T)..... 416
14.1.6 "Tool[1..3]" tag (kinematics) (S7-1500T)..... 417
14.1.7 "DynamicDefaults" tag (kinematics) (S7-1500T)..... 418
14.1.8 "DynamicLimits" tag (kinematics) (S7-1500T)..... 419
14.1.9 "Joint" tag (kinematics) (S7-1500T)..... 420
14.1.10 "AxisCoupling" tag (kinematics) (S7-1500T)..... 421
14.1.11 "MotionQueue" tag (kinematics) (S7-1500T)..... 421
14.1.12 "Transition" tag (kinematics) (S7-1500T)..... 421

14.1.13 "Override" tag (kinematics) (S7-1500T) ... 422
14.1.14 "WorkspaceZone[1..10]" tag (kinematics) (S7-1500T) ... 422
14.1.15 "KinematicsZone[2..10]" tag (kinematics) (S7-1500T) ... 424
14.1.16 "StatusPath" tag (kinematics) (S7-1500T) ... 425
14.1.17 "TcpInWcs" tag (kinematics) (S7-1500T) ... 426
14.1.18 "TcpInOcs[1..3]" tag (kinematics) (S7-1500T) ... 427
14.1.19 "StatusOcsFrame[1..3]" tag (kinematics) (S7-1500T) ... 428
14.1.20 "StatusKinematics" tag (kinematics) (S7-1500T) ... 430
14.1.21 "AxesData" tag (kinematics) (S7-1500T) ... 431
14.1.22 "JointData" tag (kinematics) (S7-1500T) ... 432
14.1.23 "FlangeInKcs" tag (kinematics) (S7-1500T) ... 432
14.1.24 "StatusTool" tag (kinematics) (S7-1500T) ... 434
14.1.25 "StatusConveyor[1..3]" tag (kinematics) (S7-1500T) ... 434
14.1.26 "StatusWorkspaceZone[1..10]" tag (kinematics) (S7-1500T) ... 436
14.1.27 "StatusKinematicsZone[2..10]" tag (kinematics) (S7-1500T) ... 437
14.1.28 "StatusZoneMonitoring" tag (kinematics) (S7-1500T) ... 438
14.1.29 "StatusMotionQueue" tag (kinematics) (S7-1500T) ... 439
14.1.30 "KinematicsAxis" tag (kinematics) (S7-1500T) ... 439
14.1.31 "Units" tag (kinematics) (S7-1500T) ... 439
14.1.32 "StatusWord" tag (kinematics) (S7-1500T) ... 441
14.1.33 "ErrorWord" tag (kinematics) (S7-1500T) ... 442
14.1.34 "ErrorDetail" tag (kinematics) (S7-1500T) ... 443
14.1.35 "WarningWord" tag (kinematics) (S7-1500T) ... 444
14.1.36 "ControlPanel" tag (kinematics) (S7-1500T) ... 444

Index ... 446

Introduction (S7-1500T) 1

Purpose of the documentation

This documentation provides important information that you need to configure and commission the integrated Motion Control functionality of the S7-1500 Automation systems.

Required basic knowledge

In order to understand this documentation, the following knowledge is required:

- General knowledge in the field of automation
- General knowledge in the field of drive engineering and motion control

Validity of the documentation

This documentation is valid for the S7-1500 product range.

Conventions

- For the path settings in the project navigation it is presumed that the "Technology objects" object is opened in the CPU subtree. The "Technology object" placeholder represents the name of the technology object.
  Example: "Technology object > Configuration > Basic parameters".
- The <TO> placeholder represents the name set in tags for the respective technology object.
  Example: <TO>.Actor.Type
- This documentation contains pictures of the devices described. The pictures may differ in minor details from the devices supplied.

You should also observe the notes that are marked as follows:

NOTE

A note contains important information about the product described in the documentation, about the handling of the product, and about sections in this documentation demanding your particular attention.

Industry Mall

The Industry Mall is the catalog and ordering system of Siemens AG for automation and drive solutions on the basis of Totally Integrated Automation (TIA) and Totally Integrated Power (TIP).

You can find catalogs for all automation and drive products on the Internet (https://mall.industry.siemens.com).

1.1 S7-1500 Motion Control Documentation Guide (S7-1500T)

Product information

Please also note the supplementary information on the Motion Control documentation:

- Product information on the S7-1500/1500T Motion Control documentation
  https://support.industry.siemens.com/cs/ww/en/view/109794046
  (https://support.industry.siemens.com/cs/ww/en/view/109794046)

Documentation

The documentation of the Motion Control functions is divided into the following documents:

- S7-1500/S7-1500T Motion Control Overview
  https://support.industry.siemens.com/cs/ww/en/view/109812056
  (https://support.industry.siemens.com/cs/ww/en/view/109812056)
  This document describes the innovations in the technology versions, functions that are used for all technology objects, and the process response of Motion Control applications.
- S7-1500/S7-1500T Motion Control alarms and error IDs
  https://support.industry.siemens.com/cs/ww/en/view/109812061
  (https://support.industry.siemens.com/cs/ww/en/view/109812061)
  This document describes the technology alarms of the technology objects and the error identifications of the Motion Control instructions.
- S7-1500/S7-1500T Axis functions
  https://support.industry.siemens.com/cs/ww/en/view/109812057
  (https://support.industry.siemens.com/cs/ww/en/view/109812057)
  This document describes the drive and encoder connection and functions for single-axis movements.
- S7-1500/S7-1500T Synchronous operation functions
  https://support.industry.siemens.com/cs/ww/en/view/109812059
  (https://support.industry.siemens.com/cs/ww/en/view/109812059)
  This document describes gearing, velocity synchronous operation and camming as well as cross-PLC synchronous operation.
- S7-1500/S7-1500T Measuring input and cam functions
  https://support.industry.siemens.com/cs/ww/en/view/109812060
  (https://support.industry.siemens.com/cs/ww/en/view/109812060)
  This document describes the detection of the actual position via a measuring input and the output of switching signals via output cam or cam track.
- S7-1500/S7-1500T Kinematics functions
  https://support.industry.siemens.com/cs/ww/en/view/109812058
  (https://support.industry.siemens.com/cs/ww/en/view/109812058)
  This document describes the control of kinematics with up to 6 interpolating axes.

See also

Topic page "SIMATIC Technology - Motion Control: Overview and Important Links"
https://support.industry.siemens.com/cs/ww/en/view/109751049
(https://support.industry.siemens.com/cs/ww/en/view/109751049)

1.2 Function Manuals documentation guide (S7-1500T)

1.2.1 Information classes Function Manuals (S7-1500T)

The documentation for the SIMATIC S7-1500 automation system, for the 1513/1516pro-2 PN, SIMATIC Drive Controller CPUs based on SIMATIC S7-1500 and the SIMATIC ET 200MP, ET 200SP, ET 200AL and ET 200eco PN distributed I/O systems is arranged into three areas.
This arrangement enables you to access the specific content you require.
You can download the documentation free of charge from the Internet (https://support.industry.siemens.com/cs/ww/en/view/109742705).

Basic information

The system manuals and Getting Started describe in detail the configuration, installation, wiring and commissioning of the SIMATIC S7-1500, SIMATIC Drive Controller, ET 200MP, ET 200SP, ET 200AL and ET 200eco PN systems. Use the corresponding operating instructions for 1513/1516pro-2 PN CPUs.
The STEP 7 online help supports you in the configuration and programming.
Examples:

- Getting Started S7-1500
- System manuals
- Operating instructions ET 200pro and 1516pro-2 PN CPU
- Online help TIA Portal

Device information

Equipment manuals contain a compact description of the module-specific information, such as properties, wiring diagrams, characteristics and technical specifications.
Examples:

- Equipment manuals for CPUs
- Equipment manuals for interface modules
- Equipment manuals for digital modules
- Equipment manuals for analog modules
- Equipment manuals for communication modules
- Equipment manuals for technology modules
- Equipment manuals for power supply modules
- Equipment manuals for BaseUnits

General information

The function manuals contain detailed descriptions on general topics relating to the SIMATIC Drive Controller and the S7-1500 automation system.
Examples:

- Function Manual Diagnostics
- Function Manual Communication
- Function Manuals Motion Control
- Function Manual Web Server
- Function Manual Cycle and Response Times
- PROFINET Function Manual
- PROFIBUS Function Manual

Product Information

Changes and supplements to the manuals are documented in a Product Information. The Product Information takes precedence over the device and system manuals.
You will find the latest Product Information on the Internet:

- S7-1500/ET 200MP (https://support.industry.siemens.com/cs/de/en/view/68052815)
- SIMATIC Drive Controller (https://support.industry.siemens.com/cs/de/en/view/109772684/en)
- Motion Control (https://support.industry.siemens.com/cs/de/en/view/109794046/en)
- ET 200SP (https://support.industry.siemens.com/cs/de/en/view/73021864)
- ET 200eco PN (https://support.industry.siemens.com/cs/ww/en/view/109765611)

Manual Collections

The Manual Collections contain the complete documentation of the systems put together in one file.
You will find the Manual Collections on the Internet:

- S7-1500/ET 200MP/SIMATIC Drive Controller (https://support.industry.siemens.com/cs/ww/en/view/86140384)
- ET 200SP (https://support.industry.siemens.com/cs/ww/en/view/84133942)
- ET 200AL (https://support.industry.siemens.com/cs/ww/en/view/95242965)
- ET 200eco PN (https://support.industry.siemens.com/cs/ww/en/view/109781058)

1.2.2 Basic tools (S7-1500T)

The tools described below support you in all steps: from planning, over commissioning, all the way to analysis of your system.

TIA Selection Tool

The TIA Selection Tool tool supports you in the selection, configuration, and ordering of devices for Totally Integrated Automation (TIA).
As successor of the SIMATIC Selection Tools , it assembles the configuration editors for automation technology already familiar into a single tool.

With the TIA Selection Tool , you can generate a complete order list from your product selection or product configuration.
You can find the TIA Selection Tool on the Internet.
(https://support.industry.siemens.com/cs/ww/en/view/109767888)

SIMATIC Automation Tool

You can use the SIMATIC Automation Tool to perform commissioning and maintenance activities on various SIMATIC S7 stations as bulk operations independent of TIA Portal.
The SIMATIC Automation Tool offers a wide range of functions:

- Scanning of a PROFINET/Ethernet system network and identification of all connected CPUs
- Assignment of addresses (IP, subnet, Gateway) and device name (PROFINET device) to a CPU
- Transfer of the date and the programming device/PC time converted to UTC time to the module
- Program download to CPU
- RUN/STOP mode switchover
- CPU localization through LED flashing
- Reading out of CPU error information
- Reading the CPU diagnostic buffer
- Reset to factory settings
- Firmware update of the CPU and connected modules

You can find the SIMATIC Automation Tool on the Internet.
(https://support.industry.siemens.com/cs/ww/en/view/98161300)

PRONETA

SIEMENS PRONETA (PROFINET network analysis) is a commissioning and diagnostic tool for PROFINET networks. PRONETA Basic has two core functions:

- The "Network analysis" offers a quick overview of the PROFINET topology. It is possible to make simple parameter changes (for example, to the names and IP addresses of the devices). In addition, a quick and convenient comparison of the real configuration with a reference system is also possible.
- The "IO test" is a simple and rapid test of the wiring and the module configuration of a plant, including documentation of the test results.

You can find SIEMENS PRONETA Basic on the Internet:
(https://support.industry.siemens.com/cs/ww/en/view/67460624)
SIEMENS PRONETA Professional is a licensed product that offers you additional functions. It offers you simple asset management in PROFINET networks and supports operators of automation systems in automatic data collection/acquisition of the components used through various functions:

- The user interface (API) offers an access point to the automation cell to automate the scan functions using MQTT or a command line.
- With PROFIenergy diagnostics, you can quickly detect the current pause mode or the readiness for operation of devices that support PROFIenergy and change these as needed.
- The data record wizard supports PROFINET developers in reading and writing acyclic PROFINET data records quickly and easily without PLC and engineering.

You can find SIEMENS PRONETA Professional on the Internet.
(https://www.siemens.com/proneta-professional)

SINETPLAN

SINETPLAN, the Siemens Network Planner, supports you in planning automation systems and networks based on PROFINET. The tool facilitates professional and predictive dimensioning of your PROFINET installation as early as in the planning stage. In addition, SINETPLAN supports you during network optimization and helps you to exploit network resources optimally and to plan reserves. This helps to prevent problems in commissioning or failures during productive operation even in advance of a planned operation. This increases the availability of the production plant and helps improve operational safety.

The advantages at a glance

- Network optimization thanks to port-specific calculation of the network load
- Increased production availability thanks to online scan and verification of existing systems
- Transparency before commissioning through importing and simulation of existing STEP 7 projects
- Efficiency through securing existing investments in the long term and the optimal use of resources

You can find SINETPLAN on the Internet
(https://new.siemens.com/global/en/products/automation/industrial-communication/profinet/sinetplan.html).

1.2.3 SIMATIC Technical Documentation (S7-1500T)

Additional SIMATIC documents will complete your information. You can find these documents and their use at the following links and QR codes.

The Industry Online Support gives you the option to get information on all topics. Application examples support you in solving your automation tasks.

Overview of the SIMATIC Technical Documentation

Here you will find an overview of the SIMATIC documentation available in Siemens Industry Online Support:

Industry Online Support International
(https://support.industry.siemens.com/cs/ww/en/view/109742705)

Watch this short video to find out where you can find the overview directly in Siemens Industry Online Support and how to use Siemens Industry Online Support on your mobile device:

Quick introduction to the technical documentation of automation products per video (https://support.industry.siemens.com/cs/us/en/view/109780491)

YouTube video: Siemens Automation Products - Technical Documentation at a Glance (https://youtu.be/TwLSxxRQQsA)

mySupport

With "mySupport" you can get the most out of your Industry Online Support.

Registration	You must register once to use the full functionality of "mySupport". After registration, you can create filters, favorites and tabs in your personal workspace.
Support requests	Your data is already filled out in support requests, and you can get an overview of your current requests at any time.
Documentation	In the Documentation area you can build your personal library.
Favorites	You can use the "Add to mySupport favorites" to flag especially interesting or frequently needed content. Under "Favorites", you will find a list of your flagged entries.
Recently viewed articles	The most recently viewed pages in mySupport are available under "Recently viewed articles".
CAx data	The CAx data area gives you access to the latest product data for your CAx or CAe system. You configure your own download package with a few clicks: • Product images, 2D dimension drawings, 3D models, internal circuit diagrams, EPLAN macro files • Manuals, characteristics, operating manuals, certificates • Product master data

You can find "mySupport" on the Internet. (https://support.industry.siemens.com/My/ww/en)

Application examples

The application examples support you with various tools and examples for solving your automation tasks. Solutions are shown in interplay with multiple components in the system - separated from the focus on individual products.
You can find the application examples on the Internet.
(https://support.industry.siemens.com/cs/ww/en/ps/ae)

Safety instructions (S7-1500T) 2

Siemens provides products and solutions with industrial security functions that support the secure operation of plants, systems, machines and networks.

In order to protect plants, systems, machines and networks against cyber threats, it is necessary to implement – and continuously maintain – a holistic, state-of-the-art industrial security concept. Siemens' products and solutions constitute one element of such a concept.

Customers are responsible for preventing unauthorized access to their plants, systems, machines and networks. Such systems, machines and components should only be connected to an enterprise network or the internet if and to the extent such a connection is necessary and only when appropriate security measures (e.g. firewalls and/or network segmentation) are in place.

For additional information on industrial security measures that may be implemented, please visit (https://www.siemens.com/industrialsecurity).

Siemens' products and solutions undergo continuous development to make them more secure. Siemens strongly recommends that product updates are applied as soon as they are available and that the latest product versions are used. Use of product versions that are no longer supported, and failure to apply the latest updates may increase customers' exposure to cyber threats.

To stay informed about product updates, subscribe to the Siemens Industrial Security RSS Feed visit (https://www.siemens.com/cert).

New features V7.0 (S7-1500T) 3

Technology version V7.0 contains the following new features:

- For motion preparation of the kinematics technology object, you can improve the system performance using the properties of MC-LookAhead [OB97]. This is possible with the modular S7-1500T(F) CPUs and the SIMATIC Drive Controller as of firmware version V3.0.

  NOTE

  Upgrade

  If you are using user-defined kinematics, disable the system performance improvement after upgrading to technology version V7.0.

  Note the information provided in the section "Upgrading to technology version V7.0" (Page 21).

- You configure mechanical axis couplings in the "Interconnections" configuration window.
- In the new "Joints" configuration window, you configure the joints of the kinematics types with more than four kinematics axes.
- Kinematics control panel:
  - You can now execute the functions of the kinematics control panel with new sliders. You can use the new sliders to finely adjust velocities of motions.
  - 3D visualization provides visual support for commissioning the kinematics technology object.
  - In the JCS, you can jog each kinematics joint individually forward, backward or to a set target position.
  - You can find the dynamics settings for commissioning in the Inspector window under "Properties".
  - The status bits in the "Control panel status" diagnostics window show you whether all kinematics axes are switched on and homed and whether there are errors on the kinematics or the kinematics axes. You can also show additional diagnostics windows via the toolbar.
  - Error messages for commissioning via the kinematics control panel are displayed in a yellow banner above the toolbar.
- Kinematics trace:
  - You can record a maximum of 64 signals in a kinematics trace.
  - You can show or hide the TCP orientation as trace in the kinematics trace.
- The "MC_MoveDirectAbsolute" and "MC_MoveDirectRelative" Motion Control instructions have been extended by the "TurnJoint" parameter.
- The "MC_KinematicsTransformation" and "MC_InverseKinematicsTransformation" Motion Control instructions have been extended by the "AxesCoordSystem" parameter.
- The arrays of the following instruction parameters have been extended from [1..4] to [1..6]:
  - MC_MoveLinearAbsolute.Position
  - MC_MoveLinearRelative.Distance
  - MC_MoveCircularAbsolute.EndPoint

- MC_MoveCircularRelative.EndPoint
- MC_MoveDirectAbsolute.Position
- MC_MoveDirectRelative.Distance
- MC_KinematicsTransformation.AxesPosition
- MC_KinematicsTransformation.AxesVelocity
- MC_KinematicsTransformation.AxesAcceleration
- MC_InverseKinematicsTransformation.Position
- MC_InverseKinematicsTransformation.Velocity
- MC_InverseKinematicsTransformation.Acceleration

NOTE
Upgrade
When upgrading to technology version V7.0, you must adapt the user program.
Note the information provided in the section "Upgrading to technology version V7.0" (Page 21).

- The tag structure of the following tags has been extended by the coordinates B and C:
  - <TO>.Tcp
  - <TO>.KcsFrame
  - <TO>.OcsFrame
  - <TO>.Tool
  - <TO>.TcpInWcs
  - <TO>.TcpInOcs
  - <TO>.StatusOcsFrame[1..3]
  - <TO>.FlangeInKcs
  - <TO>.StatusTool
  - <TO>.StatusConveyor[1..3]
  - <TO>.StatusWorkspaceZone[1..10]

S7-1500T Motion Control KinPlus

- You can use the "S7-1500T Motion Control KinPlus" Motion Control package to configure and commission predefined kinematics types with more than four kinematics axes.
- The following kinematics types are available:
  - Cartesian portal 3D with 2 orientations A, B
  - 6-axis articulated arm with central hand
  - Delta picker 3D with 2 orientations A, B
  - User defined kinematics 3D with 3 orientations
- Joints:
  - The joint coordinate system (JCS) is available.
  - The tag "<TO>.Joint" contains the configuration of the joints for kinematics types with more than four interpolating kinematics axes.
  - The tag "<TO>.JointData" contains the setpoints of the kinematics motion for the joints.
- The tag "<TO>.AxisCoupling" contains the configuration of the mechanical axis coupling for kinematics types with more than four interpolating kinematics axes.

3.1 Upgrading to technology version V7.0 (S7-1500T)

Extend default Motion Control instructions for kinematics movements and transformation information

Extend the ARRAY [1..4] OF LREAL to ARRAY [1..6] OF LREAL for target coordinates at the Motion Control instructions for kinematics movements and for the default at the Motion Control instructions for transformation information. The parameters have been extended at the instructions for programming kinematics with more than four kinematics axes. As the same instructions are used for programming kinematics with up to four kinematics axes, you must extend the array. To program kinematics with up to four kinematics axes, parameterize array elements 5 and 6 with "0.0".

The following parameters of the instructions have been extended to six elements:

Instruction	Parameters	Technology version	
		≤ V6.0	V7.0
MC_MoveLinearAbsolute	Position	ARRAY [1..4] OF LREAL	ARRAY [1..6] OF LREAL
MC_MoveLinearRelative	Distance		
MC_MoveCircularAbsolute	EndPoint		
MC_MoveCircularRelative	EndPoint		
MC_MoveDirectAbsolute	Position		
MC_MoveDirectRelative	Distance		
MC_KinematicsTransformation	AxesPosition		
	AxesVelocity		
	AxesAcceleration		
MC_InverseKinematicsTransformation	Position		
	Velocity		
	Acceleration		

Upgrading data types with user-defined transformation

When upgrading to technology version V7.0, the "TO_Struct_TransformationAxisData_V1" and "TO_Struct_TransformationCartesianData_V1" data types are automatically upgraded in the "TransformationParameter" system data block.

Manually update the following data types to V2 at all points of use in the project:

Technology version	
≤ V6.0	V7.0
TO_Struct_TransformationAxisData_V1	TO_Struct_TransformationAxisData_V2
TO_Struct_TransformationCartesianData_V1	TO_Struct_TransformationCartesianData_V2
REF_TO TO_Struct_TransformationParameter_V1	REF_TO TO_Struct_TransformationParameter_V2

Disabling system performance improvement for user-defined kinematics

When the technology version is upgraded to V7.0, system performance improvement for motion preparation of the kinematics technology object is enabled.

If you are using user-defined kinematics, clear the "Improve system performance" check box in the MC-LookAhead [OB97] properties under "General > Multi-core processor".

Overview of functions (S7-1500T) 4

4.1 Kinematics systems for handling tasks (S7-1500T)

Kinematics are user-programmable mechanical systems in which multiple mechanically coupled axes produce the motion of a working point. The S7-1500T technology CPUs provide functions for controlling kinematics systems, e.g. for handling tasks, with the kinematics technology object. Typical applications include:

- Pick & Place
- Installation
- Palletizing

The kinematics control panel and extensive online and diagnostic functions support straightforward commissioning of kinematics systems. The kinematics technology object is fully integrated in the system diagnostics of the S7-1500T CPU.

4.2 Kinematics technology object with up to 4 interpolating kinematics axes (S7-1500T)

The kinematics technology object calculates motion setpoints for the tool center point (TCP) of the kinematics taking into account the dynamic settings. The kinematics technology object calculates the motion setpoints for the individual axes of the kinematics and vice versa from the current values of the axes using the kinematics transformation. The kinematics technology object outputs the axis-specific motion setpoints to the interconnected positioning axes.

The kinematics technology object provides the kinematics transformation (Page 162) for the predefined kinematics types on the system level. In the case of user-defined kinematics systems, you must provide the user transformation (Page 173-174) in a separate program.

You create the individual axes of the kinematics in the TIA Portal as "Positioning axis" or "Synchronous axis" technology objects. When you configure the kinematics technology object, you interconnect the axes in accordance with the configured kinematics type.

You can find an overview of the functions of the kinematics technology object in the section "Motion control instructions for kinematics control (Page 26)".

The graphic below shows the basic principle of operation of the kinematics technology object with up to four interpolating kinematics axes:

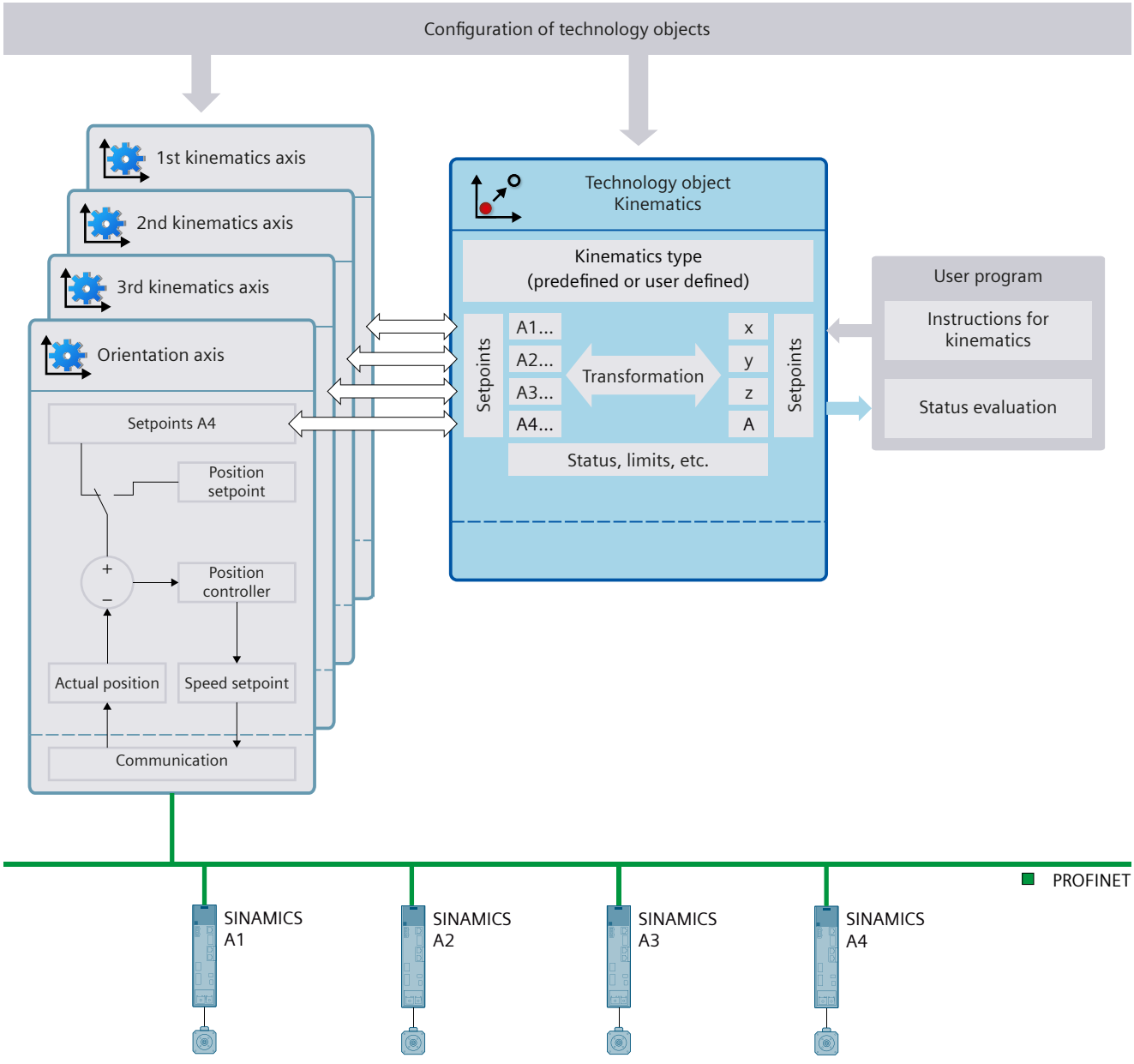

Configuration

The following configurations are available in the kinematics technology object:

- Basic parameters
  - Kinematics (Page 47)
  - Units of measure (Page 48)
- Interconnections
  - Interconnecting kinematics axes (Page 50)
  - Mechanical axis coupling (Page 51-52)
- Geometry (Page 58)
- Conveyor tracking (Page 254)
- Dynamics
  - Presets and limits (Page 213)
  - Dynamic adaptation (Page 215)
- Kinematics coordinate system, object coordinate systems and tools
  - Coordinate systems and frames (Page 38)
  - Kinematics types with up to four interpolating kinematics axes. (Page 40)
  - Offset and rotation of the coordinate system (Page 186)
- Zones (Page 191)
- Job sequence (Page 217)

4.3 Motion control instructions for kinematics control (S7-1500T)

You execute the functions of the kinematics technology object using the Motion Control instructions in your user program or the TIA Portal (under "Technology object > Commissioning").
The following table shows the motion control instructions that are supported by the kinematics technology object:

Motion control instruction	Brief description
Kinematics motions	
"MC_GroupInterrupt"	Interrupt motion execution
"MC_GroupContinue"	Continue motion execution
"MC_GroupStop"	Stop motion
"MC_MoveLinearAbsolute"	Position kinematics with linear path motion
"MC_MoveLinearRelative"	Relative positioning of kinematics with linear path motion
"MC_MoveCircularAbsolute"	Position kinematics with circular path motion
"MC_MoveCircularRelative"	Relative positioning of kinematics with circular path motion
"MC_MoveDirectAbsolute"	Absolute movement of kinematics with synchronous "point-to-point" motion
"MC_MoveDirectRelative"	Relative movement of kinematics with synchronous "point-to-point" motion
"MC_TrackConveyorBelt"	Start conveyor tracking
"MC_KinematicsMotionSimulation"	Start/end simulation of kinematics

Motion control instruction	Brief description
Zones	
"MC_DefineWorkspaceZone"	Define workspace zone
"MC_DefineKinematicsZone"	Define kinematics zone
"MC_SetWorkspaceZoneActive"	Activate workspace zone
"MC_SetWorkspaceZoneInactive"	Deactivate workspace zone
"MC_SetKinematicsZoneActive"	Activate kinematics zone
"MC_SetKinematicsZoneInactive"	Deactivate kinematics zone
Tools	
"MC_DefineTool"	Redefine tool
"MC_SetTool"	Change active tool
Coordinate systems	
"MC_SetOcsFrame"	Redefine object coordinate systems
"MC_KinematicsTransformation"	Convert axis coordinates to Cartesian coordinates
"MC_InverseKinematicsTransformation"	Convert Cartesian coordinates to axis coordinates

4.4 Functions in STEP 7 (S7-1500T)

The following table shows the functions supported by the kinematics technology object in STEP 7:

Functions in the TIA Portal	Brief description
Kinematics control panel (Page 275)	• Active homing of the kinematics axes • Jog kinematics in WCS or OCS • Jog individual kinematics axes in MCS • Jog joints in the JCS
Diagnostics (Page 290)	Monitor and observe status and error messages of the kinematics technology object
Kinematics trace (Page 298)	• 3D visualization of the current motion of the tool center point (TCP) and the object coordinate systems (OCS) • Record, play back and save kinematics motions • Exporting and importing recordings
Calibration (Page 305)	• Determine exact position of object coordinate systems • Define workspace zones • Move tool center point offline in the 3D view using the directional pad • Move real kinematics online with the kinematics control panel

4.5 Configuration limits for kinematics systems (S7-1500T)

Motion control resources

Each CPU offers a defined set of "Motion Control resources". For information on the total Motion Control resources available, refer to the technical specifications of the utilized CPU.

You can find an overview of the Motion Control resources of a CPU in the TIA Portal under "Tools > Resources".

Extended Motion Control resources (S7-1500T)

In addition to the Motion Control resources of the interconnected axes, a kinematics technology object utilizes 30 "Extended Motion Control resources". For information on the maximum number of usable kinematics systems, refer to the technical specifications of the utilized CPU.

You can find the technical specifications of the S7-15xxT CPUs in the respective manual.

Application cycle

As the number of technology objects used increases, the computing time needed by the CPU to process the technology objects increases. The Motion Control application cycle can be adapted according to the number of technology objects used.

S7-1500T Motion Control KinPlus (S7-1500T) 5

5.1 Product description of S7-1500T Motion Control KinPlus (S7-1500T)

To control kinematics with 5 or 6 interpolating axes, the S7-1500T kinematics functions must be supplemented with the Motion Control package "S7-1500T Motion Control KinPlus".

Type of delivery

The required function extensions are not included in the firmware of the technology CPUs. Instead, they are delivered as Motion Control package "S7-1500T Motion Control KinPlus". The Motion Control package "S7-1500T Motion Control KinPlus" contains the full Motion Control firmware with the function extensions. The Motion Control functions for kinematics with up to 4 axes and all other Motion Control functions, such as homing or synchronous operation, are also loaded from the Motion Control package "S7-1500T Motion Control KinPlus".

The Motion Control package must be copied to a SIMATIC Memory Card of the type "S7-1500T Motion Control KinPlus". The firmware with the function extensions is loaded from this card in runtime.

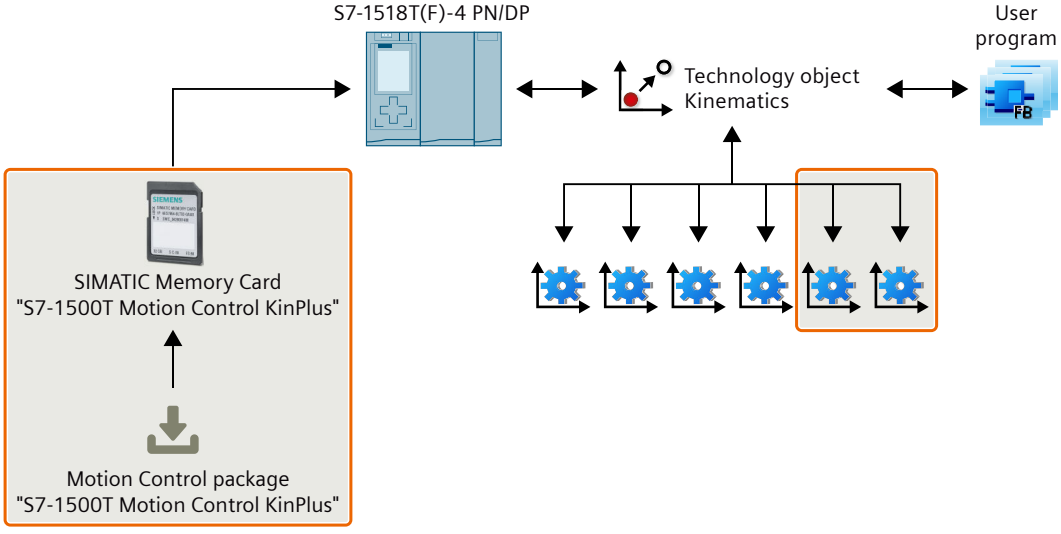

The SIMATIC Memory Card for "S7-1500T Motion Control KinPlus" is available with the following storage capacity:

Product	Article number
S7-1500T Motion Control KinPlus **2 GB**	6ES7 954-8LP80-0AA0
S7-1500T Motion Control KinPlus **32 GB**	6ES7 954-8LT80-0AA0

Motion Control package "S7-1500T Motion Control KinPlus" is available as a software download via Online Software Delivery (OSD).

Product	Article number
S7-1500T Motion Control KinPlus package as software download	6ES7 823-0KE00-1AA0

Supported CPUs

"S7-1500T Motion Control KinPlus" can be used on the following CPUs:

- S7-1507D TF with SINAMICS S120 Integrated
- S7-1518T-4 PN/DP
- S7-1518TF-4 PN/DP

Simulation with PLCSIM and PLCSIM Advanced is not supported.

Supported kinematics types

The kinematics technology object additionally supports the following kinematics types:

- Cartesian portal with 2 orientations A, B
- 6-axis articulated arm with central hand
- Delta picker with 2 orientations A, B
- User-defined kinematics 3D with 3 orientations

5.2 Kinematics technology object with more than 4 interpolating kinematics axes (S7-1500T)

If a SIMATIC Memory Card with the Motion Control package "S7-1500T Motion Control KinPlus" is plugged into the CPU, the kinematics technology object calculates the motion setpoints for the tool center point for kinematics with more than 4 kinematics axes. The kinematics technology object calculates the motion setpoints for the individual axes of the kinematics and vice versa from the current values of the axis using the kinematics transformation. The dynamic specifications are included in all calculations. The kinematics technology object outputs the axis-specific motion setpoints to the interconnected positioning or synchronous axes.

For the predefined kinematics types, the kinematic transformation (Page 162) is part of the kinematics technology object. For the user-defined kinematics 3D with 3 orientations, you need to provide the kinematics transformation in a separate program.

You create the individual axes of the kinematics in the TIA Portal as "Positioning axis" or "Synchronous axis" type technology objects. When you configure the kinematics technology object, you interconnect the axes in accordance with the configured kinematics type.

The following graphic shows the basic function of the kinematics technology object when using S7-1500T Motion Control KinPlus:

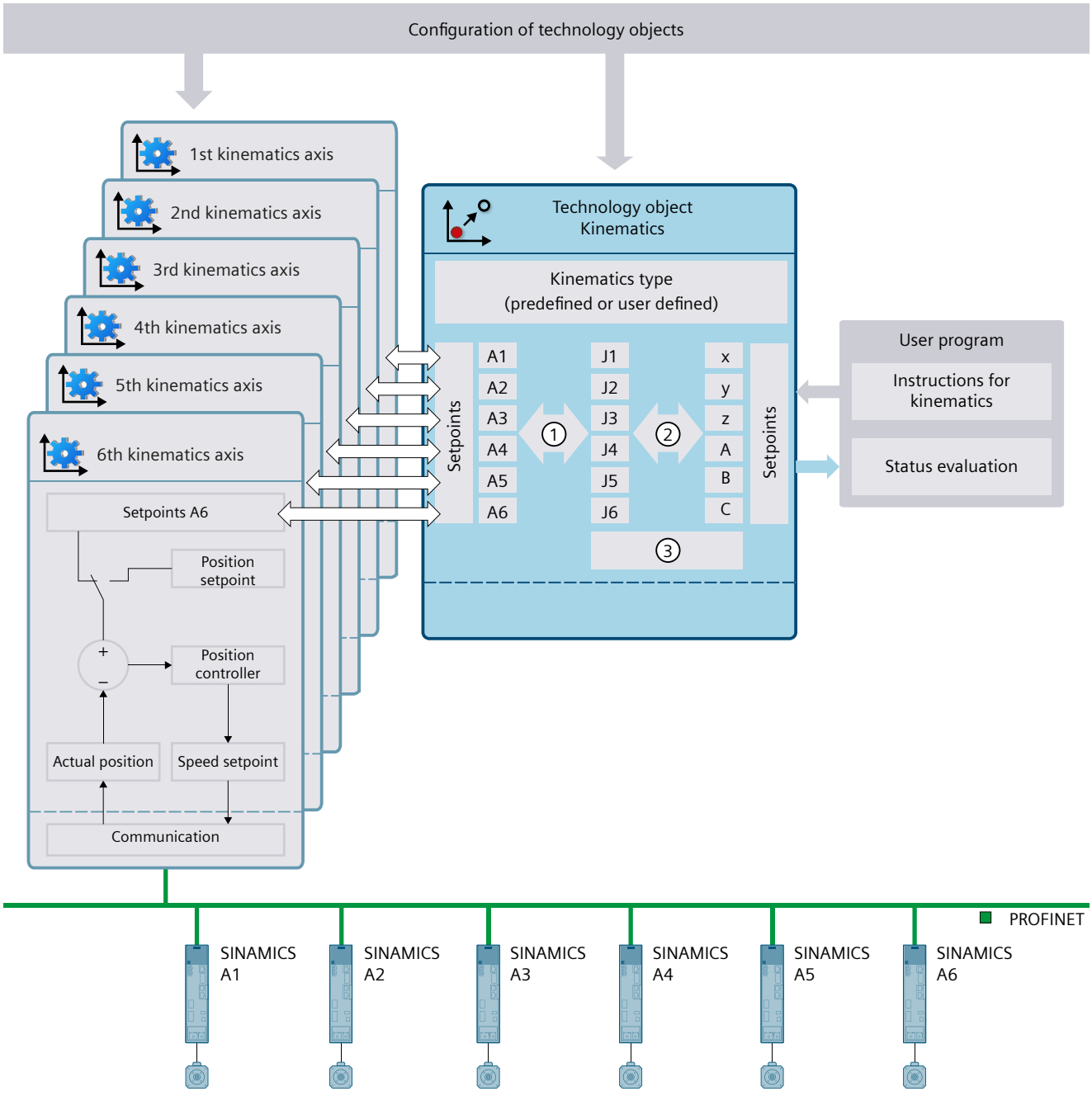

① Mechanical axis couplings

② Offsets
Inverted direction of movement
Transformation

③ Status, joint traversing range limits

For kinematics with more than 4 kinematics axes, the joint coordinate system (JCS) represents mechanical positions of the kinematics joints, while the MCS displays the axis positions. The joint coordinates can be specified as target coordinates for sPTP motions.

Configuration

In the kinematics technology object, the following configurations are available for kinematics types with more than 4 kinematics axes:

- Basic parameters
  - Kinematics (Page 47)
  - Units of measure (Page 48)
- Interconnections
  - Interconnecting kinematics axes (Page 50)
  - Mechanical axis coupling (Page 52)
  - Joints (Page 54)
- Geometry (Page 196)
- Conveyor tracking (Page 254)
- Dynamics
  - Presets and limits (Page 213)
  - Dynamic adaptation (Page 215)
- Kinematics coordinate system, object coordinate systems and tools
  - Coordinate systems and frames (Page 38)
  - Kinematics types with more than four kinematics axes (Page 42)
  - Offset and rotation of the coordinate system (Page 186)
- Zones (Page 193)
- Job sequence (Page 217)

Motion Control instructions

All Motion Control instructions supported by the kinematics technology object can also be used for kinematics with more than 4 interpolating axes.

You can find more information under Motion control instructions for kinematics control (Page 26).

Functions in STEP 7

The following table shows the functions supported by S7-1500T Motion Control KinPlus in STEP 7:

Functions in the TIA Portal	Brief description
Kinematics control panel (Page 275)	• Active homing of the kinematics axes • Jog kinematics in WCS or OCS • Jog individual kinematics axes in MCS • Jog joints in the JCS
Diagnostics (Page 290)	Monitor and observe status and error messages of the kinematics technology object
Kinematics trace (Page 298)	• 3D visualization of the current motion of the tool center point (TCP) and the object coordinate systems (OCS) • Record, play back and save kinematics motions • Exporting and importing recordings

Functions in the TIA Portal	Brief description
Calibration (Page 305)	• Determine exact position of object coordinate systems • Define workspace zones • Move tool center point offline in the 3D view using the directional pad • Move real kinematics online with the kinematics control panel

5.3 SIMATIC Memory Card S7-1500T Motion Control KinPlus (S7-1500T)

The SIMATIC Memory Card with the Motion Control package "S7-1500T Motion Control KinPlus" is marked with "S7-1500T MC KinPlus".

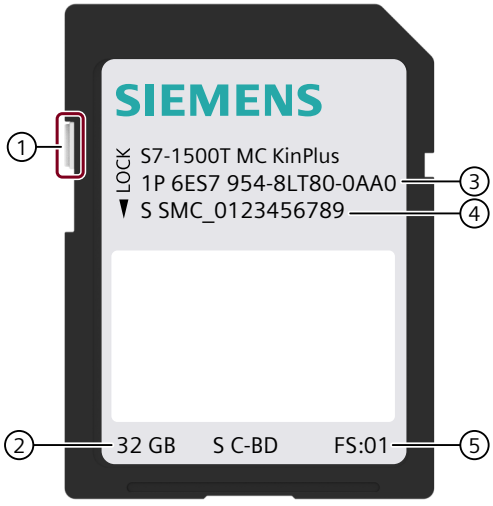

① Slider for setting write protection:
- Slider up: not write-protected
- Slider down: write-protected

② Memory size

③ Article number

④ Serial number

⑤ Production version

The card can contain the Motion Control package "S7-1500T Motion Control KinPlus" and all files that are also on a normal SIMATIC Memory Card.

You can find more information about using the SIMATIC Memory Card in the function manual "Structure and Use of the CPU Memory (https://support.industry.siemens.com/cs/ww/en/view/59193101)".

Enable Motion Control package "S7-1500T Motion Control KinPlus"

The SIMATIC Memory Card does not contain a Motion Control package "S7-1500T Motion Control KinPlus" in the following situations:

- The card is still unused.
- All versions have been deleted.
- The card has been formatted via the TIA Portal or the CPU display.

Procedure

The required Motion Control package "S7-1500T Motion Control KinPlus" with the file name "6ES7 823-0KI20-1AA0 V07.00.00.upd" is available as an OSD download.

1. Load the zip file containing the Motion Control package "S7-1500T Motion Control KinPlus".
2. Create the folder "\MCRC\" on the SIMATIC Memory Card.
3. Copy the file "6ES7 823-0KI20-1AA0 V07.00.00.upd" into the folder "\MCRC\" ("Motion Control Runtime Component") on the SIMATIC Memory Card. Copy the file to the SIMATIC Memory Card using a card reader or the SIMATIC web server. You can only use the file on a SIMATIC Memory Card with the label "MC KinPlus".
4. To activate the Motion Control package on the CPU, insert the SIMATIC Memory Card into the SIMATIC CPU. After POWER OFF → POWER ON of the CPU, the firmware extension is loaded and can be used as long as the card is inserted.

Show loaded Motion Control package

To check if the firmware extension "S7-1500T Motion Control KinPlus" has been loaded successfully, check the current Motion Control package.

You can find the version and type of the loaded Motion Control package via the following options:

- Under Online and Diagnostics > General in the Motion Control Package Information area.
- In the diagnostic buffer in the event description for the loaded version
- In the display of the CPU under Overview > Motion Control Package Information
- In the web server on the page Diagnostics > Motion Control Package Information

If the Motion Control package "S7-1500T Motion Control KinPlus" is successfully loaded, "Package name: MC KinPlus" is displayed. The version and internal version of the Motion Control package is also displayed. If "Package name: MC Base" is displayed, the Motion Control package "S7-1500T Motion Control KinPlus" is not loaded.

Upgrade the Motion Control package

To upgrade the Motion Control package, copy the new UPD file into the folder "\MCRC\". The UPD file with the highest version from the folder "\MCRC\" is always loaded during the startup of the CPU. The version of the Motion Control package is included in the file name. The newest version is always loaded if there are several versions of the Motion Control package "S7-1500T Motion Control KinPlus" on the card.

Delete data on the card

To preserve the possibility of restoring an earlier version, save the existing file on another data medium before deleting it.

To free up memory on the SIMATIC Memory Card, delete Motion Control package files with earlier versions if you have copied different versions of the Motion Control package to the card.

Format SIMATIC Memory Card

Formatting the SIMATIC Memory Card deletes the Motion Control package "S7-1500T Motion Control KinPlus".

Before formatting the SIMATIC Memory Card, save the Motion Control package file on an external data medium.

WARNING

Memory card unusable

Formatting the SIMATIC Memory Card via Windows applications makes it unusable.

Format the memory card exclusively via the TIA Portal or the display of the CPU.

NOTICE

Motion Control package "S7-1500T Motion Control KinPlus" deleted

If you select the option to format the SIMATIC Memory Card when restoring the factory settings for the module, the Motion Control package "S7-1500T Motion Control KinPlus" is deleted.

Before you restore the factory settings for the module and format the SIMATIC Memory Card, save the Motion Control package file on an external data medium.

CPU replacement

If you replace the CPU, you only have to plug the SIMATIC Memory Card "S7-1500T Motion Control KinPlus" into the new device with compatible firmware.

Mapping kinematics in the project (S7-1500T) 6

6.1 Term definition (S7-1500T)

Kinematics

Kinematics are user-programmable mechanical systems in which multiple mechanically coupled axes produce the motion of a working point.

Kinematics axes

Kinematics axes are the axes of the kinematics motion. You connect each kinematics axis with a positioning axis/synchronous axis technology object.

Kinematics zero point (KZP)

The coordinate origin of the kinematics coordinate system (KCS) is the KZP. You configure the geometry parameters of the kinematics starting from the KZP.

Zero point of the flange coordinate system (FNP)

The coordinate origin of the flange coordinate system (FCS) is the FNP. Starting from the FNP, you define, for example, the flange zones of the kinematics.

Tool center point (TCP)

The coordinate origin of the tool coordinate system (TCS) is the tool center point or TCP. The TCP is the operating point of the kinematics.

Degrees of freedom of kinematics

The degrees of freedom of kinematics are the dimensions in which the tool can move. 2D kinematics systems move the tool in the xz plane and thus have 2 translational degrees of freedom. 3D kinematics systems move the tool in xyz space and thus have 3 translational degrees of freedom. The optional orientation of the tool is 1 to 3 more degrees of freedom (rotations around the z, y and x axis).

Machine coordinate system (MCS)

The MCS contains the position data of the interconnected kinematics axes and thus combines up to six one-dimensional systems in one system.

Joint coordinate system (JCS)

The JCS contains the geometric positions of the kinematics joints. Joints can perform linear or rotary movements.

Job sequence

The job sequence of the kinematics technology object is the memory to which motion-related Motion Control jobs are entered as pending, waiting jobs. The job sequence allows the calculation of a velocity profile over several jobs.

AxesGroup

Kinematics-related Motion Control instructions have the input parameter "AxesGroup". Because the kinematics technology object groups the kinematics axes, you assign the kinematics technology object directly to the input parameter "AxesGroup".

Joint position space

Depending on the kinematics type, a kinematics can reach Cartesian coordinates via various joint positions. The kinematics type (Page 58) defines the possible joint positions and the positive and negative joint position spaces. The joint position spaces are limited by the respective transformation areas.

Joint traversing range

The joint traversing range defines the minimum and maximum traversing position of a joint.

Target joint position range

A target joint position range defines the number of revolutions of a joint.

6.2 Legend for representation of the kinematics (S7-1500T)

The following table shows the graphic elements and symbols used in the display of kinematics and coordinate systems:

Graphic element	Meaning
	Basis of kinematics
	Kinematics arm
	Kinematics deflected from zero position
	Active rotary axis

Graphic element	Meaning
	• Passive joint • Axis guide
	Active linear axis
	Rotary axis on the tool adapter
	Swivel axis
	Tool adapter
	Tool (gripper)
	Coordinate axis set up out of the mapping plane
	Coordinate axis set up into the mapping plane
	Color x axis
	Color y axis
	Color z axis

6.3 Coordinate systems and frames (S7-1500T)

A handling task involves many objects, e.g. kinematics systems, tools, pallets and products. You describe these objects and their relative positions with coordinate systems and frames. The kinematics technology object calculates all motions for the tool center point (TCP).

Coordinate systems

The kinematics technology object uses the following right-handed Cartesian coordinate systems according to DIN 66217:

- World coordinate system (WCS)
- Kinematics coordinate system (KCS)
- Flange coordinate system (FCS)
- Tool coordinate system (TCS)
- Object coordinate systems (OCS)

The following graphic shows the relative position of the coordinate systems using a workspace example:

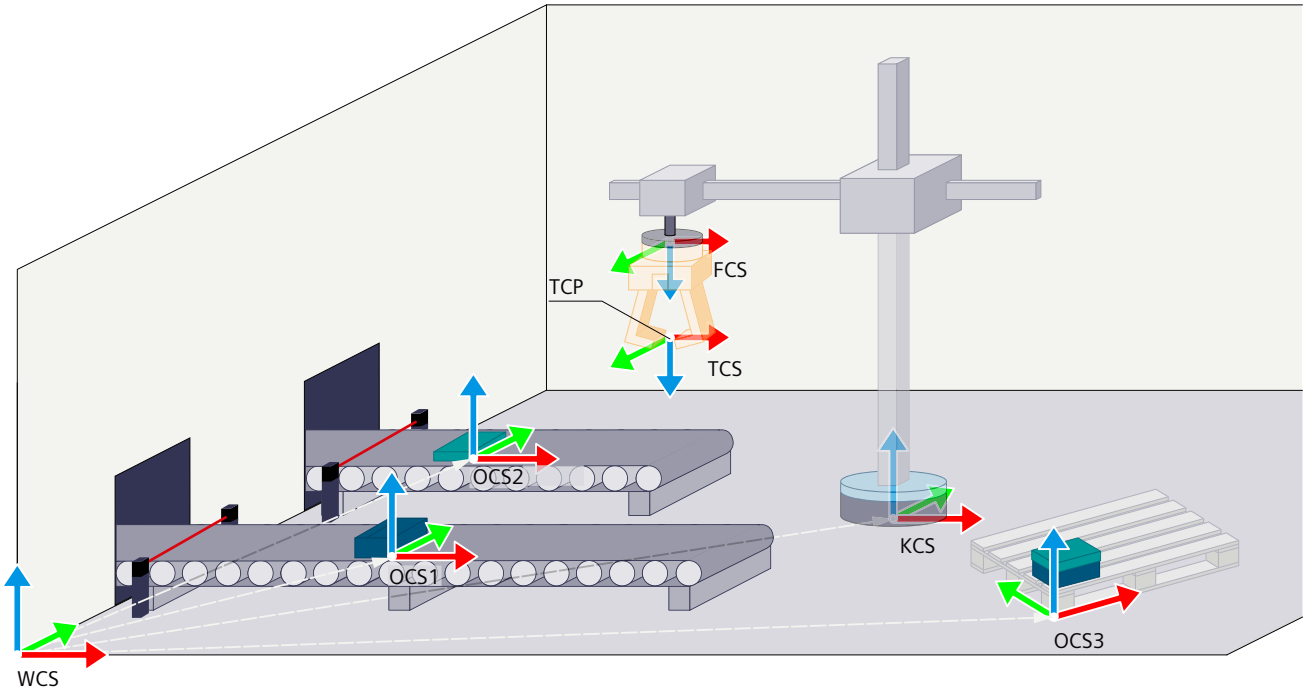

The position of the FCS and the TCS in the zero position of the kinematics is defined differently for the following kinematics types:

- Kinematics types with up to four interpolating kinematics axes. (Page 40)
- Kinematics types with more than four kinematics axes (Page 42)

World coordinate system (WCS)

The WCS is the fixed coordinate system of the environment or workspace of the kinematics. The zero point of the WCS is the reference point for objects and motions on the kinematics technology object. Starting from the zero point of the WCS (e.g. corner of a workspace), you define the position of the objects using frames.

Kinematics coordinate system (KCS)

The KCS is connected to the kinematics. The position of the KCS within the kinematics is specified for each predefined kinematics type. The coordinate origin of the KCS is the kinematics zero point (KZP). You configure the geometry parameters of the kinematics starting from the KZP.

You configure the position of the KCS in the WCS using the KCS frame.

Object coordinate system (OCS)

The OCS is a user-defined coordinate system. With an OCS, for example, you define the position of a pallet in the workspace. You define the position of the OCS in the WCS with an OCS frame. You can define up to 3 OCS frames which are active at the same time.

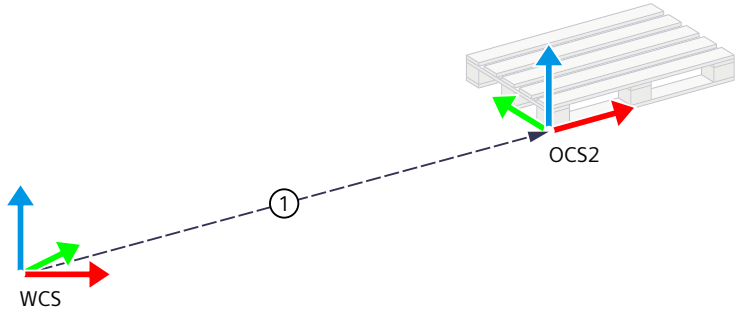

① OCS frame

Frames

Frames specify the offset and rotation of one coordinate system relative to another coordinate system.
The following table shows the frames for the kinematics technology object:

Frame	Description
KCS frame	Position of the kinematics coordinate system (KCS) in the world coordinate system (WCS)
Transformation frame	Position of the flange coordinate system (FCS) in the KCS The transformation frame results from the kinematics transformation and is displayed in the "<TO>.FlangeInKcs" tag of the technology object.
Tool frame	Position of the tool coordinate system (TCS) in the FCS
OCS1..3 frame	Position of the object coordinate systems 1 to 3 (OCS1..3) in the WCS

6.3.1 Kinematics types with up to four interpolating kinematics axes. (S7-1500T)

Flange coordinate system (FCS)

The FCS is attached to the tool adapter (flange) of the kinematics. As a result, the position of the FCS changes with kinematics motions.
The position of the FCS in the zero position of the kinematics results from the configuration of the geometry parameters of the kinematics. The kinematics technology object calculates the transformation frame from the geometry parameters.
The transformation frame describes the position of the FCS in the KCS. The z axis of the FCS always points in the negative z direction of the KCS. A rotation of the FCS around z of the KCS is possible for kinematics types with orientation.

The following graphic shows the positions of the FCS and KCS and the transformation frame using the "Cylindrical robot" kinematics example:

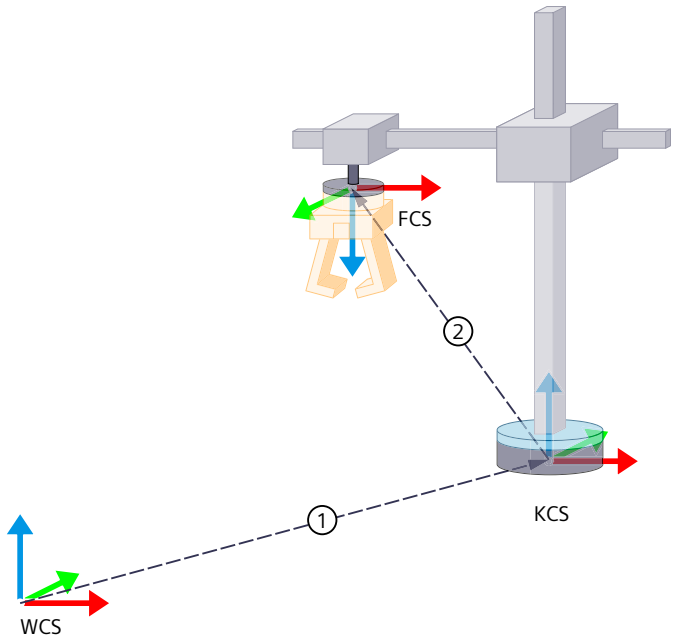

① KCS frame

② Transformation frame

Tool coordinate system (TCS - Tool Coordinate System) and tool center point (TCP - Tool Center Point)

The TCS is attached to the FCS and defines the tool center point (TCP) in the coordinate origin. The TCP is the operating point of the tool. The kinematics motions always refer to the TCP (with reference to WCS/OCS). You define the position of the TCS in the FCS using a tool frame.

You can define tool frames for up to three tools, of which only one tool and one tool frame is active at the same time. The procedure for the definition of tool frames is described in the section "Defining tool frames" (Page 189).

The position of the TCS is defined at the target position reached for kinematics types with up to 4 interpolating axes as follows:

- The x direction of the TCS is the same as the x direction of the target position.
- The y direction of the TCS is opposite to the y direction of the target position.
- The z direction of the TCS always points in the negative z direction of the target position.

The following graphic shows the position of the TCS and the TCP in the workspace:

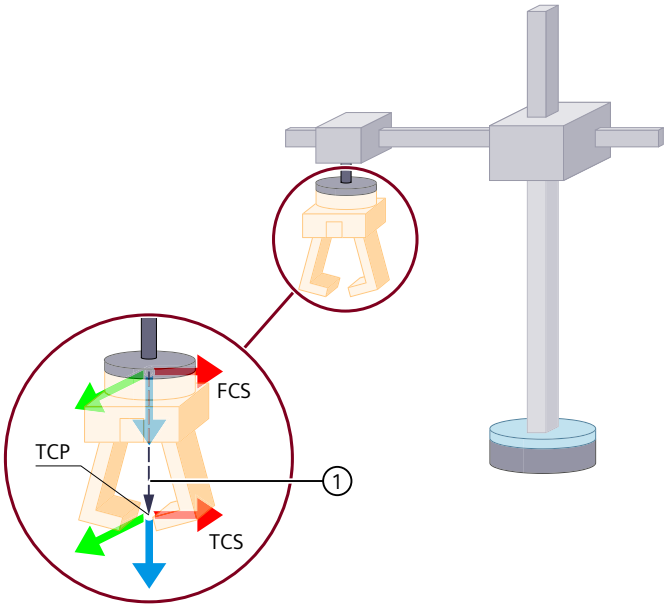

① Tool frame

The following graphic shows the position of the TCS before and after a kinematics motion:

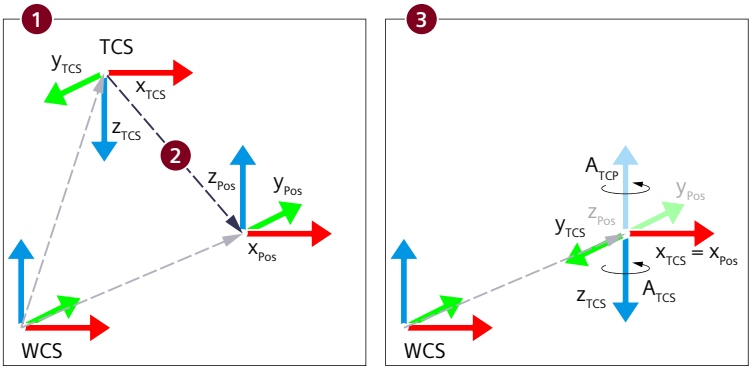

① TCS at initial position

② Kinematics motion to target position

③ TCS at the target position reached

For kinematics types with orientation, the orientation is negative relative to the TCS and positive relative to the TCP or WCS.

6.3.2 Kinematics types with more than four kinematics axes (S7-1500T)

Flange coordinate system (FCS)

The FCS is attached to the tool adapter (flange) of the kinematics. As a result, the position of the FCS changes with kinematics motions.

The position of the FCS in the zero position of the kinematics results from the configuration of the geometry parameters of the kinematics. The kinematics technology object calculates the transformation frame from the geometry parameters.

The x axis of the FCS is defined in the outward direction of the flange normal vector. This means that the x axis of the FCS is also in the direction of the tool length vector if the tool frame of the TCS is defined without rotation.

In contrast to kinematics with up to four interpolating kinematics axes, the z axis of the FCS does not always point in the negative direction of the KCS.

The following graphic shows the positions of the FCS and KCS and the transformation frame of a kinematics with five kinematics axes using the "Delta picker 3D with 2 orientations A, B" kinematics as an example:

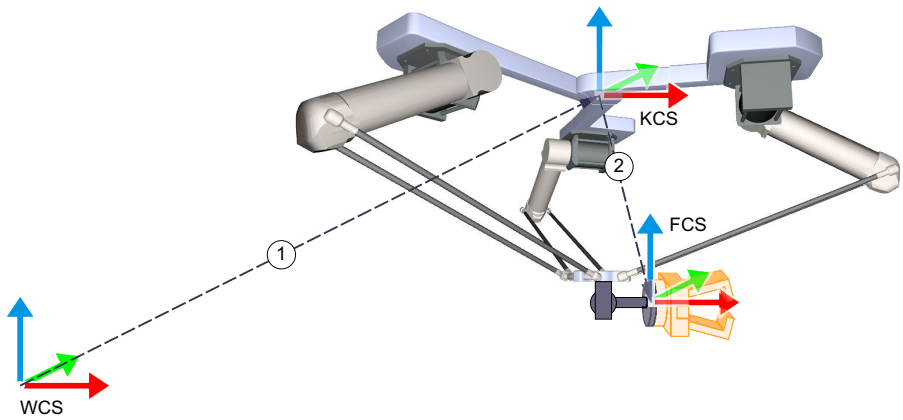

① KCS frame

② Transformation frame

The following graphic show the alignment of the FCS at other joint positions of the kinematics:

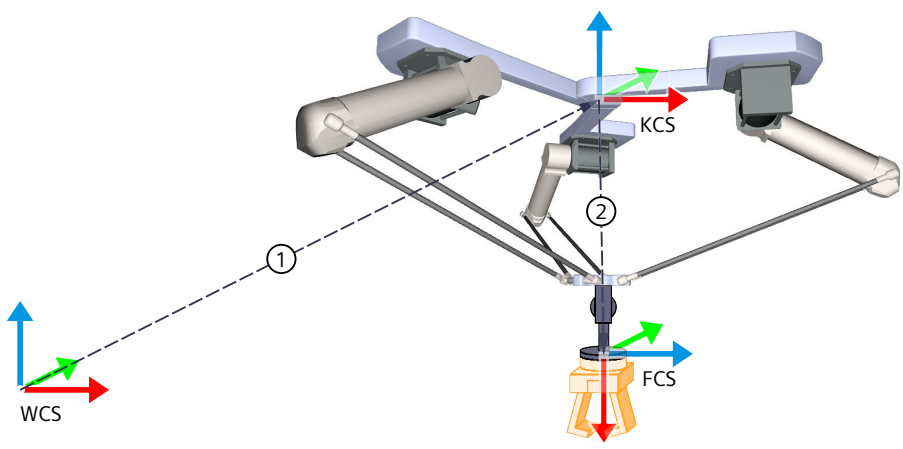

① KCS frame

② Transformation frame

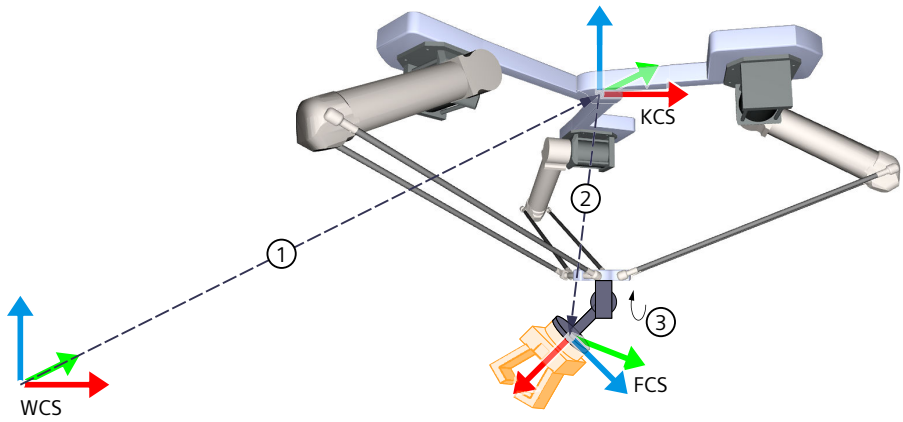

① KCS frame
② Transformation frame
③ Pivot

Tool coordinate system (TCS - Tool Coordinate System) and tool center point (TCP - Tool Center Point)

The TCS is attached to the FCS and defines the tool center point (TCP) in the coordinate origin. The TCP is the operating point of the tool. The kinematics motions always refer to the TCP (with reference to WCS/OCS). You define the position of the TCS in the FCS using a tool frame.

You can define tool frames for up to three tools, of which only one tool and one tool frame is active at the same time. The procedure for the definition of tool frames is described in the section "Defining tool frames" (Page 189).

The position of the TCS is defined at the target position reached for kinematics types with more than 4 interpolating axes as follows:

- The x direction of the TCS is the same as the x direction of the target position.
- The y direction of the TCS is the same as the y direction of the target position.
- The z direction of the TCS is the same as the z direction of the target position.

The following graphic shows the position of the TCS and the TCP in the workspace:

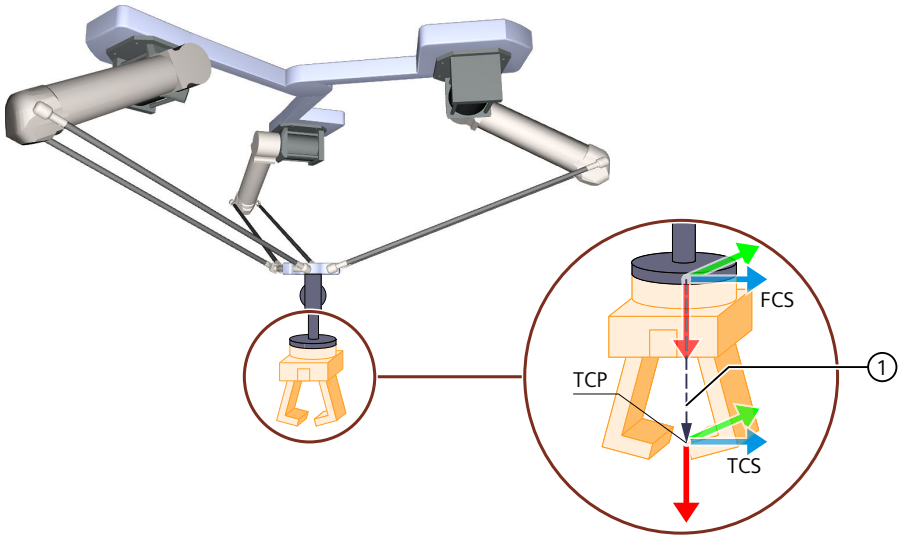

① Tool frame

The following graphic shows the position of the TCS before and after a kinematics motion:

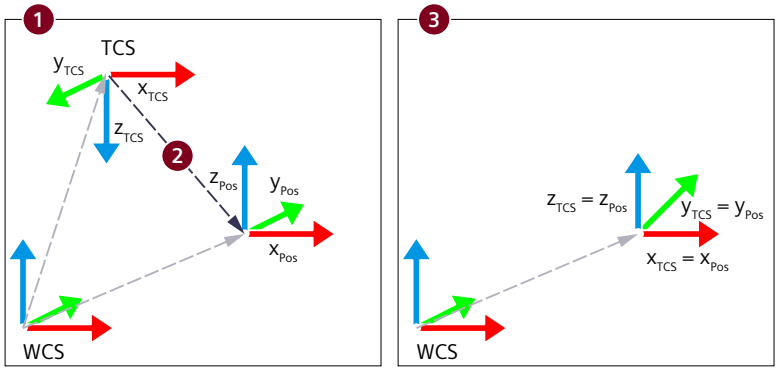

① TCS at initial position
② Kinematics motion to target position
③ TCS at the target position reached

6.4 Adding, copying and deleting a kinematics technology object (S7-1500T)

6.4.1 Adding a kinematics technology object (S7-1500T)

The following describes how to add a kinematics technology object in the project tree.

Requirement

A project with a CPU S7-1500T is created.

Procedure

To add a kinematics technology object, follow these steps:

1. Open the CPU's folder in the project navigator.
2. Open the "Technology Objects" folder.
3. Double-click "Add new object".
   The "Add new object" dialog opens.
4. Select "TO_Kinematics". You can infer the function of the technology object from the displayed description.
5. In the "Name" input field, adapt the name of the kinematics to your requirements.
   The technology object is listed under this name in the project tree. The tags of the technology object can be used in the user program under this name.
6. To change the suggested data block number, select the "Manual" option.
7. To add your own information about the technology object, click "Additional information".
8. To open the configuration after adding the technology object, select the "Add new and open" check box.
9. To add the technology object, click "OK".

Result

The new kinematics technology object was created and placed in the "Technology objects" folder of the project tree.

6.4.2 Copying a kinematics technology object (S7-1500T)

The following describes how to copy a kinematics technology object in the project tree.

Requirement

- A project with a CPU S7-1500T is created.
- A kinematics technology object is created in the project.

Procedure

To copy a kinematics technology object, follow these steps:

1. Open the CPU's folder in the project navigator.
2. Open the "Technology Objects" folder.
3. Select the kinematics technology object to be copied.
4. To also copy the interconnected axes, select them as well. To select multiple axes, press and hold down the <Ctrl> key.
5. Select "Copy" in the shortcut menu.
6. Select the "Technology objects" folder.
7. Select "Paste" in the shortcut menu.

Result

The selected kinematics technology object, together with any selected interconnected axes, are copied and created in the "Technology objects" folder of the project tree.

6.4.3 Deleting a kinematics technology object (S7-1500T)

The following describes how to delete a kinematics technology object in the project tree.

Requirement

- A project with a CPU S7-1500T is created.
- A kinematics technology object is created in the project.

Procedure

To delete a kinematics technology object, follow these steps:

1. Open the CPU's folder in the project navigator.
2. Open the "Technology Objects" folder.
3. Select the kinematics technology object to be deleted.
4. Select the "Delete" command in the shortcut menu.
   The "Confirm delete" dialog is opened.
5. To delete the technology object, click "Yes".

Result

The selected kinematics technology object has been deleted. The axes interconnected to the kinematics technology object are retained.

6.5 Supported kinematics types (S7-1500T)

The type of the mechanical system and the number of the axes determine the kinematics type. The mechanically coupled axes produce the motion of the tool center point (TCP). Depending on the kinematics type, you configure the kinematics using appropriate geometry parameters.
The kinematics technology object supports the following kinematics types:

Category	Kinematics type
Predefined kinematics systems	
Cartesian portal (Page 58-59)	Cartesian portal 2D
	Cartesian portal 2D with orientation
	Cartesian portal 3D
	Cartesian portal 3D with orientation

1) S7-1500T Motion Control KinPlus

Category	Kinematics type
Cartesian portal (Page 58-59)	Cartesian portal 3D with 2 orientations A, B [1]
Roller picker (Page 73)	Roller picker 2D
	Roller picker 2D with orientation
	Roller picker 3D (vertical)
	Roller picker 3D with orientation (vertical)
	Roller picker 3D with orientation (horizontal)
SCARA (Page 88)	SCARA 2D with orientation
	SCARA 3D with orientation
Articulated arm (Page 97)	Articulated arm 2D
	Articulated arm 2D with orientation
	Articulated arm 3D
	Articulated arm 3D with orientation
	6-axis articulated arm with central hand [1]
Delta picker (Page 127)	Delta picker 2D
	Delta picker 2D with orientation
	Delta picker 3D
	Delta picker 3D with orientation
	Delta picker 3D with 2 orientations A, B [1]
Cylindrical robot (Page 144)	Cylindrical robot 3D
	Cylindrical robot 3D with orientation
Tripod (Page 154)	Tripod 3D
	Tripod 3D with orientation
User-defined kinematics systems	
User-defined kinematics systems (Page 161)	User-defined 2D
	User-defined 2D with orientation A
	User-defined 3D
	User-defined 3D with orientation A
	User-defined 3D with 3 orientations [1]

[1] S7-1500T Motion Control KinPlus

6.6 Units of measure (S7-1500T)

Select the units of measure available for the technology object from the drop-down lists. Setting or changing the units of measurement affects the parameter values:

- Display of parameter values in the technology data block
- Assignment of parameters in the user program
- Input and display of the position and velocity in the TIA Portal

All information and displays correspond to the selected unit of measure.

The set units are displayed in the "<TO>.Units" tag structure of the technology object. The tag structure is described in the ""Units" tag (kinematics) (Page 439)" section.

Position and velocity

The following table shows the supported units of measure for position and velocity of linear axes:

Position	Velocity
nm, µm, mm[1], m, km	mm/s[1], mm/min, mm/h, m/s, m/min, m/h, km/min, km/h
in, ft, mi	in/s, in/min, ft/s, ft/min, mi/h

[1] Six decimal places when the option box "Use position values with higher resolution" is selected.

The following table shows the supported units of measure for angle and angular velocity of rotational axes:

Angle	Angular velocity
°[1], rad	°/s[1], °/min, rad/s, rad/min

[1] Six decimal places when the option box "Use position values with higher resolution" is selected.

Acceleration

The acceleration is set accordingly as the position/s^2 (angle/s^2) unit of measure.

Jerk

The jerk is set as the position/s^3 (angle/s^3) unit of measure.

Units of measure of the axes and the kinematics technology object

The technology objects always transfer values without units of measure.

For example, if you set [mm] for an axis and [m] for the kinematics technology object, the kinematics technology object miscalculates the position values of the linear axis in [m]. If, in this example, the kinematics technology object outputs a setpoint for a one-meter motion, the axis only moves by one millimeter.

The kinematics technology object outputs linear and rotary setpoints to the interconnected axes according to the kinematics type. The kinematics technology object does not check the axis type of the interconnected axis (linear or rotary).

Configure the units of measure as follows:

- Configure the interconnected technology objects as linear or rotary axes according to the kinematics type.
- Configure the same linear/rotary units of measure for the axes interconnected according to the kinematics type as for the kinematics technology object.
- Configure the same units of measure on the interconnected axes for all linear axes and for all rotary axes.

Position values with higher resolution

If you select the "Use position values with higher resolution" check box in the configuration of the positioning axis, synchronous axis, external encoder and kinematics technology objects, six decimal places are available in the selected unit, instead of the standard three. Due to the LREAL format, the representable position and angle range in [mm] and [°] is limited to +/-

1.0E09. You can then only use the units mm, mm/s, ° and °/s. If you have previously configured other units, these will automatically be changed to the unit "mm, mm/s, ° or °/s".

The following values are reduced by a factor of 1000 for position values with a higher resolution:

- Displayable position range
- Displayable angular range
- Mechanical gear ratio
- Numerical traversing range with regard to long-term stability
- Dynamic values for velocity, acceleration and deceleration

6.7 Configuring and interconnecting kinematics axes (S7-1500T)

You can interconnect a kinematics technology object with positioning axes and synchronous axes. There must be a clear reference between the kinematics technology object and the interconnected axes. You cannot use a second kinematics technology object with already interconnected axes.

Depending on the kinematics type, you need 2 to 6 positioning axes or synchronous axes, which you interconnect with the kinematics.

Depending on the kinematics type, the following kinematics axes are relevant:

Kinematics type	Kinematics axis					
	A1	A2	A3	A4	A5 [1]	A6 [1]
2D	✓	✓	-	-	-	-
2D with orientation	✓	✓	-	✓	-	-
3D	✓	✓	✓	-	-	-
3D with orientation	✓	✓	✓	✓	-	-
3D with 2 orientations A, B [1]	✓	✓	✓	✓	✓	-
3D with 3 orientations [1]	✓	✓	✓	✓	✓	✓
6-axis articulated arm with central hand [1]						

✓ Relevant

- Not relevant

[1] Only with S7-1500T Motion Control KinPlus

6.7.1 Configuring kinematics axes (S7-1500T)

Configure the following basic parameters of the axes depending on the kinematics used:

- Select the axis type according to the kinematics axes for the kinematics type (Page 58) used
- Set Configuring kinematics axes (Page 50) according to the kinematics type used or the interconnected kinematics axis

The following additional basic parameters are relevant for the interconnected kinematics axes:

- Configuring kinematics axes (Page 50)
- Units of measure (Page 48)

Modulo setting

The kinematics technology object itself has no modulo setting. When you interconnect axes with active modulo setting to the kinematics technology object, the modulo range of the axes must cover at least the traversing range of the kinematics.

For the kinematics types with up to 4 interpolating axes, the zero position of the axis must correspond to the zero position of the kinematics axis. The Modulo range of the kinematics axes A1, A2 and A3 cannot be changed during a kinematics motion.

For the Cartesian orientations, you can specify an angle greater than 360°. A relative motion traverses this angle. An absolute motion maps this angle in the following ranges:

- A = -180° to 179.999°

The following ranges for the orientation are defined in addition for kinematics types with more than four interpolating kinematics axes:

- B = -90° to 90°
- C = -180° to 179,999°

For kinematics types with more than four interpolating kinematics axes, the "Modulo" setting should not be enabled for the axes A4, A5 and A6.

Axis in simulation/virtual axis

You can also interconnect the kinematics technology object with axes in simulation and virtual axes.

6.7.2 Interconnecting kinematics axes (S7-1500T)

Interconnect the axes of kinematics in the "Interconnections" configuration window.

Kinematics axes

In the drop-down lists, select the desired axes depending on the kinematics type (Page 58). Positioning axes and synchronous axes which are already created in the project are shown in the drop-down lists. Axes that are already interconnected are also visible in the drop-down lists but cannot be interconnected twice.

No provision is made for changing the interconnection of the axes during operation.

You directly call the configuration of the selected technology object using the button. Configure the interconnected technology objects according to the kinematics type (Page 50).

6.8 Mechanical axis coupling (S7-1500T)

6.8.1 Mechanical axis coupling for kinematics types with up to four interpolating kinematics axes. (S7-1500T)

If the position of a kinematics axis changes due to the motion of another kinematics axis, these two axes are mechanically coupled. Mechanical couplings between two kinematics axes can arise for reasons of construction. For example, if the kinematics axis A4 of the "SCARA" kinematics is coupled to the spindle of a linear axis, the orientation changes due to the motion of the linear axis.

NOTE

If you set a mechanical axis coupling for a first axis to a second axis, the setting "Modulo" must not be activated for the first axis.

The kinematics transformation compensates for the mechanical couplings with a compensation factor. You specify the mechanical couplings and respective compensation factor depending on the kinematics type during configuration of the kinematics.

You can configure the mechanical axis coupling for the following kinematics types:

- SCARA 2D with orientation (Page 88)
- SCARA 3D with orientation (Page 91)
- Articulated arm 2D (Page 97)
- Articulated arm 2D with orientation (Page 100)
- Articulated arm 3D (Page 103)
- Articulated arm 3D with orientation (Page 109)
- Cylindrical robot 3D with orientation (Page 149)

You can find additional information on the setting and the compensation factor in the description of the kinematics type used.

6.8.2 Mechanical axis coupling for kinematics types with more than four interpolating kinematics axes. (S7-1500T)

Mechanical axis couplings of two axes mean that when the "<TO>.AxisCoupling.N[1].CausingAxis" axis moves by a distance or an angle, the position of another joint also changes without the coupled axis "<TO>.AxisCoupling.N[1].AffectedAxis" or the motor of the axis. The motor encoder of the coupled axis "<TO>.AxisCoupling.N[1].AffectedAxis" does not detect any change in position.

Configuring the mechanical axis coupling

If there are mechanical axis couplings, configure them in the "Interconnections" configuration window of the kinematics.

The coupling factor defines the position change of the tracked joint in relation to the position change of the moved axis.

The coupling factor <TO>.AxisCoupling.N[1..5].Factor defines the position change of the coupled axis "<TO>.AxisCoupling.N[1].AffectedAxis" in relation to the position change of the coupled axis "<TO>.AxisCoupling.N[1].CausingAxis".

The coupling factor is defined as a quotient, but the two position items do not need to be identical. The position changes are specified in a numerical value (without unit) of the position unit of the kinematics axis.

$$\text{Coupling factor} = \frac{\text{Position change coupled axis}}{\text{Position change causing axis}}$$

Example 1

When the axis A4 is moved by +90°, the joint J4 is moved by +90° and joint J5 is moved by 9° along with it, even though axis A5 does not move. This results in a coupling factor between axis A4 and axis A5 of:

$$\text{Coupling factor} = \frac{9}{90} = 0.1$$

Example 2

When the axis A4 is moved by 90°, the joint J4 is moved by 90°. The joint J5 is not affected. There is no mechanical coupling between axis A4 and axis A5.

Example 3

When the axis A4 is moved by 90°, the joint J4 is moved by 90° and joint J5 is also moved by -0.9 mm, even though axis A5 does not move. This results in a coupling factor between axis A4 and axis A5 of:

$$\text{Coupling factor} = \frac{-0.9}{90} = -0.01$$

NOTE

The coupling factor for kinematics with joint coordinate system (JCS) behaves inversely to the compensation factor of kinematics without joint coordinate system.

Determining coupling factors

You have the following options to determine the coupling factors:

- Determination based on the mechanical data of the kinematics
- Detection of the position change at the affected axis via an external measuring system with movement of the axis "<TO>.AxisCoupling.N[1..5].CausingAxis"
- Determination based on position change of the affected joint

Determination based on position change of the affected joint

Follow these steps to determine the coupling factor using the position change of the affected joint:

1. Move the affected joint into the zero position.
2. Move the coupled joint via the assigned axis by a defined distance or an angle, e.g. by 5°. The axis moves by 5° in this case when the direction of movement of the joint is not inverted.
3. Jog the axis "<TO>.AxisCoupling.N[1..5].CausingAxis" so that the coupled axis is moved again in the mechanical zero position without the motor of the affected axis moving.
4. You calculate the axis coupling factor from the moved position change of the axis "<TO>.AxisCoupling.N[1..5].CausingAxis" from step 3 and the known position change of the coupled axis "<TO>.AxisCoupling.N[1..5].AffectedAxis" (5°) from step 2.

6.8.3 Tags: Mechanical axis coupling (S7-1500T)

For the mechanical axis coupling for kinematics types with more than four interpolating kinematics axes, the following tags of the kinematics technology object are relevant:

Tag	Description
Configuration of the mechanical axis coupling	
<TO>.AxisCoupling.N[1..5].Enable	Enabling/disabling the mechanical axis coupling
<TO>.AxisCoupling.N[1..5].CausingAxis	Coupling axis
<TO>.AxisCoupling.N[1..5].AffectedAxis	Coupled axis
<TO>.AxisCoupling.N[1..5].Factor	Coupling factor

6.9 Joints (S7-1500T)

6.9.1 Joint coordinate system (JCS) (S7-1500T)

The joint coordinate system (JCS) represents the real mechanical positions of the kinematics joints.

Functions

The JCS offers the following functions:

- Display current positions, velocities and accelerations of the joints of a kinematics
- Direct movement of the joints of a kinematics without moving mechanically coupled joints
- Traversing range limit of the joints by defining a joint traversing range (Page 56)
- Specification of the joint position ranges of a kinematics system on sPTP jobs
- Setting of zero point and counting direction of the joints

Setpoint calculation at the kinematics

The following diagram shows the kinematics transformation, the calculation of the joint coordinates (in the JCS) and the calculation of the axis coordinates (in the MCS):

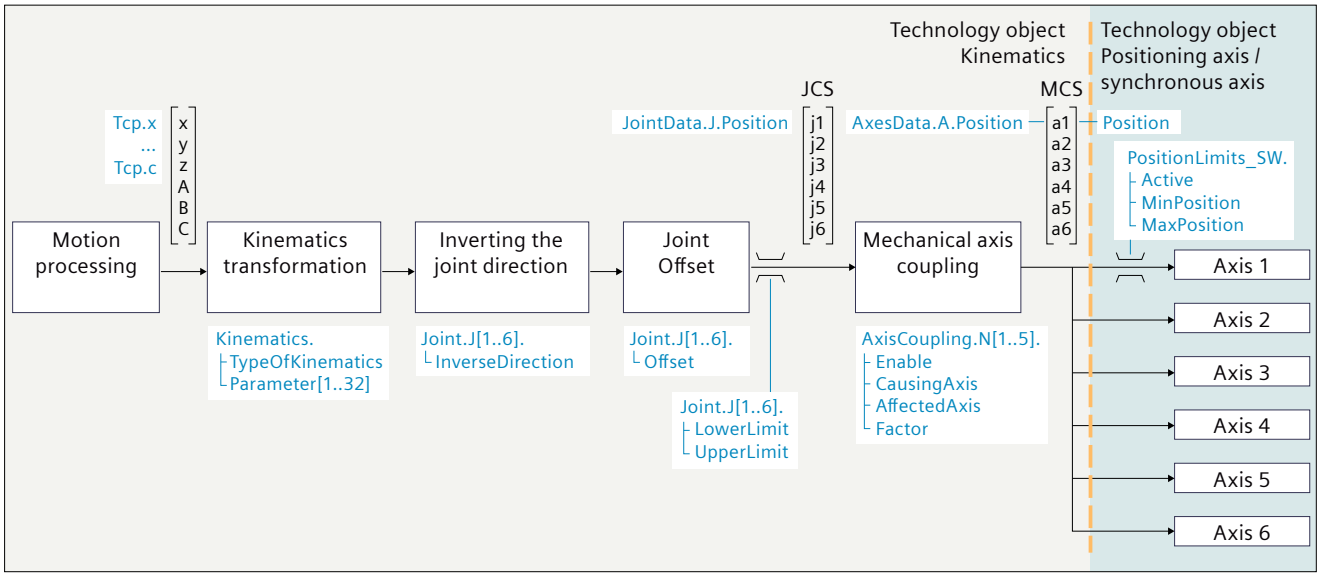

6.9.2 Configuring joints (S7-1500T)

Configure the joints of the kinematics in the "Joints" configuration window.

6.9.2.1 Inverting the joint direction (S7-1500T)

The defined directions of movement of the joints of a kinematics are described in the section "Kinematics types (Page 58)". These directions of movement are used in the kinematics transformation.

The direction of movement of the joints can be defined for different mechanics inversely to the defined directions of movement of the kinematics types.

If the direction of travel of a joint of the real kinematics is inverse to the direction of travel of the joint defined in the kinematics type from Siemens, select the check box "Direction inverted" for the joint.

The inversion of the direction of movement is calculated by the technology object after the kinematics transformation.

The following diagram shows an example of a kinematics 6-axis articulated arm with central hand, where the inverse direction of movement is required for the joint J1:

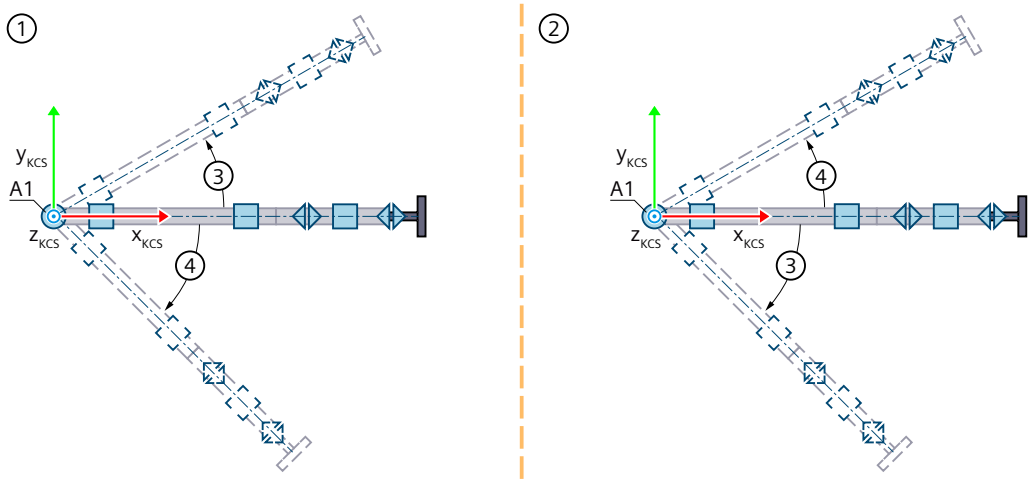

① Definition of the direction of motion on the kinematics type

② Definition of the direction of movement at the kinematics used

③ Positive direction of movement joint 1

④ Negative direction of movement joint 1

NOTE

Then check whether the direction of movement of the joint matches the direction of movement of the kinematics axis, e.g. by jogging in the MCS. If the direction of the joint and the axis direction are inverse, invert the encoder and drive direction of the kinematics axis.

6.9.2.2 Define joint traversing range (S7-1500T)

The joint traversing range defines the permitted traversing range of a kinematics joint. By defining the joint traversing range, you prevent a mechanical endstop or joint positions from being approached when these are not permitted.

In the "Joints" configuration window, define the joint traversing range by entering the lower and upper limits.

Configure the limits of the joint traversing range in such a way that the joint has a sufficient deceleration distance and comes to a standstill in the permissible traversing range.

NOTE

The software limit switches of the kinematics axes are independent of the configured joint traversing range. You can define the joint traversing range greater than, equal to or less than the axis traversing range.

6.9.2.3 Monitoring of the joint traversing range (S7-1500T)

Depending on the job, monitoring of the joint traversing range is already active when the job is issued or becomes active during the active job.

Job	Checking of the joint coordinates during the motion preparation in the MC-LookAhead [OB97]	Cyclic checking of the joint coordinates during the active job
• MC_MoveLinearAbsolute • MC_MoveLinearRelative • MC_MoveCircularAbsolut-e • MC_MoveCircularRelative	-	✓
• MC_MoveDirectAbsolute • MC_MoveDirectRelative	✓	✓
Single axis job	-	-

Alarm response when leaving the joint position area

When a joint crosses the upper or lower limit of the joint traversing range, the 820 technology alarm is output. The kinematics motion is canceled, and the axes stop with the maximum dynamic values configured for the axes (alarm response: Stop with maximum dynamic values of the axes).

To return to the joint traversing range, move the joint via a single-axis job, e.g. with an "MC_MoveAbsolute", "MC_MoveRelative", or "MC_MoveJog" job.

6.9.2.4 Defining an offset (S7-1500T)

The offset describes the difference of the defined zero position of the joint of the kinematics type (Page 58) and the mechanical zero position of the joint at the kinematics used.

If the zero position of the mechanics axis does not match the zero position of the kinematics type, configure an offset.

Example

The joint J2 is in the mechanical zero position. This mechanical zero position deviates by 30° in positive direction of rotation from the defined zero position of the kinematics type. The defined zero position of the kinematics type used for the kinematics transformation is staggered by -30°. The offset is configured with "<TO>.Joint.J[2].Offset" = -30°.

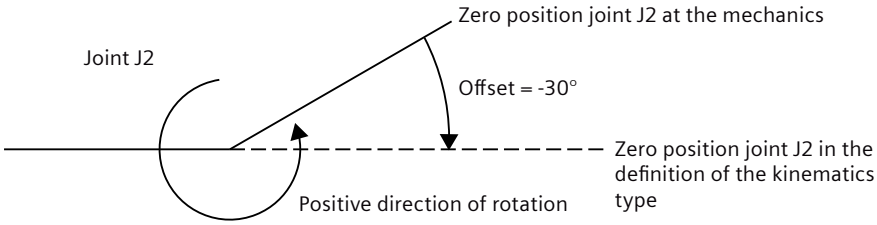

NOTE

When homing the associated kinematics axis, ensure that the mechanical zero point of the joint matches the position 0.0 of the kinematics axis.

6.9.3 Tags: Joints (S7-1500T)

When configuring the joints for kinematics types with more than four interpolating kinematics axes, the following tags of the kinematics technology object are relevant:

Tag	Description
Configuration of joints	
<TO>.Joint.J[1..6].InverseDirection	Invert direction of movement
<TO>.Joint.J[1..6].Offset	Difference between the defined zero position of the joint of the kinematics type (Page 58) and the mechanical zero position of the joint at the kinematics used
<TO>.Joint.J[1..6].LowerLimit	Lower limit of the joint traversing range
<TO>.Joint.J[1..6].UpperLimit	Upper limit of the joint traversing range
Setpoints of the kinematics motion for the joints	
<TO>.JointData.J[1..6].Acceleration	Current acceleration setpoint
<TO>.JointData.J[1..6].Position	Current position setpoint
<TO>.JointData.J[1..6].Velocity	Current velocity setpoint

6.10 Kinematics types (S7-1500T)

6.10.1 Cartesian portal (S7-1500T)

6.10.1.1 Cartesian portal 2D (S7-1500T)

The "Cartesian portal 2D" kinematics support 2 axes and 2 degrees of freedom. The following graphic shows the principal configuration and the typical working area of the kinematics:

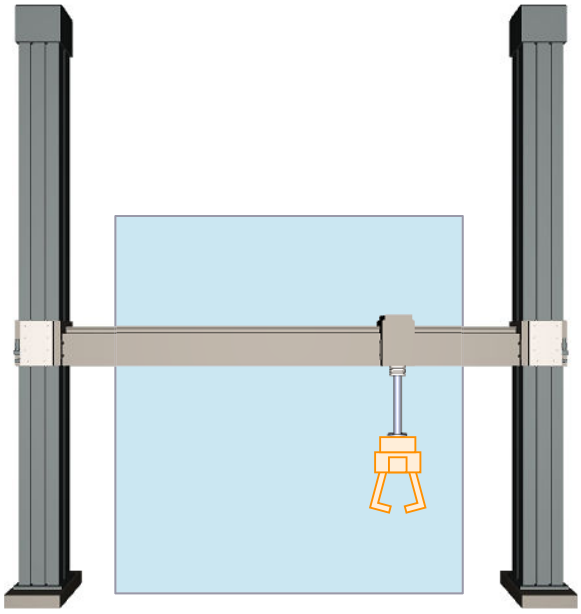

The kinematics consists of 2 orthogonal linear axes A1 and A2. The axes enclose a rectangular working range.

Coordinate systems and zero position

The graphic below shows the following in the front view:

- The position of the axes and the coordinate systems KCS and FCS
- The zero position of the kinematics
- The positive deflection of the kinematics is indicated (dashed)

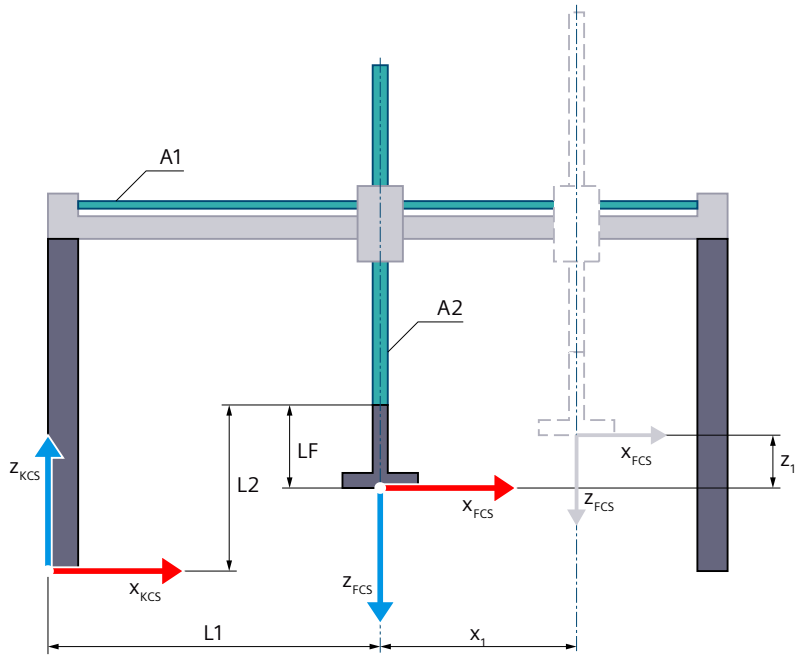

Zero position of the kinematics

L1	With axis A1 in the zero position: Distance of the FCS to the KZP in x direction of the KCS
L2	With axis A2 in the zero position: Distance of the FCS to the KZP and flange length LF in z direction of the KCS
LF	Flange length before the FCS in the z direction of the KCS

Deflection of the kinematics

x_1	Deflection of axis A1 in the positive x direction
z_1	Deflection of axis A2 in the positive z direction

Legend for representation of the kinematics (Page 37)

The kinematics coordinate system (KCS) with the kinematics zero point (KZP) is located at the base of the kinematics. The flange coordinate system (FCS) is located at distance LF from the zero position of axis A2.

The position 0.0 on the respective interconnected technology object defines the zero position of axes A1 and A2. You define the position of the FCS with axes A1 and A2 in the zero position using lengths L1 and L2. You shift the FCS in the negative z direction of the KCS using length LF.

Transformation area

The kinematics transformation covers the entire traversing range (Page 163) of the axes.

Joint position space

No arm positioning spaces for the kinematics.

6.10.1.2 Cartesian portal 2D with orientation (S7-1500T)

The "Cartesian portal 2D with orientation" kinematics supports 3 axes and 3 degrees of freedom. The following graphic shows the principal configuration and the typical working area of the kinematics:

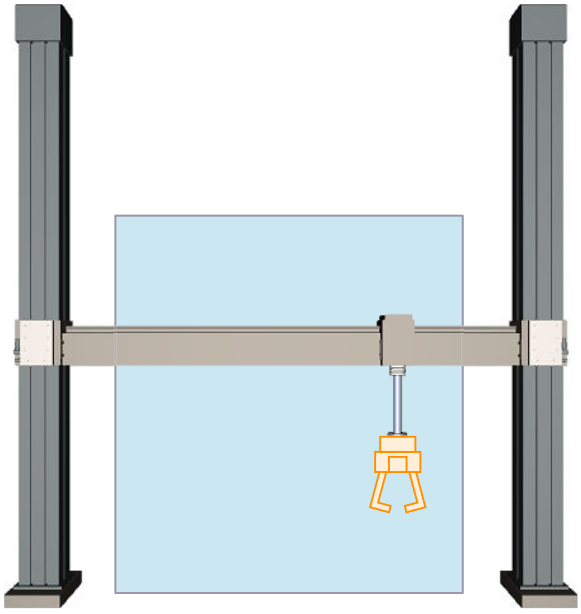

The kinematics consists of the following axes:

- 2 orthogonal linear axes A1 and A2
- 1 rotary axis A4 with rotation around z in the KCS

The linear axes enclose a rectangular working area. The kinematics axis A4 enables rotation of the tool around z in the KCS.

Coordinate systems and zero position

The graphic below shows the following in the front view:

- The position of the axes and the coordinate systems KCS and FCS
- The zero position of the kinematics
- The positive deflection of the kinematics is indicated (dashed)

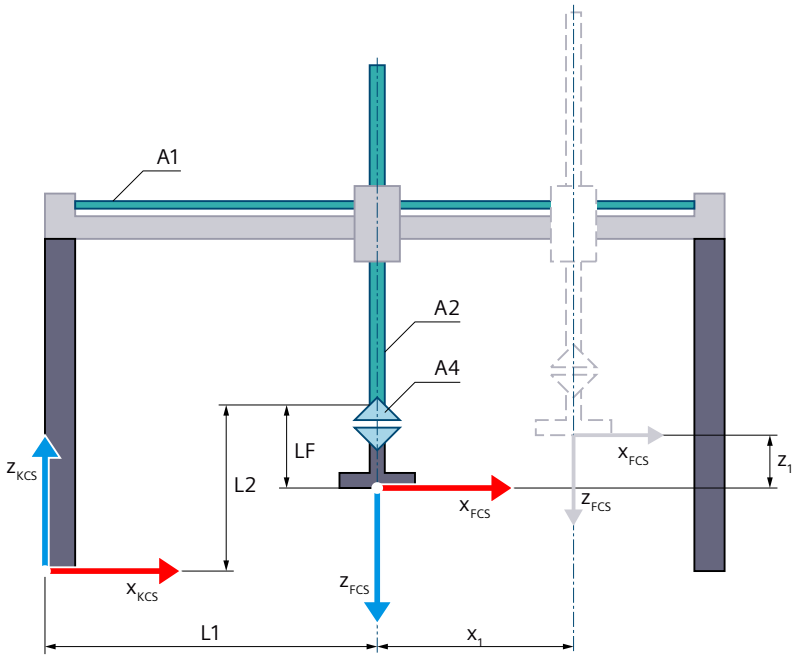

Zero position of the kinematics

L1	With axis A1 in the zero position: Distance of the FCS to the KZP in x direction of the KCS
L2	With axis A2 in the zero position: Distance of the FCS to the KZP and flange length LF in z direction of the KCS
LF	Flange length before the FCS in the z direction of the KCS

Deflection of the kinematics

x_1	Deflection of axis A1 in the positive x direction
z_1	Deflection of axis A2 in the positive z direction

Legend for representation of the kinematics (Page 37)

The kinematics coordinate system (KCS) with the kinematics zero point (KZP) is located at the base of the kinematics. The flange coordinate system (FCS) is located at distance LF from the zero position of axis A2.

The position 0.0 on the respective interconnected technology object defines the zero position of axes A1 and A2. You define the position of the FCS with axes A1 and A2 in the zero position using lengths L1 and L2. You shift the FCS in the negative z direction of the KCS using length LF. In the zero position of axis A4, the x axis of the FCS points in the direction of the x axis of the KCS.

Transformation area

The kinematics transformation covers the entire traversing range (Page 163) of the axes.

Joint position space

No arm positioning spaces for the kinematics.

6.10.1.3 Cartesian portal 3D (S7-1500T)

The "Cartesian portal 3D" kinematics supports 3 axes and 3 degrees of freedom. The following graphic shows the principal configuration and the typical working area of the kinematics:

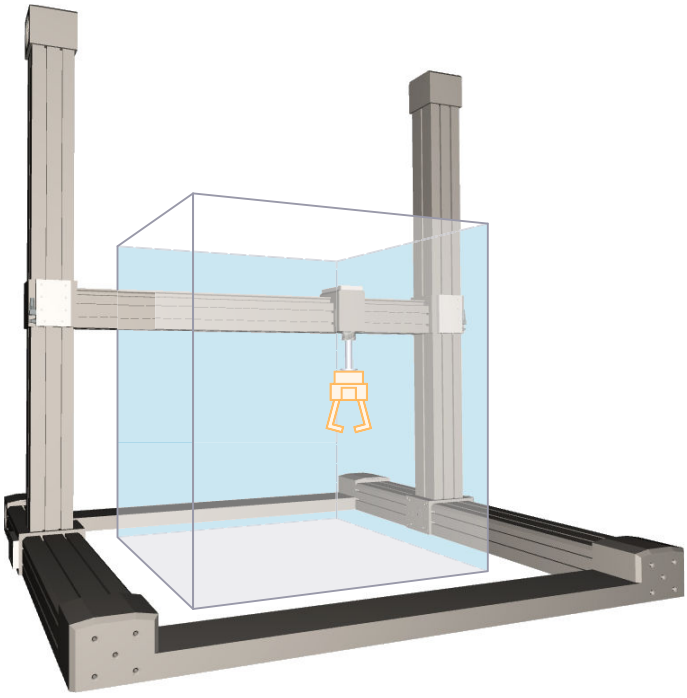

The kinematics consists of 3 orthogonal linear axes A1, A2 and A3. The linear axes enclose a rectangular working area.

Coordinate systems and zero position

The graphic below shows the following in the front view (xz plane):

- The position of the axes and the coordinate systems KCS and FCS
- The zero position of the kinematics
- The positive/negative deflection of the axes A1 and A3 is indicated (dashed)

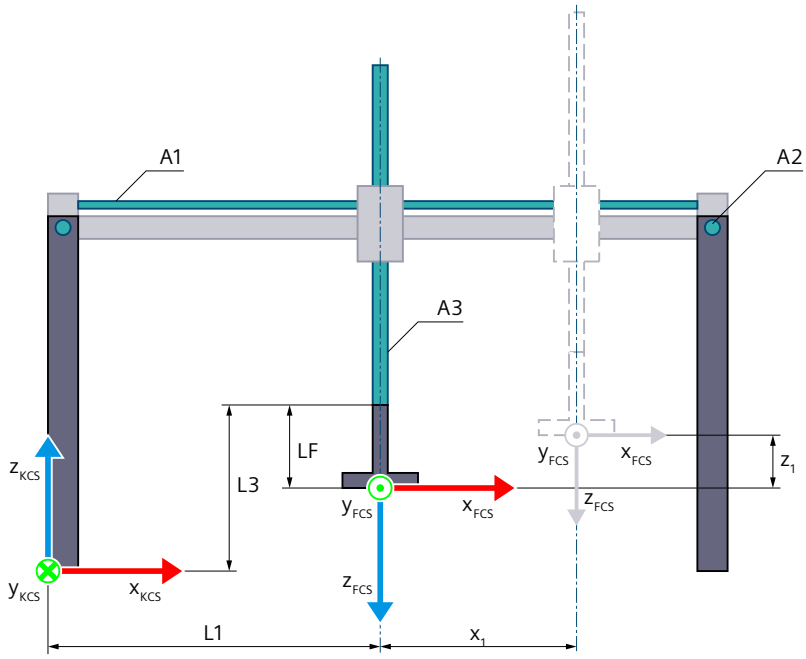

Zero position of the kinematics

L1	With axis A1 in the zero position: Distance of the FCS to the KZP in x direction of the KCS
L3	With axis A3 in the zero position: Distance of the FCS to the KZP and flange length LF in z direction of the KCS
LF	Flange length before the FCS in the z direction of the KCS

Deflection of the kinematics

x_1	Deflection of axis A1 in the positive x direction
z_1	Deflection of axis A3 in the positive z direction

Legend for representation of the kinematics (Page 37)

The graphic below shows the following in the top view (xy plane):

- The position of the axes and the coordinate systems KCS and FCS
- The zero position of the kinematics
- The positive/negative deflection of the axes A1 and A2 is indicated (dashed)

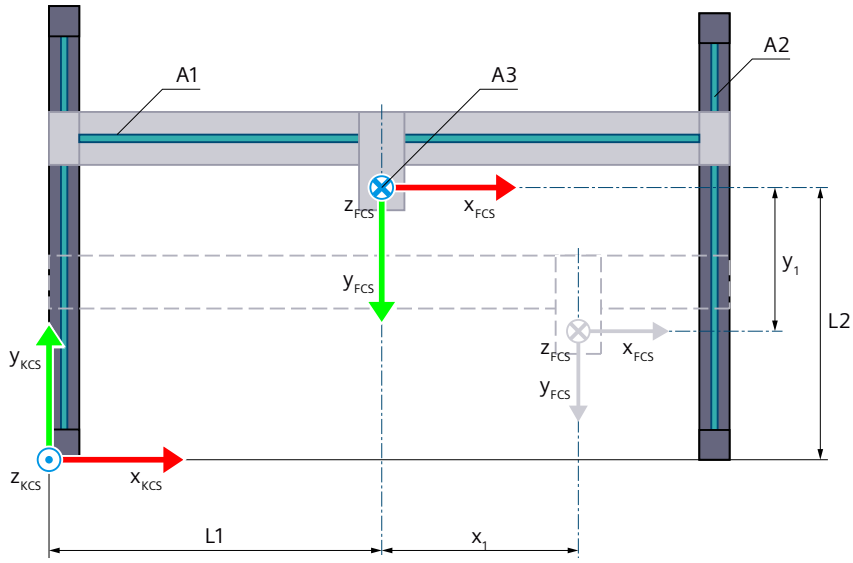

Zero position of the kinematics

L1 With axis A1 in the zero position:
Distance of the FCS to the KZP in x direction of the KCS

L2 With axis A2 in the zero position:
Distance of the FCS to the KZP in y direction of the KCS

Deflection of the kinematics

x_1 Deflection of axis A1 in the positive x direction

y_1 Deflection of axis A2 in the negative y direction

Legend for representation of the kinematics (Page 37)

The kinematics coordinate system (KCS) with the kinematics zero point (KZP) is located at the base of the kinematics. The flange coordinate system (FCS) is located at distance LF from the zero position of axis A2.

Position 0.0 on the respective interconnected technology object defines the zero position of axes A1, A2, and A3. You define the position of the FCS with axes A1, A2, and A3 in the zero position using lengths L1, L2 and L3. You shift the FCS in the negative z direction of the KCS using length LF.

Transformation area

The kinematics transformation covers the entire traversing range (Page 163) of the axes.

Joint position space

No arm positioning spaces for the kinematics.

6.10.1.4 Cartesian portal 3D with orientation (S7-1500T)

The "Cartesian portal 3D with orientation" kinematics supports 4 axes and 4 degrees of freedom. The following graphic shows the principal configuration and the typical working area of the kinematics:

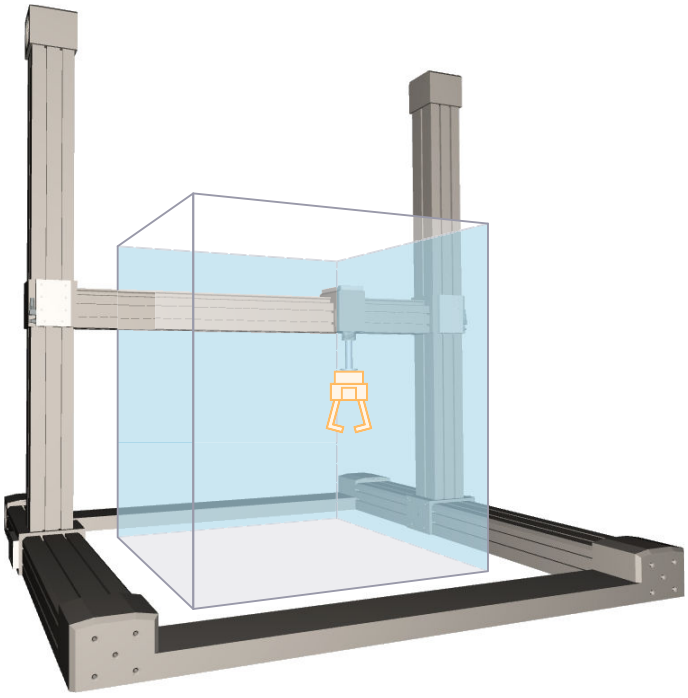

The kinematics consists of the following axes:

- 3 orthogonal linear axes A1, A2 and A3
- 1 rotary axis A4 with rotation around z in the KCS

The linear axes enclose a rectangular working area. The kinematics axis A4 enables rotation of the tool around z in the KCS.

Coordinate systems and zero position

The graphic below shows the following in the front view (xz plane):

- The position of the axes and the coordinate systems KCS and FCS
- The zero position of the kinematics
- The positive/negative deflection of the axes A1 and A3 is indicated (dashed)

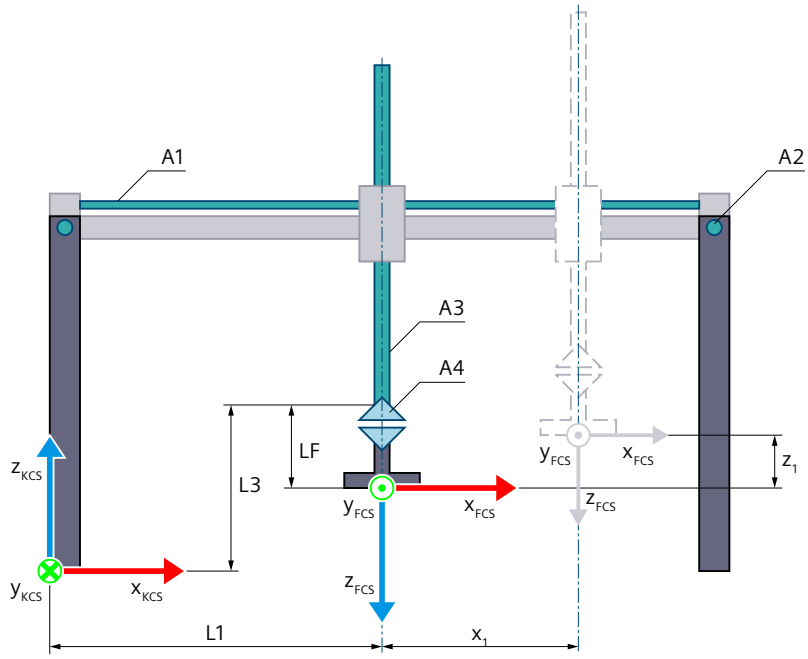

Zero position of the kinematics

L1	With axis A1 in the zero position: Distance of the FCS to the KZP in x direction of the KCS
L3	With axis A3 in the zero position: Distance of the FCS to the KZP and flange length LF in z direction of the KCS
LF	Flange length before the FCS in the z direction of the KCS

Deflection of the kinematics

x_1	Deflection of axis A1 in the positive x direction
z_1	Deflection of axis A3 in the positive z direction

Legend for representation of the kinematics (Page 37)

The graphic below shows the following in the top view (xy plane):

- The position of the axes and the coordinate systems KCS and FCS
- The zero position of the kinematics
- The positive/negative deflection of the axes A1 and A2 is indicated (dashed)

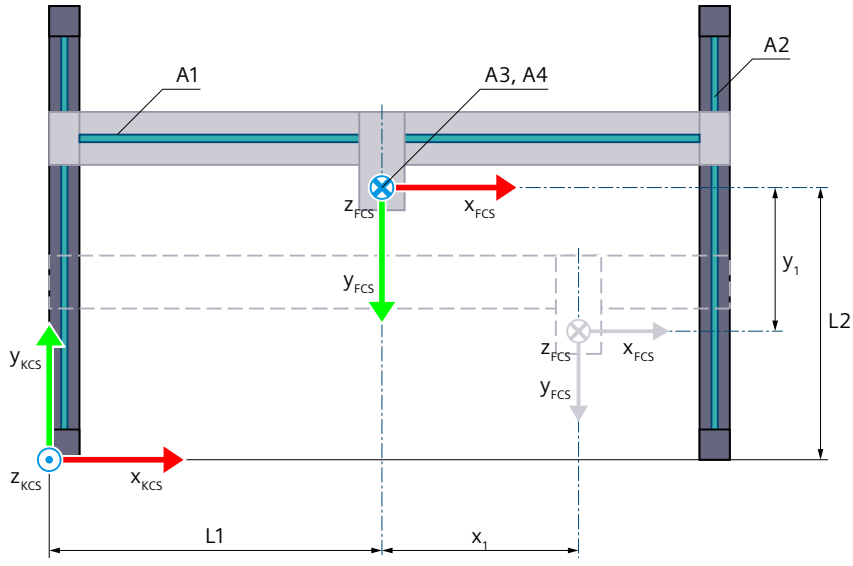

Zero position of the kinematics

L1 With axis A1 in the zero position:
Distance of the FCS to the KZP in x direction of the KCS

L2 With axis A2 in the zero position:
Distance of the FCS to the KZP in y direction of the KCS

Deflection of the kinematics

x_1 Deflection of axis A1 in the positive x direction

y_1 Deflection of axis A2 in the negative y direction

Legend for representation of the kinematics (Page 37)

The kinematics coordinate system (KCS) with the kinematics zero point (KZP) is located at the base of the kinematics. The flange coordinate system (FCS) is located at distance LF from the zero position of axis A2.

Position 0.0 on the respective interconnected technology object defines the zero position of axes A1, A2, and A3. You define the distances of the zero positions of the axes A1, A2 and A3 to the kinematics zero point using the lengths L1, L2 and L3. You shift the FCS in the negative z direction of the KCS using length LF. In the zero position of axis A4, the x axis of the FCS points in the direction of the x axis of the KCS.

Transformation area

The kinematics transformation covers the entire traversing range (Page 163) of the axes.

Joint position space

No arm positioning spaces for the kinematics.

6.10.1.5 Cartesian portal 3D with 2 orientations A, B (S7-1500T)

The "Cartesian portal 3D with 2 orientations A, B" kinematics supports 5 axes and 5 degrees of freedom. For this kinematics type, you need the Motion Control package "S7-1500T Motion Control KinPlus" (Page 29).

The following graphic shows the principal configuration and the typical working area of the kinematics:

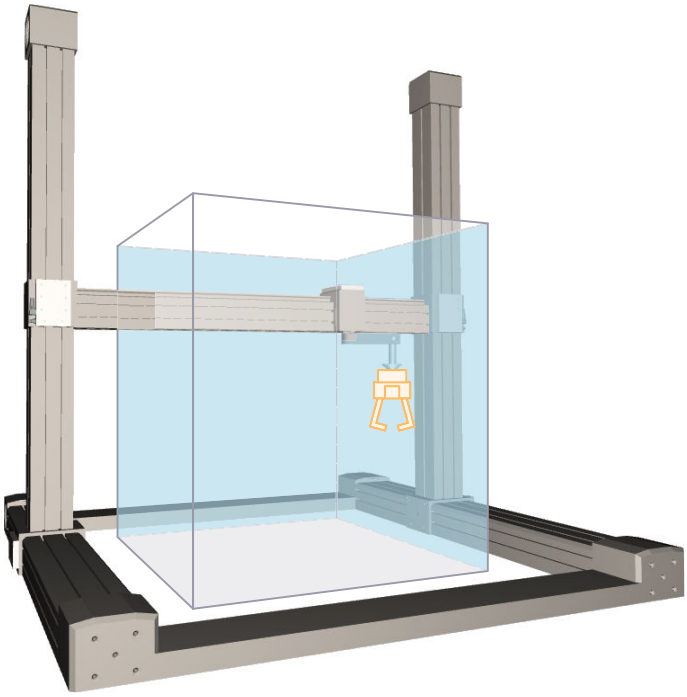

The kinematics consists of the following axes:

- 3 orthogonal linear axes A1, A2 and A3
- One rotary axis A4 rotating around the z axis of the KCS
- One rotary swivel axis A5, which rotates around the y axis of the KCS in the kinematics zero position.

The linear axes enclose a rectangular working area.

Coordinate systems and zero position

The graphic below shows the following in the front view (xz plane):

- The position of the axes and the coordinate systems KCS and FCS
- The zero position of the kinematics
- The positive deflection of axes A1 and A3 and the negative deflection of axis A5 are indicated (dashed)

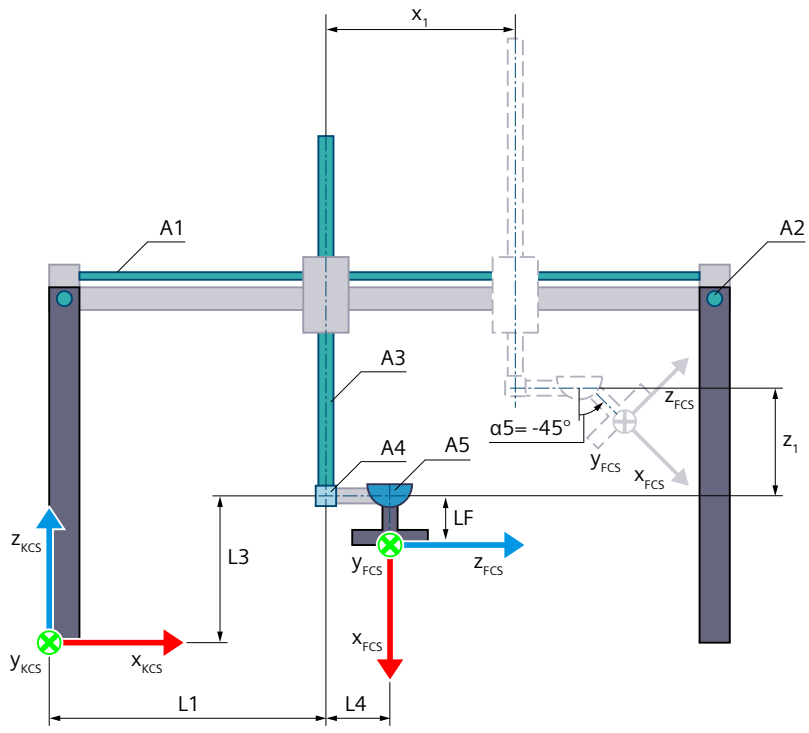

Zero position of the kinematics

L1	With axis A1 in the zero position: Distance of the zero position of axis A1 to the KZP in the z direction of the KCS
L3	With axis A3 in the zero position: Distance of the zero position of axis A3 to the KZP in the z direction of the KCS.
LF	Flange length before the FCS in the x direction of the FCS
L4	Distance of the joint points of rotational axis A4 and swivel axis A5 in the x direction of the KCS in the kinematics zero position

Deflection of the kinematics

x_1	Deflection of axis A1 in the positive x direction
z_1	Deflection of axis A3 in the positive z direction
α5	Negative deflection of swivel axis A5 when α5 = -45°

Legend for representation of the kinematics (Page 37)

The graphic below shows the following in the top view (xy plane):

- The position of the axes and the coordinate systems KCS and FCS
- The zero position of the kinematics
- The positive/negative deflection of the axes A1 and A2 is indicated (dashed)

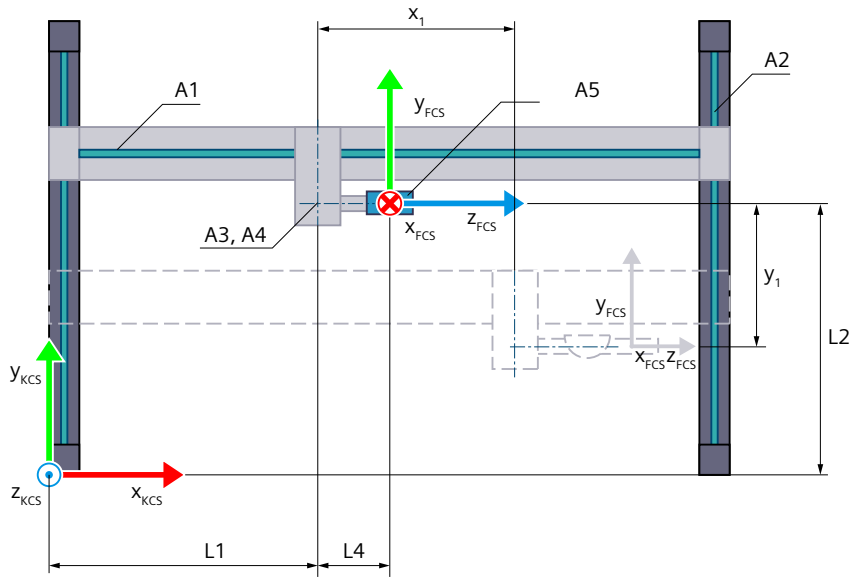

Zero position of the kinematics

L1 With axis A1 in the zero position:
Distance of axis A3/A4 to the KZP in the x direction of the KCS

L2 With axis A2 in the zero position:
Distance of the FCS to the KZP in the y direction of the KCS in the kinematics zero position. If axis A4 has been moved, the distance between KZP and FCS is no longer L2.

Deflection of the kinematics

x_1 Deflection of axis A1 in the positive x direction

y_1 Deflection of axis A2 in the negative y direction

Legend for representation of the kinematics (Page 37)

The kinematics coordinate system (KCS) with the kinematics zero point (KZP) is located at the base of the kinematics. The flange coordinate system (FCS) is located at a distance from axis A5 in the negative z direction of the KCS.

Position 0.0 on the respective interconnected technology object defines the zero position of axes A1, A2, and A3. You define the distances of the zero positions of axes A1, A2, and A3 to the kinematics zero point using lengths L1, L2, and L3. You can also move the zero position of axes A1, A2, and A3 and the associated joints J1, J2, and J3 with joint offsets (Page 57). You shift the FCS in the negative z direction of the KCS using length LF.

In the zero position, the FCS is aligned in the following Cartesian position:

- x = L1 + L4
- y = L2
- z = L3-LF
- A = 0°
- B = 90°
- C = 0

In the zero position of axes A4 and A5, the x axis of the FCS points in the opposite direction of the z axis of the KCS. The y axis of the FCS points in the same direction as the y axis of the KCS. The z axis of the FCS points in the same direction as the x axis of the KCS.

Transformation area

The kinematics transformation covers the entire traversing range (Page 163) of the axes.

Joint position space

No arm positioning spaces for the kinematics.

6.10.1.6 Tags: Cartesian portal (S7-1500T)

Cartesian portal 2D

You can define the 2D kinematics using the following tags of the technology object:

Tags	Values	Description
<TO>.Kinematics.TypeOfKinematics	1	Cartesian portal 2D
	2	Cartesian portal 2D with orientation
<TO>.Kinematics.Parameter[1]	-1.0E12 to 1.0E12	Distance L1 of the zero position of axis A1 to the kinematics zero point (KZP) in the x direction of the kinematics coordinate system (KCS)
<TO>.Kinematics.Parameter[2]	-1.0E12 to 1.0E12	Distance LF of the FCS to axis A2 in the negative z direction of the KCS
<TO>.Kinematics.Parameter[3]	-1.0E12 to 1.0E12	Distance L2 of the zero position of axis A2 to the KZP in the z direction of the KCS

Cartesian portal 3D

You can define the 3D kinematics using the following tags of the technology object:

Tags	Values	Description
<TO>.Kinematics.TypeOfKinematics	3	Cartesian portal 3D
	4	Cartesian portal 3D with orientation
	26	Cartesian portal 3D with 2 orientations A, B
<TO>.Kinematics.Parameter[1]	-1.0E12 to 1.0E12	Distance L1 of the zero position of axis A1 to the KZP in the x direction of the KCS
<TO>.Kinematics.Parameter[2]	-1.0E12 to 1.0E12	Distance L2 of the zero position of axis A2 to the KZP in the y direction of the KCS
<TO>.Kinematics.Parameter[3]	-1.0E12 to 1.0E12	• Distance LF of the FCS to axis A3 in the negative z direction of the KCS • Cartesian portal 3D with 2 orientations A, B: Distance LF of the FCS to axis A5
<TO>.Kinematics.Parameter[4]	-1.0E12 to 1.0E12	Distance L3 of the zero position of axis A3 to the KZP in the z direction of the KCS

1) Only relevant for kinematics type "Cartesian portal 3D with 2 orientations A, B"

Tags	Values	Description
<TO>.Kinematics.Parameter[5]	-1.0E12 to 1.0E12	Distance L4 of the joint points of rotational axis A4 and swivel axis A5 in the x direction of the KCS in the kinematics zero position[1)]

1) Only relevant for kinematics type "Cartesian portal 3D with 2 orientations A, B"

See also

Tags of the kinematics technology object (Page 412)

6.10.2 Roller picker (S7-1500T)

6.10.2.1 Roller picker 2D (S7-1500T)

The kinematics "Roller picker 2D" supports 2 axes and 2 degrees of freedom. The following graphic shows the principal configuration and the typical working area of the kinematics:

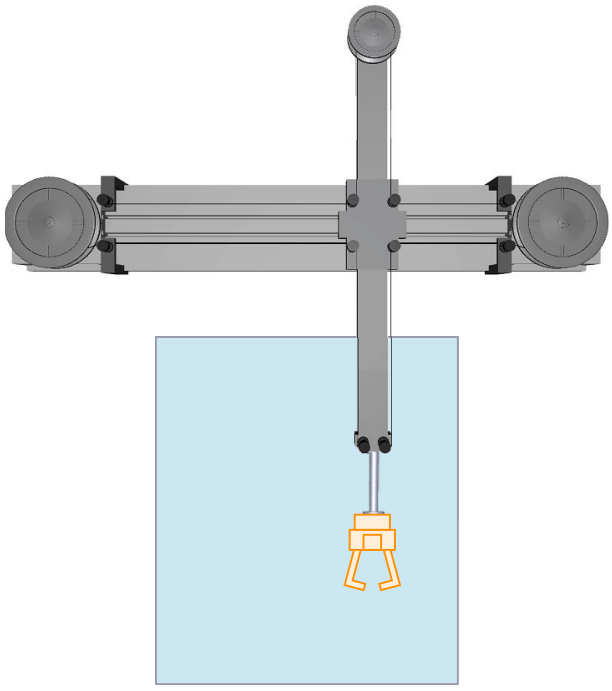

The kinematics consists of 2 rotary axes A1 and A2 and a system of guide rollers. If both axes A1 and A2 rotate with the same velocity in the same direction, the flange moves horizontally in x direction of the KCS. If both axes A1 and A2 rotate with the same velocity in opposite directions, the flange moves vertically in z direction of the KCS. The kinematics enables a rectangular working area.

Coordinate systems and zero position

The graphic below shows the following in the front view:

- The position of the axes and the coordinate systems KCS and FCS
- The zero position of the kinematics
- The deflection of the kinematics is indicated (dashed)

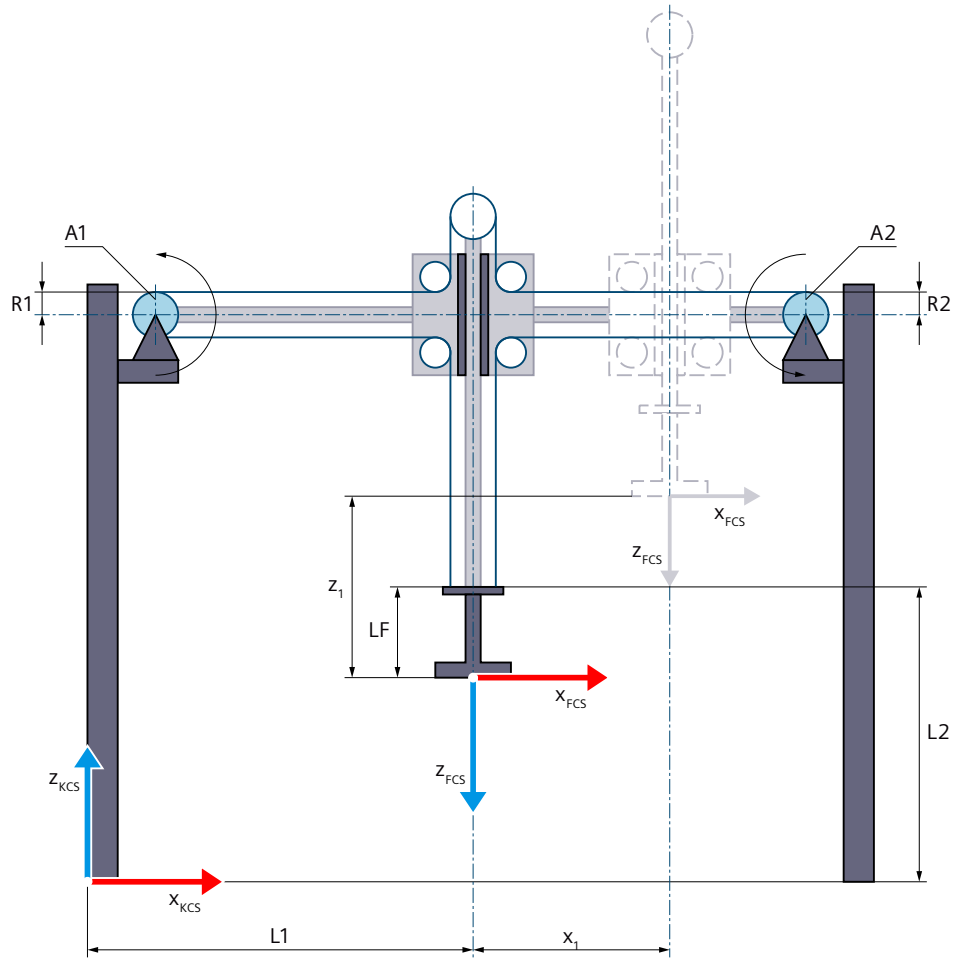

Zero position of the kinematics

L1	With zero position of the axes A1 and A2: Distance of the FCS to the KZP in x direction of the KCS
L2	With zero position of the axes A1 and A2: Distance of the FCS to the KZP and flange length LF in z direction of the KCS
LF	Flange length before the FCS in the z direction of the KCS
R1	Cam radius for axis A1
R2	Cam radius for axis A2

Deflection of the kinematics

x_1	Deflection of the kinematics in the positive x direction
z_1	Deflection of the kinematics in the positive z direction

Legend for representation of the kinematics (Page 37)

The kinematics coordinate system (KCS) with the kinematics zero point (KZP) is located at the base of the kinematics. The flange coordinate system (FCS) is located between axes A1 and A2.
The position 0.0 on the respective interconnected technology object defines the zero position of the axes A1 and A2. You define the position of the FCS for zero position of the axes A1 and A2 using lengths L1 and L2. Use the length LF to move the FCS in negative z direction of the KCS.

Transformation area

The kinematics transformation covers the entire traversing range (Page 163) of the axes.

Joint position space

No arm positioning space for the kinematics.

6.10.2.2 Roller picker 2D with orientation (S7-1500T)

The kinematics "Roller picker 2D with orientation" supports 3 axes and 3 degrees of freedom. The following graphic shows the principal configuration and the typical working area of the kinematics:

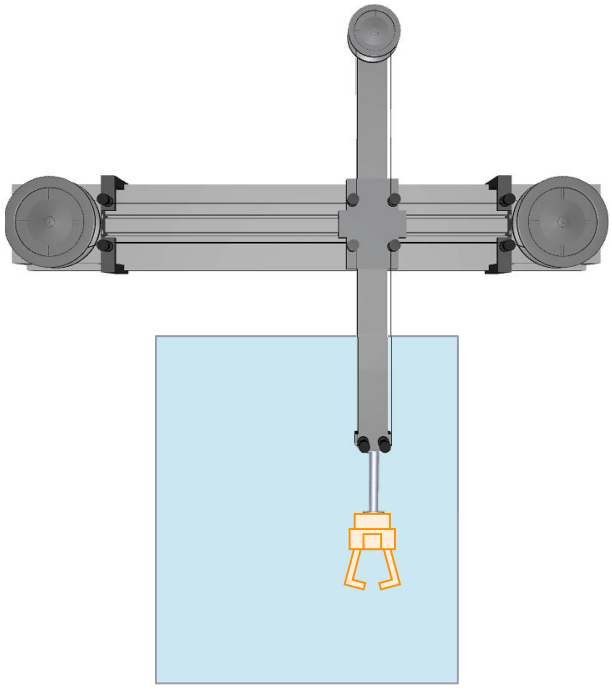

The kinematics consists of a system made up of guide rollers and the following axes:

- 2 rotary axes A1 and A2
- 1 rotary axis A4 with rotation around z in the KCS

If both axes A1 and A2 rotate with the same velocity in the same direction, the flange moves horizontally in x direction of the KCS. If both axes A1 and A2 rotate with the same velocity in

opposite directions, the flange moves vertically in z direction of the KCS. The kinematics enables a rectangular working area. The kinematics axis A4 enables rotation of the tool around z in the KCS.

Coordinate systems and zero position

The graphic below shows the following in the front view:

- The position of the axes and the coordinate systems KCS and FCS
- The zero position of the kinematics
- The deflection of the kinematics is indicated (dashed)

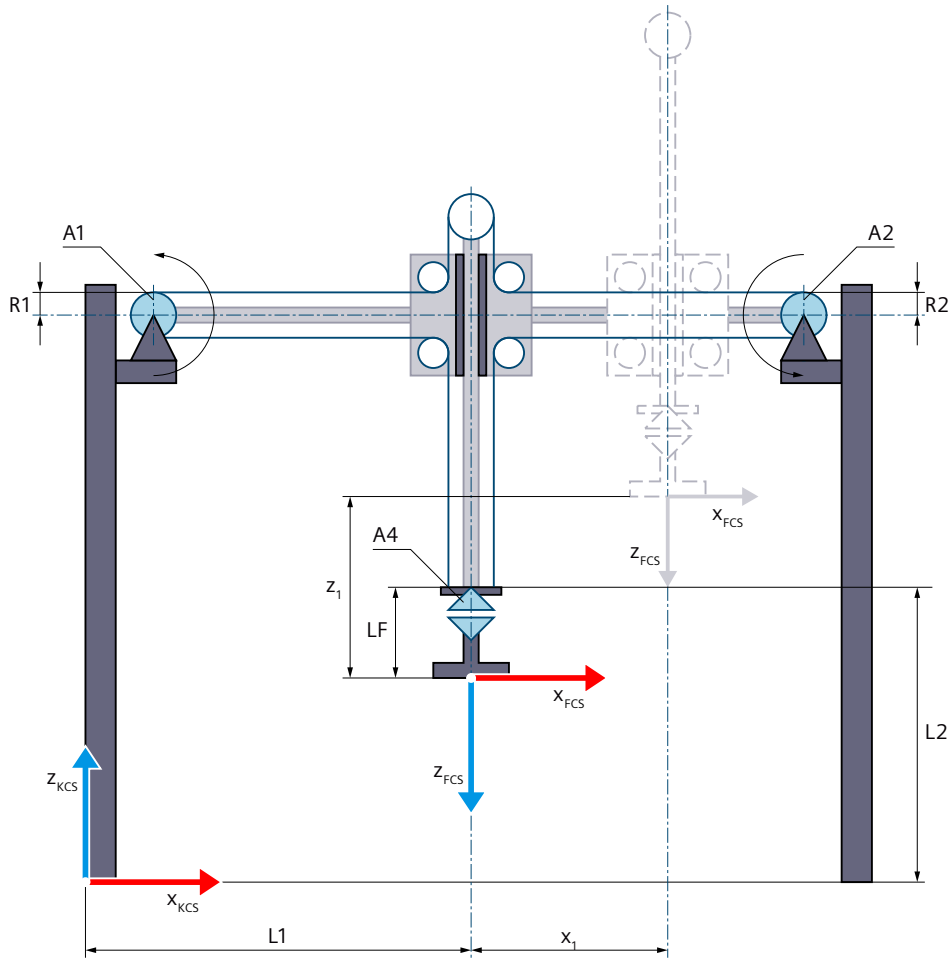

Zero position of the kinematics

L1	With axes A1 and A2 in the zero position: Distance of the FCS to the KZP in x direction of the KCS
L2	With axes A1 and A2 in the zero position: Distance of the FCS to the KZP and flange length LF in z direction of the KCS
LF	Flange length before the FCS in the z direction of the KCS
R1	Cam radius for axis A1
R2	Cam radius for axis A2

Deflection of the kinematics

x_1 Deflection of the kinematics in the positive x direction

z_1 Deflection of the kinematics in the positive z direction

Legend for representation of the kinematics (Page 37)

The kinematics coordinate system (KCS) with the kinematics zero point (KZP) is located at the base of the kinematics. The flange coordinate system (FCS) is located between axes A1 and A2.

The position 0.0 on the respective interconnected technology object defines the zero position of the axes A1 and A2. You define the position of the FCS with axes A1 and A2 in the zero position using lengths L1 and L2. You shift the FCS in the negative z direction of the KCS using length LF. At the zero position of axis A4, the x axis of the FCS points in the direction of the x axis of the KCS.

Transformation area

The kinematics transformation covers the entire traversing range (Page 163) of the axes.

Joint position space

No arm positioning spaces for the kinematics.

6.10.2.3 Roller picker 3D (vertical) (S7-1500T)

The kinematics "Roller picker 3D (vertical)" supports 3 axes and 3 degrees of freedom. The following graphic shows the principal configuration and the typical working area of the kinematics:

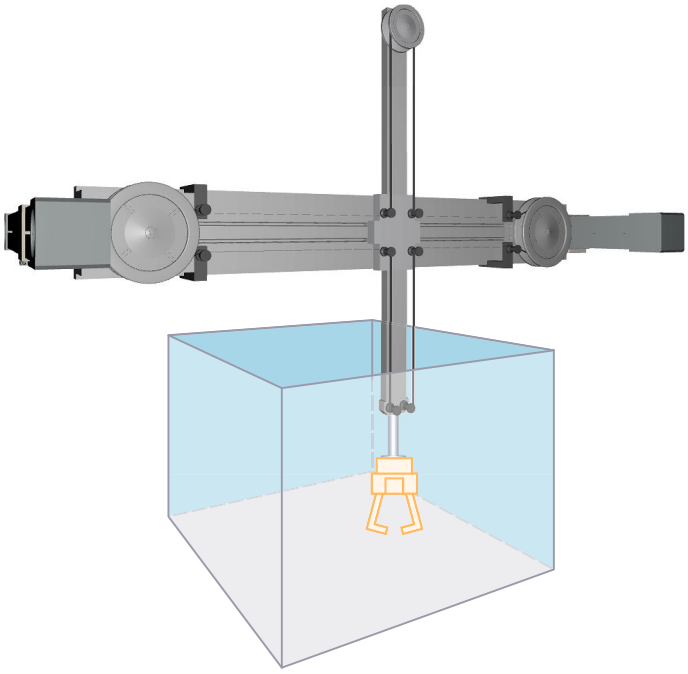

The kinematics consists of a system made up of guide rollers and the following axes:

- 2 rotary axes A1 and A2
- 1 linear axis A3 in y direction of the KCS

If both axes A1 and A2 rotate with the same velocity in the same direction, the flange moves horizontally in x direction of the KCS. If both axes A1 and A2 rotate with the same velocity in opposite directions, the flange moves vertically in z direction of the KCS. The linear portal axis A3 moves the system of guide rollers horizontally in y direction of the KCS. The kinematics enables a cuboid working area.

Coordinate systems and zero position

The graphic below shows the following in the front view (xz plane):

- The position of the axes and the coordinate systems KCS and FCS
- The zero position of the kinematics
- The deflection of the kinematics is indicated (dashed)

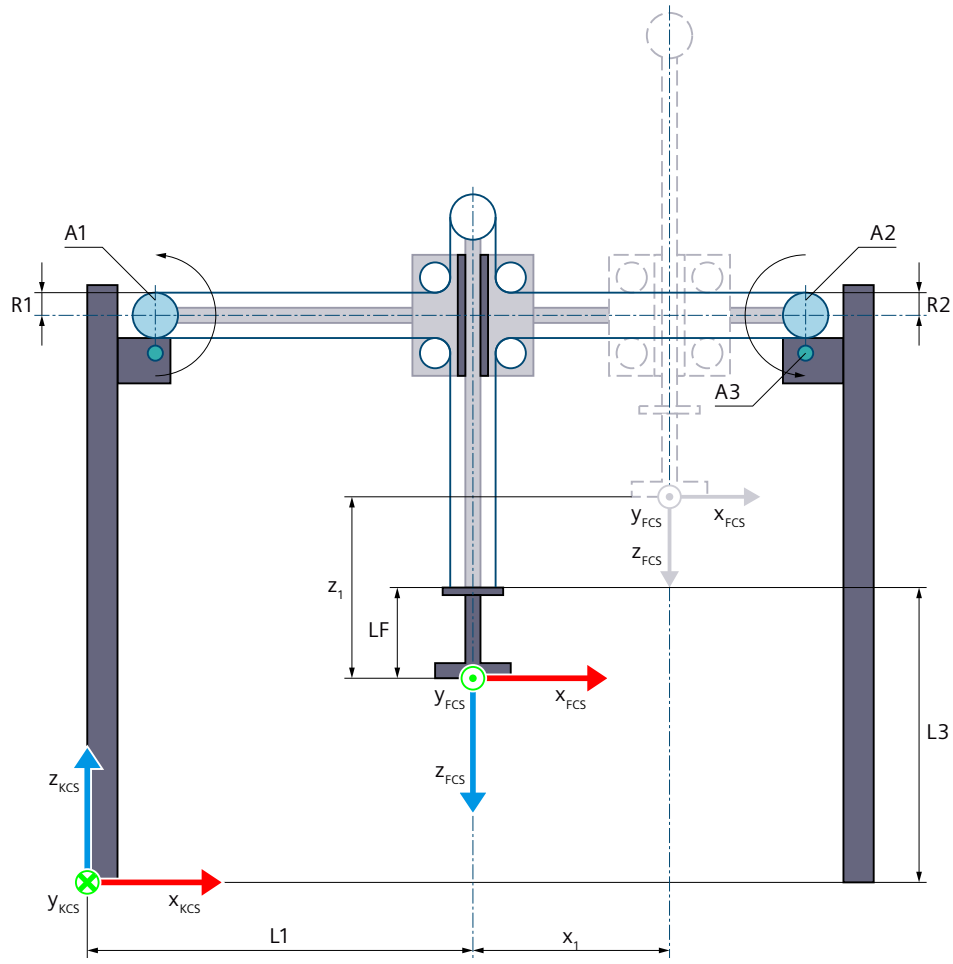

Zero position of the kinematics

L1	With zero position of the axes A1 and A2: Distance of the FCS to the KZP in x direction of the KCS
L3	With zero position of the axes A1 and A2: Distance of the FCS to the KZP and flange length LF in z direction of the KCS
LF	Flange length before the FCS in the z direction of the KCS
R1	Cam radius for axis A1
R2	Cam radius for axis A2

Deflection of the kinematics

x_1	Deflection of the kinematics in the positive x direction
z_1	Deflection of the kinematics in the positive z direction

Legend for representation of the kinematics (Page 37)

The graphic below shows the following in the top view (xy plane):

- The position of the axes and the coordinate systems KCS and FCS
- The zero position of the kinematics
- The deflection of the kinematics is indicated (dashed)

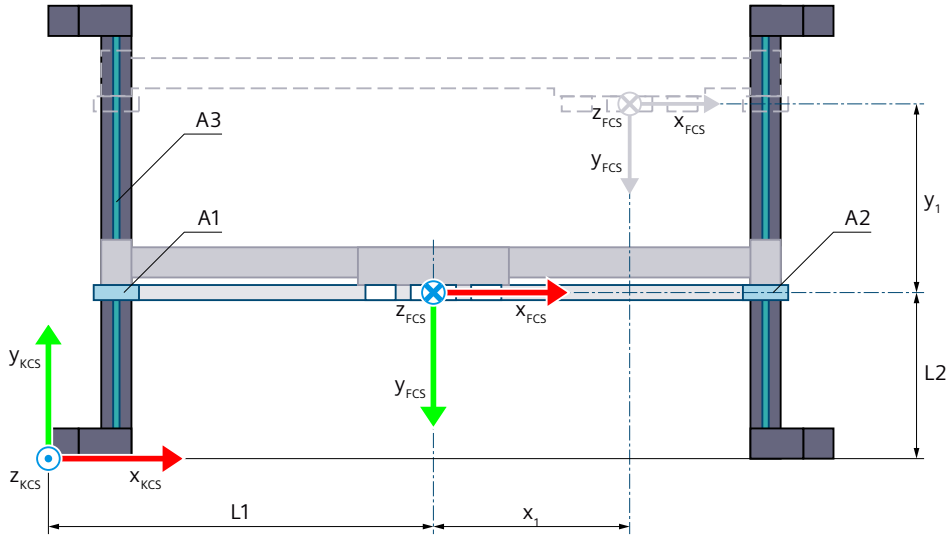

Zero position of the kinematics

L1	With zero position of the axes A1 and A2: Distance of the FCS to the KZP in x direction of the KCS
L2	At zero position of the axis A3: Distance of the FCS to the KZP in y direction of the KCS
R1	Cam radius for axis A1
R2	Cam radius for axis A2

Deflection of the kinematics

x_1	Deflection of the kinematics in the positive x direction
y_1	Deflection of the kinematics in the positive y direction

Legend for representation of the kinematics (Page 37)

The kinematics coordinate system (KCS) with the kinematics zero point (KZP) is located at the base of the kinematics. The flange coordinate system (FCS) is located between axes A1 and A2.

The position 0.0 on the respective interconnected technology object defines the zero position of the axes A1, A2 and A3. You define the position of the FCS for zero position of the axes A1, A2 and A3 using lengths L1, L2 and L3 . You shift the FCS in the negative z direction of the KCS using length LF.

Transformation area

The kinematics transformation covers the entire traversing range (Page 163) of the axes.

Joint position space

No arm positioning spaces for the kinematics.

6.10.2.4 Roller picker 3D with orientation (vertical) (S7-1500T)

The kinematics "Roller picker 3D with orientation (vertical)" supports 4 axes and 4 degrees of freedom. The following graphic shows the principal configuration and the typical working area of the kinematics:

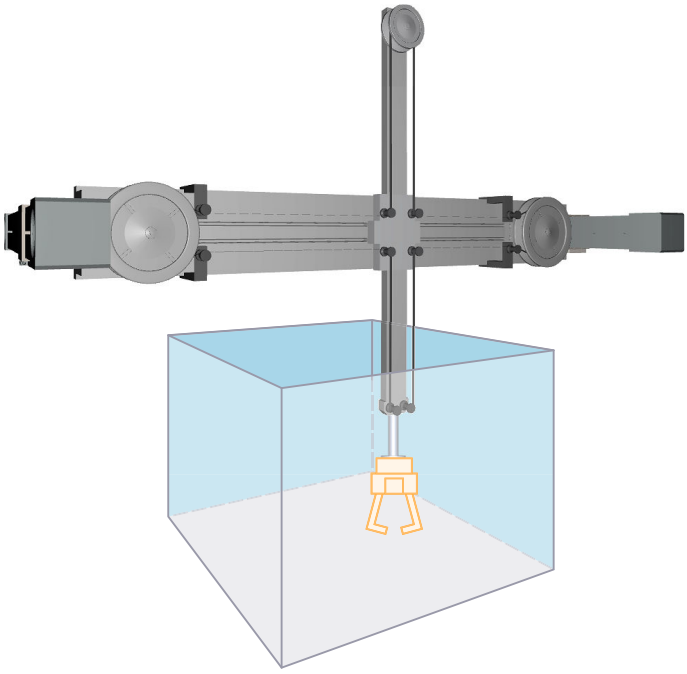

The kinematics consists of a system made up of guide rollers and the following axes:

- 2 rotary axes A1 and A2
- 1 linear axis A3 in the y direction of the KCS
- 1 rotary axis A4 with rotation around z in the KCS

If both axes A1 and A2 rotate with the same velocity in the same direction, the flange moves horizontally in x direction of the KCS. If both axes A1 and A2 rotate with the same velocity in opposite directions, the flange moves vertically in z direction of the KCS. Linear portal axis A3 moves the system of guide rollers horizontally in the y direction of the KCS. The kinematics enables a cuboid working area. Kinematics axis A4 enables rotation of the tool around z in the KCS.

Coordinate systems and zero position

The graphic below shows the following in the front view (xz plane):

- The position of the axes and the coordinate systems KCS and FCS
- The zero position of the kinematics
- The deflection of the kinematics is indicated (dashed)

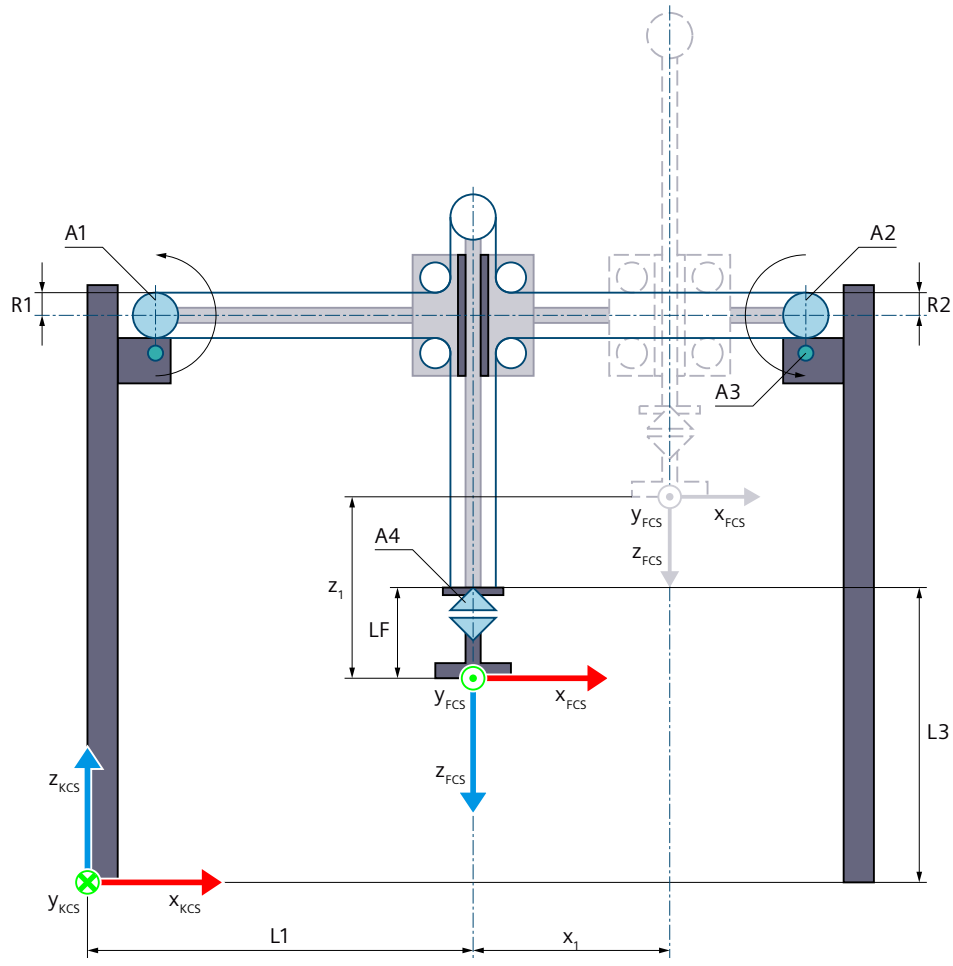

Zero position of the kinematics

L1	With axes A1 and A2 in the zero position: Distance of the FCS to the KZP in x direction of the KCS
L3	With axes A1 and A2 in the zero position: Distance of the FCS to the KZP and flange length LF in z direction of the KCS
LF	Flange length before the FCS in the z direction of the KCS
R1	Cam radius for axis A1
R2	Cam radius for axis A2

Deflection of the kinematics

x_1	Deflection of the kinematics in the positive x direction
z_1	Deflection of the kinematics in the positive z direction

Legend for representation of the kinematics (Page 37)

The graphic below shows the following in the top view (xy plane):

- The position of the axes and the coordinate systems KCS and FCS
- The zero position of the kinematics
- The deflection of the kinematics is indicated (dashed)

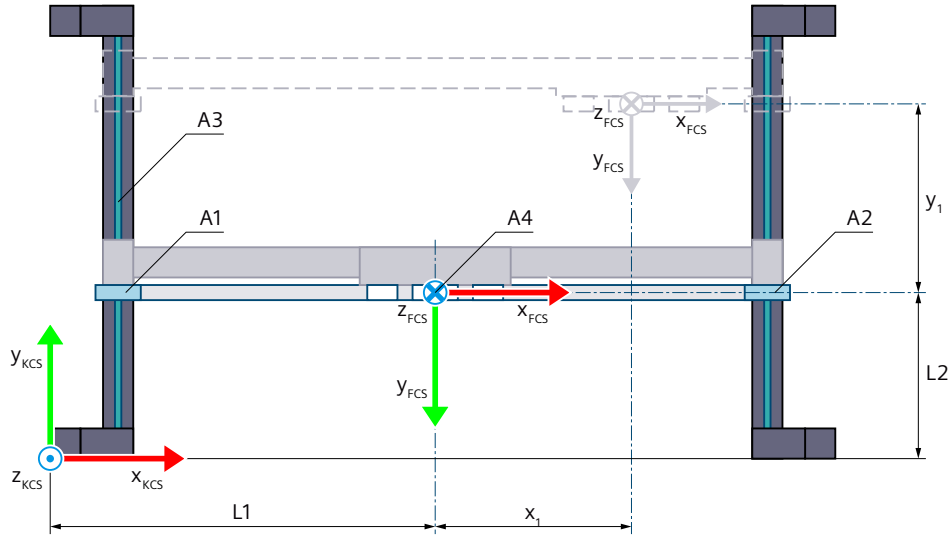

Zero position of the kinematics

L1	With axes A1 and A2 in the zero position: Distance of the FCS to the KZP in x direction of the KCS
L2	With axis A3 in the zero position: Distance of the FCS to the KZP in y direction of the KCS
R1	Cam radius for axis A1
R2	Cam radius for axis A2

Deflection of the kinematics

x_1	Deflection of the kinematics in the positive x direction
y_1	Deflection of the kinematics in the positive y direction

Legend for representation of the kinematics (Page 37)

The kinematics coordinate system (KCS) with the kinematics zero point (KZP) is located at the base of the kinematics. The flange coordinate system (FCS) is located between axes A1 and A2.

The position 0.0 on the respective interconnected technology object defines the zero position of the axes A1, A2 and A3. You define the distance of the zero position of axis A3 to the KZP in the y direction of the KCS using length L2.

You define the position of the FCS with axes A1 and A2 in the zero position using lengths L1 and L3. You shift the FCS in the negative z direction of the KCS using length LF. In the zero position of axis A4, the x axis of the FCS points in the direction of the x axis of the KCS.

Transformation area

The kinematics transformation covers the entire traversing range (Page 163) of the axes.

Joint position space

No arm positioning spaces for the kinematics.

6.10.2.5 Roller picker 3D with orientation (horizontal) (S7-1500T)

The kinematics "Roller picker 3D with orientation (horizontal)" supports 4 axes and 4 degrees of freedom. The following graphic shows the principal configuration and the typical working area of the kinematics:

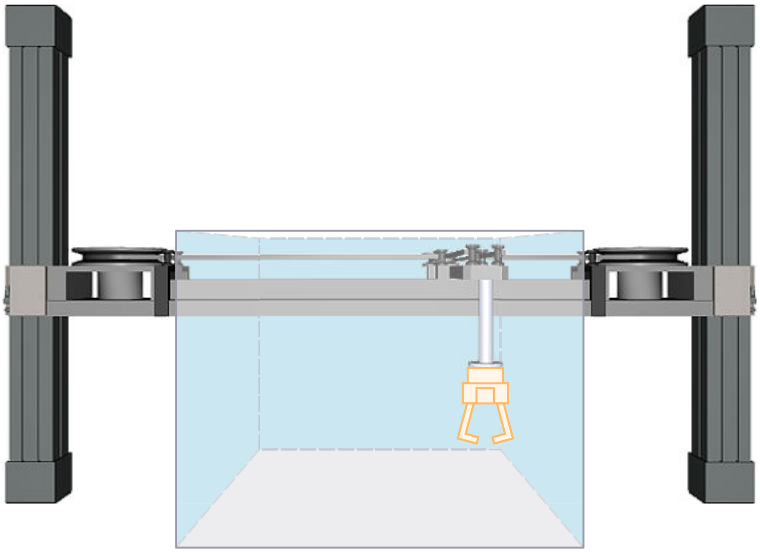

The kinematics consists of a system made up of guide rollers and the following axes:

- 2 rotary axes A1 and A2
- 1 linear axis A3 in z direction of the KCS
- 1 rotary axis A4 with rotation around z in the KCS

If both axes A1 and A2 rotate with the same velocity in the same direction, the flange moves horizontally in x direction of the KCS. If both axes A1 and A2 rotate with the same velocity in opposite directions, the flange moves horizontally in y direction of the KCS. The linear portal axis A3 moves the system of guide rollers vertically in z direction of the KCS. The kinematics enables a cuboid working area. The kinematics axis A4 enables rotation of the tool around z in the KCS.

Coordinate systems and zero position

The graphic below shows the following in the front view (xz plane):

- The position of the axes and the coordinate systems KCS and FCS
- The zero position of the kinematics
- The deflection of the kinematics is indicated (dashed)

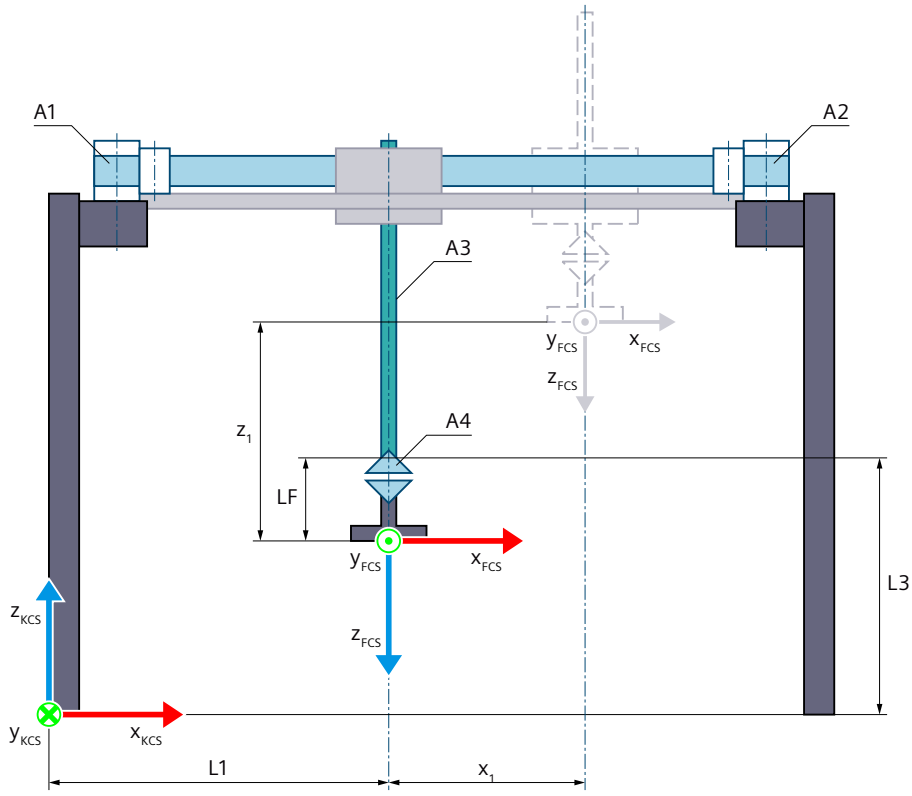

Zero position of the kinematics

L1	With zero position of the axes A1 and A2: Distance of the FCS to the KZP in x direction of the KCS
L3	At zero position of the axis A3: Distance of the FCS to the KZP and flange length LF in z direction of the KCS
LF	Flange length before the FCS in the z direction of the KCS
R1	Cam radius for axis A1
R2	Cam radius for axis A2

Deflection of the kinematics

x_1	Deflection of the kinematics in the positive x direction
z_1	Deflection of the kinematics in the positive z direction

Legend for representation of the kinematics (Page 37)

The graphic below shows the following in the top view (xy plane):

- The position of the axes and the coordinate systems KCS and FCS
- The zero position of the kinematics
- The deflection of the kinematics is indicated (dashed)

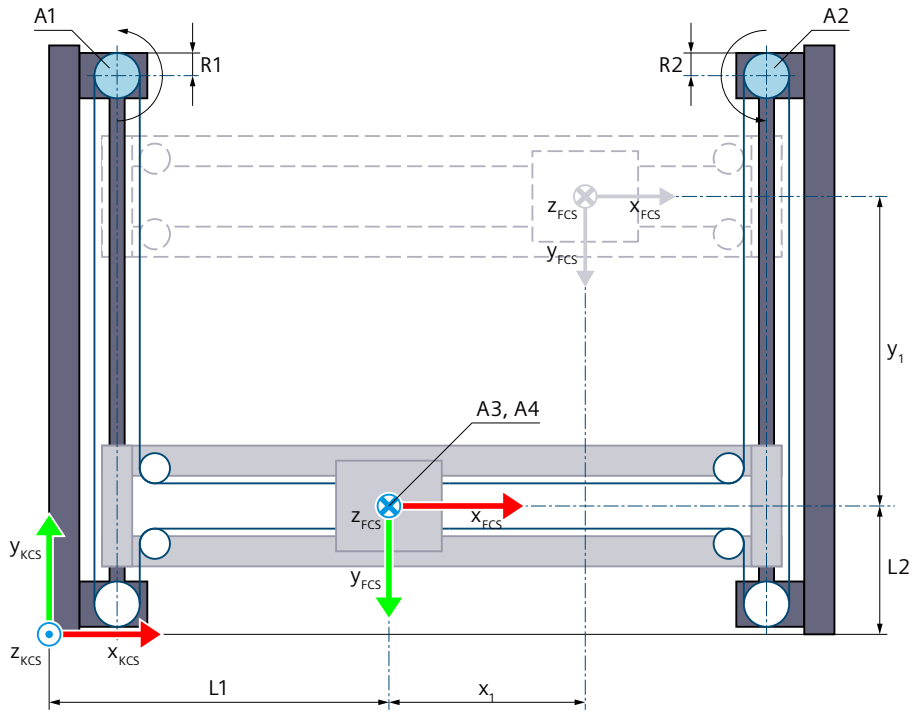

Zero position of the kinematics

L1	With zero position of the axes A1 and A2: Distance of the FCS to the KZP in x direction of the KCS
L2	With zero position of the axes A1 and A2: Distance of the FCS to the KZP in y direction of the KCS
R1	Cam radius for axis A1
R2	Cam radius for axis A2

Deflection of the kinematics

x_1	Deflection of the kinematics in the positive x direction
y_1	Deflection of the kinematics in the positive y direction

Legend for representation of the kinematics (Page 37)

The kinematics coordinate system (KCS) with the kinematics zero point (KZP) is located at the base of the kinematics. The flange coordinate system (FCS) is located between axes A1 and A2.

The position 0.0 on the respective interconnected technology object defines the zero position of the axes A1, A2 and A3. You define the distance of the zero position of the axis A3 to the KZP in y direction of the KCS using length L2.

You define the position of the FCS for zero position of the axes A1 and A2 using lengths L1 and L3. You shift the FCS in the negative z direction of the KCS using length LF. At the zero position of axis A4, the x axis of the FCS points in the direction of the x axis of the KCS.

Transformation area

The kinematics transformation covers the entire traversing range (Page 163) of the axes.

Joint position space

No arm positioning spaces for the kinematics.

6.10.2.6 Tags: Roller picker (S7-1500T)

Roller picker 2D

You define the 2D delta picker kinematics systems using the following tags of the technology object:

Tags	Values	Description
<TO>.Kinematics.TypeOfKinematics	5	Roller picker 2D
	6	Roller picker 2D with orientation
<TO>.Kinematics.Parameter[1]	-1.0E12 to 1.0E12	With zero position of the axes A1 and A2: Distance L1 of the FCS to the KZP in x direction of the kinematics coordinate system (KCS)
<TO>.Kinematics.Parameter[2]	0.001 to 1.0E12	Cam radius R1 for axis 1
<TO>.Kinematics.Parameter[3]	0.001 to 1.0E12	Cam radius R2 for axis 2
<TO>.Kinematics.Parameter[4]	-1.0E12 to 1.0E12	Flange length LF before the flange coordinate system (FCS) in the negative z direction of the KCS
<TO>.Kinematics.Parameter[5]	-1.0E12 to 1.0E12	With zero position of the axes A1 and A2: Distance L2 of the FCS to the KZP in z direction of the KCS

Roller picker 3D

You define the 3D roller picker kinematics systems using the following tags of the technology object:

Tags	Values	Description	
<TO>.Kinematics.TypeOfKinematics	7	Roller picker 3D (vertical)	
	8	Roller picker 3D with orientation (vertical)	
	9	Roller picker 3D with orientation (horizontal)	
<TO>.Kinematics.Parameter[1]	-1.0E12 to 1.0E12	With zero position of the axes A1 and A2: Distance L1 of the FCS to the KZP in x direction of the KCS	
<TO>.Kinematics.Parameter[2]	0.001 to 1.0E12	Cam radius R1 for axis 1	
<TO>.Kinematics.Parameter[3]	0.001 to 1.0E12	Cam radius R2 for axis 2	
<TO>.Kinematics.Parameter[4]	-1.0E12 to 1.0E12	Flange length LF before the FCS in the negative z direction of the KCS	
<TO>.Kinematics.Parameter[5]	-1.0E12 to 1.0E12	Roller picker vertical	Distance L2 of the zero position of the axis A3 to the KZP in y direction of the KCS

Tags	Values	Description	
<TO>.Kinematics.Parameter[5]	-1.0E12 to 1.0E12	Roller picker horizontal	With zero position of the axes A1 and A2: Distance L2 of the FCS to the kinematics zero point (KZP) in y direction of the KCS
<TO>.Kinematics.Parameter[6]	-1.0E12 to 1.0E12	Roller picker vertical	With zero position of the axes A1 and A2: Distance L3 of the FCS to the KZP in z direction of the KCS
		Roller picker horizontal	Distance L3 of the zero position of the axis A3 to the KZP in z direction of the KCS

6.10.3 SCARA (S7-1500T)

6.10.3.1 SCARA 2D with orientation (S7-1500T)

The kinematics "SCARA 2D with orientation (swivel axis)" supports 3 axes and 3 degrees of freedom. The axes are configured as serial kinematics.
The following graphic shows the principal configuration and the typical working area of the kinematics:

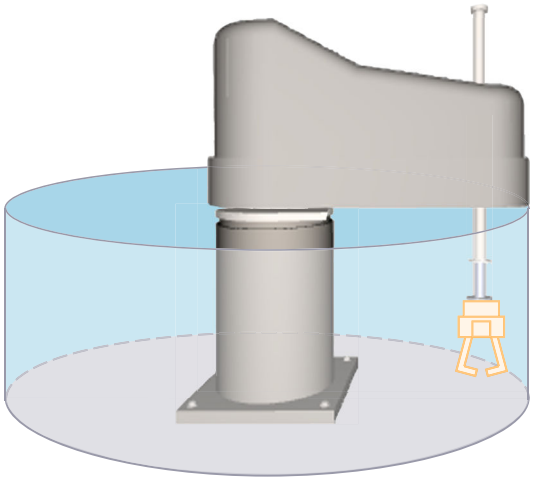

The kinematics consists of the following axes:

- 1 rotary axis A1 with rotation around the z axis of the kinematics coordinate system (KCS)
- 1 linear axis A2 in the z direction of the KCS
- 1 rotary axis A4 with rotation around z in the KCS

The kinematics consists of a base and an articulated arm for horizontal alignment which are connected by a revolute joint (axis A1). A linear stroke axis (axis A2) is fastened to the end of the articulated arm for the vertical alignment. The tool is fastened to the end of the linear axis. The kinematics axis A4 enables rotation of the tool around z in the KCS.

Coordinate systems and zero position

The graphic below shows the following in the side view (xz plane):

- The position of the axes and the coordinate systems KCS and FCS
- The zero position of the kinematics
- The positive/negative deflection of the kinematics is indicated (dashed)

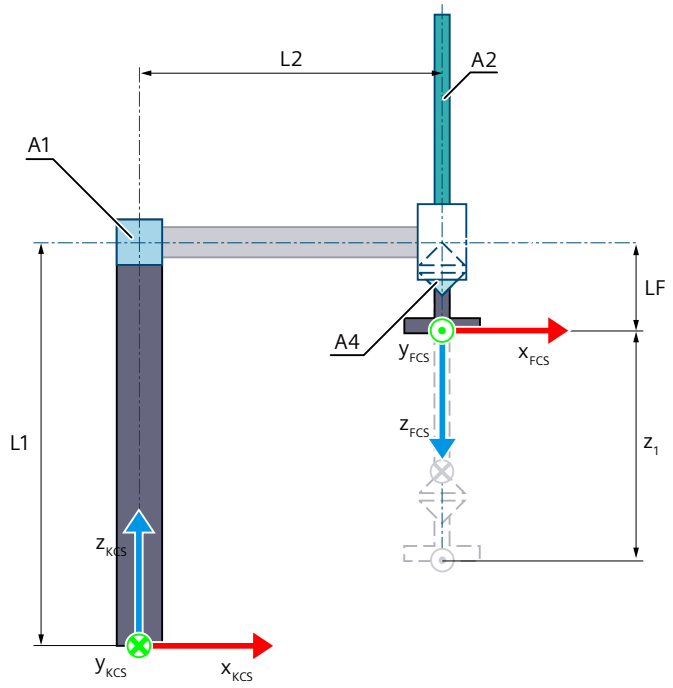

Zero position of the kinematics

L1	Distance of the axis A1 to the KZP in z direction of the KCS
L2	Distance of the axis A1 to the FCS in x direction of the KCS
LF	Distance of the FCS to the axis A1 in z direction of the FCS

Deflection of the kinematics

z_1	Deflection of the axis A2 in negative direction

Legend for representation of the kinematics (Page 37)

The graphic below shows the following in the top view (xy plane):

- The position of the axes and the coordinate systems KCS and FCS
- The zero position of the kinematics
- The positive/negative deflection of the kinematics is indicated (dashed)

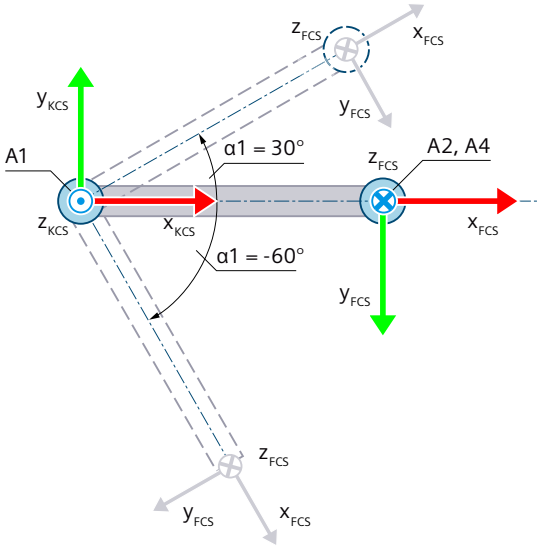

Zero position of the kinematics

Deflection of the kinematics

α1 Deflection of the axis A1 in positive direction when α1 = 30.0°
Deflection of the axis A1 in negative direction when α1 = -60.0°

Legend for representation of the kinematics (Page 37)

The KCS with the kinematics zero point (KZP) is located at the base of the kinematics. The flange coordinate system (FCS) is located at the end of the articulated arm.
The following table shows the zero position of the axes:

Axis	Zero position
A1	The articulated arm points in the x direction of the KCS.
A2	The axis A2 is at the position 0.0 of the interconnected technology object.
A4	With axis A1 in the zero position, the x axis of the FCS points in the direction of the x axis of the KCS.

Compensation of mechanical axis couplings

You can configure a mechanical axis coupling of axis A4 to axis A2 for the kinematics. The kinematics transformation compensates for the configured mechanical axis coupling. The axis coupling between axis A4 and axis A2 is implemented as a leadscrew pitch. With a compensation factor of 1.0, 360.0° on axis A4 corresponds to a distance of -1.0 mm on axis A2.

Transformation area

The kinematics transformation covers the following traversing range (Page 163) of the axes:

- Axis A1: -180.0° ≤ α1 < 180.0°
- Axis A2: No limit
- Axis A4: No limit
  An angle greater than 360° can be defined for the orientation. But coordinate A of the tool center point (TCP) is mapped in the range -180° to +180°.

You can process these kinematics only with the Motion Control instructions "MC_MoveDirectAbsolute" and "MC_MoveDirectRelative" or single-axis jobs.

Joint position space

No arm positioning spaces for the kinematics.

6.10.3.2 SCARA 3D with orientation (S7-1500T)

The kinematics "SCARA (Selective Compliance Assembly Robot Arm) 3D with orientation" supports 4 axes and 4 degrees of freedom. The axes are configured as serial kinematics.
The following graphic shows the principal configuration and the typical working area of the kinematics:

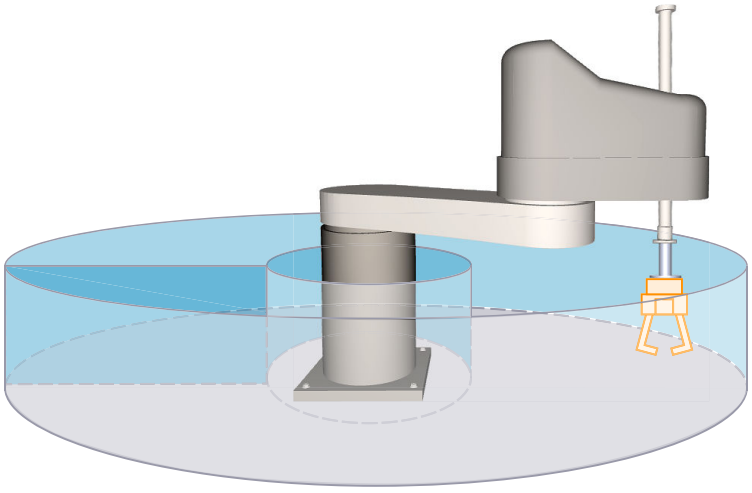

The kinematics consists of the following axes:

- 1 rotary axis A1 with rotation around the z axis of the kinematics coordinate system (KCS)
- 1 rotary axis A2 at distance L2 to A1 with rotation around z of the KCS
- 1 linear axis A3 at distance L3 to A2 with motion in z direction of the KCS
- 1 rotary axis A4 with rotation around z in the KCS

The kinematics consists of a base and two levers for horizontal alignment which are connected by revolute joints (axis A1 and A2). A linear axis (axis A3) is fastened to the end of the articulated arm for the vertical alignment. The tool is fastened to the end of the linear axis. The kinematics axis A4 enables rotation of the tool around z in the KCS.

Coordinate systems and zero position

The graphic below shows the following in the side view (xz plane):

- The position of the axes and the coordinate systems KCS and FCS
- The zero position of the kinematics

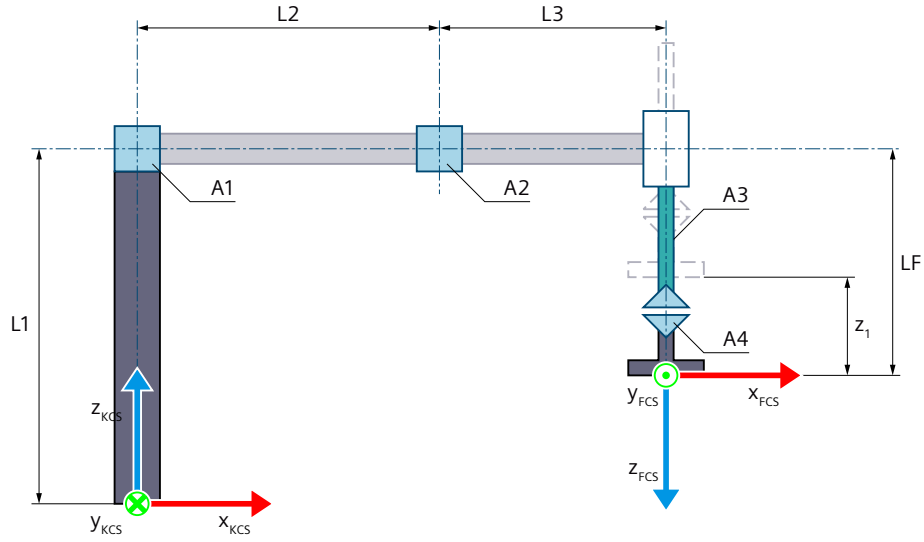

Zero position of the kinematics

L1	Distance of the axis A1 to the KZP in z direction of the KCS
L2	Distance of the axis A2 to the axis A1 in x direction of the KCS
L3	Distance of the axis A3 to the axis A2 in x direction of the KCS
LF	Distance of the FCS to the axis A2 in z direction of the FCS

Deflection of the kinematics

z_1	Deflection of the axis A3 in the positive direction

Legend for representation of the kinematics (Page 37)

The graphic below shows the following in the top view (xy plane):

- The position of the axes and the coordinate systems KCS and FCS
- The zero position of the kinematics
- The positive/negative deflection of the kinematics is indicated (dashed)

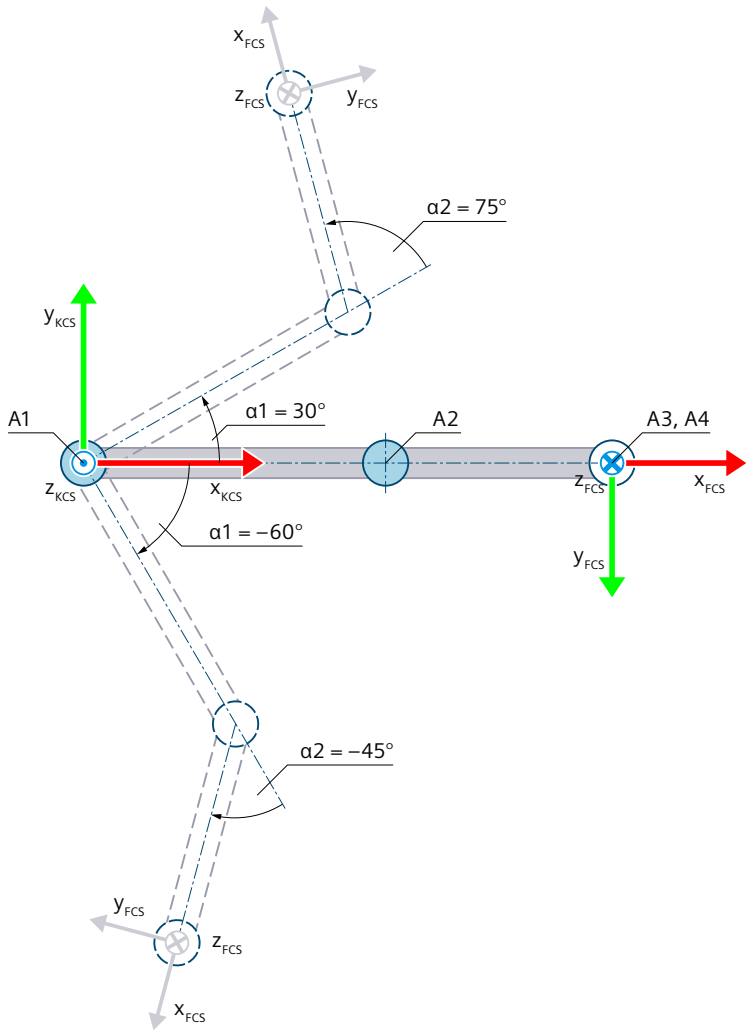

Zero position of the kinematics

Deflection of the kinematics in the positive direction when α1 = 30.0° with a positive joint position when α2 = 75.0°
Deflection of the kinematics in the negative direction when α1 = -60.0° with a negative joint position when α2 = -45.0°

α1 Deflection of the axis A1 in positive direction when α1 = 30.0°
Deflection of the axis A1 in negative direction when α1 = -60.0°

α2 The deflection of axis A2 in the positive direction when α2 = 75.0° produces a positive joint position.
The deflection of axis A2 in the negative direction when α2 = -45.0° produces a negative joint position.

Legend for representation of the kinematics (Page 37)

The KCS with the kinematics zero point (KZP) is located at the base of the kinematics. The flange coordinate system (FCS) is located at the end of the axis A3.

The following table shows the zero position of the axes:

Axis	Zero position
A1 and A2	The kinematics is elongated in the x_{KCS} direction.
A3	The FCS is located at distance L1-LF from the KCS in z direction.
A4	With axes A1 and A2 in the zero position, the x axis of the FCS points in the direction of the x axis of the KCS.

Compensation of mechanical axis couplings

You can configure the following mechanical coupled axes for the kinematics:

- Mechanical coupling of axis A1 to axis A2
- Mechanical coupling of axis A4 to axis A3

The kinematics transformation compensates for the configured mechanical axis couplings. With a compensation factor > 0.0, the kinematics transformation assumes that a positive motion of the axis A1 leads to a negative motion on the axis A2. The axis coupling between axis A4 and axis A3 is implemented as a leadscrew pitch. With a compensation factor of 1.0, 360.0° on axis A4 corresponds to a distance of -1.0 mm on axis A3.

Transformation area

The kinematics transformation covers the following traversing range (Page 163) of the axes:

- Axis A1: -180.0° ≤ α1 ≤ 180.0°
- Axis A2: -180.0° ≤ α2 ≤ 180.0°
- Axis A3: No limit
- Axis A4: No limit
  An angle greater than 360° can be defined for the orientation. But coordinate A of the tool center point (TCP) is mapped in the range -180° to +180°.

NOTE
Singularity
The kinematics has singularities (Page 167).

A singularity occurs when the zero point of the flange coordinate system (FCS) is located on the z axis of the kinematics coordinate system (KCS). Inverse transformation is not possible in this area. This position may result, e.g. in the event of suspended installation if the lengths L2 and L3 are the same size.

The graphic below shows examples of a movement in the direction of the singularity:

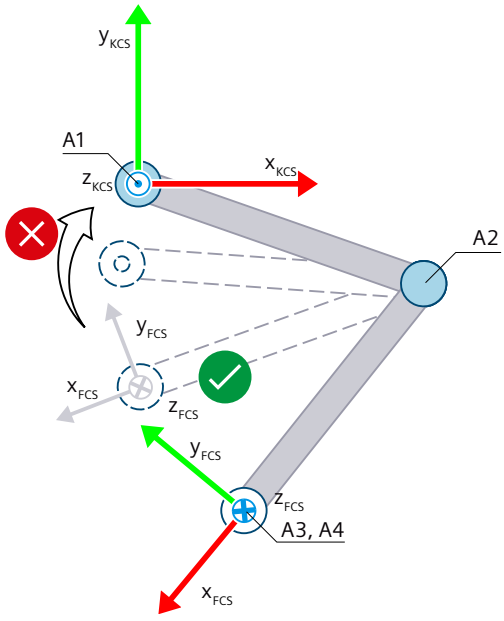

Permissible joint position

Folded position
Inner singularity at L2 = L3

Joint position space

The following table shows the possible arm positioning spaces of the kinematics:

Tag	Data type	Values	W	Description	
StatusKinematics.	TO_Struct_Kinematics_StatusKinematics				
Valid	BOOL	-	RON	Validity of the transformation values	
				FALSE	Invalid
				TRUE	Valid
LinkConstellation	DWORD	0 to n	RON	Joint position space	
Bit 0	-	-	-	Position axis 1	
				0	Not relevant
				1	Not relevant
Bit 1	-	-	-	Position axis 2 Angle α2 of axis A2 positive/negative taking into consideration the mechanical axis coupling	
				0	α2 positive
				1	α2 negative
Bit 2	-	-	-	Position axis 3	

Tag			Data type	Values	W	Description	
		Bit 2	-	-	-	0	Not relevant
						1	Not relevant
		Bit 3 ... 31	-	-	-	Not relevant	

6.10.3.3 Tags: SCARA (S7-1500T)

SCARA 2D

You define the SCARA 2D kinematics using the following tags of the technology object:

Tags	Values	Description
<TO>.Kinematics.TypeOfKinematics	20	SCARA 2D with orientation
<TO>.Kinematics.Parameter[1]	-1.0E12 to 1.0E12	Distance of the axis A1 from the kinematics zero point in z direction of the kinematics coordinate system (KCS)
<TO>.Kinematics.Parameter[2]	-1.0E12 to 1.0E12	Distance L2 of the axis A2 from the axis A4 in x direction of the KCS
<TO>.Kinematics.Parameter[3]	0.001 to 1.0E12	Distance of the flange coordinate system from the axis A2 in the negative z direction of the KCS
<TO>.Kinematics.Parameter[4]	-	Mechanical axis coupling of axis A4 to A2 present/not present
	0	Not present
	1	Present
<TO>.Kinematics.Parameter[5]	-1.0E12 to 1.0E12	Compensation factor of axis A4 to axis A2

SCARA 3D

You define the SCARA 3D kinematics using the following tags of the technology object:

Tags	Values	Description
<TO>.Kinematics.TypeOfKinematics	10	SCARA 3D with orientation
<TO>.Kinematics.Parameter[1]	-1.0E12 to 1.0E12	Distance of the axis A1 from the kinematics zero point in z direction of the kinematics coordinate system (KCS)
<TO>.Kinematics.Parameter[2]	0.001 to 1.0E12	Distance L2 of the axis A2 from the axis A1 in x direction of the KCS
<TO>.Kinematics.Parameter[3]	-	Mechanical axis coupling of axis A1 to axis A2 present/not present
	0	Not present
	1	Present
<TO>.Kinematics.Parameter[4]	-1.0E12 to 1.0E12	Compensation factor of axis A1 to axis A2
<TO>.Kinematics.Parameter[5]	0.001 to 1.0E12	Distance L3 of the axis A3 from the axis A2 in x direction of the KCS

Tags	Values	Description
<TO>.Kinematics.Parameter[6]	-	Mechanical axis coupling of axis A4 to axis A3 present/not present
	0	Not present
	1	Present
<TO>.Kinematics.Parameter[7]	-1.0E12 to 1.0E12	Compensation factor of axis A4 to axis A3
<TO>.Kinematics.Parameter[8]	-1.0E12 to 1.0E12	Distance of the flange coordinate system from the axis A2 in the negative z direction of the KCS

6.10.4 Articulated arm (S7-1500T)

6.10.4.1 Articulated arm 2D (S7-1500T)

The kinematics "Articulated arm 2D" supports 2 axes and 2 degrees of freedom. The axes are configured as serial kinematics with forced coupling of the flange system.
The following graphic shows the principal configuration and the typical working area of the kinematics:

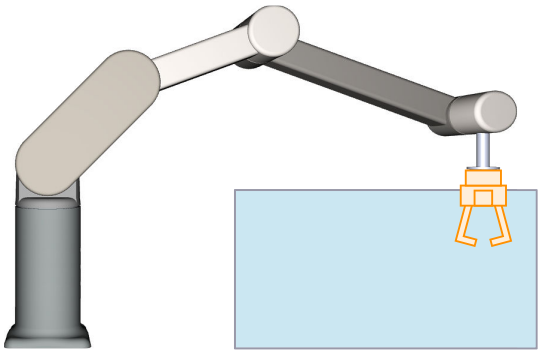

The kinematics consists of the following axes:

- 1 rotary axis A1 with the distances L1 in z direction of the KCS and L2 in x direction of the KCS to the kinematics zero point
- 1 rotary axis A2 at distance L3 to axis A1

The kinematics consists of a base and articulated arms, which are connected by revolute joints (axes A1, A2). Axes A1 and A2 move the articulated arm in the xz plane. Through a forced coupling between the axes and the flange system, the z axis of the FCS always points in the negative z direction of the KCS.

Coordinate systems and zero position

The graphic below shows the following in the side view:

- The position of the axes and of the forced coupler point
- The position of coordinate systems KCS and FCS
- The zero position of the kinematics
- The positive/negative deflection of the kinematics is indicated (dashed)

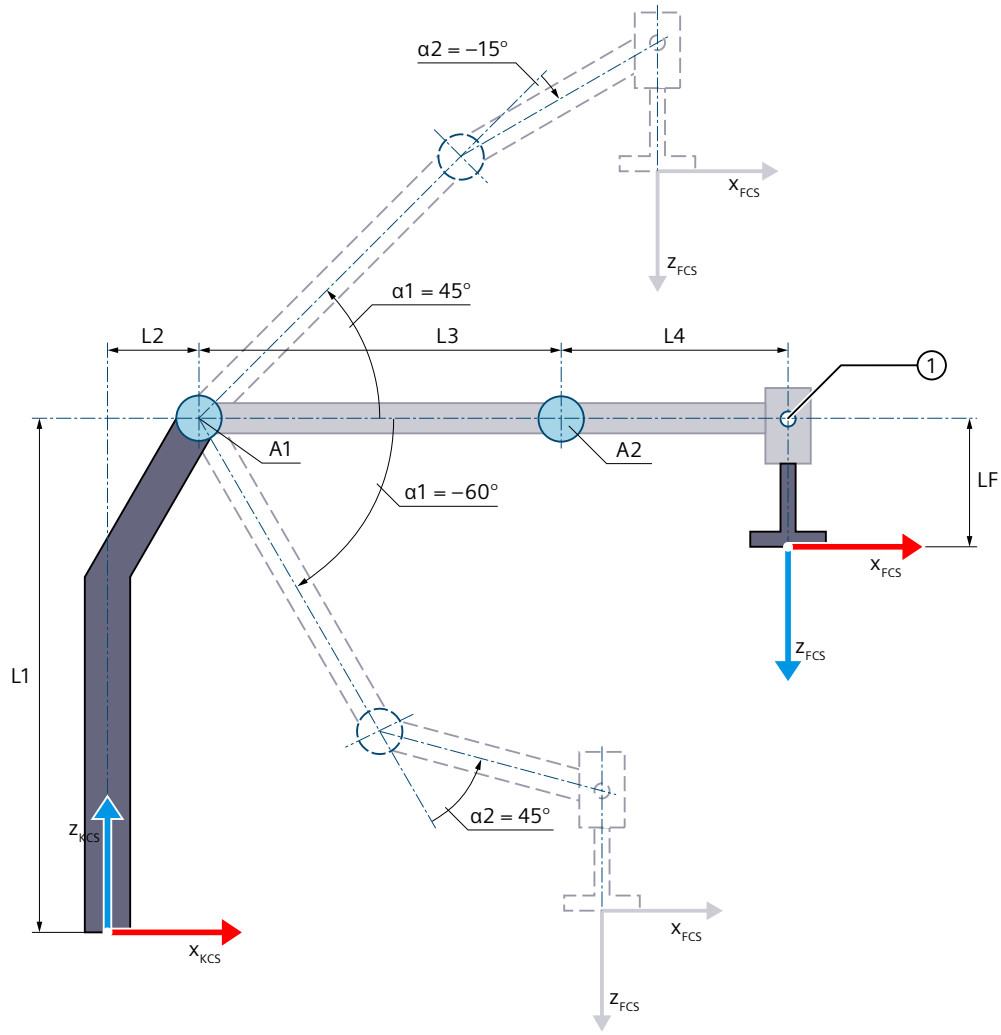

① Forced coupler point

Zero position of the kinematics

- L1 Distance of the axis A1 to the kinematics zero point (KZP) in z direction of the KCS
- L2 Distance of the axis A1 to the KZP in x direction of the KCS
- L3 Distance of the axis A2 to the axis A1 in x direction of the KCS
- L4 Distance of the forced coupler point to the axis A2 in x direction of the KCS
- LF Distance of the FCS to the forced coupler point in z direction of the FCS

Deflection of the kinematics

- α1 Positive deflection of the axis A1 when α1 = 45.0°
  Negative deflection of the axis A1 when α1 = -60.0°
- α2 The deflection of the axis A2 in the positive direction when α2 = 45.0° produces a positive joint position.
  The deflection of the axis A2 in negative direction when α2 = -15.0° produces a negative joint position.

Legend for representation of the kinematics (Page 37)

The kinematics coordinate system (KCS) with the kinematics zero point (KZP) is located at the base of the kinematics. You define the position of the axis A1 relative to the KZP using

lengths L1 and L2. The axis A2 is located at distance L3 in x direction of the KCS from the axis A1.

The flange coordinate system (FCS) is located at the following distances from the axis A2 and the forced coupler point:

- Distance L4 to the axis A2 in x direction of the KCS
- Distance LF to the forced coupler point in the negative z direction of the KCS

The axis A2 and the flange system are force-coupled. With the force coupling, the z axis of the FCS always points in negative z direction of the KCS. The forced coupler point is located at distance L4 in x direction of the KCS from the axis A2.

The following table shows the zero position of the axes:

Axis	Zero position
A1	Length L3 points in x direction of the KCS.
A2	At zero position of the axis A1, the length L4 points in x direction of the KCS.

Compensation of mechanical axis couplings

For the kinematics, you can configure a mechanical axis coupling of axis A1 to axis A2. The kinematics transformation compensates for the configured mechanical axis coupling. With a compensation factor > 0.0, the kinematics transformation assumes that a positive motion of the axis A1 leads to a negative motion on the axis A2.

Transformation area

The kinematics transformation covers the following traversing range (Page 163) of the axes:

- Axis A1: -180.0° ≤ α1 < 180.0°
- Axis A2: -180.0° ≤ α2 < 180.0°

NOTE

Singularity

The kinematics has outer singularities (Page 167).

Joint position space

The following table shows the possible arm positioning spaces of the kinematics:

Tag		Data type	Values	W	Description	
StatusKinematics.		TO_Struct_Kinematics_StatusKinematics				
	Valid	BOOL	-	RON	Validity of the transformation values	
					FALSE	Invalid
					TRUE	Valid
	LinkConstellation	DWORD	0 to n	RON	Joint position space	

Tag		Data type	Values	W	Description	
	Bit 0	-	-	-	Position axis 1	
					0	Not relevant
					1	Not relevant
	Bit 1	-	-	-	Position axis 2 Angle α2 of axis A2 positive/negative taking into consideration the mechanical axis coupling	
					0	α2 positive
					1	α2 negative
	Bit 2	-	-	-	Position axis 3	
					0	Not relevant
					1	Not relevant
	Bit 3 ... 31	-	-	-	Not relevant	

6.10.4.2 Articulated arm 2D with orientation (S7-1500T)

The kinematics "Articulated arm 2D with orientation" supports 3 axes and 3 degrees of freedom. The axes are configured as serial kinematics with forced coupling of the flange system.
The following graphic shows the principal configuration and the typical working area of the kinematics:

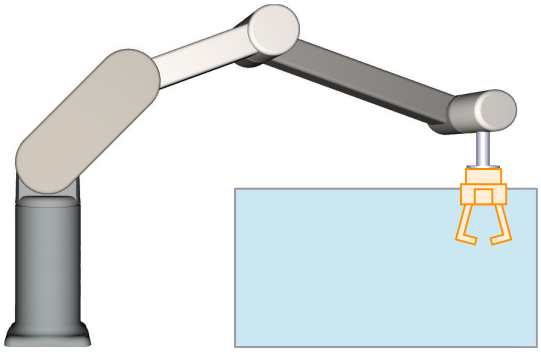

The kinematics consists of the following axes:

- 1 rotary axis A1 with the distances L1 in z direction of the KCS and L2 in x direction of the KCS to the kinematics zero point
- 1 rotary axis A2 at distance L3 to axis A1
- 1 rotary axis A4 with rotation around z in the KCS at a distance L4 in x direction of the KCS to axis A2

The kinematics consists of a base and articulated arms, which are connected by revolute joints (axes A1, A2). Axes A1 and A2 move the articulated arm in the xz plane. Through a forced coupling between the axes and the flange system, the z axis of the FCS always points in the negative z direction of the KCS. The kinematics axis A4 enables rotation of the tool around z in the KCS.

Coordinate systems and zero position

The graphic below shows the following in the side view:

- The position of the axes and of the forced coupler point
- The position of coordinate systems KCS and FCS
- The zero position of the kinematics
- The positive/negative deflection of the kinematics is indicated (dashed)

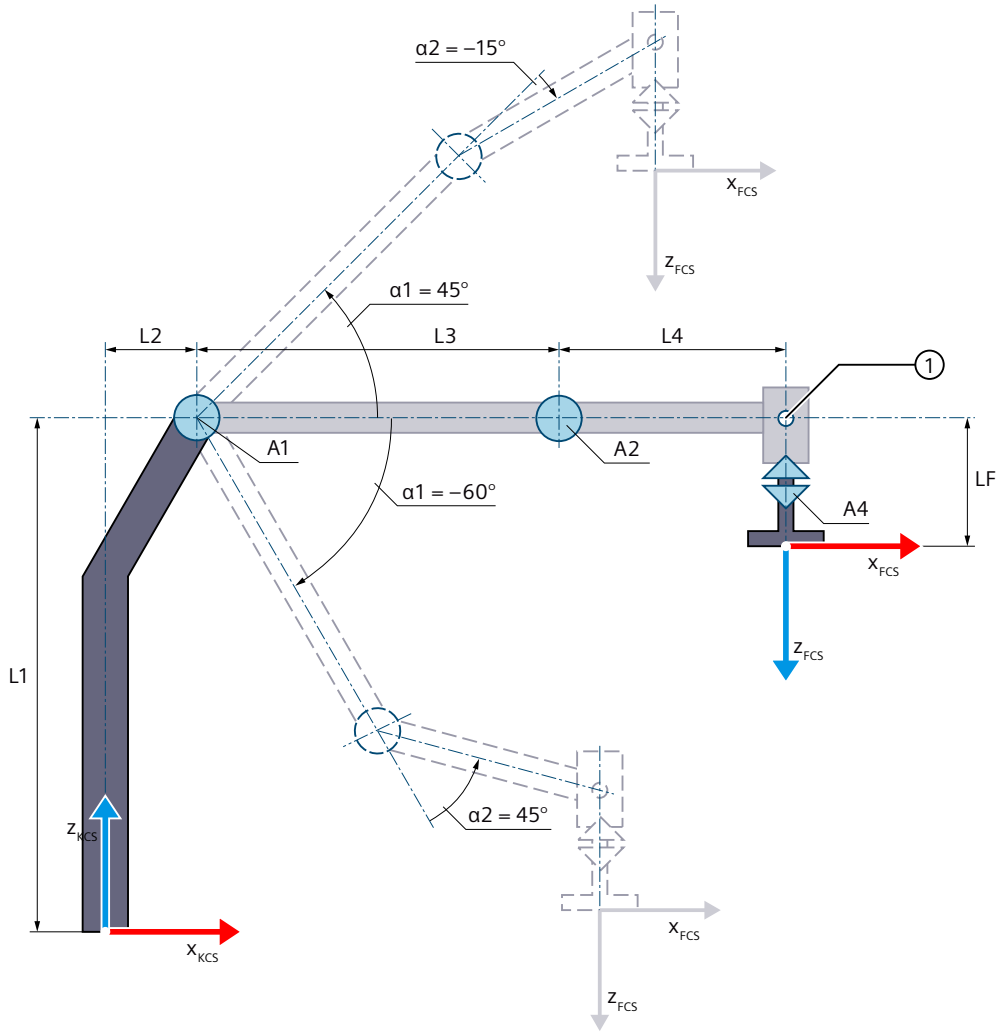

① Forced coupler point

Zero position of the kinematics

L1	Distance of the axis A1 to the kinematics zero point (KZP) in z direction of the KCS
L2	Distance of the axis A1 to the KZP in x direction of the KCS
L3	Distance of the axis A2 to the axis A1 in x direction of the KCS
L4	Distance of the forced coupler point to the axis A2 in x direction of the KCS
LF	Distance of the FCS to the forced coupler point in z direction of the FCS

Deflection of the kinematics

α1 Positive deflection of the axis A1 when α1 = 45.0°
Negative deflection of the axis A1 when α1 = -60.0°

α2 The deflection of the axis A2 in the positive direction when α2 = 45.0° produces a positive joint position.
The deflection of the axis A2 in negative direction when α2 = -15.0° produces a negative joint position.

Legend for representation of the kinematics (Page 37)

The kinematics coordinate system (KCS) with the kinematics zero point (KZP) is located at the base of the kinematics. You define the position of the axis A1 relative to the KZP using lengths L1 and L2. The axis A2 is located at distance L3 in x direction of the KCS from the axis A1.

The flange coordinate system (FCS) is located at the following distances from the axis A2 and the forced coupler point:

- Distance L4 to the axis A2 in x direction of the KCS
- Distance LF to the forced coupler point in the negative z direction of the KCS

The axis A2 and the flange system are force-coupled. With the force coupling, the z axis of the FCS always points in negative z direction of the KCS. The forced coupler point is located at distance L4 in x direction of the KCS from the axis A2.

The following table shows the zero position of the axes:

Axis	Zero position
A1	Length L3 points in x direction of the KCS.
A2	At zero position of the axis A1, the length L4 points in x direction of the KCS.
A4	At the zero position of axis A1 and A2, the x axis of the FCS points in the direction of the x axis of the KCS.

Compensation of mechanical axis couplings

For the kinematics, you can configure a mechanical axis coupling of axis A1 to axis A2. The kinematics transformation compensates for the configured mechanical axis coupling. With a compensation factor > 0.0, the kinematics transformation assumes that a positive motion of the axis A1 leads to a negative motion on the axis A2.

Transformation area

The kinematics transformation covers the following traversing range (Page 163) of the axes:

- Axis A1: -180.0° ≤ α1 < 180.0°
- Axis A2: -180.0° ≤ α2 < 180.0°
- Axis A4: No limit
  An angle greater than 360° can be defined for the orientation. But coordinate A of the tool center point (TCP) is mapped in the range -180° to +180°.

NOTE
Singularity
The kinematics has outer singularities (Page 167).

Joint position space

The following table shows the possible arm positioning spaces of the kinematics:

Tag	Data type	Values	W	Description	
StatusKinematics.	TO_Struct_Kinematics_StatusKinematics				
Valid	BOOL	-	RON	Validity of the transformation values	
				FALSE	Invalid
				TRUE	Valid
LinkConstellation	DWORD	0 to n	RON	Joint position space	
Bit 0	-	-	-	Position axis 1	
				0	Not relevant
				1	Not relevant
Bit 1	-	-	-	Position axis 2 Angle α2 of axis A2 positive/negative taking into consideration the mechanical axis coupling	
				0	α2 positive
				1	α2 negative
Bit 2	-	-	-	Position axis 3	
				0	Not relevant
				1	Not relevant
Bit 3 ... 31	-	-	-	Not relevant	

6.10.4.3 Articulated arm 3D (S7-1500T)

The kinematics "Articulated arm 3D" supports 3 axes and 3 degrees of freedom. The axes are configured as serial kinematics with forced coupling of the flange system.

The following graphic shows the principal configuration and the typical working area of the kinematics:

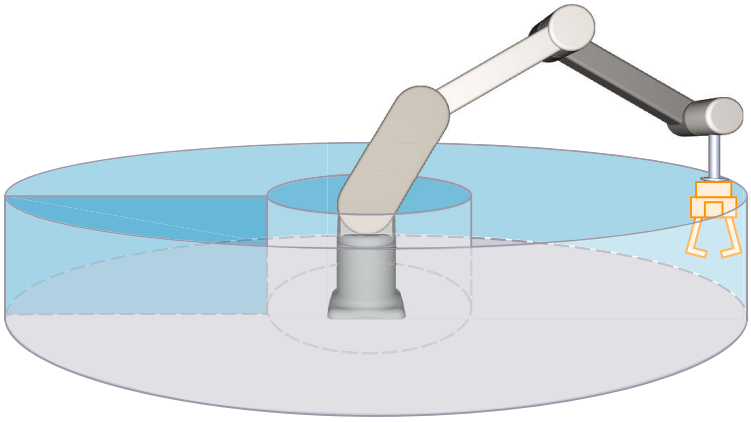

The kinematics consists of the following axes:

- 1 rotary axis A1 with rotation around the z axis of the kinematics coordinate system (KCS)
- 1 rotary axis A2 with the distances L1 in z direction of the KCS and L2 in x direction of the KCS to the kinematics zero point
- 1 rotary axis A3 at distance L3 to axis A2

The kinematics consists of a base and articulated arms, which are connected by revolute joints (axes A1, A2 and A3). Axis A1 rotates the kinematics horizontally around the base. Axes A2 and A3 move the articulated arm. The kinematics enables an approximately spherical working area. Through a forced coupling between the axes and the flange system, the z axis of the FCS always points in the negative z direction of the KCS.

Coordinate systems and zero position

The graphic below shows the following in the side view (xz plane):

- The position of the axes and of the forced coupler point
- The position of coordinate systems KCS and FCS
- The zero position of the axes
- The positive/negative deflection of the axes A2 and A3 is indicated (dashed)

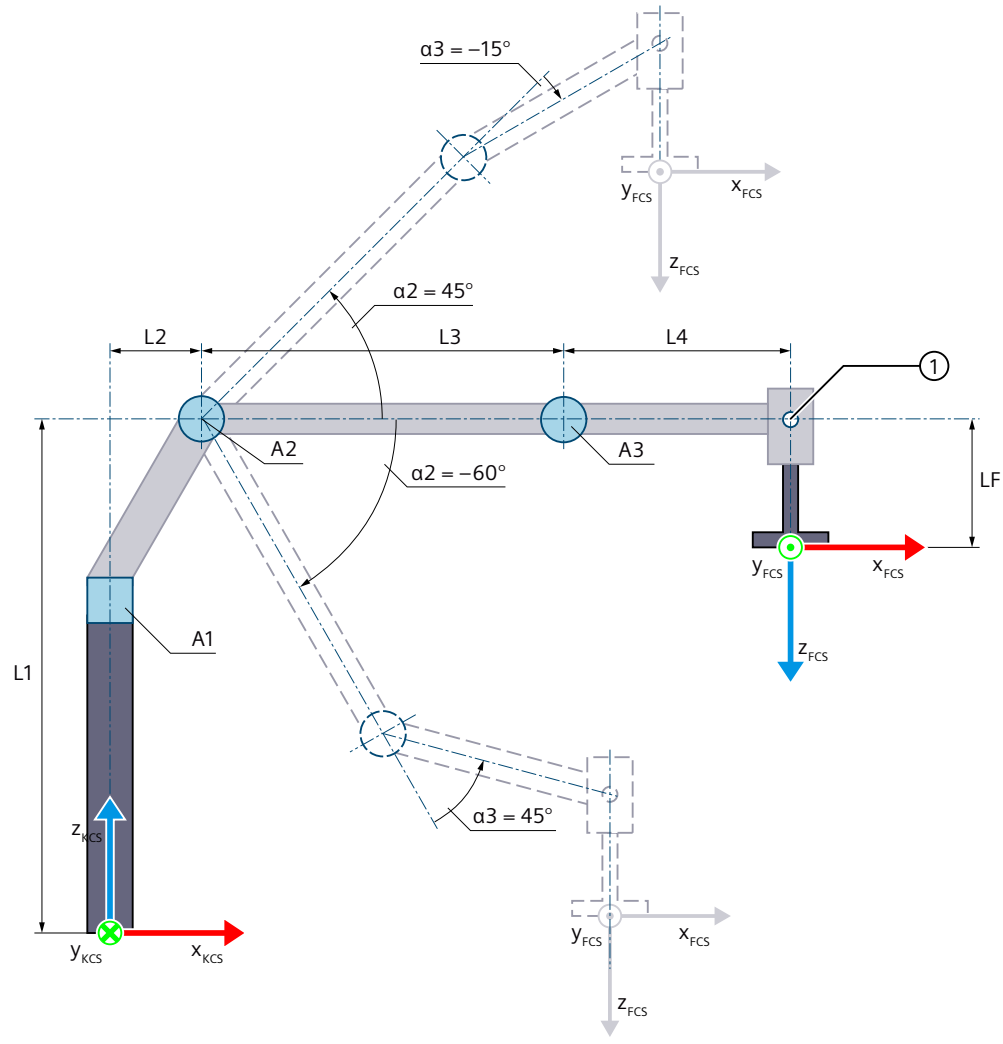

① Forced coupler point

Zero position of the kinematics

- L1 Distance of the axis A2 to the kinematics zero point (KZP) in z direction of the KCS
- L2 Distance of the axis A2 to the KZP in x direction of the KCS
- L3 Distance of the axis A3 to the axis A2 in x direction of the KCS
- L4 Distance of the forced coupler point to the axis A3 in x direction of the KCS
- LF Distance of the FCS to the forced coupler point in z direction of the FCS

Deflection of the kinematics

- α2 Positive deflection of the axis A2 when α2 = 45.0°
  Negative deflection of the axis A2 when α2 = -60.0°
- α3 The deflection of the A3 in the positive direction when α3 = 45.0° produces a positive joint position.
  The deflection of the A3 in negative direction when α3 = -15.0° produces a negative joint position.

Legend for representation of the kinematics (Page 37)

The graphic below shows the following in the top view (xy plane):

- The position of the axes and the coordinate systems KCS and FCS
- The zero position of the kinematics
- The positive/negative deflection of the kinematics is indicated (dashed)

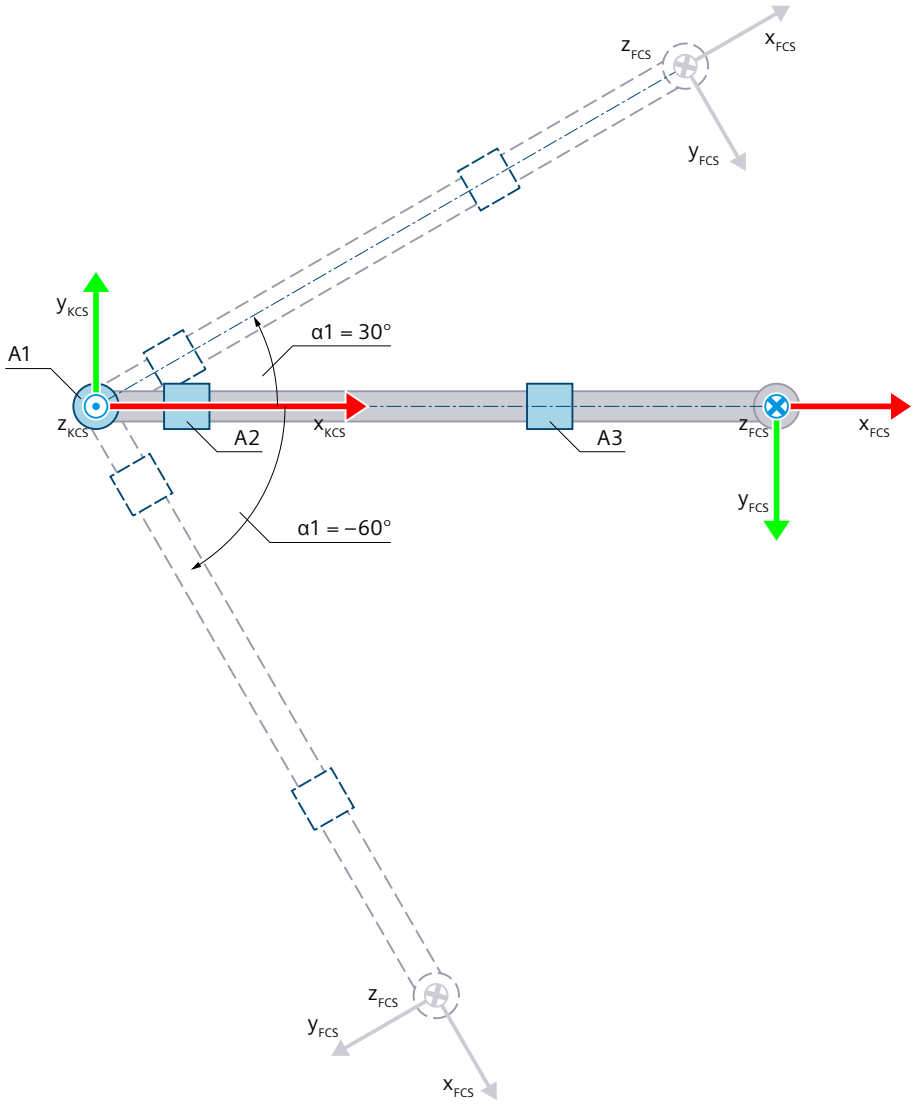

Zero position of the kinematics

Deflection of the kinematics

α1 Positive deflection of the axis A1 when α1 = 30.0°
Negative deflection of the axis A1 when α1 = -60.0°

Legend for representation of the kinematics (Page 37)

The KCS with the kinematics zero point (KZP) is located at the base of the kinematics. You define the position of the axis A2 relative to the KZP using lengths L1 and L2. The axis A3 is located at distance L3 in x direction of the KCS from the axis A2.

The flange coordinate system (FCS) is located at the following distances from the axis A3 and the forced coupler point:

- Distance L4 to the axis A3 in x direction of the KCS
- Distance LF to the forced coupler point in the negative z direction of the KCS

The axis A3 and the flange system are force-coupled. With the force coupling, the z axis of the FCS always points in negative z direction of the KCS. The forced coupler point is located at distance L4 in x direction of the KCS from the axis A3.
The following table shows the zero position of the axes:

Axis	Zero position
A1	The articulated arms of the kinematics point in the x direction of the KCS.
A2	At zero position of the axis A1, the length L3 points in x direction of the KCS.
A3	At zero position of the axes A1 and A2, the length L4 points in x direction of the KCS.

Compensation of mechanical axis couplings

You can configure a mechanical axis coupling of axis A2 to axis A3 for the kinematics. The kinematics transformation compensates for the configured mechanical axis coupling. With a compensation factor > 0.0, the kinematics transformation assumes that a positive motion of the axis A2 leads to a negative motion on the axis A3.

Transformation area

The kinematics transformation covers the following traversing range (Page 163) of the axes:

- Axis A1: $-180.0° \leq \alpha 1 < 180.0°$
- Axis A2: $-180.0° \leq \alpha 2 < 180.0°$
- Axis A3: $-180.0° \leq \alpha 3 < 180.0°$

NOTE
Singularity
The kinematics has singularities (Page 167).

A singularity occurs when the zero point of the flange coordinate system (FCS) is located on the z axis of the kinematics coordinate system (KCS). Inverse transformation is not possible in this area.

The graphic below shows examples of singularities and permissible joint positions:

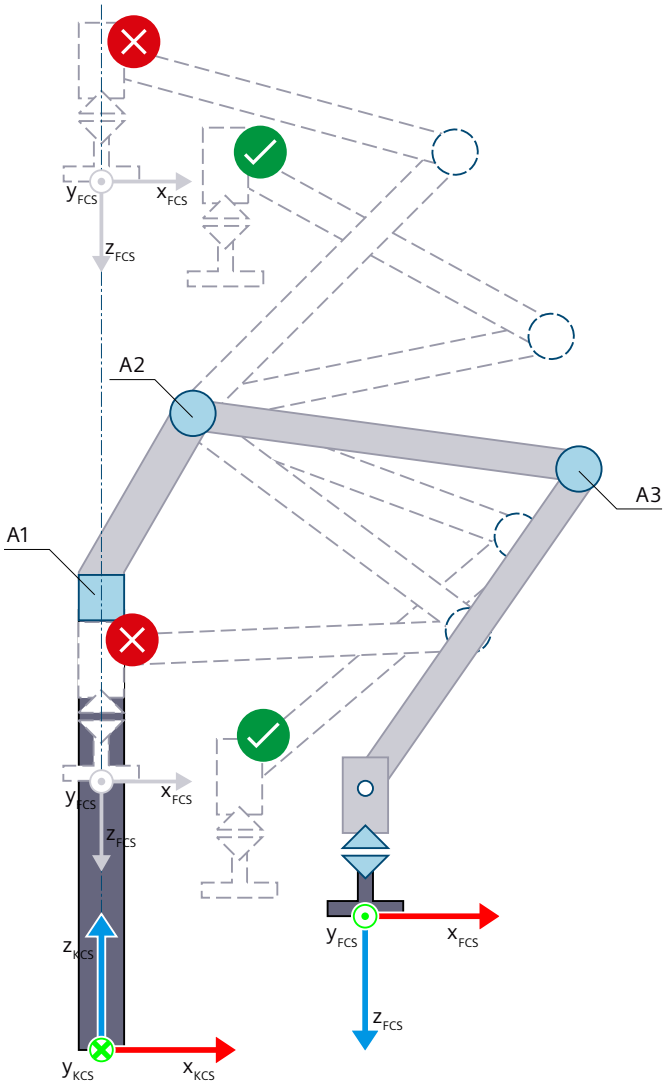

Joint position space

The following table shows the possible arm positioning spaces of the kinematics:

Tag	Data type	Values	W	Description	
StatusKinematics.	TO_Struct_Kinematics_StatusKinematics				
Valid	BOOL	-	RON	Validity of the transformation values	
				FALSE	Invalid
				TRUE	Valid

Tag	Data type	Values	W	Description	
LinkConstellation	DWORD	0 to n	RON	Joint position space	
Bit 0	-	-	-	Position axis 1 Angle α1 of axis A1 in the front/rear area (standard area/overhead area)	
				0	The zero point of the FCS is located in the front area (standard area) of the joint position lines for the axis A1. $\alpha 1 = \arctan(y_{FCS}/x_{FCS})$
				1	The zero point of the FCS is located in the rear area (overhead area) of the joint position lines for the axis A1. $\alpha 1 = -\arctan(y_{FCS}/x_{FCS})$
Bit 1	-	-	-	Position axis 2	
				0	Not relevant
				1	Not relevant
Bit 2	-	-	-	Position axis 3 Angle α3 of axis A3 positive/negative taking into consideration the mechanical axis coupling	
				0	α3 positive
				1	α3 negative
Bit 3 ... 31	-	-	-	Not relevant	

6.10.4.4 Articulated arm 3D with orientation (S7-1500T)

The kinematics "Articulated arm 3D with orientation" supports 4 axes and 4 degrees of freedom. The axes are configured as serial kinematics with forced coupling of the flange system.
The following graphic shows the principal configuration and the typical working area of the kinematics:

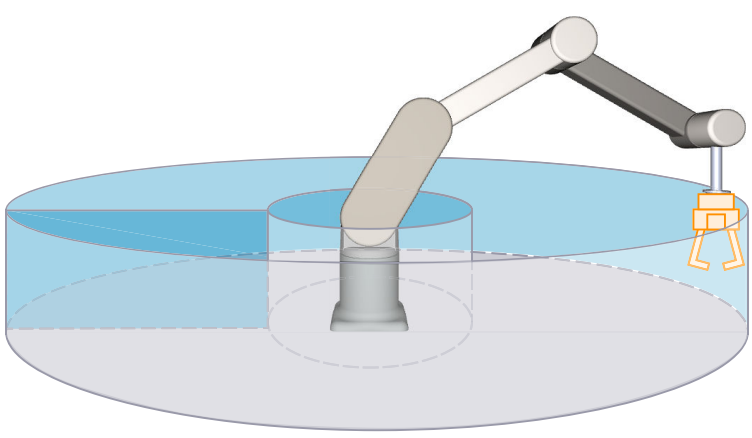

The kinematics consists of the following axes:

- 1 rotary axis A1 with rotation around the z axis of the kinematics coordinate system (KCS)
- 1 rotary axis A2 with the distances L1 in z direction of the KCS and L2 in x direction of the KCS to the kinematics zero point
- 1 rotary axis A3 at distance L3 to axis A2
- 1 rotary axis A4 with rotation around z in the KCS at a distance L4 in x direction of the KCS to axis A3

The kinematics consists of a base and articulated arms, which are connected by revolute joints (axes A1, A2 and A3). Axis A1 rotates the kinematics horizontally around the base. Axes A2 and A3 move the articulated arm. The kinematics enables an approximately spherical working area. Through a forced coupling between the axes and the flange system, the z axis of the FCS always points in the negative z direction of the KCS. The kinematics axis A4 enables rotation of the tool around z in the KCS.

Coordinate systems and zero position

The graphic below shows the following in the side view (xz plane):

- The position of the axes and of the forced coupler point
- The position of coordinate systems KCS and FCS
- The zero position of the kinematics
- The positive/negative deflection of the kinematics is indicated (dashed)

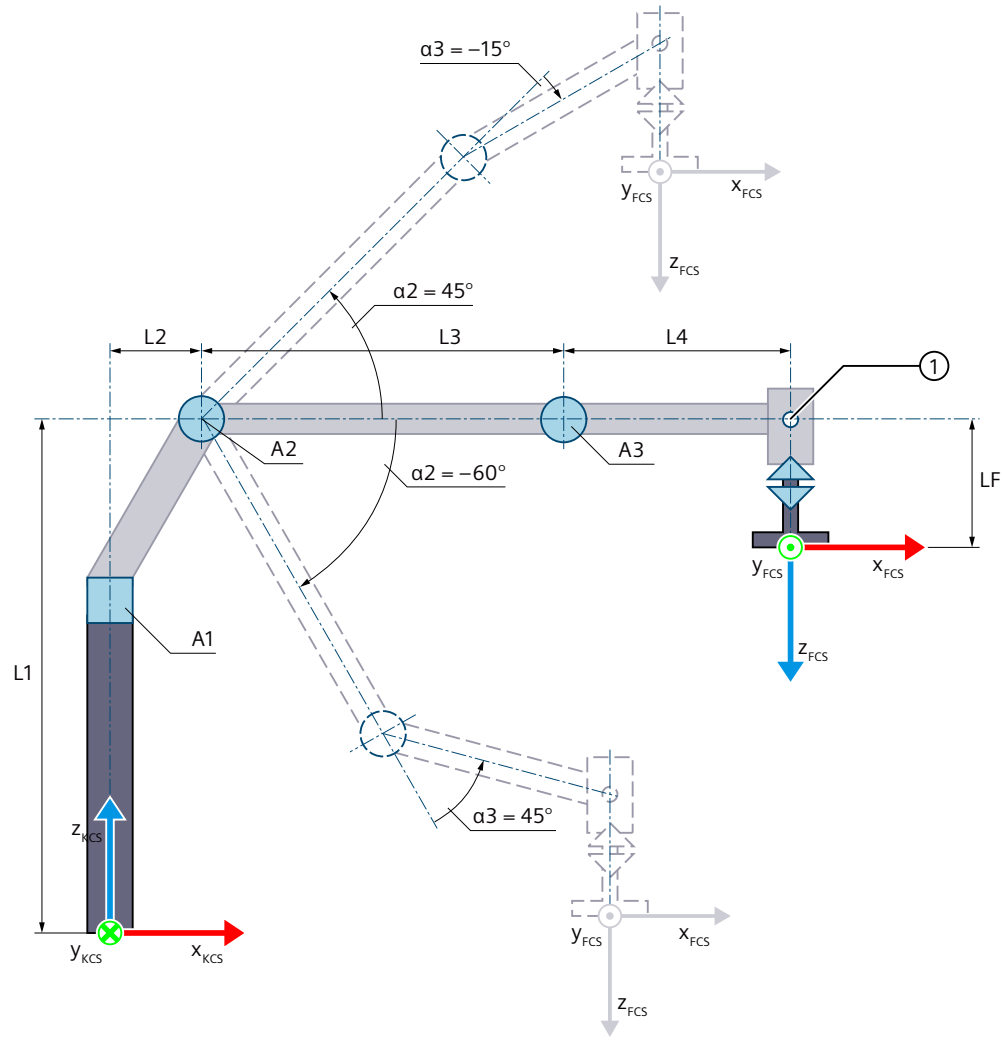

① Forced coupler point

Zero position of the kinematics

- L1 Distance of the axis A2 to the kinematics zero point (KZP) in z direction of the KCS
- L2 Distance of the axis A2 to the KZP in x direction of the KCS
- L3 Distance of the axis A3 to the axis A2 in x direction of the KCS
- L4 Distance of the forced coupler point to the axis A3 in x direction of the KCS
- LF Distance of the FCS to the forced coupler point in z direction of the FCS

Deflection of the kinematics

- α2 Positive deflection of the axis A2 when α2 = 45.0°
  Negative deflection of the axis A2 when α2 = -60.0°
- α3 The deflection of the A3 in the positive direction when α3 = 45.0° produces a positive joint position.
  The deflection of the A3 in negative direction when α3 = -15.0° produces a negative joint position.

Legend for representation of the kinematics (Page 37)

The graphic below shows the following in the top view (xy plane):

- The position of the axes
- The position of coordinate systems KCS and FCS
- The zero position of the kinematics
- The positive/negative deflection of the kinematics is indicated (dashed)

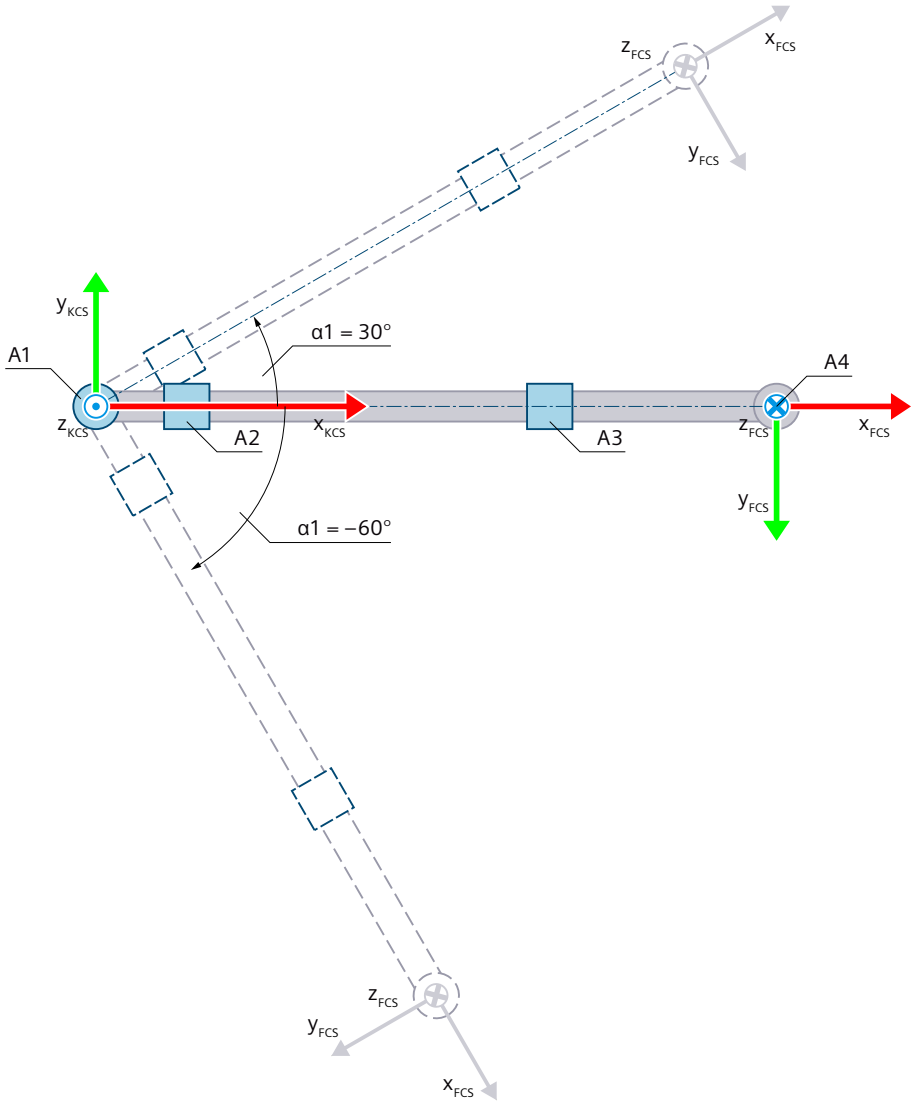

Zero position of the kinematics

Deflection of the kinematics

α1 Positive deflection of the axis A1 when α1 = 30.0°
Negative deflection of the axis A1 when α1 = -60.0°

Legend for representation of the kinematics (Page 37)

The KCS with the kinematics zero point (KZP) is located at the base of the kinematics. You define the position of the axis A2 relative to the KZP using lengths L1 and L2. The axis A3 is located at distance L3 in x direction of the KCS from the axis A2.

The flange coordinate system (FCS) is located at the following distances from the axis A3 and the forced coupler point:

- Distance L4 to the axis A3 in x direction of the KCS
- Distance LF to the forced coupler point in the negative z direction of the KCS

The axis A3 and the flange system are force-coupled. With the force coupling, the z axis of the FCS always points in negative z direction of the KCS. The forced coupler point is located at distance L4 in x direction of the KCS from the axis A3.
The following table shows the zero position of the axes:

Axis	Zero position
A1	The articulated arms of the kinematics point in the x direction of the KCS.
A2	At zero position of the axis A1, the length L3 points in x direction of the KCS.
A3	At zero position of the axes A1 and A2, the length L4 points in x direction of the KCS.
A4	At zero position of the axes A1, A2 and A3, the x axis of the FCS points in the direction of the x axis of the KCS.

Compensation of mechanical axis couplings

You can configure a mechanical axis coupling of axis A2 to axis A3 for the kinematics. The kinematics transformation compensates for the configured mechanical axis coupling. With a compensation factor > 0.0, the kinematics transformation assumes that a positive motion of the axis A2 leads to a negative motion on the axis A3.

Transformation area

The kinematics transformation covers the following traversing range (Page 163) of the axes:

- Axis A1: -180.0° ≤ α1 < 180.0°
- Axis A2: -180.0° ≤ α2 < 180.0°
- Axis A3: -180.0° ≤ α3 < 180.0°
- Axis A4: No limit
  An angle greater than 360° can be defined for the orientation. But coordinate A of the tool center point (TCP) is mapped in the range -180° to +180°.

NOTE
Singularity
The kinematics has singularities (Page 167).

A singularity occurs when the zero point of the flange coordinate system (FCS) is located on the z axis of the kinematics coordinate system (KCS). Inverse transformation is not possible in this area.

The graphic below shows examples of singularities and permissible joint positions:

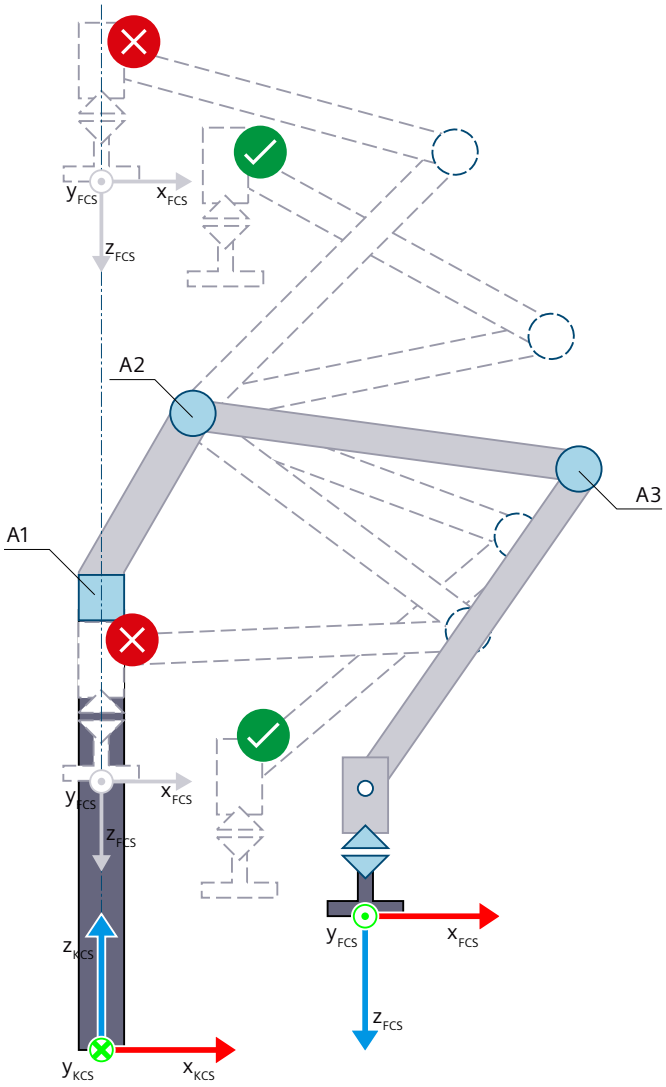

Joint position space

The following table shows the possible arm positioning spaces of the kinematics:

Tag	Data type	Values	W	Description	
StatusKinematics.	TO_Struct_Kinematics_StatusKinematics				
Valid	BOOL	-	RON	Validity of the transformation values	
				FALSE	Invalid
				TRUE	Valid

Tag	Data type	Values	W	Description	
LinkConstellation	DWORD	0 to n	RON	Joint position space	
Bit 0	-	-	-	Position axis 1 Angle α1 of axis A1 in the front/rear area (standard area/overhead area)	
				0	The zero point of the FCS is located in the front area (standard area) of the joint position lines for the axis A1. $\alpha 1 = \arctan(y_{FCS}/x_{FCS})$
				1	The zero point of the FCS is located in the rear area (overhead area) of the joint position lines for the axis A1. $\alpha 1 = -\arctan(y_{FCS}/x_{FCS})$
Bit 1	-	-	-	Position axis 2	
				0	Not relevant
				1	Not relevant
Bit 2	-	-	-	Position axis 3 Angle α3 of axis A3 positive/negative taking into consideration the mechanical axis coupling	
				0	α3 positive
				1	α3 negative
Bit 3 ... 31	-	-	-	Not relevant	

6.10.4.5 6-axis articulated arm with central hand (S7-1500T)

The kinematics "6-axis articulated arm with central hand" supports 6 axes and 6 degrees of freedom. The axes are configured as serial kinematics. For this kinematics type you need the Motion Control package "S7-1500T Motion Control KinPlus (Page 29)".

The following graphic shows the principal configuration and the typical working area of the kinematics:

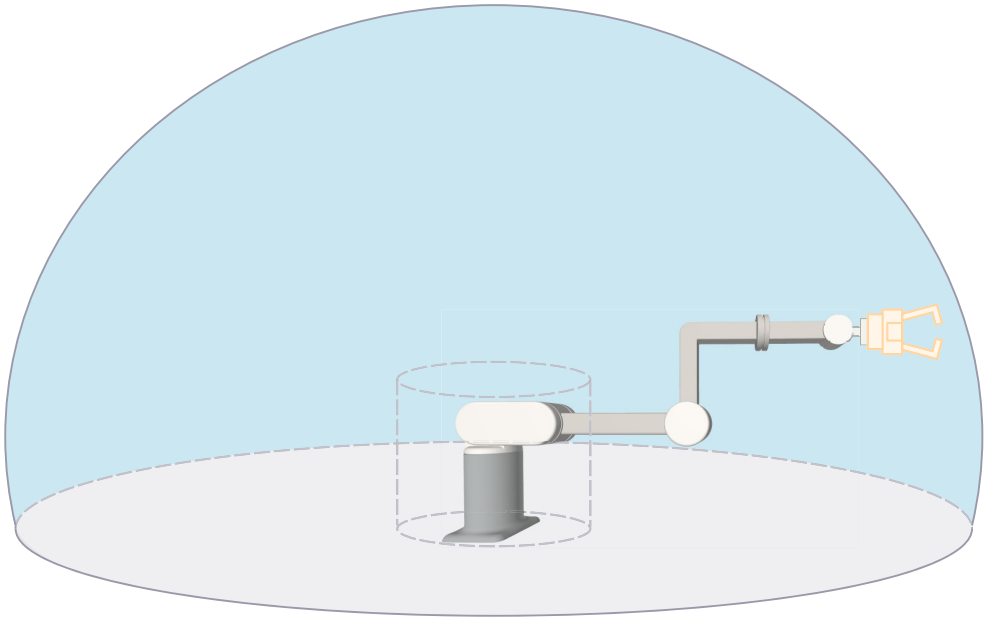

The kinematics consists of the following axes (output state):

- 1 rotary axis A1 with rotation around the z axis of the kinematics coordinate system (KCS)
- 1 rotary axis A2 with the distances L1 in z direction of the KCS and L2 in x direction of the KCS to the kinematics zero point
- 1 rotary axis A3 at distance L3 to axis A2
- 1 rotary axis A4 with the distance L5 in z direction of the KCS to the axis A3 with rotation around x
- 1 rotary axis A5 with the distances L4 in x direction of the KCS and L5 in z direction of the KCS to the axis A3 with rotation around y
- 1 rotary axis A6 with distance LF to axis A5 with rotation around x

The kinematics consists of a base and articulated arms, which are connected by revolute joints (axes A1, A2 and A3). Axis A1 rotates the kinematics horizontally around the base. Axes A2 and A3 move the articulated arm. The kinematics enables an approximately spherical working area.

The axes A4, A5 and A6 form the central hand. This means that the axes A4, A5 and A6 intersect at one point. This point is referred to as the manual root point.

Coordinate systems and zero position

The graphic below shows the following in the side view (xz plane):

- The position of the axes
- The position of coordinate systems KCS and FCS
- The zero position of the kinematics

NOTE
Singularity
Note that the zero position represents a singularity.

- The positive/negative deflection of the kinematics is indicated (dashed)

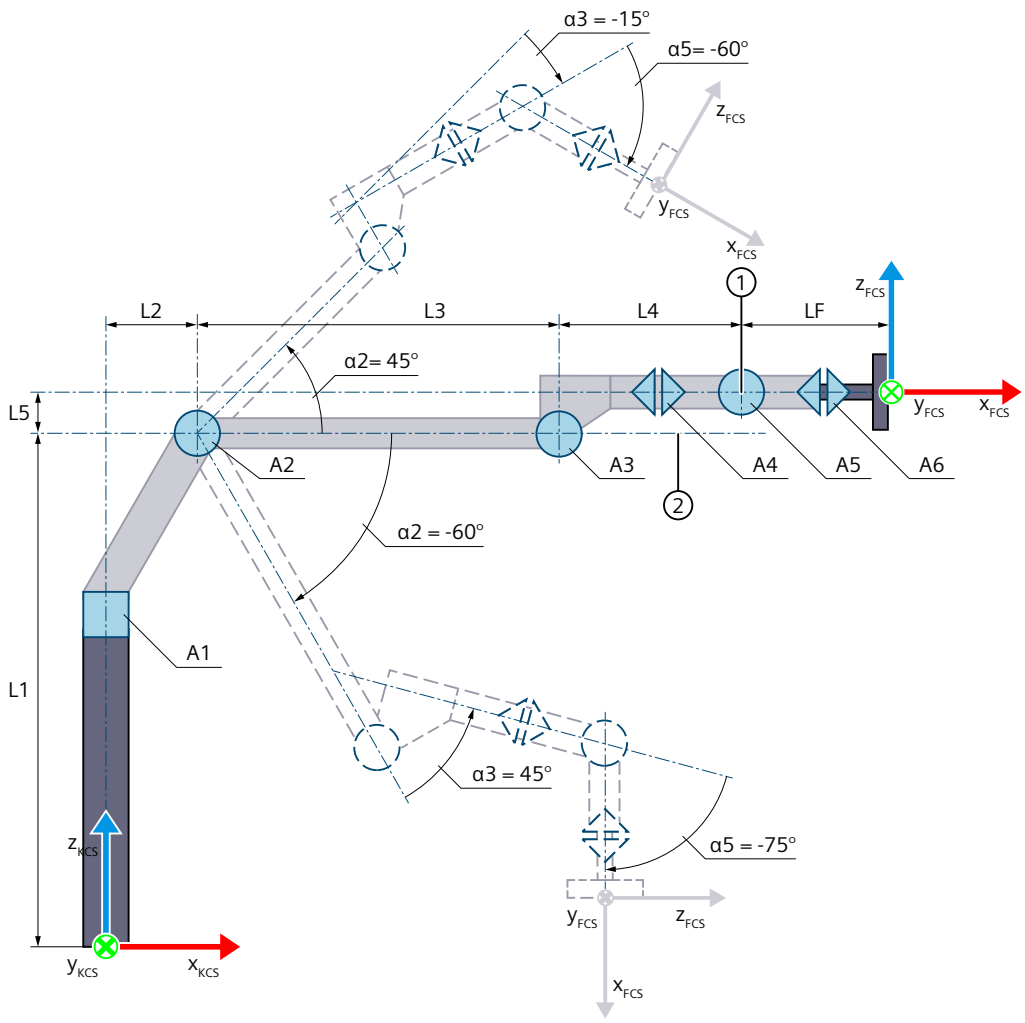

① Manual root point

② Joint position line for the joint

Zero position of the kinematics

- L1 Distance of the axis A2 to the kinematics zero point (KZP) in z direction of the KCS
- L2 Distance of the axis A2 to the KZP in x direction of the KCS
- L3 Distance of the axis A3 to the axis A2 in x direction of the KCS
- L4 Distance of the manual root point to the axis A3 in x direction of the KCS
- L5 Distance of the manual root point to the axis A3 in z direction of the KCS
- LF Distance of the FCS to the manual root point in x direction of the KCS

Deflection of the kinematics

- α2 Positive deflection of the axis A2 when α2 = 45.0°
  Negative deflection of the axis A2 when α2 = -60.0°
- α3 The deflection of the A3 in the positive direction when α3 = 45.0° produces a positive joint position.
  The deflection of the A3 in negative direction when α3 = -15.0° produces a negative joint position.
- α5 The deflection of the axis A5 in negative direction when α5 = -60.0° or α5 = -75.0°produces a negative joint position.

Legend for representation of the kinematics (Page 37)

The graphic below shows the following in the top view (xy plane):

- The position of the axes
- The position of coordinate systems KCS and FCS
- The zero position of the kinematics
- The positive/negative deflection of the kinematics is indicated (dashed)

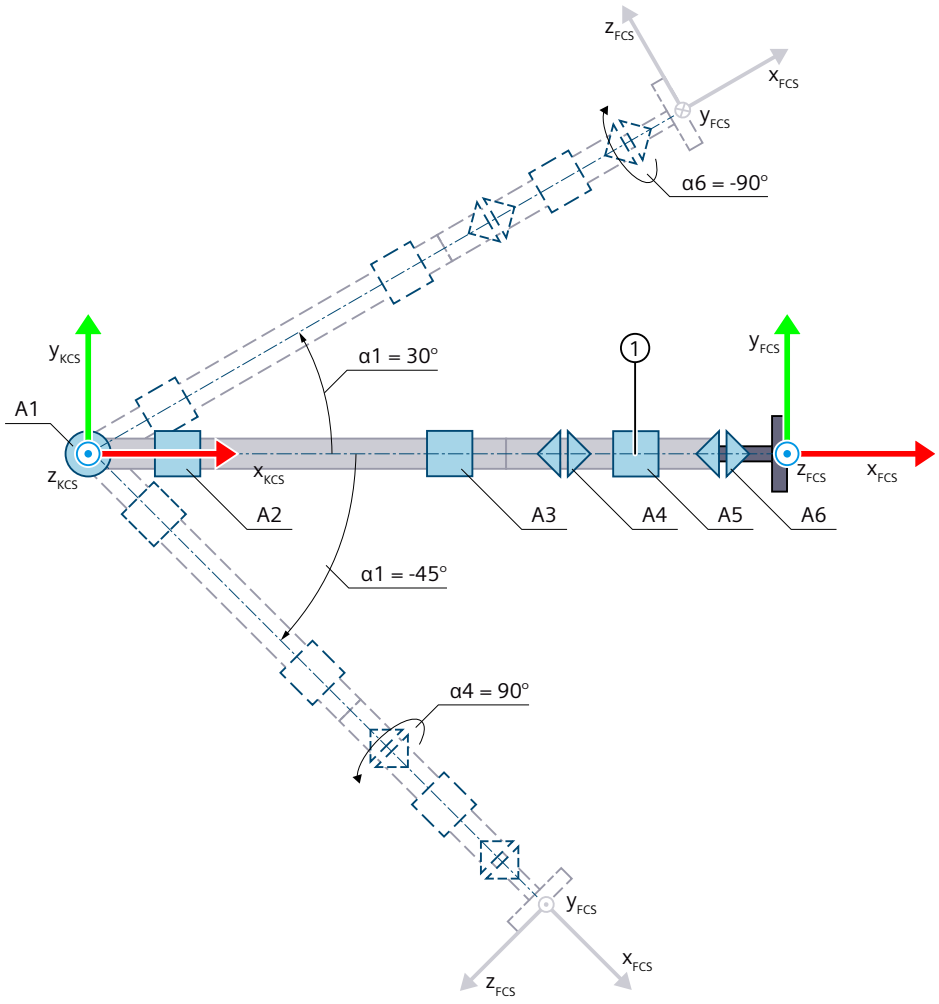

① Manual root point

Zero position of the kinematics

Deflection of the kinematics

α1	Positive deflection of the axis A1 when α1 = 30.0° Negative deflection of the axis A1 when α1 = -45.0°
α4	Positive deflection of the axis A4 when α4 = 90.0°
α6	Negative deflection of the axis A6 when α6 = -90.0°

Legend for representation of the kinematics (Page 37)

The KCS with the kinematics zero point (KZP) is located at the base of the kinematics. With zero position of the axes A1, A2, A3 and A5, the kinematics is extended in x direction of the KCS.

You can use the lengths L1 to L5 and the flange length LF to define the zero position of the flange coordinate system (FCS) at zero position of the kinematics. Since there is no forced coupling between the kinematics axes and the flange system, the coordinate axes of the FCS at the zero position of the kinematics point in the same direction as the coordinate axes of the KCS.

The following table shows the zero position of the axes:

Axis	Zero position
A1	The articulated arms of the kinematics point in the x direction of the KCS.
A2	At zero position of the axis A1, the length L3 points in x direction of the KCS.
A3	At zero position of the axes A1 and A2, the length L4 points in the x direction of the KCS and length L5 points in the z direction of the KCS.
A5	At zero position of the axes A1, A2 and A3, the length LF points in the x direction of KCS.
A4, A6	At zero position of the axes A1, A2, A3 and A5, the x, y and z axes of FCS point in the direction of the x, y and z axes of KCS.

Compensation of mechanical axis couplings

You can configure up to five mechanical axis couplings for the kinematics. The kinematics transformation compensates for the configured mechanical axis couplings. With a coupling factor > 0.0, the kinematics transformation assumes that a positive motion of the first axis leads to a negative motion at the second axis.

Transformation area

The kinematics transformation covers the following traversing range (Page 163) of the axes:

- Axis A[1..6]: -180.0° ≤ α[1..6] < 180.0°

To traverse outside these traversing range definitions, you can use, for example, the Motion Control instructions "MC_MoveLinearAbsolute (Page 340)" or "MC_MoveDirectAbsolute (Page 363)" and "MC_MoveDirectRelative (Page 371)" with "TurnJoint[1..6]" ≠ 1.

NOTE
Modulo functionality
Do not use the setting "Modulo" for the axes A1 to A6.

NOTE
Singularity
The kinematics has singularities (Page 167).

Singularity is present in the following cases:

- The axis A4 is located on the z axis of the KCS and rotates around the z axis of the KCS (A1 and A4 are collinear).
- The axis A5 is located on the z axis of the KCS and rotates around the z axis of the KCS (A1 and A5 are collinear).
- The axis A6 is located on the z axis of the KCS and rotates around the z axis of the KCS or the x axis of the FCS is located on the z axis of the KCS (A1 and A6 are collinear).
- The axes A4 and A6 rotate in opposite directions around the same axis when α5 = 0.0° (A4 and A6 are collinear).

Inverse transformation is not possible in these cases.

The graphic below shows examples of singularities and permissible joint positions:

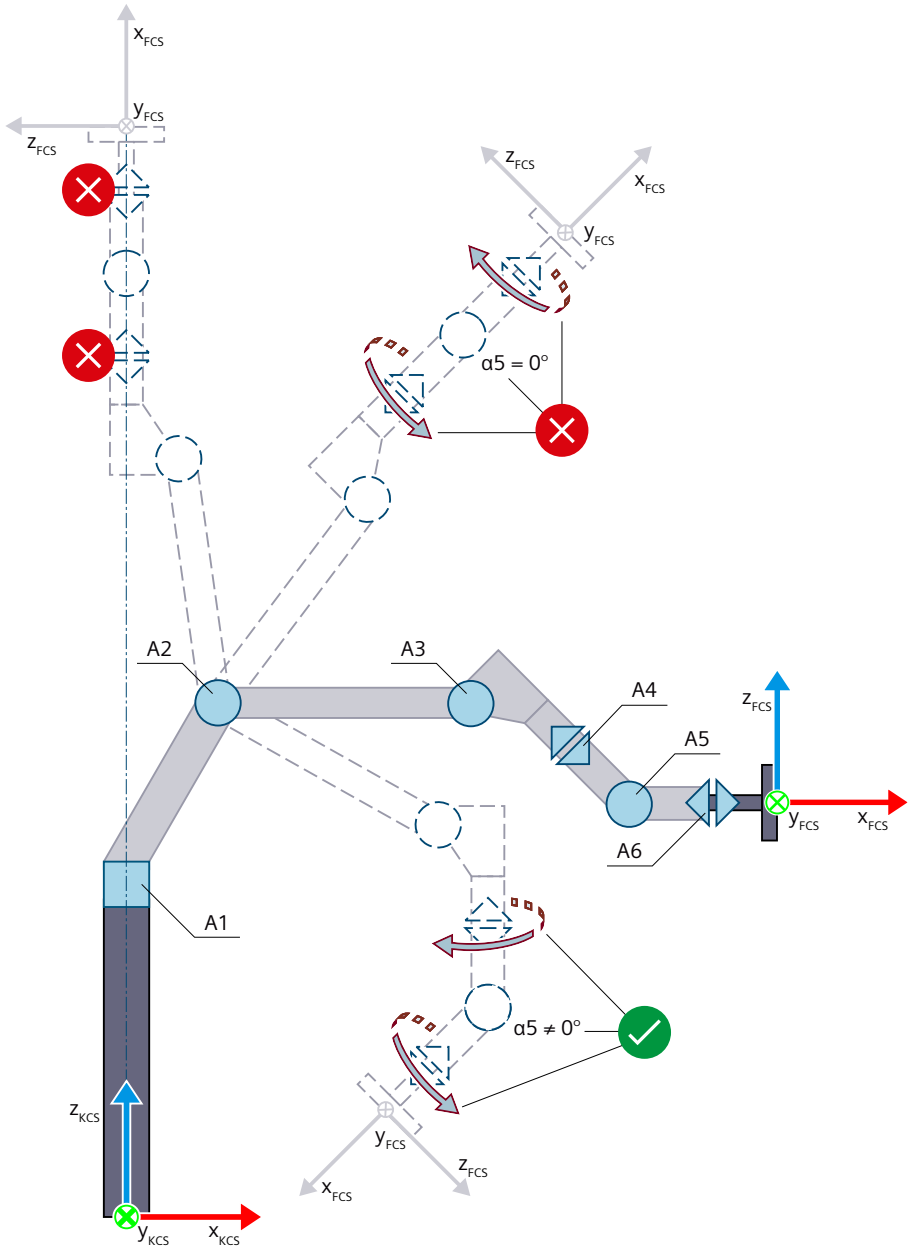

Permissible joint position

Inner singularity

Joint position space

The joint position space of the kinematics "6-axis articulated arm with central hand" is defined by the joint positions from the kinematics transformation. The joint position space thus describes the geometric joint positions of the kinematics.

When using mechanical axis couplings, inverted joint directions or joint offsets, the joint position space is not defined by the absolute joint positions "<TO>.JointData.J[1..6].Position" or the axis positions "<TO>.AxesData.A[1..6].Position".
The following example shows the geometric joint position on joint 5:

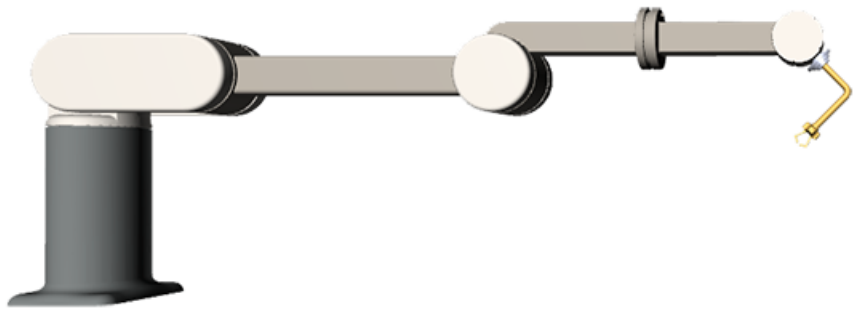

Case 1: No joint inversion and no joint offset is defined. The joint position corresponds to the geometric joint position (from the transformation), thus -45°. Bit 4 in the "<TO>StatusKinematics.LinkConstellation" tag is TRUE, because the geometric joint position is -45°.
Case 2: The inverted traversing direction is configured for joint 5. The kinematics has exactly the same geometric joint position as in Case 1. However, due to the inverted traversing direction, the joint position is +45°. Bit 4 in the "<TO>StatusKinematics.LinkConstellation" tag is thus also TRUE in this case, because the geometric joint position (from the transformation) is -45°.

Working areas

The following graphics show the overhead area ① and the standard area ②:

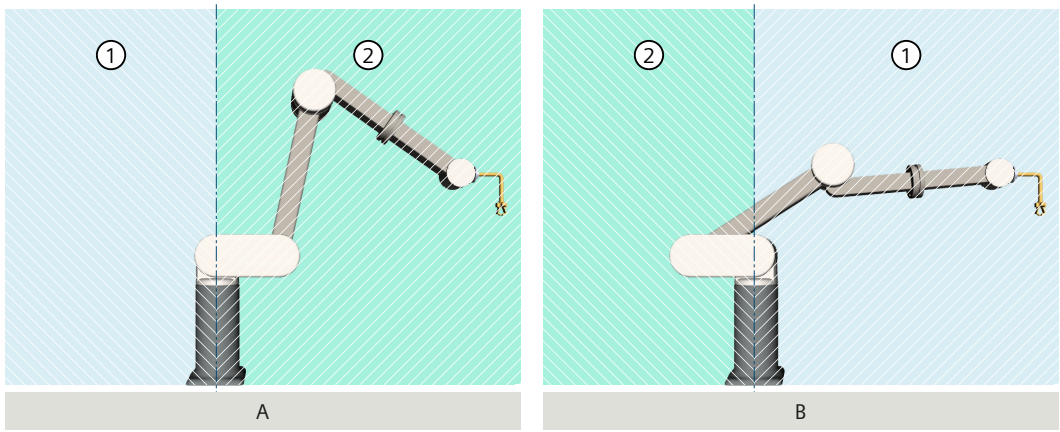

Example "A" shows the kinematics with joint J1 in the zero position. The wrist point is located in the standard area. In example "B", joint J1 is rotated by -180.0°. With the rotated joint J1, the standard area and the overhead area are also rotated.
The following table shows the possible arm positioning spaces of the kinematics:

Tag	Data type	Values	W	Description
StatusKinematics.	TO_Struct_Kinematics_StatusKinematics			

Tag	Data type	Values	W	Description	
Valid	BOOL	-	RON	Validity of the transformation values	
				FALSE	Invalid
				TRUE	Valid
LinkConstellation	DWORD	0 ... n	RON	Joint position space	
Bit 0	-	-	-	Geometric joint position joint J1	
				0	The manual root point is located in the front area (standard area) or on the joint position lines for joint J1.
				1	The manual root point is located in the rear area (overhead area) of the joint position lines for joint J1.
Bit 1	-	-	-	Geometric joint position joint J2	
				0	Not relevant
				1	Not relevant
Bit 2	-	-	-	Geometric joint position joint J3	
				0	The wrist point is in one of the following positions: • On the joint position line for joint J3 • In the standard area (bit 0 = 0), above the joint position line for joint J3 • In the overhead area (bit 0 = 1), below the joint position line for joint J3
				1	The wrist point is in one of the following positions: • In the standard area (bit 0 = 0), below the joint position line for joint J3 • In the overhead area (bit 0 = 1), above the joint position line for joint J3
Bit 3	-	-	-	Geometric joint position joint J4	
				0	Not relevant
				1	Not relevant
Bit 4	-	-	-	Geometric joint position joint J5	
				0	α5 positive
				1	α5 negative or α5 = 0°
Bit 5	-	-	-	Geometric joint position joint J6	
				0	Not relevant
				1	Not relevant
Bit 6 ... 31	-	-	-	Not relevant	

Bits 1, 3, 5 and 6 ... 31 in the "<TO>StatusKinematics.LinkConstellation" tag are not programmable on the motion control instructions "MC_MoveDirectAbsolute" or "MC_MoveDirectRelative". A setting is reported as an impermissible value for the target joint position space ("ErrorID" = 16#80D2).

Examples

The following examples show various joint position spaces for the same Cartesian position of the kinematics "6-axis articulated arm with central hand". There are no configured offsets or inversions in the example. The tool center point in the FCS is configured as follows:
x = 60 mm, y = 0 mm, z = -100 mm, A = 0°, B = 90°, C = 0°.

LinkConstellation = 16#0000_0000:

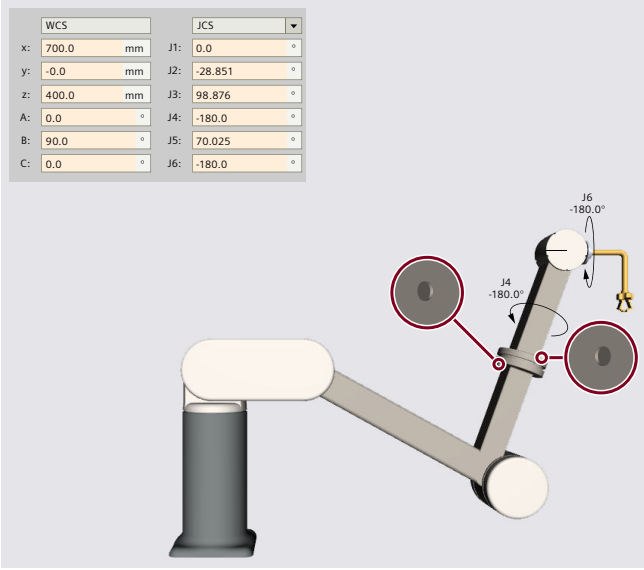

LinkConstellation = 16#0000_0001:

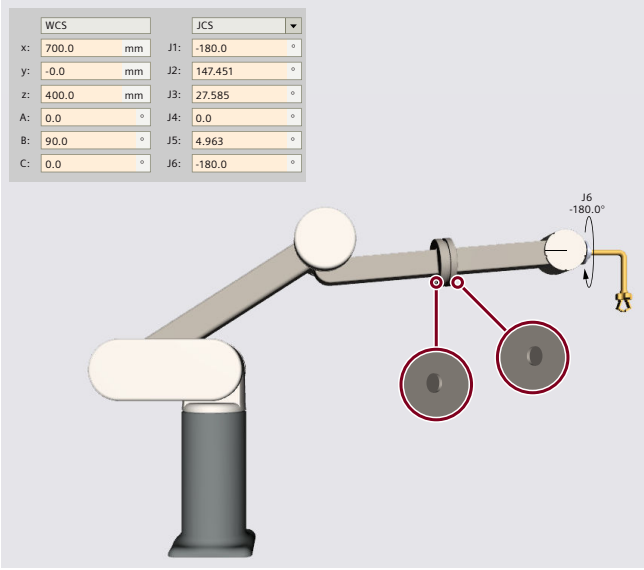

LinkConstellation = 16#0000_0004:

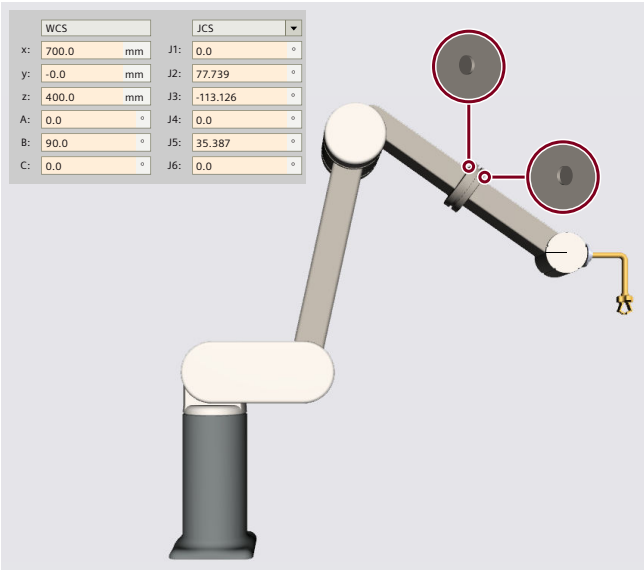

LinkConstellation = 16#0000_0005:

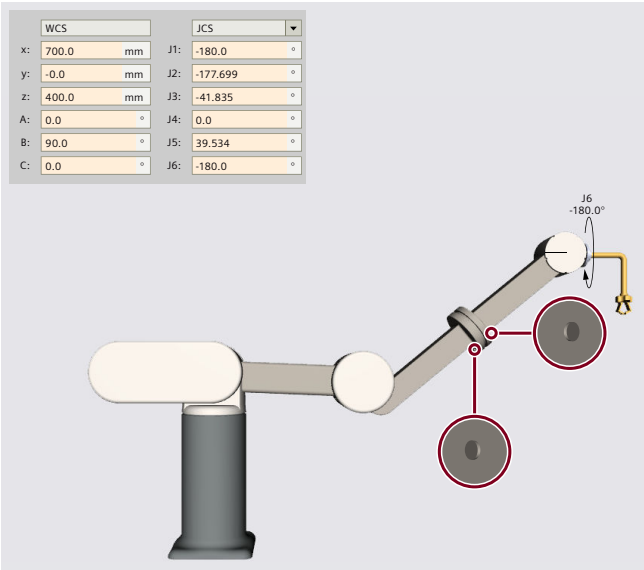

LinkConstellation = 16#0000_0010:

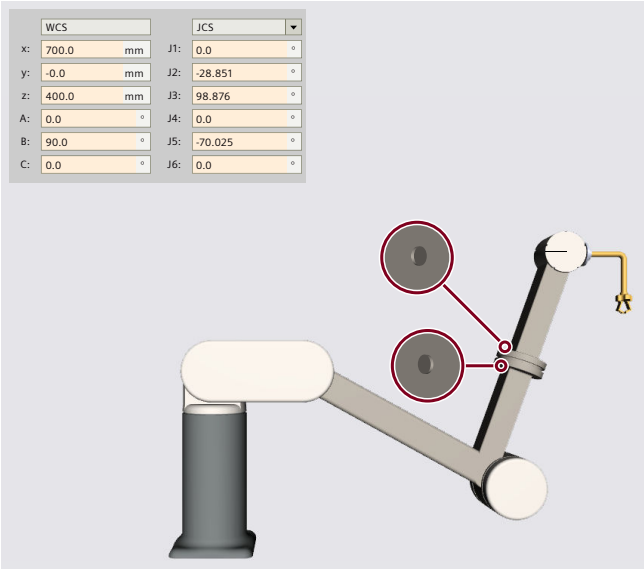

LinkConstellation = 16#0000_0011:

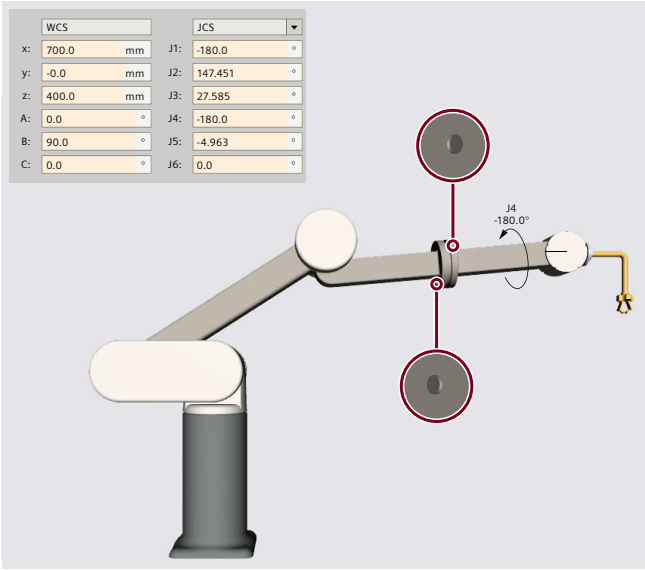

LinkConstellation = 16#0000_0014:

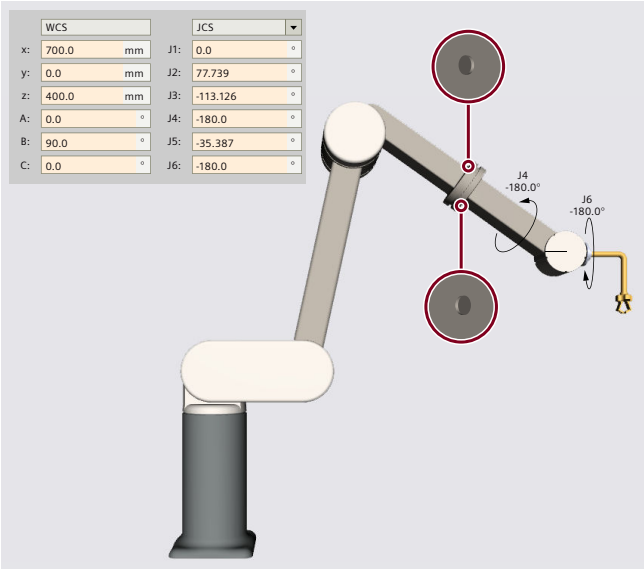

LinkConstellation = 16#0000_0015:

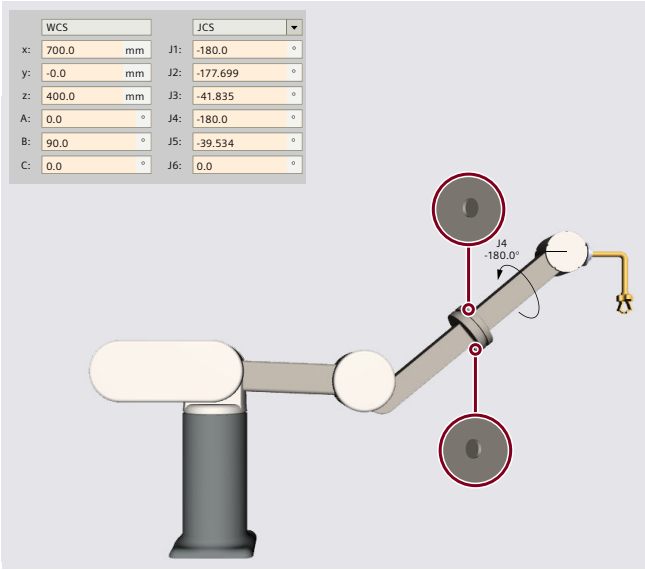

6.10.4.6 Tags: Articulated arm (S7-1500T)

Articulated arm 2D

You define the 2D articulated arm kinematics systems using the following tags of the technology object:

Tags	Values	Description
<TO>.Kinematics.TypeOfKinematics	11	Articulated arm 2D

Tags	Values	Description
<TO>.Kinematics.TypeOfKinematics	12	Articulated arm 2D with orientation
<TO>.Kinematics.Parameter[1]	-1.0E12 to 1.0E12	Distance L1 of the axis A1 to the kinematics zero point in z direction of the kinematics coordinate system (KCS)
<TO>.Kinematics.Parameter[2]	-1.0E12 to 1.0E12	Distance L2 of the axis A1 to the kinematics zero point in x direction of the KCS
<TO>.Kinematics.Parameter[3]	0.001 to 1.0E12	Arm length L3 between the axes A1 and A2
<TO>.Kinematics.Parameter[4]	-	Mechanical axis coupling of axis A1 to axis A2 present/not present
	0	Not present
	1	Present
<TO>.Kinematics.Parameter[5]	-1.0E12 to 1.0E12	Compensation factor of axis A1 to axis A2
<TO>.Kinematics.Parameter[6]	0.001 to 1.0E12	Side length L4 between A2 and positive coupling point
<TO>.Kinematics.Parameter[7]	-1.0E12 to 1.0E12	Distance LF of the flange coordinate system (FCS) from the forced coupler point in the negative z direction of the KCS

Articulated arm 3D

You define the 3D articulated arm kinematics systems using the following tags of the technology object:

Tags	Values	Description
<TO>.Kinematics.TypeOfKinematics	13	Articulated arm 3D
	14	Articulated arm 3D with orientation
<TO>.Kinematics.Parameter[1]	-1.0E12 to 1.0E12	Distance L1 of the axis A2 to the kinematics zero point in z direction of the KCS
<TO>.Kinematics.Parameter[2]	0.0 to 1.0E12	Distance L2 of the axis A2 to the kinematics zero point in x direction of the KCS
<TO>.Kinematics.Parameter[3]	0.001 to 1.0E12	Arm length L3 between the axes A2 and A3
<TO>.Kinematics.Parameter[4]	-	Mechanical axis coupling of axis A2 to A3 present/not present
	0	Not present
	1	Present
<TO>.Kinematics.Parameter[5]	-1.0E12 to 1.0E12	Compensation factor of axis A2 to axis A3
<TO>.Kinematics.Parameter[6]	0.001 to 1.0E12	Arm length L4 between the axis A3 and positive coupler point
<TO>.Kinematics.Parameter[7]	-1.0E12 to 1.0E12	Distance LF of the FCS from the forced coupler point in the negative z direction of the KCS

6-axis articulated arm with central hand

You define the kinematics "6-axis articulated arm with central hand" via the following tags of the technology object:

Tags	Values	Description
<TO>.Kinematics.TypeOfKinematics	25	6-axis articulated arm with central hand
<TO>.Kinematics.Parameter[1]	-1.0E12 to 1.0E12	Distance L1 of the axis A2 to the kinematics zero point in z direction of the KCS
<TO>.Kinematics.Parameter[2]	0.0 to 1.0E12	Distance L2 of the axis A2 to the kinematics zero point in x direction of the KCS
<TO>.Kinematics.Parameter[3]	0.001 to 1.0E12	Distance L3 of the axis A3 to the axis A2 in x direction of the KCS
<TO>.Kinematics.Parameter[4]	0.001 to 1.0E12	Distance L4 of the manual root point to the axis A3 in x direction of the KCS
<TO>.Kinematics.Parameter[5]	-1.0E12 to 1.0E12	Distance LF of the FCS to the manual root point in x direction of the KCS
<TO>.Kinematics.Parameter[6]	-1.0E12 to 1.0E12	Distance L5 of the manual root point to the axis A3 in z direction of the KCS

6.10.5 Delta picker (S7-1500T)

6.10.5.1 Delta picker 2D (S7-1500T)

The kinematics "Delta picker 2D" supports 2 axes and 2 degrees of freedom. The axes are configured as parallel kinematics.
The following graphic shows the principal configuration and the typical working area of the kinematics:

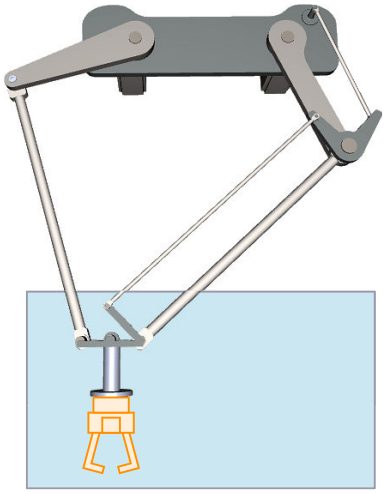

The kinematics consists of 2 rotary axes A1 and A2.
The kinematics is modeled suspended. The kinematics consists of an upper connecting plate, two upper arms, connecting rods and a lower connecting plate. The axes for moving the arms (axes A1, A2) are fastened to the upper connecting plate. The upper arms and the connecting rods connect the upper and lower connecting plates.

The tool is suspended from the lower connecting plate.
The parallelogram structures of the connecting rods keep the lower connecting plate parallel to the xy plane of the KCS.

Coordinate systems and zero position

The graphic below shows the following in the front view:

- The position of the axes and the coordinate systems KCS and FCS
- The zero position of the kinematics
- The deflection of the kinematics is indicated (dashed)

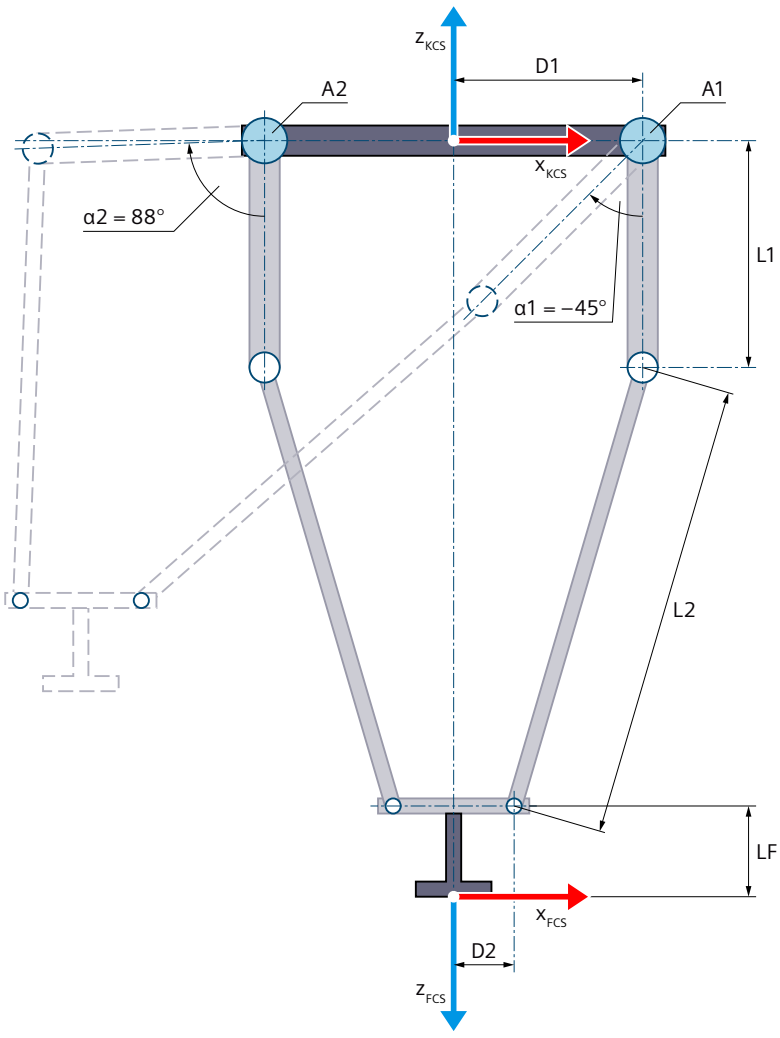

Zero position of the kinematics

D1	Distance of the axes from the center of the upper connecting plate (radius of the upper connecting plate)
D2	Distance of the hinge points of the connecting rods to the middle of the lower connecting plate (radius of the lower connecting plate)
L1	Length of the upper arms
L2	Length of the connecting rods

D1, D2, L1 and L2 are identical for the two arms of the kinematics.

LF Flange length before the FCS in the z direction of the KCS

Deflection of the kinematics
The motion of the axes in the positive direction is the outward rotation of the upper arms.

α1 Deflection of the axis A1 in the negative direction when α1 = -45.0°

α2 Deflection of the axis A2 in the positive direction when α2 = 88.0°

Legend for representation of the kinematics (Page 37)

The kinematics coordinate system (KCS) with the kinematics zero point (KZP) is located at the center point of the upper connecting plate. The axes A1 and A2 are at distance D1 from the common center point (kinematics zero point).

The flange coordinate system (FCS) is located on the bottom of the lower connecting plate with equal distance D2 to the hinge points of each arm. You shift the FCS in the negative z direction of the KCS using length LF.

In the zero position of the axes A1 and A2, the upper arms point in the negative z direction of the KCS.

Transformation area

Only the outwardly bent joint position (Page 142) is permitted for the arms of the kinematics. You cannot traverse the axes beyond the extended position of the arms.

NOTE

Singularity

The kinematics has outer singularities (Page 167).

6.10.5.2 Delta picker 2D with orientation (S7-1500T)

The kinematics "Delta picker 2D with orientation" supports 3 axes and 3 degrees of freedom. The axes are configured as parallel kinematics.

The following graphic shows the principal configuration and the typical working area of the kinematics:

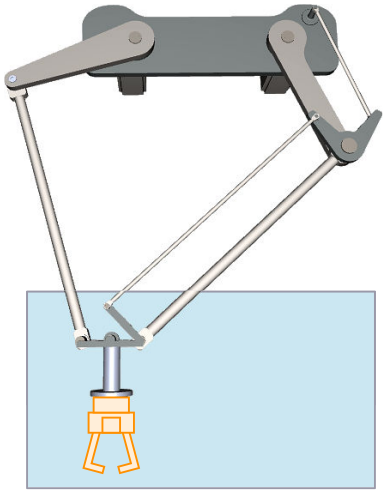

The kinematics consists of the following axes:

- 2 rotary axes A1, A2
- 1 rotary axis A4 with rotation around z in the KCS

The kinematics is modeled suspended. The kinematics consists of an upper connecting plate, two upper arms, connecting rods and a lower connecting plate. The axes for moving the arms (axes A1, A2) are fastened to the upper connecting plate. The upper arms and the connecting rods connect the upper and lower connecting plates.

The tool is suspended from the lower connecting plate.

The parallelogram structures of the connecting rods keep the lower connecting plate parallel to the xy plane of the KCS. The kinematics axis A4 enables rotation of the tool around z in the KCS.

Coordinate systems and zero position

The graphic below shows the following in the front view:

- The position of the axes and the coordinate systems KCS and FCS
- The zero positions of the axes A1 and A4
- The deflection of the kinematics is indicated (dashed)

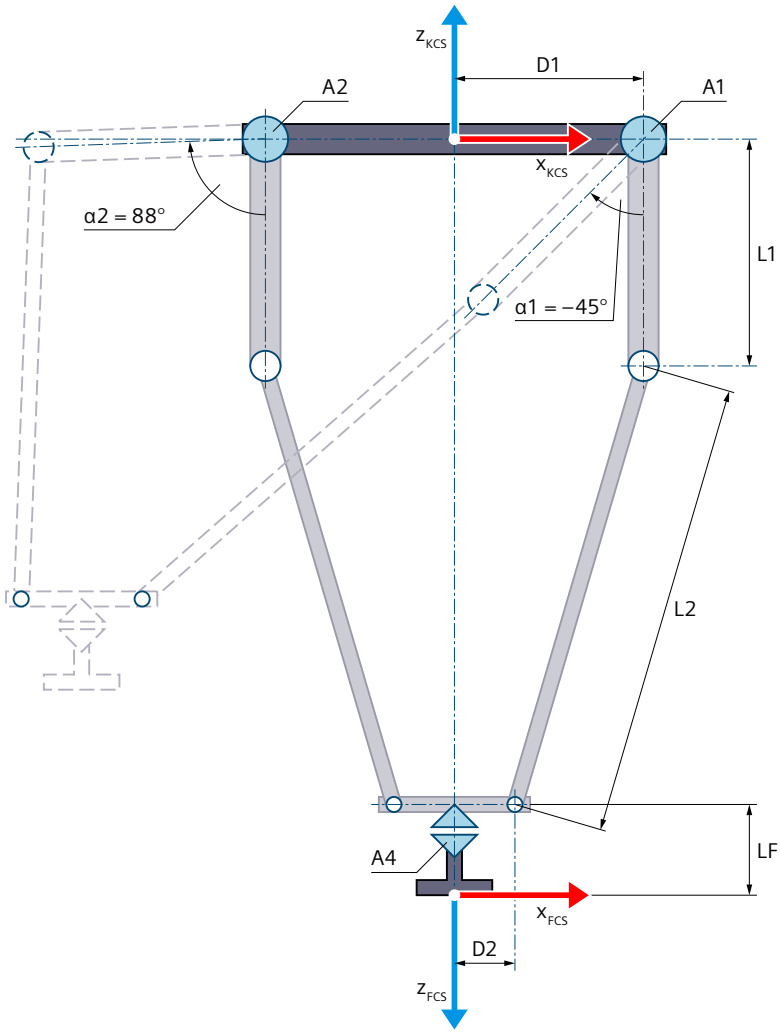

Zero position of the kinematics

D1 Distance of the axes from the center of the upper connecting plate (radius of the upper connecting plate)

D2 Distance of the joint points of the connecting rods to the middle of the lower connecting plate (radius of the lower connecting plate)

L1 Length of the upper arms

L2 Length of the connecting rods

D1, D2, L1 and L2 are identical for the two arms of the kinematics.

LF Flange length before the FCS in the z direction of the KCS

Deflection of the kinematics
The motion of the axes in the positive direction is the outward rotation of the upper arms.

α1 Deflection of the axis A1 in the negative direction when α1 = -45.0°

α2 Deflection of the axis A2 in the positive direction when α2 = 88.0°

Legend for representation of the kinematics (Page 37)

The kinematics coordinate system (KCS) with the kinematics zero point (KZP) is located at the center point of the upper connecting plate. The axes A1 and A2 are at distance D1 from the common center point (kinematics zero point).

The flange coordinate system (FCS) is located in the center point of the lower connecting plate with equal distance D2 to the joint points of each arm. You shift the FCS in the negative z direction of the KCS using length LF.

In the zero position of the axes A1 and A2, the upper arms point in the negative z direction of the KCS. At the zero position of axis A4, the x axis of the FCS points in the direction of the x axis of the KCS.

Transformation area

Only the outwardly bent joint position (Page 142) is permitted for the arms of the kinematics. You cannot traverse the axes beyond the extended position of the arms.

NOTE

Singularity

The kinematics has outer singularities (Page 167).

6.10.5.3 Delta picker 3D (S7-1500T)

The kinematics "Delta picker 3D" supports 3 axes and 3 degrees of freedom. The axes are configured as parallel kinematics.

The following graphic shows the principal configuration and the typical working area of the kinematics:

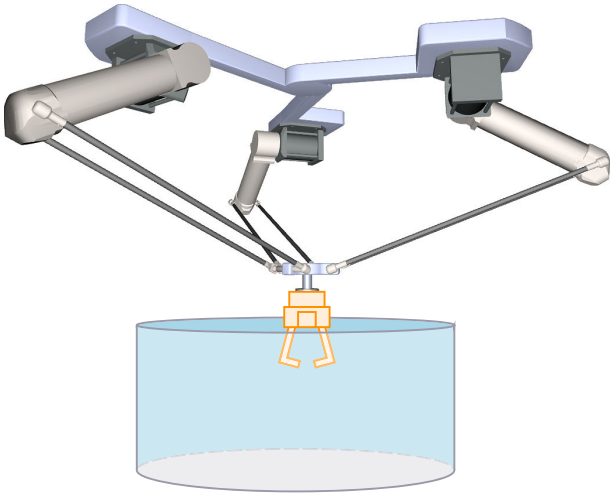

The kinematics consists of 3 rotary axes A1, A2 and A3.

The kinematics is modeled suspended. The kinematics consists of an upper connecting plate, three upper arms, connecting rods and a lower connecting plate. The axes for moving the arms (axes A1, A2 and A3) are fastened to the upper connecting plate. The upper arms and the connecting rods connect the upper and lower connecting plates.

The tool is suspended from the lower connecting plate.

The parallelogram structures of the connecting rods keep the lower connecting plate parallel to the xy plane of the KCS.

Coordinate systems and zero position

The graphic below shows the following in the top view (xy plane):

- The position of the kinematics coordinate system (KCS)
- The angles of the axes A1, A2 and A3 to one another

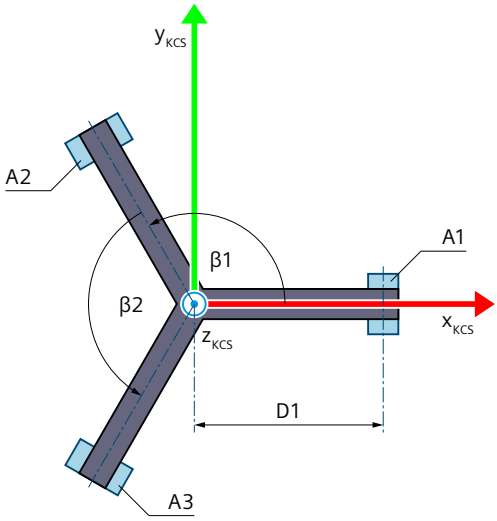

β1 Angle between the axes A1 and A2

β2 Angle between the axes A2 and A3

Legend for representation of the kinematics (Page 37)

The following graphic shows the top view of the position of the flange coordinate system (FCS) in the xy plane of the lower connecting plate:

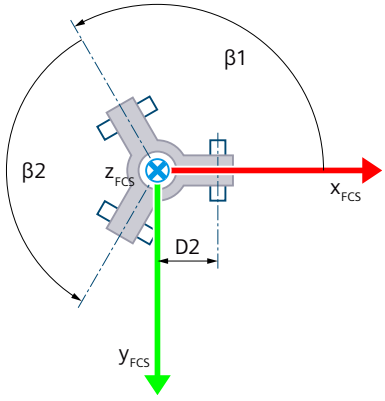

The graphic below shows the following in the front view (xz plane):

- The position of the axis A1 and the coordinate systems KCS and FCS
- The zero position of the axis A1
- The positive/negative deflection of the axis A1 is indicated (dashed)

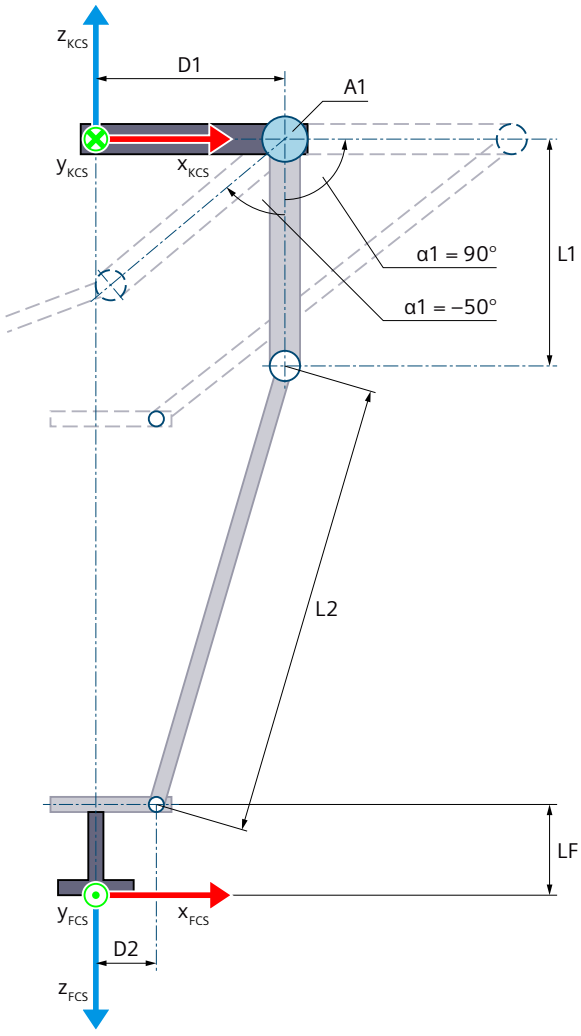

Zero position of the kinematics

D1 Distance of the axes from the center of the upper connecting plate (radius of the upper connecting plate)

D2 Distance of the hinge points of the connecting rods to the middle of the lower connecting plate (radius of the lower connecting plate)

L1 Length of the upper arms

L2 Length of the connecting rods

D1, D2, L1 and L2 are identical for the three arms of the kinematics.

LF Flange length before the FCS in the z direction of the KCS

Deflection of the kinematics
The motion of the axes in the positive direction is the outward rotation of the upper arms.

α1 Deflection of the axis A1 in negative direction when α1 = -50.0°
Deflection of the axis A1 in positive direction when α1 = 90.0°

Legend for representation of the kinematics (Page 37)

The KCS with the kinematics zero point (KZP) is located at the center point of the upper connecting plate. The axes A1, A2 and A3 are at distance D1 from the common center point (kinematics zero point).

The FCS is located in the center on the bottom of the lower connecting plate with equal distance D2 to the hinge points of each arm. You shift the FCS in the negative z direction of the KCS using length LF.
In the zero position of the axes A1, A2 and A3, the upper arms point in the negative z direction of the KCS.

Transformation area

Only the outwardly bent joint position (Page 142) is permitted for the arms of the kinematics. You cannot traverse the axes beyond the extended position of the arms.

NOTE
Singularity
The kinematics has outer singularities (Page 167).

6.10.5.4 Delta picker 3D with orientation (S7-1500T)

The kinematics "Delta picker 3D with orientation" supports 4 axes and 4 degrees of freedom. The axes are configured as parallel kinematics.
The following graphic shows the principal configuration and the typical working area of the kinematics:

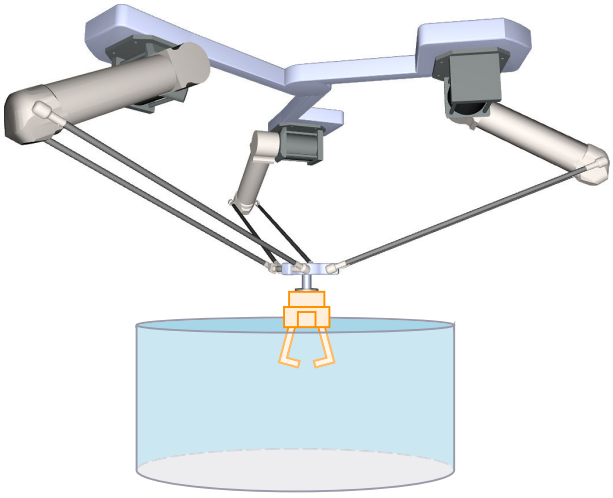

The kinematics consists of the following axes:

- 3 rotary axes A1 A2 and A3
- 1 rotary axis A4 with rotation around z in the KCS

The kinematics is modeled suspended. The kinematics consists of an upper connecting plate, three upper arms, connecting rods and a lower connecting plate. The axes for moving the arms (axes A1, A2 and A3) are fastened to the upper connecting plate. The upper arms and the connecting rods connect the upper and lower connecting plates.
The tool is attached to the lower connecting plate.

The parallelogram structures of the connecting rods keep the lower connecting plate parallel to the xy plane of the KCS. The kinematics axis A4 enables rotation of the tool around z in the KCS.

Coordinate systems and zero position

The graphic below shows the following in the top view (xy plane):

- The position of the kinematics coordinate system (KCS)
- The angles of the axes A1, A2 and A3 to one another

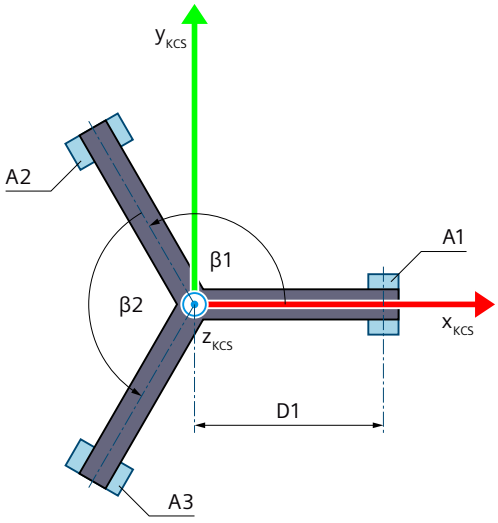

β1 Angle between the axes A1 and A2

β2 Angle between the axes A2 and A3

Legend for representation of the kinematics (Page 37)

The following graphic shows the top view of the position of the flange coordinate system (FCS) in the xy plane of the lower connecting plate:

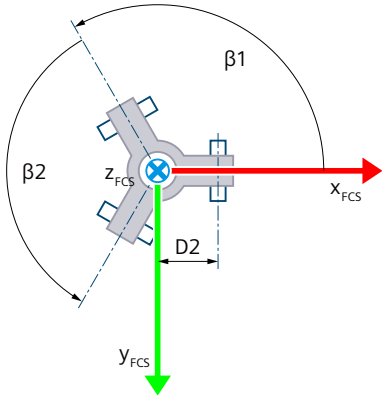

The graphic below shows the following in the front view (xz plane):

- The position of the axis A1 and the coordinate systems KCS and FCS
- The zero positions of the axes A1 and A4
- The positive/negative deflection of the axis A1 is indicated (dashed)

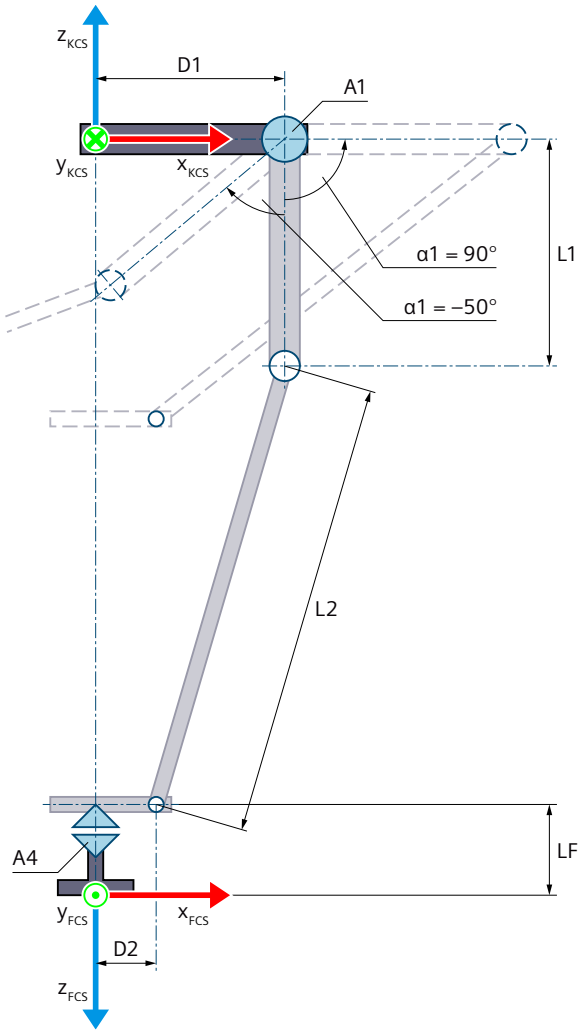

Zero position of the kinematics

D1 Distance of the axes from the center of the upper connecting plate (radius of the upper connecting plate)

D2 Distance of the joint points of the connecting rods to the middle of the lower connecting plate (radius of the lower connecting plate)

L1 Length of the upper arms

L2 Length of the connecting rods

D1, D2, L1 and L2 are identical for the three arms of the kinematics.

LF Flange length before the FCS in the z direction of the KCS

Deflection of the kinematics
The motion of the axes in the positive direction is the outward rotation of the upper arms.

α1 Deflection of the axis A1 in negative direction when α1 = -50.0°
Deflection of the axis A1 in positive direction when α1 = 90.0°

Legend for representation of the kinematics (Page 37)

The KCS with the kinematics zero point (KZP) is located at the center point of the upper connecting plate. The axes A1, A2 and A3 are at distance D1 from the common center point (kinematics zero point).

The FCS is located in the center point on the bottom of the lower connecting plate with equal distance D2 to the joint points of each arm. You shift the FCS in the negative z direction of the KCS using length LF.
In the zero position of the axes A1, A2 and A3, the upper arms point in the negative z direction of the KCS. At the zero position of axis A4, the x axis of the FCS points in the direction of the x axis of the KCS.

Transformation area

Only the outwardly bent joint position (Page 142) is permitted for the arms of the kinematics. You cannot traverse the axes beyond the extended position of the arms.

NOTE
Singularity
The kinematics has outer singularities (Page 167).

6.10.5.5 Delta picker 3D with 2 orientations A, B (S7-1500T)

The kinematics "Delta picker 3D with 2 orientations A, B" supports 5 axes and 5 degrees of freedom. The axes are configured as parallel kinematics. For this kinematics type, you need the Motion Control package "S7-1500T Motion Control KinPlus" (Page 29).
The following graphic shows the principal configuration and the typical working area of the kinematics:

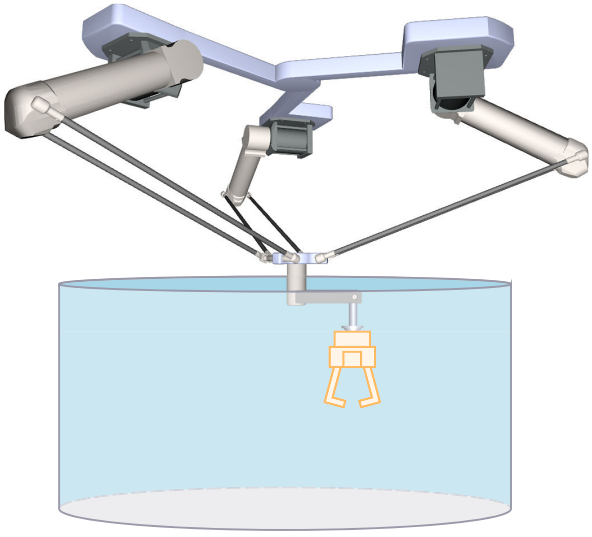

The kinematics consists of the following axes:

- 3 rotary axes A1 A2 and A3
- One rotary swivel axis A4 which rotates around the y axis of the KCS in the kinematics zero position.
- One rotary swivel axis A5, which rotates around the y axis of the KCS in the kinematics zero position.

The kinematics is modeled suspended. The kinematics consists of an upper connecting plate, three upper arms, connecting rods and a lower connecting plate. The axes for moving the arms (axes A1, A2 and A3) are fastened to the upper connecting plate. The upper arms and the connecting rods connect the upper and lower connecting plates.

The parallelogram structures of the connecting rods keep the lower connecting plate parallel to the xy plane of the KCS.

The rotary axis A4 and the swivel axis A5 are mounted on the lower connecting plate. The motors of the axes A4 and A5 can be mounted on the upper connecting plate or below the lower connecting plate. If the motors are mounted on the upper connecting plate, then the axes A4 and A5 are moved via a mechanical shaft, which is mounted between the two connecting plates.

The tool is attached to the swivel axis A5.

Coordinate systems and zero position

The graphic below shows the following in the top view (xy plane):

- The position of the kinematics coordinate system (KCS)
- The angles of the axes A1, A2 and A3 to one another

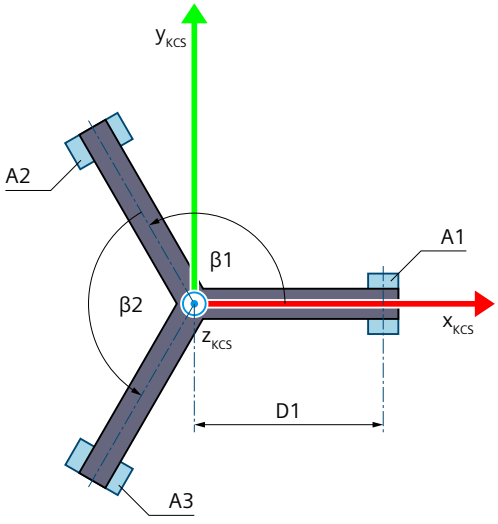

β1 Angle between the axes A1 and A2

β2 Angle between the axes A2 and A3

Legend for representation of the kinematics (Page 37)

The following graphic shows the bottom view of the position of the flange coordinate system (FCS) in the xy plane of the lower connecting plate:

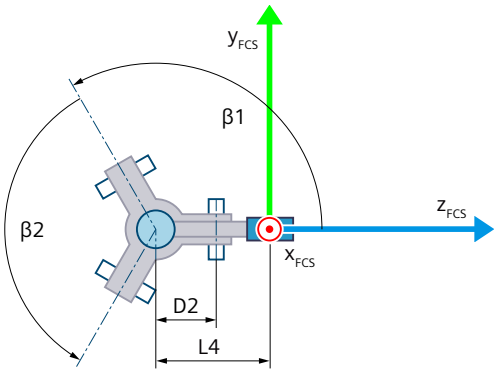

The graphic below shows the following in the front view (xz plane):

- The position of the axis A1 and the coordinate systems KCS and FCS
- The zero positions of the axes A1 and A4
- The positive/negative deflection of the axis A1 is indicated (dashed)

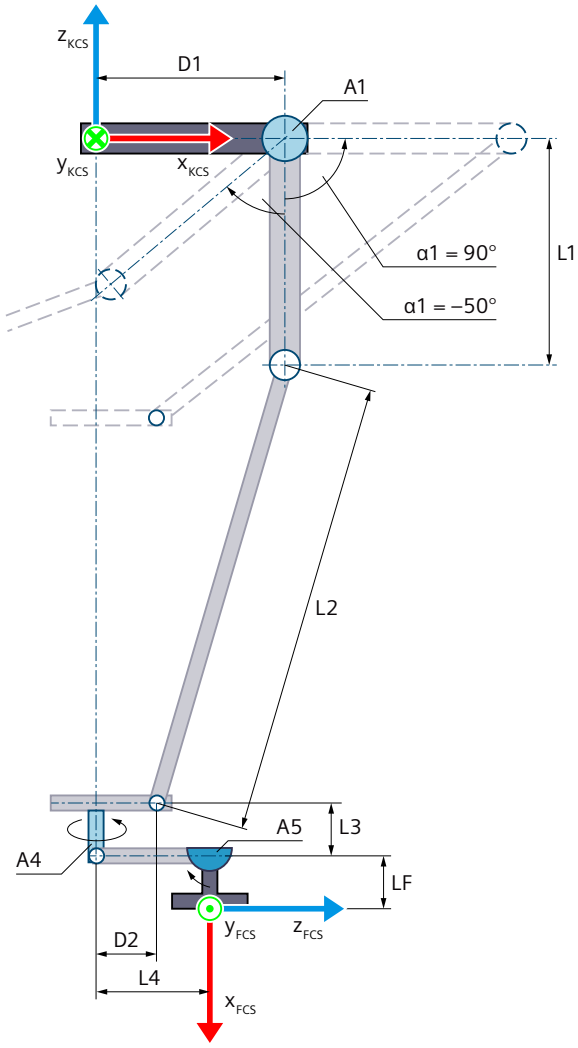

Zero position of the kinematics

D1	Distance of the axes from the center of the upper connecting plate (radius of the upper connecting plate)
D2	Distance of the joint points of the connecting rods to the middle of the lower connecting plate (radius of the lower connecting plate)
L1	Length of the upper arms
L2	Length of the connecting rods
L3	Distance of the swivel axis from the lower connecting plate in the negative z direction of the KCS
L4	Distance of the joint points of rotary axis A4 and swivel axis A5 in the x direction of the KCS in the kinematics zero position

D1, D2, L1 and L2 are identical for the three arms of the kinematics.

LF	Distance LF from the joint point of swivel axis A5 to the FCS in the negative x direction of the FCS

Deflection of the kinematics
The motion of the axes A1, A2 and A3 in positive direction is that of the rotation outward of the upper arms.

α1 Deflection of the axis A1 in negative direction when α1 = -50.0°
Deflection of the axis A1 in positive direction when α1 = 90.0°

Legend for representation of the kinematics (Page 37)

The KCS with the kinematics zero point (KZP) is located at the center point of the upper connecting plate. The axes A1, A2 and A3 are at distance D1 from the common center point (kinematics zero point).

At the zero position of the kinematics, the FCS is oriented with A = 0°, B = 90° and C = 0°.

In the zero position of the axes A1, A2 and A3, the upper arms point in the negative z direction of the KCS. At the zero position of axes A4 and A5, the x axis of the FCS points in the negative direction of the z axis of the KCS.

Transformation area

Only the outwardly bent joint position (Page 142) is permitted for the arms of the kinematics. You cannot traverse the axes beyond the extended position of the arms.

NOTE

Singularity

The kinematics has outer singularities (Page 167).

6.10.5.6 Permissible joint position for delta picker (S7-1500T)

Only the outwardly bent joint position is permitted for the arms of the delta picker kinematics. The graphic below shows examples of permissible and impermissible joint positions for the transformation:

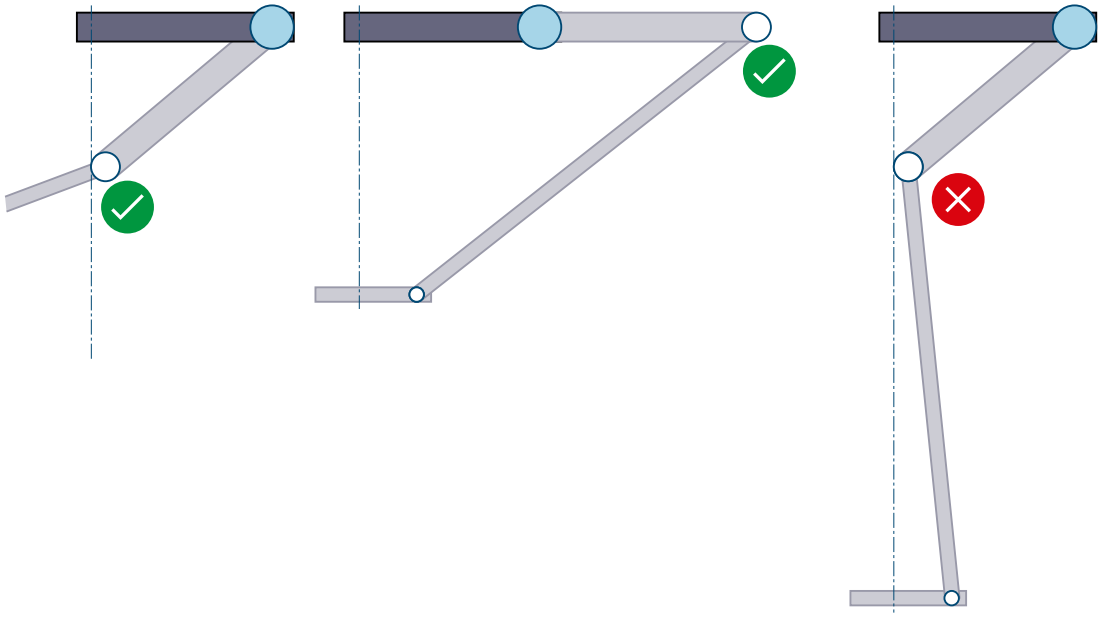

Permissible joint position

Invalid joint position for the transformation

6.10.5.7 Tags: Delta picker (S7-1500T)

Delta picker 2D

You define the 2D delta picker kinematics using the following tags of the technology object:

Tags	Values	Description
<TO>.Kinematics.TypeOfKinematics	15	Delta picker 2D
	16	Delta picker 2D with orientation
<TO>.Kinematics.Parameter[1]	0.0 to 1.0E12	Distance D1 (radius of the upper connecting plate)
<TO>.Kinematics.Parameter[2]	0.001 to 1.0E12	Length L1 of the upper arms
<TO>.Kinematics.Parameter[3]	0.001 to 1.0E12	Length L2 of connecting rods
<TO>.Kinematics.Parameter[4]	0.0 to 1.0E12	Distance D2 (radius of the lower connecting plate)
<TO>.Kinematics.Parameter[5]	-1.0E12 to 1.0E12	Distance LF of the FCS to the lower connecting plate in the negative z direction of the KCS

Delta picker 3D

You define the 3D delta picker kinematics using the following tags of the technology object:

Tags	Values	Description
<TO>.Kinematics.TypeOfKinematics	17	Delta picker 3D
	18	Delta picker 3D with orientation
	27	Delta picker 3D with 2 orientations A, B
<TO>.Kinematics.Parameter[1]	0.0 to 1.0E12	Distance D1 (radius of the upper connecting plate)
<TO>.Kinematics.Parameter[2]	0.001 to 1.0E12	Length L1 of the upper arms
<TO>.Kinematics.Parameter[3]	0.001 to 1.0E12	Length L2 of connecting rods
<TO>.Kinematics.Parameter[4]	0.0 to 1.0E12	Distance D2 (radius of the lower connecting plate)
<TO>.Kinematics.Parameter[5]	90.001° to 179.998°	Angle β1 between the axes A1 and A2
<TO>.Kinematics.Parameter[6]	90.001° to 179.998°	Angle β2 between the axes A2 and A3
<TO>.Kinematics.Parameter[7]	-1.0E12 to 1.0E12	• Distance LF of the FCS to the lower connecting plate in the negative z direction of the KCS • Delta picker 3D with 2 orientations A, B: Distance LF from pivot point of swivel axis A5 to FCS in negative x direction of FCS
<TO>.Kinematics.Parameter[8]	0.001 to 1.0E12	Distance L3 of the swivel axis to the lower connecting plate in the negative z direction of the KCS at zero position of the kinematics [1)]
<TO>.Kinematics.Parameter[9]	0.001 to 1.0E12	Distance L4 of the hinge points of the rotary axis A4 to swivel axis A5 in x direction of the KCS at zero position of the kinematics [1)]

[1)] Only relevant for kinematics type "Delta picker 3D with 2 orientations A, B"

6.10.6 Cylindrical robot (S7-1500T)

6.10.6.1 Cylindrical robot 3D (S7-1500T)

The kinematics "Cylindrical robot 3D" supports 3 axes and 3 degrees of freedom. The axes are configured as serial kinematics.

The following graphic shows the principal configuration and the typical working area of the kinematics:

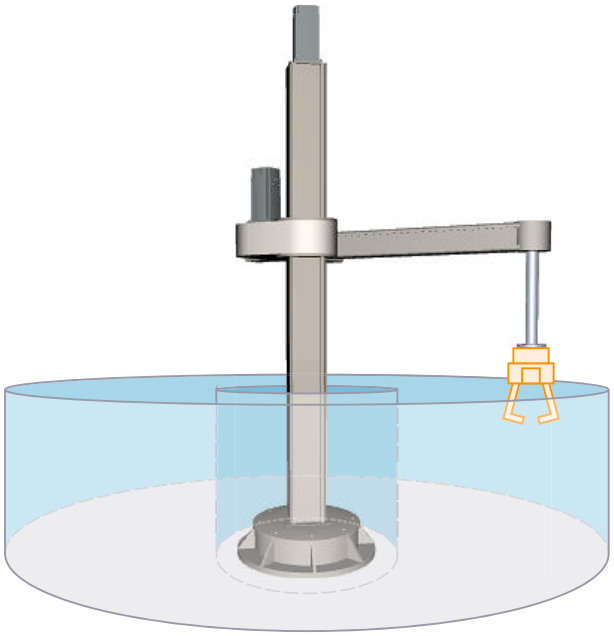

The kinematics consists of the following axes:

- 1 rotary axis A1 with rotation around the z axis of the kinematics coordinate system (KCS)
- 1 linear axis A2 in z direction of the KCS
- 1 linear axis A3 in x direction of the KCS

The kinematics consists of a base, a supporting column and a jib. Axis A1 rotates the supporting column with jib around the base. Axis A2 moves the jib vertically. Axis A3 moves the flange system horizontally on the jib. The kinematics enables a cylindrical working area.

Coordinate systems and zero position

The graphic below shows the following in the side view (xz plane):

- The position of the axes and the coordinate systems KCS and FCS
- The zero positions of the axes A1 and A2
- The deflection of the kinematics is indicated (dashed)

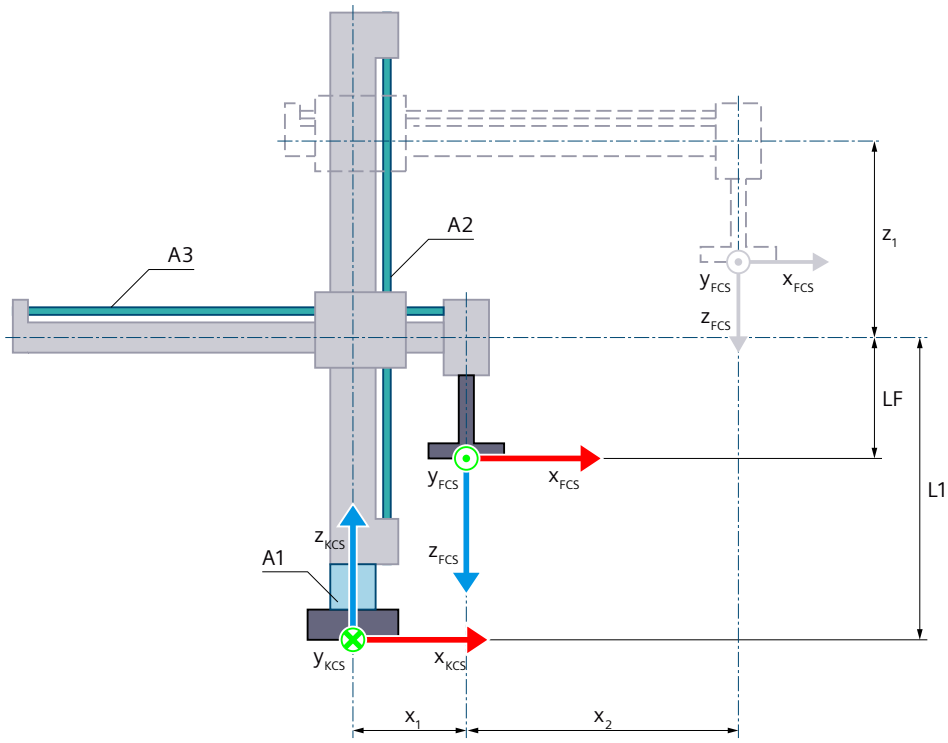

Zero position of the axes A1 and A2

L1	At zero position of the axis A2: Distance of the FCS to the kinematics zero point (KZP) and flange length LF in z direction of the KCS
LF	Flange length before the FCS in the z direction of the KCS
x_1	Positive deflection of the axis A3 At the zero position of axis A3, the z axis of the FCS is located on the z axis of the KCS. For mechanical reasons, the kinematics shown cannot approach the zero position of the axis A3.

Deflection of the kinematics

x_2	Positive deflection of the axis A3
z_1	Positive deflection of the axis A2

Legend for representation of the kinematics (Page 37)

The graphic below shows the following in the top view (xy plane):

- The position of the axes and the coordinate systems KCS and FCS
- The zero position of the kinematics
- The positive/negative deflection of the kinematics is indicated (dashed)

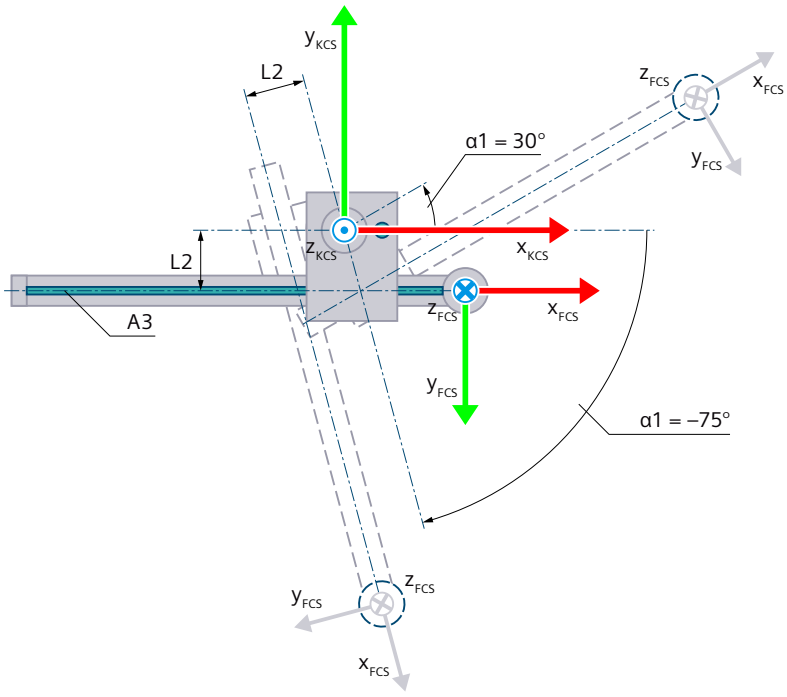

Zero position of the kinematics

L2 Distance of the axis A3 from the KZP in y direction of the KCS (negative value here)

Deflection of the kinematics

α1 Positive deflection of the axis A1 when α1 = 30°
Negative deflection of the axis A1 when α1 = -75°

Legend for representation of the kinematics (Page 37)

The KCS with the kinematics zero point (KZP) is located at the base of the kinematics. You define the distance of the zero position of axis A2 in z direction of the KCS from the KZP using length L1. You define the distance of the axis A3 from the KZP in y direction of the KCS using length L2.

The flange coordinate system (FCS) is located on the axis A3, shifted by the length LF in negative z direction of the KCS.

The following table shows the zero position of the axes:

Axis	Zero position
A1	The jib with the axis A3 points in x_{KCS} direction.
A2	The axis A2 is at the position 0.0 of the interconnected technology object.
A3	The axis A3 is at the position 0.0 of the interconnected technology object.

Transformation area

The kinematics transformation covers the following traversing range (Page 163) of the axes:

- Axis A1: -180.0° ≤ α1 < 180.0°
- Axis A2: No limit
- Axis A3: No limit

NOTE
Singularity
The kinematics has singularity (Page 167).

A singularity occurs when the zero point of the flange coordinate system (FCS) is located on the z axis of the kinematics coordinate system (KCS). Inverse transformation is not possible in this area. This position may result, e.g. if the length L2 is 0.0 due to the design.
The graphic below shows examples of permissible and impermissible joint positions for the transformation:

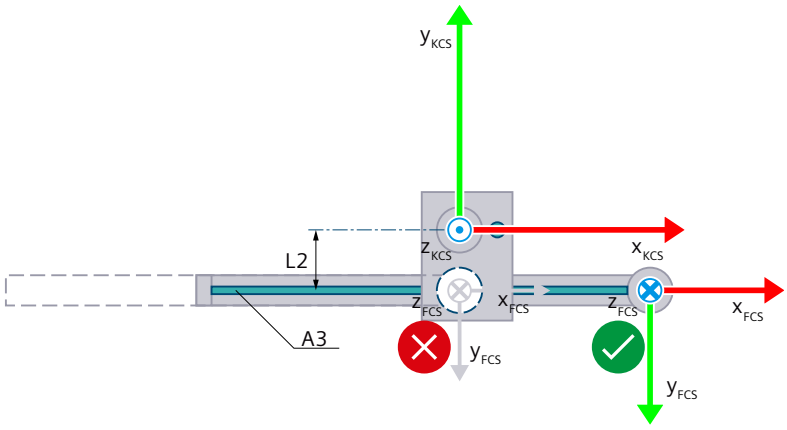

Permissible joint position

Singularity at L2 = 0.0

Joint position space

The following table shows the possible arm positioning spaces of the kinematics:

Tag	Data type	Values	W	Description	
StatusKinematics.	TO_Struct_Kinematics_StatusKinematics				
Valid	BOOL	-	RON	Validity of the transformation values	
				FALSE	Invalid
				TRUE	Valid
LinkConstellation	DWORD	0 to n	RON	Joint position space	
Bit 0	-	-	-	Position axis 1	
				0	Not relevant
				1	Not relevant

Tag			Data type	Values	W	Description	
		Bit 1	-	-	-	Position axis 2	
						0	Not relevant
						1	Not relevant
		Bit 2	-	-	-	Angle α3 of axis A3 positive/negative taking into consideration the mechanical axis coupling	
						0	α3 positive
						1	α3 negative
		Bit 3 ... 31	-	-	-	Not relevant	

6.10.6.2 Cylindrical robot 3D with orientation (S7-1500T)

The kinematics "Cylindrical robot 3D with orientation" supports 4 axes and 4 degrees of freedom. The axes are configured as serial kinematics.
The following graphic shows the principal configuration and the typical working area of the kinematics:

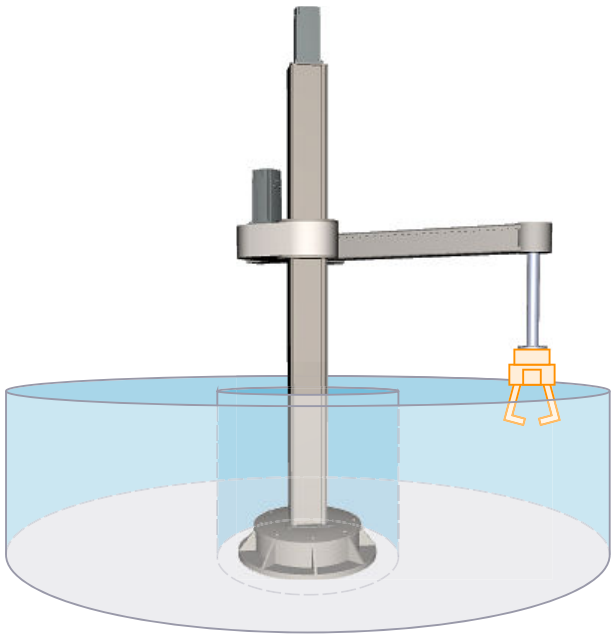

The kinematics consists of the following axes:

- 1 rotary axis A1 with rotation around the z axis of the kinematics coordinate system (KCS)
- 1 linear axis A2 in z direction of the KCS
- 1 linear axis A3 in x direction of the KCS
- 1 rotary axis A4 with rotation around z in the KCS

The kinematics consists of a base, a supporting column and a jib. Axis A1 rotates the supporting column with jib around the base. Axis A2 moves the jib vertically. Axis A3 moves the flange system horizontally on the jib. The kinematics enables a cylindrical working area. The kinematics axis A4 enables rotation of the tool around z in the KCS.

Coordinate systems and zero position

The graphic below shows the following in the side view (xz plane):

- The position of the axes and the coordinate systems KCS and FCS
- The zero positions of the axes A1 and A2
- The deflection of the kinematics is indicated (dashed)

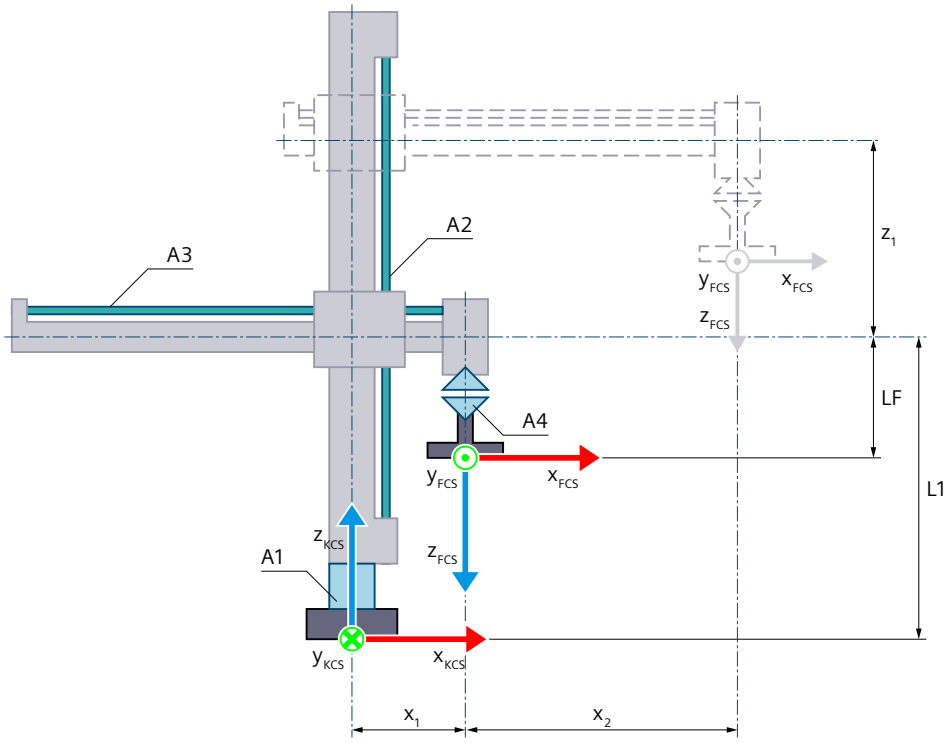

Zero position of the kinematics

L1	With axis A2 in the zero position: Distance of the FCS to the kinematics zero point (KZP) and flange length LF in z direction of the KCS
LF	Flange length before the FCS in the z direction of the KCS
x_1	Positive deflection of the axis A3 At the zero position of axis A3, the z axis of the FCS is located on the z axis of the KCS. For mechanical reasons, the kinematics shown cannot approach the zero position of the axis A3.

Deflection of the kinematics

x_2	Positive deflection of the axis A3
z_1	Positive deflection of the axis A2

Legend for representation of the kinematics (Page 37)

The graphic below shows the following in the top view (xy plane):

- The position of the axes and the coordinate systems KCS and FCS
- The zero position of the kinematics
- The positive/negative deflection of the kinematics is indicated (dashed)

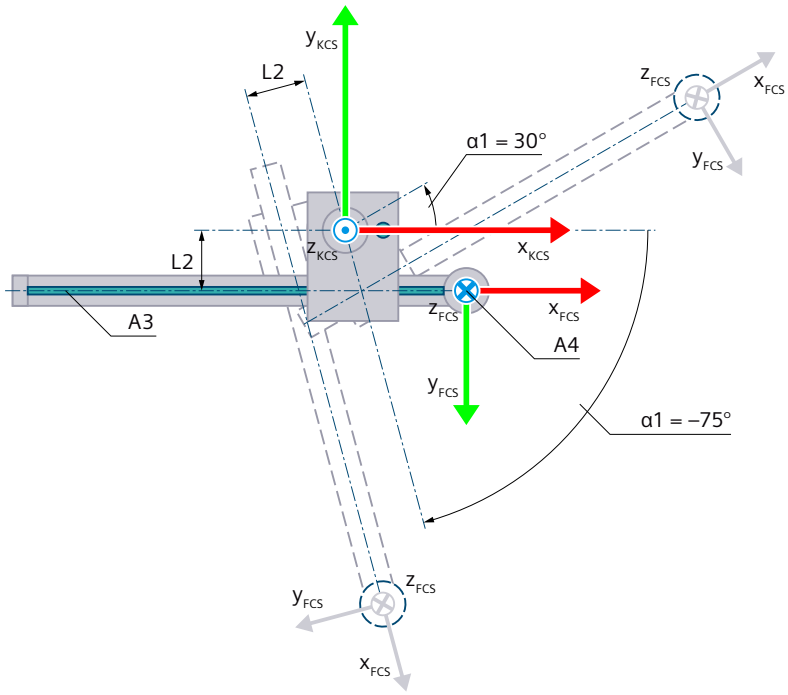

Zero position of the kinematics

L2 Distance of the axis A3 to the KZP in y direction of the KCS (negative value in this case)

Deflection of the kinematics

α1 Positive deflection of the axis A1 when α1 = 30°
Negative deflection of the axis A1 when α1 = -75°

Legend for representation of the kinematics (Page 37)

The KCS with the kinematics zero point (KZP) is located at the base of the kinematics. You define the distance of the zero position of axis A2 in z direction of the KCS from the KZP using length L1. You define the distance of the axis A3 from the KZP in y direction of the KCS using length L2.

The flange coordinate system (FCS) is located on the axis A3, shifted by the length LF in negative z direction of the KCS.

The following table shows the zero position of the axes:

Axis	Zero position
A1	The jib with the axis A3 points in x_{KCS} direction.
A2	The axis A2 is at the position 0.0 of the interconnected technology object.
A3	The axis A3 is at the position 0.0 of the interconnected technology object.
A4	With axis A1 in the zero position, the x axis of the FCS points in the direction of the x axis of the KCS.

Compensation of mechanical axis couplings

You can configure a mechanical axis coupling of axis A4 to axis A2 for the kinematics. The kinematics transformation compensates for the configured mechanical axis coupling. The axis coupling between axis A4 and axis A2 is implemented as a leadscrew pitch. With a

compensation factor of 1.0, 360.0° on axis A4 corresponds to a distance of -1.0 mm on axis A2.

Transformation area

The kinematics transformation covers the following traversing range (Page 163) of the axes:

- Axis A1: -180.0° ≤ α1 < 180.0°
- Axis A2: No limit
- Axis A3: No limit
- Axis A4: No limit
  An angle greater than 360° can be defined for the orientation. But coordinate A of the tool center point (TCP) is mapped in the range -180° to +180°.

NOTE
Singularity
The kinematics has singularity (Page 167).

A singularity occurs when the zero point of the flange coordinate system (FCS) is located on the z axis of the kinematics coordinate system (KCS). Inverse transformation is not possible in this area. This position may result, e.g. if the length L2 is 0.0 due to the design.
The graphic below shows examples of permissible and impermissible joint positions for the transformation:

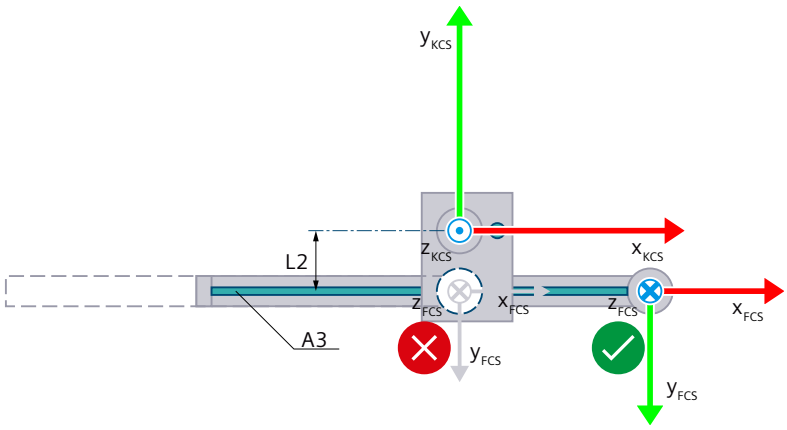

Permissible joint position

Singularity at L2 = 0.0

Joint position space

The following table shows the possible arm positioning spaces of the kinematics:

Tag	Data type	Values	W	Description
StatusKinematics.	TO_Struct_Kinematics_StatusKinematics			

Tag	Data type	Values	W	Description	
Valid	BOOL	-	RON	Validity of the transformation values	
				FALSE	Invalid
				TRUE	Valid
LinkConstellation	DWORD	0 to n	RON	Joint position space	
Bit 0	-	-	-	Position axis 1	
				0	Not relevant
				1	Not relevant
Bit 1	-	-	-	Position axis 2	
				0	Not relevant
				1	Not relevant
Bit 2	-	-	-	Angle α3 of axis A3 positive/negative taking into consideration the mechanical axis coupling	
				0	α3 positive
				1	α3 negative
Bit 3 ... 31	-	-	-	Not relevant	

6.10.6.3 Tags: Cylindrical robot (S7-1500T)

Cylindrical robot 3D

You define the "Cylindrical robot 3D" kinematics using the following tags of the technology object:

Tags	Values	Description
<TO>.Kinematics.TypeOfKinematics	21	Cylindrical robot 3D
<TO>.Kinematics.Parameter[1]	-1.0E12 to 1.0E12	Distance L1 of the zero position of the axis A2 to the kinematics zero point in z direction of the kinematics coordinate system (KCS)
<TO>.Kinematics.Parameter[2]	-1.0E12 to 1.0E12	Distance L2 between the axes A2 and A3 in y direction of the KCS
<TO>.Kinematics.Parameter[3]	-1.0E12 to 1.0E12	Distance of the flange coordinate system from the axis A3 in the negative z direction of the KCS

Cylindrical robot 3D with orientation

You define the "Cylindrical robot 3D with orientation" kinematics using the following tags of the technology object:

Tags	Values	Description
<TO>.Kinematics.TypeOfKinematics	22	Cylindrical robot 3D with orientation
<TO>.Kinematics.Parameter[1]	-1.0E12 to 1.0E12	Distance L1 of the zero position of the axis A2 to the kinematics zero point in z direction of the KCS

Tags	Values	Description
<TO>.Kinematics.Parameter[2]	-1.0E12 to 1.0E12	Distance L2 between the axes A2 and A3 in y direction of the KCS
<TO>.Kinematics.Parameter[3]	-1.0E12 to 1.0E12	Distance of the flange coordinate system from the axis A3 in the negative z direction of the KCS
<TO>.Kinematics.Parameter[4]	-	Mechanical axis coupling of axis A4 to A2 present/not present
	0	Not present
	1	Present
<TO>.Kinematics.Parameter[5]	-1.0E12 to 1.0E12	Compensation factor of axis A4 to axis A2

6.10.7 Tripod (S7-1500T)

6.10.7.1 Tripod 3D (S7-1500T)

The kinematics "Tripod 3D" supports 3 axes and 3 degrees of freedom. The axes are configured as parallel kinematics.

The following graphic shows the principal configuration and the typical working area of the kinematics:

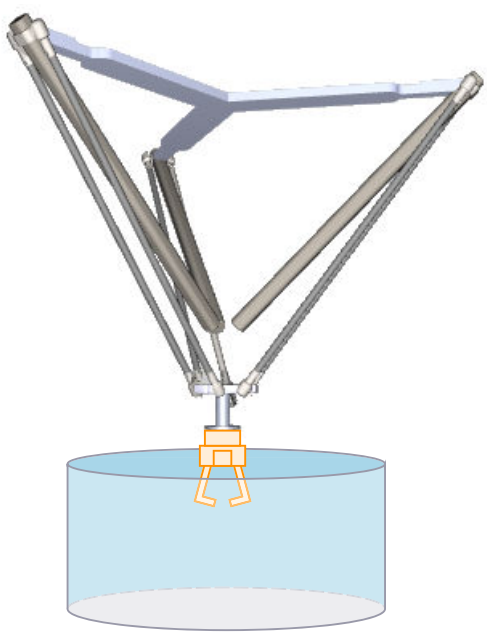

The kinematics consists of 3 linear axes A1, A2 and A3.

The kinematics is modeled suspended and consists of an upper connecting plate, 3 arms and a lower connecting plate. The axes for the motion of the arms consist of rails with sliding carriages. The rails with the sliding carriages are fastened to the upper connecting plate. Connecting rods connect the sliding carriages to the lower connecting plate. The tool is suspended from the lower connecting plate. The parallelogram structures of the connecting rods keep the lower connecting plate parallel to the xy plane of the KCS.

Coordinate systems and zero position

The graphic below shows the following in the top view (xy plane):

- The position of the kinematics coordinate system (KCS)
- The angles of the axes A1, A2 and A3 to one another

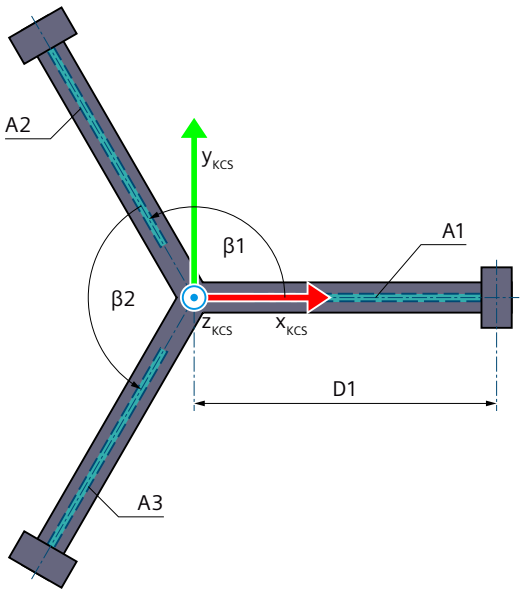

β1 Angle between the axes A1 and A2

β2 Angle between the axes A2 and A3

Legend for representation of the kinematics (Page 37)

The following graphic shows the top view of the position of the flange coordinate system (FCS) in the xy plane of the lower connecting plate:

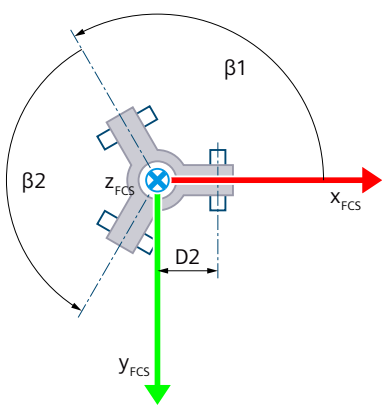

The graphic below shows the following in the front view (xz plane):

- The position of the axis A1 and the coordinate systems KCS and FCS
- The zero position of the axis A1
- The positive deflection of the axis A1 is indicated (dashed)

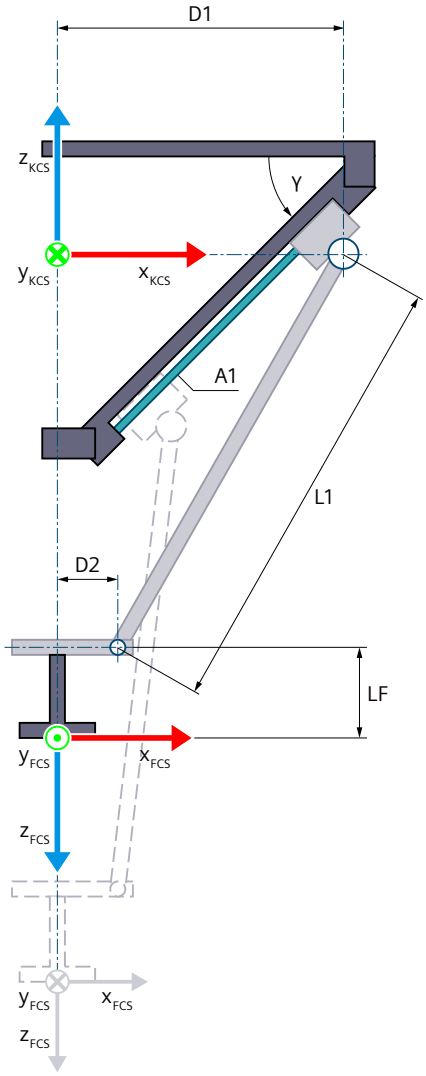

Zero position of the kinematics

D1	Distance of the upper hinge points of the connecting rods to the center of the upper connecting plate
D2	Distance of the lower hinge points of the connecting rods to the center of the lower connecting plate
L1	Length of the connecting rods
LF	Flange length before the FCS in the z direction of the KCS
γ	Angle between the upper connecting plate (xy plane of the KCS) and the rail of the axis A1 ($0.0° \leq \gamma < 90.0°$)

D1, D2, L1 and γ are identical for the three arms of the kinematics.

Deflection of the kinematics with deflection of the axis A1 in positive direction

Legend for representation of the kinematics (Page 37)

The KCS with the kinematics zero point (KZP) is located at the center point of the upper connecting plate. The kinematics zero point is centered relative to the zero positions of the axes A1, A2 and A3.

The FCS is located in the center point of the lower connecting plate with identical distance D2 to the joint points of each connecting rod. You shift the FCS in the negative z direction of the KCS using length LF.
At the zero position, axes A1, A2 and A3 are in the xy plane of the KCS.

Transformation area

The kinematics transformation covers the following traversing range (Page 163) of the axes:

- Axes A1, A2 and A3: 0.0 ≤ Travel distance

NOTE
Singularity
The kinematics has outer singularities (Page 167).

Joint position space

No arm positioning spaces for the kinematics.

6.10.7.2 Tripod 3D with orientation (S7-1500T)

The kinematics "Tripod 3D with orientation" supports 4 axes and 4 degrees of freedom. The axes are configured as parallel kinematics.
The following graphic shows the principal configuration and the typical working area of the kinematics:

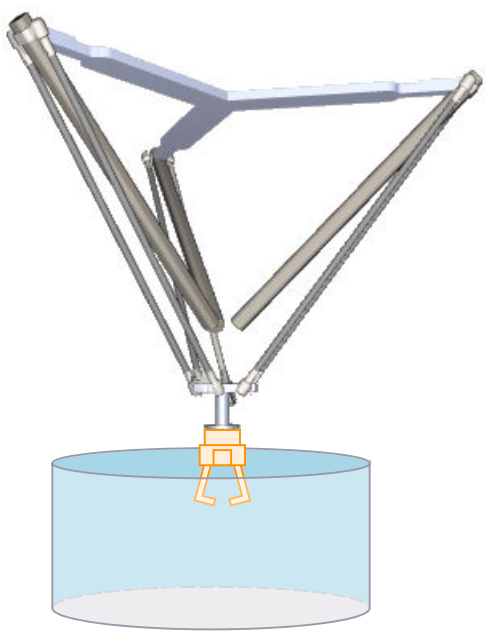

The kinematics consists of the following axes:

- 3 linear axes A1, A2 and A3
- 1 rotary axis A4 with rotation around z in the KCS

The kinematics is modeled suspended and consists of an upper connecting plate, 3 arms and a lower connecting plate. The axes for the motion of the arms consist of rails with sliding carriages. The rails with the sliding carriages are fastened to the upper connecting plate. Connecting rods connect the sliding carriages to the lower connecting plate. The tool is suspended from the lower connecting plate. The parallelogram structures of the connecting rods keep the lower connecting plate parallel to the xy plane of the KCS. The kinematics axis A4 enables rotation of the tool around z in the KCS.

Coordinate systems and zero position

The graphic below shows the following in the top view (xy plane):

- The position of the kinematics coordinate system (KCS)
- The angles of the axes A1, A2 and A3 to one another

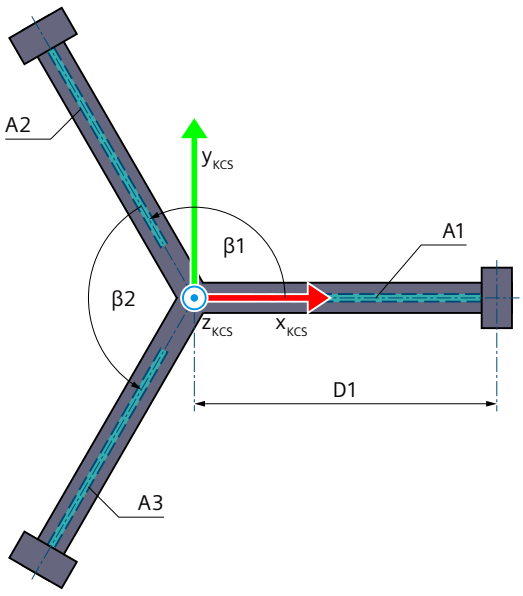

β1 Angle between the axes A1 and A2

β2 Angle between the axes A2 and A3

Legend for representation of the kinematics (Page 37)

The following graphic shows the top view of the position of the flange coordinate system (FCS) in the xy plane of the lower connecting plate:

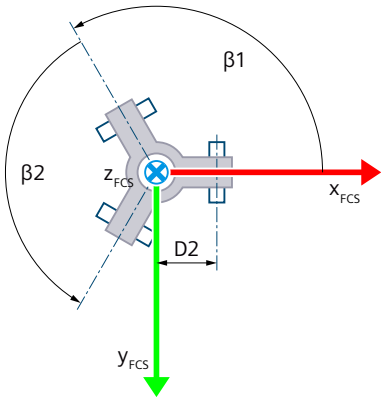

The graphic below shows the following in the side view:

- The position of the axis A1 and the coordinate systems KCS and FCS
- The zero position of the axis A1
- The positive deflection of the axis A1 is indicated (dashed)

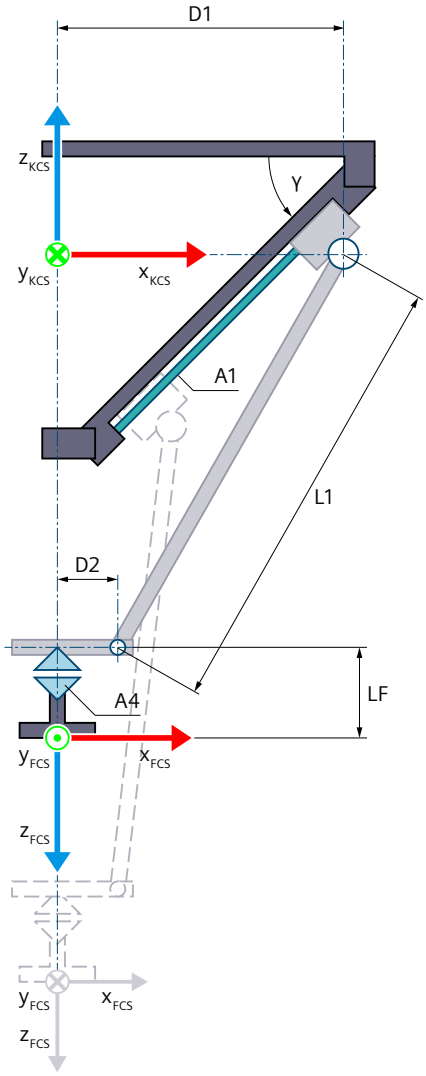

Zero position of the kinematics

D1	Distance of the upper joint points of the connecting rods to the center of the upper connecting plate
D2	Distance of the lower joint points of the connecting rods to the center of the lower connecting plate
L1	Length of the connecting rods
LF	Flange length before the FCS in the z direction of the KCS
γ	Angle between the upper connecting plate (xy plane of the KCS) and the rail of the axis A1 ($0.0° \leq \gamma < 90.0°$)

D1, D2, L1 and γ are identical for the three arms of the kinematics.

Deflection of the kinematics with deflection of the axis A1 in positive direction

Legend for representation of the kinematics (Page 37)

The KCS with the kinematics zero point (KZP) is located at the center point of the upper connecting plate. The kinematics zero point is centered relative to the zero positions of the axes A1, A2 and A3.

The FCS is located in the center point of the lower connecting plate with identical distance D2 to the joint points of each connecting rod. You shift the FCS in the negative z direction of the KCS using length LF.
At the zero position, axes A1, A2 and A3 are in the xy plane of the KCS. At the zero position of axis A4, the x axis of the FCS points in the direction of the x axis of the KCS.

Transformation area

The kinematics transformation covers the following traversing range (Page 163) of the axes:

- Axes A1, A2 and A3: 0.0 ≤ Travel distance
- Axis A4: No limit
  An angle greater than 360° can be defined for the orientation. But coordinate A of the tool center point (TCP) is mapped in the range -180° to +180°.

NOTE
Singularity
The kinematics has outer singularities (Page 167).

Joint position space

No arm positioning spaces for the kinematics.

6.10.7.3 Tags: Tripod (S7-1500T)

You define the tripod kinematics using the following tags of the technology object:

Tags	Values	Description
<TO>.Kinematics.TypeOfKinematics	23	Tripod 3D
	24	Tripod 3D with orientation
<TO>.Kinematics.Parameter[1]	0.0 to 1.0E12	Distance D1 (radius of the upper connecting plate)
<TO>.Kinematics.Parameter[2]	0.001 to 1.0E12	Length L1 of connecting rods
<TO>.Kinematics.Parameter[3]	0.0° to 89.999°	Angle γ between the linear axes and the x-y plane of the kinematics coordinate system
<TO>.Kinematics.Parameter[4]	0.0 to 1.0E12	Distance D2 (radius of the lower connecting plate)
<TO>.Kinematics.Parameter[5]	90.001° to 179.998°	Angle β1 between the axes A1 and A2
<TO>.Kinematics.Parameter[6]	90.001° to 179.998°	Angle β2 between the axes A2 and A3
<TO>.Kinematics.Parameter[7]	-1.0E12 to 1.0E12	Distance of the flange coordinate system from the lower connecting plate in the negative z direction of the kinematics coordinate system

6.10.8 User-defined kinematics systems (S7-1500T)

You can configure user-defined kinematics systems with corresponding axis interconnections:

- User-defined 2D
- User-defined 2D with orientation A
- User-defined 3D
- User-defined 3D with orientation A
- User-defined 3D with 3 orientations

The configuration supports you in a user-defined kinematics as follows:

- You interconnect the kinematics axes under "Technology object > Configuration > Interconnections".
- You define the transformation parameters under "Technology object > Configuration > Geometry". Up to 32 tags for defining the geometry of your kinematics are available on the system level.

You have to program the user transformation of the Cartesian positions and the axis positions and axis dynamics. Predefined interfaces are available on the system level. The function of the user transformation is different for kinematics with and without JCS:

- User transformation without JCS (Page 173-174)
- User transformation with JCS (Page 175)

6.10.8.1 Tags: User-defined kinematics systems (S7-1500T)

You configure the user-defined kinematics systems using the following tags of the technology object:

Tag	Values	Description
<TO>.Kinematics.TypeOfKinematics	31	User-defined 2D
	32	User-defined 2D with orientation A
	33	User-defined 3D
	34	User-defined 3D with orientation A
	36	User-defined 3D with 3 orientations
<TO>.Kinematics.Parameter[1..32]	-	Up to 32 user-specific parameters

6.11 Kinematics transformation (S7-1500T)

The kinematics transformation is the conversion between the Cartesian coordinates of the kinematics motion and the setpoints for the individual kinematics axes:

- Forward transformation
  Calculation of the Cartesian coordinates from the axis positions of the kinematics axes
- Inverse transformation
  Calculation of the axis positions of the kinematics axes from the Cartesian coordinates

The kinematics transformation converts the position values and the dynamic values (velocity, acceleration).

The kinematics technology object provides the kinematics transformation for the predefined kinematics types on the system level. In the case of user-defined kinematics systems, you must calculate the user transformation (Page 173-174) in its own program.

6.11.1 Transformation for predefined kinematics systems (S7-1500T)

6.11.1.1 Reference points (S7-1500T)

The kinematics transformation uses the following reference points:

- Kinematics zero point (KZP)
- Zero positions of the kinematics axes
- Tool center point (TCP)

The positive direction of the axes for the kinematics transformation is dependent on the kinematics type (Page 58). Configure the positive direction on the positioning axis/synchronous axis technology object corresponding to the positive direction of the axis in the kinematics.

Zero positions of the kinematics axes

The position 0.0 on the positioning axis/synchronous axis technology object defines the zero position of the kinematics axis. Reference the axes in such a way that the axes indicate the position 0.0 in the zero position of the kinematics. The zero position of the kinematics depends on the kinematics type (Page 58).

6.11.1.2 Traversing range and transformation area (S7-1500T)

The transformation area is the area of the axis positions that the kinematics transformation covers. The kinematics type defines the transformation area for the individual kinematics axes. You will find information on the transformation area in the description of the individual kinematics systems (Page 58).

The hardware and software limit switches of an axis define the maximum traversing range and the working area. The working area of a kinematics axis can be greater than or less than the transformation area depending on the axis configuration:

- Work area > Transformation area
  When a kinematics axis exits the transformation area during a kinematics motion, the kinematics technology object outputs the technology alarm 803. The kinematics motion is aborted and the axes stop with the maximum dynamic values configured for the axes (alarm reaction: Stop with maximum dynamic values of the axes).
- Work area ≤ Transformation area
  When a kinematics axis runs into the software limit switch, the positioning axis/synchronous axis technology object outputs the technology alarm 533. The axis stops with the maximum dynamic values configured for the axis (alarm reaction: Stop with maximum dynamic values). When the axis is stopped, the kinematics technology object outputs the technology alarm 801. The kinematics motion is aborted and the axes stop with the maximum dynamic values configured for the axes (alarm reaction: Stop with maximum dynamic values of the axes).

The following graphic shows the relationship between the working area of the axis and the transformation area:

① Mechanical end stop
② Hardware limit switch for positioning axis/synchronous axis technology object
③ Software limit switch for positioning axis/synchronous axis technology object
④ Maximum traversing range of the axis
⑤ Work area of the axis
⑥ Transformation area
(here working area > transformation area)

6.11.1.3 Joint position spaces (kinematics-dependent) (S7-1500T)

Depending on the kinematics type, a kinematics system can reach Cartesian coordinates via various joint positions. The kinematics type (Page 58) defines the possible joint positions and the positive and negative joint position space. The joint positioning spaces are limited by the respective transformation areas. In addition, with the "Delta picker" kinematics type there are further limitations due to invalid joint positions and singularities (Page 167) with the kinematics types "articulated arm", "SCARA 3D" and "cylindrical robot". Also note the resulting constructional limitations due to the installation location of the kinematics.

The kinematics technology object indicates the current joint position in the "<TO>.StatusKinematics.LinkConstellation" tag.

The kinematics system cannot exit the joint position space during a linear or circular motion. You can change the arm positioning space using single-axis motions and synchronous "point-to-point" motion (sPTP motion).

Example: Kinematics type SCARA 3D

A "SCARA 3D" kinematics is to relocate an object from one pallet to another pallet. Due to a wall, the kinematics system cannot reach the second pallet without the axis A2 changing the joint position space.

The figure below shows the kinematics in the top view (xy plane):

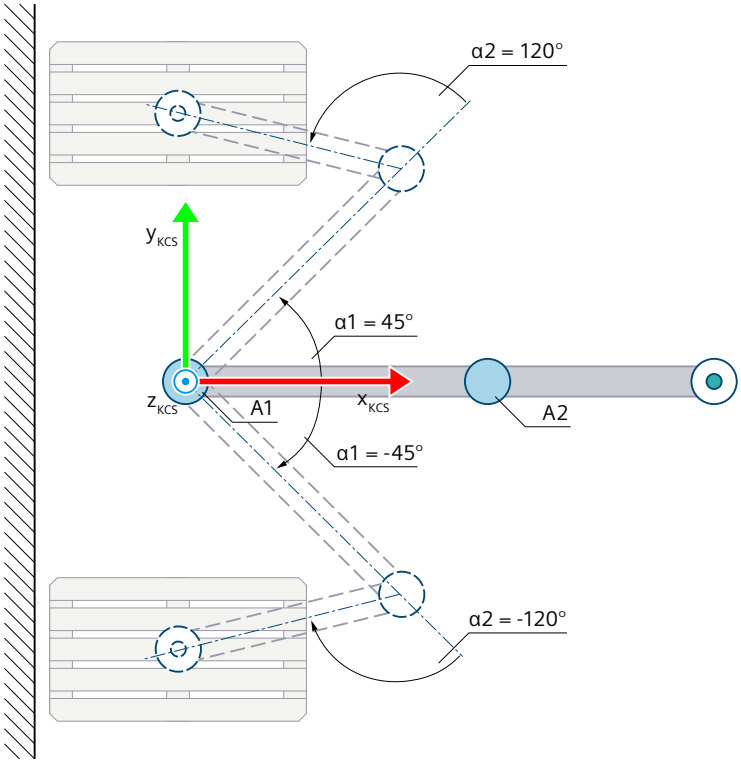

Zero position of the kinematics

Deflection of the kinematics in the positive direction when α1 = 45.0° with positive joint position when α2 = 120.0°
Deflection of the kinematics in the negative direction when α1 = -45.0° with negative joint position when α2 = -120.0°

α1 Deflection of the axis A1 in positive direction when α1 = 45.0°
Deflection of the axis A1 in the negative direction when α1 = -45.0°

α2 The deflection of the axis A2 in the positive direction when α2 = 120.0° produces a positive joint position.
The deflection of the axis A2 in negative direction when α2 = -120.0° produces a negative joint position.

Legend for representation of the kinematics (Page 37)

Example: "Articulated arm 3D" kinematics type

A kinematics "Articulated arm 3D" should move one object from one storage location to another. The kinematics cannot reach the second storage location because of the ceiling without axis A3 changing the arm positioning space.

The figure below shows the kinematics in the side view (xz plane):

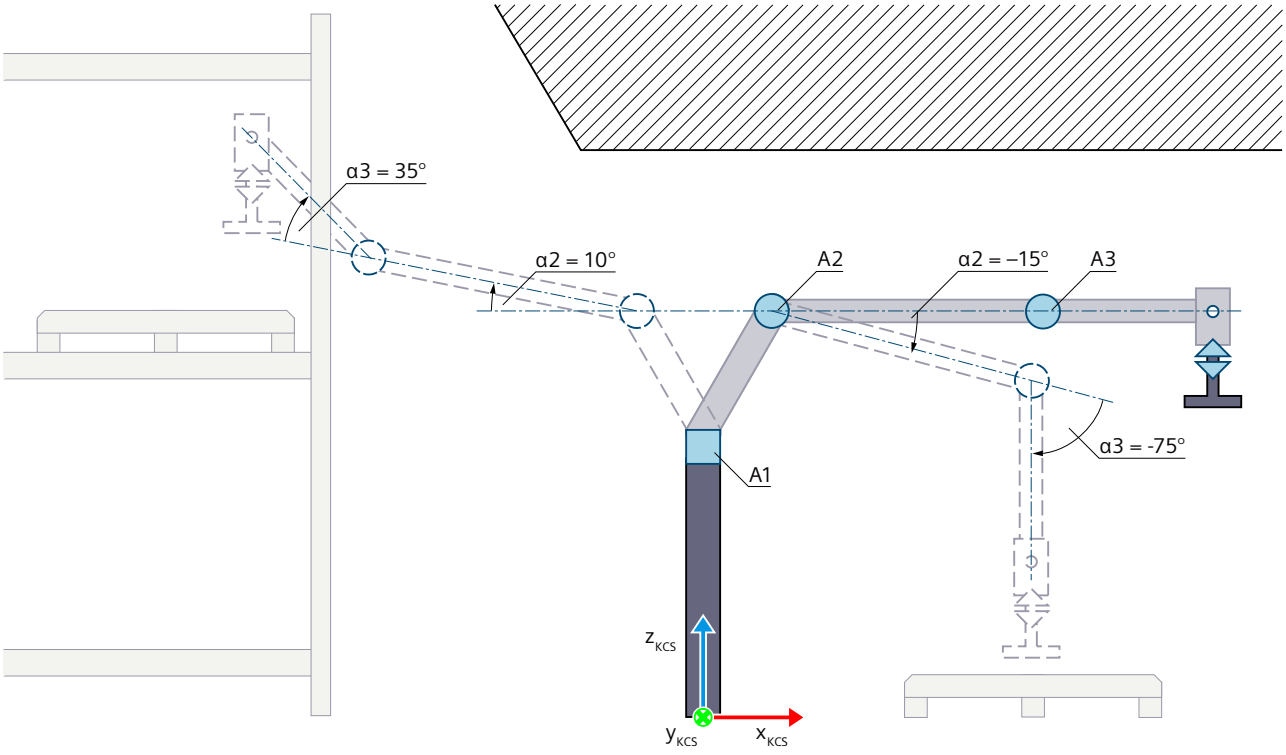

Zero position of the kinematics

Deflection of the kinematics in the positive direction when α2 = 10.0° with positive joint position when α3 = 35.0°
Deflection of the kinematics in the negative direction when α2 = -15.0° with negative joint position when α3 = -75.0°

α2 Deflection of the axis A2 in the positive direction when α2 = 10.0°
Deflection of the axis A2 in negative direction when α2 = -15.0°

α3 The deflection of the A3 in the positive direction when α3 = 35.0° produces a positive joint position.
The deflection of the A3 in negative direction when α3 = -75.0° produces a negative joint position.

Legend for representation of the kinematics (Page 37)

Example: Kinematics type "cylindrical robot"

A kinematics "Cylindrical robot" should move an object from one storage location to another. The kinematics cannot reach the second storage location without axis A3 changing the arm positioning space.

The figure below shows the kinematics in the top view (xy plane):

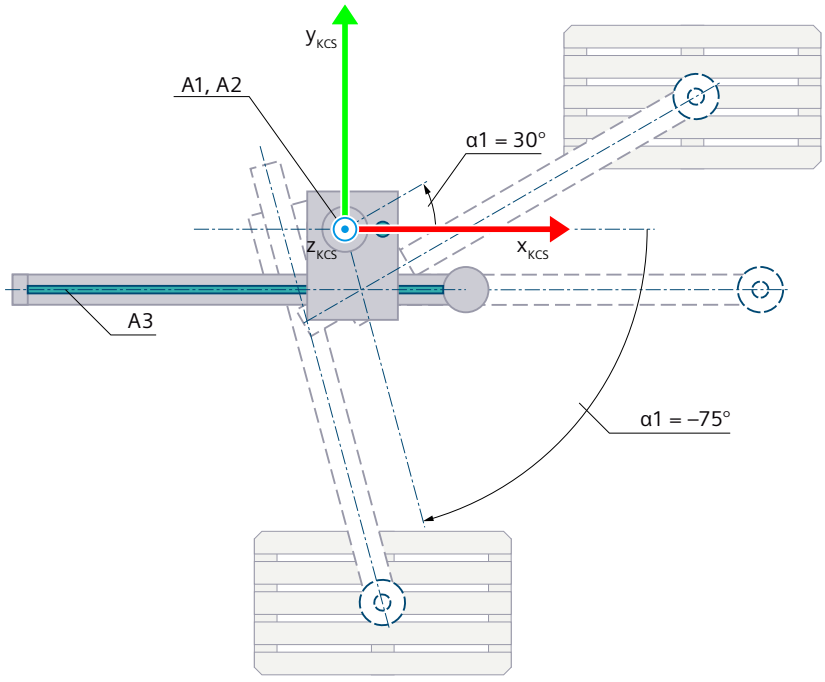

Zero position of the kinematics

Deflection of the kinematics in positive direction when α1 = 30.0°
Deflection of the kinematics in the negative direction when α1 = -75.0°

α1 Deflection of the axis A1 in positive direction when α1 = 30.0°
Deflection of the axis A1 in the negative direction when α1 = -75.0°

Legend for representation of the kinematics (Page 37)

6.11.1.4 Singularities (S7-1500T)

Depending on the kinematics type, inverse transformation Cartesian coordinates are possible, which cannot be clearly converted into axis positions of the kinematics axes. The Cartesian coordinates at which this behavior occurs are referred to as singularities.

Inner singularities

The inner singularity occurs when the zero point of the flange coordinate system (FCS) is located on the z-axis of the kinematics coordinate system (KCS). The following kinematics have inner singularities:

- Articulated arm 3D
- Articulated arm 3D with orientation
- 6-axis articulated arm with central hand
- SCARA 3D with orientation
- Cylindrical robot 3D
- Cylindrical robot 3D with orientation

Inner singularity using the articulated arm 3D as an example

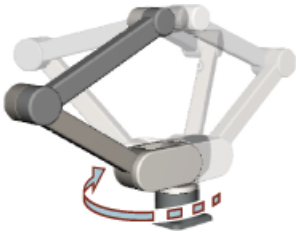

In the vicinity of the inner singularity, a path motion without dynamic adaptation will result in an overrun of the dynamics of the kinematics axis A1 and the kinematics axis A4. This causes the entire kinematics to rotate with an overrun of the dynamics.

Outer singularities

An outer singularity occurs when one or more arms of the kinematics are completely extended or folded. The following kinematics have outer singularities:

- Articulated arm 2D
- Articulated arm 2D with orientation
- Articulated arm 3D
- Articulated arm 3D with orientation
- 6-axis articulated arm with central hand
- SCARA 3D with orientation
- Delta picker 2D
- Delta picker 2D with orientation
- Delta picker 3D
- Delta picker 3D with orientation
- Delta picker 3D with 2 orientations A, B
- Tripod 3D
- Tripod 3D with orientation

In the vicinity of these singularities a path motion without dynamic adaptation will result in an overrun of the dynamics at the kinematics axes, which can result in oscillations of the entire kinematics as well as excessive forces being applied.

Extended position using the articulated arm 3D as an example

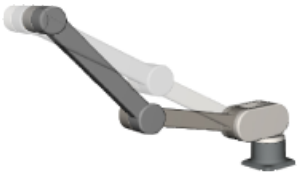

The articulated arm is fully extended and the flange is at the external limit of the maximum possible working range.

Folded position using the articulated arm 3D as an example

The articulated arm is completely folded.

Behavior in the vicinity of a singularity

In the vicinity of a singularity a path motion without dynamic adaptation results in overruns of the dynamics. This means one or more kinematics axes can move at very high speed and accelerate or decelerate with excessive force. The size of the area in which this behavior occurs depends on the kinematics used.

⚠ WARNING

Overrun of the dynamics in the vicinity of a singularity

An overrun of the dynamics in the vicinity of a singularity can result in the following damage:

- Personal injury, for example, caused by products or machine parts coming loose
- Machine damages, for example, through overload of the mechanical components

Take into account the preventive measures described in this section to prevent this behavior.

A path motion through a singularity is not possible. The technology alarm 803 "Error during calculation of the transformation" is output (alarm response: Stop with maximum dynamic values of the axes).

The kinematics system reduces the overruns of the dynamics caused by setpoints to the maximum dynamics of the axis. The reduction of the overruns of the dynamics can result in an unpredictable axis motion.

When the dynamic limits of the kinematics axes are exceeded, this is displayed at the affected kinematics axis with the tag "<TO>.StatusKinematicsMotion" and the technology alarm 511 "Dynamic limit is violated by the kinematics motion" is triggered. The technology alarm 511 does not trigger an alarm response and the kinematics motion is not stopped.

Affected kinematics motions

An overrun of the dynamics in the vicinity of a singularity only occurs for path motions without dynamic adaptation.

An overrun of the dynamics due to a singularity does not occur for the following motions:

- Synchronous point-to-point motion
- Motions in the MCS through the kinematics control panel

Dynamic adaptation in the vicinity of singularities

With movement in the vicinity of singularities with dynamic adaptation without segmentation of the path, dynamics can be significantly limited over the entire motion. Therefore, with motions in the vicinity of singularities, use the dynamic adaptation with segmentation of the path.

Preventive measures to prevent the behavior

By applying the following preventive measures, you can avoid a path motion without dynamic adaptation in the vicinity of a singularity:

1. Avoid the use of conveyor tracking in the vicinity of a singularity. Dynamic adaptation cannot be used in any phase of the conveyor tracking.
2. Activate Dynamic adaptation (Page 213) for linear or circular motions that are not part of the phases of conveyor tracking.
3. To limit the working area of the kinematics, use zone monitoring or software limit switches at the kinematics axes.
4. Control with the kinematics control panel
   - Move the kinematics in the MCS.
   - In the WCS or OCS, avoid the "Jog" mode.
     The dynamic adaptation is not active in the kinematics control panel. The dynamic limits of the kinematics axes are not taken into account during a kinematics motion with the kinematics control panel.
   - Up to technology version V5.0 of the kinematics technology object: In the WCS or OCS, avoid using the "Jog to target position" mode.
     The dynamic adaptation is not active in the kinematics control panel. The dynamic limits of the kinematics axes are not taken into account during a kinematics motion with the kinematics control panel.
   - As of technology version V5.0 and higher: Move the kinematics to the "Jog to target position" mode in the WCS or OCS using the kinematics control panel.
     "Dynamic adaptation without segmentation of the path" is permanently active in the "Jog to target position" mode, and the dynamic limits of the kinematics axes are taken into account.

Determining the area with overrun of the dynamics for articulated arm 3D

To empirically determine the area in which overruns of the dynamics occur due to a singularity, use the following functions:

- Kinematics diagnostics
- Kinematics control panel
- Trace
- Virtual or simulated axes

⚠ WARNING

Deliberately traveling into the singularity

The following damage may occur due to overruns of the dynamics in the vicinity of a singularity:

- Personal injury, for example, caused by products or machine parts coming loose
- Machine damages, for example, through overload of the mechanical components

Do **not** determine the areas with overrun in the dynamics by moving the actual kinematics.

You **must** configure all kinematics axes as "virtual axis" or "axis in simulation".

Requirements

- All kinematics axes are configured as virtual or simulated axes. The kinematics are interconnected.
- The geometry of the kinematics is configured to match the real kinematics.
- The dynamics for kinematics and all kinematics axes are configured.
- The permitted dynamics are known from the application.
- The tool center point is located at the origin of the FCS.

Determining the distance to the inner singularity

1. Configure a Trace with the following signals:
   - <TOKinematics>.A[1..6].Velocity
   - <TOKinematics>.A[1..6].Acceleration
   - <TOKinematics>.FlangeInKcs.x.Position
   - <TOKinematics>.FlangeInKcs.y.Position
   - <TOKinematics>.FlangeInKcs.z.Position
2. Open the diagnostics of the kinematics and arrange it next to the kinematics control panel.
3. Set the kinematics control panel as follows:
   - Operating mode: Jog
   - Coordinate system: WCS
   - Path velocity: Maximum required path velocity for the process
4. Make sure that all kinematics axes are configured as virtual axes or axes in simulation.
5. Jog the kinematics to a position from which the inner singularity could be reached.
6. Jog the kinematics backward a little (e.g. 1 mm) in y direction so that you can jog slightly past the singularity.
7. Jog the kinematics with maximum path velocity in x direction past the inner singularity and record the signals in the Trace.

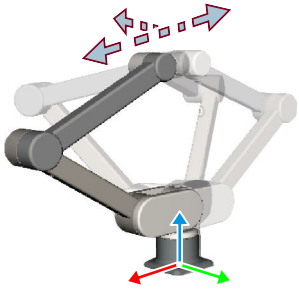

Jog forward and backward in x direction

Jog backward in y direction

8. Gradually increase the distance in y direction to the inner singularity. Repeat step 7.

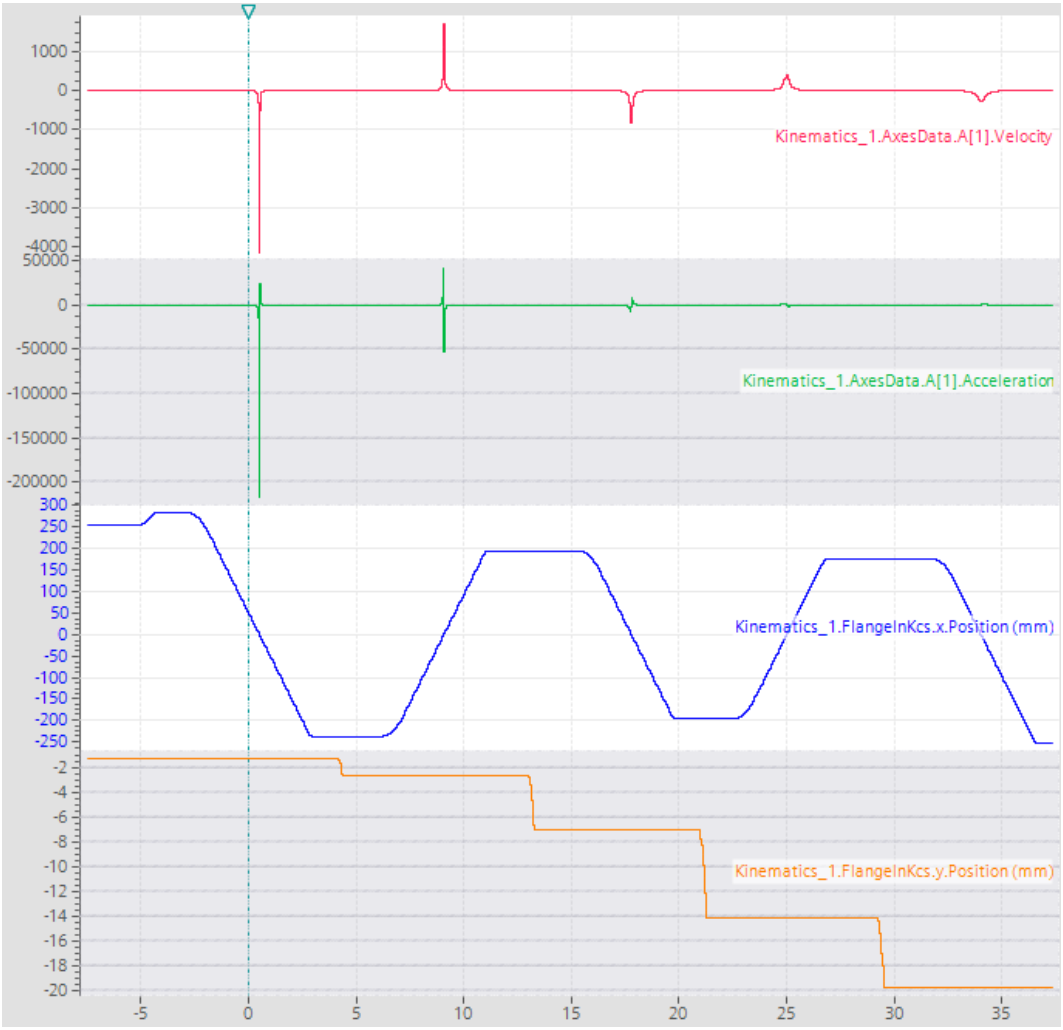

The recorded Trace shows the dynamics of the axis A1 at different distances of the FCS to the inner singularity.

9. Determine the distance on the y-axis at which the dynamics of the kinematics axis A1 is permissible for your process.
   This distance corresponds to the radius of a cylinder around the z axis of the KCS in which overruns of the dynamics occur and the flange must not be moved.

NOTE

Validity of the determined distance

The determined distance only applies to a kinematics with the configured geometry and dynamics.

NOTE

Valid tool

Configure the tool once again so that the tool matches your application.

Limiting the working area with zone monitoring

The Cartesian space that must be excluded from the working area results from the determined distance.
You can find a description of the zone monitoring in section "Zone monitoring (Page 191)".

1. Define a cylindrical blocked zone or signal zone around the z-axis of the KCS:
   - Length z: Entire working area of the kinematics
   - Radius: Determined distance
   - x: Position of the KZP in x direction of the WCS
   - y: Position of the KZP in y direction of the WCS

Signal zone	Blocked zone
Useful in case of a major shift of the TCP from the origin of the FCS in x or y direction and when using conveyor tracking	Useful in case of a minor shift of the TCP from the origin of the FCS in x or y direction Not very useful when using conveyor tracking
Individually programmed stop reaction when: – Flange zone violates signal zone – Signal zone violated by TCP	Automatic stop reaction when: – Flange zone violates blocked zone – Blocked zone violated by TCP

2. Define a spherical flange zone:
   - Radius: Distance required for the stop reaction
   - CS: FCS
   - x: 0.0
   - y: 0.0
   - z: 0.0

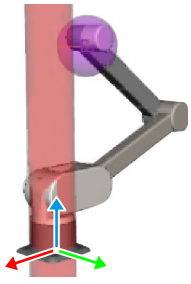

3. When you are using a signal zone, program a stop reaction for the kinematics and any other axes, if necessary.

NOTE
Extended position and folded position
You can also use this procedure to determine the area of the overruns of the dynamics in extended and folded positions and then limit the working area of the kinematics with zones.

See also

Moving a kinematics with a synchronous "point-to-point" motion (Page 245)

6.11.2 Transformation for user-defined kinematics systems (S7-1500T)

6.11.2.1 User transformation without JCS (S7-1500T)

Unlike for predefined kinematics types, you must calculate the transformation for user-defined kinematics systems in your own program. Like for predefined kinematics types, the kinematics technology object performs the following tasks:

- Processing of Motion Control instructions
- Monitoring functions
- Communication with the interconnected axes

You program the user transformation of the Cartesian coordinates and the axis-specific setpoints in the MC-Transformation [OB98] organization block. This programming includes the transformation of the positions and the dynamic values (velocity, acceleration). You freely define the parameters of a user-defined kinematics system in the tags of the kinematics technology object "<TO>.Kinematics.Parameter[1..32]" or under "Technology object > Configuration > Geometry".

When you add the MC-Transformation [OB98] in the TIA Portal, the system data block "TransformationParameter" is automatically created under "Program blocks > System blocks > Program resources". In the properties of the organization block under "General > Transformation", the MC-Transformation [OB98] indicates the number of the system data block "TransformationParameter". You write and read the axis-specific data or the Cartesian data of the kinematics to be transformed in the system data block "TransformationParameter".

With the Technology Version V5.0, longer runtimes of the MC-Interpolator [OB92] arise with the user transformation. With longer runtimes of the MC-Interpolator [OB92], the runtimes of the organization blocks with lower priority are extended.

NOTE

Disable system performance improvement

If you are using user-defined kinematics, clear the "Improve system performance" check box in the MC-LookAhead [OB97] properties under "General > Multi-core processor".

Programming

The graphic below shows the interfaces and the interaction of system performance and user transformation:

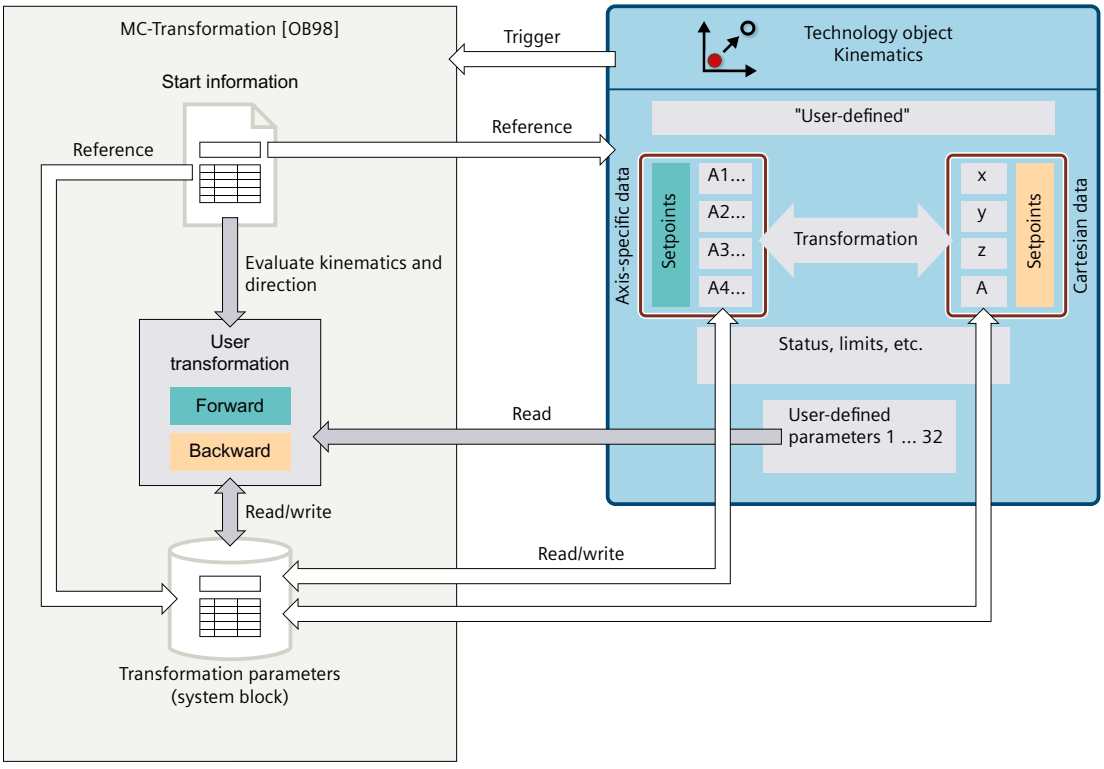

Processing by user program

System performance

The kinematics technology object automatically calls the MC-Transformation [OB98]. The MC-Transformation [OB98] contains the following start information:

- Kinematics technology object that calls the MC-Transformation [OB98]
- Required direction of the transformation (forward or inverse transformation)
- Processing context of the transformation (current motion or motion planning)
- Pointer to the system data block "TransformationParameter" (VARIANT)

You evaluate this status information in your user program. In MC-Transformation [OB98]. you program the algorithms for the calculation of the axis-specific data or the Cartesian data of all user-defined kinematics systems. You read the kinematics parameters needed for this from the tags of the "<TO>.Kinematics.Parameter[1..32]" technology object. You write the result of the calculation to the "TransformationParameter" interface.

The transformation parameters are then applied automatically to the kinematics technology object and processed further. The kinematics technology object outputs the setpoints to the kinematics axes.

You can configure and apply the user-defined transformation with multiple kinematics technology objects on a PLC. To differentiate in MC-Transformation [OB98] between the different kinematics technology objects, use the input "KinematicsObject".

6.11.2.2 User transformation with JCS (S7-1500T)

Unlike for predefined kinematics types, you must calculate the transformation for user-defined kinematics systems in your own program. Like for predefined kinematics types, the kinematics technology object performs the following tasks:

- Processing of Motion Control instructions
- Monitoring functions
- Communication with the interconnected axes

You program the user transformation of the Cartesian coordinates and the joint-specific setpoints in the MC-Transformation [OB98] organization block without considering inversions and offsets. If the joint directions of movement or the joint zero positions of the kinematics used do not correspond to the programmed user transformation, there are two ways to adapt them:

1. Retain the user transformation. Invert the affected joint directions of movement and joint zero positions in the "Joints" configuration window of the kinematics technology object. In this case, the joint-specific parameters "AxisData" in the system data block "Transformation" are not equal to the joint coordinates ("JointData"). The technology object performs this calculation automatically through the configured offsets and inversions.
2. Change the programmed user transformation in such a way that the calculated joint-specific setpoints from the transformation correspond to the joint coordinate system of the kinematics. In this case, the "AxisData" parameters in the "Transformation" system data block are equal to the joint coordinates ("JointData"). It is not necessary to configure the joint offset.

This programming includes the transformation of the positions and the dynamic values (velocity, acceleration). You freely define the parameters of a user-defined kinematics system in the tags of the kinematics technology object "<TO>.Kinematics.Parameter[1..32]" or under "Technology object > Configuration > Geometry".

When you add the MC-Transformation [OB98] in the TIA Portal, the system data block "TransformationParameter" is automatically created under "Program blocks > System blocks > Program resources". In the properties of the organization block under "General > Transformation", the MC-Transformation [OB98] indicates the number of the system data block "TransformationParameter". You write and read the joint-specific data or the Cartesian data of the kinematics to be transformed in the system data block "TransformationParameter".

With the Technology Version V5.0, longer runtimes of the MC-Interpolator [OB92] arise with the user transformation. With longer runtimes of the MC-Interpolator [OB92], the runtimes of the organization blocks with lower priority are extended.

NOTE

Disable system performance improvement

If you are using user-defined kinematics, clear the "Improve system performance" check box in the MC-LookAhead [OB97] properties under "General > Multi-core processor".

Programming

The graphic below shows the interfaces and the interaction of system performance and user transformation in a kinematics with used JCS:

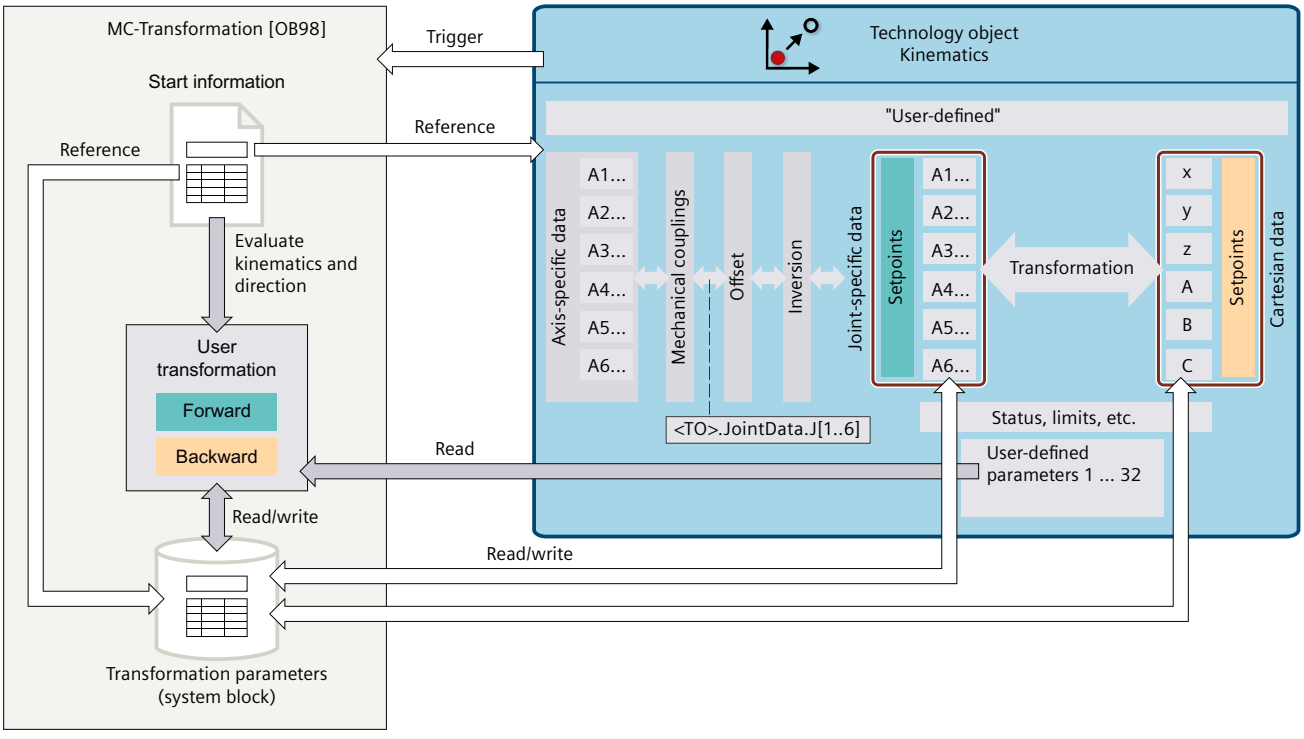

The kinematics technology object automatically calls the MC-Transformation [OB98]. The MC-Transformation [OB98] contains the following start information:

- Kinematics technology object that calls the MC-Transformation [OB98]
- Required direction of the transformation (forward or inverse transformation)
- Processing context of the transformation (current motion or motion planning)
- Pointer to the system data block "TransformationParameter" (VARIANT)

You evaluate this status information in your user program. In MC-Transformation [OB98]. you program the algorithms for the calculation of the axis-specific data or the Cartesian data of all user-defined kinematics systems. You read the kinematics parameters needed for this from the tags of the "<TO>.Kinematics.Parameter[1..32]" technology object. You write the result of the calculation to the "TransformationParameter" interface.

The transformation parameters are then applied automatically to the kinematics technology object and processed further. The kinematics technology object outputs the setpoints to the kinematics axes.

You can configure and apply the user-defined transformation with multiple kinematics technology objects on a PLC. To differentiate in MC-Transformation [OB98] between the different kinematics technology objects, use the input "KinematicsObject".

NOTE

Inverse transformation

In the inverse transformation, only the basic joint range "TurnJoint" = 0 needs to be programmed. The technology object automatically calculates the sPTP motions for the joint position ranges outside of the basic joint range "TurnJoint" ≠ 0.

6.11.2.3 MC-Transformation [OB98] (S7-1500T)

Reference declaration for system data block "TransformationParameter"

You must specify a reference to the data type for the system data block "TransformationParameter" in the "MC-Transformation [OB98]". For this purpose, you specify a tag with the following data type in the "Temp" area of the block interface:

"REF_TO TO_Struct_TransformationParameter_V2"

To enable access to the system data block "TransformationParameter", assign the data type "TO_Struct_TransformationParameter_V2" using the following casting command:

```
#P ?= #TransformationParameters;
```

The declaration is described in a program example (Page 180).

Block call

The MC-Transformation [OB98] is called in the Motion Control application cycle according to the configured priority. When the MC-Transformation [OB98] is called, the kinematics technology object assigns its parameters:

Parameter	Declaration	Data type	Default value	Description	
KinematicsObject	INPUT	DB_ANY	-	Kinematics technology object for which the MC-Transformation [OB98] calculates the transformation when called.	
ExecutionContext	INPUT	DINT	-	Processing context of the MC-Transformation OB	
				0	MOTION_EXECUTION Calculation of the axis setpoints in the motion execution in the MC-Interpolator [OB92]. The calculated values are necessary for the current motion control.
				1	NON_MOTION_EXECUTION The transformation is necessary for the motion planning (currently no motion).

Parameter	Declaration	Data type	Default value	Description	
TransformationType	INPUT	DINT	-	Calculation called for	
				0	Forward transformation Calculation of the Cartesian parameters from the axis positions
				1	Inverse transformation Calculation of the axis-specific parameters from the Cartesian parameters
TransformationParameters	InOut	VARIANT	-	Pointer to the system data block "TransformationParameter"	
FunctionResult	OUTPUT	DINT	-	Return value of the MC-Transformation [OB98] to the kinematics technology object	
				0	Calculation performed and parameters output
				≠ 0	Error during calculation (user-defined) If an error occurs during the calculation, the kinematics technology object stops the motion. The kinematics technology object outputs a technology alarm with the error ID as an accompany value and deletes the job sequence. The value can be greater than or less than zero.

Priority

You configure the priority of the MC-Transformation [OB98] in the properties of the organization block under "General > Attributes > Priority". For the priority you can set values from 17 to 25 (default setting 25):

- The priority of MC-Transformation [OB98] must be at least one level lower than the priority of MC-Servo [OB91].
- The priority of MC-Transformation [OB98] must be at least one level higher than the priority of MC-Interpolator [OB92].

Tags of the system data block "TransformationParameter"

The following table shows the tags in the system data block "TransformationParameter":

NOTE

If JCS is used, the "AxisData" tags are to be interpreted as joint-specific setpoints.

Tag	Data type	Description	
AxisData.	STRUCT_ Transformation AxisData_V2	JCS not used: Axis-specific parameters	JCS used: Joint-specific parameters without consideration of inversions and offsets
a1Position	LREAL	Position setpoint of the axis A1	Position setpoint of the joint J1
a1Velocity	LREAL	Velocity setpoint of the axis A1	Velocity setpoint of the joint J1
a1Acceleration	LREAL	Acceleration setpoint of the axis A1	Acceleration setpoint of the joint J1

Tag	Data type	Description	
a2Position	LREAL	Position setpoint of the axis A2	Position setpoint of the joint J2
a2Velocity	LREAL	Velocity setpoint of the axis A2	Velocity setpoint of the joint J2
a2Acceleration	LREAL	Acceleration setpoint of the axis A2	Acceleration setpoint of the joint J2
a3Position	LREAL	Position setpoint of the axis A3	Position setpoint of the joint J3
a3Velocity	LREAL	Velocity setpoint of the axis A3	Velocity setpoint of the joint J3
a3Acceleration	LREAL	Acceleration setpoint of the axis A3	Acceleration setpoint of the joint J3
a4Position	LREAL	Position setpoint of the axis A4	Position setpoint of the joint J4
a4Velocity	LREAL	Velocity setpoint of the axis A4	Velocity setpoint of the joint J4
a4Acceleration	LREAL	Acceleration setpoint of the axis A4	Acceleration setpoint of the joint J4
a5Position	LREAL	Position setpoint of the axis A5	Position setpoint of the joint J5
a5Velocity	LREAL	Velocity setpoint of the axis A5	Velocity setpoint of the joint J5
a5Acceleration	LREAL	Acceleration setpoint of the axis A5	Acceleration setpoint of the joint J5
a6Position	LREAL	Position setpoint of the axis A6	Position setpoint of the joint J6
a6Velocity	LREAL	Velocity setpoint of the axis A6	Velocity setpoint of the joint J6
a6Acceleration	LREAL	Acceleration setpoint of the axis A6	Acceleration setpoint of the joint J6
CartesianData	STRUCT_ Transformation CartesianData-_V2	Cartesian parameters and joint position space	
xPosition	LREAL	x position	
xVelocity	LREAL	x velocity	
xAcceleration	LREAL	x acceleration	
yPosition	LREAL	y position	
yVelocity	LREAL	y velocity	
yAcceleration	LREAL	y acceleration	
zPosition	LREAL	z position	
zVelocity	LREAL	z velocity	
zAcceleration	LREAL	z acceleration	
aPosition	LREAL	A-position (orientation)	
aVelocity	LREAL	A velocity (orientation)	
aAcceleration	LREAL	A acceleration (orientation)	
bPosition	LREAL	B position (orientation)	
bVelocity	LREAL	B velocity (orientation)	
bAcceleration	LREAL	B acceleration (orientation)	
cPosition	LREAL	C position (orientation)	
cVelocity	LREAL	C velocity (orientation)	
cAcceleration	LREAL	C acceleration (orientation)	
LinkConstellation	DWORD	Joint position space	

6.11.2.4 Program example for a user-defined kinematics systems (S7-1500T)

The following describes a example for the user transformation in the MC-Transformation [OB98] (Page 178) of a 2D kinematics with the name "KinematicsUserDefined2D". For these kinematics, two transformation parameters were defined under "Technology object > Configuration > Geometry".

The interaction of system performance and user transformation is displayed in the figure in section "User transformation without JCS (Page 173-174)".

The following table shows the declaration of the tags used:

Tag	Declaration	Data type	Description	
KinematicsObject	Input	DB_ANY	Reference to the technology object	
TransformationType	Input	DInt	Transformation direction	
			0	Forward transformation
			1	Inverse transformation
FunctionResult	Output	DInt	Transformation result	
			0	Successful
			< 0	Error
TransformationParameters	InOut	Variant	Reference to the system data block "TransformationParameter" in the MC-Transformation [OB98]	
P	Temp	REF_TO TO_Struct_TransformationParameter_V2	Temporary tag for the casting command	
GearRatioA1	Temp	LReal	Temporary tag for read the defined transformation parameters	
GearRatioA2	Temp	LReal	Temporary tag for read the defined transformation parameters	
InvalidCast	Constant	DInt	Return value for an unsuccessful casting command	

The program example is structured as follows:

- Casting command for access to the system data block "TransformationParameter"
- Evaluation of the technology object
- Read the defined transformation parameters
- Evaluation of the transformation direction
- Calculation of the Cartesian coordinates from the axis positions of the kinematics axes (forward transformation)
- Calculation of the axis positions of the kinematics axes from the Cartesian coordinates (backward transformation)

First, the example program is explained step by step. The program code is summarized in the section "Program example".

Casting command for access to the system data block "TransformationParameter"

The casting command enables access the transformation parameters defined in the configuration.

The variant pointer is passed on to the temporary tag using the casting command.

```
#P ?= #TransformationParameters;
```

It is then tested whether the casting command was successful. This means that the specified InOut tag "TransformationParameters" has the expected structure of type "TO_Struct_TransformationParameter_V1".

If the casting command was not successful, the calculation is canceled and the tag "FunctionResult" gets the value "InvalidCast".

```
IF #P = NULL THEN
    #FunctionResult := #InvalidCast;
    RETURN;
END_IF;
```

Evaluation of the technology object

An IF query is used to evaluate whether the user-defined kinematics requires the transformation defined below.

```
IF #KinematicsObject = "KinematicsUserDefined2D" THEN
```

Read the defined transformation parameters

First, the transformation parameters defined in the configuration are read out. Two gears ratios were defined in this example.

```
    #GearRatioA1 := "KinematicsUserDefined2D".Kinematics.Parameter[1];
    #GearRatioA2 := "KinematicsUserDefined2D".Kinematics.Parameter[2];
```

Evaluation of the transformation direction

The transformation direction is evaluated in the next step. If the tag "TransformationType" has the value "0", the forward transformation is calculated. If the tag has the value "1", the backward transformation is calculated.

```
IF #TransformationType = 0 THEN
```

Calculation of the Cartesian coordinates from the axis positions of the kinematics axes (forward transformation)

In the forward transformation, Cartesian data (position, velocity and acceleration) are calculated from the axis data. The forward transformation is first calculated in x direction and then in z direction.

```
        #P^.CartesianData.xPosition := #P^.AxisData.a1Position * #GearRatioA1;
        #P^.CartesianData.xVelocity := #P^.AxisData.a1Velocity * #GearRatioA1;
        #P^.CartesianData.xAcceleration := #P^.AxisData.a1Acceleration * #GearRatioA1;

        #P^.CartesianData.zPosition := #P^.AxisData.a2Position * #GearRatioA2;
        #P^.CartesianData.zVelocity := #P^.AxisData.a2Velocity * #GearRatioA2;
        #P^.CartesianData.zAcceleration := #P^.AxisData.a2Acceleration * #GearRatioA2;
```

The specification of the arm positioning space is not required in this example. The corresponding tag is set to zero.

```
#P^.CartesianData.LinkConstellation := 16#0000;
```

If the transformation is successful, the tag "FunctionResult" receives the value "0".

```
#FunctionResult := 0;
```

Calculation of the axis positions of the kinematics axes from the Cartesian coordinates (backward transformation)

In the backward transformation, axis data (position, velocity and acceleration) are calculated from the Cartesian data. The backward transformation is first calculated for axis A1 and then for axis A2.

```
    ELSIF #TransformationType = 1 THEN

        #P^.AxisData.a1Position := #P^.CartesianData.xPosition / #GearRatioA1;
        #P^.AxisData.a1Velocity := #P^.CartesianData.xVelocity / #GearRatioA1;
        #P^.AxisData.a1Acceleration := #P^.CartesianData.xAcceleration / #GearRatioA1;

        #P^.AxisData.a2Position := #P^.CartesianData.zPosition / #GearRatioA2;
        #P^.AxisData.a2Velocity := #P^.CartesianData.zVelocity / #GearRatioA2;
        #P^.AxisData.a2Acceleration := #P^.CartesianData.zAcceleration / #GearRatioA2;
```

If the transformation is successful, the tag "FunctionResult" receives the value "0".

```
        #FunctionResult := 0;

    END_IF;
END_IF;
```

Program example

The program example is summarized with Commentary in the following section:

SCL

```
//Caste of the variant "TransformationParameters" to the referenced datatype
//"TO_Struct_TransformationParameter_V2".
//This has to be done in order to access the variant pointer, which references
//the "TransformationParameters" where the "AxisData" and "CartesianData" for
//the calculation of user transformation are stored.
#P ?= #TransformationParameters;

//Check if cast of "TransformationParameters" was successfull. Otherwise abort calculation.
IF #P = NULL THEN
    #FunctionResult := #InvalidCast;
    RETURN;
END_IF;

//Check if "KinematicsUserDefined2D" needs transformation.
IF #KinematicsObject = "KinematicsUserDefined2D" THEN

    //Read the user defined cartesian parameters.
    #GearRatioA1 := "KinematicsUserDefined2D".Kinematics.Parameter[1];
    #GearRatioA2 := "KinematicsUserDefined2D".Kinematics.Parameter[2];
```

SCL

```
    //Calculate the forward transformation "AxisData" -> "CartesianData".
    //The system fills the "AxisData" of "TransformationParameters" with values.
    //To calculate the "CartesianData" evaluate "AxisData".
    IF #TransformationType = 0 THEN

        //Calculate the position, velocity and acceleration component for the x-vector.
        #P^.CartesianData.xPosition := #P^.AxisData.a1Position * #GearRatioA1;
        #P^.CartesianData.xVelocity := #P^.AxisData.a1Velocity * #GearRatioA1;
        #P^.CartesianData.xAcceleration := #P^.AxisData.a1Acceleration * #GearRatioA1;

        //Calculate the position, velocity and acceleration component for the z-vector.
        #P^.CartesianData.zPosition := #P^.AxisData.a2Position * #GearRatioA2;
        #P^.CartesianData.zVelocity := #P^.AxisData.a2Velocity * #GearRatioA2;
        #P^.CartesianData.zAcceleration := #P^.AxisData.a2Acceleration * #GearRatioA2;

        //Link constellation can be set to 0 here, hence it is not needed.
        #P^.CartesianData.LinkConstellation := 16#0000;

        //Transformation was successfull.
        #FunctionResult := 0;

    //Calculate the backward transformation "CartesianData" -> "AxisData".
    //The system fills the "CartesianData" of "TransformationParameters" with values.
    //To calculate the "AxisData" evaluate "CartesianData".
    ELSIF #TransformationType = 1 THEN

        //Calculate the position, velocity and acceleration component for the first axis.
        #P^.AxisData.a1Position := #P^.CartesianData.xPosition / #GearRatioA1;
        #P^.AxisData.a1Velocity := #P^.CartesianData.xVelocity / #GearRatioA1;
        #P^.AxisData.a1Acceleration := #P^.CartesianData.xAcceleration / #GearRatioA1;

        //Calculate the position, velocity and acceleration component for the second axis.
        #P^.AxisData.a2Position := #P^.CartesianData.zPosition / #GearRatioA2;
        #P^.AxisData.a2Velocity := #P^.CartesianData.zVelocity / #GearRatioA2;
        #P^.AxisData.a2Acceleration := #P^.CartesianData.zAcceleration / #GearRatioA2;

        //Transformation was successfull.
        #FunctionResult := 0;

    END_IF;
END_IF;
```

Check the validity of the transformation/cartesian values

Check the "<TO>.StatusKinematics.Valid" bit cyclically, e.g. in the MC-PostServo [OB95]. If "<TO>.StatusKinematics.Valid" shows the value "FALSE", then the Cartesian values are invalid. In this case, initiate a stop action, for example, with the Motion Control instruction "MC_GroupStop".

Check the setpoint specification of the Cartesian values and the programmed user transformation.

6.11.3 Tags: Kinematics transformation (S7-1500T)

The following tags of the kinematics technology object are relevant for the kinematics transformation:

Tag	Description	
Status values		
<TO>.StatusKinematics.Valid	TRUE	Transformation/Cartesian values valid
	FALSE	Transformation/Cartesian values invalid
<TO>.StatusKinematics.LinkConstellation	Joint position space	
<TO>.FlangeInKcs	Current transformation frame (with dynamics, setpoint reference)	

Kinematics functions (S7-1500T) 7

7.1 Offset and rotation of the coordinate system (S7-1500T)

You can define the following frames in the configuration for a technology object kinematics:

Frame	Description
KCS frame	Position of the kinematics coordinate system (KCS) in the world coordinate system (WCS)
OCS1..3 frame	Position of the object coordinate systems 1 to 3 (OCS1..3) in the WCS
Tool frame	Position of the tool coordinate system (TCS) in the FCS

The position of the frames is determined by the offset and the rotation in the reference coordinate system.

Offset

You use the shift to define the position of the zero point of a coordinate system or a zone within the reference coordinate system. You specify the offset in Cartesian coordinates.
The following table shows the definition of the offset:

Value in the frame	Description
x	Shift in the x direction in the reference coordinate system
y	Shift in the y direction in the reference coordinate system
z	Shift in the z direction in the reference coordinate system

Rotation

You use the rotation to define the orientation of a coordinate system or a zone within the reference coordinate system. The rotation is made up of three successive individual rotations around the axes of the coordinate system which you define using three Euler angles. The individual rotations depend on each other.

The following graphic shows the three successive rotations using a cuboid zone as an example:

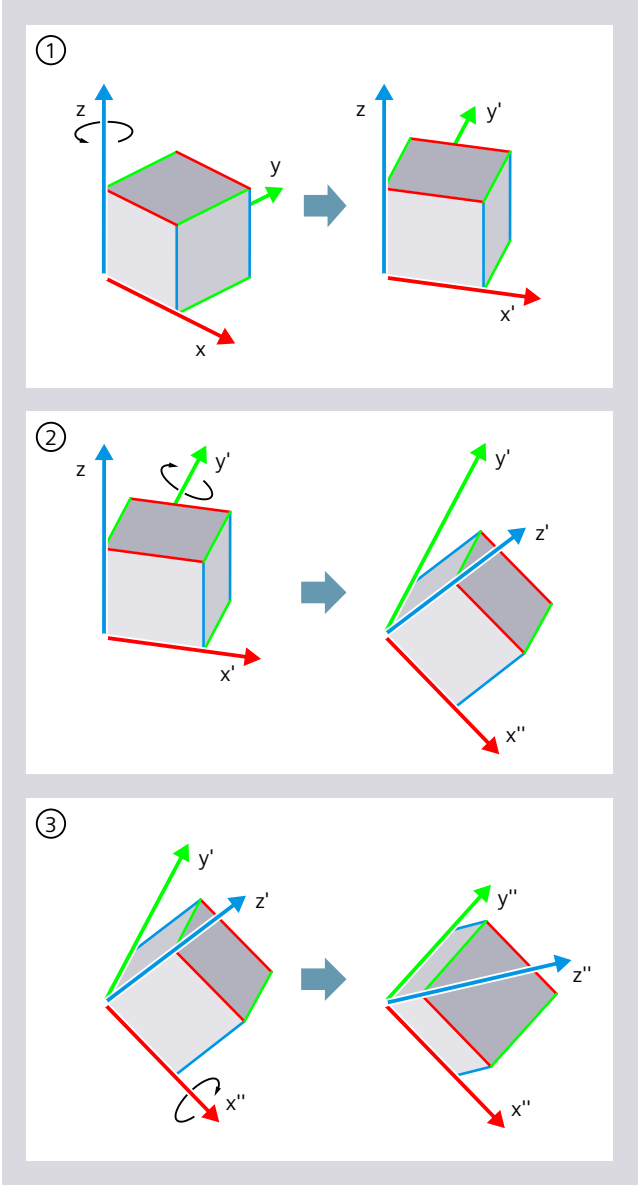

① Rotation A
② Rotation B
③ Rotation C

The following table shows the definition of the rotations:

Rotation	Description
Rotation A	Euler angle of the first rotation A positive angle corresponds to a clockwise rotation around the z axis of the coordinate system. The coordinate system rotated once consists of the axes x', y' and z.
Rotation B	Euler angle of the second rotation A positive angle corresponds to a clockwise rotation around the rotated y' axis. The coordinate system rotated twice consists of the axes x", y' and z'.
Rotation C	Euler angle of the third rotation A positive angle corresponds to a clockwise rotation around the rotated x" axis. The coordinate system rotated three times consists of the axes x", y" and z". The x", y" and z" axes correspond to the x, y and z axes of the rotated coordinate system or of the rotated zone.

7.1.1 Define KCS/OCS frame (S7-1500T)

Define KCS/OCS frame offline

In the following configuration windows, you configure the position of the KCS/OCS frames in the world coordinate system (WCS):

- You configure the position of the KCS in the WCS in the "Kinematics coordinate system" configuration window.
- You configure the position of the OCS in the WCS in the "Object coordinate system" configuration window.

Select object coordinate system (OCS)

In the "Object coordinate system" configuration window, select the object coordinate system to be defined in the "Object coordinate system (OCS)" drop-down list. You can define up to three tool object coordinate systems.

Enter offset and rotation

To define a frame, enter the values for the offset and rotation. Since the kinematics types support different numbers of degrees of freedom, enter only the values that are relevant and permissible for your kinematics type.

The following table shows you the values that you can specify during configuration (✓) and their valid value ranges.

Kinematics type	KCS/OCS frame					
	Offset			Rotation		
	x	y	z	A	B	C
2D	✓	0.0	✓	0.0	✓ -180.0° to 179.999°	0.0
2D with orientation	✓	0.0 [1]	✓	0.0[2]	0.0	0.0
3D	✓	✓	✓	✓ -180.0° to 179.999°	✓ -90.0° to 90.0°	✓ -180.0° to 179.999°
3D with orientation	✓	✓	✓	✓ -180.0° to 179.999°	0.0	0.0
3D with 2 orientations A, B	✓	✓	✓	✓ -180.0° to 179.999°	0.0	0.0
3D with 3 orientations **6-axis articulated arm with central hand**	✓	✓	✓	✓ -180.0° to 179.999°	✓ -90.0° to 90.0°	✓ -180.0° to 179.999°

[1] For the kinematics type "SCARA 2D", an offset in the y direction is permissible.

[2] For the kinematics type "SCARA 2D", a rotation around A is permissible.

Value = 0.0: Offset/rotation not permitted or not relevant

Calibrate OCS

Calibration (Page 305) enables you to determine the exact position of an OCS in the WCS in online or offline mode or check an OCS already defined in the WCS.

Define OCS frames with Motion Control instructions

With the "MC_SetOcsFrame (Page 397)" Motion Control instruction, you define the position of an object coordinate system (OCS) in relation to the world coordinate system (WCS).

7.1.2 Define tool frames (S7-1500T)

Define tool frames offline

In the "Tools" configuration window, you configure the tool frames and also the position of the tool center point (TCP) of the tools in the flange coordinate system (FCS). You can define up to three tools.

Select tool

Select the tool to be defined in the "Tool" drop-down list. You can define up to three tools.

Enter offset and rotation

To define a frame, enter the values for the offset and rotation. Since the kinematics types support different numbers of degrees of freedom, enter only the values that are relevant and permissible for your kinematics type.

The following table shows you the values that you can specify during configuration (✓) and their valid value ranges.

Kinematics type	Tool frame					
	Offset			Rotation		
	x	y	z	A	B	C
2D	✓	0.0	✓	0.0	0.0	0.0
2D with orientation	0.0	0.0	✓	✓ -180.0° to 179.999°	0.0	0.0
3D	✓	✓	✓	0.0	0.0	0.0
3D with orientation	✓	✓	✓	✓ -180.0° to 179.999°	0.0	0.0
3D with 2 orientations A, B	✓	✓	✓	0.0	✓ -180.0° to 179.999°	0.0
3D with 3 orientations **6-axis articulated arm with central hand**	✓	✓	✓	✓ -180.0° to 179.999°	✓ -90.0° to 90.0°	✓ -180.0° to 179.999°

Value = 0.0: Offset/rotation not permitted

Define tool frame with Motion Control instructions

You can use the "MC_DefineTool (Page 394)" Motion Control instruction to redefine the tool frame of tool 1.

Example

Tool frame with a kinematics "Delta picker 3D with 2 orientations A, B"

The following example shows a possible definition of the tool frame with a kinematics "Delta picker 3D with 2 orientations A, B". The tool is rotated by B = -90° in relation to the FCS and is shifted in direction x and z.

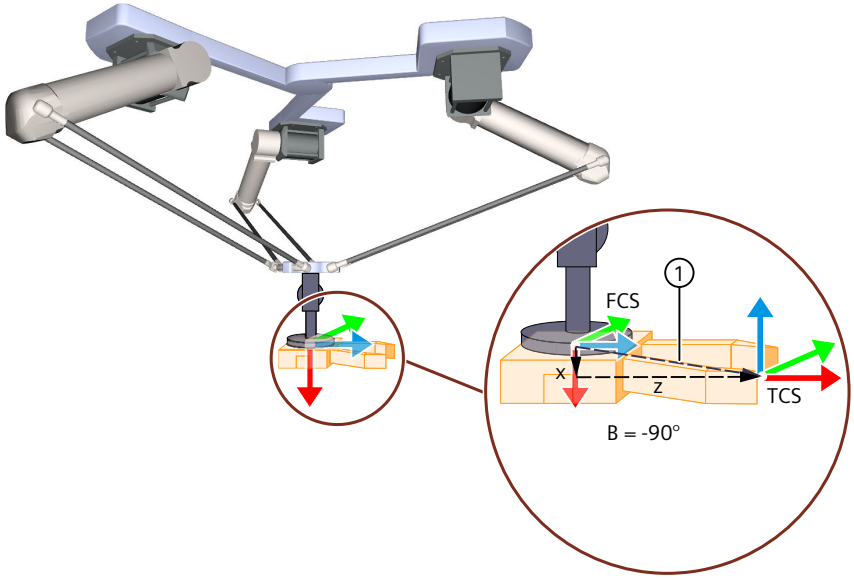

① Tool frame

7.1.3 Tags: Coordinate systems and frames (S7-1500T)

The following tags of the kinematics technology object are relevant for coordinate systems and frames:

Tag	Description
Configuration	
<TO>.KcsFrame	KCS frame x, y, z, A, B, C
<TO>.OcsFrame[1..3]	OCS frame x, y, z, A, B, C
<TO>.Tool[1..3]	Tool frame x, y, z, A, B, C
Status values	
<TO>.Tcp	Position of the tool center point (TCP), TCP frame in the world coordinate system (WCS). x, y, z, A, B, C
<TO>.TcpInWcs	Parameter for tool center point in the world coordinate system x, y, z, A, B, C
<TO>.TcpInOcs[1..3]	Parameter for the tool center point (TCP) in the Object Coordinate Systems 1 to 3 (OCS) x, y, z, A, B, C
<TO>.FlangeInKcs	Parameter for the flange coordinate system (FCS) in the kinematics coordinate system (KCS) x, y, z, A, B, C
<TO>.StatusOcsFrame[1..3]	Display of the OCS frames x, y, z, A, B, C

7.2 Zone monitoring (S7-1500T)

The zone monitoring has the following purposes:

- Protection from collisions with mechanical installations
- Triggering of process-related actions (signal zones)

⚠ WARNING

Inappropriate use of zone monitoring

Zone monitoring is not suitable for preventing personal injury.

1. Implement suitable protective measures to prevent personal injury, e.g. protective fences or safety doors.
2. Use safety functions for safe monitoring of the kinematics, for example, with SIMATIC Safe Kinematics.

Zones

Zones are geometric bodies you can use to describe and subdivide the workspace of a kinematics system. You can configure the following zones on the kinematics technology object:

- **Workspace zones**
  Workspace zones describe the environment of a kinematics system. You can configure the following zone types as workspace zones for the kinematics technology object:
  - Work zone
    With work zones, you limit the possible travel space of the kinematics or define several possible work areas.
  - Signal zone
    Signal zones are areas within the traversing space of the kinematics. Signal zones indicate the following:
    - Kinematics zone is entering the signal zones
    - Kinematics zone is located in the signal zone
  - Blocked zone
    Blocked zones are areas within the traversing space of the kinematics in which a kinematics zone must not enter (e.g. control cabinet, protective wall).
- **Kinematics zones**
  Kinematics zones envelope the end point of a kinematics system (flange or tool).
  Kinematics zones are related to the working point/flange of a kinematics and move with the kinematics. The zone monitoring checks the kinematics zones for penetration with workspace zones. With kinematics zones, you expand the monitored area beyond the tool center point (TCP). The tool center point (TCP) is permanently defined as the first kinematics zone (<TO>.KinematicsZone[1]) and always activated.
  You can configure the following zone types as kinematics zones for the kinematics technology object:
  - Tool zone
    Tool zones envelope the tool or parts of the tool.
  - Flange zone
    Flange zones envelope the flange or parts of the flange.

The following example shows how the zone types of a kinematics are used:

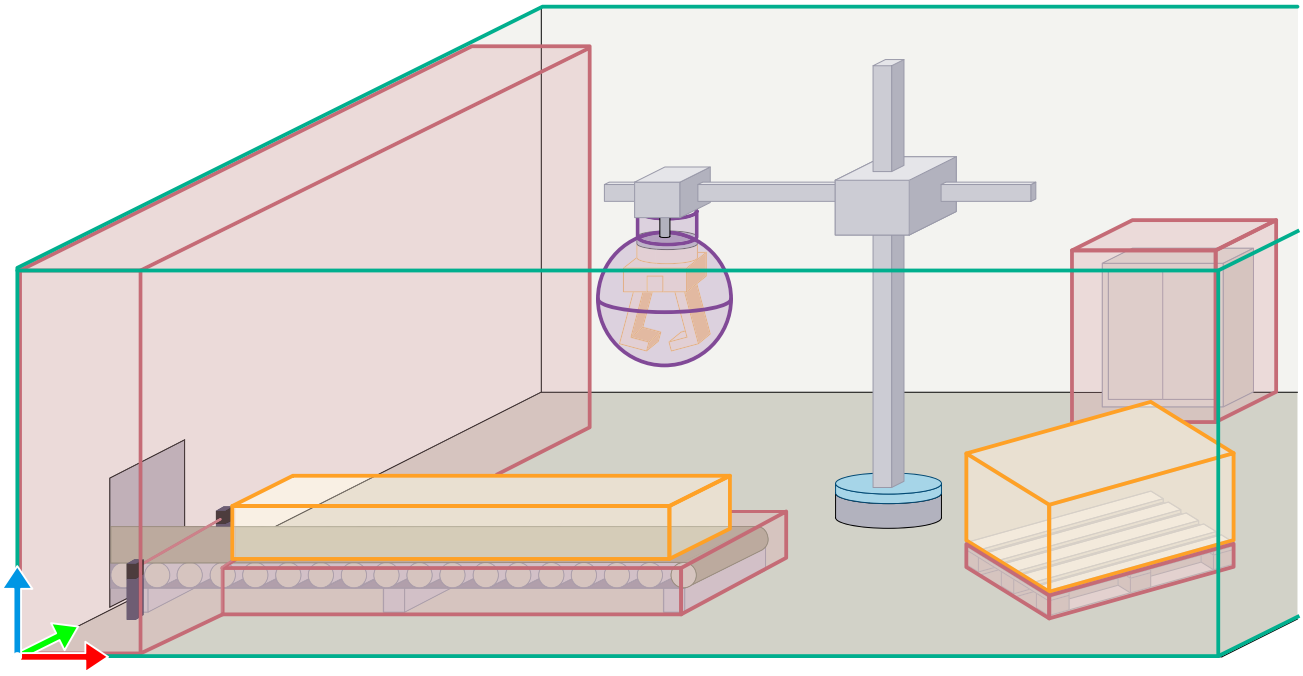

Workspace zones

- Work zone
- Signal zone
- Blocked zone

Kinematics zones

- Flange zone and tool zone

See also

Zones status (Page 293)

Tags: Zone monitoring (Page 202)

Configuring a workspace zone offline (Page 194)

Configuring kinematics zones offline (Page 195)

SIMATIC Safe Kinematics (https://support.industry.siemens.com/cs/ww/en/view/109801883)

7.2.1 Configuring zones (S7-1500T)

You have the following options to define workspace zones:

- Via the "Zones" configuration window, you can Configuring a workspace zone offline (Page 194).
- Via the Calibration (Page 305) configuration window, you can define workspace zones in online and offline mode.
- With the Motion Control instruction "MC_DefineWorkspaceZone" (Page 384), you define a workspace zone during runtime.

You have the following options to define kinematics zones:

- Via the "Zones" configuration window, you can Configuring kinematics zones offline (Page 195).
- With the Motion Control instruction "MC_DefineKinematicsZone" (Page 386), you define a kinematics zone during runtime.

"Zones" configuration window

The "Zones" configuration window is divided into the following areas:

- Graphic view
  The workspace zones or the kinematics zones, which you define in the tabular editor, are displayed in the graphic view. You operate the 3D visualization via the toolbar. For more information about operating the toolbar and the graphic display, refer to the section "3D visualization (Page 268)".
- Tabular editor of the workspace zones
  You configure the workspace zones (Page 194)here.
- Tabular editor of the kinematics zones
- You configure the kinematics zones (Page 195)here.

Online view

When you click on the symbol, values of the workspace zones and the kinematics zones at the current point in time are read back from the CPU. When you click the icon in the "Number" column, two additional rows are displayed. The additional rows contain the following values:

- Start values of the CPU
- Start values in project
  You can edit these values. If you want to apply the change, load the changes from the project into the device.

7.2.1.1 Configuring a workspace zone offline (S7-1500T)

You can configure up to 10 workspace zones in the kinematics configuration window under "Extended parameters > Zones > Workspace zones".

1. In the "Status" column, select whether zone monitoring (Page 200) for the zone should be active or inactive after loading into the device.
2. In the "Zone type" column, select whether the zone is a work zone, signal zone or blocked zone.
   - **Work zone**
     You can specify several work zones.
     Only one work zone can be activated at a given time. If no work zone is activated, the entire traversing space of the kinematics is regarded as the work area.
     Kinematics zones must be located within work zones.
   - **Signal zone**
     You can specify several signal zones. Multiple signal zones can be activated at the same time.
     Signal zones can be located outside the work zone to some extent.
   - **Blocked zone**
     You can specify several blocked zones. Multiple blocked zones can be activated at the same time.
     Blocked zones can be located outside the work zone to some extent.
3. In the "Geometry" column, select whether the zone is a sphere, a cuboid or a cylinder.
4. Configure the zone geometry (Page 196).
5. In the "KS" column, select the coordinate system in which the zone is defined.
   You can select the following coordinate systems:
   - WCS (world coordinate system)
   - OCS1 (object coordinate system 1)
   - OCS2 (object coordinate system 2)
   - OCS3 (object coordinate system 3)

   If you create the zone in an OCS, the zone moves together with the OCS.
6. Enter the offset and rotation of the zero point (Page 199) of the zone.
   The offset of the zone to the zero point of the WCS or OCS remains constant.

7.2.1.2 Configuring kinematics zones offline (S7-1500T)

You can configure up to 9 kinematics zones in the kinematics configuration window under "Extended parameters > Zones > Kinematics zones".

1. In the "Status" column, select whether zone monitoring (Page 200) for the zone should be active or inactive after loading into the device.
2. In the "Geometry" column, select whether the zone is a sphere, a cuboid or a cylinder.
3. Configure the zone geometry (Page 196).
4. In the "KS" column, select the coordinate system in which the zone is defined.
   You can select the following coordinate systems:
   - If you select TCS, the zone envelops the tool or parts of it and moves with the tool (TCP).
   - If you select FCS, the zone envelops the flange or parts of it and moves with the flange.

5. Enter the offset and rotation of the zero point (Page 199) of the zone.
   The offset of the zone to the zero point of the TCS or FCS remains constant.

Tool changeover

If you wish to define and use more than one tool, check whether the dimensions of a tool zone are suitable for all tools and envelop them. Otherwise, create a separate zone for each of the tools dimensioned differently.

Example of tool zone

You define tool zones in the tool coordinate system (TCS). The following graphic shows a spherical tool zone:

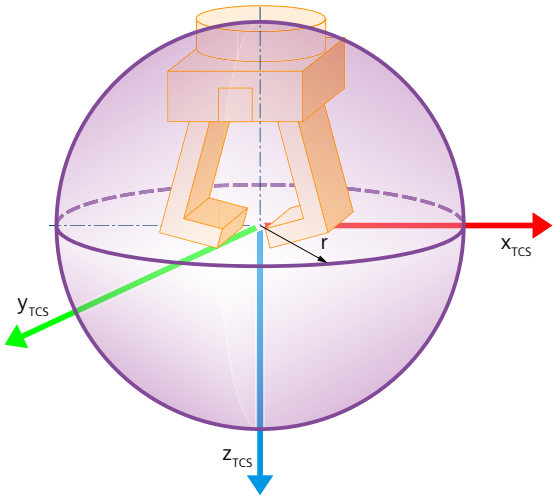

Example of flange zone

You define flange zones in the flange coordinate system (FCS). The following graphic shows a cylindrical flange zone:

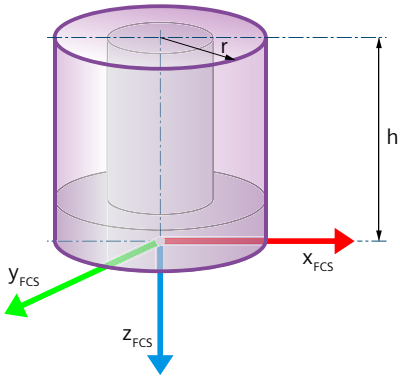

In this example, a shift by the height of the flange zone in negative z direction of the FCS has been defined.

7.2.1.3 Defining the zone geometry (S7-1500T)

You can configure zones with the following geometric bodies:

- Sphere
- Cuboid
- Cylinder

Sphere

You define a sphere starting from the zero point using the radius:

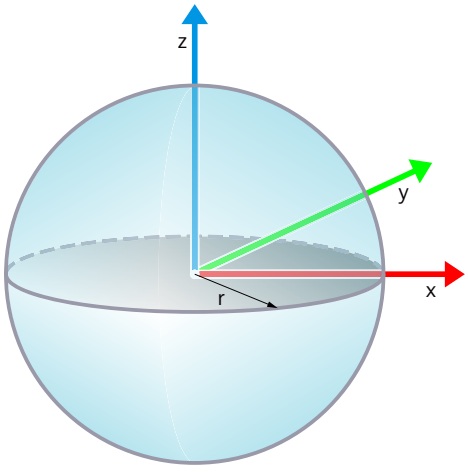

r Radius of the sphere

Configuration

1. Select the icon in the "Geometry" column.
2. Enter the radius in the "Radius" column.

Motion Control instructions

In the Motion Control instructions "MC_DefineWorkspaceZone" and "MC_DefineKinematicsZone", specify the zone geometry in these parameters:

Parameter	Value
GeometryType	1
GeometryParameter[1]	Radius of the sphere

Cuboid

You define a cuboid starting from the zero point using the edge lengths in x, y and z direction:

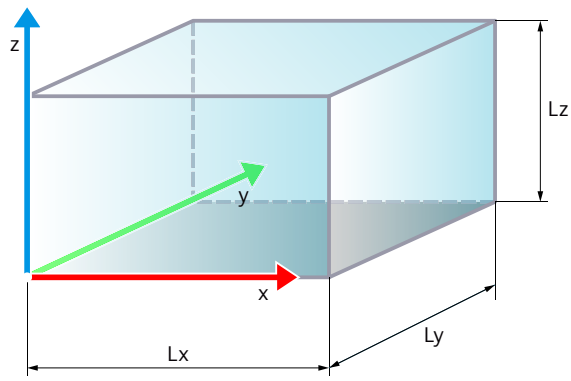

Lx Edge length in x direction of the zone coordinate system

Ly Edge length in y direction of the zone coordinate system

Lz Edge length in z direction of the zone coordinate system

Configuration

1. Select the icon in the "Geometry" column.
2. Enter the edge lengths in the following columns:
   - In the "Length x" column, edge length in x direction of the zone coordinate system
   - In the "Length y" column, edge length in y direction of the zone coordinate system
   - In the "Length z" column, edge length in z direction of the zone coordinate system

Motion Control instructions

In the Motion Control instructions "MC_DefineWorkspaceZone" and "MC_DefineKinematicsZone", specify the zone geometry in these parameters:

Parameter	Value
GeometryType	0
GeometryParameter[1]	Edge length in x direction of the zone coordinate system
GeometryParameter[2]	Edge length in y direction of the zone coordinate system
GeometryParameter[3]	Edge length in z direction of the zone coordinate system

Cylinder

You define a cylinder starting from the zero point using the radius of the base and the cylinder height:

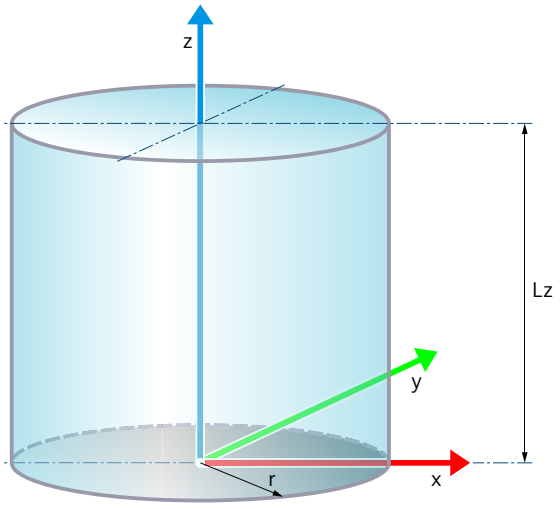

r Radius of the base of the cylinder

Lz Height of the cylinder

Configuration

1. Select the icon in the "Geometry" column.
2. Enter the height of the cylinder in the "Length z" column.
3. Enter the radius of the base in the "Radius" column.

Motion Control instructions

In the Motion Control instructions "MC_DefineWorkspaceZone" and "MC_DefineKinematicsZone", specify the zone geometry in these parameters:

Parameter	Value
GeometryType	2
GeometryParameter[1]	Radius of the base of the cylinder
GeometryParameter[2]	Height of the cylinder

7.2.1.4 Defining the offset and rotation in the reference coordinate system (S7-1500T)

Define the offset and rotation of the geometric body starting from the zero point of the reference coordinate system as follows:

1. Define the offset of the zone by entering the following values:
   - x: Offset of the zone in the x direction
   - y: Offset of the zone in the y direction
   - z: Offset of the zone in the z direction
2. Define the rotation of the zone by entering the following values:
   (Not relevant for a spherical zone)
   - A: Enter a value between -180.0° and 179.999° for the rotation of the zone around the z axis.
   - B: Enter a value between -90.0° and 90.0° for the rotation of the zone around the y axis.
   - C: Enter a value between -180.0° and 179.999° for the rotation of the zone around the x axis.

Defining the position and rotation in a Motion Control instruction

In the Motion Control instructions "MC_DefineWorkspaceZone" and "MC_DefineKinematicsZone", specify the offset and rotation in the "Frame" parameter.

7.2.1.5 Activating zone monitoring (S7-1500T)

Note the following when activating zone monitoring for work zones:

- Only one work zone can be active at a given time.
- If no work zone is activated, the entire traversing space of the kinematics is regarded as the work area.

Configuring the status offline

You activate or deactivate zone monitoring for a defined zone in the tabular editor in the "Zones" configuration window. In the "Column" status, select whether the zone should be active or inactive after loading into the device.

Activating and deactivating zone monitoring online

You can activate and deactivate zones online in your user program using the following Motion Control instructions:

- MC_SetWorkspaceZoneActive: Activate workspace zone V7 (Page 388)
- MC_SetWorkspaceZoneInactive: Deactivate workspace zone V7 (Page 389)
- MC_SetKinematicsZoneActive: Activate kinematics zone V7 (Page 391)
- MC_SetKinematicsZoneInactive: Deactivate kinematics zone V7 (Page 392)

7.2.2 Zone violation (S7-1500T)

The zone monitoring checks all activated workspace zones (work zones, signal zones, blocked zones) for collision with all activated kinematics zones (flange zones, tool zones, TCP). The zone monitoring monitors the zones for all motions of the kinematics system:

- Kinematics motions via the user program or kinematics control panel
- Single axis motions via the user program or axis control panel

The status of the zone monitoring is indicated in the diagnostics (Page 293) and in the tags (Page 202) of the kinematics technology object.

If the zone monitoring detects a zone violation by a kinematics motion, the following reactions occur:

Zone violation	Reaction	Description
Exiting the work zone	Alarm with stop	The kinematics technology object outputs technology alarm 806 (alarm response: Stop without leaving the path). The kinematics motion is stopped. The kinematics leaves the zone by the length of the deceleration distance at a minimum.
Entering a signal zone	Alarm without stop	The kinematics technology object outputs a technology alarm 807 (no alarm response). The kinematics motion will be continued.
Entering a blocked zone	Alarm with stop	The kinematics technology object outputs a technology alarm 806 (alarm response: Stop without leaving the path). The kinematics motion is stopped. The kinematics violates the zone by the length of the brake path at a minimum. All jobs in the job sequence are canceled.

The kinematics technology object outputs a technology alarm following zone violations by single axis motions. The positioning axis/synchronous axis technology object outputs a technology alarm. The single axis motion is not aborted. You can abort the single axis motion in the application.

In addition to the zones of the kinematics technology object, you can limit the travel space of the kinematics as follows:

- Software limit switches at the axes
- Joint traversing ranges

7.2.3 Retracting after a zone violation (S7-1500T)

Once you have acknowledged the technology alarm on the kinematics technology object, you can move the kinematics system again.

NOTICE

Zone monitoring for violated zone deactivated after acknowledgment

After you have acknowledged the technology alarm on the kinematics technology object, the zone monitoring is deactivated for the violated zone until the kinematics exits the violated blocked zone / signal zone or enters the violated work zone again. You can move the kinematics in all directions including again into the violated blocked zone / signal zone or from the work zone.

Take into consideration the travel direction when retracting the kinematics.

Monitor retraction in the application. The zone monitoring status is still displayed in the data block technology object.
After the kinematics has exited the violated blocked zone / signal zone again or entered the violated work zone again, zone monitoring is activated again for this zone. A new technology alarm is therefore triggered when the zone is violated again.

7.2.4 Tags: Zone monitoring (S7-1500T)

The following tags of the kinematics technology object are relevant for the zone monitoring:

Tag	Description
Zone configuration	
<TO>.WorkspaceZone[1..10]	Configuration of the workspace zones
<TO>.KinematicsZone[2..10]	Configuration of the kinematics zones The <TO>.KinematicsZone[1] zone is the tool center point (TCP) and is always activated.
Status values	
<TO>.StatusWorkspaceZone[1..10]	Status of the workspace zones
<TO>.StatusKinematicsZone[2..10]	Status of the kinematics zones
<TO>.StatusZoneMonitoring.WorkingZones	Display of violated work zones Bit numbers 0 to 9 correspond to the configured zone numbers.
<TO>.StatusZoneMonitoring.BlockedZones	Display of violated blocked zones Bit numbers 0 to 9 correspond to the configured zone numbers.
<TO>.StatusZoneMonitoring.SignalizingZones	Display of approached signal zones Bit numbers 0 to 9 correspond to the configured zone numbers.
<TO>.StatusZoneMonitoring.KinematicsZones	Display of kinematics zones that violate workspace zones Bit number 0 indicates the monitoring status of the TCP. Bit numbers 1 to 9 correspond to the configured zone numbers.

7.3 Overview of kinematics motions (S7-1500T)

With kinematics motions, you move the kinematics through the three-dimensional space and rotate the kinematics with up to three orientations. Plan the kinematics motion in advance. Take into consideration the following:

- Reachable points of the kinematics
- Zones
- Transformation areas
- Joint position spaces
- Joint traversing ranges
- Software limit switches of axes

Motion types

The following motion types are available:

- Linear motion (Page 226)
  You can move the kinematics linearly to a defined target position with a linear motion.
- Circular motion (Page 233)
  You can move the kinematics using a defined circular path with a circular motion.
- sPTP motion (Page 245)
  With a synchronous "point-to-point" motion (sPTP motion), you can move a kinematics time- and motion-optimized, bypass singularities or change joint position spaces. The kinematics does not follow a specified path. The single-axis motions, which move the kinematics axes synchronously, are calculated from the start and target positions.
- Conveyor tracking (Page 254)
  With conveyor tracking, the kinematics can follow an object on a moving conveyor belt.
- Orientation motion
  The orientation motion is the motion of the Cartesian orientation and is performed at the same time as the path motion. When motions are smoothed, the orientation motion is also smoothed. When the circular motion stops, the orientation motion also stops.

Reference coordinate system

The target position and the target orientation you specify for a kinematics motion can relate to different coordinate systems, e.g. the world coordinate system (WCS) or an object coordinate system (OCS).

7.3.1 Introduction to the programming of the kinematics motions (S7-1500T)

You can use Motion Control instructions in the user program to transmit jobs to the technology object. You can find an overview of the Motion Control instructions for the kinematics technology object in the section "Motion control instructions for kinematics control (Page 26)".

You configure the job with the input parameters of the Motion Control instructions. The current job status is indicated in the output parameters.

Because the kinematics technology object groups the kinematics axes, you assign the kinematics technology object directly to the input parameter "AxesGroup".

You cannot enable the kinematics technology object itself using an "MC_Power" command or home it using an "MC_Home" job. For kinematics motions, the interconnected axes must be enabled ("MC_Power.Enable" = TRUE).

You can acknowledge errors of the kinematics technology object with an "MC_Reset" job or by restarting the technology object.

WARNING

Unexpected axis motions

The kinematics can perform unexpected motions due to the incorrect configuration of the technology objects or parameter assignment of the motion control jobs.

This can cause the following damages:

- Personal injury, for example, caused by products or machine parts coming loose
- Machine damages, for example, through overload of the mechanical components or collision between kinematics and machine components

Before you start the user program, implement the following preventive measures:

1. Check the correct configuration of all technology objects that are used for the motion sequence of the kinematics.
2. Check the correct parameter assignment of the motion control instructions.
3. Protect the configuration and user program against unauthorized access.

WARNING

Overrun of the dynamics through singularities

Overruns of the dynamics in the vicinity of a singularity (Page 167) can result in the following damages:

- Personal injury, for example, caused by products or machine parts coming loose
- Machine damages, for example, through overload of the mechanical components

To prevent overruns of the dynamics in the vicinity of a singularity, implement the following preventive measures:

1. Avoid path motions without dynamic adaptation in the vicinity of a singularity.
2. Use blocked zones or software limit switches for kinematics motions in the vicinity of a singularity.
3. Avoid the use of conveyor tracking in the vicinity of a singularity. Dynamic adaptation cannot be used in any phase of the conveyor tracking.
4. Programming motions that are not part of the phases of conveyor tracking:
   - For linear or circular motions, activate the dynamic adaptation (Page 213).
   - Use synchronous "point-to-point" motions (Page 245).

7.3.2 Define target position (S7-1500T)

You define the target position in a Motion Control instruction for a kinematics motion depending on the kinematics type.

Define offset and rotation

Enter the values according to the following specifications:

Kinematics type	Target position					
	Offset			Rotation		
	x	y	z	A	B	C
2D	✓	0.0	✓	0.0	0.0	0.0
2D with orientation	✓	0.0	✓	✓ -180.0° to 179.999°	0.0	0.0
3D	✓	✓	✓	0.0	0.0	0.0
3D with orientation	✓	✓	✓	✓ -180.0° to 179.999°	0.0	0.0
3D with 2 orientations A, B	✓	✓	✓	✓ -180.0° to 179.999°	✓ -90.0° to 90.0°	✓ 0.0 / -180.0°
3D with 3 orientations **6-axis articulated arm with central hand**	✓	✓	✓	✓ -180.0° to 179.999°	✓ -90.0° to 90.0°	✓ -180.0° to 179.999°

✓ Value for offset/rotation configurable

Value = 0.0: Offset/rotation not permitted

Examples

The following examples of a kinematics type with more than 4 interpolating kinematics axes show 4 different positions of the TCP at the target position reached. The target positions are configured in each case with the same shift, but with different rotation.

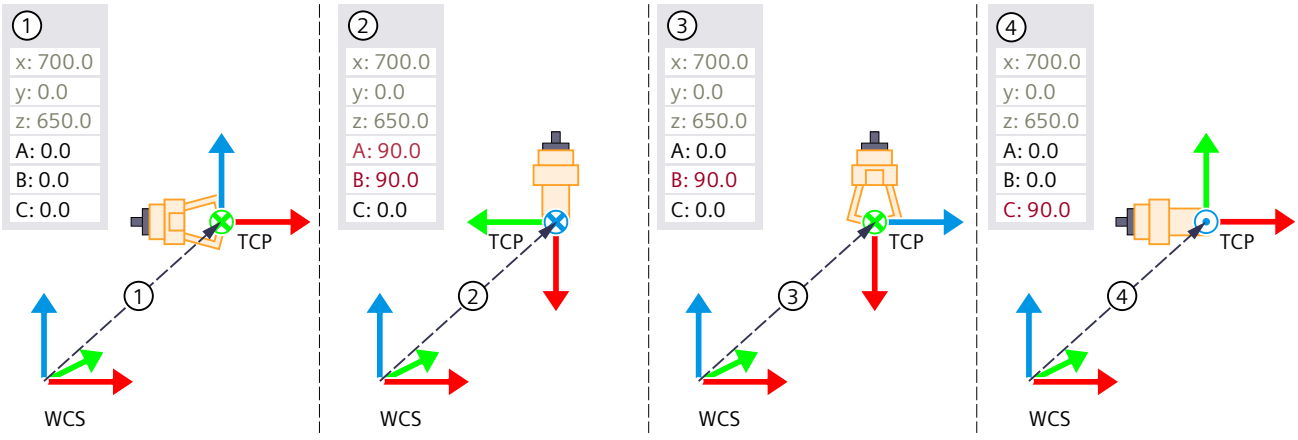

① ... ④ Position in the WCS

Orientation in path motion jobs for 3D kinematics with 2 orientations

You can move a 3D kinematics with 2 orientations to a Cartesian position with a differently configured orientation. The following figures show the kinematics with different joint positions at the same target position with different orientation of the TCP. The effective direction of the tool in x direction of the TCP is the same in both cases. However, due to the rotation C, the tool is rotated -180° around the x axis of the TCP.

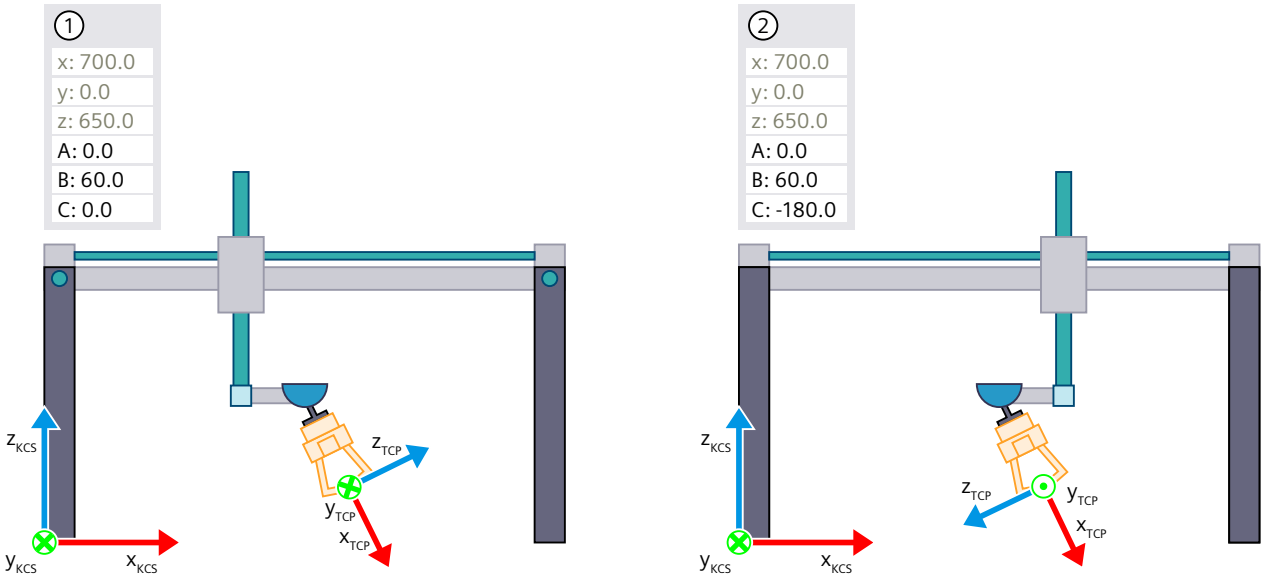

The following figure shows the orientation motion B in which joint J5 is moved beyond 0° and joint J4 is stationary. Since values greater than 90° for orientation B are not permitted, configure the Cartesian orientations as follows in order to move beyond the vertical position without rotating joint J4:

- A: By -180° (from 0° to -180° or also, e.g. from 20° to -160°)
- B: 90° when position of the TCP is vertical, decreasing to 0°
- C: -180°

Abrupt changes in orientations A and C do not lead to abrupt position changes on the joints or kinematics axes.

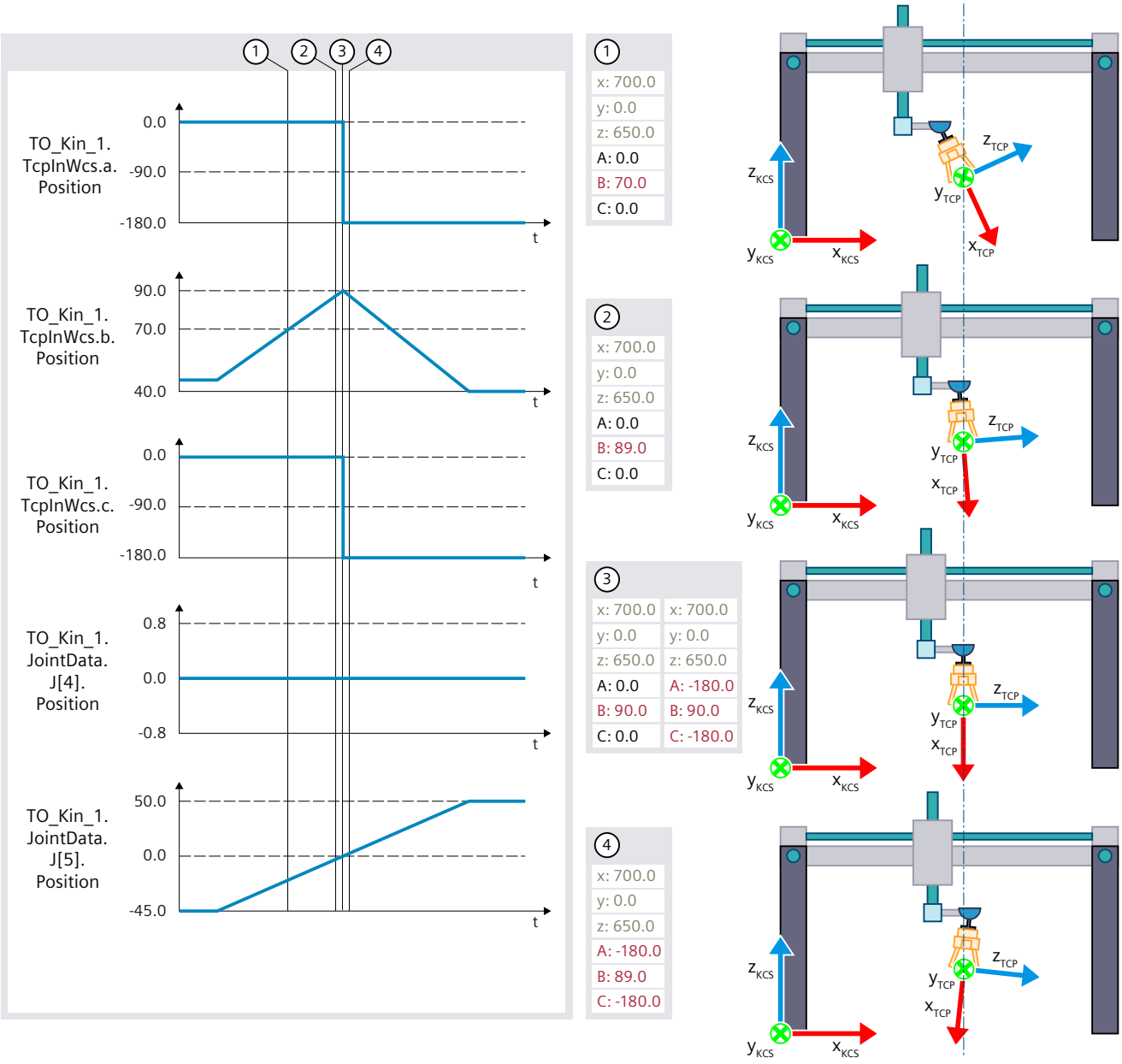

7.3.3 Motion status and remaining distance (S7-1500T)

You can obtain the status and the remaining distance of a motion job from the parameters of the corresponding Motion Control instruction.

Status of a motion job

You can identify the status of a motion job based on the "Busy" and "Active" parameters. When the job is transmitted, the "Busy" parameter is set to TRUE and the job is added to the job sequence. As long as the job is still in the job sequence, the "Active" parameter is set to FALSE. As soon as the job is active in the motion control, the "Active" parameter is set to TRUE. If the motion job is completed, the parameters "Busy" and "Active"are set to FALSE and the parameter "Done" to TRUE.

All inactive jobs in the job sequence are recalculated if another motion job is added to the job sequence. The current job is also included in the new calculation so that the current job can be blended with the next job.

Remaining distance of a motion job

You can obtain the remaining distance of a motion job from the "RemainingDistance" parameter. If the motion is not being blended, the "RemainingDistance" parameter contains the distance to the target position on the path. If the active motion is being blended with the next motion, the "RemainingDistance" parameter contains the distance to the beginning of the blending segment on the path. If only the Cartesian orientation of the TCP is changed in a motion task, but the TCP is at the Cartesian coordinates x, y, z, then the "RemainingDistance" parameter has the value "-1.0".

With an sPTP motion job, the execution progress is displayed with the "ExecutionTimeStatus" parameter instead of the remaining path. The parameter value starts at "0.0" and increases incrementally in the course of job execution until the job is completed at "1.0".

Distance of linear and circular motion jobs

The status tag "<TO>.StatusPath.AccumulatedPathLength" contains the distance already covered by the TCP of all completed motion jobs and the current motion job.

The status tag "<TO>.StatusPath.TotalPathLength" contains the total path length of the TCP for all jobs in the job sequence.

The total path length is the sum of:

- Distance of all completed motion jobs
- Distance travelled of the active motion job
- Remaining distance of the motion job
- Calculated distance of all jobs in the job sequence

Distances based on the following motion jobs are not taken into account:

- Synchronous "point-to-point" motions (sPTP motion)
  Exception: Blending segment between path motion and sPTP motion
- Active conveyor tracking
- Pure orientation motions

If there are no jobs in the job sequence and the last motion job is completed, then "AccumulatedPathLength" and "TotalPathLength" are equal.

Resetting distances

To reset the tags "AccumulatedPathLength" and "TotalPathLength" to zero in the user program, use one of the following instructions:

- Call "MC_Reset" with "Restart = TRUE" for the kinematics.
- Call "MC_GroupStop" for the kinematics.

The two tags are automatically reset during the following actions.

- Operating state changes from STOP to RUN
- Startup after POWER ON of the CPU

Calculate remaining distance of all jobs of the job sequence

To determine the remaining distance of all jobs in the job sequence, subtract "AccumulatedPathLength" from "TotalPathLength".

Remaining distance of the job sequence = "TotalPathLength" - "AccumulatedPathLength"

Example: Three linear motion jobs with smoothing

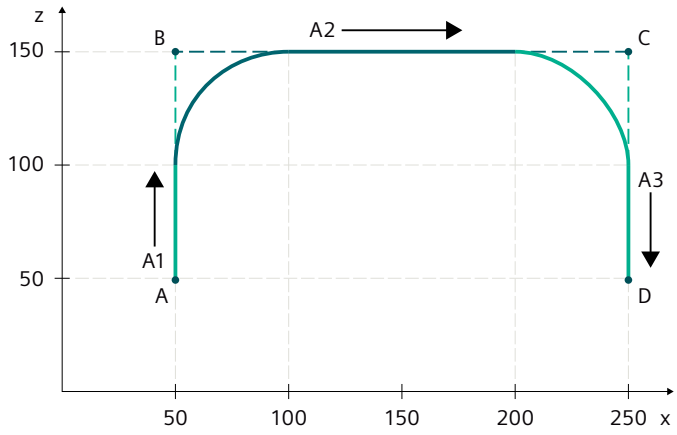

The starting point is point A. From point A, three linear path jobs are sent to points B, C and D. Blending is carried out in the second and third jobs. The path length is 0 mm at the beginning of the example. To simplify this, a 2D kinematics without orientation motion is used.

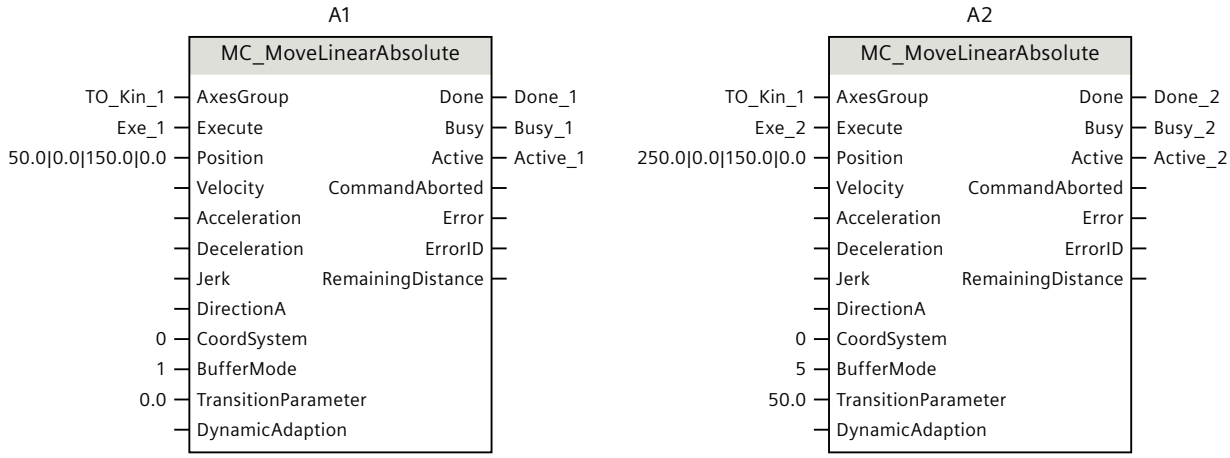

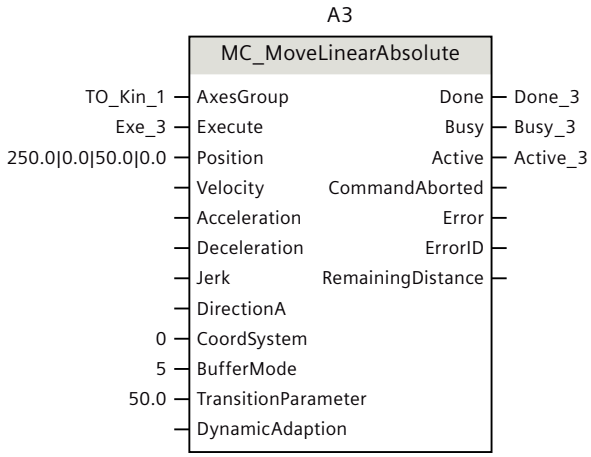

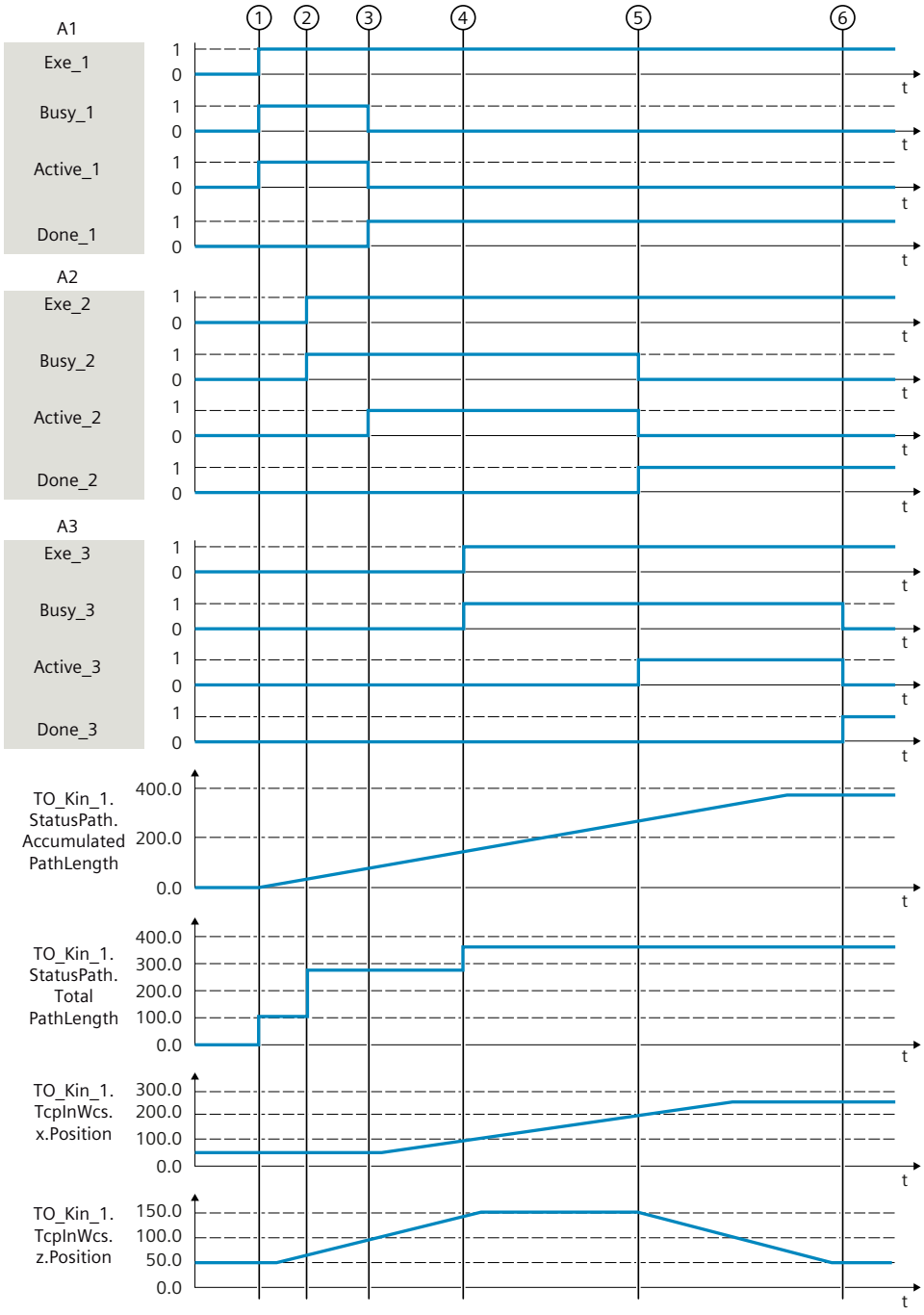

At time ①, the first linear motion job is started from point A to point B. The tag "AccumulatedPathLength" is 0.0 mm at the time ① because the kinematics is not yet moving. "TotalPathLength" outputs the distance 100.0 mm between point A and point B. After the TCP moves, the "AccumulatedPathLength" tag shows the distance already moved.

When the second linear motion job is issued at time ②, the distance to point B is added, taking into account the smoothing, and displayed in "TotalPathLength". The total path length is now 281.8 mm. The second linear motion job becomes active at time ③.

At time ④, the third linear motion job is sent to point D. The total path length of 363.5 mm between point A and point D is now displayed in "TotalPathLength" . The third linear motion job becomes active at time ⑤.

At the time ⑥, the TCP reaches point D and all motion jobs are completed. The "AccumulatedPathLength" corresponds to the "TotalPathLength", as no more motion jobs are processed in the job sequence.

7.3.4 Interrupting, continuing and stopping kinematics motions (S7-1500T)

You can interrupt and continue active kinematics motions or stop them and thus also cancel queued motion jobs.

Suspend kinematics motions

With the Motion Control instruction "MC_GroupInterrupt (Page 332)", you interrupt the execution of the motion on a kinematics technology object. With the "Mode" parameter, you specify the dynamic behavior. The kinematics can be stopped either with the dynamics of the motion job to be interrupted or with the maximum dynamics. When dynamic adaptation is activated, the dynamics of the motion can also be reduced so that the dynamic limits of the axes are not exceeded. The current path is not exited when the kinematics is stopped. If the kinematics is already at a standstill, the motion control is also interrupted for subsequent motion jobs.

The kinematics technology object is in "Interrupted" status (<TO>.StatusWord.X17).

Continue kinematics motions

With the Motion Control instruction "MC_GroupContinue (Page 333)", you continue a kinematics motion that was previously interrupted with an "MC_GroupInterrupt" job. The kinematics motion can be continued if the kinematics has come to a standstill following the "MC_GroupInterrupt" job.

The "MC_GroupContinue" job only has an effect if the kinematics technology object is in "Interrupted" status (<TO>.StatusWord.X17).

Stop kinematics motions

With the Motion Control instruction "MC_GroupStop (Page 336)", you stop the Motion Control of the kinematics technology object. In so doing, both the active motion job as well as all queued jobs in the job sequence are canceled and the job sequence is emptied. If the kinematics motion was already interrupted with an "MC_GroupInterrupt" job, this job is also canceled. As long as the "Execute" parameter is set to TRUE, the following kinematics jobs are rejected ("ErrorID" = 16#80CD).

With the "Mode" parameter, you specify the dynamic behavior. The kinematics can be stopped either with the dynamics of the motion job to be stopped or with the maximum dynamics. When dynamic adaptation is activated, the dynamics of the motion can also be reduced so that the dynamic limits of the axes are not exceeded. The current path is not exited when the kinematics is stopped.

See also

Job sequence (Page 217)

7.3.5 Motion dynamics (S7-1500T)

Configure the following values in the "Dynamics" configuration window:

- Default values for the dynamics, the dynamic limits of the path motion and the orientation motion
- Default values for the dynamics of the sPTP motion
- Dynamic adaptation

7.3.5.1 Configuring dynamics for the kinematics and the orientation motion (S7-1500T)

Dynamic limits of the kinematics

The configured dynamic limits of the kinematics configured under "Technology object > Configuration > Extended parameters > Dynamics" are taken into account during the motion execution. The dynamics of a motion can be restricted so that the dynamic limits of the kinematics are not exceeded. When you change the dynamic limits of the kinematics, the changes take effect immediately for the kinematics motion and orientation motion.

Dynamic limits of the kinematics axes

When a motion job is transmitted, the dynamic limits of the kinematics axes configured under "Technology object > Configuration > Extended parameters > Limits > Dynamic limits" are only taken into account when dynamic adaptation (Page 215) is active. The dynamics of the motion can be restricted so that the dynamic limits of the kinematics axes are not exceeded. Even when using dynamic adaptation, there may be slight overruns of the dynamic limits of the kinematics axes. Set the dynamics at the kinematics axes about 5% lower than their permitted limit. When you change the dynamic limits of the kinematics axes during an active motion, the changed values only take effect with the next motion job.

NOTE

Dynamic adaptation in the user program

Dynamic adaptation is only active if it is activated in the user program.

NOTE

Dynamic adaptation in "Jog" mode

The dynamic adaptation is not active in the kinematics control panel. The dynamic limits of the kinematics axes are not taken into account during a kinematics motion with the kinematics control panel.

NOTE

Dynamic adaptation in "Jog to target position" mode

In the kinematics control panel, the dynamic adaptation is only effective as of technology V6.0 and the dynamic limits of the kinematic axes are taken into account. "Dynamic adaptation without segmentation of the path" is always used.

Configuring dynamic defaults for the kinematics motion

You specify the dynamic values (velocity, acceleration, jerk) of a kinematics motion for the corresponding Motion Control instruction. If you do not specify any dynamic values for motion jobs (default value "-1.0"), the dynamic defaults configured under "Technology object > Configuration > Extended parameters > Dynamics" are used for the kinematics motion.

NOTE

If you change the dynamic defaults during an active motion, the changed values take effect only in the next motion job.

Procedure

1. Select the entry "Kinematics motion" in the "Settings for" drop-down list.
2. Enter the default values of the dynamics in the "Velocity", "Acceleration", "Deceleration" and "Jerk" fields.
3. To activate the default settings, set the dynamic factors at the Motion Control instructions to less than zero.
4. Define the default values of the dynamic limits in the "Maximum velocity", "Maximum acceleration", "Maximum deceleration" and "Maximum jerk" fields.

Configuring dynamic defaults for the orientation motion

NOTE

If you change the dynamic defaults during an active motion, the changed values take effect only in the next motion job.

Procedure

1. Select the entry "Orientation motion" in the "Settings for" drop-down list.
2. Enter the default values of the dynamics in the "Velocity", "Acceleration", "Deceleration" and "Jerk" fields.
3. Define the default values of the dynamic limits in the "Maximum velocity", "Maximum acceleration", "Maximum deceleration" and "Maximum jerk" fields.

7.3.5.2 Configuring dynamics for the sPTP motion (S7-1500T)

You specify the dynamic values (velocity, acceleration, jerk) of an sPTP motion for the corresponding Motion Control instruction. If you do not specify any dynamic values for motion jobs (default value "-1.0"), the dynamic defaults configured under "Technology object > Configuration > Extended parameters > Dynamics" are used for the sPTP motion.

You specify the default settings of the dynamics of the synchronous "point-to-point" motion using factors. These factors each relate in percentage terms to the maximum values of velocity, acceleration, deceleration and jerk that you have configured for the individual axes under "Technology object > Configuration > Extended parameters > Limits> Dynamic limits".

Configuring dynamic defaults for the sPTP motion

NOTE

If you change the dynamic defaults during an active motion, the changed values take effect only in the next motion job.

Procedure

1. Select the entry "sPTP motion" in the "Settings for" drop-down list.
2. Enter the default values of the dynamics in the "Velocity factor", "Acceleration factor", "Deceleration factor" and "Jerk factor" fields.
3. To activate the default settings, set the dynamic factors at the Motion Control instructions "MC_MoveDirectRelative" or "MC_MoveDirectAbsolute" to less than zero.

7.3.5.3 Dynamic adaptation (S7-1500T)

When dynamic adaptation is activated, a velocity profile for the motion of the kinematics is calculated, which takes into account both the dynamic specifications or dynamic presettings and dynamic limits of the kinematic motion as well as the maximum velocity, maximum acceleration and maximum deceleration of the kinematics axes. In addition, the dynamic presets and dynamic limits for velocity, acceleration and deceleration of the orientation motion are taken into account.

The "<TO>.StatusPath.DynamicAdaption" tag displays the status of the dynamic adaptation.

NOTE

Dynamic adaptation in the user program

Dynamic adaptation is only active if it is activated in the user program.

NOTE

Dynamic adaptation in "Jog" mode

The dynamic adaptation is not active in the kinematics control panel. The dynamic limits of the kinematics axes are not taken into account during a kinematics motion with the kinematics control panel.

NOTE

Dynamic adaptation in "Jog to target position" mode

In the kinematics control panel, the dynamic adaptation is only effective as of technology V6.0 and the dynamic limits of the kinematic axes are taken into account. "Dynamic adaptation without segmentation of the path" is always used.

The graphic below shows examples of a velocity curve with and without dynamic adaptation:

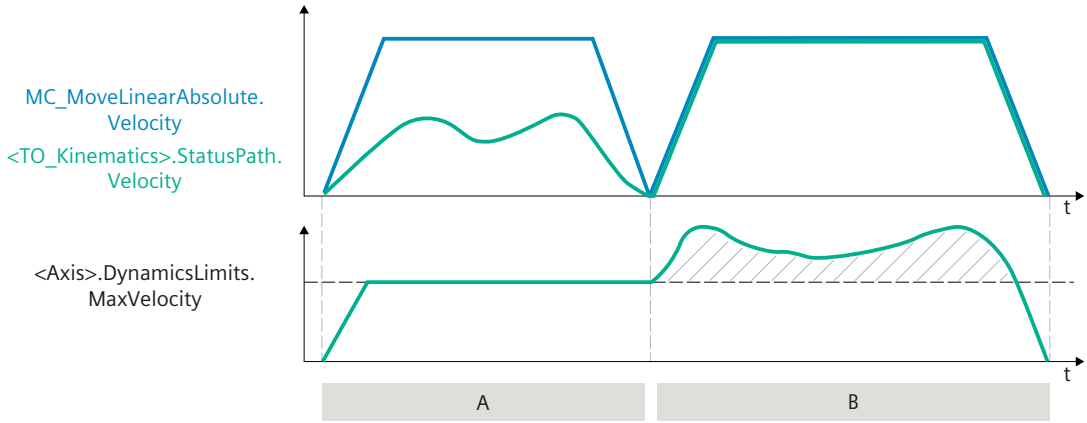

A	With dynamic adaptation
B	Without dynamic adaptation

Configuring dynamic adaptation

You set the dynamic adaptation under "Kinematics technology object > Configuration > Extended parameters > Dynamics".
Select the default for the dynamic adaptation in the drop-down list.

- **Do not limit**
  The dynamic limits of the axes are not taken into consideration.
- **Limit with segmentation of the path**
  The path is divided into individual equidistant segments. For each of these segments, the velocity profile is calculated taking into consideration the dynamic limits of the kinematics axes which apply for individual sections of the motion. The dynamic response is therefore adapted for individual sections of a motion. Dynamic adaptation in the "Limit with segmentation of the path" mode requires a considerably higher computing time than in the "Limit without segmentation of the path" mode.
- **Limit without segmentation of the path**
  With dynamic adaptation without segmentation of the path, the velocity profile is calculated taking into consideration the dynamic limits of the kinematics axes which apply for the entire motion.

7.3.5.4 Override (S7-1500T)

You can specify a velocity override for the kinematics (<TO>.Override.Velocity) using the technology object data block.

- You can enter a value between 0% and 200% for a path motion.
- You can enter a value between 0% and 100% for an sPTP motion.

The velocity override acts on the velocity of the tool center point (TCP) along the path. If you change the velocity override of the kinematics, the change takes effect immediately for the kinematics motion and orientation motion.
The setpoint velocity of the motion is the velocity specified for the Motion Control instruction multiplied by the percentage value of the velocity override.

The axis-specific velocity override values do not take effect for kinematics motions.

7.3.6 Motion preparation using multiple jobs (S7-1500T)

7.3.6.1 Job sequence (S7-1500T)

Motion-relevant jobs are entered in the job sequence of the kinematics technology object. The following jobs enter the job sequence:

Job	Brief description
Kinematics motions	
MC_MoveLinearAbsolute (Page 339)	Position kinematics with linear path motion
MC_MoveLinearRelative (Page 345)	Relative positioning of kinematics with linear path motion
MC_MoveCircularAbsolute (Page 350)	Position kinematics with circular path motion
MC_MoveCircularRelative (Page 356)	Relative positioning of kinematics with circular path motion
MC_MoveDirectAbsolute (Page 363)	Absolute movement of kinematics with synchronous "point-to-point" motion
MC_MoveDirectRelative (Page 370)	Relative movement of kinematics with synchronous "point-to-point" motion
Zones	
MC_DefineWorkspaceZone (Page 384)	Define workspace zone
MC_DefineKinematicsZone (Page 386)	Define kinematics zone
MC_SetWorkspaceZoneActive (Page 388)	Activate workspace zone
MC_SetWorkspaceZoneInactive (Page 389)	Deactivate workspace zone
MC_SetKinematicsZoneActive (Page 391)	Activate kinematics zone
MC_SetKinematicsZoneInactive (Page 392)	Deactivate kinematics zone
Coordinate systems	
MC_SetOcsFrame (Page 397)	Redefine object coordinate systems

Define maximum number of jobs

By default, the job sequence can contain up to five jobs. You can change the maximum number of jobs in the configuration window "Technology object > Configuration > Extended parameters > Job sequence". The job sequence can contain a maximum of ten jobs.

NOTE

Multiple jobs in the job sequence

The more jobs contained in the job sequence, the longer it takes to calculate the motion jobs.

Processing of jobs in the job sequence

The jobs are processed in the same order in which they were entered in the job sequence. The order of the jobs cannot be changed subsequently. If another motion job is added to the job sequence, all jobs in the job sequence will be recalculated. The kinematics motion jobs do not cancel each other.

The job sequence allows the calculation of a velocity profile over several jobs. The number of motion jobs to be considered depends on the type of motion jobs, e. g. sPTP motion, linear motion, circular motion, conveyor tracking. The current job is also included in the new calculation so that the current job can be blended as far as possible with the next job.

Status of the job sequence

The two tags for the status of the job sequence can be used to check whether the calculation of the jobs in the job sequence has been completed and whether the corresponding programmed motion jobs are being blended. If the number of prepared commands in the job sequence ("<TO>StatusMotionQueue.NumberOfPreparedCommands") matches the number of jobs in the job sequence ("<TO>.StatusMotionQueue.NumberOfCommands"), then the preparation of the motion is complete.

Interrupting and resuming job execution

You can also interrupt execution of the jobs with a "MC_GroupInterrupt" job, fill the job sequence and then continue execution with an "MC_GroupContinue" job. The behavior of the motion processing at the "MC_GroupContinue" differs as follows:

- If a "MC_GroupInterrupt" job is transmitted before the start of the motion, the kinematics motion jobs transmitted between the "MC_GroupInterrupt" and the "MC_GroupContinue" job are prepared. If the number of prepared commands in the job sequence ("<TO>StatusMotionQueue.NumberOfPreparedCommands") matches the number of jobs in the job sequence ("<TO>.StatusMotionQueue.NumberOfCommands"), then the preparation of the motion is complete. As soon as the motion preparation is completed, the "MC_GroupContinue" job immediately releases the motion execution without renewed preparation.
- If an active kinematics motion is stopped with a "MC_GroupInterrupt" job and continued with a "MC_GroupContinue" job, the kinematics motions in the job sequence are prepared again with the "MC_GroupContinue" job.

See also

"MotionQueue" tag (kinematics) (Page 421)
Interrupting, continuing and stopping kinematics motions (Page 212)

7.3.6.2 Blending kinematics motions with maximum rounding clearance (S7-1500T)

Multiple motions can be appended to one another, in which case the kinematics comes to a standstill between the individual motions. To achieve an uninterrupted Motion Control without standstill between the individual motion jobs, the individual motions can be blended and thus connected via geometric transitions.

You can configure the maximum rounding clearance of the kinematics motions from 0% to 100% of the distance. You can specify and move blending distances greater than half of the shorter path length.

Determine maximum rounding clearance

The maximum rounding clearance is determined depending on the following values:

- L0: Rounding clearance of the previous motion job
- L1: Path length of the first job to the rounding point.
- L2: Path length of the second job to the rounding point

The maximum rounding clearance is the smallest of the following values:

- L1 - L0
- "<TO>.Transition.FactorBlendingLength" / 100 * L1
- "<TO>.Transition.FactorBlendingLength" / 100 * L2

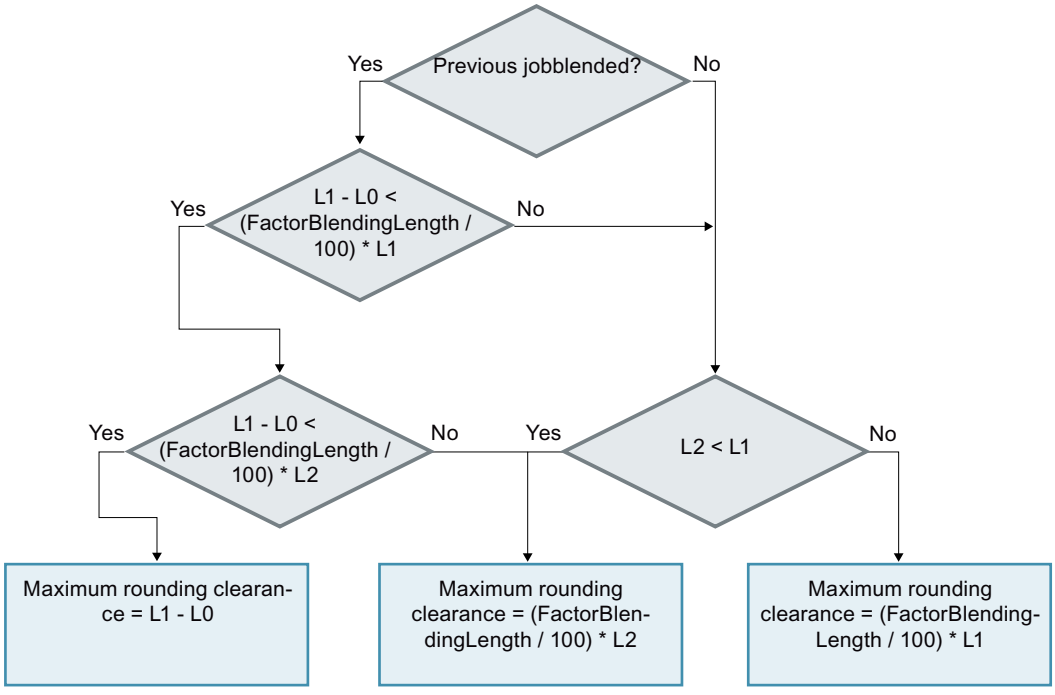

Example: Equal distances between the points

The distances between points A and B and points B and C are the same length. The kinematics is at a standstill.

<TO>.Transition.FactorBlendingLength	Maximum rounding clearance ①		Description
100.0	L1	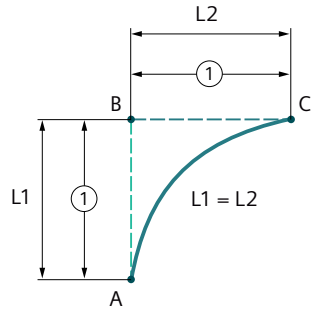	The entire motion can be blended. The maximum rounding clearance corresponds to the distance between points A and B or B and C.
50.0	L1 * 0.5	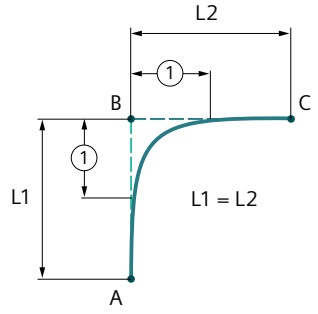	The maximum rounding clearance is reduced to half the distance between points A and B.

Example: Different distances between the points

The distances between points A and B and points B and C are different in length. The distance between points A and B is less than the distance between points B and C. The kinematics is in standstill.

<TO>.Transition.FactorBlendingLength	Maximum rounding clearance ①		Description
100.0	L1	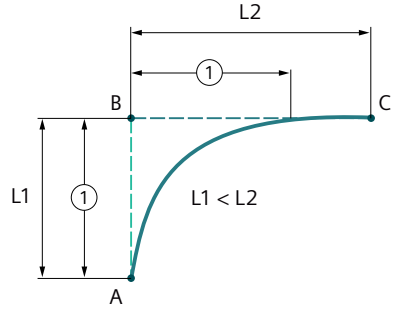	The maximum rounding clearance corresponds to the distance L1, as this is the shorter distance.

<TO>.Transition.FactorBlendingLength	Maximum rounding clearance ①		Description
50.0	L1 * 0.5	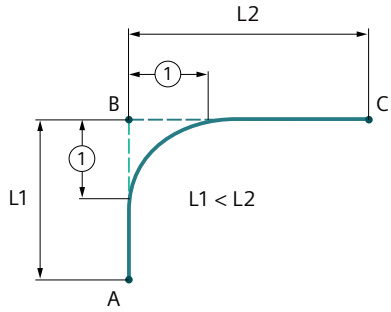	The maximum rounding clearance is calculated with half of L1, because L1 is the shorter distance.

Example: Previous job blended

The example builds on the previous example. A linear motion to point D should be traversed. Point C should not be approached directly. The motion to point D should be done with maximum rounding clearance to point C. The previous motion job to point C is blended with rounding clearance L0.

<TO>.Transition.FactorBlendingLength	Maximum rounding clearance ①		Description
100.0	L1 - L0	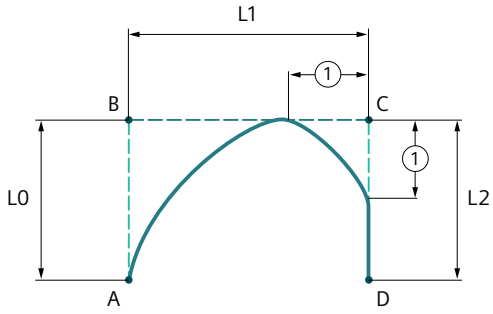	The maximum rounding clearance corresponds to the distance L1 minus the rounding clearance from the previous motion. That is the shortest distance.
50.0	L2 * 0.5	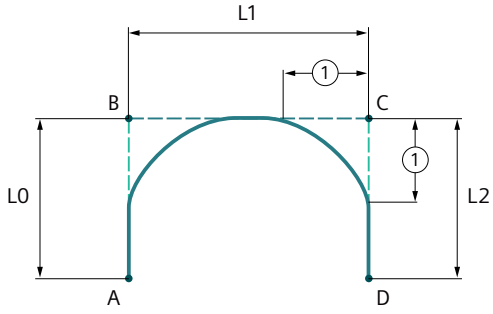	Half of L2 is the shortest distance and therefore the maximum rounding clearance. The rounding clearance of the previous motion is lower by a factor of 50% and does not reduce the maximum rounding clearance of the following motion as much as it does at 100%.

Configure maximum rounding clearance

Up to technology version V5.0, the maximum rounding clearance is limited to 50% of the shorter distance. From technology version V6.0, you can configure the maximum rounding clearance. The default is 50% and therefore compatible with the technology versions < V6.0.

The factor [%] is configured in the configuration window "Technology object > Configuration > Extended parameters > Job sequence" or using the tag "<TO>.Transition.FactorBlendingLength" of the kinematics technology object. Change the factor in the user program before sending the motion jobs to the job sequence so that the change is effective.

The maximum rounding clearance is used when the value of the "TransitionParameter[1]" parameter is < 0.0 or the specified value exceeds the maximum rounding clearance. The rounding clearance is limited to the maximum rounding clearance when the value of the "TransitionParameter[1]" is > 0. If you have parameterized a smaller positive rounding clearance at the Motion Control instruction than the maximum rounding clearance, then the configured rounding clearance "TransitionParameter[1]" is effective.

The following table shows three possible configuration examples and their effect on the calculation of the maximum rounding clearance:

Configuration example "<TO>.Transition.FactorBlendingLength"	**Effect**
0.0	The rounding clearance is always zero. Blending is not possible with any motion.
50.0	The maximum rounding clearance is calculated from half of the shorter distance between the two motions.
100.0	The maximum rounding clearance is calculated from the shorter distance of the two motions and the rounding clearance of the previous motion. You have the option of moving the kinematics with the maximum possible rounding clearances.

7.3.6.3 Dynamic behavior when motions are appended/blended (S7-1500T)

You define the dynamic behavior for the transition of kinematics motions with the "BufferMode" and "DynamicAdaption" parameters.

Multiple motions can be appended to one another, in which case the kinematics comes to a standstill between the individual motions ("BufferMode" = 1). To achieve an uninterrupted motion, the individual motions can be blended with a blending segment. The consecutive motions can be blended at the lower velocity ("BufferMode" = 2) or at the higher velocity ("BufferMode" = 5).

Dynamic adaptation

With active dynamic adaptation with segmentation of the path ("DynamicAdaption" =1), the path of a motion job is divided into individual segments. For each of these segments, the velocity profile is calculated with consideration of the applicable limits. The dynamic response of the path is thus adapted for individual segments of a motion job. As a result, a higher traversing velocity can be reached section by section, thus reducing the traversing time of the motion .

With active dynamic adaptation ("DynamicAdaption"=1) without segmentation of the path, the velocity profile is calculated taking into account the limitations that apply to the entire motion job.

Dynamic adaptation in the "Limit with segmentation of the path" mode requires a considerably higher computing time than in the "Limit without segmentation of the path" mode.

When dynamic adaptation is activated, a velocity profile for the motion of the kinematics is calculated, which takes into account both the dynamic specifications or dynamic presettings and dynamic limits of the kinematic motion as well as the maximum velocity, maximum acceleration and maximum deceleration of the kinematics axes. In addition, the dynamic presets and dynamic limits for velocity, acceleration and deceleration of the orientation motion are taken into account.

7.3.6.4 Preliminary motion preparation (S7-1500T)

With technology version V5.0, the calculation of the motion preparation has changed. The motion preparation is calculated in the organization block (OB) MC-LookAhead [OB97] and no longer in MC-Interpolator [OB92].

The jobs from the job sequence are prepared in advance with MC-LookAhead [OB97]. The dynamic values for path motions and orientation motions are transferred to the job sequence. The dynamic values are only active when the job is executed.

For the motion processing, the current path motion job and the following path motion jobs (for sPTP-motions only the next motion job) must be taken into account so that the blending of path motions is possible. Path motions are first processed in MC-LookAhead [OB97] and then take effect in MC-Interpolator [OB92]. Motions with blending require a longer lead time and a longer reaction time.

You can change the velocity override during a path motion, which immediately changes the dynamics of the path motion.

In MC-Interpolator [OB92], less time is needed for motion preparation and you can set a shorter application cycle of MC-Servo [OB91].

The description of the organization blocks MC-Interpolator [OB92] and MC-LookAhead [OB7] can be found in the "Organization blocks for Motion Control" section of the "S7-1500/S7-1500T Motion Control overview documentation" (Page 13).

7.3.6.5 Setting the motion preparation (S7-1500T)

The motion preparation is influenced by various factors.

To increase the available computing time of the MC-LookAhead [OB97], adjust the following settings:

- Application cycle:
  - Set a bigger application cycle.
  - Set a longer PN send clock.
- Increase the maximum cycle load for MC-LookAhead [OB97] in the properties of the organization block under "General > Multi-core processor". You can set values from 1% to 40% (default setting 20%) for the maximum cycle load.
- If you are not using user-defined kinematics, select the "Improve system performance" check box in the properties of MC-LookAhead [OB97] under "General > Multi-core processor".
- Set the higher priority 16 for the MC-LookAhead [OB97].

- Reduce the percentage communication load in the CPU properties.
- If necessary for interpolation of cyclic cams, clear the "Improve system performance" check box in the properties of MC-Interpolator [OB92] under "General > Multi-core processor".

You have the following options for reducing the calculation time of the motion preparation:

- Use dynamic adaptation without segmentation of the path instead of dynamic adaptation with segmentation of the path.
- Reduce the maximum number of jobs in the job sequence.

The following measures are possible during programming of the jobs:

- So that blending of a currently active job with a newly issued subsequent job is possible, sufficient computing time must be available for preparation of the subsequent job. You can increase the available computing time using the following measures:
  - Select the smallest possible rounding clearance. Since the rounding clearance shortens the currently active job, there is less time for calculation of the subsequent job.
  - Reduce the traversing velocity.
  - Use jobs with the longest possible traversing length.
- If no motion job is active and the job sequence is empty, you can interrupt the processing of the jobs with an "MC_GroupInterrupt" job and fill the job sequence. Then continue the processing with an "MC_GroupContinue" job as soon as the motion preparation is complete. As a result, the number of prepared commands (<TO>.StatusMotionQueue.NumberOfPreparedCommands) corresponds to the number of queued jobs (<TO>.StatusMotionQueue.NumberOfCommands) in the job sequence.

7.3.7 Interaction of kinematics motions and single axis motions (S7-1500T)

Kinematics motions are only possible if no single axis motions are active on the kinematics axes. Single axis motions have an overriding effect on kinematics motions. The motion of the corresponding axis is overridden by the single-axis motion and the job sequence is cleared. The other kinematics axes stop with the maximum dynamics. Exception: The kinematics is in simulation (Page 266).

The following functions are permitted during an active kinematics motion:

- Torque reduction on the axes/Travel to fixed stop ("MC_TorqueLimiting")
  When the fixed stop is reached, the kinematics motion is aborted.
- Setting of an additive torque ("MC_TorqueAdditive")
- Setting of the upper and lower torque limit ("MC_TorqueRange")
- Sensor switchover ("MC_SetSensor")

The following functions are rejected during an active kinematics motion:

- Overlaid motion on the axes ("MC_MoveSuperimposed")
- Homing of the axes ("MC_Home")

7.3.8 Tags: Kinematics motions (S7-1500T)

The following technology object tags are relevant for motion control:

Tag	Description	
Status values		
<TO>.StatusWord	Status indicator for an active motion	
<TO>.Tcp	Target coordinates x, y, z, A, B, C of the kinematics motion in the world coordinate system	
<TO>.StatusPath.CoordSystem	Coordinate system of the active motion job	
	0	World coordinate system
	1, 2, 3	Object coordinate system 1, 2, 3
	100	Machine coordinate system
	101	Joint coordinate system[1)]
<TO>.StatusPath.Velocity	Current path velocity (setpoint reference)	
<TO>.StatusPath.Acceleration	Current path acceleration (setpoint reference)	
<TO>.StatusPath.OrientationVelocity	Resulting orientation velocity	
<TO>.StatusPath.DynamicAdaption	Dynamic adaptation	
	0	No dynamic adaptation
	1	Dynamic adaptation with segmentation of the path
	2	Dynamic adaptation without segmentation of the path
<TO>.StatusPath.TotalPathLength	Total path length of linear and circular path motions Sum of: • Distance of all completed motion jobs • Distance travelled of the active motion job • Remaining distance of the motion job • Calculated distance of all jobs in the job sequence	
<TO>.StatusPath.AccumulatedPathLength	Accumulated path length of linear and circular path motions Sum of: • Distance of all completed motion jobs • Distance travelled of the active motion job	
<TO>.StatusMotionQueue.NumberOfCommands	Number of jobs in the job sequence	
Override		
<TO>.Override.Velocity	Velocity override	
Dynamic limits		
<TO>.DynamicLimits.Path.Velocity	Dynamic limitation for the maximum velocity of the path	
<TO>.DynamicLimits.Path.Acceleration	Dynamic limitation for the maximum acceleration of the path	
<TO>.DynamicLimits.Path.Deceleration	Dynamic limitation for the maximum deceleration of the path	
<TO>.DynamicLimits.Path.Jerk	Dynamic limitation for the maximum jerk of the path	
<TO>.DynamicLimits.Orientation.Velocity	Dynamic limitation for the maximum velocity of the Cartesian orientation	
<TO>.DynamicLimits.Orientation.Acceleration	Dynamic limitation for the maximum acceleration of the Cartesian orientation	

1) With up to four interpolating kinematics axes, the joint coordinate system is identical to the machine coordinate system.

Tag	Description	
<TO>.DynamicLimits.Orientation.Deceleration	Dynamic limitation for the maximum deceleration of the Cartesian orientation	
<TO>.DynamicLimits.Orientation.Jerk	Dynamic limitation for the maximum jerk of the Cartesian orientation	
Dynamic defaults		
<TO>.DynamicDefaults.Path.Velocity	Default setting of the velocity of the path	
<TO>.DynamicDefaults.Path.Acceleration	Default setting of the acceleration of the path	
<TO>.DynamicDefaults.Path.Deceleration	Default setting of the deceleration of the path	
<TO>.DynamicDefaults.Path.Jerk	Default setting of the jerk of the path	
<TO>.DynamicDefaults.Orientation.Velocity	Default setting of the velocity of the Cartesian orientation	
<TO>.DynamicDefaults.Orientation.Acceleration	Default setting of the acceleration of the Cartesian orientation	
<TO>.DynamicDefaults.Orientation.Deceleration	Default setting of the deceleration of the Cartesian orientation	
<TO>.DynamicDefaults.Orientation.Jerk	Default setting of the jerk of the Cartesian orientation	
<TO>.DynamicDefaults.DynamicAdaption	Default setting of the dynamic adaptation	
	0	No dynamic adaptation
	1	Dynamic adaptation with segmentation of the path
	2	Dynamic adaptation without segmentation of the path
<TO>.DynamicDefaults.MoveDirect.VelocityFactor	Factor for the velocity of the axis motions in relation to the respective maximum velocity of the axes with sPTP motion.	
<TO>.DynamicDefaults.MoveDirect.Acceleration-Factor	Factor for the acceleration of the axis motions in relation to the respective maximum acceleration of the axes with sPTP motion.	
<TO>.DynamicDefaults.MoveDirect.Deceleration-Factor	Factor for the deceleration of the axis motions in relation to the respective maximum deceleration of the axes with sPTP motion.	
<TO>.DynamicDefaults.MoveDirect.JerkFactor	Factor for the jerk of the axis motions in relation to the respective maximum jerk of the axes with sPTP motion.	
Rounding clearance		
<TO>.Transition.FactorBlendingLength	Factor of the maximum rounding distance in percent [%] The configuration takes place in "Technology object > Configuration > Extended parameters > Job sequence". Change the factor in the user program before sending the motion jobs to the job sequence so that the change is effective.	
	0.0	No blending possible
	50.0	Default value
	100.0	Blending possible with complete segment length or motion length

[1] With up to four interpolating kinematics axes, the joint coordinate system is identical to the machine coordinate system.

7.4 Moving a kinematics in a linear manner (S7-1500T)

You can move the kinematics linearly to a defined target position with a linear motion. With the Motion Control instruction "MC_MoveLinearAbsolute (Page 340)", you move a kinematics with a linear motion to an absolute position. With the Motion Control instruction

"MC_MoveLinearRelative (Page 345)", you move a kinematics with a linear path relative to the position which was present at the start of the job processing.
You have the following options for the linear motion:

- Define target position (Page 227)
- Define dynamic response (Page 228)
- Define motion transition (Page 229)
- Start job (Page 231)
- Show motion status and remaining distance (Page 207)

7.4.1 Defining the target position of the linear motion (S7-1500T)

With the Motion Control instruction "MC_MoveLinearAbsolute", you move a kinematics with a linear motion to an absolute position. With the Motion Control instruction "MC_MoveLinearRelative", you move a kinematics with a linear path relative to the position which was present at the start of the job processing.

Parameter inputs

Absolute target position

You define the absolute target position of the linear motion with the following parameters of the Motion Control instruction "MC_MoveLinearAbsolute (Page 340)":

- With the "CoordSystem" parameter, you define the reference system for the target coordinates.
- With the "Position[1..4]" parameters, you define the x, y, z and A coordinates of the target position.
- With up to four interpolating kinematics axes:
  - With the "DirectionA" parameter, you define the direction of movement of the Cartesian orientation A.
- With more than four interpolating kinematics axes:
  - With the "Position[5..6]" parameters, you define the B and C coordinates of the target position.

NOTE

Orientation motion

The target orientation is always approached by the shortest distance. If the target orientation can be reached via two paths of equal length, motion is in the positive direction.

Relative target position

You define the relative target position of the linear motion with the following parameters of the Motion Control instruction "MC_MoveLinearRelative (Page 345)":

- With the "CoordSystem" parameter, you define the reference system for the target coordinates.
- With the "Distance[1..4]" parameters, you define the x, y, z and A coordinates of the target position.

- With more than four interpolating kinematics axes:
  - With the "Distance[5..6]" parameters, you define the B and C coordinates of the target position.

NOTE
Orientation motion
The target orientation is always approached by the shortest distance. If the target orientation can be reached via two paths of equal length, motion is in the positive direction.

7.4.2 Defining the dynamic response of the linear motion (S7-1500T)

You can define the dynamic response of the linear path motion at the corresponding Motion Control instruction. You can only define the dynamic response of the orientation motion in the configuration of the kinematics technology object.

Parameter inputs

You define the dynamics of the linear motion with the following parameters of the Motion Control instruction "MC_MoveLinearAbsolute (Page 340)" or "MC_MoveLinearRelative (Page 345)":

- With the "Velocity" parameter, you define the velocity.
- With the "Acceleration" parameter, you define the acceleration.
- With the "Deceleration" parameter, you define the deceleration.
- With the "Jerk" parameter, you define the jerk.
- With the "DynamicAdaption" parameter, you specify the dynamic adaptation of the path motion.

With the following configuration parameters under "Technology object > Configuration > Extended parameters > Dynamics", you define the dynamic response of the orientation motion:

- Select the entry "Orientation motion" in the "Settings for" drop-down list.
- Define the velocity (<TO>.DynamicDefaults.Orientation.Velocity) in the field "Velocity".
- Define the acceleration (<TO>.DynamicDefaults.Orientation.Acceleration) in the field "Acceleration".
- Define the deceleration (<TO>.DynamicDefaults.Orientation.Deceleration) in the field "Deceleration".
- Define the jerk (<TO>.DynamicDefaults.Orientation.Jerk) in the field "Jerk".

Dynamic adaptation

The dynamic adaptation limits the path dynamics to the axis dynamics. When dynamic adaptation is activated, a velocity profile for the motion of the kinematics is calculated, which takes into account not only the dynamic specifications or dynamic defaults and the dynamic limits of the kinematic motion, but also the maximum velocity, maximum acceleration and maximum deceleration of the kinematics axes. In addition, the dynamic defaults and the

dynamic limits for velocity, acceleration and deceleration of the orientation motion are taken into account.

Use the configured default

With the "DynamicAdaption" < 0 parameter, the configured default is used. You configure the default value in the field "Limit path dynamics to axis dynamics" under "Technology object > Configuration > Extended parameters > Dynamics" of the kinematics technology object (<TO>.DynamicDefaults.DynamicAdaption).

Do not limit path dynamics to axis dynamics

With the "DynamicAdaption" = 0 parameter, no dynamic adaptation is used for the linear motion.

Limit path dynamics to axis dynamics with segmentation of the path

With the "DynamicAdaption" = 1 parameter, the dynamic adaptation is used for the linear motion. The path of the linear motion is divided into individual segments. For each of these segments, the velocity profile is calculated with consideration of the applicable limits. The dynamic response of the path is thus adapted for individual segments of the linear motion. As a result, a higher traversing velocity is reached section by section and the traversing time of the linear motion is reduced.

Note that dynamic adaptation with segmentation of the path requires a considerably higher computing time than dynamic adaptation without segmentation of the path.

Limit path dynamics to axis dynamics without segmentation of the path

With the "DynamicAdaption" = 2 parameter, the dynamic adaptation is used for the linear motion. The velocity profile is calculated for the entire linear motion. The limitations which apply to the entire motion job are taken into consideration.

7.4.3 Defining the transition of linear motion (S7-1500T)

Multiple motions can be appended to one another, in which case the kinematics comes to a standstill between the individual motions. To achieve an uninterrupted Motion Control without standstill between the individual motion jobs, the individual motions can be blended with geometric transitions. You define the corresponding parameters at the new motion job (A2), into which the previous job (A1) is to be blended.

In the following examples, the various motion transitions are explained using an active linear motion (A1) and a subsequent linear motion (A2).

Parameter inputs

You define the transition to the active motion with the following parameters of the Motion Control instruction "MC_MoveLinearAbsolute (Page 340)" or "MC_MoveLinearRelative (Page 345)":

- With the "BufferMode" parameter, you define the mode of the motion transition.
- With the "TransitionParameter[1]" parameter, you define the rounding clearance.

Appending motion

With the "BufferMode" = 1 parameter, the linear motion is appended to the active motion. The active motion sequence (A1) is completed and the kinematics comes to a standstill. The linear motion (A2) is then executed.

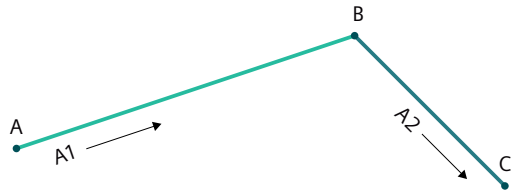

In this case, the parameter "TransitionParameter[1]" is not relevant.

Blending motion

With the "BufferMode" = 2 parameter, the active motion is blended with the linear motion and the lower velocity of both jobs is used.

With the "BufferMode" = 5 parameter, the active motion is blended with the linear motion and the higher velocity of both jobs is used.

Rounding clearance d > 0.0

With the "TransitionParameter[1]" < 0.0 parameter, the active motion (A1) is blended with the linear motion (A2) as soon as the specified rounding clearance to the target position of the active motion is reached.

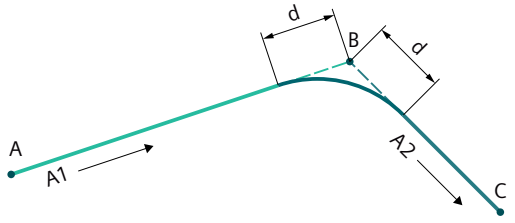

Rounding clearance d = 0.0

With the "TransitionParameter[1]" = 0.0 parameter, the linear motion is appended to the active motion as with "BufferMode" = 1. The active motion sequence (A1) is completed and the kinematics comes to a standstill. The linear motion (A2) is then executed.

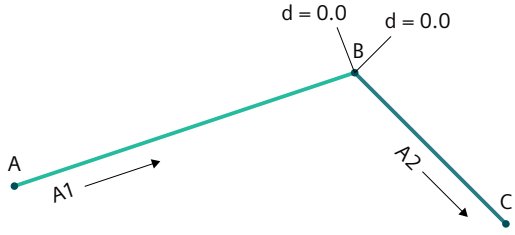

Rounding clearance d < 0.0

With the "TransitionParameter[1]" < 0.0 parameter, the active motion (A1) is blended with the linear motion (A2) as soon as the maximum rounding clearance to the target position of the active motion is reached.

You configure the factor of the maximum rounding clearance under "Technology object > Configuration > Extended parameters > Job sequence"

(<TO>.Transition.FactorBlendingLength). In the following example, the maximum rounding clearance is limited to 50% of the shorter distance.

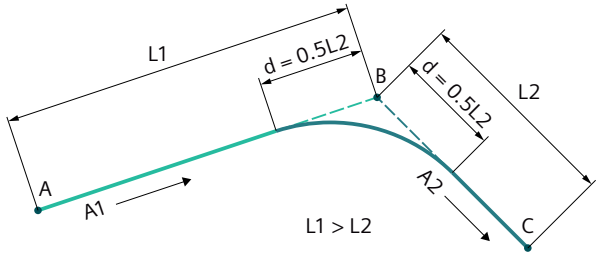

7.4.4 Starting a linear motion job (S7-1500T)

After the start of the linear motion job with "Execute" = TRUE, the job is added to the job sequence (Page 217). The processing status is indicated in the Motion Control instruction "MC_MoveLinearAbsolute (Page 340)" or. "MC_MoveLinearRelative (Page 345)" with the parameter "Busy" = TRUE. If the job is active, this is indicated with the parameter "Active" = TRUE and in the "<TO>.StatusWord.X8 (LinearCommand)" tag of the technology object.

As soon as the target position is reached or the linear motion is blended to the next motion, the job is completed. The status is indicated with the parameter "Done" = TRUE.

You can find more information in the section "Motion status and remaining distance (Page 207)".

7.4.5 Tags: Linear motion (S7-1500T)

The following technology object tags are relevant for motion control:

Tag	Description	
Status values		
<TO>.StatusWord	Status indicator for an active motion	
<TO>.StatusWord.X8 (LinearCommand)	The value "TRUE" is set if a job for linear motion is active ("MC_MoveLinearAbsolute", "MC_MoveLinearRelative").	
<TO>.Tcp	Target coordinates x, y, z, A, B, C of the kinematics motion in the world coordinate system	
<TO>.StatusPath.CoordSystem	Coordinate system of the active motion job	
	0	World coordinate system
	1, 2, 3	Object coordinate system 1, 2, 3
	100	Machine coordinate system
	101	Joint coordinate system[1)]
<TO>.StatusPath.Velocity	Current path velocity (setpoint reference)	
<TO>.StatusPath.Acceleration	Current path acceleration (setpoint reference)	
<TO>.StatusPath.OrientationVelocity	Resulting orientation velocity	

1) With up to four interpolating kinematics axes, the joint coordinate system is identical to the machine coordinate system.

Tag	Description	
<TO>.StatusPath.DynamicAdaption	Dynamic adaptation	
	0	No dynamic adaptation
	1	Dynamic adaptation with segmentation of the path
	2	Dynamic adaptation without segmentation of the path
<TO>.StatusPath.TotalPathLength	Total path length of linear and circular path motions Sum of: • Distance of all completed motion jobs • Distance travelled of the active motion job • Remaining distance of the motion job • Calculated distance of all jobs in the job sequence	
<TO>.StatusPath.AccumulatedPathLength	Accumulated path length of linear and circular path motions Sum of: • Distance of all completed motion jobs • Distance travelled of the active motion job	
<TO>.StatusMotionQueue.NumberOfCommands	Number of jobs in the job sequence	
Override		
<TO>.Override.Velocity	Velocity override	
Dynamic limits		
<TO>.DynamicLimits.Path.Velocity	Dynamic limitation for the maximum velocity of the path	
<TO>.DynamicLimits.Path.Acceleration	Dynamic limitation for the maximum acceleration of the path	
<TO>.DynamicLimits.Path.Deceleration	Dynamic limitation for the maximum deceleration of the path	
<TO>.DynamicLimits.Path.Jerk	Dynamic limitation for the maximum jerk of the path	
<TO>.DynamicLimits.Orientation.Velocity	Dynamic limitation for the maximum velocity of the Cartesian orientation	
<TO>.DynamicLimits.Orientation.Acceleration	Dynamic limitation for the maximum acceleration of the Cartesian orientation	
<TO>.DynamicLimits.Orientation.Deceleration	Dynamic limitation for the maximum deceleration of the Cartesian orientation	
<TO>.DynamicLimits.Orientation.Jerk	Dynamic limitation for the maximum jerk of the Cartesian orientation	
Dynamic defaults		
<TO>.DynamicDefaults.Path.Velocity	Default setting of the velocity of the path	
<TO>.DynamicDefaults.Path.Acceleration	Default setting of the acceleration of the path	
<TO>.DynamicDefaults.Path.Deceleration	Default setting of the deceleration of the path	
<TO>.DynamicDefaults.Path.Jerk	Default setting of the jerk of the path	
<TO>.DynamicDefaults.Orientation.Velocity	Default setting of the velocity of the Cartesian orientation	
<TO>.DynamicDefaults.Orientation.Acceleration	Default setting of the acceleration of the Cartesian orientation	
<TO>.DynamicDefaults.Orientation.Deceleration	Default setting of the deceleration of the Cartesian orientation	
<TO>.DynamicDefaults.Orientation.Jerk	Default setting of the jerk of the Cartesian orientation	

1) With up to four interpolating kinematics axes, the joint coordinate system is identical to the machine coordinate system.

Tag	Description	
<TO>.DynamicDefaults.DynamicAdaption	Default setting of the dynamic adaptation	
	0	No dynamic adaptation
	1	Dynamic adaptation with segmentation of the path
	2	Dynamic adaptation without segmentation of the path
Rounding clearance		
<TO>.Transition.FactorBlendingLength	Factor of the maximum rounding clearance in percent [%] The configuration takes place in "Technology object > Configuration > Extended parameters > Job sequence". Change the factor in the user program before sending the motion jobs to the job sequence so that the change is effective.	
	0.0	No blending possible
	50.0	Default value
	100.0	Blending possible with complete segment length or motion length

1) With up to four interpolating kinematics axes, the joint coordinate system is identical to the machine coordinate system.

7.5 Moving a kinematics in a circular manner (S7-1500T)

You can move the kinematics using a defined circular path with a circular motion. With the Motion Control instruction "MC_MoveCircularAbsolute (Page 350)", you move a kinematics with a circular motion to an absolute position. With the Motion Control instruction "MC_MoveCircularRelative (Page 356)", you move a kinematics with a circular motion relative to the position which was present at the start of the job processing.

You have the following options for the circular motion:

- Define circular path:
  - Define circular path via intermediate point and target position (Page 233)
  - Define circular path via center point and angle (Page 235)
  - Define circular path via radius and target position (Page 237)
- Define dynamic response (Page 240)
- Define motion transition (Page 241)
- Start job (Page 243)
- Show motion status and remaining distance (Page 207)

7.5.1 Defining the circular path of the circular motion (S7-1500T)

7.5.1.1 Defining the circular path via intermediate point and target position (S7-1500T)

With the Motion Control instruction "MC_MoveCircularAbsolute", you move a kinematics with a circular motion to an absolute position. With the Motion Control instruction "MC_MoveCircularRelative", you move a kinematics with a circular motion relative to the position which was present at the start of the job processing.

Specify an intermediate point on the circular path and the target position for the definition of the circular path. The circular path is calculated via the start position, the intermediate point and the target position. The kinematics can only traverse circular paths less than 360.

With this mode of circular path definition, the kinematics can move in three-dimensional space:

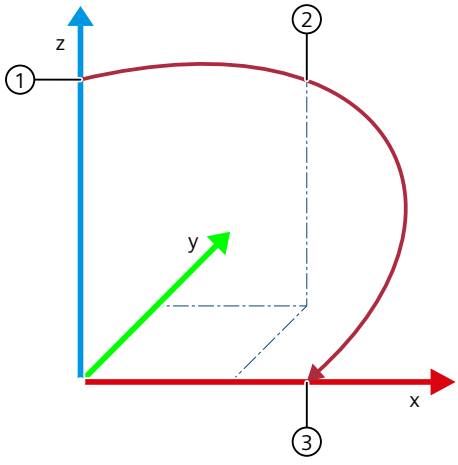

① Start position

② Intermediate point ("AuxPoint")

③ Target position ("EndPoint")

When defining the intermediate point and target position, ensure that the information is consistent.

Parameter inputs

You define the circular path of the circular motion with the following parameters of the Motion Control instruction "MC_MoveCircularAbsolute (Page 350)" or "MC_MoveCircularRelative (Page 356)":

- With the "CircMode" parameter, you define the mode of the circular path definition. With "CircMode" = 0, you define the circular path via an intermediate point and the target position.
- With the "CoordSystem" parameter, you define the reference coordinate system.
- With the "AuxPoint[1..3]" parameters, you define the x, y and z coordinates of the intermediate point of the circular path in the reference coordinate system.
- With the parameter "EndPoint[1..4]", you define the x, y, z and A coordinates of the target position in the reference coordinate system.
- With up to four interpolating kinematics axes:
  - With the "DirectionA" parameter, you define the direction of movement of the Cartesian orientation A (only with "MC_MoveCircularAbsolute").

- With more than four interpolating kinematics axes:
  - With the parameter "EndPoint[5..6]", you define the B and C coordinates of the target position in the reference coordinate system.

NOTE
Orientation motion
The target orientation is always approached by the shortest distance. If the target orientation can be reached via two paths of equal length, motion is in the positive direction.

7.5.1.2 Defining the circular path via center point and angle (S7-1500T)

With the Motion Control instruction "MC_MoveCircularAbsolute", you move a kinematics with a circular motion to an absolute position. With the Motion Control instruction "MC_MoveCircularRelative", you move a kinematics with a circular motion relative to the position which was present at the start of the job processing.

Specify the intermediate point of the circular path and the angle for the definition of the circular path. Also define the main plane and the orientation of the circular path. The circular path and the target position are calculated via the defaults .

With this mode of circular path definition, the kinematics can also move circular paths with more than 360°in a main plane.

When defining the circle center and angle, ensure that the information is consistent.

Parameter inputs

You define the circular path of the circular motion with the following parameters of the Motion Control instruction "MC_MoveCircularAbsolute (Page 350)" or "MC_MoveCircularRelative (Page 356)":

- With the "CircMode" parameter, you define the mode of the circular path definition. With "CircMode" = 1, you define the circular path via the circle center and an angle in a main plane.
- With the "CoordSystem" parameter, you define the reference coordinate system.
- With the "AuxPoint[1..3]" parameters, you define the x, y and z coordinates of the center point of the circular path in the reference coordinate system.
- With the "EndPoint[4]" parameter, you define the A coordinates of the target position in the reference coordinate system.
- With up to four interpolating kinematics axes:
  - With the "DirectionA" parameter, you define the direction of movement of the Cartesian orientation A (only with "MC_MoveCircularAbsolute").

- With more than four interpolating kinematics axes:
  - With the parameter "EndPoint[5..6]", you define the B and C coordinates of the target position in the reference coordinate system.

NOTE
Orientation motion
The target orientation is always approached by the shortest distance. If the target orientation can be reached via two paths of equal length, motion is in the positive direction.

- With the "Arc" parameter, you define the angle of the circular path in the main plane.
- With the "CirclePlane" parameter, you define the main plane of the circular path in the reference coordinate system.
- With the "PathChoice" parameter, you define the orientation of the circular path in the reference coordinate system.

Main plane of the circular path

With the "CirclePlane" parameter, you define on which main plane of the reference coordinate system the circular path is to move:

- With the "CirclePlane" = 0 parameter, you define the xz plane of the reference coordinate system as the main plane.
- With the "CirclePlane" = 1 parameter, you define the yz plane of the reference coordinate system as the main plane.
- With the "CirclePlane" = 2 parameter, you define the xy plane of the reference coordinate system as the main plane.

Orientation of the circular path

There are two possible circular paths in the specified main plane. With the "PathChoice" parameter, you specify the direction in which the circular path should move:

- Use the positive direction of rotation with the "PathChoice" = 0 parameter.
- Use the negative direction of rotation using the "PathChoice" = 1 parameter.

In the following example, the xz plane is defined as the main plane:

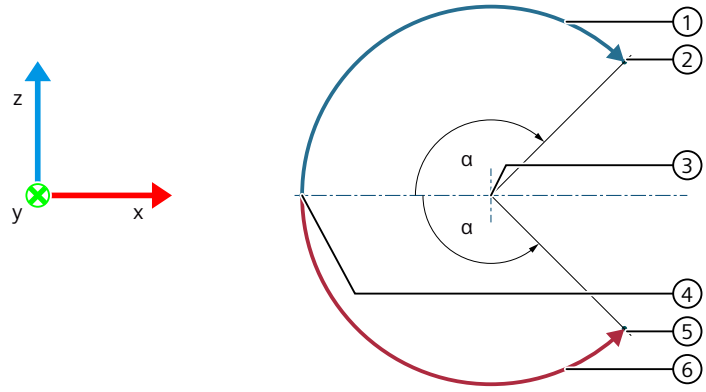

① Positive direction of rotation ("PathChoice" = 0)
② Target position of positive direction of rotation
③ Circle center
④ Start position
⑤ Target position of negative direction of rotation
⑥ Positive direction of rotation ("PathChoice" = 1)
α Angle α = 135°

The figure below shows the direction of rotation depending on the main planes:

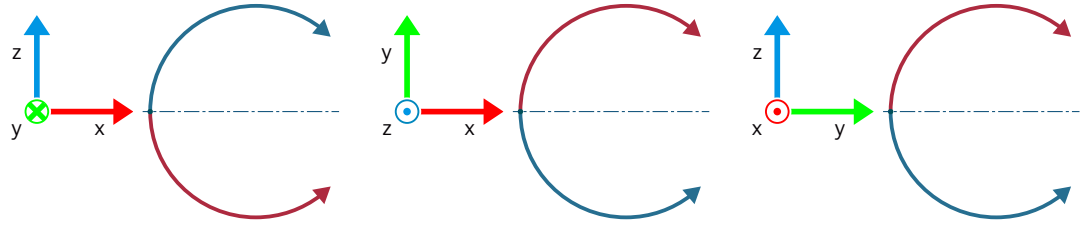

Positive direction of rotation

Negative direction of rotation

7.5.1.3 Define circular path via radius and target position (S7-1500T)

With the Motion Control instruction "MC_MoveCircularAbsolute", you move a kinematics with a circular motion to an absolute position. With the Motion Control instruction "MC_MoveCircularRelative", you move a kinematics with a circular motion relative to the position which was present at the start of the job processing.

Specify the radius of the circular path and the target position for each definition of the circular path. Also define the main plane and the orientation of the circular path. The circular path is calculated via the defaults.

With this mode of circular path definition, the kinematics can only move circular paths less than 360°in a main plane.

When defining the radius and target position, ensure that the information is consistent.

Parameter inputs

You define the circular path of the circular motion with the following parameters of the Motion Control instruction "MC_MoveCircularAbsolute (Page 350)" or "MC_MoveCircularRelative (Page 356)":

- With the "CircMode" parameter, you define the mode of the circular path definition. With "CircMode" = 2, you define the circular path via the circle radius and the target position in a main plane.
- With the "CoordSystem" parameter, you define the reference coordinate system.
- With the parameter "EndPoint[1..4]", you define the x, y, z and A coordinates of the target position in the reference coordinate system.
- With up to four interpolating kinematics axes:
  - With the "DirectionA" parameter, you define the direction of movement of the Cartesian orientation A (only with "MC_MoveCircularAbsolute").
- With more than four interpolating kinematics axes:
  - With the parameter "EndPoint[5..6]", you define the B and C coordinates of the target position in the reference coordinate system.

NOTE

Orientation motion

The target orientation is always approached by the shortest distance. If the target orientation can be reached via two paths of equal length, motion is in the positive direction.

- With the "Radius" parameter, you define the radius of the circular path in the main plane.
- With the "CirclePlane" parameter, you define the main plane of the circular path in the reference coordinate system.
- With the "PathChoice" parameter, you define the orientation of the circular path in the reference coordinate system.

Main plane of the circular path

With the "CirclePlane" parameter, you define on which main plane of the reference coordinate system the circular path is to move:

- With the "CirclePlane" = 0 parameter, you define the xz plane of the reference coordinate system as the main plane.
- With the "CirclePlane" = 1 parameter, you define the yz plane of the reference coordinate system as the main plane.
- With the "CirclePlane" = 2 parameter, you define the xy plane of the reference coordinate system as the main plane.

Orientation of the circular path

Depending on the radius, up to four possible circular paths can occur in the specified main plane. With the "PathChoice" parameter, you specify how the circular path should move:

- Use the shorter positive circle segment with the "PathChoice" = 0 parameter.
- Use the shorter negative circle segment using the "PathChoice" = 1 parameter.
- Use the longer positive circle segment with the "PathChoice" = 2 parameter.
- Use the longer negative circle segment with the "PathChoice" = 3 parameter.

In the following example, the xz plane is defined as the main plane:

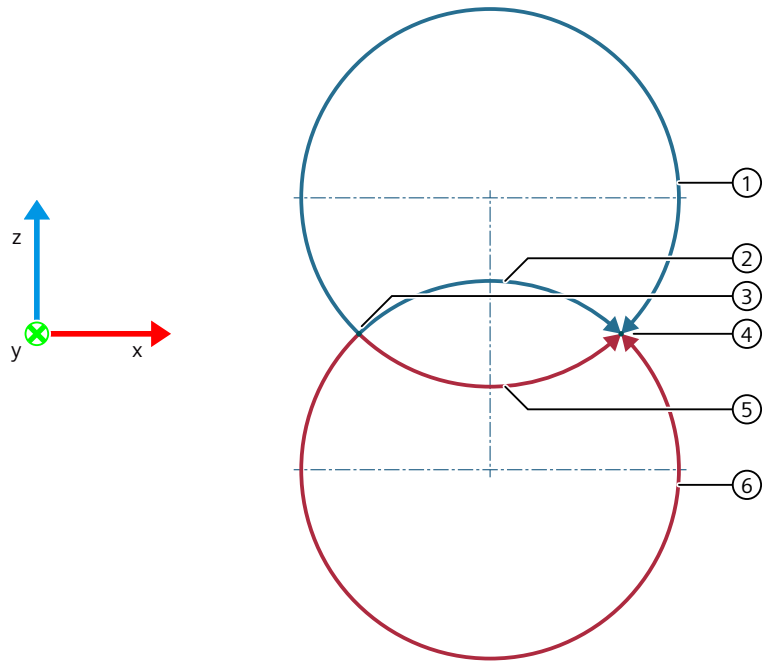

① Longer positive circle segment ("PathChoice" = 2)
② Shorter positive circle segment ("PathChoice" = 0)
③ Start position
④ Target position
⑤ Shorter negative circle segment ("PathChoice" = 1)
⑥ Longer negative circle segment ("PathChoice" = 3)

The following figure shows the positive and negative circle segments depending on the main planes:

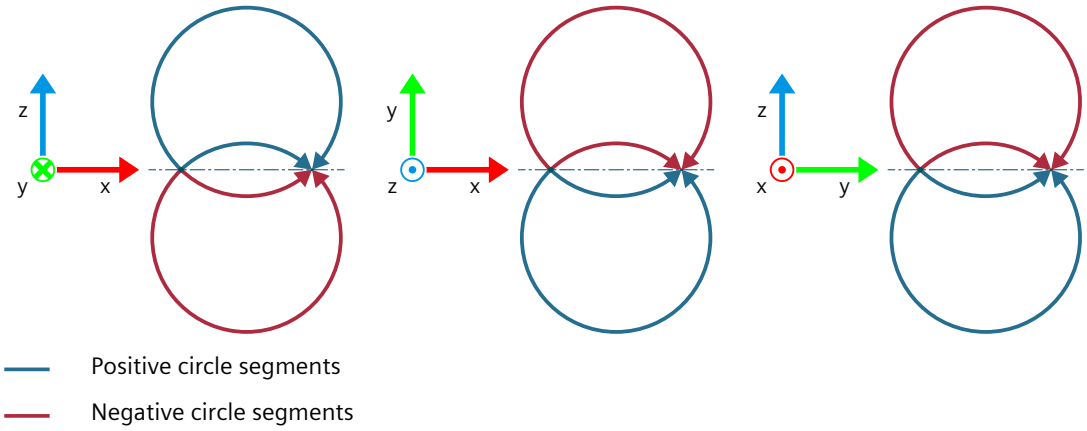

7.5.2 Define the dynamic response of the circular motion (S7-1500T)

You can define the dynamic response of the circular path motion at the corresponding Motion Control instruction. You can only define the dynamic response of the orientation motion in the configuration of the kinematics technology object.

Parameter inputs

You define the dynamics of the circular motion with the following parameters of the Motion Control instruction "MC_MoveCircularAbsolute (Page 350)" or "MC_MoveCircularRelative (Page 356)":

- With the "Velocity" parameter, you specify the velocity of the path motion.
- With the "Acceleration" parameter, you specify the acceleration of the path motion.
- With the "Deceleration" parameter, you specify the deceleration of the path motion.
- With the "Jerk" parameter, you specify the jerk of the path motion.
- With the "DynamicAdaption" parameter, you specify the dynamic adaptation of the path motion.

With the following configuration parameters under "Technology object > Configuration > Extended parameters > Dynamics", you define the dynamic response of the orientation motion:

- Select the entry "Orientation motion" in the "Settings for" drop-down list.
- Define the velocity of the orientation motion (<TO>.DynamicDefaults.Orientation.Velocity) in the field "Velocity".
- Define the acceleration of the orientation motion (<TO>.DynamicDefaults.Orientation.Acceleration) in the field "Acceleration".
- Define the deceleration of the orientation motion (<TO>.DynamicDefaults.Orientation.Deceleration) in the field "Deceleration".
- Define the jerk of the orientation motion (<TO>.DynamicDefaults.Orientation.Jerk) in the field "Jerk".

Dynamic adaptation

The dynamic adaptation limits the path dynamics to the axis dynamics. When dynamic adaptation is activated, a velocity profile for the motion of the kinematics is calculated, which takes into account not only the dynamic specifications or dynamic defaults and the dynamic limits of the kinematic motion, but also the maximum velocity, maximum acceleration and maximum deceleration of the kinematics axes. In addition, the dynamic defaults and the dynamic limits for velocity, acceleration and deceleration of the orientation motion are taken into account.

Use the configured default

With the "DynamicAdaption" < 0 parameter, the configured default is used. You configure the default value in the field "Limit path dynamics to axis dynamics" under "Technology object > Configuration > Extended parameters > Dynamics" of the kinematics technology object (<TO>.DynamicDefaults.DynamicAdaption).

Do not limit path dynamics to axis dynamics

With the "DynamicAdaption" = 0 parameter, no dynamic adaptation is used for the circular motion.

Limit path dynamics to axis dynamics with segmentation of the path

With the "DynamicAdaption" = 1 parameter, the dynamic adaptation is used for the circular motion. The path of the circular motion is divided into individual segments. For each of these segments, the velocity profile is calculated with consideration of the applicable limits. The dynamic response of the path is thus adapted for individual segments of the circular motion. As a result, a higher traversing velocity is reached section by section and the traversing time of the circular motion is reduced.

Note that dynamic adaptation with segmentation of the path requires a considerably higher computing time than dynamic adaptation without segmentation of the path.

Limit path dynamics to axis dynamics without segmentation of the path

With the "DynamicAdaption" = 2 parameter, the dynamic adaptation is used for the circular motion. The velocity profile is calculated for the entire circular motion. The limitations which apply to the entire motion job are taken into consideration.

7.5.3 Define the transition of circular motion (S7-1500T)

Multiple motions can be appended to one another, in which case the kinematics comes to a standstill between the individual motions. To achieve an uninterrupted Motion Control without standstill between the individual motion jobs, the individual motions can be blended with geometric transitions. You define the corresponding parameters at the new motion job (A2), into which the previous job (A1) is to be blended.

In the following examples, the various motion transitions are explained using an active linear motion (A1) and a subsequent circular motion (A2).

Parameter inputs

You define the transition to the active motion with the following parameters of the Motion Control instruction "MC_MoveCircularAbsolute (Page 350)" or "MC_MoveCircularRelative (Page 356)":

- With the "BufferMode" parameter, you define the mode of the motion transition.
- With the "TransitionParameter[1]" parameter, you define the rounding clearance.

Appending motion

With the "BufferMode" = 1 parameter, the circular motion is appended to the active motion. The active motion sequence (A1) is completed and the kinematics comes to a standstill. The circular motion (A2) is then executed.

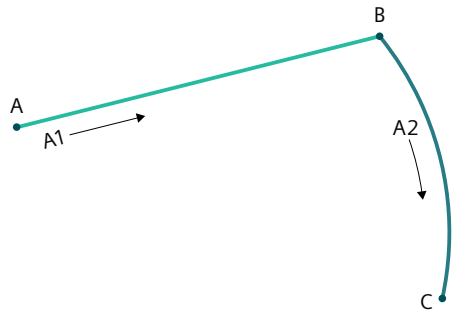

In this case, the parameter "TransitionParameter[1]" is not relevant.

Blending motion

With the "BufferMode" = 2 parameter, the active motion is blended with the circular motion and the lower velocity of both jobs is used.
With the "BufferMode" = 5 parameter, the active motion is blended with the circular motion and the higher velocity of both jobs is used.

Rounding clearance d > 0.0

With the "TransitionParameter[1]" < 0.0 parameter, the active motion (A1) is blended with the circular motion (A2) as soon as the specified rounding clearance to the target position of the active motion is reached.

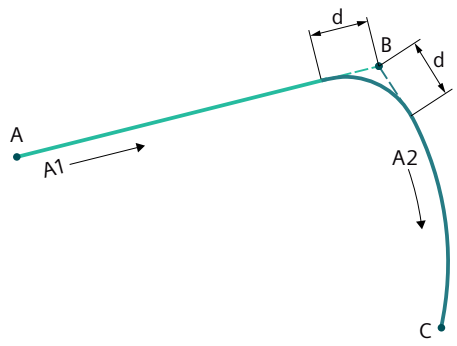

Rounding clearance d = 0.0

With the "TransitionParameter[1]" = 0.0 parameter the circular motion is appended to the active motion as with "BufferMode" = 1. The active motion sequence (A1) is completed and the kinematics comes to a standstill. The circular motion (A2) is then executed.

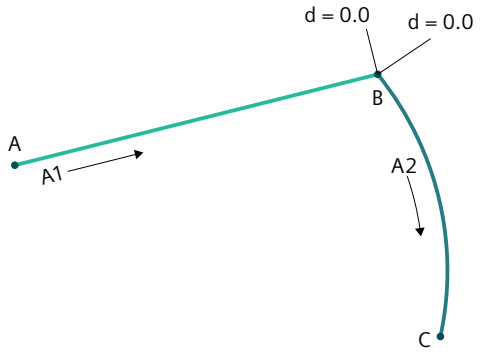

Rounding clearance d < 0.0

With the "TransitionParameter[1]" < 0.0 parameter, the active motion (A1) is blended with the circular motion (A2) as soon as the maximum rounding clearance to the target position of the active motion is reached.

You configure the factor of the maximum rounding clearance under "Technology object > Configuration > Extended parameters > Job sequence" (<TO>.Transition.FactorBlendingLength). In the following example, the maximum rounding clearance is limited to 50% of the shorter distance.

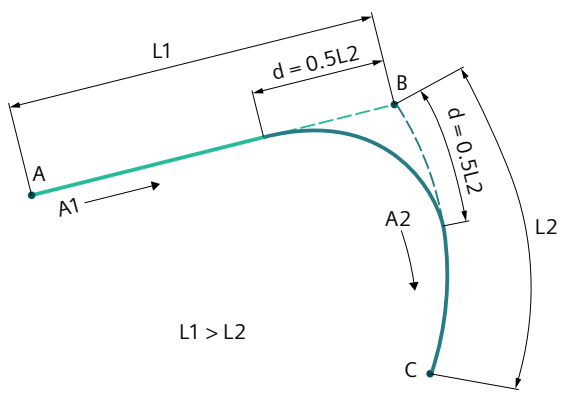

7.5.4 Starting a circular motion job (S7-1500T)

After the start of the circular motion job with "Execute" = TRUE, the job is added to the job sequence (Page 217). The processing status is indicated in the Motion Control instruction "MC_MoveCircularAbsolute (Page 350)" or. "MC_MoveCircularRelative (Page 356)" with the parameter "Busy" = TRUE. If the job is active, this is indicated with the parameter "Active" = TRUE and in the "<TO>.StatusWord.X9 (CircularCommand)" tag of the technology object.

As soon as the target position is reached or the circular motion is blended to the next motion, the job is completed. The status is indicated with the parameter "Done" = TRUE.

You can find more information in the section "Motion status and remaining distance (Page 207)".

7.5.5 Tags: Circular motion (S7-1500T)

The following technology object tags are relevant for motion control:

Tag	Description	
Status values		
<TO>.StatusWord	Status indicator for an active motion	
<TO>.StatusWord.X9 (CircularCommand)	The value "TRUE" is set if a job for circular motion is active ("MC_MoveCircularAbsolute", "MC_MoveCircularRelative").	
<TO>.Tcp	Target coordinates x, y, z, A, B, C of the kinematics motion in the world coordinate system	
<TO>.StatusPath.CoordSystem	Coordinate system of the active motion job	
	0	World coordinate system
	1, 2, 3	Object coordinate system 1, 2, 3
	100	Machine coordinate system
	101	Joint coordinate system[1)]
<TO>.StatusPath.Velocity	Current path velocity (setpoint reference)	
<TO>.StatusPath.Acceleration	Current path acceleration (setpoint reference)	
<TO>.StatusPath.OrientationVelocity	Resulting orientation velocity	
<TO>.StatusPath.DynamicAdaption	Dynamic adaptation	
	0	No dynamic adaptation
	1	Dynamic adaptation with segmentation of the path
	2	Dynamic adaptation without segmentation of the path
<TO>.StatusPath.TotalPathLength	Total path length of linear and circular path motions Sum of: • Distance of all completed motion jobs • Distance travelled of the active motion job • Remaining distance of the motion job • Calculated distance of all jobs in the job sequence	
<TO>.StatusPath.AccumulatedPathLength	Accumulated path length of linear and circular path motions Sum of: • Distance of all completed motion jobs • Distance travelled of the active motion job	
<TO>.StatusMotionQueue.NumberOfCommands	Number of jobs in the job sequence	
Override		
<TO>.Override.Velocity	Velocity override	
Dynamic limits		
<TO>.DynamicLimits.Path.Velocity	Dynamic limitation for the maximum velocity of the path	
<TO>.DynamicLimits.Path.Acceleration	Dynamic limitation for the maximum acceleration of the path	
<TO>.DynamicLimits.Path.Deceleration	Dynamic limitation for the maximum deceleration of the path	
<TO>.DynamicLimits.Path.Jerk	Dynamic limitation for the maximum jerk of the path	
<TO>.DynamicLimits.Orientation.Velocity	Dynamic limitation for the maximum velocity of the Cartesian orientation	

1) With up to four interpolating kinematics axes, the joint coordinate system is identical to the machine coordinate system.

Tag	Description	
<TO>.DynamicLimits.Orientation.Acceleration	Dynamic limitation for the maximum acceleration of the Cartesian orientation	
<TO>.DynamicLimits.Orientation.Deceleration	Dynamic limitation for the maximum deceleration of the Cartesian orientation	
<TO>.DynamicLimits.Orientation.Jerk	Dynamic limitation for the maximum jerk of the Cartesian orientation	
Dynamic defaults		
<TO>.DynamicDefaults.Path.Velocity	Default setting of the velocity of the path	
<TO>.DynamicDefaults.Path.Acceleration	Default setting of the acceleration of the path	
<TO>.DynamicDefaults.Path.Deceleration	Default setting of the deceleration of the path	
<TO>.DynamicDefaults.Path.Jerk	Default setting of the jerk of the path	
<TO>.DynamicDefaults.Orientation.Velocity	Default setting of the velocity of the Cartesian orientation	
<TO>.DynamicDefaults.Orientation.Acceleration	Default setting of the acceleration of the Cartesian orientation	
<TO>.DynamicDefaults.Orientation.Deceleration	Default setting of the deceleration of the Cartesian orientation	
<TO>.DynamicDefaults.Orientation.Jerk	Default setting of the jerk of the Cartesian orientation	
<TO>.DynamicDefaults.DynamicAdaption	Default setting of the dynamic adaptation	
	0	No dynamic adaptation
	1	Dynamic adaptation with segmentation of the path
	2	Dynamic adaptation without segmentation of the path
Rounding clearance		
<TO>.Transition.FactorBlendingLength	Factor of the maximum rounding clearance in percent [%] The configuration takes place in "Technology object > Configuration > Extended parameters > Job sequence". Change the factor in the user program before sending the motion jobs to the job sequence so that the change is effective.	
	0.0	No blending possible
	50.0	Default value
	100.0	Blending possible with complete segment length or motion length

1) With up to four interpolating kinematics axes, the joint coordinate system is identical to the machine coordinate system.

7.6 Moving a kinematics with a synchronous "point-to-point" motion (S7-1500T)

With a synchronous "point-to-point" motion (sPTP motion), you can move a kinematics time- and motion-optimized, bypass singularities (Page 167) or change joint position spaces. The kinematics does not follow a specified path. The single-axis motions, which move the kinematics axes synchronously, are calculated from the start and target positions. All kinematics axes move simultaneously and reach the corresponding target position at the same time. The kinematics axis with the longest travel time determines the travel time of the sPTP motion and therefore the travel time of all other kinematics axes. The movement path of the tool center point (TCP) results from the motions and dynamics of the individual axes.

Blending between sPTP motions and path motions results in the reduction of the travel time of a sequence of motion jobs, e.g.:

- Record product with a defined path motion
- Move product with sPTP motion as quickly as possible
- Place product with a defined path motion

With the Motion Control instruction "MC_MoveDirectAbsolute (Page 363)", you move a kinematics with an sPTP motion to an absolute position. With the Motion Control instruction "MC_MoveDirectRelative (Page 371)", you move a kinematics with an sPTP motion relative to the position which was present at the start of the job processing.

You have the following options for the sPTP motion:

- Define target position:
  - Define axis target positions (Page 246)
  - Define joint target positions (Page 247)
  - Define Cartesian coordinates (Page 248)
- Define dynamic factors (Page 249)
- Define motion transition (Page 250)
- Start job and show execution progress (Page 253)

7.6.1 Defining the target position of the sPTP motion (S7-1500T)

7.6.1.1 Defining the axis target position of the sPTP motion (S7-1500T)

With the Motion Control instruction "MC_MoveDirectAbsolute", you move a kinematics with a synchronous "point-to-point" motion (sPTP motion) to an absolute position. With the Motion Control instruction "MC_MoveDirectRelative", you move a kinematics with an sPTP motion relative to the position which was present at the start of the job processing.

Enter axis-related target positions in the machine coordinate system (MCS). The single-axis motions are calculated from the start and target positions of the axes. The kinematics moves all single-axis motions synchronously. All kinematics axes move simultaneously and reach the given target positions at the same time. The kinematics axis with the longest travel time determines the travel time of the sPTP motion and therefore the travel time of all other kinematics axes.

Parameter inputs

Absolute target positions

You define the absolute target position of the axes with the following parameters of the Motion Control instruction "MC_MoveDirectAbsolute (Page 363)":

- With the "CoordSystem" = 100 parameter, you define the MCS as the reference coordinate system.
- With the "Position[1..4]" parameters, you define the absolute target joint positions of the axes A1 to A4.
- With more than four interpolating kinematics axes:
  - With the "Position[5..6]" parameters, you define the absolute target joint positions of the axes A5 and A6.

Relative target positions

You define the relative target position of the axes with the following parameters of the Motion Control instruction "MC_MoveDirectRelative (Page 371)":

- With the "CoordSystem" = 100 parameter, you define the MCS as the reference coordinate system.
- With the "Distance[1..4]" parameters, you define the relative target joint positions of the axes A1 to A4.
- With more than four interpolating kinematics axes:
  - With the "Distance[5..6]" parameters, you define the relative target joint positions of the axes A5 and A6.

7.6.1.2 Define joint target positions of the sPTP motion (S7-1500T)

With the Motion Control instruction "MC_MoveDirectAbsolute", you move a kinematics with a synchronous "point-to-point" motion (sPTP motion) to an absolute position. With the Motion Control instruction "MC_MoveDirectRelative", you move a kinematics with an sPTP motion relative to the position which was present at the start of the job processing.

Enter target positions in the joint coordinate system (JCS). The single-axis motions are calculated from the start and target positions of the joints. The kinematics moves all single-axis motions synchronously. All kinematics axes move simultaneously and reach the given target positions at the same time. The kinematics axis with the longest travel time determines the travel time of the sPTP motion and therefore the travel time of all other kinematics axes.

With up to four interpolating kinematics axes, the joint coordinate system is identical to the machine coordinate system.

Parameter inputs

Absolute target positions

You define the absolute target position of the joints with the following parameters of the Motion Control instruction "MC_MoveDirectAbsolute (Page 363)":

- With the "CoordSystem" = 101 parameter, you define the JCS as the reference coordinate system.
- With the "Position[1..4]" parameters, you define the absolute target positions of joints J1 to J4.
- With more than four interpolating kinematics axes:
  - With the "Position[5..6]" parameters. you define the absolute target positions of joints J5 and J6.

Relative target positions

You define the relative target positions of the joints with the following parameters of the Motion Control instruction "MC_MoveDirectRelative (Page 371)":

- With the "CoordSystem" = 101 parameter, you define the JCS as the reference coordinate system.
- With the "Distance[1..4]" parameters, you define the relative target positions of joints J1 to J4.
- With more than four interpolating kinematics axes:
  - With the "Distance[5..6]" parameters, you define the relative target positions of joints J5 and J6.

7.6.1.3 Defining the Cartesian target coordinates of the sPTP motion (S7-1500T)

With the Motion Control instruction "MC_MoveDirectAbsolute", you move a kinematics with a synchronous "point-to-point" motion (sPTP motion) to an absolute position. With the Motion Control instruction "MC_MoveDirectRelative", you move a kinematics with an sPTP motion relative to the position which was present at the start of the job processing.

You define the Cartesian target coordinates in the world coordinate system (WCS) or an object coordinate system (OCS). The single-axis motions are calculated from the start and target coordinates. The kinematics moves all single-axis motions synchronously. All kinematics axes move simultaneously and reach their target positions at the same time. The kinematics axis with the longest travel time determines the travel time of the sPTP motion and therefore the travel time of all other kinematics axes.

Parameter inputs

Absolute Cartesian coordinates

You define the absolute Cartesian target coordinates of the sPTP motion with the following parameters of the Motion Control instruction "MC_MoveDirectAbsolute (Page 363)":

- With the "CoordSystem" = 0, 1, 2 or 3 parameter, you define the WCS, OCS1, OCS2 or OCS3 as the reference coordinate system.
- With the "Position[1..4]" parameters, you define the absolute Cartesian target coordinates x, y, z and A.
- With the "LinkConstellation" parameter, you define the target arm positioning space.
- With up to four interpolating kinematics axes:
  - With the "PositionMode" parameter, you define for the kinematics types with orientation A whether the value of the parameter "Position[4]" is to be interpreted as absolute or relative for the axis A4. This is only possible if you have enabled Modulo functionality for the axis A4.
  - If "PositionMode" = 1, you define the direction of movement of the Cartesian orientation A with the "DirectionA" parameter. This is only possible if you have enabled Modulo functionality for the axis A4.
- With more than four interpolating kinematics axes:
  - With the "Position[5..6]" parameters, you define the absolute Cartesian target coordinates B and C.
  - With the parameter "TurnJoint[1..6]", you define the target joint position ranges of the joints J1 to J6.

Relative Cartesian coordinates

You define the relative Cartesian target coordinates of the sPTP motion with the following parameters of the Motion Control instruction "MC_MoveDirectRelative (Page 371)":

- With the "CoordSystem" = 0, 1, 2 or 3 parameter, you define the WCS, OCS1, OCS2 or OCS3 as the reference coordinate system.
- With the "Distance[1..4]" parameters, you define the relative Cartesian target coordinates x, y, z and A.
- With the "LinkConstellation" parameter, you define the target arm positioning space.
- With more than four interpolating kinematics axes:
  - With the "Distance[5..6]" parameters, you define the relative target coordinates B and C.
  - With the parameter "TurnJoint[1..6]", you define the target joint position ranges of the joints J1 to J6.

Joint position range

With more than four interpolating kinematics axes, you can define the target joint position ranges of the joints J1 to J6. You determine the joint position range of the joint J[i] at the target position with the "TurnJoint[i]" parameter. The parameter values are defined as follows:

Value	Description
m (m < 0)	(m · 360) - 180 ≤ position < ((m + 1) · 360) - 180
-2	-900 ≤ position < -540
-1	-540 ≤ position < -180
0	Shortest distance
1	-180 ≤ position < 180
2	180 ≤ position < 540
3	540 ≤ position < 900
n (n > 0)	((n - 2) · 360) + 180 ≤ position < ((n -1) · 360) + 180

The parameterized values for the joint position ranges are absolute for the motion control instructions "MC_MoveDirectAbsolute" and "MC_MoveDirectRelative".

The current position setpoints of the joints J1 to J6 are indicated in the variables "<TO>.JointData.J[1..6].Position" of the technology object. You can derive the current joint position areas from the current position setpoints.

Example

The current position of a joint J[i] is 0°. The joint J[i] is therefore located in joint position range 1.

With the specification "Position[i]" = 90.0 and "TurnJoint[i]" = 2, the joint J[i] will not only rotate by 90°, but by 450° in order to reach the specified target joint position range 2.

With the specification "Position[i]" = 0.0 and "TurnJoint[i]" = 2, the joint J[i] will rotate by 360° in order to reach the center of the specified target joint position range 2.

7.6.2 Defining the dynamics factors of the sPTP motion (S7-1500T)

The dynamic response of the synchronous "point-to-point" motion (sPTP motion) is determined via dynamics factors. The factors relate to the configured maximum dynamic values of the kinematics axes. You configure the maximum dynamic values in "Technology objects > Configuration > Extended parameters > Limits > Dynamics limits" of the technology objects of the interconnected axes.

The single-axis motions, which move the kinematics axes synchronously, are calculated from the start and target positions. All kinematics axes move simultaneously and reach the corresponding target position at the same time. The kinematics axis with the longest travel time determines the travel time of the sPTP motion and therefore the travel time of all other kinematics axes. For the motion profile calculation, the dynamic values of the individual kinematics axes are adapted to the kinematics axis with the longest movement time.

Parameter inputs

You define the dynamics of the sPTP motion with the following parameters of the Motion Control instruction "MC_MoveDirectAbsolute (Page 363)" or "MC_MoveDirectRelative (Page 371)":

- With the "VelocityFactor" parameter, you define the velocity factor of the sPTP motion.
- With the "AccelerationFactor" parameter, you define the acceleration factor of the sPTP motion.
- With the "DecelerationFactor" parameter, you define the deceleration factor of the sPTP motion.
- With the "JerkFactor" parameter, you define the jerk factor of the sPTP motion.

Configure default settings

Proceed as follows to configure the defaults for the dynamics factors of the sPTP motion:

1. Open the "Technology object > Configuration > Extended parameters > Dynamics" configuration window of the kinematics technology object.
2. Select the entry "sPTP motion" in the "Settings for" drop-down list.
3. Enter the default for the velocity factor in the field "Velocity factor" (<TO>.DynamicDefaults.MoveDirect.VelocityFactor).
4. Enter the default for the acceleration factor in the field "Acceleration factor" (<TO>.DynamicDefaults.MoveDirect.AccelerationFactor).
5. Enter the default for the deceleration factor in the field "Deceleration factor" (<TO>.DynamicDefaults.MoveDirect.DecelerationFactor).
6. Enter the default for the jerk factor in the field "Jerk factor" (<TO>.DynamicDefaults.MoveDirect.JerkFactor).

7.6.3 Defining the transition of the sPTP motion (S7-1500T)

Multiple motions can be appended to one another, in which case the kinematics comes to a standstill between the individual motions. To achieve an uninterrupted Motion Control without standstill between the individual motion jobs, the individual motions can be blended with geometric transitions. You define the corresponding parameters at the new motion job (A2), into which the previous job (A1) is to be blended.

In the following examples, the various motion transitions are explained using an active linear motion (A1) and a subsequent sPTP motion (A2). The sPTP motion is shown as an example. The motion of the kinematics results from off the joint position of the individual axes and the dynamics of the motion job.

Parameter inputs

You define the transition to the active motion with the following parameters of the Motion Control instruction "MC_MoveDirectAbsolute (Page 363)" or "MC_MoveDirectRelative (Page 371)":

- With the "BufferMode" parameter, you define the mode of the motion transition.
- With the "TransitionParameter[1]" parameter, you define the rounding clearance.

Appending motion

With the "BufferMode" = 1 parameter, the sPTP motion is appended to the active motion. The active motion sequence (A1) is completed and the kinematics comes to a standstill. The sPTP motion (A2) is then executed.

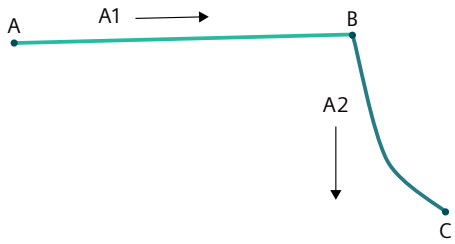

In this case, the parameter "TransitionParameter[1]" is not relevant.

Blending motion

With the "BufferMode" = 2 parameter, the active motion is blended with the sPTP motion. When blending two sPTP motions, the lower velocity of the two jobs is used.
With the "BufferMode" = 5 parameter, the active motion is blended with the sPTP motion. When blending two sPTP motions, the higher velocity of the two jobs is used.

NOTE

Blending path motions and sPTP motions

When blending path motions and sPTP motions, the velocity of the blending segment is independent of the parameter value "BufferMode" = 2 or 5. The dynamic limits of the axes are not exceeded in the blending area.

Set the acceleration and the jerk of the path motion as high as possible.

Rounding clearance d > 0.0

With the "TransitionParameter[1]" < 0.0 parameter, the active motion (A1) is blended with the sPTP motion (A2) as soon as the specified rounding clearance to the target position of the active motion is reached.

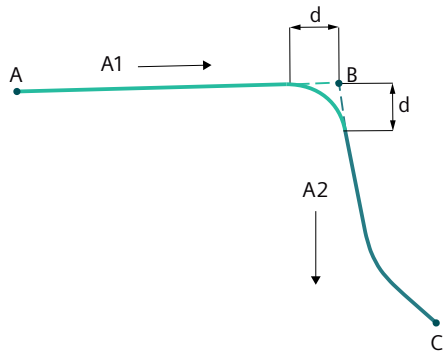

Rounding clearance d = 0.0

With the "TransitionParameter[1]" = 0.0 parameter, the sPTP motion is appended to the active motion as with "BufferMode" = 1. The active motion sequence (A1) is completed and the kinematics comes to a standstill. The sPTP motion (A2) is then executed.

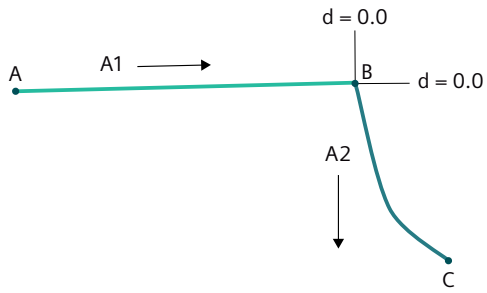

Rounding clearance d < 0.0

With the "TransitionParameter[1]" < 0.0 parameter, the active motion (A1) is blended with the sPTP motion (A2) as soon as the maximum rounding clearance to the target position of the active motion is reached.

You configure the factor of the maximum rounding clearance under "Technology object > Configuration > Extended parameters > Job sequence" (<TO>.Transition.FactorBlendingLength). In the following example, the maximum rounding clearance is limited to 50% of the shorter distance.

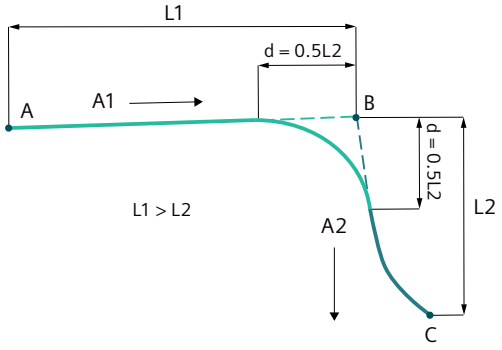

Constantly blending path motions and sPTP motions

To enable constant blending between sPTP motion and path motions, note the following:

- Set a sufficiently large rounding clearance.
- Avoid small curvature radii in the resulting contour of the TCP.
- Set the dynamic response of the path motion and the sPTP motion similarly.
- Set the dynamic adaptation for the path motion.
- Set the dynamics factors of the sPTP motion to smaller than 1.0.

7.6.4 Starting the sPTP motion job (S7-1500T)

After the start of the synchronous "point-to-point" job (sPTP motion) with "Execute" = TRUE, the job is added to the job sequence (Page 217). The processing status is indicated in the Motion Control instruction "MC_MoveDirectAbsolute (Page 363)" or. "MC_MoveDirectRelative (Page 371)" with the parameter "Busy" = TRUE. If the job is active, this is indicated with the parameter "Active" = TRUE and in the "<TO>.StatusWord.X11 (DirectCommand)" tag of the technology object.
The progress of execution is displayed using the "ExecutionTimeStatus" parameter. The parameter value starts at 0.0 and increases incrementally in the course of job execution.
As soon as the target position is reached or the sPTP motion is blended to the next motion, the job is completed. The status is indicated with the parameter "Done" = TRUE and "ExecutionTimeStatus" = 1.0 .

7.6.5 Tags: sPTP motion (S7-1500T)

The following technology object tags are relevant for motion control:

Tag	Description
Status values	

[1] With up to four interpolating kinematics axes, the joint coordinate system is identical to the machine coordinate system.

Tag	Description	
<TO>.StatusWord	Status indicator for an active motion	
<TO>.StatusWord.X11 (DirectCommand)	The value "TRUE" is set if a job for sPTP motion is active ("MC_MoveDirectAbsolute", "MC_MoveDirectRelative").	
<TO>.Tcp	Target coordinates x, y, z, A, B, C of the kinematics motion in the world coordinate system	
<TO>.AxesData.A[1..6]	Current setpoints of the kinematics motion for the kinematics axes A1 to A6	
<TO>.JointData.J[1..6]	Current setpoints of the kinematics motion for the joints J1 to J6	
<TO>.StatusPath.CoordSystem	Coordinate system of the active motion job	
	0	World coordinate system
	1, 2, 3	Object coordinate system 1, 2, 3
	100	Machine coordinate system
	101	Joint coordinate system[1)]
<TO>.StatusMotionQueue.NumberOfCommands	Number of jobs in the job sequence	
Override		
<TO>.Override.Velocity	Velocity override	
Dynamic defaults		
<TO>.DynamicDefaults.MoveDirect.VelocityFactor	Factor for the velocity of the axis motions in relation to the respective maximum velocity of the axes with sPTP motion.	
<TO>.DynamicDefaults.MoveDirect.Acceleration-Factor	Factor for the acceleration of the axis motions in relation to the respective maximum acceleration of the axes with sPTP motion.	
<TO>.DynamicDefaults.MoveDirect.Deceleration-Factor	Factor for the deceleration of the axis motions in relation to the respective maximum deceleration of the axes with sPTP motion.	
<TO>.DynamicDefaults.MoveDirect.JerkFactor	Factor for the jerk of the axis motions in relation to the respective maximum jerk of the axes with sPTP motion.	
Rounding clearance		
<TO>.Transition.FactorBlendingLength	Factor of the maximum rounding distance in percent [%] The configuration takes place in "Technology object > Configuration > Extended parameters > Job sequence". Change the factor in the user program before sending the motion jobs to the job sequence so that the change is effective.	
	0.0	No blending possible
	50.0	Default value
	100.0	Blending possible with complete segment length or motion length

1) With up to four interpolating kinematics axes, the joint coordinate system is identical to the machine coordinate system.

7.7 Conveyor Tracking (S7-1500T)

With conveyor tracking, the kinematics can follow an object on a moving conveyor belt. The conveyor belt is represented by a leading-value-capable technology object. Leading-value-capable technology objects are:

- Positioning axis
- Synchronous axis
- External encoder
- Leading axis proxy

WARNING

Overrun of the dynamics in the vicinity of a singularity

In the vicinity of a singularity (Page 167) a path motion without dynamic adaptation mostly results in overruns of the dynamics. This means one or more kinematics axes can move at very high speed and accelerate or decelerate with excessive force.

This can cause the following damages:

- Personal injury, for example, caused by products or machine parts coming loose
- Machine damages, for example, through overload of the mechanical components

Dynamic adaptation cannot be used in any phase of the conveyor tracking.

- Avoid motions within an OCS that is assigned to a leading-value-capable technology object in the vicinity of a singularity.

A typical motion sequence runs in 5 phases.

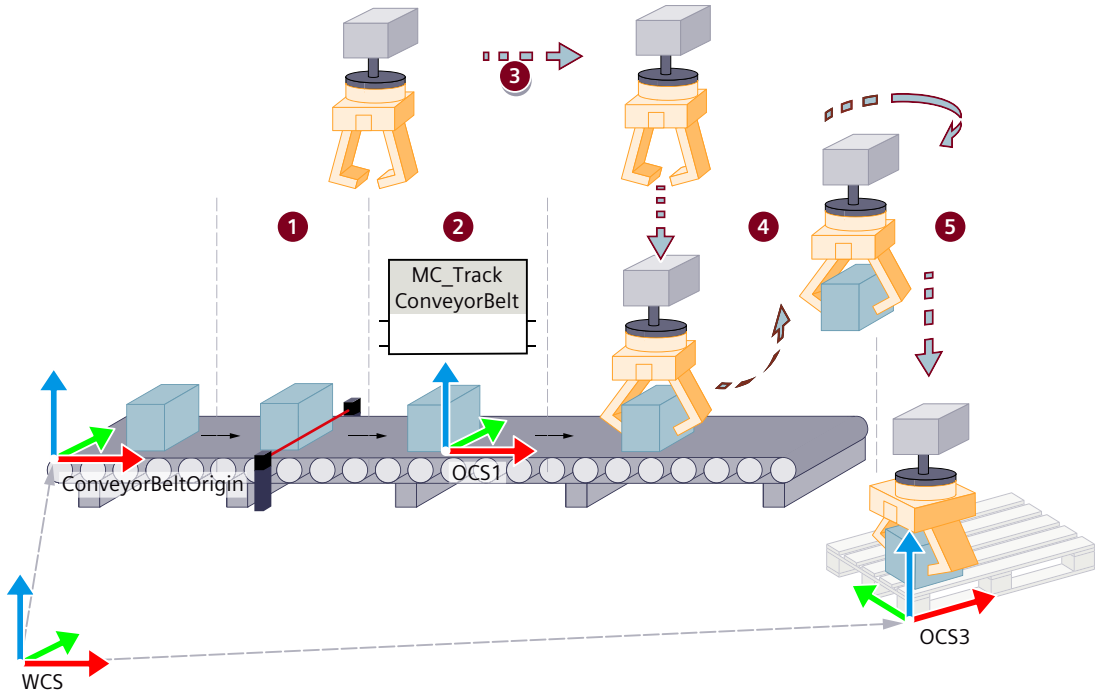

Phase 1: Detect the object position on the conveyor belt
Phase 2: Assign OCS to the object position
Phase 3: Synchronize TCP to tracked OCS

Phase 4: Move TCP within the tracked OCS
Phase 5: Desynchronize TCP from the OCS
The current status of conveyor tracking is displayed in the tag structure "<TO>.StatusConveyor[1..3].TrackingState". "StatusConveyor[1]" refers to OCS1.

7.7.1 Configuring and starting conveyor tracking (S7-1500T)

Configure and start the conveyor tracking function as follows:

- In the "Conveyor tracking" configuration window, interconnect the leading values and configure the type of coupling for conveyor tracking.
- Use the "MC_TrackConveyorBelt" Motion Control instruction to start the configured conveyor tracking.

Configure leading values for the conveyor tracking

Configure the coupling coefficients in the "Conveyor tracking" configuration window as follows:

1. In the table column "Possible technology objects", add all leading-value-capable technology objects that you need in the instruction as leading-value-capable values for conveyor tracking.
   An object coordinate system can only be coupled with a leading-value-capable technology object whose technology object is defined in this table.
2. In the "Type of coupling" column, select how the leading value of the technology object capable of the leading value is to be coupled:
   - Via a setpoint
   - Via an actual value
     With external encoders, only the selection of the actual value is available.
   - Delayed

See also

MC_TrackConveyorBelt: Start conveyor tracking V7 (Page 378)

7.7.2 Phases of conveyor tracking (S7-1500T)

Phase 1: Detect the object position on the conveyor belt

The frame "ConveyorBeltOrigin" is used to define the original position of the conveyor belt in relation to the WCS.
The x direction of the "ConveyorBeltOrigin" must be aligned in the direction of the conveyor belt. When defining frames, note the restrictions described in the "Frames (Page 188)" section. The "ConveyorBeltOrigin" frame is defined in the example on the left side of the conveyor belt. However, the "ConveyorBeltOrigin" frame can be set so that it does not coincide with the zero point of the conveyor belt. The frame "ConveyorBeltOrigin" is assigned to the Motion Control instruction "MC_TrackConveyorBelt".
When an object reaches a defined position, the current position of the conveyor belt is recorded, e.g. using a measuring input function with a light barrier or with a camera. The "BeltPosition" tag shows the position of the leading-value-capable technology object. In the

example, "BeltPosition" is 2000 mm at acquisition time t0. The distance between the measuring position and "ConveyorBeltOrigin" is 500 mm.

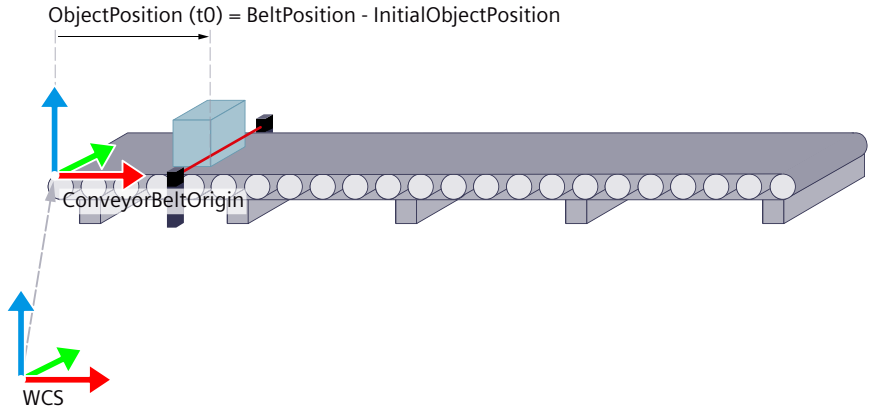

After the conveyor position has been acquired, you must enter the "InitialObjectPosition" at the Motion Control instruction "MC_TrackConveyorBelt".

The "InitialObjectPosition" is calculated as follows:

"InitialObjectPosition" = Detected position of the conveyor belt at the time of object detection - Distance of the measuring position from the "ConveyorBeltOrigin" in x direction

The "InitialObjectPosition" from the example is calculated as follows:

"InitialObjectPosition" = 2000 mm - 500 mm = 1500 mm

If the frame "ConveyorBeltOrigin" is exactly at the acquisition position of the object, then the "BeltPosition" corresponds to the "InitialObjectPosition".

The relative offset of the object to the ConveyorBeltOrigin in x direction is calculated from the difference between the "BeltPosition" and the "InitialObjectPosition".

At the time of acquisition, the "BeltPosition" is 2000 mm and the "InitialObjectPosition" is 1500 mm. This results in a relative offset of 500 mm. The offset of the tracked OCS in x direction to the reference position "ConveyorBeltOrigin" is displayed in the "ObjectPosition".

The "ObjectPosition" is calculated as follows:

ObjectPosition = BeltPosition - InitialObjectPosition

No OCS is yet coupled in this phase "TrackingState" is "0". The description of the tag and an overview of the behavior of the tag can be found in section "Behavior of the "TrackingState" tag (Page 261)".

Phase 2: OCS is assigned to the object position

With a Motion Control instruction "MC_TrackConveyorBelt", the OCS1 is assigned to the acquired object position ("ObjectPosition") at time t1. The OCS is then tracked with the object in x direction.

"TrackingState" changes from "0" to "1".

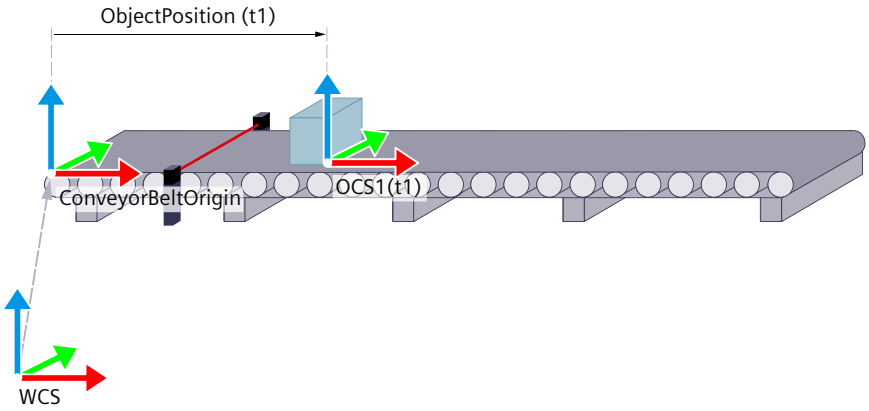

At time t1 the "BeltPosition" is 2400 mm. This calculates the "ObjectPosition" from the example as follows:

"ObjectPosition" = 2400 mm - 1500 mm = 900 mm.

When the conveyor belt moves, the "BeltPosition" and the "ObjectPosition" rise at the same time. The "InitialObjectPosition" is constant. The OCS is moved further in x direction.

At time t2, the conveyor belt has moved the object further in x direction of the OCS and the OCS1 continues to be tracked. The OCS frame moves with the leading value that the conveyor belt specifies.

At time t2 the "BeltPosition" is 2500 mm. This means that the "ObjectPosition" is 1000 mm.

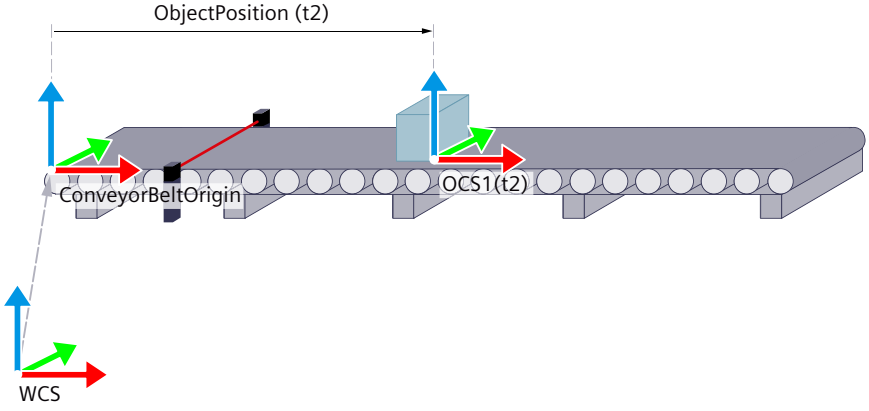

Phase 3: Synchronize TCP to tracked OCS

With the first motion job in the tracked OCS, the TCP is synchronized to the motion of the OCS. Use the Motion Control instruction "MC_MoveLinearAbsolute" or "MC_MoveCircularAbsolute" for the first motion job. You specify the target position in absolute coordinates in the tracked OCS.

"TrackingState" changes with the start of the job from "1" to "2".

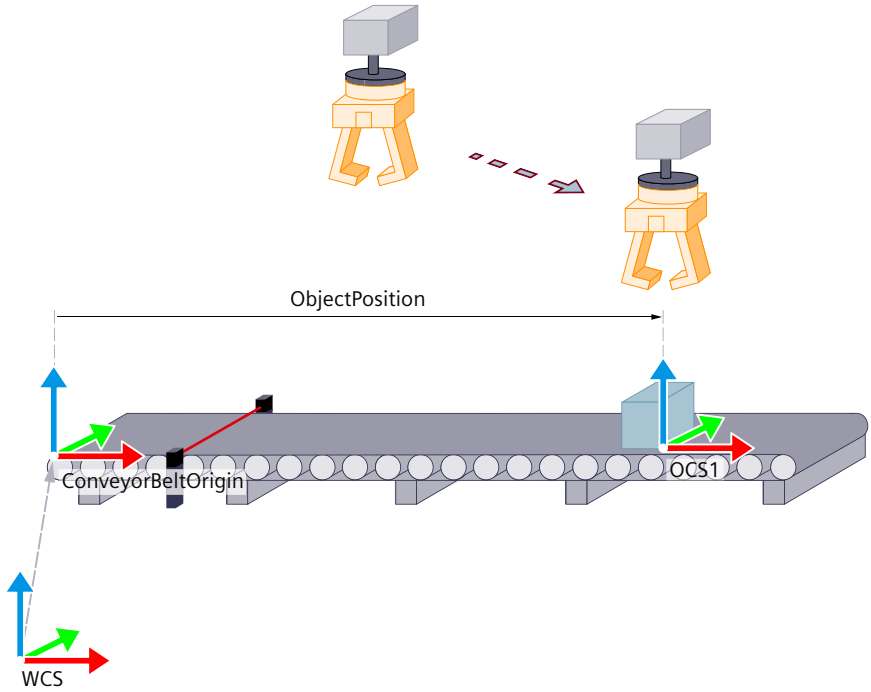

As soon as the target position is reached, "TrackingState" changes from "2" to "3" and the motion job is completed. The TCP now follows the object on the conveyor belt.

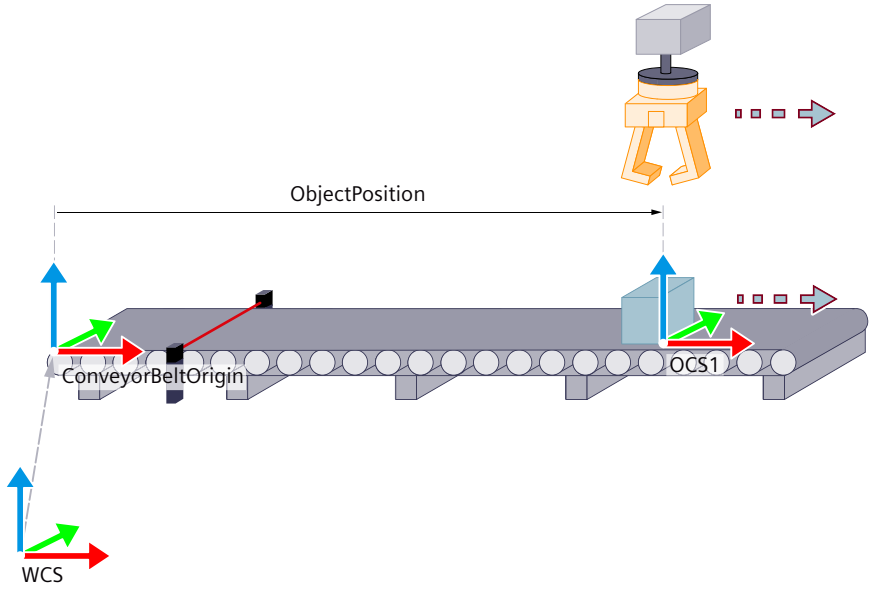

Phase 4: Move TCP within the OCS

In phase 4 you move the kinematics within the OCS, e.g. to grab or process the object. In phase 4, the TCP always follows the tracked OCS.

Select one of the following Motion Control instructions:

- "MC_MoveLinearAbsolute"
- "MC_MoveLinearRelative"
- "MC_MoveCircularAbsolute"
- "MC_MoveCircularRelative"

"TrackingState" remains at "3".

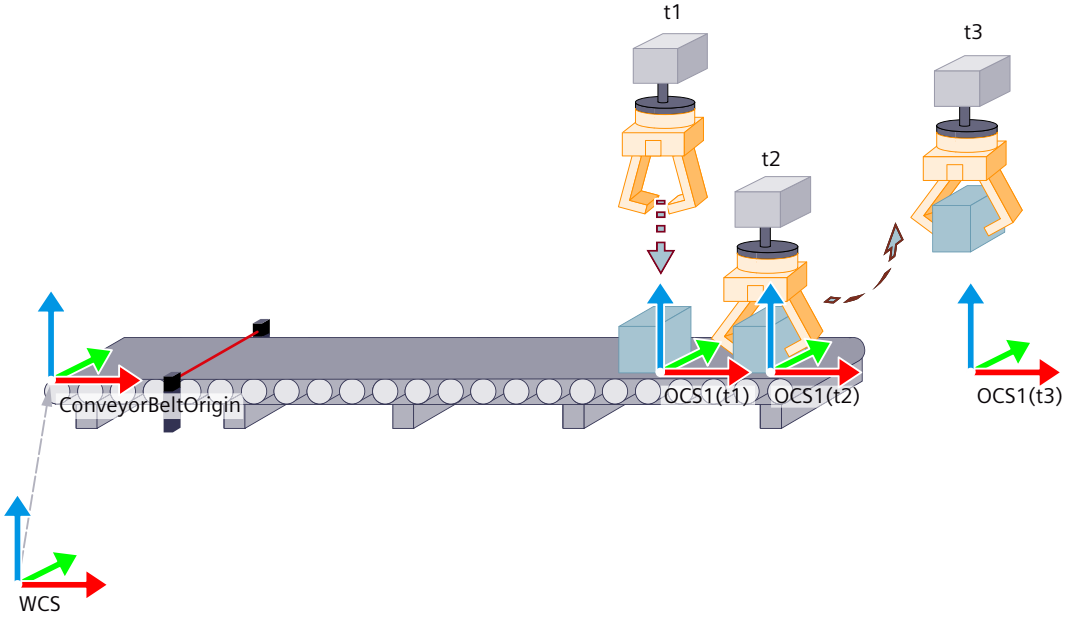

The figure shows three kinematics motions at different times.

- **t1:** The TCP is moved with the instruction "MC_MoveLinearAbsolute" in the tracked OCS1 downward in z direction toward the object.
- **t2:** The object is gripped. The TCP continues to move with the tracked OCS1.
- **t3:** The TCP is moved upwards in z direction with the instruction "MC_MoveLinearAbsolute" in the tracked OCS1, in order to lift the object from the conveyor belt. The TCP continues to be tracked with the OCS1.

Phase 5: Desynchronize TCP from the OCS

With a Motion Control instruction "MC_MoveLinearAbsolute" or "MC_MoveCircularAbsolute" in the WCS or a non-tracked OCS, the TCP is desynchronized from the OCS and no longer follows the motion of the conveyor belt.

"TrackingState" changes with the start of the job from "3" to "4".

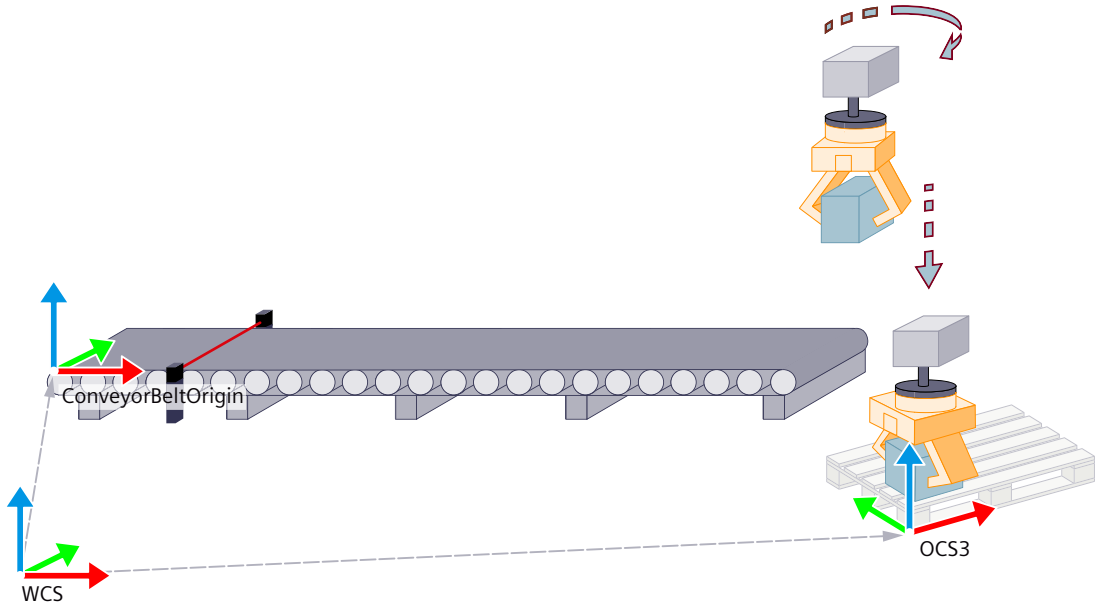

"TrackingState" changes with the end of the job from "4" to "0". The OCS is not tracked with the object position anymore.

7.7.3 Behavior of the "TrackingState" tag (S7-1500T)

The tag "<TO>.StatusConveyor[1..3].TrackingState" indicates the status of conveyor tracking.

Tag	Description	
<TO>.StatusConvey-or[1..3].TrackingState	Conveyor tracking status	
	0	OCS not assigned The OCS is not assigned to a leading-value-capable technology object.
	1	OCS assigned The Motion Control instruction "MC_TrackConveyorBelt" is finished and the OCS is assigned to a leading-value-capable technology object. The first path motion job in the tracked OCS can be sent.
	2	TCP synchronizes to OCS The OCS is assigned to a leading-value-capable technology object. The first path motion job in the tracked OCS is active.
	3	TCP follows OCS The OCS is assigned to a leading-value-capable technology object. The first path motion job in the tracked OCS is completed. The kinematics has reached the position programmed in the path motion job. The kinematics follows the motion of the OCS.
	4	TCP desynchronizes from OCS The motion of the kinematics in the tracked OCS is ended by a motion job in the WCS or a non-tracked OCS. When the motion job is completed, the "TrackingState" changes to 0 and the OCS is not tracked with the object position anymore.

The following overview shows how the value of "TrackingState" changes when a motion control instruction is issued:

Phase	Motion control instruction	Status of the instruction	"TrackingState"
1	Position acquisition, for example "MC_MeasuringInput"		0
2	"MC_TrackConveyorBelt"	Done = False	0
		Done = False → True	0 → 1
3	• "MC_MoveLinearAbsolute" • "MC_MoveCircularAbsolute"	Active = False, Done = False	1
		Active = False → True, Done = False	1 → 2
		Active = True → False, Done = False → True	2 → 3
4	• "MC_MoveLinearAbsolute" • "MC_MoveLinearRelative" • "MC_MoveCircularAbsolute" • "MC_MoveCircularRelative" Reference system: Currently tracked OCS	Active = False, Done = False	3
		Active = False → True, Done = False	3
		Active = True → False, Done = False → True	3
5	• "MC_MoveLinearAbsolute" • "MC_MoveCircularAbsolute" Reference system: WCS or non-tracked OCS	Busy = False, Done = False	3
		Busy = False → True, Done = False	3 → 4
		Busy = True → False, Done = False → True	4 → 0

Possible jobs to define the OCS depending on "TrackingState".

Motion control instruction	"TrackingState"	Result with active job
"MC_SetOcsFrame"	0, 4	The OCS is redefined.
	1, 2, 3	• The OCS is not redefined. • The OCS is no longer tracked with the conveyor belt. • All kinematics motions are stopped. Please note the following information in this regard.
"MC_TrackConveyorBelt"	0, 1, 4	The OCS is tracked with the defined conveyor belt.
	2, 3	• The OCS is no longer tracked with the conveyor belt. • All kinematics motions are stopped. Please note the following information in this regard.

NOTICE

Product and machine damage

If the motion of the kinematics with an OCS is not yet finished and the OCS is stopped while the conveyor is running, this leads to an interruption of motion of the kinematics.

Close the coupled motion of the kinematics using the OCS or stop the conveyor belt.

7.7.4 Motion between two tracked OCS (S7-1500T)

For many tasks it is necessary to place motion jobs orders in two tracked OCS.

Example of a pick-and-place task

A product is to be picked up by conveyor belt 1 and placed in a packaging on conveyor belt 2. The object position on conveyor belt 1 is assigned to OCS1, the object position on conveyor belt 2 is assigned to OCS2. The motion between the conveyor belts takes place via an intermediate point in the WCS.

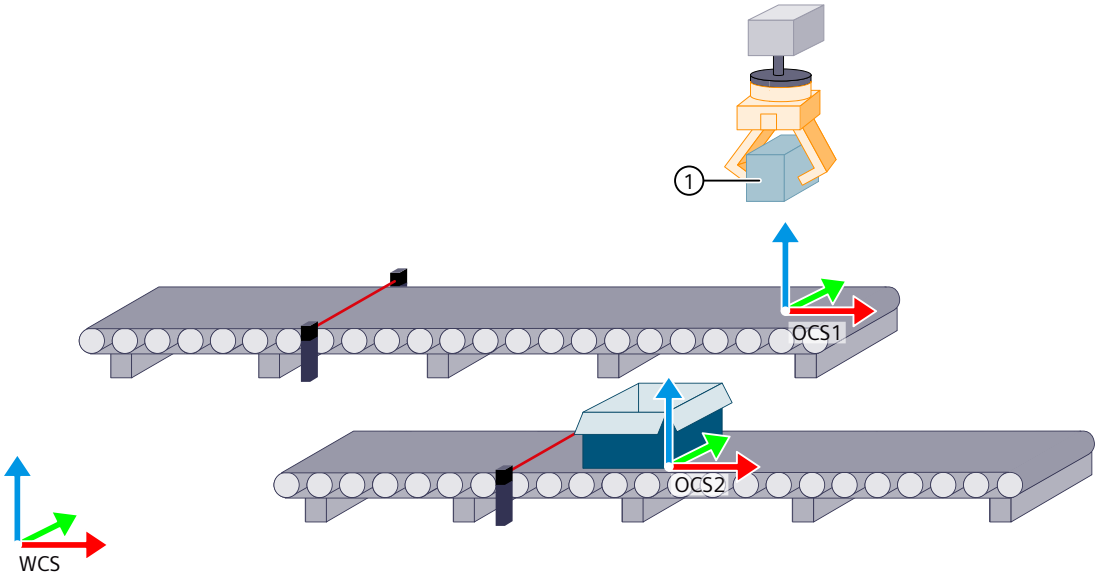

① Intermediate point in the WCS

NOTE

To approach the OCS2 more quickly, smooth the intermediate point in the WCS.

If the intermediate point is to be smoothed in the WCS, place the "MC_MoveLinearAbsolute" job in the OCS2 no later than at OCS1 "TrackingState" = "3".

Initial situation: The "TrackingState" of OCS1 is "3". The product has already been gripped and the TCP of the kinematics follows the OCS1.

Program the following Motion Control instructions to move the kinematics from the tracked OCS1 into the tracked OCS2.

1. To assign the OCS2 to the acquired object position, transmit a "MC_TrackConveyorBelt" job.
2. Transmit a "MC_MoveLinearAbsolute" job to an intermediate point in the WCS.
3. Transmit a "MC_MoveLinearAbsolute" job in the tracked OCS2 above the position for the storage.
   The kinematics follows the OCS2.
4. To store the object, transmit a motion command in the OCS2.

7.7.5 Dynamics in the conveyor tracking phases (S7-1500T)

During synchronization or desynchronization, the dynamics of the kinematics results from the dynamics of the motion job and the dynamics required for synchronization or desynchronization. While traveling in the OCS, the dynamics results from the dynamics of the

motion job and the dynamics of the conveyor belt. The dynamics of the kinematics is not limited in any phase of the conveyor tracking.

Synchronization or desynchronization to conveyors with changing conveyor speed results in high dynamics of the kinematics. Execute the synchronization or desynchronization at a constant conveyor speed.

The path length of the motion job for synchronization or desynchronization influences the dynamics of the kinematics. To reduce the dynamics of the kinematics during synchronization or desynchronization at a constant conveyor speed, increase the length of the path available for synchronization or desynchronization.

Dynamic adaptation cannot be used in any phase of the conveyor tracking. Deactivate dynamic adaptation by setting the value for "DynamicAdaption" to "0" on the motion job.

7.7.6 Stopping behavior with "MC_GroupStop" and "MC_GroupInterrupt" (S7-1500T)

"TrackingState" = "2" and "4"

An "MC_GroupStop" or "MC_GroupInterrupt" instruction completes the tracking of the OCS with "TrackingState" = "2" and "4". Alarm 811 is triggered and all kinematics motions are stopped.

"TrackingState" = "3"

The path motion within the coupled OCS is stopped with an "MC_GroupInterrupt" job or "MC_GroupStop" job. The status of the conveyor tracking "<TO>.StatusConveyor[1..3].TrackingState" = "3" is retained. The kinematics continues to follow the OCS.

An "MC_GroupContinue" job can be used to continue a motion that was interrupted with an "MC_GroupInterrupt" job.

The job sequence is emptied after an executed "MC_GroupStop" job. A new path motion is restarted with a new job in the tracked OCS.

To end all kinematics motions, follow these steps:

1. To stop the path motion within the tracked OCS, transmit an "MC_GroupStop" job.
2. Move the kinematics upward, e.g. with an "MC_MoveLinearRelative" job within the tracked OCS. If possible, you can alternatively stop the conveyor with an "MC_Halt" job.
3. To stop moving the TCP on the conveyor belt, move the kinematics, e.g. with an "MC_MoveLinearAbsolute" job to a position in WCS, e.g. to a waiting position.

7.7.7 Blending behavior (S7-1500T)

Blending is possible for the following motions of the conveyor tracking:

- In a motion job for moving into the first position in the tracked OCS
- In motions within the tracked OCS
- From a motion job that desynchronizes the TCP from the tracked OCS, in the following motion job (see section "Motion between two OCS (Page 263)")

Blending is not possible for the following motions:

- In a motion job that desynchronizes the TCP from the tracked OCS
- From a motion job that synchronizes the TCP with the tracked OCS to the subsequent motion job in the tracked OCS

7.8 Set kinematics to simulation mode (S7-1500T)

When disabling the kinematics axes or in case of single-axis motions, a kinematics motion is canceled, and the job sequence is cleared. By setting the kinematics to simulation mode, you will keep the motion processing at the kinematics technology object active. The jobs in the job sequence are retained.

With the "MC_KinematicsMotionSimulation" (Page 382) Motion Control instruction, you start or end the simulation mode for a kinematics technology object. In simulation mode, the setpoints of the kinematics are still being calculated. Setpoint changes through motion jobs at the kinematics technology object are no longer taken into consideration at the kinematics axes and are no longer being forwarded to the drives.

When the simulation is started with "Execute" = TRUE and "Mode" = 1, the position setpoints of the kinematics axes are kept constant. The velocity setpoint and the setpoint acceleration of the kinematics axes are immediately set to zero.

NOTE

Setpoint jump

When you activate the simulation during a kinematics motion, the kinematics axes will decelerate immediately with a jump of the velocity setpoint.

To stop the kinematics axes in a controlled manner, interrupt the kinematics motion with a "MC_GroupInterrupt" job before you activate the simulation. Once you have ended the simulation, you can continue the kinematics motion with a "MC_GroupContinue" job.

While the kinematics technology object is in simulation, you can move, disable and enable the kinematics axes again using single-axis jobs, without the motion processing being canceled at the kinematics technology object. The same is true for technology alarms pending at the kinematics axes during the kinematics simulation.

So that the simulation mode can be exited with "Execute" = TRUE and "Mode" = 0 , each of the kinematics axes must be at position "<TO>.AxesData.A[1..6].Position". A modulo axis must also be in the same modulo cycle as at the start time of the simulation.

Before you exit the simulation, move each of the kinematics axes using single-axis jobs to position "<TO>.AxesData.A[1..6].Position".

When the simulation is exited with "Execute" = TRUE and "Mode" = 0, the kinematics motion is continued. The setpoints take effect directly on the kinematics axes.

Example

The following procedure shows an example of how you can disable the kinematics axes using the kinematics simulation and enable them again without canceling the motion processing at the kinematics technology object.

Interrupting the kinematics motion and disabling the kinematics axes

1. Interrupt the kinematics motion with a "MC_GroupInterrupt" job.
   The kinematics axes are stopped.
2. Set the kinematics to simulation with a "MC_KinematicsMotionSimulation" job with "Execute" = TRUE and "Mode" = 1.
3. If necessary, move the individual kinematics axes using single-axis jobs.
4. Disable the individual kinematics axes with a "MC_Power" job.
   The jobs in the job sequence are retained.

Enabling the kinematics axes and continuing the kinematics motion

1. Enable the individual kinematics axes again with a "MC_Power" job.
2. Move the individual kinematics axes using single-axis jobs to positions "<TO>.AxesData.A[1..6].Position". These position values match the position values after stopping the kinematics motion. With a modulo axis, additionally ensure that the axis is in the same modulo cycle as at the start time of the simulation.
3. Exit the kinematics simulation with a "MC_KinematicsMotionSimulation" job with "Execute" = TRUE and "Mode" = 0.
4. Continue the kinematics motion with a "MC_GroupContinue" job.

7.8.1 Tags: Kinematics to simulation (S7-1500T)

The following tags of the technology object are relevant for simulation:

Status indicators		
Tag	**Description**	
<TO>.StatusWord.X19 (InSimulation)	Kinematics simulation	
	FALSE	Not simulated
	TRUE	Simulated
<TO>.AxesData.A[1..6].Position	Position setpoints of the kinematics motion for the kinematics axes 1 to 6	
<TO>.AxesData.A[1..6].Velocity	Velocity setpoints of the kinematics motion for the kinematics axes 1 to 6	
<TO>.AxesData.A[1..6].Acceleration	Acceleration setpoints of the kinematics motion for the kinematics axes 1 to 6	

3D visualization (S7-1500T) 8

The 3D visualization supports you visually in the configuration, commissioning and diagnostics of the kinematics technology object with the following components:

- 3D display (Page 268)
- Diagnostics window (Page 290)
- Toolbar (Page 269)
- Directional pad (Page 271)
- Kinematics control panel (Page 275)

Online view

In the online view, the kinematics, zones and coordinate systems are updated based on the online values. The refresh rate depends on multiple factors, for example, on the performance of the programming device and the CPU, the communication times, etc. The 3D visualization, therefore, does not show the behavior of the real machine. Note the behavior of the real machine when using calibration, diagnostics and the kinematics trace.

8.1 Structure of the 3D visualization (S7-1500T)

The 3D visualization has a function-oriented structure. Different functions are available in the 3D visualization depending on the configuration window.
The following table gives you an overview of the configuration windows with a 3D visualization and the available functions:

Configuration window	Structure				
	3D display	Toolbar	Visualization of the positions	Directional pad	Kinematics control panel with "Control panel status" diagnostics window.
Zones configuration window	✓	✓	–	–	–
Diagnostics	✓	✓	✓	–	–
Kinematics trace	✓	✓	✓	–	–
Calibration	✓	✓	✓	✓	✓
Commissioning	✓	✓	✓	✓	✓

3D display

The following values and information are visualized in the 3D display:

Configuration window	Graphically displayed values and information
Zones	• Zones • Position KCS in WCS
Diagnostics	• Kinematics and tool center point (TCP) • Zones
Kinematics trace	• Kinematics and tool center point (TCP) • Traces – Tool center point (TCP) – Kinematics – OCS frames
Calibration	• Kinematics and tool center point (TCP) • Zones – Calibrated workspace zones – Configured kinematics zones • Calibrated object coordinate systems • Values for the calibration – Configured points and angles – Guide lines – Offset of the OCS from the origin – Current position of the TCP – Graphically highlighted active calibration point
Commissioning	• Kinematics and tool center point (TCP) • Zones

NOTE

You set the dimensions for the representation of the kinematics in the 3D display under "Technology object > Configuration > Geometry".

8.2 Working with the 3D display (S7-1500T)

A description is provided below of how to adapt the view of the coordinate system with mapped kinematics in the 3D view using the toolbar or the mouse.

Customizing the appearance of the 3D display

You can adapt the display in the 3D view as follows:

1. To hide or show the coordinate system in the display, click the # symbol in the toolbar.
2. To adjust the brightness of the 3D display, select a preset brightness level via the 100 selection box.
   Alternatively, change the brightness using the (darker) button or the (brighter) button.

Customizing the display of the kinematics and the coordinate system

1. In the WCS selection box, select a coordinate system that is displayed in the 3D display.
   In addition, the selected coordinate system is displayed in the "Positions" window. If you select the kinematics coordinate system (KCS), the WCS is displayed in the "Positions" window.
   See also Monitoring and comparing position values (Page 272).
   You can select the FCS or TCS in the configuration of the kinematics zones.
2. To change the display of the kinematics, click the button. If you click on the arrow, the other display options of the kinematics are shown and you can directly select the desired display:

Button	Description
	Shows the kinematics.
	Shows a simplified view of the kinematics.
	Hides the view of the kinematics.

3. To change the tool, select an already configured tool in the Tool 1 selection box.
   This selection box is available in the configuration of the kinematics zones and in the calibration.
4. To show or hide the tool coordinate system (TCS), click the button.
   This function is available in the kinematics trace and diagnostics.
5. To switch the focus of the view to the TCP, click the button.
   During the path motion of the kinematics, the focus is always on the TCP. In standstill, the view can be moved or rotated using the mouse.

Change screen section

1. To switch the view between 2D or 3D display, use the following buttons:
   – To use the 2D display, click the button.
   – To use the 3D display, click the button.
2. To change the plane view of the selected coordinate system, use the following buttons:

Button/mouse	Description
	Show xz plane
	Show the xz plane rotated around the z axis
	Show yz plane
	Show the yz plane rotated around the z axis
	Show xy plane
	Show the xy plane rotated around the x axis

3. To rotate the view as desired, hold down the left mouse button and move the mouse in the desired direction.
4. To center the view and display the entire kinematics, click the icon in the toolbar.

5. Use the mouse wheel to zoom in and out of the display of the kinematics continuously.
6. To move the kinematics in the view, hold down the right mouse button and move the mouse in the desired direction.

8.3 Operating the zone display (S7-1500T)

You show or hide all active and inactive zones with the button.
In addition, with the active icon , you can show and hide all active and inactive workspace zones individually with the icon in the following areas:

- Diagnostics > "Status zones" window
- Calibration > Object coordinate systems / Workspace zones > "Zone display" window

Zone display in calibration

When you click on the icon, values of the workspace zones and the kinematics zones at the current point in time are read back from the CPU. When you click the icon in the "Number" column, 2 additional rows are displayed. The additional rows contain the following values:

- Start values of the CPU
- Start values in project
  You can edit these values. If you want to apply the change, load the changes from the project into the device.

If you have performed an offline recalibration of a workspace zone calibrated online, both zones are displayed in the graphic view. Load the changes from the project to the device. The display is updated and the result of the last calibration is displayed.

8.4 Operating the directional pad (S7-1500T)

The directional pad offers the following functions:

- In offline mode: Move the tool center point (TCP) in the 3D view
- In online mode: Specify target position in "Jog to target position" mode in the WCS or OCS

Moving the tool center point (TCP)

During calibration, you can move the tool center point (TCP) in the 3D view in offline mode using the directional pad.

NOTE
Singularity
When you move the kinematics into a singularity (Page 167), a message is output in the graphic display and you can no longer move the kinematics using the directional pad. To be able to move the kinematics once again, click on "Reset kinematics" in the message.

1. To move the TCP to a position, click on the positive or negative x, y or z direction on the directional pad.

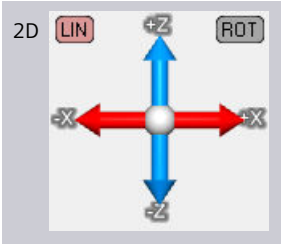

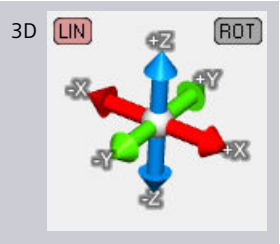

   In the 3D view, you can see the motion of the kinematics model and the TCP.
   The coordinates of the TCP are displayed in the Positions window.
2. To change the orientation of the TCP, click "ROT" or the intersection of the axes.
   Instead of the directional pad, arrows for the orientation motion are displayed.
3. Click the arrow to rotate in a positive or negative direction.

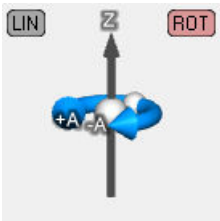

   The Cartesian coordinates and the Cartesian orientations in space are displayed in the "Positions" window.
   If you have shown a kinematics zone, you will see the rotation of the kinematics zone in the 3D view.
4. To move the TCP again, click "LIN".
   The directional pad is displayed.

Specify target position

In online mode, you can use the directional pad to specify the target position in the WCS or OCS in "Jog to target position" mode. This function is available during commissioning and calibration.
The target position in the selected coordinate system is applied and you can jog the kinematics to the target position with the kinematics control panel.
The operation of the kinematics control panel in "Jog to target position" mode is described in the section "Jogging the kinematics (Page 285)".

8.5 Monitoring and comparing position values (S7-1500T)

You monitor and compare position information with the following 3D visualization functions:

- "Positions" diagnostics window
- Position values in the graphically displayed trace

Operating the "Positions" diagnostics window

The "Positions" window provides the following functions:

- Monitor position values, e.g. during diagnostics
- Check approached points of the kinematics during calibration with the current position
- Compare position values in two different coordinate systems, e.g. during calibration

The values in the "Positions" window are displayed as follows:

- During commissioning, in the diagnostics and in the kinematics trace, the positions are displayed in online mode.
- The positions in offline and online mode are displayed in the calibration.

Selecting a reference coordinate system for recording in the kinematics trace

The selection of the coordinate systems in the toolbar and in the "Positions" window depends on the signals you have activated under "Technology object > Kinematics trace > Configuration > Traces". The following table shows the available coordinate systems depending on the active signals:

Active signals	Coordinate system 1	Coordinate system 2
TCP and kinematics	World coordinate system (WCS), kinematics coordinate system (KCS)	Machine coordinate system (MCS), WCS, JCS
TCP	WCS, KCS,	WCS
TCP, OCS1	WCS, KCS, OCS1	WCS
TCP, OCS1, OCS2	WCS, KCS, OCS1, OCS2	WCS
TCP, OCS1, OCS2, OCS3	WCS, KCS, OCS1, OCS2, OCS3	WCS

If you activate another signal or the "Monitoring on/off" function, the available coordinate systems are updated.

Comparing position values

1. Select a coordinate system in the toolbar. The selected coordinate system is displayed in the left field of the "Positions" window.
   When you select the kinematics coordinate system (KCS) in the toolbar, the WCS is displayed in the "Positions" window.
2. Select another coordinate system in the "Positions" window in the right drop-down list.
3. The actual position of the active tool in the selected reference coordinate system is displayed.

The meaning of the position information is described in the table in the section "Positions (Page 296)".

Position values in the graphic display

If you position the mouse cursor on one of the traces in the 3D visualization in the kinematics trace, the position values are displayed directly on the trace.

The following values are displayed:

- Measuring point number
- Coordinates x, y, z and A, B, C

The values displayed show the position and rotation in the set coordinate system.

Commissioning (S7-1500T) 9

You can find the kinematics control panel under "Technology object > Commissioning". The kinematics control panel enables you to assume master control for a kinematics technology object and control the motions of the kinematics, the individual axes or the individual joints. You can therefore move the kinematics without affecting the user program.

You can find the dynamics settings (Page 284) for commissioning in the Inspector window under "Properties".

3D visualization (Page 268) provides visual support for commissioning the kinematics technology object. The status LEDs in the "Control panel status (Page 275)" diagnostics window show you whether all kinematics axes are switched on and homed and whether errors are pending at the kinematics or the kinematics axes. You can also show additional diagnostics windows (Page 290) via the toolbar.

You can also find the kinematics control panel in the project tree under "Technology object > Calibrate (Page 305)". In calibration, you move the real kinematics online via the kinematics control panel in the "Jog" or "Jog to target position" operating modes.

9.1 Control panel status (S7-1500T)

You use the "Control panel status" diagnostics window in "Technology object > Commissioning" in the TIA Portal to monitor the status and error messages of the kinematics and the kinematics axes during commissioning.

The diagnostics function is available in online operation. The "Control panel status" diagnostics window is shown in the graphical display during commissioning. You can show the diagnostics window via the symbol of the toolbar and move the window to a desired position within the graphic display.

Kinematics status

The following table shows the possible statuses of the kinematics:

Status	Description
Valid	The transformation values are valid. (<TO>.StatusKinematics.Valid)
Error	An error occurred at the technology object. Error messages are displayed in the Inspector window under "Diagnostics > Alarm display".

Axis status

The following table shows the possible states of the kinematics axes:

Status	Description
Enabled	The technology object has been enabled. The axis can be moved with motion jobs.
Error	An error occurred at the technology object. Error messages are displayed in the Inspector window under "Diagnostics > Alarm display".

Status	Description
Homed	The technology object is homed.

9.2 Taking over master control and enabling kinematics (S7-1500T)

WARNING

Unexpected axis motions

During operation with the kinematics control panel, the kinematics can execute unexpected motions (for example, due to incorrect configuration of the drive or technology object). In addition, when a leading axis is moved with the kinematics control panel, any synchronized following axis is also moved.

Therefore, take the following protective measures before operation with the kinematics control panel:

- Ensure that the EMERGENCY OFF switch is within the reach of the operator.
- Enable the hardware limit switches.
- Enable the software limit switches.
- Use blocked zones to prevent mechanical collisions.
- Ensure that following error monitoring is enabled.
- Make sure that no following axis is coupled to the axis to be moved.
- Make sure that the dynamic settings in the kinematics control panel do not violate the dynamic limits of the kinematics axes or process.
- Ensure that the kinematics control panel is configured correctly.

WARNING

Overrun of the dynamics through singular positions

Overruns of the dynamics in the vicinity of singular positions can result in the following damage:

- Machine damage through overload of the mechanical components
- Personal injury caused by products or machine parts coming loose

To prevent dynamic overruns in the vicinity of singular positions, take the following measures:

- Move the kinematics in the MCS or the JCS.
- In the WCS or OCS, avoid the "Jog" mode. The dynamic adaptation in "Jog" mode in the WCS or OCS is not active in the kinematics control panel. The dynamic limits of the kinematics axes are not taken into account during a kinematics motion with the kinematics control panel.
- Up to technology version V5: In the WCS or OCS, avoid using the "Jog to target position" mode. The dynamic adaptation in "Jog to target position" mode in the WCS or OCS is not active in the kinematics control panel. The dynamic limits of the kinematics axes are not taken into account during a kinematics motion with the kinematics control panel.
- As of technology version V6: Move the kinematics to the "Jog to target position" mode in the WCS or OCS using the kinematics control panel. "Dynamic adaptation without segmentation of the path" is permanently active in the "Jog to target position" mode, and the dynamic limits of the kinematics axes are taken into account.

WARNING

Moving leading axes with active synchronous operation

Any synchronized following axis is moved as well when a leading axis is moved with the kinematics control panel.

Requirements

- The kinematics and the kinematics axes are locked in the user program.
- No axis control panel or drive control panel is active for any kinematics axis.
- The kinematics technology object is configured.
- The travel directions of the kinematics axes match the joint travel directions of the kinematics used.

  Use the axis control panel to check whether the travel directions of the kinematics axes match the joint travel directions of the kinematics used. The joint travel direction can be found in the Manufacturer descriptions. Invert the drive and encoder directions in the kinematics axis if the directions are inverse.
- The joint travel directions of the kinematics used correspond to the travel directions defined by Siemens from the kinematics type.

  Check whether the joint travel directions of the kinematics used match the travel directions defined by Siemens from the Kinematics type (Page 58). If the directions are inverse, then invert the joint direction at the associated joint in the Kinematics technology object.

- The kinematics axes are homed.
  The joint zero position corresponds to the position 0.0 of the kinematics axis. For mechanical axis couplings, first home the coupling axes.
- Possible joint offsets are defined.
  Check whether the joint zero position of the kinematics deviates from the joint zero position of the kinematics type defined by Siemens. In this case, you must define a joint offset. If the offset cannot be determined from data sheets, then you can determine it practically. To do this, jog the joint in the zero position defined by Siemens and then accept the position of the joint as offset.
- All kinematics axes are ready to start.
- The CPU must be in the RUN mode.
- No alarm is active on the kinematics technology object.

Procedure

1. Click the "Activate" button.
2. Read the warning.
3. Set the sign-of-life monitoring time to a value between 1000 and 60 000 ms.

Setting the sign-of-life monitoring time

The kinematics control panel requires a direct connection from its TIA Portal to the controller, which is monitored cyclically. If there is no sign of life from the PG/PC within the monitoring time, master control is handed over for safety reasons.

Monitoring time	Effect
Too low	Master control is often handed over because the monitoring time is exceeded. The kinematics stops with maximum deceleration because the communication time between TIA Portal and CPU is longer than the configured monitoring time.
Appropriate	The monitoring time is not exceeded. The kinematics is stopped in time if the online connection is lost or the sign-of-life monitoring is exceeded. Recommendation: 1000 ms to 2000 ms
Too high	The kinematics continues to move with the last setpoints of the kinematics control panel, although the connection between the TIA Portal and the CPU has been interrupted or the communication time between the TIA Portal and the CPU is too long. The kinematics is not stopped on time because the monitoring time is still running.

Result

- An online connection to the CPU is established and the kinematics control panel takes master control of the technology object.
- The kinematics can now only be moved with this kinematics control panel. The user program has no influence on the functions of the technology object. Motion Control jobs from the user program to the technology object are rejected with error ("ErrorID" = 16#8012: Kinematics control panel enabled).
- Access to the kinematics and the kinematics axes is blocked by another instance of the TIA Portal.

Enabling the kinematics

1. Click the "Enable" button to enable interconnected axes of the selected kinematics technology object.
   Result: The kinematics or the kinematics axes can now be moved or actively homed with the kinematics control panel.
2. Use the status LEDs in the "Control panel status" diagnostics window to check whether all kinematics axes are switched on and homed and whether errors are pending. Use the alarm display (Inspector window > "Diagnostics > Alarm display") in the TIA Portal to display pending causes of the error.

Behavior during operation of the kinematics control panel

In the following situation, the kinematics control panel retains master control and the kinematics remain in motion:

- The kinematics control panel is embedded in the TIA Portal, and you switch to another window, for example, to the kinematics trace. Use the "Split editor area" option to use the kinematics control panel and the kinematics trace at the same time.

In the following situation, the kinematics control panel retains master control but stops the kinematics with maximum deceleration and revokes the enabling of the technology objects:

- The kinematics control panel is detached in the TIA Portal, and you switch to another window within the TIA Portal, for example, to the kinematics trace.
- You switch to a window outside the TIA Portal.

In the following situations, the kinematics is stopped or the axes are stopped with maximum deceleration and the kinematics control panel returns the master control to the user program:

- The communication time between TIA Portal and CPU is longer than the configured monitoring time. In the banner above the toolbar, the message is displayed that the master control has been handed over because the monitoring time has been exceeded. Adapt the time for the sign-of-life monitoring in the warning.
- The online connection to the CPU is impaired by a communication load that is too high. The following message is entered in the alarm display log: "Commissioning error. Sign-of-life failure between controller and TIA Portal". Adapt the time for the sign-of-life monitoring in the warning.
- A dialog (e.g. "Save as") or another window within the TIA Portal covers the kinematics control panel.

9.3 Selecting an active tool (S7-1500T)

If you use kinematics with multiple tools, you can select the different tools in the kinematics control panel. This allows you to define the position of the TCP in the flange coordinate system (FCS) in relation to this tool. In the real kinematics, the tool is not changed by the changed selection.

Requirement

Kinematics is enabled in the kinematics control panel.

Procedure

1. In the "Active tool" drop-down list, select the tool that is mounted on the real kinematics.
2. If you want to use zone monitoring (Page 191), activate the tool zone associated with the active tool. If necessary, deactivate the tool zone that is not required (e.g. after a tool change). See section "Activating zone monitoring" (Page 200).

NOTE

Before you return master control to the user program, the tool that the user program expects must be installed and set. The active tool is not set automatically to the active tool at the time of takeover of master control.

In the user program, you can change the tool with the "MC_SetTool" Motion Control instruction after handing over master control.

9.4 Operator controls for jogging and homing (S7-1500T)

You can use the slider to execute the following functions of the kinematics control panel:

- Jog axes, joints, or the kinematics Cartesian in a direction or to the set target position. (Page 285)
- Start active homing of a kinematics axis (Page 283)

The following sliders and buttons are displayed depending on the selected coordinate system, the kinematics type and the operating mode:

Coordinate system	Slider/Button
MCS	• Axis number: A1 ... A6 • Setzen •
JCS	Joint number: J1 ... J6
WCS or OCS	• Cartesian coordinates: x, y, z, A, B, C • Start

NOTICE
Velocity override The position of the slider in the "Control" area is adopted as a velocity override in the "<TO>.Override.Velocity" tag of the kinematics technology object. If the velocity override is set by the user program, the user program overrides the value from the kinematics control panel. If the position of the slider is not equal to zero, then the value from the user program for the velocity override is transferred to the "<TO>.Override.Velocity" tag of the kinematics technology object. Do not set the velocity override via the user program as long as the kinematics control panel is active.

Jogging and homing velocity

The preset jogging and homing velocity is calculated as follows:
Jogging/homing velocity = configured velocity * slider position * "Adjust velocity" factor
The following shows the operation of the slider using kinematics axis A1. Operation is identical for jogging of joints and the kinematics in the Cartesian space.

Active homing

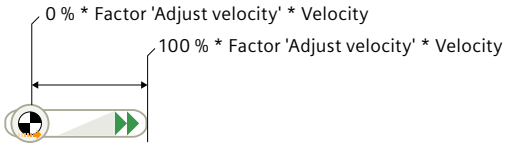

Click the slider and drag the slider to the right. Homing is executed at the maximum preset velocity. The homing stops automatically with the set dynamics.
To home at the maximum preset velocity, click the ▶▶ symbol.

Jog forward or backward

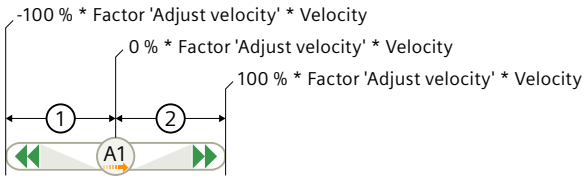

Backward①

- Click A1 and drag the slider to the left.
- In the WCS and OCS: The further you move the slider to the left, the faster the kinematics moves backwards.
- In the JCS and MCS: As soon as you move the slider to the left, the axis/joint moves backwards at the maximum specified velocity.
- To jog backward at the maximum, specified jogging velocity, click the ◀◀ symbol.

Forward②

- Click A1 and drag the slider to the right.
- In the WCS and OCS: The further you move the slider to the right, the faster the kinematics moves forward.
- In the JCS and MCS: As soon as you move the slider to the left, the axis/joint moves forward at maximum specified velocity.
- To jog forward at the maximum preset jogging velocity, click the ▶▶ symbol.

Stop jogging

- Release the pressed mouse button. The slider automatically jumps to zero and the axis/joint/kinematics is stopped with the specified deceleration.

Jog to target position

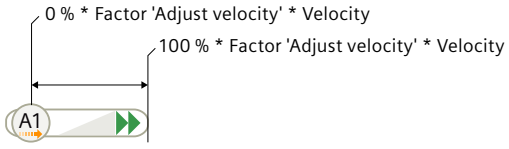

In the MCS/JCS

Click A1 and drag the slider to the right. As soon as you move the slider to the right, the axis/joint moves at the maximum specified velocity. Positioning stops automatically with the set dynamics.

To jog to the target position at the maximum preset jog velocity, click the ▶▶ icon.

In the WCS/OCS

Click on the "Start" slider and drag it to the right. The further you move the slider to the right, the faster the kinematics moves forward.

To jog to the target position at the maximum preset jog velocity, click the ▶▶ icon.

9.5 Setting the home position of a kinematics axis (S7-1500T)

This function corresponds to direct homing (absolute) or setting the actual position or "Mode" = 0 at the "MC_Home" Motion Control instruction. The current position of the technology object is set to the value of parameter "Position".

Requirements

Kinematics is enabled in the kinematics control panel.

Procedure

1. In the drop-down list, select "Single axes: Set home position".
2. Enter the home position of the respective kinematics axis in the text box.
3. Click the "Set" button of the axis with the actual position you want to set.
   Result: The specified actual position is set. The kinematics axis is homed.
4. In the "Status and errors bits" diagnostics window, check whether the axis was homed.

9.6 Active homing of the kinematics axis (S7-1500T)

This function corresponds to active homing with "Mode" = 3. The positioning axis/synchronous axis technology object performs a homing movement according to the configuration of the active homing.

⚠ WARNING

Avoiding collisions

Make sure that no unwanted positions are approached and that no collisions occur during the automatic homing movement.

Requirements

- Kinematics is enabled in the kinematics control panel.
- The kinematics are in a position from which the homing movement of the kinematics axes is possible.

Procedure

1. In the drop-down list, select "Single axes: Homing".
2. Enter the home position of the respective kinematics axis in the text box.
3. To start active homing, click the slider and drag the slider to the right.

4. To cancel homing, release the pressed mouse button.
   Result: The axis executes the homing movement configured under "Active homing". The other kinematics axes are not moved. The entered position of the kinematics control panel is used as home position.

NOTE

Up to technology version V7: Absolute encoder calibration is not possible in the kinematics control panel. The technology object is not homed when this mode is used with an absolute encoder.

As technology version V7: Absolute encoder adjustment can be performed in the kinematics control panel.

9.7 Specifying dynamics in the kinematics control panel (S7-1500T)

In the "Jog" and "Jog to target position" modes, you can specify the dynamics for the next step of the commissioning. The dynamics settings can be found in the Inspector window under "Properties".

Default setting of dynamic values

The default settings of the dynamic values are as follows when the kinematics control panel is called:

Dynamic value	Default value MCS/JCS coordinate systems	Default value WCS/OCS coordinate system
Acceleration	10% of the maximum acceleration of the kinematics axis	10% of the maximum acceleration of the kinematics motion
Deceleration	100% of the maximum deceleration of the kinematics axis	100% of the maximum deceleration of the kinematics motion
Jerk	100% of the maximum jerk of the kinematics axis	100% of the maximum jerk of the kinematics motion

Specifying dynamic values

In the WCS or OCS, these values apply to the motion in x, y and z direction and for the orientation.

To change these defaults temporarily, select the "User-defined dynamics" check box and enter the dynamic values.

If you have changed the values in the configuration of the technology object during operation with the kinematics control panel, these changes have no effect on the operation of the kinematics control panel. Changed values in the configuration only take effect after they have been loaded into the CPU and the control panel has been reopened.

Resetting dynamic values to default values

As soon as the check box "User-defined dynamics" is cleared or the commissioning is completed, the original default values are valid again. The specified dynamics values are replaced by the predefined default values in the following cases. If necessary, transfer the values to your configuration.

Transferring dynamic values from the kinematics control panel to the technology object

If you want to retain your specified dynamic values as default values or as dynamic limits after jogging in the WCS or OCS, transfer the dynamic values of the kinematics control panel to the configuration of the technology objects.

1. Make a note of the dynamic values of the kinematics control panel.
2. Click the "Deactivate" button.
3. Apply the noted dynamics values as the default setting of the dynamics or dynamics limit in the "Dynamics" configuration window of the kinematics.
4. Load the changed configuration into the CPU.
   The changed parameters are now effective in the user program.

Adjusting the velocity

Under "Adjust velocity", you correct the configured velocity using a percentage.

Example:

- Configured velocity in the kinematics control panel: 100 mm/s
- Adjust velocity: 50%
- Resulting velocity specification: 50 mm/s

You can set a value with the slider or enter a value between 1% and 200% directly in the text box below.

When master control is handed over, the last active position of the slider in the "Control" area is transferred as velocity override to the "<TO>.Override.Velocity" tag of the kinematics technology object. This is not influenced by the "Adjust velocity" set factor.

9.8 Jogging the kinematics (S7-1500T)

In "Jog" mode, the following values are preset with 10% of the default value:

- Velocity of kinematics axes
- Velocity of the joints or joint angle
- Velocity in x, y and z direction
- Velocity for the orientations A, B and C

You use the slider to set the velocity override to a value between 1% and 200%.

Requirement

Kinematics is enabled in the kinematics control panel.

9.8.1 Jogging the kinematics axes in the MCS (S7-1500T)

In the MCS, you can jog each kinematics axis individually forwards, backwards or to a predefined target position or target angle. With mechanical couplings of the axes, select the "JCS" coordinate system to jog the joints of the kinematics (Page 286).

WARNING

Limits of the joint traversing range are not taken into consideration in the MCS

When you move the kinematics axes in the kinematics control panel in the MCS, the limits that have been set for the joint traversing ranges (Page 56) are taken into consideration for the joints.

In the case of kinematics without mechanically coupled axes, the joint position can be limited to the working area through the use of software limit switches. The software limit switches have to be correctly set and existing offsets or the inverted traversing direction of the joints must be taken into consideration.

In the case of kinematics with mechanically coupled axes, limiting the joint position to the working area using the software limit switches is not completely possible. Therefore, you must yourself take into consideration the configured limits for the joint traversing ranges. Make sure that no unwanted positions are approached and that no collisions occur.

Procedure for jogging forwards or backwards

1. Select the "Jog" operating mode in the drop-down list.
2. Select the "MCS" coordinate system in the drop-down list.
3. Enter the velocity for the axis.
4. Move the axis by dragging the slider forward or backward.
5. To stop the axis, release the pressed mouse button. The slider automatically jumps to the center position and the axis is stopped with the specified dynamics.

Procedure for jogging to a target position

1. Select the "Jog to target position" operating mode in the drop-down list.
2. Select the "MCS" coordinate system in the drop-down list.
3. Enter the target position for the kinematics axis.
4. Enter the velocity for the axis.
5. To specify the velocity, drag the slider to the right. The further you drag the slider to the right, the higher the velocity of the axis movement.
6. To stop the axis before the target position is reached, release the pressed mouse button. The slider automatically jumps to zero to the left and the axis stops with the set dynamics.
7. The axis stops automatically with the specified dynamics when the target position has been approached.

9.8.2 Jogging joints in the JCS (S7-1500T)

In the JCS, you can jog each kinematics joint individually forwards, backwards or to a set target position. In contrast to jogging in the MCS where only the axis coordinates are taken into account, the mechanical axis coupling is taken into account when jogging in the JCS.
For kinematics types with up to 4 interpolating axes, the jogging of the joints in the JCS corresponds to the jogging of the axes in the MCS.

Requirement

You have assumed master control in the kinematics control panel.

Jog forward or backward

To move a joint forward or backward in jog mode, proceed as follows:

1. In the "Operating mode" drop-down list, select the "Jog" entry.
2. In the "Coordinate system" drop-down list, select the "JCS" entry.
3. Enter the velocity for the joint.
4. To move a joint in the positive direction, drag the slider to the right.
   The joint moves in the positive direction as long as you keep the slider pressed and to the right of the zero position.
5. To move a joint in the negative direction, drag the slider to the left.
   The joint moves in the negative direction as long as you keep the slider pressed and hold it to the left of the zero position.
6. To stop the joint moving, release the pressed mouse button.
   The slider automatically jumps to the center position and the joint is stopped with the specified dynamics.

Jogging to a target position

To move a joint to a target position in jog mode, proceed as follows:

1. In the "Operating mode" drop-down list, select the "Jog to target position" entry.
2. In the "Coordinate system" drop-down list, select the "JCS" entry.
3. Enter the velocity for the joint.
4. Enter the target position for the joint.
5. To move the joint to the target position, move the slider to the right. The further you move the slider to the right, the higher the velocity of the joint movement.
   The kinematics stops as soon as you release the pressed mouse button or the target position is reached.

9.8.3 Cartesian kinematics jogging in WCS/OCS (S7-1500T)

In WCS or OCS, you can move each kinematic in jog mode in x, y and z direction or rotate the tool center point around the x, y and z-axis (rotation A, B, C).
When jogging to a target position, you move the kinematics to the position specified under "Target position" with a linear motion. The direction of movement of the Cartesian

orientation is not limited to the positive direction here. For kinematics with up to four interpolating axes, the A4 kinematics axis is moved using the "Shortest path" mode.

WARNING

Overrun of the dynamics through singular positions

Overruns of the dynamics in the vicinity of singular positions can result in the following damage:

- Machine damage through overload of the mechanical components
- Personal injury caused by products or machine parts coming loose

To prevent dynamic overruns in the vicinity of singular positions, take the following measures:

- Move the kinematics in the MCS or the JCS.
- In the WCS or OCS, avoid the "Jog" mode. The dynamic adaptation in "Jog" mode in the WCS or OCS is not active in the kinematics control panel. The dynamic limits of the kinematics axes are not taken into account during a kinematics motion with the kinematics control panel.
- Up to technology version V5: In the WCS or OCS, avoid using the "Jog to target position" mode. The dynamic adaptation in "Jog to target position" mode in the WCS or OCS is not active in the kinematics control panel. The dynamic limits of the kinematics axes are not taken into account during a kinematics motion with the kinematics control panel.
- As of technology version V6: Move the kinematics to the "Jog to target position" mode in the WCS or OCS using the kinematics control panel. "Dynamic adaptation without segmentation of the path" is permanently active in the "Jog to target position" mode, and the dynamic limits of the kinematics axes are taken into account.

Jog

To move the kinematics axes in jog mode, follow these steps:

1. In the "Operating mode" drop-down list, select the "Jog" entry.
2. In the "Coordinate system" drop-down list, select the "WCS" or "OCS" entry.
3. Enter the velocity for the x, y and z directions and for the orientations A, B, and C.
4. To move a kinematics axis in the positive direction, click the slider and drag the slider to the right.
   The kinematics moves in the positive direction as long as you keep the slider pressed and to the right of the zero position. As soon as you release the pressed mouse button, the slider automatically jumps to zero and the kinematics is stopped with the specified dynamics. Depending on the kinematics type, several axes can be moved.
5. To move a kinematics axis in the negative direction, click the slider and drag the slider to the left.
   The kinematics moves in the negative direction as long as you keep the slider pressed and to the left of the zero position. As soon as you release the pressed mouse button, the slider automatically jumps to zero and the kinematics is stopped with the specified dynamics. Depending on the kinematics type, several axes can be moved.

Jogging to a Cartesian target position

To move the kinematics to a target position in jog mode, proceed as follows:

1. In the "Operating mode" drop-down list, select the "Jog to target position" entry.
2. In the "Coordinate system" drop-down list, select the "WCS" or "OCS" entry.
   The target position is shown in the 3D display.
3. Enter the velocity for the path and the orientation motion.
4. Enter the Cartesian target position in the selected coordinate system.
   Alternatively, you can specify the target position with the directional pad (Page 271).
5. To move the kinematics to the target position, click the "Start" slider, hold down the mouse button and move the slider to the right.
   The kinematics moves to the specified target position. Movements of the kinematics axis are possible in both the positive and the negative direction. For kinematics with up to four interpolating axes, the A4 kinematics axis is moved using the "Shortest path" mode.
   The kinematics stops as soon as you release the pressed mouse button or the target position is reached.

9.9 Disabling kinematics and handing over master control (S7-1500T)

Procedure

To return the master control to the user program, perform the following steps:

1. Jog the kinematics to a basic position from which the kinematics can be moved with the user program.
2. Set the currently mounted tool in the kinematics control panel and activate the tool zone associated with the active tool. If necessary, deactivate the tool zone that is no longer required (e.g. after a tool change).
3. Click the "Disable" button.
   The kinematics axes are disabled.
4. Click "Deactivate".
   The master control is returned from the kinematics control panel to the user program.
5. Set the velocity override to the value required in the user program (<TO>.Override.Velocity).

Result

You can move the kinematics via an automatic program or an HMI.

Diagnostics (S7-1500T) 10

The description of Motion Control diagnostics is limited to the diagnostics view of the technology objects in TIA Portal, the technology alarms and the error detections on Motion Control instructions.

The following descriptions can be found in the "S7-1500/S7-1500T Motion Control alarms and error IDs" documentation (Page 13):

- Diagnostics concept
- Technology alarms
- Error IDs in Motion Control instructions

A comprehensive description of the system diagnostics of the S7-1500 CPU can be found in the "Diagnostics" function manual (https://support.industry.siemens.com/cs/ww/en/view/59192926).

10.1 Kinematics technology object (S7-1500T)

10.1.1 Structure of the diagnostics (S7-1500T)

The diagnostics of the kinematics in "Technology object > Diagnostics" is divided into the following areas:

- Graphic display
- Diagnostics window

Diagnostics window

The following diagnostics windows are available in the graphic display:

- Status and error bits (Page 290)
- Zones status (Page 293)
- Motion and Tools (Page 293)
- Positions (Page 296)

With the following buttons, you can show or hide the associated diagnostics windows:

Button	Function
	Status and error bits
	Zones status
	Motion and tools
	Positions

You can also move the diagnostics window to a desired position within the graphic display.

10.1.2 Status and error bits (S7-1500T)

With the diagnostics window "Status and error bits" in "Technology object > Diagnostics" you monitor the status and error messages of the technology object in the TIA Portal. The diagnostics function is available in online operation.

The diagnostics window "Status and error bits" is shown in the graphic display of the diagnostics. You can show the diagnostics window via the symbol of the toolbar and move the window to a desired position within the graphic display.

The meaning of the status and error messages is described in the following tables. The associated technology object tag is given in parentheses.

"Kinematics status"

The following table shows the possible statuses of the kinematics:

Status	Description
Error	An error occurred at the technology object. Detailed information about the error is available in the "Error" area and in the "<TO>.ErrorDetail.Number" and "<TO>.ErrorDetail.Reaction" tags of the technology object. (<TO>.StatusWord.X1 (Error))
Restart active	The technology object is being reinitialized. (<TO>.StatusWord.X2 (RestartActive))
Kinematics control panel active	The kinematics control panel is activated. The kinematics control panel has master control over the technology object. The kinematics cannot be controlled from the user program. (<TO>.StatusWord.X4 (ControlPanelActive))
Restart required	Data relevant for the restart has been changed. The changes are applied only after a restart of the technology object. (<TO>.StatusWord.X3 (OnlineStartValuesChanged))
Valid	The transformation values are valid. (<TO>.StatusKinematics.Valid)
Simulation active	The kinematics technology object is in simulation. (<TO>.StatusWord.X19 (InSimulation))
JCS enabled	The kinematics technology object uses the JCS. (<TO>.StatusWord.X21 (EnabledJCS))

"Error"

The following table shows the possible errors:

Error	Description
System	A system-internal error has occurred. (<TO>.ErrorWord.X0 (SystemFault))
Configuration	A configuration error has occurred. One or more configuration parameters are inconsistent or invalid. The technology object was incorrectly configured, or editable configuration data was incorrectly modified during runtime of the user program. (<TO>.ErrorWord.X1 (ConfigFault))

Error	Description
Transformation	A transformation error has occurred. (<TO>.ErrorWord.X4 (TransformationFault))
User program	An error has occurred in the user program at a Motion Control instruction or its use (e.g. by the kinematics control panel). (<TO>.ErrorWord.X2 (UserFault))
Job rejected	A job cannot be executed. A Motion Control instruction cannot be executed because necessary requirements have not been met (e.g. technology object not homed). (<TO>.ErrorWord.X3 (CommandNotAccepted))
Dynamic limitation	The dynamic values are limited to the dynamic limits. (<TO>.ErrorWord.X6 (DynamicError))

"Warnings"

The following table shows the possible warnings:

Warning	Description
Configuration	One or more configuration parameters are being internally adapted temporarily. (<TO>.WarningWord.X1 (ConfigWarning))
Job rejected	A job cannot be executed. A Motion Control instruction cannot be executed because the necessary conditions have not been met. (<TO>.WarningWord.X3 (CommandNotAccepted))
Dynamic limitation	The dynamic values are limited to the dynamic limits. (<TO>.WarningWord.X6 (DynamicWarning))

"Motion status"

The following table shows the possible statuses of the kinematics motion:

Status	Description
Done (no job running)	There is no active motion job at the technology object. (<TO>.StatusWord.X6 (Done))
Linear motion active	There is a linear motion job active at the technology object. (<TO>.StatusWord.X8 (LinearCommand))
Circular motion active	There is a circular motion job active at the technology object. (<TO>.StatusWord.X9 (CircularCommand))
sPTP motion active	There is a synchronous "point-to-point" motion job active at the technology object. (<TO>.StatusWord.X11 (DirectCommand))
Constant velocity	The kinematics is being moved at constant velocity or is at a standstill. (<TO>.StatusWord.X12 (ConstantVelocity))
Accelerating	The kinematics is being accelerated. (<TO>.StatusWord.X13 (Accelerating))

Status	Description
Decelerating	The kinematics is being decelerated. (<TO>.StatusWord.X14 (Decelerating))
Motion interrupted	The active kinematics motion is interrupted by an "MC_GroupInterrupt" command . (<TO>.StatusWord.X17 (Interrupted))
Orientation movement active	There is an orientation motion active at the technology object. (<TO>.StatusWord.X15 (OrientationMotion))

See also

"StatusWord" tag (kinematics) (Page 441)
"ErrorWord" tag (kinematics) (Page 442)
"WarningWord" tag (kinematics) (Page 443)

10.1.3 Zones status (S7-1500T)

Using the diagnostics windows "Status Zones" in "Technology object > Diagnostics", you monitor the status of the workspace zones and the kinematics zones of the technology object in the TIA portal. The diagnostics function is available in online operation.

The diagnostics window "Zones Status" is displayed in the graphic display of the diagnostics. You can show the diagnostics window via the symbol of the toolbar and move the window to a desired position within the graphic display.

"Zones status"

The "Workspace zones" and "Kinematics zones" tables show the status of the individual zones. The following symbols are displayed for this purpose:

Symbol	Description
	The zone is not defined.
	The zone is inactive.
	The zone is active.
	The zone was violated.

You can use the toolbar icon in the graphic display of the diagnostics to show and hide all zones. In addition, when the icon is active, you can display and hide the zones using the symbol .

See also

Structure of the diagnostics (Page 290)

10.1.4 Motion and tools (S7-1500T)

You monitor the path motions and the tools of the technology object in the TIA Portal using the diagnostics window "Motion and Tools" in "Technology object > Diagnostics". The diagnostics function is available in online operation.

The diagnostics window "Motion and Tools" is shown in the graphic display of the diagnostics. You can show the diagnostics window via the symbol of the toolbar and move the window to a desired position within the graphic display.

"Motion and Tools"

The following table describes the meaning of the parameters of the motion and tools:

Status	Description
Path dynamics values	
Limit path dynamics to axis dynamics	Dynamic adaptation (<TO>.StatusPath.DynamicAdaption)
Velocity	Current path velocity (setpoint reference) (<TO>.StatusPath.Velocity)
Acceleration	Current path acceleration (setpoint reference) (<TO>.StatusPath.Acceleration)
Orientation velocity	Resulting orientation velocity (<TO>.StatusPath.OrientationVelocity)
Override	Percentage correction of the velocity specification The setpoint velocity set in Motion Control instructions or from the kinematics control panel is superimposed with an override signal and corrected as a percentage. The following values are permitted as velocity correction: • Path motion: from 0.0% to 200.0% • sPTP motion: from 0.0% to 100.0% (<TO>.Override.Velocity)
Job sequence	
Existing jobs	Current number of jobs for the kinematics technology object in the job sequence. (<TO>.StatusMotionQueue.NumberOfCommands)
Prepared jobs	Number of prepared jobs for the kinematics technology object in the job sequence. (<TO>.StatusMotionQueue.NumberOfPreparedCommands)
Prepared jobs (distance)	
Total path length	Total path length of linear and circular path motions (<TO>.StatusPath.TotalPathLength) Sum of: • Distance of all completed motion jobs • Distance travelled of the active motion job • Remaining distance of the motion job • Calculated distance of all jobs in the job sequence
Accumulated path length	Accumulated path length of linear and circular path motions (<TO>.StatusPath.AccumulatedPathLength) Sum of: • Distance of all completed motion jobs • Distance travelled of the active motion job
Active tool	
Active tool	Currently selected tool (<TO>.StatusTool.ActiveTool)
Tool center point in the FCS	

Status	Description
x position	x coordinate of the current tool frame in the flange coordinate system (FCS) (<TO>.StatusTool.Frame[1].x)
y position	y coordinate of the current tool frame in the FCS (<TO>.StatusTool.Frame[1].y)
z position	z coordinate of the current tool frame in the FCS (<TO>.StatusTool.Frame[1].z)
Rotation A	A-coordinate of the current tool frame in the FCS (<TO>.StatusTool.Frame[1].a)
Rotation B	B-coordinate of the current tool frame in the FCS (<TO>.StatusTool.Frame[1].b)
Rotation C	C-coordinate of the current tool frame in the FCS (<TO>.StatusTool.Frame[1].c)
Joints	
J1...J6 velocity setpoint	Current velocity setpoint of the respective joint J1 to J6 (<TO>.JointData.J[1...6].Velocity)
J1...J6 acceleration setpoint	Current acceleration setpoint of joint J1 to J6 (<TO>.JointData.J[1...6].Acceleration)
Conveyor tracking	
OCS1 ... 3	Active coupled OCS 1, 2 or 3
Coupled technology object	Technology object for active conveyor tracking Leading-value-capable technology objects are: • Positioning axis • Synchronous axis • External encoder • Leading axis proxy (<TO>.StatusConveyor[1..3].ConveyorBelt)
Conveyor position	Conveyor position of the technology object (<TO>.StatusConveyor[1..3].BeltPosition)
Position of the OCS in x direction	Position of the OCS in x direction on the conveyor (<TO>.StatusConveyor[1..3].ObjectPosition)
Conveyor tracking status	Conveyor tracking status (<TO>.StatusConveyor[1..3].TrackingState)
	OCS not assigned: The OCS is not assigned to a leading-value-capable technology object. (<TO>.StatusConveyor[1..3].TrackingState = 0)
	OCS assigned: The Motion Control instruction "MC_TrackConveyorBelt" is finished and the OCS is assigned to a leading-value-capable technology object. The first path motion job in the tracked OCS can be sent. (<TO>.StatusConveyor[1..3].TrackingState = 1)
	TCP synchronizes to OCS: The OCS is assigned to a leading-value-capable technology object. The first path motion job in the tracked OCS is active. (<TO>.StatusConveyor[1..3].TrackingState = 2)

Status			Description	
		Conveyor tracking status	TCP follows OCS	The OSC is assigned to a leading-value-capable technology object. The position of the OCS is reached. The kinematics is moved with the position of the OCS. (<TO>.StatusConveyor[1..3].TrackingState = 3)
			TCP desynchronizes from OCS	The motion of the kinematics in the tracked OCS is ended by a motion job in the WCS or a non-tracked OCS. When the motion job is completed, the "TrackingState" changes to 0 and the OCS is not tracked with the product position anymore. (<TO>.StatusConveyor[1..3].TrackingState = 4)

See also

Structure of the diagnostics (Page 290)

10.1.5 Positions (S7-1500T)

You monitor the position values of the technology object in the TIA Portal using the diagnostics window "Positions" in "Technology object > Diagnostics". The diagnostics function is available in online operation.

The diagnostics window "Positions" is shown in the graphical display of the diagnostics. You can show the diagnostics window via the symbol of the toolbar and move the window to a desired position within the graphic display.

The available functions are described in the section "Monitoring and comparing position values (Page 272)".

"Positions"

The following table describes the meaning of the position information:

Status		Description
Coordinate system 1		Reference coordinate system • In "Diagnostics", in "Calibration" and in "Kinematics trace", this field shows the coordinate system that you have selected in the toolbar. • In "Commissioning", this field shows the coordinate system that you have selected in the kinematics control panel. • When you select the kinematics coordinate system (KCS) in the toolbar, the WCS is displayed in the "Positions" window in "Diagnostics" and in "Kinematics trace".
	x position	x coordinate of the active tool in the set coordinate system (<TO>.Tcp.x; <TO>.TcpInOcs[1..3].x.Position)
	y position	y coordinate of the active tool in the set coordinate system (<TO>.Tcp.y; <TO>.TcpInOcs[1..3].y.Position)
	z position	z coordinate of the active tool in the set coordinate system (<TO>.Tcp.z; <TO>.TcpInOcs[1..3].z.Position)
	Rotation A	A coordinate of the active tool in the set coordinate system (<TO>.Tcp.a; <TO>.TcpInOcs[1..3].a.Position)

Status	Description
Rotation B	B coordinate of the active tool in the set coordinate system (<TO>.Tcp.b; <TO>.TcpInOcs[1..3].b.Position)
Rotation C	C coordinate of the active tool in the set coordinate system (<TO>.Tcp.c; <TO>.TcpInOcs[1..3].c.Position)
Coordinate system 2	Reference coordinate system In the drop-down list, you can select an additional coordinate system in order to display the actual position of the active tool in this coordinate system.
WCS, OCS1, OCS2, OCS3	
x position	x coordinate of the active tool in the set coordinate system (<TO>.Tcp.x; <TO>.TcpInOcs[1..3].x.Position)
y position	y coordinate of the active tool in the set coordinate system (<TO>.Tcp.y; <TO>.TcpInOcs[1..3].y.Position)
z position	z coordinate of the active tool in the set coordinate system (<TO>.Tcp.z; <TO>.TcpInOcs[1..3].z.Position)
Rotation A	A coordinate of the active tool in the set coordinate system (<TO>.Tcp.a; <TO>.TcpInOcs[1..3].a.Position)
Rotation B	B coordinate of the active tool in the set coordinate system (<TO>.Tcp.b; <TO>.TcpInOcs[1..3].b.Position)
Rotation C	C coordinate of the active tool in the set coordinate system (<TO>.Tcp.c; <TO>.TcpInOcs[1..3].c.Position)
MCS	
A[1..6]	Current position setpoint of axis A[1..6] (<TO>.Position)
JCS	
J[1..6]	Current position setpoint of joint JJ[1..6] (<TO>.JointData.J[1..6].Position)

See also

Structure of the diagnostics (Page 290)

Kinematics trace (S7-1500T) 11

The kinematics trace offers the following functions:

- 3D visualization of the current motion of the tool center point (TCP) and the object coordinate systems (OCS)
- Recording, playing and saving kinematic motions
- Exporting and importing the recordings

You can find the kinematics trace of the kinematics technology object in the project tree under "Technology object > Kinematics trace".

11.1 Defining parameter values for recording (S7-1500T)

You specify the parameter values for the recording under "Technology object > Kinematics trace > Configuration"

Setting the sampling

Configure the duration of a recording as follows:

1. In the "Time of recording" drop-down list, select the desired recording time between the following OBs:
   - MC-Servo
   - MC-Interpolator
2. In the "Record all" drop-down list, select the desired value for the recording interval:
   - Specification in cycles
   - Specification in seconds
3. The calculated value of the maximum recording duration is displayed in the "Max. recording duration" field.

   If you change the recording interval in the field "Record all", the maximum recording time changes.
4. To set the recording duration to the maximum possible, select the "Use max. recording duration" check box.
5. In the "Recording duration (a)" drop-down list, select the desired type of recording duration display for the recording:
   - In seconds
   - Number of samples

Setting triggers

Configure the start of a recording as follows:

1. In the "Trigger mode" drop-down list, select the desired trigger mode for your recording:
   - Record now
     The recording starts immediately after the configuration is loaded.
   - Trigger on tag
     The system waits for a trigger event that triggers the recording.
2. In the "Trigger tag" field, select a tag of the data type "BOOL".
3. In the "Event" drop-down list, select the desired event to be used as trigger event:
   - Positive edge
   - Falling edge
4. In the "Pretrigger (b)" drop-down list, select a suitable pretrigger for your recording:
   - In seconds
   - Number of samples

   The "pre-trigger" is used to record measuring points already before the beginning of the trigger event. As soon as the trigger event occurs, the recording is displayed in the graphic view.

Selecting the traces to be recordedTraces

Select the traces for the recording as follows.

1. Select whether the setpoint positions of the kinematics axes should be recorded with the coordinates of the tool center point (TCP). You have the following options:
   - Tool center point (TCP) and kinematics
     If you activate this option, the coordinates of the TCP and the set positions of the kinematics axis are recorded. The motions of the TCP and the motions of the kinematic axes are displayed when a recording is played.
   - Tool center point (TCP)
     If you activate this option, only the coordinates of the TCP will be recorded. The motions of the TCP are displayed when a recording is played, the motions of the kinematic axes are not displayed.
2. Select the object coordinate systems (OCS) to be recorded.
   - OCS 1 frame
   - OCS 2 frame
   - OCS 3 frame

Maximum number of signals per kinematics trace

You can record a maximum of 64 signals in a kinematics trace. The following table shows how many signals are required for the traces.

Kinematics type	Trace	Required signals
2D	Tool center point (TCP) and kinematics	4
	Tool center point (TCP)	2

Kinematics type	Trace	Required signals
2D	per OCS	3
2D with orientation	Tool center point (TCP) and kinematics	6
	Tool center point (TCP)	3
	per OCS	2
3D	Tool center point (TCP) and kinematics	6
	Tool center point (TCP)	3
	per OCS	6
3D with orientation	Tool center point (TCP) and kinematics	8
	Tool center point (TCP)	4
	per OCS	4
3D with 2 orientations A, B	Tool center point (TCP) and kinematics	10
	Tool center point (TCP)	5
	per OCS	4
3D with 3 orientations	Tool center point (TCP) and kinematics	12
	Tool center point (TCP)	6
	per OCS	6
6-axis articulated arm with central hand	Tool center point (TCP) and kinematics	12
	Tool center point (TCP)	6
	per OCS	6

The more traces you record, the lower the maximum recording duration and the number of samples per trace.

11.2 List of recordings (S7-1500T)

The list of recordings is displayed below the graphic display as tabular editor. The list contains the following recordings:

- The current recording
- All saved recordings for the selected technology object

The recordings are displayed line by line.

Functions

The following functions are available in the list of recordings:

- Saving and deleting recordings (Page 302)
- Showing traces of a recording
  You can also show all traces of a recording by expanding the line of a recording.

- Showing and hiding traces in the graphic display
  The button for showing and hiding a trace has the following functions depending on the status:

Button	Status and function
	The recording or the trace is hidden. Shows the hidden recording or trace.
	The traces of the recording are partially shown and hidden.
	The recording or the trace is shown. Hides the recording or trace

11.3 Recording and playing kinematics motions (S7-1500T)

For the recording, use the values set under "Technology object > Kinematics trace > Configuration".

Switch to live display

You can show the current motion or position of the kinematics with the icon in online mode. The button for the live display is active when a saved recording is selected or while a recording is played. In offline mode and when no recording is available, the live display button is inactive.

Requirement

- The kinematics trace was configured under "Technology object > Kinematics trace > Configuration".

Record kinematics motion

To record a kinematics motion, proceed as follows:

1. Click the icon in the toolbar to establish an online connection to the device.
   The kinematics trace establishes an online connection to the device. If the online and offline trace configurations differ, the trace configuration is loaded into the device.
2. To start a recording, click on the symbol in the toolbar.
   If you start a recording directly without previously establishing the online connection (step 1), an online connection is established automatically.
3. Move the kinematics.
4. To end the recording, click on the symbol on the toolbar.
   The current recording and the configuration are kept until the "kinematics trace" has been closed. When you start a new recording, the current recording is overwritten.

Play kinematics motion

To play a kinematics motion, proceed as follows:

1. If the live display is activated, switch off the live display by clicking the symbol .
2. To show the trace, click on this symbol of the corresponding recording.
   The graphic display displays the complete trace of the recording.
3. To play the selected recording, click on the symbol at the bottom of the graphic display.
   The selected recording is played.
4. To adjust the playback speed, change the position of the speed slider in the toolbar for playing a recording.
   .
5. You can jump to certain positions in a recording using the following buttons:

Button	Function
	Jumps back to the start of the selected recording.
	Jumps back step-by-step in the selected recording.
	Jumps forward step-by-step in the selected recording.
	Jumps to the end of the selected recording.

6. To pause a recording, click on the symbol in the toolbar for playing a recording.
7. To stop a recording, click on the symbol in the toolbar for playing a recording.

Show TCP orientation

Use the button to show or hide the TCP orientation as a trace in the kinematics trace.

Displaying and comparing position values

In the kinematics trace, you can monitor position values of the technology object or compare the position values in two different reference coordinate systems with the "Positions" window.

In addition, you can view position values directly on the trace.

The available functions are described in the section "Monitoring and comparing position values (Page 272)".

11.4 Saving and deleting recordings (S7-1500T)

Saving a recording

You can save a current recording. A saved recording contains the following data:

- Kinematics type
- Coordinates of:
  - Kinematics
  - Tool center point (TCP)
  - Object coordinate systems (OCS)
- Valid online geometry at the time of the recording

To adjust and save a recording, proceed as follows:

1. In the "Current recording" area, enter the name of the recording in the "Name" column.
2. In the "Color" column, select the desired colors for the traces.
3. If necessary, enter comments in the "Comment" column.
4. To save the current recording, click on the symbol in the "Current recording" area.
   The recording is inserted in the "Saved recordings" area in the tabular editor.

NOTE

Up to 20 recordings which can be saved

The tabular editor can save a maximum of 20 recordings.

To save additional recordings, delete the recording you no longer need.

Deleting saved recordings

To delete a recording, follow these steps:

1. To delete a recording, click on the symbol ✕ in the corresponding line in the "Saved recordings" area.
   The record is deleted.

NOTE

Traces cannot be deleted individually

You cannot delete traces individually. When you delete a recording, all included traces are deleted.

11.5 Importing and exporting recordings (S7-1500T)

You have the option to export a recording as measurement, as *.ltr or *.csv file. The exported file contains the TCP position values, the OCS position values and the configuration of the kinematics technology object. Optionally, the following values can be exported:

- Technology version V7.0 of later: Axis position values
- As of technology version V7.0: Joint position values

You can re-import an exported *.ltr file into the kinematics trace. The recordings saved under measurements cannot be imported into the kinematics trace again.

Export record as file

To export a record, proceed as follows:

1. From the list of recordings, select the record to be exported.
2. Click on the symbol in the toolbar.
   The "Export recording" dialog opens.
3. Select "*.csv" or "*.ltr" as file format.
4. Select the storage location.
5. Click "Save".
   The file is exported and saved.

Import recording as file

To import a recording, proceed as follows:

1. Click on the symbol in the toolbar.
   The "Import recording" dialog opens.
2. In the corresponding folder, select the file of the "*.ltr" file format to be imported.
3. Click the "Open" button.
   The file is imported. The recording is displayed in the tabular editor under saved recordings.

Save recording as measurement

With the trace you have extended evaluation options to analyze kinematics motion in detail.
To save the recording as a measurement, proceed as follows:

1. Select the current recording or a saved recording.
2. Click on the symbol in the toolbar.
   The recording is saved under "Traces > Measurements".
3. Open the recording stored under "Traces > Measurements" in the trace.
   The recorded parameters are displayed in the trace.

Calibration (S7-1500T) 12

During calibration, you move a kinematics to relevant points and use the position values to determine the exact position of an object coordinate system (OCS) in the world coordinate system (WCS), to check a predefined OCS in the WCS or to define a workspace zone.

Open calibration under "Technology object > Calibration".

Alternatively, you can open the calibration to the following type:

- To calibrate an object coordinate system, select an object coordinate system in the selection box under "Technology object > Configuration > Extended parameters > Object coordinate systems" and click the symbol.
- To calibrate a workspace zone, go to "Technology object > Configuration > Extended parameters > Zones > Workspace zones" and click the symbol in the line for the respective workspace zone.

Requirement

The kinematics technology object is correctly configured and connected.

Structure

Calibration is divided into two views:

- Object coordinate systems
- Workspace zones

Each view is divided into the following areas:

- Configuration section (Page 305)
- 3D visualization (Page 305) and control pad (Page 271)
- Kinematics control panel (Page 275)

12.1 Using 3D display for the calibration (S7-1500T)

The 3D display provides you with visual support during calibration. The following values are displayed graphically depending on the configured calibration method:

- Configured points and angles
- Guide lines
- Offset of the OCS from the origin
- Current position of the TCP
- Graphically highlighted active calibration point
- Active and inactive workspace zones

In addition, you can also use the following functions of the 3D visualization for the calibration:

- Operating the zone display (Page 271)
- Selecting values for the calibration (Page 269)
- Monitoring and comparing position values (Page 272)

In the configuration area, select a calibration method and set all the required parameters for the calibration.
The configuration area is structured differently for the calibration of object coordinate systems, the calibration of workspace zones and depending on the selected calibration method.

- Configuring calibration of an object coordinate system (Page 308)
- Configuring calibration of a workspace zone (Page 325)

12.2 Moving the kinematics for calibration (S7-1500T)

For the calibration, you can move the kinematics as follows:

- **Move the tool center point in the 3D view using the control pad**
  See also section "Operating the directional pad (Page 271)".
- **Moving real kinematics online**
  You move the real kinematics online via the control panel in the "Jog" or "Jog to target position" mode. In the 3D view, you can see the motion of the kinematics model.
  To specify the target position in the "Jog to target position" mode, you can determine the coordinates with the control pad or enter them directly on the control panel.
  The functionality of the kinematics control panel is described in section "Commissioning (Page 275)".

12.3 Display progress and status (S7-1500T)

The progress and notes on the input of the values are displayed in the configuration area of the calibration method.
The entered values of the calibration are checked for the "Three-point" and "Two-point" methods. The distances between the points in the OCS are compared with the distances between the points in the WCS. Comparison of the points is not required with the "One-point" method.
If the entries are still incomplete, the status indicator is displayed in red. Depending on your inputs, the status indicator shows the following:

- In the case of the "Three-point" (Page 310) calibration method
  - Angle of triangles in the WCS and the OCS, less than 20°
  - Deviation of the points in WCS and OCS to each other greater than 5%
- In the case of the "Two-point" (Page 309) calibration method
  - Deviation of the points in WCS and OCS to each other greater than 5%

Each correctly set point is shown in green in the progress display.

If your entries are complete and correct, the status indicator "Finished" appears green. You can accept the values in the configuration.

12.4 Setting points (S7-1500T)

To set points, use the following input options:

- Enter the position manually
- Apply TCP position
- Couple coordinates to TCP position

Each of the values displayed in the fields is a position value in the following coordinate system:

- Calibrate object coordinate system: WCS or selected object coordinate system (marking in adjustment range of the individual points)
- Calibrate workspace zone: Coordinate system of the workspace zone (selection in the zone properties)

Enter the position manually

1. Enter the position of the workspace zone in the x, y and z directions in the respective field.

Apply TCP position

To adopt the current position value of the TCP, proceed as follows:

1. Move the kinematics to a position.
   You can monitor the current position values in the "Positions" window.
2. To adopt the current position value of the TCP, click the symbol.
   - To apply all coordinates of a position, click the uppermost and higher-level symbol in the area for a point.
   - To apply the coordinates individually or an angle of a position, click the symbol next to the field for the coordinates or the angle.

   The position value of the TCP is displayed in the selected fields. An angle for a rotation defined by the position value is displayed in the graphical view.

Couple coordinates to TCP position

1. To link the coordinates to the TCP, click the symbol.
   - To couple all coordinates of a position, click the uppermost and higher-level symbol in the area for a point.
   - To couple a single coordinate or angle, click the symbol next to the respective field for the coordinate or angle.

   The symbol changes to and the position value is coupled to the TCP. The corresponding fields of the coordinates are inactive.

2. Move the kinematics to a position.
   In the corresponding fields of the coupled coordinates, the current value of the TCP is displayed while moving the kinematics. An angle for a rotation defined by the position value is displayed in the graphical view.
3. To decouple the coordinates from the TCP, click the symbol .
   – To decouple all coordinates of a position, click the uppermost and higher-level symbol in the area for a point.
   – To uncouple a single coordinate or angle, click the symbol next to the respective field for the coordinate or angle.

   The corresponding fields of the coordinates can be edited again.
4. To adopt the current position value or the angle of the TCP, click the symbol.
   The position value of the TCP is displayed in the selected fields. An applied angle is shown in the graphic view .

See also

Apply or reset values (Page 308)

12.5 Apply or reset values (S7-1500T)

Apply values

If you have entered new values for the calibration and the "status indicator" is green, you can click on the button "Apply values". The values from the calibration are applied to the configuration. If you calibrate an already defined zone and adopt the calibrated values, the previously defined values are overwritten.
The "Apply values" button becomes inactive as soon as the values from the calibration have been successfully applied in the configuration.

Reset values

With the "Reset values" button, you reset the entered values of the calibration.

12.6 Calibrate object coordinate systems (S7-1500T)

12.6.1 Configuring calibration of an object coordinate system (S7-1500T)

Requirement

The kinematics technology object is correctly configured and connected.

Selecting the object coordinate system

1. Select an OCS from the drop-down list.

Selecting the calibration method Calibration methods

Select a calibration method In the drop-down list.
Depending on the type of kinematics, you can use the calibration methods as follows:

Kinematics type	Definition OCS / Checking the OCS position	Calibration methods
2D	Move OCS	Two-point (Page 309)
	Move OCS and rotate around the y axis	Move and rotate around y (Page 310)
2D with orientation	Move OCS	One-point (Page 310)
6-axis articulated arm with central hand3D, 3D with 3 orientations and	Move OCS	Three-point (Page 310)
	Move OCS and rotate around an axis	• Three-point (Page 310) • Move and rotate (Page 310)
	Move OCS and rotate around two axes	• Three-point (Page 310) • Plane (Page 310)
3D with 2 orientations A, B3D with orientation and	Move OCS	Two-point (Page 309)
	Move OCS and rotate around the z axis	Move and rotate around z (Page 312)

12.6.2 Move OCS with the "Two-point" calibration method (S7-1500T)

To move the origin of the object coordinate system (OCS) and define the location of the OCS, use the "Two-point" calibration method.

"Two-point" calibration methodTwo-point

Using this method, you can move the OCS origin or check the position of an already defined OCS in the WCS.
The calibration method assumes that the defined points for the tool center point (TCP) of the kinematics can be reached.
With this method, you calibrate the OCS based on 2 points. You define the OCS origin using the first item in the menu "1. Set point 1" .
You define the second point in the "2. Set point 2" menu as follows:

- With 2D kinematics: Define a point on the xz plane
- With 3D kinematics with orientation or with 2 orientations: Define a point on the xy plane. The z coordinate is automatically applied from the first point and cannot be changed for the second point.

The points entered in the WCS and in the OCS each form a route. The method compares the length and location of the two distances in the WCS and the OCS. If the deviation between the two distances is greater than 5%, this is shown in red in the status display. If the entries are incomplete, this is also shown in red in the status display.
To compare the actual position of an OCS in the WCS with your configured OCS frames, move the kinematics to the corresponding points.

12.6.3 Move OCS and rotate around the y axis (S7-1500T)

To move the origin of the object coordinate system (OCS) and define the position of the OCS, use the "Move and rotate around y" calibration method.

"Move and rotate around y" calibration methodMove and rotate around y

With this method, you can move the OCS origin to a point and rotate the OCS with an angle of rotation around the y axis.

In the menu "1. Move origin of OCS", you define the new position of the OCS origin.

In the second step, you define the rotation of the OCS in the menu "2. Rotate OCS around one coordinate axis". First select the x axis or z axis from the "Rotate around" drop-down list. This determines which axis should be rotated around the y axis. Then move the kinematics to a point through which the selected coordinate axis should run after rotation. In the "Angle" field, you accept the value of the TCP and thus define the angle of rotation for the selected coordinate axis and the OCS.

12.6.4 Move OCS with the "One-point" calibration method (S7-1500T)

To move the origin of the object coordinate system (OCS) and define the position of the OCS, use the "One-point" calibration method.

"One-point" calibration methodOne-point

Using this method, you can move the OCS origin or check the position of an already defined OCS in the WCS.

The calibration method assumes that the defined points for the tool center point (TCP) of the kinematics can be reached.

With this method, you calibrate the OCS based on one point. In the menu "1. Set point 1" you define the x and z coordinates of the point in the WCS. Then enter the corresponding coordinates in the OCS.

The method checks whether all coordinates for the point have been entered. If the entries are still incomplete, the status indicator is displayed in red.

To compare the actual position of an OCS in the WCS with your configured OCS frames, move the kinematics to the corresponding point.

12.6.5 Move OCS and rotate around one axis or two axes (S7-1500T)

Use one of the following calibration methods to move the origin of the object coordinate system (OCS) and define the position of the OCS:

- Move and rotate
- Three-point
- Plane

With the "Move and rotate" calibration method, you can rotate the OCS around 1 axis. If you want to rotate the OCS around a second axis, use the "Three-point" or "Plane" calibration method.

"Three-point" calibration methodThree-point

With this method, you can:

- Move the OCS origin and rotate the OCS around 2 axes
- Check the position of an already defined OCS in the WCS.

The calibration method assumes that the defined points for the tool center point (TCP) of the kinematics can be reached.

With this method, you calibrate the OCS based on 3 points. You define the coordinates of the points in the WCS. Then enter the corresponding coordinates in the OCS.

The points entered in the WCS and the OCS each form a triangle. The method compares the angles and side lengths of the two triangles.

The status of the check gives you feedback on the accuracy of your information. Depending on your inputs, the status indicator shows the following:

- Angle of triangles in the WCS and the OCS, less than 20°
- Deviation of the points in WCS and OCS to each other greater than 5%
- Conformity error of the side lengths of the triangle greater than 5%

If the entries are incomplete, this is also shown in red in the status display.

If the two triangles are within the tolerances, the position of the OCS is defined via the 3 points.

To compare the actual position of an OCS in the WCS with your configured OCS frames, move the kinematics to the corresponding points.

"Move and rotate" calibration methodMove and rotate

With this method, you can move the OCS origin to a point and rotate the OCS with an angle of rotation around one of the three coordinate axes.

In the menu "1. Move origin of OCS", you define the new position of the OCS origin.

In the second step, you define the rotation of the OCS in the menu "2. Rotate OCS around one coordinate axis". First, select a coordinate axis (x, y or zaxis) in the drop-down list "Rotate around" around which the OCS is to be rotated. Then select a coordinate axis in the "Axis to rotate" drop-down list that is to be rotated around the previously selected coordinate axis. To conclude, move the kinematics to a point through which the coordinate axis selected in the second step should pass after the rotation. In the "Angle" field, you accept the value of the TCP and thus define the angle of rotation for the selected coordinate axis and the OCS.

"Plane" calibration methodPlane

With this method, you can move the OCS origin to a point and rotate the OCS with 2 angles of rotation around 2 coordinate axes.

In the menu "1. Move origin of OCS", you define the new position of the OCS origin.

In the second step, you define the first rotation of the OCS in the menu "2. Rotate coordinate axis to TCP". In the "Axis" drop-down list, first select the coordinate axis (x, y or z-axis) to be rotated to the TCP. Then move the kinematics to a point through which the selected coordinate axis should run after rotation. Adopt the value of the TCP to define the angle of rotation for the selected coordinate axis and the OCS.

In the last step, you define the second rotation of the OCS in the menu "Span plane over two coordinate axes". First select a plane from the "Plane" drop-down list, which is spanned between the previously rotated and a second coordinate axis. Then move the kinematics to a

point through which the spanned plane should run. Adopt the value of the TCP to define the angle of rotation for the selected coordinate axes and the OCS.

12.6.6 Move OCS and rotate around the z axis (S7-1500T)

To move the origin of the object coordinate system (OCS) and define the position of the OCS, use the "Move and rotate around z" calibration method.

"Move and rotate around z" calibration methodMove and rotate around z

With this method, you can move the OCS origin to a point and rotate the OCS with an angle of rotation around the z axis.

In the menu "1. Move origin of OCS", you define the new position of the OCS origin.

In the second step, you define the rotation of the OCS in the menu "2. Rotate OCS around one coordinate axis". First select the x or y axis in the "Rotate around" drop-down list. This determines which axis should be rotated around the y axis. Then move the kinematics to a point through which the selected coordinate axis should run after rotation. In the "Angle" field, you accept the value of the TCP and thus define the angle of rotation for the selected coordinate axis and the OCS.

12.6.7 Examples (S7-1500T)

12.6.7.1 Introduction (S7-1500T)

The following examples show you how to calibrate an object coordinate system using the different calibration methods.

The example looks at the following application. A kinematics stacks products on pallets. The products have four different shapes, for which the pallet is repositioned in each case depending on the surrounding area. The position of the pallet is described by the OCS 1 frame. Based on a few details relating to position, the calibration determines the position of the OCS 1 frame after a change of position.

To illustrate all calibration methods, the following examples are carried out with the different types of Cartesian Portal kinematics.

Kinematics	New position of the pallet	Calibration method used	Example
Cartesian portal 2D	Position 1	Two-point	Move OCS 1 (Page 316)
Cartesian portal 2D with orientation		One-point	
Cartesian portal 2D	Position 2	Move and rotate around y	Move OCS 1 and rotate around the y axis (Page 318)
Cartesian portal 3D		Move and rotate	
Cartesian portal 3D	Position 3	Move and rotate	Move OCS 1 and rotate around z axis. (Page 320)
Cartesian portal 3D with orientation		Move and rotate around z	

Kinematics	New position of the pallet	Calibration method used	Example
Cartesian portal 3D	Position 4	• Three-point • Plane	Move OCS 1 and rotate it around the z axis and y axis (Page 322)

Pallet

The pallet has the following dimensions:

- Width: 800.0 mm
- Height: 144.0 mm
- Depth: 1200.0 mm

The origin of the pallet is the same for all four positions and has the following position in the WCS:

	Position in the WCS (mm)	
	2D	3D
x	600.0	600.0
y	0.0	600.0
z	0.0	0.0

The pallet is rotated differently in each position. The following angles are used for the new positioning:

- **Position 1**
  2D kinematics

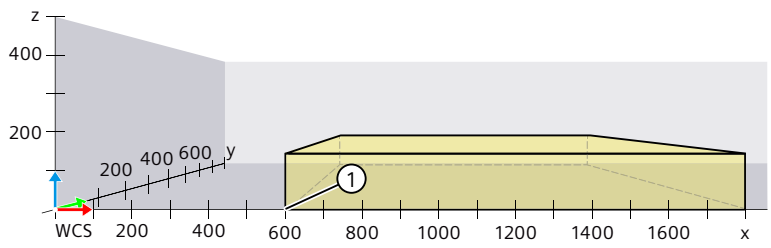

① Origin of the pallet

3D kinematics

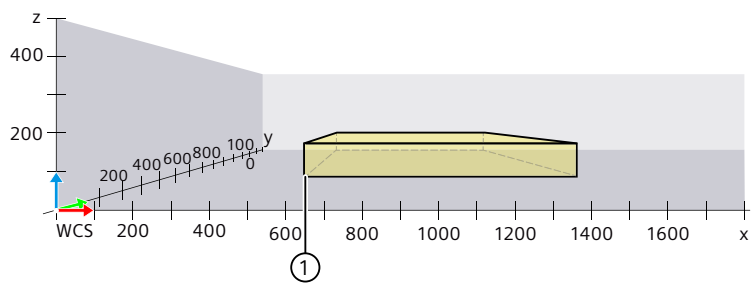

① Origin of the pallet

- **Position 2**
  2D kinematics

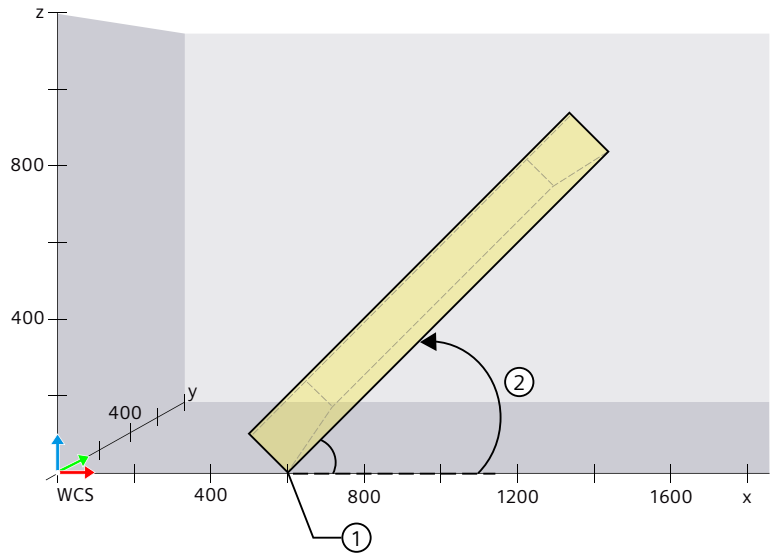

① Origin of the pallet

② Rotation with angle B

3D kinematics

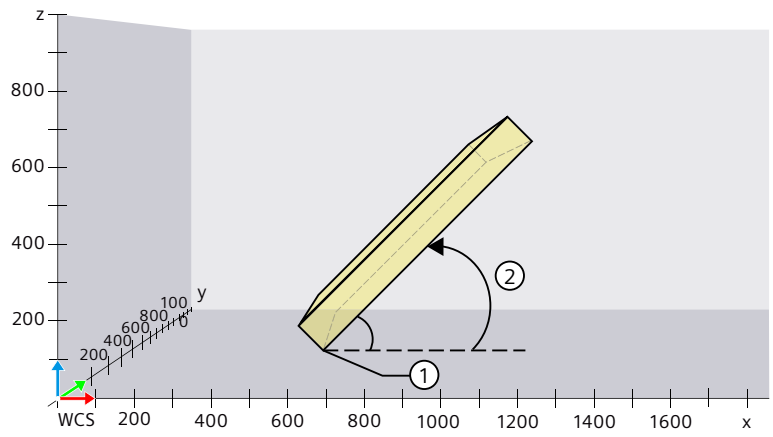

① Origin of the pallet

② Rotation with angle B

- **Position 3**

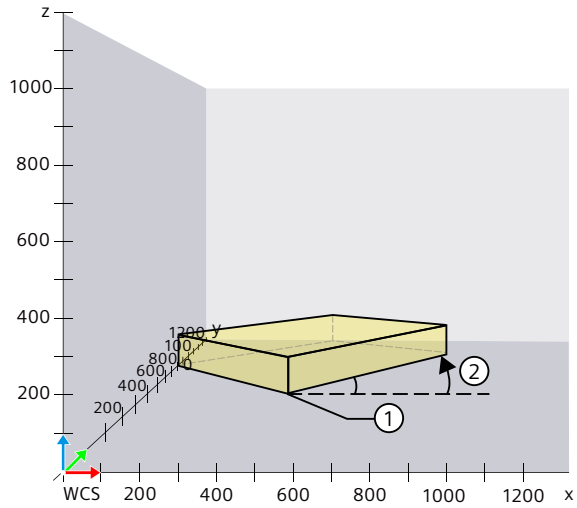

① Origin of the pallet
② Rotation with angle A

- **Position 4**

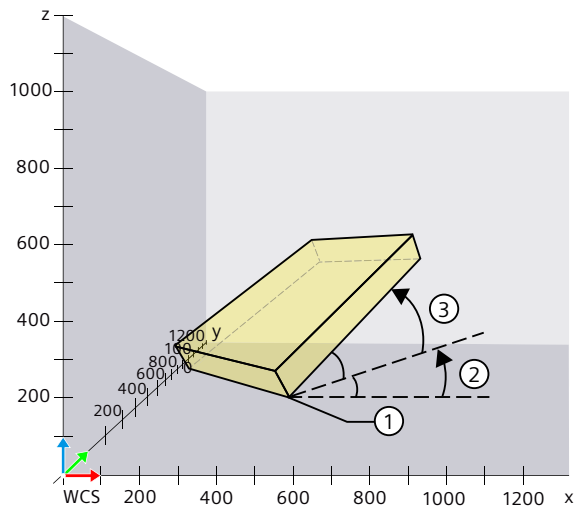

① Origin of the pallet
② First rotation with angle A
③ Second rotation with angle B

Position	Angle		
	A	B	C
1	0°	0°	0°
2	0°	-45°	0°
3	45°	0°	0°
4	45°	30°	0°

Kinematics

Execute the examples for each of the kinematics types mentioned in the overview and enter the following values for the geometry:

Parameters	2D kinematics / 2D kinematics with orientation	3D kinematics / 3D kinematics with orientation
Length L1	500.0 mm	
Length L2	500.0 mm	
Length L3	-	500.0 mm
Flange length FL	100.0 mm	
x minimum	-500.0 mm	
x maximum	2500.0 mm	
y minimum	-	0.0 mm
y maximum	-	2000.0 mm
z minimum	0.0 mm	
z maximum	1000.0 mm	

If you want to use a different kinematics, consider the position and dimensions of the pallet when defining the geometric parameters of the kinematics. Make sure that all points are accessible for the kinematics.

12.6.7.2 Move OCS 1 (S7-1500T)

Introduction

The pallet was moved in the direction of the x axis in the WCS. Two corner points at the pallet edge are used to determine the new position of the OCS 1 frame.

The position of the first pallet corner defines the origin of the OCS 1. Using the position of the second pallet corner, an additional point for the OCS 1 in the WCS can be determined using the "Two-point" calibration method.

The following methods are used for calibration:

- 2D kinematics: "Two-point" calibration method
- 2D kinematics with orientation: "One-point" calibration method

Coordinates of the points used in the example

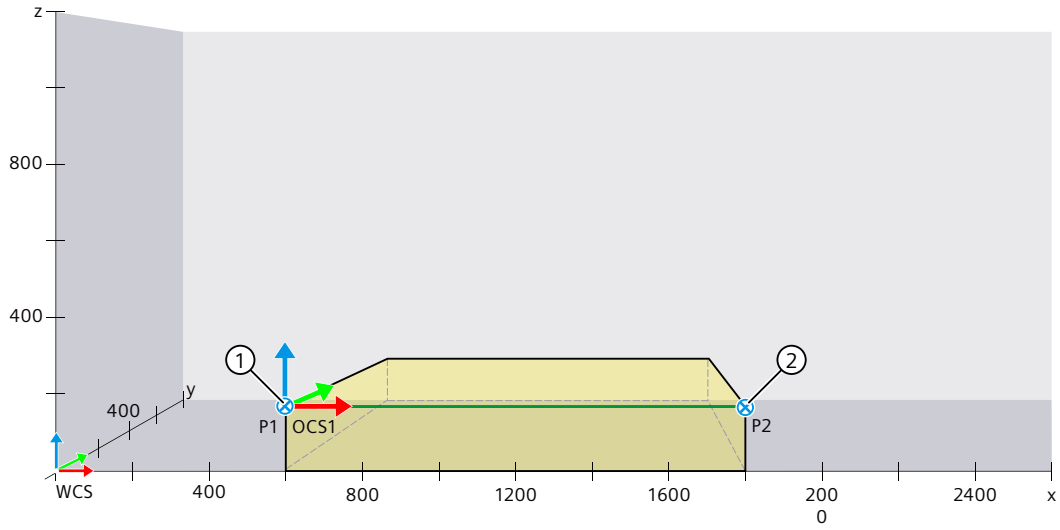

		Position in the WCS (mm)		Position in the OCS (mm)	
		x	z	x	z
①	Point P1 on pallet corner	600.0	144.0	0.0	0.0
②	Point P2 on pallet corner	1800.0	144.0	1200.0	0.0

2D kinematics: "Two-point" calibration method

Two corner points at the pallet edge are used to determine the new position of the OCS 1 frame.

The position of the first pallet corner defines the origin of the OCS 1. The position of the second pallet corner can be used to determine the position in the WCS for another point.

1. Select the object coordinate system "OCS 1".
2. Select the "Two-point" calibration method in the drop-down list.

Define the origin for the OCS 1 as follows:

1. Move the kinematics to the point P1 ① on the pallet.
2. Accept the position coordinates of the TCP in WCS by clicking on the symbol next to the field "Position in WCS".
3. Enter the values for the position in OCS for the point P1 ①.
   You have defined the origin of OCS 1.

Define the point P2 ② as follows:

1. Move the kinematics to the point P2 ② on the pallet.
2. Define the coordinates for point P2 ② in the WCS by adopting the current position values of the TCP. Click the symbol next to the "Position in WCS" field.
3. For the point P2 ②, enter the values for the position in the OCS.

The position of the OCS is thus unambiguously determined and the "Apply values" button is active.

1. Accept the values from the calibration into the configuration.

2D kinematics with orientation: "One-point" calibration method

A corner point of the pallet is used to determine the new position of the OCS 1 frame.
The position of the pallet corner defines the origin of the OCS 1.

1. Select the object coordinate system "OCS 1".
2. Select the "One-point" calibration method in the drop-down list.

Define the origin for the OCS 1 as follows:

1. Move the kinematics to the point P1 ① on the pallet.
2. Accept the position coordinates of the TCP in WCS by clicking on the symbol ←1 next to the field "Position in WCS".
3. Enter the values for the position in OCS for the point P1 ①.
   You have defined the origin of OCS 1.

The position of the OCS is thus unambiguously determined and the "Apply values" button is active.

1. Accept the values from the calibration into the configuration.

12.6.7.3 Move OCS 1 and rotate around the y axis (S7-1500T)

Introduction

The pallet has been tilted. Two points at the pallet edge are used to determine the new position of the OCS 1 frame.
The position of the pallet corner defines the origin of the OCS 1. The angle of rotation for the OCS 1 is determined via a point on the pallet edge.
The following methods are used for calibration:

- 3D kinematics: "Move and rotate" calibration method
- 2D kinematics: "Move and rotate around y" calibration method

Coordinates of the points used in the example

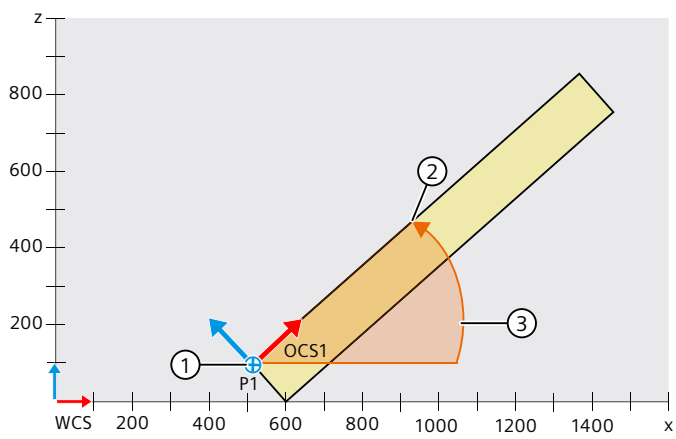

① Point P1 pallet corner

② Point at pallet edge
The rotated x axis now runs through this point

③ Angle of rotation OCS 1

		Position in the WCS (mm)				
		3D kinematics			2D kinematics	
		x	y	z	x	z
①	Point pallet corner	498.5	600.0	102.0	498.5	102.0
②	Point at pallet edge	900.0	600.0	504.0	900.0	504.0

3D kinematics: "Move and rotate" calibration method

1. Select the object coordinate system "OCS 1".
2. Select the "Move and rotate" calibration method in the drop-down list.

Define the origin for the OCS 1 as follows:

1. Move the kinematics to the point P1 ① on the pallet.
2. Accept the position coordinates of the TCP in WCS by clicking the button next to the field "Position in WCS".

   You have defined the origin of the OCS 1 with point P1 ①.

Define the angle of rotation ③ for the OCS 1 as follows:

1. Select the y axis as the coordinate axis around which the OCS 1 is rotated.
2. Select the x axis as the coordinate axis that is rotated around the y axis to the TCP or point ②.
3. Move the kinematics to the point ② at the pallet edge.
4. Rotate OCS 1 by clicking on the symbol next to the field for the angle.

   The set angle of rotation ③ is shown in the field and in the graphic display . The rotated x axis now runs through the point ②.

The position of the OCS 1 is thus unambiguously determined and the "Apply values" button is active.

1. Accept the values from the calibration into the configuration.

2D kinematics: "Move and rotate around y" calibration method

1. Select the object coordinate system "OCS 1".
2. Select the "Move and rotate around y" calibration method in the drop-down list.

Define the origin for the OCS 1 as follows:

1. Move the kinematics to the point P1 ① on the pallet.
2. Accept the position coordinates of the TCP in WCS by clicking on the symbol next to the field "Position in WCS".

   You have defined the origin of the OCS 1 with point P1 ①.

Define the angle of rotation ③ for the OCS 1 as follows:

1. Select the rotation of the x axis around the y axis.
   In this way, you specify that the x axis is rotated around the y axis to the TCP or point ②.
2. Move the kinematics to the point ② at the pallet edge.
3. Rotate OCS 1 by clicking on the symbol ↤1 next to the field for the angle.
   The set angle of rotation ③ is shown in the field and in the graphic display . The rotated x axis now runs through the point ②.

The position of the OCS 1 is thus unambiguously determined and the "Apply values" button is active.

1. Accept the values from the calibration into the configuration.

12.6.7.4 Move OCS 1 and rotate around z axis. (S7-1500T)

Introduction

The pallet was rotated horizontally. Two points at the pallet edge are used to determine the new position of the OCS 1 frame.
The position of the pallet corner defines the origin of the OCS 1. The angle of rotation for the OCS 1 is determined via a point on the pallet edge.
The following methods are used for calibration:

- 3D kinematics: "Move and rotate" calibration method
- 3D kinematics with orientation: "Move and rotate around z" calibration method

Coordinates of the points used in the example

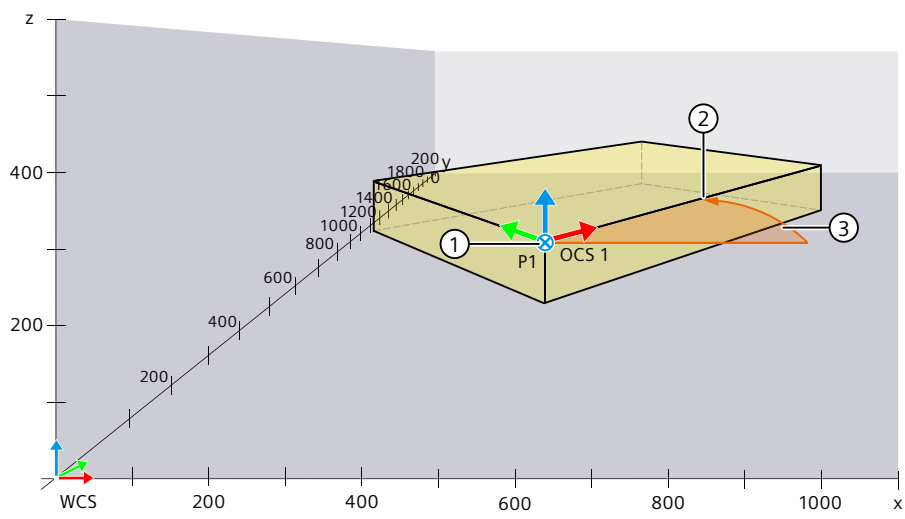

① Point P1 on pallet corner

② Point at pallet edge
The rotated x axis now runs through this point

③ Angle of rotation OCS 1

		Position in the WCS (mm)		
		x	y	z
①	Point P1 on pallet corner	600.0	600.0	144.0
②	Point at pallet edge	1000.0	1000.0	144.0

3D kinematics: "Move and rotate" calibration method

1. Select the object coordinate system "OCS 1".
2. Select the "Move and rotate" calibration method in the drop-down list.

Define the origin for the OCS 1 as follows:

1. Move the kinematics to the point P1 ① on the pallet.
2. Accept the position coordinates of the TCP in WCS by clicking on the symbol ←1 next to the field "Position in WCS".
   You have defined the origin of the OCS 1 with point P1.

Define the angle of rotation ③ for the OCS 1 as follows:

1. Select the z axis as the coordinate axis around which the OCS 1 is rotated.
2. Select the x axis as the coordinate axis that is rotated around the z axis to the TCP or point ②.
3. Move the kinematics to the point ② at the pallet edge.
4. Rotate OCS 1 by clicking on the symbol ←1 next to the field for the angle.
   The set angle of rotation ③ is shown in the field and in the graphic display . The rotated x axis now runs through the point ②.

The position of the OCS 1 is thus unambiguously determined and the "Apply values" button is active.

1. Accept the values from the calibration into the configuration.

3D kinematics with orientation: "Move and rotate around z" calibration method

1. Select the object coordinate system "OCS 1".
2. Select the "Move and rotate around z" calibration method in the drop-down list.

Define the origin for the OCS 1 as follows:

1. Move the kinematics to the point P1 ① on the pallet.
2. Accept the position coordinates of the TCP in WCS by clicking on the symbol ←1 next to the field "Position in WCS".
   You have defined the origin of the OCS 1 with point P1 ①.

Define the angle of rotation ③ for the OCS 1 as follows:

1. Select the rotation of the x axis around the z axis.
   In this way, you specify that the x axis is rotated around the z axis to the TCP or point ②.
2. Move the kinematics to the point ② at the pallet edge.
3. Rotate OCS 1 by clicking on the symbol ↔1 next to the field for the angle.
   The set angle of rotation ③ is shown in the field and in the graphic display . The rotated x axis now runs through the point ②.

The position of the OCS 1 is thus unambiguously determined and the "Apply values" button is active.

1. Accept the values from the calibration into the configuration.

12.6.7.5 Move OCS 1 and rotate it around the z axis and y axis (S7-1500T)

Introduction

The pallet was tilted and also rotated horizontally.

3D kinematics: "Plane" calibration method

Three points on the pallet surface are used to determine the new position of the OCS 1 frame. The origin of the OCS 1 is determined via the position of a pallet corner. The positions of the other two points are used to determine the angles of rotation for the OCS 1.
The "Plane" calibration method is used for calibration with 3D kinematics.

Coordinates of the points used in the example

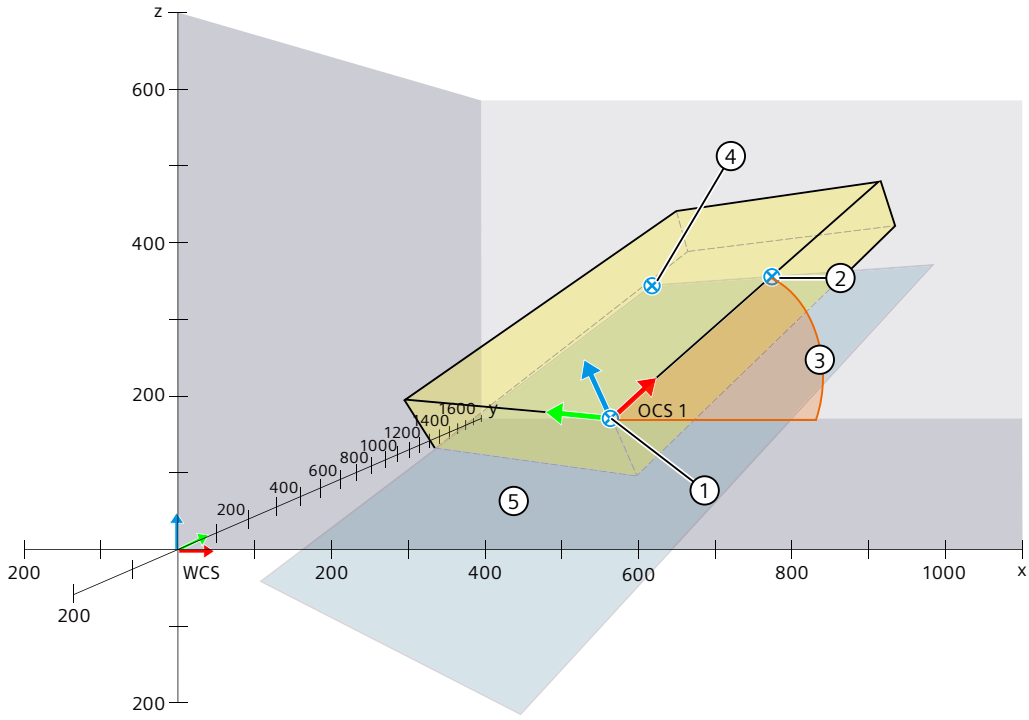

① Point pallet corner as origin of the OCS 1

② Point at pallet edge
The set point through which the rotated x axis passes defines the angle of rotation for the x axis.

③ Angle of rotation for the x axis

④ Point on pallet surface
The set point, together with the first two points, defines the selected xy plane.

⑤ xy plane which passes through the three set points

		Position in the WCS (mm)		
		x	y	z
①	Point pallet corner	549.1	549.1	124.7
②	Point pallet edge	916.5	916.5	424.7
④	Point pallet surface	633.7	1199.3	424.7

1. Select the object coordinate system "OCS 1".
2. Select the "Plane" calibration method in the drop-down list.

Define the origin for the OCS 1 as follows:

1. Move the kinematics to point P1 on the pallet.
2. Accept the position coordinates of the TCP in WCS by clicking on the symbol ↵1 next to the field "Position in WCS".
   You have defined the origin for OCS 1.

Define the angle of rotation for the OCS 1 as follows:

1. Select the x axis as the coordinate axis to be rotated to the TCP or point ②.
2. Move the kinematics to the point ② at the pallet edge.
3. Rotate OCS 1 by clicking on the symbol next to the field for the coordinate axis.
   The set angles of rotation are shown in the graphic display.
4. Select the xy plane to be spanned between the three set points.
5. Move the kinematics to the point ④ on the pallet surface.
6. To align the OCS 1, click the symbol next to the field for the plane.
   The spanned plane is shown in the graphic display.

The position of the OCS 1 is thus unambiguously determined and the "Apply values" button is active.

1. Accept the values from the calibration into the configuration.

3D kinematics: "Three-point" calibration method

Three corner points of the pallet are used to determine the new position of the OCS 1 frame. The positions of the corner points in OCS 1 can be derived from the dimensions of the pallet. The position of the corner points in the WCS is determined using the "three-point" method. The origin of the OCS 1 is determined via the position of a pallet corner. The positions of the other two corner points are used to determine the angles of rotation for OCS 1.

Coordinates of the points used in the example

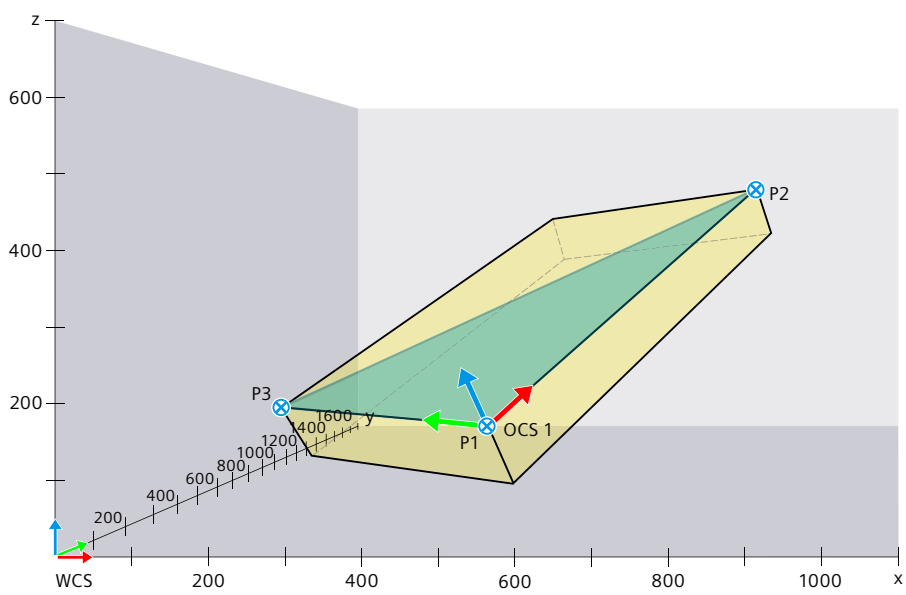

	Position in the WCS (mm)			Position in the OCS (mm)		
	x	y	z	x	y	z
Point P1 pallet corner	549.1	549.1	124.7	0.0	0.0	0.0
Point P2 pallet corner	1283.9	1283.9	724.7	1200.0	0.0	0.0
Point P3 pallet corner	-16.6	1114.8	124.7	0.0	800.0	0.0

1. Select the object coordinate system "OCS 1".
2. Select the "Plane" calibration method in the drop-down list.

Define the origin for the OCS 1 as follows:

1. Move the kinematics to the pallet corner (point P1).
2. Accept the position coordinates of the TCP in WCS by clicking on the symbol next to the field "Position in WCS".
3. For the point P1, enter the values for the position in OCS 1.
   You have defined the origin of OCS 1.

Define the angle of rotation for the OCS 1 as follows:

1. Move the kinematics to the second pallet corner (point P2).
2. Define the coordinates for point P2 in the WCS by adopting the current position values of TCP. Click the symbol next to the "Position in WCS" box.
3. For the point P2, enter the values for the position in the OCS.
4. Move the kinematics to point P3 on the pallet.
5. Define the coordinates for point P3 in the WCS by adopting the current position values of the TCP. Click the symbol next to the "Position in WCS" box.
6. For the point P3, enter the values for the position in the OCS.

The position of the OCS is thus unambiguously determined and the "Apply values" button is active.

1. Accept the values from the calibration into the configuration.

12.7 Calibrate workspace zones (S7-1500T)

12.7.1 Configuring calibration of a workspace zone (S7-1500T)

Requirement

The kinematics technology object is correctly configured and connected.

Configuring zone properties Zone properties

1. In the "Workspace zone" drop-down list, select the zone you want to calibrate.
   If you have opened the calibration for a zone via the symbol in the configuration window "Configuration > Extended parameters > Zones", the corresponding zone is already preselected. If you open the calibration via the project tree, workspace zone 1 is preselected.
2. In the "Status" drop-down list, select the activation status "Active" or "Inactive".
   If you select status "Not defined", all other settings in the configuration mask for the calibration are deactivated.
3. In the "Zone type" drop-down list, select the Blocked zone or Signal zone work zone type.
4. In the "Geometry" drop-down list, select the shape Cuboid, Cylinder or Sphere.
5. In the "Coordinate system" drop-down list, select the "WCS" or an "OCS".

You can find more information on the zone parameters in the section "Configuring zones (Page 193)".

Selecting the suitable calibration method Calibration method

The selectable calibration methods are dependent on the selected geometry of the zone. The calibration methods "circular plane" and "radius" are not suitable for calibrating zones containing obstacles as the zones are traversed during calibration. As a result, these two calibration methods for calibrating blocked and signal zones which usually contain obstacles are not suitable.

The following table shows an overview of the calibration methods that are suitable for the selected type of zone:

Selected zone type	Suitable calibration methods		
	Cuboid	Cylinder	Sphere
Work zone	Corner points (Page 326)	Circular plane (Page 328)	Radius (Page 330)
Signal zones		Surface line (Page 327)	Diameter (Page 329)
Blocked zones			

The individual points are fixed for each calibration method. However, you can calibrate the individual points in any order.

12.7.2 Calibrate cuboid zone with corner points (S7-1500T)

You calibrate a cuboid workspace zone using the "Corner points" calibration method.Corner points

Definition

With this calibration method, the cuboid zone is defined by the position values of three or four corner points.

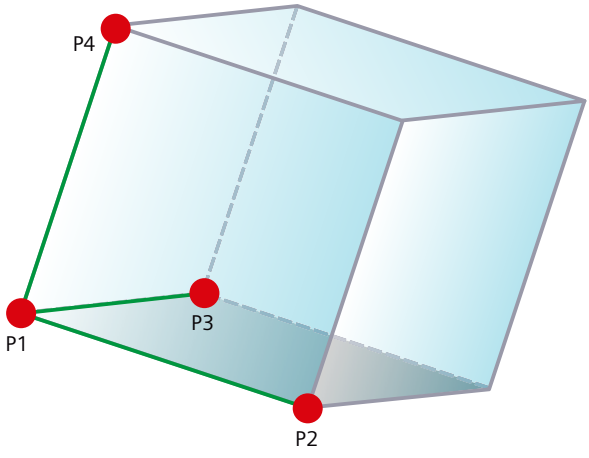

A cuboid workspace zone for 2D kinematics is defined by three points.

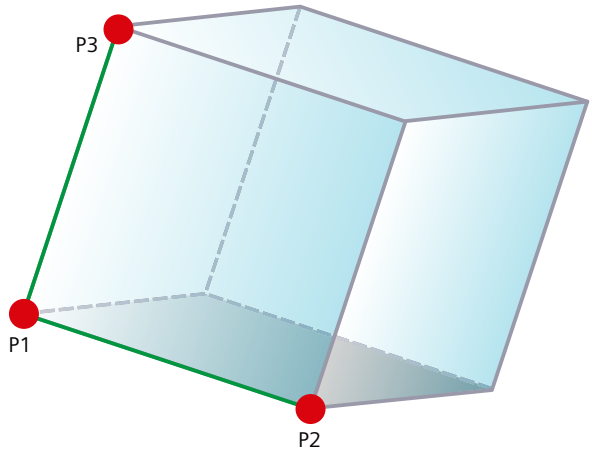

Requirements

- The kinematics technology object is correctly configured and connected.
- You have selected a cuboid workspace zone for the calibration.

Procedure

1. Enter the origin of the cuboid as point P1.
2. Starting from the origin, use the other points to determine the edge lengths in x, y and z direction.

12.7.3 Calibrate cylindrical zone with surface line (S7-1500T)

A cylindrical signal or blocked zone is calibrated using the "Surface line" calibration method.Surface line

Definition

With this calibration method, the cylindrical zone is defined by the points of the surface line and the diameter.

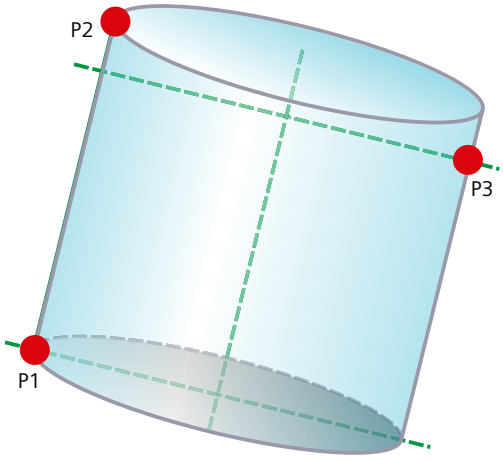

Requirements

- The kinematics technology object is correctly configured and connected.
- You have selected a cylindrical signal or blocked zone for the calibration.

Procedure

1. Set the point P1 as the start of the surface line.
2. Set point P2 as the end of the surface line.
   With the points P1 and P2 you have defined the surface line of the cylinder. The surface line defines the height and orientation of the cylinder.
3. To define the diameter of the cylinder, set point P3 diametrically to the surface line P1 ↔ P2.
   The surface opposite the P1 ↔ P2 surface line runs through the point P3. As the height of the cylinder is defined by surface line P1 ↔ P2, you can also set point P3 outside the cylinder height.

12.7.4 Calibrate cylindrical zone with circular plane (S7-1500T)

You calibrate a cylindrical workspace zone using the "Circular plane" calibration method.Circular plane

Definition

With this calibration method, the cylindrical zone is defined by the points of the circular plane and the height.

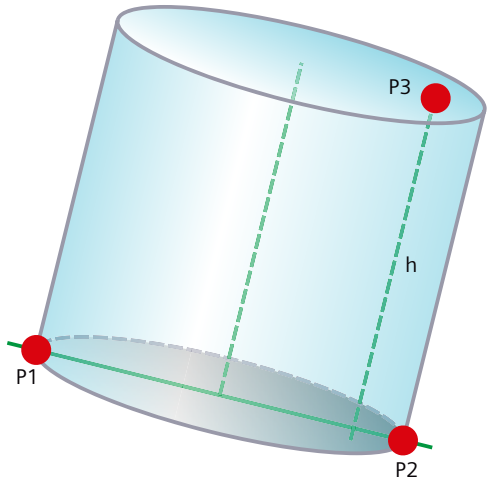

Requirements

- The kinematics technology object is correctly configured and connected.
- You have selected a cylindrical work zone for the calibration.

Procedure

1. Set the point P1 on the circumference of the cylinder.
2. Set point P2 diametrically to point P1 and on the circumference of the cylinder.
   With points P1 and P2, you have defined the diameter and orientation of the cylinder.
3. To define the height of the cylinder, set point P3 at distance h from the circular plane.
   Since point P3 only determines the height of the cylinder, you can also set point P3 outside the previously set cylinder width.

12.7.5 Calibrate spherical zone with diameter (S7-1500T)

You calibrate a spherical signal or blocked zone using the "Diameter" calibration method.Diameter

Definition

With this calibration method, the spherical zone is defined by two points for the diameter.

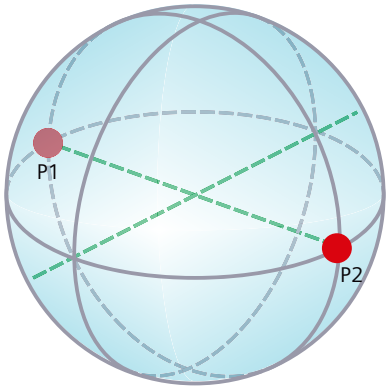

Requirements

- The kinematics technology object is correctly configured and connected.
- You have selected a spherical signal or blocked zone for the calibration.

Procedure

1. Enter the first point on the surface of the sphere as point P1.
2. To form the diameter, enter the point P2 on the surface of the sphere and diametrical to the point P1.

12.7.6 Calibrate spherical zone with radius (S7-1500T)

You calibrate a spherical workspace zone using the "Radius" calibration method.Radius

Definition

With this calibration method, the spherical zone is defined by two points for the radius.

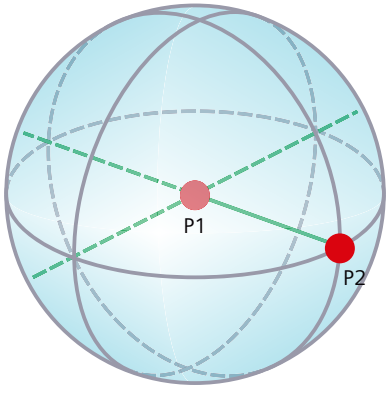

Requirements

- The kinematics technology object is correctly configured and connected.
- You have selected a spherical work zone for the calibration.

Procedure

1. Enter the origin of the sphere as point P1.
2. To determine the radius, set the second point P2 on the surface.

Instructions (S7-1500T) 13

13.1 Kinematics motions (S7-1500T)

13.1.1 MC_GroupInterrupt V7 (S7-1500T)

13.1.1.1 MC_GroupInterrupt: Interrupt motion execution V7 (S7-1500T)

Description

With the Motion Control instruction "MC_GroupInterrupt", you interrupt the execution of the motion on a kinematics technology object. The interrupted kinematics motion can be resumed with a "MC_GroupContinue" job.
If the kinematics is already at a standstill, the execution of the motion is also interrupted for subsequent motion jobs. New motion jobs are then arranged as pending jobs in the job sequence.
With the "Mode" parameter, you specify the dynamic behavior of the holding.

Applies to

- Kinematics

Requirement

- The technology object has been configured correctly.
- The interconnected axes are enabled.

Override response

The override response for "MC_GroupInterrupt" jobs is described in section "Override response V7: Kinematics motion commands (Page 409)".

Parameters

The following table shows the parameters of the Motion Control instruction "MC_GroupInterrupt":

Parameter	Declaration	Data type	Default value	Description
AxesGroup	INPUT	TO_Kinematics	-	Technology object

Parameter	Declaration	Data type	Default value	Description	
Execute	INPUT	BOOL	FALSE	TRUE	Start job with a positive edge
Mode	INPUT	DINT	0	Mode for dynamic behavior	
				0	Stop with the dynamics of the motion job to be interrupted When dynamic adaptation is activated, the dynamics of the motion can also be reduced so that the dynamic limits of the axes are not exceeded.
				1	Stop with maximum dynamics of kinematics motion When dynamic adaptation is activated, the dynamics of the motion can also be reduced so that the dynamic limits of the axes are not exceeded.
Done	OUTPUT	BOOL	FALSE	TRUE	Job is completed.
Busy	OUTPUT	BOOL	FALSE	TRUE	The job is being processed.
Active	OUTPUT	BOOL	FALSE	TRUE	The setpoints are calculated.
CommandAborted	OUTPUT	BOOL	FALSE	TRUE	The job was aborted by another job during execution.
Error	OUTPUT	BOOL	FALSE	TRUE	An error occurred while processing the job. The job is rejected. The cause of the error can be found in the "ErrorID" parameter.
ErrorID	OUTPUT	WORD	16#0000	Error ID for parameter "ErrorID" You can find more detailed information in the "Error IDs" section of the "S7-1500/S7-1500T Motion Control alarms and error IDs" documentation (Page 13).	

See also

Interrupting, continuing and stopping kinematics motions (Page 212)

13.1.2 MC_GroupContinue V7 (S7-1500T)

13.1.2.1 MC_GroupContinue: Continue motion execution V7 (S7-1500T)

Description

With the Motion Control instruction "MC_GroupContinue", you continue a kinematics motion that was previously interrupted with a "MC_GroupInterrupt" job. The kinematics motion can be continued if the kinematics has come to a standstill following the "MC_GroupInterrupt" job.

The "MC_GroupContinue" job has only an effect if the technology object is in "Interrupted" state.

Applies to

- Kinematics

Requirement

- The technology object has been configured correctly.
- The interconnected axes are enabled.

Override response

- An "MC_GroupContinue" job is not aborted by any other Motion Control job.
- A new "MC_GroupContinue" job aborts a current "MC_GroupInterrupt" job.
- The override response for "MC_GroupContinue" jobs is described in section "Override response V7: Kinematics motion commands (Page 409)".

Parameters

The following table shows the parameters of the Motion Control instruction "MC_GroupContinue":

Parameter	Declaration	Data type	Default value	Description	
AxesGroup	INPUT	TO_Kinematics	-	Technology object	
Execute	INPUT	BOOL	FALSE	TRUE	Start job with a positive edge
Done	OUTPUT	BOOL	FALSE	TRUE	Job is completed.
Busy	OUTPUT	BOOL	FALSE	TRUE	The job is being processed.
Error	OUTPUT	BOOL	FALSE	TRUE	An error occurred while processing the job. The job is rejected. The cause of the error can be found in the "ErrorID" parameter.
ErrorID	OUTPUT	WORD	16#0000	Error ID for parameter "ErrorID" You can find more detailed information in the "Error IDs" section of the "S7-1500/S7-1500T Motion Control alarms and error IDs" documentation (Page 13).	

See also

Interrupting, continuing and stopping kinematics motions (Page 212)

13.1.2.2 MC_GroupContinue: Function chart V7 (S7-1500T)

Function chart: Continue motion execution

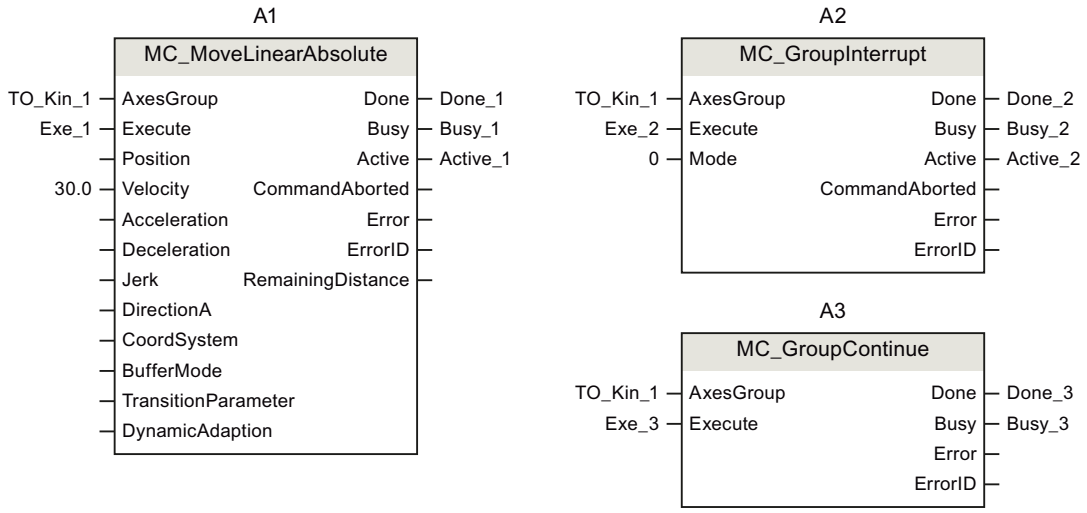

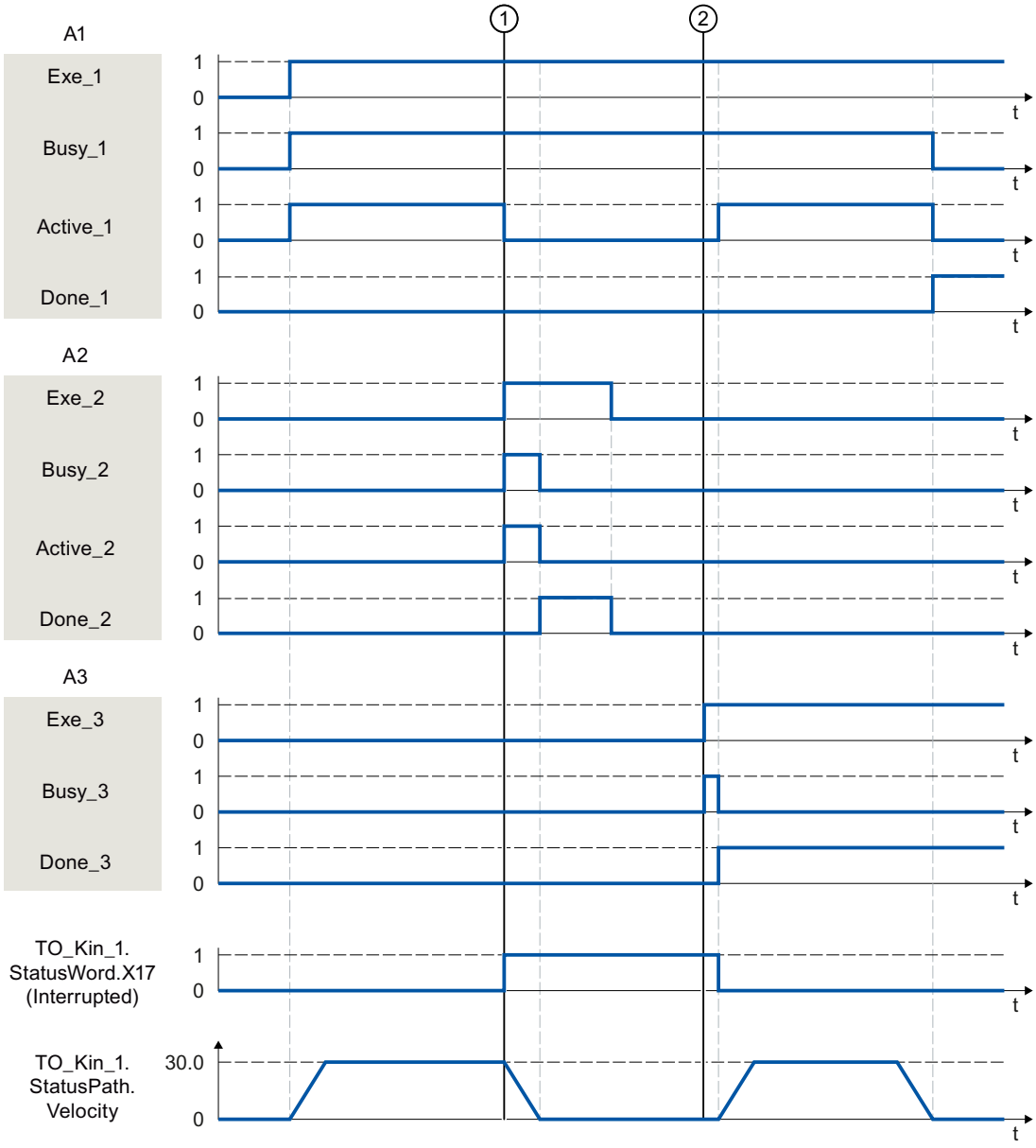

The kinematics is moved with an "MC_MoveLinearAbsolute" job (A1).

At time ①, the "MC_MoveLinearAbsolute" job is interrupted by an "MC_GroupInterrupt" job (A2). The kinematics is in "Interrupted" state. With "Mode" = 0 the motion is stopped with the dynamics of the "MC_MoveLinearAbsolute" job. The completion of the "MC_GroupInterrupt" job is reported via "Done_2".

At time ②, the "MC_MoveLinearAbsolute" job is continued by an "MC_GroupContinue" job (A3).

13.1.3 MC_GroupStop V7 (S7-1500T)

13.1.3.1 MC_GroupStop: Stop motion V7 (S7-1500T)

Description

With the Motion Control instruction "MC_GroupStop", you stop and abort an active motion on the kinematics technology object. If the motion was already interrupted with an "MC_GroupInterrupt", this is aborted. All still pending jobs in the job sequence are also aborted by a "MC_GroupStop" job. As long as the "Execute" parameter is set to TRUE, kinematics jobs are rejected ("ErrorID" = 16#80CD).

With the "Mode" parameter, you specify the dynamic behavior of the stop motion.

Applies to

- Kinematics

Requirement

- The technology object has been configured correctly.
- The interconnected axes are enabled.

Override response

The override response for "MC_GroupStop" jobs is described in section "Override response V7: Kinematics motion commands (Page 409)".

Parameters

The following table shows the parameters of the Motion Control instruction "MC_GroupStop":

Parameter	Declaration	Data type	Default value	Description	
AxesGroup	INPUT	TO_Kinematics	-	Technology object	
Execute	INPUT	BOOL	FALSE	TRUE	Start job with a positive edge
Mode	INPUT	DINT	0	Mode for dynamic behavior	
				0	Stop with the dynamics of the motion job to be interrupted When dynamic adaptation is activated, the dynamics of the motion can also be reduced so that the dynamic limits of the axes are not exceeded.

Parameter	Declaration	Data type	Default value	Description	
Mode	INPUT	DINT	0	1	Stop with maximum dynamics of kinematics motion When dynamic adaptation is activated, the dynamics of the motion can also be reduced so that the dynamic limits of the axes are not exceeded.
Done	OUTPUT	BOOL	FALSE	TRUE	Job is completed.
Busy	OUTPUT	BOOL	FALSE	TRUE	The job is being processed.
Active	OUTPUT	BOOL	FALSE	TRUE	The setpoints are calculated.
CommandAborted	OUTPUT	BOOL	FALSE	TRUE	The job was aborted by another job during execution.
Error	OUTPUT	BOOL	FALSE	TRUE	An error occurred while processing the job. The job is rejected. The cause of the error can be found in the "ErrorID" parameter.
ErrorID	OUTPUT	WORD	16#0000	Error ID for parameter "ErrorID" You can find more detailed information in the "Error IDs" section of the "S7-1500/S7-1500T Motion Control alarms and error IDs" documentation (Page 13).	

See also

Interrupting, continuing and stopping kinematics motions (Page 212)

13.1.3.2 MC_GroupStop: Function chart V7 (S7-1500T)

Function chart: Stop motion

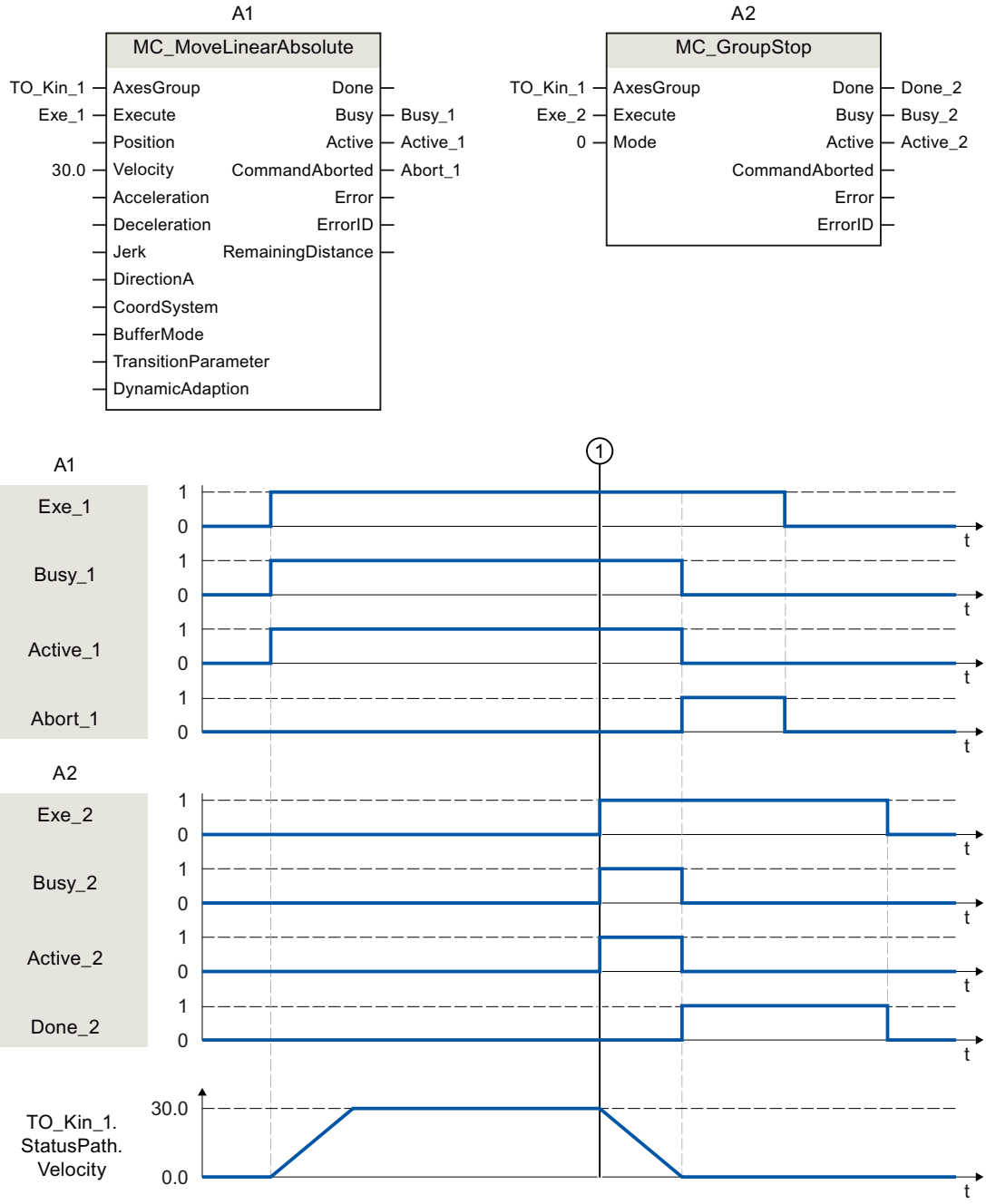

The kinematics is moved with an "MC_MoveLinearAbsolute" job (A1).

At time ①, the "MC_MoveLinearAbsolute" job is aborted by an "MC_GroupStop" job (A2). The job abort is signaled via "Abort_1". With "Mode" = 0 the motion is stopped with the dynamics of the "MC_MoveLinearAbsolute" job. The completion of the "MC_GroupStop" job is reported via "Done_2".

13.1.4 MC_MoveLinearAbsolute V7 (S7-1500T)

13.1.4.1 MC_MoveLinearAbsolute: Position kinematics with linear path motion V7 (S7-1500T)

Description

With the Motion Control instruction "MC_MoveLinearAbsolute", you move a kinematics with a linear motion (Page 226) to an absolute position. Cartesian orientation is also used absolute.

The Motion Control instruction offers you the following:

- Define absolute target position (Page 227)
- Define dynamic response (Page 228)
- Define motion transition (Page 229)
- Start job (Page 231)
- Show motion status and remaining distance (Page 207)

Applies to

- Kinematics

Requirements

- The technology object has been configured correctly.
- The interconnected axes are enabled.
- A single axis job (e.g. "MC_MoveVelocity") is not active on any of the interconnected axes.

Override response

With the "TransitionParameter[1]" parameter, you determine the distance from the target point of the previous motion job at which the new motion job is superimposed.

The override response for "MC_MoveLinearAbsolute" jobs is described in section "Override response V7: Kinematics motion commands (Page 409)".

Parameters

The following table shows the parameters of the Motion Control instruction "MC_MoveLinearAbsolute":

Parameter	Declaration	Data type	Default value	Description	
AxesGroup	INPUT	TO_Kinematics	-	Technology object	
Execute	INPUT	BOOL	FALSE	TRUE	Start job with a positive edge

1) Only relevant with more than four interpolating kinematics axes.

Parameter	Declaration	Data type	Default value	Description	
Position	INPUT	ARRAY [1..6] OF LREAL	-	Absolute target coordinates in the specified reference coordinate system (Page 227)	
Position[1]	INPUT	LREAL	0.0	x coordinate	
Position[2]	INPUT	LREAL	0.0	y coordinate	
Position[3]	INPUT	LREAL	0.0	z coordinate	
Position[4]	INPUT	LREAL	0.0	A coordinate	
Position[5]	INPUT	LREAL	0.0	B coordinates[1]	
Position[6]	INPUT	LREAL	0.0	C coordinates[1]	
Velocity	INPUT	LREAL	-1.0	Velocity (Page 228)	
				> 0.0	The specified value is used.
				= 0.0	Not permitted
				< 0.0	The value configured in "Technology object > Configuration > Extended parameters > Dynamic default values" is used. (<TO>.DynamicDefaults.Path.Velocity)
Acceleration	INPUT	LREAL	-1.0	Acceleration (Page 228)	
				> 0.0	The specified value is used.
				= 0.0	Not permitted
				< 0.0	The value configured in "Technology object > Configuration > Extended parameters > Dynamic default values" is used. (<TO>.DynamicDefaults.Path.Acceleration)
Deceleration	INPUT	LREAL	-1.0	Deceleration (Page 228)	
				> 0.0	The specified value is used.
				= 0.0	Not permitted
				< 0.0	The value configured in "Technology object > Configuration > Extended parameters > Dynamic default values" is used. (<TO>.DynamicDefaults.Path.Deceleration)
Jerk	INPUT	LREAL	-1.0	Jerk (Page 228)	
				> 0.0	The specified value is used.
				= 0.0	No jerk limitation
				< 0.0	The value configured in "Technology object > Configuration > Extended parameters > Dynamic default values" is used. (<TO>.DynamicDefaults.Path.Jerk)

[1] Only relevant with more than four interpolating kinematics axes.

Parameter	Declaration	Data type	Default value	Description	
DirectionA	INPUT	DINT	3	Direction of movement of the Cartesian orientation A (Page 227)	
				1	Positive direction
				2	Negative direction
				3	Shortest distance
				With more than four interpolating kinematics axes: Not relevant	
CoordSystem	INPUT	DINT	0	Reference coordinate system (Page 227)	
				0	World coordinate system (WCS)
				1	Object coordinate system 1 (OCS1)
				2	Object coordinate system 2 (OCS2)
				3	Object coordinate system 3 (OCS3)
BufferMode	INPUT	DINT	1	Motion transition (Page 229)	
				1	Append motion
				2	Smooth with the lower velocity
				5	Smooth with the higher velocity
TransitionParameter	INPUT	ARRAY [1..5] OF LREAL		Transition parameter	
TransitionParameter[1]	INPUT	LREAL	-1.0	Rounding clearance (Page 229)	
				≥ 0.0	The specified value is used.
				< 0.0	The maximum possible rounding clearance is used.
TransitionParameter[2..5]	INPUT	LREAL	-	Reserved	
DynamicAdaption	INPUT	DINT	-1	Dynamic adaptation (Page 228)	
				< 0	The configured setting in "Technology object > Configuration > Extended parameters > Dynamic" is used. (<TO>.DynamicDefaults.DynamicAdaption)
				0	Without dynamic adaption
				1	Dynamic adaptation with segmentation of the path
				2	Dynamic adaptation without segmentation of the path
Done	OUTPUT	BOOL	FALSE	TRUE	Job is completed.
Busy	OUTPUT	BOOL	FALSE	TRUE	The job is being processed.
Active	OUTPUT	BOOL	FALSE	TRUE	The setpoints are calculated.
				FALSE	When "Busy" = TRUE: Job is waiting. (Typical: A preceding job is still active.)

1) Only relevant with more than four interpolating kinematics axes.

Parameter	Declaration	Data type	Default value	Description	
CommandAborted	OUTPUT	BOOL	FALSE	TRUE	The job was aborted by another job during execution.
Error	OUTPUT	BOOL	FALSE	TRUE	An error occurred while processing the job. The job is rejected. The cause of the error can be found in the "ErrorID" parameter.
ErrorID	OUTPUT	WORD	16#0000	Error ID for parameter "ErrorID" You can find more detailed information in the "Error IDs" section of the "S7-1500/S7-1500T Motion Control alarms and error IDs" documentation (Page 13).	
RemainingDistance	OUTPUT	LREAL	-1.0	Remaining distance of the current job (Page 207)	

1) Only relevant with more than four interpolating kinematics axes.

13.1.4.2 MC_MoveLinearAbsolute: Function chart V7 (S7-1500T)

Function chart: Position kinematics with linear path motion

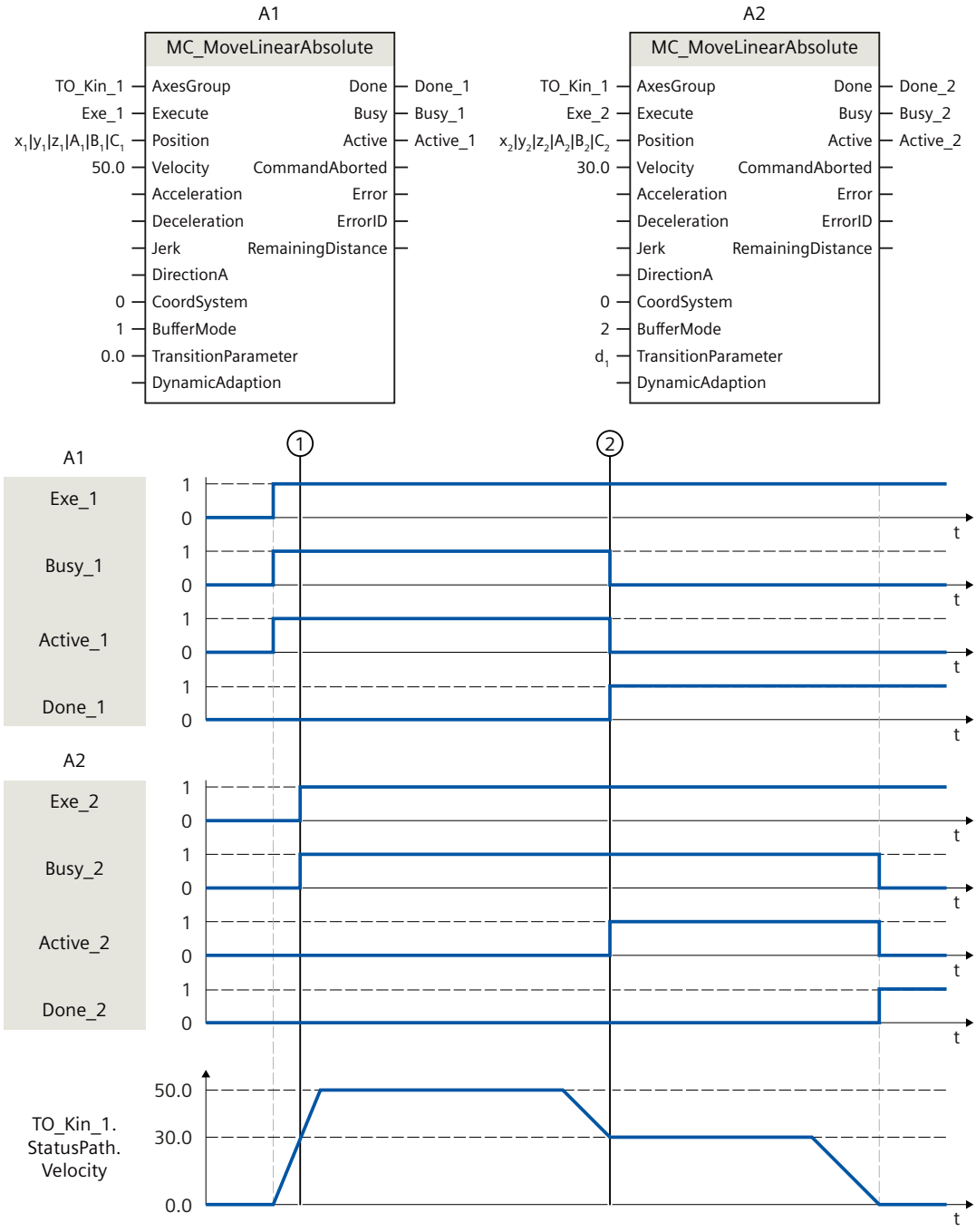

The kinematics is moved with an "MC_MoveLinearAbsolute" job (A1).

At time ① an additional "MC_MoveLinearAbsolute" job (A2) is initiated. As the "MC_MoveLinearAbsolute" jobs have no override effect on one another, the job A2 is arranged in the job sequence.

At the point in time ②, completion of the A1 job is signaled via "Done_1" and the job A2 is started. As "BufferMode" = 2 is set for job A2, the motion transition is blended with the lower velocity of the two jobs. As soon as the target position is reached, the completion of the A2 job is signaled via "Done_2".

13.1.5 MC_MoveLinearRelative V7 (S7-1500T)

13.1.5.1 MC_MoveLinearRelative: Relative positioning of kinematics with linear path motion V7 (S7-1500T)

Description

With the Motion Control instruction "MC_MoveLinearRelative", you move a kinematics with a linear motion (Page 226) relative to the position which was present at the start of the job processing. Cartesian orientation is also used relative.
The Motion Control instruction offers you the following:

- Define relative target position (Page 227)
- Define dynamic response (Page 228)
- Define motion transition (Page 229)
- Start job (Page 231)
- Show motion status and remaining distance (Page 207)

Applies to

- Kinematics

Requirements

- The technology object has been configured correctly.
- The interconnected axes are enabled.
- A single axis job (e.g. "MC_MoveVelocity") is not active on any of the interconnected axes.

Override response

With the "TransitionParameter[1]" parameter, you determine the distance from the target point of the previous motion job at which the new motion job is superimposed.
The override response for "MC_MoveLinearRelative" jobs is described in section "Override response V7: Kinematics motion commands (Page 409)".

Parameters

The following table shows the parameters of the Motion Control instruction "MC_MoveLinearRelative":

Parameter	Declaration	Data type	Default value	Description	
AxesGroup	INPUT	TO_Kinematics	-	Technology object	
Execute	INPUT	BOOL	FALSE	TRUE	Start job with a positive edge
Distance	INPUT	ARRAY [1..6] OF LREAL	-	Relative target coordinates in the specified reference coordinate system (Page 227)	
Distance[1]	INPUT	LREAL	0.0	x coordinate	
Distance[2]	INPUT	LREAL	0.0	y coordinate	
Distance[3]	INPUT	LREAL	0.0	z coordinate	
Distance[4]	INPUT	LREAL	0.0	A coordinate	
Distance[5]	INPUT	LREAL	0.0	B coordinates[1)]	
Distance[6]	INPUT	LREAL	0.0	C coordinates[1)]	
Velocity	INPUT	LREAL	-1.0	Velocity (Page 228)	
				> 0.0	The specified value is used.
				= 0.0	Not permitted
				< 0.0	The value configured in "Technology object > Configuration > Extended parameters > Dynamic default values" is used. (<TO>.DynamicDefaults.Path.Velocity)
Acceleration	INPUT	LREAL	-1.0	Acceleration (Page 228)	
				> 0.0	The specified value is used.
				= 0.0	Not permitted
				< 0.0	The value configured in "Technology object > Configuration > Extended parameters > Dynamic default values" is used. (<TO>.DynamicDefaults.Path.Acceleration)
Deceleration	INPUT	LREAL	-1.0	Deceleration (Page 228)	
				> 0.0	The specified value is used.
				= 0.0	Not permitted
				< 0.0	The value configured in "Technology object > Configuration > Extended parameters > Dynamic default values" is used. (<TO>.DynamicDefaults.Path.Deceleration)

1) Only relevant with more than four interpolating kinematics axes.

Parameter	Declaration	Data type	Default value	Description	
Jerk	INPUT	LREAL	-1.0	Jerk (Page 228)	
				> 0.0	The specified value is used.
				= 0.0	No jerk limitation
				< 0.0	The value configured in "Technology object > Configuration > Extended parameters > Dynamic default values" is used. (<TO>.DynamicDefaults.Path.Jerk)
CoordSystem	INPUT	DINT	0	Reference coordinate system (Page 227)	
				0	World coordinate system (WCS)
				1	Object coordinate system 1 (OCS1)
				2	Object coordinate system 2 (OCS2)
				3	Object coordinate system 3 (OCS3)
BufferMode	INPUT	DINT	1	Motion transition (Page 229)	
				1	Append motion
				2	Smooth with the lower velocity
				5	Smooth with the higher velocity
TransitionParameter	INPUT	ARRAY [1..5] OF LREAL	-	Transition parameter	
TransitionParameter[1]	INPUT	LREAL	-1.0	Rounding clearance (Page 229)	
				≥ 0.0	The specified value is used.
				< 0.0	The maximum possible rounding clearance is used.
TransitionParameter[2..5]	INPUT	LREAL	-	Reserved	
DynamicAdaption	INPUT	DINT	-1.0	Dynamic adaptation (Page 228)	
				< 0	The configured setting in "Technology object > Configuration > Extended parameters > Dynamic" is used. (<TO>.DynamicDefaults.DynamicAdaption)
				0	Without dynamic adaption
				1	Dynamic adaptation with segmentation of the path
				2	Dynamic adaptation without segmentation of the path
Done	OUTPUT	BOOL	FALSE	TRUE	Job is completed.
Busy	OUTPUT	BOOL	FALSE	TRUE	The job is being processed.
Active	OUTPUT	BOOL	FALSE	TRUE	The setpoints are calculated.
				FALSE	When "Busy" = TRUE: Job is waiting. (Typical: A preceding job is still active.)

1) Only relevant with more than four interpolating kinematics axes.

Parameter	Declaration	Data type	Default value	Description	
CommandAborted	OUTPUT	BOOL	FALSE	TRUE	The job was aborted by another job during execution.
Error	OUTPUT	BOOL	FALSE	TRUE	An error occurred while processing the job. The job is rejected. The cause of the error can be found in the "ErrorID" parameter.
ErrorID	OUTPUT	WORD	16#0000	Error ID for parameter "ErrorID" You can find more detailed information in the "Error IDs" section of the "S7-1500/S7-1500T Motion Control alarms and error IDs" documentation (Page 13).	
RemainingDistance	OUTPUT	LREAL	-1.0	Remaining distance of the current job (Page 207)	

1) Only relevant with more than four interpolating kinematics axes.

13.1.5.2 MC_MoveLinearRelative: Function chart V7 (S7-1500T)

Function chart: Relative positioning of kinematics with linear path motion

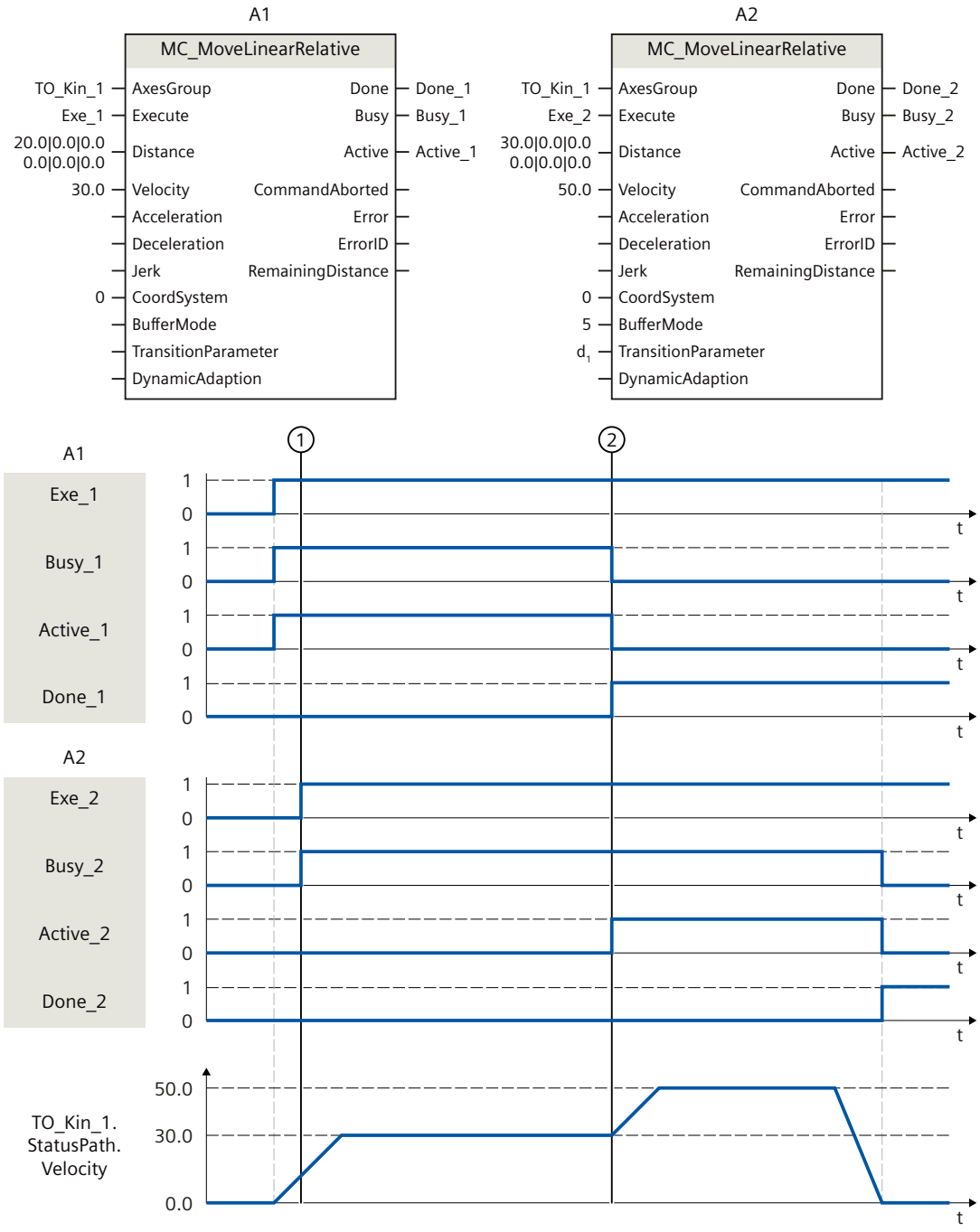

The kinematics is moved with an "MC_MoveLinearRelative" job (A1).

At time ① an additional "MC_MoveLinearRelative" job (A2) is initiated. As the "MC_MoveLinearRelative" jobs have no override effect on one another, the job A2 is arranged in the job sequence.

At the point in time ②, completion of the A1 job is signaled via "Done_1" and the job A2 is started. As "BufferMode" = 5 is set for job A2, the motion transition is blended with the higher velocity of the two jobs. As soon as the target position is reached, the completion of the A2 job is signaled via "Done_2".

13.1.6 MC_MoveCircularAbsolute V7 (S7-1500T)

13.1.6.1 MC_MoveCircularAbsolute: Position kinematics with circular path motion V7 (S7-1500T)

Description

With the Motion Control instruction "MC_MoveCircularAbsolute", you move a kinematics with a circular motion (Page 233) to an absolute position. Cartesian orientation is also used absolute.
The Motion Control instruction offers you the following:

- Define circular path:
  - Define circular path via intermediate point and target position (Page 233)
  - Define circular path via center point and angle (Page 235)
  - Define circular path via radius and target position (Page 237)
- Define dynamic response (Page 240)
- Define motion transition (Page 241)
- Start job (Page 243)
- Show motion status and remaining distance (Page 207)

Applies to

- Kinematics

Requirements

- The technology object has been configured correctly.
- The interconnected axes are enabled.
- A single axis job (e.g. "MC_MoveVelocity") is not active on any of the interconnected axes.

Override response

With the "TransitionParameter[1]" parameter, you determine the distance from the target point of the previous motion job at which the new motion job is superimposed.
The override response for "MC_MoveCircularAbsolute" jobs is described in section "Override response V7: Kinematics motion commands (Page 409)".

Parameters

The following table shows the parameters of the Motion Control instruction "MC_MoveCircularAbsolute":

Parameter	Declaration	Data type	Default value	Description	
AxesGroup	INPUT	TO_Kinematics	-	Technology object	
Execute	INPUT	BOOL	FALSE	TRUE	Start job with a positive edge
CircMode	INPUT	DINT	0	Definition of circular path	
				0	Define circular path via intermediate point and target position (Page 233)
				1	Define circular path via center point and angle (Page 235)
				2	Define circular path via radius and target position (Page 237)
AuxPoint	INPUT	ARRAY [1..3] OF LREAL	-	When "CircMode" = 0: Intermediate point on the circular path (Page 233)	
				When "CircMode" = 1: Center point of the circular path (Page 235)	
				When "CircMode" = 2: Not relevant	
AuxPoint[1]	INPUT	LREAL	0.0	x coordinate	
AuxPoint[2]	INPUT	LREAL	0.0	y coordinate	
AuxPoint[3]	INPUT	LREAL	0.0	z coordinate	
EndPoint	INPUT	ARRAY [1..6] OF LREAL	-	Target position in the specified reference coordinate system	
				When "CircMode" = 1: "EndPoint[1..3]" not relevant	
EndPoint[1]	INPUT	LREAL	0.0	x coordinate	
EndPoint[2]	INPUT	LREAL	0.0	y coordinate	
EndPoint[3]	INPUT	LREAL	0.0	z coordinate	
EndPoint[4]	INPUT	LREAL	0.0	A coordinate	
EndPoint[5]	INPUT	LREAL	0.0	B coordinates[1)]	
EndPoint[6]	INPUT	LREAL	0.0	C coordinates[1)]	
PathChoice	INPUT	DINT	0	When "CircMode" = 1: Orientation of the circular path (Page 235)	
				0	Positive direction of rotation
				1	Negative direction of rotation
				When "CircMode" = 2: Orientation of the circular path (Page 237)	
				0	Shorter positive circle segment
				1	Shorter negative circle segment

[1)] Only relevant with more than four interpolating kinematics axes.

Parameter	Declaration	Data type	Default value	Description	
PathChoice	INPUT	DINT	0	2	Longer positive circle segment
				3	Longer negative circle segment
				When "CircMode" = 0: Not relevant	
CirclePlane	INPUT	DINT	0	When "CircMode" = 1 and 2: Main plane of the circular path	
				0	xz plane
				1	yz plane
				2	xy plane
				When "CircMode" = 0: Not relevant	
Radius	INPUT	LREAL	0.0	When "CircMode" = 2: Radius of the circular movement (Page 237)	
				When "CircMode" = 0 and 1: Not relevant	
Arc	INPUT	LREAL	0.0	When "CircMode" = 1: Angle of the circular movement (Page 235) The absolute value of the specified value is used.	
				When "CircMode" = 0 and 2: Not relevant	
Velocity	INPUT	LREAL	-1.0	Velocity (Page 240)	
				> 0.0	The specified value is used.
				= 0.0	Not permitted
				< 0.0	The value configured in "Technology object > Configuration > Extended parameters > Dynamic default values" is used. (<TO>.DynamicDefaults.Path.Velocity)
Acceleration	INPUT	LREAL	-1.0	Acceleration (Page 240)	
				> 0.0	The specified value is used.
				= 0.0	Not permitted
				< 0.0	The value configured in "Technology object > Configuration > Extended parameters > Dynamic default values" is used. (<TO>.DynamicDefaults.Path.Acceleration)
Deceleration	INPUT	LREAL	-1.0	Deceleration (Page 240)	
				> 0.0	The specified value is used.
				= 0.0	Not permitted

1) Only relevant with more than four interpolating kinematics axes.

Parameter	Declaration	Data type	Default value	Description	
Deceleration	INPUT	LREAL	-1.0	< 0.0	The value configured in "Technology object > Configuration > Extended parameters > Dynamic default values" is used. (<TO>.DynamicDefaults.Path.Deceleration)
Jerk	INPUT	LREAL	-1.0	Jerk (Page 240)	
				> 0.0	The specified value is used.
				= 0.0	No jerk limitation
				< 0.0	The value configured in "Technology object > Configuration > Extended parameters > Dynamic default values" is used. (<TO>.DynamicDefaults.Path.Jerk)
DirectionA	INPUT	DINT	3	Direction of movement of the Cartesian orientation A	
				1	Positive direction
				2	Negative direction
				3	Shortest distance
				With more than four interpolating kinematics axes: Not relevant	
CoordSystem	INPUT	DINT	0	Reference coordinate system	
				0	World coordinate system (WCS)
				1	Object coordinate system 1 (OCS1)
				2	Object coordinate system 2 (OCS2)
				3	Object coordinate system 3 (OCS3)
BufferMode	INPUT	DINT	1	Motion transition (Page 241)	
				1	Append motion
				2	Smooth with the lower velocity
				5	Smooth with the higher velocity
TransitionParameter	INPUT	ARRAY [1..5] OF LREAL		Transition parameter	
TransitionParameter[1]	INPUT	LREAL	-1.0	Rounding clearance (Page 241)	
				≥ 0.0	The specified value is used.
				< 0.0	The maximum possible rounding clearance is used.
TransitionParameter[2..5]	INPUT	LREAL	-	Reserved	

[1] Only relevant with more than four interpolating kinematics axes.

Parameter	Declaration	Data type	Default value	Description	
DynamicAdaption	INPUT	DINT	-1.0	Dynamic adaptation (Page 240)	
				< 0	The configured setting in "Technology object > Configuration > Extended parameters > Dynamic" is used. (<TO>.DynamicDefaults.DynamicAdaption)
				0	Without dynamic adaption
				1	Dynamic adaptation with segmentation of the path
				2	Dynamic adaptation without segmentation of the path
Done	OUTPUT	BOOL	FALSE	TRUE	Job is completed.
Busy	OUTPUT	BOOL	FALSE	TRUE	The job is being processed.
Active	OUTPUT	BOOL	FALSE	TRUE	The setpoints are calculated.
				FALSE	When "Busy" = TRUE: Job is waiting. (Typical: A preceding job is still active.)
CommandAborted	OUTPUT	BOOL	FALSE	TRUE	The job was aborted by another job during execution.
Error	OUTPUT	BOOL	FALSE	TRUE	An error occurred while processing the job. The job is rejected. The cause of the error can be found in the "ErrorID" parameter.
ErrorID	OUTPUT	WORD	16#0000	Error ID for parameter "ErrorID" You can find more detailed information in the "Error IDs" section of the "S7-1500/S7-1500T Motion Control alarms and error IDs" documentation (Page 13).	
RemainingDistance	OUTPUT	LREAL	-1.0	Remaining distance of the current job (Page 207)	

1) Only relevant with more than four interpolating kinematics axes.

13.1.6.2 MC_MoveCircularAbsolute: Function chart V7 (S7-1500T)

Function chart: Position kinematics with circular path motion

In the function chart, sections A1 and A2 of the following kinematics motion are viewed:

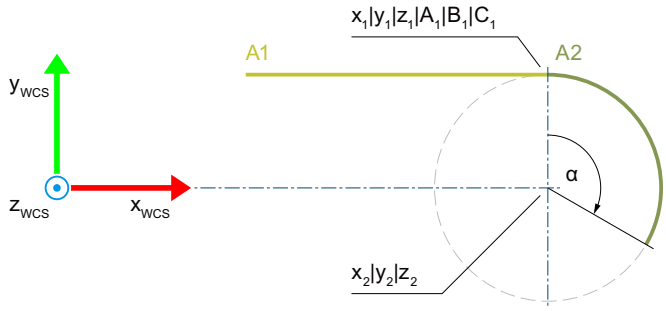

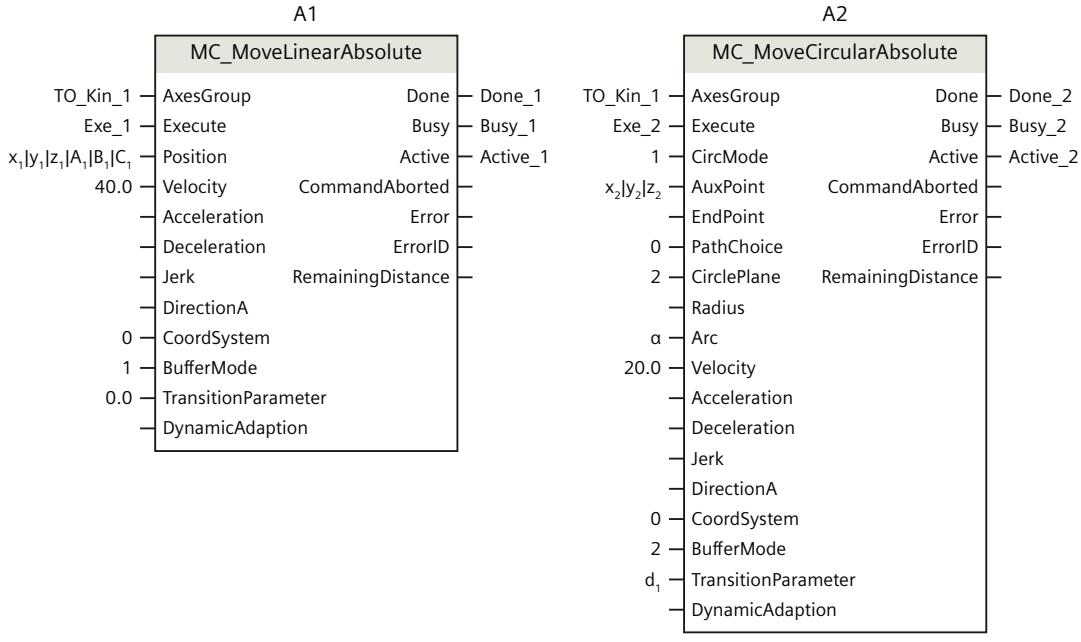

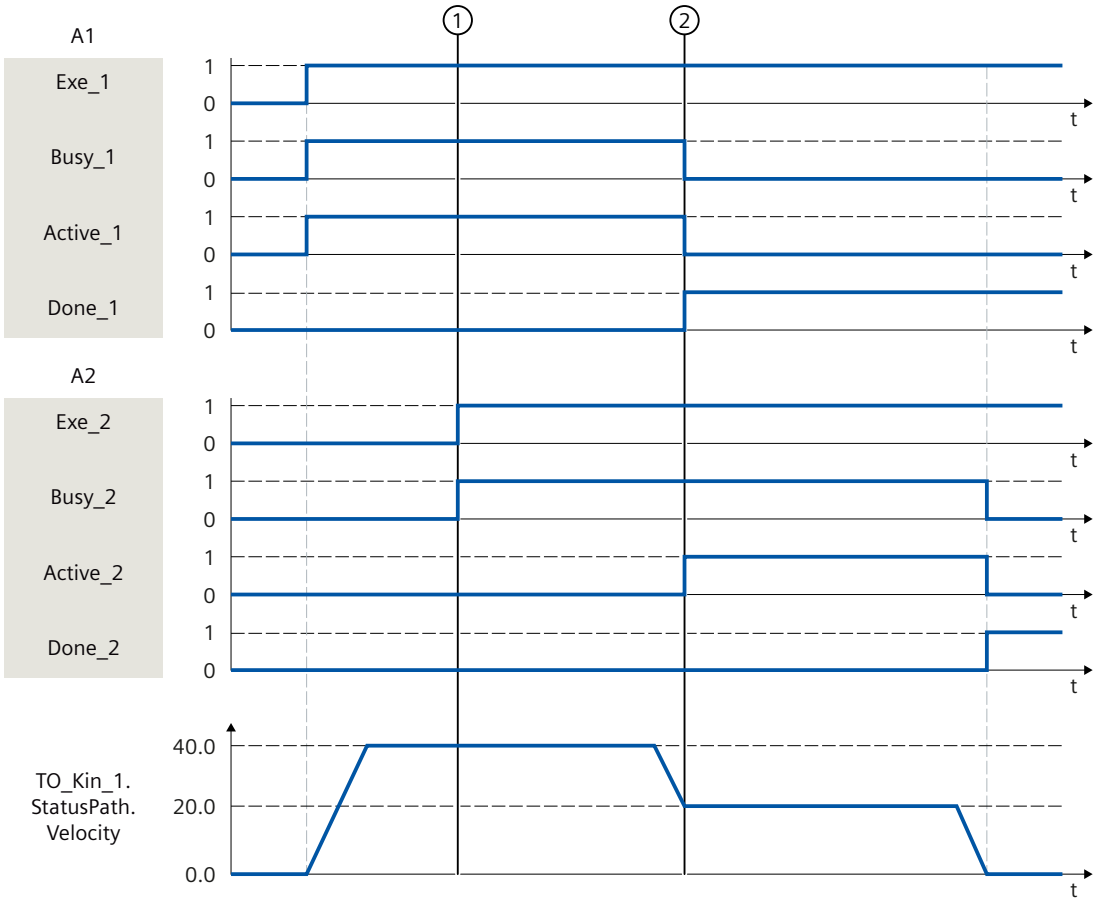

The kinematics is moved with an "MC_MoveLinearAbsolute" job (A1).

At time ① an "MC_MoveCircularAbsolute" job (A2) is initiated. As the "MC_MoveCircularAbsolute" job has no overdrive effect, the job A2 is arranged in the job sequence.

At the point in time ②, completion of the A1 job is signaled via "Done_1" and the job A2 is started. As "BufferMode" = 2 is set for job A2, the motion transition is smoothed with the lower velocity of both jobs and the rounding clearance d_1. The circular motion is determined with "CircMode" = 1 via the center of the circle ($x_2|y_2|z_2$) and the angle α. As soon as the target position is reached, the completion of the A2 job is signaled via "Done_2".

13.1.7 MC_MoveCircularRelative V7 (S7-1500T)

13.1.7.1 MC_MoveCircularRelative: Relative positioning of kinematics with circular path motion V7 (S7-1500T)

Description

With the Motion Control instruction "MC_MoveCircularRelative", you move a kinematics with a circular motion (Page 233) to a relative position. Cartesian orientation is also used relative.

The Motion Control instruction offers you the following:

- Define circular path:
  - Define circular path via intermediate point and target position (Page 233)
  - Define circular path via center point and angle (Page 235)
  - Define circular path via radius and target position (Page 237)
- Define dynamic response (Page 240)
- Define motion transition (Page 241)
- Start job (Page 243)
- Show motion status and remaining distance (Page 207)

Applies to

- Kinematics

Requirements

- The technology object has been configured correctly.
- The interconnected axes are enabled.
- A single axis job (e.g. "MC_MoveVelocity") is not active on any of the interconnected axes.

Override response

With the "TransitionParameter[1]" parameter, you determine the distance from the target point of the previous motion job at which the new motion job is superimposed.

The override response for "MC_MoveCircularRelative" jobs is described in section "Override response V7: Kinematics motion commands (Page 409)".

Parameters

The following table shows the parameters of the Motion Control instruction "MC_MoveCircularRelative":

Parameter	Declaration	Data type	Default value	Description	
AxesGroup	INPUT	TO_Kinematics	-	Technology object	
Execute	INPUT	BOOL	FALSE	TRUE	Start job with a positive edge
CircMode	INPUT	DINT	0	Definition of circular path	
				0	Define circular path via intermediate point and target position (Page 233)
				1	Define circular path via center point and angle (Page 235)
				2	Define circular path via radius and target position (Page 237)

[1] Only relevant with more than four interpolating kinematics axes.

Parameter	Declaration	Data type	Default value	Description
AuxPoint	INPUT	ARRAY [1..3] OF LREAL	-	When "CircMode" = 0: Intermediate point on the circular path relative to the start position (Page 233)
				When "CircMode" = 1: Center point of the circular path relative to the start position (Page 235)
				When "CircMode" = 2: Not relevant
AuxPoint[1]	INPUT	LREAL	0.0	x coordinate
AuxPoint[2]	INPUT	LREAL	0.0	y coordinate
AuxPoint[3]	INPUT	LREAL	0.0	z coordinate
EndPoint	INPUT	ARRAY [1..6] OF LREAL	-	Target position relative to the start position in the specified reference coordinate system
				When "CircMode" = 1: "EndPoint[1..3]" not relevant
EndPoint[1]	INPUT	LREAL	0.0	x coordinate
EndPoint[2]	INPUT	LREAL	0.0	y coordinate
EndPoint[3]	INPUT	LREAL	0.0	z coordinate
EndPoint[4]	INPUT	LREAL	0.0	A coordinate
EndPoint[5]	INPUT	LREAL	0.0	B coordinates[1)]
EndPoint[6]	INPUT	LREAL	0.0	C coordinates[1)]
PathChoice	INPUT	DINT	0	When "CircMode" = 1: Orientation of the circular path (Page 235)
				0 Positive direction of rotation
				1 Negative direction of rotation
				When "CircMode" = 2: Orientation of the circular path (Page 237)
				0 Shorter positive circular path
				1 Shorter negative circular path
				2 Longer positive circular path
				3 Longer negative circular path
				When "CircMode" = 0: Not relevant
CirclePlane	INPUT	DINT	0	When "CircMode" = 1 and 2: Main plane of the circular path
				0 xz plane
				1 yz plane
				2 xy plane
				When "CircMode" = 0: Not relevant

1) Only relevant with more than four interpolating kinematics axes.

Parameter	Declaration	Data type	Default value	Description	
Radius	INPUT	LREAL	0.0	When "CircMode" = 2: Radius of the circular movement (Page 237)	
				When "CircMode" = 0 and 1: Not relevant	
Arc	INPUT	LREAL	0.0	When "CircMode" = 1: Angle of the circular movement (Page 235) The absolute value of the specified value is used.	
				When "CircMode" = 0 and 2: Not relevant	
Velocity	INPUT	LREAL	-1.0	Velocity (Page 240)	
				> 0.0	The specified value is used.
				= 0.0	Not permitted
				< 0.0	The velocity configured in "Technology object > Configuration > Extended parameters > Dynamic default values" is used. (<TO>.DynamicDefaults.Path.Velocity)
Acceleration	INPUT	LREAL	-1.0	Acceleration (Page 240)	
				> 0.0	The specified value is used.
				= 0.0	Not permitted
				< 0.0	The velocity configured in "Technology object > Configuration > Extended parameters > Dynamic default values" is used. (<TO>.DynamicDefaults.Path.Acceleration)
Deceleration	INPUT	LREAL	-1.0	Deceleration (Page 240)	
				> 0.0	The specified value is used.
				= 0.0	Not permitted
				< 0.0	The velocity configured in "Technology object > Configuration > Extended parameters > Dynamic default values" is used. (<TO>.DynamicDefaults.Path.Deceleration)
Jerk	INPUT	LREAL	-1.0	Jerk (Page 240)	
				> 0.0	The specified value is used.
				= 0.0	No jerk limitation
				< 0.0	The velocity configured in "Technology object > Configuration > Extended parameters > Dynamic default values" is used. (<TO>.DynamicDefaults.Path.Jerk)

[1] Only relevant with more than four interpolating kinematics axes.

Parameter	Declaration	Data type	Default value	Description	
CoordSystem	INPUT	DINT	0	Reference coordinate system	
				0	World coordinate system (WCS)
				1	Object coordinate system 1 (OCS1)
				2	Object coordinate system 2 (OCS2)
				3	Object coordinate system 3 (OCS3)
BufferMode	INPUT	DINT	1	Motion transition (Page 241)	
				1	Append motion
				2	Smooth with the lower velocity
				5	Smooth with the higher velocity
TransitionParameter	INPUT	ARRAY [1..5] OF LREAL		Transition parameter	
TransitionParameter[1]	INPUT	LREAL	-1.0	Rounding clearance (Page 241)	
				≥ 0.0	The specified value is used.
				< 0.0	The maximum possible rounding clearance is used.
TransitionParameter[2..5]	INPUT	LREAL	-	Reserved	
DynamicAdaption	INPUT	DINT	-1	Dynamic adaptation (Page 240)	
				< 0	The configured setting in "Technology object > Configuration > Extended parameters > Dynamic" is used. (<TO>.DynamicDefaults.DynamicAdaption)
				0	Without dynamic adaption
				1	Dynamic adaptation with segmentation of the path
				2	Dynamic adaptation without segmentation of the path
Done	OUTPUT	BOOL	FALSE	TRUE	Job is completed.
Busy	OUTPUT	BOOL	FALSE	TRUE	The job is being processed.
Active	OUTPUT	BOOL	FALSE	TRUE	The setpoints are calculated.
				FALSE	When "Busy" = TRUE: Job is waiting. (Typical: A preceding job is still active.)
CommandAborted	OUTPUT	BOOL	FALSE	TRUE	The job was aborted by another job during execution.

1) Only relevant with more than four interpolating kinematics axes.

Parameter	Declaration	Data type	Default value	Description	
Error	OUTPUT	BOOL	FALSE	TRUE	An error occurred while processing the job. The job is rejected. The cause of the error can be found in the "ErrorID" parameter.
ErrorID	OUTPUT	WORD	16#0000	Error ID for parameter "ErrorID" You can find more detailed information in the "Error IDs" section of the "S7-1500/S7-1500T Motion Control alarms and error IDs" documentation (Page 13).	
RemainingDistance	OUTPUT	LREAL	-1.0	Remaining distance of the current job (Page 207)	

1) Only relevant with more than four interpolating kinematics axes.

13.1.7.2 MC_MoveCircularRelative: Function chart V7 (S7-1500T)

Function chart: Relative positioning of kinematics with circular path motion

In the function chart, sections A1 and A2 of the following kinematics motion are viewed:

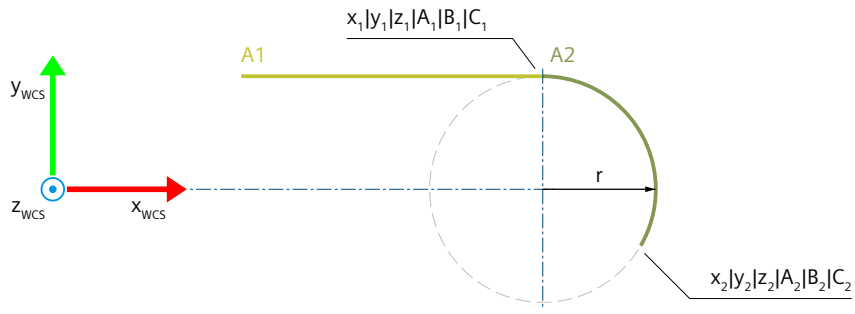

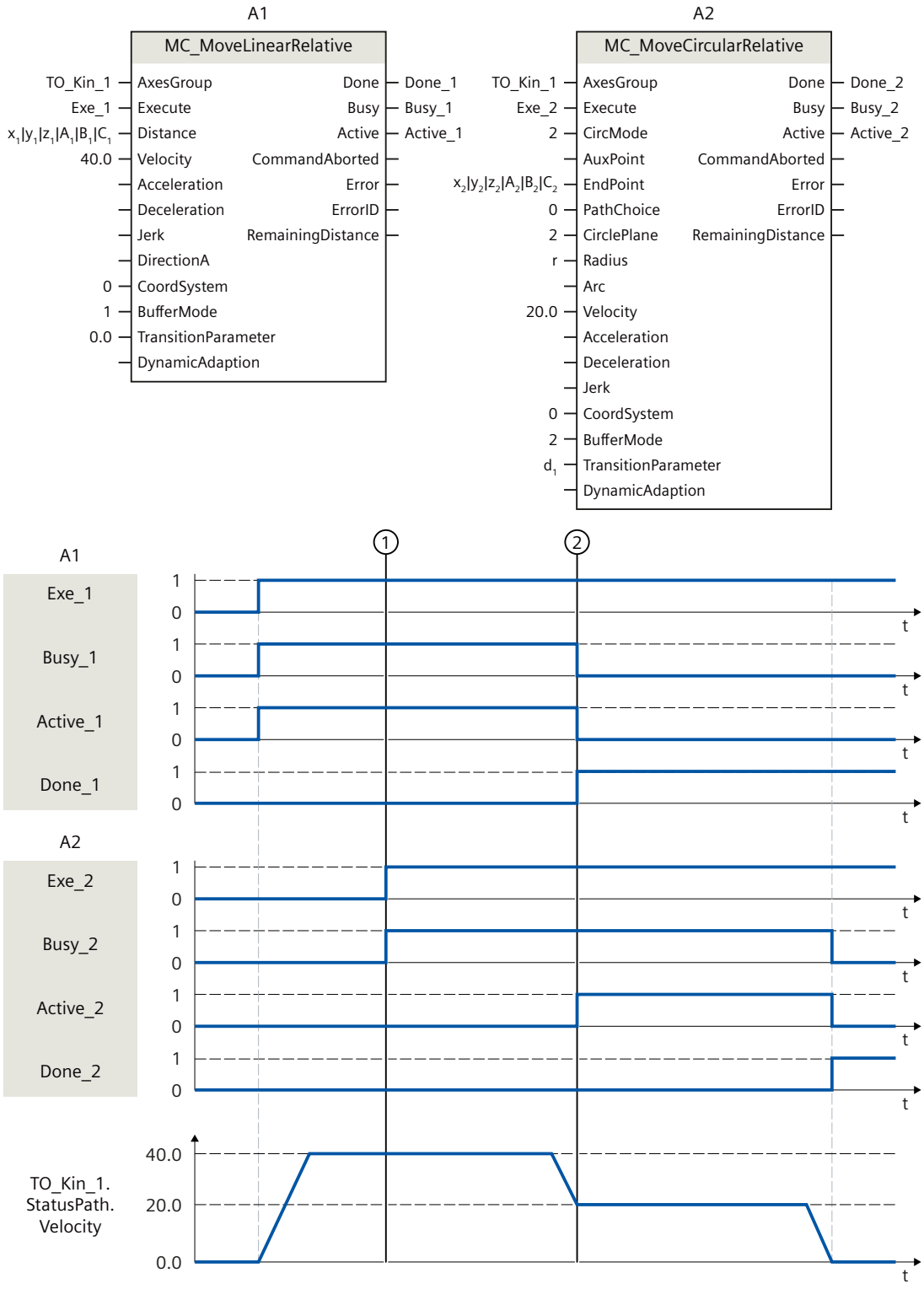

The kinematics is moved with an "MC_MoveLinearRelative" job (A1).

At time ① an "MC_MoveCircularRelative" job (A2) is initiated. As the "MC_MoveCircularRelative" job has no overdrive effect, the job A2 is arranged in the job sequence.

At the point in time ②, completion of the A1 job is signaled via "Done_1" and the job A2 is started. As "BufferMode" = 2 is set for job A2, the motion transition is smoothed with the lower velocity of both jobs and the rounding clearance d_1. The circular motion is determined with "CircMode" = 2 via the radius r and the end point ($x_2|y_2|z_2$). As soon as the target position is reached, the completion of the A2 job is signaled via "Done_2".

13.1.8 MC_MoveDirectAbsolute V7 (S7-1500T)

13.1.8.1 MC_MoveDirectAbsolute: Absolute movement of kinematics with synchronous "point-to-point" motion V7 (S7-1500T)

Description

With the Motion Control instruction "MC_MoveDirectAbsolute", you can move the kinematics with a synchronous "point-to-point" motion (sPTP motion) (Page 245) to absolute positions. All kinematics axes are moved at the same time. The axes start the movement at the same time and reach the target position at the same time.

The movement path of the tool center point (TCP) results from the dynamic values of the axes. The kinematics axis with the longest travel time determines the travel time of the sPTP motion and therefore the travel time of all other kinematics axes. The position of the TCP results from the positions of the kinematics axes.

The Motion Control instruction offers you the following:

- Define target position:
  - Define absolute axis target positions (Page 246)
  - Define absolute joint target positions (Page 247)
  - Defining absolute Cartesian target coordinates (Page 248)
- Define dynamic factors (Page 249)
- Define motion transition (Page 250)
- Start job and show execution progress (Page 253)

Applies to

- Kinematics

Requirements

- The technology object has been configured correctly.
- The interconnected axes are enabled.
- A single axis job (e.g. "MC_MoveVelocity") is not active on any of the interconnected axes.

Override response

With the "TransitionParameter[1]" parameter, you determine the distance from the target point of the previous motion job at which the new motion job is superimposed.
The override response for "MC_MoveDirectAbsolute" jobs is described in section "Override response V7: Kinematics motion commands (Page 409)".

Parameters

The following table shows the parameters of the Motion Control instruction "MC_MoveDirectAbsolute":

Parameter	Declaration	Data type	Default value	Description
AxesGroup	INPUT	TO_Kinematics	-	Technology object
Execute	INPUT	BOOL	FALSE	TRUE: Start job with a positive edge
Position	INPUT	ARRAY [1..6] OF LREAL	-	When "CoordSystem" = 100: Absolute axis positions (Page 246)
				When "CoordSystem" = 101[1) 2)]: Absolute joint positions (Page 247)
				When "CoordSystem" = 0, 1, 2 or 3 and "PositionMode" = 1: Absolute Cartesian target coordinates in the specified reference coordinate system (Page 248)
				When "CoordSystem" = 0, 1, 2 or 3 and "PositionMode" = 2: Absolute Cartesian position and relative Cartesian orientation (Page 248)
Position[1]	INPUT	LREAL	0.0	When "CoordSystem" = 100: Position of axis A1
				When "CoordSystem" = 101[1) 2)]: Position of joint J1
				When "CoordSystem" = 0, 1, 2 or 3 and "PositionMode" = 1 or 2: x coordinate
Position[2]	INPUT	LREAL	0.0	When "CoordSystem" = 100: Position of axis A2
				When "CoordSystem" = 101[1) 2)]: Position of joint J2
				When "CoordSystem" = 0, 1, 2 or 3 and "PositionMode" = 1 or 2: y coordinate
Position[3]	INPUT	LREAL	0.0	When "CoordSystem" = 100: Position of axis A3
				When "CoordSystem" = 101[1) 2)]: Position of joint J3

1) Only relevant with more than four interpolating kinematics axes.

2) With up to four interpolating kinematics axes, the joint target position in the JCS corresponds to the axis target position in the MCS.

Parameter	Declaration	Data type	Default value	Description
Position[3]	INPUT	LREAL	0.0	When "CoordSystem" = 0, 1, 2 or 3 and "PositionMode" = 1 or 2: z coordinate
Position[4]	INPUT	LREAL	0.0	When "CoordSystem" = 100: Position of axis A4
				When "CoordSystem" = 101[1) 2)]: Position of joint J4
				When "CoordSystem" = 0, 1, 2 or 3 and "PositionMode" = 1 or 2: A coordinate
Position[5]	INPUT	LREAL	0.0	When "CoordSystem" = 100[1)]: Position of axis A5
				When "CoordSystem" = 101[1)]: Position of joint J5
				When "CoordSystem" = 0, 1, 2 or 3[1)]: B coordinate
				With up to four interpolating kinematics axes: Not relevant
Position[6]	INPUT	LREAL	0.0	When "CoordSystem" = 100[1)]: Position of axis A6
				When "CoordSystem" = 101[1)]: Position of joint J6
				When "CoordSystem" = 0, 1, 2 or 3[1)]: C coordinate
				With up to four interpolating kinematics axes: Not relevant
VelocityFactor	INPUT	LREAL	-1.0	Factor for the velocity (Page 249) of axis motions in relation to the respective maximum velocity of the axes (<TO>.DynamicLimits.MaxVelocity) Permitted range of values: Factor < 0.0 and 0.01 ≤ Factor ≤ 1.0
				< 0.0 — The velocity factor configured under "Technology object > Configuration > Extended parameters > Dynamics > Settings for sPTP motion" is used. (<TO>.DynamicDefaults.MoveDirect.VelocityFactor)
				≥ 0.01 — The specified factor is used.
				1.0 — The maximum velocity of the axes is used.

1) Only relevant with more than four interpolating kinematics axes.

2) With up to four interpolating kinematics axes, the joint target position in the JCS corresponds to the axis target position in the MCS.

Parameter	Declaration	Data type	Default value	Description	
AccelerationFactor	INPUT	LREAL	-1.0	Factor for the acceleration (Page 249) of axis motions in relation to the respective maximum acceleration of the axis (<TO>.DynamicLimits.MaxAcceleration) Permitted range of values: Factor ≤ 1.0	
				< 0.0	The acceleration factor configured under "Technology object > Configuration > Extended parameters > Dynamics > Settings for sPTP motion" is used. (<TO>.DynamicDefaults.MoveDirect.AccelerationFactor)
				0.0	Not permissible
				> 0.0	The specified factor is used.
				1.0	The maximum acceleration of the axes is used.
DecelerationFactor	INPUT	LREAL	-1.0	Factor for the deceleration (Page 249) of axis motions in relation to the respective maximum deceleration of the axis (<TO>.DynamicLimits.MaxDeceleration) Permitted range of values: Factor ≤ 1.0	
				< 0.0	The deceleration factor configured under "Technology object > Configuration > Extended parameters > Dynamics > Settings for sPTP motion" is used. (<TO>.DynamicDefaults.MoveDirect.DecelerationFactor)
				0.0	Not permissible
				> 0.0	The specified factor is used.
				1.0	The maximum deceleration of the axes is used.
JerkFactor	INPUT	LREAL	-1.0	Factor for the jerk (Page 249) of axis motions in relation to the respective maximum jerk of the axis (<TO>.DynamicLimits.MaxJerk) Permitted range of values: Factor < 0.0 and 0.1 < Factor ≤ 0.9	
				< 0.0	The jerk factor configured under "Technology object > Configuration > Extended parameters > Dynamics > Settings for sPTP motion" is used. (<TO>.DynamicDefaults.MoveDirect.JerkFactor)
				0.0	No jerk limitation
				≥ 0.1	The specified factor is used.

1) Only relevant with more than four interpolating kinematics axes.

2) With up to four interpolating kinematics axes, the joint target position in the JCS corresponds to the axis target position in the MCS.

Parameter	Declaration	Data type	Default value	Description	
LinkConstellation	INPUT	DWORD	16#FFFF FFFF	When "CoordSystem" = 0, 1, 2 or 3: Target joint position space (Page 248) The joint position space is specified depending on the respective kinematics type (Page 58).	
				#FFFF FFFF	Keep current joint position space
				When "CoordSystem" = 100 or 101: Not relevant	
CoordSystem	INPUT	DINT	0	Reference coordinate system	
				0	World coordinate system (WCS)
				1	Object coordinate system 1 (OCS1)
				2	Object coordinate system 2 (OCS2)
				3	Object coordinate system 3 (OCS3)
				100	Machine coordinate system (MCS)
				101	Joint coordinate system (JCS)[1) 2)]
BufferMode	INPUT	DINT	1	Motion transition (Page 250)	
				1	Append motion
				2	Smooth with the lower velocity
				5	Smooth with the higher velocity
TransitionParameter	INPUT	ARRAY [1..5] OF LREAL	-	Transition parameter	
TransitionParameter[1]	INPUT	LREAL	-1.0	Rounding clearance (Page 250)	
				≥ 0.0	The specified value is used.
				< 0.0	The maximum possible rounding clearance is used.
TransitionParameter[2..5]	INPUT	LREAL	-	Reserved	
PositionMode	INPUT	DINT	1	When "CoordSystem" = 0, 1, 2 or 3, kinematics types with orientation A and enabled Modulo functionality: Use of the "Position" parameter (Page 248)	
				1	Absolute Cartesian position and absolute Cartesian orientation A
				2	Absolute Cartesian position and relative Cartesian orientation A
				With more than four interpolating kinematics axes: Not relevant	

1) Only relevant with more than four interpolating kinematics axes.

2) With up to four interpolating kinematics axes, the joint target position in the JCS corresponds to the axis target position in the MCS.

Parameter	Declaration	Data type	Default value	Description	
DirectionA	INPUT	DINT	3	When "CoordSystem" = 0, 1, 2 or 3, "PositionMode" = 1, kinematics types with orientation A and enabled Modulo functionality: Direction of movement of the Cartesian orientation A (Page 248)	
				1	Positive direction
				2	Negative direction
				3	Shortest distance
				With more than four interpolating kinematics axes: Not relevant	
TurnJoint	INPUT	ARRAY [1..6] OF LREAL	-	With up to four interpolating kinematics axes: Not relevant	
				When "CoordSystem" = 0, 1, 2 or 3[1]: Target joint position range of the joint J[1..6] (Page 248)	
TurnJoint[1..6]	INPUT	DINT	0	m (m < 0)	(m · 360) - 180 ≤ position < ((m + 1) · 360) - 180
				-2	-900 ≤ position < -540
				-1	-540 ≤ position < -180
				0	Shortest distance
				1	-180 ≤ position < 180
				2	180 ≤ position < 540
				3	540 ≤ position < 900
				n (n > 0)	((n - 2) · 360) + 180 ≤ position < ((n -1) · 360) + 180
ExecutionTimeStatus	OUTPUT	LREAL	0.0	Display of execution progress (Page 253) Value range: 0.0 ... 1.0 The job is completed with "ExecutionTimeStatus" = 1.0.	
Done	OUTPUT	BOOL	FALSE	TRUE	Job is completed.
Busy	OUTPUT	BOOL	FALSE	TRUE	The job is being processed.
Active	OUTPUT	BOOL	FALSE	TRUE	The setpoints are calculated.
				FALSE	When "Busy" = TRUE: Job is waiting. (Typical: A preceding job is still active.)
CommandAborted	OUTPUT	BOOL	FALSE	TRUE	The job was aborted by another job during execution.
Error	OUTPUT	BOOL	FALSE	TRUE	An error occurred while processing the job. The job is rejected. The cause of the error can be found in the "ErrorID" parameter.

1) Only relevant with more than four interpolating kinematics axes.

2) With up to four interpolating kinematics axes, the joint target position in the JCS corresponds to the axis target position in the MCS.

Parameter	Declaration	Data type	Default value	Description
ErrorID	OUTPUT	WORD	16#0000	Error ID for parameter "ErrorID" You can find more detailed information in the "Error IDs" section of the "S7-1500/S7-1500T Motion Control alarms and error IDs" documentation (Page 13).

1) Only relevant with more than four interpolating kinematics axes.

2) With up to four interpolating kinematics axes, the joint target position in the JCS corresponds to the axis target position in the MCS.

13.1.8.2 MC_MoveDirectAbsolute: Function diagram V7 (S7-1500T)

Function chart: Absolute movement of kinematics with synchronous "point-to-point" motion

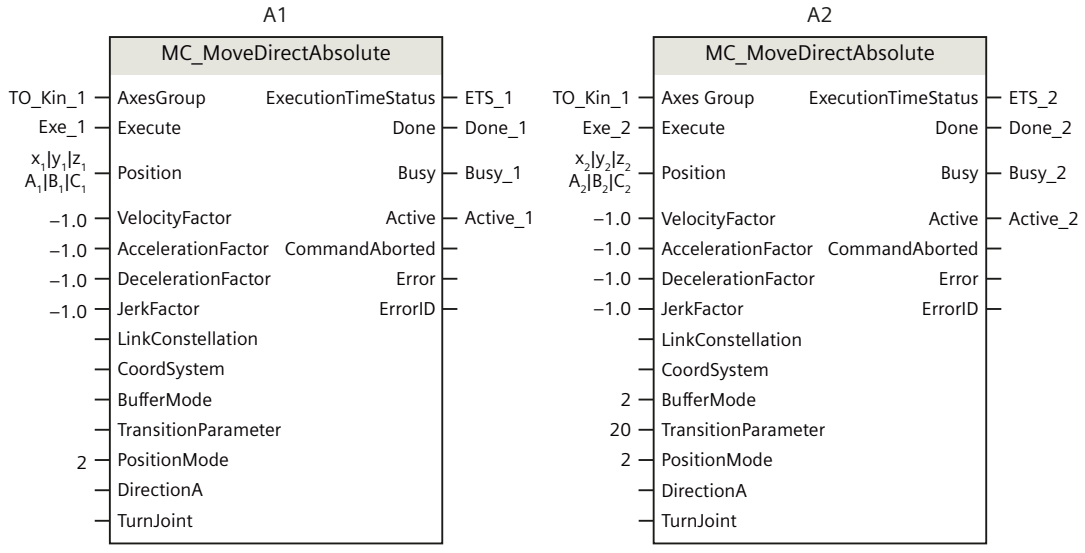

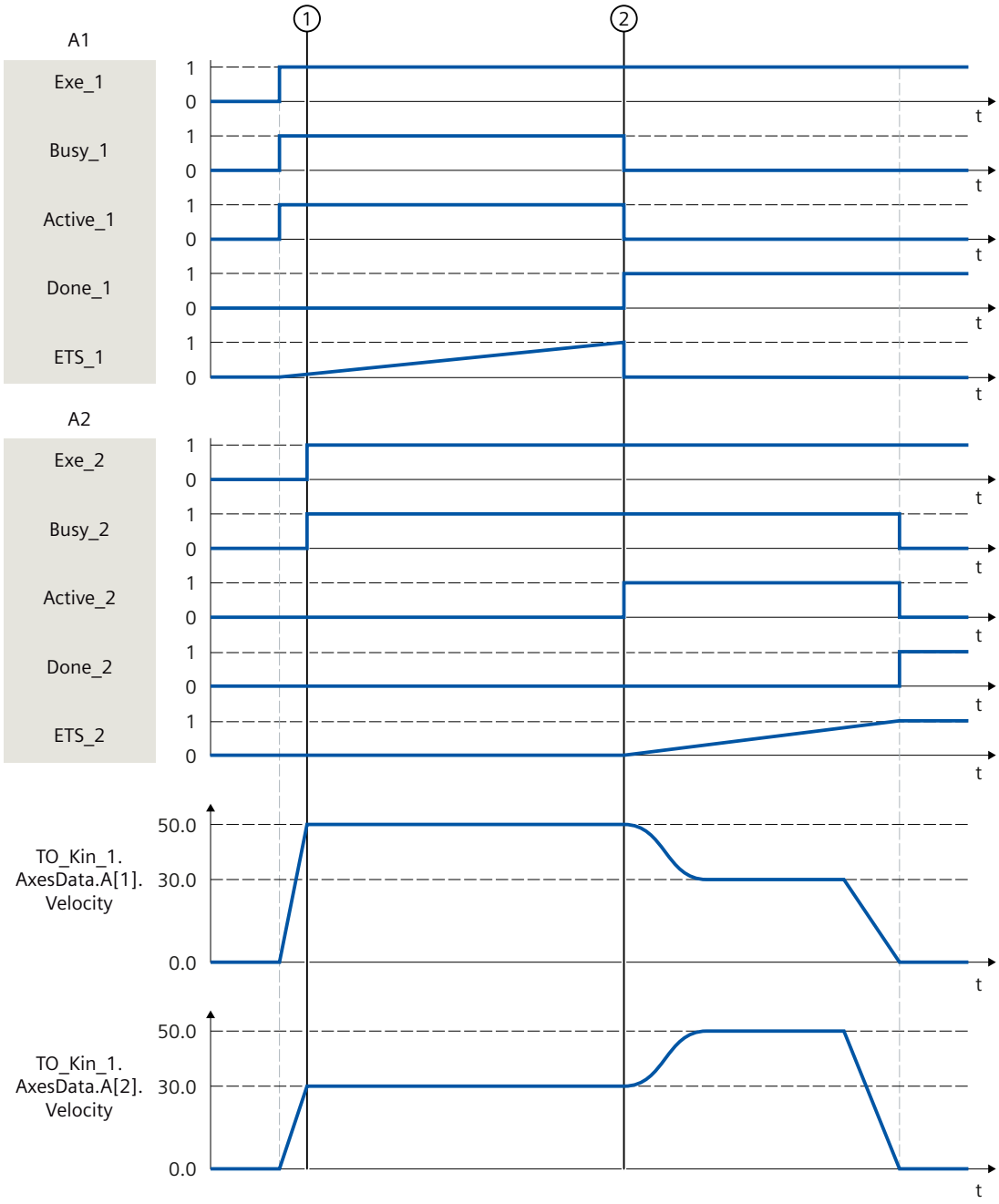

The kinematics is moved with an "MC_MoveDirectAbsolute" job (A1).

At time ①, an additional "MC_MoveDirectAbsolute" job (A2) is initiated. As the "MC_MoveDirectAbsolute" jobs have no override effect on one another, the job A2 is arranged in the job sequence.

At time ②, completion of the job A1 is signaled via "Done_1" and the job A2 is started. As "BufferMode" = 2 is set for job A2, the motion transition is blended with the lower velocity of the two jobs. As soon as the target position is reached, the completion of the A2 job is signaled via "Done_2".

13.1.9 MC_MoveDirectRelative V7 (S7-1500T)

13.1.9.1 MC_MoveDirectRelative: Relative movement of kinematics with synchronous "point-to-point" motion V7 (S7-1500T)

Description

With the Motion Control instruction "MC_MoveDirectRelative", you can move the kinematics with a synchronous "point-to-point" motion (sPTP motion) (Page 245) to relative positions. All kinematics axes are moved at the same time. The axes start the movement at the same time and reach the target position at the same time.

The movement path of the tool center point (TCP) results from the dynamic values of the axes. The kinematics axis with the longest travel time determines the travel time of the sPTP motion and therefore the travel time of all other kinematics axes. The position of the TCP results from the positions of the kinematics axes.

The Motion Control instruction offers you the following:

- Define target position:
  - Define relative axis target positions (Page 246)
  - Define relative joint target positions (Page 247)
  - Define relative Cartesian target coordinates (Page 248)
- Define dynamic factors (Page 249)
- Define motion transition (Page 250)
- Start job and show execution progress (Page 253)

Applies to

- Kinematics

Requirements

- The technology object has been configured correctly.
- The interconnected axes are enabled.
- A single axis job (e.g. "MC_MoveVelocity") is not active on any of the interconnected axes.

Override response

With the "TransitionParameter[1]" parameter, you determine the distance from the target point of the previous motion job at which the new motion job is superimposed.

The override response for "MC_MoveDirectRelative" jobs is described in section "Override response V7: Kinematics motion commands (Page 409)".

Parameters

The following table shows the parameters of the Motion Control instruction "MC_MoveDirectRelative":

Parameter	Declaration	Data type	Default value	Description
AxesGroup	INPUT	TO_Kinematics	-	Technology object
Execute	INPUT	BOOL	FALSE	TRUE: Start job with a positive edge
Distance	INPUT	ARRAY [1..6] OF LREAL	-	When "CoordSystem" = 100: Relative axis positions (Page 246)
				When "CoordSystem" = 101[1) 2)]: Relative joint positions (Page 247)
				When "CoordSystem" = 0, 1, 2 or 3: Relative target coordinates in the specified reference coordinate system (Page 248)
Distance[1]	INPUT	LREAL	0.0	When "CoordSystem" = 100: Relative position of the axis A1
				When "CoordSystem" = 101[1) 2)]: Relative position of joint J1
				When "CoordSystem" = 0, 1, 2 or 3: x coordinate
Distance[2]	INPUT	LREAL	0.0	When "CoordSystem" = 100: Relative position of the axis A2
				When "CoordSystem" = 101[1) 2)]: Relative position of joint J2
				When "CoordSystem" = 0, 1, 2 or 3: y coordinate
Distance[3]	INPUT	LREAL	0.0	When "CoordSystem" = 100: Relative position of the axis A3
				When "CoordSystem" = 101[1) 2)]: Relative position of joint J3
				When "CoordSystem" = 0, 1, 2 or 3: z coordinate
Distance[4]	INPUT	LREAL	0.0	When "CoordSystem" = 100: Relative position of the axis A4
				When "CoordSystem" = 101[1) 2)]: Relative position of joint J4
				When "CoordSystem" = 0, 1, 2 or 3: A coordinate
Distance[5]	INPUT	LREAL	0.0	When "CoordSystem" = 100[1)]: Relative position of axis A5
				When "CoordSystem" = 101[1)]: Relative position of joint J5

1) Only relevant with more than four interpolating kinematics axes.

2) With up to four interpolating kinematics axes, the joint target position in the JCS corresponds to the axis target position in the MCS.

Parameter	Declaration	Data type	Default value	Description	
Distance[5]	INPUT	LREAL	0.0	When "CoordSystem" = 0, 1, 2 or 3[1]: B coordinate	
				With up to four interpolating kinematics axes: Not relevant	
Distance[6]	INPUT	LREAL	0.0	When "CoordSystem" = 100[1]: Relative position of axis A6	
				When "CoordSystem" = 101[1]: Relative position of joint J6	
				When "CoordSystem" = 0, 1, 2 or 3[1]: C coordinate	
				With up to four interpolating kinematics axes: Not relevant	
VelocityFactor	INPUT	LREAL	-1.0	Factor for the velocity (Page 249) of axis motions in relation to the respective maximum velocity of the axes (<TO>.DynamicLimits.MaxVelocity) Permitted range of values: Factor < 0.0 and 0.01 ≤ Factor ≤ 1.0	
				< 0.0	The velocity factor configured under "Technology object > Configuration > Extended parameters > Dynamics > Settings for sPTP motion" is used. (<TO>.DynamicDefaults.MoveDirect.VelocityFactor)
				≥ 0.01	The specified factor is used.
				1.0	The maximum velocity of the axes is used.
AccelerationFactor	INPUT	LREAL	-1.0	Factor for the acceleration (Page 249) of axis motions in relation to the respective maximum acceleration of the axis (<TO>.DynamicLimits.MaxAcceleration) Permitted range of values: Factor ≤ 1.0	
				< 0.0	The acceleration factor configured under "Technology object > Configuration > Extended parameters > Dynamics > Settings for sPTP motion" is used. (<TO>.DynamicDefaults.MoveDirect.AccelerationFactor)
				0.0	Not permissible
				> 0.0	The specified factor is used.
				1.0	The maximum acceleration of the axes is used.

1) Only relevant with more than four interpolating kinematics axes.

2) With up to four interpolating kinematics axes, the joint target position in the JCS corresponds to the axis target position in the MCS.

Parameter	Declaration	Data type	Default value	Description	
DecelerationFactor	INPUT	LREAL	-1.0	Factor for the deceleration (Page 249) of axis motions in relation to the respective maximum deceleration of the axis (<TO>.DynamicLimits.MaxDeceleration) Permitted range of values: Factor ≤ 1.0	
				< 0.0	The deceleration factor configured under "Technology object > Configuration > Extended parameters > Dynamics > Settings for sPTP motion" is used. (<TO>.DynamicDefaults.MoveDirect.DecelerationFactor)
				0.0	Not permissible
				> 0.0	The specified factor is used.
				1.0	The maximum deceleration of the axes is used.
JerkFactor	INPUT	LREAL	-1.0	Factor for the jerk (Page 249) of axis motions in relation to the respective maximum jerk of the axis (<TO>.DynamicLimits.MaxJerk) Permitted range of values: Factor < 0.0 and 0.1 < Factor ≤ 0.9	
				< 0.0	The jerk factor configured under "Technology object > Configuration > Extended parameters > Dynamics > Settings for sPTP motion" is used. (<TO>.DynamicDefaults.MoveDirect.JerkFactor)
				0.0	No jerk limitation
				≥ 0.1	The specified factor is used.
LinkConstellation	INPUT	DWORD	16#FFFF FFFF	When "CoordSystem" = 0, 1, 2 or 3: Target joint position space (Page 248) The joint position space is specified depending on the respective kinematics type (Page 58).	
				#FFFF FFFF	Keep current joint position space
				When "CoordSystem" = 100 or 101: Not relevant	
CoordSystem	INPUT	DINT	0	Reference coordinate system	
				0	World coordinate system (WCS)
				1	Object coordinate system 1 (OCS1)
				2	Object coordinate system 2 (OCS2)
				3	Object coordinate system 3 (OCS3)
				100	Machine coordinate system (MCS)
				101	Joint coordinate system (JCS)[1) 2)]

1) Only relevant with more than four interpolating kinematics axes.

2) With up to four interpolating kinematics axes, the joint target position in the JCS corresponds to the axis target position in the MCS.

Parameter	Declaration	Data type	Default value	Description	
BufferMode	INPUT	DINT	1	Motion transition (Page 250)	
				1	Append motion
				2	Smooth with the lower velocity
				5	Smooth with the higher velocity
TransitionParameter	INPUT	ARRAY [1..5] OF LREAL	-	Transition parameter	
TransitionParameter[1]	INPUT	LREAL	-1.0	Rounding clearance (Page 250)	
				≥ 0.0	The specified value is used.
				< 0.0	The maximum possible rounding clearance is used.
TransitionParameter[2..5]	INPUT	LREAL	-	Reserved	
TurnJoint	INPUT	ARRAY [1..6] OF LREAL	-	With up to four interpolating kinematics axes: Not relevant	
				When "CoordSystem" = 0, 1, 2 or 3[1]: Target joint position range of the joint J[1..6] (Page 248)	
TurnJoint[1..6]	INPUT	DINT	0	m (m < 0)	(m · 360) - 180 ≤ position < ((m + 1) · 360) - 180
				-2	-900 ≤ position < -540
				-1	-540 ≤ position < -180
				0	Shortest distance
				1	-180 ≤ position < 180
				2	180 ≤ position < 540
				3	540 ≤ position < 900
				n (n > 0)	((n - 2) · 360) + 180 ≤ position < ((n -1) · 360) + 180
ExecutionTimeStatus	OUTPUT	LREAL	0.0	Display of execution progress (Page 253) Value range: 0.0 ... 1.0 The job is completed with "ExecutionTimeStatus" = 1.0.	
				0.0	The job has not yet been executed.
				> 0.0	The job is being executed.
				1.0	The job was executed.
Done	OUTPUT	BOOL	FALSE	TRUE	Job is completed.
Busy	OUTPUT	BOOL	FALSE	TRUE	The job is being processed.
Active	OUTPUT	BOOL	FALSE	TRUE	The setpoints are calculated.
				FALSE	When "Busy" = TRUE: Job is waiting. (Typical: A preceding job is still active.)

1) Only relevant with more than four interpolating kinematics axes.

2) With up to four interpolating kinematics axes, the joint target position in the JCS corresponds to the axis target position in the MCS.

Parameter	Declaration	Data type	Default value	Description	
CommandAborted	OUTPUT	BOOL	FALSE	TRUE	The job was aborted by another job during execution.
Error	OUTPUT	BOOL	FALSE	TRUE	An error occurred while processing the job. The job is rejected. The cause of the error can be found in the "ErrorID" parameter.
ErrorID	OUTPUT	WORD	16#0000	Error ID for parameter "ErrorID" You can find more detailed information in the "Error IDs" section of the "S7-1500/S7-1500T Motion Control alarms and error IDs" documentation (Page 13).	

1) Only relevant with more than four interpolating kinematics axes.

2) With up to four interpolating kinematics axes, the joint target position in the JCS corresponds to the axis target position in the MCS.

13.1.9.2 MC_MoveDirectRelative: Function chart V7 (S7-1500T)

Function chart: Relative movement of kinematics with synchronous "point-to-point" motion

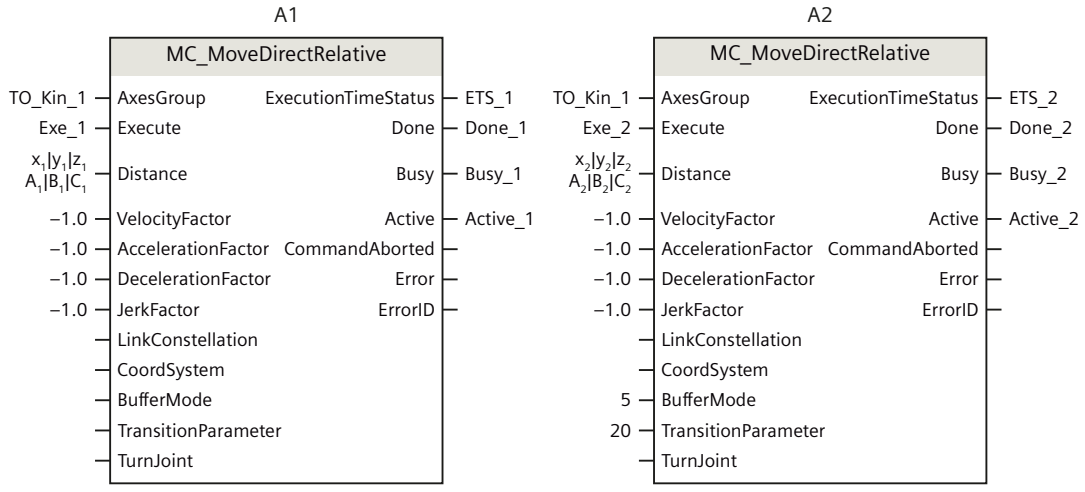

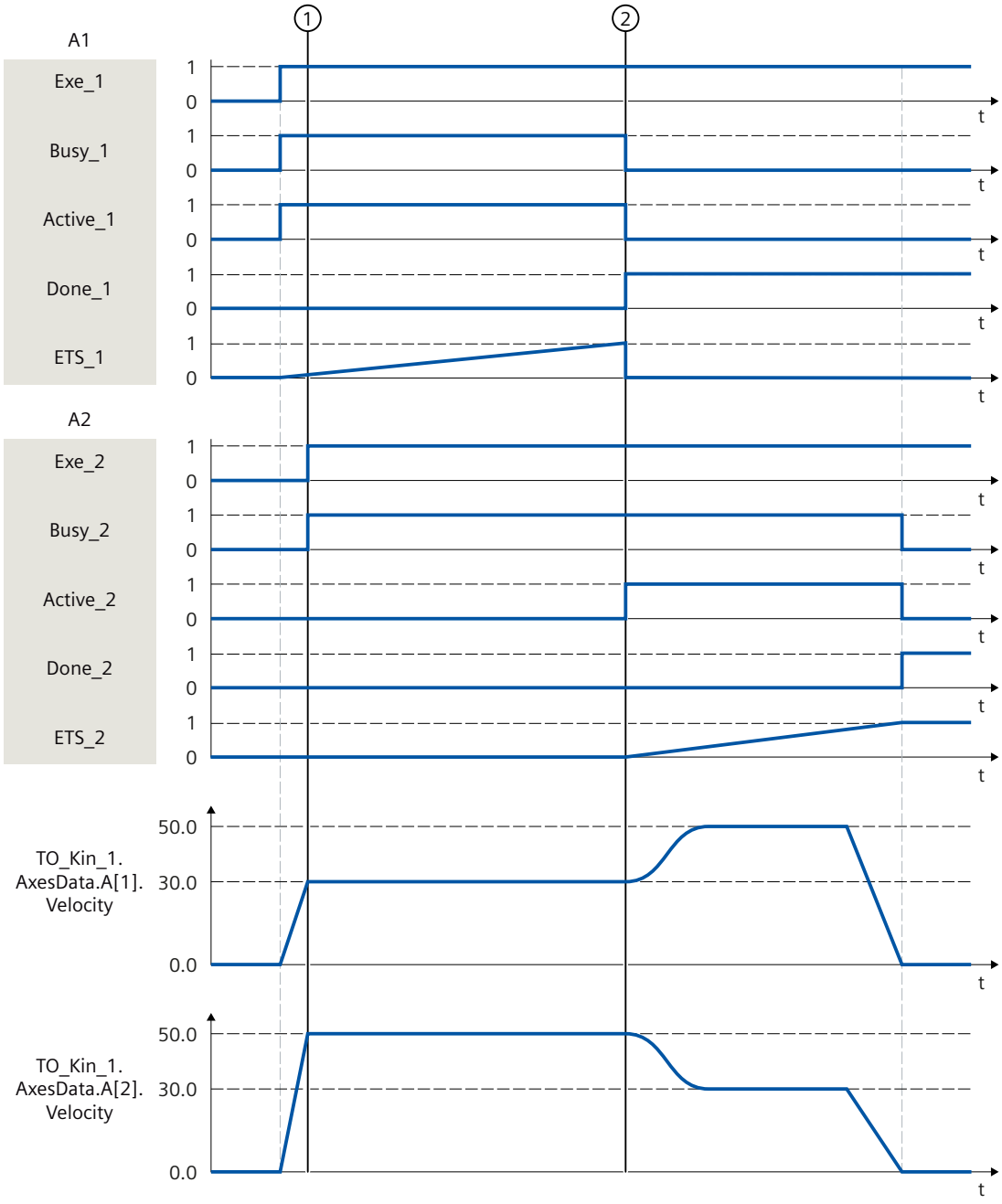

The kinematics is moved with an "MC_MoveDirectRelative" job (A1).

At time ①, an additional "MC_MoveDirectRelative" job (A2) is initiated. As the "MC_MoveDirectRelative" jobs have no override effect on one another, the job A2 is arranged in the job sequence.

At time ②, completion of the job A1 is signaled via "Done_1" and the job A2 is started. As "BufferMode" = 5 is set for job A2, the motion transition is blended with the higher velocity of the two jobs. As soon as the target position is reached, the completion of the A2 job is signaled via "Done_2".

13.1.10 MC_TrackConveyorBelt V7 (S7-1500T)

13.1.10.1 MC_TrackConveyorBelt: Start conveyor tracking V7 (S7-1500T)

Description

With the Motion Control instruction "MC_TrackConveyorBelt", an OCS is assigned via the parameter "ConveyorBelt" to a leading value capable technology object which represents the conveyor belt. The OCS is assigned to a known conveyor position to this purpose.

The OCS is assigned to an object on the conveyor using the OCS frame ("ConveyorBeltOrigin") and the "InitialObjectPosition". The OCS is then tracked with the object in x direction.

With the next kinematics motion job with target position in this OCS, the kinematics moves to the specified position in OCS and couples with the conveyor at the position.

Applies to

- Kinematics

Requirement

- The technology objects have been configured correctly.
- You have selected a kinematics type that can execute path motion jobs.
- There is no active single axis job (e.g. "MC_MoveVelocity") on the interconnected axes.

Override response

- A "MC_SetOcsFrame" job cancels the tracking of the OCS with a leading value-capable technology object.
- A technology alarm on the kinematics, with the alarm response termination of the motion, cancels the tracking of the OCS on the conveyor.
- The override response for "MC_TrackConveyorBelt" jobs is described in section "Override response V7: Kinematics motion commands (Page 409)".

Parameters

The following table shows the parameters of the Motion Control instruction "MC_TrackConveyorBelt":

Parameter	Declaration	Data type	Default value	Description
AxesGroup	INPUT	TO_Kinematics	-	Kinematics technology object

Parameter	Declaration	Data type	Default value	Description	
ConveyorBelt	INPUT	TO_PositioningAxis TO_SynchronousAxis TO_ExternalEncoder TO_LeadingAxisProxy	-	Leading value capable technology object to which the OCS is coupled: Leading-value-capable technology objects are: • Positioning axis • Synchronous axis • External encoder • Leading axis proxy	
Execute	INPUT	BOOL	FALSE	TRUE	Start job with a positive edge
ConveyorBeltOrigin	INPUT	TO_Struct_Kinematics_Frame	-	Frame for the OCS reference position on the conveyor	
InitialObjectPosition	INPUT	TO_Struct_Kinematics_Frame	0.0	"InitialObjectPosition.x" contains the differential value on the belt position to determine the tracked position of the OCS in relation to the OCS reference position Permitted values: • "InitialObjectPosition.x" <=> 0.0 • "InitialObjectPosition.y" = 0.0 • "InitialObjectPosition.z" = 0.0 • "InitialObjectPosition.a" = 0.0 • "InitialObjectPosition.b" = 0.0 • "InitialObjectPosition.c" = 0.0	
CoordSystem	INPUT	DINT	1	Number of the tracked OCS	
				1	OCS1
				2	OCS2
				3	OCS3
Done	OUTPUT	BOOL	FALSE	TRUE	Job is completed.
Busy	OUTPUT	BOOL	FALSE	TRUE	The job is being processed.
CommandAborted	OUTPUT	BOOL	FALSE	TRUE	The job was aborted by another job during execution.
Error	OUTPUT	BOOL	FALSE	TRUE	An error occurred while processing the job. The job is rejected. The cause of the error can be found in the "ErrorID" parameter.
ErrorID	OUTPUT	WORD	16#0000	Error ID for parameter "ErrorID" You can find more detailed information in the "Error IDs" section of the "S7-1500/S7-1500T Motion Control alarms and error IDs" documentation (Page 13).	

See also

Conveyor Tracking (Page 254)

13.1.10.2 MC_TrackConveyorBelt: Function chart V7 (S7-1500T)

Function chart: Start conveyor tracking

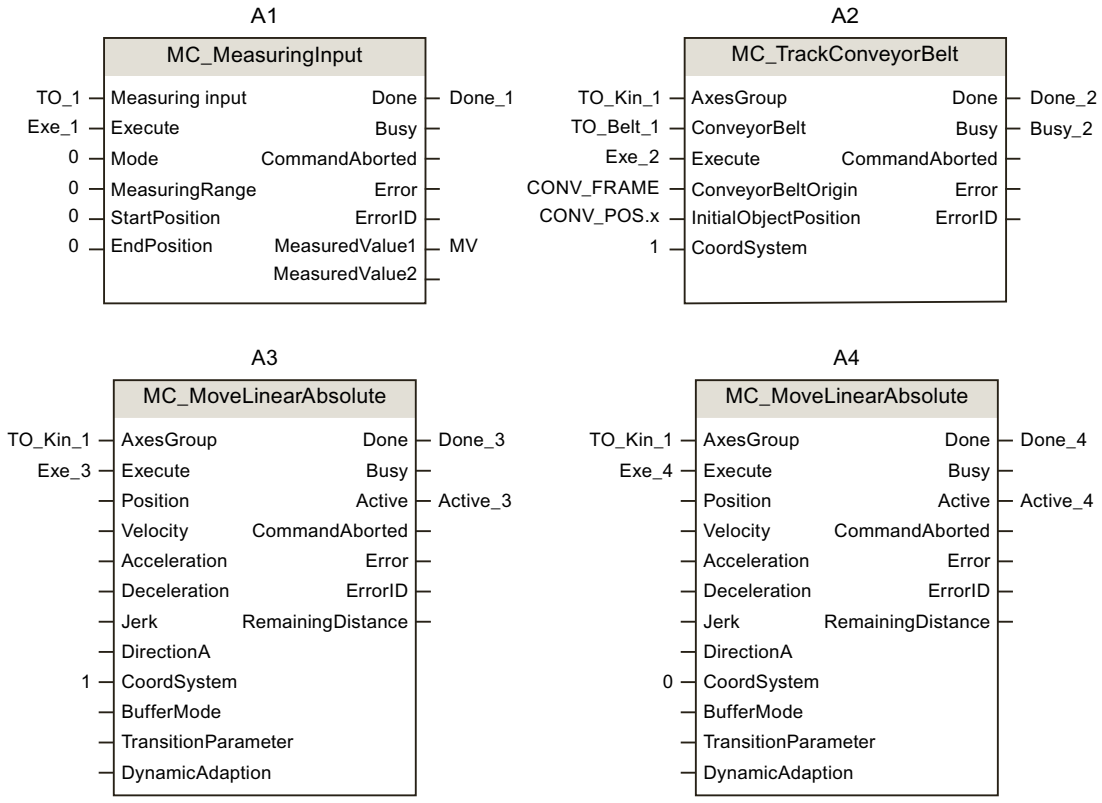

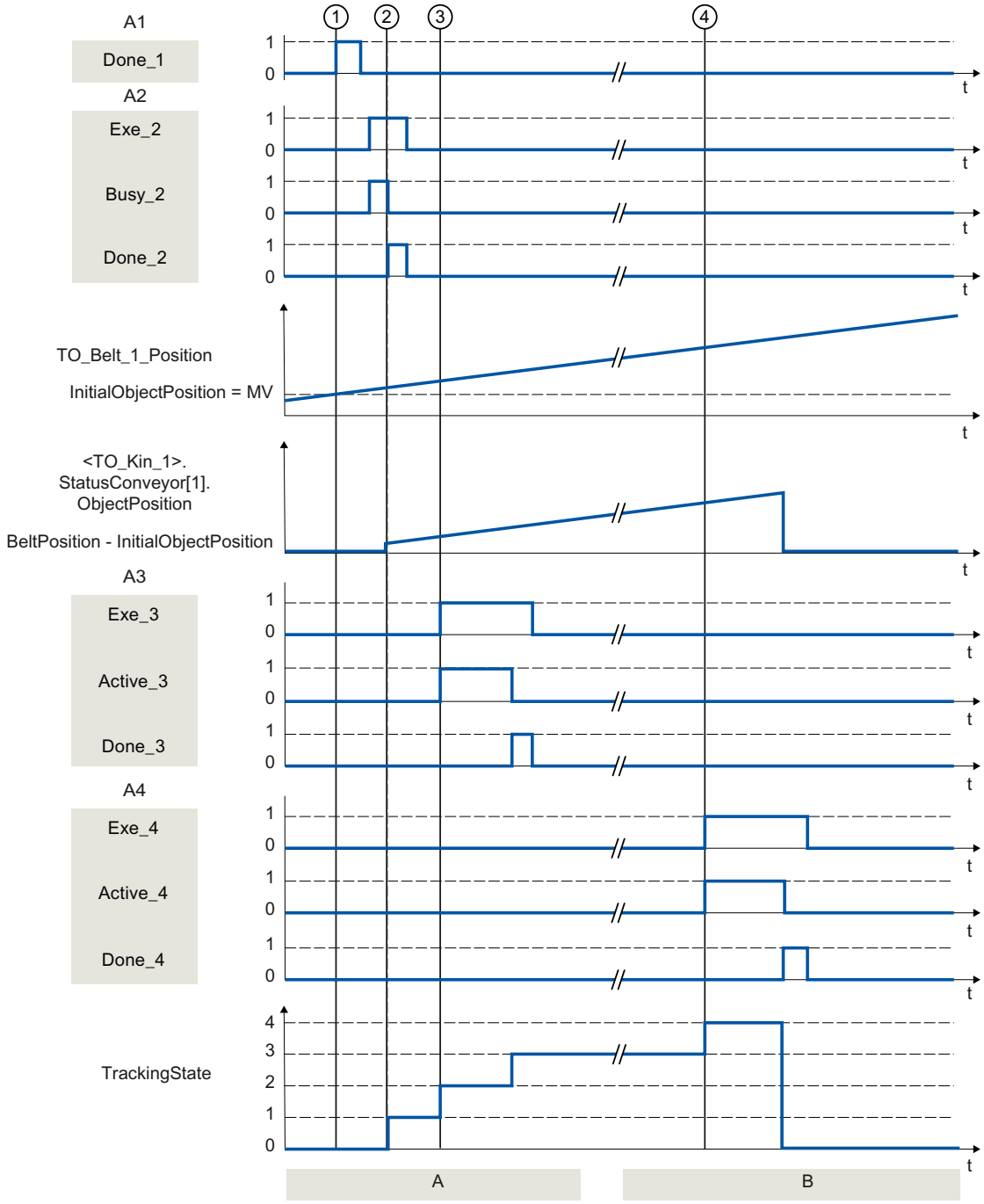

Section A

The position of an object at time ① is recorded via a "MC_MeasuringInput" job (A1). The recorded position "MV" is reported via "Done_1" and written into the variable "CONV_POS.x".

With a "MC_TrackConveyorBelt" job (A2), an OCS is assigned at the time ② via the parameter "ConveyorBelt" to a leading-value capable technology object, which represents the conveyor belt. The OCS is assigned to a known conveyor position to this purpose. The OCS is assigned with the OCS frame and the object position to an object on the conveyor.

The "ObjectPosition" is calculated from the conveyor position minus the "InitialObjectPosition". In the present case the "InitialObjectPosition" is the position of the conveyor ("MV") at the time ①.

The status of conveyor tracking ("TrackingState") changes from 0 to 1.

Via a "MC_MoveLinearAbsolute" job at the time ③ the kinematics is moved to the position specified in the OCS. When the kinematics moves to the object position, the status of conveyor tracking changes from 1 to 2. When the kinematics follows the object position, the status of conveyor tracking changes from 2 to 3.

Section B

To complete the process of the kinematics with the tracked OCS, a "MC_MoveLinearAbsolute" job is started in the WCS at the time ④. When the kinematics moves to the position in WCS, the status of conveyor tracking changes from 3 to 4.

The completed conveyor tracking is reported via "Done_4" and the "TrackingState" changes to 0. The OCS is not tracked with the conveyor position anymore.

13.1.11 MC_KinematicsMotionSimulation V7 (S7-1500T)

13.1.11.1 MC_KinematicsMotionSimulation: Start/end simulation of kinematics V7 (S7-1500T)

Description

With the "MC_KinematicsMotionSimulation" Motion Control instruction, you start or end the simulation mode (Page 266) for a kinematics technology object. In simulation mode, the setpoints of the kinematics are still being calculated, but are not output to the kinematics axes.

When the simulation is started with "Execute" = TRUE and "Mode" = 1, the position setpoints of the kinematics axes are kept constant. The velocity setpoint and the setpoint acceleration of the kinematics axes are immediately set to zero.

In simulation mode, the individual kinematics axes can move independently using single-axis jobs, be disabled and enabled again without the motion processing being canceled at the kinematics technology object.

To exit simulation mode, each of the kinematics axes must be at position "<TO>.AxesData.A[1..6].Position". Before you exit the simulation, move each of the kinematics axes using single-axis jobs to position "<TO>.AxesData.A[1..6].Position". A modulo axis must also be in the same modulo cycle as at the start time of the simulation.

When simulation is exited with "Execute" = TRUE and "Mode" = 0, the simulation is exited and the kinematics motion is continued. The setpoints take effect directly on the kinematics axes.

Applies to

- Kinematics

Requirements

- The technology object has been configured correctly.
- The interconnected axes are enabled.
- When switching on and off, a single-axis job (e.g. "MC_MoveAbsolute") is not active on any of the interconnected axes.
- To exit the simulation with "Execute" = TRUE and "Mode" = 0, the kinematics axes must be at position "<TO>.AxesData.A[1..6].Position". A modulo axis must also be in the same modulo cycle as at the start time of the simulation.

Override response

An "MC_KinematicsMotionSimulation" job is not aborted by any other Motion Control job. You can add more motion jobs to the job sequence or cancel the kinematics motion with an "MC_GroupStop" job without exiting the simulation. The simulation remains active even when the kinematics axes is disabled with "MC_Power.Enable" = FALSE or "MC_Stop".

When a single-axis job is active on a kinematics axis when you exit the simulation, execution of the "MC_KinematicsMotionSimulation" job is rejected with an error.

A restart of the kinematics technology object or one of the kinematics axes terminates the kinematics motion and the simulation.

A new "MC_KinematicsMotionSimulation" job does not abort any other Motion Control jobs.

A new "MC_KinematicsMotionSimulation" job is aborted without errors in the following cases and has no effect:

- The kinematics are not in simulation mode when the job is started with "Execute" = TRUE and "Mode" = 0 .
- The kinematics are already in simulation mode when the job is started with "Execute" = TRUE and "Mode" = 1 .

Parameter

The following table shows the parameters of the Motion Control instruction "MC_KinematicsMotionSimulation":

Parameter	Declaration	Data type	Default value	Description	
AxesGroup	INPUT	TO_Kinematics	-	Kinematics technology object	
Execute	INPUT	BOOL	FALSE	TRUE	Start job with a positive edge
Mode	INPUT	DINT	FALSE	0	Exit simulation mode of the kinematics
				1	Set kinematics to simulation mode or leave in simulation
Done	OUTPUT	BOOL	FALSE	TRUE	Job is completed.
Busy	OUTPUT	BOOL	FALSE	TRUE	The job is being processed.
Error	OUTPUT	BOOL	FALSE	TRUE	An error occurred while processing the job. The job is rejected. The cause of the error can be found in the "ErrorID" parameter.

Parameter	Declaration	Data type	Default value	Description
ErrorID	OUTPUT	WORD	0	Error ID for parameter "ErrorID" You can find more detailed information in the "Error IDs" section of the "S7-1500/S7-1500T Motion Control alarms and error IDs" documentation (Page 13).

See also

Set kinematics to simulation mode (Page 266)

13.2 Zones (S7-1500T)

13.2.1 MC_DefineWorkspaceZone V7 (S7-1500T)

13.2.1.1 MC_DefineWorkspaceZone: Define workspace zone V7 (S7-1500T)

Description

With the Motion Control instruction "MC_DefineWorkspaceZone", you define a workspace zone in relation to the world coordinates system or an object coordinates system. The zones (<TO>.WorkspaceZone[1..10]) defined under "Technology object > Configuration > Extended parameters > Zones" are not hereby changed are available again after a restart of the technology object. The "<TO>.StatusWorkspaceZone" tag of the technology object data block contains the currently effective workspace zones.

The "MC_DefineWorkspaceZone" job interjects itself in the job sequence on the Kinematics technology object and therefore effective for the following motion jobs.

With the "GeometryType" and "GeometryParameter" parameters, you specify the zone geometry type and zone size. You use the "ZoneType" parameter to define a workspace zone as work zone, blocked zone or signal zone. You can define up to ten workspace zones. While several of the defined blocked zones and signal zones can be active simultaneously, only one area of the defined work zones can be active.

Applies to

- Kinematics

Requirement

- The technology object has been configured correctly.
- A single axis job (e.g. "MC_MoveVelocity") is not active on any of the interconnected axes.

Override response

- The override response for "MC_DefineWorkspaceZone" jobs is described in section "Override response V7: Kinematics motion commands (Page 409)".

Parameter

The following table shows the parameters of the Motion Control instruction "MC_DefineWorkspaceZone":

Parameter	Declaration	Data type	Default value	Description	
AxesGroup	INPUT	TO_Kinematics	-	Technology object	
Execute	INPUT	BOOL	FALSE	TRUE	The job is accepted in the job sequence.
ZoneType	INPUT	DINT	0	Zone type	
				0	Blocked zone
				1	Work zone
				2	Signal zone
ZoneNumber	INPUT	DINT	1	Zone number	
				1 to 10	Zone 1 ... 10
ReferenceSystem	INPUT	DINT	0	Reference system	
				0	World coordinate system (WCS)
				1	Object coordinate system 1 (OCS1)
				2	Object coordinate system 2 (OCS2)
				3	Object coordinate system 3 (OCS3)
Frame	INPUT	TO_Struct_Kinematics_Frame	-	Shifting of the zone zero point in relation to the reference system	
GeometryType	INPUT	DINT	0	Zone geometry type	
				0	Cuboid
				1	Sphere
				2	Cylinder
GeometryParameter	INPUT	ARRAY [1..3] OF LREAL	-	Geometric parameters	
GeometryParameter[1]	INPUT	LREAL	0.0	Length x	
				When "GeometryType" = 1 or 2: Radius	
GeometryParameter[2]	INPUT	LREAL	0.0	Length y	
				When "GeometryType" = 2: Height	
GeometryParameter[3]	INPUT	LREAL	0.0	Length z	
Done	OUTPUT	BOOL	FALSE	TRUE	Job is completed.
Busy	OUTPUT	BOOL	FALSE	TRUE	The job is being processed.

Parameter	Declaration	Data type	Default value	Description	
CommandAborted	OUTPUT	BOOL	FALSE	TRUE	The job was aborted by another job during execution.
Error	OUTPUT	BOOL	FALSE	TRUE	An error occurred while processing the job. The job is rejected. The cause of the error can be found in the "ErrorID" parameter.
ErrorID	OUTPUT	WORD	16#0000	Error ID for parameter "ErrorID" You can find more detailed information in the "Error IDs" section of the "S7-1500/S7-1500T Motion Control alarms and error IDs" documentation (Page 13).	

See also

MC_SetWorkspaceZoneActive: Activate workspace zone V7 (Page 388)
MC_SetWorkspaceZoneInactive: Deactivate workspace zone V7 (Page 389)

13.2.2 MC_DefineKinematicsZone V7 (S7-1500T)

13.2.2.1 MC_DefineKinematicsZone: Define kinematics zone V7 (S7-1500T)

Description

With the Motion Control instruction "MC_DefineKinematicsZone", you define a kinematics zone in relation to the tool and flange coordinate system. The zones (<TO>.KinematicsZone[2..10]) defined under "Technology object > Configuration > Extended parameters > Zones" are not hereby changed are available again after a restart of the technology object. The "<TO>.StatusKinematicsZone" tag of the technology object data block contains the currently effective kinematics zones.

The "MC_DefineKinematicsZone" job is added to the queue of the job sequence and is therefore effective for subsequent motion jobs.

With the "GeometryType" and "GeometryParameter" parameters, you specify the zone geometry type and size. You can define up to nine kinematics zones. Kinematics zone 1 is the tool center point (TCP) and cannot be changed.

Applies to

- Kinematics

Requirement

- The technology object has been configured correctly.
- A single axis job (e.g. "MC_MoveVelocity") is not active on any of the interconnected axes.

Override response

- The override response for "MC_DefineKinematicsZone" jobs is described in section "Override response V7: Kinematics motion commands (Page 409)".

Parameters

The following table shows the parameters of the Motion Control instruction "MC_DefineKinematicsZone":

Parameter	Declaration	Data type	Default value	Description	
AxesGroup	INPUT	TO_Kinematics	-	Technology object	
Execute	INPUT	BOOL	FALSE	TRUE	The job is accepted in the job sequence.
ZoneNumber	INPUT	DINT	2	Zone number	
				2 ... 10	Zone 2 ... 10
ReferenceSystem	INPUT	DINT	0	Reference system	
				0	Flange coordinate system (FCS)
				1	Tool coordinate system (TCS)
Frame	INPUT	TO_Struct_Kinematics_Frame	-	Shifting of the zone zero point in relation to the reference system	
GeometryType	INPUT	DINT	0	Zone geometry type	
				0	Cuboid
				1	Sphere
				2	Cylinder
GeometryParameter	INPUT	ARRAY [1..3] OF LREAL	-	Geometric parameters	
GeometryParameter[1]	INPUT	LREAL	0.0	Length x	
				When "GeometryType" = 1 or 2: Radius	
GeometryParameter[2]	INPUT	LREAL	0.0	Length y	
				When "GeometryType" = 2: Height	
GeometryParameter[3]	INPUT	LREAL	0.0	Length z	
Done	OUTPUT	BOOL	FALSE	TRUE	Job is completed.
Busy	OUTPUT	BOOL	FALSE	TRUE	The job is being processed.
CommandAborted	OUTPUT	BOOL	FALSE	TRUE	The job was aborted by another job during execution.
Error	OUTPUT	BOOL	FALSE	TRUE	An error occurred while processing the job. The job is rejected. The cause of the error can be found in the "ErrorID" parameter.
ErrorID	OUTPUT	WORD	16#0000	Error ID for parameter "ErrorID" You can find more detailed information in the "Error IDs" section of the "S7-1500/S7-1500T Motion Control alarms and error IDs" documentation (Page 13).	

See also

MC_SetKinematicsZoneActive: Activate kinematics zone V7 (Page 391)
MC_SetKinematicsZoneInactive: Deactivate kinematics zone V7 (Page 392)

13.2.3 MC_SetWorkspaceZoneActive V7 (S7-1500T)

13.2.3.1 MC_SetWorkspaceZoneActive: Activate workspace zone V7 (S7-1500T)

Description

The "MC_SetWorkspaceZoneActive" Motion Control instruction is used to activate the zone monitoring (Page 191) for a workspace zone which you have defined under "Technology object > Configuration > Extended parameters > Zones" or via a "MC_DefineWorkspaceZone" job. With the "ZoneNumber" parameter, you enter the number of the zone to be activated.

The "MC_SetWorkspaceZoneActive" job is added to the queue of the job sequence and is therefore effective for subsequent motion jobs. When an "MC_SetWorkspaceZoneActive" job becomes part of the job sequence, the zone must already be defined. Otherwise, the job is rejected with "ErrorID" = 16#80C7. You can ensure this as follows:

- Do not submit the "MC_SetWorkspaceZoneActive" job until the "MC_DefineWorkspaceZone" job is completed ("Done" = TRUE).
- Check whether the tag "StatusWorkspaceZone[1..10].Valid" = TRUE before you submit the "MC_SetWorkspaceZoneActive" job.

The "<TO>.StatusWorkspaceZone[1..10].Active" tags of the technology object data block contain the current activation status of the zones. While several of the defined blocked zones and signal zones can be active simultaneously, only one area of the defined work zones can be active.

Applies to

- Kinematics

Requirement

- The technology object has been configured correctly.
- A single axis job (e.g. "MC_MoveVelocity") is not active on any of the interconnected axes.
- The zone to be activated is defined.

Override response

- The override response for "MC_SetWorkspaceZoneActive" jobs is described in section "Override response V7: Kinematics motion commands (Page 409)".

Parameters

The following table shows the parameters of the Motion Control instruction "MC_SetWorkspaceZoneActive":

Parameter	Declaration	Data type	Default value	Description	
AxesGroup	INPUT	TO_Kinematics	-	Technology object	
Execute	INPUT	BOOL	FALSE	TRUE	Start job with a positive edge
ZoneNumber	INPUT	DINT	1	Zone number	
				1 to 10	Zone 1 ... 10
Done	OUTPUT	BOOL	FALSE	TRUE	Job is completed.
Busy	OUTPUT	BOOL	FALSE	TRUE	The job is being processed.
CommandAborted	OUTPUT	BOOL	FALSE	TRUE	The job was aborted by another job during execution.
Error	OUTPUT	BOOL	FALSE	TRUE	An error occurred while processing the job. The job is rejected. The cause of the error can be found in the "ErrorID" parameter.
ErrorID	OUTPUT	WORD	16#0000	Error ID for parameter "ErrorID" You can find more detailed information in the "Error IDs" section of the "S7-1500/S7-1500T Motion Control alarms and error IDs" documentation (Page 13).	

See also

MC_DefineWorkspaceZone: Define workspace zone V7 (Page 384)
MC_SetWorkspaceZoneInactive: Deactivate workspace zone V7 (Page 389)

13.2.4 MC_SetWorkspaceZoneInactive V7 (S7-1500T)

13.2.4.1 MC_SetWorkspaceZoneInactive: Deactivate workspace zone V7 (S7-1500T)

Description

You use Motion Control instruction "MC_SetWorkspaceZoneInactive" to deactivate an active workspace zone. With the "Mode" parameter, you can deactivate a specific zone, all zones of a type or all zones.

The "MC_SetWorkspaceZoneInactive" job is added to the queue of the job sequence and is therefore effective for subsequent motion jobs.

The "<TO>.StatusWorkspaceZone[1..10].Active" tags of the technology object data block contain the current activation status of the zones.

Applies to

- Kinematics

Requirement

- The technology object has been configured correctly.
- A single axis job (e.g. "MC_MoveVelocity") is not active on any of the interconnected axes.
- The zone to be deactivated is defined.

Override response

- The override response for "MC_SetWorkspaceZoneInactive" jobs is described in section "Override response V7: Kinematics motion commands (Page 409)".

Parameters

The following table shows the parameters of the Motion Control instruction "MC_SetWorkspaceZoneInactive":

Parameter	Declaration	Data type	Default value	Description	
AxesGroup	INPUT	TO_Kinematics	-	Technology object	
Execute	INPUT	BOOL	FALSE	TRUE	Start job with a positive edge
ZoneNumber	INPUT	DINT	1	Zone number	
				1 to 10	Zone 1 ... 10
Mode	INPUT	DINT	0	Set zones of a zone type to inactive	
				0	Set a specific zone to inactive
				1	Set all workspace zones to inactive
				2	Set all blocked zones to inactive
				3	Set all signal zones to inactive
				4	Set workspace to inactive.
Done	OUTPUT	BOOL	FALSE	TRUE	Job is completed.
Busy	OUTPUT	BOOL	FALSE	TRUE	The job is being processed.
CommandAborted	OUTPUT	BOOL	FALSE	TRUE	The job was aborted by another job during execution.
Error	OUTPUT	BOOL	FALSE	TRUE	An error occurred while processing the job. The job is rejected. The cause of the error can be found in the "ErrorID" parameter.
ErrorID	OUTPUT	WORD	16#0000	Error ID for parameter "ErrorID" You can find more detailed information in the "Error IDs" section of the "S7-1500/S7-1500T Motion Control alarms and error IDs" documentation (Page 13).	

See also

MC_DefineWorkspaceZone: Define workspace zone V7 (Page 384)
MC_SetWorkspaceZoneActive: Activate workspace zone V7 (Page 388)

13.2.5 MC_SetKinematicsZoneActive V7 (S7-1500T)

13.2.5.1 MC_SetKinematicsZoneActive: Activate kinematics zone V7 (S7-1500T)

Description

The "MC_SetKinematicsZoneActive" Motion Control instruction is used to activate the zone monitoring (Page 191) for a kinematics zone which you have defined under "Technology object > Configuration > Extended parameters > Zones" or via a "MC_DefineKinematicsZone" job. With the "ZoneNumber" parameter, you enter the number of the kinematics zone to be activated.

The "MC_SetKinematicsZoneActive" job is added to the queue of the job sequence and is therefore effective for subsequent motion jobs. When an "MC_SetKinematicsZoneActive" job becomes part of the job sequence, the zone must already be defined. Otherwise, the job is rejected with "ErrorID" = 16#80C7. You can ensure this as follows:

- Do not submit the "MC_SetKinematicsZoneActive" job until the "MC_DefineKinematicsZone" job is completed ("Done" = TRUE).
- Check whether the tag "StatusKinematicsZone[2..10].Valid" = TRUE before you submit the "MC_SetWorkspaceZoneActive" job.

The "<TO>.StatusKinematicsZone[2..10].Active" tags of the technology object data block contain the current activation status of the kinematics zones.

Applies to

- Kinematics

Requirement

- The technology object has been configured correctly.
- A single axis job (e.g. "MC_MoveVelocity") is not active on any of the interconnected axes.
- The kinematics zone to be activated is defined.

Override response

- The override response for "MC_SetKinematicsZoneActive" jobs is described in section "Override response V7: Kinematics motion commands (Page 409)".

Parameters

The following table shows the parameters of the Motion Control instruction "MC_SetKinematicsZoneActive":

Parameter	Declaration	Data type	Default value	Description	
AxesGroup	INPUT	TO_Kinematics	-	Technology object	
Execute	INPUT	BOOL	FALSE	TRUE	Start job with a positive edge
ZoneNumber	INPUT	DINT	2	Zone number	
				2 ... 10	Zone 2 ... 10
Done	OUTPUT	BOOL	FALSE	TRUE	Job is completed.
Busy	OUTPUT	BOOL	FALSE	TRUE	The job is being processed.
CommandAborted	OUTPUT	BOOL	FALSE	TRUE	The job was aborted by another job during execution.
Error	OUTPUT	BOOL	FALSE	TRUE	An error occurred while processing the job. The job is rejected. The cause of the error can be found in the "ErrorID" parameter.
ErrorID	OUTPUT	WORD	16#0000	Error ID for parameter "ErrorID" You can find more detailed information in the "Error IDs" section of the "S7-1500/S7-1500T Motion Control alarms and error IDs" documentation (Page 13).	

See also

MC_DefineKinematicsZone: Define kinematics zone V7 (Page 386)
MC_SetKinematicsZoneInactive: Deactivate kinematics zone V7 (Page 392)

13.2.6 MC_SetKinematicsZoneInactive V7 (S7-1500T)

13.2.6.1 MC_SetKinematicsZoneInactive: Deactivate kinematics zone V7 (S7-1500T)

Description

You use Motion Control instruction "MC_SetKinematicsZoneInactive" to deactivate an active kinematics zone. With the "Mode" parameter, you can deactivate a specific kinematics zone or all kinematics zones.

The "MC_SetKinematicsZoneInactive" job is added to the queue of the job sequence and is therefore effective for subsequent motion jobs.

The "<TO>.StatusKinematicsZone[2..10].Active" tags of the technology object data block contain the current activation status of the kinematics zones.

Applies to

- Kinematics

Requirement

- The technology object has been configured correctly.
- A single axis job (e.g. "MC_MoveVelocity") is not active on any of the interconnected axes.
- The kinematics zone to be deactivated is defined.

Override response

- The override response for "MC_SetKinematicsZoneInactive" jobs is described in section "Override response V7: Kinematics motion commands (Page 409)".

Parameters

The following table shows the parameters of the Motion Control instruction "MC_SetKinematicsZoneInactive":

Parameter	Declaration	Data type	Default value	Description	
AxesGroup	INPUT	TO_Kinematics	-	Technology object	
Execute	INPUT	BOOL	FALSE	TRUE	Start job with a positive edge
ZoneNumber	INPUT	DINT	2	Zone number	
				2 ... 10	Zone 2 ... 10
Mode	INPUT	DINT	0	Set zones to inactive	
				0	Set a specific zone to inactive
				1	Set all zones to inactive
Done	OUTPUT	BOOL	FALSE	TRUE	Job is completed.
Busy	OUTPUT	BOOL	FALSE	TRUE	The job is being processed.
CommandAborted	OUTPUT	BOOL	FALSE	TRUE	The job was aborted by another job during execution.
Error	OUTPUT	BOOL	FALSE	TRUE	An error occurred while processing the job. The job is rejected. The cause of the error can be found in the "ErrorID" parameter.
ErrorID	OUTPUT	WORD	16#0000	Error ID for parameter "ErrorID" You can find more detailed information in the "Error IDs" section of the "S7-1500/S7-1500T Motion Control alarms and error IDs" documentation (Page 13).	

See also

MC_DefineKinematicsZone: Define kinematics zone V7 (Page 386)
MC_SetKinematicsZoneActive: Activate kinematics zone V7 (Page 391)

13.3 Tools (S7-1500T)

13.3.1 MC_DefineTool V7 (S7-1500T)

13.3.1.1 MC_DefineTool: Redefine tool V7 (S7-1500T)

Description

You redefine the tool frame of the tool 1 job with the "MC_DefineTool" Motion Control instruction. The configured start values are not overwritten. Tool 1 is active by default.

The "MC_DefineTool" job is not added to the queue of the job sequence of the kinematics technology object and therefore takes effect immediately. The "MC_DefineTool" job can be executed only if the kinematics is in standstill.

The configurable coordinates depend on the kinematics type used:

Kinematics type		Configurable coordinates	Coordinates predefined with "0.0"
2D	without orientation	x, z	y, A, B, C
	with orientation	z, a	x, y, B, C
3D	without orientation	x, y, z	A, B, C
	with orientation	x, y, z, A	B, C
	with 2 orientations	x, y, z, B	A, C
	with 3 orientations	x, y, z, A, B, C	-
	with central hand		

The following tags of the technology object data block contain the current coordinates of the tool frame 1:

- <TO>.StatusTool.Frame[1].x
- <TO>.StatusTool.Frame[1].y
- <TO>.StatusTool.Frame[1].z
- <TO>.StatusTool.Frame[1].a
- <TO>.StatusTool.Frame[1].b
- <TO>.StatusTool.Frame[1].c

Applies to

- Kinematics

Requirement

- The technology object has been configured correctly.
- A single axis job (e.g. "MC_MoveVelocity") is not active on any of the interconnected axes.
- The kinematics is at a standstill.
- The kinematics is not in "Interrupted" state.
- No kinematics motion is active.

Override response

- An "MC_DefineTool" job cannot be aborted by any other Motion Control job.
- A new "MC_DefineTool" job does not abort any active Motion Control jobs.

Parameters

The following table shows the parameters of the Motion Control instruction "MC_DefineTool":

Parameter	Declaration	Data type	Default value	Description	
AxesGroup	INPUT	TO_Kinematics	-	Technology object	
Execute	INPUT	BOOL	FALSE	TRUE	Start job with a positive edge
Frame	INPUT	TO_Struct_Kinematics_-KinematicsFrame	-	Coordinates in relation to the FCS	
Done	OUTPUT	BOOL	FALSE	TRUE	Job is completed.
Busy	OUTPUT	BOOL	FALSE	TRUE	The job is being processed.
CommandAborted	OUTPUT	BOOL	FALSE	TRUE	The job was aborted by another job during execution.
Error	OUTPUT	BOOL	FALSE	TRUE	An error occurred while processing the job. The job is rejected. The cause of the error can be found in the "ErrorID" parameter.
ErrorID	OUTPUT	WORD	16#0000	Error ID for parameter "ErrorID" You can find more detailed information in the "Error IDs" section of the "S7-1500/S7-1500T Motion Control alarms and error IDs" documentation (Page 13).	

13.3.2 MC_SetTool V7 (S7-1500T)

13.3.2.1 MC_SetTool: Change active tool V7 (S7-1500T)

Description

With the "MC_SetTool" Motion Control instruction, you activate a tool. With the "ToolNumber" parameter, you specify the tool number. The "MC_SetTool" job can be executed only if the kinematics is in standstill. Tool 1 is active by default.

The "<TO>.StatusTool.ActiveTool" tag of the technology object data block contains the tool number of the currently active tool.

NOTE

Zone monitoring

Before changing the tool, make sure that the dimensioning of the activated tool zone is suitable for the new tool and the tool is enveloped by the zone.

Otherwise, create a suitable zone for the tool and activate it. In addition, deactivate the tool zone of the unused tool.

Applies to

- Kinematics

Requirements

- The technology object has been configured correctly.
- A single axis job (e.g. "MC_MoveVelocity") is not active on any of the interconnected axes.
- The kinematics is at a standstill.
- The kinematics is not in "Interrupted" state.
- No kinematics motion is active.

Override response

- An "MC_SetTool" job cannot be aborted by any other Motion Control job.
- A new "MC_SetTool" job does not abort any active Motion Control jobs.

Parameters

The following table shows the parameters of the Motion Control instruction "MC_SetTool":

Parameter	Declaration	Data type	Default value	Description
AxesGroup	INPUT	TO_Kinematics	-	Technology object

Parameter	Declaration	Data type	Default value	Description	
Execute	INPUT	BOOL	FALSE	TRUE	Start job with a positive edge
ToolNumber	INPUT	DINT	1	Number of the tool to be activated.	
				1 to 3	Tool 1 to 3
Done	OUTPUT	BOOL	FALSE	TRUE	Job is completed.
Busy	OUTPUT	BOOL	FALSE	TRUE	The job is being processed.
CommandAborted	OUTPUT	BOOL	FALSE	TRUE	The job was aborted by another job during execution.
Error	OUTPUT	BOOL	FALSE	TRUE	An error occurred while processing the job. The job is rejected. The cause of the error can be found in the "ErrorID" parameter.
ErrorID	OUTPUT	WORD	16#0000	Error ID for parameter "ErrorID" You can find more detailed information in the "Error IDs" section of the "S7-1500/S7-1500T Motion Control alarms and error IDs" documentation (Page 13).	

13.4 Coordinate systems (S7-1500T)

13.4.1 MC_SetOcsFrame V7 (S7-1500T)

13.4.1.1 MC_SetOcsFrame: Redefine object coordinate systems V7 (S7-1500T)

Description

With the "MC_SetOcsFrame" Motion Control instruction, you define the position of an object coordinate system (OCS) in relation to the world coordinate system (WCS). The initial values stored in the technology object data block are not overwritten in the process.

The "MC_SetOcsFrame" job is added to the queue of the job sequence and is therefore effective only for subsequent motion jobs.

The following tags of the technology object data block contain the current coordinates of the object coordinate systems:

- <TO>.StatusOcsFrame[1..3].x
- <TO>.StatusOcsFrame[1..3].y
- <TO>.StatusOcsFrame[1..3].z
- <TO>.StatusOcsFrame[1..3].a
- <TO>.StatusOcsFrame[1..3].b
- <TO>.StatusOcsFrame[1..3].c

Applies to

- Kinematics

Requirement

- The technology object has been configured correctly.
- A single axis job (e.g. "MC_MoveVelocity") is not active on any of the interconnected axes.

Override response

The override response for "MC_SetOcsFrame" jobs is described in section "Override response V7: Kinematics motion commands (Page 409)".

Parameters

The following table shows the parameters of the Motion Control instruction "MC_SetOcsFrame":

Parameter	Declaration	Data type	Default value	Description	
AxesGroup	INPUT	TO_Kinematics	-	Technology object	
Execute	INPUT	BOOL	FALSE	TRUE	The job is accepted in the job sequence.
Frame	INPUT	TO_Struct_Kinematics_Frame	-	Coordinates in relation to the WCS	
OcsNumber	INPUT	DINT	1	Object coordinate system	
				1 to 3	OCS1 to OCS3
Done	OUTPUT	BOOL	FALSE	TRUE	Job is completed. The new values are active for the display and the motion.
Busy	OUTPUT	BOOL	FALSE	TRUE	The job is being processed.
CommandAborted	OUTPUT	BOOL	FALSE	TRUE	The job was aborted by another job during execution.
Error	OUTPUT	BOOL	FALSE	TRUE	An error occurred while processing the job. The job is rejected. The cause of the error can be found in the "ErrorID" parameter.
ErrorID	OUTPUT	WORD	16#0000	Error ID for parameter "ErrorID" You can find more detailed information in the "Error IDs" section of the "S7-1500/S7-1500T Motion Control alarms and error IDs" documentation (Page 13).	

13.4.2 MC_KinematicsTransformation V7 (S7-1500T)

13.4.2.1 MC_KinematicsTransformation: Convert axis coordinates to Cartesian coordinates V7 (S7-1500T)

Description

With the Motion Control instruction "MC_KinematicsTransformation", you convert the setpoints of positions, velocity and acceleration of the kinematics axes or joints to Cartesian coordinates, velocity and acceleration of the tool center point (TCP). The active tool is hereby taken into consideration.

With the instruction, you can determine the Cartesian position, orientation, velocity and acceleration of the axis values or joints.

The instruction is for information purposes only - the kinematics is not moved.

Applies to

- Kinematics

Requirements

- The technology object has been configured correctly.

Override response

- An "MC_KinematicsTransformation" job cannot be aborted by any other Motion Control job.
- A new "MC_KinematicsTransformation" job does not abort any active Motion Control jobs.

Parameters

The following table shows the parameters of the Motion Control instruction "MC_KinematicsTransformation":

Parameter	Declaration	Data type	Default value	Description	
AxesGroup	INPUT	TO_Kinematics	-	Technology object	
Enable	INPUT	BOOL	FALSE	TRUE	The calculation is performed synchronously.
AxesPosition	INPUT	ARRAY[1..6] OF LREAL	-	When "AxesCoordSystem" = 100: Positions of the kinematics axes	
				When "AxesCoordSystem" = 101[1]: Positions of the joints	

[1] Only relevant with more than four interpolating kinematics axes.

[2] With up to four interpolating kinematics axes, the joint position in the JCS corresponds to the axis position in the MCS.

Parameter	Declaration	Data type	Default value	Description	
AxesPosition[1..6]	INPUT	LREAL	0.0	When "AxesCoordSystem" = 100: Position of the axis A[1..6]	
				When "AxesCoordSystem" = 101[1]: Position of the joint J[1..6]	
AxesVelocity	INPUT	ARRAY[1..6] OF LREAL	-	When "AxesCoordSystem" = 100: Velocity of kinematics axes	
				When "AxesCoordSystem" = 101[1]: Velocity of the joints	
AxesVelocity[1..6]	INPUT	LREAL	0.0	When "AxesCoordSystem" = 100: Velocity of axis A[1..6]	
				When "AxesCoordSystem" = 101[1]: Velocity of the joint J[1..6]	
AxesAcceleration	INPUT	ARRAY[1..6] OF LREAL	-	When "AxesCoordSystem" = 100: Acceleration of the kinematics axes	
				When "AxesCoordSystem" = 101[1]: Acceleration of the joints	
AxesAcceleration[1..6]	INPUT	LREAL	0.0	When "AxesCoordSystem" = 100: Acceleration of the axis A[1..6]	
				When "AxesCoordSystem" = 101[1]: Acceleration of the joint J[1..6]	
CoordSystem	INPUT	DINT	0	Reference coordinate system of the output parameters	
				0	World coordinate system (WCS)
				1	Object coordinate system 1 (OCS1)
				2	Object coordinate system 2 (OCS2)
				3	Object coordinate system 3 (OCS3)
AxesCoordSystem	INPUT	DINT	100	Reference coordinate system of the input parameters	
				100	Machine coordinate system (MCS)
				101	Joint coordinate system (JCS)[1] [2]
Valid	OUTPUT	BOOL	FALSE	TRUE	The output parameters are valid.
Busy	OUTPUT	BOOL	FALSE	TRUE	The job is being processed.
Error	OUTPUT	BOOL	FALSE	TRUE	An error occurred while processing the job. The job is rejected. The cause of the error can be found in the "ErrorID" parameter.
ErrorID	OUTPUT	WORD	16#0000	Error ID for parameter "ErrorID" You can find more detailed information in the "Error IDs" section of the "S7-1500/S7-1500T Motion Control alarms and error IDs" documentation (Page 13).	

[1] Only relevant with more than four interpolating kinematics axes.

[2] With up to four interpolating kinematics axes, the joint position in the JCS corresponds to the axis position in the MCS.

Parameter	Declaration	Data type	Default value	Description
Position	OUTPUT	ARRAY[1..6] OF LREAL	-	Cartesian position of the TCP in the reference coordinate system
Position[1]	OUTPUT	LREAL	0.0	x-coordinate
Position[2]	OUTPUT	LREAL	0.0	y-coordinate
Position[3]	OUTPUT	LREAL	0.0	z-coordinate
Position[4]	OUTPUT	LREAL	0.0	A-coordinate
Position[5]	OUTPUT	LREAL	0.0	B coordinate[1)]
Position[6]	OUTPUT	LREAL	0.0	C coordinate[1)]
Velocity	OUTPUT	ARRAY[1..6] OF LREAL	-	Cartesian velocity of the TCP
Velocity[1]	OUTPUT	LREAL	0.0	Velocity in x direction
Velocity[2]	OUTPUT	LREAL	0.0	Velocity in y direction
Velocity[3]	OUTPUT	LREAL	0.0	Velocity in z direction
Velocity[4]	OUTPUT	LREAL	0.0	Velocity of rotation A
Velocity[5]	OUTPUT	LREAL	0.0	Velocity of rotation B[1)]
Velocity[6]	OUTPUT	LREAL	0.0	Velocity of rotation C[1)]
Acceleration	OUTPUT	ARRAY[1..6] OF LREAL	-	Cartesian acceleration of the TCP
Acceleration[1]	OUTPUT	LREAL	0.0	Acceleration in x direction
Acceleration[2]	OUTPUT	LREAL	0.0	Acceleration in y direction
Acceleration[3]	OUTPUT	LREAL	0.0	Acceleration in z direction
Acceleration[4]	OUTPUT	LREAL	0.0	Acceleration of rotation A
Acceleration[5]	OUTPUT	LREAL	0.0	Acceleration of rotation B[1)]
Acceleration[6]	OUTPUT	LREAL	0.0	Acceleration of rotation C[1)]
LinkConstellation	OUTPUT	DINT	0	Joint position information The joint position space is specified depending on the respective kinematics type (Page 58). The parameter is to be interpreted bit by bit.

1) Only relevant with more than four interpolating kinematics axes.

2) With up to four interpolating kinematics axes, the joint position in the JCS corresponds to the axis position in the MCS.

13.4.3 MC_InverseKinematicsTransformation V7 (S7-1500T)

13.4.3.1 MC_InverseKinematicsTransformation: Convert Cartesian coordinates to axis coordinates V7 (S7-1500T)

Description

With the Motion Control instruction "MC_InverseKinematicsTransformation", you convert Cartesian coordinates, velocity and acceleration of the tool center point (TCP) to the setpoints of positions, velocity and acceleration of the kinematics axes or joints. The active tool is hereby taken into consideration.

You can use the instruction to test, for example, whether specific Cartesian positions can be reached with the kinematics or whether software limit switches of the axes or joint traversing ranges are violated with kinematics movements.
The instruction is for information purposes only - the kinematics is not moved.

Applies to

- Kinematics

Requirements

- The technology object has been configured correctly.

Override response

- An "MC_InverseKinematicsTransformation" job cannot be aborted by any other Motion Control job.
- A new "MC_InverseKinematicsTransformation" job does not abort any active Motion Control jobs.

Parameters

The following table shows the parameters of the Motion Control instruction "MC_InverseKinematicsTransformation":

Parameter	Declaration	Data type	Default value	Description	
AxesGroup	INPUT	TO_Kinematics	-	Technology object	
Enable	INPUT	BOOL	FALSE	TRUE	The calculation is performed synchronously.
Position	INPUT	ARRAY[1..6] OF LREAL	-	Cartesian position of the TCP in the reference coordinate system	
Position[1]	INPUT	LREAL	0.0	x-coordinate	
Position[2]	INPUT	LREAL	0.0	y-coordinate	
Position[3]	INPUT	LREAL	0.0	z-coordinate	
Position[4]	INPUT	LREAL	0.0	A-coordinate	
Position[5]	INPUT	LREAL	0.0	B coordinate[1)]	
Position[6]	INPUT	LREAL	0.0	C coordinate[1)]	
Velocity	INPUT	ARRAY[1..6] OF LREAL	-	Cartesian velocity of the TCP	

1) Only relevant with more than four interpolating kinematics axes.

2) With up to four interpolating kinematics axes, the joint position in the JCS corresponds to the axis position in the MCS.

Parameter	Declaration	Data type	Default value	Description	
Velocity[1]	INPUT	LREAL	0.0	Velocity in x direction	
Velocity[2]	INPUT	LREAL	0.0	Velocity in y direction	
Velocity[3]	INPUT	LREAL	0.0	Velocity in z direction	
Velocity[4]	INPUT	LREAL	0.0	Velocity of rotation A	
Velocity[5]	INPUT	LREAL	0.0	Velocity of rotation B[1]	
Velocity[6]	INPUT	LREAL	0.0	Velocity of rotation C[1]	
Acceleration	INPUT	ARRAY[1..6] OF LREAL	-	Cartesian acceleration of the TCP	
Acceleration[1]	INPUT	LREAL	0.0	Acceleration in x direction	
Acceleration[2]	INPUT	LREAL	0.0	Acceleration in y direction	
Acceleration[3]	INPUT	LREAL	0.0	Acceleration in z direction	
Acceleration[4]	INPUT	LREAL	0.0	Acceleration of rotation A	
Acceleration[5]	INPUT	LREAL	0.0	Acceleration of rotation B[1]	
Acceleration[6]	INPUT	LREAL	0.0	Acceleration of rotation C[1]	
CoordSystem	INPUT	DINT	0	Reference coordinate system of the input parameters	
				0	World coordinate system (WCS)
				1	Object coordinate system 1 (OCS1)
				2	Object coordinate system 2 (OCS2)
				3	Object coordinate system 3 (OCS3)
LinkConstellation	INPUT	DINT	0	Joint position information The joint position space is specified depending on the respective kinematics type (Page 58). The parameter is to be interpreted bit by bit.	
AxesCoordSystem	INPUT	DINT	100	Reference coordinate system of the output parameters	
				100	Machine coordinate system (MCS)
				101	Joint coordinate system (JCS)[1] [2]
Valid	OUTPUT	BOOL	FALSE	TRUE	The output parameters are valid.
Busy	OUTPUT	BOOL	FALSE	TRUE	The job is being processed.
Error	OUTPUT	BOOL	FALSE	TRUE	An error occurred while processing the job. The job is rejected. The cause of the error can be found in the "ErrorID" parameter.
ErrorID	OUTPUT	WORD	16#0000	Error ID for parameter "ErrorID" You can find more detailed information in the "Error IDs" section of the "S7-1500/S7-1500T Motion Control alarms and error IDs" documentation (Page 13).	

[1] Only relevant with more than four interpolating kinematics axes.

[2] With up to four interpolating kinematics axes, the joint position in the JCS corresponds to the axis position in the MCS.

Parameter	Declaration	Data type	Default value	Description
AxesPosition	OUTPUT	ARRAY[1..6] OF LREAL	-	When "AxesCoordSystem" = 100: Positions of the kinematics axes
				When "AxesCoordSystem" = 101[1]: Positions of the joints
AxesPosition[1..6]	OUTPUT	LREAL	0.0	When "AxesCoordSystem" = 100: Position of the axis A[1..6]
				When "AxesCoordSystem" = 101[1]: Position of the joint J[1..6]
AxesVelocity	OUTPUT	ARRAY[1..6] OF LREAL	-	When "AxesCoordSystem" = 100: Velocity of kinematics axes
				When "AxesCoordSystem" = 101[1]: Velocity of the joints
AxesVelocity[1..6]	OUTPUT	LREAL	0.0	When "AxesCoordSystem" = 100: Velocity of axis A[1..6]
				When "AxesCoordSystem" = 101[1]: Velocity of the joint J[1..6]
AxesAcceleration	OUTPUT	ARRAY[1..6] OF LREAL	-	When "AxesCoordSystem" = 100: Acceleration of the kinematics axes
				When "AxesCoordSystem" = 101[1]: Acceleration of the joints
AxesAcceleration[1..6]	OUTPUT	LREAL	0.0	When "AxesCoordSystem" = 100: Acceleration of the axis A[1..6]
				When "AxesCoordSystem" = 101[1]: Acceleration of the joint J[1..6]

[1] Only relevant with more than four interpolating kinematics axes.

[2] With up to four interpolating kinematics axes, the joint position in the JCS corresponds to the axis position in the MCS.

13.5 Override response of Motion Control jobs V7 (S7-1500T)

13.5.1 Override response V7: Homing and motion jobs (S7-1500T)

The following table shows how a new motion control job affects active homing and motion jobs:

⇒ Active job ⇓ New job	MC_Home "Mode" = 2, 8, 10	MC_Home "Mode" = 3, 5	MC_Halt MC_MoveAbsolute MC_MoveRelative MC_MoveVelocity MC_MoveJog	MC_Stop	MC_MoveSuperimposed MC_MotionInSuperimposed MC_HaltSuperImposed	MC_MotionInVelocity MC_MotionInPosition
MC_Home "Mode" = 3, 5	A	A	A	-	A	A
MC_Home "Mode" = 9	A	-	-	-	-	-
MC_Halt **MC_MoveAbsolute** **MC_MoveRelative** **MC_MoveVelocity** **MC_MoveJog** **MC_MotionInVelocity** **MC_MotionInPosition**	-	A	A	-	A	A
MC_MoveSuperimposed **MC_MotionInSuperimposed** **MC_HaltSuperImposed**	-	-	-	-	A	-
MC_Stop	A	A	A	B	A	A
MC_GearIn **MC_GearInVelocity**	-	A	A	-	A	-
MC_GearInPos **MC_CamIn** waiting[1)]	-	-	-	-	-	-
MC_GearInPos **MC_CamIn** active[2)]	-	A	A	-	A	-
MC_LeadingValueAdditive	-	-	-	-	-	-
MC_GearOut **MC_CamOut** waiting[3)]	-	-	-	-	-	-

⇒ Active job ⇓ New job	MC_Home "Mode" = 2, 8, 10	MC_Home "Mode" = 3, 5	MC_Halt MC_MoveAbsolute MC_MoveRelative MC_MoveVelocity MC_MoveJog	MC_Stop	MC_MoveSuperimposed MC_MotionInSuperimposed MC_HaltSuperImposed	MC_MotionInVelocity MC_MotionInPosition
MC_GearOut **MC_CamOut** active[4]	-	-	-	-	A	-

A The running job is aborted with "CommandAborted" = TRUE.

B An "MC_Stop" job is aborted by another "MC_Stop" job with a stop response that is the same or higher.

- No effect. Running job continues to be executed.

1) The status "Busy" = TRUE, "StartSync" = FALSE, "InSync" = FALSE corresponds to a waiting synchronous operation.

2) The status "Busy" = TRUE, "StartSync" or "InSync" = TRUE corresponds to an active synchronous operation.

3) The status "Busy" = TRUE, "StartSyncOut" = FALSE corresponds to a pending desynchronization job.

4) The status "Busy" = TRUE, "StartSyncOut" = TRUE corresponds to an active desynchronization job.

NOTE

Override response with active fixed stop

With an active force and torque limiting with "MC_TorqueLimiting", running jobs are aborted if the drive is held at the fixed stop with "InClamping" = TRUE.

13.5.2 Override response V7: Synchronous operation jobs (S7-1500T)

The following table shows how a new motion control job affects the motion of the axis on active synchronous operation jobs:

⇒ Active job ⇓ New job	MC_GearIn	MC_GearInVelocity	MC_GearInPos MC_CamIn waiting[1]	MC_GearInPos MC_CamIn active[2]	MC_PhasingAbsolute MC_PhasingRelative	MC_OffsetAbsolute MC_OffsetRelative	MC_LeadingValueAdditive	MC_GearOut MC_CamOut waiting[3]	MC_GearOut MC_CamOut active[4]
MC_Home "Mode" = 3, 5	A	A	-	-	-	-	-	-	-
MC_Halt	A	A	-	A	A	A	-	A	A
MC_MoveAbsolute MC_MoveRelative MC_MoveVelocity MC_MoveJog	A	A	-	A	A	A	-	A	A
MC_MotionInVelocity MC_MotionInPosition	A	A	A	A	A	A	-	A	A
MC_MoveSuperimposed MC_MotionInSuperimposed MC_HaltSuperImposed	-	-/N[5]	-	-	-	-	-	-	-
MC_Stop	A	A	A	A	A	A	-	A	A
MC_GearIn MC_GearInVelocity	A	A	A	A	A	A	-	A	A

A The running job is aborted with "CommandAborted" = TRUE.

N Not permitted. Running job continues to be executed. The new job is rejected.

- No effect. Running job continues to be executed.

1) A waiting synchronous operation job ("Busy" = TRUE, "StartSync" = FALSE, "InSync" = FALSE) does not abort any active jobs. Abort with an "MC_Power" job is possible.

2) The status "Busy" = TRUE, "StartSync" or "InSync" = TRUE corresponds to an active synchronous operation.

3) A pending desynchronization job ("Busy" = TRUE, "StartSyncOut" = FALSE) does not abort any active jobs. Abort with an "MC_Power" job is possible.

4) The status "Busy" = TRUE, "StartSyncOut" = TRUE corresponds to an active desynchronization job.

5) When the following axis is in position-controlled mode, execution of the running job is continued. When the following axis is not in position-controlled mode, the new job is rejected.

6) An "MC_GearOut" job only terminates an "MC_Gear[...]" job. Correspondingly, an "MC_CamOut" job only cancels a "MC_Cam[...]" job.

7) A job with "SyncProfileReference" = 5 aborts a pending synchronous operation. Canceling a pending synchronous operation has no influence on an active synchronous operation.

⇒ Active job ⇓ New job	MC_GearIn	MC_GearInVelocity	MC_GearInPos MC_CamIn waiting[1]	MC_GearInPos MC_CamIn active[2]	MC_PhasingAbsolute MC_PhasingRelative	MC_OffsetAbsolute MC_OffsetRelative	MC_LeadingValueAdditive	MC_GearOut MC_CamOut waiting[3]	MC_GearOut MC_CamOut active[4]
MC_GearInPos MC_CamIn waiting[1]	-	-	A	-	-	-	-	A	-
MC_GearInPos MC_CamIn active[2]	A	A[5]	A	A	A	A	-	A	A
MC_PhasingAbsolute MC_PhasingRelative	-	N	-	-	A	N	-	-	-
MC_OffsetAbsolute MC_OffsetRelative	-	N	-	-	N	A	-	-	-
MC_LeadingValueAdditive	-	-	-	-	-	-	A	-	-
MC_GearOut MC_CamOut waiting[3]	-	N	A[6] [7]	-	-	-	-	A[6]	-
MC_GearOut MC_CamOut active[4]	A[6]	N	A[6] [7]	A[6]	A	A	-	A[6]	-

A The running job is aborted with "CommandAborted" = TRUE.

N Not permitted. Running job continues to be executed. The new job is rejected.

- No effect. Running job continues to be executed.

1) A waiting synchronous operation job ("Busy" = TRUE, "StartSync" = FALSE, "InSync" = FALSE) does not abort any active jobs. Abort with an "MC_Power" job is possible.

2) The status "Busy" = TRUE, "StartSync" or "InSync" = TRUE corresponds to an active synchronous operation.

3) A pending desynchronization job ("Busy" = TRUE, "StartSyncOut" = FALSE) does not abort any active jobs. Abort with an "MC_Power" job is possible.

4) The status "Busy" = TRUE, "StartSyncOut" = TRUE corresponds to an active desynchronization job.

5) When the following axis is in position-controlled mode, execution of the running job is continued. When the following axis is not in position-controlled mode, the new job is rejected.

6) An "MC_GearOut" job only terminates an "MC_Gear[...]" job. Correspondingly, an "MC_CamOut" job only cancels a "MC_Cam[...]" job.

7) A job with "SyncProfileReference" = 5 aborts a pending synchronous operation. Canceling a pending synchronous operation has no influence on an active synchronous operation.

NOTE

Override response with active fixed stop

With an active force and torque limiting with "MC_TorqueLimiting", running jobs are aborted if the drive is held at the fixed stop with "InClamping" = TRUE.

13.5.3 Override response V7: Measuring input jobs (S7-1500T)

The following table shows which new Motion Control jobs will override active measuring input jobs:

⇒ **Active job** ⇓ **New job**	**MC_MeasuringInput**	**MC_MeasuringInputCyclic**
MC_Home "Mode" = 2, 3, 5, 8, 9, 10	A	A
MC_Home "Mode" = 0, 1, 6, 7, 11, 12	-	-
MC_MeasuringInput **MC_MeasuringInputCyclic** **MC_AbortMeasuringInput**	A	A

A The running job is aborted with "CommandAborted" = TRUE.

- No effect. Running job continues to be executed.

13.5.4 Override response V7: Kinematics motion commands (S7-1500T)

Single axis jobs are not overridden by kinematics jobs.

The following table shows how a new Motion Control job affects active kinematics motion jobs:

⇒ **Active job** ⇓ **New job**	**MC_MoveLinearAbsolute** **MC_MoveLinearRelative** **MC_MoveCircularAbsolute** **MC_MoveCircularRelative** **MC_MoveDirectAbsolute** **MC_MoveDirectRelative** **MC_TrackConveyorBelt** **MC_DefineWorkspaceZone** **MC_DefineKinematicsZone** **MC_SetWorkspaceZoneActive** **MC_SetWorkspaceZoneInactive** **MC_SetKinematicsZoneActive** **MC_SetKinematicsZoneInactive** **MC_SetOcsFrame**	**MC_GroupInterrupt**	**MC_GroupStop**
MC_Home **MC_MoveSuperimposed** **MC_GearOut** **MC_CamOut**	N	N	N
MC_Halt **MC_MoveAbsolute** **MC_MoveRelative** **MC_MoveVelocity** **MC_MoveJog** **MC_Stop** **MC_GearIn** **MC_GearInPos** **MC_GearInVelocity** **MC_CamIn** **MC_MotionInVelocity** **MC_MotionInPosition**	A	A	A
MC_GroupStop	A	A	N
MC_GroupInterrupt **MC_GroupContinue**	B	A	N
MC_MoveLinearAbsolute **MC_MoveLinearRelative** **MC_MoveCircularAbsolute** **MC_MoveCircularRelative** **MC_MoveDirectAbsolute** **MC_MoveDirectRelative** **MC_TrackConveyorBelt** **MC_DefineWorkspaceZone** **MC_DefineKinematicsZone** **MC_SetWorkspaceZoneActive** **MC_SetWorkspaceZoneInactive** **MC_SetKinematicsZoneActive** **MC_SetKinematicsZoneInactive**	-	-	N

A The running job is aborted with "CommandAborted" = TRUE.

B Running job is interrupted or resumed.

C Synchronization of the OCS with the conveyor belt is aborted with "MC_SetOcsFrame" = TRUE.

N Not permitted. Running job continues to be executed. The new job is rejected.

- No effect. Running job continues to be executed. A new kinematics job is added to the job sequence.

⇒ **Active job** ⇓ **New job**	**MC_MoveLinearAbsolute** **MC_MoveLinearRelative** **MC_MoveCircularAbsolute** **MC_MoveCircularRelative** **MC_MoveDirectAbsolute** **MC_MoveDirectRelative** **MC_TrackConveyorBelt** **MC_DefineWorkspaceZone** **MC_DefineKinematicsZone** **MC_SetWorkspaceZoneActive** **MC_SetWorkspaceZoneInactive** **MC_SetKinematicsZoneActive** **MC_SetKinematicsZoneInactive** **MC_SetOcsFrame**	**MC_GroupInterrupt**	**MC_GroupStop**
MC_SetOcsFrame	C, -	-	N

A The running job is aborted with "CommandAborted" = TRUE.

B Running job is interrupted or resumed.

C Synchronization of the OCS with the conveyor belt is aborted with "MC_SetOcsFrame" = TRUE.

N Not permitted. Running job continues to be executed. The new job is rejected.

- No effect. Running job continues to be executed. A new kinematics job is added to the job sequence.

Tags of the technology object data blocks (S7-1500T) 14

14.1 Tags of the kinematics technology object (S7-1500T)

14.1.1 Legend (S7-1500T)

Tag	Name of the tag	
Data type	Data type of the tag	
Values	Value range of the tag - minimum value to maximum value (L - linear specification R - rotary specification) If no specific value is shown, the value range limits of the relevant data type apply or the information under "Description".	
W	Effectiveness of changes in the technology data block	
	DIR	Direct: Values are changed via direct assignment and take effect at the start of the next MC-Servo [OB91].
	CAL	At call of Motion Control instruction: Values are changed directly and take effect at the start of the next MC-Servo [OB91] after the call of the corresponding Motion Control instruction in the user program.
	RES	Restart: Changes to the start value in the load memory are made using the extended instruction "WRIT_DBL" (write to DB in load memory). Changes will not take effect until after restart of the technology object.
	RON	Read only: The tag cannot and must not be changed during runtime of the user program.
Description	Description of the tag	

Access to the tags is with "<TO>.<tag name>". The placeholder <TO> represents the name of the technology object.

14.1.2 "Tcp" tag (kinematics) (S7-1500T)

The tag structure "<TO>.Tcp.<Tag name>" contains the position of the tool center point (TCP), the TCP frame in the World Coordinate System (WCS).

Tags

Legend (Page 412)

Tag		Data type	Values	W	Description
Tcp.		TO_Struct_Kinematics_StatusKinematicsFrameTcp			
	x	LREAL	-1.0E12 ... 1.0E12	RON	x coordinate
	y	LREAL	-1.0E12 ... 1.0E12	RON	y coordinate
	z	LREAL	-1.0E12 ... 1.0E12	RON	z coordinate
	a	LREAL	-180.0 to 179.999	RON	A coordinate
	b	LREAL	-90.0 to 90.0	RON	B coordinate
	c	LREAL	-180.0 to 179.999	RON	C coordinate

See also

Tags: Coordinate systems and frames (Page 191)

14.1.3 "Kinematics" tag (kinematics) (S7-1500T)

The tag structure "<TO>.Kinematics.<Tag name>" contains the defined kinematics type.

Tags

Legend (Page 412)

Tag		Data type	Values	W	Description	
Kinematics.		TO_Struct_Kinematics_Kinematics				
	TypeOfKinematics	DINT	1 to 36	RON	Kinematics type The configuration is performed using the function view.	
					1	Cartesian portal 2D
					2	Cartesian portal 2D with orientation
					3	Cartesian portal 3D
					4	Cartesian portal 3D with orientation
					5	Roller picker 2D
					6	Roller picker 2D with orientation
					7	Roller picker 3D (vertical)
					8	Roller picker 3D with orientation (vertical)
					9	Roller picker 3D with orientation (horizontal)
					10	SCARA 3D with orientation
					11	Articulated arm 2D
					12	Articulated arm 2D with orientation

Tag	Data type	Values	W	Description	
TypeOfKinematics	DINT	1 to 36	RON	13	Articulated arm 3D
				14	Articulated arm 3D with orientation
				15	Delta picker 2D
				16	Delta picker 2D with orientation
				17	Delta picker 3D
				18	Delta picker 3D with orientation
				19	Reserved
				20	SCARA 2D with orientation
				21	Cylindrical robot 3D
				22	Cylindrical robot 3D with orientation
				23	Tripod 3D
				24	Tripod 3D with orientation
				25	6-axis articulated arm with central hand
				26	Cartesian portal 3D with 2 orientations A, B
				27	Delta picker 3D with 2 orientations A, B
				28 to 30	Reserved
				31	User-defined 2D
				32	User-defined 2D with orientation A
				33	User-defined 3D
				34	User-defined 3D with orientation A
				36	User-defined 3D with 3 orientations
Parameter[1..32]	ARRAY [1..32] OF LREAL	-1.0E12 ... 1.0E12	RES	Kinematics-specific parameters	

See also

Tags: Cartesian portal (Page 72)
Tags: Delta picker (Page 143)
Tags: Roller picker (Page 87)
Tags: Articulated arm (Page 125)
Tags: Cylindrical robot (Page 153)
Tags: Tripod (Page 161)
Tags: SCARA (Page 96)
Tags: User-defined kinematics systems (Page 162)

14.1.4 "KcsFrame" tag (kinematics) (S7-1500T)

The tag structure "<TO>.KcsFrame.<Tag name>" contains the frame of the Kinematic Coordinate System (KCS) in the World Coordinate System (WCS).

Tags

Legend (Page 412)

Tag	Data type	Value range	W	Description
KcsFrame.	TO_Struct_Kinematics_Frame			
x	LREAL	-1.0E12 ... 1.0E12	RES	x coordinate
y	LREAL	-1.0E12 ... 1.0E12	RES	y coordinate
z	LREAL	-1.0E12 ... 1.0E12	RES	z coordinate
a	LREAL		RES	A coordinate
		0.0		With kinematics type: • "2D" • "2D with orientation"
		-180.0 to 179.9-99		With kinematics type: • "3D" • "3D with orientation" • "3D with 2 orientations" • "3D with 3 orientations" • "with central hand"
b	LREAL		RES	B coordinates
		0.0		With kinematics type: • "2D with orientation" • "3D with orientation" • "3D with 2 orientations"
		-90.0 to 90.0		With kinematics type: • "3D" • "with central hand"
		-180.0 to 179.9-99		With kinematics type: • "2D"
c	LREAL		RES	C coordinates
		0.0		With kinematics type: • "2D" • "2D with orientation" • "3D with orientation" • "3D with 2 orientations"
		-180.0 to 179.9-99		With kinematics type: • "3D" • "3D with 3 orientations" • "with central hand"

See also

Tags: Coordinate systems and frames (Page 191)

14.1.5 "OcsFrame[1..3]" tag (kinematics) (S7-1500T)

The tag structure "<TO>.OcsFrame[1..3].<Tag name>" contains the frames of the Object Coordinate Systems 1 to 3 (OCS) in the World Coordinate System (WCS).

Tags

Tag	Data type	Value range	W	Description
OcsFrame[1..3].	ARRAY [1..3] OF TO_Struct_Kinematics_Frame			
x	LREAL	-1.0E12 ... 1.0E12	RES	x coordinate
y	LREAL	-1.0E12 ... 1.0E12	RES	y coordinate
z	LREAL	-1.0E12 ... 1.0E12	RES	z coordinate
a	LREAL		RES	A coordinate
		0.0		With kinematics type: • "2D" • "2D with orientation"
		-180.0 to 179.9-99		With kinematics type: • "3D" • "3D with orientation" • "3D with 2 orientations" • "3D with 3 orientations" • "with central hand"
b	LREAL		RES	B coordinates
		0.0		With kinematics type: • "2D with orientation" • "3D with orientation" • "3D with 2 orientations"
		-90.0 to 90.0		With kinematics type: • "3D" • "with central hand"
		-180.0 to 179.9-99		With kinematics type "2D"
c	LREAL		RES	C coordinates
		0.0		With kinematics type: • "2D" • "2D with orientation" • "3D with orientation" • "3D with 2 orientations"
		-180.0 to 179.9-99		With kinematics type: • "3D" • "3D with 3 orientations" • "with central hand"

See also

Tags: Coordinate systems and frames (Page 191)
Legend (Page 412)

14.1.6 "Tool[1..3]" tag (kinematics) (S7-1500T)

The tag structure "<TO>.Tool[1..3].<Tag name>" contains the tool frame in the Flange Coordinate System (FCS).

Tags

Legend (Page 412)

Tag	Data type	Value range	W	Description
Tool[1..3].	ARRAY [1..3] OF TO_Struct_Kinematics_Tool			
Frame.	TO_Struct_Kinematics_KinematicsFrame			
x	LREAL	-1.0E12 ... 1.0E12	RES	x coordinate in the FCS
y	LREAL	-1.0E12 ... 1.0E12	RES	y coordinate in the FCS
z	LREAL	-1.0E12 ... 1.0E12	RES	z coordinate in the FCS
a	LREAL		RES	A coordinate
		0.0		With kinematics type: • "2D" • "3D" • "3D with 2 orientations A, B"
		-180.0 to 179.999		With kinematics type: • "2D with orientation" • "3D with orientation" • "3D with 3 orientations" • "with central hand"
b	LREAL		RES	B coordinates
		0.0		With kinematics type: • "2D" • "2D with orientation" • "3D" • "3D with orientation"
		-180.0 to 179.999		With kinematics type: • "3D with 2 orientations A, B"
		-90.0 to 90.0		With kinematics type: • "3D with 3 orientations" • "with central hand"
c	LREAL		RES	C coordinates

Tag	Data type	Value range	W	Description
c	LREAL	0.0	RES	With kinematics type: • "2D" • "2D with orientation" • "3D" • "3D with orientation" • "3D with 2 orientations A, B"
		-180.0 to 179.9-99		With kinematics type: • "3D with 3 orientations" • "with central hand"

See also

Tags: Coordinate systems and frames (Page 191)

14.1.7 "DynamicDefaults" tag (kinematics) (S7-1500T)

The tag structure "<TO>.DynamicDefaults.<Tag name>" contains the configuration of the dynamic presets. These settings will be used when you specify a dynamic value less than 0.0 for a Motion Control instruction. Changes to the default dynamics will be applied at the next positive edge at the "Execute" parameter of a Motion Control instruction.

Tags

Legend (Page 412)

Tag	Data type	Values	W	Description
DynamicDefaults.	TO_Struct_Kinematics_DynamicDefaults			
Path.	TO_Struct_Kinematics_Dynamics			
Velocity	LREAL	0.0 to 1.0E12	DIR	Default setting of the velocity of the path
Acceleration	LREAL	0.0 to 1.0E12	DIR	Default setting of the acceleration of the path
Deceleration	LREAL	0.0 to 1.0E12	DIR	Default setting of the deceleration of the path
Jerk	LREAL	0.0 to 1.0E12	DIR	Default setting of the jerk of the path
Orientation.	TO_Struct_Kinematics_OrientationDynamics			
Velocity	LREAL	0.0 to 1.0E12	DIR	Default setting of the velocity of the Cartesian orientation
Acceleration	LREAL	0.0 to 1.0E12	DIR	Default setting of the acceleration of the Cartesian orientation
Deceleration	LREAL	0.0 to 1.0E12	DIR	Default setting of the deceleration of the Cartesian orientation
Jerk	LREAL	0.0 to 1.0E12	DIR	Default setting of the jerk of the Cartesian orientation
DynamicAdaption	DINT	0 to 2	CAL	Default setting of the dynamic adaptation
				0 — No dynamic adaptation
				1 — Dynamic adaptation with segmentation of the path

Tag	Data type	Values	W	Description	
DynamicAdaption	DINT	0 to 2	CAL	2	Dynamic adaptation without segmentation of the path
MoveDirect	TO_Struct_Kinematics_MoveDirectDynamics				
VelocityFactor	LREAL	0.0 to 1.0E12	CAL	Factor for the velocity of the axis motions in relation to the respective maximum velocity of the axes with sPTP motion.	
AccelerationFactor	LREAL	0.0 to 1.0E12	CAL	Factor for the acceleration of the axis motions in relation to the respective maximum acceleration of the axes with sPTP motion.	
DecelerationFactor	LREAL	0.0 to 1.0E12	CAL	Factor for the deceleration of the axis motions in relation to the respective maximum deceleration of the axes with sPTP motion.	
JerkFactor	LREAL	0.0 to 1.0E12	CAL	Factor for the jerk of the axis motions in relation to the respective maximum jerk of the axes with sPTP motion.	

See also

Tags: Kinematics motions (Page 224)

14.1.8 "DynamicLimits" tag (kinematics) (S7-1500T)

The tag structure "<TO>.DynamicLimits.<Tag name>" contains the configuration of the dynamic limits. During Motion Control, no dynamic values greater than the dynamic limits are permitted. If you have specified greater values in a Motion Control instruction, then motion is performed using the dynamic limits, and a warning is indicated (alarm 501 to 503 - Dynamic values are limited).

Tags

Legend (Page 412)

Tag	Data type	Values	W	Description
DynamicLimits.	TO_Struct_Kinematics_DynamicLimits			
Path.	TO_Struct_Kinematics_Dynamics			
Velocity	LREAL	0.0 to 1.0E12	DIR	Dynamic limitation for the maximum velocity of the path
Acceleration	LREAL	0.0 to 1.0E12	DIR	Dynamic limitation for the maximum acceleration of the path
Deceleration	LREAL	0.0 to 1.0E12	DIR	Dynamic limitation for the maximum deceleration of the path
Jerk	LREAL	0.0 to 1.0E12	DIR	Dynamic limitation for the maximum jerk of the path
Orientation.	TO_Struct_Kinematics_OrientationDynamics			
Velocity	LREAL	0.0 to 1.0E12	DIR	Dynamic limitation for the maximum velocity of the Cartesian orientation

Tag	Data type	Values	W	Description
Acceleration	LREAL	0.0 to 1.0E12	DIR	Dynamic limitation for the maximum acceleration of the Cartesian orientation
Deceleration	LREAL	0.0 to 1.0E12	DIR	Dynamic limitation for the maximum deceleration of the Cartesian orientation
Jerk	LREAL	0.0 to 1.0E12	DIR	Dynamic limitation for the maximum jerk of the Cartesian orientation

See also

Tags: Kinematics motions (Page 224)

14.1.9 "Joint" tag (kinematics) (S7-1500T)

The tag structure "<TO>.Joint.<Tag name>" contains the configuration of the joints for kinematics types with more than four interpolating kinematics axes.

Tags

Legend (Page 412)

Tag	Data type	Value range	W	Description	
Joint.	TO_Struct_Kinematics_Joint				
J[1..6].	ARRAY [1..6] OF TO_Struct_Kinematics_JointParameters				
InverseDirection	BOOL	-	RES	FALSE	Direction of movement of the joint corresponds to the defined direction of movement of the kinematics type (Page 58)
				TRUE	Direction of movement of the joint is inverse to the defined direction of movement of the kinematics type (Page 58)
Offset	LREAL	-1.0E12 ... 1.0E12	RES	Difference between the defined zero position of the joint of the kinematics type (Page 58) and the mechanical zero position of the joint at the kinematics used	
LowerLimit	LREAL	-5.0E11 ... 5.0E11, -5.0E8 ... 5.0E8 [1]	RES	Lower limit of the joint traversing range	
UpperLimit	LREAL	-5.0E11 ... 5.0E11, -5.0E8 ... 5.0E8 [1]	RES	Upper limit of the joint traversing range	

[1] If position values with higher resolution are used

14.1.10 "AxisCoupling" tag (kinematics) (S7-1500T)

The tag structure "<TO>.AxisCoupling.<Tag name>" contains the configuration of the mechanical axis coupling for kinematics types with more than four interpolating kinematics axes.

Tags

Legend (Page 412)

Tag	Data type	Value range	W	Description	
AxisCoupling.	TO_Struct_Kinematics_AxisCoupling				
N[1..5].	ARRAY [1..5] OF TO_Struct_Kinematics_AxisCoupling-Parameters				
Enable	BOOL	-	RES	FALSE	Mechanical axis coupling is disabled
				TRUE	Mechanical axis coupling is enabled
CausingAxis	DINT	1 to 6	RES	Mechanically coupled axis that is moved	
AffectedAxis	DINT	1 to 6	RES	Mechanically coupled axis that is also moved	
Factor	LREAL	-1.0E12 ... 1.0E12	RES	Coupling factor	

14.1.11 "MotionQueue" tag (kinematics) (S7-1500T)

The tag structure "<TO>.MotionQueue.<Tag name>" contains the configuration of parameters of the job sequence.

Tags

Legend (Page 412)

Tag	Data type	Values	W	Description
MotionQueue.	TO_Struct_Kinematics_MotionQueue			
MaxNumberOfCom-mands	DINT	1 to 10	RON	Maximum number of commands in job sequence The configuration takes place in "Technology object > Con-figuration > Extended parameters > Job sequence".

See also

Tags: Kinematics motions (Page 224)

14.1.12 "Transition" tag (kinematics) (S7-1500T)

The tag structure "<TO>.Transition.<tag name>" contains the configuration of motion jobs.

Tags

Legend (Page 412)

Tag	Data type	Values	W	Description	
Transition.	TO_Struct_Kinematics_Transition				
FactorBlendingLength	LREAL	0 to 100.0	DIR	Factor of the maximum rounding distance in percent [%] The configuration takes place in "Technology object > Configuration > Extended parameters > Job sequence". Change the factor in the user program before sending the motion jobs to the job sequence so that the change is effective.	
				= 0.0	No blending possible
				= 50.0	Default This configuration ensures compatibility with projects that are compatible with Motion Control versions < V6.0.
				= 100.0	Blending possible with complete segment length or motion length

14.1.13 "Override" tag (kinematics) (S7-1500T)

The tag structure "<TO>.Override.<Tag name>" contains the configuration of override parameters.

Tags

Legend (Page 412)

Tag	Data type	Values	W	Description
Override.	TO_Struct_Kinematics_Override			
Velocity	LREAL	0.0 to 200.0	DIR	Velocity override The following values are permitted as velocity correction: • Path motion: from 0.0% to 200.0% • sPTP motion: from 0.0% to 100.0%

See also

Tags: Kinematics motions (Page 224)

14.1.14 "WorkspaceZone[1..10]" tag (kinematics) (S7-1500T)

The tag structure "<TO>.WorkspaceZone[1..10].<Tag name>" contains the parameter for the workspace zones.

Tags

Legend (Page 412)

Tag	Data type	Values	W	Description	
WorkspaceZone[1..10].	ARRAY [1..10] OF TO_Struct_Kinematics_WorkSpaceZone				
Active	BOOL	-	RES	FALSE	Workspace zone deactivated
				TRUE	Workspace zone activated
Valid	BOOL	-	RES	FALSE	Zone is not defined
				TRUE	Zone is defined
Type	DINT	0 to 2	RES	Type of the workspace zone	
				0	Blocked zone
				1	Work zone
				2	Signal zone
ReferenceSystem	DINT	0 ... 3	RES	Reference coordinate system for the workspace zone	
				0	WCS
				1	OCS1
				2	OCS2
				3	OCS3
Frame.	TO_Struct_Kinematics_Frame				
x	LREAL	-1.0E12 to 1.0E-12	RES	x coordinate	
y	LREAL	-1.0E12 to 1.0E-12	RES	y coordinate	
z	LREAL	-1.0E12 to 1.0E-12	RES	z coordinate	
a	LREAL	-180.0 to 179.999	RES	A coordinate	
b	LREAL	-90.0 to 90.0	RES	B coordinate	
c	LREAL	-180.0 to 179.999	RES	C coordinate	
Geometry.	TO_Struct_Kinematics_ZoneGeometry				
Type	DINT	0 to 2	RES	Zone geometry	
				0	Cuboid
				1	Sphere
				2	Cylinder
Parameter[1..3]	ARRAY [1..3] OF LREAL	0.0 to 1.0E12	RES	1	Length x (cuboid) or radius (sphere, cylinder)
				2	Length y (cuboid) or height (cylinder)
				3	Length z (cuboid)

See also

Tags: Zone monitoring (Page 202)

14.1.15 "KinematicsZone[2..10]" tag (kinematics) (S7-1500T)

The tag structure "<TO>.KinematicsZone[2..10].<Tag name>" contains the parameters for kinematic zones.

Tags

Legend (Page 412)

Tag	Data type	Values	W	Description	
KinematicsZone[2..10].	ARRAY [2..10] OF TO_Struct_Kinematics_KinematicsZone				
Active	BOOL	-	RES	FALSE	Kinematics zone deactivated
				TRUE	Kinematics zone activated
Valid	BOOL	-	RES	FALSE	Zone is not defined
				TRUE	Zone is defined
ReferenceSystem	DINT	0 to 1	RES	Reference coordinate system for the kinematics zone	
				0	FCS
				1	TCS
Frame.	TO_Struct_Kinematics_Frame				
x	LREAL	-1.0E12 to 1.0E-12	RES	x coordinate	
y	LREAL	-1.0E12 to 1.0E-12	RES	y coordinate	
z	LREAL	-1.0E12 to 1.0E-12	RES	z coordinate	
a	LREAL	-180.0 to 179.999	RES	A coordinate	
b	LREAL	-90.0 to 90.0	RES	B coordinate	
c	LREAL	-180.0 to 179.999	RES	C coordinate	
Geometry.	TO_Struct_Kinematics_ZoneGeometry				
Type	DINT	0 to 2	RES	Zone geometry	
				0	Cuboid
				1	Sphere
				2	Cylinder
Parameter[1..3]	ARRAY [1..3] OF LREAL	0.0 to 1.0E12	RES	1	Length x (cuboid) or radius (sphere, cylinder)
				2	Length y (cuboid) or height (cylinder)
				3	Length z (cuboid)

See also

Tags: Zone monitoring (Page 202)

14.1.16 "StatusPath" tag (kinematics) (S7-1500T)

The tag structure "<TO>.StatusPath.<Tag name>" contains the parameters of the current kinematics movement. With a synchronous "point-to-point" motion (sPTP motion) the parameters "<TO>.StatusPath.Velocity" and "<TO>.StatusPath.Acceleration" = 0.0.

Tags

Legend (Page 412)

Tag	Data type	Values	W	Description	
StatusPath.	TO_Struct_Kinematics_StatusPath				
CoordSystem	DINT	0 ... 100	RON	Coordinate system of the active motion job	
				0	World coordinate system
				1, 2, 3	Object coordinate system 1, 2, 3
				100	Machine coordinate system
				101	Joint coordinate system[1)]
Velocity	LREAL	-1.0E12 ... 1.0E12	RON	Current path velocity (setpoint reference)	
Acceleration	LREAL	-1.0E12 ... 1.0E12	RON	Current path acceleration (setpoint reference)	
OrientationVelocity	LREAL	0 to 1.0E12	RON	Resulting orientation velocity	
DynamicAdaption	DINT	0 ... 2	RON	Dynamic adaptation	
				0	No dynamic adaptation
				1	Dynamic adaptation with segmentation of the path
				2	Dynamic adaptation without segmentation of the path
TotalPathLength	LREAL	0 to 1.0E12	RON	Total path length of linear and circular path motions Sum of: • Distance of all completed motion jobs • Distance travelled of the active motion job • Remaining distance of the motion job • Calculated distance of all jobs in the job sequence	
AccumulatedPathLength	LREAL	0 to 1.0E12	RON	Accumulated path length of linear and circular path motions Sum of: • Distance of all completed motion jobs • Distance travelled of the active motion job	

[1)] Only relevant with more than four kinematics axes.

See also

Tags: Kinematics motions (Page 224)

14.1.17 "TcpInWcs" tag (kinematics) (S7-1500T)

The tag structure "<TO>.TcpInWcs.<Tag name>" contains the parameters for the tool center point (TCP) in the World Coordinate System (WCS).

Tags

Legend (Page 412)

Tag	Data type	Values	W	Description
TcpInWcs.	TO_Struct_Kinematics_StatusKinematicsFrameWithDynamics			
x.	TO_Struct_Kinematics_StatusMotionVector			
Acceleration	LREAL	-1.0E12 ... 1.0E12	RON	Acceleration of path coordinate x
Position	LREAL	-1.0E12 ... 1.0E12	RON	Position of path coordinate x
Velocity	LREAL	-1.0E12 ... 1.0E12	RON	Velocity of path coordinate x
y.	TO_Struct_Kinematics_StatusMotionVector			
Acceleration	LREAL	-1.0E12 ... 1.0E12	RON	Acceleration of path coordinate y
Position	LREAL	-1.0E12 ... 1.0E12	RON	Position of path coordinate y
Velocity	LREAL	-1.0E12 ... 1.0E12	RON	Velocity of path coordinate y
z.	TO_Struct_Kinematics_StatusMotionVector			
Acceleration	LREAL	-1.0E12 ... 1.0E12	RON	Acceleration of path coordinate z
Position	LREAL	-1.0E12 ... 1.0E12	RON	Position of path coordinate z
Velocity	LREAL	-1.0E12 ... 1.0E12	RON	Velocity of path coordinate z
a.	TO_Struct_Kinematics_StatusMotionVector			
Acceleration	LREAL	-1.0E12 ... 1.0E12	RON	Acceleration of rotation A
Position	LREAL	-1.0E12 ... 1.0E12	RON	Position of rotation A
Velocity	LREAL	-1.0E12 ... 1.0E12	RON	Velocity of rotation A
b.	TO_Struct_Kinematics_StatusMotionVector			
Acceleration	LREAL	-1.0E12 ... 1.0E12	RON	Acceleration of rotation B

Tag	Data type	Values	W	Description
Position	LREAL	-1.0E12 ... 1.0E12	RON	Position of rotation B
Velocity	LREAL	-1.0E12 ... 1.0E12	RON	Velocity of the rotation B
c.	TO_Struct_Kinematics_StatusMotionVector			
Acceleration	LREAL	-1.0E12 ... 1.0E12	RON	Acceleration of rotation C
Position	LREAL	-1.0E12 ... 1.0E12	RON	Position of rotation C
Velocity	LREAL	-1.0E12 ... 1.0E12	RON	Velocity the rotation C

See also

Tags: Coordinate systems and frames (Page 191)

14.1.18 "TcpInOcs[1..3]" tag (kinematics) (S7-1500T)

The tag structure "<TO>.TcpInOcs[1..3].<Tag name>" contains the parameters for the tool center point (TCP) in the Object Coordinate Systems 1 to 3 (OCS).

Tags

Legend (Page 412)

Tag	Data type	Values	W	Description
TcpInOcs[1..3].	ARRAY [1..3] OF TO_Struct_Kinematics_StatusKinematicsFrameWithDynamicsOcs			
x.	TO_Struct_Kinematics_StatusMotionVectorOcs			
Acceleration	LREAL	-1.0E12 ... 1.0E12	RON	Acceleration of the x coordinate of the tool center point in the object coordinate system 1 to 3
Position	LREAL	-1.0E12 ... 1.0E12	RON	x coordinate of the tool center point in the object coordinate system 1 to 3
Velocity	LREAL	-1.0E12 ... 1.0E12	RON	Velocity of the x coordinate of the tool center point in the object coordinate system 1 to 3
y.	TO_Struct_Kinematics_StatusMotionVectorOcs			
Acceleration	LREAL	-1.0E12 ... 1.0E12	RON	Acceleration of the y coordinate of the tool center point in the object coordinate system 1 to 3
Position	LREAL	-1.0E12 ... 1.0E12	RON	y coordinate of the tool center point in the object coordinate system 1 to 3
Velocity	LREAL	-1.0E12 ... 1.0E12	RON	Velocity of the y coordinate of the tool center point in the object coordinate system 1 to 3

Tag			Data type	Values	W	Description
	z.		TO_Struct_Kinematics_StatusMotionVectorOcs			
		Acceleration	LREAL	-1.0E12 ... 1.0E12	RON	Acceleration of the z coordinate of the tool center point in the object coordinate system 1 to 3
		Position	LREAL	-1.0E12 ... 1.0E12	RON	z coordinate of the tool center point in the object coordinate system 1 to 3
		Velocity	LREAL	-1.0E12 ... 1.0E12	RON	Velocity of the z coordinate of the tool center point in the object coordinate system 1 to 3
	a.		TO_Struct_Kinematics_StatusMotionVectorOcs			
		Acceleration	LREAL	-1.0E12 ... 1.0E12	RON	Acceleration of the A coordinate of the tool center point in the object coordinate system 1 to 3
		Position	LREAL	-1.0E12 ... 1.0E12	RON	A coordinate of the tool center point in the object coordinate system 1 to 3
		Velocity	LREAL	-1.0E12 ... 1.0E12	RON	Velocity of the A coordinate of the tool center point in the object coordinate system 1 to 3
	b.		TO_Struct_Kinematics_StatusMotionVectorOcs			
		Acceleration	LREAL	-1.0E12 ... 1.0E12	RON	Acceleration of the B coordinate of the tool center point in the object coordinate system 1 to 3
		Position	LREAL	-1.0E12 ... 1.0E12	RON	B coordinate of the tool center point in the object coordinate system 1 to 3
		Velocity	LREAL	-1.0E12 ... 1.0E12	RON	Velocity of the B coordinate of the tool center point in the object coordinate system 1 to 3
	c.		TO_Struct_Kinematics_StatusMotionVectorOcs			
		Acceleration	LREAL	-1.0E12 ... 1.0E12	RON	Acceleration of the C coordinate of the tool center point in the object coordinate system 1 to 3
		Position	LREAL	-1.0E12 ... 1.0E12	RON	C coordinate of the tool center point in the object coordinate system 1 to 3
		Velocity	LREAL	-1.0E12 ... 1.0E12	RON	Velocity the C coordinate of the tool center point in the object coordinate system 1 to 3

See also

Tags: Coordinate systems and frames (Page 191)

14.1.19 "StatusOcsFrame[1..3]" tag (kinematics) (S7-1500T)

The tag structure "<TO>.StatusOcsFrame[1..3].<Tag name>" contains the frames of the Object Coordinate Systems 1 to 3 (OCS) in the World Coordinate System (WCS).

Tags

Legend (Page 412)

Tag	Data type	Value range	W	Description
StatusOcsFrame[1..3].	ARRAY [1..3] OF TO_Struct_Kinematics_StatusFrame			
x	LREAL	-1.0E12 ... 1.0E12	RON	x coordinate in the WCS
y	LREAL	-1.0E12 ... 1.0E12	RON	y coordinate in the WCS
z	LREAL	-1.0E12 ... 1.0E12	RON	z coordinate in the WCS
a	LREAL		RON	A coordinate in the WCS
		0.0		With kinematics type: • "2D" • "2D with orientation"
		-180.0 to 179.9-99		With kinematics type: • "3D" • "3D with orientation" • "3D with 2 orientations" • "3D with 3 orientations" • "with central hand"
b	LREAL		RON	B coordinate in the WCS
		0.0		With kinematics type: • "2D with orientation" • "3D with orientation" • "3D with 2 orientations"
		-90.0 to 90.0		With kinematics type: • "3D" • "with central hand"
		-180.0 to 179.9-99		With kinematics type "2D"
c	LREAL		RON	C coordinate in the WCS
		0.0		With kinematics type: • "2D" • "2D with orientation" • "3D with orientation" • "3D with 2 orientations"
		-180.0 to 179.9-99		With kinematics type: • "3D" • "3D with 3 orientations" • "with central hand"

See also

Tags: Coordinate systems and frames (Page 191)

14.1.20 "StatusKinematics" tag (kinematics) (S7-1500T)

The tag structure "<TO>.StatusKinematics.<Tag name>" contains the status of the kinematics.

Tags

Legend (Page 412)

Tag	Data type	Values	W	Description	
StatusKinematics.	TO_Struct_Kinematics_StatusKinematics				
Type5D6D	BOOL	-	RON	FALSE	The kinematics type can be operated without "S7-1500T Motion Control KinPlus".
				TRUE	The kinematics type can only be operated with "S7-1500T Motion Control KinPlus".
Valid	BOOL	-	RON	Validity of the transformation values	
				FALSE	Invalid
				TRUE	Valid
LinkConstellation	DWORD	0 ... n	RON	Joint position space	
Bit 0	-	-	-	Angle α1 of axis A1 in the front/rear area (standard area/overhead area)	
				0	The zero point of the FCS is located in the front area (standard area) of the joint position lines for the axis A1. $\alpha 1 = \arctan(y_{FCS}/x_{FCS})$
					With 6-axis articulated arm with central hand (KinPlus): The manual root point is located in the front area (standard area) of the joint position lines for joint J1.
				1	The zero point of the FCS is located in the rear area (overhead area) of the joint position lines for the axis A1. $\alpha 1 = -\arctan(y_{FCS}/x_{FCS})$
					With 6-axis articulated arm with central hand (KinPlus): The manual root point is located in the rear area (overhead area) of the joint position lines for joint J1.
Bit 1	-	-	-	Angle α2 of axis A2 positive/negative taking into consideration the mechanical axis coupling	
				0	α2 positive
				1	α2 negative
Bit 2	-	-	-	Angle α3 of axis A3 positive/negative taking into consideration the mechanical axis coupling	
				0	α3 positive

Tag	Data type	Values	W	Description	
Bit 2	-	-	-	0	With 6-axis articulated arm with central hand (KinPlus): The manual root point is located on, in the standard area above or in the overhead area below the joint position lines for joint J3.
				1	α3 negative
					With 6-axis articulated arm with central hand (KinPlus): The manual root point is located in the standard area below or in the overhead above the joint position lines for joint J3.
Bit 3	-	-	-	Angle α4 of axis A4 positive/negative taking into consideration the mechanical axis coupling	
				0	α4 positive
				1	α4 negative
Bit 4	-	-	-	Geometric joint position joint J5 (KinPlus)	
				0	α5 positive
				1	α5 negative or α5 = 0°
Bit 5	-	-	-	Geometric joint position joint J6 (KinPlus)	
				0	α6 positive
				1	α6 negative
Bit 6 ... 31	-	-	-	Not relevant	

See also

Tags: Kinematics transformation (Page 184)

14.1.21 "AxesData" tag (kinematics) (S7-1500T)

The tag structure "<TO>.AxesData.<Tag name>" contains the setpoints of the kinematics motion for the kinematics axes.

Tags

Legend (Page 412)

Tag	Data type	Values	W	Description
AxesData.	TO_Struct_Kinematics_AxesData			
A[1..6].	ARRAY [1..6] OF TO_Struct_Kinematics_AxisMotionVector			Setpoints of the kinematics motion for the kinematics axes A1 to A6
Position	LREAL	-1.0E12 ... 1.0E12	RON	Current position setpoint
Velocity	LREAL	-1.0E12 ... 1.0E12	RON	Current velocity setpoint

Tag	Data type	Values	W	Description
Acceleration	LREAL	-1.0E12 ... 1.0E12	RON	Current acceleration setpoint

14.1.22 "JointData" tag (kinematics) (S7-1500T)

The tag structure "<TO>.JointData.<Tag name>" contains the setpoints of the kinematics motion for the joints.

Tags

Legend (Page 412)

Tag	Data type	Values	W	Description
JointData.	TO_Struct_Kinematics_StatusJointData			
J[1..6].	ARRAY [1..6] OF TO_Struct_Kinematics_StatusJointMotionVector			Setpoints of the kinematics motion for the joints J1 to J6
Acceleration	LREAL	-1.0E12 ... 1.0E12	RON	Current acceleration setpoint
Position	LREAL	-1.0E12 ... 1.0E12	RON	Current position setpoint
Velocity	LREAL	-1.0E12 ... 1.0E12	RON	Current velocity setpoint

14.1.23 "FlangeInKcs" tag (kinematics) (S7-1500T)

The tag structure "<TO>.FlangeInKcs.<Tag name>" contains the parameters for the Flange Coordinate System (FCS) in the Kinematics Coordinate System (KCS).

Tags

Legend (Page 412)

Tag	Data type	Values	W	Description
FlangeInKcs.	TO_Struct_Kinematics_StatusFlangeInKcs			
x.	TO_Struct_Kinematics_StatusMotionVectorKcs			
Acceleration	LREAL	-1.0E12 ... 1.0E12	RON	Acceleration of the x coordinate of the flange coordinate system (FCS) in the kinematics coordinate system (KCS)
Position	LREAL	-1.0E12 ... 1.0E12	RON	x coordinate of the flange coordinate system in the kinematics coordinate system
Velocity	LREAL	-1.0E12 ... 1.0E12	RON	Velocity of the x coordinate of the flange coordinate system in the kinematics coordinate system

Tag		Data type	Values	W	Description
y.		TO_Struct_Kinematics_StatusMotionVectorKcs			
	Acceleration	LREAL	-1.0E12 ... 1.0E12	RON	Acceleration of the y coordinate of the flange coordinate system in the kinematics coordinate system
	Position	LREAL	-1.0E12 ... 1.0E12	RON	y coordinate of the flange coordinate system in the kinematics coordinate system
	Velocity	LREAL	-1.0E12 ... 1.0E12	RON	Velocity of the y coordinate of the flange coordinate system in the kinematics coordinate system
z.		TO_Struct_Kinematics_StatusMotionVectorKcs			
	Acceleration	LREAL	-1.0E12 ... 1.0E12	RON	Acceleration of the z coordinate of the flange coordinate system in the kinematics coordinate system
	Position	LREAL	-1.0E12 ... 1.0E12	RON	z coordinate of the flange coordinate system in the kinematics coordinate system
	Velocity	LREAL	-1.0E12 ... 1.0E12	RON	Velocity of the z coordinate of the flange coordinate system in the kinematics coordinate system
a.		TO_Struct_Kinematics_StatusMotionVectorKcs			
	Acceleration	LREAL	-1.0E12 ... 1.0E12	RON	Acceleration of the rotation A of the flange coordinate system in the kinematics coordinate system
	Position	LREAL	-1.0E12 ... 1.0E12	RON	Position of the rotation A of the flange coordinate system in the kinematics coordinate system
	Velocity	LREAL	-1.0E12 ... 1.0E12	RON	Velocity of the rotation A of the flange coordinate system in the kinematics coordinate system
b.		TO_Struct_Kinematics_StatusMotionVectorKcs			
	Acceleration	LREAL	-1.0E12 ... 1.0E12	RON	Acceleration of the rotation B of the flange coordinate system in the kinematics coordinate system.
	Position	LREAL	-1.0E12 ... 1.0E12	RON	Position of rotation B of the flange coordinate system in the kinematics coordinate system.
	Velocity	LREAL	-1.0E12 ... 1.0E12	RON	Velocity of the rotation B of the flange coordinate system in the kinematics coordinate system.
c.		TO_Struct_Kinematics_StatusMotionVectorKcs			
	Acceleration	LREAL	-1.0E12 ... 1.0E12	RON	Acceleration of the rotation C of the flange coordinate system in the kinematics coordinate system.
	Position	LREAL	-1.0E12 ... 1.0E12	RON	Position of the rotation C of the flange coordinate system in the kinematics coordinate system.
	Velocity	LREAL	-1.0E12 ... 1.0E12	RON	Velocity of the rotation C of the flange coordinate system in the kinematics coordinate system.

See also

Tags: Coordinate systems and frames (Page 191)

14.1.24 "StatusTool" tag (kinematics) (S7-1500T)

The tag structure "<TO>.StatusTool.<Tag name>" contains the parameters for the tool.

Tags

Legend (Page 412)

Tag	Data type	Values	W	Description
StatusTool.	TO_Struct_Kinematics_StatusTool			
ActiveTool	DINT	1 to 3	RON	Currently active tool
Frame[1..1].	ARRAY [1..1] OF TO_Struct_Kinematics_StatusKinematicsFrame			
x	LREAL	-1.0E12 ... 1.0E12	RON	x coordinate of tool 1
y	LREAL	-1.0E12 ... 1.0E12	RON	y coordinate of tool 1
z	LREAL	-1.0E12 ... 1.0E12	RON	z coordinate of tool 1
a	LREAL	-1.0E12 ... 1.0E12	RON	A coordinate of tool 1
b	LREAL	-1.0E12 ... 1.0E12	RON	B coordinate of tool 1
c	LREAL	-1.0E12 ... 1.0E12	RON	C coordinate of the tool 1

See also

Tags: Coordinate systems and frames (Page 191)

14.1.25 "StatusConveyor[1..3]" tag (kinematics) (S7-1500T)

The tag structure "<TO>.StatusConveyor[1..3].<Tag name>" contains the conveyor tracking status.

Tags

Legend (Page 412)

Tag	Data type	Values	W	Description
StatusConveyor[1..3].	ARRAY [1..3] OF TO_Struct_Kinematics_StatusConveyor			

Tag	Data type	Values	W	Description
ConveyorBelt	DB_ANY	-	RON	Active leading-value-capable technology object to which the object coordinate system (OCS) is coupled: Leading-value-capable technology objects are: • Positioning axis • Synchronous axis • External encoder • Leading axis proxy
BeltPosition	LREAL	-	RON	Position of the leading-value-capable technology object.
ObjectPosition	TO_Struct_-Kinematics-_StatusFra-me	-	RON	Object position Relative offset of the OCS in x direction to the reference position "ConveyorBeltOrigin" "ObjectPosition.x" = "BeltPosition" - "InitialObjectPosition.x"
x	LREAL	-1.0E12 ... 1.0E12	RON	x coordinate
y	LREAL	-1.0E12 ... 1.0E12	RON	y coordinate
z	LREAL	-1.0E12 ... 1.0E12	RON	z coordinate
a	LREAL	-180.0 to 179.9-99	RON	A coordinate
b	LREAL	-180.0 to 179.9-99	RON	B coordinate
c	LREAL	-180.0 to 179.9-99	RON	C coordinate
TrackingState	DINT	0 to 4	RON	Conveyor tracking status
				0: OCS not assigned The OCS is not assigned to a leading-value-capable technology object.
				1: OCS assigned The Motion Control instruction "MC_TrackConveyorBelt" is finished and the OCS is assigned to a leading-value-capable technology object. The first path motion job in the tracked OCS can be sent.
				2: TCP synchronizes to OCS The OCS is assigned to a leading-value-capable technology object. The first path motion job in the tracked OCS is active.
				3: TCP follows OCS The OCS is assigned to a leading-value-capable technology object. The first path motion job in the tracked OCS is completed. The kinematics has reached the position programmed in the path motion job. The kinematics follows the motion of the OCS.

Tag	Data type	Values	W	Description	
TrackingState	DINT	0 to 4	RON	4	TCP desynchronizes from OCS The motion of the kinematics in the tracked OCS is ended by a motion job in the WCS or a non-tracked OCS. When the motion job is completed, the "TrackingState" changes to 0 and the OCS is not tracked with the object position anymore.

14.1.26 "StatusWorkspaceZone[1..10]" tag (kinematics) (S7-1500T)

The tag structure "<TO>.StatusWorkspaceZone[1..10].<Tag name>" contains the status of the workspace zones.

Tags

Legend (Page 412)

Tag	Data type	Values	W	Description	
StatusWork-spaceZone[1..10].	ARRAY [1..10] OF TO_Struct_Kinematics_StatusWorkS-paceZone				
Active	BOOL	-	RON	FALSE	Workspace zone deactivated
				TRUE	Workspace zone activated
Valid	BOOL	-	RON	FALSE	Zone is not defined
				TRUE	Zone is defined
Type	DINT	0 ... 2	RON	Type of the workspace zone	
				0	Blocked zone
				1	Work zone
				2	Signal zone
ReferenceSystem	DINT	0 ... 3	RON	Reference coordinate system for the workspace zone	
				0	WCS
				1	OCS1
				2	OCS2
				3	OCS3
Frame.	TO_Struct_Kinematics_StatusFrame				
x	LREAL	-1.0E12 ... 1.0E12	RON	x coordinate	
y	LREAL	-1.0E12 ... 1.0E12	RON	y coordinate	
z	LREAL	-1.0E12 ... 1.0E12	RON	z coordinate	
a	LREAL	-180.0 to 179.9-99	RON	A coordinate	
b	LREAL	-90.0 to 90.0	RON	B coordinate	

Tag	Data type	Values	W	Description	
c	LREAL	-180.0 to 179.9-99	RON	C coordinate	
Geometry.	TO_Struct_Kinematics_StatusZoneGeometry				
Type	DINT	0 ... 2	RON	Zone geometry	
				0	Cuboid
				1	Sphere
				2	Cylinder
Parameter[1..3]	ARRAY [1..3] OF LREAL	0.0 to 1.0E12	RON	1	Length x (cuboid) or radius (sphere, cylinder)
				2	Length y (cuboid) or height (cylinder)
				3	Length z (cuboid)

See also

Tags: Zone monitoring (Page 202)

14.1.27 "StatusKinematicsZone[2..10]" tag (kinematics) (S7-1500T)

The tag structure "<TO>.StatusKinematicsZone[2..10].<Tag name>" contains the status of the kinematics zones.

Tags

Legend (Page 412)

Tag	Data type	Values	W	Description	
StatusKinematicsZone[2..10].	ARRAY [2..10] OF TO_Struct_Kinematics_StatusKinematicsZone				
Active	BOOL	-	RON	FALSE	Kinematics zone deactivated
				TRUE	Kinematics zone activated
Valid	BOOL	-	RON	FALSE	Zone is not present
				TRUE	Zone is present
ReferenceSystem	DINT	0 to 1	RON	Reference coordinate system for the kinematics zone	
				0	FCS
				1	TCS
Frame.	TO_Struct_Kinematics_StatusFrame				
x	LREAL	-1.0E12 ... 1.0E12	RON	x coordinate	
y	LREAL	-1.0E12 ... 1.0E12	RON	y coordinate	
z	LREAL	-1.0E12 ... 1.0E12	RON	z coordinate	

Tag	Data type	Values	W	Description	
a	LREAL	-180.0 to 179.9-99	RON	A coordinate	
b	LREAL	-90.0 to 90.0	RON	B coordinate	
c	LREAL	-180.0 to 179.9-99	RON	C coordinate	
Geometry.	TO_Struct_Kinematics_StatusZoneG-eometry				
Type	DINT	0 to 2	RON	Zone geometry	
				0	Cuboid
				1	Sphere
				2	Cylinder
Parameter[1..3]	ARRAY [1..3] OF LREAL	0.0 to 1.0E12	RON	1	Length x (cuboid) or radius (sphere, cylinder)
				2	Length y (cuboid) or height (cylinder)
				3	Length z (cuboid)

See also

Tags: Zone monitoring (Page 202)

14.1.28 "StatusZoneMonitoring" tag (kinematics) (S7-1500T)

The tag structure "<TO>.StatusZoneMonitoring.<Tag name>" contains the status of the violated zones.

Tags

Legend (Page 412)

Tag	Data type	Values	W	Description
StatusZoneMonitoring.	TO_Struct_Kinematics_StatusZoneM-onitoring			
WorkingZones	DWORD	-	RON	Display of violated work zones Bit numbers 0 to 9 correspond to the configured zone numbers.
BlockedZones	DWORD	-	RON	Display of violated blocked zones Bit numbers 0 to 9 correspond to the configured zone numbers.
SignalizingZones	DWORD	-	RON	Display of approached signal zones Bit numbers 0 to 9 correspond to the configured zone numbers.
KinematicsZones	DWORD	-	RON	Display of kinematics zones that violate workspace zones Bit number 0 indicates the monitoring status of the tool center point (TCP). Bit numbers 1 to 9 correspond to the configured zone numbers.

See also

Tags: Zone monitoring (Page 202)

14.1.29 "StatusMotionQueue" tag (kinematics) (S7-1500T)

The tag structure "<TO>.StatusMotionQueue.<Tag name>" contains the status of the job sequence.

Tags

Legend (Page 412)

Tag	Data type	Values	W	Description
StatusMotionQueue.	TO_Struct_Kinematics_StatusMotionQueue			
NumberOfCommands	DINT	-	RON	Number of queued jobs in the job sequence
NumberOfPreparedCommands	DINT	-	RON	Number of prepared commands in the job sequence

See also

Tags: Kinematics motions (Page 224)

14.1.30 "KinematicsAxis" tag (kinematics) (S7-1500T)

The tag structure "<TO>.KinematicsAxis.<Tag name>" contains the defined kinematics axes.

Tags

Legend (Page 412)

Tag	Data type	Values	W	Description
KinematicsAxis.	TO_Struct_Kinematics_KinematicsAxis			
A1	DB_ANY	-	RON	Technology object data block of the kinematics axis A1
A2	DB_ANY	-	RON	Technology object data block of the kinematics axis A2
A3	DB_ANY	-	RON	Technology object data block of the kinematics axis A3
A4	DB_ANY	-	RON	Technology object data block of the kinematics axis A4
A5	DB_ANY	-	RON	Technology object data block of the kinematics axis A5
A6	DB_ANY	-	RON	Technology object data block of the kinematics axis A6

14.1.31 "Units" tag (kinematics) (S7-1500T)

The tag structure "<TO>.Units.<Tag name>" contains the configured technological units of measure.

Tags

Legend (Page 412)

Tag	Data type	Values	W	Description	
Units.	TO_Struct_Kinematics_Units				
LengthUnit	UDINT	-	RON	Unit of measure for the position	
				1010	m
				1013	mm
				1536	mm[1)]
				1011	km
				1014	µm
				1015	nm
				1019	in
				1018	ft
				1021	mi
LengthVelocityUnit	UDINT	-	RON	Unit of measure for the velocity	
				1062	mm/s
				1538	mm/s[1)]
				1061	m/s
				1524	mm/min
				1525	m/min
				1526	mm/h
				1063	m/h
				1527	km/min
				1064	km/h
				1066	in/s
				1069	in/min
				1067	ft/s
				1070	ft/min
				1075	mi/h
AngleUnit	UDINT	-	RON	Unit of measure for the position of the rotary axes	
				1004	rad
				1005	°
				1537	°[1)]
AngleVelocityUnit	UDINT	-	RON	Unit of measure for the velocity of the rotary axes	
				1521	°/s
				1522	°/min
				1539	°/s[1)]
				1086	rad/s

1) Position values with higher resolution or six decimal places

Tag		Data type	Values	W	Description	
	AngleVelocityUnit	UDINT	-	RON	1523	rad/min

1) Position values with higher resolution or six decimal places

See also

Units of measure (Page 48)

14.1.32 "StatusWord" tag (kinematics) (S7-1500T)

The "<TO>.StatusWord" tag contains the status information of the technology object. Information on the evaluation of the individual bits (e.g. bit 2 "RestartActive") can be found in the "Evaluating StatusWord, ErrorWord and WarningWord" section of the "S7-1500/S7-1500T Motion Control Overview" documentation (Page 13).

Tags

Legend (Page 412)

Tag		Data type	Values	W	Description
StatusWord		DWORD	-	RON	Status information of the technology object
	Bit 0	-	-	-	Reserved
	Bit 1	-	-	-	"Error" An error is present.
	Bit 2	-	-	-	"RestartActive" A restart is active. The technology object is being reinitialized.
	Bit 3	-	-	-	"OnlineStartValuesChanged" The restart tags have been changed. For the changes to be applied, the technology object must be reinitialized.
	Bit 4	-	-	-	"ControlPanelActive" The kinematics control panel is activated.
	Bit 5	-	-	-	Reserved
	Bit 6	-	-	-	"Done" No motion job is in progress and the kinematics control panel is deactivated.
	Bit 7	-	-	-	Reserved
	Bit 8	-	-	-	"LinearCommand" A linear motion is active.
	Bit 9	-	-	-	"CircularCommand" A circular motion is active.
	Bit 10	-	-	-	Reserved
	Bit 11	-	-	-	"DirectCommand" A synchronous point-to-point motion is active.
	Bit 12	-	-	-	"ConstantVelocity" The velocity setpoint is reached. The path motion of the kinematics is moving at this constant velocity or is at a standstill.

Tag		Data type	Values	W	Description
	Bit 13	-	-	-	"Accelerating" An acceleration operation of a path motion is active.
	Bit 14	-	-	-	"Decelerating" A deceleration operation of a path motion is active.
	Bit 15	-	-	-	"OrientationMotion" An orientation motion is active.
	Bit 16	-	-	-	"Stopping" An "MC_GroupStop" job is running. The motion of the kinematics technology object is aborted
	Bit 17	-	-	-	"Interrupted" The motion of the kinematics technology object is interrupted with an "MC_GroupInterrupt" job. The motion can be continued with a "MC_GroupContinue" command.
	Bit 18	-	-	-	"Blending" A blending segment is active.
	Bit 19	-	-	-	"InSimulation" The technology object is in simulation.
	Bit 20				Reserved
	Bit 21				"EnabledJCS" The kinematics technology object uses the JCS.
	Bit 22				Reserved
	Bit 23				Reserved
	Bit 24				"StandardOrientationMode5D" A linear or circular motion of a 3D kinematics with two orientations is active.
	Bit 25				"StandardOrientationMode6D" A linear or circular motion of a 3D kinematics with three orientations is active.
	Bit 26 ... Bit 31	-	-	-	Reserved

14.1.33 "ErrorWord" tag (kinematics) (S7-1500T)

The "<TO>.ErrorWord" tag indicates technology object errors (technology alarms).

Information on the evaluation of the individual bits (e.g. bit 3 "CommandNotAccepted") can be found in the "Evaluating StatusWord, ErrorWord and WarningWord" section of the "S7-1500/S7-1500T Motion Control Overview" documentation (Page 13).

Tags

Legend (Page 412)

Tag		Data type	Values	W	Description
ErrorWord		DWORD	-	RON	
	Bit 0	-	-	-	"SystemFault" A system-internal error has occurred.

Tag		Data type	Values	W	Description
	Bit 1	-	-	-	"ConfigFault" Configuration error One or more configuration parameters are inconsistent or invalid.
	Bit 2	-	-	-	"UserFault" Error in the user program at a Motion Control instruction or its use (e.g. by the kinematics control panel).
	Bit 3	-	-	-	"CommandNotAccepted" Job cannot be executed A Motion Control instruction cannot be executed because the necessary conditions have not been met.
	Bit 4	-	-	-	"TransformationFault" Error in the kinematics transformation
	Bit 5	-	-	-	Reserved
	Bit 6	-	-	-	"DynamicError" Specified dynamic values are limited to permissible values.
	Bit 7	-	-	-	"ConveyorFault" Error in the conveyor tracking
	Bit 8	-	-	-	"JointLimit" Joint traversing range limit approached or overtraveled.
	Bit 9 ... Bit 31	-	-	-	Reserved

14.1.34 "ErrorDetail" tag (kinematics) (S7-1500T)

The tag structure "<TO>.ErrorDetail.<Tag name>" contains the alarm number and the effective local alarm response for the technology alarm that is currently pending on the technology object.

You can find a list of the technology alarms and alarm responses in the "Overview of the technology alarms" section of the "S7-1500/S7-1500T Motion Control alarms and error IDs" documentation (Page 13).

Tags

Legend (Page 412)

Tag		Data type	Values	W	Description	
ErrorDetail.		TO_Struct_Kinematics_ErrorDetail				
	Number	UDINT	-	RON	Alarm number	
	Reaction	DINT	0, 11, 12	RON	Effective alarm response	
					0	No reaction (warnings only)
					11	Stop without leaving the path
					12	Stop with maximum dynamic values of the axes

14.1.35 "WarningWord" tag (kinematics) (S7-1500T)

The "<TO>.WarningWord" tag indicates pending warnings at the technology object.
Information on the evaluation of the individual bits (e.g. bit 2 "UserFault") can be found in the "Evaluating StatusWord, ErrorWord and WarningWord" section of the "S7-1500/S7-1500T Motion Control overview" documentation (Page 13).

Tags

Legend (Page 412)

Tag	Data type	Values	W	Description
WarningWord	DWORD	-	RON	
Bit 0	-	-	-	"SystemFault" A system-internal error has occurred.
Bit 1	-	-	-	"ConfigFault" Configuration error One or more configuration parameters will be adjusted internally.
Bit 2	-	-	-	"UserFault" Error in user program at a Motion Control instruction or its use
Bit 3	-	-	-	"CommandNotAccepted" Job cannot be executed A Motion Control instruction cannot be executed because the necessary conditions have not been met.
Bit 4	-	-	-	Reserved
Bit 5	-	-	-	Reserved
Bit 6	-	-	-	"DynamicWarning" Specified dynamic values are limited to permissible values.
Bit 7 ... Bit 31	-	-	-	Reserved

14.1.36 "ControlPanel" tag (kinematics) (S7-1500T)

The tag structure "<TO>.ControlPanel.<tag name>" contains no relevant data for you. This tag structure is internally used.

Tags

Legend (Page 412)

Tag	Data type	Values	W	Description
ControlPanel.	TO_Struct_Kinematics_ControlPanel			
Input.	TO_Struct_Kinematics_ControlPanel-Input			
TimeOut	LREAL	100 to 60000	DIR	-
EsLifeSign	UDINT	-	DIR	-

Tag	Data type	Values	W	Description
Command[1..2].	ARRAY [1..2] OF TO_Struct_Kinematics_ControlPanel-Input			
ReqCounter	UDINT	-	DIR	-
Type	UDINT	-	DIR	-
Position[1..6]	ARRAY [1..6] OF LREAL	-	DIR	-
Velocity[1..2]	ARRAY [1..2] OF LREAL	-	DIR	-
Acceleration[1..2]	ARRAY [1..2] OF LREAL	-	DIR	-
Deceleration[1..2]	ARRAY [1..2] OF LREAL	-	DIR	-
Jerk[1..2]	ARRAY [1..2] OF LREAL	-	DIR	-
Param[1..9]	ARRAY [1..9] OF LREAL	-	DIR	-
CoordinateSystem	UDINT	-	DIR	-
ToolNumber	UDINT	-	DIR	-
Output.	TO_Struct_Kinematics_ControlPanel-Output			
RtLifeSign	UDINT	-	RON	-
Command[1..2].	ARRAY [1..2] OF TO_Struct_Kinematics_ControlPanel-OutputCmd			
AckCounter	UDINT	-	RON	-
Error	BOOL	-	RON	-
ErrorID	WORD	-	RON	-
Done	BOOL	-	RON	-
Aborted	BOOL	-	RON	-

Index

A

Application cycle, 28
Articulated arm
  2D, 97
  2D with orientation, 100
  3D, 103
  3D with orientation, 109
  6-axis articulated arm with central hand, 115
AxesGroup, 37

C

Calibration, 305
  Object coordinate systems, 309
  Object coordinate systems, 309
  Workspace zones, 325
  Workspace zones, 325
  Workspace zones, 326
Calibration methods, 309, 310, 310, 311, 311, 311, 312, 326, 327, 328, 329, 330
Cartesian portal
  2D, 59
  2D with orientation, 61
  3D, 63
  3D with orientation, 66
  3D with orientation, 69
Circular motion, 233, 233
Compensation factor, 52
Configuration
  Overview, 26
  Overview, 32
  Conveyor tracking, 256
Configuration limits, 28
Conveyor tracking, 255
  Configuration, 256
  Dynamics, 264-265
  Dynamic adaptation, 264-265
Cylindrical robot
  3D, 144
  3D with orientation, 149

D

Degrees of freedom, 36
Delta picker
  2D, 127
  2D with orientation, 129
  3D, 132
  3D with orientation, 135
  3D with orientation, 138
Diagnostics, 290
  Status and error bits, 291
  Kinematics status, 291
  Error, 291
  Warnings, 292
  Motion status, 292
  Zones status, 293
  Motion and tools, 293
  Positions, 296
Dynamics
  Dynamic limits, 213
  Orientation motion, 213
  Kinematics motion, 213
  sPTP motion, 215

E

Extended Motion Control resources, 28

F

FCS, 40, 42
Flange coordinate system (FCS), 40, 42
Flange zones, 196
FNP, 36
Frame
  Offset, 186
  Rotation, 186
Frames, 40
  KCS frame, 188
  OCS frame, 188
  Tool frame, 189

I

Interconnecting kinematics axes, 51
Interconnections, 51

J

JCS, 37
Job sequence, 37, 217
Joint coordinate system, 37
Joint position space, 164
Joints, 55
  Invert direction, 55
  Joint traversing range, 56
Joint traversing range, 56
  Monitoring depending on the job, 57

K

KCS, 39
Kinematics, 26
  Functions, 26
  Coordinate systems, 38
  Adding, 45
  Copying, 46
  Deleting, 47
  Joint position space, 164
  Singularity, 167
  User transformation, 174
  User transformation, 176
  Motion, 202
  Dynamics, 213
  Dynamic limits, 213
  Dynamic adaptation, 216
  Linear motion, 226-227
  Circular motion, 233
  Point-to-point motion, 245
  Diagnostics, 296
  Tags, 412
Kinematics axes, 36
Kinematics coordinate system, 39
Kinematics motion, 202
  Status, 208
  Remaining distance, 208
  Interrupting, 212
  continue, 212
  stop, 212
  Motion transition dynamics, 222
Kinematics to simulation, 266
Kinematics trace, 298
  Configuration, 298
  Configuration, 298
  Sampling, 298
  Configuration, 299
  Trigger, 299
  Configuration, 299
  Configuration, 299
  Signals, 299
  Recordings, 300
Kinematics transformation, 162, 163
Kinematics type
  Cartesian portal 2D, 59
  Cartesian portal 2D with orientation, 61
  Cartesian portal 3D, 63
  Cartesian portal 3D with orientation, 66
  Cartesian portal 3D with orientation, 69
  Roller picker 2D, 73
  Roller picker 2D with orientation, 75
  Roller picker 3D (vertical), 78
  Roller picker 3D with orientation (vertical), 81
  Roller picker 3D with orientation (horizontal), 84
  SCARA 2D with orientation, 88
  SCARA 3D with orientation, 91
  Articulated arm 2D, 97
  Articulated arm 2D with orientation, 100
  Articulated arm 3D, 103
  Articulated arm 3D with orientation, 109
  6-axis articulated arm with central hand, 115
  Delta picker 2D, 127
  Delta picker 2D with orientation, 129
  Delta picker 3D, 132
  Delta picker 3D with orientation, 135
  Delta picker 3D with orientation, 138
  Cylindrical robot 3D, 144
  Cylindrical robot 3D with orientation, 149
  Tripod 3D, 154
  Tripod 3D with orientation, 157
  User-defined, 162

Kinematics types, 47
Kinematics zero point, 36
Kinematics zones, 195
KZP, 36

L

Linear motion, 226-227

M

Machine coordinate system, 36
Maximum rounding clearance, 219
MC_DefineKinematicsZone, 386
MC_DefineTool, 394
MC_DefineWorkspaceZone, 384
MC_GroupContinue, 333, 335
MC_GroupInterrupt, 332
MC_GroupStop, 337, 339
MC_InverseKinematicsTransformation, 401
MC_KinematicsMotionSimulation, 382
MC_KinematicsTransformation, 399
MC_MoveCircularAbsolute, 350, 355
MC_MoveCircularRelative, 356, 361
MC_MoveDirectAbsolute, 363, 369
MC_MoveDirectRelative, 371, 376
MC_MoveLinearAbsolute, 340, 344
MC_MoveLinearRelative, 345, 349
MC_SetKinematicsZoneActive, 391
MC_SetKinematicsZoneInactive, 392
MC_SetOcsFrame, 397
MC_SetTool, 396
MC_SetWorkspaceZoneActive, 388
MC_SetWorkspaceZoneInactive, 389
MC_TrackConveyorBelt, 378, 380
MCS, 36
MC-Transformation-OB, 178
Mechanical axis coupling, 52
  Coupling factor, 52
Motion control resources, 28
Motion transition
  Maximum rounding clearance, 219

O

Object coordinate system, 40
OCS, 40
Orientation motion, 203

P

Point-to-point motion, 245
Positions
  Diagnostics, 296

R

Roller picker
  2D, 73
  2D with orientation, 75
  3D (vertical), 78
  3D with orientation (vertical), 81
  3D with orientation (horizontal), 84
Rotation conventions, 188, 190

S

S7-1500 Motion Control
  Unit of measure, 49
SCARA
  2D with orientation, 88
  3D with orientation, 91
Singularity, 167
sPTP motion, 245
Synchronous point-to-point motion, 245

T

Tags
  Kinematics technology object, 412
TCP, 36, 41, 44
TCS, 41, 44
Technology data block
  Tags of the kinematics technology object, 412

Technology object
Kinematics, 24
Kinematics, 26
Term definition, 36
Tool center point, 36, 41, 44
Tool coordinate system, 41, 44
Tool zones, 196
Transformation area, 163
Transformation-OB, 178
Traversing range, 163
Tripod
3D, 154
3D with orientation, 157

U

Unit of measure, 49
User-defined kinematics systems, 162
User transformation, 174
Example, 181

W

WCS, 39
Workspace zones, 195
World coordinate system, 39

Z

Zone geometry, 197
Zone monitoring, 192
Zone violation, 201
Zones
Workspace zones, 195
Kinematics zones, 195
Tool zones, 196
Flange zones, 196
Zone geometry, 197
Zone violation, 201

SIEMENS

Edition 11/2022

FUNCTION MANUAL

SIMATIC

S7-1500

S7-1500/S7-1500T Motion Control alarms and error IDs V7.0 as of STEP 7 V18

support.industry.siemens.com

SIEMENS

SIMATIC

S7-1500
S7-1500/S7-1500T Motion Control alarms and error IDs V7.0 as of STEP 7 V18

Diagnostics Manual

Introduction (S7-1500, S7-1500T) 1

Safety instructions (S7-1500, S7-1500T) 2

Diagnostics concept (S7-1500, S7-1500T) 3

Technology alarms (S7-1500, S7-1500T) 4

Error IDs in Motion Control instructions (S7-1500, S7-1500T) 5

S7-1500/S7-1500T Motion Control

11/2022
A5E50859265-AB

Legal information

Warning notice system

This manual contains notices you have to observe in order to ensure your personal safety, as well as to prevent damage to property. The notices referring to your personal safety are highlighted in the manual by a safety alert symbol, notices referring only to property damage have no safety alert symbol. These notices shown below are graded according to the degree of danger.

⚠ DANGER
indicates that death or severe personal injury **will** result if proper precautions are not taken.

⚠ WARNING
indicates that death or severe personal injury **may** result if proper precautions are not taken.

⚠ CAUTION
indicates that minor personal injury can result if proper precautions are not taken.

NOTICE
indicates that property damage can result if proper precautions are not taken.

If more than one degree of danger is present, the warning notice representing the highest degree of danger will be used. A notice warning of injury to persons with a safety alert symbol may also include a warning relating to property damage.

Qualified Personnel

The product/system described in this documentation may be operated only by **personnel qualified** for the specific task in accordance with the relevant documentation, in particular its warning notices and safety instructions. Qualified personnel are those who, based on their training and experience, are capable of identifying risks and avoiding potential hazards when working with these products/systems.

Proper use of Siemens products

Note the following:

⚠ WARNING
Siemens products may only be used for the applications described in the catalog and in the relevant technical documentation. If products and components from other manufacturers are used, these must be recommended or approved by Siemens. Proper transport, storage, installation, assembly, commissioning, operation and maintenance are required to ensure that the products operate safely and without any problems. The permissible ambient conditions must be complied with. The information in the relevant documentation must be observed.

Trademarks

All names identified by ® are registered trademarks of Siemens AG. The remaining trademarks in this publication may be trademarks whose use by third parties for their own purposes could violate the rights of the owner.

Disclaimer of Liability

We have reviewed the contents of this publication to ensure consistency with the hardware and software described. Since variance cannot be precluded entirely, we cannot guarantee full consistency. However, the information in this publication is reviewed regularly and any necessary corrections are included in subsequent editions.

Siemens AG
Digital Industries
Postfach 48 48
90026 NÜRNBERG
GERMANY

A5E50859265-AB
Ⓟ 10/2022 Subject to change

Copyright © Siemens AG 2020 - 2022.
All rights reserved

Table of contents

1 Introduction (S7-1500, S7-1500T) ... 7

1.1 S7-1500 Motion Control Documentation Guide (S7-1500, S7-1500T) ... 8

1.2 Function Manuals documentation guide (S7-1500, S7-1500T) ... 9
1.2.1 Information classes Function Manuals (S7-1500, S7-1500T) ... 9
1.2.2 Basic tools (S7-1500, S7-1500T) ... 10
1.2.3 SIMATIC Technical Documentation (S7-1500, S7-1500T) ... 12

2 Safety instructions (S7-1500, S7-1500T) ... 14

3 Diagnostics concept (S7-1500, S7-1500T) ... 15

4 Technology alarms (S7-1500, S7-1500T) ... 16

4.1 Overview of the technology alarms (S7-1500, S7-1500T) ... 19

4.2 Technology alarms 101 - 114 (S7-1500, S7-1500T) ... 24
4.2.1 Technology alarm 101 (S7-1500, S7-1500T) ... 24
4.2.2 Technology alarm 102 (S7-1500, S7-1500T) ... 25
4.2.3 Technology alarm 103 (S7-1500, S7-1500T) ... 26
4.2.4 Technology alarm 104 (S7-1500, S7-1500T) ... 27
4.2.5 Technology alarm 105 (S7-1500, S7-1500T) ... 27
4.2.6 Technology alarm 106 (S7-1500, S7-1500T) ... 28
4.2.7 Technology alarm 107 (S7-1500, S7-1500T) ... 28
4.2.8 Technology alarm 108 (S7-1500, S7-1500T) ... 29
4.2.9 Technology alarm 109 (S7-1500, S7-1500T) ... 30
4.2.10 Technology alarm 110 (S7-1500, S7-1500T) ... 30
4.2.11 Technology alarm 111 (S7-1500, S7-1500T) ... 31
4.2.12 Technology alarm 112 (S7-1500, S7-1500T) ... 31
4.2.13 Technology alarm 113 (S7-1500, S7-1500T) ... 32
4.2.14 Technology alarm 114 (S7-1500, S7-1500T) ... 32

4.3 Technology alarms 201 - 204 (S7-1500, S7-1500T) ... 33
4.3.1 Technology alarm 201 (S7-1500, S7-1500T) ... 33
4.3.2 Technology alarm 202 (S7-1500, S7-1500T) ... 33
4.3.3 Technology alarm 203 (S7-1500, S7-1500T) ... 33
4.3.4 Technology alarm 204 (S7-1500, S7-1500T) ... 34

4.4 Technology alarms 304 - 343 (S7-1500, S7-1500T) ... 34
4.4.1 Technology alarm 304 (S7-1500, S7-1500T) ... 34
4.4.2 Technology alarm 305 (S7-1500, S7-1500T) ... 34
4.4.3 Technology alarm 306 (S7-1500, S7-1500T) ... 35
4.4.4 Technology alarm 307 (S7-1500, S7-1500T) ... 35
4.4.5 Technology alarm 308 (S7-1500, S7-1500T) ... 36
4.4.6 Technology alarm 321 (S7-1500, S7-1500T) ... 36
4.4.7 Technology alarm 322 (S7-1500, S7-1500T) ... 36
4.4.8 Technology alarm 323 (S7-1500, S7-1500T) ... 37
4.4.9 Technology alarm 341 (S7-1500, S7-1500T) ... 37
4.4.10 Technology alarm 342 (S7-1500, S7-1500T) ... 38

4.4.11 Technology alarm 343 (S7-1500, S7-1500T) ... 38

4.5 Technology alarms 401 - 431 (S7-1500, S7-1500T) ... 38
4.5.1 Technology alarm 401 (S7-1500, S7-1500T) ... 38
4.5.2 Technology alarm 411 (S7-1500, S7-1500T) ... 39
4.5.3 Technology alarm 412 (S7-1500, S7-1500T) ... 39
4.5.4 Technology alarm 421 (S7-1500, S7-1500T) ... 41
4.5.5 Technology alarm 431 (S7-1500, S7-1500T) ... 41

4.6 Technology alarms 501 - 563 (S7-1500, S7-1500T) ... 42
4.6.1 Technology alarm 501 (S7-1500, S7-1500T) ... 42
4.6.2 Technology alarm 502 (S7-1500, S7-1500T) ... 42
4.6.3 Technology alarm 503 (S7-1500, S7-1500T) ... 43
4.6.4 Technology alarm 504 (S7-1500, S7-1500T) ... 43
4.6.5 Technology alarm 511 (S7-1500, S7-1500T) ... 44
4.6.6 Technology alarm 521 (S7-1500, S7-1500T) ... 44
4.6.7 Technology alarm 522 (S7-1500, S7-1500T) ... 45
4.6.8 Technology alarm 531 (S7-1500, S7-1500T) ... 45
4.6.9 Technology alarm 533 (S7-1500, S7-1500T) ... 47
4.6.10 Technology alarm 534 (S7-1500, S7-1500T) ... 47
4.6.11 Technology alarm 541 (S7-1500, S7-1500T) ... 48
4.6.12 Technology alarm 542 (S7-1500, S7-1500T) ... 48
4.6.13 Technology alarm 550 (S7-1500, S7-1500T) ... 49
4.6.14 Technology alarm 551 (S7-1500, S7-1500T) ... 49
4.6.15 Technology alarm 552 (S7-1500, S7-1500T) ... 50
4.6.16 Technology alarm 561 (S7-1500T) ... 51
4.6.17 Technology alarm 562 (S7-1500T) ... 51
4.6.18 Technology alarm 563 (S7-1500T) ... 51

4.7 Technology alarms 601 - 612 (S7-1500, S7-1500T) ... 52
4.7.1 Technology alarm 601 (S7-1500, S7-1500T) ... 52
4.7.2 Technology alarm 603 (S7-1500, S7-1500T) ... 52
4.7.3 Technology alarm 608 (S7-1500, S7-1500T) ... 52
4.7.4 Technology alarm 612 (S7-1500T) ... 53

4.8 Technology alarms 700 - 758 (S7-1500, S7-1500T) ... 53
4.8.1 Technology alarm 700 (S7-1500, S7-1500T) ... 53
4.8.2 Technology alarm 701 (S7-1500, S7-1500T) ... 54
4.8.3 Technology alarm 702 (S7-1500, S7-1500T) ... 54
4.8.4 Technology alarm 703 (S7-1500, S7-1500T) ... 55
4.8.5 Technology alarm 704 (S7-1500, S7-1500T) ... 55
4.8.6 Technology alarm 750 (S7-1500, S7-1500T) ... 55
4.8.7 Technology alarm 752 (S7-1500, S7-1500T) ... 56
4.8.8 Technology alarm 753 (S7-1500, S7-1500T) ... 56
4.8.9 Technology alarm 754 (S7-1500, S7-1500T) ... 56
4.8.10 Technology alarm 755 (S7-1500, S7-1500T) ... 57
4.8.11 Technology alarm 758 (S7-1500, S7-1500T) ... 57

4.9 Technology alarms 801 - 820 (S7-1500T) ... 58
4.9.1 Technology alarm 801 (S7-1500T) ... 58
4.9.2 Technology alarm 802 (S7-1500T) ... 58
4.9.3 Technology alarm 803 (S7-1500T) ... 59
4.9.4 Technology alarm 804 (S7-1500T) ... 60
4.9.5 Technology alarm 805 (S7-1500T) ... 60

4.9.6 Technology alarm 806 (S7-1500T) 61
4.9.7 Technology alarm 807 (S7-1500T) 61
4.9.8 Technology alarm 808 (S7-1500T) 61
4.9.9 Technology alarm 809 (S7-1500T) 62
4.9.10 Technology alarm 810 (S7-1500T) 62
4.9.11 Technology alarm 811 (S7-1500T) 62
4.9.12 Technology alarm 812 (S7-1500T) 63
4.9.13 Technology alarm 820 (S7-1500T) 63

4.10 Technology alarms 900 - 903 (S7-1500T) 64
4.10.1 Technology alarm 900 (S7-1500T) 64
4.10.2 Technology alarm 901 (S7-1500T) 64
4.10.3 Technology alarm 902 (S7-1500T) 64
4.10.4 Technology alarm 903 (S7-1500T) 65

5 Error IDs in Motion Control instructions (S7-1500, S7-1500T) 66

5.1 Error IDs 16#0000 - 16#800F (S7-1500, S7-1500T) 66

5.2 Error IDs 16#8010 - 16#801F (S7-1500, S7-1500T) 69

5.3 Error IDs 16#8020 - 16#802F (S7-1500, S7-1500T) 70

5.4 Error IDs 16#8030 - 16#803F (S7-1500, S7-1500T) 71

5.5 Error IDs 16#8040 - 16#804F (S7-1500, S7-1500T) 71

5.6 Error IDs 16#8050 - 16#805F (S7-1500, S7-1500T) 72

5.7 Error IDs 16#8060 - 16#806F (S7-1500, S7-1500T) 73

5.8 Error IDs 16#8070 - 16#807F (S7-1500, S7-1500T) 73

5.9 Error IDs 16#8080 - 16#808F (S7-1500, S7-1500T) 74

5.10 Error IDs 16#80A0 - 16#80AF (S7-1500, S7-1500T) 75

5.11 Error IDs 16#80B0 - 16#80BF (S7-1500T) 76

5.12 Error IDs 16#80C0 - 16#80CF (S7-1500T) 77

5.13 Error IDs 16#80D0 - 16#80DF (S7-1500T) 78

5.14 Error IDs 16#80E0 - 16#80EF (S7-1500T) 79

5.15 Error IDs 16#8FF0 - 16#8FFF (S7-1500, S7-1500T) 80

Index 81

Introduction (S7-1500, S7-1500T) 1

Purpose of the documentation

This documentation provides important information that you need to configure and commission the integrated Motion Control functionality of the S7-1500 Automation systems.

Required basic knowledge

In order to understand this documentation, the following knowledge is required:

- General knowledge in the field of automation
- General knowledge in the field of drive engineering and motion control

Validity of the documentation

This documentation is valid for the S7-1500 product range.

Conventions

- For the path settings in the project navigation it is presumed that the "Technology objects" object is opened in the CPU subtree. The "Technology object" placeholder represents the name of the technology object.
  Example: "Technology object > Configuration > Basic parameters".
- The <TO> placeholder represents the name set in tags for the respective technology object.
  Example: <TO>.Actor.Type
- This documentation contains pictures of the devices described. The pictures may differ in minor details from the devices supplied.

You should also observe the notes that are marked as follows:

NOTE

A note contains important information about the product described in the documentation, about the handling of the product, and about sections in this documentation demanding your particular attention.

Industry Mall

The Industry Mall is the catalog and ordering system of Siemens AG for automation and drive solutions on the basis of Totally Integrated Automation (TIA) and Totally Integrated Power (TIP).

You can find catalogs for all automation and drive products on the Internet (https://mall.industry.siemens.com).

1.1 S7-1500 Motion Control Documentation Guide (S7-1500, S7-1500T)

Product information

Please also note the supplementary information on the Motion Control documentation:

- Product information on the S7-1500/1500T Motion Control documentation
  https://support.industry.siemens.com/cs/ww/en/view/109794046
  (https://support.industry.siemens.com/cs/ww/en/view/109794046)

Documentation

The documentation of the Motion Control functions is divided into the following documents:

- S7-1500/S7-1500T Motion Control Overview
  https://support.industry.siemens.com/cs/ww/en/view/109812056
  (https://support.industry.siemens.com/cs/ww/en/view/109812056)
  This document describes the innovations in the technology versions, functions that are used for all technology objects, and the process response of Motion Control applications.
- S7-1500/S7-1500T Motion Control alarms and error IDs
  https://support.industry.siemens.com/cs/ww/en/view/109812061
  (https://support.industry.siemens.com/cs/ww/en/view/109812061)
  This document describes the technology alarms of the technology objects and the error identifications of the Motion Control instructions.
- S7-1500/S7-1500T Axis functions
  https://support.industry.siemens.com/cs/ww/en/view/109812057
  (https://support.industry.siemens.com/cs/ww/en/view/109812057)
  This document describes the drive and encoder connection and functions for single-axis movements.
- S7-1500/S7-1500T Synchronous operation functions
  https://support.industry.siemens.com/cs/ww/en/view/109812059
  (https://support.industry.siemens.com/cs/ww/en/view/109812059)
  This document describes gearing, velocity synchronous operation and camming as well as cross-PLC synchronous operation.
- S7-1500/S7-1500T Measuring input and cam functions
  https://support.industry.siemens.com/cs/ww/en/view/109812060
  (https://support.industry.siemens.com/cs/ww/en/view/109812060)
  This document describes the detection of the actual position via a measuring input and the output of switching signals via output cam or cam track.
- S7-1500/S7-1500T Kinematics functions
  https://support.industry.siemens.com/cs/ww/en/view/109812058
  (https://support.industry.siemens.com/cs/ww/en/view/109812058)
  This document describes the control of kinematics with up to 6 interpolating axes.

See also

Topic page "SIMATIC Technology - Motion Control: Overview and Important Links"
https://support.industry.siemens.com/cs/ww/en/view/109751049
(https://support.industry.siemens.com/cs/ww/en/view/109751049)

1.2 Function Manuals documentation guide (S7-1500, S7-1500T)

1.2.1 Information classes Function Manuals (S7-1500, S7-1500T)

The documentation for the SIMATIC S7-1500 automation system, for the 1513/1516pro-2 PN, SIMATIC Drive Controller CPUs based on SIMATIC S7-1500 and the SIMATIC ET 200MP, ET 200SP, ET 200AL and ET 200eco PN distributed I/O systems is arranged into three areas.
This arrangement enables you to access the specific content you require.
You can download the documentation free of charge from the Internet (https://support.industry.siemens.com/cs/ww/en/view/109742705).

Basic information

The system manuals and Getting Started describe in detail the configuration, installation, wiring and commissioning of the SIMATIC S7-1500, SIMATIC Drive Controller, ET 200MP, ET 200SP, ET 200AL and ET 200eco PN systems. Use the corresponding operating instructions for 1513/1516pro-2 PN CPUs.
The STEP 7 online help supports you in the configuration and programming.
Examples:

- Getting Started S7-1500
- System manuals
- Operating instructions ET 200pro and 1516pro-2 PN CPU
- Online help TIA Portal

Device information

Equipment manuals contain a compact description of the module-specific information, such as properties, wiring diagrams, characteristics and technical specifications.
Examples:

- Equipment manuals for CPUs
- Equipment manuals for interface modules
- Equipment manuals for digital modules
- Equipment manuals for analog modules
- Equipment manuals for communication modules
- Equipment manuals for technology modules
- Equipment manuals for power supply modules
- Equipment manuals for BaseUnits

General information

The function manuals contain detailed descriptions on general topics relating to the SIMATIC Drive Controller and the S7-1500 automation system.
Examples:

- Function Manual Diagnostics
- Function Manual Communication
- Function Manuals Motion Control
- Function Manual Web Server
- Function Manual Cycle and Response Times
- PROFINET Function Manual
- PROFIBUS Function Manual

Product Information

Changes and supplements to the manuals are documented in a Product Information. The Product Information takes precedence over the device and system manuals.
You will find the latest Product Information on the Internet:

- S7-1500/ET 200MP (https://support.industry.siemens.com/cs/de/en/view/68052815)
- SIMATIC Drive Controller (https://support.industry.siemens.com/cs/de/en/view/109772684/en)
- Motion Control (https://support.industry.siemens.com/cs/de/en/view/109794046/en)
- ET 200SP (https://support.industry.siemens.com/cs/de/en/view/73021864)
- ET 200eco PN (https://support.industry.siemens.com/cs/ww/en/view/109765611)

Manual Collections

The Manual Collections contain the complete documentation of the systems put together in one file.
You will find the Manual Collections on the Internet:

- S7-1500/ET 200MP/SIMATIC Drive Controller (https://support.industry.siemens.com/cs/ww/en/view/86140384)
- ET 200SP (https://support.industry.siemens.com/cs/ww/en/view/84133942)
- ET 200AL (https://support.industry.siemens.com/cs/ww/en/view/95242965)
- ET 200eco PN (https://support.industry.siemens.com/cs/ww/en/view/109781058)

1.2.2 Basic tools (S7-1500, S7-1500T)

The tools described below support you in all steps: from planning, over commissioning, all the way to analysis of your system.

TIA Selection Tool

The TIA Selection Tool tool supports you in the selection, configuration, and ordering of devices for Totally Integrated Automation (TIA).
As successor of the SIMATIC Selection Tools , it assembles the configuration editors for automation technology already familiar into a single tool.

With the TIA Selection Tool , you can generate a complete order list from your product selection or product configuration.
You can find the TIA Selection Tool on the Internet.
(https://support.industry.siemens.com/cs/ww/en/view/109767888)

SIMATIC Automation Tool

You can use the SIMATIC Automation Tool to perform commissioning and maintenance activities on various SIMATIC S7 stations as bulk operations independent of TIA Portal.
The SIMATIC Automation Tool offers a wide range of functions:

- Scanning of a PROFINET/Ethernet system network and identification of all connected CPUs
- Assignment of addresses (IP, subnet, Gateway) and device name (PROFINET device) to a CPU
- Transfer of the date and the programming device/PC time converted to UTC time to the module
- Program download to CPU
- RUN/STOP mode switchover
- CPU localization through LED flashing
- Reading out of CPU error information
- Reading the CPU diagnostic buffer
- Reset to factory settings
- Firmware update of the CPU and connected modules

You can find the SIMATIC Automation Tool on the Internet.
(https://support.industry.siemens.com/cs/ww/en/view/98161300)

PRONETA

SIEMENS PRONETA (PROFINET network analysis) is a commissioning and diagnostic tool for PROFINET networks. PRONETA Basic has two core functions:

- The "Network analysis" offers a quick overview of the PROFINET topology. It is possible to make simple parameter changes (for example, to the names and IP addresses of the devices). In addition, a quick and convenient comparison of the real configuration with a reference system is also possible.
- The "IO test" is a simple and rapid test of the wiring and the module configuration of a plant, including documentation of the test results.

You can find SIEMENS PRONETA Basic on the Internet:
(https://support.industry.siemens.com/cs/ww/en/view/67460624)
SIEMENS PRONETA Professional is a licensed product that offers you additional functions. It offers you simple asset management in PROFINET networks and supports operators of automation systems in automatic data collection/acquisition of the components used through various functions:

- The user interface (API) offers an access point to the automation cell to automate the scan functions using MQTT or a command line.
- With PROFIenergy diagnostics, you can quickly detect the current pause mode or the readiness for operation of devices that support PROFIenergy and change these as needed.
- The data record wizard supports PROFINET developers in reading and writing acyclic PROFINET data records quickly and easily without PLC and engineering.

You can find SIEMENS PRONETA Professional on the Internet.
(https://www.siemens.com/proneta-professional)

SINETPLAN

SINETPLAN, the Siemens Network Planner, supports you in planning automation systems and networks based on PROFINET. The tool facilitates professional and predictive dimensioning of your PROFINET installation as early as in the planning stage. In addition, SINETPLAN supports you during network optimization and helps you to exploit network resources optimally and to plan reserves. This helps to prevent problems in commissioning or failures during productive operation even in advance of a planned operation. This increases the availability of the production plant and helps improve operational safety.

The advantages at a glance

- Network optimization thanks to port-specific calculation of the network load
- Increased production availability thanks to online scan and verification of existing systems
- Transparency before commissioning through importing and simulation of existing STEP 7 projects
- Efficiency through securing existing investments in the long term and the optimal use of resources

You can find SINETPLAN on the Internet
(https://new.siemens.com/global/en/products/automation/industrial-communication/profinet/sinetplan.html).

1.2.3 SIMATIC Technical Documentation (S7-1500, S7-1500T)

Additional SIMATIC documents will complete your information. You can find these documents and their use at the following links and QR codes.

The Industry Online Support gives you the option to get information on all topics. Application examples support you in solving your automation tasks.

Overview of the SIMATIC Technical Documentation

Here you will find an overview of the SIMATIC documentation available in Siemens Industry Online Support:

Industry Online Support International
(https://support.industry.siemens.com/cs/ww/en/view/109742705)

Watch this short video to find out where you can find the overview directly in Siemens Industry Online Support and how to use Siemens Industry Online Support on your mobile device:

Quick introduction to the technical documentation of automation products per video (https://support.industry.siemens.com/cs/us/en/view/109780491)

YouTube video: Siemens Automation Products - Technical Documentation at a Glance (https://youtu.be/TwLSxxRQQsA)

mySupport

With "mySupport" you can get the most out of your Industry Online Support.

Registration	You must register once to use the full functionality of "mySupport". After registration, you can create filters, favorites and tabs in your personal workspace.
Support requests	Your data is already filled out in support requests, and you can get an overview of your current requests at any time.
Documentation	In the Documentation area you can build your personal library.
Favorites	You can use the "Add to mySupport favorites" to flag especially interesting or frequently needed content. Under "Favorites", you will find a list of your flagged entries.
Recently viewed articles	The most recently viewed pages in mySupport are available under "Recently viewed articles".
CAx data	The CAx data area gives you access to the latest product data for your CAx or CAe system. You configure your own download package with a few clicks: • Product images, 2D dimension drawings, 3D models, internal circuit diagrams, EPLAN macro files • Manuals, characteristics, operating manuals, certificates • Product master data

You can find "mySupport" on the Internet. (https://support.industry.siemens.com/My/ww/en)

Application examples

The application examples support you with various tools and examples for solving your automation tasks. Solutions are shown in interplay with multiple components in the system - separated from the focus on individual products.
You can find the application examples on the Internet.
(https://support.industry.siemens.com/cs/ww/en/ps/ae)

Safety instructions (S7-1500, S7-1500T) 2

Siemens provides products and solutions with industrial security functions that support the secure operation of plants, systems, machines and networks.

In order to protect plants, systems, machines and networks against cyber threats, it is necessary to implement – and continuously maintain – a holistic, state-of-the-art industrial security concept. Siemens' products and solutions constitute one element of such a concept.

Customers are responsible for preventing unauthorized access to their plants, systems, machines and networks. Such systems, machines and components should only be connected to an enterprise network or the internet if and to the extent such a connection is necessary and only when appropriate security measures (e.g. firewalls and/or network segmentation) are in place.

For additional information on industrial security measures that may be implemented, please visit (https://www.siemens.com/industrialsecurity).

Siemens' products and solutions undergo continuous development to make them more secure. Siemens strongly recommends that product updates are applied as soon as they are available and that the latest product versions are used. Use of product versions that are no longer supported, and failure to apply the latest updates may increase customers' exposure to cyber threats.

To stay informed about product updates, subscribe to the Siemens Industrial Security RSS Feed visit (https://www.siemens.com/cert).

Diagnostics concept (S7-1500, S7-1500T) 3

The diagnostic concept encompasses alarms and associated messages, as well as error messages in the Motion Control instructions. The TIA Portal also supports you with consistency checks during configuration of the technology objects, and during the creation of your user program.

All alarms in runtime (from the CPU, technology, hardware etc.) are displayed in the Inspector window of the TIA Portal. Diagnostic information that relates to technology objects (technology alarms, status information) are additionally displayed in the Diagnostics window of the respective technology object.

During motion control, if an error occurs at a technology object (e.g. approaching a hardware limit switch), then a technology alarm (Page 16) is triggered, and a corresponding message is displayed in the TIA Portal as well as on HMI devices.

In your user program, technology alarms are generally signaled via error bits in the technology data block. The number of the technology alarm with the highest priority is also displayed. In order to simplify error evaluation, the "Error" and "ErrorID" parameters of the Motion Control instructions also indicate that a technology alarm is pending.

Program errors (Page 66) can occur during parameter assignment or during the processing sequence of the Motion Control instructions (e.g. invalid parameter specification when calling the instruction, initiation of a job without enable via "MC_Power"). With active jobs, errors in Motion Control instructions are indicated by the "Error" and "ErrorID" parameters.

Technology alarms (S7-1500, S7-1500T) 4

If an error occurs at a technology object (e.g. approaching a hardware limit switch), a technology alarm is triggered and indicated. The impact of a technology alarm on the technology object is specified by the alarm response.

Alarm classes

Technology alarms are divided into three classes:

- **Acknowledgeable warning**
  The processing of Motion Control job is continued. The current motion of the axis can be influenced, e.g. by limiting the current dynamic values to the configured limit values.
- **Alarm requiring acknowledgment**
  Motion jobs are aborted in accordance with the alarm response. You must acknowledge the alarms in order to continue execution of new jobs after eliminating the cause of the error.
- **Fatal error**
  Motion jobs are aborted in accordance with the alarm response.
  To be able to use the technology object again after eliminating the cause of the error, you must restart the technology object.

Display of technology alarms

A technology alarm is displayed in the following locations:

- **TIA Portal**
  - **"Technology object > Diagnostics > Status and error bits"**
    Display of pending technology alarms for each technology object
  - **"Technology object > Commissioning > Axis control panel"**
    Display of the last pending technology alarm for each technology object
  - **"Inspector window > Diagnostics > Message display"**
    Select the "Receive messages" check box under "Online & Diagnostics > Online Access" in order to display technology alarms via the message display.
    With an online connection to the CPU, the pending technology alarms for all technology objects are displayed. Additionally, the archive view is available to you.
    The message display can also be activated and displayed on a connected HMI.
  - **"CPU > Online & diagnostics"**
    Display of the technology alarms that have been entered in the diagnostic buffer
- **User program**
  - **Tags "<TO>.ErrorDetail.Number" and "<TO>.ErrorDetail.Reaction"**
    Indication of the number and the reaction of the technology alarm with the highest priority
  - **Tag "<TO>.StatusWord"**
    A pending technology alarm is indicated with bit 1 ("Error").

  - **Tag "<TO>.ErrorWord"**
    Indication of alarms and fatal errors
  - **Tag "<TO>.WarningWord"**
    Indication of warnings
  - **Parameter "Error" and "ErrorID"**
    In a Motion Control instruction, the parameters "Error" = TRUE and "ErrorID" = 16#8001 indicate that a technology alarm is pending.
- **Display of the CPU**
  In order to show technology alarms on the CPU display, make the following setting when loading to the CPU:
  In the "Load preview" dialog, select the action "Consistent download" for the "Text libraries" entry.
- **Web server**
  - **"Motion Control diagnostics > Diagnostics"**
    Display of pending technology alarms for each technology object
  - **"Motion Control diagnostics > Service overview"**
    Status display of technology objects

Alarm response

A technology-alarm always leads to an alarm response, which describes the effect on the technology object. The alarm response is specified by the system.
The following table shows possible alarm response:

Alarm response	Validity		Description
	TO[1]	Kin[2]	
No reaction (warnings only) <TO>.ErrorDetail.Reaction = 0	✓	✓	The processing of Motion Control job is continued. The current motion of the axis can be influenced, e.g. by limiting the current dynamic values to the configured limit values.
Stop with current dynamic values <TO>.ErrorDetail.Reaction = 1	✓	-	Active motion commands are aborted. The axis is braked with the dynamic values that present in the Motion Control instruction and brought to a standstill.
Stop with maximum dynamic values <TO>.ErrorDetail.Reaction = 2	✓	-	Active motion commands are aborted. The axis is braked with the dynamic values configured under "Technology object > Extended parameters > Dynamic limits", and brought to a standstill. The configured maximum jerk is hereby taken into account.
Stop with emergency stop ramp <TO>.ErrorDetail.Reaction = 3	✓	-	Active motion commands are aborted. The axis is braked with the emergency stop deceleration configured under "Technology object > Extended parameters > Emergency stop ramp", without any jerk limit, and brought to a standstill.
Remove enable <TO>.ErrorDetail.Reaction = 4	✓	-	Active motion commands are aborted. The setpoint zero is output and the enable is removed. The axis is braked to a standstill according to the configuration in the drive.

[1] Applies to all technology objects with the exception of the Kinematics technology object.

[2] Applies to the Kinematics technology object only.

Alarm response	Validity		Description
	TO[1]	Kin[2]	
Track setpoints <TO>.ErrorDetail.Reaction = 5	✓	-	Active motion commands are aborted. The setpoint zero is output. The actual values supplied by the drive are automatically tracked as setpoints.
Terminate processing of the technology object: • Output cam <TO>.ErrorDetail.Reaction = 6 • Cam track <TO>.ErrorDetail.Reaction = 7 • Measuring input <TO>.ErrorDetail.Reaction = 8 • Cam <TO>.ErrorDetail.Reaction = 9 • External encoder <TO>.ErrorDetail.Reaction = 10 • Leading axis proxy <TO>.ErrorDetail.Reaction = 13	✓	-	Processing of the technology object is terminated. All running Motion Control jobs are aborted.
Stop without leaving the path <TO>.ErrorDetail.Reaction = 11	-	✓	The kinematics are decelerated and brought to a standstill. The current path is not exited when the kinematics is stopped. Linear and circular motion jobs are braked without jerk limit.
Stop with maximum dynamic values of the axes <TO>.ErrorDetail.Reaction = 12	-	✓	Active and queued motion jobs are canceled. The axes are decelerated with the maximum dynamic values configured under "Technology object > Configuration > Extended parameters > Limits > Dynamic limits", and brought to a standstill. The configured maximum jerk is hereby taken into account.

1) Applies to all technology objects with the exception of the Kinematics technology object.

2) Applies to the Kinematics technology object only.

Acknowledging technology alarms

You can acknowledge technology alarms as follows:

- **TIA Portal**
  - **"Technology object > Commissioning > Axis control panel"**
    Click "Confirm" to acknowledge all alarms and warnings pending for the selected technology object.
  - **"Inspector window > Diagnostics > Message display"**
    You can acknowledge the alarms and warnings for all technology objects either individually, or all at once.
- **HMI**
  At an HMI with enabled message display, you can acknowledge the alarms and warnings for all technology objects either individually, or all at once.
- **User program**
  Acknowledge pending technology alarms for a technology object with the Motion Control instruction "MC_Reset".

- **CPU display**
  Acknowledge pending technology alarms via the display of the CPU.
- **Web server**
  Acknowledge pending technology alarms under "Alarms".

4.1 Overview of the technology alarms (S7-1500, S7-1500T)

The following table shows an overview of the technology alarms and the corresponding alarm responses. When a technology alarm occurs, evaluate the entire indicated alarm text, in order to find the precise cause.

Legend

Table column	Description
No.	Number of the technology alarm (corresponds to "<TO>.ErrorDetail.Number")
Validity	Validity of the descriptions for the technology objects
TO	Applies to all technology objects with the exception of the Kinematics technology object.
Kin	Applies only to the Kinematics technology object.
Reaction	Effective alarm response (corresponds to "<TO>.ErrorDetail.Reaction")
F	Error bit Bit that is set in "<TO>.ErrorWord" when the technology alarm occurs A description of the bits can be found in the tags of the corresponding technology object.
W	Warning bit Bit that is set in "<TO>.WarningWord" when the technology alarm occurs A description of the bits can be found in the tags of the corresponding technology object.
R	Restart To acknowledge the technology alarm, the technology object must be reinitialized (Restart).
D	Diagnostic buffer The alarm is entered in the diagnostic buffer.
Alarm text	Displayed alarm text

List of the technology alarms

No.	Validity		Reaction	F	W	R	D	Alarm text
	TO	Kin						
101	✓	-	Remove enable	X1	-	✓	✓	Configuration error.
	-	✓	Stop with maximum dynamic values of the axes					
102	✓	-	Remove enable	X15	-	✓	✓	Error in drive configuration adaptation.
103	✓	-	Remove enable	X15	-	✓	✓	Encoder configuration adaptation error.
104	✓	-	Stop with maximum dynamic values	X1	-	-	-	SW limit switch specification error.

No.	Validity		Reaction	F	W	R	D	Alarm text
	TO	Kin						
105	✓	-	Remove enable	X1	-	✓	✓	Drive configuration error.
106	✓	-	Remove enable	X1	-	-	✓	Drive connection configuration error.
107	✓	-	Remove enable	X1	-	✓	✓	Encoder configuration error.
108	✓	-	Remove enable	X1	-	-	✓	Encoder connection configuration error.
109	✓	-	Remove enable	X1	-	✓	-	Configuration error.
110	✓	-	No reaction	-	X1	-	-	Configuration is adjusted internally.
111	✓	-	No reaction	-	X15	-	✓	TO and drive configuration inconsistent.
112	✓	-	No reaction	-	X15	-	✓	TO and encoder configuration inconsistent.
113	✓	-	Remove enable	X2	-	✓	-	Isochronous mode not possible.
114	✓	-	Remove enable	X1	-	✓	✓	Cross-PLC synchronous operation configuration error.
201	✓	-	Remove enable	X0	-	✓	✓	Internal error.
	-	✓	Stop with maximum dynamic values of the axes					
202	✓	-	No reaction	X0	-	✓	-	Internal configuration error.
	-	✓	Stop with maximum dynamic values of the axes					
203	✓	-	Remove enable	X0	-	✓	-	Internal error.
	-	✓	Stop with maximum dynamic values of the axes					
204	✓	-	Remove enable	X0	-	-	-	Commissioning error.
	-	✓	Stop with maximum dynamic values of the axes					
304	✓	-	Stop with emergency stop ramp	X2	-	-	-	Velocity limit is zero.
	-	✓	Stop with maximum dynamic values of the axes					
305	✓	-	Stop with emergency stop ramp	X2	-	-	-	• Limit value of the acceleration is zero. • Limit value of the deceleration is zero.
	-	✓	Stop with maximum dynamic values of the axes					
306	✓	-	Stop with emergency stop ramp	X2	-	-	-	Jerk limit is zero.
	-	✓	Stop with maximum dynamic values of the axes					
307	✓	-	Stop with maximum dynamic values	X2	-	-	✓	• Negative numerical value range of the position reached. • Positive numerical value range of the position reached.
308	✓	-	Remove enable	X2	-	-	✓	• Negative numerical value range of the position exceeded. • Positive numerical value range of the position exceeded.

No.	Validity		Reaction	F	W	R	D	Alarm text
	TO	Kin						
321	✓	-	Stop with emergency stop ramp	X3	-	-	-	Axis is not homed.
322	✓	-	No reaction	-	X3	-	-	Restart not executed.
323	✓	-	Remove enable	X3	-	-	-	MC_Home could not be executed.
341	✓	-	Stop with maximum dynamic values	X10	-	-	-	Homing data faulty.
342	✓	-	Stop with emergency stop ramp	X10	-	-	-	Reference cam/encoder zero mark not found.
343	✓	-	Remove enable	X1	-	-	-	Homing function not supported by device.
401	✓	-	Remove enable	X13	-	-	✓	Error accessing logical address.
411	✓	-	Remove enable	X5	-	-	✓	Encoder at the logical address disrupted.
412	✓	-	Remove enable	X5	-	-	-	Permitted actual value range exceeded.
421	✓	-	Remove enable	X4	-	-	✓	Drive disrupted at the logical address.
431	✓	-	Remove enable	X7	-	-	✓	Communication to the device under logical address is disturbed.
501	✓	✓	No reaction	-	X6	-	-	Programmed velocity is limited.
502	✓	✓	No reaction	-	X6	-	-	• Programmed acceleration is being limited. • Programmed deceleration is being limited.
503	✓	✓	No reaction	-	X6	-	-	Programmed jerk is limited.
504	✓	-	No reaction	-	X6	-	-	Speed setpoint monitoring active.
511	✓	-	No reaction	-	X6	-	-	Dynamic limit is violated by the kinematics motion.
521	✓	-	Remove enable	X11	-	-	-	Following error.
522	✓	-	No reaction	-	X11	-	-	Warning following error tolerance.
531	✓	-	Remove enable	X9	-	-	-	• Positive HW limit switch approached. • Negative HW limit switch approached. • Invalid retraction direction, HW limit switch active.
						✓	-	• HW limit switch polarity reversed, retraction not possible. • Both HW limit switches active, retraction not possible. • Encoder error with triggered HW limit switch, no retraction possible.
533	✓	-	The alarm response depends on the configured response and the type of axis motion.	X8	-	-	-	• Negative SW limit switch is approached. • Positive SW limit switch is approached.

No.	Validity		Reaction	F	W	R	D	Alarm text
	TO	Kin						
			• Stop with maximum dynamic values When "<TO>.PositionLimits_SW.LimitReachedBehavior" = 0 and an interconnected axis. – Axis motion as following axis in synchronous operation – Kinematics axis in kinematics motion • Stop with current dynamic values When "<TO>.PositionLimits_SW.LimitReachedBehavior" = 1 and interconnected axis					
534	✓	-	You can configure the alarm response. • Remove enable Setting: "<TO>.PositionLimits_SW.LimitReachedBehavior" = 0 • Stop with emergency stop ramp Setting: "<TO>.PositionLimits_SW.LimitReachedBehavior" = 1	X8	-	-	-	• Negative SW limit switch was overtraveled. • Positive SW limit switch was overtraveled.
541	✓	-	Remove enable	X12	-	-	-	Positioning monitoring error.
542	✓	-	Remove enable	X2	-	-	-	Clamping monitoring error: Axis leaving clamping tolerance window.
550	✓	-	Track setpoints	X13	-	-	-	Drive-autonomous motion is being executed.
551	✓	-	No reaction	-	X6	-	-	Maximum velocity cannot be reached with drive/axis parameters.
552	✓	-	Remove enable	X15	-	-	-	Encoder adaptation error during ramp-up.
561	-	✓	No reaction	-	X6	-	-	Programmed velocity of the orientation motion is limited.
562	-	✓	No reaction	-	X6	-	-	• Programmed acceleration of the orientation motion is limited. • Programmed deceleration of the orientation motion is limited.
563	-	✓	No reaction	-	X6	-	-	Programmed jerk of the orientation motion is limited.
601	✓	-	Stop with maximum dynamic values	X14	-	-	-	Leading axis is not assigned or defective.
603	✓	-	Remove enable	X14	-	-	-	Leading axis is not in position-controlled mode.

No.	Validity		Reaction	F	W	R	D	Alarm text
	TO	Kin						
608	✓	-	Stop with maximum dynamic values	X14	-	-	-	Error during synchronization/desynchronization.
612	✓	-	Remove enable	X2	-	-	-	Specified cyclic cam has not been interpolated.
700	✓	-	Remove enable	X2	-	-	-	Error when calculating the switching position.
701	✓	-	Remove enable	X13	-	-	-	I/O output error.
702	✓	-	Remove enable	X2	-	-	-	Position value invalid.
703	✓	-	Remove enable	X2	-	-	-	Cam track data faulty.
704	✓	-	Remove enable	X2	-	-	-	Output cam data faulty.
750	✓	-	Remove enable	X2	-	-	-	Measuring job not possible during homing of assigned axis.
752	✓	-	No reaction	X2	-	-	-	Validity range of measuring job not recognized.
753	✓	-	Remove enable	X2	-	-	-	Only one measuring input can access an encoder at a time.
754	✓	-	Remove enable	X2	-	-	-	Measuring input configuration in external device is not correct.
755	✓	-	Remove enable	X13	-	-	-	Measuring job not possible.
758	✓	-	No reaction	X2	-	-	-	A measuring edge was not evaluated.
801	-	✓	Stop with maximum dynamic values of the axes	X2	-	-	-	Kinematics axis not ready.
802	-	✓	Stop with maximum dynamic values of the axes	X3	-	-	-	Cannot calculate the geometry element.
803	-	✓	Stop with maximum dynamic values of the axes	X4	-	-	-	Error in the calculation of the transformation.
804	-	✓	Stop with maximum dynamic values of the axes	X2	-	-	-	Kinematics motion cannot be stopped at the end.
805	-	✓	Stop with maximum dynamic values of the axes	X2	-	-	-	Limitation of path dynamics by axis dynamics incorrect.
806	-	✓	Stop without leaving the path	X2	-	-	-	Zone violation of work or blocked zones.
807	-	✓	No reaction	-	X2	-	-	Zone violation of signal zones.
808	-	✓	Stop with maximum dynamic values of the axes	X2	-	-	-	Ambiguity due to multiple active work zones.
809	-	✓	Stop with maximum dynamic values of the axes	X2	-	-	-	Path dynamic limit through dynamic response of the orientation motion faulty.
810	-	✓	Stop with maximum dynamic values of the axes	X7	-	-	-	Conveyor belt not assigned or faulty (OCS <number>).
811	-	✓	Stop with maximum dynamic values of the axes	X7	-	-	-	Error when approaching the TCP to an object coordinate system (OCS <number>).
812	-	✓	Stop with maximum dynamic values of the axes	X4	-	-	-	Error in the treatment of singularities. • The kinematics has reached the singularity. • Too many singularities occur in the path command.

No.	Validity		Reaction	F	W	R	D	Alarm text
	TO	Kin						
820	-	✓	Stop with maximum dynamic values of the axes	X8	-	-	-	• Upper limit of joint traversing range joint <No.> overtraveled. • Lower limit of joint traversing range joint <No.> overtraveled.
900	✓	-	Set leading value invalid	X2	-	-	✓	Leading values invalid.
901	✓	-	Set leading value invalid	X2	-	-	✓	Data transmission error
902	✓	-	No reaction	-	X2	-	-	Leading value accuracy limited.
903	✓	-	Set leading value invalid	X2	-	✓	✓	Modulo settings of the leading axis changed in cyclic mode.

4.2 Technology alarms 101 - 114 (S7-1500, S7-1500T)

4.2.1 Technology alarm 101 (S7-1500, S7-1500T)

Alarm response TO[1]: Remove enable
Alarm response Kin[2]: Stop with maximum dynamic values of the axes
Restart: Required

Alarm text	Validity		Remedy
	TO[1]	Kin[2]	
Configuration error.	✓	✓	
Value in <tag> not allowed.	✓	✓	Adjust the specified value.
Value in Kinematics.TypeOfKinematics not permissible.			• Select a valid kinematics type. • If you are using a kinematics type with more than 4 interpolating axes, ensure that the "S7-1500T Motion Control KinPlus" motion control package is supported by the CPU and is loaded into the CPU and activated.
Faulty load gear factors.	✓	-	Adjust the load gear factors in the "<TO>.LoadGear.Numerator" and/or "<TO>.LoadGear.Denominator" parameters.
At least one encoder required. Sensor[].existent	✓	-	Configure at least one encoder.
Sensor[1] must be configured for DSC.	✓	-	Configure Sensor[1].
Values in Sensor[1..4].Parameter.FineResolutionXist1 and p979 are not equal.	✓	-	Set the identical fine resolution on the technology as on the drive.
Encoder position cannot be displayed due to the encoder configuration/mechanics.	✓	-	Check the configuration of the encoder and mechanics.
Linear encoder in not permitted on rotary drive system (Sensor.System).	✓	-	
Backlash compensation not permitted with encoder on load side.	✓	-	

[1] Applies to all technology objects with the exception of the Kinematics technology object.

[2] Applies to the Kinematics technology object only.

Alarm text	Validity		Remedy
	TO[1]	Kin[2]	
Controller parameter incorrect.	✓	-	Adjust the value of the "<TO>.PositionController.Kv" parameter.
PROFIBUS parameter assignment inconsistent. Sum of Ti and To greater than send clock.	✓	-	Adjust the send clock in the hardware configuration.
Drive or drive telegram type or encoder not suitable for DSC.	✓	-	Check whether the drive can be operated with DSC and adjust the drive telegram if required.
Technology data block is only possible with digital drive coupling.	✓	-	Check the drive coupling.
The VREF of the analog output or the bit drivers are assigned multiple times.	✓	-	Make sure that different addresses are assigned for all technology objects in the project.
TimeOut parameter outside of limits.	✓	-	Set the monitoring time of the axis control panel to a valid value.
Telegram in Actor.Interface.AddressIn and AddressOut not equal.	✓	-	Set the identical drive telegram type for sending and receiving direction.
Illegal combination for homing data with incremental encoder. encoder.	✓	-	Check the active and passive homing settings.
Telegram in Sensor[1..4].Interface.AddressIn and AddressOut not equal.	✓	-	Set the identical encoder telegram type for sending and receiving direction.
Kinematics axis A<No.> not connected	-	✓	Interconnect the axis.
Delta picker 2D: No formation of a closed parallel structure.	-	✓	Adjust the geometry data of the mechanics.
Delta picker 3D: No formation of a closed parallel structure.	-	✓	
Delta picker 3D: Angular offset does not permit a third arm.	-	✓	
Invalid arm distances.	-	✓	
Tripod: Angular offset does not permit a third arm.	-	✓	
Multiple versions of the same kinematics axis specified as AxisCoupling.N[].CausingAxis.	-	✓	Adjust the configuration for the mechanical axis coupling.
Kinematics axes coupled in a circle under AxisCoupling.N[].	-	✓	

1) Applies to all technology objects with the exception of the Kinematics technology object.

2) Applies to the Kinematics technology object only.

4.2.2 Technology alarm 102 (S7-1500, S7-1500T)

Alarm response TO[1]: Remove enable
Alarm response Kin[2]: -

Restart: Required

Alarm text	Validity		Remedy
	TO[1]	Kin[2]	
Drive configuration adaptation error.	✓	-	
Drive is not assigned to a SINAMICS device.	✓	-	The drive adaptation is only available for SINAMICS drives.
Parameter does not exist, value unreadable or invalid.	✓	-	Check whether your device supports acyclic data communication according to PROFIdrive.
Maximum speed.	✓	-	
Maximum torque (p1520).	✓	-	
Maximum torque (p1521)	✓	-	
Fine resolution torque.	✓	-	
Rated speed.	✓	-	
Rated torque.	✓	-	
Motor type.	✓	-	
Unspecified.	✓	-	
Adaptation canceled due to insufficient resources.	✓	-	
Drive is not interconnected directly to I/O area.	✓	-	In the configuration of the axis, the logical addresses were placed, for example, in a data block. The adaptation is only possible when the encoder has been directly interconnected to an I/O area.

1) Applies to all technology objects with the exception of the Kinematics technology object.

2) Applies to the Kinematics technology object only.

4.2.3 Technology alarm 103 (S7-1500, S7-1500T)

Alarm response TO[1]: Remove enable
Alarm response Kin[2]: -
Restart: Required

Alarm text	Validity		Remedy
	TO[1]	Kin[2]	
Encoder configuration adaptation error.	✓	-	
Encoder is not assigned to a SINAMICS device.	✓	-	The encoder adaptation is only available for SINAMICS devices and external Siemens encoders.
Parameter does not exist, value unreadable or invalid.	✓	-	Check whether your device supports acyclic data communication according to PROFIdrive.
Encoder system	✓	-	
Encoder resolution	✓	-	
Encoder fine resolution Gx_XIST1	✓	-	
Encoder fine resolution Gx_XIST2	✓	-	

1) Applies to all technology objects with the exception of the Kinematics technology object.

2) Applies to the Kinematics technology object only.

Alarm text		Validity		Remedy
		TO[1]	Kin[2]	
	Encoder revolutions	✓	-	Check whether your device supports acyclic data communication according to PROFIdrive.
	Unspecified	✓	-	
Adaptation canceled due to insufficient resources.		✓	-	
Encoder is not interconnected directly to I/O area.		✓	-	In the configuration of the axis, the logical addresses were placed, for example, in a data block. The adaptation is only possible when the encoder has been directly interconnected to an I/O area.

1) Applies to all technology objects with the exception of the Kinematics technology object.

2) Applies to the Kinematics technology object only.

4.2.4 Technology alarm 104 (S7-1500, S7-1500T)

Alarm response TO[1]: Stop with maximum dynamic values
Alarm response Kin[2]: -
Restart: Not required

Alarm text		Validity		Remedy
		TO[1]	Kin[2]	
SW limit switch specification error.		✓	-	
	Neg. SW limit switch greater than pos. SW limit switch.	✓	-	Change the position of the software limit switches.

1) Applies to all technology objects with the exception of the Kinematics technology object.

2) Applies to the Kinematics technology object only.

4.2.5 Technology alarm 105 (S7-1500, S7-1500T)

Alarm response TO[1]: Remove enable
Alarm response Kin[2]: -
Restart: Required

Alarm text		Validity		Remedy
		TO[1]	Kin[2]	
Drive configuration error.		✓	-	
	HW Configuration.	✓	-	• Connect a suitable device. • Check the device (I/Os). • Check the topology of the project. • Compare the device configuration and the configuration of the technology object. • Contact customer support.
	The TO needs a smaller servo cycle clock.	✓	-	

1) Applies to all technology objects with the exception of the Kinematics technology object.

2) Applies to the Kinematics technology object only.

Alarm text	Validity		Remedy
	TO[1]	Kin[2]	
Error in internal communication.	✓	-	• Check the project for consistency and reload the project into the controller. • Contact customer support.
Address for drive data does not exist in project.	✓	-	Check the project for consistency and reload the project into the controller.
Error during the parameter assignment of the frame for the torque data.	✓	-	Check the interconnection of the SIEMENS additional telegram 750 (torque data).
Address overlap during drive interconnection.	✓	-	Make sure that different addresses are assigned for all technology objects in the project.

1) Applies to all technology objects with the exception of the Kinematics technology object.

2) Applies to the Kinematics technology object only.

4.2.6 Technology alarm 106 (S7-1500, S7-1500T)

Alarm response TO[1]: Remove enable
Alarm response Kin[2]: -
Restart: Not required

Alarm text	Validity		Remedy
	TO[1]	Kin[2]	
Drive connection configuration error.	✓	-	
System has no communication with drive.	✓	-	Internal system error. • Check the project for consistency and reload the project into the controller. • Contact customer support.
Drive not initialized during ramp-up.	✓	-	• Ensure that the communication between the controller and drive is established. To do this, evaluate the "<TO>.StatusDrive.CommunicationOK" parameter before enabling the axis. • To enable a technology object, the drive initialization must be complete. Trigger the job again later.

1) Applies to all technology objects with the exception of the Kinematics technology object.

2) Applies to the Kinematics technology object only.

4.2.7 Technology alarm 107 (S7-1500, S7-1500T)

Alarm response TO[1]: Remove enable
Alarm response Kin[2]: -

Restart: Required

Alarm text	Validity		Remedy
	TO[1]	Kin[2]	
Encoder configuration error.	✓	-	
HW Configuration.	✓	-	• Connect a suitable device. • Check the device (I/Os). • Check the topology of the project. • Compare the device configuration and the configuration of the technology object. • Contact customer support.
The TO needs a smaller servo cycle clock.	✓	-	
Error in internal communication.	✓	-	• Check the project for consistency and reload the project into the controller. • Contact customer support.
Address overlap during encoder interconnection.	✓	-	Make sure that different addresses are assigned for all technology objects in the project.

1) Applies to all technology objects with the exception of the Kinematics technology object.

2) Applies to the Kinematics technology object only.

4.2.8 Technology alarm 108 (S7-1500, S7-1500T)

Alarm response TO[1]: Remove enable
Alarm response Kin[2]: -
Restart: Not required

Alarm text	Validity		Remedy
	TO[1]	Kin[2]	
Encoder connection configuration error.	✓	-	
System without communication to encoder.	✓	-	Internal system error. • Check the project for consistency and reload the project into the controller. • Contact customer support.
Encoder not initialized during ramp-up.	✓	-	• Ensure that the communication between the controller and encoder is established. To do this, evaluate the "<TO>.StatusSensor[1..4].CommunicationOK" parameter before enabling the axis and also check if the status of the encoder actual value is "<TO>.StatusSensor[1..4].State" = VALID (2). • To enable a technology object, the encoder initialization must be complete. Trigger the job again later.
Encoder data address missing in project.	✓	-	Check the project for consistency and reload the project into the controller.

1) Applies to all technology objects with the exception of the Kinematics technology object.

2) Applies to the Kinematics technology object only.

4.2.9 Technology alarm 109 (S7-1500, S7-1500T)

Alarm response TO[1]: Remove enable
Alarm response Kin[2]: -
Restart: Required

Alarm text	Validity		Remedy
	TO[1]	Kin[2]	
Configuration error.	✓	-	
Neg. HW limit switch.	✓	-	• Connect a suitable device. • Check the device (I/Os). • Check the topology of the project. • Compare the device configuration and the configuration of the technology object. • Contact customer support.
Pos. HW limit switch	✓	-	
Reference cam "Active homing".	✓	-	
Reference cam "Passive homing".	✓	-	
Enable bit for the analog drive interface.	✓	-	
DriveReady bit of the analog drive interface.	✓	-	
Input for measuring input faulty.	✓	-	
Output cam output faulty.	✓	-	

1) Applies to all technology objects with the exception of the Kinematics technology object.

2) Applies to the Kinematics technology object only.

4.2.10 Technology alarm 110 (S7-1500, S7-1500T)

Alarm response TO[1]: No reaction
Alarm response Kin[2]: -
Restart: Not required

Alarm text	Validity		Remedy
	TO[1]	Kin[2]	
Configuration is adjusted internally.	✓	-	
Actor.DriveParameter.MaxSpeed is limited.	✓	-	• Correct the reference speed in the drive and in the technology object "<TO>.Actor.DriveParameter.ReferenceSpeed". The reference speed (parameter p2000) must be at least half the maximum speed (parameter p1082) "<TO>.Actor.DriveParameter.ReferenceSpeed" ≥ 0.5 "<TO>.Actor.DriveParameter.MaxSpeed". • During the automatic transfer of the drive parameters to the technology object during runtime (online), slight accuracy deviations may occur from the reference speed and maximum speed configured in the drive. • With analog drive connection, correct the reference value in the drive and in the configuration of the technology object to "<TO>.Actor.MaxSpeed" / 1.17.

1) Applies to all technology objects with the exception of the Kinematics technology object.

2) Applies to the Kinematics technology object only.

Alarm text	Validity		Remedy
	TO[1]	Kin[2]	
PositioningMonitoring.ToleranceTime is limited.	✓	-	Change the configuration data.
DynamicDefaults.EmergencyDeceleration is limited.	✓	-	
DriveParameter.ReferenceTorque too low.	✓	-	
Sensor[].Backlash.Size is limited.	✓	-	
Sensor[].Backlash.Velocity is limited.	✓	-	

1) Applies to all technology objects with the exception of the Kinematics technology object.

2) Applies to the Kinematics technology object only.

4.2.11 Technology alarm 111 (S7-1500, S7-1500T)

Alarm response TO[1]: No reaction
Alarm response Kin[2]: -
Restart: Not required

Alarm text	Validity		Remedy
	TO[1]	Kin[2]	
TO and drive configuration inconsistent.	✓	-	
Different telegram.	✓	-	Match the telegram configuration for the technology object with the telegram configuration in the drive (p922 in the drive).
Incompatible torque resolution.	✓	-	Adjust the high torque resolution for the drive.
Application cycle of the drive and servo cycle are different.	✓	-	Adjust the application cycle of the drive in the device configuration for the PROFIBUS drive.
Application cycle of the drive and processing cycle of the TO are different.	✓	-	
Linear motor configured.	✓	-	Set round-frame motor (P300) in the drive.

1) Applies to all technology objects with the exception of the Kinematics technology object.

2) Applies to the Kinematics technology object only.

4.2.12 Technology alarm 112 (S7-1500, S7-1500T)

Alarm response TO[1]: No reaction
Alarm response Kin[2]: -
Restart: Not required

Alarm text	Validity		Remedy
	TO[1]	Kin[2]	
TO and encoder configuration inconsistent.	✓	-	

1) Applies to all technology objects with the exception of the Kinematics technology object.

2) Applies to the Kinematics technology object only.

Alarm text	Validity		Remedy
	TO[1]	Kin[2]	
Different telegram type.	✓	-	Match the telegram configuration for the technology object with the telegram configuration in the encoder.
Encoder is not an absolute encoder.	✓	-	Configure the encoder for the technology object as absolute encoder.
Application cycle of the encoder and servo cycle are different.	✓	-	Adjust the application cycle of the encoder in the device configuration for the PROFIBUS encoder.
Application cycle of the encoder and processing cycle of the TO are different.	✓	-	
Encoder is not an incremental encoder.	✓	-	Configure the encoder for the technology object as an incremental encoder.

1) Applies to all technology objects with the exception of the Kinematics technology object.

2) Applies to the Kinematics technology object only.

4.2.13 Technology alarm 113 (S7-1500, S7-1500T)

Alarm response TO[1]: Remove enable
Alarm response Kin[2]: -
Restart: Required

Alarm text	Validity		Remedy
	TO[1]	Kin[2]	
Isochronous mode not possible.	✓	-	• The configured output for the technology object output cam or cam track or input for the technology object measuring input cannot be used in isochronous mode. Configure the I/O in the device configuration as isochronous I/O. • The maximum permissible application cycle T_{Servo} has been exceeded. When using SINAMICS sensors, the maximum application cycle may be up to 8 ms. • Make sure that the organization block MC-Servo [OB91] is called synchronously with the bus system.

1) Applies to all technology objects with the exception of the Kinematics technology object.

2) Applies to the Kinematics technology object only.

4.2.14 Technology alarm 114 (S7-1500, S7-1500T)

Alarm response TO[1]: Remove enable
Alarm response Kin[2]: -

Restart: Required

Alarm text	Validity		Remedy
	TO[1]	Kin[2]	
Cross-PLC synchronous operation configuration error.	✓	-	
Configuration error.	✓	-	Check the configuration of the interconnected leading and following axes. Make sure that all relevant tags are correctly configured for cross-PLC synchronous operation.

[1] Applies to all technology objects with the exception of the Kinematics technology object.

[2] Applies to the Kinematics technology object only.

4.3 Technology alarms 201 - 204 (S7-1500, S7-1500T)

4.3.1 Technology alarm 201 (S7-1500, S7-1500T)

Alarm response TO[1]: Remove enable
Alarm response Kin[2]: Stop with maximum dynamic values of the axes
Restart: Required

Alarm text	Validity		Remedy
	TO[1]	Kin[2]	
Internal error.	✓	✓	Contact customer support.

[1] Applies to all technology objects with the exception of the Kinematics technology object.

[2] Applies to the Kinematics technology object only.

4.3.2 Technology alarm 202 (S7-1500, S7-1500T)

Alarm response TO[1]: No reaction
Alarm response Kin[2]: Stop with maximum dynamic values of the axes
Restart: Required

Alarm text	Validity		Remedy
	TO[1]	Kin[2]	
Internal configuration error.	✓	✓	Contact customer support.

[1] Applies to all technology objects with the exception of the Kinematics technology object.

[2] Applies to the Kinematics technology object only.

4.3.3 Technology alarm 203 (S7-1500, S7-1500T)

Alarm response TO[1]: Remove enable
Alarm response Kin[2]: Stop with maximum dynamic values of the axes

Restart: Required

Alarm text	Validity		Remedy
	TO[1]	Kin[2]	
Internal error.	✓	✓	Contact customer support.

[1] Applies to all technology objects with the exception of the Kinematics technology object.

[2] Applies to the Kinematics technology object only.

4.3.4 Technology alarm 204 (S7-1500, S7-1500T)

Alarm response TO[1]: Remove enable
Alarm response Kin[2]: Stop with maximum dynamic values of the axes
Restart: Not required

Alarm text	Validity		Remedy
	TO[1]	Kin[2]	
Commissioning error.	✓	✓	
Connection to the TIA Portal interrupted.	✓	✓	Check the connection properties.

[1] Applies to all technology objects with the exception of the Kinematics technology object.

[2] Applies to the Kinematics technology object only.

4.4 Technology alarms 304 - 343 (S7-1500, S7-1500T)

4.4.1 Technology alarm 304 (S7-1500, S7-1500T)

Alarm response TO[1]: Stop with emergency stop ramp
Alarm response Kin[2]: Stop with maximum dynamic values of the axes
Restart: Not required

Alarm text	Validity		Remedy
	TO[1]	Kin[2]	
Velocity limit is zero.	✓	-	Enter a non-zero value for the maximum velocity (DynamicLimits.MaxVelocity) in the dynamic limits.
	-	✓	Enter a value for the velocity (DynamicLimits.Path.Velocity) that does not equal zero in the dynamic limits.

[1] Applies to all technology objects with the exception of the Kinematics technology object.

[2] Applies to the Kinematics technology object only.

4.4.2 Technology alarm 305 (S7-1500, S7-1500T)

Alarm response TO[1]: Stop with emergency stop ramp
Alarm response Kin[2]: Stop with maximum dynamic values of the axes

Restart: Not required

Alarm text	Validity		Remedy
	TO[1]	Kin[2]	
Acceleration/deceleration limit is zero.	✓	✓	
Acceleration	✓	-	Enter a non-zero value for the maximum acceleration (DynamicLimits.MaxAcceleration) in the dynamic limits.
	-	✓	Enter a value for the acceleration (DynamicLimits.Path.Acceleration) that does not equal zero in the dynamic limits.
Deceleration	✓	-	Enter a non-zero value for the maximum deceleration (DynamicLimits.MaxDeceleration) in the dynamic limits.
	-	✓	Enter a value for the deceleration (DynamicLimits.Path.Deceleration) that does not equal zero in the dynamic limits.

1) Applies to all technology objects with the exception of the Kinematics technology object.

2) Applies to the Kinematics technology object only.

4.4.3 Technology alarm 306 (S7-1500, S7-1500T)

Alarm response TO[1]: Stop with emergency stop ramp
Alarm response Kin[2]: Stop with maximum dynamic values of the axes
Restart: Not required

Alarm text	Validity		Remedy
	TO[1]	Kin[2]	
Jerk limit is zero.	✓	-	Enter a non-zero value for the maximum jerk (DynamicLimits.MaxJerk) in the dynamic limits.
	-	✓	Enter a value for the JERK (DynamicLimits.Path.Jerk) that does not equal zero in the dynamic limits.

1) Applies to all technology objects with the exception of the Kinematics technology object.

2) Applies to the Kinematics technology object only.

4.4.4 Technology alarm 307 (S7-1500, S7-1500T)

Alarm response TO[1]: Stop with maximum dynamic values
Alarm response Kin[2]: -

Restart: Not required

Alarm text		Validity		Remedy
		TO[1]	Kin[2]	
Negative/positive numerical value range of the position reached.		✓	-	
	Negative	✓	-	Enable the "Modulo" setting for the technology object.
	Positive	✓	-	

[1] Applies to all technology objects with the exception of the Kinematics technology object.

[2] Applies to the Kinematics technology object only.

4.4.5 Technology alarm 308 (S7-1500, S7-1500T)

Alarm response TO[1]: Remove enable
Alarm response Kin[2]: -
Restart: Not required

Alarm text		Validity		Remedy
		TO[1]	Kin[2]	
Negative/positive numerical value range of the position exceeded.		✓	-	
	Negative	✓	-	Enable the "Modulo" setting for the technology object.
	Positive	✓	-	

[1] Applies to all technology objects with the exception of the Kinematics technology object.

[2] Applies to the Kinematics technology object only.

4.4.6 Technology alarm 321 (S7-1500, S7-1500T)

Alarm response TO[1]: Stop with emergency stop ramp
Alarm response Kin[2]: -
Restart: Not required

Alarm text	Validity		Remedy
	TO[1]	Kin[2]	
Axis is not homed.	✓	-	To perform an absolute positioning motion, you must home the technology object.

[1] Applies to all technology objects with the exception of the Kinematics technology object.

[2] Applies to the Kinematics technology object only.

4.4.7 Technology alarm 322 (S7-1500, S7-1500T)

Alarm response TO[1]: No reaction
Alarm response Kin[2]: -

Restart: Not required

Alarm text	Validity		Remedy
	TO[1]	Kin[2]	
Restart not executed.	✓	-	
TO is not ready for restart.	✓	-	Download the project again.
Condition for TO restart not satisfied.	✓	-	Disable the technology object.
			Cam technology object: Make sure that the cam is not in use.

[1] Applies to all technology objects with the exception of the Kinematics technology object.

[2] Applies to the Kinematics technology object only.

4.4.8 Technology alarm 323 (S7-1500, S7-1500T)

Alarm response TO[1]: Remove enable
Alarm response Kin[2]: -
Restart: Not required

Alarm text	Validity		Remedy
	TO[1]	Kin[2]	
MC_Home could not be executed.	✓	-	• Enable the "Modulo" setting for the technology object. • Adjust the position value for use of the Motion Control instruction "MC_Home".

[1] Applies to all technology objects with the exception of the Kinematics technology object.

[2] Applies to the Kinematics technology object only.

4.4.9 Technology alarm 341 (S7-1500, S7-1500T)

Alarm response TO[1]: Stop with maximum dynamic values
Alarm response Kin[2]: -
Restart: Not required

Alarm text	Validity		Remedy
	TO[1]	Kin[2]	
Homing data faulty.	✓	-	
Approach velocity is zero.	✓	-	Check the configuration for homing (Homing.ApproachVelocity).
Homing velocity is zero.	✓	-	Check the configuration for homing (Homing.ReferencingVelocity).

[1] Applies to all technology objects with the exception of the Kinematics technology object.

[2] Applies to the Kinematics technology object only.

4.4.10 Technology alarm 342 (S7-1500, S7-1500T)

Alarm response TO[1]: Stop with emergency stop ramp
Alarm response Kin[2]: -
Restart: Not required

Alarm text	Validity		Remedy
	TO[1]	Kin[2]	
Reference cam/encoder zero mark not found.	✓	-	The reference cam configured for homing was not found in the traversing range of the axis.

1) Applies to all technology objects with the exception of the Kinematics technology object.

2) Applies to the Kinematics technology object only.

4.4.11 Technology alarm 343 (S7-1500, S7-1500T)

Alarm response TO[1]: Remove enable
Alarm response Kin[2]: -
Restart: Not required

Alarm text	Validity		Remedy
	TO[1]	Kin[2]	
Homing function not supported by device.	✓	-	Configure a reference switch input for the pulse generator output used in the properties of the C-CPU. ("Pulse generators (PTO/PWM) > PTO[n]/PWN[n] > Hardware inputs/outputs") When homing across a zero mark, the CPU transfers the reference switch input as zero mark.

1) Applies to all technology objects with the exception of the Kinematics technology object.

2) Applies to the Kinematics technology object only.

4.5 Technology alarms 401 - 431 (S7-1500, S7-1500T)

4.5.1 Technology alarm 401 (S7-1500, S7-1500T)

Alarm response TO[1]: Remove enable
Alarm response Kin[2]: -
Restart: Not required

Alarm text	Validity		Remedy
	TO[1]	Kin[2]	
Error accessing logical address.	✓	-	
Address is invalid.	✓	-	• Connect a suitable device. • Check the device (I/Os).
Input address is invalid.	✓	-	

1) Applies to all technology objects with the exception of the Kinematics technology object.

2) Applies to the Kinematics technology object only.

Alarm text	Validity		Remedy
	TO[1]	Kin[2]	
Output address is invalid.	✓	-	• Check the topology of the project. • Compare the device configuration and the configuration of the technology object. • Configure the valid hardware limit switch. • Contact customer support.
Error during parameter assignment of the address area.	✓	-	Make sure that different addresses are assigned for all technology objects in the project.
Address overlap during drive interconnection.	✓	-	
Address overlap during encoder interconnection.	✓	-	

1) Applies to all technology objects with the exception of the Kinematics technology object.

2) Applies to the Kinematics technology object only.

4.5.2 Technology alarm 411 (S7-1500, S7-1500T)

Alarm response TO[1]: Remove enable
Alarm response Kin[2]: -
Restart: Not required

Alarm text	Validity		Remedy
	TO[1]	Kin[2]	
Encoder at the logical address disrupted.	✓	-	
Alarm message from encoder.	✓	-	Check the function, connections and I/Os of the encoder.
HW error encoder.	✓	-	
Encoder dirty.	✓	-	
Read error encoder absolute value.	✓	-	Compare the encoder type in the drive or encoder parameter P979 with the configuration data of the technology object.
Zero mark monitoring encoder.	✓	-	Encoder signals error in zero mark monitoring (fault code 0x0002 in Gx_XIST2, see PROFIdrive profile).
Encoder in Parking state.	✓	-	• Search for the cause of the error in the connected drive or encoder. • Check whether the alarm was possibly triggered by a commissioning action involving the drive or encoder.

1) Applies to all technology objects with the exception of the Kinematics technology object.

2) Applies to the Kinematics technology object only.

4.5.3 Technology alarm 412 (S7-1500, S7-1500T)

Alarm response TO[1]: Remove enable
Alarm response Kin[2]: -

Restart: Not required

Alarm text	Validity		Remedy
	TO[1]	Kin[2]	
Permitted actual value range exceeded.	✓	-	
Positive.	✓	-	• Home the axis/encoder in a valid actual value range. • When using an absolute encoder, check the transfer of the incremental actual value "Gx_XIST1" in PROFIdrive Telegram. If the incremental actual value is transmitted at less than 32 bit, configure the evaluation of "Gx_XIST1" in "<TO>.Sensor[1..4].Parameter.BehaviorGx_XIST1" to the value "0" in the data block of the technology object. For more detailed information on the evaluation of the incremental actual value "Gx_XIST1", refer to the section "Drive and encoder connection" in the "S7-1500/S7-1500T Axis functions" documentation (Page 8).
Negative.	✓	-	
Modulo length.	✓	-	Note the maximum permissible velocity for modulo axes: • The modulo axis is not configured as a possible leading value for a synchronous axis technology object: The maximum permissible velocity is limited to the modulo length/cycle time of MC-Servo [OB91]. • The modulo axis is configured as a possible leading value for a synchronous axis technology object: The maximum permissible velocity is limited to half the modulo length/cycle time of MC-Servo [OB91]. Reduce the cycle time of MC-Servo [OB91]. Configure the maximum velocity "<TO>.DynamicLimits.MaxVelocity" to the maximum permissible velocity of the modulo axis. This limits the velocity of the axis to the maximum permissible velocity. The axis remains enabled. Increase the modulo length or disable the "Modulo" setting if that is possible for your application. **Notice** You must adapt the user program after changing the modulo configuration. Modify the following points in the user program: • Calculation of the target positions and the motion direction for positioning instructions • Parameter assignment of synchronous operation instructions and cams • Display of positions in the HMI and other user interfaces Additional modifications may be necessary depending on your application.

[1] Applies to all technology objects with the exception of the Kinematics technology object.

[2] Applies to the Kinematics technology object only.

4.5.4 Technology alarm 421 (S7-1500, S7-1500T)

Alarm response TO[1]: Remove enable
Alarm response Kin[2]: -
Restart: Not required

Alarm text	Validity		Remedy
	TO[1]	Kin[2]	
Drive disrupted at the logical address.	✓	-	
Alarm message from drive.	✓	-	• Check the function and the connections of the drive. • Enable the safety function in the drive. You can find more detailed information in the section "Safety functions in the drive" of the "S7-1500/S7-1500T Axis functions" documentation (Page 8). • In the case of analog connected axes, check if the "<TO>.StatusDrive.InOperation" tag = TRUE.
No drive control required.	✓	-	
Drive has shut down.	✓	-	
Drive enable not possible.	✓	-	

[1] Applies to all technology objects with the exception of the Kinematics technology object.

[2] Applies to the Kinematics technology object only.

4.5.5 Technology alarm 431 (S7-1500, S7-1500T)

Alarm response TO[1]: Remove enable
Alarm response Kin[2]: -
Restart: Not required

Alarm text	Validity		Remedy
	TO[1]	Kin[2]	
Communication to the device under logical address is disturbed.	✓	-	
Drive failed.	✓	-	Check the function, connections and I/Os of the drive.
Signs of life of drive faulty.	✓	-	• Check the function, connections and I/Os of the drive. • Compare the cycle times in the device configuration (PROFINET sync master, PROFINET sync slave or PROFIBUS DP master system, PROFIBUS slave) and in the MC-Servo [OB91]. The cycle of the master application and the application cycle of the MC-Servo must be parameterized with the same cycle time. (An incorrect parameter assignment is indicated with 0x0080.) • If you call the application cycle of the MC-Servo [OB91] reduced to the send clock of a PROFINET IO system and the technology alarm 431 (Signs of life of drive faulty) is repeatedly shown, increase the update time of the send clock.

[1] Applies to all technology objects with the exception of the Kinematics technology object.

[2] Applies to the Kinematics technology object only.

Alarm text	Validity		Remedy
	TO[1]	Kin[2]	
Encoder failed.	✓	-	Check the function, connections and I/Os of the encoder.
Signs of life of encoder faulty.	✓	-	• Check the function, connections and I/Os of the encoder. • Compare the cycle times in the device configuration (PROFINET sync master, PROFINET sync slave or PROFIBUS DP master system, PROFIBUS slave) and in the MC-Servo [OB91]. The cycle of the master application and the application cycle of the MC-Servo must be parameterized with the same cycle time.

[1] Applies to all technology objects with the exception of the Kinematics technology object.

[2] Applies to the Kinematics technology object only.

4.6 Technology alarms 501 - 563 (S7-1500, S7-1500T)

4.6.1 Technology alarm 501 (S7-1500, S7-1500T)

Alarm response TO[1]: No reaction
Alarm response Kin[2]: No reaction
Restart: Not required

Alarm text	Validity		Remedy
	TO[1]	Kin[2]	
Programmed velocity is limited.	✓	✓	• Check the value for the velocity of the Motion Control instruction. • Check the configuration of the dynamic limits. • Check the value of the "<TO>.Static.DynamicLimits.Velocity" tag.

[1] Applies to all technology objects with the exception of the Kinematics technology object.

[2] Applies to the Kinematics technology object only.

4.6.2 Technology alarm 502 (S7-1500, S7-1500T)

Alarm response TO[1]: No reaction
Alarm response Kin[2]: No reaction

Restart: Not required

Alarm text	Validity		Remedy
	TO[1]	Kin[2]	
Programmed acceleration/deceleration is being limited.	✓	✓	
Acceleration	✓	✓	• Check the value for the acceleration of the Motion Control instruction. • Check the configuration of the dynamic limits.
Deceleration	✓	✓	• Check the value for the deceleration of the Motion Control instruction. • Check the configuration of the dynamic limits.

1) Applies to all technology objects with the exception of the Kinematics technology object.

2) Applies to the Kinematics technology object only.

4.6.3 Technology alarm 503 (S7-1500, S7-1500T)

Alarm response TO[1]: No reaction
Alarm response Kin[2]: No reaction
Restart: Not required

Alarm text	Validity		Remedy
	TO[1]	Kin[2]	
Programmed jerk is limited.	✓	✓	• Check the value for the velocity of the Motion Control instruction. • Check the configuration of the dynamic limits.

1) Applies to all technology objects with the exception of the Kinematics technology object.

2) Applies to the Kinematics technology object only.

4.6.4 Technology alarm 504 (S7-1500, S7-1500T)

Alarm response TO[1]: No reaction
Alarm response Kin[2]: -
Restart: Not required

Alarm text	Validity		Remedy
	TO[1]	Kin[2]	
Speed setpoint monitoring active.	✓	-	• Check the mechanical configuration. • Check the encoder connection. • Check the configuration of the speed setpoint interface. • Check the configuration of the control loop. • Check the value for the maximum velocity (<TO>.DynamicLimits.MaxVelocity).

Alarm text	Validity		Remedy
	TO[1]	Kin[2]	
			• When using an absolute encoder, check the transfer of the incremental actual value "Gx_XIST1" in PROFIdrive Telegram. If the incremental actual value is transmitted at less than 32 bit, configure the evaluation of "Gx_XIST1" in "<TO>.Sensor[1..4].Parameter.BehaviorGx_XIST1" to the value "0" in the data block of the technology object. For more detailed information on the evaluation of the incremental actual value "Gx_XIST1", refer to the section "Drive and encoder connection" of the "S7-1500/S7-1500T" documentation (Page 8).

[1] Applies to all technology objects with the exception of the Kinematics technology object.

[2] Applies to the Kinematics technology object only.

4.6.5 Technology alarm 511 (S7-1500, S7-1500T)

Alarm response TO[1]: No reaction
Alarm response Kin[2]: -
Restart: Not required

Alarm text	Validity		Remedy
	TO[1]	Kin[2]	
Dynamic limit is violated by kinematics motion.	✓	-	
Velocity.	✓	-	Reduce the velocity of the kinematics motion.
Acceleration.	✓	-	Reduce the acceleration of the kinematics motion.
Deceleration.	✓	-	Reduce the deceleration of the kinematics motion.

[1] Applies to all technology objects with the exception of the Kinematics technology object.

[2] Applies to the Kinematics technology object only.

4.6.6 Technology alarm 521 (S7-1500, S7-1500T)

Alarm response TO[1]: Remove enable
Alarm response Kin[2]: -

Restart: Not required

Alarm text	Validity		Remedy
	TO[1]	Kin[2]	
Following error.	✓	-	• Check the configuration of the control loop. • Check the direction signal of the encoder. • Check the configuration of the following error monitoring. • When using an absolute encoder, check the transfer of the incremental actual value "Gx_XIST1" in PROFIdrive Telegram. If the incremental actual value is transmitted at less than 32 bit, configure the evaluation of "Gx_XIST1" in "<TO>.Sensor[1..4].Parameter.BehaviorGx_XIST1" to the value 0 in the data block of the technology object. For more detailed information on the evaluation of the incremental actual value "Gx_XIST1", refer to the section "Drive and encoder connection" in the "S7-1500/S7-1500T Axis functions" documentation (Page 8).

1) Applies to all technology objects with the exception of the Kinematics technology object.

2) Applies to the Kinematics technology object only.

4.6.7 Technology alarm 522 (S7-1500, S7-1500T)

Alarm response TO[1]: No reaction
Alarm response Kin[2]: -
Restart: Not required

Alarm text	Validity		Remedy
	TO[1]	Kin[2]	
Warning following error tolerance.	✓	-	• Check the configuration of the control loop. • Check the direction signal of the encoder. • Check the configuration of the following error monitoring.

1) Applies to all technology objects with the exception of the Kinematics technology object.

2) Applies to the Kinematics technology object only.

4.6.8 Technology alarm 531 (S7-1500, S7-1500T)

Alarm response TO[1]: Remove enable
Alarm response Kin[2]: -

Restart: Not required

Alarm text	Validity		Remedy
	TO[1]	Kin[2]	
Positive HW limit switch approached.	✓	-	Acknowledge the alarm. After the acknowledgment, motions in the negative direction are allowed.
Negative HW limit switch approached.	✓	-	Acknowledge the alarm. After the acknowledgment, motions in the positive direction are allowed.
Invalid retraction direction, HW limit switch active.	✓	-	The programmed direction of movement is disabled due to the active HW limit switch. Retract the axis in the opposite direction.

Restart: Required

Alarm text	Validity		Remedy
	TO[1]	Kin[2]	
Encoder error with triggered HW limit switch, no retraction possible.	✓	-	Correct the fault in the encoder. Acknowledge the alarm by switching the controller off and on or by executing an "MC_Reset" job with "Restart" = TRUE.

Restart: See Remedy

Alarm text	Validity		Remedy
	TO[1]	Kin[2]	
HW limit switch polarity reversed, retraction not possible.	✓	-	• Check the mechanical configuration of the HW limit switch. • Check the limit switches. • Make sure that only one of the two tags is "TRUE": – <TO>.StatusWord.X17 (HWLimitMinActive) – <TO>.StatusWord.X18 (HWLimitMaxActive) • To enable retraction, you can temporarily disable the HW limit switches with the Motion Control instruction "MC_WriteParameter" via the parameter "PositionLimits_HW.Active" = FALSE. Technology version ≥ V7.0: Only required for traversable HW limit switches: Acknowledge the alarm by switching the controller off and on or by executing an "MC_Reset" job with "Restart" = TRUE. Technology version < V7.0: Acknowledge the alarm by switching the controller off and on or by executing an "MC_Reset" job with "Restart" = TRUE.
Both HW limit switches active, retraction not possible.	✓	-	

[1] Applies to all technology objects with the exception of the Kinematics technology object.

[2] Applies to the Kinematics technology object only.

4.6.9 Technology alarm 533 (S7-1500, S7-1500T)

Alarm response TO[1]: The alarm response depends on the configured response and the type of axis motion.

- Stop with maximum dynamic values
  When "<TO>.PositionLimits_SW.LimitReachedBehavior" = 0 and an interconnected axis.
  - Axis motion as following axis in synchronous operation
  - Kinematics axis in kinematics motion
- Stop with current dynamic values
  When "<TO>.PositionLimits_SW.LimitReachedBehavior" = 1 and interconnected axis

Alarm response Kin[2]: -
Restart: Not required

Alarm text	Validity		Remedy
	TO[1]	Kin[2]	
Software limit switch is approached.	✓	-	
Negative	✓	-	With the current dynamic values, the axis will approach the negative software limit switch. For positioning axes, check the position setpoint. For following axes, check whether the current dynamics violates the configured dynamic limits. Move the axis in positive direction away from the negative software limit switch.
Positive	✓	-	With the current dynamic values, the axis will approach the positive software limit switch. For positioning axes, check the position setpoint. For following axes, check whether the current dynamics violates the configured dynamic limits. Move the axis in negative direction away from the positive software limit switch

[1] Applies to all technology objects with the exception of the Kinematics technology object.

[2] Applies to the Kinematics technology object only.

4.6.10 Technology alarm 534 (S7-1500, S7-1500T)

Alarm response TO[1]: You can configure the alarm response.

- Remove enable
  Setting: "<TO>.PositionLimits_SW.LimitExceededBehavior" = 0
- Stop with emergency stop ramp
  Setting: "<TO>.PositionLimits_SW.LimitExceededBehavior" = 1

Alarm response Kin[2]: -

Restart: Not required

Alarm text	Validity		Remedy
	TO[1]	Kin[2]	
SW limit switch was overtraveled.	✓	-	
Negative	✓	-	The software limit switch was overtraveled. Acknowledge the alarm. After the acknowledgment, motions in the positive direction are allowed.
Positive	✓	-	The software limit switch was overtraveled. Acknowledge the alarm. After the acknowledgment, motions in the negative direction are allowed.

1) Applies to all technology objects with the exception of the Kinematics technology object.

2) Applies to the Kinematics technology object only.

4.6.11 Technology alarm 541 (S7-1500, S7-1500T)

Alarm response TO[1]: Remove enable
Alarm response Kin[2]: -
Restart: Not required

Alarm text	Validity		Remedy
	TO[1]	Kin[2]	
Position monitoring error.	✓	-	
Target range not reached.	✓	-	The target range was not reached within the tolerance time. • Check the configuration of the position monitoring. • Check the configuration of the control loop.
Exit target range again.	✓	-	The target range was exited within the minimum dwell time. • Check the configuration of the position monitoring. • Check the configuration of the control loop.

1) Applies to all technology objects with the exception of the Kinematics technology object.

2) Applies to the Kinematics technology object only.

4.6.12 Technology alarm 542 (S7-1500, S7-1500T)

Alarm response TO[1]: Remove enable
Alarm response Kin[2]: -

Restart: Not required

Alarm text	Validity		Remedy
	TO[1]	Kin[2]	
Clamping monitoring error: Axis leaving clamping tolerance window.	✓	-	The axis has executed a motion greater than the permissible tolerance at the fixed stop. Check whether the fixed stop has broken away.

[1] Applies to all technology objects with the exception of the Kinematics technology object.

[2] Applies to the Kinematics technology object only.

4.6.13 Technology alarm 550 (S7-1500, S7-1500T)

Alarm response TO[1]: Track setpoints
Alarm response Kin[2]: -
Restart: Not required

Alarm text	Validity		Remedy
	TO[1]	Kin[2]	
Drive-autonomous motion is being executed.	✓	-	• The drive is performing a motion that was not specified by the technology object. • Check if a safety function is active in the drive. You can find more detailed information in the section "Safety functions in the drive" of the "S7-1500/S7-1500T Axis functions" documentation (Page 8).

[1] Applies to all technology objects with the exception of the Kinematics technology object.

[2] Applies to the Kinematics technology object only.

4.6.14 Technology alarm 551 (S7-1500, S7-1500T)

Alarm response TO[1]: No reaction
Alarm response Kin[2]: -
Restart: Not required

Alarm text	Validity		Remedy
	TO[1]	Kin[2]	
Maximum velocity cannot be reached with drive/axis parameters.	✓	-	The configured maximum velocity cannot be reached with the configured mechanics of the axis. Check the configuration of the mechanics and the set reference speed. Check the adapted reference speed "<TO>.Actor.DriveParameter.ReferenceSpeed" during automatic transfer of the drive parameters during runtime (online). During the automatic transfer of the drive parameters in runtime (online), slight accuracy deviations may occur from the reference speed configured in the drive.

[1] Applies to all technology objects with the exception of the Kinematics technology object.

[2] Applies to the Kinematics technology object only.

4.6.15 Technology alarm 552 (S7-1500, S7-1500T)

Alarm response TO[1]: Remove enable
Alarm response Kin[2]: -
Restart: Not required

Alarm text	Validity		Remedy
	TO[1]	Kin[2]	
Encoder adaptation error during ramp-up.	✓	-	
Encoder is not assigned to a SINAMICS device.	✓	-	• The operationally active encoder could not be adapted. Other encoders that can be used are configured. Use the encoder switch (MC_SetSensor). • The encoder set as the operationally active encoder could not be adapted. • Specify a different sensor for the initialization of the technology object.
Encoder system.	✓	-	
Encoder resolution.	✓	-	
Encoder fine resolution.	✓	-	
Encoder revolutions.	✓	-	
Unspecified.	✓	-	
Reference value NACT.	✓	-	
Parameter does not exist, value unreadable or invalid.	✓	-	Check whether your device supports acyclic data communication according to PROFIdrive.
Encoder system.	✓	-	
Encoder resolution.	✓	-	
Encoder fine resolution.	✓	-	
Encoder revolutions.	✓	-	
Unspecified.	✓	-	
Reference value NACT.	✓	-	
Adaptation canceled due to insufficient resources.	✓	-	
Encoder system.	✓	-	
Encoder resolution.	✓	-	
Encoder fine resolution.	✓	-	
Encoder revolutions.	✓	-	
Unspecified.	✓	-	
Reference value NACT	✓	-	
Encoder is not interconnected directly to I/O area.	✓	-	During the configuration of the axis, the logical addresses were set to a data block or bit memory address area, for example. The adaptation is only possible when the encoder has been directly interconnected to an I/O area.
Encoder system.	✓	-	
Encoder resolution.	✓	-	
Encoder fine resolution.	✓	-	
Encoder revolutions.	✓	-	
Unspecified.	✓	-	
Reference value NACT.	✓	-	

1) Applies to all technology objects with the exception of the Kinematics technology object.

2) Applies to the Kinematics technology object only.

4.6.16 Technology alarm 561 (S7-1500T)

Alarm response TO[1]: -
Alarm response Kin[2]: No reaction
Restart: Not required

Alarm text	Validity		Remedy
	TO[1]	Kin[2]	
Programmed velocity of the orientation motion is limited.	-	✓	Check the configuration of the velocity of the orientation motion.

[1] Applies to all technology objects with the exception of the Kinematics technology object.

[2] Applies to the Kinematics technology object only.

4.6.17 Technology alarm 562 (S7-1500T)

Alarm response TO[1]: -
Alarm response Kin[2]: No reaction
Restart: Not required

Alarm text		Validity		Remedy
		TO[1]	Kin[2]	
Programmed acceleration/deceleration of the orientation motion is limited.		-	✓	
	Acceleration	-	✓	Check the configuration of the acceleration of the orientation motion.
	Deceleration	-	✓	Check the configuration of the deceleration of the orientation motion.

[1] Applies to all technology objects with the exception of the Kinematics technology object.

[2] Applies to the Kinematics technology object only.

4.6.18 Technology alarm 563 (S7-1500T)

Alarm response TO[1]: -
Alarm response Kin[2]: No reaction
Restart: Not required

Alarm text	Validity		Remedy
	TO[1]	Kin[2]	
Programmed jerk of the orientation motion is limited.	-	✓	Check the configuration of the jerk of the orientation motion.

[1] Applies to all technology objects with the exception of the Kinematics technology object.

[2] Applies to the Kinematics technology object only.

4.7 Technology alarms 601 - 612 (S7-1500, S7-1500T)

4.7.1 Technology alarm 601 (S7-1500, S7-1500T)

Alarm response TO[1]: Stop with maximum dynamic values
Alarm response Kin[2]: -
Restart: Not required

Alarm text	Validity		Remedy
	TO[1]	Kin[2]	
Leading axis is not assigned or defective.	✓	-	Configure the possible leading value axes for the following axis under "Configuration > Leading value interconnections". For a cross-PLC synchronous operation make sure that the option "Synchronous to the bus" is selected for the MC-SERVO OBs of all connected CPUs under "Properties > General > Cycle time".

[1] Applies to all technology objects with the exception of the Kinematics technology object.

[2] Applies to the Kinematics technology object only.

4.7.2 Technology alarm 603 (S7-1500, S7-1500T)

Alarm response TO[1]: Remove enable
Alarm response Kin[2]: -
Restart: Not required

Alarm text	Validity		Remedy
	TO[1]	Kin[2]	
Leading axis is not in position-controlled mode.	✓	-	During synchronization/desynchronization, the leading axis must be operated in position-controlled mode.

[1] Applies to all technology objects with the exception of the Kinematics technology object.

[2] Applies to the Kinematics technology object only.

4.7.3 Technology alarm 608 (S7-1500, S7-1500T)

Alarm response TO[1]: Stop with maximum dynamic values
Alarm response Kin[2]: -

Restart: Not required

Alarm text	Validity		Remedy
	TO[1]	Kin[2]	
Error during synchronization/desynchronization.	✓	-	• Prevent a reverse leading value motion during the synchronization/desynchronization. • If necessary, use a higher hysteresis value (<TO>.Extrapolation.Hysteresis.Value) for actual value coupling. You can find more information at Siemens Industry Online Support in the FAQ entry 109798578 (https://support.industry.siemens.com/cs/ww/en/view/109798578). • Check the "SyncDirection" or "SyncOutDirection" parameter of the corresponding motion control instruction.

[1] Applies to all technology objects with the exception of the Kinematics technology object.

[2] Applies to the Kinematics technology object only.

4.7.4 Technology alarm 612 (S7-1500T)

Alarm response TO[1]: Remove enable
Alarm response Kin[2]: -
Restart: Not required

Alarm text	Validity		Remedy
	TO[1]	Kin[2]	
Specified cam has not been interpolated.	✓	-	Interpolate the cam used for camming with the Motion Control instruction "MC_InterpolateCam".

[1] Applies to all technology objects with the exception of the Kinematics technology object.

[2] Applies to the Kinematics technology object only.

4.8 Technology alarms 700 - 758 (S7-1500, S7-1500T)

4.8.1 Technology alarm 700 (S7-1500, S7-1500T)

Alarm response TO[1]: Remove enable
Alarm response Kin[2]: -
Restart: Not required

Alarm text	Validity		Remedy
	TO[1]	Kin[2]	
Error when calculating the switching position.	✓	-	

[1] Applies to all technology objects with the exception of the Kinematics technology object.

[2] Applies to the Kinematics technology object only.

Alarm text	Validity		Remedy
	TO[1]	Kin[2]	
Cam position: OnPosition	✓	-	The position for the "OnPosition" parameter could not be calculated. Invalid positions (e.g. "OnPosition" > "OffPosition") were calculated due to lead times. The output cam cannot be switched due to the axis dynamics and compensation times.
Cam position: OffPosition	✓	-	The position for the "OffPosition" parameter could not be calculated. Invalid positions (e.g. "OffPosition" > "OnPosition") were calculated due to lead times. The output cam cannot be switched due to the axis dynamics and compensation times.

1) Applies to all technology objects with the exception of the Kinematics technology object.

2) Applies to the Kinematics technology object only.

4.8.2 Technology alarm 701 (S7-1500, S7-1500T)

Alarm response TO[1]: Remove enable
Alarm response Kin[2]: -
Restart: Not required

Alarm text	Validity		Remedy
	TO[1]	Kin[2]	
I/O output error.	✓	-	The digital output for the output cam or cam track technology object cannot be addressed. Download the device configuration again.

1) Applies to all technology objects with the exception of the Kinematics technology object.

2) Applies to the Kinematics technology object only.

4.8.3 Technology alarm 702 (S7-1500, S7-1500T)

Alarm response TO[1]: Remove enable
Alarm response Kin[2]: -
Restart: Not required

Alarm text	Validity		Remedy
	TO[1]	Kin[2]	
Position value invalid.	✓	-	• A Motion Control job "MC_Reset" is being executed on the axis. Wait until the technology object restart is complete. • The encoder values are invalid due to an encoder error. Check the encoder and adjust the configuration if necessary.

1) Applies to all technology objects with the exception of the Kinematics technology object.

2) Applies to the Kinematics technology object only.

4.8.4 Technology alarm 703 (S7-1500, S7-1500T)

Alarm response TO[1]: Remove enable
Alarm response Kin[2]: -
Restart: Not required

Alarm text	Validity		Remedy
	TO[1]	Kin[2]	
Output cam data faulty.	✓	-	
Output cam: Output cam number	✓	-	Check the configuration of the relevant output cam in the cam track and adjust the values if necessary. Examples of a correct configuration: • "<TO>.Parameter.Cam[1..32].OnPosition" < "<TO>.Parameter.Cam[1..32].OffPosition" • "<TO>.Parameter.Cam[1..32].Duration" > "<TO>.Parameter.OffCompensation" - "<TO>.Parameter.OnCompensation"

1) Applies to all technology objects with the exception of the Kinematics technology object.

2) Applies to the Kinematics technology object only.

4.8.5 Technology alarm 704 (S7-1500, S7-1500T)

Alarm response TO[1]: Remove enable
Alarm response Kin[2]: -
Restart: Not required

Alarm text	Validity		Remedy
	TO[1]	Kin[2]	
Output cam data faulty.	✓	-	Check the configuration of the output cam and adjust the values if necessary. Examples of a correct configuration: • "MC_OutputCam.OnPosition" < "MC_OutputCam.OffPosition" • "MC_OutputCam.Duration" > "<TO>.Parameter.OffCompensation" - "<TO>.Parameter.OnCompensation"

1) Applies to all technology objects with the exception of the Kinematics technology object.

2) Applies to the Kinematics technology object only.

4.8.6 Technology alarm 750 (S7-1500, S7-1500T)

Alarm response TO[1]: Remove enable
Alarm response Kin[2]: -

Restart: Not required

Alarm text	Validity		Remedy
	TO[1]	Kin[2]	
Measuring job not possible during homing of assigned axis.	✓	-	Do not use the Motion Control instructions "MC_Home" and "MC_MeasuringInput" simultaneously.

[1] Applies to all technology objects with the exception of the Kinematics technology object.

[2] Applies to the Kinematics technology object only.

4.8.7 Technology alarm 752 (S7-1500, S7-1500T)

Alarm response TO[1]: No reaction
Alarm response Kin[2]: -
Restart: Not required

Alarm text	Validity		Remedy
	TO[1]	Kin[2]	
Validity range of measuring job not recognized.	✓	-	The measuring range specified in Motion Control instruction "MC_MeasuringInput" was not recognized. Adjust the measuring range.

[1] Applies to all technology objects with the exception of the Kinematics technology object.

[2] Applies to the Kinematics technology object only.

4.8.8 Technology alarm 753 (S7-1500, S7-1500T)

Alarm response TO[1]: Remove enable
Alarm response Kin[2]: -
Restart: Not required

Alarm text	Validity		Remedy
	TO[1]	Kin[2]	
Only one measuring input can access an encoder at a time.	✓	-	Use only one Motion Control instruction "MC_MeasuringInput" for an encoder.

[1] Applies to all technology objects with the exception of the Kinematics technology object.

[2] Applies to the Kinematics technology object only.

4.8.9 Technology alarm 754 (S7-1500, S7-1500T)

Alarm response TO[1]: Remove enable
Alarm response Kin[2]: -

Restart: Not required

Alarm text	Validity		Remedy
	TO[1]	Kin[2]	
Measuring input configuration in external device is not correct.	✓	-	Check the configuration of the measuring inputs on the external device.

[1] Applies to all technology objects with the exception of the Kinematics technology object.

[2] Applies to the Kinematics technology object only.

4.8.10 Technology alarm 755 (S7-1500, S7-1500T)

Alarm response TO[1]: Remove enable
Alarm response Kin[2]: -
Restart: Not required

Alarm text		Validity		Remedy
		TO[1]	Kin[2]	
Measuring job not possible.		✓	-	
	Device has reported an error.	✓	-	The measurement was aborted with error. Check the measuring input functionality in the utilized device.
	Cyclic measuring is not possible with telegram 39x.	✓	-	• Use the Motion Control instruction "MC_MeasuringInput" for starting a one-time measurement. • Cyclic measuring is only possible when measuring using TM Timer DIDQ. Change the configuration of the measuring input type to "TM Timer DIDQ".

[1] Applies to all technology objects with the exception of the Kinematics technology object.

[2] Applies to the Kinematics technology object only.

4.8.11 Technology alarm 758 (S7-1500, S7-1500T)

Alarm response TO[1]: No reaction
Alarm response Kin[2]: -
Restart: Not required

Alarm text	Validity		Remedy
	TO[1]	Kin[2]	
A measuring edge was not evaluated.	✓	-	An edge was already detected at the input of the measuring input even though the module was not yet ready. The measured value is provided at the next edge.

[1] Applies to all technology objects with the exception of the Kinematics technology object.

[2] Applies to the Kinematics technology object only.

4.9 Technology alarms 801 - 820 (S7-1500T)

4.9.1 Technology alarm 801 (S7-1500T)

Alarm response TO[1]: -
Alarm response Kin[2]: Stop with maximum dynamic values of the axes
Restart: Not required

Alarm text	Validity		Remedy
	TO[1]	Kin[2]	
Kinematics axis <no.> not ready.	-	✓	
Axis not released.	-	✓	Enable the technology object.
Axis job programmed.	-	✓	To be able to transmit another kinematics job, set the specified axis to a standstill.
Axis alarm.	-	✓	Check and acknowledge the technology alarms of the specified kinematics axis.

1) Applies to all technology objects with the exception of the Kinematics technology object.

2) Applies to the Kinematics technology object only.

4.9.2 Technology alarm 802 (S7-1500T)

Alarm response TO[1]: -
Alarm response Kin[2]: Stop with maximum dynamic values of the axes
Restart: Not required

Alarm text	Validity		Remedy
	TO[1]	Kin[2]	
Cannot calculate the geometry element.	-	✓	
Radius for "CircMode" = 2 is less than half the distance.	-	✓	Adjust the radius.
Starting, intermediate, or end point identical with "CircMode" = 0.	-	✓	Specify different values for starting point, intermediate point and end point.
Intermediate point not reachable at "CircMode" = 0.	-	✓	Adjust the intermediate point.
Start and end point identical with "CircMode" = 2 and "PathChoice" = 2, 3.	-	✓	Define different start and end points.
Unable to execute dynamic adaptation.	-	✓	Switch off the dynamic adaptation.
Movement is outside the transformation area.	-	✓	Define the motions within the transformation area
Transformation only works with sPTP motions.	-	✓	Select a "MC_MoveDirectAbsolute" instruction or "MC_MoveDirectRelative" instruction for the transformation.

1) Applies to all technology objects with the exception of the Kinematics technology object.

2) Applies to the Kinematics technology object only.

Alarm text	Validity		Remedy
	TO[1]	Kin[2]	
Not possible to approach tracked OCS.	-	✓	• Use the instructions "MC_MoveLinearAbsolute" or "MC_MoveCircularAbsolute". • At "MC_MoveCircularAbsolute" use the "CircMode" = 0. • Switch off the dynamic adaptation. • Use a route > 0 for the instructions. An orientation motion without kinematics motion is not possible.
Kinematics motion in the coupled OCS cannot be terminated by job configuration.			• Use the instructions "MC_MoveLinearAbsolute" or "MC_MoveCircularAbsolute". • At "MC_MoveCircularAbsolute" use the "CircMode" = 0. • Switch off the dynamic adaptation. • Use a route > 0 for the instructions. An orientation motion without kinematics motion is not possible.
Change of the coordinate system is not possible with coupled OCS.	-	✓	It is not possible to directly change from one coupled OCS into another coupled OCS with a motion command. First transmit an instruction in the WCS or a non-tracked OCS to complete the process of the kinematics with the tracked OCS.
sPTP motion not possible with coupled OCS.	-	✓	A "MC_MoveDirectRelative" or "MC_MoveDirectAbsolute" instruction cannot be used in a moved OCS. To move the kinematics in a coupled ocs, use the following instructions: • "MC_MoveLinearAbsolute" and "MC_MoveLinearRelative" • "MC_MoveCircularAbsolute" and "MC_MoveCircularRelative"
Active coordinate system cannot be changed with coupled OCS.	-	✓	The following instructions can only be performed with the status "TrackingState" = 0 or 1: • "MC_DefineTool" • "MC_SetTool" • "MC_TrackConveyorBelt" The instruction "MC_SetOCSFrame" can only be performed with the status "TrackingState" = 0. First transmit an instruction in the WCS or a non-tracked OCS to complete the process of the kinematics with the tracked OCS.
Dynamic values of the user transformation not correctly specified.	-	✓	Check the calculation of the speeds and accelerations in the user transformation in the MC-Transformation [OB98].
The target joint position is outside the valid joint travel range.	-	✓	Check the set limits of the joint travel range. Specify a valid target joint position.

1) Applies to all technology objects with the exception of the Kinematics technology object.

2) Applies to the Kinematics technology object only.

4.9.3 Technology alarm 803 (S7-1500T)

Alarm response TO[1]: -

Alarm response Kin[2]: Stop with maximum dynamic values of the axes
Restart: Not required

Alarm text	Validity		Remedy
	TO[1]	Kin[2]	
Error in the calculation of the transformation.	-	✓	
Error during transformation of the axis coordinates into Cartesian coordinates.	-	✓	• Correct your specified motion with regard to the joint positioning space and the transformation areas: • Position the kinematics axes with single-axis motions in a permitted transformation area. • For user transformation: Check the calculation in the MC-transformation [OB98].
With user-defined kinematics systems: "FunctionResult" of the MC transformation [OB 98]	-	✓	
Error during transformation of the Cartesian coordinates into axis coordinates.	-	✓	
With predefined kinematics systems: Additional info:	-	✓	
0 Cartesian position cannot be reached	-	✓	
1 Singularity	-	✓	
With user-defined kinematics systems: "FunctionResult" of the MC transformation [OB 98]	-	✓	

1) Applies to all technology objects with the exception of the Kinematics technology object.

2) Applies to the Kinematics technology object only.

4.9.4 Technology alarm 804 (S7-1500T)

Alarm response TO[1]: -
Alarm response Kin[2]: Stop with maximum dynamic values of the axes
Restart: Not required

Alarm text	Validity		Remedy
	TO[1]	Kin[2]	
Kinematics motion cannot be stopped at end.	-	✓	Ensure that the path is sufficiently long.

1) Applies to all technology objects with the exception of the Kinematics technology object.

2) Applies to the Kinematics technology object only.

4.9.5 Technology alarm 805 (S7-1500T)

Alarm response TO[1]: -
Alarm response Kin[2]: Stop with maximum dynamic values of the axes

Restart: Not required

Alarm text	Validity		Remedy
	TO[1]	Kin[2]	
Limitation of path dynamics by axis dynamics incorrect.	-	✓	
Path velocity is limited to zero.	-	✓	Configure a higher "Maximum velocity" on the kinematics axes.
Acceleration/deceleration is limited to zero.	-	✓	Configure a larger "Maximum acceleration" or "Maximum deceleration" on the kinematics axes.

1) Applies to all technology objects with the exception of the Kinematics technology object.

2) Applies to the Kinematics technology object only.

4.9.6 Technology alarm 806 (S7-1500T)

Alarm response TO[1]: -
Alarm response Kin[2]: Stop without leaving the path
Restart: Not required

Alarm text	Validity		Remedy
	TO[1]	Kin[2]	
Zone violation of work or blocked zones	-	✓	Move the kinematics into the work zone or out of the blocked zone.

1) Applies to all technology objects with the exception of the Kinematics technology object.

2) Applies to the Kinematics technology object only.

4.9.7 Technology alarm 807 (S7-1500T)

Alarm response TO[1]: -
Alarm response Kin[2]: No reaction
Restart: Not required

Alarm text	Validity		Remedy
	TO[1]	Kin[2]	
Zone violation of signal zones	-	✓	-

1) Applies to all technology objects with the exception of the Kinematics technology object.

2) Applies to the Kinematics technology object only.

4.9.8 Technology alarm 808 (S7-1500T)

Alarm response TO[1]: -
Alarm response Kin[2]: Stop with maximum dynamic values of the axes

Restart: Not required

Alarm text	Validity		Remedy
	TO[1]	Kin[2]	
Ambiguity due to multiple active work zones.	-	✓	
<Number of current active work zones>	-	✓	Activate only one work zone.

[1] Applies to all technology objects with the exception of the Kinematics technology object.

[2] Applies to the Kinematics technology object only.

4.9.9 Technology alarm 809 (S7-1500T)

Alarm response TO[1]: -
Alarm response Kin[2]: Stop with maximum dynamic values of the axes
Restart: Not required

Alarm text	Validity		Remedy
	TO[1]	Kin[2]	
Path dynamic limit through dynamic of the orientation motion faulty.	-	✓	
Velocity is limited to zero.	-	✓	Configure a higher maximum velocity for the axes involved in the orientation motion.
Acceleration/deceleration is limited to zero.	-	✓	Configure a higher maximum acceleration or deceleration for the axes involved in the orientation motion.

[1] Applies to all technology objects with the exception of the Kinematics technology object.

[2] Applies to the Kinematics technology object only.

4.9.10 Technology alarm 810 (S7-1500T)

Alarm response TO[1]: -
Alarm response Kin[2]: Stop with maximum dynamic values of the axes
Restart: Not required

Alarm text	Validity		Remedy
	TO[1]	Kin[2]	
Conveyor belt not assigned or faulty (OCS <number>).	-	✓	• Check the parameters of the "MC_TrackConveyorBelt" job. • Check the configuration of the leading-value-capable technology object which represents the conveyor belt.

[1] Applies to all technology objects with the exception of the Kinematics technology object.

[2] Applies to the Kinematics technology object only.

4.9.11 Technology alarm 811 (S7-1500T)

Alarm response TO[1]: -

Alarm response Kin[2]: Stop with maximum dynamic values of the axes
Restart: Not required

Alarm text	Validity		Remedy
	TO[1]	Kin[2]	
Error when approaching the TCP to an object coordinate system (OCS <number>).	-	✓	• An impermissible motion job for approaching the TCP is being used on the object coordinate system. Use an "MC_MoveLinearAbsolute" or an "MC_MoveCircularAbsolute" job. • The tracking of the OCS with "TrackingState" = "2" and "4" was completed with a Motion Control Instruction "MC_GroupStop" or "MC_GroupInterrupt".

[1] Applies to all technology objects with the exception of the Kinematics technology object.

[2] Applies to the Kinematics technology object only.

4.9.12 Technology alarm 812 (S7-1500T)

Alarm response TO[1]: -
Alarm response Kin[2]: Stop with maximum dynamic values of the axes
Restart: Not required

Alarm text	Validity		Remedy
	TO[1]	Kin[2]	
Error in the treatment of singularities.	-	✓	
The kinematics has reached the singularity.	-	✓	Correct the given path motion with respect to the singularities.
Too many singularities occur in the path command.	-	✓	

[1] Applies to all technology objects with the exception of the Kinematics technology object.

[2] Applies to the Kinematics technology object only.

4.9.13 Technology alarm 820 (S7-1500T)

Alarm response TO[1]: -
Alarm response Kin[2]: Stop with maximum dynamic values of the axes
Restart: Not required

Alarm text	Validity		Remedy
	TO[1]	Kin[2]	
Upper limit of joint traversing range joint <No.> overtraveled.	-	✓	Move the joint back into the joint traversing range via a single-axis job.
Lower limit of joint traversing range joint <No.> overtraveled.	-	✓	

[1] Applies to all technology objects with the exception of the Kinematics technology object.

[2] Applies to the Kinematics technology object only.

4.10 Technology alarms 900 - 903 (S7-1500T)

4.10.1 Technology alarm 900 (S7-1500T)

Alarm response TO[1]: Set leading value invalid
Alarm response Kin[2]: -
Restart: Not required

Alarm text	Validity		Remedy
	TO[1]	Kin[2]	
Leading values invalid.	✓	-	Set a higher tolerance time (<TO>.Parameter.ToleranceTimeExternalLeadingValueInvalid). Check the connection of the interconnected components. Make sure that there is no communication interference. Make sure that the CPUs involved are in RUN operating state.

[1] Applies to all technology objects with the exception of the Kinematics technology object.

[2] Applies to the Kinematics technology object only.

4.10.2 Technology alarm 901 (S7-1500T)

Alarm response TO[1]: Set leading value invalid
Alarm response Kin[2]: -
Restart: Not required

Alarm text	Validity		Remedy
	TO[1]	Kin[2]	
Data transmission error	✓	-	
Reason: Invalid version	✓	-	Check the communication.
Reason: Invalid modulo start value	✓	-	
Reason: Invalid modulo length	✓	-	
Reason: Sign-of-life error	✓	-	
Reason: Invalid position	✓	-	Check the leading value of the leading axis on the other CPU.
Reason: Invalid velocity	✓	-	
Reason: Invalid acceleration	✓	-	

[1] Applies to all technology objects with the exception of the Kinematics technology object.

[2] Applies to the Kinematics technology object only.

4.10.3 Technology alarm 902 (S7-1500T)

Alarm response TO[1]: No reaction
Alarm response Kin[2]: -

Restart: Not required

Alarm text	Validity		Remedy
	TO[1]	Kin[2]	
Leading value accuracy limited.	✓	-	Decrease the configured delay time.

[1] Applies to all technology objects with the exception of the Kinematics technology object.

[2] Applies to the Kinematics technology object only.

4.10.4 Technology alarm 903 (S7-1500T)

Alarm response TO[1]: Set leading value invalid
Alarm response Kin[2]: -
Restart: Required

Alarm text	Validity		Remedy
	TO[1]	Kin[2]	
Modulo settings of the leading axis changed in cyclic operation.	✓	-	The changed modulo settings of the leading axis are only adopted by the leading axis proxy after a restart and a change in the operating state of the CPU. Confirm the alarm by switching the controller off and on and by executing a "MC_Reset" job with "Restart" = TRUE.

[1] Applies to all technology objects with the exception of the Kinematics technology object.

[2] Applies to the Kinematics technology object only.

Error IDs in Motion Control instructions (S7-1500, S7-1500T) 5

Errors in Motion Control instructions are indicated by the "Error" and "ErrorID" output parameters.

Under the following conditions, "Error" = TRUE and "ErrorID" = 16#8xxx are indicated for the Motion Control instruction:

- Illegal status of the technology object, which prevents the execution of the job.
- Invalid parameter assignment of the Motion Control instruction, which prevents the execution of the job.
- As a result of the alarm response for a technology object error.

Error display

If there is a Motion Control instruction error, the "Error" parameter shows the value "TRUE". The cause of the error is given in the "ErrorID" parameter.

Jobs to the technology object are rejected when "Error" = TRUE. Running jobs are not influenced by rejected jobs.

If "Error" = TRUE and "ErrorID" = 16#8001 is indicated during job execution, a technology alarm has occurred. In this case, evaluate the indication of the technology alarm.

If "Error" = "TRUE " is displayed during execution of a "MC_MoveJog" job, the axis is braked and brought to a standstill. In this case, the deceleration configured for the "MC_MoveJog" instruction takes effect.

Acknowledge error

Acknowledging errors in Motion Control instructions is not required.

Restart a job after resolving the error.

5.1 Error IDs 16#0000 - 16#800F (S7-1500, S7-1500T)

ErrorID	Validity		Description	Remedy
	TO[1]	Kin[2]		
16#0000	✓	✓	No error	-
16#8001	✓	✓	A technology alarm (technology object error) occurred while processing the Motion Control instruction.	In the technology data block, an error message is output at the "ErrorDetail.Number" tag. You can find a list of the technology alarms and alarm responses in the section "Overview of the technology alarms (Page 19)".

[1] Applies to all technology objects with the exception of the Kinematics technology object.

[2] Applies to the Kinematics technology object only.

ErrorID	Validity		Description	Remedy
	TO[1]	Kin[2]		
16#8002	✓	-	Invalid specification of the technology object	• Check the specification of the technology object for the "Axis", "Master", "SlaveOutputCam-CamTrackMeasuringInput" or "Cam" parameter. • With "MC_MeasuringInputCyclic": Specify a valid measuring input type for parameter "MeasuringInputType".
	-	✓		Check the specification of the technology object for the "Axis" or "AxesGroup" parameter. You can use a kinematics technology object only for the "AxesGroup" parameter.
16#8003	✓	✓	Invalid velocity specification	Specify a permissible value for the velocity for parameter "Velocity".
	-	✓	Invalid velocity factor	Specify a permissible value for the velocity factor for the "VelocityFactor" parameter.
16#8004	✓	✓	Invalid acceleration specification	Specify a permissible value for the acceleration for the "Acceleration" parameter.
	-	✓	Invalid acceleration factor	Specify a permissible value for the acceleration factor for the "AccelerationFactor" parameter.
16#8005	✓	✓	Invalid deceleration specification	Specify a permissible value for the deceleration for the "Deceleration" parameter.
	-	✓	Invalid deceleration factor	Specify a permissible value for the deceleration factor for the "DecelerationFactor" parameter.
16#8006	✓	✓	Invalid jerk specification	Specify a permissible value for the jerk for parameter "Jerk".
	-	✓	Invalid jerk factor	Specify a permissible value for the jerk factor for the "JerkFactor" parameter.
16#8007	✓	-	Invalid entry Both the "JogForward" and "JogBackward" parameters are set to TRUE at the same time. The axis is braked at the last valid deceleration.	Reset both the "JogForward" parameter and the "JogBackward" parameter.
	✓	-	Invalid direction specification	Specify a permissible value for the direction at the parameter "Direction" or "SyncDirection".
	-	✓		Specify a permissible value for the motion direction for the "DirectionA" parameter.
16#8008	✓	-	Invalid distance specification	Set a permissible distance value for the "Distance" parameter.
	-	✓	Invalid specification of the relative target coordinate	Specify permissible values for the relative target coordinate for the "Distance" parameter.
16#8009	✓	-	Invalid position specification	Set a permissible position value for the "Position" parameter.
	-	✓	Invalid specification of the absolute target coordinate	Specify a permissible value for the absolute target coordinate in the "Position" parameter.

1) Applies to all technology objects with the exception of the Kinematics technology object.

2) Applies to the Kinematics technology object only.

ErrorID	Validity		Description	Remedy
	TO[1]	Kin[2]		
16#800A	✓	-	Invalid operating mode	Specify a permissible operating mode for parameter "Mode".
	-	✓	Invalid mode specification	Specify a permissible value for the mode for the "Mode" parameter.
16#800B	✓	-	Invalid stop mode specifications	Specify a permissible value for the stop mode at the "StopMode" parameter.
16#800C	✓	-	Only one instance of the instruction per technology object is allowed.	• The instruction is called at multiple points in the user program with identical value for parameter "Axis", "Master", "Slave" or "Cam". Ensure that only one instruction with the value for parameter "Axis", "Master", "Slave" or "Cam" is called. • The error message can occur through the DB edit- or functions "Load snapshot as actual values" or "Load start values as actual values". Correct the error of the affected data block technology object by switching the CPU to STOP, re-compiling the affected data block, and loading it into the device.
16#800D	✓	✓	The job is not permitted in the current state. Technology objects are initialized.	When the operating state changes from STOP to RUN, the technology objects are initialized one after the other (STARTUP operating state). Depending on the number of technology objects used, this may take several application cycles. Wait until the initialization of the technology objects is complete. Alternatively, extend the application cycle.
	✓	-	The job is not permitted in the current state. "Restart" is executed.	While a "Restart" is being performed, the technology object cannot perform any jobs. Active jobs on the cam, output cam, cam track or measuring input technology objects were canceled. Wait until the "Restart" of the technology object is complete.
	-	✓		While a restart is being performed, the technology object cannot perform any jobs. Active jobs were canceled. Restarting the kinematics technology object can take up to one second. Wait until the technology object restart is complete.
16#800E	✓	-	If the technology object is enabled, a "Restart" is not possible.	Before a "Restart", deactivate the technology object with "MC_Power.Enable" = FALSE.
16#800F	✓	✓	The job cannot be executed because the technology object is locked.	• Enable the technology object with "MC_Power.Enable" = TRUE. Restart the job. • A "MC_Stop" job is active with "Execute" = TRUE. Reset the job with the parameter "Execute" = FALSE.

1) Applies to all technology objects with the exception of the Kinematics technology object.

2) Applies to the Kinematics technology object only.

5.2 Error IDs 16#8010 - 16#801F (S7-1500, S7-1500T)

ErrorID	Validity		Description	Remedy
	TO[1]	Kin[2]		
16#8010	✓	-	Invalid homing mode for incremental encoder	Absolute encoder adjustment is not possible with an incremental encoder ("Mode" = 6, 7). Technology version ≥ V7.0: Start a homing process for an incremental encoder using parameter "Mode" = 0, 1, 2, 3, 5, 8, 10, 11, 12. Technology version < V7.0: Start a homing process for an incremental encoder using parameter "Mode" = 0, 1, 2, 3, 5, 8, 10, 11, 12, 13.
16#8011	✓	-	Invalid homing mode for absolute encoder	Technology version ≥ V7.0: Start a homing process for an absolute encoder using parameter "Mode" = 0, 1, 2, 3, 5, 8, 10, 11, 12. Technology version < V7.0: Start a homing process for an absolute encoder using parameter "Mode" = 0, 1, 6, 7, 11, 12.
16#8012	✓	-	The job cannot be executed because the axis control panel is active.	Return master control to your user program. Restart the job.
	-	✓	The job cannot be executed because the kinematics control panel is active.	
16#8013	✓	-	The online connection between the CPU and the TIA Portal is down.	Check the online connection to the CPU.
16#8014	✓	✓	No internal job memory available.	The maximum possible number of motion control job has been reached. Reduce the number of jobs to be executed (parameter "Execute" = FALSE).
16#8015	✓	✓	Error acknowledgment with "MC_Reset" is not possible. Error in the configuration of the technology object.	Check the configuration of the technology object.
16#8016	✓	-	The actual values are not valid.	To execute a "MC_Home" or positioning job, the actual values must be valid. Check the status of the actual values. The "<TO>.StatusSensor[1..4].State" tag of the technology object must show the value 2 (valid).
16#8017	✓	-	Illegal value for gear ratio numerator	Specify a permissible value for the gear ratio numerator for parameter "RatioNumerator". Permitted integer values: -2147483648 to 2147483647 (value 0 not permitted)
16#8018	✓	-	Illegal value for gear ratio denominator	Specify a permissible value for the gear ratio denominator for parameter "RatioDenominator". Permitted integer values: 1 to 2147483647

[1] Applies to all technology objects with the exception of the Kinematics technology object.

[2] Applies to the Kinematics technology object only.

ErrorID	Validity		Description	Remedy
	TO[1]	Kin[2]		
16#8019	✓	-	Job cannot be executed. The specified following axis is the original leading value for the synchronous operation chain.	Recursive interconnections are not possible. A leading axis cannot be interconnected as a following axis to its own leading value. Specify a permissible following axis for parameter "Slave".

[1] Applies to all technology objects with the exception of the Kinematics technology object.

[2] Applies to the Kinematics technology object only.

5.3 Error IDs 16#8020 - 16#802F (S7-1500, S7-1500T)

ErrorID	Validity		Description	Remedy
	TO[1]	Kin[2]		
16#8021	✓	-	Illegal value for shift of the leading value range	Specify a permissible value for the shift of the leading value range for parameter "MasterOffset".
16#8022	✓	-	Illegal value for shift of the following value range	Specify a permissible value for the shift of the leading value range for parameter "SlaveOffset".
16#8023	✓	-	Illegal value for scaling of the leading value range	Specify a permissible value for the scaling of the leading value range for parameter "MasterScaling".
16#8024	✓	-	Illegal value for scaling of the following value range	Specify a permissible value for the scaling of the following value range for parameter "SlaveScaling".
16#8026	✓	-	Illegal value for leading value distance	Specify a permissible value for the leading value distance for parameter "MasterStartDistance".
16#8027	✓	-	Illegal value for use of cam	Specify a permissible value for cyclic/acyclic use of the cam for parameter "ApplicationMode".

[1] Applies to all technology objects with the exception of the Kinematics technology object.

[2] Applies to the Kinematics technology object only.

5.4 Error IDs 16#8030 - 16#803F (S7-1500, S7-1500T)

ErrorID	Validity		Description	Remedy
	TO[1]	Kin[2]		
16#8034	✓	-	Illegal value for synchronous position of the leading axis	Specify a permissible value for the synchronous position of the leading axis for parameter "MasterSyncPosition".
16#8035	✓	-	Illegal value for synchronous position of the following axis	Specify a permissible value for the synchronous position of the following axis for parameter "SlaveSyncPosition".
16#8036	✓	-	Invalid value for type of synchronization/desynchronization	Specify a permissible value for the type of synchronization/desynchronization for the "SyncProfileReference" parameter.
16#8037	✓	-	Invalid value for stop position of the following axis	Specify a permissible value for the stop position of the following axis for the "SlavePosition" parameter.

[1] Applies to all technology objects with the exception of the Kinematics technology object.

[2] Applies to the Kinematics technology object only.

5.5 Error IDs 16#8040 - 16#804F (S7-1500, S7-1500T)

ErrorID	Validity		Description	Remedy
	TO[1]	Kin[2]		
16#8040	✓	-	Illegal value for start position of output cam	Specify a permissible value for the start position of the output cam for parameter "OnPosition".
16#8041	✓	-	Illegal value for end position of distance output cam	Specify a permissible value for the end position of the distance output cam for parameter "OffPosition".
16#8042	✓	-	Illegal value for switch-on duration of time-based output cam	Specify a permissible value for the switch-on duration of the time-based output cam for parameter "Duration".
16#8043	✓	-	Illegal value for force/torque limiting	Specify a value within the permissible range at the "Limit" parameter. Permitted integer values: -2147483648 to 2147483648
16#8044	✓	-	The axis is not configured for torque reduction.	Select drive telegram 102, 103, 105 or 106
16#8045	✓	-	The job cannot be executed because a job for traveling to fixed stop is active.	Switchover to non-position-controlled mode is not possible during active travel to fixed stop.
16#8046	✓	-	The "MC_TorqueLimiting" job cannot be deactivated in the "InClamping" state.	Retract the axis and deactivate "MC_TorqueLimiting".
16#8047	✓	-	The motion results in a fixed stop.	Only motions away from the fixed stop are permitted.
16#804A	✓	-	Illegal value for additive torque setpoint	Specify a permissible value for the additive torque setpoint at the "Value" parameter.

[1] Applies to all technology objects with the exception of the Kinematics technology object.

[2] Applies to the Kinematics technology object only.

ErrorID	Validity		Description	Remedy
	TO[1]	Kin[2]		
16#804B	✓	-	Illegal value for torque high limit	Specify a permissible value for the high limit of the torque at the "UpperLimit" parameter.
16#804C	✓	-	Illegal value for torque low limit	Specify a permissible value for the low limit of the torque at the "LowerLimit" parameter.
16#804D	✓	-	The value of the high limit of the torque is less than or equal to the value of the low limit of the torque.	Adapt the values of the "UpperLimit" and "LowerLimit" parameters so that the high limit of the torque is greater than the value of the low limit of the torque.
16#804E	✓	-	The job cannot be executed because a "MC_TorqueLimiting" job is active.	Exit the setting of the high and low torque limits. Restart the "MC_TorqueLimiting" job.
			The job cannot be executed because a "MC_TorqueRange" job is active.	Stop the force/torque limit or fixed stop detection. Restart the "MC_TorqueRange" job.
16#804F	✓	-	The axis is not configured for additional torque values.	Use supplemental telegram 750.

1) Applies to all technology objects with the exception of the Kinematics technology object.

2) Applies to the Kinematics technology object only.

5.6 Error IDs 16#8050 - 16#805F (S7-1500, S7-1500T)

ErrorID	Validity		Description	Remedy
	TO[1]	Kin[2]		
16#8050	✓	-	Illegal encoder number	Technology version < V7.0: MC_SetSensor: At the "Sensor" parameter, enter a permissible number for the encoder. Technology version ≥ V7.0: MC_SetSensor: At the "Sensor" parameter, enter a permissible number (1, 2, 3, 4) for the encoder. MC_Home: At the "Sensor" parameter, enter a permissible number (0, 1, 2, 3, 4) used for an encoder.
16#8051	✓	-	Illegal number of the reference encoder	Specify a permissible number of the reference encoder for parameter "MC_SetSensor.ReferenceSensor". If you call the instruction "MC_SetSensor" with parameter "Mode" = 0, enter a different number for the parameter "ReferenceSensor" than for the parameter "Sensor".
16#8055	✓	-	Bit masking not permitted at "MC_SetAxisSTW"	Non-controllable bits are selected in the "STW1 BitMask" and "STW2 BitMask" bit masks. Only control permissible bits.
16#805A	✓	-	Illegal value of the parameter to be changed	At parameter "ParameterNumber", enter a permissible value for the index of the parameter to be changed.

1) Applies to all technology objects with the exception of the Kinematics technology object.

2) Applies to the Kinematics technology object only.

ErrorID	Validity		Description	Remedy
	TO[1]	Kin[2]		
16#805B	✓	-	Error in the configuration of the hardware limit switch.	Specify a valid tag at the input of the positive/negative HW limit switch.
16#805C	✓	-	Illegal data type of the value to be written.	Specify a valid data type at the parameter "Value".
16#805D	✓	-	• Direct PROFIdrive data connection from axis or external encoder. • Axis is in simulation. • Axis is configured as virtual axis.	Configure the T_i, T_o, T_{DC} communication times only if the PROFIdrive data connection via data block is configured.

[1] Applies to all technology objects with the exception of the Kinematics technology object.

[2] Applies to the Kinematics technology object only.

5.7 Error IDs 16#8060 - 16#806F (S7-1500, S7-1500T)

ErrorID	Validity		Description	Remedy
	TO[1]	Kin[2]		
16#8062	✓	-	Invalid approach value	Specify a permissible approach value for the searched for leading value for parameter "ApproachLeadingValue".
16#8063	✓	-	A valid mapping to the definition range (leading values) does not exist for the specified following value.	• Specify a permissible following value for parameter "FollowingValue". • Ensure that the cam is interpolated ("MC_InterpolateCam.Done" = TRUE, "<TO>.StatusWord.X5 (Interpolated)" = TRUE).
16#8064	✓	-	A valid mapping to the range of the function (following values) does not exist for the specified leading value.	• Specify a permissible leading value for parameter "LeadingValue". • Ensure that the cam is interpolated ("MC_InterpolateCam.Done" = TRUE, "<TO>.StatusWord.X5 (Interpolated)" = TRUE).

[1] Applies to all technology objects with the exception of the Kinematics technology object.

[2] Applies to the Kinematics technology object only.

5.8 Error IDs 16#8070 - 16#807F (S7-1500, S7-1500T)

ErrorID	Validity		Description	Remedy
	TO[1]	Kin[2]		
16#8070	✓	-	Illegal value for leading value shift	Specify a permissible value for the leading value shift for parameter "PhaseShift".
16#8071	✓	-	The job cannot be executed because the axis is not in position-controlled mode.	Activate position-controlled mode.

[1] Applies to all technology objects with the exception of the Kinematics technology object.

[2] Applies to the Kinematics technology object only.

ErrorID	Validity		Description	Remedy
	TO[1]	Kin[2]		
16#8074	✓	-	The job cannot be executed because a "MC_Home" job is active.	During active or passive homing, an encoder switchover is rejected. Wait until the "MC_Home" job is complete. Restart the job.
16#8075	✓	-	The job cannot be executed because no synchronization operation is active on the axis.	Switch on the synchronous operation function. Restart the job.
16#8076	✓	-	The job cannot be executed because synchronization is being simulated at the specified axis.	End the simulation of the synchronous operation. Restart the job.
16#8077	✓	-	The job cannot be executed because no "MC_GearInPos" or "MC_GearIn" job is waiting or active.	Switch on the synchronous operation function. Restart the job. To desynchronize a camming, use the Motion Control instruction "MC_CamOut".
16#8078	✓	-	The job cannot be executed because no "MC_CamIn" job is waiting or active.	Switch on the camming function. Restart the job. To desynchronize gearing, use the Motion Control instruction "MC_GearOut".
16#8079	✓	-	The job cannot be executed because a velocity gearing with "MC_GearInVelocity" is active.	A job to offset the leading or following value is only applicable during an active gearing or camming.
				Following axis is in non-position-controlled operation. Stop velocity gearing and restart "MC_GearInPos" job or "MC_CamIn" job.

1) Applies to all technology objects with the exception of the Kinematics technology object.

2) Applies to the Kinematics technology object only.

5.9 Error IDs 16#8080 - 16#808F (S7-1500, S7-1500T)

ErrorID	Validity		Description	Remedy
	TO[1]	Kin[2]		
16#8080	✓	-	Invalid value for the following value offset	Specify a permissible value for the following value offset for the "Offset" parameter.
16#8081	✓	-	Invalid value for leading value distance	Specify a permissible value for the following value offset for the "OffsetDistance" parameter.
16#8082	✓	-	Invalid value for leading value distance	Specify a permissible value for the leading value offset for parameter "PhasingDistance".
16#8083	✓	-	Invalid value for the type of traversing of the leading/following value offset	Specify a permissible value for the leading value/following value offset shift for parameter "ProfileReference".
16#8084	✓	-	Invalid value for start position	Specify a permissible value for the leading value/following value offset shift for parameter "StartPosition".

1) Applies to all technology objects with the exception of the Kinematics technology object.

2) Applies to the Kinematics technology object only.

ErrorID	Validity		Description	Remedy
	TO[1]	Kin[2]		
16#808A	✓	-	The job for the leading value offset cannot be executed because a following value offset is active on the axis.	Exit the active following value offset via "MC_OffsetAbsolute" or "MC_OffsetRelative". Restart the job.
			The job for the following value offset cannot be executed because a leading value offset is active on the axis.	Exit the active leading value offset via "MC_PhasingAbsolute" or "MC_PhasingRelative". Restart the job.
16#808B	✓	-	The job cannot be executed because no camming is active on the axis.	A "MC_CamIn" job with "SyncProfileReference" = 5 can only be used if the camming is already active.
16#808C	✓	-	Reversing the leading value is not permitted during an active leading value offset or following value offset.	Start the job again after reversing the leading value.

[1] Applies to all technology objects with the exception of the Kinematics technology object.

[2] Applies to the Kinematics technology object only.

5.10 Error IDs 16#80A0 - 16#80AF (S7-1500, S7-1500T)

ErrorID	Validity		Description	Remedy
	TO[1]	Kin[2]		
16#80A1	✓	-	The order cannot be executed because a synchronous operation job is active.	A "MC_Home" job on a following axis is not executed when a "MC_CamIn" or "MC_GearInPos" job is active. Exit the synchronous operation job. Restart the job.
16#80A2	✓	-	• For one-time measuring with measuring range, the measuring range was run without a measuring edge being detected. • The measuring range is invalid with the configured modulo axis settings.	Check and adjust the measuring input and adjust the measuring range positions, if necessary.
16#80A3	✓	-	The measuring input job via PROFIdrive telegram could not be started because a homing job is active.	Simultaneous execution of a homing job and a measuring input job via PROFIdrive telegram is not possible. Wait until the homing job has ended. Restart the measuring job via PROFIdrive telegram.
16#80A5	✓	-	Illegal value for start position of measuring range	Specify a permissible value for the start position of the measuring range for parameter "MC_MeasuringInput.StartPosition" or "MC_MeasuringInputCyclic.StartPosition".
16#80A6	✓	-	Illegal value for end position of measuring range	Specify a permissible value for the end position of the measuring range for parameter "MC_MeasuringInput.EndPosition" or "MC_MeasuringInputCyclic.EndPosition".

[1] Applies to all technology objects with the exception of the Kinematics technology object.

[2] Applies to the Kinematics technology object only.

ErrorID	Validity		Description	Remedy
	TO[1]	Kin[2]		
16#80A7	✓	-	A measurement is performed when measuring with the measuring range, but the calculated position is outside the specified measuring range. The measured value is discarded.	Check and adjust the measuring input and adjust the measuring range positions, if necessary.
16#80A8	✓	-	The job cannot be executed because camming is active on the axis.	An "MC_PhasingRelative" or "MC_PhasingAbsolute" job with "ProfileReference" = 0 can only be used on an active gearing with "MC_GearIn" or "MC_GearInPos" in the "synchronous" status ("MC_GearIn.InGear" = TRUE or "MC_GearInPos.InSync" = TRUE).
16#80A9	✓	-	The job cannot be executed because no synchronous gearing or camming is active on the axis.	A job for leading/following value offset is only applicable to up an active gearing or camming in "synchronous" status ("MC_GearIn.InGear" = TRUE, "MC_GearInPos.InSync" = TRUE or "MC_CamIn.InSync" = TRUE).
16#80AA	✓	-	The cam contains no points or segments and cannot be interpolated.	Fill the cam with points/segments. Restart the job.
16#80AB	✓	-	The cam is currently being used and cannot be interpolated.	End the current use of the cam. Restart the job.
16#80AC	✓	-	The cam contains incorrect points or segments and cannot be interpolated. (for example, the cam contains only one point.)	Fill the cam with permissible points/segments. Restart the job.
16#80AD	✓	-	The specified synchronous position is outside the definition range of the cam.	When "SyncProfileReference" = 0, 1, 2, 3, 5, 6: Specify a permissible synchronous position for parameter "MasterSyncPosition". Restart the job. When "SyncProfileReference" = 4: With the "MasterOffset" parameter, you offset the leading values of the cam or move the leading axis into the definition range of the cam. Restart the job.
16#80AE	✓	-	The job cannot be executed because a kinematic motion is active.	End the current kinematic motion. Restart the job.

1) Applies to all technology objects with the exception of the Kinematics technology object.

2) Applies to the Kinematics technology object only.

5.11 Error IDs 16#80B0 - 16#80BF (S7-1500T)

ErrorID	Validity		Description	Remedy
	TO[1]	Kin[2]		
16#80B1	-	✓	Illegal specification of the coordinate system	Specify a permissible value for the coordinate system for the "CoordSystem" parameter.
16#80B2	-	✓	Illegal specification of the motion transition	Specify a permissible value for the motion transition for the "BufferMode" parameter.

1) Applies to all technology objects with the exception of the Kinematics technology object.

2) Applies to the Kinematics technology object only.

ErrorID	Validity		Description	Remedy
	TO[1]	Kin[2]		
16#80B3	-	✓	Illegal specification of the rounding clearance	Specify a permissible value for the rounding clearance for the "TransitionParameter" parameter.
16#80B4	-	✓	Illegal specification for the joint position range	Specify a permissible value for the joint target position range at the "TurnJoint" parameter.
16#80B5	-	✓	Illegal specification of the dynamic adaptation	Specify a permissible value for the dynamic adaptation for the "DynamicAdaption" parameter.
16#80B6	-	✓	Illegal specification for the definition of the circular path	Specify a permissible value for the definition of the circular path for the "CircMode" parameter.
16#80B7	-	✓	Illegal specification for the circular path auxiliary point	Specify a permissible value for the circular path auxiliary point for the "AuxPoint" parameter.
16#80B8	-	✓	Illegal specification of the target position	Specify a permissible value for the target position for the "EndPoint" parameter.
16#80B9	-	✓	Illegal specification of the orientation of the circular path	Specify a permissible value for the orientation of the circular path for the "PathChoice" parameter.
16#80BA	-	✓	Illegal specification for the main plane of the circular path	Specify a permissible value for the main plane of the circular path for the "CirclePlane" parameter.
16#80BB	-	✓	Illegal radius specification	Specify a permissible value for the radius of the circular path for the "Radius" parameter.
16#80BC	-	✓	Illegal angle specification	Specify a permissible value for the angle of the circular path for the "Arc" parameter.

1) Applies to all technology objects with the exception of the Kinematics technology object.

2) Applies to the Kinematics technology object only.

5.12 Error IDs 16#80C0 - 16#80CF (S7-1500T)

ErrorID	Validity		Description	Remedy
	TO[1]	Kin[2]		
16#80C1	-	✓	Illegal specification of the zone type	Specify a permissible value for the zone type for the "ZoneType" parameter.
16#80C2	-	✓	Illegal specification of the zone position	Specify a permissible value for the zone number for the "ZoneNumber" parameter.
16#80C3	-	✓	Illegal specification of the reference system	Specify a permissible value for the reference system for the "ReferenceSystem" parameter.
16#80C4	-	✓	Illegal coordinate specification	Specify permissible values for the coordinates for the "Frame" parameter.
16#80C5	-	✓	Illegal specification of the zone geometry	Specify a permissible value for the zone geometry for the "GeometryType" parameter.
16#80C6	-	✓	Illegal specification of the geometric parameters	Specify permissible values for the geometric parameters for the "GeometryParameter" parameter.

1) Applies to all technology objects with the exception of the Kinematics technology object.

2) Applies to the Kinematics technology object only.

ErrorID	Validity		Description	Remedy
	TO[1]	Kin[2]		
16#80C7	-	✓	The zone is not defined.	Define a workspace zone using the "MC_DefineWorkspaceZone" job or a kinematics zone using the "MC_DefineKinematicsZone" job.
16#80C8	-	✓	A tool cannot be redefined during a motion.	Exit the active motion. Restart the "MC_DefineTool" job.
	-	✓	An active tool cannot be changed during a motion.	Exit the active motion. Restart the "MC_SetTool" job.
16#80CA	-	✓	Illegal specification of the tool number	Specify a permissible value for the tool number for the "ToolNumber" parameter.
16#80CB	-	✓	Illegal specification of the object coordinate system	Specify a permissible value for the object coordinate system for the "OcsNumber" parameter.
16#80CC	-	✓	The job cannot be executed because a single-axis motion is active at a kinematics axis.	Exit the current single-axis motion. Restart the job.
16#80CD	-	✓	The job cannot be executed because a "MC_GroupStop" job is active.	Set the "MC_GroupStop.Execute" parameter to FALSE. Restart the job.
16#80CE	-	✓	The job sequence is used to capacity.	The maximum possible Motion Control jobs have been transmitted.
16#80CF	-	✓	The kinematics motion cannot be executed.	Configure the kinematics motion within the working range of the kinematics axes.

1) Applies to all technology objects with the exception of the Kinematics technology object.

2) Applies to the Kinematics technology object only.

5.13 Error IDs 16#80D0 - 16#80DF (S7-1500T)

ErrorID	Validity		Description	Remedy
	TO[1]	Kin[2]		
16#80D1	-	✓	Invalid value for the use of the parameter "Position"	At the "PositionMode"parameter, specify a valid value for the use of the "Position" parameter.
16#80D2	-	✓	Illegal value for the target arm positioning space	Enter a permissible value for the target arm positioning space in the "LinkConstellation" parameter.
16#80D3	-	✓	Illegal value for the positions of the kinematics axes	Enter a permissible value for the positions of the kinematics axes at the parameter "AxesPosition".
16#80D4	-	✓	Illegal value for the velocity of the kinematics axes	Specify a permissible value for the velocity of the kinematics axes for the "AxesVelocity" parameter.
16#80D5	-	✓	Illegal value for the acceleration of the kinematics axes	Specify a permissible value for the acceleration of the kinematics axes for the "AxesAcceleration" parameter.
16#80D6	-	✓	An error occurred during the transformation.	Specify permissible values for the transformation.

1) Applies to all technology objects with the exception of the Kinematics technology object.

2) Applies to the Kinematics technology object only.

ErrorID	Validity		Description	Remedy
	TO[1]	Kin[2]		
16#80D7	-	✓	The job on the kinematics transformation cannot be executed.	A "MC_KinematicsTransformation" or "MC_InverseKinematicsTransformation" instruction cannot perform a calculation, when the kinematics moves a tracked OCS or the moving of a tracked OCS is completed. Wait until the current job for the conveyor tracking has been completed and restart the job for the kinematics transformation.
16#80D8	-	✓	Invalid value for the reference coordinate system	Specify a permissible value for the reference coordinate system for the "AxesCoordSystem" parameter.
16#80DA	-	✓	Invalid value parameter "InitialObjectPosition"	Enter permissible values for the frame at the parameter "InitialObjectPosition".
16#80DB	-	✓	Simulation mode of kinematics cannot be ended	Ensure that when you end the simulation, the setpoints of the axis positions on the kinematics technology object match the setpoints of the axis positions on the assigned axes. If you use a modulo axis, make sure that the axis is in the same modulo cycle as at the start time of the simulation.
16#80DC	-	✓	The job cannot be executed, because only one job of this type can be active at the technology object.	Wait until the active job is finished or finish the active job. Restart the job.

1) Applies to all technology objects with the exception of the Kinematics technology object.

2) Applies to the Kinematics technology object only.

5.14 Error IDs 16#80E0 - 16#80EF (S7-1500T)

ErrorID	Validity		Description	Remedy
	TO[1]	Kin[2]		
16#80E0	-	✓	The kinematics motion cannot be executed.	Configure the kinematics motion within the workspace zone of the kinematics.
16#80E1	✓	-	Invalid value for the index of the starting point in the cam	At the "StartPointCam" parameter, specify a valid value for the index of the starting point in the cam.
16#80E2	✓	-	Invalid value for the index of the starting segment in the cam	At the "StartSegmentCam" parameter, specify a valid value for the index of the starting segment in the cam.
16#80E3	✓	-	Invalid value for the index of the starting point in the "ArrayOfPoints".	At the "StartPointArray" parameter, specify a valid value for the index of the starting point in the "ArrayOfPoints".
16#80E4	✓	-	Invalid value for the index of the starting segment in the "ArrayOfSegments".	At the "StartSegmentArray" parameter, specify a valid value for the index of the starting segment in the "ArrayOfSegments".
16#80E5	✓	-	Invalid value for the number of points to be copied	At the "NumberOfPoints" parameter, specify a valid value for the number of points to be copied.

1) Applies to all technology objects with the exception of the Kinematics technology object.

2) Applies to the Kinematics technology object only.

ErrorID	Validity		Description	Remedy
	TO[1]	Kin[2]		
16#80E6	✓	-	Invalid value for the number of segments to be copied	At the "NumberOfSegments"parameter, specify a valid value for the number of segments to be copied.
16#80E7	✓	-	The job cannot be executed because a copy operation is active.	Wait until the active copy operation is completed via "MC_CopyCamData". Restart the job.
16#80E8	✓	-	The job cannot be executed because the cam is being interpolated.	Wait until the interpolation of the cam is completed via "MC_InterpolateCam". Restart the job.
16#80E9	✓	-	Invalid array of points to be copied	At the "ArrayOfPoints" parameter, specify an array of the data type "ARRAY[*] OF TO_Cam_Struct_PointData". Ensure that the "Optimized block access" option is activated under "General > Attributes" in the properties of the data block that contains the array.
16#80EA	✓	-	Invalid array of segments to be copied	At the "ArrayOfSegments" parameter, specify an array of the data type "ARRAY[*] OF TO_Cam_Struct_SegmentData". Ensure that the "Optimized block access" option is activated under "General > Attributes" in the properties of the data block that contains the array.
16#80EB	✓	-	SIMATIC Memory Card has insufficient storage space for the backup file.	Ensure there is sufficient storage space available on the SIMATIC Memory Card used.
16#80EC	✓	-	An error occurred when writing the backup file.	-
16#80ED	✓	-	More than two instances of the "MC_SaveAbsoluteEncoderData" instruction are used in the user program.	Use a maximum of two instances of the "MC_SaveAbsoluteEncoderData" instruction in your user program.
16#80EE	✓	-	Job cannot be executed.	Wait until the current "MC_SaveAbsoluteEncoderData" job has finished with "Done" = TRUE and restart the job.
16#80EF	✓	-	The SIMATIC Memory Card is write-protected.	Deactivate the write protection on your SIMATIC Memory Card.

1) Applies to all technology objects with the exception of the Kinematics technology object.

2) Applies to the Kinematics technology object only.

5.15 Error IDs 16#8FF0 - 16#8FFF (S7-1500, S7-1500T)

ErrorID	Validity		Description	Remedy
	TO[1]	Kin[2]		
16#8FFF	✓	✓	Unspecified error	Contact your local Siemens representative or support center. You will find your contact information for digital industries at: https://www.siemens.com/automation/partner (https://www.siemens.com/automation/partner)

1) Applies to all technology objects with the exception of the Kinematics technology object.

2) Applies to the Kinematics technology object only.

Index

D

Diagnostics
- S7-1500 Motion Control, 15
- S7-1500 Motion Control, 16
- S7-1500 Motion Control, 66

E

ErrorID
- Basics, 66

Error ID, 66

Error IDss
- Basics, 15

Errors in Motion Control instructions, 15, 66

S

S7-1500 Motion Control
- Diagnostics, 15
- Technology alarms, 15
- Technology alarms, 16
- Diagnostics, 16
- Technology alarms, 19
- Diagnostics, 66

S7-1500 Motion Control instruction
- Errors in Motion Control instructions, 15
- Errors in Motion Control instructions, 66

T

Technology alarms
- Basics, 15
- Basics, 16
- List of the technology alarms, 19

SIEMENS

SIMATIC

S7-1500, ET 200MP, ET 200SP

Counting, measurement and position detection

Function manual

Edition 11/2022

siemens.com

SIEMENS

SIMATIC

S7-1500, ET 200MP, ET 200SP, ET 200AL
Counting, measurement and position detection

Function Manual

Preface

Documentation guide 1

The basics of counting, measurement and position detection 2

Using the High_Speed_Counter technology object 3

Using the SSI_Absolute_Encoder technology object 4

Using the module 5

11/2022

A5E32009889-AK

Legal information

Warning notice system

This manual contains notices you have to observe in order to ensure your personal safety, as well as to prevent damage to property. The notices referring to your personal safety are highlighted in the manual by a safety alert symbol, notices referring only to property damage have no safety alert symbol. These notices shown below are graded according to the degree of danger.

⚠ DANGER
indicates that death or severe personal injury **will** result if proper precautions are not taken.

⚠ WARNING
indicates that death or severe personal injury **may** result if proper precautions are not taken.

⚠ CAUTION
indicates that minor personal injury can result if proper precautions are not taken.

NOTICE
indicates that property damage can result if proper precautions are not taken.

If more than one degree of danger is present, the warning notice representing the highest degree of danger will be used. A notice warning of injury to persons with a safety alert symbol may also include a warning relating to property damage.

Qualified Personnel

The product/system described in this documentation may be operated only by **personnel qualified** for the specific task in accordance with the relevant documentation, in particular its warning notices and safety instructions. Qualified personnel are those who, based on their training and experience, are capable of identifying risks and avoiding potential hazards when working with these products/systems.

Proper use of Siemens products

Note the following:

⚠ WARNING
Siemens products may only be used for the applications described in the catalog and in the relevant technical documentation. If products and components from other manufacturers are used, these must be recommended or approved by Siemens. Proper transport, storage, installation, assembly, commissioning, operation and maintenance are required to ensure that the products operate safely and without any problems. The permissible ambient conditions must be complied with. The information in the relevant documentation must be observed.

Trademarks

All names identified by ® are registered trademarks of Siemens AG. The remaining trademarks in this publication may be trademarks whose use by third parties for their own purposes could violate the rights of the owner.

Disclaimer of Liability

We have reviewed the contents of this publication to ensure consistency with the hardware and software described. Since variance cannot be precluded entirely, we cannot guarantee full consistency. However, the information in this publication is reviewed regularly and any necessary corrections are included in subsequent editions.

Siemens AG
Digital Industries
Postfach 48 48
90026 NÜRNBERG
GERMANY

A5E32009889-AK
Ⓟ 10/2022 Subject to change

Copyright © Siemens AG 2013 - 2022.
All rights reserved

Preface

Purpose of the documentation

This documentation supports you in configuring and programming modules for counting and measurement tasks of the S7-1500, ET 200MP and ET 200SP, as well as in position feedback and position input.

Basic knowledge required

The following knowledge is required in order to understand the documentation:

- General knowledge of automation technology
- Knowledge of the industrial automation system SIMATIC
- Knowledge about the use of Windows-based computers
- Proficiency with STEP 7

Scope of the documentation

This documentation applies to the use of the following modules:

- S7-1500 modules
  - TM Count 2x24V (as of firmware version V1.3)
  - TM PosInput 2 (as of firmware version V1.3)
  - TM Timer DIDQ 16x24V
  - CPU 1511C-1 PN
  - CPU 1512C-1 PN
  - DI 32x24VDC HF (as of firmware version V2.2.1)
  - DI 16x24VDC HF (as of firmware version V2.2.0)
  - DI 16xNAMUR HF
  - DI 16x24VDC HS
- SIMATIC Drive Controller
  - CPU 1504D TF
  - CPU 1507D TF

- ET 200SP modules
  - TM Count 1x24V (as of firmware version V1.3)
  - TM PosInput 1 (as of firmware version V1.3)
  - TM Timer DIDQ 10x24V
  - DI 8x24VDC HS
- ET 200AL modules
  - DIQ 16x24VDC/0.5A 8xM12

TM Count, TM PosInput and compact CPU are suitable for complex counting and measuring tasks and for position detection. TM Timer DIDQ and digital modules are suitable for simple counting tasks. SIMATIC Drive Controller is suitable for measuring the number of edge and period durations.

Conventions

Observe notes marked as follows:

Note

The notes contain important information on the product described in the documentation, on the handling of the product or on part of the documentation to which particular attention should be paid.

Recycling and disposal

For environmentally sustainable recycling and disposal of your old equipment, contact a certified electronic waste disposal company and dispose of the equipment according to the applicable regulations in your country.

Additional support

The range of technical documentation for the individual SIMATIC products and automation systems is available on the Internet (http://www.siemens.com/simatic-tech-doku-portal).

Siemens Industry Online Support

You can find current information on the following topics quickly and easily here:

- **Product support**

  All the information and extensive know-how on your product, technical specifications, FAQs, certificates, downloads, and manuals.

- **Application examples**

  Tools and examples to solve your automation tasks – as well as function blocks, performance information and videos.

- **Services**

  Information about Industry Services, Field Services, Technical Support, spare parts and training offers.

- **Forums**

  For answers and solutions concerning automation technology.

- **mySupport**

  Your personal working area in Industry Online Support for messages, support queries, and configurable documents.

This information is provided by the Siemens Industry Online Support in the Internet (https://support.industry.siemens.com).

Industry Mall

The Industry Mall is the catalog and order system of Siemens AG for automation and drive solutions on the basis of Totally Integrated Automation (TIA) and Totally Integrated Power (TIP).

You can find catalogs for all automation and drive products on the Internet (https://mall.industry.siemens.com) and in the Information and Download Center (https://www.siemens.com/automation/infocenter).

Security information

Siemens provides products and solutions with industrial security functions that support the secure operation of plants, systems, machines and networks.

In order to protect plants, systems, machines and networks against cyber threats, it is necessary to implement – and continuously maintain – a holistic, state-of-the-art industrial security concept. Siemens' products and solutions form one element of such a concept.

Customers are responsible for preventing unauthorized access to their plants, systems, machines and networks. Such systems, machines and components should only be connected to an enterprise network or the internet if and to the extent such a connection is necessary and only when appropriate security measures (e.g. firewalls and/or network segmentation) are in place.

For additional information on industrial security measures that may be implemented, please visit (http://www.siemens.com/industrialsecurity).

Siemens' products and solutions undergo continuous development to make them more secure. Siemens strongly recommends that product updates are applied as soon as they are available and that the latest product versions are used. Use of product versions that are no longer supported, and failure to apply latest updates may increase customer's exposure to cyber threats.

To stay informed about product updates, subscribe to the Siemens Industrial Security RSS Feed under (https://www.siemens.com/cert).

Table of contents

Preface ... **3**

1 Documentation guide ... **10**

2 The basics of counting, measurement and position detection ... **14**

2.1 Overview of modules and properties ... 14

2.2 Basics of counting, measuring and position input (TM Count, TM PosInput, Compact CPU) ... 20
2.2.1 Convention ... 20
2.2.2 Overview of applications ... 20
2.2.3 Recording of count signals ... 26
2.2.3.1 Counting with incremental or pulse encoder ... 26
2.2.3.2 Position input with SSI absolute encoder ... 28
2.2.4 Behavior at the counting limits ... 30
2.2.5 Gate control with incremental or pulse encoder ... 32
2.2.5.1 Software gate ... 32
2.2.5.2 Hardware gate ... 32
2.2.5.3 Internal gate ... 33
2.2.5.4 Counter behavior at gate start ... 34
2.2.6 Capture (Latch) ... 35
2.2.6.1 Capture with incremental or pulse encoder ... 35
2.2.6.2 Capture with SSI absolute encoder ... 38
2.2.7 Synchronization ... 40
2.2.7.1 Synchronization by digital input ... 43
2.2.7.2 Synchronization at signal N ... 45
2.2.8 Comparison values ... 48
2.2.8.1 Comparison values and outputs ... 48
2.2.8.2 Switching at comparison values with counter value as reference ... 49
2.2.8.3 Switching at comparison values with position value (SSI absolute value) as reference ... 53
2.2.8.4 Switching at comparison values with measured value as reference ... 57
2.2.9 Measured value determination ... 59
2.2.9.1 Overview of measuring functions ... 59
2.2.9.2 Measured value determination with incremental or pulse encoder ... 60
2.2.9.3 Measured value determination with SSI absolute encoder ... 64
2.2.10 Hysteresis ... 67
2.2.10.1 Hysteresis with incremental or pulse encoder ... 67
2.2.10.2 Hysteresis with SSI absolute encoder ... 69
2.2.11 Interrupts ... 70
2.2.12 Position detection for Motion Control ... 71
2.2.13 Encoder signals ... 72
2.2.13.1 24 V and TTL count signals ... 72
2.2.13.2 RS422 count signals ... 74
2.2.13.3 SSI signals ... 76

2.2.14 Signal evaluation of incremental signals ... 77
2.2.14.1 Overview ... 77
2.2.14.2 Single evaluation ... 77
2.2.14.3 Double evaluation ... 78
2.2.14.4 Quadruple evaluation ... 79
2.2.15 Clock synchronization (TM Count and TM PosInput) ... 80

2.3 Basics of counting (TM Timer DIDQ) ... 82
2.3.1 Overview of applications ... 82
2.3.2 Counting with incremental encoder ... 83
2.3.3 Counting with pulse encoder ... 84
2.3.4 24 V count signals ... 85
2.3.5 Isochronous mode ... 86

2.4 Basics of counting (digital modules) ... 87
2.4.1 Overview of applications ... 87
2.4.2 Counting with pulse encoders ... 88
2.4.3 Behavior at the counting limits ... 89
2.4.4 Gate control ... 91
2.4.4.1 Software gate ... 91
2.4.4.2 Hardware gate ... 91
2.4.4.3 Internal gate ... 92
2.4.4.4 Counting once with hardware gate ... 92
2.4.5 Comparison values ... 94
2.4.6 Interrupts ... 96
2.4.7 24 V count signals ... 97
2.4.8 Isochronous mode ... 97
2.4.9 Counting once with direction setting via digital input ... 98

2.5 Basics of counting (SIMATIC Drive Controller) ... 99
2.5.1 Overview of applications ... 99
2.5.2 Event counter ... 99
2.5.3 Period duration measurement ... 100
2.5.4 Isochronous mode ... 100

3 Using the High_Speed_Counter technology object ... 101

3.1 Convention ... 101

3.2 High_Speed_Counter technology object ... 101

3.3 Overview of the configuration steps ... 102

3.4 Add technology object ... 102

3.5 Configuring the High_Speed_Counter ... 104
3.5.1 Working with the configuration dialog ... 104
3.5.2 Basic parameters ... 106
3.5.3 Counter inputs (High_Speed_Counter) ... 107
3.5.4 Counter behavior ... 112
3.5.4.1 Counting limits and start value ... 112
3.5.4.2 Counter behavior at limits and gate start ... 113
3.5.5 Behavior of a DI (High_Speed_Counter) ... 114
3.5.6 Behavior of a DQ (High_Speed_Counter) ... 119
3.5.7 Specify measured value (High_Speed_Counter) ... 124

3.6 Programming the High_Speed_Counter ... 126
3.6.1 High_Speed_Counter instruction ... 126
3.6.2 Call instruction in the user program ... 127
3.6.3 Description High_Speed_Counter ... 128
3.6.4 High_Speed_Counter input parameters ... 133
3.6.5 High_Speed_Counter output parameters ... 134
3.6.6 High_Speed_Counter static variables ... 136
3.6.7 Error codes of parameter ErrorID ... 138

3.7 Commissioning the High_Speed_Counter ... 140
3.7.1 Commissioning the technology object ... 140

3.8 High_Speed_Counter diagnostics ... 142
3.8.1 Monitoring counter values, measured values, DIs and DQs ... 142

4 Using the SSI_Absolute_Encoder technology object ... 144

4.1 Technology object SSI_Absolute_Encoder ... 144

4.2 Overview of the configuration steps ... 145

4.3 Add technology object ... 146

4.4 Configuring SSI_Absolute_Encoder ... 147
4.4.1 Working with the configuration dialog ... 147
4.4.2 Basic parameters ... 148
4.4.3 SSI absolute encoder ... 149
4.4.4 Behavior of a DI (SSI_Absolute_Encoder) ... 152
4.4.5 Behavior of a DQ (SSI_Absolute_Encoder) ... 154
4.4.6 Specify measured value (SSI_Absolute_Encoder) ... 158
4.4.7 Examples of the frame format ... 160

4.5 Programming the SSI_Absolute_Encoder ... 163
4.5.1 Instruction SSI_Absolute_Encoder ... 163
4.5.2 Call instruction in the user program ... 163
4.5.3 Description SSI_Absolute_Encoder ... 165
4.5.4 Input parameter SSI_Absolute_Encoder ... 168
4.5.5 Output parameter SSI_Absolute_Encoder ... 168
4.5.6 Static tags SSI_Absolute_Encoder ... 170
4.5.7 Error codes of parameter ErrorID ... 171

4.6 Commissioning SSI_Absolute_Encoder ... 172
4.6.1 Commissioning the technology object ... 172

4.7 SSI_Absolute_Encoder diagnostics ... 173
4.7.1 Monitoring counter values, measured values, DIs and DQs ... 173

5 Using the module ... 175

5.1 Using the technology module ... 175
5.1.1 Convention ... 175
5.1.2 Configuring a module ... 175
5.1.2.1 Adding a technology module for hardware configuration (TM Count and TM PosInput) ... 175
5.1.2.2 Adding a technology module to hardware configuration (Compact CPU) ... 176
5.1.2.3 Open hardware configuration ... 177
5.1.2.4 Parameter assignment options ... 177

5.1.2.5 Basic parameters ... 178
5.1.2.6 Additional parameters for Compact CPU ... 188
5.1.2.7 Manual operation (incremental or pulse encoder) ... 190
5.1.2.8 Manual operation (SSI absolute encoder) ... 207
5.1.2.9 Fast Mode (incremental or pulse encoder) ... 218
5.1.2.10 Fast Mode (SSI absolute encoder) ... 230
5.1.3 Online & diagnostics module ... 236
5.1.3.1 Displaying and evaluating diagnostics ... 236
5.1.4 Control and feedback interface (TM Count, TM PosInput) ... 237
5.1.4.1 Assignment of the control interface ... 237
5.1.4.2 Assignment of the feedback interface ... 240

5.2 Using the digital module ... 246
5.2.1 Configuring and assigning parameters to the module ... 246
5.2.1.1 Adding a module to the hardware configuration ... 246
5.2.1.2 Open hardware configuration ... 246
5.2.1.3 Counting operating mode ... 247
5.2.2 Online & diagnostics module ... 252
5.2.2.1 Displaying and evaluating diagnostics ... 252

5.3 Using SIMATIC Drive Controller ... 253
5.3.1 Configuration and parameter assignment of SIMATIC Drive Controller ... 253
5.3.1.1 Adding the SIMATIC Drive Controller to the hardware configuration ... 253
5.3.1.2 Open hardware configuration ... 253
5.3.1.3 Event/period duration measurement operating mode ... 254
5.3.2 Online & diagnostics module ... 255
5.3.2.1 Displaying and evaluating diagnostics ... 255

Index ... 256

Documentation guide

1

The documentation for the SIMATIC S7-1500 automation system, the CPUs 1513/1516pro-2 PN based on SIMATIC S7-1500, and the distributed I/O systems SIMATIC ET 200MP, ET 200SP and ET 200AL is divided into three areas.
This division allows you easier access to the specific information you require.

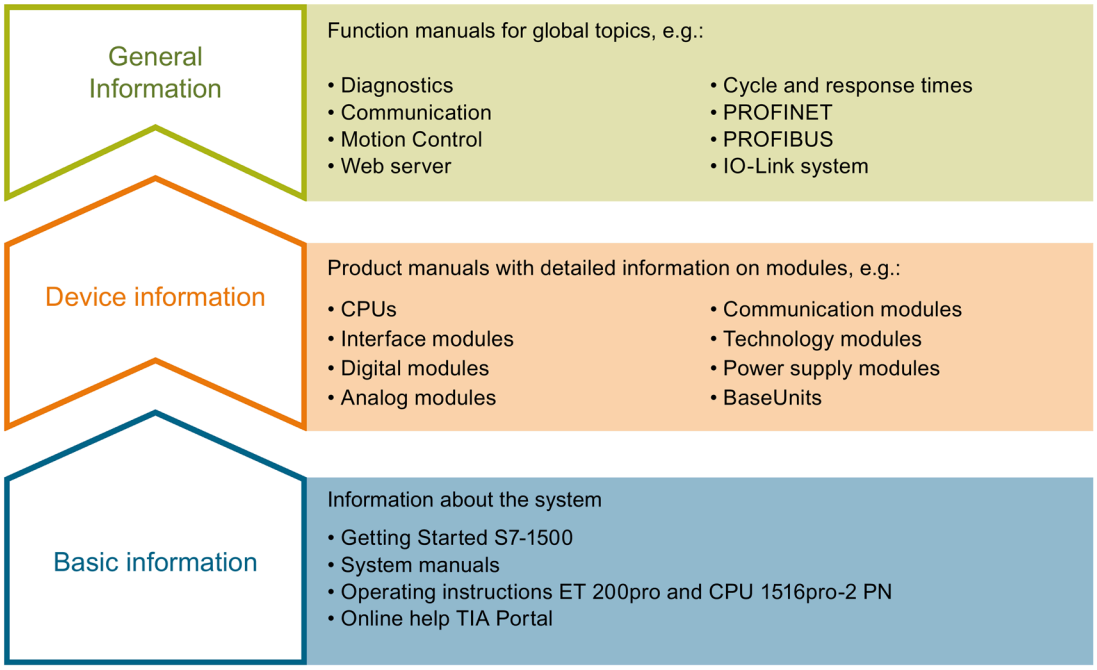

Basic information

System manuals and Getting Started manuals describe in detail the configuration, installation, wiring and commissioning of the SIMATIC S7-1500, ET 200MP, ET 200SP and ET 200AL systems. Use the corresponding operating instructions for the CPUs 1513/1516pro-2 PN. The STEP 7 online help supports you in the configuration and programming.

Device information

Product manuals contain a compact description of the module-specific information, such as properties, terminal diagrams, characteristics and technical specifications.

General information

The function manuals contain detailed descriptions on general topics such as diagnostics, communication, Motion Control, Web server, OPC UA.

You can download the documentation free of charge from the Internet (http://w3.siemens.com/mcms/industrial-automation-systems-simatic/en/manual-overview/Pages/Default.aspx).

Changes and additions to the manuals are documented in product information sheets.

You will find the product information on the Internet:

- S7-1500/ET 200MP (https://support.industry.siemens.com/cs/us/en/view/68052815)
- ET 200SP (https://support.industry.siemens.com/cs/us/en/view/73021864)
- ET 200AL (https://support.industry.siemens.com/cs/us/en/view/99494757)

Manual Collections

The Manual Collections contain the complete documentation of the systems put together in one file.

You will find the Manual Collections on the Internet:

- S7-1500/ET 200MP (https://support.industry.siemens.com/cs/ww/en/view/86140384)
- ET 200SP (https://support.industry.siemens.com/cs/ww/en/view/84133942)
- ET 200AL (https://support.industry.siemens.com/cs/ww/en/view/95242965)

"mySupport"

With "mySupport", your personal workspace, you make the best out of your Industry Online Support.

In "mySupport", you can save filters, favorites and tags, request CAx data and compile your personal library in the Documentation area. In addition, your data is already filled out in support requests and you can get an overview of your current requests at any time.

You must register once to use the full functionality of "mySupport".

You can find "mySupport" on the Internet (https://support.industry.siemens.com/My/ww/en).

"mySupport" - Documentation

With "mySupport", your personal workspace, you make the best out of your Industry Online Support.

In "mySupport", you can save filters, favorites and tags, request CAx data and compile your personal library in the Documentation area. In addition, your data is already filled out in support requests and you can get an overview of your current requests at any time.

You must register once to use the full functionality of "mySupport".

You can find "mySupport" on the Internet.

"mySupport" - CAx data

In the CAx data area of "mySupport", you can access the latest product data for your CAx or CAe system.

You configure your own download package with a few clicks.

In doing so you can select:

- Product images, 2D dimension drawings, 3D models, internal circuit diagrams, EPLAN macro files
- Manuals, characteristics, operating manuals, certificates
- Product master data

You can find "mySupport" - CAx data on the Internet (http://support.industry.siemens.com/my/ww/en/CAxOnline).

Application examples

The application examples support you with various tools and examples for solving your automation tasks. Solutions are shown in interplay with multiple components in the system - separated from the focus on individual products.

You will find the application examples on the Internet (https://support.industry.siemens.com/sc/ww/en/sc/2054).

TIA Selection Tool

With the TIA Selection Tool, you can select, configure and order devices for Totally Integrated Automation (TIA).
This tool is the successor of the SIMATIC Selection Tool and combines the known configurators for automation technology into one tool.
With the TIA Selection Tool, you can generate a complete order list from your product selection or product configuration.

You can find the TIA Selection Tool on the Internet (http://w3.siemens.com/mcms/topics/en/simatic/tia-selection-tool).

SIMATIC Automation Tool

You can use the SIMATIC Automation Tool to perform commissioning and maintenance activities simultaneously on various SIMATIC S7 stations as a bulk operation independent of TIA Portal.

The SIMATIC Automation Tool provides a multitude of functions:

- Scanning of a PROFINET/Ethernet system network and identification of all connected CPUs
- Address assignment (IP, subnet, gateway) and station name (PROFINET device) to a CPU
- Transfer of the date and the programming device/PC time converted to UTC time to the module

- Program download to CPU
- RUN/STOP mode switchover
- CPU localization by means of LED flashing
- Reading out of CPU error information
- Reading of the CPU diagnostics buffer
- Reset to factory settings
- Firmware update of the CPU and connected modules

You can find the SIMATIC Automation Tool on the Internet (https://support.industry.siemens.com/cs/ww/en/view/98161300).

PRONETA

SIEMENS PRONETA (PROFINET network analysis) allows you to analyze the plant network during commissioning. PRONETA features two core functions:

- The topology overview automatically scans the PROFINET and all connected components.
- The IO check is a fast test of the wiring and the module configuration of a plant.

You can find SIEMENS PRONETA on the Internet (https://support.industry.siemens.com/cs/ww/en/view/67460624).

SINETPLAN

SINETPLAN, the Siemens Network Planner, supports you in planning automation systems and networks based on PROFINET. The tool facilitates professional and predictive dimensioning of your PROFINET installation as early as in the planning stage. In addition, SINETPLAN supports you during network optimization and helps you to exploit network resources optimally and to plan reserves. This helps to prevent problems in commissioning or failures during productive operation even in advance of a planned operation. This increases the availability of the production plant and helps improve operational safety.

The advantages at a glance

- Network optimization thanks to port-specific calculation of the network load
- Increased production availability thanks to online scan and verification of existing systems
- Transparency before commissioning through importing and simulation of existing STEP 7 projects
- Efficiency through securing existing investments in the long term and the optimal use of resources

You can find SINETPLAN on the Internet (https://www.siemens.com/sinetplan).

See also

My Documentation Manager (http://support.industry.siemens.com/My/ww/en/documentation)

The basics of counting, measurement and position detection

2

2.1 Overview of modules and properties

Modules for the S7-1500 and ET 200MP systems

The table below summarizes the performance features of the modules for counting, measuring and position input for the S7-1500 and ET 200MP systems.

Property	S7-1500 / ET 200MP			
	Technology module			Digital input module
	TM Count 2x24V	TM PosInput 2	TM Timer DIDQ 16x24V	DI 32x24VDC HF DI 16x24VDC HF
Number of counters	2	2	4[1]	2
Use of counters can be activated/deactivated	—	—	X	X
Maximum signal frequency	200 kHz	1 MHz	50 kHz	3 kHz
Maximum count frequency for incremental encoders with quadruple evaluation (Page 77)	800 kHz	4 MHz	200 kHz	—
Maximum counting range	32 bits (Page 26)	32 bits (Page 26)	32 bits (Page 83)	32 bits (Page 88)
Maximum position value range (Page 28)	—	32 bits	—	—
24 V incremental encoder connection	X (Page 72)	—	X (Page 85)	—
24 V pulse encoder connection	X (Page 72)	—	X (Page 85)	X (Page 97)
RS422/TTL incremental and pulse encoder (Page 74) connection	—	X	—	—
SSI absolute encoder (Page 76) connection	—	X	—	—
Position detection for Motion Control (Page 71)	X	X	—	—
5 V encoder supply	—	X	—	—
24 V encoder supply	X	X	X	—
Number of additional digital inputs per counter	3	2	0	0
Number of physical digital outputs per counter	2	2	0	0
Number of logical digital outputs per counter	2	2	0	1

Property	S7-1500 / ET 200MP			
	Technology module			Digital input module
	TM Count 2x24V	TM PosInput 2	TM Timer DIDQ 16x24V	DI 32x24VDC HF DI 16x24VDC HF
Software gate	X (Page 32)	X (Page 32)	—	X (Page 91)
Hardware gate	X (Page 32)	X (Page 32)	—	—
Capture function (Latch) (Page 35)	X	X	—	—
Synchronization (Page 40)	X	X	—	—
Comparison functions	X (Page 48)	X (Page 48)	—	X (Page 94)
Hysteresis (Page 67)	X	X	—	—
Frequency, velocity and period duration measurement (Page 59)	X	X	—	—
Isochronous mode support	X (Page 80)	X (Page 80)	X (Page 86)	X (Page 97)
Support of diagnostic interrupts for sensor signals	X (Page 70)	X (Page 70)	—	—
Hardware interrupt support	X (Page 70)	X (Page 70)	—	X (Page 96)
Configurable filter for count signals and digital inputs	X	X	—	X

[1] The number of available counters is dependent on the channel configuration. In order to use four counters, you must choose the use of eight inputs in the channel configuration. If you choose the use of three inputs, you can use one counter. Other channel configurations do not allow any counter use.

Property	S7-1500			
	Digital input module		Compact CPU	SIMATIC Drive Controller
	DI 16x24VDC HS	DI 16xNAMUR HF	CPU 1511C-1 PN CPU 1512C-1 PN	CPU 1504D TF CPU 1507D TF
Number of counters	4	4	6	8
Use of counters can be activated/deactivated	X	X	X	X
Maximum signal frequency	20 kHz	20 kHz	100 kHz	32 kHz
Maximum count frequency for incremental encoders with quadruple evaluation (Page 77)	—	—	400 kHz	—
Maximum counting range	32 bits (Page 88)	32 bits (Page 88)	32 bits (Page 26)	Event counter: 16 bits Period duration measurement: 32 bits
24 V incremental encoder connection	—	—	X (Page 72)	—
24 V pulse encoder connection	X (Page 97)	X	X (Page 72)	X (Page 99)

Property	S7-1500			
	Digital input module		Compact CPU	SIMATIC Drive Controller
	DI 16x24VDC HS	DI 16xNAMUR HF	CPU 1511C-1 PN CPU 1512C-1 PN	CPU 1504D TF CPU 1507D TF
Position detection for Motion Control (Page 71)	—	—	X	—

Property	S7-1500			
	Digital input module		Compact CPU	SIMATIC Drive Controller
	DI 16x24VDC HS	DI 16xNAMUR HF	CPU 1511C-1 PN CPU 1512C-1 PN	CPU 1504D TF CPU 1507D TF
24 V encoder supply	X	—	X	Via 24 V supply
NAMUR encoder supply	—	X	—	—
Number of additional digital inputs per counter	2	2	2	0
Number of physical digital outputs per counter	0	0	1	0
Number of logical digital outputs per counter	1	1	2	0
Software gate	X	X	X (Page 32)	—
Hardware gate	X (Page 92)	X (Page 92)	X (Page 32)	—
Capture function (Latch) (Page 35)	—	—	X	—
Synchronization (Page 40)	—	—	X	—
Comparison functions	X (Page 94)	X (Page 94)	X (Page 48)	—
Hysteresis (Page 67)	—	—	X	—
Frequency measurement	—	—	X	—
Period duration measurement	—	—	X	X
Velocity measurement	—	—	X	—
Isochronous mode support	X (Page 97)	X (Page 97)	—	X
Support of diagnostic interrupts for sensor signals	—	—	X (Page 70)	—
Hardware interrupt support	X (Page 96)	X (Page 96)	X (Page 70)	—
Configurable filter for digital inputs	X	X	X	X

Modules for the ET 200SP system

The following table provides an overview of the performance features of the modules for counting, measuring and position input for the ET 200SP system.

Property	ET 200SP			
	Technology module			Digital input module
	TM Count 1x24V	TM PosInput 1	TM Timer DIDQ 10x24V	DI 8x24VDC HS
Number of counters	1	1	3[1]	4
Use of counters can be activated/deactivated	—	—	X	X
Maximum signal frequency	200 kHz	1 MHz	50 kHz	10 kHz
Maximum count frequency for incremental encoders with quadruple evaluation (Page 77)	800 kHz	4 MHz	200 kHz	—
Maximum counting range	32 bits (Page 26)	32 bits (Page 26)	32 bits (Page 83)	32 bits (Page 88)
Maximum position value range (Page 28)	—	32 bits	—	—
24 V incremental encoder connection	X (Page 72)	—	X (Page 85)	—
24 V pulse encoder connection	X (Page 72)	—	X (Page 85)	X (Page 97)
RS422/TTL incremental and pulse encoder (Page 74) connection	—	X	—	—
SSI absolute encoder (Page 76) connection	—	X	—	—
Position detection for Motion Control (Page 71)	X	X	—	—
24 V encoder supply	X	X	X	X
Number of additional digital inputs per counter	3	2	0	1
Number of physical digital outputs per counter	2	2	0	0
Number of logical digital outputs per counter	2	2	0	1
Software gate	X (Page 32)	X (Page 32)	—	X (Page 91)
Hardware gate	X (Page 32)	X (Page 32)	—	X (Page 91)
Capture function (Latch) (Page 35)	X	X	—	—
Synchronization (Page 40)	X	X	—	—
Comparison functions	X (Page 48)	X (Page 48)	—	X (Page 94)
Hysteresis (Page 67)	X	X	—	—
Frequency, velocity and period duration measurement (Page 59)	X	X	—	—

Property	ET 200SP			
	Technology module			Digital input module
	TM Count 1x24V	TM PosInput 1	TM Timer DIDQ 10x24V	DI 8x24VDC HS
Isochronous mode support	X (Page 80)	X (Page 80)	X (Page 86)	X (Page 97)
Support of diagnostic interrupts for sensor signals	X (Page 70)	X (Page 70)	—	—
Hardware interrupt support	X (Page 70)	X (Page 70)	—	—
Configurable filter for count signals and digital inputs	X	X	—	X

[1] One counter for incremental encoder (A, B phase-shifted) and two counters for pulse encoder

Modules for the ET 200AL system

The following table provides an overview of the performance features of the modules for counting, measuring and position input for the ET 200AL system.

Property	ET 200AL
	Digital input/digital output module
	DIQ 16x24VDC/0.5A 8xM12
Number of counters	4
Use of counters can be activated/deactivated	X
Maximum signal frequency	2 kHz
Maximum counting range	32 bits
24 V incremental encoder connection	—
24 V pulse encoder connection	X
24 V encoder supply	X
Number of additional digital inputs per counter	2
Number of physical digital outputs per counter	1
Number of logical digital outputs per counter	1
Software gate	X
Hardware gate	X
Capture function (Latch)	—
Synchronization	—
Comparison functions	X
Frequency, velocity and period duration measurement	—
Isochronous mode support	—
Support of diagnostic interrupts for sensor signals	X
Hardware interrupt support	X
Configurable filter digital inputs	X

2.2 Basics of counting, measuring and position input (TM Count, TM PosInput, Compact CPU)

2.2.1 Convention

Technology module: We use the term "technology module" in this documentation both for the technology modules TM Count and TM PosInput and the technology component of the compact CPUs.

2.2.2 Overview of applications

Introduction

The technology module is configured and assigned parameters using the configuration software.

The operation and control of the technology module functions is effected either via the technology object or through the application program via the control and feedback interface.

System environment for TM Count and TM PosInput

The technology modules can be used in the following system environments:

Application scenarios	Components required	Configuration software	In the user program
Central operation with an S7-1500 CPU or 151xSP CPU	• S7-1500 automation system or ET 200SP CPU • Technology module	STEP 7 (TIA Portal): Operating with "Counting and measurement" technology object • Device configuration with hardware configuration (Page 175) • Parameter setting with High_Speed_Counter (Page 101) or SSI_Absolute_Encoder (Page 144) technology object	For incremental / pulse encoders: High_Speed_Counter instruction for the technology object For SSI absolute encoder: SSI_Absolute_Encoder instruction for the technology object
		STEP 7 (TIA Portal): Position input for "Motion Control" technology object • Device configuration with hardware configuration (Page 175) • Parameter setting with axis and measuring input technology object (Page 181)	Instructions for "Motion Control" technology object
		STEP 7 (TIA Portal): Manual operation (without technology object) • Device configuration and parameter setting (Page 175) with hardware configuration	Direct access to control and feedback interface of the technology module in the I/O data

Application scenarios	Components required	Configuration software	In the user program
Distributed operation with a S7-1500 CPU	• S7-1500 automation system • ET 200 distributed I/O system • Technology module	STEP 7 (TIA Portal): Operating with "Counting and measurement" technology object • Device configuration with hardware configuration (Page 175) • Parameter setting with High_Speed_Counter (Page 101) or SSI_Absolute_Encoder (Page 144) technology object	For incremental / pulse encoders: High_Speed_Counter instruction for the technology object For SSI absolute encoder: SSI_Absolute_Encoder instruction for the technology object
		STEP 7 (TIA Portal): Position input for "Motion Control" technology object • Device configuration with hardware configuration (Page 175) • Parameter setting with axis and measuring input technology object (Page 181)	Instructions for "Motion Control" technology object
		STEP 7 (TIA Portal): Manual operation (without technology object) • Device configuration and parameter setting (Page 175) with hardware configuration	Direct access to control and feedback interface (Page 237) of the technology module in the I/O data
Distributed operation with an S7-1200 CPU	• S7-1200 automation system • ET 200 distributed I/O system • Technology module	STEP 7 (TIA Portal): Device configuration and parameter setting (Page 175) with hardware configuration	Direct access to control and feedback interface (Page 237) of the technology module in the I/O data

Application scenarios	Components required	Configuration software	In the user program
Distributed operation with a S7-300/400 CPU	• S7-300/400 automation system • ET 200 distributed I/O system • Technology module	STEP 7 (TIA Portal): Device configuration and parameter setting (Page 175) with hardware configuration STEP 7: Device configuration and parameter settings with HSP or GSD file	Direct access to control and feedback interface (Page 237) of the technology module in the I/O data
Distributed operation in a third-party system	• Third-party automation system • ET 200 distributed I/O system • Technology module	Third-party configuration software: Device configuration and parameter settings with GSD file	Direct access to control and feedback interface (Page 237) of the technology module in the I/O data

System environment for a Compact CPU

The Compact CPUs can be used in the following system environments:

Application scenarios	Components required	Configuration software	In the user program
Central operation with a S7-1500 Compact CPU	• S7-1500 automation system • Compact CPU	STEP 7 (TIA Portal): Operating with "Counting and measurement" technology object • Device configuration with hardware configuration (Page 175) • Parameter setting with High_Speed_Counter (Page 101) technology object	High_Speed_Counter instruction for the technology object
		STEP 7 (TIA Portal): Position input for "Motion Control" technology object • Device configuration with hardware configuration (Page 175) • Parameter setting with axis and measuring input technology object (Page 181)	Instructions for "Motion Control" technology object
		STEP 7 (TIA Portal): Manual operation (without technology object) • Device configuration and parameter setting (Page 175) with hardware configuration	Direct access to control and feedback interface of the technology module in the I/O data

Parameter assignment options

In an S7-1500 system, you have two options for parameter assignment and control of technology module functions:

- Configuration using the technology object and control using the associated instruction
  Access to the control and feedback interface of the technology module takes place through the technology object.
- Parameter setting via hardware configuration
  The control and feedback interface of the technology module is accessed using direct access to the I/O data.

Configuration via technology object

For central and distributed use, we recommend the convenient, graphics-assisted configuration using a technology object. A detailed description of this configuration can be found in section High_Speed_Counter technology object (Page 101) or SSI_Absolute_Encodertechnology object (Page 144).

You specify the "Operation with technology object "Counting and measuring"" in the device configuration of the technology module: see section Operating mode (Page 180).

You can assign the technology module and counting channel in the basic parameters of the technology object: see section Basic parameters (Page 106).

Parameter setting via hardware configuration

You specify the "Manual operation (without technology object)" in the device configuration of the technology module: see section Operating mode (Page 180).

Additional support for parameter setting via hardware configuration is available in the context-sensitive help for the parameters in STEP 7 (TIA Portal). A description of the control and feedback interface is available in the following sections:

- Assignment of the control interface (Page 237)
- Assignment of the feedback interface (Page 240)

2.2.3 Recording of count signals

2.2.3.1 Counting with incremental or pulse encoder

Counting refers to the recording and adding up of events. The counters of the technology modules capture and evaluate pulse and incremental signals. The count direction can be specified using encoder or pulse signals or through the user program.

You can control counting processes using the digital inputs of the technology module. You can switch the digital outputs exactly at defined counter values, regardless of the user program.

You can configure the response of the counters using the functionalities described below.

Counter limits

The counter limits define the counter value range used. The counter limits are configurable and can be modified during runtime using the user program.

The highest counter limit that can be set is 2147483647 (2^{31}–1). The lowest counter limit that can be set is –2147483648 (–2^{31}).

You can configure the response of the counter at the counter limits:

- Continue or stop counting upon violation of a counter limit (automatic gate stop)
- Set counter value to start value or to opposite counter limit upon violation of a counter limit

Start value

You can configure a start value within the counter limits. The start value can be modified during runtime by the user program.

The technology module can, as configured, set the current counter value to the start value upon synchronization, upon Capture function activation, upon violation of a counter limit or when the gate is opened.

Gate control

Opening and closing the hardware gate and software gate defines the period of time during which the counting signals are captured.

The hardware gate is controlled externally via a digital input of the technology module. The software gate is controlled via the user program. The hardware gate can be enabled through parameter assignment. The software gate (bit in the control interface of the cyclic I/O data) cannot be disabled.

Capture (Latch)

You can configure an external reference signal edge that triggers the saving of the current counter value or position value as a Capture value. The following external signals can trigger the Capture function:

- Rising or falling edge of a digital input
- Both edges of a digital input
- Rising edge of the N signal at the encoder input

When using a digital input, you can specify whether counting is to continue from the current counter value or from the start value after the Capture function. When using the rising edge of the N signal at the encoder input, counting is to continue from the current counter value after the Capture function. The use of a digital input and the use of the N signal are not mutually exclusive for the Capture function.

The parameter "Frequency of the Capture function" determines if the function is executed for each configured edge or only once after each enable.

Measuring input

If you use the position input for Motion Control (Page 71), you can use the "Measuring input" technology object to execute a measuring input function with a hardware digital input.

Synchronization

You can configure an external reference signal edge to load the counter with the specified start value. The following external signals can load the counter with the start value:

- Rising or falling edge of a digital input
- Rising edge of signal N at the encoder input
- Rising edge of signal N at the encoder input depending on the level of the assigned digital input

The parameter "Frequency of synchronization" determines whether the function is executed for each configured edge or only once after each enable.

Hysteresis

You can specify hysteresis for the comparison values, within which a digital output is prevented from switching again. An encoder can come to a standstill at a specific position, and slight movements may make the counter value fluctuate around this position. If a comparison value or a counting limit lies within this fluctuation range, the corresponding digital output will be switched on and off with corresponding frequency if hysteresis is not used. The hysteresis prevents these unwanted switching operations.

2.2.3.2 Position input with SSI absolute encoder

Description

You can use the TM PosInput technology modules with an SSI absolute encoder for position detection. The technology module reads the position value via a synchronous serial interface from the SSI absolute encoder and makes it available to the controller.

You can switch the digital outputs of the technology module exactly at defined position values, regardless of the user program. Position input with an SSI absolute encoder does not involve gate control. Due to system constraints, synchronization is not possible with an SSI absolute encoder.

Gray- and dual-code

Gray-code and dual-code SSI absolute encoders are supported.

Capture (Latch)

You can configure one or both edges of a digital input that triggers a saving of the current position value as Capture value.

The parameter "Frequency of the Capture function" determines if the function is executed for each configured edge or only once after each enable.

Measuring input

If you use the position input for Motion Control (Page 71), you can use the "Measuring input" technology object to execute a measuring input function with a hardware digital input.

Hysteresis

You can specify hysteresis for the comparison values, within which a digital output is prevented from switching again. An encoder can come to a standstill at a specific position, and slight movements may make the position value fluctuate around this position. If a comparison value or a limit lies within this fluctuation range, the corresponding digital output is switched on and off with corresponding frequency if hysteresis is not used. The hysteresis prevents these unwanted switching operations.

Range for position value

You can specify a frame length of 10 bits to 40 bits for the SSI absolute encoder. The configurable bit numbers of the LSB and the MSB of the position value in the frame define the value range. The technology module can read a position value with a maximum length of 32 bits and communicate it to the controller.

If you use an encoder with a position value length of up to 31 bits, the position value is handled unsigned as a positive value and can assume values between 0 and $2^{(MSB-LSB+1)}-1$. If you use an encoder with a position value length of 32 bits, the MSB of the position value corresponds to the sign and the position value can assume values between –2147483648 and 2147483647. If you use a 32 bit position value for the comparison function, the position value is interpreted as DINT.

Complete SSI frame

Instead of having a measured variable returned, you can choose to have the least significant 32 bits of the current unprocessed SSI frame returned. This provides you with encoder-specific additional bits, such as error bits, in addition to the position value. If the SSI frame is shorter than 32 bits, the complete SSI frame is returned right-aligned and the top unused bits are returned with "0" in the feedback interface.

2.2.4 Behavior at the counting limits

Violation of a counting limit

The high counting limit is violated when the current counter value is equal to the high counting limit and another upward count pulse is received. The counter low limit is violated when the current counter value is equal to the counter low limit and another downward count pulse is received.

The appropriate status bit is set in the feedback interface in the event of limit violation:

Counting limit violated	Status bit
High counting limit	EVENT_OFLW is set
Low counting limit	EVENT_UFLW is set

You can reset the status bits with RES_EVENT .

You can configure whether or not and from which counter value counting is to continue following counting limit violation.

Note

The high counting limit and the start value define the value range of the counter:

Value range of the counter = (high limit – start value) + 1

Examples

The figure below shows an example for terminating the counting process (automatic gate stop) after an overflow and setting the counter to the start value:

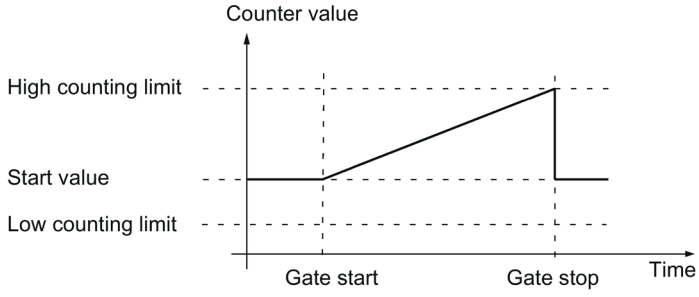

The figure below shows an example for continuing the counting process after an overflow and setting the counter to the start value:

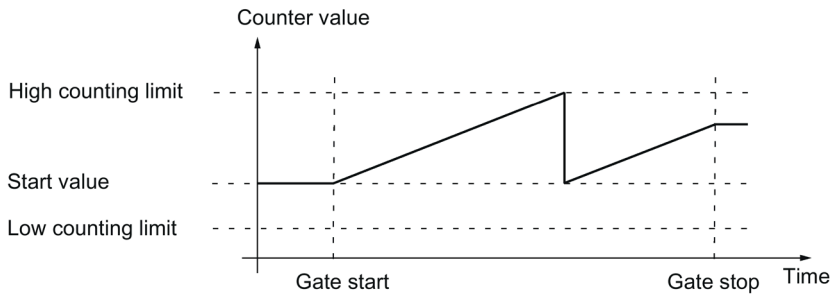

The figure below shows an example for terminating counting after an overflow and setting the counter to the opposite counting limit:

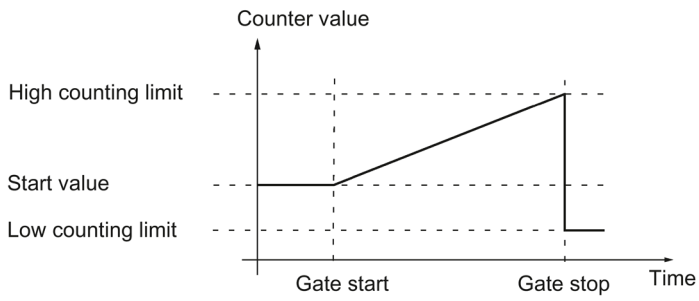

The figure below shows an example for continuing the counting process after an overflow and setting the counter to the opposite counting limit:

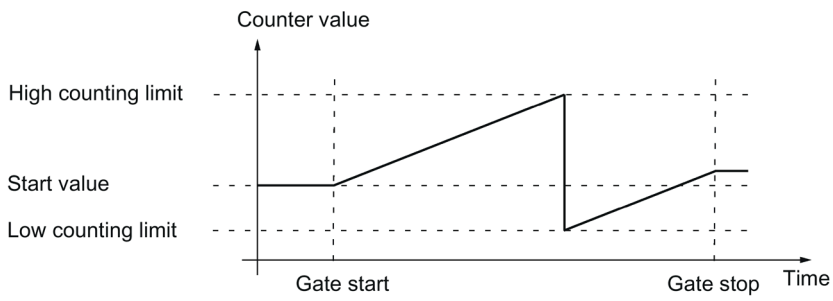

2.2.5 Gate control with incremental or pulse encoder

Many applications require counting processes to be started or stopped in accordance with other events. In such cases, counting is started and stopped using the gate function.

The technology modules have two gates for each channel. These define the resulting internal gate:

- Software gate
- Hardware gate

2.2.5.1 Software gate

The software gate of the channel is opened and closed with the control bit (Page 237) SW_GATE. The status of the software gate is indicated by the feedback bit (Page 240) STS_SW_GATE .

2.2.5.2 Hardware gate

The hardware gate is optional. You open and close the hardware gate by means of signals at the configured digital inputs of the channel.

Note

The configured input filters delay the control signal of the digital input.

The status of a DIm digital input is indicated by the respective feedback bit (Page 240) STS_DIm .

Level-triggered opening and closing of the hardware gate with a digital input

The figure below shows an example of level-triggered opening and closing with a digital input. The digital input is configured to be active with high level:

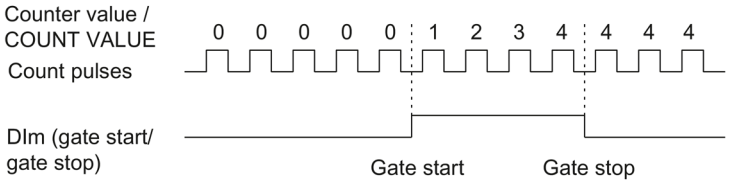

As long as the digital input is active, the hardware gate is open and the count pulses are counted. The hardware gate is closed when the digital input becomes inactive. The counter value stays constant and ignores any further count pulses.

Edge-triggered opening and closing of the hardware gate with two digital inputs

The figure below shows an example of opening and closing with two digital inputs. The two digital inputs are configured so that the rising edge is evaluated:

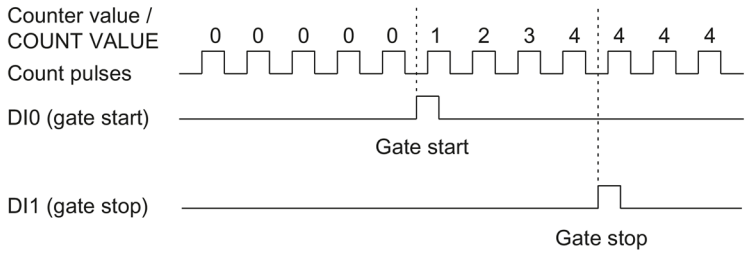

The hardware gate is opened with the configured edge at the digital input that is configured for opening. The hardware gate is closed with the configured edge at the digital input that is configured for closing.

2.2.5.3 Internal gate

Internal gate

The internal gate is open if the software gate is open and the hardware gate is open or has not been configured. The status of the internal gate is indicated by the feedback bit (Page 240) STS_GATE.

If the internal gate is open, counting is started. If the internal gate is closed, all other count pulses are ignored and counting is stopped.

If you want to control a counting process with the hardware gate only, the software gate must be open. If you do not configure a hardware gate, the hardware gate is considered to be always open. In this case, you open and close the internal gate with the software gate only.

Hardware gate	Software gate	Internal gate
Open/not configured	open	open
Open/not configured	closed	closed
closed	open	closed
closed	closed	closed

When you configure the counter behavior, you can specify whether the counting process is to start from the start value or from the current counter value when the internal gate is opened.

The internal gate can also be automatically closed upon violation of a counting limit. The software or hardware gate must then be closed and reopened to continue counting.

2.2.5.4 Counter behavior at gate start

You have the following configuration options for counter behavior upon gate start:

- Setting counter to start value
- Continuing with the current counter value

Setting counter to start value

Counter behavior is as follows for this configuration:

Each counting process starts with the start value when the internal gate is opened.

The figure below shows an example for continuing the counting process after counter is set to the start value:

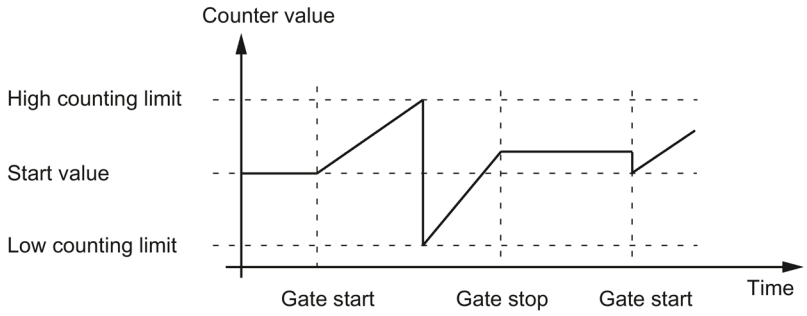

Continuing with the current counter value

Counter behavior is as follows for this configuration:

Each counting process starts from the current counter value after the internal gate is reopened.

The figure below shows an example for continuing the counting process with the current counter value:

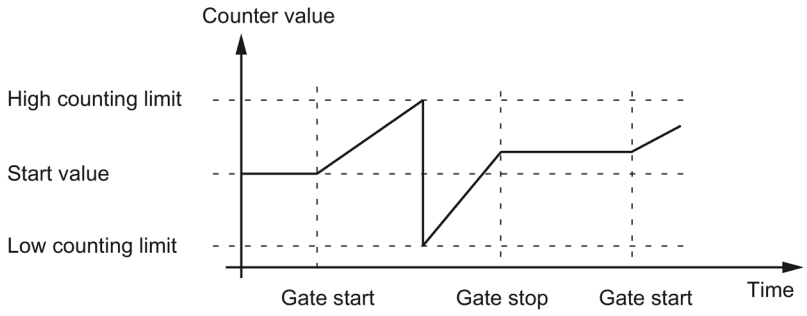

2.2.6 Capture (Latch)

2.2.6.1 Capture with incremental or pulse encoder

Description

The "Capture" function is used to save the current counter value with an external reference signal. You can configure the Capture function for the following reference signals:

- Rising or falling edge at a digital input
- Rising and falling edge at a digital input
- Rising edge of signal N at the encoder input

Function principle

The Capture value is always the exact counter value at the time of the respective edge (delayed by the configured input filter time). The Capture function is effective regardless of the status of the internal gate. The unchanged counter value is saved when the gate is closed.

The figure below shows an example of the Capture function with the following configuration:

- Start value = 0
- Capture event upon rising edge at configured digital input
- Set counter to start value at gate start
- Continue counting after Capture event

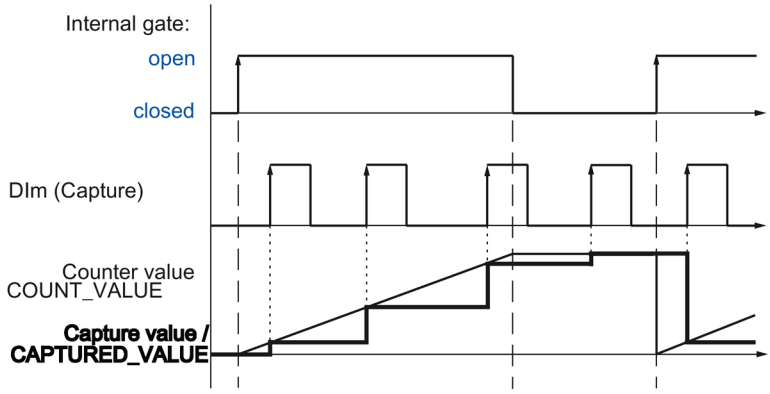

The figure below shows another example of the Capture function with the following configuration:

- Start value = 0
- Capture event upon rising edge at configured digital input
- Set counter to start value at gate start
- Reset counter value to start value after Capture event and continue counting.

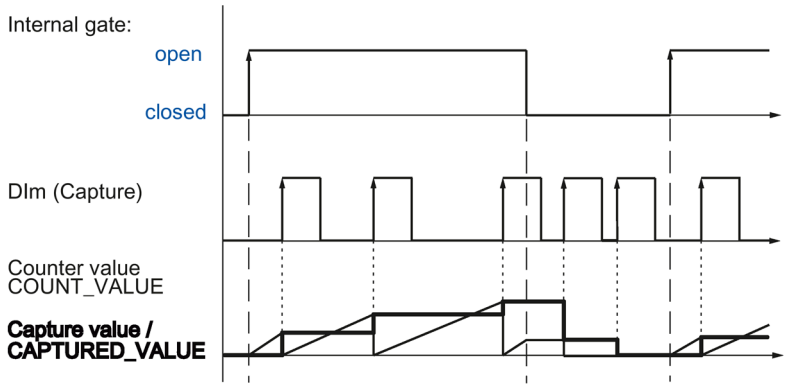

The control bit (Page 237) EN_CAPTURE is used to enable the Capture function. The feedback bit (Page 240) EVENT_CAP indicates that a counter value has been saved as a Capture in the feedback interface. If you reset EN_CAPTURE, EVENT_CAP is also reset. The status of a digital input is indicated by the respective feedback bit (Page 240) STS_DIm .

The figure below shows an example of the EN_CAPTURE and EVENT_CAP bits with use of the one-time Capture function by the rising edge at a digital input:

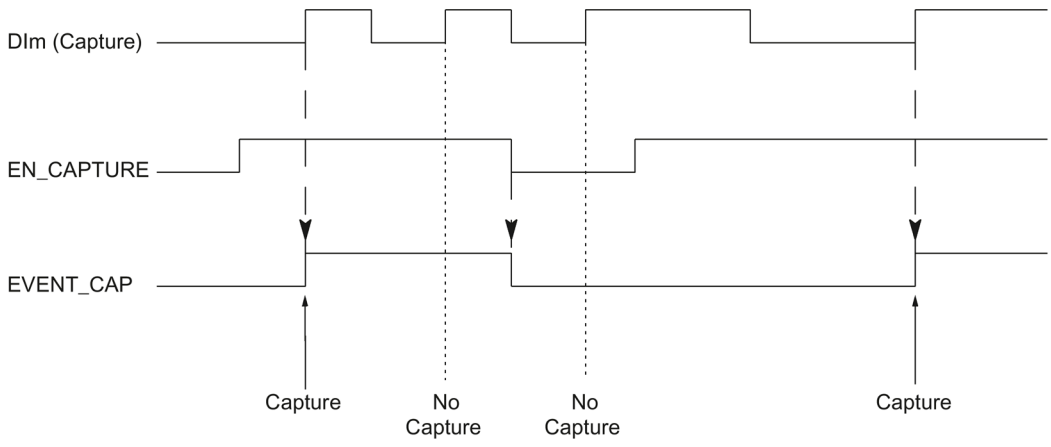

The figure below shows an example of the EN_CAPTURE and EVENT_CAP bits with use of the periodic Capture function by the rising edge at a digital input:

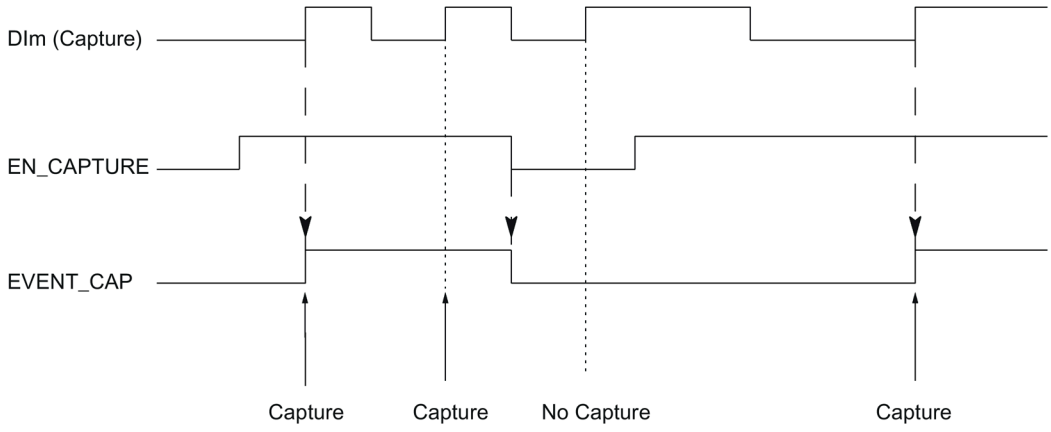

Note

The configured input filters delay the control signal of the corresponding digital input.

The Capture function has no effect on the feedback bit STS_CNT and the LEDs UP and DN.

Hardware interrupt

You can configure a hardware interrupt for the Capture function. If the hardware interrupts are triggered more quickly by the system than they can be acknowledged, hardware interrupts are lost and the "Hardware interrupt" diagnostics interrupt is signaled.

2.2.6.2 Capture with SSI absolute encoder

Description

The "Capture" function is used to save the current position value using an external reference signal. You can configure the Capture function for the following reference signals:

- Rising **or** falling edge at a digital input
- Rising **and** falling edge at a digital input

Function principle

At the time of each edge, the position value of the last valid SSI frame is stored in the Capture value.

The figure below shows an example of the Capture event by a rising edge at the configured digital input:

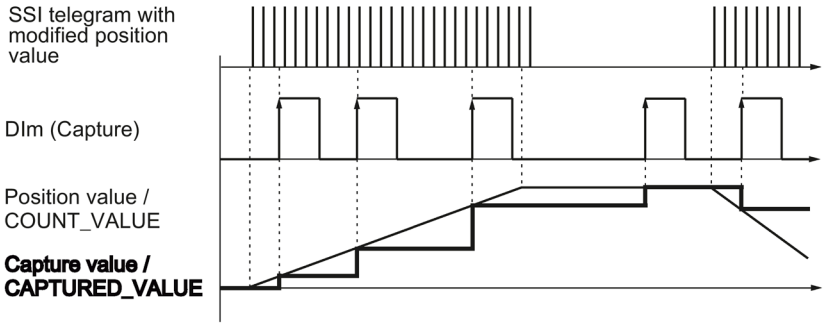

The control bit (Page 237) EN_CAPTURE is used to enable the Capture function. The feedback bit (Page 240) EVENT_CAP indicates that a position value has been saved as Capture value in the feedback interface. If you reset EN_CAPTURE, EVENT_CAP is also reset. The status of a digital input is indicated by the respective feedback bit (Page 240) STS_DIm .

The figure below shows an example of the EN_CAPTURE and EVENT_CAP bits with use of the one-time Capture function by the rising edge at a digital input:

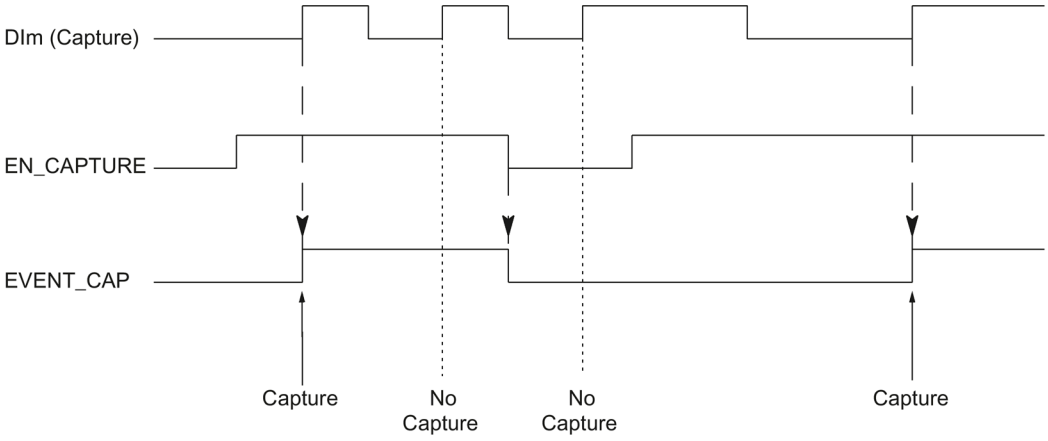

The figure below shows an example of the EN_CAPTURE and EVENT_CAP bits with use of the periodic Capture function by the rising edge at a digital input:

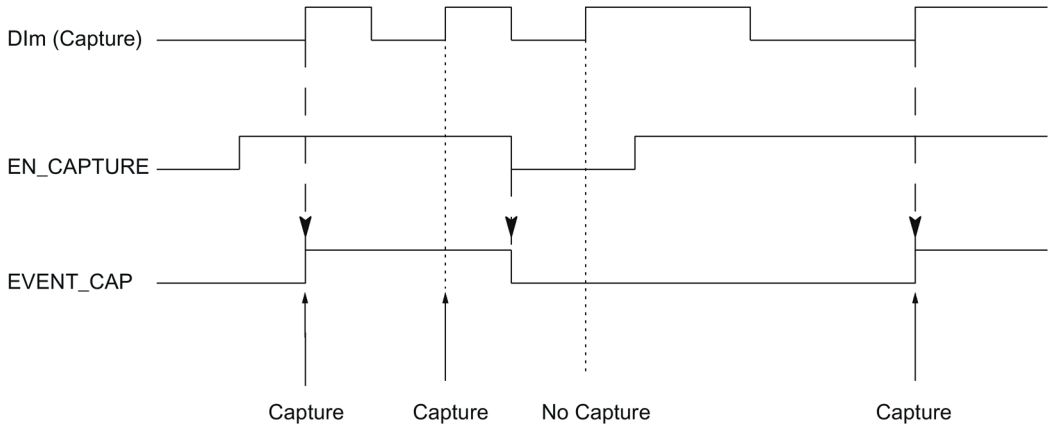

Note

The configured input filters delay the control signal of the corresponding digital input.

Hardware interrupt

You can configure a hardware interrupt for the Capture function. If the hardware interrupts are triggered more quickly by the system than they can be acknowledged, hardware interrupts are lost and the "Hardware interrupt" diagnostics interrupt is signaled.

2.2.7 Synchronization

Description

You use the "Synchronization" function to set the counter to the pre-defined start value with an external reference signal. You can configure synchronization for the following reference signals:

- Rising or falling edges at a digital input
- Rising edge of signal N at the encoder input
- Rising edge of signal N at the encoder input defined by the level of a digital input

Function principle

Synchronization always takes place exactly at the time of the reference signal. Synchronization is effective regardless of the status of the internal gate.

You use the control bit (Page 237) EN_SYNC_UP to enable synchronization for counting in an up direction. Use the control bit (Page 237) EN_SYNC_DN to enable synchronization for counting down. The feedback bit (Page 240) EVENT_SYNC indicates that synchronization has been performed. Resetting EN_SYNC_UP or EN_SYNC_DN also resets EVENT_SYNC.

Note

The configured input filters delay the control signal of the corresponding digital input.

Synchronization has no effect on the feedback bit (Page 240) STS_CNT.

Single synchronization

The figure below shows an example of the EN_SYNC_UP, EN_SYNC_DN and EVENT_SYNC bits with single synchronization by an edge at a digital input for count pulses in an up direction:

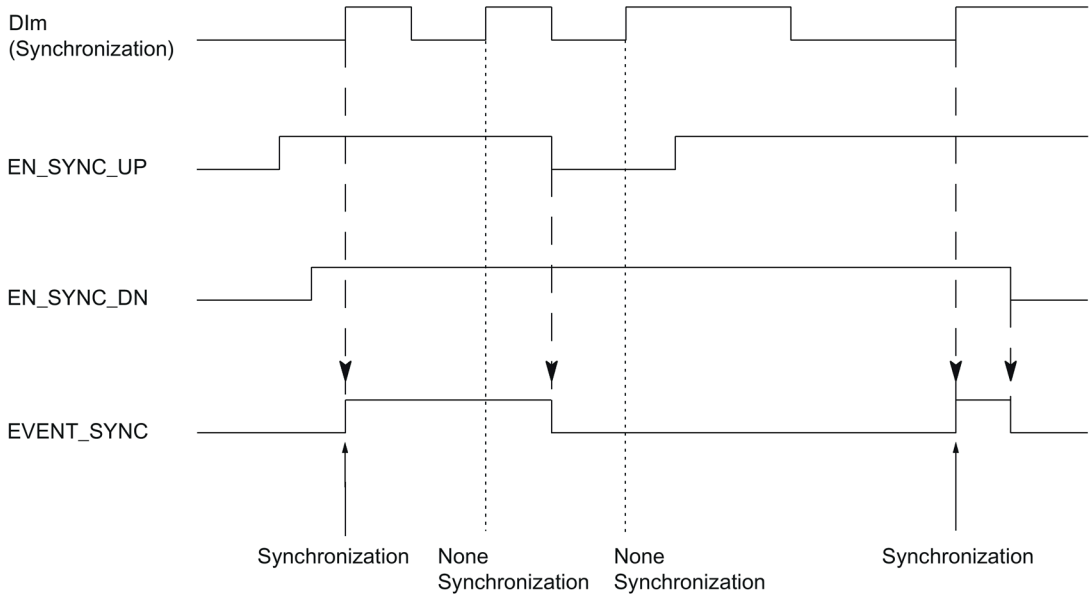

After synchronization is enabled for counting in an up direction, the counter is synchronized at the first rising edge at the configured digital input. The counter can only be synchronized again once the control bit (Page 237) EN_SYNC_UP has been reset and set again.

Periodic synchronization

The figure below shows an example of the EN_SYNC_UP, EN_SYNC_DN and EVENT_SYNC bits with periodic synchronization by an edge at a digital input for count pulses in an up direction:

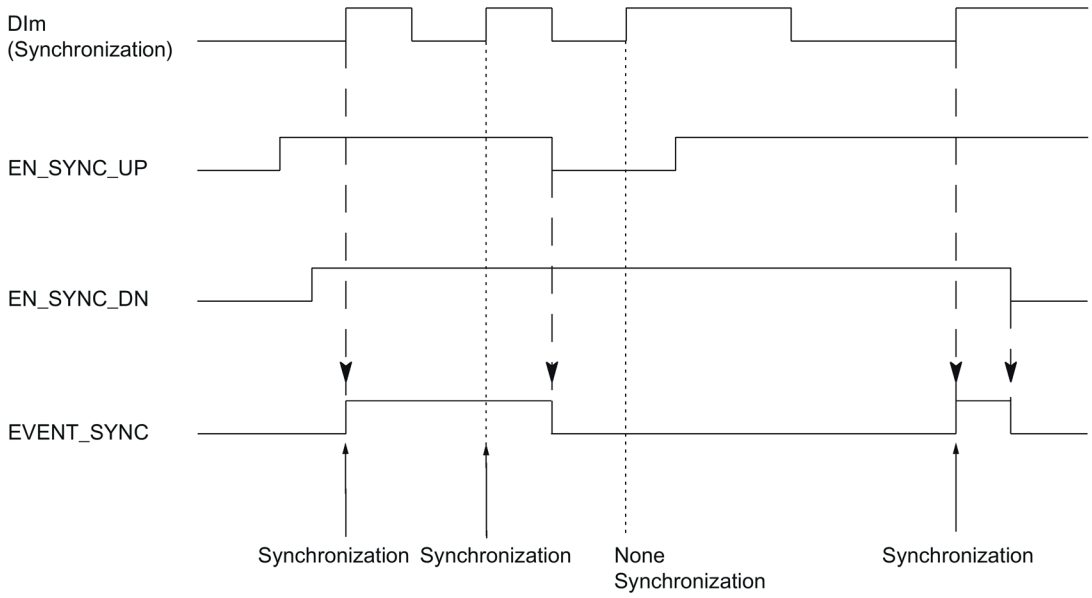

As long as synchronization for counting in an up direction is enabled, the counter is synchronized at each rising edge at the configured digital input.

Hardware interrupt

You can configure a hardware interrupt for the synchronization. If the hardware interrupts are triggered more quickly by the system than they can be acknowledged, hardware interrupts are lost and the "Hardware interrupt" diagnostic interrupt is signaled.

2.2.7.1 Synchronization by digital input

You can trigger synchronization by edges at a digital input.

Single synchronization

The figure below shows an example for single synchronization by an edge at a digital input:

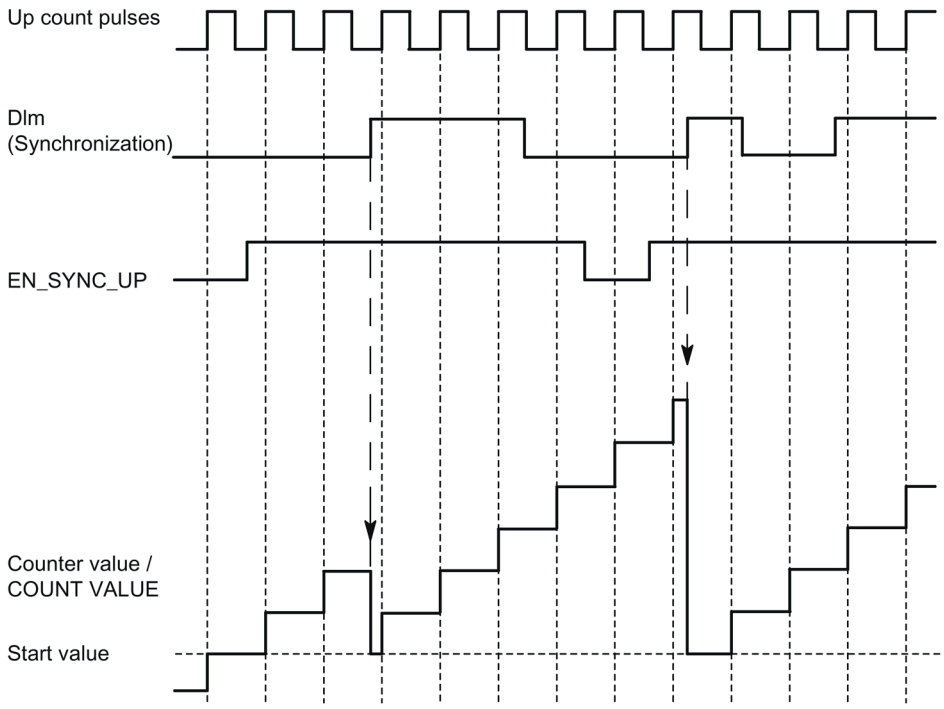

After synchronization is enabled for counting in an upwards direction, the counter is synchronized at the first rising edge at the configured digital input. Until the control bit (Page 237) EN_SYNC_UP has been reset and set again, any additional rising edge at the digital output is ignored. The counter can then be synchronized again.

Periodic synchronization

The figure below shows an example for periodic synchronization by an edge at a digital input:

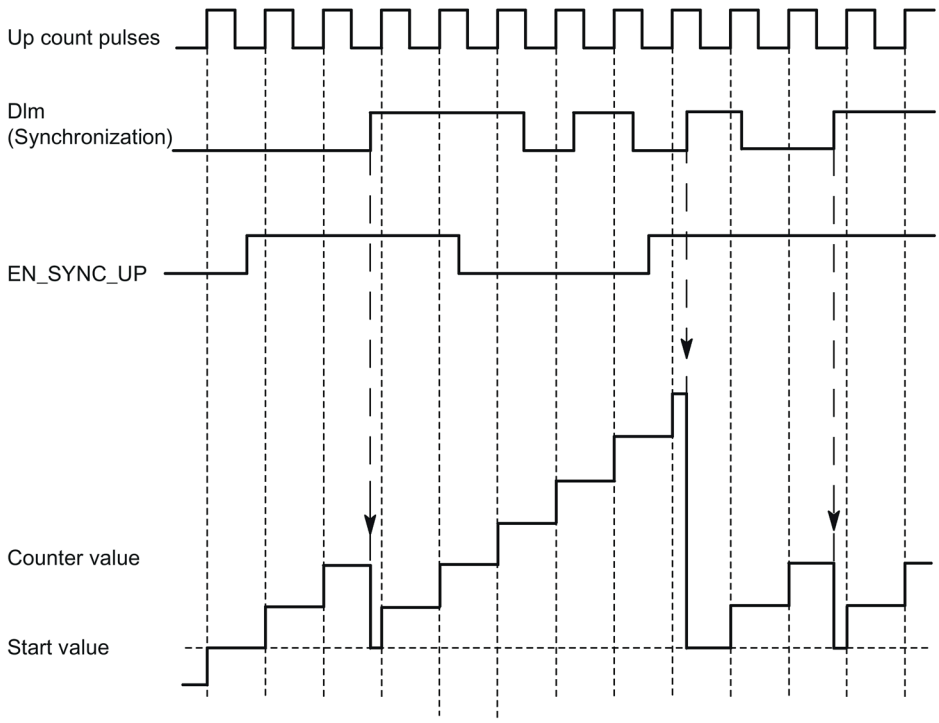

As long as synchronization for counting in an upwards direction is enabled, the counter is synchronized at each rising edge at the configured digital input.

2.2.7.2 Synchronization at signal N

You can trigger synchronization at signal N at the encoder input either directly or depending on the status of a digital input.

Single synchronization

The figure below shows an example of single synchronization at signal N (not dependent on a digital input):

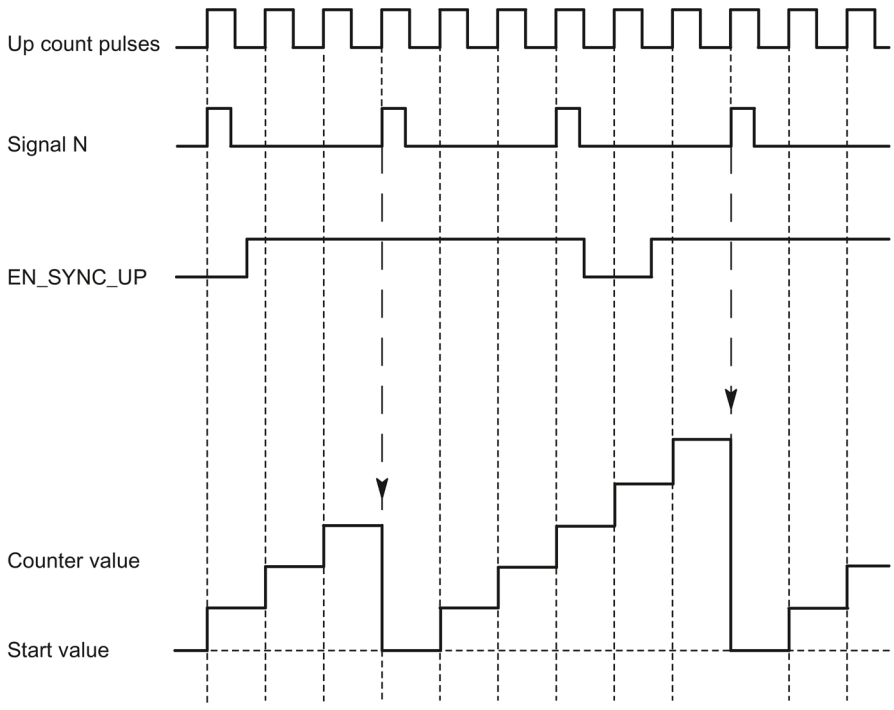

After synchronization is enabled for counting in an upwards direction, the counter is synchronized at the first signal N. After resetting and setting the control bit (Page 237) EN_SYNC_UP once again, the counter can be synchronized again.

Periodic synchronization

The figure below shows an example for periodic synchronization at signal N:

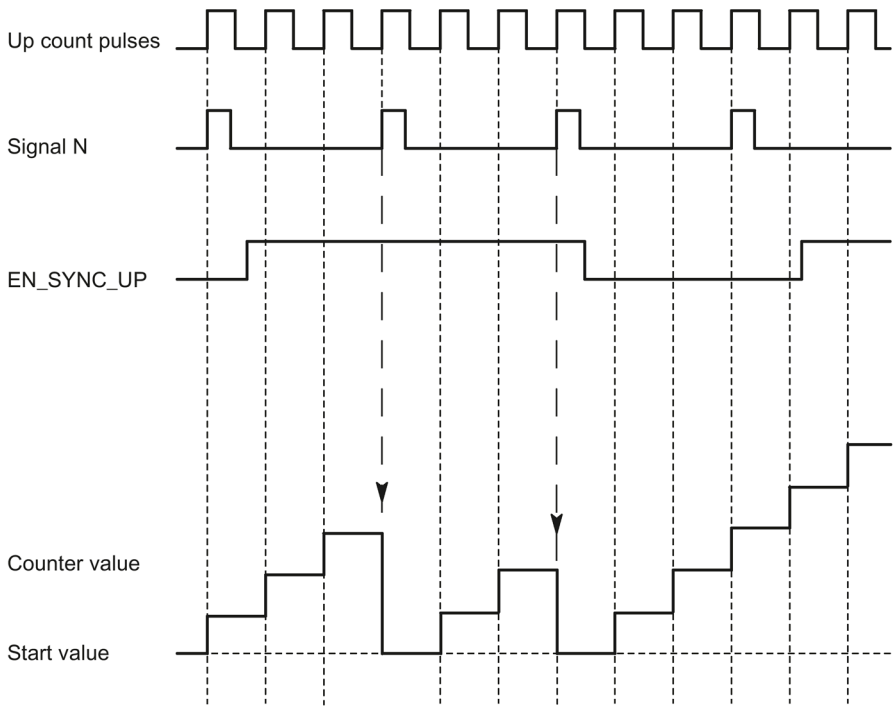

As long as synchronization for counting in an upwards direction is enabled, the counter is synchronized at each signal N.

Enable by a digital input

The figure below shows an example for periodic synchronization at signal N depending on the status of a digital input:

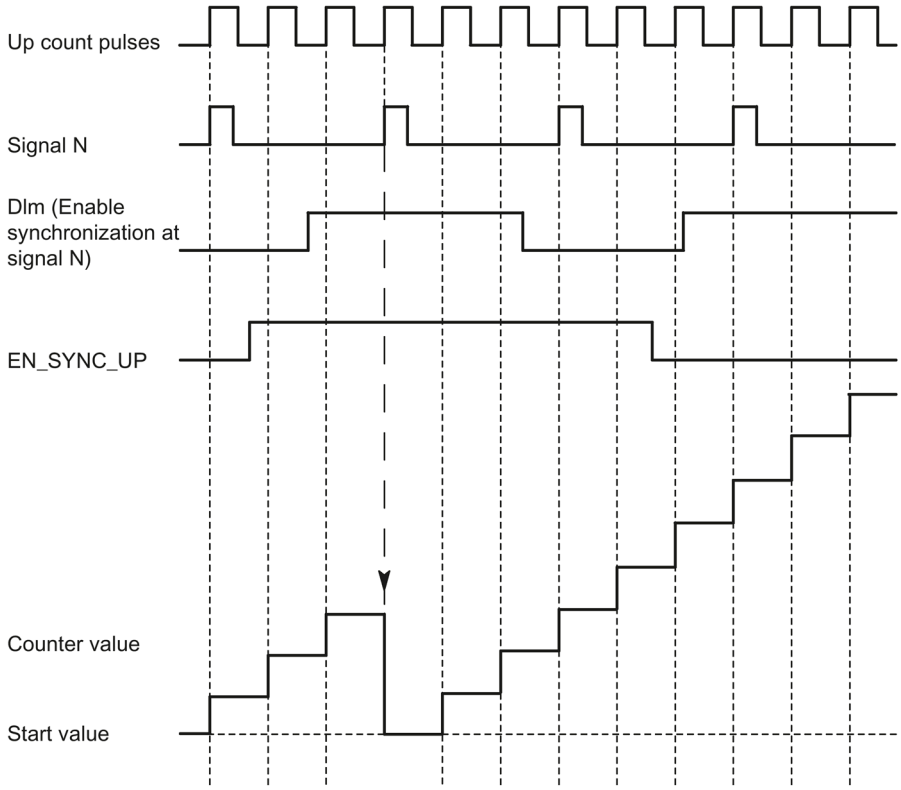

As long as synchronization for counting up is enabled and the corresponding digital input is active, the counter is synchronized at each signal N. If one of the conditions is not met, the counter is not synchronized at the signal N.

2.2.8 Comparison values

2.2.8.1 Comparison values and outputs

Description

You can specify two comparison values to control both digital outputs of the channel independently of the user program:

- Comparison value 0 for digital output DQ0
- Comparison value 1 for digital output DQ1

Depending on the operating mode and the encoder used, define two position, counter or measured values as comparison value. The comparison values are configurable and can be modified during runtime using the user program.

Note

DQ0 of a counter of a Compact CPU

With a Compact CPU, the respective digital output DQ0 is available via the feedback interface, but not as a physical output.

Switching digital outputs from the user program

The control bits (Page 237) TM_CTRL_DQ0 and TM_CTRL_DQ1 are used to control use of the digital outputs.

If TM_CTRL_DQm is set to 0, you can control the relevant digital output from the user program with the control bit SET_DQm regardless of the configured technological function. If TM_CTRL_DQm is set to 1, the technological function of the controller of the respective digital output is enabled.

The status of a digital output is indicated by the respective STS_DQm feedback bit.

2.2.8.2 Switching at comparison values with counter value as reference

The comparison values are compared with the current counter value. If the counter value meets the assigned comparison condition and the technological function of the associated digital output is enabled, the digital output is set. If you assign "Between comparison value 0 and 1" for digital output DQ1, both comparison values affect DQ1.

You can make switching for a digital output dependent on one of the following comparison events:

Setting between comparison value and high counting limit

The digital output is set to 1 if:

Comparison value <= counter value <= high counting limit

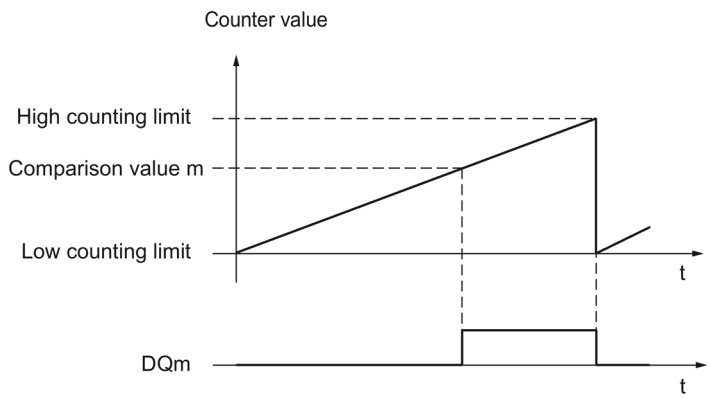

The comparison event is independent of the count direction.

Setting between comparison value and low limit

The digital output is set to 1 if:

Low counting limit <= counter value <= comparison value

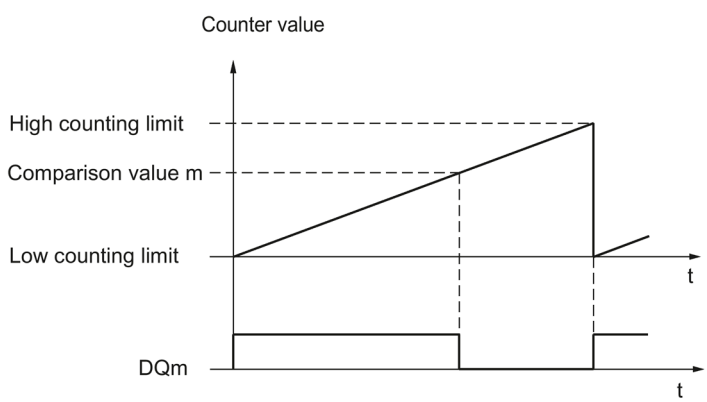

The comparison event is independent of the count direction.

Setting between comparison value 0 and comparison value 1

The comparison event can be configured for the digital output DQ1 if "Use by user program" has been configured for the digital output DQ0. Comparison value 1 must be greater than Comparison value 0.

DQ1 is set to 1 if:

Comparison value 0 <= counter value <= comparison value 1

The figure below shows an example of the comparison event when counting in an upwards direction:

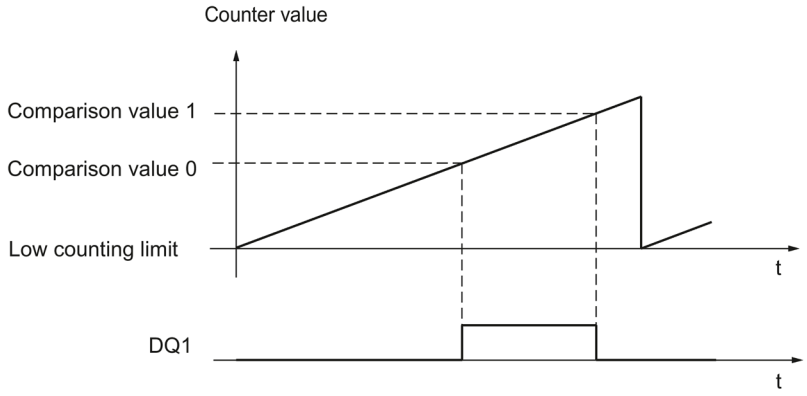

Setting at comparison value for one pulse duration

The respective digital output is set to 1 for a specified period of time when the following conditions are fulfilled:

- Counter value = comparison value
- Current count direction = configured count direction for the comparison event

The figure below shows an example of the comparison event when counting in an upwards direction:

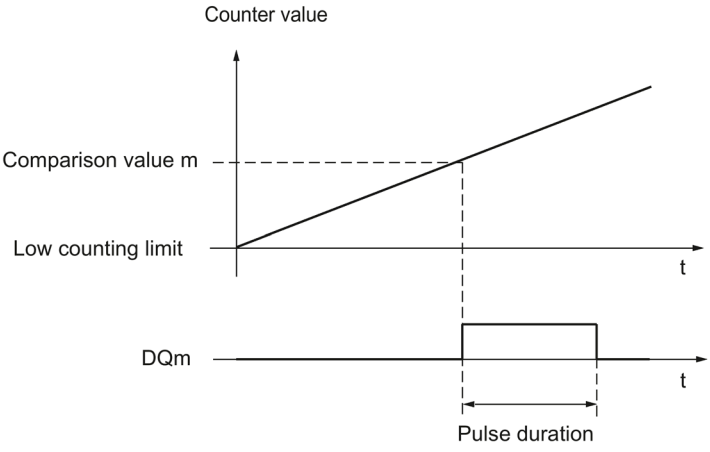

The figure below shows an example of the comparison event when counting in a downward direction:

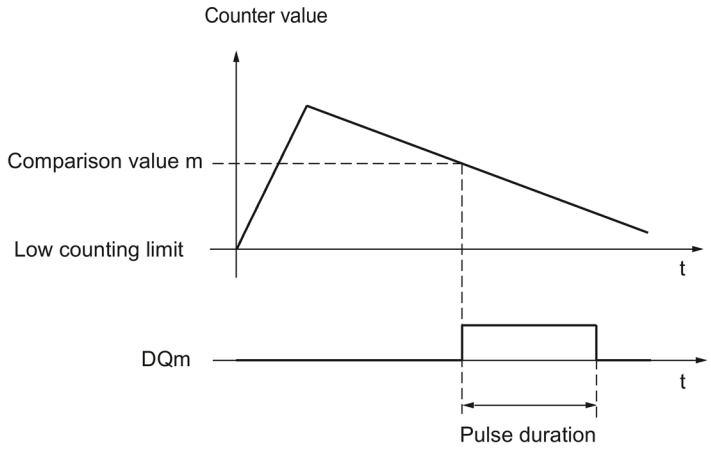

To repeat the comparison event, the counter value must change and then correspond to the respective comparison value again.

If the pulse duration has been defined as "0" and the counter value is equal to the comparison value, the digital output is set to 1 until the next count pulse:

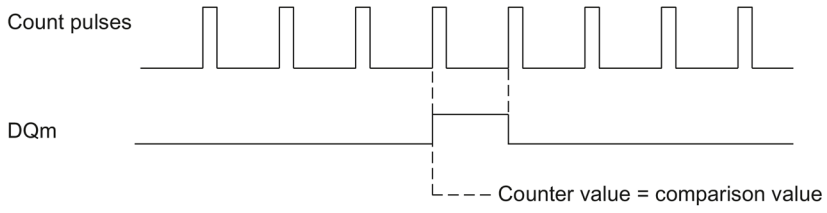

Note

This comparison event switches the relevant digital output if a count pulse reaches the comparison value. The digital output does not switch when the counter value is set, by synchronization for example.

Setting by the user program up to comparison value

You can set the respective digital output to 1 (edge) by setting the control bit (Page 237) SET_DQm. The respective digital output is set to 0 by any of the following events:

- Match of the counter value and the comparison value in the configured direction of the comparison event
- Reset of the corresponding SET_DQm control bit.

The figure below shows an example of the comparison event when counting in an upwards direction:

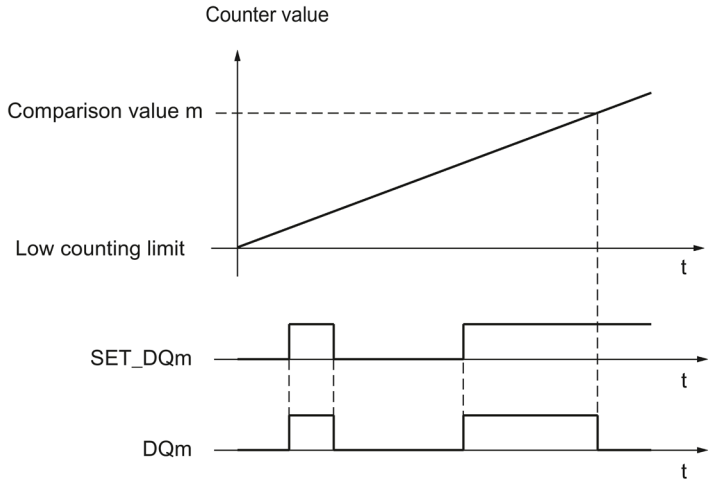

You can disable the digital output before the counter value reaches the comparison value by setting the control bit SET_DQm to 0.

Note

If the comparison value is reached in the configured count direction, the feedback bit EVENT_CMPm is set independently of the state of the control bit SET_DQm.

The comparison event switches a digital output when a count pulse reaches the respective comparison value. The digital output does not switch when the counter value is set, by synchronization for example.

2.2.8.3 Switching at comparison values with position value (SSI absolute value) as reference

The comparison values are compared with the current position value. If the position value meets the assigned comparison condition and the technological function of the associated digital output is enabled, the digital output is set. If you assign "Between comparison value 0 and 1" for digital output DQ1, both comparison values affect DQ1.

If you use a 32 bit position value for the comparison function, the position value is interpreted as DINT.

You can make switching for a digital output dependent on one of the following comparison events:

Setting between comparison value and high limit

The high limit corresponds to the maximum position value.

The digital output is set to 1 if:

Comparison value <= position value <= maximum position value

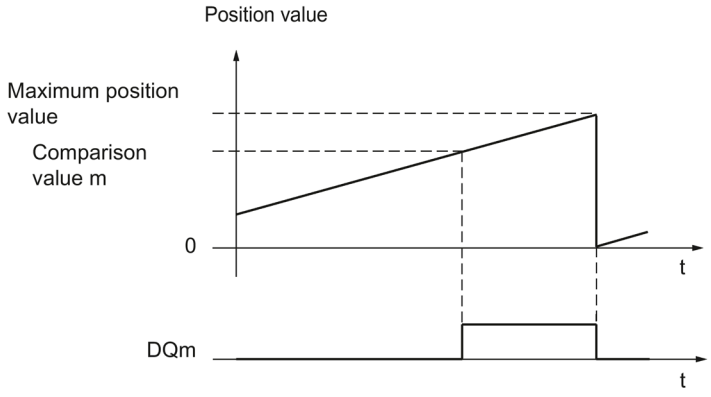

The comparison event is independent of the direction of the position value change. The maximum position value depends on the resolution of the SSI absolute encoder.

Setting between comparison value and low limit

The low limit corresponds to the position value "0".

The digital output is set to 1 if:

0 <= position value <= comparison value

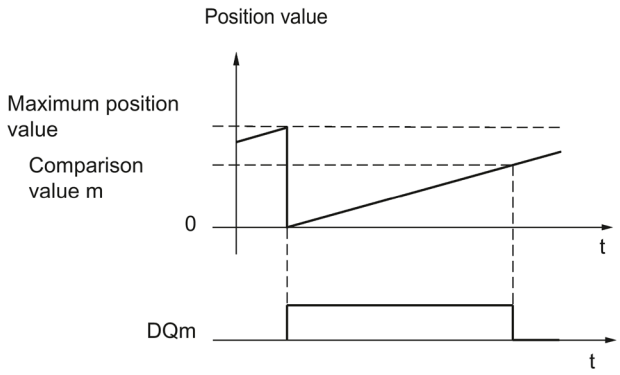

The comparison event is independent of the direction of the position value change.

Setting between comparison value 0 and comparison value 1

The comparison event can be configured for the digital output DQ1 if "Use by user program" has been configured for the digital output DQ0. Comparison value 1 must be greater than Comparison value 0.

DQ1 is set to 1 if:

Comparison value 0 <= position value <= comparison value 1

The figure below shows an example of the comparison event when counting up:

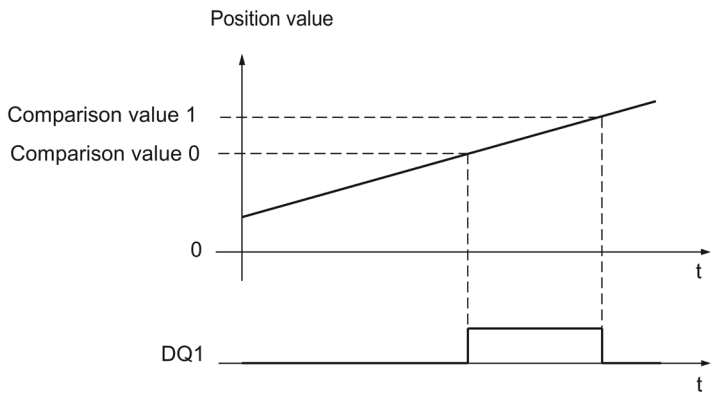

Setting at comparison value for one pulse duration

The respective digital output is set to 1 for a specified period of time when the following conditions are fulfilled:

- Matching of the position value and comparison value or crossing of the comparison value
- Current direction of the position value change = assigned direction for the comparison event

The figure below shows an example of the comparison event when counting up:

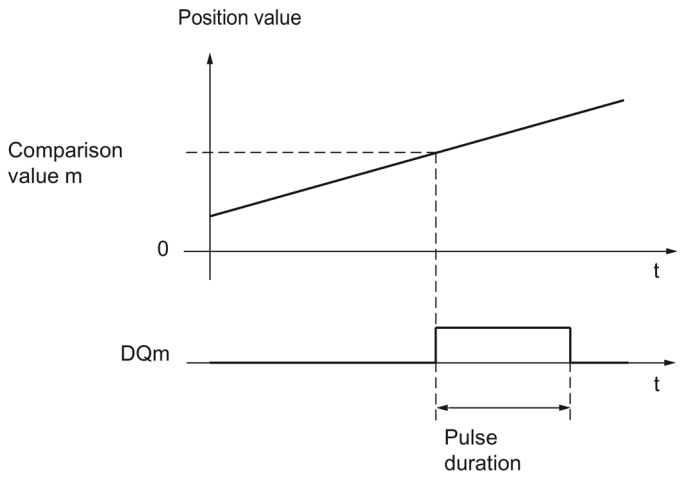

The figure below shows an example of the comparison event when counting down:

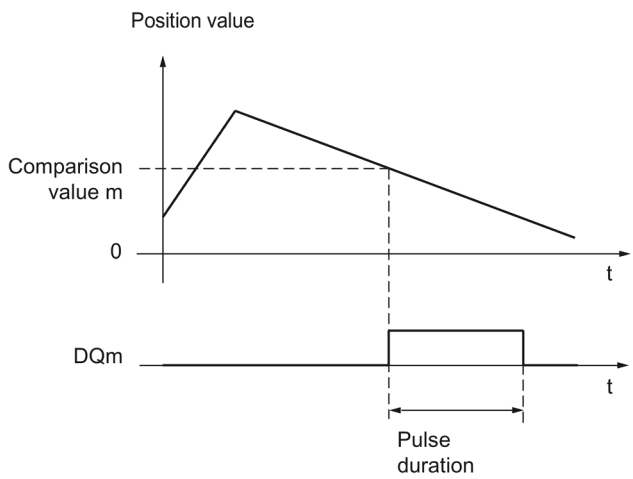

To repeat the comparison event, the position value must change and then correspond to or cross the respective comparison value again.

Setting by the user program up to comparison value

You can set each digital output to 1 (edge) by setting the control bit (Page 237) SET_DQm. The respective digital output is set to 0 by any of the following events:

- Matching of the position value and the comparison value or crossing of the comparison value in the configured direction of the comparison event
- Resetting of the SET_DQm control bit.

The figure below shows an example of the comparison event when counting up:

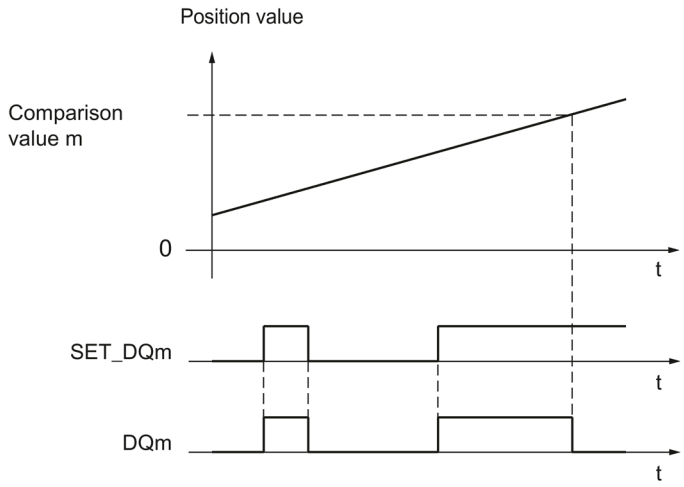

You can disable the digital output before the position value corresponds to or exceeds the comparison value by setting the control bit SET_DQm to 0.

Note

If the comparison value is reached or exceeded in the assigned direction, feedback bit EVENT_CMPm is set independently of the status of control bit SET_DQm.

2.2.8.4 Switching at comparison values with measured value as reference

The comparison values are compared with the current measured value. If the measured value meets the configured comparison condition and the technological function of the corresponding digital output is enabled, the digital output is set. If you configure "Between comparison value 0 and 1" or "Not between comparison value 0 and 1" for digital output DQ1, both comparison values affect DQ1.

You can make switching for a digital output dependent on one of the following comparison events:

Setting above the comparison value

The digital output is set to 1 if:

Measured value >= comparison value

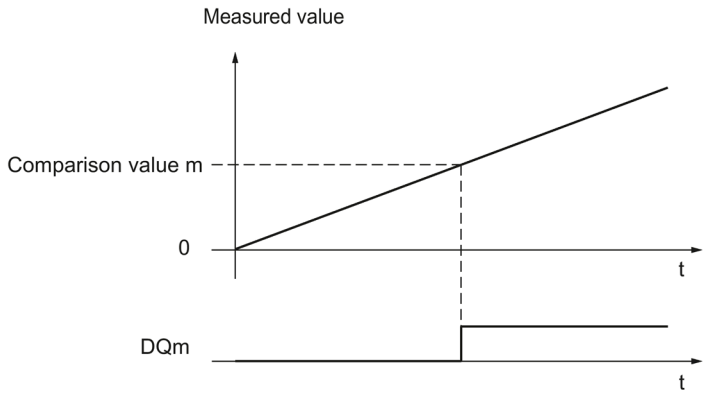

Setting below the comparison value

The digital output is set to 1 if:

Measured value <= comparison value

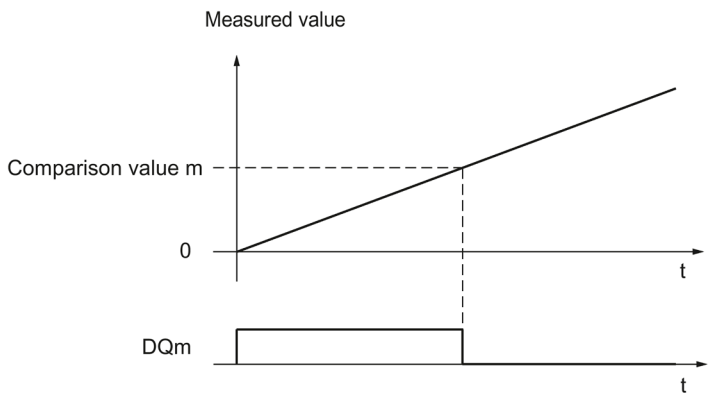

Setting between comparison value 0 and comparison value 1

The comparison event can be configured for the digital output DQ1 if "Use by user program" has been configured for the digital output DQ0. Comparison value 1 must be greater than Comparison value 0.

DQ1 is set to 1 if:

Comparison value 0 <= measured value <= comparison value 1

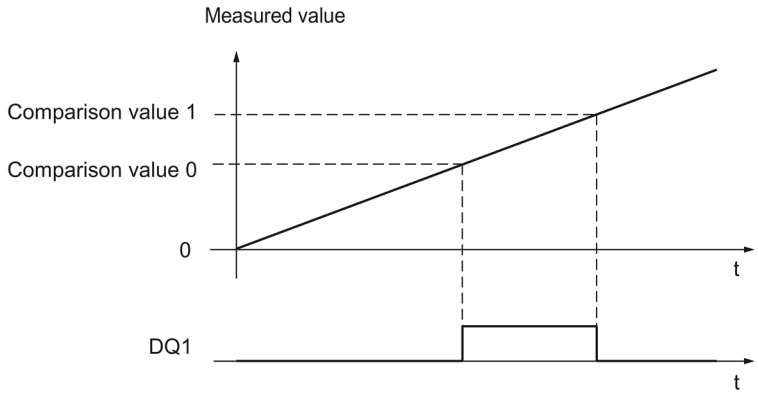

Not setting between comparison value 0 and comparison value 1

The comparison event can be configured for the digital output DQ1 if "Use by user program" has been configured for the digital output DQ0. Comparison value 1 must be greater than Comparison value 0.

DQ1 is set to 1 if:

Comparison value 1 <= measured value <= comparison value 0

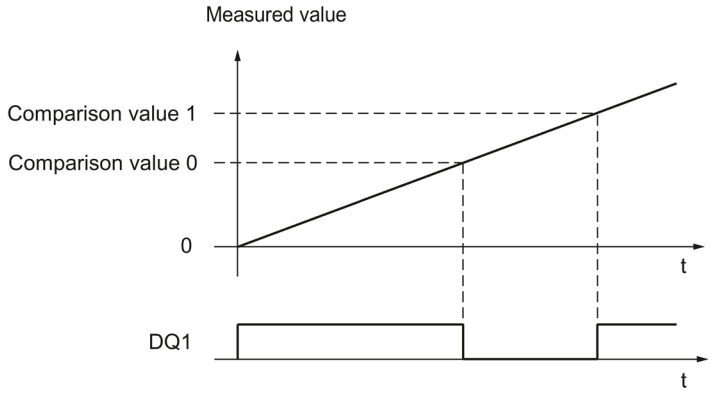

2.2.9 Measured value determination

2.2.9.1 Overview of measuring functions

The following highly accurate measuring functions are available (accuracy up to 100 ppm):

Measurement type (Page 60)	Description
Frequency measurement	The mean frequency is calculated at set measuring intervals on the basis of the time profile of the count pulses or position value changes and returned in Hertz as floating point number.
Period measurement	The mean period duration is calculated at set measuring intervals on the basis of the time profile of the count pulses or position value changes and returned in seconds as floating point number.
Velocity measurement	The mean velocity is calculated at set measuring intervals on the basis of the time profile of the count pulses or position value changes and other parameters, and returned in the configured unit of measurement.

Measured values and counter values are available concurrently in the feedback interface.

Update time

You can configure the interval at which the technology module updates the measured values cyclically as the update time. Setting longer update time intervals allows uneven measured variables to be smoothed and increases measuring accuracy.

Gate control for incremental and pulse encoders

Opening and closing the internal gate defines the period of time during which the count pulses are captured. The update time is asynchronous to the opening of the gate, which means that the update time is not started when the gate is opened. After the internal gate is closed, the last measured value captured is still returned.

2.2.9.2 Measured value determination with incremental or pulse encoder

Measuring range (TM Count and TM PosInput)

The measuring functions have the following measuring limits:

Measurement type	Low measuring range limit	High measuring range limit
Frequency measurement	0.04 Hz	800 kHz* / 4 MHz**
Period measurement	1.25 µs* / 0.25 µs**	25 s
Velocity measurement	Depending on the configured number of "increments per unit" and the "time base for velocity measurement"	

* Applies to 24 V incremental encoders and "quadruple" signal evaluation.
** Applies to RS422 incremental encoders and "quadruple" signal evaluation.

All measured values are returned as signed values. The sign indicates whether the counter value increased or decreased during the relevant time period.

Measuring range (Compact CPU)

The measuring functions have the following measuring range limits:

Measurement type	Low measuring range limit	High measuring range limit
Frequency measurement	0.04 Hz	400 kHz*
Period measurement	2.5 µs*	25 s
Velocity measurement	Depends on the configured number of "Increments per unit" and the "Time base for velocity measurement"	

* Applies to 24 V incremental encoders and "quadruple“ signal evaluation.

All measured values are returned as signed values. The sign indicates whether the counter value increased or decreased during the relevant time period.

Measuring principle

The technology module assigns a time value to each count pulse. The measuring interval is defined as the time between each last count pulse before and during the previous update time. The measuring interval and the number of pulses in the measuring interval are evaluated to calculate measured variables.

If there is no count pulse within an update time, the measuring interval is dynamically adjusted. In this case, a pulse is assumed at the end of the update time and the measuring interval is calculated as the time between that point and the last pulse which occurred. The number of pulses is then 1.

The feedback bit STS_M_INTERVAL indicates whether a count pulse occurred in the previous measuring interval. This allows for a differentiation between an assumed and an actual count pulse.

The following figures show the principle of measurement and the dynamic adjustment of the measuring interval:

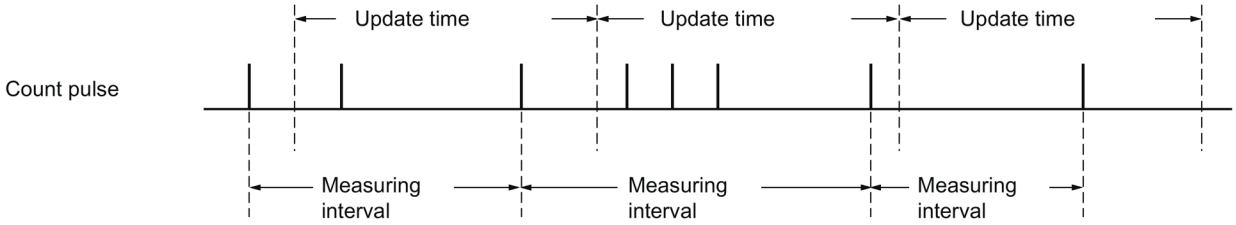

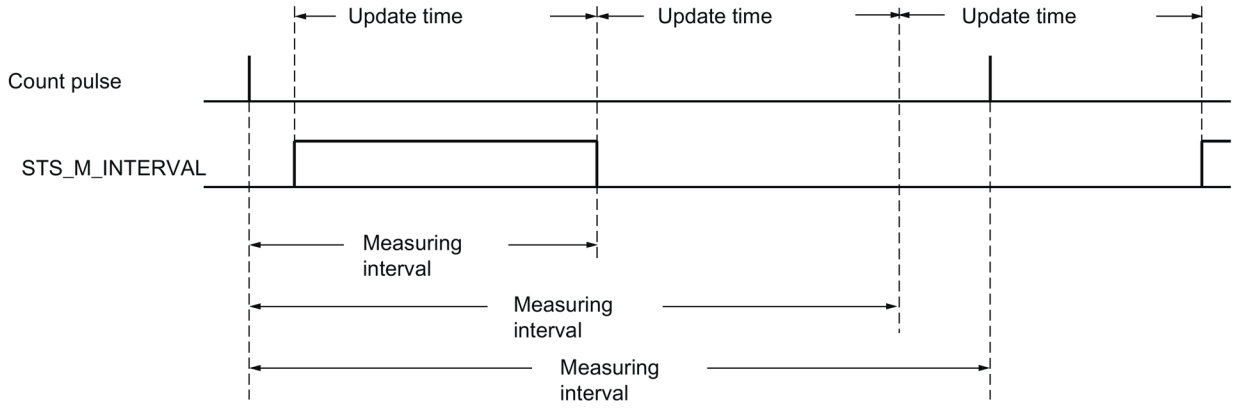

Frequency measurement

A value "0" is returned until the first measured value is available.

The measurement process begins with the first pulse detected once the internal gate has been opened. The first measured value can be calculated after the second pulse at the earliest.

The measured value is updated in the feedback interface (Page 240) upon completion of each update time. If the internal gate is closed, measuring stops and the measured value is no longer updated.

The figures below shows an example of frequency measurement with an update time of 1 s:

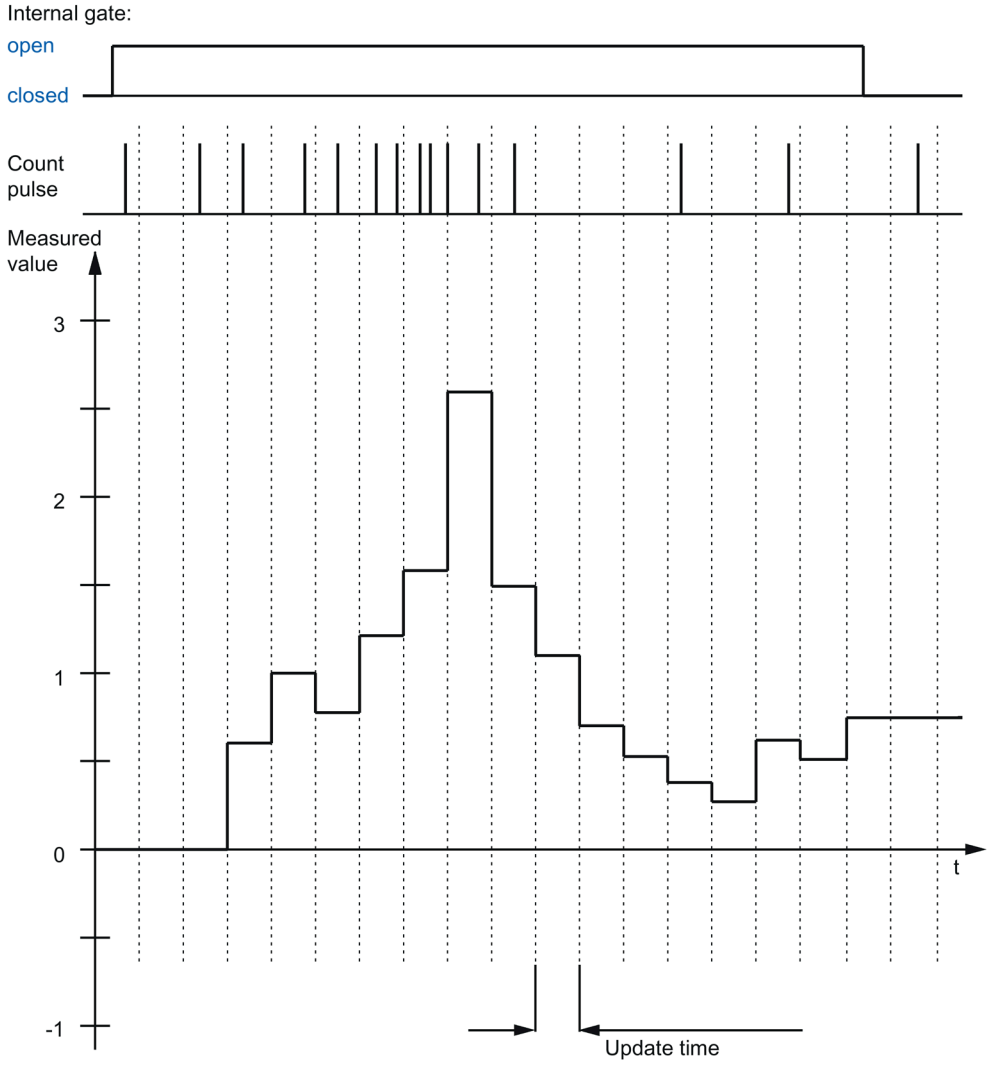

Period measurement

The reciprocal of the frequency is output as the measured value for period measurement.

A value "25 s" is returned until the first measured value is available.

Velocity measurement

The normalized frequency is output as the measured value in velocity measurement. You can configure the scaling using the time basis and the number of increments that your encoder delivers per unit.

Example:

Your encoder delivers 4000 increments per meter. The velocity is to be measured in meters per minute.

In this case, you need to configure 4000 Increments per unit and a time basis of one minute.

2.2.9.3 Measured value determination with SSI absolute encoder

Measuring range SSI absolute encoder

The measuring functions have the following measuring limits:

Measurement type	Low measuring range limit	High measuring range limit
Frequency measurement	0,04 Hz	4 MHz
Period measurement	0,25 µs	25 s
Velocity measurement	Depending on the configured number of "increments per unit" and the "time base for velocity measurement"	

All measured values are returned as signed values. The sign indicates whether the position value increased or decreased during the relevant time period.

Measuring principle

The technology module assigns a time value to each SSI frame. The measuring interval is defined as the time between the last SSI frame with a change of position value before and during the previous update time. The measuring interval and the total change in position value in the measuring interval are evaluated to calculate a measured variable. The total change in position value in a measuring interval corresponds to the number of encoder increments in the same measuring interval.

If there is no change in position value within an update time, the measuring interval is dynamically adjusted. In this case, a change in position value is assumed at the end of the update time and the measuring interval is calculated as the time between that point and the last SSI frame with a change in position value. The change in position value is then 1.

The feedback bit STS_M_INTERVAL indicates whether a change in position value occurred in the previous measuring interval. This allows for a differentiation between an assumed and an actual change in position value. If the technology module cannot calculate measured values because the measuring range limit has been violated, the feedback bit STS_M_INTERVAL is not set.

Frequency measurement

The value "0.0" is reported in the time up to the first available measured value.

The measuring process begins with the first detected change in position value. The first measured value can be calculated after the second detected change in position value at the earliest.

The measured value is updated in the feedback interface (Page 240) upon completion of each update time.

The figures below shows an example of frequency measurement with an update time of 1 s:

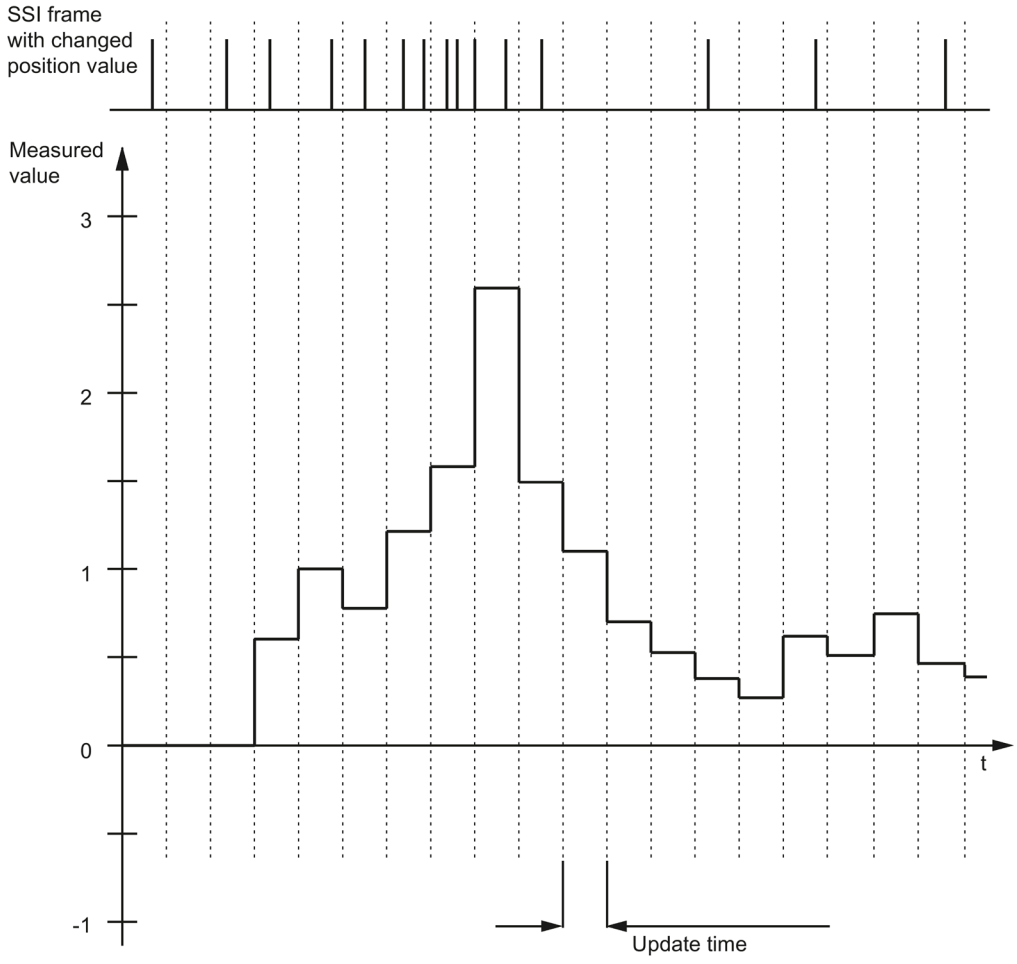

Period measurement

The reciprocal of the frequency is output as the measured value for period measurement.

A value "25 s" is returned until the first measured value is available.

Velocity measurement

The normalized frequency is output as the measured value in velocity measurement. You can configure the scaling using the time basis and the number of increments that your encoder delivers per unit.

Example:

Your SSI absolute encoder operates with a resolution of 12 bits per revolution and performs 4096 increments per revolution. The velocity should be measured in revolutions per minute.

In this case, you need to configure 4096 Increments per unit and a time basis of one minute.

Note

Excessive encoder speed can provide wrong direction of rotation.

If an SSI absolute encoder rotates so quickly that more than half of the value range is covered within one module cycle[1], the velocity and direction of rotation can not be determined correctly anymore. This can result in an incorrect function at:

- DQ functions
- Feedback bits EVENT_OFLW, EVENT_UFLW, EVENT_ZERO, EVENT_CMP0, EVENT_CMP1 and STS_DIR

[1] Non isochronous mode: 500 µs; isochronous mode: PROFINET cycle time

---

Note

If you are using an SSI absolute encoder whose value range does not correspond to the power of 2, the calculated speed measured value may be incorrect at the moment of the overflow.

2.2.10 Hysteresis

2.2.10.1 Hysteresis with incremental or pulse encoder

Description

Hysteresis allows you to specify a range around the comparison values within which the digital outputs are not to be switched again until the counter value has gone outside this range.

Slight movements by the encoder can result in the counter value fluctuating around a certain value. If a comparison value or a counting limit lies within this fluctuation range, the corresponding digital output is switched on and off with corresponding frequency if hysteresis is not used. Hysteresis prevents this unwanted switching, and configured hardware interrupts when a comparison event occurs.

The hysteresis becomes active when the respective comparison value is reached by a count pulse. If the counter value is set to the start value during an active hysteresis, the hysteresis becomes inactive.

Regardless of the hysteresis value, the hysteresis range ends at the low/high counting limits.

Function principle

The figure below shows an example for the hysteresis with the following configuration:

- Setting of a digital output between comparison value and high counting limit
- Comparison value = 5
- Hysteresis = 0 or 2 (gray background)

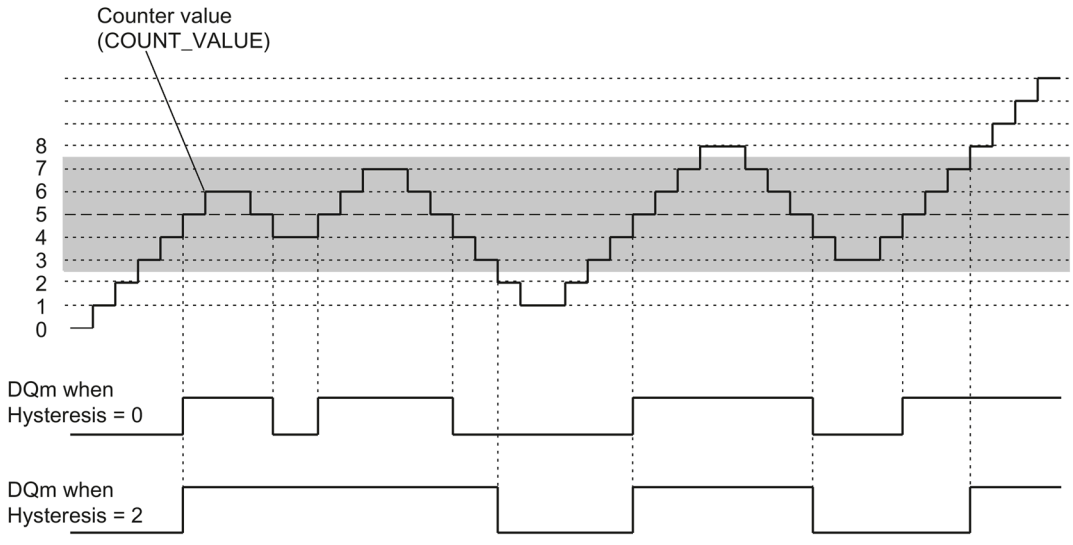

Hysteresis is enabled when the counter value 5 is reached. When the hysteresis is active, the comparison result remains unchanged. Hysteresis is disabled when the counter value 2 or 8 is reached.

The figure below shows an example for the hysteresis with the following configuration:

- Setting at comparison value for one pulse duration
- Comparison value = 5
- Comparison in both count directions
- Hysteresis = 0 or 2 (gray background)

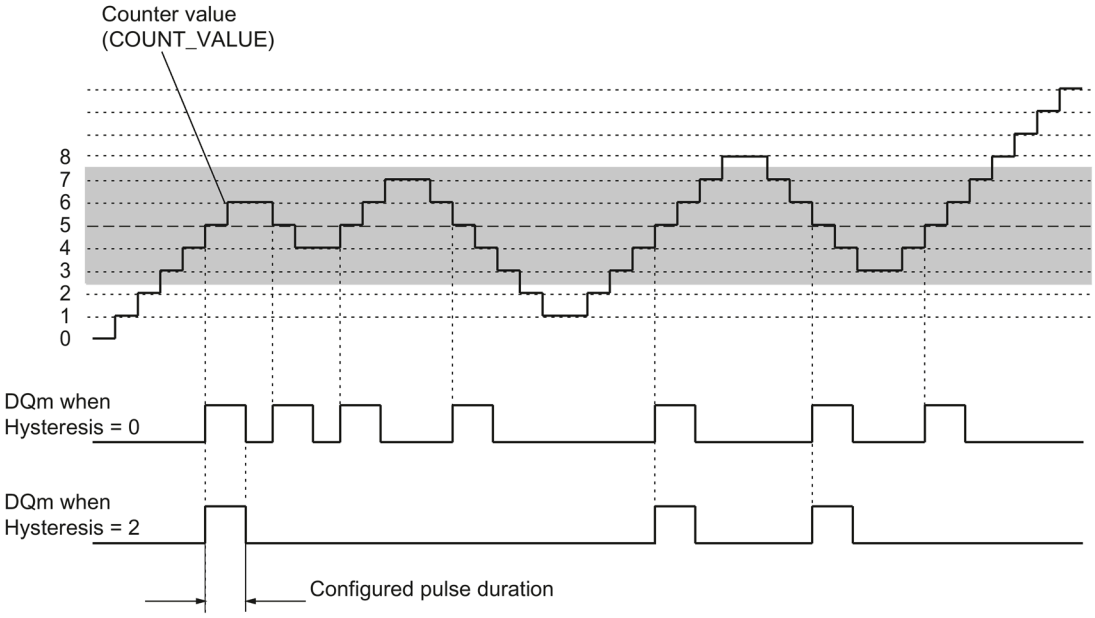

2.2.10.2 Hysteresis with SSI absolute encoder

Description

Hysteresis allows you to specify a range around the comparison values within which the digital outputs are not to be switched again until the position value has gone outside this range.

Slight movements by the encoder can result in the position value fluctuating around a certain value. If a comparison value, the minimum or maximum position value, lies within the fluctuation range, the associated digital output is switched on and off if a hysteresis is not used. Hysteresis prevents this unwanted switching, and configured hardware interrupts when a compare event occurs.

Regardless of the hysteresis value, the hysteresis range ends at the respective minimum or maximum position value.

Function principle

The figure below shows an example for the hysteresis with the following parameter assignment:

- Setting of a digital output between comparison value and high limit
- Comparison value = 10
- Hysteresis = 0 or 2 (gray background)

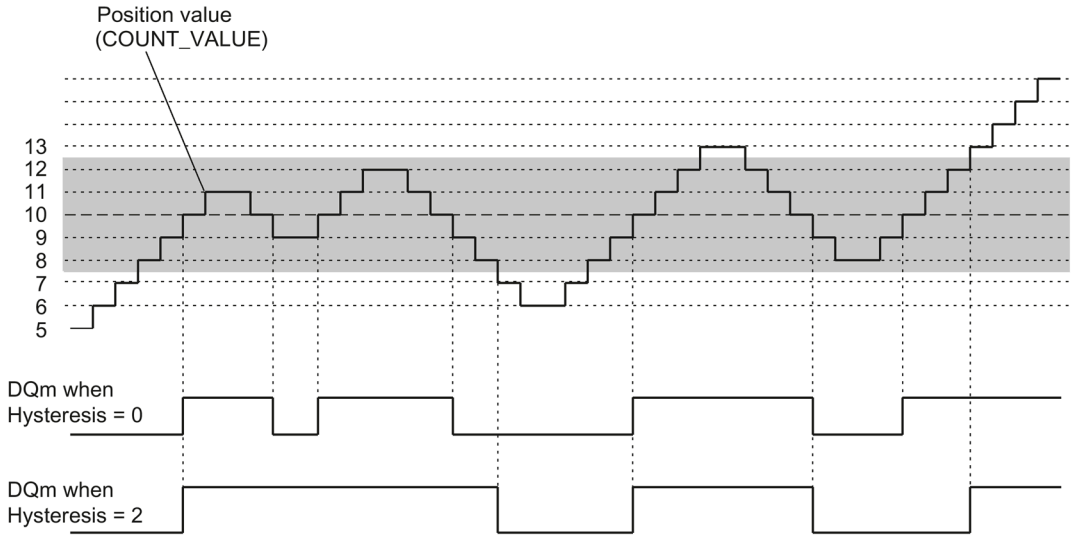

Hysteresis is enabled when the position value 10 is reached. When the hysteresis is active, the comparison result remains unchanged. Hysteresis is disabled when the position values 7 or 13 are reached.

The figure below shows an example for the hysteresis with the following parameter assignment:

- Setting at comparison value for one pulse duration
- Comparison value = 10
- Comparison in both directions of position value changes
- Hysteresis = 0 or 2 (gray background)

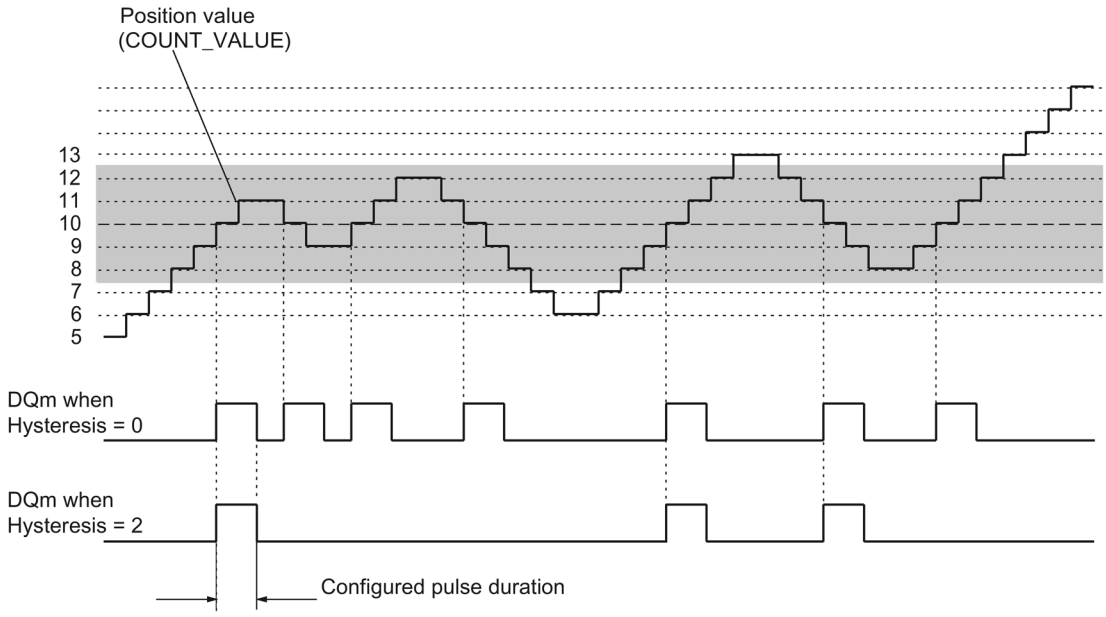

2.2.11 Interrupts

Hardware interrupt

The technology module can trigger a hardware interrupt in the CPU if, for example, a comparison event occurs; in the event of overflow or underflow; in the event of a zero crossing of the counter and/or of a change in count direction (direction reversal). You can specify which events are to trigger a hardware interrupt during operation.

Diagnostic interrupt

The technology module can trigger diagnostic interrupts in the event of errors. You enable the diagnostic interrupts for certain errors in the device configuration. Refer to the device manual for the technology module to learn about the events that can trigger a diagnostic interrupt during operation.

2.2.12 Position detection for Motion Control

Description

You can use the technology module for example with an incremental encoder for the following axis technology objects of S7-1500 Motion Control for position detection :

- TO_PositioningAxis
- TO_SynchronousAxis
- TO_ExternalEncoder

When using an incremental or pulse encoder, the position detection is based on the counting function of the technology module. With an SSI absolute encoder, the absolute value is read in via a synchronous, serial interface and prepared according to the parameter assignment and made available for S7-1500 Motion Control.

The range of functions of the technology module has the following limitations in this case:

- Counter behavior not configurable
- No functions for digital inputs available apart from measuring input function
- No comparison functions for digital outputs available
- No hardware interrupts available

In the device configuration of the technology module in STEP 7 (TIA Portal), select the "Position input for technology object "Motion Control"" operating mode and use the corresponding technology object in the program. This reduces the configuration options to the parameters that are essential. For TM Count or TM PosInput, the mode automatically applies to all channels of the technology module. For a Compact CPU, the mode automatically applies to the respective channel.

In this operating mode you can use the (TO_MeasuringInput) measuring input technology object to execute a measuring input function with a hardware digital input. To do this select the measuring input type "Measuring via PROFIdrive telegram" in the measuring input technology object and the value "1" as the number of the measuring input.

You can find information about further configuring in the help for the axis technology objects and the measuring input technology object of S7-1500 Motion Control.

2.2.13 Encoder signals

2.2.13.1 24 V and TTL count signals

24 V and TTL incremental encoder count signals

The 24 V incremental encoder returns the 24 V signals A, B, and N to the technology module. The A and B signals are phase-shifted by 90°. You can also connect incremental encoders without an N signal.

A 24 V incremental encoder uses the A and B signals for counting. If configured accordingly, the N signal is used for setting the counter to the start value or for saving the current counter value to the Capture value.

The figure below shows an example of the time profile of the signals of an 24 V incremental encoder:

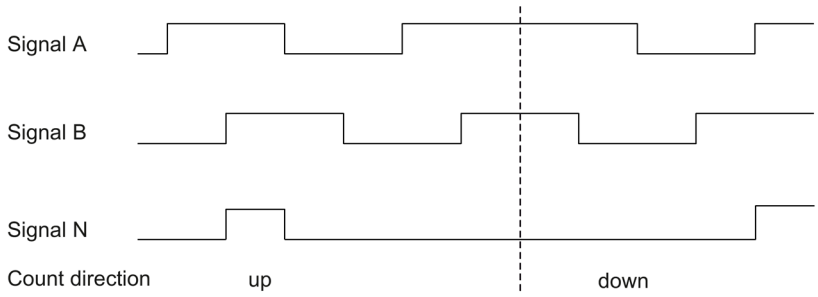

The technology module detects the count direction by evaluating the sequence of edges of the A and B signals. You can specify an inversion of the count direction.

24 V and TTL pulse encoder count signals without/with direction signal

The encoder, for example an initiator (BERO) or a light barrier, returns only a count signal that is connected to terminal A of the counter.

In addition, you can connect a signal for direction detection to terminal B of the counter. In case of a high level the direction signal is counted backwards. If your encoder does not return a corresponding signal, you can specify the count direction with the user program using the control interface.

The figure below shows an example of the time profile of the signals of a 24 V pulse encoder with direction signal and the resulting count pulses:

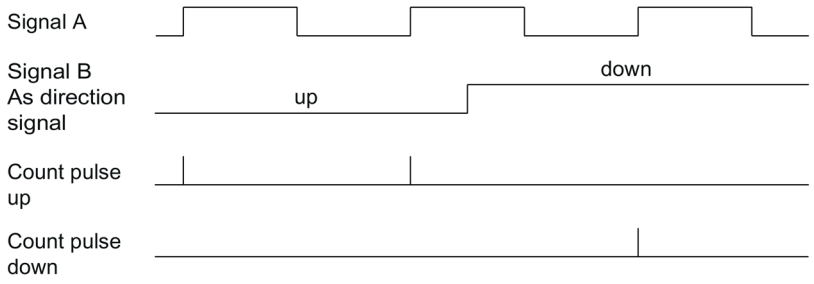

24 V and TTL pulse encoder count signals with Up/Down count signal

The Up count signal is connected to terminal A. The Down count signal is connected to terminal B.

The figure below shows an example of the time profile of the signals of a pulse encoder with Up/Down count signal and the resulting count pulses:

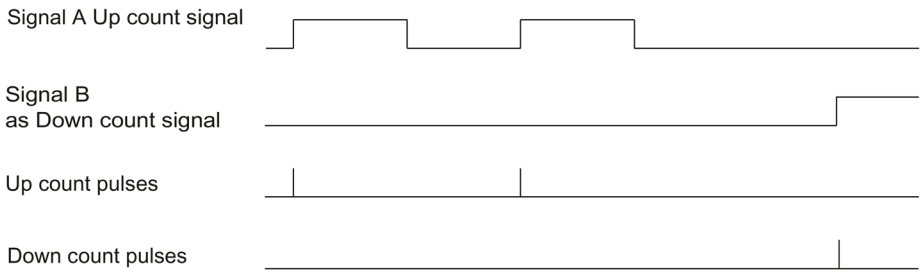

Sourcing output/sinking output for 24 V counter signals (TM Count)

You can connect the following encoders/sensors to the counter inputs:

- Sourcing output:
  The A, B, and N inputs are wired to 24VDC .
- Sinking output:
  The A, B, and N inputs are wired to ground M .
- Push-pull (sourcing and sinking output):
  The A, B, and N inputs are wired alternately to 24VDC and ground M .

Sourcing output for 24 V counter signals (Compact CPU)

You can connect the sourcing output and push-pull encoders or sensors to the counter inputs.

Monitoring of the encoder signals (TM Count and TM PosInput)

The signals of push-pull 24 V encoders are monitored for wire breaks by the technology module. TTL signals are monitored by the technology module for faulty supply voltages.

If you enable the diagnostic interrupt in the device configuration, the technology module triggers a diagnostic interrupt in the event of encoder signal errors.

2.2.13.2 RS422 count signals

RS422 incremental encoder count signals

The RS422 incremental encoder sends the following differential signals to the technology module:

- +A and -A
- +B and -B
- +N and -N

The signal information for RS422 signals is encoded in the differential voltage between A and -A, B and -B, and +N and -N. The A and B signals are phase-shifted by 90°. You can also connect incremental encoders without an N signal.

RS422 incremental encoders use the A and B signals for counting. If configured accordingly, the N signal is used for setting the counter to the start value or for saving the current counter value as the Capture value.

The figure below shows an example of the time profile of the signals of an RS422 incremental encoder:

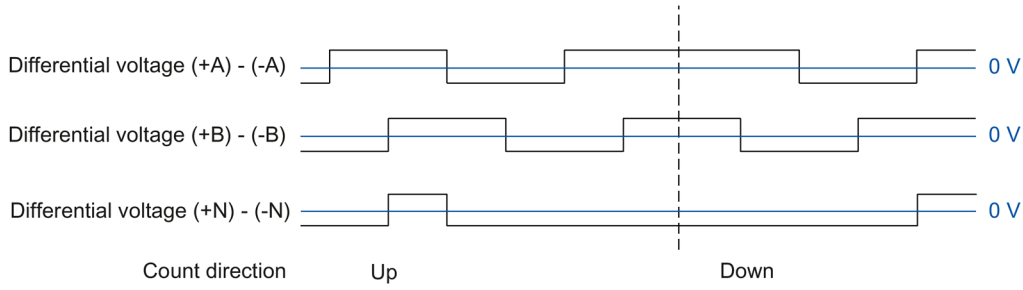

The technology module detects the count direction by evaluating the sequence of edges of the A and B signals. You can specify an inversion of the count direction.

Count signals of RS422 pulse encoders without/with direction signal

The encoder, for example a light barrier, only returns a count signal that is connected to terminal A.

You can also connect a signal for direction detection to terminal B. In case of a high level the direction signal is counted backwards. If your encoder does not return a corresponding signal, you can specify the count direction with the user program using the control interface.

The figure below shows an example of the time profile of the signals of a RS422 pulse encoder with direction signal and the resulting count pulses:

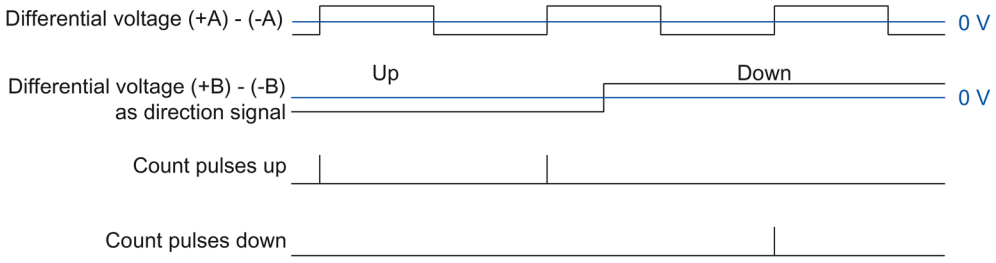

Count signals of RS422 pulse encoders with Up/Down count signal

The Up count signal is connected to the A terminals. The Down count signal is connected to the B terminals.

The figure below shows an example of the time profile of the signals of an RS422 pulse encoder with Up/Down count signal and the resulting count pulses:

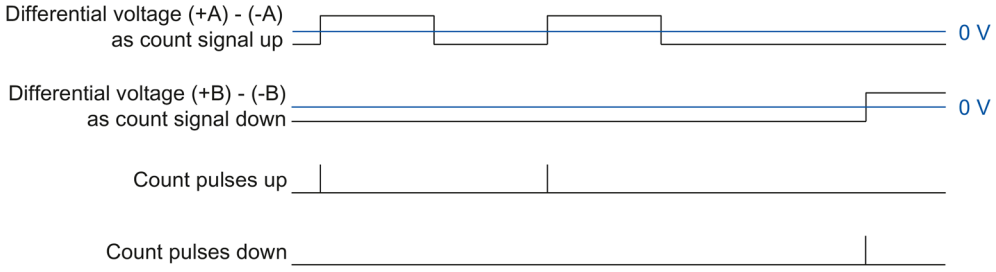

Monitoring of encoder signals

RS422 signals are monitored by the technology module for wire breaks, short-circuits, and incorrect supply voltage.

If you enable the diagnostic interrupt in the device configuration, the technology module triggers a diagnostic interrupt in the event of encoder signal errors.

2.2.13.3 SSI signals

Signals from SSI absolute encoders

The SSI absolute encoder and the technology module communicate by means of the SSI data signals +D and -D and the SSI clock signals +C and -C. SSI uses the RS422 signal standard. The signal information is coded in the respective differential voltage between +C and -C as well as +D and -D.

Monitoring of the encoder signals and the SSI frames

The signals of an SSI absolute encoder are monitored for wire breaks, short-circuits and incorrect supply voltage. The technology module also monitors the SSI frames for errors.

If you enable the diagnostic interrupts in the device configuration, the technology module triggers a diagnostic interrupt in the event of encoder signal or SSI frame errors.

2.2.14 Signal evaluation of incremental signals

2.2.14.1 Overview

The technology module counter counts the edges of encoder signals A and B. For incremental encoders with phase-shifted signals A and B, you can select either single or multiple evaluation to improve the resolution.

You can configure the following signal evaluations:

- Single evaluation (Page 77)
- Double evaluation (Page 78)
- Quadruple evaluation (Page 79)

Note

The phase offset between the edges of signals A and B is evaluated. If no phase shift is identifiable, an encoder error (invalid transition of A/B signals) is reported via the ENC_ERROR feedback bit.

2.2.14.2 Single evaluation

Single evaluation evaluates the rising and falling edge at signal A when signal B has a low level.

Count pulses in an upwards direction are generated with a rising edge at signal A during a low level at signal B. Count pulses in a downwards direction are generated with a falling edge at signal A during a low level of signal B.

The following figure shows an example for single evaluation of 24 V and TTL count signals:

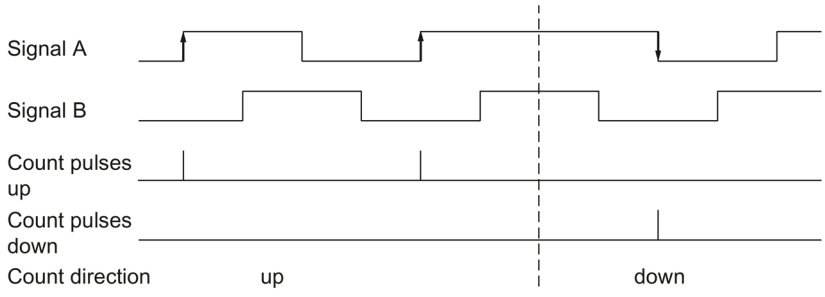

The following figure shows an example for single evaluation of RS422 count signals:

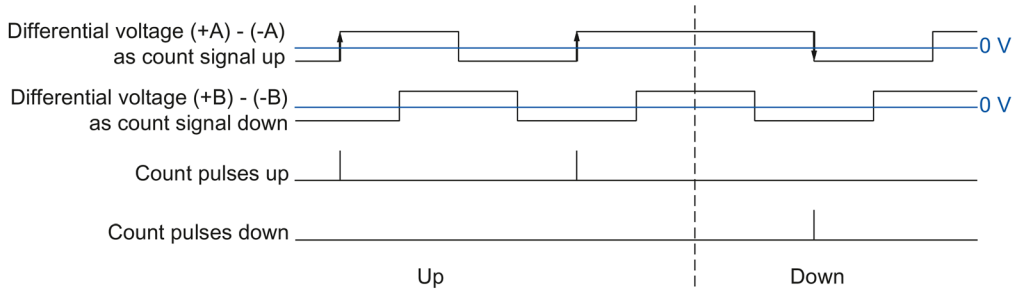

2.2.14.3 Double evaluation

With double evaluation, the rising and falling edges of signal A are evaluated.

The edge direction of signal A and the level at signal B determines whether count pulses are generated in an upward or downward direction.

The following figure shows an example for double evaluation of 24 V and TTL count signals:

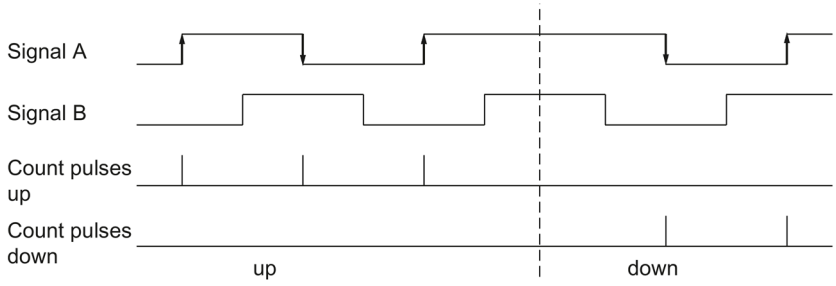

The following figure shows an example for double evaluation of RS422 count signals:

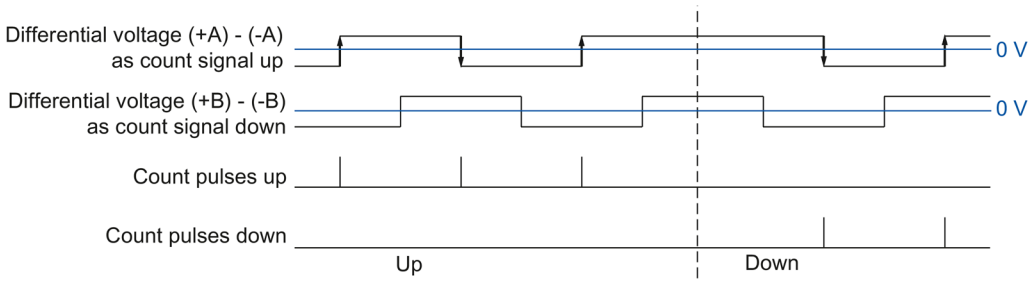

2.2.14.4 Quadruple evaluation

With quadruple evaluation, the rising and falling edges of signals A and B are evaluated.

The edge direction of one signal and the level of the other signal determines whether count pulses are generated in an upward or downward direction.

The figure below shows an example for quadruple evaluation of 24 V and TTL count signals:

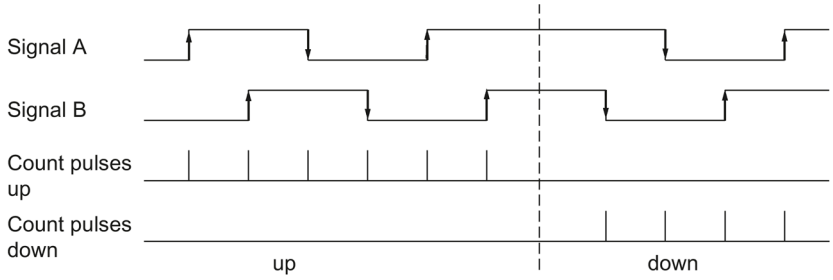

The figure below shows an example for quadruple evaluation of RS422 count signals:

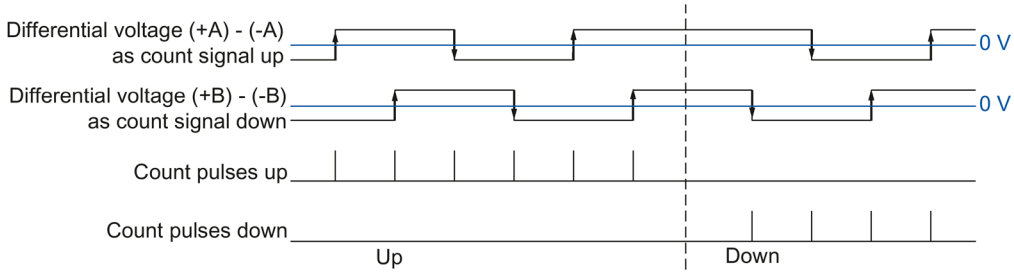

2.2.15 Clock synchronization (TM Count and TM PosInput)

The technology module supports the system function "Isochronous mode". This system function enables position, count and measured values to be recorded in a defined system cycle.

In isochronous mode, the cycle of the user program, the transmission of the input and output data and the processing in the module are synchronized with each other. The output signals switch immediately if the relevant comparison condition is met. A change in the state of a digital input immediately affects the planned reaction of the technology module and changes the status bit of the digital input in the feedback interface.

In the case of operation with a "Counting and measurement" technology object use an OB of the type "Synchronous Cycle" (for example OB61). In the assigned OB the instruction High_Speed_Counter or SSI_Absolute_Encoder is called.

For position detection of a "Motion Control" technology object use the OB of the type "MC-Servo". When using the technology objects cam and cam track, isochronous mode is required. When using the measuring input technology object in connection with the hardware digital input DI1, no isochronous mode is required.

In case of manual operation use an OB of the "Synchronous Cycle" type (for example OB61). In the assigned OB the input and output data is processed.

Data processing

The data that was transmitted to the technology module in the current bus cycle via the control interface takes effect when it is processed in the internal technology module cycle. At the moment when the input data (T_i) are read, the position and counter value and, if appropriate, the measured value as well as status bits are detected and made available in the feedback interface for retrieval in the current bus cycle.

The update time for the measured value is synchronized in a suitable relationship to the system cycle and, if required, adapted in length. If you configure "0", the measured value is updated once per system cycle.

Isochronous mode parameter

In isochronous mode, the following parameters can have an effect on the isochronous parameters of the Sync domain.

- Filter frequency
- Frame length[1]
- Transmission rate[1]
- Monoflop time[1]
- Parity[1]

[1] Only when using an SSI absolute encoder

Because the isochronous parameters are not checked in RUN, overflows can occur when you change one or more of the named parameters in RUN: You prevent overflows by already selecting the option with the greatest time demand during the offline parameter assignment.

Additional information

For a detailed description of the isochronous mode refer to:

- The isochronous mode function manual available as a download from the Internet (https://support.industry.siemens.com/cs/ww/en/view/109755401).
- The PROFINET with STEP 7 function manual as a download from the Internet (https://support.industry.siemens.com/cs/ww/en/view/49948856).

2.3 Basics of counting (TM Timer DIDQ)

2.3.1 Overview of applications

Introduction

You configure the TM Timer DIDQ and assign its parameters with the configuration software.

The module's functions are controlled and monitored via the user program with the control and feedback interface.

System environment

The respective module can be used in the following system environments with its counter functions:

Applications	Components required	Configuration software	In the user program
Central operation with an S7-1500 CPU or 151xSP CPU	• S7-1500 automation system or ET 200SP CPU • TM Timer DIDQ	STEP 7 (TIA Portal): Device configuration and parameter setting with hardware configuration	Direct access to feedback interface of the technology module in the I/O data
Distributed operation with a S7-1500 CPU	• S7-1500 Automation System • ET 200 Distributed I/O System • TM Timer DIDQ		
Distributed operation with a S7-300/400 CPU	• S7-300/400 automation system • ET 200 distributed I/O system • TM Timer DIDQ	STEP 7 (TIA Portal): Device configuration and parameter setting with hardware configuration STEP 7: Device configuration and parameter setting with hardware configuration (only ET 200SP)	

Note

A description of the control and feedback interface is available in the device manual for the TM Timer DIDQ.

2.3.2 Counting with incremental encoder

You can use a few channels of a TM Timer DIDQ for simple counting tasks with an incremental encoder. Counting refers to the recording and adding up of events. The channels configured as counters each acquire the two incremental signals and evaluate these accordingly.

Count direction

The technology module can count up and down with an incremental encoder. You can invert the counting direction to adapt it to the process.

Counting limits

The counting limits define the counter value range used.

The minimum counter value is -2147483648 (-2^{31}). The maximum counter value is 2147483647 (2^{31}-1). The respective counter counts continuously. At an overflow, the counter jumps to the other counting limit in each case and continues counting.

The counter value cannot be influenced by the user program.

Parameter assignment

For use of a counter for an incremental encoder, two digital inputs each of a channel group are combined. For this purpose, you choose the configuration "Incremental encoder (A, B phase-shifted)" in the channel parameters for the respective group.

Note

Counters of the TM Timer DIDQ 16x24V

The number of available counters of the TM Timer DIDQ 16x24V is dependent on the channel configuration. In order to use 4 counters, you must choose the use of 8 inputs in the channel configuration. If you choose the use of 3 inputs, you can use 1 counter. Other channel configurations do not allow any counter use.

Counter value feedback

The current counter value is indicated in the feedback interface in the TEC_IN value (DIm). DIm corresponds to the first of the two grouped digital inputs in each case. For the second digital input, "0" is returned in the value TEC_IN (DIm+1).

2.3.3 Counting with pulse encoder

You can use a few channels of a TM Timer DIDQ for simple counting tasks with a pulse encoder. Counting refers to the recording and adding up of events. The channels configured as counters each acquire one pulse signal and evaluate this accordingly.

Count direction

The technology module can count up and down with a pulse encoder.

Counting limits

The counting limits define the counter value range used.

The minimum counter value is -2147483648 (-2^{31}). The maximum counter value is 2147483647 ($2^{31}-1$). The respective counter counts continuously. At an overflow, the counter jumps to the other counting limit in each case and continues counting.

The counter value cannot be influenced by the user program.

Parameter assignment

For use of a counter for a pulse encoder, you choose the configuration "Use inputs individually" or "Use input/output individually" in the channel parameters for the respective group. You can configure the first digital input of a group as a counter.

Note

Counters of the TM Timer DIDQ 16x24V

The number of available counters of the TM Timer DIDQ 16x24V is dependent on the channel configuration. In order to use 4 counters, you must choose the use of 8 inputs in the channel configuration. If you choose the use of 3 inputs, you can use 1 counter. Other channel configurations do not allow any counter use.

Counter value feedback

The current counter value is indicated in the feedback interface in the TEC_IN value (DIm). DIm corresponds to the respective digital input.

2.3.4 24 V count signals

Count signals of 24 V incremental encoders

The 24 V incremental encoder returns the 24 V signals A and B to the technology module. The A and B signals are phase-shifted by 90°.

The figure below shows an example of the time profile of the signals of an 24 V incremental encoder:

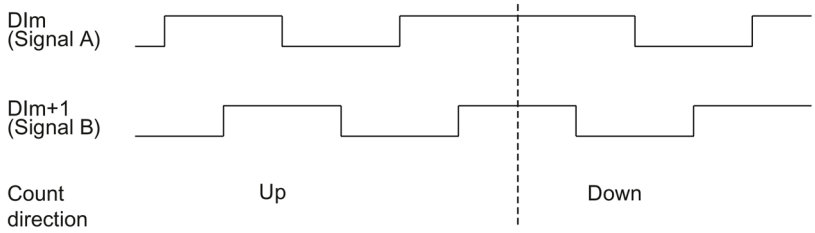

The technology module detects the count direction by evaluating the sequence of edges of the A and B signals. You can specify an inversion of the count direction.

Signal evaluation

The two phase-shifted signals of an incremental encoder are evaluated four times. With quadruple evaluation, the positive and negative edges of signal A and signal B are evaluated.

Whether count pulses are generated in an upward or downward direction depends on the edge direction of the one signal and the level of the other signal in the meantime.

The figure below shows an example of the quadruple evaluation of 24 V count signals:

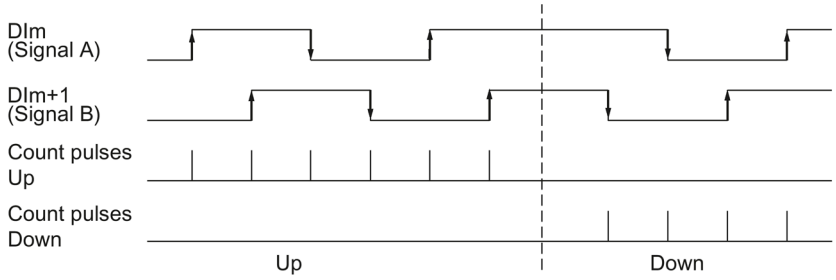

Count signals of 24 V pulse encoders

An encoder, for example, a proximity switch (BERO) or a light barrier, returns only one count signal that is connected to the digital input of a counter.

You can count the positive or the negative edges of the signal.

2.3.5 Isochronous mode

The TM Timer DIDQ supports the system function "Isochronous mode". This system function enables counter values to be acquired in a defined system cycle.

In isochronous mode, the cycle of the user program, the transmission of the input and output data and the processing in the module are synchronized with each other.

Data processing

The data that was transmitted to the module in the current bus cycle via the control interface takes effect when it is processed in the module's internal cycle. The counter value and status bits are detected at time T_i and made available in the feedback interface for retrieval in the current bus cycle.

Additional information

You will find detailed description of the isochronous mode:

- In the Isochronous mode function manual as a download from the Internet (https://support.industry.siemens.com/cs/ww/en/view/109755401) .
- In the PROFINET with STEP 7 function manual as a download from the Internet (https://support.industry.siemens.com/cs/ww/en/view/49948856).

2.4 Basics of counting (digital modules)

2.4.1 Overview of applications

Introduction

You configure the digital module and assign its parameters using the configuration software.

The module's functions are controlled and monitored via the user program with the control and feedback interface.

System environment

The respective module can be used in the following system environments:

Applications	Components required	Configuration software	In the user program
Central operation with a S7-1500 CPU or ET 200SP CPU	• S7-1500 automation system or ET 200SP CPU • Digital module	STEP 7 (TIA Portal): Device configuration and parameter setting with hardware configuration	Direct access to the control and feedback interface of the digital module in the I/O data
Distributed operation with a S7-1500 CPU	• S7-1500 Automation System • ET 200 Distributed I/O System • Digital module		
Distributed operation with a S7-300/400 CPU	• S7-300/400 automation system • ET 200 distributed I/O system • Digital module	STEP 7 (TIA Portal): Device configuration and parameter setting with hardware configuration STEP 7: Device configuration and parameter setting with hardware configuration (ET 200SP) or GSD file (ET 200MP)	
Distributed operation in a third-party system	• Third-party automation system • ET 200 distributed I/O system • Digital module	Third-party configuration software: Device configuration and parameter settings with GSD file	

Note

A description of the control and feedback interface is available in the device manual for the digital module.

2.4.2 Counting with pulse encoders

Counting refers to the detection and summation of events. The modules' counters record and evaluate pulse signals. The counting direction can be specified using encoder or pulse signals or through the configuration.

You can use feedback bits to switch the digital outputs of digital output modules at defined counter values.

You can configure the characteristics of the counters using the functionalities described below.

Counter limits

The counter limits define the counter value range used. The counter limits are configurable and can be modified during runtime using the user program. See the module's device manual for the maximum and minimum configurable counter limits.

You can configure whether the counting processes are terminated or continue when a counter limit is violated (automatic gate stop).

Start value

You can configure a start value within the counter limits. The start value can be modified during runtime with the user program.

Gate control

Opening and closing the hardware gate and software gate defines the period of time during which the counting signals are recordd.

The hardware gate is controlled externally via a digital input of the digital module. The hardware gate can be enabled through parameter assignment. The software gate is controlled via the user program. A description of the control and feedback interface is available in the device manual for the digital module.

2.4.3 Behavior at the counting limits

Violation of a counting limit

The high counting limit is violated when the current counter value is equal to the high counting limit and another upward count pulse is received. The counter low limit is violated when the current counter value is equal to the counter low limit and another downward count pulse is received.

For digital modules of ET 200SP and ET 200AL, the corresponding event bit is set in the feedback interface when the limit is exceeded. You can reset an event bit with the respective control bit:

Counting limit violated	Event bit	Reset bit
High counting limit	EVENT_OFLW	RES_EVENT_OFLW
Low counting limit	EVENT_UFLW	RES_EVENT_UFLW

Note

A description of the control and feedback interface is available in the device manual for the digital module.

You can configure whether or not you want to continue counting to another counter limit after a counting limit violation.

Note

The high counting limit and the start value define the value range of the counter:

Value range of the counter = (high limit – start value) + 1

Examples

The figure below shows an example for terminating counting after overflow and setting the counter to the opposite counting limit:

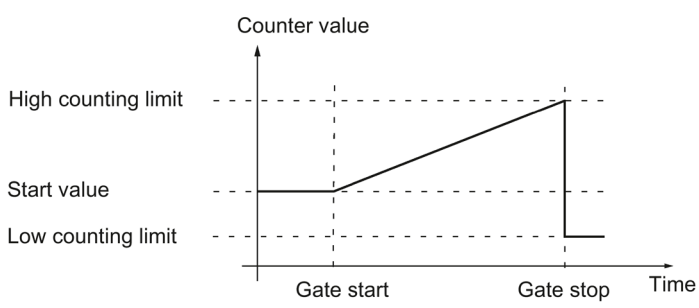

The figure below shows an example for continuing the counting process after an overflow and setting the counter to the opposite counting limit:

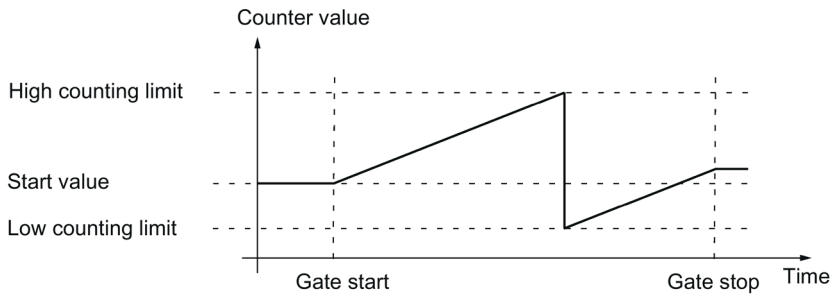

2.4.4 Gate control

Many applications require counting processes to be started or stopped in accordance with other events. In such cases, counting is started and stopped using the gate function.

The digital modules have two gates for each counting channel. These define the resulting internal gate:

- Software gate
- Hardware gate

Note

The hardware gate is not available for all digital modules.

2.4.4.1 Software gate

The software gate of the channel is opened and closed with the SW_GATEcontrol bit.

Note

A description of the control and feedback interface is available in the device manual for the digital module.

2.4.4.2 Hardware gate

The hardware gate is optional. You open and close the hardware gate using signals at the corresponding digital input.

Note

A configurable input delay delays the control signal of the digital input.

The status of a DIm digital input is indicated by the respective STS_DIm feedback bit. A description of the control and feedback interface is available in the device manual for the digital module.

Opening and closing the hardware gate

The figure below shows an example of opening and closing with a digital input:

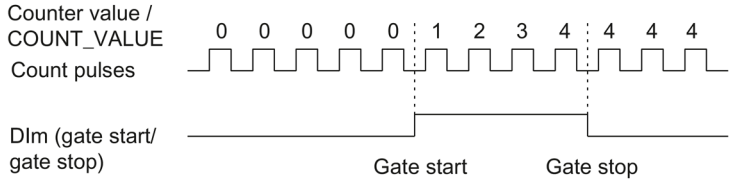

As long as the digital input is set, the hardware gate is open and the count pulses are counted. The hardware gate is closed when the digital input is reset. The counter value stays constant and ignores any further count pulses.

2.4.4.3 Internal gate

Internal gate

The internal gate is open if the software gate is open and the hardware gate is open or has not been configured. The status of the internal gate is indicated by the STS_GATE feedback bit. A description of the control and feedback interface is available in the device manual for the digital module.

If the internal gate is open, counting is started. If the internal gate is closed, all other count pulses are ignored and counting is stopped.

If you want to control a counting process with the hardware gate only, the software gate must be open. If you do not configure a hardware gate, the hardware gate is considered to be always open. In this case, you open and close the internal gate with the software gate only.

Hardware gate	Software gate	Internal gate
Open/not configured	open	open
Open/not configured	closed	closed
closed	open	closed
closed	closed	closed

The internal gate can also be automatically closed upon violation of a counting limit. The software or hardware gate must then be closed and reopened to continue counting.

2.4.4.4 Counting once with hardware gate

One-time counting with hardware gate

The following section describes the one-time counting with hardware gate (HW_Gate).

The counting process stops when the high counting limit is violated. The count value jumps to the lower count limit (= 0).

When counting with hardware gate, the software gate (SW_Gate) and the hardware gate must be set (AND operation). When counting once, the software gate must be set and is controlled with the hardware gate, i.e. when the limit is reached, the counter stops and only when the hardware gate is reset and set again does the counter restart.

If the "SW_Gate" control bit or the hardware gate is reset before the high counting limit is reached, the counter stops.

The following picture shows an example of the principle for counting with hardware gate.

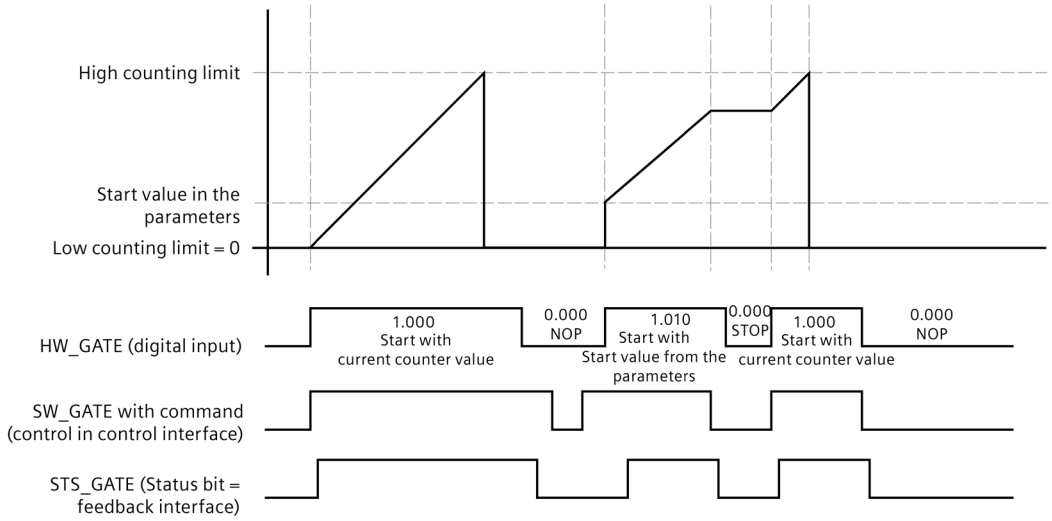

Figure 2-1 Principle: Counting with hardware gate

2.4.5 Comparison values

Depending on the module, you can define up to two comparison values that control a feedback bit for the channel, independent of the user program.

When there are two comparison values, comparison value 1 must be greater than comparison value 0. The comparison values are configurable and can be modified during runtime using the user program.

The comparison values are compared with the current counter value. If the counter value meets the configured comparison condition, the respective STS_DQ feedback bit is set.

You can use the respective feedback bit in order to switch a digital output module's digital output. You can make setting the respective STS_DQ feedback bit dependent on one of the following comparison events. See the device manual for the digital module to find out which comparison events can be configured.

Setting between comparison value and high counter limit

The respective STS_DQ feedback bit is set to 1 when:

Comparison value <= counter value <= high counter limit

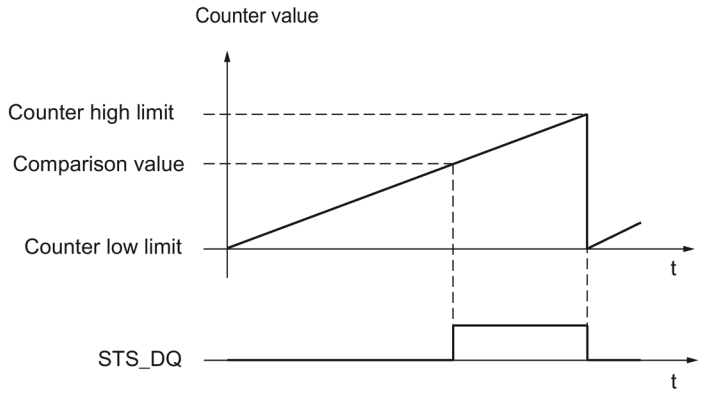

Setting between comparison value and low counter limit

The respective STS_DQ feedback bit is set to 1 when:

Low counter limit <= counter value <= comparison value

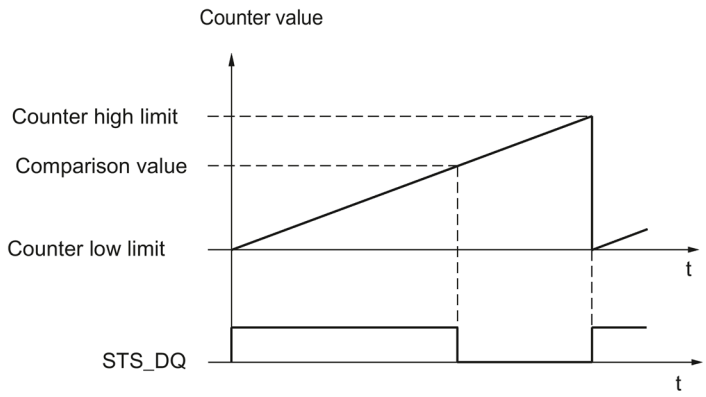

Setting between comparison value 0 and comparison value 1

The respective STS_DQ feedback bit is set to 1 when:

Comparison value 0 <= counter value <= comparison value 1

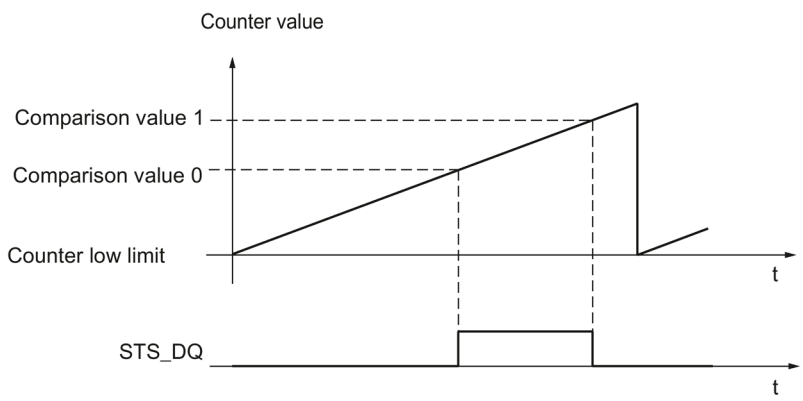

Not setting between comparison value 0 and comparison value 1

The respective STS_DQ feedback bit is set to 1 when:

Comparison value 0 <= counter value <= comparison value 1

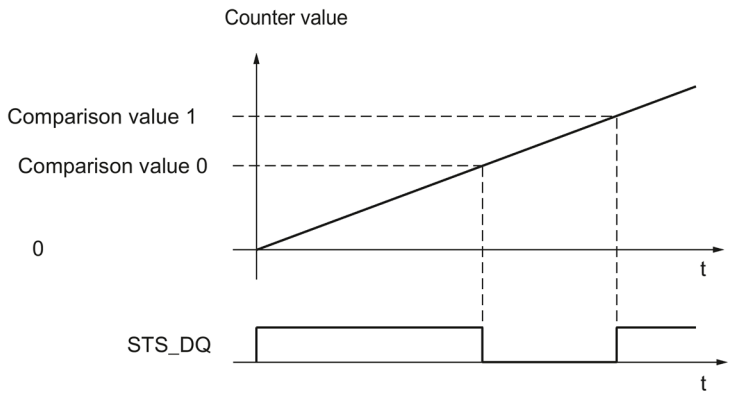

2.4.6 Interrupts

Hardware interrupt

The modules can trigger a hardware interrupt in the CPU for certain events during operation. Process interrupts are enabled via the parameter assignment. Refer to the device manual for the module for information about the events that can trigger a hardware interrupt during operation.

Note

Hardware interrupts for counting are not available at all the modules.

2.4.7 24 V count signals

24 V pulse encoder count signals

An encoder, for example an initiator (BERO) or a light barrier, returns a count signal that is connected to the terminal of a counter. For some modules you change the count direction via the parameter assignment of the DI function.

The figure below shows an example of the time profile of the signals of a 24 V pulse encoder with direction signal and the resulting count pulses:

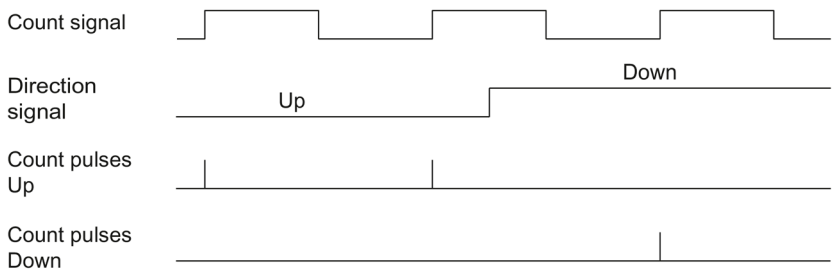

Note

A signal for direction detection is not connectable for all digital modules.

2.4.8 Isochronous mode

The digital module supports the system function "Isochronous mode". This system function enables counter values to be acquired in a defined system cycle.

In isochronous mode, the cycle of the user program, the transmission of the input and output data and the processing in the module are synchronized with each other.

Data processing

The data that was transmitted to the module in the current bus cycle via the control interface takes effect when it is processed in the module's internal cycle. The counter value and status bits are detected at time T_i and made available in the feedback interface for retrieval in the current bus cycle.

Additional information

You will find detailed description of the isochronous mode:

- In the Isochronous mode function manual as a download from the Internet (https://support.industry.siemens.com/cs/ww/en/view/109755401) .
- In the PROFINET with STEP 7 function manual as a download from the Internet (https://support.industry.siemens.com/cs/ww/en/view/49948856).

2.4.9 Counting once with direction setting via digital input

Counting once with direction setting via digital input

The following section describes the direction setting via a digital input.

The "Digital input" count direction is set via the parameters. This means that the count direction is specified via the "Partner digital input".

Count direction:

- "0" up
- "1" down

The start command determines the behavior when starting the counter:

- The counting process starts with the current count value.
- The counting process starts with the start value that was specified via parameter/command interface.

The following figure shows an example of the principle for counting with direction setting via a digital input.

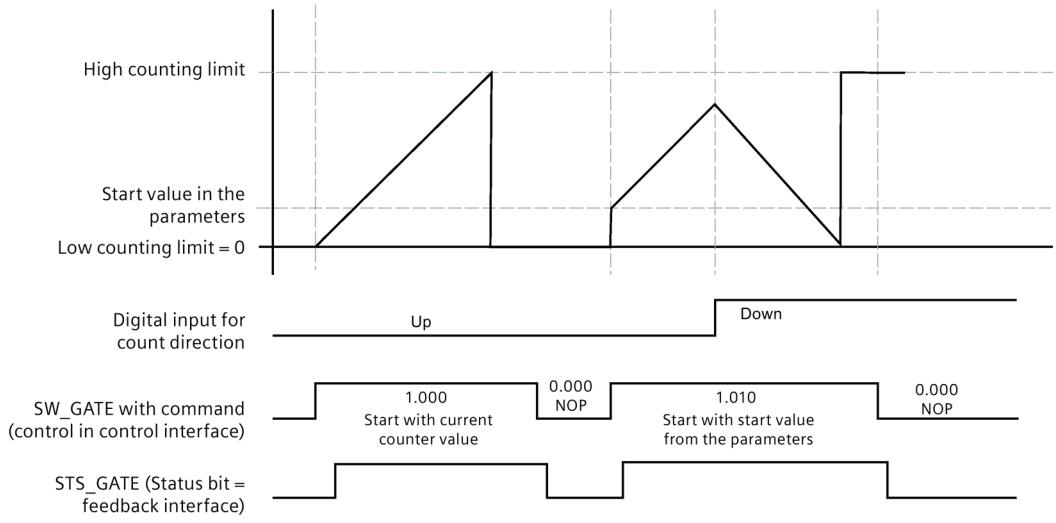

Figure 2-2 Principle: Counting with direction specification

2.5 Basics of counting (SIMATIC Drive Controller)

2.5.1 Overview of applications

Introduction

You configure the X142 technology I/Os of the SIMATIC Drive Controller and assign its parameters with the STEP 7 configuration software. The event counter and the period duration measurement are evaluated via the feedback interface of the X142 technology I/Os in the IO data.

Note

A description of the control and feedback interface is available in the SIMATIC Drive Controller system manual (https://support.industry.siemens.com/cs/ww/en/view/109766665).

System environment

The SIMATIC Drive Controllers can be used in the following system environment:

Application scenarios	Components required	Configuration software	In the user program
Drive-based automation solution with SIMATIC Drive Controller	• SIMATIC Drive Controller[1] • SINAMICS S120 drive components (power units, ...)	STEP 7[1] and SINAMICS S120 Startdrive (TIA Portal): Device configuration and parameter setting (Page 253)	Direct access to control and feedback interface of the X142 technology I/Os

[1] Required for X142 technology I/Os

2.5.2 Event counter

You can use up to 8 channels of the X142 technology I/Os for counting tasks.

With the event counter (16-bit value), you measure the number of positive edges per application cycle via the feedback interface.

The event counter is a circumferential counter.

- An overflow of the event counter is not displayed.
- The exact value must be calculated from the difference.

Count direction

Counting always takes place in the forward direction.

2.5.3 Period duration measurement

You can use up to 8 channels of the X142 technology I/Os for period duration measurement.

With period duration measurement (32-bit value), you measure the number of increments of 41.67 ns between the last two incoming positive edges in the application cycle via the feedback interface.

Period duration = 41.67 ns x number of increments

2.5.4 Isochronous mode

The event/period duration measurement requires isochronous operation.

You can find more information in the SIMATIC Drive Controller system manual (https://support.industry.siemens.com/cs/ww/en/view/109766665).

Using the High_Speed_Counter technology object 3

3.1 Convention

Technology module: We use the term "technology module" in this documentation both for the technology modules TM Count and TM PosInput and the technology component of the compact CPUs.

3.2 High_Speed_Counter technology object

STEP 7 (TIA Portal) supports you in the configuration, commissioning and diagnostics of counting and measuring functions for the following technology modules with the "Technology objects" function:

- You configure the High_Speed_Counter technology object in STEP 7 (TIA Portal) with the settings for the counting and measuring functions.
- The corresponding High_Speed_Counter instruction is programmed in the user program. This instruction supplies the control and feedback interface of the technology module.

The High_Speed_Counter technology object corresponds to the instance DB of the High_Speed_Counter instruction. The configuration of the counting and measuring functions is saved in the technology object. The technology object is located in the folder "PLC > Technology objects".

The High_Speed_Counter technology object can be used for technology modules of both the S7-1500 and ET 200SP systems.

Operating mode

In order to assign the technology module parameters using the technology object, you specify the operating mode (Page 180) "Operating with "Counting and measurement" technology object" in the hardware configuration of the technology module. This selection is already preset.

3.3 Overview of the configuration steps

Introduction

The overview below shows the basic procedure for configuring the counting and measuring functions of the technology module with the High_Speed_Counter technology object.

Requirement (TM Count and TM PosInput)

Before you can use the High_Speed_Counter technology object, a project with an S7-1500 CPU or an ET 200SP CPU must be created in STEP 7 (TIA Portal) .

Requirement (Compact CPU)

Before you can use the High_Speed_Counter technology object, a project with a Compact CPU S7-1500 must be created in STEP 7 (TIA Portal).

Procedure

Proceed in the recommended sequence outlined below:

Step	Description
1	Configure a technology module (Page 175)
2	Add technology object (Page 102)
3	Configure a technology object according to your application (Page 104)
4	Call instruction in the user program (Page 127)
5	Load to CPU
6	Commissioning the technology object (Page 140)
7	Diagnostics of the technology object (Page 142)

3.4 Add technology object

Adding a technology object in the project navigation

When a technology object is added, an instance DB is created for the instruction of this technology object. The configuration of the technology object is stored in this instance DB.

Requirement (TM Count and TM PosInput)

A project with a CPU S7-1500 has been created.

Requirement (Compact CPU)

A project with a Compact CPU S7-1500 has been created.

Procedure

To add a technology object, proceed as follows:

1. Open the CPU folder in the project tree.
2. Open the "Technology objects" folder.
3. Double-click on "Add new object".
   The "Add new object" dialog opens.
4. Select the "Counting and measurement" technology.
5. Select the "High_Speed_Counter" object.
6. Enter an individual name for the technology object in the "Name" text box.
7. Click "Additional information" if you want to add your own information to the technology object.
8. Confirm with "OK".

Result

The new technology object has now been created and stored in the project tree in the "Technology objects" folder.

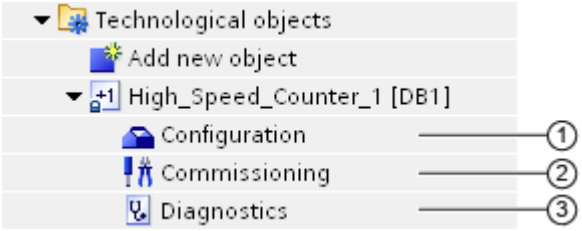

	Object	Description
①	Configuration (Page 104)	In the configuration dialog: • Assignment of technology module and channel • Technology object parameter settings for counting and measurement functions When you change the configuration of the technology object, you must download the technology object **and** the hardware configuration to the CPU.
②	Commissioning (Page 140)	Commissioning and function test of the technology object: Simulating parameters of the High_Speed_Counter instruction and monitoring the effects
③	Diagnostics (Page 142)	Monitoring the counting and measuring functions

3.5 Configuring the High_Speed_Counter

3.5.1 Working with the configuration dialog

You configure the properties of the technology object in the configuration window. Proceed as follows to open the configuration window of the technology object:

1. Open the "Technology objects" folder in the project tree.
2. Open the technology object in the project tree.
3. Double-click on the "Configuration" object.

The configuration is divided into the following categories:

- **Basic parameters**

  The basic parameters include the selection of the technology module and the number of the counting channel for which the technology object is configured.

- **Extended parameters**

  The extended parameters include the parameters for adapting the counting and measuring functions and for setting the characteristics of the digital inputs and digital outputs.

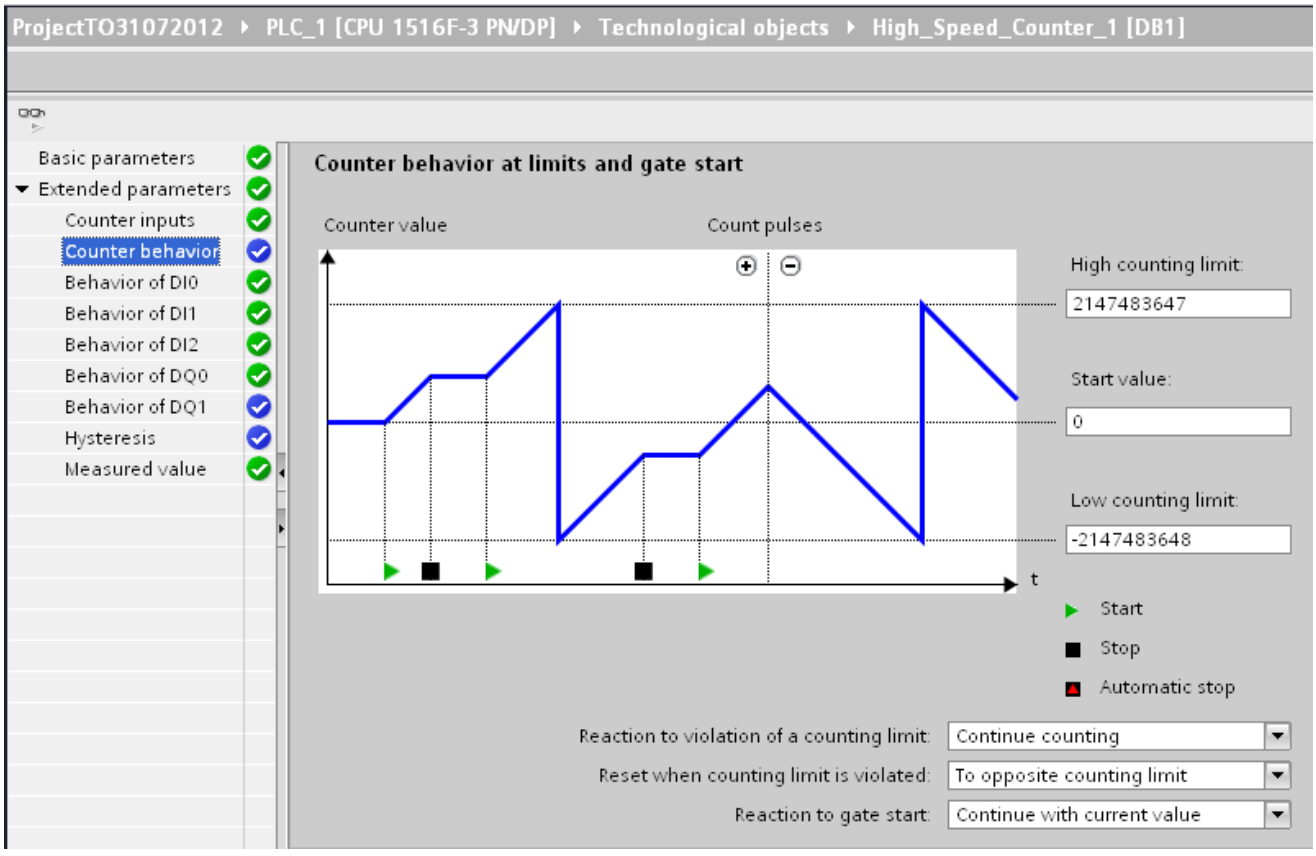

Configuration window icons

Icons in the area navigation of the configuration show additional details about the status of the configuration:

	The configuration contains default values and is complete. The configuration contains only default values. With these default values, you can use the technology object without additional changes.
	The configuration contains values set by the user or automatically adapted values and is complete All text boxes of the configuration contain valid values and at least one default value was changed.
	The configuration is incomplete or incorrect At least one text box or drop-down list contains an invalid value. The corresponding field or the drop-down list is displayed on a red background. Click the roll-out error message to indicate the cause of error.

3.5.2 Basic parameters

You can establish the connection between the High_Speed_Counter technology object and the technology module under "Basic parameters".

Module (TM Count and TM PosInput)

You select the technology module in a subsequent dialog box. All technology modules (central or distributed) that are configured for use with a "Counting and measurement" technology object under the S7-1500 CPU or ET 200SP CPU are available for selection.

After selecting the technology module, you can open the device configuration associated with the technology module by clicking the"Device configuration" button.

The technology module parameter settings required for the use of the technology object are made in the "Extended parameters" of the technology object.

Module (Compact CPU)

You can select a high-speed counter for the Compact CPU in a subsequent dialog. You can choose any of the high-speed counters which are enabled and configured for use with a technology object from "Counting and measuring".

After selecting the high-speed counter, you can open the device configuration associated with the Compact CPU by clicking the"Device configuration" button.

The parameter settings of the high-speed counter required for the use of the technology object are made in the "Extended parameters" of the technology object.

Channel

For a technology module with several counting channels, you can also select the number of the counting channel for which the High_Speed_Counter technology object is to be valid.

Note

A channel can be assigned to only *one* technology object. A channel that is already assigned to a technology object can no longer be selected.

Synchronization of the parameter values

If, after assignment of the channel to the technology object, there is an inconsistency between the parameter values in the property dialog of the module and in the technology object, a button with a corresponding inquiry appears. When you click the button, the parameter values in the property dialog are overwritten by the parameter values in the property dialog within STEP 7 (TIA Portal). The current parameter values of the technology object are displayed in the property dialog (read-only).

Note

If you change parameter values of the technology object, the corresponding parameter values are also overwritten without prompt in the properties dialog of the hardware configuration. As after every change in hardware configuration, the next time the project is loaded in the CPU, a prompt appears asking whether the CPU should go to STOP mode.

3.5.3 Counter inputs (High_Speed_Counter)

Signal type

You can choose from the following signal types (Page 72):

Symbol	Signal type	Meaning	Additional option-specific parameters
	Incremental encoder (A, B phase-shifted)	An incremental encoder with phase-shifted A and B signals is connected.	• Signal evaluation • Invert direction • Filter frequency • Sensor type or Interface standard
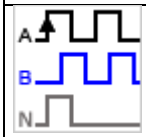	Incremental encoder (A, B, N)	An incremental encoder with phase-shifted signals A and B and a zero signal N is connected.	• Signal evaluation • Invert direction • Filter frequency • Sensor type or Interface standard • Reaction to signal N • Frequency of synchronization • Frequency of the Capture function
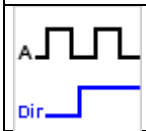	Pulse (A) and direction (B)	A pulse encoder (signal A) with direction signal (signal B) is connected.	• Filter frequency • Sensor type or Interface standard
	Pulse (A)	A pulse encoder (signal A) without direction signal is connected. You can specify the count direction by means of the control interface (Page 237).	• Filter frequency • Sensor type or Interface standard
	Count up (A), count down (B)	Signals for counting up (signal A) and down (signal B) are connected.	• Filter frequency • Sensor type or Interface standard

Invert direction

You can invert the counting direction to adapt it to the process.

The inverting of the direction is configurable and active for the following signal types:

- Incremental encoder (A, B phase-shifted)
- Incremental encoder (A, B, N)

Signal evaluation

By configuring signal evaluation (Page 77), you can specify which edges of the signals are counted.

You can select from the following options:

Symbol	Signal evaluation	Meaning
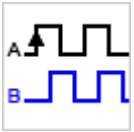	Single (Page 77) (default)	The edges of signal A are evaluated during a low level of signal B.
	Double (Page 78)	Each edge of signal A is evaluated.
	Quadruple (Page 79)	Each edge of signals A and B is evaluated.

The parameter can be assigned with the following signal types:

- Incremental encoder (A, B phase-shifted)
- Incremental encoder (A, B, N)

Filter frequency

By configuring the filter frequency, you suppress interferences at the counting inputs A, B and N.

The selected filter frequency is based on a pulse/break ratio of between around 40:60 and around 60:40. This results in a specific minimum pulse/break time. Signal changes with a duration shorter than the minimum pulse/break time are suppressed.

You can select from the following filter frequencies:

Filter frequency	Minimum pulse/break time
100 Hz	4.0ms
200 Hz	2.0 ms
500 Hz	800 µs
1 kHz	400 µs
2 kHz	200 µs
5 kHz	80 µs
10 kHz	40 µs
20 kHz	20 µs
50 kHz	8.0 µs

Filter frequency	Minimum pulse/break time
100 kHz (preset for Compact CPU)	4.0 µs
200 kHz** (preset for TM Count)	2.0 µs
500 kHz*	0.8 µs
1 MHz* (default at TM PosInput)	0.4 µs

* Only available with TM PosInput
** * Only available with TM Count and TM PosInput

Sensor type (TM Count)

By configuring the sensor type, you specify how the counter inputs are switched for the TM Count.

You can select from the following options:

Sensor type	Meaning
Sourcing output (default)	The encoder/sensor switches the inputs A, B and N to 24VDC.
Sinking output	The encoder/sensor switches the inputs A, B and N to M.
Push-pull (sinking and sourcing output)	The encoder/sensor alternately switches the inputs A, B and N to M and 24VDC.

"Push-pull" is usually selected when incremental encoders are used. If using 2-wire sensors, such as light barriers or proximity switches, you need to select the corresponding wiring "sourcing output" or "sinking output".

The data sheet of the encoder includes information on whether your incremental encoder is a push-pull encoder.

Note

If you use a push-pull encoder and the sensor type "Push-pull (sinking and sourcing output)" is configured, you can monitor the encoder signals for wire break.

Sensor type (Compact CPU)

The "Sourcing output" sensor type is set for the Compact CPU and cannot be changed. The encoder or sensor switches the inputs A, B and N to 24V DC.

You can operate both sourcing output encoders as well as push-pull encoders on the Compact CPU. You can find additional information on the sensor type in the data sheet for the encoder.

Interface Standard (TM PosInput)

You use this parameter to specify whether the encoder outputs symmetric (RS422) or asymmetric (TTL) signals for the TM PosInput.

You can select from the following options:

Interface standard	Meaning
RS422, symmetrical (default)	The encoder outputs symmetric signals according to the RS422 standard (Page 74).
TTL (5 V), asymmetrical	The encoder outputs asymmetric 5 V signals according to the TTL standard (Page 72).

Note

The RS422 standard provides greater interference immunity than the TTL standard. If your incremental or pulse encoder supports the RS422 standard **and** the TTL standard, we recommend using the RS422 standard.

Reaction to signal N

You use this parameter to specify which reaction is triggered to signal N.

You can select from the following options:

Option	Meaning
No reaction to signal N (default)	The counter is not affected by signal N.
Synchronization at signal N (Page 45)	The counter is set to the start value at signal N. If you select the function "Enable synchronization at signal N" for a digital input, the synchronization depends on the level at the digital input.
Capture at signal N (Page 35)	The counter value is stored in the Capture value at signal N. The use of a digital input and the use of the N signal are not mutually exclusive for the Capture function. The technology object displays the Capture value at the output parameter CapturedValue.

Note

You can only select the reaction to signal N if you have selected the "Incremental encoder (A, B, N)" signal type.

Note

If "Synchronization at signal N" is selected, you can select the function "Enable synchronization at signal N" for a digital input (Page 114).

Note

For High_Speed_Counter as of V3.0, the following applies:

You can choose "Capture at signal N" only in operating mode "Use count value as reference":

Frequency of synchronization

This parameter is used to define the frequency of the following events:

- Synchronization at signal N
- Synchronization as function of a digital input

You can select from the following options:

Option	Meaning
Once (default)	The counter is only set at the first signal N or the first configured edge of the digital input.
Periodic	The counter is set at each signal N or each configured edge of the digital input.

Frequency of the Capture function

This parameter is used to define the frequency of Capture events for the following functions:

- Capture at Signal N
- Capture as function of a digital input

You can select from the following options:

Option	Meaning
Once	The first configured edge at the respective digital input or first rising edge of the N signal saves the current counter value as a Capture value.
Periodic (default)	Each configured edge at the respective digital input or each rising edge of the N signal saves the current counter value as a Capture value.

Note

This parameter is available for High_Speed_Counter as of V3.2.

3.5.4 Counter behavior

3.5.4.1 Counting limits and start value

High counting limit

You limit the counting range by setting the high counting limit. You can enter a value up to 2147483647 (2^{31}-1). You must enter a value that lies above the low counting limit.

The default setting is "2147483647".

Low counting limit

You limit the counting range by setting the low counting limit. You can enter a value up to -2147483648 (-2^{31}). You must enter a value below the high counting limit.

The default setting is "-2147483648".

Start value

By configuring the start value, you specify the value at which counting is to start and where it is to continue in the case of defined events. You must enter a value between the counting limits or equal to the counting limits.

The default setting is "0".

Additional information

For more information, see Behavior at the counting limits (Page 30) and Counter behavior at gate start (Page 34).

3.5.4.2 Counter behavior at limits and gate start

Reaction to violation of a counting limit

You can configure the following characteristics for violation of a counting limit (Page 30):

Reaction	Meaning
Stop counting	If a counting limit is violated, counting is stopped and the internal gate is closed. To restart counting, you must also close and reopen the software/hardware gate.
Continue counting (default)	Counting continues either with the start value or at the opposite counting limit, depending on the additional parameter assignment.

Reset when counting limit is violated

You can reset the counter to the following values when a counting limit is violated:

Reset the value	Meaning
To start value	The counter value is set to the start value.
To opposite counting limit (default)	The counter value is set to the opposite counting limit.

Reaction to gate start

You can set the following Reaction to gate start (Page 34):

Reaction	Meaning
Set to start value	When the gate is opened, the counter value is set to the start value.
Continue with current value (default)	When the gate is opened, counting is continued with the last counter value.

3.5.5 Behavior of a DI (High_Speed_Counter)

Setting function of the DI

By configuring a digital input, you specify which functions the digital input triggers at switching.

You can select from the following options:

Function of a digital input	Meaning	Additional option-specific parameters
Gate start/stop (level-triggered)	The level at the respective digital input opens and closes the hardware gate (Page 32).	• Input delay • Select level
Gate start (edge-triggered)	The configured edge at the respective digital input opens the hardware gate (Page 32).	• Input delay • Edge selection
Gate stop (edge-triggered)	The configured edge at the respective digital input closes the hardware gate (Page 32).	• Input delay • Edge selection
Synchronization (Page 40)	The configured edge at the respective digital input sets the counter to the start value. The technology object indicates whether a synchronization has occurred at the output parameter SyncStatus.	• Input delay • Edge selection • Frequency of synchronization
Enable synchronization at signal N	The active level at the respective digital input enables synchronization of the counter at signal N (Page 45).	• Input delay • Select level
Capture	The configured edge at the respective digital input saves the current counter value (Page 35) as a Capture value. The use of a digital input and the use of the N signal are not mutually exclusive for the Capture function. The technology object displays the Capture value at the output parameter CapturedValue.	• Input delay • Edge selection • Frequency of the Capture function • Behavior of counter value after Capture
Digital input without function	No technological function is assigned to the respective digital input. You can read the signal state of the digital input via the respective static variable of the technology object: • UserStatusFlags.StatusDI0 • UserStatusFlags.StatusDI1 • UserStatusFlags.StatusDI2	• Input delay

Note

With the exception of "Digital input without function", each function can only be used once for each counter, and if used for one digital input is not available to the others.

Note

For High_Speed_Counter as of V3.0, the following applies:

You can choose the "Capture" function only in operating mode "Use count value as reference".

Input delay (TM Count and TM PosInput)

You use this parameter to suppress signal interference at the digital inputs. Changes to the signal are only detected if they remain stable for longer than the configured input delay time.

You can select from the following input delays:

- None
- 0.05 ms
- 0.1 ms (default)
- 0.4 ms
- 0.8 ms
- 1.6 ms
- 3.2 ms
- 12.8 ms
- 20 ms

Note

If you select the "None" or "0.05 ms" option, you have to use shielded cables for connection of the digital inputs.

Note

You configure the input delay under "Behavior of DI0" for all digital inputs together. The input delay is also displayed under "Behavior of DI1" and for TM Count also under "Behavior of DI2".

Input delay (Compact CPU)

You use this parameter to suppress interference at the digital inputs of the DIn signals. Changes to the signal are only detected if they remain stable for longer than the configured input delay time.

You can configure the input delay for a digital input of a Compact CPU in the Inspector window of the device configuration under "Properties > DI 16/DQ 16 > Inputs > Channel n".

You can select from the following input delays:

- None
- 0.05 ms
- 0.1 ms
- 0.4 ms
- 1.6 ms
- 3.2 ms (default)
- 12.8 ms
- 20 ms

Note

If you select the "None" or "0.05 ms" option, you have to use shielded cables for connection of the digital inputs.

Select level

You use this parameter to specify the level at which the digital input is active.

You can select from the following options:

Level	Meaning
Active with high level (default)	The respective digital input is active when it is set.
Active with low level	The respective digital input is active when it is not set.

The parameter can be set for the following functions of a digital input:

- Gate start/stop (level-triggered)
- Enable synchronization at signal N

Edge selection

You can use this parameter to specify the edge of the digital input at which the configured function is triggered.

The following options may be available depending on the function selected:

- At rising edge (default)
- At falling edge
- At rising and falling edge

The parameter can be set for the following functions of a digital input:

- Gate start (edge-triggered)
- Gate stop (edge-triggered)
- Synchronization
- Capture

Note

At rising and falling edge" can only be configured for the "Capture" function.

Frequency of synchronization

This parameter is used to define the frequency of the following events:

- Synchronization at signal N
- Synchronization as a function of a digital input

You can select from the following options:

Option	Meaning
Once (default)	The counter is only set at the first signal N or the first configured edge of the digital input.
Periodic	The counter is set at each signal N or each configured edge of the digital input.

Frequency of the Capture function

This parameter is used to define the frequency of Capture events for the following functions:

- Capture at Signal N
- Capture as function of a digital input

You can select from the following options:

Option	Meaning
Once	The first configured edge at the respective digital input or first rising edge of the N signal saves the current counter value as a Capture value.
Periodic (default)	Each configured edge at the respective digital input or each rising edge of the N signal saves the current counter value as a Capture value.

Note

This parameter is available for High_Speed_Counter as of V3.2.

Behavior of counter value after Capture

You can configure the following characteristics for the counter after a capture event (Page 35):

Reaction	Meaning
Continue counting (default)	After saving the current counter value as Capture value, counting is continued unchanged.
Set to start value and continue counting	After saving the current counter value as Capture value, counting is continued with the start value.

3.5.6 Behavior of a DQ (High_Speed_Counter)

Operating mode (High_Speed_Counter V3.0 or higher)

The operating mode determines which value comparison functions work.

Operating mode	Meaning
Use count value as reference (default)	The comparison functions and hardware interrupts for compare events work with the counter value. This functionality corresponds to the functionality of the High_Speed_Counter in versions before V3.0.
Use measured value as reference	The comparison functions and hardware interrupts for compare events work with the measured value.

Note

You configure the operating mode under "Behavior of DQ0" for both digital outputs together. The operating mode is also displayed under "Behavior of DQ1".

Set output

With the parameter assignment of a digital output, you specify the condition upon which the digital output switches.

You can select from the following options:

Function of a digital output (Page 49) in operating mode "Use count value as reference"	Meaning	Additional option-specific parameters
Between comparison value and high limit (default)	The respective digital output is active if: Comparison value <= counter value <= high counting limit	• Comparison value 0 • Comparison value 1 • Hysteresis (in increments)
Between comparison value and low limit	The respective digital output is active if: Low counting limit <= counter value <= comparison value	• Comparison value 0 • Comparison value 1 • Hysteresis (in increments)
Between comparison value 0 and 1	The digital output DQ1 is active if: Comparison value 0 <= counter value <= comparison value 1	• Comparison value 0 • Comparison value 1 • Hysteresis (in increments)
At comparison value for a pulse duration	The respective digital output is active once for the configured time and count direction when the counter value reaches the comparison value.	• Comparison value 0 • Comparison value 1 • Count direction • Pulse duration • Hysteresis (in increments)

Function of a digital output (Page 49) in operating mode "Use count value as reference"	Meaning	Additional option-specific parameters
After set command from CPU until comparison value	When a set command is sent from the CPU, the respective digital output is active until the counter value is equal to the comparison value.	• Comparison value 0 • Comparison value 1 • Count direction • Hysteresis (in increments)
Use by user program	The respective digital output can be switched by the CPU via the control interface (Page 48).	—

Note

DQ0 of a counter of a Compact CPU

With a Compact CPU, the respective digital output DQ0 is available via the feedback interface, but not as a physical output.

Note

You can only select the "Between comparison value 0 and 1" function for digital output DQ1 and only if you have selected the "Use by user program" function for digital output DQ0.

Note

The "At comparison value for a pulse duration" and "After set command from CPU until comparison value" functions only switch the digital output in question if a count pulse reaches the comparison value. When the counter value is set, e.g. by synchronization, the digital output does not switch.

Function of a digital output (Page 57) in operating mode "Use measured value as reference"	Meaning	Additional option-specific parameters
Measured value >= comparison value (default)	The respective digital output is active if the measured value is greater than or equal to the comparison value.	• Comparison value 0 • Comparison value 1
Measured value <= comparison value	The respective digital output is active if the measured value is less than or equal to the comparison value.	• Comparison value 0 • Comparison value 1
Between comparison value 0 and 1	The digital output DQ1 is active if: Comparison value 0 <= measured value <= comparison value 1	• Comparison value 0 • Comparison value 1
Not between comparison value 0 and 1	The digital output DQ1 is active if: Comparison value 1 <= measured value <= comparison value 0	• Comparison value 0 • Comparison value 1
Use by user program	The respective digital output can be switched by the CPU via the control interface (Page 48).	—

Note

You can select the "Between comparison value 0 and 1" and "Not between comparison value 0 and 1" functions only for digital output DQ1 and only if you have selected the "Use by user program" function for digital output DQ0.

Comparison value 0(TM Count and TM PosInput)

Operating mode "Use count value as reference"

With the parameter assignment of the comparison value (Page 49), you specify the counter value at which the digital output DQ0 switches as a result of the selected comparison event.

You must enter an integer (DINT) that is greater than or equal to the low counting limit. If you use the DQ function "Between comparison value 0 and 1", the comparison value 0 has to be smaller than comparison value 1. The default setting is "0".

Operating mode "Use measured value as reference"

With the parameter assignment of the comparison value (Page 57), you specify the measured value at which the digital output DQ0 switches as a result of the selected comparison event.

You must enter a floating point number (REAL). If you use the DQ function "Between comparison value 0 and 1", the comparison value 0 has to be smaller than comparison value 1. The minimum value is -7.922816×10^{28}. The default setting is "0.0". The unit of the comparison value depends on the measured variable.

Comparison value 0(Compact CPU)

Operating mode "Use count value as reference"

With the parameter assignment of the Comparison value (Page 49), you specify the counter value at which the STS_DQ0 bit is set in the feedback interface of the selected comparison event. The digital output DQ0 is not available as a physical output in a Compact CPU.

You must enter an integer (DINT) that is greater than or equal to the low counting limit. If you use the DQ function "Between comparison value 0 and 1", the comparison value 0 has to be smaller than comparison value 1. The default setting is "0".

Operating mode "Use measured value as reference"

With the parameter assignment of the Comparison value (Page 57), you specify the measured value at which the STS_DQ0 bit is set in the feedback interface of the selected comparison event. The digital output DQ0 is not available as a physical output in a Compact CPU.

You must enter a floating point number (REAL). If you use the DQ function "Between comparison value 0 and 1", the comparison value 0 has to be smaller than comparison value 1. The minimum value is -7.922816×10^{28}. The default setting is "0.0". The unit of the comparison value depends on the measured variable.

Comparison value 1

Operating mode "Use count value as reference"

With the parameter assignment of the comparison value (Page 49), you specify the counter value at which the digital output DQ1 switches as a result of the selected comparison event.

You must enter an integer (DINT) that is smaller than or equal to the high counting limit. If you use the DQ function "Between comparison value 0 and 1", the comparison value 0 has to be smaller than comparison value 1. The default setting is "10".

Operating mode "Use measured value as reference"

With the parameter assignment of the comparison value (Page 57), you specify the measured value at which the digital output DQ1 switches as a result of the selected comparison event.

You must enter a floating point number (REAL). If you use the DQ function "Between comparison value 0 and 1", the comparison value 0 has to be smaller than comparison value 1. The maximum value is 7.922816×10^{28}. The default setting is "10.0". The unit of the comparison value depends on the measured variable.

Count direction

You use this parameter to specify the count direction for which the selected function is valid.

You can select from the following options:

Count direction	Meaning
In both directions (default)	The comparison and switching of the respective digital output take place regardless of the count direction.
Up	The comparison and switching of the respective digital output only takes place when the counter counts up.
Down	The comparison and switching of the respective digital output only takes place when the counter counts down.

The parameter can be configured for the following functions:

- At comparison value for a pulse duration
- After set command from CPU until comparison value

Pulse duration

By configuring the pulse duration for the function "At comparison value for a pulse duration", you specify the number of milliseconds for which the respective digital output is active.

If you enter "0" and the counter value corresponds to the comparison value, the digital output remains active until the next count pulse.

You can enter a value between 0.0 and 6553.5.

The default setting is "500.0", which is equivalent to a pulse duration of 0.5 s.

Hysteresis (in increments)

By configuring the hysteresis (Page 67), you can define a range around the comparison values. For the functions "Between comparison value and upper counter limit" and "Between comparison value and lower counter limit" the hysteresis also applies at the counter limits. Within the hysteresis range, the digital outputs cannot switch again until the counter value is outside the range.

Choose a small enough hysteresis. When the hysteresis range, starting from the configured comparison value, spans the entire counter value range, proper functioning of the comparison values cannot be guaranteed.

If a comparison value lies so close to the counter limit that the hysteresis range would extend beyond this counter limit, the hysteresis range ends at it.

If you enter "0", the hysteresis is turned off. You can enter a value between 0and 255. The default setting is "0".

Note

The following applies for High_Speed_Counter as of V3.0:

You configure the hysteresis under "Behavior of DQ0" for both digital outputs together. The hysteresis is also displayed under "Behavior of DQ1".

The hysteresis is only available in operating mode "Use count value as reference".

3.5.7 Specify measured value (High_Speed_Counter)

Measured variable

This parameter is used to specify the measured variable (Page 60) to be provided by the technology module. The technology object displays the measured value at the output parameter MeasuredValue.

You can select from the following options:

Measured variable	Meaning	Additional option-specific parameters
Frequency (default)	The measured variable shows the number of increments per second. The value is a floating point number (REAL). The unit is Hz. The technology object displays the measured value at the output parameter MeasuredValue.	• Update time
Period	The measured variable is the average period between two increments. The value is an integer (DINT). The unit is s. The technology object displays the measured value at the output parameter MeasuredValue.	• Update time
Velocity	The measured variable is a velocity. Examples of a velocity measurement can be found in the explanation of the "Increments per unit" parameter. The technology object displays the measured value at the output parameter MeasuredValue.	• Update time • Time base for velocity measurement • Increments per unit

Update time

By configuring the update time (Page 60) in milliseconds, you can specify the time interval between two measured value updates.

The update time and the signal type effect the accuracy of the measurement. In the case of update times of at least 100 ms, the effect of the signal type is negligible.

In the case of update times of less than 100 ms, you achieve maximum measurement accuracy using the following signal types:

- Incremental encoder (A, B phase-shifted) with Signal evaluation "Single"
- Incremental encoder (A, B, N) with Signal evaluation "Single"
- Pulse (A) and direction (B)
- Pulse (A)

In the case of other signal types, measurement accuracy depends on the encoder and cable used.

If you enter "0", the measured value is updated once per module-internal cycle. Up to three decimal places can be entered. A value from 0.0 to 25000.0 is permissible. The default setting is "10.0".

Time base for velocity measurement

This parameter defines the time base on which the velocity is to be returned.

You can select from the following options:

- 1 ms
- 10 ms
- 100 ms
- 1 s
- 60 s

The default setting is "60 s".

Increments per unit

You can use this parameter to define the number of count pulses per relevant unit that the incremental or absolute encoder supplies for the velocity measurement.

The number of count pulses depends on the configured signal evaluation. You can enter a value between 1 and 65535.

Example 1:

You encoder delivers 4000 count pulses for travel over one meter. The velocity is to be measured in meters per second. "Double" is configured as signal evaluation.

In this case, you need to assign the following parameters:

- Increments per unit: 8000
- Time base for velocity measurement: 1 s

Example 2:

Your encoder delivers 4096 count pulses per revolution. The velocity is to be measured in revolutions per minute. "Single" is configured as the signal evaluation.

In this case, you need to assign the following parameters:

- Increments per unit: 4096
- Time base for velocity measurement: 60 s

3.6 Programming the High_Speed_Counter

3.6.1 High_Speed_Counter instruction

High_Speed_Counter

The High_Speed_Counter instruction is part of the High_Speed_Counter technology object. It supplies the control and feedback interface of the technology module.

The High_Speed_Counter instruction thereby forms the software interface between the user program and the technology module. It must be called cyclically from the user program in order to synchronize the input and output data.

The High_Speed_Counter instruction can be used for the technology modules of both S7-1500 and ET 200SP. The modules can be used centrally and decentrally. The instruction applies in each case to the channel of the technology module that was assigned to the associated technology object.

Additional information

Description High_Speed_Counter (Page 128)

High_Speed_Counter input parameters (Page 133)

High_Speed_Counter output parameters (Page 134)

Error codes of parameter ErrorID (Page 138)

High_Speed_Counter static variables (Page 136)

3.6.2 Call instruction in the user program

The High_Speed_Counter instruction can be called once for each counter in the cycle or, alternatively, in a time-controlled program. The call is not permitted in an event-controlled interrupt program.

Procedure

Proceed as follows to call the instruction in the user program:

1. Open the CPU folder in the project tree.
2. Open the "Program blocks" folder.
3. Double-click the OB for cyclic program execution.
   The block is opened in the work area.
4. In the "Instructions" window, open the "Technology" group and the "Counting and measurement" folder.
   The folder contains the instruction.
5. Select the instruction and drag it to your OB.
   The "Call options" dialog opens.
6. Select a technology object from the "Name" list or enter the name for a new technology object.
7. Confirm with "OK".

Result

If the technology object does not exist yet, it is added. The instruction is added in the OB. The technology object is assigned to this call of the instruction.

Note

If you click one of the buttons "Configuration", "Commissioning" or "Diagnostics" in the user interface of the instruction, the respective editor opens.

3.6.3 Description High_Speed_Counter

Description

The High_Speed_Counter instruction is used to control the technology module counting and measuring functions via the user program.

Call

The instruction High_Speed_Counter must be called once per counter, either cyclically or in a time-controlled program. The call is not permitted in an event-controlled interrupt program.

Operating principle

Counter value: The counter value is available at the output parameter CountValue. The counter value is updated at every call of the High_Speed_Counter instruction.

Measured value: The technology module updates the measured value asynchronously to the instruction call based on the configured update time. The measured value last determined by the technology module is updated at the output parameter MeasuredValue each time the instruction is called.

The measured value and the counter value are available in parallel in the feedback interface.

Capture: The output parameter CaptureStatus = TRUE indicates a valid Capture value at the output parameter CapturedValue.

- A Capture value is captured under the following conditions:
  - A digital input has the parameter assignment "Capture"
  - CaptureEnable = TRUE
  - Edge at digital input with the Capture function
- The output parameter CaptureStatus is reset by a negative edge at the input parameter CaptureEnable.

Synchronization: The output parameter SyncStatus = TRUE indicates that a synchronization has occurred.

- The counter value is synchronized under the following conditions:
  - A digital input has the parameter assignment "Synchronization" **or** the incremental encoder has the parameter assignment "Synchronization at signal N"
  - SyncEnable = TRUE
  - The static tag SyncUpDirection (or SyncDownDirection) = TRUE
  - Edge at the digital input with the synchronization function **or** positive edge of the signal N at the encoder input
- The output parameter SyncStatus is reset by a negative edge at
  - the input parameter SyncEnable or
  - the static tag SyncDownDirection or
  - the static tag SyncUpDirection

Parameter changes via the user program

Proceed as follows to modify parameters using the user program:

1. Check based on the respective Set tag to determine whether the technology object is ready for the parameter change (Set tag = FALSE) or whether a change job is still running (Set tag = TRUE).
   The following Set tags in UserCmdFlags are available for this in the static tags of the technology object instance DB:
   - SetReferenceValue0
   - SetReferenceValue1
   - SetUpperLimit
   - SetLowerLimit
   - SetCountValue
   - SetStartValue
   - SetNewDirection
2. If the technology object is ready for the parameter change, modify the relevant static tag.
   The following static tags of the technology object instance DB are available for this:
   - NewReferenceValue0 / NewReferenceValue0_M (for SetReferenceValue0)
   - NewReferenceValue1 / NewReferenceValue1_M (for SetReferenceValue1)
   - NewUpperLimit
   - NewLowerLimit
   - NewCountValue
   - NewStartValue
   - NewDirection

3. Set the relevant Set tag for execution of the change command.
4. Use the output parameter Error to check whether an error has occurred.
   If no errors have occurred and the Set tag has been automatically reset by the technology object, the parameter change was successful.

Note

Changed counting limit

If the new high counting limit is less than the current counter value, the counter value is set to the low counting limit or the start value according on the parameter assignment. If the new low counting limit is greater than the current counter value, the counter value is set to the high counting limit or the start value according to the parameter assignment.

Operating mode (High_Speed_Counter V3.0 or higher)

Configure the operating mode in the technology object under "Behavior of DQ0".

The operating mode is indicated by the output parameter CompareMeasuredValue:

State	Description
FALSE	Operating mode "Use count value as reference" The comparison functions work with the counter value. The following static variables are specifically used in this operating mode: • NewReferenceValue0 • NewReferenceValue1 • CurReferenceValue0 • CurReferenceValue1 The four specific static variables of operating mode "Use measured value as reference" are ignored.
TRUE	Operating mode "Use measured value as reference": The comparison functions work with the measured value. The following static variables are specifically used in this operating mode: • NewReferenceValue0_M • NewReferenceValue1_M • CurReferenceValue0_M • CurReferenceValue1_M The four specific static variables of operating mode "Use count value as reference" are ignored.

Acknowledgment of events

You acknowledge signaled events using the positive edge of the input parameter EventAck . EventAck must stay set until the technology object has reset the status bits of the following events of the count channel:

- CompResult0
- CompResult1
- ZeroStatus
- PosOverflow
- NegOverflow

Status of the digital inputs (TM Count and TM PosInput)

You can obtain the status of the digital inputs with the static tags StatusDI0, StatusDI1 or StatusDI2.

Status of the digital inputs (Compact CPU)

You can obtain the status of the digital inputs with the static tags StatusDI0 and StatusDI1. When a digital input of the Compact CPU is not used for a counter, you can use it via the user program.

Use of digital outputs by the user program (TM Count and TM PosInput)

You can set the digital outputs with the High_Speed_Counter instruction,

- If the "Use by user program" setting is configured for "Set output".
- If the "After set command from CPU until comparison value" setting is configured for "Set output".
- if you set the corresponding static tag ManualCtrlDQm (temporary overwrite).

The static tags SetDQ0 and SetDQ1 only have an effect in these cases. In the first and third case, DQm follows the value of SetDQm. In the second case, DQm is set with a positive edge of SetDQm. DQm is reset when the counter value corresponds to the comparison value or at a negative edge of SetDQm.

Use digital outputs by user program (Compact CPU)

You can set the DQ1 digital output with the High_Speed_Counter instruction.

- If the "Use by user program" setting is configured for "Set output".
- If the "After set command from CPU until comparison value" setting is configured for "Set output".
- if you set the corresponding static tag ManualCtrlDQ1 (temporary overwrite).

The static tag SetDQ1 only has an effect in these cases. In the first and third case, DQ1 follows the value of SetDQ1. In the second case, DQ1 is set and reset with a positive edge of SetDQ1 when the counter value corresponds to the comparison value or at a negative edge of SetDQ1.

Note

Before you can set a physical digital output of the Compact CPU with the High_Speed_Counter instruction, you have to assign the DQ1 signal to the desired digital output.

You can set the DQ0 signal using the High_Speed_Counter instruction with the static tag StatusDQ0.

- If the "Use by user program" setting is configured for "Set output".
- If the "After set command from CPU until comparison value" setting is configured for "Set output".
- If you set the static tag ManualCtrlDQ0 (temporary overwrite).

The static tag SetDQ0 only has an effect in these cases. In the first and third case, DQ0 follows the value of SetDQ0. In the second case, StatusDQ0 is set and reset with an edge (positive or negative) by SetDQ0 and is reset when the counter value corresponds to the comparison value.

Note

The digital output DQ0 is not available as a physical output.

Reaction to error

If an error has occurred during the call of the instruction or in the technology module, the output parameter Error is set. More detailed error information can be read at the output parameter ErrorID.

Eliminate the cause of the error and acknowledge the error message by setting the input parameter ErrorAck. When no more errors are pending, the technology object resets the output parameter Error . No new error is signaled until you acknowledge the previous error.

Changing the count direction

The count direction can only be changed by the user program if "Pulse (A)" is configured as the signal type. In all other cases, the count direction is determined by the input signals of the technology module. The count direction is controlled by the static tag NewDirection:

- +1: Upward count direction
- -1: Downward count direction

To execute the change command, you need to set the static tag SetNewDirection = TRUE.

3.6.4 High_Speed_Counter input parameters

Parameter	Declaration	Data type	Default	Description
SwGate	INPUT	BOOL	FALSE	Control software gate: • Positive edge: Software gate opens • Negative edge: Software gate closes Together with the hardware gate, the SwGate enables the internal gate.
CaptureEnable	INPUT	BOOL	FALSE	Enable Capture function After the enable, a Capture event occurs at the next configured edge at the relevant digital input. A negative edge at CaptureEnable resets the output parameter CaptureStatus. A negative edge at CaptureEnable resets the enable even if no Capture event has occurred. Irrespective of CaptureEnable the last value is retained at the output parameter CapturedValue until the next Capture event.
SyncEnable	INPUT	BOOL	FALSE	Enable synchronization The direction enabled for synchronization is indicated in the static tags SyncUpDirection and SyncDownDirection. A negative edge at SyncEnable resets the output parameter SyncStatus .
ErrorAck	INPUT	BOOL	FALSE	High_Speed_Counter up to V3.0: A positive edge acknowledges the status reported. High_Speed_Counter as of V3.1: A high level acknowledges the error status reported.
EventAck	INPUT	BOOL	FALSE	A positive edge resets the following output parameters: • CompResult0 • CompResult1 • ZeroStatus • PosOverflow • NegOverflow
SetCountValue	INOUT	BOOL	FALSE	A positive edge starts the transfer of the new counter value in the static tag NewCountValue to the technology module. The counter value takes effect immediately after the transfer.

3.6.5 High_Speed_Counter output parameters

Parameter	Declaration	Data type	Default	Description
StatusHW	OUTPUT	BOOL	FALSE	Status bit technology module: The module is configured and ready for operation. The module data is valid.
StatusGate	OUTPUT	BOOL	FALSE	Status bit: Internal gate is released if parameter is set
StatusUp	OUTPUT	BOOL	FALSE	Status bit: The last count pulse incremented the counter and took place no more than 0.5 s ago
StatusDown	OUTPUT	BOOL	FALSE	Status bit: The last count pulse decremented the counter and took place no more than 0.5 s ago
CompResult0	OUTPUT	BOOL	FALSE	Status bit: Compare event for DQ0 occurred (status change) based on the selected comparison condition. If the counter value is set to the start value in operating mode "Use count value as reference", CompResult0 is not set. The positive edge of the input parameter EventAck is used to reset CompResult0 .
CompResult1	OUTPUT	BOOL	FALSE	Status bit: Compare event for DQ1 occurred (status change) based on the selected comparison condition. If the counter value is set to the start value in operating mode "Use count value as reference", CompResult1 is not set. The positive edge of the input parameter EventAck is used to reset CompResult1 .
SyncStatus	OUTPUT	BOOL	FALSE	Status bit: Synchronization event occurred If the input parameter SyncEnable is set, the configured edge sets the status bit SyncStatus at the respective digital input . SyncStatus is reset by a negative edge at • SyncEnable (input parameter) or • SyncUpDirection (static tag) or • SyncDownDirection (static tag)
CaptureStatus	OUTPUT	BOOL	FALSE	Status bit: Capture event occurred, the output parameter CapturedValue has a valid Capture value If the input parameter CaptureEnable is set, the configured edge sets the status bit CaptureStatus. at the respective digital input. You reset CaptureStatus using the negative edge of the input parameter CaptureEnable .
ZeroStatus	OUTPUT	BOOL	FALSE	Status bit: CountValue has reached the value "0" irrespective of the count direction You reset ZeroStatus using the positive edge of the input parameter EventAck.
PosOverflow	OUTPUT	BOOL	FALSE	Status bit: CountValue has violated high counting limit in the positive direction You reset PosOverflow using the positive edge of the input parameter EventAck.

Parameter	Declaration	Data type	Default	Description
NegOverflow	OUTPUT	BOOL	FALSE	Status bit: CountValue has violated low counting limit in the negative direction You reset NegOverflow using the positive edge of the input parameter EventAck.
Error	OUTPUT	BOOL	FALSE	An error has occurred. Refer to the output parameter ErrorID for the cause of the error.
ErrorID	OUTPUT	WORD	0	The ErrorID (Page 138) parameter displays the number of the error message. ErrorID = 0000H: There is no error.
CountValue	OUTPUT	DINT	0	Current counter value
CapturedValue	OUTPUT	DINT	0	The last acquired Capture value The value is retained until the next Capture event, irrespective of the input parameter CaptureEnable. If a new Capture event has occurred, CaptureStatus is set and is reset by you using the negative edge of the input parameter CaptureEnable .
MeasuredValue	OUTPUT	REAL	0.0	Current measured value for frequency, period duration or velocity (depending on configuration)
CompareMeasuredValue[1]	OUTPUT	BOOL	FALSE	Status bit: FALSE: Operating mode "Use count value as reference"; comparison functions work with counter value TRUE: Operating mode "Use measured value as reference"; comparison functions work with measured value

[1] Available for High_Speed_Counter version V3.0 or higher

3.6.6 High_Speed_Counter static variables

Tag	Data type	Default	Access	Description
NewCountValue	DINT	L#0	Write	New counter value
NewReferenceValue0	DINT	L#0	Write	New comparison value 0 in the operating mode "Use count value as reference"
NewReferenceValue1	DINT	L#10	Write	New comparison value 1 in the operating mode "Use count value as reference"
NewReferenceValue0_M[1]	REAL	L#0.0	Write	New comparison value 0 in operating mode "Use measured value as reference"
NewReferenceValue1_M[1]	REAL	L#10.0	Write	New comparison value 1 in operating mode "Use measured value as reference"
NewUpperLimit	DINT	L#2147483647	Write	New high counting limit
NewLowerLimit	DINT	L#-2147483648	Write	New low counting limit
NewStartValue	DINT	L#0	Write	New start value
NewDirection	INT	0	Write	New count direction: +1: Upward count direction -1: Downward count direction
CurReferenceValue0	DINT	L#0	Read	Current comparison value 0 in operating mode "Use count value as reference"
CurReferenceValue1	DINT	L#10	Read	Current comparison value 1 in operating mode "Use count value as reference"
CurReferenceValue0_M[1]	REAL	L#0.0	Read	Current comparison value 0 in operating mode "Use measured value as reference"
CurReferenceValue1_M[1]	REAL	L#10.0	Read	Current comparison value 1 in operating mode "Use measured value as reference"
CurUpperLimit	DINT	L#2147483647	Read	Current high counting limit
CurLowerLimit	DINT	L#-2147483648	Read	Current low counting limit
CurStartValue	DINT	L#0	Read	Current start value
AdditionalErrorID	DWORD	W#16#0000	Read	Error information of an internal instruction, e.g.,RDREC

Tag		Data type	Default	Access	Description
UserCmdFlags		STRUCT	-		
	SetNewDirection	BOOL	FALSE	Write	Set new count direction
	SetUpperLimit	BOOL	FALSE	Write	Set high counting limit
	SetLowerLimit	BOOL	FALSE	Write	Set low counting limit
	SetReferenceValue0	BOOL	FALSE	Write	Set comparison value 0
	SetReferenceValue1	BOOL	FALSE	Write	Set comparison value 1
	SetStartValue	BOOL	FALSE	Write	Set start value
	SyncDownDirection	BOOL	TRUE	Write	Enable synchronization in downward count direction
	SyncUpDirection	BOOL	TRUE	Write	Enable synchronization in upward count direction
	SetDQ0	BOOL	FALSE	Write	Set digital output DQ0
	SetDQ1	BOOL	FALSE	Write	Set digital output DQ1
	ManualCtrlDQ0	BOOL	FALSE	Write	Enable setting of digital output DQ0: TRUE: • SetDQ0 sets DQ0 • Control bit TM_CTRL_DQ0 = FALSE FALSE: • Setting not enabled • Control bit TM_CTRL_DQ0 = TRUE
	ManualCtrlDQ1	BOOL	FALSE	Write	Enable setting of digital output DQ1: TRUE: • SetDQ1 sets DQ1 • Control bit TM_CTRL_DQ1 = FALSE FALSE: • Setting not enabled • Control bit TM_CTRL_DQ1 = TRUE
UserStatusFlags		STRUCT	-		
	StatusDI0	BOOL	FALSE	Read	Current status of digital input DI0
	StatusDI1	BOOL	FALSE	Read	Current status of digital input DI1
	StatusDI2	BOOL	FALSE	Read	Current status of digital input DI2
	StatusDQ0	BOOL	FALSE	Read	Current status of digital output DQ0
	StatusDQ1	BOOL	FALSE	Read	Current status of digital output DQ1

[1] Available for High_Speed_Counter version V3.0 or higher

3.6.7 Error codes of parameter ErrorID

Error code (W#16#...)	Description
0000	No error
Error messages from technology module	
80A1	POWER_ERROR from feedback interface: Incorrect supply voltage L+
80A2	ENC_ERROR from feedback interface: Incorrect encoder signal
80A3	LD_ERROR from feedback interface: Error when loading via control interface
Error messages of the instruction High_Speed_Counter	
80B1	Invalid count direction
80B4	For operating mode "Use count value as reference", the following applies: New low counting limit does not meet the following conditions: • Low counting limit < high counting limit • Low counting limit <= comparison value/start value For operating mode "Use measured value as reference", the following applies: New low counting limit does not meet the following conditions: • Low counting limit < high counting limit • Low counting limit <= start value
80B5	For operating mode "Use count value as reference", the following applies: New high counting limit does not meet the following conditions: • Low counting limit < high counting limit • High counting limit >= comparison value/start value For operating mode "Use measured value as reference", the following applies: New high counting limit does not meet the following conditions: • Low counting limit < high counting limit • High counting limit >= start value
80B6	New start value does not meet the following condition: • Low counting limit <= start value <= high counting limit
80B7	New counter value does not meet the following condition: • Low counting limit <= counter value <= high counting limit
80B8	For operating mode "Use count value as reference", the following applies: New comparison value 0 does not meet the following conditions: • Low counting limit <= comparison value 0 <= high counting limit • Comparison value 0 < comparison value 1 For operating mode "Use measured value as reference", the following applies: New comparison value 0 does not meet the following conditions: • Comparison value 0 < comparison value 1

Error code (W#16#...)	Description
80B9	For operating mode "Use count value as reference", the following applies: New comparison value 1 does not meet the following conditions: • Low counting limit <= comparison value 1 <= high counting limit • Comparison value 0 < comparison value 1 For operating mode "Use measured value as reference", the following applies: New comparison value 1 does not meet the following conditions: • Comparison value 0 < comparison value 1
80C0	Instruction High_Speed_Counter was called multiple times with the same instance (DB)
80C1	Communication with technology module failed (read data records): Error information of internal instruction RDREC saved in static tag AdditionalErrorID
80C2	Communication with technology module failed (write data records): Error information of internal instruction WRREC saved in static tag AdditionalErrorID
80C3	Access to input data (feedback interface) failed: Error information of internal instruction GETIO_PART saved in static tag AdditionalErrorID
80C4	Access to output data (control interface) failed: Error information of internal instruction SETIO_PART saved in static tag AdditionalErrorID
80C5	Reading of the current start information of the OB failed: Error information of internal instruction RD_SINFO saved in static tag AdditionalErrorID
80C6	Failed to get I/O addresses of the technology module: Error information of internal instruction RD_ADDR saved in static tag AdditionalErrorID
80C7	Module not inserted or no supply voltage L+
80C8	Specified module is not permitted in the static tag Configuration.HWID

3.7 Commissioning the High_Speed_Counter

3.7.1 Commissioning the technology object

A graphic display of the block in the commissioning editor helps you with commissioning and the function test for the technology object. You can change specific parameters of the High_Speed_Counter instruction in CPU/IM online mode and monitor their effects.

Requirements

- There is an online connection between STEP 7 (TIA Portal) and the CPU.
- The CPU is in RUN.
- The corresponding High_Speed_Counter instruction is called cyclically from the user program.
- The parameters of the technology object are not overwritten by the user program.

Procedure

To open the commissioning editor of a technology object and to simulate a parameter value change, follow these steps:

1. Open the "Technology objects" folder in the project tree.
2. Open the High_Speed_Counter technology object in the project tree.
3. Double-click on the "Commissioning" object.
   The functions for commissioning the High_Speed_Counter technology object are displayed.
4. In the commissioning dialog, click on the "Monitor all" button.
   The parameters (online values) of the High_Speed_Counter technology object are loaded and displayed.
5. If the parameter you want to change has a text box, enter the new value there.
6. Select the check box of the parameter.
   The new parameter value becomes effective and the effects of the change are simulated.

Online mode

In online mode, you can modify the following parameters to test the technology object function:

- New counter value (NewCountValue)
- New high counting limit (NewUpperLimit)
- New low counting limit (NewLowerLimit)
- New comparison value 0 (NewReferenceValue0 or NewReferenceValue0_M)
- New comparison value 1 (NewReferenceValue1 or NewReferenceValue1_M)
- New start value (NewStartValue)
- Start and stop counter (SwGate)
- Enable Capture (CaptureEnable)
- Enable synchronization (SyncEnable)
- Acknowledgment of signaled error states (ErrorAck)
- Resetting the status flag (EventAck)

3.8 High_Speed_Counter diagnostics

3.8.1 Monitoring counter values, measured values, DIs and DQs

You use the diagnostic functions to monitor the counting and measuring functions.

Requirements

- There is an online connection between STEP 7 (TIA Portal) and the CPU.
- The CPU is in RUN.

Procedure

To open the display editor for the diagnostic functions, follow these steps:

1. Open the "Technology objects" folder in the project tree.
2. Open the High_Speed_Counter technology object in the project tree.
3. Double-click on the "Diagnostics" object.
4. Click the "Monitor all" button.

Display

The following values are read by the technology object from the feedback interface and displayed:

- Event display/diagnostics information
- Signal states of the digital inputs and digital outputs
- Counter value
- Capture value
- Measured value

Additional information on status displays is available in the context-sensitive help for each event in STEP 7 (TIA Portal). When the CPU is in STOP, the status display is not updated.

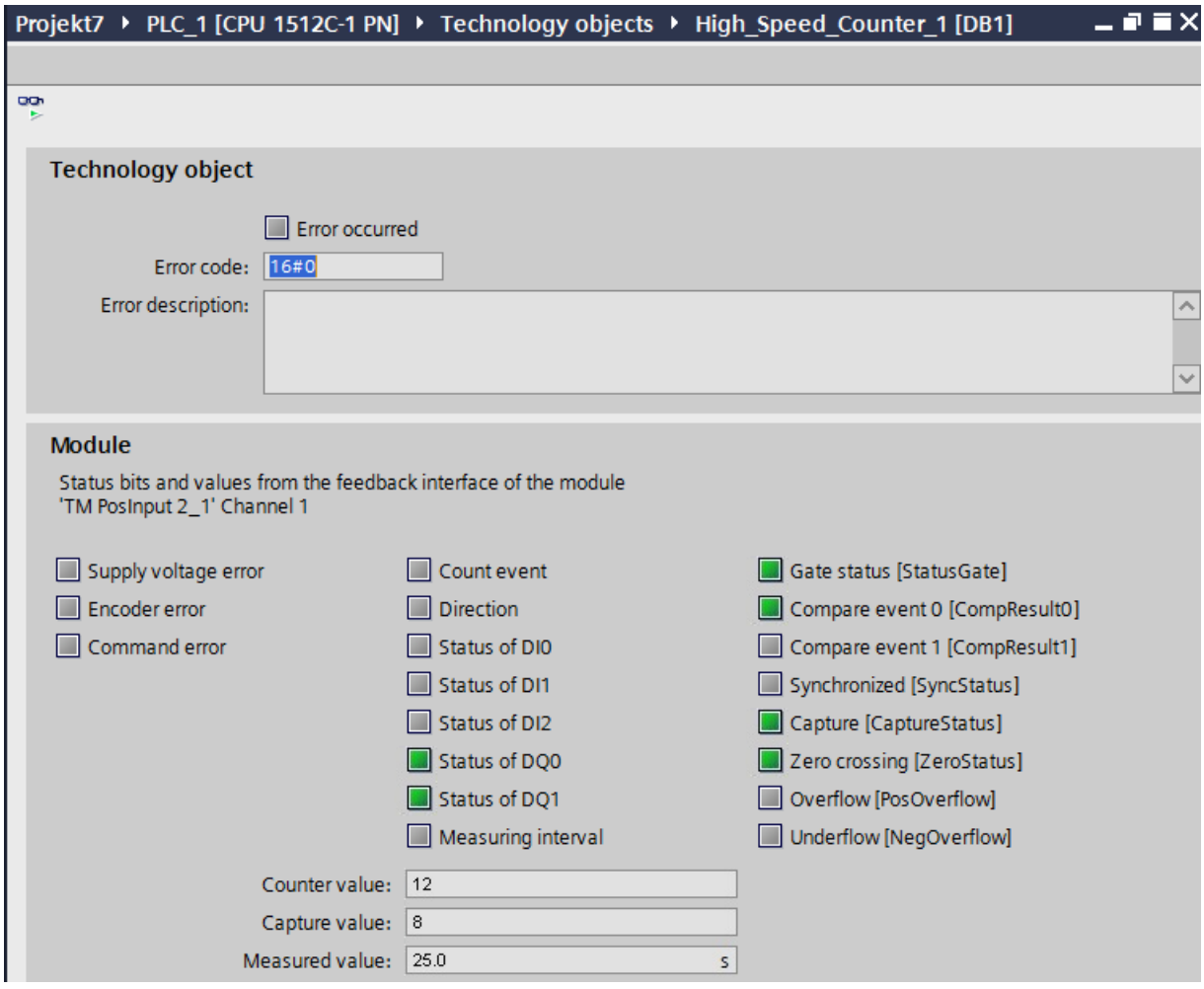

Using the SSI_Absolute_Encoder technology object 4

4.1 Technology object SSI_Absolute_Encoder

STEP 7 (TIA Portal) supports you in the configuration, commissioning and diagnostics of counting and measuring functions for the TM PosInput technology module with the "Technology objects" function in combination with the SSI absolute encoders:

- In STEP 7 (TIA Portal) you configure the SSI_Absolute_Encoder technology object by entering the encoder parameters.
- The corresponding SSI_Absolute_Encoder instruction is programmed in the user program. This instruction supplies the control and feedback interface of the technology module.

The SSI_Absolute_Encoder technology object corresponds to the instance DB of the SSI_Absolute_Encoder instruction. The configuration of the position input and measuring functions is saved in the technology object. The technology object is located in the folder "PLC > Technology objects".

The SSI_Absolute_Encoder technology object can be used for the TM PosInput of both the S7-1500 and ET 200SP systems alike.

Operating mode

In order to assign the technology module parameters using a TM PosInput, you specify the operating mode (Page 180) "Operation with technology objects for "counting and measurement"" in the hardware configuration of the TM PosInput. This selection is already preset.

4.2 Overview of the configuration steps

Introduction

The overview below shows the basic procedure for configuring the position input and measuring functions of the technology module with the SSI_Absolute_Encoder technology object.

Requirement

Before you can use the technology object, a project with an S7-1500 CPU or an ET 200SP CPU must be created in STEP 7 (TIA Portal).

Procedure

Proceed in the recommended sequence outlined below:

Step	Description
1	Configure a technology module (Page 175)
2	Add technology object (Page 146)
3	Configure a technology object according to your application (Page 147)
4	Call instruction in the user program (Page 163)
5	Load to CPU
6	Commissioning the technology object (Page 172)
7	Diagnostics of the technology object (Page 173)

4.3 Add technology object

Adding a technology object in the project navigation

When a technology object is added, an instance DB is created for the instruction of this technology object. The configuration of the technology object is stored in this instance DB.

Requirement

A project with a CPU S7-1500 has been created.

Procedure

To add a technology object, proceed as follows:

1. Open the CPU folder in the project tree.
2. Open the "Technology objects" folder.
3. Double-click on "Add new object".
   The "Add new object" dialog opens.
4. Select the "Counting and measurement" technology.
5. Select the "SSI_Absolute_Encoder" object.
6. Enter an individual name for the technology object in the "Name" text box.
7. Click "Additional information" if you want to add your own information to the technology object.
8. Confirm with "OK".

Result

The new technology object has now been created and stored in the project tree in the "Technology objects" folder.

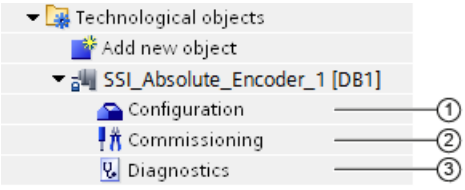

	Object	Description
①	Configuration (Page 147)	In the configuration dialog: • Assignment of technology module and channel • Technology object parameter settings for position input and measurement functions When you change the configuration of the technology object, you must download the technology object **and** the hardware configuration to the CPU.
②	Commissioning (Page 172)	Commissioning and function test of the technology object: Simulating parameters of the SSI_Absolute_Encoder instruction and monitoring the effects
③	Diagnostics (Page 173)	Monitoring of the position input and measurement functions

4.4 Configuring SSI_Absolute_Encoder

4.4.1 Working with the configuration dialog

You configure the properties of the technology object in the configuration window. Proceed as follows to open the configuration window of the technology object:

1. Open the "Technology objects" folder in the project tree.
2. Open the technology object in the project tree.
3. Double-click on the "Configuration" object.

The configuration is divided into the following categories:

- **Basic parameters**

  The basic parameters include the selection of the technology module and the number of the channel for which the technology object is configured.

- **Extended parameters**

  The extended parameters include the parameters for adapting the position input and measuring functions and for setting the characteristics of the digital inputs and digital outputs.

Configuration window icons

Icons in the area navigation of the configuration show additional details about the status of the configuration:

	The configuration contains default values and is complete. The configuration contains only default values. With these default values, you can use the technology object without additional changes.
	The configuration contains values set by the user or automatically adapted values and is complete All text boxes of the configuration contain valid values and at least one default value was changed.
	The configuration is incomplete or incorrect At least one text box or drop-down list contains an invalid value. The corresponding field or the drop-down list is displayed on a red background. Click the roll-out error message to indicate the cause of error.

4.4.2 Basic parameters

Under "Basic parameters", you can establish the connection between the technology object and the TM PosInput technology module.

Module

You select the technology module in a subsequent dialog box. All TM PosInput technology modules (central or distributed) that are configured for use with a "Counting and measurement" technology object under the S7-1500 CPU or ET 200SP CPU are available for selection.

After selecting the technology module, you can open the device configuration associated with the technology module by clicking the"Device configuration" button.

The technology module parameter settings required for the use of the technology object are made in the "Extended parameters" of the technology object.

Channel

For a technology module with several channels, you select the number of the channel for which the technology object is valid.

Note

A channel can be assigned to only *one* technology object. A channel that is already assigned to a technology object can no longer be selected.

Synchronization of the parameter values

If, after assignment of the channel to the technology object, there is an inconsistency between the parameter values in the property dialog of the TM PosInput module and in the technology object, a button with a corresponding inquiry appears. When you click the button, the parameter values in the property dialog of the assigned module are overwritten by the parameter values of the technology object within STEP 7 (TIA Portal). The current parameter values of the technology object are displayed in the property dialog of the module (read-only).

Note

If you change parameter values of the technology object, the corresponding parameter values are also overwritten without prompt in the properties dialog of the hardware configuration. As after every change in hardware configuration, the next time the project is loaded in the CPU, a prompt appears asking whether the CPU should go to STOP mode.

4.4.3 SSI absolute encoder

Frame length

With the parameter assignment of the frame length, you specify the number of bits of an SSI frame of the SSI absolute encoder (Page 28) used. You can find the frame length of your SSI absolute encoder in the data sheet of the encoder. Special bits are also included in the frame length. A parity bit does not count in the frame length.

A frame length of between 10 bits and 40 bits is permitted. The default setting is "13 Bit".

You can find two examples of the SSI frame format at Examples of the frame format (Page 160).

Code type

You use the parameter assignment of the code type to specify whether the encoder supplies Dual code or Gray code.

You can select from the following options:

Code type	Meaning
Gray (default)	The gray-coded position value returned by the SSI absolute encoder is converted to dual code.
Dual	The value returned by the SSI absolute encoder is not converted.

Transmission rate

With the parameter assignment of the transmission rate, you specify the data transmission rate between the technology module and the SSI absolute encoder.

You can select from the following options:

- 125 kHz (preset)
- 250 kHz
- 500 kHz
- 1 MHz
- 1.5 MHz
- 2 MHz

The maximum transmission rate depends on the cable length and the technical specifications of the SSI absolute encoder. For additional information, refer to the product manual of the TM PosInput and the encoder description.

Monoflop time

With the parameter assignment of the monoflop time, you specify the idle time between two SSI frames.

The configured monoflop time must be at least equal to the monoflop time of the SSI absolute encoder used. You can find this value in the technical specifications of the SSI absolute encoder.

You can select from the following options:

- Automatically (default)
- 16 µs
- 32 µs
- 48 µs
- 64 µs

Note

If you select the "Automatic" option, the monoflop time automatically adapts to the encoder used.

In isochronous mode, the "Automatic" option corresponds to a monoflop time of 64 µs. If the monoflop time of the employed SSI absolute value encoder is less than 64 µs, you can select the value of the encoder to achieve faster isochronous times.

Parity

With the parameter assignment of the parity, you specify whether the SSI absolute encoder transfers a parity bit.

If, for example, a 25-bit encoder with parity is assigned, the technology module reads 26 bits. A parity error is indicated by the technology object at the ErrorID output parameter with the value 80A2.

Bit number LSB of the position value

This parameter is used to specify the bit number of the LSB (least significant bit) of the position value in the frame of the SSI absolute encoder. In this way you limit the range in the frame that supplies the position value.

The value must be less than the bit number of the MSB of the position value. The difference between the bit numbers of the MSB and the LSB of the position value must be less than 32.

The default setting is "0".

Note

If you have selected the Code type "Gray", only the range from the LSB to the MSB of the position value is converted to binary code.

Bit number MSB of the position value

This parameter is used to specify the bit number of the MSB (most significant bit) of the position value in the frame of the SSI absolute encoder. In this way you limit the range in the frame that supplies the position value.

The value must be less than the frame length and higher than the bit number of the LSB of the position value. The difference between the bit numbers of the MSB and the LSB of the position value must be less than 32.

The default setting is "12".

Note

If you have selected the Code type "Gray", only the range from the LSB to the MSB of the position value is converted to binary code.

Invert direction

You can use this parameter to invert the values supplied by the SSIabsolute encoder. This allows you to adapt the detected direction of the encoder to the motor's direction of rotation.

Note

This parameter acts only on the range from the LSB to the MSB of the position value in the frame.

SSI frame

You can also set the following parameters in the graphic with drag-and-drop:

- Frame length
- Bit number LSB of the position value
- Bit number MSB of the position value

Complete SSI frame

If "Complete SSI frame" has been selected as the measured variable, the module returns the least significant 32 bits of the unprocessed current SSI frame as the measured value. The graphic shows the corresponding meaning of a supplied bit. The following abbreviations are used:

V	Value: Position value as gray or dual code
S	Special: Special bit
P	Parity: Parity bit When you have configured a parity bit, the module returns the least significant 31 bits of the SSI frame *and* the parity bit.

4.4.4 Behavior of a DI (SSI_Absolute_Encoder)

Setting function of the DI

By configuring a digital input, you specify which functions the digital input triggers at switching.

You can select from the following options:

Function of a digital input	Meaning	Additional option-specific parameters
Capture (Page 38)	The configured edge at the respective digital input saves the current position value as a Capture value. The technology object displays the Capture value at the output parameter CapturedValue. The function can only be used for one of the two digital inputs.	• Input delay • Edge selection • Frequency of the Capture function
Digital input without function	No technological function is assigned to the respective digital input. You can read the signal state of the digital input via the respective static variable (Page 170) of the technology object: • UserStatusFlags.StatusDI0 • UserStatusFlags.StatusDI1	• Input delay

Note

You can choose the "Capture" function only in operating mode "Use position value (SSI absolute value) as reference".

Input delay

By configuring the input delay, you suppress interferences at the digital inputs. Signals with a pulse duration below the configured input delay are suppressed.

You can select from the following input delays:

- None
- 0.05 ms
- 0.1 ms (default)
- 0.4 ms
- 0.8 ms
- 1.6 ms
- 3.2 ms
- 12.8 ms
- 20 ms

Note

If you select the "None" or "0.05 ms" option, you have to use shielded cables for connection of the digital inputs.

Note

You configure the input delay under "Behavior of DI0" for all digital inputs together. The input delay is also displayed under "Behavior of DI1".

Edge selection

You can use this parameter to specify the edge of the digital input at which the configured function is triggered for the "Capture" function.

You can select from the following options:

- At rising edge (default)
- At falling edge
- At rising and falling edge

Frequency of the Capture function

This parameter is used to define the frequency of Capture events (Page 38):

You can select from the following options:

Option	Meaning
Once	The first configured edge at the respective digital input saves the current counter value as Capture value.
Periodic (default)	Each configured edge at the respective digital input saves the current counter value as a Capture value.

Note

This parameter is available for SSI_Absolute_Encoder as of V3.0.

4.4.5 Behavior of a DQ (SSI_Absolute_Encoder)

Operating mode

With the operating mode, you specify the reference value with which the comparison functions work.

Operating mode	Meaning
Use position value (SSI absolute value) as reference (default)	The comparison functions and hardware interrupts for compare events work with the position value.
Use measured value as reference	The comparison functions and hardware interrupts for compare events work with the measured value.

Note

You configure the operating mode under "Behavior of DQ0" for both digital outputs together. The operating mode is also displayed under "Behavior of DQ1".

Set output

With the parameter assignment of a digital output, you specify the condition upon which the digital output switches.

You can select from the following options depending on the operating mode:

Function of a digital output (Page 53) in operating mode "Use position value (SSI absolute value) as reference"	Meaning	Additional option-specific parameters
Between comparison value and high limit (default)	The respective digital output is active if: Comparison value <= position value <= maximum position value	• Comparison value 0 • Comparison value 1 • Hysteresis (in increments)
Between comparison value and low limit	The respective digital output is active if: Minimum position value <= Position value <= Comparison value	• Comparison value 0 • Comparison value 1 • Hysteresis (in increments)
Between comparison value 0 and 1	The digital output DQ1 is active if: Comparison value 0 <= position value <= comparison value 1	• Comparison value 0 • Comparison value 1 • Hysteresis (in increments)
At comparison value for a pulse duration	The respective digital output is active once for the assigned time and direction of the position value change when the position value is equal to the comparison value or has fallen below or exceeded it.	• Comparison value 0 • Comparison value 1 • Count direction • Pulse duration • Hysteresis (in increments)

Function of a digital output (Page 53) in operating mode "Use position value (SSI absolute value) as reference"	Meaning	Additional option-specific parameters
After set command from CPU until comparison value	When a set command is sent from the CPU, the respective digital output is active for the assigned direction of the position value change until the position value is equal to the comparison value or has fallen below or exceeded it.	• Comparison value 0 • Comparison value 1 • Count direction • Hysteresis (in increments)
Use by user program	The respective digital output can be switched by the CPU via the control interface (Page 48).	—

Note

You can only select the "Between comparison value 0 and 1" function for digital output DQ1 and only if you have selected the "Use by user program" function for digital output DQ0.

Function of a digital output (Page 57) in operating mode "Use measured value as reference"	Meaning	Additional option-specific parameters
Measured value >= comparison value (default)	The respective digital output is active if the measured value is greater than or equal to the comparison value.	• Comparison value 0 • Comparison value 1
Measured value <= comparison value	The respective digital output is active if the measured value is less than or equal to the comparison value.	• Comparison value 0 • Comparison value 1
Between comparison value 0 and 1	The digital output DQ1 is active if: Comparison value 0 <= measured value <= comparison value 1	• Comparison value 0 • Comparison value 1
Not between comparison value 0 and 1	The digital output DQ1 is active if: Comparison value 1 <= measured value <= comparison value 0	• Comparison value 0 • Comparison value 1
Use by user program	The respective digital output can be switched by the CPU via the control interface (Page 48).	—

Note

You can select the "Between comparison value 0 and 1" and "Not between comparison value 0 and 1" functions only for digital output DQ1 and only if you have selected the "Use by user program" function for digital output DQ0.

Comparison value 0

Operating mode "Use position value (SSI absolute value) as reference"

With the parameter assignment of the comparison value (Page 53), you specify the position value at which the digital output DQ0 switches as a result of the selected comparison event.

If you use an SSI absolute encoder with a position value length of up to 31 bits, you must enter a positive integer (DINT) with a value between 0 and $2^{(MSB-LSB+1)}$-1. If you use an SSI absolute encoder with a position value length of 32 bits, you must enter a signed integer (DINT) with a value between –2147483648 and 2147483647.

If you use the DQ function "Between comparison value 0 and 1", the comparison value 0 has to be smaller than comparison value 1. The default setting is "0".

Operating mode "Use measured value as reference"

With the parameter assignment of the comparison value (Page 57), you specify the measured value at which the digital output DQ0 switches as a result of the selected comparison event.

You must enter a floating point number (REAL). If you use the DQ function "Between comparison value 0 and 1", the comparison value 0 has to be smaller than comparison value 1. The minimum value is -7.922816 x 10^{28}. The default setting is "0.0". The unit of the comparison value depends on the measured variable.

Comparison value 1

Operating mode "Use position value (SSI absolute value) as reference"

With the parameter assignment of the comparison value (Page 53), you specify the position value at which the digital output DQ1 switches as a result of the selected comparison event.

If you use an SSI absolute encoder with a position value length of up to 31 bits, you must enter a positive integer (DINT) with a value between 0 and $2^{(MSB-LSB+1)}$-1. If you use an SSI absolute encoder with a position value length of 32 bits, you must enter a signed integer (DINT) with a value between –2147483648 and 2147483647.

If you use the DQ function "Between comparison value 0 and 1", the comparison value 0 has to be smaller than comparison value 1. The default setting is "10".

Operating mode "Use measured value as reference"

With the parameter assignment of the comparison value (Page 57), you specify the measured value at which the digital output DQ1 switches as a result of the selected comparison event.

You must enter a floating point number (REAL). If you use the DQ function "Between comparison value 0 and 1", the comparison value 0 has to be smaller than comparison value 1. The maximum value is 7.922816 x 10^{28}. The default setting is "10.0". The unit of the comparison value depends on the measured variable.

Count direction

You use this parameter to specify the direction of position value change for which the selected function is valid.

You can select from the following options:

Direction of position value change	Meaning
In both directions (default)	The comparison and switching of the respective digital output is carried out regardless of whether the position value increases of decreases.
Up	The comparison and switching of the respective digital output only takes place when the position value increases.
Down	The comparison and switching of the respective digital output only takes place when the position value decreases.

The parameter can be configured for the following functions:

- At comparison value for a pulse duration
- After set command from CPU until comparison value

Pulse duration

By configuring the pulse duration for the function "At comparison value for a pulse duration", you specify the number of milliseconds for which the respective digital output is active.

A value from 0.1 to 6553.5 ms is permissible.

The default setting is "500.0", which is equivalent to a pulse duration of 0.5 s.

Hysteresis (in increments)

By configuring the hysteresis (Page 69), you can define a range around the comparison values. For the functions "Between comparison value and upper counter limit" and "Between comparison value and lower counter limit" the hysteresis also applies at the counter limits. Within the hysteresis range, the digital outputs cannot switch again until the position value has left this range once.

Choose a small enough hysteresis. When the hysteresis range, starting from the configured comparison value, spans the entire position value range, proper functioning of the comparison values cannot be guaranteed.

If a comparison value lies so close to the counter limit that the hysteresis range would extend beyond this counter limit, the hysteresis range ends there.

If you enter "0", the hysteresis is turned off. You can enter a value between 0and 255. The default setting is "0".

Note

You configure the hysteresis under "Behavior of DQ0" for both digital outputs together. The hysteresis is also displayed under "Behavior of DQ1".

Note

The hysteresis is only available in operating mode "Use position value (SSI absolute value) as reference".

4.4.6 Specify measured value (SSI_Absolute_Encoder)

Measured variable

With this parameter you specify whether the technology module is to provide a certain measured variable (Page 64) or the complete SSI frame.

You can select from the following options:

Option	Meaning	Additional option-specific parameters
Frequency (default)	The measured variable shows the number of increments per second, where each increment corresponds to one position value change. The value is a floating point number (REAL). The unit is Hz. The technology object displays the measured value at the output parameter MeasuredValue.	• Update time
Period	The measured variable is the average period between two increments of the position value. The value is an integer (DINT). The unit is s. The technology object displays the measured value at the output parameter MeasuredValue.	• Update time
Velocity	The measured variable is a velocity. Examples of a velocity measurement can be found in the explanation of the "Increments per unit" parameter. The technology object displays the measured value at the output parameter MeasuredValue.	• Update time • Time base for velocity measurement • Increments per unit
Complete SSI frame	Instead of a measured variable, the first 32 bits of the SSI frame are returned (bit 0 to bit 31). In so doing, special bits that do not belong to the position information are also supplied. A configured inversion of the direction is ignored. The technology object displays the value at the output parameter CompleteSSIFrame. You can find examples under Examples of the frame format (Page 160). This option is only available in operating mode "Use position value (SSI absolute value) as reference".	—

Note

If the increment per revolution is required for calculation of the measured values, it is automatically calculated from the parameterized telegram length as the power of 2, e.g. 8192 increments per revolution with a telegram length of 13 bit. If you are using an SSI absolute encoder whose increment per revolution does not correspond to the power of 2, the calculated measured value may be incorrect for a short time.

Update time

By configuring the update time (Page 64) in milliseconds, you can specify the time interval between two measured value updates. Unsteady measured variables can be smoothed through longer update times

If you enter "0", the measured value is updated once per module-internal cycle. Up to three decimal places can be entered. A value from 0.0 to 25000.0 is permissible. The default setting is "10.0".

Time base for velocity measurement

This parameter defines the time base on which the velocity is to be returned.

You can select from the following options:

- 1 ms
- 10 ms
- 100 ms
- 1 s
- 60 s

The default setting is "60 s".

Increments per unit

With this parameter you define the number of increments per relevant unit that the SSI absolute encoder supplies for the velocity measurement.

You can enter a value between 1 and 65535.

Example 1:

Your absolute encoder operates with a resolution of 12 bits per revolution and performs 4096 increments per revolution. The velocity should be measured in revolutions per minute.

In this case, you need to assign the following parameters:

- Increments per unit: 4096
- Time base for velocity measurement: 60 s

Example 2:

You encoder delivers 10000 increments for travel over one meter. The velocity is to be measured in meters per second.

In this case, you need to assign the following parameters:

- Increments per unit: 10000
- Time base for velocity measurement: 1 s

4.4.7 Examples of the frame format

Example 1

In this example the SSI absolute encoder has the following specification:

- The encoder has a resolution of 13 bits per revolution and a value range of 12 bits of revolutions. The SSI frame has a length of 25 bits.
- The MSB of the position value is bit 24.
- The LSB of the position value is bit 0.
- The position value is Gray coded.
- A parity bit is not available.

The frame has the following format:

Cycle:	1	2	3	4	5	6	7	8	9	10	11	12	13	14	15	16	17	18	19	20	21	22	23	24	25
Bit:	24	23	22	21	20	19	18	17	16	15	14	13	12	11	10	9	8	7	6	5	4	3	2	1	0
	MG	MG	MG	MG	MG	MG	MG	MG	MG	MG	MG	MG	SG	SG	SG	SG	SG	SG	SG	SG	SG	SG	SG	SG	SG
	MSB																								LSB

Position value

MG Multiturn bit as Gray code

SG Singleturn bit as Gray code

Complete SSI frame

If you configure "Complete SSI frame", the technology module returns the unprocessed SSI frame in the return interface right-justified:

Cycle:	1	2	3	4	5	6	7	8	9	10	11	12	13	14	15	16	17	18	19	20	21	22	23	24	25	26	27	28	29	30	31	32
Bit:	31	30	29	28	27	26	25	24	23	22	21	20	19	18	17	16	15	14	13	12	11	10	9	8	7	6	5	4	3	2	1	0
	0	0	0	0	0	0	0	MG	MG	MG	MG	MG	MG	MG	MG	MG	MG	MG	MG	SG	SG	SG	SG	SG	SG	SG	SG	SG	SG	SG	SG	SG

MG Multiturn bit as Gray code

SG Singleturn bit as Gray code

Position value feedback value

The position value supplied in Gray code is converted into binary code by the technology module and returned right-justified in the feedback interface:

Cycle:	1	2	3	4	5	6	7	8	9	10	11	12	13	14	15	16	17	18	19	20	21	22	23	24	25	26	27	28	29	30	31	32
Bit:	31	30	29	28	27	26	25	24	23	22	21	20	19	18	17	16	15	14	13	12	11	10	9	8	7	6	5	4	3	2	1	0
	0	0	0	0	0	0	0	MD	MD	MD	MD	MD	MD	MD	MD	MD	MD	MD	MD	SD	SD	SD	SD	SD	SD	SD	SD	SD	SD	SD	SD	SD

MD Multiturn bit as binary code

SD Singleturn bit as binary code

Example 2

In this example the SSI absolute encoder has the following specification:

- The encoder has a resolution of 17 bits per revolution and a value range of 11 bits of revolutions. The SSI frame has a length of 34 bits.
- The MSB of the position value is bit 33.
- The LSB of the position value is bit 6.
- The position value is Gray coded.
- The SSI frame has six special bits.
- A parity bit is available. A parity bit does not count in the frame length.

The frame has the following format:

Clock:	1	2	3	4	5	6	7	8	9	10	11	12	13	14	15	16	17	18	19	20	21	22	23	24	25	26	27	28	29	30	31	32	33	34	35
Bit:	33	32	31	30	29	28	27	26	25	24	23	22	21	20	19	18	17	16	15	14	13	12	11	10	9	8	7	6	5	4	*	3	2	1	0
	MG	MG	MG	MG	MG	MG	MG	MG	MG	MG	MG	SG	SG	SG	SG	SG	SG	SG	SG	SG	SG	SG	SG	SG	SG	SG	SG	SG	S1	S2	P	S3	S4	S5	S6
	MSB																											LSB							

Position value

MG	Multiturn bit as Gray code
SG	Singleturn bit as Gray code
Sn	Special bit n
P	Parity bit

Complete SSI frame

If you configure "Complete SSI frame", the technology module returns the least significant 32 bits of the SSI frame as an unprocessed bit string. The technology module returns the bit following the LSB as parity bit. In this example, the technology module therefore returns only the least significant 31 bits of the SSI frame. With the complete SSI frame, you can evaluate the additional special bits in your application.

The returned bit string is structured as follows:

Clock:	1	2	3	4	5	6	7	8	9	10	11	12	13	14	15	16	17	18	19	20	21	22	23	24	25	26	27	28	29	30	31	32
Bit:	31	30	29	28	27	26	25	24	23	22	21	20	19	18	17	16	15	14	13	12	11	10	9	8	7	6	5	4	3	2	1	0
	MG	MG	MG	MG	MG	MG	MG	MG	SG	SG	SG	SG	SG	SG	SG	SG	SG	SG	SG	SG	SG	SG	SG	SG	SG	P	S1	S2	S3	S4	S5	S6

MG	Multiturn bit as Gray code
SG	Singleturn bit as Gray code
Sn	Special bit n
P	Parity bit

Position value

The position value supplied in Gray code is converted into binary code by the technology module and returned right-justified in the feedback interface: The special bits are ignored in this case. The parity bit is evaluated but is not returned with the position value:

Cycle:	1	2	3	4	5	6	7	8	9	10	11	12	13	14	15	16	17	18	19	20	21	22	23	24	25	26	27	28	29	30	31	32
Bit:	31	30	29	28	27	26	25	24	23	22	21	20	19	18	17	16	15	14	13	12	11	10	9	8	7	6	5	4	3	2	1	0
	0	0	0	0	MD	MD	MD	MD	MD	MD	MD	MD	MD	MD	MD	SD	SD	SD	SD	SD	SD	SD	SD	SD	SD	SD	SD	SD	SD	SD	SD	SD

MD Multiturn bit as binary code

SD Singleturn bit as binary code

4.5 Programming the SSI_Absolute_Encoder

4.5.1 Instruction SSI_Absolute_Encoder

SSI_Absolute_Encoder

The SSI_Absolute_Encoder instruction is part of the SSI_Absolute_Encoder technology object. It supplies the control and feedback interface of the TM PosInput technology module.

The SSI_Absolute_Encoder instruction thereby forms the software interface between the user program and the technology module. It must be called cyclically from the user program in order to synchronize the input and output data.

The SSI_Absolute_Encoder instruction can be used for the TM PosInput of both the S7-1500 and ET 200SP systems alike. The TM PosInput modules can be used centrally and decentrally. The instruction applies in each case to the channel of the technology module that was assigned to the associated technology object.

Additional information

Description SSI_Absolute_Encoder (Page 165)

Input parameter SSI_Absolute_Encoder (Page 168)

Output parameter SSI_Absolute_Encoder (Page 168)

Error codes of parameter ErrorID (Page 171)

Static tags SSI_Absolute_Encoder (Page 170)

4.5.2 Call instruction in the user program

The SSI_Absolute_Encoder instruction can be called once per channel, either cyclically or in a time-controlled program. The call is not permitted in an event-controlled interrupt program.

Procedure

Proceed as follows to call the instruction in the user program:

1. Open the CPU folder in the project tree.
2. Open the "Program blocks" folder.
3. Double-click the OB for cyclic program execution.
   The block is opened in the work area.
4. In the "Instructions" window, open the "Technology" group and the "Counting and measurement" folder.
   The folder contains the instruction.

5. Select the instruction and drag it to your OB.
   The "Call options" dialog opens.
6. Select a technology object from the "Name" list or enter the name for a new technology object.
7. Confirm with "OK".

Result

If the technology object does not exist yet, it is added. The instruction is added in the OB. The technology object is assigned to this call of the instruction.

Note

If you click one of the buttons "Configuration", "Commissioning" or "Diagnostics" in the user interface of the instruction, the respective editor opens.

4.5.3 Description SSI_Absolute_Encoder

Description

The SSI_Absolute_Encoder instruction is used to control the position input and measuring functions of the technology module TM PosInput via the user program.

Call

The instruction must be called once per channel, either cyclically or in a time-controlled program. The call is not permitted in an event-controlled interrupt program.

Operating principle

Position value: The position value is available at the output parameter PositionValue. The position value is updated every time the instruction is called.

Measured value: The technology module updates the measured value asynchronously to the instruction call based on the configured update time. The measured value last determined by the technology module is updated at the output parameter MeasuredValue each time the instruction is called.

Measured value and position value are available in parallel as output parameters.

Instead of a measured value, the complete SSI frame can be returned at the output parameter CompleteSSIFrame. Either MeasuredValue or CompleteSSIFrame is valid, depending on the parameter assignment.

Capture: The output parameter CaptureStatus = TRUE indicates a valid Capture value at the output parameter CapturedValue.

- A Capture value is captured under the following conditions:
  - A digital input has the parameter assignment "Capture"
  - CaptureEnable = TRUE
  - Edge at digital input with the Capture function
- The output parameter CaptureStatus is reset by a negative edge at the input parameter CaptureEnable.

Parameter changes via the user program

Proceed as follows to modify parameters using the user program:

1. Check the relevant Set tag to establish whether the technology object is ready for the parameter change (Set tag = FALSE) or whether a change job is still running (Set tag = TRUE).
   The following Set tags in UserCmdFlags are available for this in the static tags of the technology object instance DB:
   – SetReferenceValue0
   – SetReferenceValue1
2. If the technology object is ready for the parameter change, modify the relevant static tag.
   The following static tags of the technology object instance DB are available for this:
   – NewReferenceValue0 / NewReferenceValue0_M (for SetReferenceValue0)
   – NewReferenceValue1 / NewReferenceValue1_M (for SetReferenceValue1)
3. Set the relevant Set tag for execution of the change job.
4. Use the output parameter Error to check whether an error has occurred.
   If no errors have occurred and the Set tag has been automatically reset by the technology object, the parameter change was successful.

Operating mode

Configure the operating mode in the technology object under "Behavior of DQ0".

The operating mode is indicated by the output parameters CompareMeasuredValue:

State	Description
FALSE	Operating mode "Use position value (SSI absolute value) as reference": The comparison functions work with the position value. The following static variables are specifically used in this operating mode: • NewReferenceValue0 • NewReferenceValue1 • CurReferenceValue0 • CurReferenceValue1 The four specific static variables of operating mode "Use measured value as reference" are ignored.
TRUE	Operating mode "Use measured value as reference": The comparison functions work with the measured value. The following static variables are specifically used in this operating mode: • NewReferenceValue0_M • NewReferenceValue1_M • CurReferenceValue0_M • CurReferenceValue1_M The four specific static tags of operating mode "Use position value (SSI absolute value) as reference" are ignored.

Acknowledgment of events

You acknowledge signaled events using the positive edge of the input parameter EventAck . EventAck must stay set until the technology object has reset the status bits of the following events of the count channel:

- CompResult0
- CompResult1
- ZeroStatus
- PosOverflow
- NegOverflow

Status of the digital inputs

You obtain the status of the digital inputs via the static tags StatusDI0 and StatusDI1.

Using digital outputs with user program

In the following cases you can set the digital outputs via the instruction:

Case	Description
The setting "Use by user program" is configured for "Set output".	The respective digital output DQM follows the value of SetDQm.
The setting "After set command from CPU until comp. value" is configured for "Set output".	The respective digital output DQm is set with a negative edge of SetDQm. DQm is reset when the position value corresponds to the comparison value or at a negative edge of SetDQm.
Set the respective static variable ManualCtrlDQm (temporary overwrite).	The respective digital output DQM follows the value of SetDQm.

Reaction to error

If an error has occurred during the call of the instruction or in the technology module, the output parameter Error is set. More detailed error information can be read at the output parameter ErrorID (Page 171).

Eliminate the cause of the error and acknowledge the error message by setting the input parameter ErrorAck. When no more errors are pending, the technology object resets the output parameter Error . No new error is signaled until you acknowledge the previous error.

4.5.4 Input parameter SSI_Absolute_Encoder

Parameter	Declaration	Data type	Default	Description
CaptureEnable	INPUT	BOOL	FALSE	Enable Capture function After the enable, a Capture event occurs at the next configured edge at the relevant digital input. A negative edge at CaptureEnable resets the output parameter CaptureStatus. A negative edge at CaptureEnable resets the enable even if no Capture event has occurred. Irrespective of CaptureEnable the last value is retained at the output parameter CapturedValue until the next Capture event.
ErrorAck	INPUT	BOOL	FALSE	SSI_Absolute_Encoder V1.0: A positive edge acknowledges the error status reported. SSI_Absolute_Encoder as of V2.0: A high level acknowledges the error status reported.
EventAck	INPUT	BOOL	FALSE	A positive edge resets the following output parameters: • CompResult0 • CompResult1 • ZeroStatus • PosOverflow • NegOverflow

4.5.5 Output parameter SSI_Absolute_Encoder

Parameter	Declaration	Data type	Default	Description
StatusHW	OUTPUT	BOOL	FALSE	Status bit technology module: The module is configured and ready for operation. The module data is valid.
StatusUp	OUTPUT	BOOL	FALSE	Status bit: Last position value has changed in the positive direction and took place no more than 0.5 s ago.
StatusDown	OUTPUT	BOOL	FALSE	Status bit: Last position value has changed in the negative direction and took place no more than 0.5 s ago.
CompResult0	OUTPUT	BOOL	FALSE	Status bit: Comparison event for DQ0 (change of state) occurs as a result of the selected comparison condition. The positive edge of the input parameter EventAck is used to reset CompResult0 .
CompResult1	OUTPUT	BOOL	FALSE	Status bit: Comparison event for DQ1 (change of state) occurs as a result of the selected comparison condition. The positive edge of the input parameter EventAck is used to reset CompResult1 .

Parameter	Declaration	Data type	Default	Description
CaptureStatus	OUTPUT	BOOL	FALSE	Status bit: Capture event occurred, the output parameter CapturedValue has a valid Capture value If the input parameter CaptureEnable is set, the configured edge sets the status bit CaptureStatus. at the respective digital input. You reset CaptureStatus using the negative edge of the input parameter CaptureEnable .
CapturedValue	OUTPUT	DINT	0	The last acquired Capture value The value is retained until the next Capture event, irrespective of the input parameter CaptureEnable. If a new Capture event has occurred, CaptureStatus is set and is reset by you using the negative edge of the input parameter CaptureEnable .
ZeroStatus	OUTPUT	BOOL	FALSE	Status bit: PositionValue has reached or exceeded the value "0" irrespective of the count direction. You reset ZeroStatus using the positive edge of the input parameter EventAck.
PosOverflow	OUTPUT	BOOL	FALSE	Status bit: PositionValue has exceeded the high limit of the position value range of the encoder in the positive direction. You reset PosOverflow using the positive edge of the input parameter EventAck.
NegOverflow	OUTPUT	BOOL	FALSE	Status bit: PositionValue has exceeded the low limit of the position value range of the encoder in the negative direction. You reset NegOverflow using the positive edge of the input parameter EventAck.
Error	OUTPUT	BOOL	FALSE	An error has occurred. Refer to the output parameter ErrorID for the cause of the error.
ErrorID	OUTPUT	WORD	0	The ErrorID (Page 171) parameter displays the number of the error message. ErrorID = 0000_H: There is no error.
PositionValue	OUTPUT	DINT	0	Current position value
Measured-Value	OUTPUT	REAL	0.0	Current measured value for frequency, period duration or velocity (depending on configuration) Either MeasuredValue or CompleteSSIFrame is valid, depending on the parameter assignment in the technology object under "Measured value".
Complete-SSIFrame	OUTPUT	DWORD	0	Last received complete SSI frame (least significant 32 bits) Either MeasuredValue or CompleteSSIFrame is valid, depending on the parameter assignment in the technology object under "Measured value".
CompareMeas-uredValue	OUTPUT	BOOL	FALSE	Status bit: FALSE: Operating mode "Use position value (SSI absolute value) as reference"; position value is used as reference TRUE: Operating mode "Use measured value as reference"; measured value is used as reference

4.5.6 Static tags SSI_Absolute_Encoder

Tag		Data type	Default	Access	Description
NewReferenceValue0		DINT	L#0	Write	New comparison value 0 in operating mode "Use position value (SSI absolute value) as reference"
NewReferenceValue1		DINT	L#10	Write	New comparison value 1 in operating mode "Use position value (SSI absolute value) as reference"
NewReferenceValue0_M		REAL	L#0.0	Write	New comparison value 0 in operating mode "Use measured value as reference"
NewReferenceValue1_M		REAL	L#10.0	Write	New comparison value 1 in operating mode "Use measured value as reference"
CurReferenceValue0		DINT	L#0	Read	Current comparison value 0 in operating mode "Use position value (SSI absolute value) as reference"
CurReferenceValue1		DINT	L#10	Read	Current comparison value 1 in operating mode "Use position value (SSI absolute value) as reference"
CurReferenceValue0_M		REAL	L#0.0	Read	Current comparison value 0 in operating mode "Use measured value as reference"
CurReferenceValue1_M		REAL	L#10.0	Read	Current comparison value 1 in operating mode "Use measured value as reference"
AdditionalErrorID		DWORD	W#16#0000	Read	Error information of an internal instruction, e.g.,RDREC
UserCmdFlags		STRUCT	-		
	SetReferenceValue0	BOOL	FALSE	Write	Set comparison value 0
	SetReferenceValue1	BOOL	FALSE	Write	Set comparison value 1
	SetDQ0	BOOL	FALSE	Write	Set digital output DQ0
	SetDQ1	BOOL	FALSE	Write	Set digital output DQ1
	ManualCtrlDQ0	BOOL	FALSE	Write	Enable setting of digital output DQ0. TRUE: SetDQ0 sets DQ0[1] FALSE: Setting not enabled
	ManualCtrlDQ1	BOOL	FALSE	Write	Enable setting of digital output DQ1: TRUE: SetDQ1 sets DQ1[1] FALSE: Setting not enabled
UserStatusFlags		STRUCT	-		
	StatusDI0	BOOL	FALSE	Read	Current status of digital input DI0
	StatusDI1	BOOL	FALSE	Read	Current status of digital input DI1
	StatusDQ0	BOOL	FALSE	Read	Current status of digital output DQ0
	StatusDQ1	BOOL	FALSE	Read	Current status of digital output DQ1

[1] The instruction sets the TM_CTRL_DQm bit to FALSE. in the control interface of the module. The static tag SetDQm acts on the control bit SET_DQm.

4.5.7 Error codes of parameter ErrorID

Error code (W#16#...)	Description
0000	No error
Error messages from technology module	
80A1	POWER_ERROR from feedback interface: Incorrect supply voltage L+
80A2	ENC_ERROR from feedback interface: Incorrect encoder signal
80A3	LD_ERROR from feedback interface: Error when loading via control interface
Error messages of the instruction SSI_Absolute_Encoder	
80B8	New comparison value 0 does not meet the following conditions: • Low counting limit <= comparison value 0 <= high counting limit • Comparison value 0 < comparison value 1
80B9	New comparison value 1 does not meet the following conditions: • Low counting limit <= comparison value 1 <= high counting limit • Comparison value 0 < comparison value 1
80C0	Instruction was called multiple times with the same instance (DB)
80C1	Communication with technology module failed (read data records): Error information of internal instruction RDREC saved in static tag AdditionalErrorID
80C2	Communication with technology module failed (write data records): Error information of internal instruction WRREC saved in static tag AdditionalErrorID
80C5	Reading of the current start information of the OB failed: Error information of internal instruction RD_SINFO saved in static tag AdditionalErrorID
80C6	Failed to get I/O addresses of the technology module: Error information of internal instruction RD_ADDR saved in static tag AdditionalErrorID
80C7	Module not inserted or no supply voltage L+
80C8	Specified module is not permitted in the static tag Configuration.HWID

4.6 Commissioning SSI_Absolute_Encoder

4.6.1 Commissioning the technology object

A graphic display of the block in the commissioning editor helps you with commissioning and the function test for the technology object. You can change specific parameters of the SSI_Absolute_Encoder instruction in CPU/IM online mode and monitor their effects.

Requirements

- There is an online connection between STEP 7 (TIA Portal) and the CPU.
- The CPU is in RUN.
- The corresponding SSI_Absolute_Encoder instruction is called cyclically from the user program.
- The parameters of the technology object are not overwritten by the user program.

Procedure

To open the commissioning editor of a technology object and to simulate a parameter value change, follow these steps:

1. Open the "Technology objects" folder in the project tree.
2. Open the SSI_Absolute_Encoder technology object in the project tree.
3. Double-click on the "Commissioning" object.
   The functions for commissioning the SSI_Absolute_Encoder technology object are displayed.
4. In the commissioning dialog, click on the "Monitor all" button.
   The parameters (online values) of the SSI_Absolute_Encoder technology object are loaded and displayed.
5. If the parameter you want to change has a text box, enter the new value there.
6. Select the check box of the parameter.
   The new parameter value becomes effective and the effects of the change are simulated.

Online mode

In online mode, you can modify the following parameters to test the technology object function:

- New comparison value 0 (NewReferenceValue0 or NewReferenceValue0_M)
- New comparison value 1 (NewReferenceValue1 or NewReferenceValue1_M)
- Enable Capture (CaptureEnable)
- Acknowledgment of signaled error states (ErrorAck)
- Resetting the status flag (EventAck)

4.7 SSI_Absolute_Encoder diagnostics

4.7.1 Monitoring counter values, measured values, DIs and DQs

The diagnostic functions are used to monitor the position input and measuring functions.

Requirements

- There is an online connection between STEP 7 (TIA Portal) and the CPU.
- The CPU is in RUN.

Procedure

To open the display editor for the diagnostic functions, follow these steps:

1. Open the "Technology objects" folder in the project tree.
2. Open the SSI_Absolute_Encoder technology object in the project tree.
3. Double-click on the "Diagnostics" object.
4. Click the "Monitor all" button.

Display

The following values are read by the technology object from the feedback interface and displayed:

- Event display/diagnostics information
- Signal states of the digital inputs and digital outputs
- Position value
- Capture value
- Measured value

Additional information on status displays is available in the context-sensitive help for each event in STEP 7 (TIA Portal). When the CPU is in STOP, the status display is not updated.

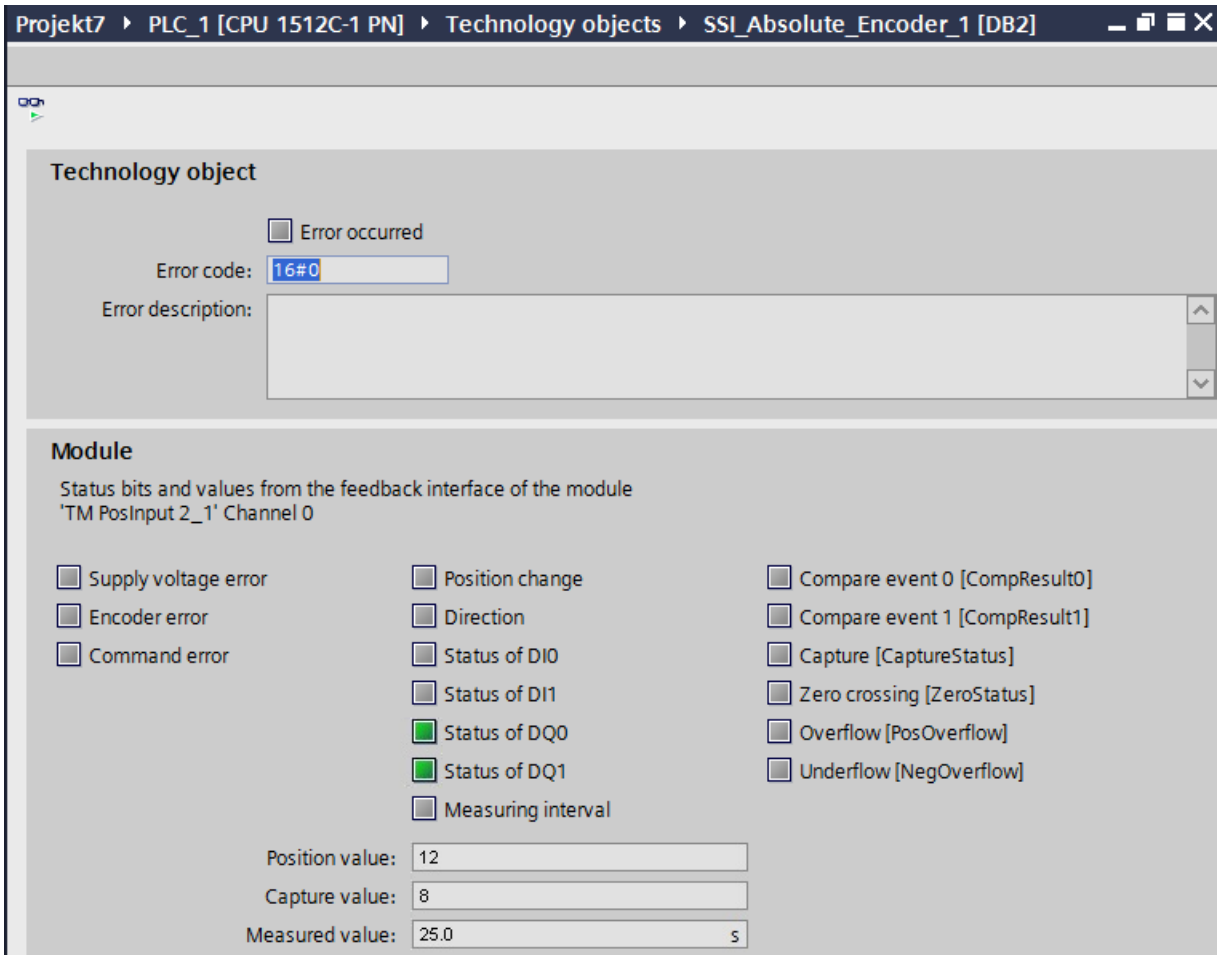

Using the module

5

5.1 Using the technology module

5.1.1 Convention

Technology module: We use the term "technology module" in this documentation both for the technology modules TM Count and TM PosInput and the technology component of the compact CPUs.

5.1.2 Configuring a module

5.1.2.1 Adding a technology module for hardware configuration (TM Count and TM PosInput)

Requirement

- The project has been created.
- The CPU S7-1500 has been created.
- At decentralized operation a distributed I/O ET 200 is created.

Procedure

To add a technology module to the hardware configuration, proceed as follows:

1. Open the device configuration of the CPU or IM.
2. Select a module rack.
3. Select the technology module from the module catalog:
   "Technology module > Counting or Position input > Technology module > Article number"
4. Drag the technology module to the required slot in the module rack.

5.1.2.2 Adding a technology module to hardware configuration (Compact CPU)

Requirement

The project has been created.

Procedure

To add a Compact CPU to the project tree, follow these steps:

1. Double-click "Add new device".
   The "Add new object" dialog opens.
2. Select Controller".
3. Select the Compact CPU:
   "SIMATIC S7-1500 > CPU > Compact CPU > Article number"
4. Confirm with "OK".

Result

The new Compact CPU is displayed with the following objects in the project tree. Double-click to open the required editor.

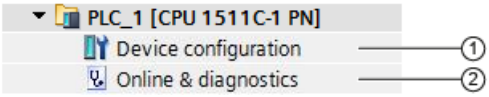

	Object	Description
①	Device configuration (Page 178)	In the Inspector window (per channel): • Activation of the counter (Page 188) • Assign signals to inputs and outputs (Page 189) • Setting the reaction to CPU STOP (Page 178) • Enable diagnostic interrupts (Page 180) • Setting the operating mode (Page 180) • Enable hardware interrupts (Page 186) • Setting the module addresses
②	Online & Diagnostics (Page 236)	• Hardware diagnostics • Obtain information about the Compact CPU • Run firmware update

5.1.2.3 Open hardware configuration

Procedure

1. Open the device configuration of the CPU or IM.
2. Select the device view.
3. Click on the module.

5.1.2.4 Parameter assignment options

Counting, measuring and position input with SSI absolute encoder

For the counting and measuring function as well as the position input with an SSI absolute encoder, you have the following alternatives for parameter assignment and control of the technology module:

- Configuration of a technology object and control using the related instruction:

  When using an incremental or pulse encoder, we recommend the simple configuration with graphic support using thee High_Speed_Counter technology object. A detailed description of this configuration can be found in section Technology Object High_Speed_Counter (Page 101).

  When using an SSI absolute value encoder, we recommend the simple configuration with graphic support using the SSI_Absolute_Encoder technology object. A detailed description of this configuration can be found in section Technology Object High_Speed_Counter (Page 144).

  For configuration of a technology object, select the operating mode (Page 180) "Operating with "Counting and measurement" technology object".
- Parameter setting via hardware configuration and control via the control and feedback interface of the technology module:

  Select the operating mode (Page 180) "Manual operation (without technology object)" for this.

  A description of the control and feedback interface for TM Count and TM PosInput is available in the following sections:

  Assignment of the control interface (Page 237)

  Assignment of the feedback interface (Page 240)
- Parameter settings via GSD file and control via the control and feedback interface of the technology module.

  A description of the control and feedback interface for TM Count and TM PosInput is available in the following sections:

  Assignment of the control interface (Page 237)

  Assignment of the feedback interface (Page 240)

Position input for Motion Control

Alternatively, you have the option of using the technology module for position input for Motion Control.

Select the operating mode (Page 180) "Position input for "Motion Control" technology object" and assign the parameters of the encoder using the module parameters (Page 181) in the device configuration of the technology module. You perform the rest of the configuration of this application using an axis technology object of S7-1500 Motion Control .

5.1.2.5 Basic parameters

Reaction to CPU STOP

Reaction to CPU STOP

You set the response of the technology module for each channel to CPU STOP in the basic parameters of the device configuration.

Option	Meaning
Continue operation	The technology module remains fully functional. Incoming count pulses are processed or the actual position is read. The digital outputs continue to switch according to the parameter assignment.
Output substitute value	The technology module outputs the configured substitute values at the digital outputs until the next CPU STOP-RUN transition. The technology module is returned to its startup state after a STOP-RUN transition: The counter value is set to the Start value (with incremental encoders or pulse encoders) and the digital outputs switch according to the parameter assignment.
Keep last value	The technology module outputs the values at the digital outputs that were valid when the transition to STOP took place until the next CPU STOP-RUN transition. If a digital output with the function "In case of comparison value for a pulse duration" is set at CPU stop, the digital output is reset after expiry of pulse duration. The technology module is returned to its startup state after a STOP-RUN transition: The counter value is set to the Start value (with incremental encoders or pulse encoders) and the digital outputs switch according to the parameter assignment.

Substitute value for DQ0 (TM Count und TM PosInput)

This parameter lets you specify which value the technology module is to output to the digital output DQ0 in the event of a CPU STOP under "Output substitute value".

Note

In operating mode "Operating with "Counting and measurement" technology object", you assign this parameter using the technology object.

Substitute value for DQ0 (Compact CPU)

You can use this parameter to specify the value to be output for a STOP of the Compact CPU in the feedback interface for DQ0 in the context of the "Substitute value for DQ0" behavior.

Note

In operating mode "Operating with "Counting and measurement" technology object", you assign this parameter using the technology object.

Substitute value for DQ1

This parameter lets you specify which value the technology module is to output to the digital output DQ1 in the event of a CPU STOP under "Output substitute value".

Note

In operating mode "Operating with "Counting and measurement" technology object", you assign this parameter using the technology object.

Diagnostic interrupts (TM Count and TM PosInput)

The technology module can trigger additional diagnostic interrupts when you enable the diagnostic interrupts in the basic parameters. These diagnostic interrupts are processed in an interrupt OB.

Detailed information on the error event is available in the error organization block with the instruction "RALRM" (read alarm supplementary information) and in the Diagnostics function manual (https://support.industry.siemens.com/cs/ww/en/view/59192926), section "System diagnostics by means of the user program".

Enable diagnostic interrupt on wire break

You use this parameter to specify whether a diagnostic interrupt is to be triggered in the event of wire breaks of the utilized signals for the following encoders:

- Push-pull 24 V encoder (Page 72)
- RS422 encoder (Page 74) (additionally monitored for short-circuits and incorrect supply voltage)
- SSI absolute encoder (Page 76) (additionally monitored for short-circuits and incorrect supply voltage)

Note

If you use an encoder with a different sensor type or interface standard, wire break cannot be detected.

Enable additional diagnostic interrupts

You use this parameter to specify whether diagnostic interrupts are to be triggered for additional errors.

See the device manual for the technology module to find out which errors during operation can trigger a diagnostic interrupt.

Diagnostics interrupts (Compact CPU)

Enable diagnostic interrupts

A Compact CPU can trigger diagnostic interrupts for certain faults if you have enabled diagnostic interrupts. These diagnostic interrupts are processed in an interrupt OB.

You use this parameter to determine if the Compact CPU should trigger diagnostic interrupts when a given error occurs.

See the device manual for the Compact CPU to find out which errors can trigger a diagnostic interrupt during operation. The diagnostic interrupts are not enabled in the default setting.

Operating mode

Selection of the operating mode for the channel

This setting defines how the channel counting and measuring functions are to be configured and controlled.

Operating mode	Description
Operating with technology object "Counting and measurement"	A technology object is used for the parameter assignment of the channel. The related instruction for the technology object in the user program provides the access to the control and feedback interfaces of the technology module. You specify the assignment between the technology module/channel and technology object in the basic parameters of the technology object.
Position input for "Motion Control" technology object	The technology module is used for position input for a higher-level Motion Control controller. This operating mode affects all channels of the technology module for TM Count and TM PosInput. Setting the operating mode only affects the given channel of the Compact CPU. Parameter assignment is implemented via the Device configuration of the technology module. Parameter assignment of the encoder signals is implemented by means of the Module parameters (Page 181).
Manual operation (without technology object)	Parameter assignment of the channel is effected via the hardware configuration of the technology module: • Manual operation (incremental or pulse encoder) (Page 190) • Manual operation (SSI absolute encoder) (Page 207) You have direct access to the control and feedback interface of the channel through the user program.
Fast Mode	The technology module is used for very fast acquisition of the counter value or position value. No control interface is available. The parameter setting (hardware configuration) of the module is used for the parameter assignment of the channel. You have direct access to the feedback interface of the channel through the user program.

Note

GSD file

When using a GSD file you determine the operating mode via the selection of the module name in the hardware catalog. You can select manual operation or Fast Mode in the process.

Selection of the operating type for the channel

You use this parameter in "Manual operation" to specify the main task for which the channel of the technology module is used. This defines the setting options under "Parameters" (hardware configuration).

Operating mode	Description
Counting (Page 26) / Position input (Page 28)	The main function of the channel is counting or position input. The comparison functions and hardware interrupts work with the counter value or position value. The measured values are available concurrently.
Measuring (Page 59)	The main function of the channel is counting. The comparison functions (Page 57) and hardware interrupts for compare events work with the measured value. The counter value is available concurrently.

Note

GSD file

When using a GSD file, you determine the operating mode via the selection of the module name in the hardware catalog.

Module parameters (position input for Motion Control)

In operating mode "Position input for technology object "Motion Control"", the parameters for the encoder signals of the channel are assigned under "Module parameters". The parameters depend on the encoder used.

Note

You cannot use this operating mode with a GSD file.

Module parameters for incremental encoders and pulse encoders

If you use an incremental or pulse encoder, you need to configure the following parameters for the encoder signals of the channel.

- Signal type
- Invert direction
- Signal evaluation
- Filter frequency
- Sensor type (for TM Count)
- Interface standard (for TM PosInput)
- Signal selection for reference mark 0

- Measuring input
- Encoder type
- Increments per revolution
- Steps per revolution
- Reference speed
- Distance between increments
- Fine-resolution increment distance
- Reference velocity

You can find a description of the first six parameters in section Counter inputs (Page 190).

Module parameters for SSI absolute encoders

If you use an TM PosInput with an SSI absolute encoder, you need to configure the following parameters for the encoder signals of the channel.

- Signal type
- Invert direction
- Frame length
- Code type
- Transmission rate
- Monoflop time
- Parity
- Bit number LSB of the position value
- Bit number MSB of the position value
- Measuring input
- Encoder type
- Steps per revolution
- Number of revolutions
- Reference speed
- Distance between increments
- Reference velocity

You can find additional information on the first new parameters in section Counter inputs (Page 207).

Signal selection for reference mark 0 (TM Count and TM PosInput)

You can use this parameter to specify the external reference signal upon which a new reference mark is saved for the encoder position.

You can select from the following options:

Option	Meaning
DI0	The current counter value is saved as the new encoder position reference mark upon a positive edge at digital input DI0.
Signal N of incremental encoder (default)	The current counter value is saved as the new encoder position reference mark upon a positive edge of the signal N of incremental encoder.

Signal selection for reference mark 0 (Compact CPU)

You can use this parameter to specify the external reference signal upon which a new reference mark is saved for the encoder position.

You can select from the following options:

Option	Meaning
None	No external reference signal is used.
DI0	The current counter value is saved as the new encoder position reference mark upon a positive edge at digital input DI0.
Signal N of incremental encoder (default[1])	The current counter value is saved as the new encoder position reference mark upon a positive edge of the signal N of incremental encoder.

[1] Exceptions: "DI0" is the default for HSC 3 and HSC 6 on the 1511C as well as on the 1512C in compatibility mode

Measuring input (TM Count and TM PosInput)

The parameter specifies that the hardware digital input DI1 serves as a measuring input. For rising, falling or both edges of the DI1, the current counter value or position value is saved as the current encoder position. The value of the parameter cannot be changed.

Measuring input (compact CPU)

This parameter is used to define the hardware input which is used as the external measuring input for saving the encoder position.

You can select from the following options:

Option	Meaning
None (default)	No external measuring input is used.
DI1	The hardware digital input DI1 serves as the measuring input. For rising, falling or both edges of the DI1, the current counter value is saved as current encoder position.

Increments per revolution

With this parameter you specify the line count of the incremental and pulse encoder. The line count can be found in the data sheet for the encoder.

Steps per revolution (incremental and pulse encoder)

The parameter specifies the number of count pulses per encode rotation.

The number of count pulses depends on the increment per rotation and the parameterized signal evaluation.

Example:

Your incremental or pulse encoder delivers 2048 increments per revolution. Depending on the signal evaluation the following value is displayed:

Signal evaluation	Steps per revolution
Single	2048
Double	4096
Quadruple	8192

Steps per revolution (SSI absolute encoder)

With this parameter you define the number of increments the SSI absolute encoder supplies per revolution.

Number of revolutions

The parameter specifies how many rotations the value range of the SSI absolute encoder encompasses.

The value is calculated from the parameterized values for the bit numbers LSB and MSB of the position value as well as the steps per revolution.

Reference speed

The encoder transmits the process value of the speed as a percentage of the reference speed. This parameter defines the speed in rpm which is to be correspond to the value 100 % . The reference speed must be identical to the setting in the controller.

You can enter a value between 6.00 and 210000.00. The default setting is "3000.00 rpm".

Encoder type

You can use this parameter to specify whether the encoder records linear or rotatory movements. The encoder type must be identical to the setting in the controller.

The default setting is "Rotary".

Distance between increments

You can use this parameter to specify the distance between two increments of the encoder in nm.

The value must be identical to the setting in the controller.

Fine-resolution increment distance

The parameter specifies the distance between two count pulses in nm.

The value depends on the distance between two increments and the configured signal evaluation.

Example:

Your incremental or pulse encoder has an incremental distance of 16000 nm. Depending on the signal evaluation the following value is displayed:

Signal evaluation	Fine-resolution increment distance
Single	16000.00 nm
Double	8000.00 nm
Quadruple	4000.00 nm

Reference velocity

The encoder transmits the process value of the velocity as a percentage of the reference velocity. This parameter defines the velocity in m/min which corresponds to a value of 100%.

You can enter a value between 0.60 and 600.00. The default setting is "16.00 m/min".

Further configuring

You can perform the further configuration by using an axis or measuring input technology object of S7-1500 Motion Control . See the S7-1500 Motion Control (https://support.industry.siemens.com/cs/ww/en/view/59381279) and S7-1500T Motion Control (https://support.industry.siemens.com/cs/ww/en/view/109481326) function manuals for further details on configuring and commissioning position input and the measuring input technology object.

See also

Position detection for Motion Control (Page 71)

Hardware interrupts

You can set for each channel the events which are to trigger a hardware interrupt during operation when assigning the basic parameters of the technology module.

In an S7-1500 system, you enter a matching event name for each enabled hardware interrupt and assign a corresponding hardware interrupt OB to each hardware interrupt. If a hardware interrupt is triggered, the corresponding OB is started to evaluate the hardware interrupt data.

Note

In the following cases you can only release only *one* hardware interrupt per module.

- Distributed operation with an S7-300/400 CPU
- Use of a GSD file

A hardware interrupt is triggered if the condition for changing the respective status bit or event bit in the feedback interface is fulfilled.

Lost hardware interrupt

If the hardware interrupts are triggered more quickly by the system than they can be acknowledged, hardware interrupts are lost and the "Hardware interrupt" diagnostics interrupt is signaled.

Hardware interrupts that can be activated

Hardware interrupt	Available in counting mode using		Available in measuring mode using		Available in operating mode Position input for "Motion Control" technology object	Description	Event Type number
	Incremental or pulse encoder	SSI absolute encoder	Incremental or pulse encoder	SSI absolute encoder			
New Capture value available	Yes	Yes	No	No	No	Hardware interrupt when current counter value or position value is saved as Capture value	1000_B
Synchronization of the counter by an external signal	Yes	No	Yes	No	No	Hardware interrupt upon synchronization of the counter by signal N or DI edge	1001_B
Gate start	Yes	No	Yes	No	No	Hardware interrupt when internal gate opens	0001_B
Gate stop	Yes	No	Yes	No	No	Hardware interrupt when internal gate closes	0010_B

Hardware interrupt	Available in counting mode using		Available in measuring mode using		Available in operating mode Position input for "Motion Control" technology object	Description	Event Type number
	Incremental or pulse encoder	SSI absolute encoder	Incremental or pulse encoder	SSI absolute encoder			
Overflow (high counting limit violated)	Based on counter value	No	Based on counter value	No	No	Hardware interrupt when counter value exceeds high counting limit	0011B
Underflow (low counting limit violated)	Based on counter value	No	Based on counter value	No	No	Hardware interrupt when counter value falls below low counting limit	0100B
Change of direction[1]	Based on counter value	Based on position value	Based on counter value	Based on position value	No	Hardware interrupt when counter value or position value changes direction	1010B
Zero crossing	Based on counter value	Based on position value	Based on counter value	Based on position value	No	Hardware interrupt with zero crossing of counter value or position value	0111B
Comparison event for DQ0 occurred	Based on counter value	Based on position value	Based on measured value	Based on measured value	No	Hardware interrupt when a comparison event for DQ0 occurs as a result of the selected comparison condition. No hardware interrupt when the change of the counter value for an incremental or pulse encoder was not caused by a count pulse	0101B
Comparison event for DQ1 occurred	Based on counter value	Based on position value	Based on measured value	Based on measured value	No	Hardware interrupt when a comparison event for DQ1 occurs as a result of the selected comparison condition. No hardware interrupt when the change of the counter value for an incremental or pulse encoder was not caused by a count pulse	0110B

[1] The STS_DIR feedback bit has a default of "0". A hardware interrupt is not triggered when the first change to the counter value or position value immediately after the technology module is switched on is in the down direction.

Default setting

No hardware interrupts are enabled in the default setting.

5.1.2.6 Additional parameters for Compact CPU

Introduction

When using a Compact CPU, the following parameters are additionally available for the signals of the high-speed counter.

Compatibility 1511C (high-speed counters of Compact CPU 1512C-1 PN)

Front connector assignment same as CPU 1511C

You can use this parameter to specify if the pin assignment for the front connector of the CPU 1511C-1 PN is to be used for the high-speed counter of the CPU 1512C-1 PN:

Option	Meaning
Disabled (default)	CPU 1512C-1 PN uses the pin assignment of the onboard front connector. 1512C-1 PN supports the use of the connections of both front connectors of the digital onboard I/Os for the high-speed counter. The assignment of hardware inputs and outputs for the HSC channels is described in the CPU 1512C-1 PN manual.
Enabled	CPU 1512C-1 PN uses the pin assignment of the front connector of the CPU 1511C-1 PN. 1511C-1 PN supports the use of the connections of the first front connector of the digital onboard I/Os for the high-speed counter. The assignment of hardware inputs and outputs for the HSC channels is described in the CPU 1511C-1 PN manual.

General

Activate this high-speed counter

You can use this parameter to specify whether the respective high speed counter is to be used:

Option	Meaning
Disabled (default)	The high-speed counter is not used. The counter uses no connections of the onboard front connector and can not trigger interrupts. Writing to its control interface is ignored and its feedback interface returns zero values.
Enabled	The high-speed counter is used. The assignment of HSC addresses to the connections of the onboard front connector is described in the device manual of the Compact CPU.

Hardware inputs/outputs

Clock generator input (A) / Pulse input (A) / Clock generator forward (A)

This parameter specifies which input is used for the encoder signal A for the respective counter. The value cannot be changed.

Clock generator input (B) / Pulse input (B) / Clock generator forward (B)

If you use an encoder with multiple signals for the respective counter, this parameter specifies which input is used for the encoder signal B. The value cannot be changed.

Reset input (N)

If you use an incremental encoder for the respective counter, this parameter specifies which input is used for the reset input (encoder signal N). The value cannot be changed.

HSC DI0 / HSC DI1

This parameter determines which digital input of the Compact CPU is to be used as the DIm of the counter.

Note

You can configure the input delay for a digital input in the Inspector window of the device configuration under "Properties > DI 16/DQ 16 > Inputs > Channel n".

HSC DQ0

You can read the status of the DQ0 via the feedback interface. You cannot assign DQ0 to a physical digital output of the Compact CPU.

HSC DQ1

This parameter determines which digital output of the Compact CPU is to be used as DQ1. You can select an output with an output delay of 5 µs or 500 µs.

You can find an overview of the output delay for all digital outputs in the device manual of the Compact CPU.

5.1.2.7 Manual operation (incremental or pulse encoder)

Counter inputs

Signal type

You can choose from the following signal types (Page 72):

Signal type	Meaning	Additional option-specific parameters
Incremental encoder (A, B phase-shifted)	An incremental encoder with phase-shifted A and B signals is connected.	• Invert direction • Signal evaluation • Filter frequency • Sensor type or Interface standard
Incremental encoder (A, B, N)	An incremental encoder with phase-shifted signals A and B and a zero signal N is connected.	• Invert direction • Signal evaluation • Filter frequency • Sensor type or Interface standard • Reaction to signal N • Frequency of synchronization • Frequency of the Capture function
Pulse (A) and direction (B)	A pulse encoder (signal A) with direction signal (signal B) is connected.	• Filter frequency • Sensor type or Interface standard
Pulse (A)	A pulse encoder (signal A) without direction signal is connected. You can specify the count direction by means of the control interface (Page 237).	• Filter frequency • Sensor type or Interface standard
Count up (A), count down (B)	Signals for counting up (signal A) and down (signal B) are connected.	• Filter frequency • Sensor type or Interface standard

Invert direction

You can invert the count direction to adapt it to the process.

The inverting of the direction is configurable and active for the following signal types:

- Incremental encoder (A, B phase-shifted)
- Incremental encoder (A, B, N)

Signal evaluation

By configuring signal evaluation (Page 77), you can specify which edges of the signals are counted.

You can select from the following options:

Signal evaluation	Meaning
Single (default)	The edges of signal A are evaluated during a low level of signal B.
Double	Each edge of signal A is evaluated.
Quadruple	Each edge of signals A and B is evaluated.

The parameter can be assigned with the following signal types:

- Incremental encoder (A, B phase-shifted)
- Incremental encoder (A, B, N)

Filter frequency

By configuring the filter frequency, you suppress interferences at the counter inputs A, B and N.

The selected filter frequency is based on a pulse/break ratio of between around 40:60 and around 60:40. This results in a specific minimum pulse/break time. Signal changes with a duration shorter than the minimum pulse/break time are suppressed.

You can select from the following filter frequencies:

Filter frequency	Minimum pulse/break time
100 Hz	4.0 ms
200 Hz	2.0 ms
500 Hz	800 µs
1 kHz	400 µs
2 kHz	200 µs
5 kHz	80 µs
10 kHz	40 µs
20 kHz	20 µs
50 kHz	8.0 µs
100 kHz (default for Compact CPU)	4.0 µs
200 kHz** (default for TM Count)	2.0 µs
500 kHz*	0.8 µs
1 MHz* (default at TM PosInput)	0.4 µs

* Only available with TM PosInput
** * Only available with TM Count and TM PosInput

Sensor type (TM Count)

By configuring the sensor type, you specify how the counter inputs are switched for the TM Count.

You can select from the following options:

Sensor type	Meaning
Sourcing output (default)	The encoder/sensor switches the inputs A, B and N to 24VDC.
Sinking output	The encoder/sensor switches the inputs A, B and N to M.
Push-pull (sinking and sourcing output)	The encoder/sensor alternately switches the inputs A, B and N to M and 24VDC.

"Push-pull" is usually selected when incremental encoders are used. If using 2-wire sensors, such as light barriers or proximity switches, you need to select the corresponding wiring "Sourcing output" or "Sinking output".

The data sheet of the encoder includes information on whether your incremental encoder is a push-pull encoder.

Note

If you use a push-pull encoder and the sensor type "Push-pull (sinking and sourcing output)" is configured, you can monitor the encoder signals for wire break.

Sensor type (compact CPU)

The "Sourcing output" sensor type is set for the Compact CPU and cannot be changed. The encoder or sensor switches the inputs A, B and N to 24V DC.

You can operate both sourcing output encoders and push-pull encoders on the Compact CPU. You can find additional information on the sensor type in the data sheet for the encoder.

Interface standard (TM PosInput)

You use this parameter to specify whether the encoder outputs symmetric (RS422) or asymmetric (TTL) signals for the TM PosInput.

You can select from the following options:

Interface standard	Meaning
RS422, symmetrical (default)	The encoder outputs symmetric signals according to the RS422 standard (Page 74).
TTL (5 V), asymmetrical	The encoder outputs asymmetric 5 V signals according to the TTL standard (Page 72).

Note

The RS422 standard provides greater interference immunity than the TTL standard. Therefore, if your incremental or pulse encoder supports the RS422 **and** the TTL standard, it is recommended to use the RS422 signal standard.

Reaction to signal N

You use this parameter to specify which reaction is triggered to signal N.

You can select from the following options:

Option	Meaning
No reaction to signal N (default)	The counter is not affected by signal N.
Synchronization at signal N (Page 45)	The counter is set to the start value at signal N. If you select the function "Enable synchronization at signal N" for a digital input, the synchronization depends on the level at the digital input.
Capture at signal N (Page 35)	The counter value is stored in the Capture value at signal N. The use of a digital input and the use of the N signal are not mutually exclusive for the Capture function. The technology object displays the Capture value at the output parameter CapturedValue.

Note

You can only select the reaction to signal N if you have selected the "Incremental encoder (A, B, N)" signal type.

Note

If "Synchronization at signal N" is selected, you can select the function "Enable synchronization at signal N" for a digital input (Page 196).

Note

For High_Speed_Counter as of V3.0, the following applies:

You can choose "Capture at signal N" only in operating mode "Use count value as reference":

Frequency of synchronization

This parameter is used to define the frequency of the following events:

- Synchronization at signal N
- Synchronization as a function of a digital input

You can select from the following options:

Option	Meaning
Once (default)	The counter is only set at the first signal N or the first configured edge of the digital input.
Periodic	The counter is set at each signal N or each configured edge of the digital input.

Frequency of the Capture function

This parameter is used to define the frequency of Capture events for the following functions:

- Capture at Signal N
- Capture as function of a digital input

You can select from the following options:

Option	Meaning
Once	The first configured edge at the respective digital input or first rising edge of the N signal saves the current counter value as a Capture value.
Periodic (default)	Each configured edge at the respective digital input or each rising edge of the N signal saves the current counter value as a Capture value.

Counting limits and start value

High counting limit

You limit the counting range by setting the high counting limit. You can enter a value up to 2147483647 (2^{31}-1). You must enter a value that lies above the low counting limit.

The default setting is "2147483647".

Low counting limit

You limit the counting range by setting the low counting limit. You can enter a value up to -2147483648 (-2^{31}). You must enter a value below the high counting limit.

The default setting is "-2147483648".

Start value

By configuring the start value, you specify the value at which counting is to start and where it is to continue in the case of defined events. You must enter a value between the counting limits or equal to the counting limits.

The default setting is "0".

Additional information

For more information, see Behavior at the counting limits (Page 30) and Counter behavior at gate start (Page 34).

Counter behavior at limits and gate start

Reaction to violation of a counting limit

You can configure the following characteristics for violation of a counting limit (Page 30):

Reaction	Meaning
Stop counting	If a counting limit is violated, counting is stopped and the internal gate is closed. To restart counting, you must also close and reopen the software/hardware gate.
Continue counting (default)	Counting continues either with the start value or at the opposite counting limit, depending on the additional parameter assignment.

Reset when counting limit is violated

You can reset the counter to the following values when a counting limit is violated:

Reset the value	Meaning
To start value	The counter value is set to the start value.
To opposite counting limit (default)	The counter value is set to the opposite counting limit.

Reaction to gate start

You can set the following Reaction to gate start (Page 34):

Reaction	Meaning
Set to start value	When the gate is opened, the counter value is set to the start value.
Continue with current value (default)	When the gate is opened, counting is continued with the last counter value.

Behavior of a DI

Set function of DI

By configuring a digital input, you specify which functions the digital input triggers at switching.

You can select from the following options:

Function of a digital input	Meaning	Additional option-specific parameters
Gate start/stop (level-triggered)	The level at the respective digital input opens and closes the hardware gate (Page 32).	• Input delay • Select level
Gate start (edge-triggered)	The configured edge at the respective digital input opens the hardware gate (Page 32).	• Input delay • Edge selection
Gate stop (edge-triggered)	The configured edge at the respective digital input closes the hardware gate (Page 32).	• Input delay • Edge selection
Synchronization (Page 40)	The configured edge at the respective digital input sets the counter to the start value. The EVENT_SYNC feedback bit indicates whether a synchronization has occurred.	• Input delay • Edge selection • Frequency of synchronization
Enable synchronization at signal N	The active level at the respective digital input enables synchronization of the counter at signal N (Page 45).	• Input delay • Select level
Capture	The configured edge at the respective digital input saves the current counter value (Page 35) as a Capture value. The use of a digital input and the use of the N signal are not mutually exclusive for the Capture function. The CAPTURED_VALUE value in the feedback interface indicates the Capture value.	• Input delay • Edge selection • Frequency of the Capture function • Behavior of counter value after Capture
Digital input without function	No technological function is assigned to the respective digital input. You can read the signal state of the digital input via the respective feedback bit: • STS_DI0 • STS_DI1 • STS_DI2	• Input delay

Note

With the exception of "Digital input without function", each function can only be used once for each counter, and if used for one digital input is not available to the others.

Input delay (TM Count and TM PosInput)

You use this parameter to suppress signal interference at the digital inputs. Changes to the signal are only detected if they remain stable for longer than the configured input delay time.

You can select from the following input delays:

- None
- 0.05 ms
- 0.1 ms (default)
- 0.4 ms
- 0.8 ms
- 1.6 ms
- 3.2 ms
- 12.8 ms
- 20 ms

Note

If you select the "None" or "0.05 ms" option, you have to use shielded cables for connection of the digital inputs.

Note

You configure the input delay under "Behavior of DI0" for all digital inputs together. The input delay is also displayed under "Behavior of DI1" and for TM Count also under "Behavior of DI2".

Input delay (compact CPU)

You use this parameter to suppress interference at the digital inputs of the DIn signals. Changes to the signal are only detected if they remain stable for longer than the configured input delay time.

You can configure the input delay for a digital input of a compact CPU in the Inspector window of the device configuration under "Properties > DI 16/DQ 16 > Inputs > Channel n".

You can select from the following input delays:

- None
- 0.05 ms
- 0.1 ms
- 0.4 ms
- 1.6 ms
- 3.2 ms (default)
- 12.8 ms
- 20 ms

Note

If you select the "None" or "0.05 ms" option, you have to use shielded cables for connection of the digital inputs.

Select level

You use this parameter to specify the level at which the digital input is active.

You can select from the following options:

Level	Meaning
Active with high level (default)	The respective digital input is active when it is set.
Active with low level	The respective digital input is active when it is not set.

The parameter can be set for the following functions of a digital input:

- Gate start/stop (level-triggered)
- Enable synchronization at signal N

Edge selection

You can use this parameter to specify the edge of the digital input at which the configured function is triggered.

The following options may be available depending on the function selected:

- At rising edge (default)
- At falling edge
- At rising and falling edge

The parameter can be set for the following functions of a digital input:

- Gate start (edge-triggered)
- Gate stop (edge-triggered)
- Synchronization
- Capture

Note

"At rising and falling edge" can only be configured for the "Capture" function.

Frequency of synchronization

This parameter is used to define the frequency of the following events:

- Synchronization at signal N
- Synchronization as a function of a digital input

You can select from the following options:

Option	Meaning
Once (default)	The counter is only set at the first signal N or the first configured edge of the digital input.
Periodic	The counter is set at each signal N or each configured edge of the digital input.

Frequency of the Capture function

This parameter is used to define the frequency of Capture events for the following functions:

- Capture at Signal N
- Capture as function of a digital input

You can select from the following options:

Option	Meaning
Once	The first configured edge at the respective digital input or first rising edge of the N signal saves the current counter value as a Capture value.
Periodic (default)	Each configured edge at the respective digital input or each rising edge of the N signal saves the current counter value as a Capture value.

Behavior of counter value after Capture

You can configure the following characteristics for the counter after a capture event (Page 35):

Reaction	Meaning
Continue counting (default)	After saving the current counter value as Capture value, counting is continued unchanged.
Set to start value and continue counting	After saving the current counter value as Capture value, counting is continued with the start value.

Behavior of a DQ

Set output

With the parameter assignment of a digital output, you specify the condition upon which the digital output switches.

You can select from the following options:

Function of a digital output (Page 49) in the operating mode "Counting"	Meaning	Additional option-specific parameters
Between comparison value and high limit (default)	The respective digital output is active if: Comparison value <= counter value <= high counting limit	• Comparison value 0 • Comparison value 1 • Hysteresis (in increments)
Between comparison value and low limit	The respective digital output is active if: Low counting limit <= counter value <= comparison value	• Comparison value 0 • Comparison value 1 • Hysteresis (in increments)
Between comparison value 0 and 1	The digital output DQ1 is active if: Comparison value 0 <= counter value <= comparison value 1	• Comparison value 0 • Comparison value 1 • Count direction • Hysteresis (in increments)
At comparison value for a pulse duration	The respective digital output is active once for the configured time and count direction when the counter value reaches the comparison value.	• Comparison value 0 • Comparison value 1 • Count direction • Pulse duration • Hysteresis (in increments)
After set command from CPU until comparison value	When a set command is sent from the CPU, the respective digital output is active until the counter value is equal to the comparison value.	• Comparison value 0 • Comparison value 1 • Count direction • Hysteresis (in increments)
Use by user program	The respective digital output can be switched by the CPU via the control interface (Page 48).	—

Note

DQ0 of a counter of a Compact CPU

With a Compact CPU, the respective digital output DQ0 is available via the feedback interface, but not as a physical output.

Note

You can only select the "Between comparison value 0 and 1" function for digital output DQ1 and only if you have selected the "Use by user program" function for digital output DQ0.

Note

The "At comparison value for a pulse duration" and "After set command from CPU until comparison value" functions only switch the digital output in question if a count pulse reaches the comparison value. When the counter value is set, e.g. by synchronization, the digital output does not switch.

Function of a digital output (Page 57) in the operating mode "Measuring"	Meaning	Additional option-specific parameters
Measured value >= comparison value (default)	The respective digital output is active if the measured value is greater than or equal to the comparison value.	• Comparison value 0 • Comparison value 1
Measured value <= comparison value	The respective digital output is active if the measured value is less than or equal to the comparison value.	• Comparison value 0 • Comparison value 1
Between comparison value 0 and 1	The digital output DQ1 is active if: Comparison value 0 <= measured value <= comparison value 1	• Comparison value 0 • Comparison value 1
Not between comparison value 0 and 1	The digital output DQ1 is active if: Comparison value 1 <= measured value <= comparison value 0	• Comparison value 0 • Comparison value 1
Use by user program	The respective digital output can be switched by the CPU via the control interface (Page 48).	—

Note

You can select the "Between comparison value 0 and 1" and "Not between comparison value 0 and 1" functions only for digital output DQ1 and only if you have selected the "Use by user program" function for digital output DQ0.

Comparison value 0 (TM Count and TM PosInput)

Operating mode "Counting":

With the parameter assignment of the comparison value (Page 49), you specify the counter value at which the digital output DQ0 switches as a result of the selected comparison event.

You must enter an integer (DINT) that is greater than or equal to the low counting limit. If you use the DQ function "Between comparison value 0 and 1", the comparison value 0 has to be smaller than comparison value 1. The default setting is "0".

Operating mode "Measurement":

With the parameter assignment of the comparison value (Page 57), you specify the measured value at which the digital output DQ0 switches as a result of the selected comparison event.

You must enter a floating point number (REAL). If you use the DQ function "Between comparison value 0 and 1", the comparison value 0 has to be smaller than comparison value 1. The minimum value is -7.922816 x 10^{28}. The default setting is "0.0". The unit of the comparison value depends on the measured variable.

Comparison value 0 (compact CPU)

Operating mode "Counting":

With the parameter assignment of the Comparison value (Page 49), you specify the counter value at which the STS_DQ0 bit is set in the feedback interface of the selected comparison event. The digital output DQ0 is not available as a physical output in a Compact CPU.

You must enter an integer (DINT) that is greater than or equal to the low counting limit. If you use the DQ function "Between comparison value 0 and 1", the comparison value 0 has to be smaller than comparison value 1. The default setting is "0".

Operating mode "Measurement":

With the parameter assignment of the Comparison value (Page 57), you specify the measured value at which the STS_DQ0 bit is set in the feedback interface of the selected comparison event. The digital output DQ0 is not available as a physical output in a Compact CPU.

You must enter a floating point number (REAL). If you use the DQ function "Between comparison value 0 and 1", the comparison value 0 has to be smaller than comparison value 1. The minimum value is -7.922816 x 10^{28}. The default setting is "0.0". The unit of the comparison value depends on the measured variable.

Comparison value 1

Operating mode "Counting":

With the parameter assignment of the comparison value (Page 49), you specify the counter value at which the digital output DQ1 switches as a result of the selected comparison event.

You must enter an integer (DINT) that is less than or equal to the high counting limit. If you use the DQ function "Between comparison value 0 and 1", the comparison value 0 has to be smaller than comparison value 1. The default setting is "10".

Operating mode "Measurement":

With the parameter assignment of the comparison value (Page 57), you specify the measured value at which the digital output DQ1 switches as a result of the selected comparison event.

You must enter a floating point number (REAL). If you use the DQ function "Between comparison value 0 and 1", the comparison value 0 has to be smaller than comparison value 1. The maximum value is 7.922816×10^{28}. The default setting is "10.0". The unit of the comparison value depends on the measured variable.

Count direction

You use this parameter to specify the count direction for which the selected function is valid.

You can select from the following options:

Count direction	Meaning
In both directions (default)	The comparison and switching of the respective digital output take place regardless of the count direction.
Up	The comparison and switching of the respective digital output only takes place when the counter counts up.
Down	The comparison and switching of the respective digital output only takes place when the counter counts down.

The parameter can be configured for the following functions:

- Between Comparison value 0 and 1 (Operating mode "Counting")
- At comparison value for a pulse duration
- After set command from CPU until comparison value

Pulse duration

By configuring the pulse duration for the function "At comparison value for a pulse duration", you specify the number of milliseconds for which the respective digital output is active.

If you enter "0" and the counter value corresponds to the comparison value, the digital output remains active until the next count pulse.

A value from 0.0 to 6553.5 ms is permissible.

The default setting is "500.0", which is equivalent to a pulse duration of 0.5 s.

Hysteresis (in increments)

By configuring the hysteresis (Page 67), you can define a range around the comparison values. For the functions "Between comparison value and high limit" and "Between comparison value and low limit", the hysteresis also applies at the counter limits. Within the hysteresis range, the digital outputs cannot switch again until the counter value is outside the range.

Choose a small enough hysteresis. When the hysteresis range, starting from the configured comparison value, spans the entire counting range, proper functioning of the comparison values cannot be guaranteed.

Regardless of the hysteresis value, the hysteresis range ends at the low or high counting limit.

If you enter "0", the hysteresis is turned off. You can enter a value between 0 and 255. The default setting is "0".

Note

The hysteresis is only available in operating mode "Counting".

Specifying the measured value

Measured variable

This parameter is used to specify the measured variable (Page 60) to be provided by the technology module. The MEASURED_VALUE value in the feedback interface indicates the measured value.

You can select from the following options:

Measured variable	Meaning	Additional option-specific parameters
Frequency (default)	The measured variable shows the number of increments per second. The value is a floating point number (REAL). The unit is Hz.	• Update time
Period	The measured variable is the average period between two increments. The value is an integer (DINT). The unit is s.	• Update time
Velocity	The measured variable is a velocity. Examples of a velocity measurement can be found in the explanation of the "Increments per unit" parameter.	• Update time • Time base for velocity measurement • Increments per unit

Update time

By configuring the update time (Page 60) in milliseconds, you can specify the time interval between two measured value updates.

The update time and the signal type (Page 190) effect the accuracy of the measurement. In the case of update times of at least 100 ms, the effect of the signal type is negligible.

In the case of update times of less than 100 ms, you achieve maximum measurement accuracy using the following signal types:

- Incremental encoder (A, B phase-shifted) with Signal evaluation "Single"
- Incremental encoder (A, B, N) with Signal evaluation "Single"
- Pulse (A) and direction (B)
- Pulse (A)

In the case of other signal types, measurement accuracy depends on the encoder and cable used.

If you enter "0", the measured value is updated once per module-internal cycle. Up to three decimal places can be entered. A value from 0.0 to 25000.0 is permissible. The default setting is "10.0".

Time base for velocity measurement

This parameter defines the time base on which the velocity is to be returned.

You can select from the following options:

- 1 ms
- 10 ms
- 100 ms
- 1 s
- 60 s

The default setting is "60 s".

Increments per unit

You can use this parameter to define the number of count pulses per relevant unit that the incremental or absolute encoder supplies for the velocity measurement.

The number of count pulses depends on the configured signal evaluation. You can enter a value between 1 and 65535.

Example 1:

You encoder delivers 4000 count pulses for travel over one meter. The velocity is to be measured in meters per second. "Double" is configured as signal evaluation.

In this case, you need to assign the following parameters:

- Increments per unit: 8000
- Time base for velocity measurement: 1 s

Example 2:

Your encoder delivers 4096 count pulses per revolution. The velocity is to be measured in revolutions per minute. "Single" is configured as the signal evaluation.

In this case, you need to assign the following parameters:

- Increments per unit: 4096
- Time base for velocity measurement: 60 s

5.1.2.8 Manual operation (SSI absolute encoder)

Counter inputs

Signal type

If an SSI absolute encoder with the data signal (Signal ID) and cycle signal (Signal C) is connected, select the signal type (Page 76) "Absolute encoder (SSI)".

Invert direction

You can use this parameter to invert the values supplied by the SSI absolute encoder. This allows you to adapt the detected direction of the encoder to the motor's direction of rotation.

Note

This parameter acts only on the range from the LSB to the MSB of the position value in the frame.

Frame length

With the parameter assignment of the frame length, you specify the number of bits of an SSI frame of the SSI absolute encoder (Page 28) used. You can find the frame length of your SSI absolute encoder in the data sheet of the encoder. Special bits are also included in the frame length. A parity bit does not count in the frame length.

A frame length of between 10 bits and 40 bits is permitted. The default setting is "13 Bit".

You can find two examples of the SSI frame format at Examples of the frame format (Page 160).

Code type

You use the parameter assignment of the code type to specify whether the encoder supplies Dual code or Gray code.

You can select from the following options:

Code type	Meaning
Gray (default)	The gray-coded position value returned by the SSI absolute encoder is converted to dual code.
Dual	The value returned by the SSI absolute encoder is not converted.

Transmission rate

With the parameter assignment of the transmission rate, you specify the data transmission rate between the technology module and the SSI absolute encoder.

You can select from the following options:

- 125 kHz (preset)
- 250 kHz
- 500 kHz
- 1 MHz
- 1.5 MHz
- 2 MHz

The maximum transmission rate depends on the cable length and the technical specifications of the SSI absolute encoder. For additional information, refer to the product manual of the TM PosInput and the encoder description.

Monoflop time

With the parameter assignment of the monoflop time, you specify the idle time between two SSI frames.

The configured monoflop time must be at least equal to the monoflop time of the SSI absolute encoder used. You can find this value in the technical specifications of the SSI absolute encoder.

You can select from the following options:

- Automatically (default)
- 16 µs
- 32 µs
- 48 µs
- 64 µs

Note

If you select the "Automatic" option, the monoflop time automatically adapts to the encoder used.

In isochronous mode, the "Automatic" option corresponds to a monoflop time of 64 µs. If the monoflop time of the employed SSI absolute value encoder is less than 64 µs, you can select the value of the encoder to achieve faster isochronous times.

Parity

With the parameter assignment of the parity, you specify whether the SSI absolute encoder transfers a parity bit.

If, for example, a 25-bit encoder with parity is assigned, the technology module reads 26 bits. A parity error is reported in the feedback interface by means of the ENC_ERROR bit.

Bit number LSB of the position value

This parameter is used to specify the bit number of the LSB (least significant bit) of the position value in the frame of the SSI absolute encoder. In this way you limit the range in the frame that supplies the position value.

The value must be less than the bit number of the MSB of the position value. The difference between the bit numbers of the MSB and the LSB of the position value must be less than 32.

The default setting is "0".

Note

If you have selected the Code type "Gray", only the range from the LSB to the MSB of the position value is converted to binary code.

Bit number MSB of the position value

This parameter is used to specify the bit number of the MSB (most significant bit) of the position value in the frame of the SSI absolute encoder. In this way you limit the range in the frame that supplies the position value.

The value must be less than the frame length and higher than the bit number of the LSB of the position value. The difference between the bit numbers of the MSB and the LSB of the position value must be less than 32.

The default setting is "12".

Note

If you have selected the Code type "Gray", only the range from the LSB to the MSB of the position value is converted to binary code.

Behavior of a DI

Setting function of the DI

By configuring a digital input, you specify which functions the digital input triggers at switching.

You can select from the following options:

Function of a digital input	Meaning	Additional option-specific parameters
Capture (Page 38)	The configured edge at the respective digital input saves the current position value as a Capture value. The CAPTURED_VALUE feedback bit indicates the capture value. The function can only be used for one of the two digital inputs.	• Input delay • Edge selection • Frequency of the Capture function
Digital input without function	No technological function is assigned to the respective digital input. You can read the signal state of the digital input via the respective feedback bit: • STS_DI0 • STS_DI1	• Input delay

Note

You can choose the "Capture" function only in operating mode "Use position value (SSI absolute value) as reference".

Input delay

By configuring the input delay, you suppress interferences at the digital inputs. Signals with a pulse duration below the configured input delay are suppressed.

You can select from the following input delays:

- None
- 0.05 ms
- 0.1 ms (default)
- 0.4 ms
- 0.8 ms
- 1.6 ms

- 3.2 ms
- 12.8 ms
- 20 ms

Note

If you select the "None" or "0.05 ms" option, you have to use shielded cables for connection of the digital inputs.

Note

You configure the input delay under "Behavior of DI0" for all digital inputs together. The input delay is also displayed under "Behavior of DI1".

Edge selection

You can use this parameter to specify the edge of the digital input at which the configured function is triggered for the "Capture" function.

You can select from the following options:

- At rising edge (default)
- At falling edge
- At rising and falling edge

Frequency of the Capture function

This parameter is used to define the frequency of Capture events (Page 38):

You can select from the following options:

Option	Meaning
Once	The first configured edge at the respective digital input saves the current counter value as Capture value.
Periodic (default)	Each configured edge at the respective digital input saves the current counter value as a Capture value.

Behavior of a DQ

Set output

With the parameter assignment of a digital output, you specify the condition upon which the digital output switches.

You can select from the following options depending on the operating mode:

Function of a digital output (Page 53) in the operating mode "Position input"	Meaning	Additional option-specific parameters
Between comparison value and high limit (default)	The respective digital output is active if: Comparison value <= position value <= maximum position value	• Comparison value 0 • Comparison value 1 • Hysteresis (in increments)
Between comparison value and low limit	The respective digital output is active if: Minimum position value <= Position value <= Comparison value	• Comparison value 0 • Comparison value 1 • Hysteresis (in increments)
Between comparison value 0 and 1	The digital output DQ1 is active if: Comparison value 0 <= position value <= comparison value 1	• Comparison value 0 • Comparison value 1 • Count direction • Hysteresis (in increments)
At comparison value for a pulse duration	The respective digital output is active once for the assigned time and direction of the position value change when the position value is equal to the comparison value or has fallen below or exceeded it.	• Comparison value 0 • Comparison value 1 • Count direction • Pulse duration • Hysteresis (in increments)
After set command from CPU until comparison value	When a set command is sent from the CPU, the respective digital output is active for the assigned direction of the position value change until the position value is equal to the comparison value or has fallen below or exceeded it.	• Comparison value 0 • Comparison value 1 • Count direction • Hysteresis (in increments)
Use by user program	The respective digital output can be switched by the CPU via the control interface (Page 48).	—

Note

You can only select the "Between comparison value 0 and 1" function for digital output DQ1 and only if you have selected the "Use by user program" function for digital output DQ0.

Function of a digital output (Page 57) in the operating mode "Measuring"	Meaning	Additional option-specific parameters
Measured value >= comparison value (default)	The respective digital output is active if the measured value is greater than or equal to the comparison value.	• Comparison value 0 • Comparison value 1
Measured value <= comparison value	The respective digital output is active if the measured value is less than or equal to the comparison value.	• Comparison value 0 • Comparison value 1
Between comparison value 0 and 1	The digital output DQ1 is active if: Comparison value 0 <= measured value <= comparison value 1	• Comparison value 0 • Comparison value 1
Not between comparison value 0 and 1	The digital output DQ1 is active if: Comparison value 1 <= measured value <= comparison value 0	• Comparison value 0 • Comparison value 1
Use by user program	The respective digital output can be switched by the CPU via the control interface (Page 48).	—

Note

You can select the "Between comparison value 0 and 1" and "Not between comparison value 0 and 1" functions only for digital output DQ1 and only if you have selected the "Use by user program" function for digital output DQ0.

Comparison value 0

Operating mode "Position input":

With the parameter assignment of the comparison value (Page 53), you specify the position value at which the digital output DQ0 switches as a result of the selected comparison event.

If you use an SSI absolute encoder with a position value length of up to 31 bits, you must enter a positive integer (DINT) with a value between 0 and $2^{(MSB-LSB+1)}$-1. If you use an SSI absolute encoder with a position value length of 32 bits, you must enter a signed integer (DINT) with a value between -2147483648 and 2147483647.

If you use the DQ function "Between comparison value 0 and 1", the comparison value 0 has to be smaller than comparison value 1. The default setting is "0".

Operating mode "Measurement":

With the parameter assignment of the comparison value (Page 57), you specify the measured value at which the digital output DQ0 switches as a result of the selected comparison event.

You must enter a floating point number (REAL). If you use the DQ function "Between comparison value 0 and 1", the comparison value 0 has to be smaller than comparison value 1. The minimum value is -7.922816 x 10^{28}. The default setting is "0.0". The unit of the comparison value depends on the measured variable.

Comparison value 1

Operating mode "Position input"

With the parameter assignment of the comparison value (Page 53), you specify the position value at which the digital output DQ1 switches as a result of the selected comparison event.

If you use an SSI absolute encoder with a position value length of up to 31 bits, you must enter a positive integer (DINT) with a value between 0 and $2^{(MSB-LSB+1)}$-1. If you use an SSI absolute encoder with a position value length of 32 bits, you must enter a signed integer (DINT) with a value between -2147483648 and 2147483647.

If you use the DQ function "Between comparison value 0 and 1", the comparison value 0 has to be smaller than comparison value 1. The default setting is "10".

Operating mode "Measurement"

With the parameter assignment of the comparison value (Page 57), you specify the measured value at which the digital output DQ1 switches as a result of the selected comparison event.

You must enter a floating point number (REAL). If you use the DQ function "Between comparison value 0 and 1", the comparison value 0 has to be smaller than comparison value 1. The maximum value is 7.922816 x 10^{28}. The default setting is "10.0". The unit of the comparison value depends on the measured variable.

Count direction

You use this parameter to specify the direction of position value change for which the selected function is valid.

You can select from the following options:

Direction of position value change	Meaning
In both directions (default)	The comparison and switching of the respective digital output is carried out regardless of whether the position value increases of decreases.
Up	The comparison and switching of the respective digital output only takes place when the position value increases.
Down	The comparison and switching of the respective digital output only takes place when the position value decreases.

The parameter can be configured for the following functions:

- Between comparison value 0 and 1 (operating mode "Position input")
- At comparison value for a pulse duration
- After set command from CPU until comparison value

Pulse duration

By configuring the pulse duration for the function "At comparison value for a pulse duration", you specify the number of milliseconds for which the respective digital output is active.

A value from 0.1 to 6553.5 ms is permissible.

The default setting is "500.0", which is equivalent to a pulse duration of 0.5 s.

Hysteresis (in increments)

By configuring the hysteresis (Page 69), you can define a range around the comparison values. For the functions "Between comparison value and high limit" and "Between comparison value and low limit", the hysteresis also applies at the counter limits. Within the hysteresis range, the digital outputs cannot switch again until the position value has left this range once.

Choose a small enough hysteresis. When the hysteresis range, starting from the configured comparison value, spans the entire position value range, proper functioning of the comparison values cannot be guaranteed.

Regardless of the hysteresis value, the hysteresis range ends at the low or high counting limit.

If you enter "0", the hysteresis is turned off. You can enter a value between 0 and 255. The default setting is "0".

Note

The hysteresis is only available in "Position input" operating mode.

Specifying the measured value

Measured variable

With this parameter you specify whether the technology module is to provide a certain measured variable (Page 60) or the complete SSI frame.

You can select from the following options:

Option	Meaning	Additional option-specific parameters
Frequency (default)	The measured variable shows the number of increments per second, where each increment corresponds to one position value change. The value is a floating point number (REAL). The unit is Hz. The MEASURED_VALUE value in the feedback interface indicates the measured value.	• Update time
Period	The measured variable is the average period between two increments of the position value. The value is an integer (DINT). The unit is s. The MEASURED_VALUE value in the feedback interface indicates the measured value.	• Update time
Velocity	The measured variable is a velocity. Examples of a velocity measurement can be found in the explanation of the "Increments per unit" parameter. The MEASURED_VALUE value in the feedback interface indicates the measured value.	• Update time • Time base for velocity measurement • Increments per unit
Complete SSI frame	Instead of a measured variable, the first 32 bits of the SSI frame are returned (bit 0 to bit 31). In so doing, special bits that do not belong to the position information are also supplied. A configured inversion of the direction is ignored. The MEASURED_VALUE value in the feedback interface indicates the 32 bits. You can find examples under Examples of the frame format (Page 160). This option is only available in operating mode "Use position value (SSI absolute value) as reference".	—

Note

If the increment per revolution is required for calculation of the measured values, it is automatically calculated from the parameterized telegram length as the power of 2, e.g. 8192 increments per revolution with a telegram length of 13 bit. If you are using an SSI absolute encoder whose increment per revolution does not correspond to the power of 2, the calculated measured value may be incorrect for a short time.

Update time

By configuring the update time (Page 60) in milliseconds, you can specify the time interval between two measured value updates. Unsteady measured variables can be smoothed through longer update times

If you enter "0", the measured value is updated once per module-internal cycle. Up to three decimal places can be entered. A value from 0.0 to 25000.0 is permissible. The default setting is "10.0".

Time base for velocity measurement

This parameter defines the time base on which the velocity is to be returned.

You can select from the following options:

- 1 ms
- 10 ms
- 100 ms
- 1 s
- 60 s

The default setting is "60 s".

Increments per unit

With this parameter you define the number of increments per relevant unit that the SSI absolute encoder supplies for the velocity measurement.

You can enter a value between 1 and 65535.

Example 1:

Your absolute encoder operates with a resolution of 12 bits per revolution and performs 4096 increments per revolution. The velocity should be measured in revolutions per minute.

In this case, you need to assign the following parameters:

- Increments per unit: 4096
- Time base for velocity measurement: 60 s

Example 2:

You encoder delivers 10000 increments for travel over one meter. The velocity is to be measured in meters per second.

In this case, you need to assign the following parameters:

- Increments per unit: 10000
- Time base for velocity measurement: 1 s

5.1.2.9 Fast Mode (incremental or pulse encoder)

Counter inputs

Signal type

You can choose from the following signal types (Page 72):

Signal type	Meaning	Additional option-specific parameters
Incremental encoder (A, B phase-shifted)	An incremental encoder with phase-shifted A and B signals is connected.	• Invert direction • Signal evaluation • Filter frequency • Sensor type or Interface standard
Incremental encoder (A, B, N)	An incremental encoder with phase-shifted signals A and B and a zero signal N is connected.	• Invert direction • Signal evaluation • Filter frequency • Sensor type or Interface standard • Reaction to signal N • Frequency of synchronization • Count direction for synchronization
Pulse (A) and direction (B)	A pulse encoder (signal A) with direction signal (signal B) is connected.	• Filter frequency • Sensor type or Interface standard
Pulse (A)	A pulse encoder (signal A) without direction signal is connected.	• Filter frequency • Sensor type or Interface standard
Count up (A), count down (B)	Signals for counting up (signal A) and down (signal B) are connected.	• Filter frequency • Sensor type or Interface standard

Invert direction

You can invert the count direction to adapt it to the process.

The inverting of the direction is configurable and active for the following signal types:

- Incremental encoder (A, B phase-shifted)
- Incremental encoder (A, B, N)

Signal evaluation

By configuring signal evaluation (Page 77), you can specify which edges of the signals are counted.

You can select from the following options:

Signal evaluation	Meaning
Single (default)	The edges of signal A are evaluated during a low level of signal B.
Double	Each edge of signal A is evaluated.
Quadruple	Each edge of signals A and B is evaluated.

The parameter can be assigned with the following signal types:

- Incremental encoder (A, B phase-shifted)
- Incremental encoder (A, B, N)

Filter frequency

By configuring the filter frequency, you suppress interferences at the counter inputs A, B and N.

The selected filter frequency is based on a pulse/break ratio of between around 40:60 and around 60:40. This results in a specific minimum pulse/break time. Signal changes with a duration shorter than the minimum pulse/break time are suppressed.

You can select from the following filter frequencies:

Filter frequency	Minimum pulse/break time
100 Hz	4.0 ms
200 Hz	2.0 ms
500 Hz	800 µs
1 kHz	400 µs
2 kHz	200 µs
5 kHz	80 µs
10 kHz	40 µs
20 kHz	20 µs
50 kHz	8.0 µs
100 kHz	4.0 µs
200 kHz (default for TM Count)	2.0 µs
500 kHz*	0.8 µs
1 MHz* (default for TM PosInput)	0.4 µs

* Only available with TM PosInput

Sensor type (TM Count)

By configuring the sensor type, you specify how the counter inputs are switched for the TM Count.

You can select from the following options:

Sensor type	Meaning
Sourcing output (default)	The encoder/sensor switches the inputs A, B and N to 24VDC.
Sinking output	The encoder/sensor switches the inputs A, B and N to M.
Push-pull (sinking and sourcing output)	The encoder/sensor alternately switches the inputs A, B and N to M and 24VDC.

"Push-pull" is usually selected when incremental encoders are used. If using 2-wire sensors, such as light barriers or proximity switches, you need to select the corresponding wiring "Sourcing output" or "Sinking output".

The data sheet of the encoder includes information on whether your incremental encoder is a push-pull encoder.

Note

If you use a push-pull encoder and the sensor type "Push-pull (sinking and sourcing output)" is configured, you can monitor the encoder signals for wire break.

Interface standard (TM PosInput)

You use this parameter to specify whether the encoder outputs symmetric (RS422) or asymmetric (TTL) signals for the TM PosInput.

You can select from the following options:

Interface standard	Meaning
RS422, symmetrical (default)	The encoder outputs symmetric signals according to the RS422 standard (Page 74).
TTL (5 V), asymmetrical	The encoder outputs asymmetric 5 V signals according to the TTL standard (Page 72).

Note

The RS422 standard provides greater interference immunity than the TTL standard. Therefore, if your incremental or pulse encoder supports the RS422 **and** the TTL standard, it is recommended to use the RS422 signal standard.

Reaction to signal N

You use this parameter to specify which reaction is triggered to signal N.

You can select from the following options:

Option	Meaning
No reaction to signal N (default)	The counter is not affected by signal N.
Synchronization at signal N (Page 45)	The counter is set to the start value at signal N. If you select the function "Enable synchronization at signal N" for a digital input, the synchronization depends on the level at the digital input.

Note

You can only select the reaction to signal N if you have selected the "Incremental encoder (A, B, N)" signal type.

Note

If "Synchronization at signal N" is selected, you can select the function "Enable synchronization at signal N" for a digital input (Page 224).

Frequency of synchronization

This parameter is used to define the frequency of the following events:

- Synchronization at signal N
- Synchronization as a function of a digital input

You can select from the following options:

Option	Meaning
Once (default)	The counter is only set at the first signal N or the first configured edge of the digital input.
Periodic	The counter is set at each signal N or each configured edge of the digital input.

Count direction for synchronization

You use this parameter to define the count direction for which the following functions are enabled:

- Synchronization at signal N
- Synchronization as a function of a digital input

You can select from the following options:

Option	Meaning
Up (default)	The synchronization only takes place when the counter counts up.
Down	The synchronization only takes place when the counter counts down.
In both directions	The synchronization takes place regardless of the count direction.

Counting limits and start value

High counting limit

You limit the counting range by setting the high counting limit. You can enter a value up to 33554431 (2^{25}-1). You must enter a value that lies above the low counting limit.

The default setting is "33554431".

Low counting limit

You limit the counting range by setting the low counting limit. You can enter a value starting with 0. You must enter a value below the high counting limit.

The default setting is "0".

Start value

By configuring the start value, you specify the value at which counting is to start and where it is to continue in the case of defined events. You must enter a value between the counting limits or equal to the counting limits.

The default setting is "0".

More information

For more information, see Behavior at the counting limits (Page 30) and Counter behavior at gate start (Page 34).

Counter behavior at limits and gate start

Reaction to violation of a counting limit

You can configure the following Reaction to violation of a counting limit (Page 30):

Reaction	Meaning
Stop counting	If a counting limit is violated, counting is stopped and the internal gate is closed. To restart counting, you must also close and reopen the software/hardware gate.
Continue counting (default)	Counting continues either with the start value or at the opposite counting limit, depending on the additional parameter assignment.

Reset when counting limit is violated

You can reset the counter to the following values when a counting limit is violated:

Reset the value	Meaning
To start value	The counter value is set to the start value.
To opposite counting limit (default)	The counter value is set to the opposite counting limit.

Reaction to gate start

You can set the following Reaction to gate start (Page 34):

Reaction	Meaning
Set to start value	When the gate is opened, the counter value is set to the start value.
Continue with current value (default)	When the gate is opened, counting is continued with the last counter value.

Note

The parameter is only active if you have configured a hardware gate.

Behavior of a DI

Set function of DI

By configuring a digital input, you specify which functions the digital input triggers at switching.

You can select from the following options:

Function of a digital input	Meaning	Additional option-specific parameters
Gate start/stop (level-triggered)	The level at the respective digital input opens and closes the hardware gate (Page 32).	• Input delay • Select level
Gate start (edge-triggered)	The configured edge at the respective digital input opens the hardware gate (Page 32).	• Input delay • Edge selection
Gate stop (edge-triggered)	The configured edge at the respective digital input closes the hardware gate (Page 32).	• Input delay • Edge selection
Synchronization (Page 40)	The configured edge at the respective digital input sets the counter to the start value.	• Input delay • Edge selection • Frequency of synchronization • Count direction for synchronization
Enable synchronization at signal N	The active level at the respective digital input enables synchronization of the counter at signal N (Page 45).	• Input delay • Select level
Digital input without function	No technological function is assigned to the respective digital input. You can read the signal state of the digital input via the respective feedback bit: • STS_DI0 • STS_DI1 • STS_DI2	• Input delay

Note

With the exception of "Digital input without function", each function can only be used once for each counter, and if used for one digital input is not available to the others.

Input delay

You use this parameter to suppress signal interference at the digital inputs. Changes to the signal are only detected if they remain stable for longer than the configured input delay time.

You can select from the following input delays:

- None
- 0.05 ms
- 0.1 ms (default)
- 0.4 ms
- 0.8 ms
- 1.6 ms
- 3.2 ms
- 12.8 ms
- 20 ms

Note

If you select the "None" or "0.05 ms" option, you have to use shielded cables for connection of the digital inputs.

Note

You configure the input delay under "Behavior of DI0" for all digital inputs together. The input delay is also displayed under "Behavior of DI1" and for TM Count also under "Behavior of DI2".

Select level

You use this parameter to specify the level at which the digital input is active.

You can select from the following options:

Level	Meaning
Active with high level (default)	The respective digital input is active when it is set.
Active with low level	The respective digital input is active when it is not set.

The parameter can be set for the following functions of a digital input:

- Gate start/stop (level-triggered)
- Enable synchronization at signal N

Edge selection

You can use this parameter to specify the edge of the digital input at which the configured function is triggered.

The following options may be available depending on the function selected:

- At rising edge (default)
- At falling edge

The parameter can be set for the following functions of a digital input:

- Gate start (edge-triggered)
- Gate stop (edge-triggered)
- Synchronization

Frequency of synchronization

This parameter is used to define the frequency of the following events:

- Synchronization at signal N
- Synchronization as a function of a digital input

You can select from the following options:

Option	Meaning
Once (default)	The counter is only set at the first signal N or the first configured edge of the digital input.
Periodic	The counter is set at each signal N or each configured edge of the digital input.

Count direction for synchronization

You use this parameter to define the count direction for which the following functions are enabled:

- Synchronization at signal N
- Synchronization as a function of a digital input

You can select from the following options:

Option	Meaning
Up (default)	The synchronization only takes place when the counter counts up.
Down	The synchronization only takes place when the counter counts down.
In both directions	The synchronization takes place regardless of the count direction.

Behavior of a DQ

Set output

With the parameter assignment of a digital output, you specify the condition upon which the digital output switches.

You can select from the following options:

Function of a digital output (Page 49)	Meaning	Additional option-specific parameters
Between comparison value and high limit (default)	The respective digital output is active if: Comparison value <= counter value <= high counting limit	• Comparison value 0 • Comparison value 1 • Hysteresis (in increments)
Between comparison value and low limit	The respective digital output is active if: Low counting limit <= counter value <= comparison value	• Comparison value 0 • Comparison value 1 • Hysteresis (in increments)
Between comparison value 0 and 1	The digital output DQ1 is active if: Comparison value 0 <= counter value <= comparison value 1	• Comparison value 0 • Comparison value 1 • Count direction • Hysteresis (in increments)
At comparison value for a pulse duration	The respective digital output is active once for the configured time and count direction when the counter value reaches the comparison value.	• Comparison value 0 • Comparison value 1 • Count direction • Pulse duration • Hysteresis (in increments)
Digital output without function	The respective digital output is set to 0 regardless of the reaction to CPU STOP.	—

Note

You can only set the "Between comparison value 0 and 1" function for digital output DQ1 and only if you have selected the function "Digital output without function" for digital output DQ0.

Comparison value 0

With the parameter assignment of the comparison value (Page 49), you specify the counter value at which the digital output DQ0 switches as a result of the selected comparison event.

You must enter an integer (DINT) with a value between 0 and 33554431. If you use the DQ function "Between comparison value 0 and 1", the comparison value 0 has to be smaller than comparison value 1. The default setting is "0".

Comparison value 1

With the parameter assignment of the comparison value (Page 49), you specify the counter value at which the digital output DQ1 switches as a result of the selected comparison event.

You must enter an integer (DINT) with a value between 0 and 33554431. If you use the DQ function "Between comparison value 0 and 1", the comparison value 0 has to be smaller than comparison value 1. The default setting is "10".

Count direction

You use this parameter to specify the count direction for which the selected function is valid.

You can select from the following options:

Count direction	Meaning
In both directions (default)	The comparison and switching of the respective digital output take place regardless of the count direction.
Up	The comparison and switching of the respective digital output only takes place when the counter counts up.
Down	The comparison and switching of the respective digital output only takes place when the counter counts down.

The parameter can be configured for the following functions:

- Between comparison value 0 and 1
- At comparison value for a pulse duration

Pulse duration

By configuring the pulse duration for the function "At comparison value for a pulse duration", you specify the number of milliseconds for which the respective digital output is active.

A value from 0.0 to 6553.5 ms is permissible.

The default setting is "500.0", which is equivalent to a pulse duration of 0.5 s.

Hysteresis (in increments)

By configuring the hysteresis (Page 67), you can define a range around the comparison values. For the functions "Between comparison value and high limit" and "Between comparison value and low limit", the hysteresis also applies at the counter limits. Within the hysteresis range, the digital outputs cannot switch again until the counter value is outside the range.

Choose a small enough hysteresis. When the hysteresis range, starting from the configured comparison value, spans the entire counting range, proper functioning of the comparison values cannot be guaranteed.

Regardless of the hysteresis value, the hysteresis range ends at the low or high counting limit.

If you enter "0", the hysteresis is turned off. You can enter a value between 0 and 255. The default setting is "0".

5.1.2.10 Fast Mode (SSI absolute encoder)

Counter inputs

Signal type

If an SSI absolute encoder with the data signal (Signal ID) and cycle signal (Signal C) is connected, select the signal type (Page 28) "Absolute encoder (SSI)".

Invert direction

You can use this parameter to invert the values supplied by the SSI absolute encoder. This allows you to adapt the detected direction of the encoder to the motor's direction of rotation.

Note

This parameter acts only on the range from the LSB to the MSB of the position value in the frame.

Frame length

With the parameter assignment of the frame length, you specify the number of bits of an SSI frame of the SSI absolute encoder (Page 76) used. You can find the frame length of your SSI absolute encoder in the data sheet of the encoder. Special bits are also included in the frame length. A parity bit does not count in the frame length.

A frame length of between 10 bits and 40 bits is permitted. The default setting is "13 Bit".

You can find two examples of the SSI frame format at Examples of the frame format (Page 160).

Code type

You use the parameter assignment of the code type to specify whether the encoder supplies Dual code or Gray code.

You can select from the following options:

Code type	Meaning
Gray (default)	The gray-coded position value returned by the SSI absolute encoder is converted to dual code.
Dual	The value returned by the SSI absolute encoder is not converted.

Transmission rate

With the parameter assignment of the transmission rate, you specify the data transmission rate between the technology module and the SSI absolute encoder.

You can select from the following options:

- 125 kHz (preset)
- 250 kHz
- 500 kHz
- 1 MHz
- 1.5 MHz
- 2 MHz

The maximum transmission rate depends on the cable length and the technical specifications of the SSI absolute encoder. For additional information, refer to the product manual of the TM PosInput and the encoder description.

Monoflop time

With the parameter assignment of the monoflop time, you specify the idle time between two SSI frames.

The configured monoflop time must be at least equal to the monoflop time of the SSI absolute encoder used. You can find this value in the technical specifications of the SSI absolute encoder.

You can select from the following options:

- Automatically (default)
- 16 µs
- 32 µs
- 48 µs
- 64 µs

Note

If you select the "Automatic" option, the monoflop time automatically adapts to the encoder used.

In isochronous mode, the "Automatic" option corresponds to a monoflop time of 64 µs. If the monoflop time of the employed SSI absolute value encoder is less than 64 µs, you can select the value of the encoder to achieve faster isochronous times.

Parity

With the parameter assignment of the parity, you specify whether the SSI absolute encoder transfers a parity bit.

If, for example, a 25-bit encoder with parity is assigned, the technology module reads 26 bits. A parity error is reported in the feedback interface by means of the ENC_ERROR bit.

Bit number LSB of the position value

This parameter is used to specify the bit number of the LSB (least significant bit) of the position value in the frame of the SSI absolute encoder. In this way you limit the range in the frame that supplies the position value.

The value must be less than the bit number of the MSB of the position value. The difference between the bit numbers of the MSB and the LSB of the position value must be less than 32.

The default setting is "0".

Note

If you have selected the Code type "Gray", only the range from the LSB to the MSB of the position value is converted to binary code.

Bit number MSB of the position value

This parameter is used to specify the bit number of the MSB (most significant bit) of the position value in the frame of the SSI absolute encoder. In this way you limit the range in the frame that supplies the position value.

The value must be less than the frame length and higher than the bit number of the LSB of the position value. The difference between the bit numbers of the MSB and the LSB of the position value must be less than 32.

The default setting is "12".

Note

If you have selected the Code type "Gray", only the range from the LSB to the MSB of the position value is converted to binary code.

Behavior of a DI

Set function of DI

By configuring a digital input, you specify which functions the digital input triggers at switching.

You can select from the following options:

Function of a digital input	Meaning	Additional option-specific parameters
Digital input without function	No technological function is assigned to the respective digital input. You can read the signal state of the digital input via the respective feedback bit: • STS_DI0 • STS_DI1	• Input delay

Input delay

By configuring the input delay, you suppress interferences at the digital inputs. Signals with a pulse duration below the configured input delay are suppressed.

You can select from the following input delays:

- None
- 0.05 ms
- 0.1 ms (default)
- 0.4 ms
- 0.8 ms
- 1.6 ms
- 3.2 ms
- 12.8 ms
- 20 ms

Note

If you select the "None" or "0.05 ms" option, you have to use shielded cables for connection of the digital inputs.

Note

You configure the input delay under "Behavior of DI0" for all digital inputs together. The input delay is also displayed under "Behavior of DI1".

Behavior of a DQ

Set output

With the parameter assignment of a digital output, you specify the condition upon which the digital output switches.

You can select from the following options depending on the operating mode:

Function of a digital output (Page 53)	Meaning	Additional option-specific parameters
Between comparison value and high limit (default)	The respective digital output is active if: Comparison value <= position value <= maximum position value	• Comparison value 0 • Comparison value 1 • Hysteresis (in increments)
Between comparison value and low limit	The respective digital output is active if: Minimum position value <= Position value <= Comparison value	• Comparison value 0 • Comparison value 1 • Hysteresis (in increments)
Between comparison value 0 and 1	The digital output DQ1 is active if: Comparison value 0 <= position value <= comparison value 1	• Comparison value 0 • Comparison value 1 • Count direction • Hysteresis (in increments)
At comparison value for a pulse duration	The respective digital output is active once for the assigned time and direction of the position value change when the position value is equal to the comparison value or has fallen below or exceeded it.	• Comparison value 0 • Comparison value 1 • Count direction • Pulse duration • Hysteresis (in increments)
Digital output without function	The respective digital output is set to 0 regardless of the reaction to CPU STOP.	—

Note

You can only select the "Between comparison value 0 and 1" function for digital output DQ1 and only if you have selected the "Use by user program" function for digital output DQ0.

Comparison value 0

With the parameter assignment of the comparison value (Page 53), you specify the position value at which the digital output DQ0 switches as a result of the selected comparison event.

You must enter an integer (DINT) that is greater than or equal to the low counting limit. If you use the DQ function "Between comparison value 0 and 1", the comparison value 0 has to be smaller than comparison value 1. The default setting is "0".

If you use the DQ function "Between comparison value 0 and 1", the comparison value 0 has to be smaller than comparison value 1. The default setting is "0".

Comparison value 1

With the parameter assignment of the comparison value (Page 53), you specify the position value at which the digital output DQ1 switches as a result of the selected comparison event.

You must enter an integer (DINT) that is less than or equal to the high counting limit. If you use the DQ function "Between comparison value 0 and 1", the comparison value 0 has to be smaller than comparison value 1. The default setting is "10".

If you use the DQ function "Between comparison value 0 and 1", the comparison value 0 has to be smaller than comparison value 1. The default setting is "10".

Count direction

You use this parameter to specify the direction of position value change for which the selected function is valid.

You can select from the following options:

Direction of position value change	Meaning
In both directions (default)	The comparison and switching of the respective digital output is carried out regardless of whether the position value increases of decreases.
Up	The comparison and switching of the respective digital output only takes place when the position value increases.
Down	The comparison and switching of the respective digital output only takes place when the position value decreases.

The parameter can be configured for the following functions:

- Between comparison value 0 and 1
- At comparison value for a pulse duration

Pulse duration

By configuring the pulse duration for the function "At comparison value for a pulse duration", you specify the number of milliseconds for which the respective digital output is active.

A value from 0.1 to 6553.5 ms is permissible.

The default setting is "500.0", which is equivalent to a pulse duration of 0.5 s.

Hysteresis (in increments)

By configuring the hysteresis (Page 69), you can define a range around the comparison values. For the functions "Between comparison value and high limit" and "Between comparison value and low limit", the hysteresis also applies at the counter limits. Within the hysteresis range, the digital outputs cannot switch again until the position value has left this range once.

Choose a small enough hysteresis. When the hysteresis range, starting from the configured comparison value, spans the entire position value range, proper functioning of the comparison values cannot be guaranteed.

Regardless of the hysteresis value, the hysteresis range ends at the low or high counting limit.

If you enter "0", the hysteresis is turned off. You can enter a value between 0 and 255. The default setting is "0".

5.1.3 Online & diagnostics module

5.1.3.1 Displaying and evaluating diagnostics

The online and diagnostics view enables hardware diagnostics. You can also

- Obtain information on the technology module (e.g., Firmware version and serial number)
- Execute a firmware update if required

Procedure (TM Count and TM PosInput)

To open the display editor for the diagnostic functions, follow these steps:

1. Open the device configuration of the CPU or IM.
2. Select the device view.
3. Right-click the module and select "Online & Diagnostics".
1. Select the required display in the diagnostics navigation.

Procedure (Compact CPU)

To open the display editor for the diagnostic functions, follow these steps:

1. Open the Compact CPU folder in the project tree.
2. Double-click on the "Online & diagnostics" object.
3. Select the required display in the diagnostics navigation.

Additional information

Additional information on the diagnostic alarms and possible remedies can be found in the technology module device manual.

Note

Position input for Motion Control

In operating mode "Position input for "Motion Control" technology object", channel diagnostics is not available for the technology module.

5.1.4 Control and feedback interface (TM Count, TM PosInput)

Information on using the control and feedback interface can be found under Overview of application options (Page 20).

Note

The following description does not apply for the operating modes "Fast Mode" and "Position input for technology object "Motion Control"". You can find a description of the feedback interface in the respective device manual for those technology modules that support the "Fast Mode" operating mode.

5.1.4.1 Assignment of the control interface

The user program uses the control interface to influence the behavior of the technology module.

Control interface per channel

The following table shows control interface assignment:

Byte offset to start address Channel 0/1 ↓	↓	Bit 7	Bit 6	Bit 5	Bit 4	Bit 3	Bit 2	Bit 1	Bit 0
0 … 3	12 … 15	SLOT_0: DINT or REAL: Load value (significance of the value is specified in LD_SLOT_0) Value range: –2147483648 to 2147483647D or 80000000 to 7FFFFFFFH							
4 … 7	16 … 19	SLOT_1: DINT or REAL: Load value (significance of the value is specified in LD_SLOT_1) Value range: –2147483648 to 2147483647D or 80000000 to 7FFFFFFFH							
8	20	LD_SLOT_1				LD_SLOT_0			
9	21	EN_ CAPTURE	EN_ SYNC_DN	EN_ SYNC_UP	SET_DQ1	SET_DQ0	TM_ CTRL_DQ1	TM_ CTRL_DQ0	SW_GATE
10	22	SET_DIR	Reserved					RES_ EVENT	RES_ ERROR
11	23	Reserved							

Notes

Control bit/value	Notes
SLOT_m	You specify the load value with this value. You specify the meaning of the value in LD_SLOT_m. If you want to load a comparison value in the "Measuring" operating mode, specify the load value as floating-point number (REAL). In all other cases, you specify the load value as an integer (DINT). Value range: –2147483648 to 2147483647D or 80000000 to 7FFFFFFFH
LD_SLOT_m	With this load request you specify the meaning of the value in SLOT_m: • 0000 means: No action, idle • 0001 means: Load count value (with incremental or pulse encoder) • 0010 not permitted • 0011 means: Load start value (with incremental or pulse encoder) • 0100 means: Load Comparison value 0 • 0101 means: Load comparison value 1 • 0110 means: Load low counting limit (with incremental or pulse encoder) • 0111 means: Load high counting limit (with incremental or pulse encoder) • 1000 to 1111 not permitted The technology module executes the respective action as soon as LD_SLOT_m changes. If values are loaded simultaneously via LD_SLOT_0 and LD_SLOT_1, the first value is applied internally from SLOT_0 and then the value from SLOT_1 is applied. This might lead to unexpected intermediate states. A change of the COUNT_VALUE value via LD_SLOT_m has no influence on the MEASURED_VALUE value.
EN_CAPTURE	Use this bit to enable the Capture function. Resetting this bit resets a set EVENT_CAP in the feedback interface.
EN_SYNC_DN	Use this bit to enable the synchronization of the counter when counting down with an incremental encoder or pulse encoder. Resetting this bit resets a set EVENT_SYNC in the feedback interface.
EN_SYNC_UP	Use this bit to enable the synchronization of the counter when counting up with an incremental encoder or pulse encoder. Resetting this bit resets a set EVENT_SYNC in the feedback interface.
SET_DQ0	Use this bit to set digital output DQ0 when TM_CTRL_DQ0 is set to 0. In the case of the function "After set command from CPU until comparison value", SET_DQ0 is effective regardless of TM_CTRL_DQ0 as long as the counter value is not equal to the comparison value.
SET_DQ1	Use this bit to set digital output DQ1 when TM_CTRL_DQ1 is set to 0. In the case of the function "After set command from CPU until comparison value", SET_DQ1 is effective regardless of TM_CTRL_DQ1 as long as the counter value is not equal to the comparison value.
TM_CTRL_DQ0	Use this bit to enable the technological function of digital output DQ0. • 0 means: SET_DQ0 defines the state of DQ0 • 1 means: assigned function defines the state of DQ0
TM_CTRL_DQ1	Use this bit to enable the technological function of digital output DQ1. • 0 means: SET_DQ1 defines the state of DQ1 • 1 means: assigned function defines the state of DQ1

Control bit/value	Notes
SW_GATE	Use this bit to open and close the software gate when using an incremental encoder or pulse encoder. Together, the software gate and the hardware gate form the internal gate. The technology module only counts when the internal gate is open. • 0 means: Software gate closed • 1 means: Software gate open The control of the hardware gate takes place externally via the digital inputs of the technology module. The hardware gate can be activated through parameter assignment. The software gate cannot be deactivated.
SET_DIR	Use this bit to specify the counting direction for signal type "Pulse (A)". • 0 means: Up • 1 means: Down
RES_EVENT	Use this bit to trigger the reset of the saved events in the EVENT_ZERO, EVENT_OFLW, EVENT_UFLW, EVENT_CMP0, EVENT_CMP1 feedback bits.
RES_ERROR	Use this bit to trigger the reset of the saved error states LD_ERROR and ENC_ERROR .
Reserved	Reserved bits must be set to 0.

5.1.4.2 Assignment of the feedback interface

The user program receives current values and status information from the technology module via the feedback interface.

Feedback interface per channel

The following table shows the assignment of the feedback interface:

Byte offset to start address Channel 0/1 ↓ ↓		Bit 7	Bit 6	Bit 5	Bit 4	Bit 3	Bit 2	Bit 1	Bit 0
0 … 3	16 … 19	COUNT_VALUE: DINT: Current counter value or position value							
4 … 7	20 … 23	CAPTURED_VALUE: DINT: The last acquired Capture value							
8 … 11	24 … 27	MEASURED_VALUE: REAL: Current measured value or DWORD: Full SSI frame							
12	28	Reserved					LD_ERROR	ENC_ ERROR	POWER_ ERROR
13	29	Reserved		STS_SW_ GATE	STS_ READY	LD_STS_ SLOT_1	LD_STS_ SLOT_0	RES_EVENT_ ACK	Reserved
14	30	STS_DI2[1]	STS_DI1	STS_DI0	STS_DQ1	STS_DQ0	STS_GATE	STS_CNT	STS_DIR
15	31	STS_M_ INTERVAL	EVENT_ CAP	EVENT_ SYNC	EVENT_ CMP1	EVENT_ CMP0	EVENT_ OFLW	EVENT_ UFLW	EVENT_ ZERO

[1] For TM PosInput applies: Reserved

Note

Validity of the position value

The position value of an SSI absolute encoder is valid if STS_READY is set to 1 and ENC_ERROR is set to 0. In the module startup STS_READY is set to 0.

Notes

Feedback bit/value	Notes
COUNT_VALUE	This DINT value shows the current counter value or position value. If you use an SSI absolute encoder with a position value length of up to 31 bits, the position value is treated unsigned as a positive value and can assume values between 0 and $2^{(MSB-LSB+1)}$-1. If you use an SSI absolute encoder with a position value length of 32 bits, the MSB of the position value corresponds to the sign and the position value can assume values between -2147483648 and 2147483647. If you use a 32 bit position value for the comparison function, the position value is interpreted as DINT. A change of the COUNT_VALUE value via LD_SLOT_m has no influence on the MEASURED_VALUE value.
CAPTURED_VALUE	This DINT value indicates the last detected Capture value. The following external signals can trigger the Capture function: • Rising or falling edge of a digital input • Both edges of a digital input The parameter "Frequency of the Capture function" determines if the function is executed for each configured edge or only once after each enable.
MEASURED_ VALUE	This value shows the current measurement value with the REAL data type or the complete SSI frame with the DWORD data type: • Frequency: The mean frequency is calculated at set measuring intervals on the basis of the time profile of the count pulses or position value changes and returned in Hertz as floating point number. • Period duration: The mean period duration is calculated at set measuring intervals on the basis of the time profile of the count pulses or position value changes and returned in seconds as floating point number. • Velocity: The mean velocity is calculated at set measuring intervals on the basis of the time profile of the count pulses or position value changes and other parameters, and returned in the configured unit of measurement. • Complete SSI frame: Instead of a measured variable, the least significant 32 bits of the unprocessed current SSI frame are returned. This provides you with encoder-specific additional bits, such as error bits, in addition to the position value. If the SSI frame is shorter than 32 bits, the complete SSI frame is returned right-aligned and the top unused bits are returned with "0" in the feedback interface. The measured values are returned as signed values. The sign indicates whether the counter value or position value increased or decreased during the relevant time period. The update time is asynchronous to the opening of the internal gate, which means that the update time is not started when the gate is opened. After the internal gate is closed, the last measured value captured is still returned.
LD_ERROR	This bit indicates that an error occurred (latching) during loading via the control interface. The loaded values were not applied. When using an incremental or pulse encoder, one of the following conditions is not fulfilled: • Low counting limit <= counter value <= high counting limit • Low counting limit <= start value <= high counting limit • Low counting limit <= comparison value 0/1 <= high counting limit When using an SSI absolute encoder, one of the following conditions is not fulfilled: • 0 <= position value <= maximum position value • 0 <= comparison value 0/1 <= maximum position value The bit is reset once you have acknowledged the error with RES_ERROR .

Feedback bit/value	Notes
ENC_ERROR	This bit indicates that one of the following errors has occurred at the encoder signals (retentive) for the respective technology module: TM Count: • Wire break of digital input A, B, or N (with push-pull encoder) • Invalid transition of A/B signals (with incremental encoder) TM PosInput: • Invalid transition of A/B signals (with incremental encoder) • RS422/TTL error • SSI encoder error or SSI frame error (with SSI absolute encoder) If you have enabled the diagnostic interrupts, the respective diagnostic interrupt is triggered in the event of encoder signal errors. For information on the meaning of the diagnostic interrupts, refer to the manual for the respective technology module. The bit is reset once you have acknowledged the error with RES_ERROR .
POWER_ERROR	For an S7-1500 technology module, this bit indicates that the supply voltage L+ is not available or too low or that the front plug is not plugged in. For an ET 200SP technology module, this bit indicates that the supply voltage L+ is too low. If you have enabled the diagnostic interrupts, the respective diagnostic interrupt is triggered in the event of errors in the supply voltage. For details on the diagnostic interrupts and the corrective measures they require, refer to the device manual for the respective technology module. If the supply voltage L+ is available at a sufficient level once again, POWER_ERROR is automatically set to 0.
STS_SW_GATE	This bit indicates the status of the software gate. 0 means: Gate closed 1 means: Gate open
STS_READY	This bit indicates that the technology module supplies valid user data. The technology module has been started up and configured.
LD_STS_SLOT_0	This bit indicates by a status change (toggling) that the load request for Slot 0 (LD_SLOT_0) has been detected and executed.
LD_STS_SLOT_1	This bit indicates by a status change (toggling) that the load request for Slot 1 (LD_SLOT_1) has been detected and executed.
RES_EVENT_ACK	This bit indicates that the reset of event bit EVENT_SYNC, EVENT_CMP0, EVENT_CMP1, EVENT_OFLW, EVENT_UFLW, EVENT_ZERO is active.
STS_DI0	This bit indicates the status of digital input DI0.
STS_DI1	This bit indicates the status of digital input DI1.
STS_DI2	This bit indicates the status of digital input DI2 of the TM Count .
STS_DQ0	This bit indicates the status of digital output DQ0.
STS_DQ1	This bit indicates the status of digital output DQ1.
STS_GATE	This bit indicates the status of the internal gate when using an incremental or pulse encoder. 0 means: Gate closed 1 means: Gate open Information for TM PosInput: In order for the counting logic including the gate control to function correctly, the startup of the technology module must complete correctly at least once with a connected incremental or pulse encoder (STS_READY at 1). If a connected encoder is not ready yet during startup, the function of the STS_GATE feedback bit is delayed until the encoder for the technology module is available. If the technology module starts up without a connected encoder, the startup does not complete correctly and STS_READY as well as STS_GATE remain at 0. As soon as an encoder is then connected, the startup completes and the STS_GATE functions correctly. An encoder error after a completed startup has no influence on STS_GATE.

Feedback bit/value	Notes
STS_CNT	This bit indicates that at least one count pulse or a position value change has been detected in the last approx. 0.5 s.
STS_DIR	This bit indicates the counting direction of the last count pulse or the direction of the last position value change. 0 means: Down 1 means: Up
STS_M_INTERVAL	This bit indicates that at least one count pulse or a position value change was detected in the previous measurement interval.
EVENT_CAP	This bit indicates that a Capture event has occurred and a counter value has been saved in CAPTURED_VALUE . You reset the state by resetting EN_CAPTURE .
EVENT_SYNC	This bit indicates the saved state that the counter was loaded with the start value by an external reference signal (synchronization) when using an incremental or pulse encoder. You reset the state by resetting EN_SYNC_UP or EN_SYNC_DN .
EVENT_CMP0	This bit indicates the saved state that a comparison event (state change) has occurred for the digital output DQ0 based on the selected comparison condition. You reset the state by acknowledgment with RES_EVENT. If the counter value is set to the start value in counting operating mode, EVENT_CMP0 is not set.
EVENT_CMP1	This bit indicates the saved state that a comparison event (state change) has occurred for the digital output DQ1 based on the selected comparison condition. You reset the state by acknowledgment with RES_EVENT. If the counter value is set to the start value in counting operating mode, EVENT_CMP1 is not set.
EVENT_OFLW	This bit indicates the saved state that there was a counter value overflow. You reset the state by acknowledgment with RES_EVENT.
EVENT_UFLW	This bit indicates the saved state, that there was a counter value underflow. You reset the state by acknowledgment with RES_EVENT.
EVENT_ZERO	This bit indicates the saved state that the counter value or position value experienced a zero crossing. You reset the state by acknowledgment with RES_EVENT.
Reserved	Reserved bits are set to 0.

Complete acknowledgment principle

Saving bits are acknowledged according to the complete acknowledgment principle.

The figure below shows an example of the sequence of the complete acknowledgment principle in the event of an overflow:

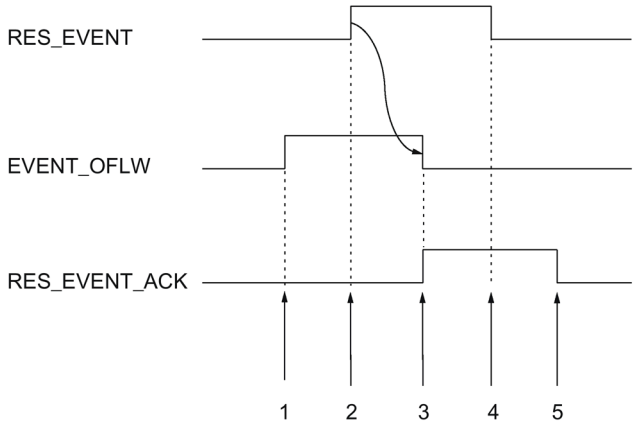

① The EVENT_OFLW feedback bit is set as a saving event upon overflow.
② You set the RES_EVENT control bit to trigger EVENT_OFLW reset.
③ The RES_EVENT_ACK feedback bit is set when reset of EVENT_OFLW is detected.
④ You then rest the control bit RES_EVENT .
⑤ The RES_EVENT_ACK feedback bit is reset.

Applying values via load prompt

The figure below shows an example of the procedure of application of values with the load prompt and on error detection:

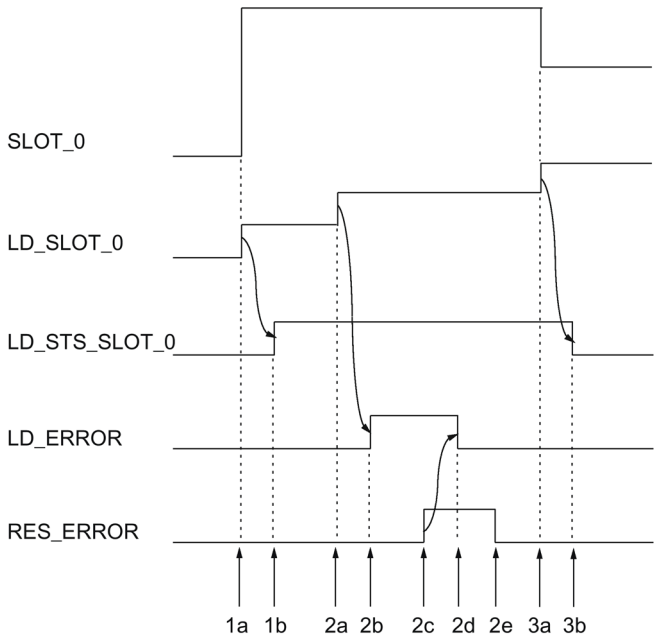

1a You write the valid value 1 (load count value) to LD_SLOT_0 and the desired load value to SLOT_0.

1b The LD_STS_SLOT_0 feedback bit is toggled because the LD_SLOT_0 load request was recognized by the module and implemented.

2a You write the invalid value 2 to LD_SLOT_0.

2b The LD_ERROR feedback bit is set because the value in LD_STS_SLOT_0 is invalid. The value in SLOT_0 is not applied.

2c You set the RES_ERROR control bit in order to acknowledge the error.

2d The LD_ERROR feedback bit is reset.

2e You reset the RES_ERROR control bit.

3a You write the valid value 3 (load start value) to LD_SLOT_0 and the desired load value to SLOT_0.

3b The LD_STS_SLOT_0 feedback bit is toggled because the LD_SLOT_0 load request was recognized by the module and implemented.

5.2 Using the digital module

5.2.1 Configuring and assigning parameters to the module

5.2.1.1 Adding a module to the hardware configuration

Requirements

- The project has been created.
- The CPU S7-1500 has been created.
- At decentralized operation an ET 200 distributed I/O system is created.

Procedure

1. Open the device configuration of the CPU or IM.
2. Select a module rack.
3. Select the digital input module from the module catalog:
   "DI > Digital input module > Article number" or
   "DIQ > Digital input module /Digital output module > Article number"
4. Drag the module to the required slot in the module rack.

5.2.1.2 Open hardware configuration

Procedure

1. Open the device configuration of the CPU or IM.
2. Select the device view.
3. Click on the module.

5.2.1.3 Counting operating mode

In counting operating mode or in the counter configuration you can set the following parameters for each channel.

Note

Some of the parameters and options are not available for all digital modules. See the module's device manual for the associated parameters and options.

Channel enabled

You use this parameter to specify whether the respective channel is enabled or disabled.

Each channel is enabled by default.

Input delay

By configuring the input delay, you suppress signal errors at the digital inputs. Changes to the signal are only detected if they are constantly pending longer than the set input delay time.

Isochronous configuration is only possible if there is an input delay of 0.05 ms configured for at least one channel. In isochronous mode, the feedback interface is updated at the time T_i (time for reading the input data).

You can select from the following options:

- 0.05 ms
- 0.1 ms
- 0.4 ms
- 0.8 ms
- 1.6 ms
- 3.2 ms (default)
- 12.8 ms
- 20 ms

Note

If you select the "0.05 ms" option for the input delay, you have to use shielded cables for connection of the digital inputs.

Reaction to violation of a counting limit

The following behavior can be configured for Violation of the counter high limit in the upward direction or the counter low limit in the downward direction (Page 89):

Reaction	Meaning
Stop counting (default at ET200SP and ET200AL)	After a counting limit is violated, the internal gate is closed (automatic gate stop). As a result, the counting process is stopped and the module ignores any further counting signals. The counter value is set to the opposite counting limit. To restart counting, you must close and reopen the software/hardware gate.
Continue counting (default at S7-1500)	After a counting limit is violated, the counter value is set to the opposite counting limit and counting continues.

Edge selection

This parameter is used to specify which edge the respective counter counts:

Edge selection	Meaning
At rising edge (default)	The respective counter counts all rising edges at the digital input.
At falling edge	The respective counter counts all falling edges at the digital input.
At rising and falling edge	The respective counter counts all edges at the digital input.

Count direction

Use this parameter to specify the counting direction of the respective counter.

You can select from the following options:

- Up
- Down

Set output

Use this parameter to specify the Function (Page 94) that controls the STS_DQ feedback bit. You can use the STS_DQ reset bit in order to control a digital output module's digital output.

You can select from the following options:

Option	Meaning
Off (DQ = 0)	Regardless of the counter value, STS_DQ is permanently not set.
Off (DQ = 1)	Regardless of the counter value, STS_DQ is permanently set.
Between comparison value 0 and 1	STS_DQ is set if the counter value between comparison values 0 and 1.

Option	Meaning
Not between comparison value 0 and 1	STS_DQ is set if the counter value is outside the range between comparison values 0 and 1.
Between comparison value and counter high limit	STS_DQ is set if the counter value is between the comparison value and the counter high limit.
Between comparison value and counter low limit	STS_DQ is set if the counter value is between the comparison value and the counter low limit.

Setting function of the DI

Use this parameter to specify which function the respective digital input DI_{n+4} triggers.

You can select from the following options:

Option	Meaning
Digital input without function	No function is assigned to the respective digital input DI_{n+4}. The signal status of DI_{n+4} can be read by the CPU using the feedback interface.
Gate start/stop	Setting the respective digital input DI_{n+4} opens the hardware gate (Page 91) for DI_n. Resetting the respective digital input DI_{n+4} closes the hardware gate for DI_n.
Count direction	The respective DI_{n+4} digital input determines the counting direction at DI_n, in order to adjust it to the process. If DI_{n+4} is not set, DI_n counts up. If DI_{n+4} is set, DI_n counts down.

Note

If "Count direction" is selected and the counting direction in the process changes, the counting edge is automatically adjusted (opposite edges).

High counting limit

You limit the counting range by setting the counter high limit. The maximum value for the counter high limit depends on the module:

High counting limit	DI 8x24VDC HS, DIQ 16x24VDC/0.5A 8xM12	DI 32x24VDC HF, DI 16x24VDC HF, DI 16xNAMUR HF, DI 16x24VDC HS
Maximalwert	2147483647 (2^{31}–1)	4294967295 (2^{32}–1)
Voreinstellung	2147483647	4294967295

You must enter a value that lies above the counter low limit.

Counter low limit

You limit the counting range by setting the counter low limit. The minimum value for the counter low limit depends on the module:

Counter low limit	DI 8x24VDC HS, DIQ 16x24VDC/0.5A 8xM12	DI 32x24VDC HF, DI 16x24VDC HF, DI 16xNAMUR HF, DI 16x24VDC HS
Minimum value	–2147483648 (-2^{31})	0 (not configurable)
Default	0	0

You must enter a value below the counter high limit.

Start value

By configuring the start value, you specify the value at which counting is to start. You must enter a value between the counting limits or equal to the counting limits.

The default setting is "0".

Comparison value

By configuring a comparison value (Page 94), you specify the counter value that controls the STS_DQ reset bit based on the comparison function that was selected under "Set output".

You have to enter a value that is greater than or equal to the low counting limit as well as smaller than or equal to the high counting limit.

The default setting depends on the module:

Comparison value	DI 8x24VDC HS, DIQ 16x24VDC/0.5A 8xM12	DI 32x24VDC HF, DI 16x24VDC HF, DI 16xNAMUR HF, DI 16x24VDC HS
Default	10	1

Comparison value 0

By configuring a comparison value (Page 94), you specify the counter value that controls the STS_DQ reset bit based on the comparison function that was selected under "Set output".

You must enter a value which is greater than or equal to the counter low limit and less than comparison value 1.

The default setting is "0".

Comparison value 1

By configuring the second comparison value (Page 94), you specify the additional counter value that controls the STS_DQ reset bit based on the comparison function that was selected under "Set output".

You must enter a value which is greater than comparison value 0 and less than or equal to the counter high limit.

The default setting is "10".

Hardware gate

Use this parameter to specify the one-time counting process.

With the hardware gate, as with the software gate, you can start and stop the counting process with an external signal. If you use the hardware gate, the software gate must be enabled ("1").

Counting is stopped when the upper counting limit is violated. The count value jumps to the lower count limit (= 0).

Hardware interrupt: Comparison event for DQ occurred

With this parameter, you specify for S7-1500 and ET200AL whether a process alarm is given off when a comparison event occurs based on the comparison function that was selected under "Set output".

The hardware interrupt is not enabled in the default setting.

5.2.2 Online & diagnostics module

5.2.2.1 Displaying and evaluating diagnostics

The online and diagnostics view enables hardware diagnostics. You can also

- Obtain information on the module (e.g., Firmware version and serial number)
- Execute a firmware update if required

Procedure

To open the display editor for the diagnostic functions, follow these steps:

1. Open the device configuration of the CPU or IM.
2. Select the device view.
3. Right-click on the module and select "Online & Diagnostics".
4. Select the required display in the diagnostics navigation.

Additional information

Additional information on the diagnostic alarms and possible remedies can be found in the module's device manual.

5.3 Using SIMATIC Drive Controller

5.3.1 Configuration and parameter assignment of SIMATIC Drive Controller

5.3.1.1 Adding the SIMATIC Drive Controller to the hardware configuration

Requirements

The project has been created.

Procedure

1. Double-click "Add new device".
   The "Add new object" dialog opens.
2. Select "Controller".
3. Select the SIMATIC Drive Controller:
   "SIMATIC Drive Controller > CPU variant > Article number"
4. With the "Open device view" check box, you define whether the hardware configuration view should be opened after creation of a new device is completed. Leave the check box selected if you want to configure the CPU next.
5. Confirm with "OK".

5.3.1.2 Open hardware configuration

Procedure

1. Select the device configuration item below the CPU in the project tree.
   The device view opens.
2. Click on the interface DI/DQ 8x24VDC [X142] in the device view.
   You can adapt the configurable properties in the Inspector window under Properties. Under Channel parameters, you will find an overview of all channels and their selected settings. To assign parameters to the desired channels, click on the arrow symbol after the channel number in the overview. Alternatively, you can also select the channel directly in the navigation.
3. Select the "Event/period duration measurement" operating mode for the desired channel.

5.3.1.3 Event/period duration measurement operating mode

In Event/period duration measurement operating mode (Page 99), you can count positive edges and determine the period duration between two positive edges.

You can set the following parameters in event/period duration measurement operating mode:

Invert

You can invert the 24 V signal in order to adapt the signal to your process.

The signal is not inverted in the default setting.

Input delay

By configuring the input delay, you suppress signal errors at the digital inputs. Changes to the signal are only detected if they are constantly pending longer than the set input delay time.

To be able to record the very briefly pending signals at high counting frequencies, you need to set an input delay of 1 µs.

You can select from the following options:

- 125 µs (default)
- 1 µs

Isochronous mode

The event/period duration measurement requires isochronous operation.

You can find more information in the SIMATIC Drive Controller system manual (https://support.industry.siemens.com/cs/ww/en/view/109766665).

5.3.2 Online & diagnostics module

5.3.2.1 Displaying and evaluating diagnostics

The online and diagnostics view enables hardware diagnostics. You can also

- Obtain information on the CPU or SINAMICS Integrated (e.g. Firmware version and serial number)
- Execute a firmware update if required

Procedure

To open the display editor for the diagnostic functions of the CPU, follow these steps:

1. Open the CPU folder in the project tree.
2. Double-click on the "Online & diagnostics" object.
3. Select the required display in the diagnostics navigation.

Additional information

You can find more information in the SIMATIC Drive Controller system manual (https://support.industry.siemens.com/cs/ww/en/view/109766665).

Index

A

Absolute encoder, 28

B

Basic parameters
    High_Speed_Counter, 106
    SSI_Absolute_Encoder, 148
    Technology module, 178

C

Call
    High_Speed_Counter, 128
    SSI_Absolute_Encoder, 165
Capture, 27, 28, 35, 38, 114, 152, 196, 210, 233
Commissioning
    High_Speed_Counter, 140
    SSI_Absolute_Encoder, 172
Compact CPU
    Performance features, 14, 18
Compact CPU S7-1500, (Technology module)
Comparison value, 48, 119, 154, 200, 212, 227, 234
    Counting, 119, 200, 227
    Digital input module, 94
    Position input, 154, 212, 234
Control interface, 237
Counter limits, 26, 30, 88, 89, 249
Counting
    Comparison value, 119, 200, 227
Counting functions, 26, 83, 84, 88
Counting limits, 83, 84, 112, 194, 222
CPU-STOP, 178

D

Diagnostic interrupt, 70
    Enable, 179, 180
Diagnostics
    High_Speed_Counter, 142
    SIMATIC Drive Controller, 255
    SSI_Absolute_Encoder, 173
    Technology module, 236, 252
Digital input
    Functions, 114, 152, 196, 210, 224, 233
Digital input module
    Applications, 87
    Hardware configuration, 246
    Performance features, 14, 18
Digital input/digital output module
    Performance features, 19
Digital output
    Comparison
    value, 48, 119, 154, 200, 212, 227, 234
    Functions, 119, 154, 200, 212, 227, 234

E

Enable
    Diagnostic interrupt, 70
    Hardware interrupt, 70, 96
Error response
    High_Speed_Counter, 132
    SSI_Absolute_Encoder, 167
ErrorID, 139, 171

F

Feedback interface, 240
Filter frequency, 108, 191, 219
Frequency measurement, 59

G

Gate control, 26, 32, 59, 88, 91, 114, 196, 224

H

Hardware gate, 26, 32, 88, 91, 114, 196, 224
Hardware interrupt, 70, 96
    Enable, 187
    lost, 186
High_Speed_Counter, 101, 128
    Basic parameters, 106
    Call, 128
    Commissioning, 140
    Configuring, 104
    Description, 128

Diagnostics, 142
Error response, 132
Input parameters, 133
Operating principle, 128
Output parameters, 135
Programming, 127
Static tags, 137
Hysteresis, 27, 28, 67, 69, 123, 157, 204, 215, 229, 235

I

Input parameters
High_Speed_Counter, 133
SSI_Absolute_Encoder, 168
Isochronous mode, 80, 86, 97

L

Latch, (Capture)

M

Measuring functions, 59
Measuring interval, 60, 64
Measuring range, 60, 60, 64

O

Operating mode, 180
High_Speed_Counter, 119
Operating principle
High_Speed_Counter, 128
SSI_Absolute_Encoder, 165
Output parameters
High_Speed_Counter, 135
SSI_Absolute_Encoder, 169

P

Parameter
ErrorID, 139, 171
Parameter assignment
Compact CPU, 24
Technology module, 24, 177
Period measurement, 59
Position input
Comparison value, 154, 212, 234
With Motion Control, 71
with SSI absolute encoder, 28, 28

R

Reaction to CPU STOP, 178

S

Sensor type, 108, 191, 219
Signal evaluation, 108, 191, 219
Signal N, 108, 191, 219
Signal type, 107, 190, 207, 218, 230
SIMATIC Drive Controller, 99
Hardware configuration, 253
Online & Diagnostics, 255
Sinking output, 108, 191, 219
Software gate, 26, 32, 88, 91
Sourcing output, 108, 191, 219
SSI absolute encoder, 149, 207, 230
SSI_Absolute_Encoder, 144, 165
Basic parameters, 148
Call, 165
Commissioning, 172
Configuring, 147
Description, 165
Diagnostics, 173
Error response, 167
Input parameters, 168
Operating principle, 165
Output parameters, 169
Programming, 163
Static tags, 170
Start value, 26, 88, 112, 194, 222, 250
Static tags
High_Speed_Counter, 137
SSI_Absolute_Encoder, 170
SW_GATE, 32, 91
Synchronization, 27, 40, 114, 196, 224
at signal N, 45, 114, 196, 224
by digital input, 43

T

Technology module
Application scenarios, 20, 99
Applications, 82
Basic parameters, 178
Control interface, 237
Feedback interface, 240
Hardware configuration, 175
Online & Diagnostics, 236, 252
Parameter assignment, 177
Performance features, 14, 18
Project tree, 176

Technology object
High_Speed_Counter, 101
SSI_Absolute_Encoder, 144

U

Update time, 59

V

Velocity measurement, 59

W

Wire break, 179

SIEMENS

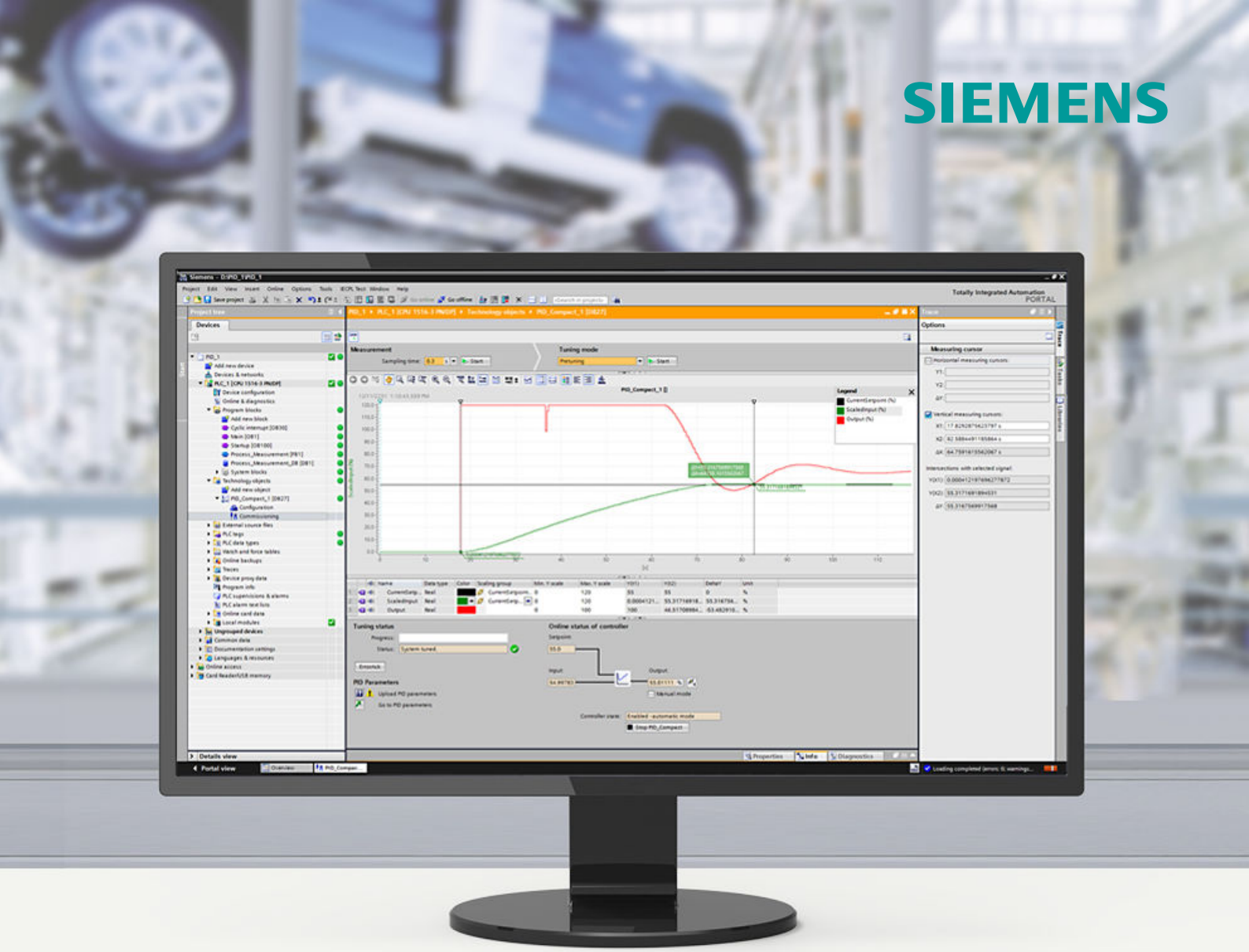

Output

11/2022

FUNCTION MANUAL

SIMATIC

S7-1200, S7-1500

PID control

support.industry.siemens.com

SIEMENS

SIMATIC

S7-1200, S7-1500 PID control

Function Manual

Introduction 1

Safety instructions 2

Principles for control 3

Configuring a software controller 4

Using PID_Compact 5

Using PID_3Step 6

Using PID_Temp 7

Using PID basic functions 8

Auxiliary functions 9

Instructions 10

11/2022

A5E35300227-AF

Legal information

Warning notice system

This manual contains notices you have to observe in order to ensure your personal safety, as well as to prevent damage to property. The notices referring to your personal safety are highlighted in the manual by a safety alert symbol, notices referring only to property damage have no safety alert symbol. These notices shown below are graded according to the degree of danger.

⚠ DANGER
indicates that death or severe personal injury **will** result if proper precautions are not taken.

⚠ WARNING
indicates that death or severe personal injury **may** result if proper precautions are not taken.

⚠ CAUTION
indicates that minor personal injury can result if proper precautions are not taken.

NOTICE
indicates that property damage can result if proper precautions are not taken.

If more than one degree of danger is present, the warning notice representing the highest degree of danger will be used. A notice warning of injury to persons with a safety alert symbol may also include a warning relating to property damage.

Qualified Personnel

The product/system described in this documentation may be operated only by **personnel qualified** for the specific task in accordance with the relevant documentation, in particular its warning notices and safety instructions. Qualified personnel are those who, based on their training and experience, are capable of identifying risks and avoiding potential hazards when working with these products/systems.

Proper use of Siemens products

Note the following:

⚠ WARNING
Siemens products may only be used for the applications described in the catalog and in the relevant technical documentation. If products and components from other manufacturers are used, these must be recommended or approved by Siemens. Proper transport, storage, installation, assembly, commissioning, operation and maintenance are required to ensure that the products operate safely and without any problems. The permissible ambient conditions must be complied with. The information in the relevant documentation must be observed.

Trademarks

All names identified by ® are registered trademarks of Siemens AG. The remaining trademarks in this publication may be trademarks whose use by third parties for their own purposes could violate the rights of the owner.

Disclaimer of Liability

We have reviewed the contents of this publication to ensure consistency with the hardware and software described. Since variance cannot be precluded entirely, we cannot guarantee full consistency. However, the information in this publication is reviewed regularly and any necessary corrections are included in subsequent editions.

Siemens AG
Digital Industries
Postfach 48 48
90026 NÜRNBERG
GERMANY

A5E35300227-AF
Ⓟ 10/2022 Subject to change

Copyright © Siemens AG 2019 - 2022.
All rights reserved

Table of contents

1 Introduction 13

1.1 Purpose, conventions and supplementary information 13

1.2 Guide to the Function Manuals documentation 14
1.2.1 Information classes Function Manuals 14
1.2.2 Basic tools 15
1.2.3 SIMATIC Technical Documentation 17

2 Safety instructions 19

2.1 Security information 19

3 Principles for control 20

3.1 Controlled system and actuators 20

3.2 Controlled systems 21

3.3 Characteristic values of the control section 23

3.4 Pulse controller 25

3.5 Response to setpoint changes and disturbances 29

3.6 Control Response at Different Feedback Structures 30

3.7 Selection of the controller structure for specified controlled systems 37

3.8 PID parameter settings 38

4 Configuring a software controller 39

4.1 Overview of software controller 39

4.2 Steps for the configuration of a software controller 40

4.3 Add technology objects 41

4.4 Configure technology objects 42

4.5 Call instruction in the user program 43

4.6 Downloading technology objects to device 44

4.7 Commissioning software controller 45

4.8 Save optimized PID parameter in the project 45

4.9 Working with multi-instance objects 46

4.10 Comparing values 48
4.10.1 Comparison display and boundary conditions 48
4.10.2 Comparing values 48

4.11 Parameter view 50
4.11.1 Introduction to the parameter view 50

4.11.2 Structure of the parameter view ... 52
4.11.2.1 Toolbar ... 52
4.11.2.2 Navigation ... 52
4.11.2.3 Parameter table ... 53
4.11.3 Opening the parameter view ... 54
4.11.4 Default setting of the parameter view ... 55
4.11.5 Working with the parameter view ... 57
4.11.5.1 Overview ... 57
4.11.5.2 Filtering the parameter table ... 57
4.11.5.3 Sorting the parameter table ... 58
4.11.5.4 Transferring parameter data to other editors ... 58
4.11.5.5 Indicating errors ... 59
4.11.5.6 Editing start values in the project ... 59
4.11.5.7 Status of configuration (offline) ... 60
4.11.5.8 Monitoring values online in the parameter view ... 61
4.11.5.9 Change display format of value ... 62
4.11.5.10 Create snapshot of monitor values ... 63
4.11.5.11 Modifying values ... 63
4.11.5.12 Comparing values ... 65
4.11.5.13 Applying values from the online program as start values ... 66
4.11.5.14 Initializing setpoints in the online program ... 67

4.12 Display instance DB of a technology object ... 68

5 Using PID_Compact ... 69

5.1 Technology object PID_Compact ... 69

5.2 PID_Compact V2 ... 70
5.2.1 Configuring PID_Compact V2 ... 70
5.2.1.1 Basic settings V2 ... 70
5.2.1.2 Process value settings V2 ... 72
5.2.1.3 Advanced settings V2 ... 73
5.2.2 Commissioning PID_Compact V2 ... 80
5.2.2.1 Pretuning V2 ... 80
5.2.2.2 Fine tuning V2 ... 81
5.2.2.3 "Manual" mode V1 ... 83
5.2.3 Override control with PID_Compact V2 ... 83
5.2.4 Simulating PID_Compact V2 with PLCSIM ... 87

5.3 PID_Compact V1 ... 87
5.3.1 Configuring PID_Compact V1 ... 87
5.3.1.1 Basic settings V1 ... 87
5.3.1.2 Process value settings V1 ... 90
5.3.1.3 Advanced settings V1 ... 91
5.3.2 Commissioning PID_Compact V1 ... 97
5.3.2.1 Commissioning V1 ... 97
5.3.2.2 Pretuning V1 ... 98
5.3.2.3 Fine tuning V1 ... 99
5.3.2.4 "Manual" mode V1 ... 100
5.3.3 Simulating PID_Compact V1 with PLCSIM ... 102

6 Using PID_3Step ... 103

6.1 Technology object PID_3Step ... 103

6.2 PID_3Step V2 ... 104
6.2.1 Configuring PID_3Step V2 ... 104
6.2.1.1 Basic settings V2 ... 104
6.2.1.2 Process value settings V2 ... 107
6.2.1.3 Actuator settings V2 ... 108
6.2.1.4 Advanced settings V2 ... 111
6.2.2 Commissioning PID_3Step V2 ... 114
6.2.2.1 Pretuning V2 ... 114
6.2.2.2 Fine tuning V2 ... 115
6.2.2.3 Commissioning with manual PID parameters V2 ... 117
6.2.2.4 Measuring the motor transition time V2 ... 117
6.2.3 Simulating PID_3Step V2 with PLCSIM ... 120

6.3 PID_3Step V1 ... 120
6.3.1 Configuring PID_3Step V1 ... 120
6.3.1.1 Basic settings V1 ... 120
6.3.1.2 Process value settings V1 ... 124
6.3.1.3 Actuator settings V1 ... 125
6.3.1.4 Advanced settings V1 ... 127
6.3.2 Commissioning PID_3Step V1 ... 130
6.3.2.1 Commissioning V1 ... 130
6.3.2.2 Pretuning V1 ... 131
6.3.2.3 Fine tuning V1 ... 132
6.3.2.4 Commissioning with manual PID parameters V1 ... 133
6.3.2.5 Measuring the motor transition time V1 ... 134
6.3.3 Simulating PID_3Step V1 with PLCSIM ... 136

7 Using PID_Temp ... 137

7.1 Technology object PID_Temp ... 137

7.2 Configuring PID_Temp ... 138
7.2.1 Basic settings ... 138
7.2.1.1 Introduction ... 138
7.2.1.2 Controller type ... 138
7.2.1.3 Setpoint ... 139
7.2.1.4 Process value ... 139
7.2.1.5 Heating and cooling output value ... 140
7.2.1.6 Cascade ... 141
7.2.2 Process value settings ... 142
7.2.2.1 Process value limits ... 142
7.2.2.2 Process value scaling ... 143
7.2.3 Output settings ... 143
7.2.3.1 Basic settings of output ... 143
7.2.3.2 Output value limits and scaling ... 145
7.2.4 Advanced settings ... 148
7.2.4.1 Process value monitoring ... 148
7.2.4.2 PWM limits ... 149

7.2.4.3 PID parameters ... 151

7.3 Commissioning PID_Temp ... 159
7.3.1 Commissioning ... 159
7.3.2 Pretuning ... 159
7.3.3 Fine tuning ... 161
7.3.4 "Manual" mode ... 165
7.3.5 Substitute setpoint ... 166
7.3.6 Cascade commissioning ... 166

7.4 Cascade control with PID_Temp ... 167
7.4.1 Introduction ... 167
7.4.2 Program creation ... 168
7.4.3 Configuration ... 169
7.4.4 Commissioning ... 170
7.4.5 Substitute setpoint ... 171
7.4.6 Operating modes and fault response ... 172

7.5 Multi-zone controlling with PID_Temp ... 172

7.6 Override control with PID_Temp ... 175

7.7 Simulating PID_Temp with PLCSIM ... 178

8 Using PID basic functions ... 179

8.1 CONT_C ... 179
8.1.1 Technology object CONT_C ... 179
8.1.2 Configure controller difference CONT_C ... 179
8.1.3 Configure the controller algorithm CONT_C ... 180
8.1.4 Configure the output value CONT_C ... 181
8.1.5 Programming a pulse controller ... 182
8.1.6 Commissioning CONT_C ... 182

8.2 CONT_S ... 183
8.2.1 Technology object CONT_S ... 183
8.2.2 Configure controller difference CONT_S ... 183
8.2.3 Configuring control algorithm CONT_S ... 184
8.2.4 Configure manipulated value CONT_S ... 184
8.2.5 Commissioning CONT_S ... 185

8.3 TCONT_CP ... 185
8.3.1 Technology object TCONT_CP ... 185
8.3.2 Configure TCONT_CP ... 186
8.3.2.1 Controller difference ... 186
8.3.2.2 Controlling algorithm ... 187
8.3.2.3 Manipulated value continual controller ... 188
8.3.2.4 Manipulated value pulse controller ... 189
8.3.3 Commissioning TCONT_CP ... 191
8.3.3.1 Optimization of TCONT_CP ... 191
8.3.3.2 Requirements for an optimization ... 193
8.3.3.3 Possibilities for optimization ... 195
8.3.3.4 Tuning result ... 198
8.3.3.5 Parallel tuning of controller channels ... 199

8.3.3.6 Fault descriptions and corrective measures ... 200
8.3.3.7 Performing pretuning ... 203
8.3.3.8 Performing fine tuning ... 203
8.3.3.9 Cancelling pretuning or fine tuning ... 203
8.3.3.10 Manual fine-tuning in control mode ... 204
8.3.3.11 Performing fine tuning manually ... 205

8.4 TCONT_S ... 206
8.4.1 Technology object TCONT_S ... 206
8.4.2 Configure controller difference TCONT_S ... 206
8.4.3 Configure controller algorithm TCONT_S ... 207
8.4.4 Configure manipulated value TCONT_S ... 208
8.4.5 Commissioning TCONT_S ... 208

9 Auxiliary functions ... 209

9.1 Polyline ... 209

9.2 SplitRange ... 209

9.3 RampFunction ... 210

9.4 RampSoak ... 210

9.5 Filter_PT1 ... 211

9.6 Filter_PT2 ... 211

9.7 Filter_DT1 ... 211

10 Instructions ... 213

10.1 PID_Compact ... 213
10.1.1 New features of PID_Compact ... 213
10.1.2 Compatibility with CPU and FW ... 216
10.1.3 CPU processing time and memory requirement PID_Compact V2.x ... 216
10.1.4 PID_Compact V2 ... 217
10.1.4.1 Description of PID_Compact V2 ... 217
10.1.4.2 Mode of operation of PID_Compact V2 ... 221
10.1.4.3 Input parameters of PID_Compact V2 ... 223
10.1.4.4 Output parameters of PID_Compact V2 ... 224
10.1.4.5 In/out parameters of PID_Compact V2 ... 225
10.1.4.6 Static tags of PID_Compact V2 ... 225
10.1.4.7 Changing the PID_Compact V2 interface ... 233
10.1.4.8 Parameters State and Mode V2 ... 234
10.1.4.9 Parameter ErrorBits V2 ... 237
10.1.4.10 Tag ActivateRecoverMode V2 ... 239
10.1.4.11 Tag Warning V2 ... 241
10.1.4.12 IntegralResetMode V2 tag ... 241
10.1.4.13 Sample program for PID_Compact ... 243
10.1.5 PID_Compact V1 ... 248
10.1.5.1 Description of PID_Compact V1 ... 248
10.1.5.2 Input parameters of PID_Compact V1 ... 251
10.1.5.3 Output parameters of PID_Compact V1 ... 252
10.1.5.4 Static tags of PID_Compact V1 ... 253
10.1.5.5 Parameters State and sRet.i_Mode V1 ... 257
10.1.5.6 Parameter Error V1 ... 260

10.1.5.7 Parameter Reset V1 ... 260
10.1.5.8 Tag sd_warning V1 ... 262
10.1.5.9 Tag i_Event_SUT V1 ... 263
10.1.5.10 Tag i_Event_TIR V1 ... 263

10.2 PID_3Step ... 264
10.2.1 New features of PID_3Step ... 264
10.2.2 Compatibility with CPU and FW ... 265
10.2.3 CPU processing time and memory requirement PID_3Step V2.x ... 266
10.2.4 PID_3Step V2 ... 267
10.2.4.1 Description of PID_3Step V2 ... 267
10.2.4.2 Mode of operation of PID_3Step V2 ... 273
10.2.4.3 Changing the PID_3Step V2 interface ... 276
10.2.4.4 Input parameters of PID_3Step V2 ... 276
10.2.4.5 Output parameters of PID_3Step V2 ... 278
10.2.4.6 In/out parameters of PID-3Step V2 ... 280
10.2.4.7 Static tags of PID_3Step V2 ... 280
10.2.4.8 Parameters State and Mode V2 ... 288
10.2.4.9 Parameter ErrorBits V2 ... 293
10.2.4.10 Tag ActivateRecoverMode V2 ... 295
10.2.4.11 Tag Warning V2 ... 297
10.2.5 PID_3Step V1 ... 298
10.2.5.1 Description PID_3Step V1 ... 298
10.2.5.2 Operating principle PID_3Step V1 ... 302
10.2.5.3 PID_3Step V1 input parameters ... 305
10.2.5.4 PID_3Step V1 output parameters ... 306
10.2.5.5 PID_3Step V1 static tags ... 308
10.2.5.6 Parameter State and Retain.Mode V1 ... 315
10.2.5.7 Parameter ErrorBits V1 ... 320
10.2.5.8 Parameter Reset V1 ... 322
10.2.5.9 Tag ActivateRecoverMode V1 ... 322
10.2.5.10 Tag Warning V1 ... 324
10.2.5.11 Tag SUT.State V1 ... 325
10.2.5.12 Tag TIR.State V1 ... 325

10.3 PID_Temp ... 326
10.3.1 New features of PID_Temp ... 326
10.3.2 Compatibility with CPU and FW ... 326
10.3.3 CPU processing time and memory requirement PID_Temp V1 ... 326
10.3.4 PID_Temp ... 327
10.3.4.1 Description of PID_Temp ... 327
10.3.4.2 Mode of operation of PID_Temp ... 331
10.3.4.3 Input parameters of PID_Temp ... 336
10.3.4.4 Output parameters of PID_Temp ... 337
10.3.4.5 In/out parameters of PID_Temp V2 ... 339
10.3.4.6 PID_Temp static tags ... 340
10.3.4.7 PID_Temp state and mode parameters ... 365
10.3.4.8 PID_Temp ErrorBits parameter ... 371
10.3.4.9 PID_Temp ActivateRecoverMode tag ... 373
10.3.4.10 PID_Temp Warning tag ... 375
10.3.4.11 PwmPeriode tag ... 376
10.3.4.12 IntegralResetMode tag ... 378

10.4 PID basic functions ... 379
10.4.1 CONT_C ... 379
10.4.1.1 Description CONT_C ... 379
10.4.1.2 How CONT_C works ... 380
10.4.1.3 CONT_C block diagram ... 382
10.4.1.4 Input parameter CONT_C ... 383
10.4.1.5 Output parameters CONT_C ... 384
10.4.2 CONT_S ... 385
10.4.2.1 Description CONT_S ... 385
10.4.2.2 Mode of operation CONT_S ... 385
10.4.2.3 Block diagram CONT_S ... 387
10.4.2.4 Input parameters CONT_S ... 388
10.4.2.5 Output parameters CONT_S ... 389
10.4.3 PULSEGEN ... 389
10.4.3.1 Description PULSEGEN ... 389
10.4.3.2 Mode of operation PULSEGEN ... 391
10.4.3.3 Mode of operation PULSEGEN ... 394
10.4.3.4 Three-step control ... 394
10.4.3.5 Two-step control ... 396
10.4.3.6 Input parameters PULSEGEN ... 397
10.4.3.7 Output parameter PULSEGEN ... 398
10.4.4 TCONT_CP ... 398
10.4.4.1 Description TCONT_CP ... 398
10.4.4.2 Mode of operation TCONT_CP ... 399
10.4.4.3 Operating principle of the pulse generator ... 408
10.4.4.4 Block diagram TCONT_CP ... 411
10.4.4.5 Input parameters TCONT_CP ... 412
10.4.4.6 Output parameters TCONT_CP ... 413
10.4.4.7 In/out parameters TCONT_CP ... 413
10.4.4.8 Static variables TCONT_CP ... 414
10.4.4.9 Parameter STATUS_H ... 418
10.4.4.10 Parameters STATUS_D ... 419
10.4.5 TCONT_S ... 419
10.4.5.1 Description TCONT_S ... 419
10.4.5.2 Mode of operation TCONT_S ... 420
10.4.5.3 Block diagram TCONT_S ... 424
10.4.5.4 Input paramters TCONT_S ... 425
10.4.5.5 Output parameters TCONT_S ... 426
10.4.5.6 In/out parameters TCONT_S ... 426
10.4.5.7 Static variables TCONT_S ... 426
10.4.6 Integrated system functions ... 427
10.4.6.1 CONT_C_SF ... 427
10.4.6.2 CONT_S_SF ... 428
10.4.6.3 PULSEGEN_SF ... 428

10.5 Polyline ... 429
10.5.1 Compatibility with CPU and FW ... 429
10.5.2 Description Polyline ... 429
10.5.3 Operating principle Polyline ... 431
10.5.4 Input parameters of Polyline ... 434
10.5.5 Output parameters of Polyline ... 435
10.5.6 Static tags of Polyline ... 435

10.5.7 ErrorBits parameter ... 436

10.6 SplitRange ... 439
10.6.1 Compatibility with CPU and FW ... 439
10.6.2 SplitRange description ... 439
10.6.3 SplitRange input parameters ... 441
10.6.4 SplitRange output parameters ... 442
10.6.5 SplitRange static tags ... 442
10.6.6 ErrorBits parameter ... 443

10.7 RampFunction ... 444
10.7.1 Compatibility with CPU and FW ... 444
10.7.2 RampFunction description ... 445
10.7.3 RampFunction mode of operation ... 449
10.7.4 RampFunction input parameters ... 452
10.7.5 RampFunction output parameters ... 452
10.7.6 RampFunction static tags ... 453
10.7.7 ErrorBits parameter ... 454

10.8 RampSoak ... 457
10.8.1 Compatibility with CPU and FW ... 457
10.8.2 Description of RampSoak ... 457
10.8.3 Operating principle RampSoak ... 459
10.8.3.1 Configuring and validating profile data ... 459
10.8.3.2 Executing a profile ... 462
10.8.3.3 Configuring the starting behavior - static tag StartMode ... 466
10.8.3.4 Configuring the stopping behavior - static tag StopMode ... 469
10.8.3.5 Measuring the cycle time ... 471
10.8.3.6 Enable behavior EN/ENO ... 472
10.8.4 Input parameter RampSoak ... 472
10.8.5 Output parameter RampSoak ... 473
10.8.6 In-out parameter RampSoak ... 473
10.8.7 Static tags RampSoak ... 474
10.8.8 ErrorBits parameter ... 475

10.9 Filter_PT1 ... 479
10.9.1 Compatibility with CPU and FW ... 479
10.9.2 Description of Filter_PT1 ... 479
10.9.3 Operating principle Filter_PT1 ... 486
10.9.4 Input parameter Filter_PT1 ... 487
10.9.5 Output parameter Filter_PT1 ... 488
10.9.6 Static tags Filter_PT1 ... 488
10.9.7 ErrorBits parameter ... 488

10.10 Filter_PT2 ... 491
10.10.1 Compatibility with CPU and FW ... 491
10.10.2 Description of Filter_PT2 ... 492
10.10.3 Operating principle Filter_PT2 ... 498
10.10.4 Input parameter Filter_PT2 ... 499
10.10.5 Output parameter Filter_PT2 ... 500
10.10.6 Static tags Filter_PT2 ... 500
10.10.7 ErrorBits parameter ... 500

10.11 Filter_DT1 ... 504
10.11.1 Compatibility with CPU and FW ... 504

10.11.2 Description of Filter_DT1 ... 504
10.11.3 Operating principle Filter_DT1 ... 510
10.11.4 Input parameter Filter_DT1 ... 512
10.11.5 Output parameter Filter_DT1 ... 512
10.11.6 Static tags Filter_DT1 ... 512
10.11.7 ErrorBits parameter ... 513

Index ... 517

Introduction 1

1.1 Purpose, conventions and supplementary information

Purpose of the documentation

This documentation will support you in configuring and programming control tasks with the S7-1200 and S7-1500 automation systems.

Basic knowledge required

The following knowledge is required in order to understand the documentation:

- General knowledge of automation technology
- Knowledge of the industrial automation system SIMATIC
- Experience of working with STEP 7 (TIA Portal)

Scope of the documentation

This documentation applies to the use of SW controllers on the CPUs of automation systems S7-1200 and S7-1500 together with STEP 7 (TIA Portal). Additional SW controllers that are not covered in this documentation are available for the use of S7-300 and S7-400 with STEP 7 (TIA Portal). Section Overview of software controller (Page 39) gives a complete overview of all SW controllers in STEP 7 (TIA Portal) and their possible applications.

Conventions

Observe notes marked as follows:

NOTE

The notes contain important information on the product described in the documentation, on the handling of the product or on part of the documentation to which particular attention should be paid.

Industry Mall

The Industry Mall is the Siemens AG catalog and ordering system for automation and drive solutions based on Totally Integrated Automation (TIA) and Totally Integrated Power (TIP).

Catalogs for all automation and drive technology products can be found on the Internet (https://mall.industry.siemens.com).

See also

Topic page "SIMATIC Technology - PID Control: Overview and important links"
https://support.industry.siemens.com/cs/ww/en/view/109751051
(https://support.industry.siemens.com/cs/ww/en/view/109751051)

1.2 Guide to the Function Manuals documentation

1.2.1 Information classes Function Manuals

The documentation for the SIMATIC S7-1500 automation system, for the 1513/1516pro-2 PN, SIMATIC Drive Controller CPUs based on SIMATIC S7-1500 and the SIMATIC ET 200MP, ET 200SP, ET 200AL and ET 200eco PN distributed I/O systems is arranged into three areas.
This arrangement enables you to access the specific content you require.
You can download the documentation free of charge from the Internet (https://support.industry.siemens.com/cs/ww/en/view/109742705).

Basic information

The system manuals and Getting Started describe in detail the configuration, installation, wiring and commissioning of the SIMATIC S7-1500, SIMATIC Drive Controller, ET 200MP, ET 200SP, ET 200AL and ET 200eco PN systems. Use the corresponding operating instructions for 1513/1516pro-2 PN CPUs.
The STEP 7 online help supports you in the configuration and programming.
Examples:

- Getting Started S7-1500
- System manuals
- Operating instructions ET 200pro and 1516pro-2 PN CPU
- Online help TIA Portal

Device information

Equipment manuals contain a compact description of the module-specific information, such as properties, wiring diagrams, characteristics and technical specifications.
Examples:

- Equipment manuals for CPUs
- Equipment manuals for interface modules
- Equipment manuals for digital modules
- Equipment manuals for analog modules
- Equipment manuals for communication modules
- Equipment manuals for technology modules
- Equipment manuals for power supply modules
- Equipment manuals for BaseUnits

General information

The function manuals contain detailed descriptions on general topics relating to the SIMATIC Drive Controller and the S7-1500 automation system.
Examples:

- Function Manual Diagnostics
- Function Manual Communication
- Function Manuals Motion Control
- Function Manual Web Server
- Function Manual Cycle and Response Times
- PROFINET Function Manual
- PROFIBUS Function Manual

Product Information

Changes and supplements to the manuals are documented in a Product Information. The Product Information takes precedence over the device and system manuals.
You will find the latest Product Information on the Internet:

- S7-1500/ET 200MP (https://support.industry.siemens.com/cs/de/en/view/68052815)
- SIMATIC Drive Controller (https://support.industry.siemens.com/cs/de/en/view/109772684/en)
- Motion Control (https://support.industry.siemens.com/cs/de/en/view/109794046/en)
- ET 200SP (https://support.industry.siemens.com/cs/de/en/view/73021864)
- ET 200eco PN (https://support.industry.siemens.com/cs/ww/en/view/109765611)

Manual Collections

The Manual Collections contain the complete documentation of the systems put together in one file.
You will find the Manual Collections on the Internet:

- S7-1500/ET 200MP/SIMATIC Drive Controller (https://support.industry.siemens.com/cs/ww/en/view/86140384)
- ET 200SP (https://support.industry.siemens.com/cs/ww/en/view/84133942)
- ET 200AL (https://support.industry.siemens.com/cs/ww/en/view/95242965)
- ET 200eco PN (https://support.industry.siemens.com/cs/ww/en/view/109781058)

1.2.2 Basic tools

The tools described below support you in all steps: from planning, over commissioning, all the way to analysis of your system.

TIA Selection Tool

The TIA Selection Tool tool supports you in the selection, configuration, and ordering of devices for Totally Integrated Automation (TIA).
As successor of the SIMATIC Selection Tools , it assembles the configuration editors for automation technology already familiar into a single tool.

With the TIA Selection Tool , you can generate a complete order list from your product selection or product configuration.
You can find the TIA Selection Tool on the Internet.
(https://support.industry.siemens.com/cs/ww/en/view/109767888)

SIMATIC Automation Tool

You can use the SIMATIC Automation Tool to perform commissioning and maintenance activities on various SIMATIC S7 stations as bulk operations independent of TIA Portal.
The SIMATIC Automation Tool offers a wide range of functions:

- Scanning of a PROFINET/Ethernet system network and identification of all connected CPUs
- Assignment of addresses (IP, subnet, Gateway) and device name (PROFINET device) to a CPU
- Transfer of the date and the programming device/PC time converted to UTC time to the module
- Program download to CPU
- RUN/STOP mode switchover
- CPU localization through LED flashing
- Reading out of CPU error information
- Reading the CPU diagnostic buffer
- Reset to factory settings
- Firmware update of the CPU and connected modules

You can find the SIMATIC Automation Tool on the Internet.
(https://support.industry.siemens.com/cs/ww/en/view/98161300)

PRONETA

SIEMENS PRONETA (PROFINET network analysis) is a commissioning and diagnostic tool for PROFINET networks. PRONETA Basic has two core functions:

- The "Network analysis" offers a quick overview of the PROFINET topology. It is possible to make simple parameter changes (for example, to the names and IP addresses of the devices). In addition, a quick and convenient comparison of the real configuration with a reference system is also possible.
- The "IO test" is a simple and rapid test of the wiring and the module configuration of a plant, including documentation of the test results.

You can find SIEMENS PRONETA Basic on the Internet:
(https://support.industry.siemens.com/cs/ww/en/view/67460624)
SIEMENS PRONETA Professional is a licensed product that offers you additional functions. It offers you simple asset management in PROFINET networks and supports operators of automation systems in automatic data collection/acquisition of the components used through various functions:

- The user interface (API) offers an access point to the automation cell to automate the scan functions using MQTT or a command line.
- With PROFIenergy diagnostics, you can quickly detect the current pause mode or the readiness for operation of devices that support PROFIenergy and change these as needed.
- The data record wizard supports PROFINET developers in reading and writing acyclic PROFINET data records quickly and easily without PLC and engineering.

You can find SIEMENS PRONETA Professional on the Internet.
(https://www.siemens.com/proneta-professional)

SINETPLAN

SINETPLAN, the Siemens Network Planner, supports you in planning automation systems and networks based on PROFINET. The tool facilitates professional and predictive dimensioning of your PROFINET installation as early as in the planning stage. In addition, SINETPLAN supports you during network optimization and helps you to exploit network resources optimally and to plan reserves. This helps to prevent problems in commissioning or failures during productive operation even in advance of a planned operation. This increases the availability of the production plant and helps improve operational safety.

The advantages at a glance

- Network optimization thanks to port-specific calculation of the network load
- Increased production availability thanks to online scan and verification of existing systems
- Transparency before commissioning through importing and simulation of existing STEP 7 projects
- Efficiency through securing existing investments in the long term and the optimal use of resources

You can find SINETPLAN on the Internet
(https://new.siemens.com/global/en/products/automation/industrial-communication/profinet/sinetplan.html).

1.2.3 SIMATIC Technical Documentation

Additional SIMATIC documents will complete your information. You can find these documents and their use at the following links and QR codes.

The Industry Online Support gives you the option to get information on all topics. Application examples support you in solving your automation tasks.

Overview of the SIMATIC Technical Documentation

Here you will find an overview of the SIMATIC documentation available in Siemens Industry Online Support:

Industry Online Support International
(https://support.industry.siemens.com/cs/ww/en/view/109742705)

Watch this short video to find out where you can find the overview directly in Siemens Industry Online Support and how to use Siemens Industry Online Support on your mobile device:

Quick introduction to the technical documentation of automation products per video (https://support.industry.siemens.com/cs/us/en/view/109780491)

YouTube video: Siemens Automation Products - Technical Documentation at a Glance (https://youtu.be/TwLSxxRQQsA)

mySupport

With "mySupport" you can get the most out of your Industry Online Support.

Registration	You must register once to use the full functionality of "mySupport". After registration, you can create filters, favorites and tabs in your personal workspace.
Support requests	Your data is already filled out in support requests, and you can get an overview of your current requests at any time.
Documentation	In the Documentation area you can build your personal library.
Favorites	You can use the "Add to mySupport favorites" to flag especially interesting or frequently needed content. Under "Favorites", you will find a list of your flagged entries.
Recently viewed articles	The most recently viewed pages in mySupport are available under "Recently viewed articles".
CAx data	The CAx data area gives you access to the latest product data for your CAx or CAe system. You configure your own download package with a few clicks: • Product images, 2D dimension drawings, 3D models, internal circuit diagrams, EPLAN macro files • Manuals, characteristics, operating manuals, certificates • Product master data

You can find "mySupport" on the Internet. (https://support.industry.siemens.com/My/ww/en)

Application examples

The application examples support you with various tools and examples for solving your automation tasks. Solutions are shown in interplay with multiple components in the system - separated from the focus on individual products.
You can find the application examples on the Internet.
(https://support.industry.siemens.com/cs/ww/en/ps/ae)

Safety instructions 2

2.1 Security information

Siemens provides products and solutions with industrial security functions that support the secure operation of plants, systems, machines and networks.

In order to protect plants, systems, machines and networks against cyber threats, it is necessary to implement – and continuously maintain – a holistic, state-of-the-art industrial security concept. Siemens' products and solutions constitute one element of such a concept.

Customers are responsible for preventing unauthorized access to their plants, systems, machines and networks. Such systems, machines and components should only be connected to an enterprise network or the internet if and to the extent such a connection is necessary and only when appropriate security measures (e.g. firewalls and/or network segmentation) are in place.

For additional information on industrial security measures that may be implemented, please visit.

Siemens' products and solutions undergo continuous development to make them more secure. Siemens strongly recommends that product updates are applied as soon as they are available and that the latest product versions are used. Use of product versions that are no longer supported, and failure to apply the latest updates may increase customers' exposure to cyber threats.

To stay informed about product updates, subscribe to the Siemens Industrial Security RSS Feed visit.

Principles for control

3

3.1 Controlled system and actuators

Controlled system

Room temperature control by means of a heating system is a simple example of a controlled system. A sensor measures the room temperature and transfers the value to a controller. The controller compares the current room temperature with a setpoint and calculates an output value (manipulated variable) for heating control.

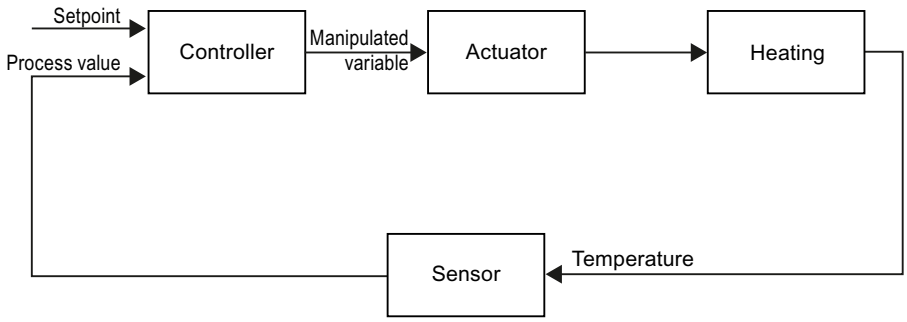

A properly set PID controller reaches this setpoint as quickly as possible and then holds it a constant value. After a change in the output value, the process value often changes only with a time delay. The controller has to compensate for this response.

Actuators

The actuator is an element of the controlled system and is influenced by the controller. Its function modifies mass and energy flows.

The table below provides an overview of actuator applications.

Application	Actuator
Liquid and gaseous mass flow	Valve, shutter, gate valve
Solid mass flow, e.g., bulk material	Articulated baffle, conveyor, vibrator channel
Flow of electrical power	Switching contact, contactor, relay, thyristor
	Variable resistor, variable transformer, transistor

Actuators are distinguished as follows:

- Proportional actuators with constant actuating signal
  These elements set degrees of opening, angular positions or positions in proportion to the output value. The output value has an analog effect on the process within the control range.
  Actuators in this group include spring-loaded pneumatic drives, as well as motorized drives with position feedback for which a position control system is formed.
  An continuous controller, such as PID_Compact, generates the output value.

- Proportional actuators with pulse-width modulated signal
  These actuators are used to generate the output of pulses with a length proportional to the output value within the sampling time intervals. The actuator - e.g. a heating resistor or cooling apparatus - is switched on in isochronous mode for durations that differ depending on the output value.
  The actuating signal can assume unipolar "On" or "Off" states, or represent bipolar states such as "open/close", "forward/backward", "accelerate/brake".
  The output value is generated by a two-step controller such as PID_Compact with pulse-width modulation.
- Actuators with integral action and three-step actuating signal
  Actuators are frequently operated by motors with an on period that is proportional to the actuator travel of the choke element. This includes elements such as valves, shutters, and gate valves. In spite of their different design, all of these actuators follow the effect of an integral action at the input of the controlled system.
  A step controller, such as PID_3Step. generates the output value.

3.2 Controlled systems

The properties of a controlled system can hardly be influenced as these are determined by the technical requirements of the process and machinery. Acceptable control results can only be achieved by selecting a suitable controller type for the specific controlled system and adapting the controller to the time response of the controlled system. Therefore, it is is indispensable for the configuration of the proportional, integral and derivative actions of the controller to have precise knowledge of the type and parameters of the controlled system.

Controlled system types

Controlled systems are classified based on their time response to step changes of the output value.
We distinguish between the following controlled systems:

- Self-regulating controlled systems
  - Proportional-action controlled systems
  - PT1 controlled systems
  - PT2 controlled systems
- Non-self-regulating controlled systems
- Controlled systems with and without dead time

Self-regulating controlled systems

Proportional-action controlled systems

In proportional-action controlled systems, the process value follows the output value almost immediately. The ratio between the process value and output value is defined by the proportional Gain of the controlled system.

Examples:

- Gate valve in a piping system
- Voltage dividers
- Step-down function in hydraulic systems

PT1 controlled systems

In a PT1 controlled system, the process value initially changes in proportion to the change of the output value. The rate of change of the process value is reduced as a function of the time until the end value is reached, i.e., it is delayed.

Examples:

- Spring damping system
- Charge of RC elements
- Water container that is heated with steam.

The time constants are often identical for heating and cooling processes, or for charging and discharge characteristics. With different time constants, controlling is clearly more complex.

PT2 controlled systems

In a PT2 controlled system, the process value does not immediately follow a step change of the output value, i.e., it increases in proportion to the positive rate of rise and then approaches the setpoint at a decreasing rate of rise. The controlled system shows a proportional response characteristic with second order delay element.

Examples:

- Pressure control
- Flow rate control
- Temperature control

Non-self-regulating controlled systems

Non-self-regulating controlled systems have an integral response. The process value approaches an infinite maximum value.

Example:

- Liquid flow into a container

Controlled systems with dead time

A dead time always represents the runtime or transport time that has to expire before a change to the system input can be measured at the system output.

In controlled systems with dead time, the process value change is delayed by the amount of the dead time.

Example:

Conveyor

3.3 Characteristic values of the control section

Determining the time response from the step response

Time response of the controlled system can be determined based on the time characteristic of process value x following a step change of output value y. Most controlled systems are self-regulating controlled systems.

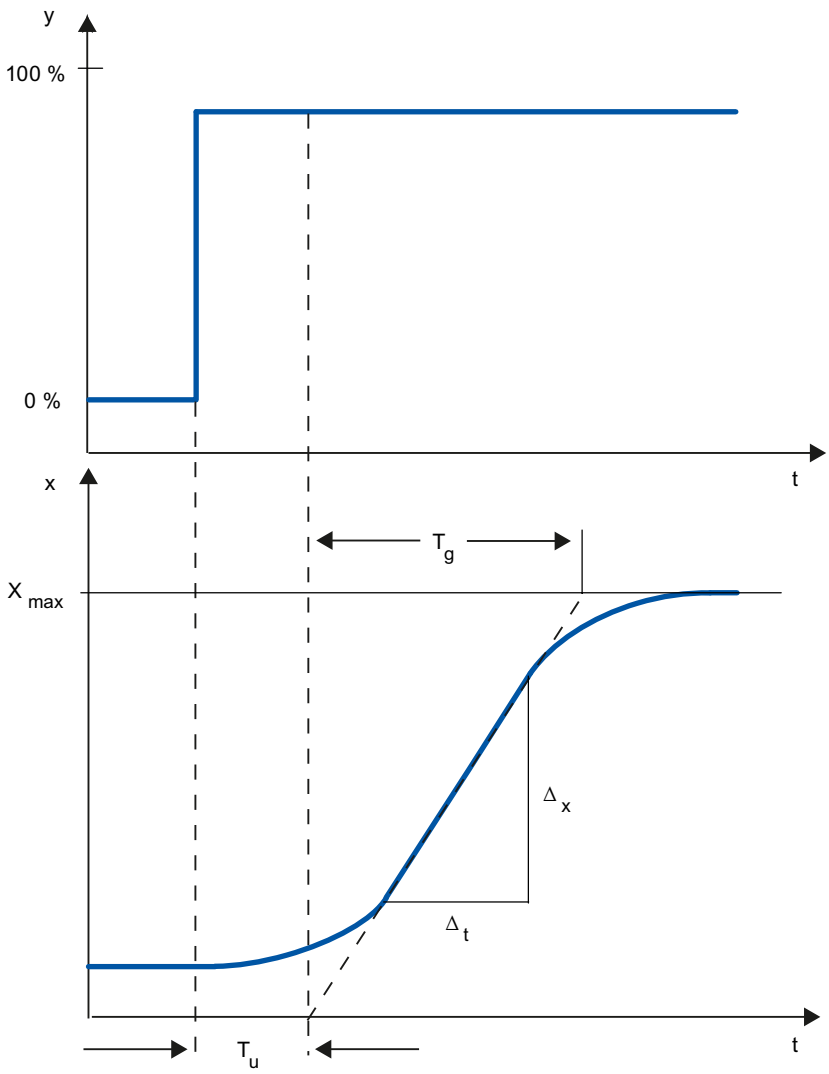

The time response can be determined by approximation using the variables Delay time T_u, Recovery time T_g and Maximum value X_{max}. The variables are determined by applying tangents to the maximum value and the inflection point of the step response. In many situations, it is not possible to record the response characteristic up to the maximum value because the process value cannot exceed specific values. In this case, the rate of rise v_{max} is used to identify the controlled system ($v_{max} = \Delta_x/\Delta_t$).

The controllability of the controlled system can be estimated based on the ratio T_u/T_g, or $T_u \times v_{max}/X_{max}$. Rule:

Process type	T_u / T_g	Suitability of the controlled system for controlling
I	< 0.1	can be controlled well
II	0.1 to 0.3	can still be controlled
III	> 0.3	difficult to control

Influence of the dead time on the controllability of a controlled system

A controlled system with dead time and recovery reacts as follows to a jump of the output value.

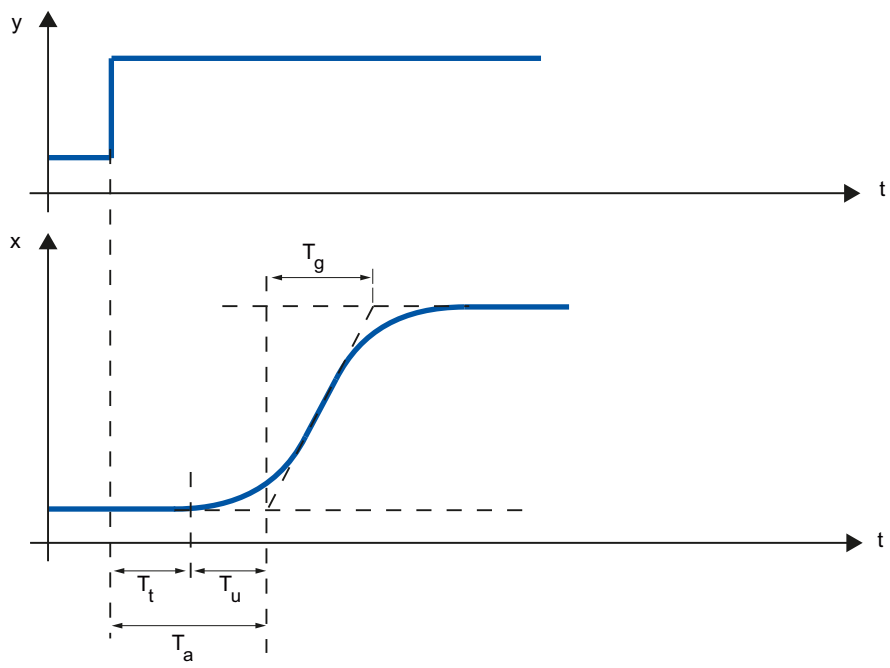

T_t	Dead time
T_u	Delay time
T_g	Recovery time
y	Output value
x	Process value

The controllability of a self-regulating controlled system with dead time is determined by the ratio of T_t to T_g. T_t must be small compared to T_g. Rule:

$T_t/T_g \leq 1$

Response rate of controlled systems

Controlled systems can be judged on the basis of the following values:

$T_u < 0.5$ min, $T_g < 5$ min = fast controlled system

$T_u > 0.5$ min, $T_g > 5$ min = slow controlled system

Parameters of certain controlled systems

Physical quantity	Controlled system	Delay time T_u	Recovery time T_g	Rate of rise v_{max}
Temperature	Small electrically heated furnace	0.5 to 1 min	5 to 15 min	Up to 60 K/min.
	Large electrically heated annealing furnace	1 to 5 min	10 to 20 min	Up to 20 K/min.
	Large gas-heated annealing furnace	0.2 to 5 min	3 to 60 min	1 to 30 K/min
	Distillation tower	1 to 7 min	40 to 60 min	0.1 to 0.5° C/s
	Autoclaves (2.5 m^3)	0.5 to 0.7 min	10 to 20 min	Not specified
	High-pressure autoclaves	12 to 15 min	200 to 300 min	Not specified
	Steam superheater	30 s to 2.5 min	1 to 4 min	2°C/s
	Injection molding machines	0.5 to 3 min	3 to 30 min	5 to 20 K/min
	Extruders	1 to 6 min	5 to 60 min	
	Packaging machines	0.5 to 4 min	3 to 40 min	2 to 35 K/min
	Room heating	1 to 5 min	10 to 60 min	1° C/min
Flow rate	Pipeline with gas	0 to 5 s	0.2 to 10 s	Not relevant
	Pipeline with liquid	None	None	
Pressure	Gas pipeline	None	0.1 s	Not relevant
	Drum boiler with gas or oil firing	None	150 s	Not relevant
	Drum boiler with impact grinding mills	1 to 2 min	2 to 5 min	Not relevant
Vessel level	Drum boiler	0.6 to 1 min	Not specified	0.1 to 0.3 cm/s
Speed	Small electric drive	None	0.2 to 10 s	Not relevant
	Large electric drive	None	5 to 40 s	Not relevant
	Steam turbine	None	Not specified	50 min^{-1}
Voltage	Small generators	None	1 to 5 s	Not relevant
	Large generators	None	5 to 10 s	Not relevant

3.4 Pulse controller

Two-step controllers without feedback

Two-step controllers have the state "ON" and "OFF" as the switching function. This corresponds to 100% or 0% output. This behavior generates a sustained oscillation of process value x around setpoint w.

The amplitude and duration of the oscillation increase in proportion to the ratio between the delay time T_u and recovery time T_g of the controlled system. These controllers are used mainly for simple temperature control systems (such as electrically directly heated furnaces) or as limit-value signaling units.

The following diagram shows the characteristic of a two-step controller

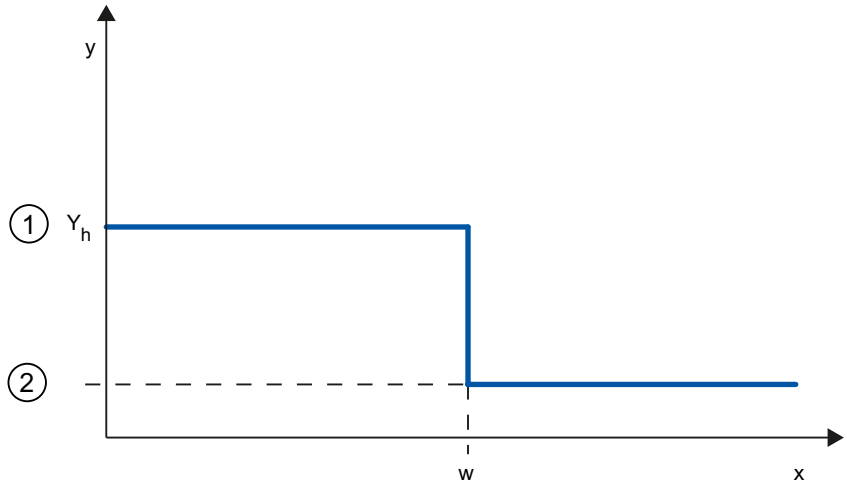

①	ON
②	OFF
Y_h	Control range
w	Setpoint

The following diagram shows the control function of a two-step controller

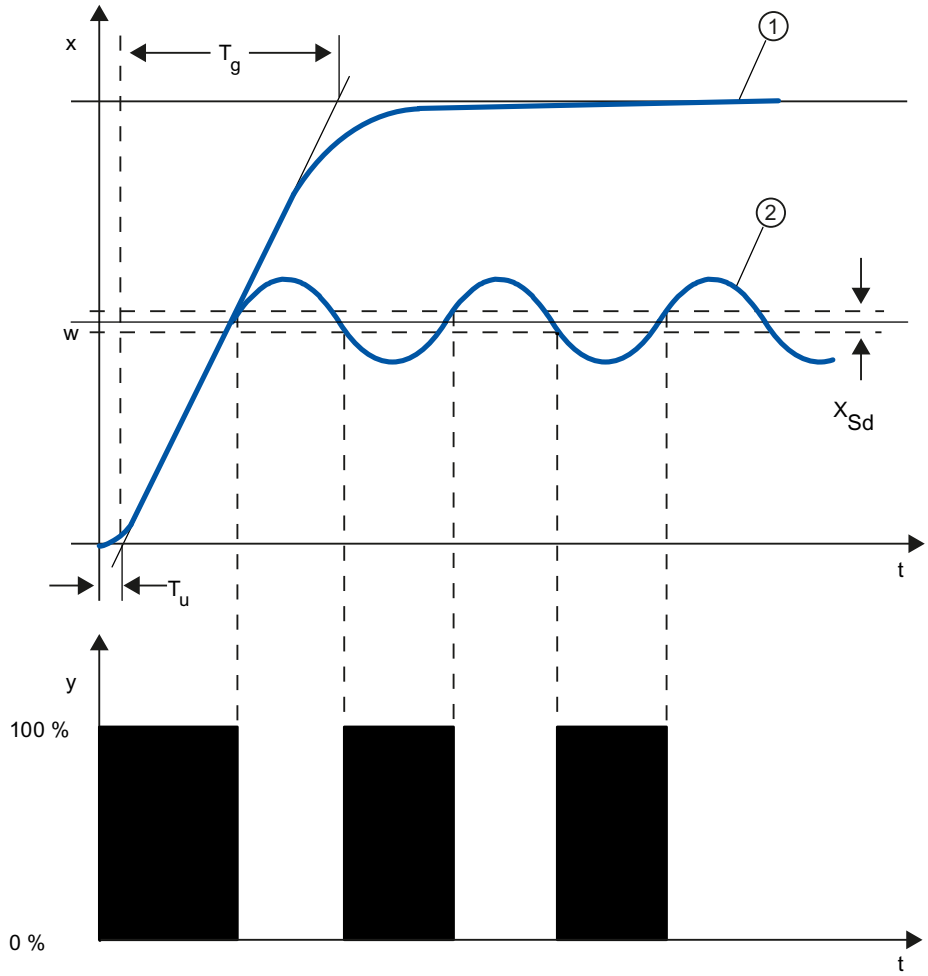

①	Response characteristic without controller
②	Response characteristic with two-step controller
T_u	Delay time
T_g	Recovery time
X_{Sd}	Switching difference

Two-step controllers with feedback

The behavior of two-step controllers in the case of controlled systems with larger delay times, such as furnaces where the functional space is separated from the heating, can be improved by the use of electronic feedback.

The feedback is used to increase the switching frequency of the controller, which reduces the amplitude of the process value. In addition, the control-action results can be improved substantially in dynamic operation. The limit for the switching frequency is set by the output level. It should not exceed 1 to 5 switches per minute at mechanical actuators, such as relays and contactors. In the case of voltage and current outputs with downstream thyristor or Triac controllers high switching frequencies can be selected that exceed the limit frequency of the controlled system by far.

Since the switching pulses can no longer be determined at the output of the controlled system, results comparable with those of continuous controllers are obtained.

The output value is generated by pulse-width modulation of the output value of a continuous controller.

Two-step controllers with feedback are used for temperature control in furnaces, at processing machines in the plastics, textile, paper, rubber and foodstuff industries as well as for heating and cooling devices.

Three-step controllers

Three-step controllers are used for heating / cooling. These controllers have two switching points as their output. The control-action results are optimized through electronic feedback structures. Fields of applications for such controllers are heating, low-temperature, climatic chambers and tool heating units for plastic-processing machines.

The following diagram shows the characteristic of a three-step controller

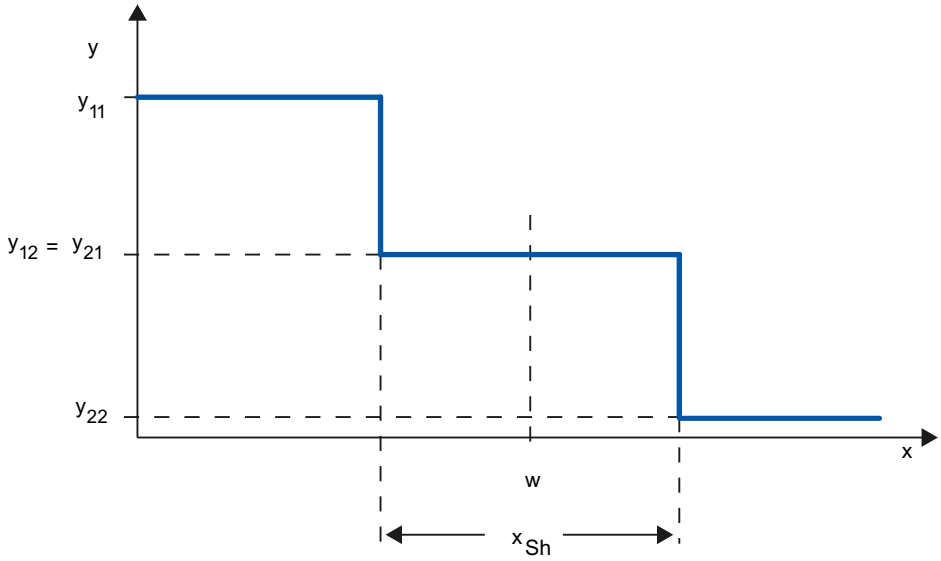

y	Output value, e.g. y11 = 100% heating y12 = 0% heating y21 = 0% cooling y22 = 100% cooling
x	Physical quantity of the process value, e.g., temperature in° C
w	Setpoint
x_{Sh}	Distance between Switching Point 1 and Switching Point 2

3.5 Response to setpoint changes and disturbances

Response to setpoint changes

The process value should follow a setpoint change as quickly as possible. The response to setpoint changes is improved by minimizing fluctuation of the process value and the time required to reach the new setpoint.

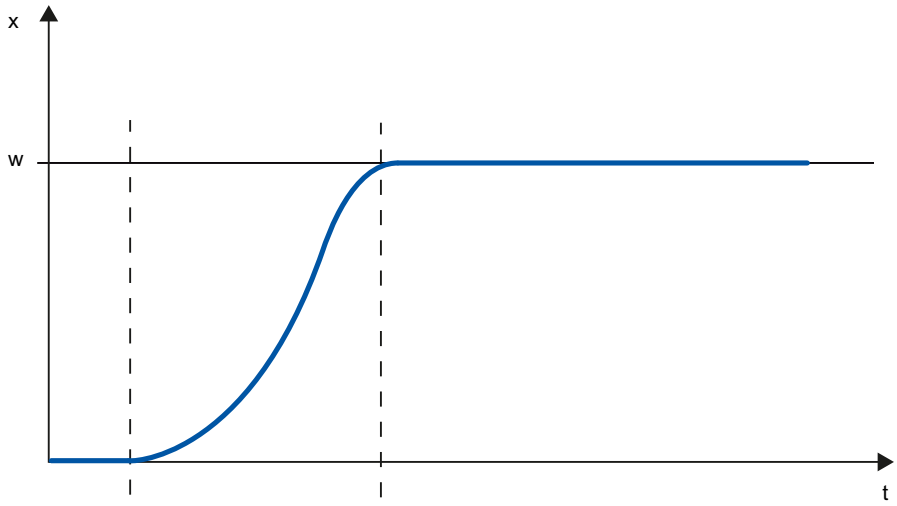

x Process value

w Setpoint

Response to disturbances

The setpoint is influenced by disturbance variables. The controller has to eliminate the resulting control deviations in the shortest time possible. The response to disturbances is improved by minimizing fluctuation of the process value and the time required to reach the new setpoint.

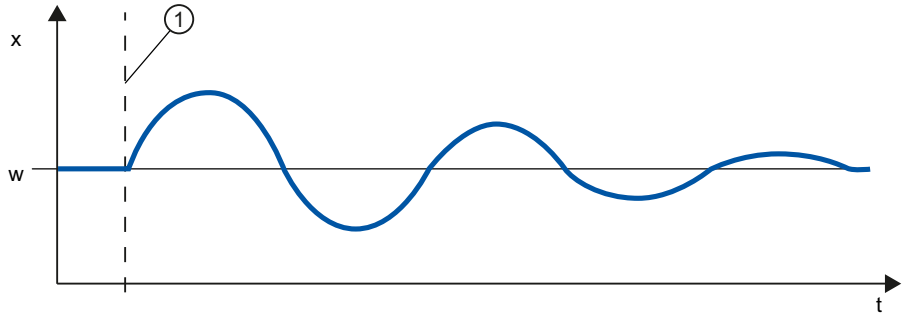

x Process value

w Setpoint

① Influencing a disturbance variable

Disturbance variables are corrected by a controller with integral action. A persistent disturbance variable does not reduce control quality because the control deviation is relatively constant. Dynamic disturbance variables have a more significant impact on control

quality because of control deviation fluctuation. The control deviation is eliminated again only by means of the slow acting integral action.

A measurable disturbance variable can be included in the controlled system. This inclusion would significantly accelerated the response of the controller.

3.6 Control Response at Different Feedback Structures

Control behavior of controllers

A precise adaptation of the controller to the time response of the controlled system is decisive for the controller's precise settling to the setpoint and optimum response to disturbance variables.

The feedback circuit can have a proportional action (P), proportional-derivative action (PD), proportional-integral action (PI), or proportional-integral-derivative action (PID).

If step functions are to be triggered by control deviations, the step responses of the controllers differ depending on their type.

Step response of a proportional action controller

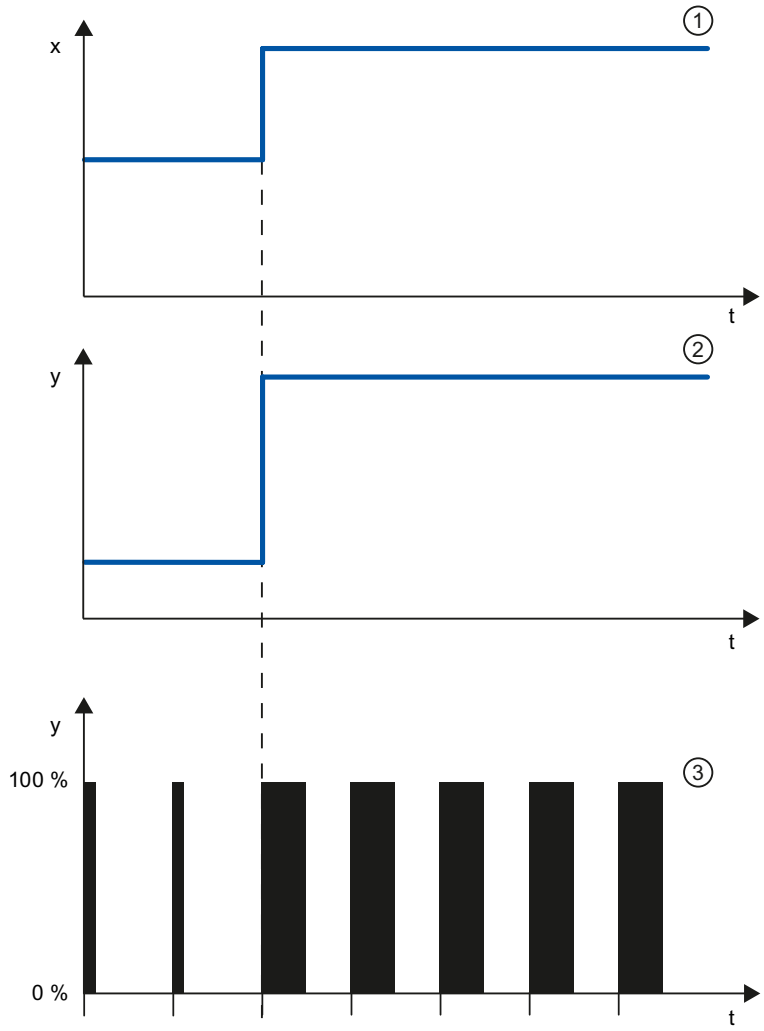

① Control deviation
② Output value of a continuous controller
③ Output value of a pulse controller

Equation for proportional action controller
Output value and control deviation are directly proportional, meaning:
Output value = proportional gain × control deviation
y = GAIN × x

Step response of a PD-action controller

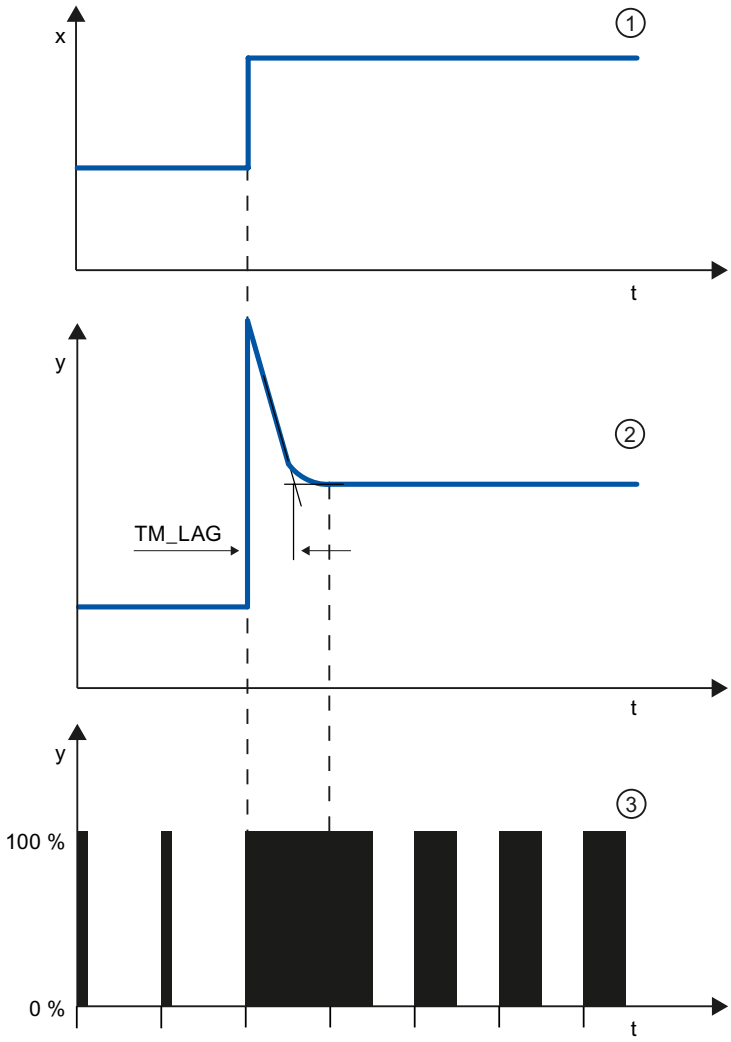

①	Control deviation
②	Output value of a continuous controller
③	Output value of a pulse controller
TM_LAG	Delay of the Derivative action

Equation for PD-action controller

The following applies for the step response of the PD-action controller in the time range:

$$y = GAIN \cdot X_W \cdot \left(1 + \frac{TD}{TM_LAG} \cdot e^{\frac{-t}{TM_LAG}} \right)$$

t = time interval since the step of the control deviation

The derivative action generates a output value as a function of the rate of change of the process value. A derivative action by itself is not suitable for controlling because the output value only follows a step of the process value. As long as the process value remains constant, the output value will no longer change.

The response to disturbances of the derivative action is improved in combination with a proportional action. Disturbances are not corrected completely. The good dynamic response is advantageous. A well attenuated, non-oscillating response is achieved during approach and setpoint change.

A controller with derivative action is not appropriate if a controlled system has pulsing measured quantities, for example, in the case of pressure or flow control systems.

Step response of a PI-action controller

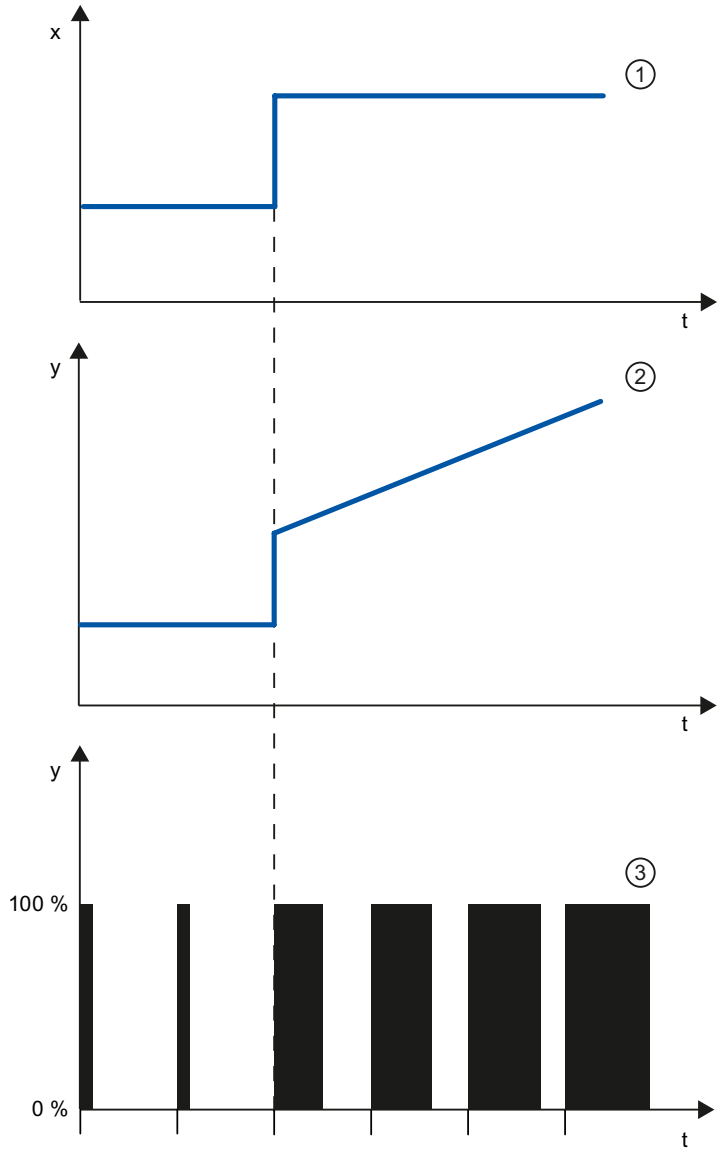

① Control deviation

② Output value of a continuous controller

③ Output value of a pulse controller

An integral action in the controller adds the control deviation as a function of the time. This means that the controller corrects the system until the control deviation is eliminated. A

sustained control deviation is generated at controllers with proportional action only. This effect can be eliminated by means of an integral action in the controller.

In practical experience, a combination of the proportional, integral and derivative actions is ideal, depending on the requirements placed on the control response. The time response of the individual components can be described by the controller parameters proportional gain GAIN, integral action time TI (integral action), and derivative action time TD (derivative action).

Equation for PI-action controller

The following applies for the step response of the PI-action controller in the time range:

$$y = GAIN \cdot X_W \cdot \left(1 + \frac{1}{TI \cdot t}\right)$$

t = time interval since the step of the control deviation

Step response of a PID controller

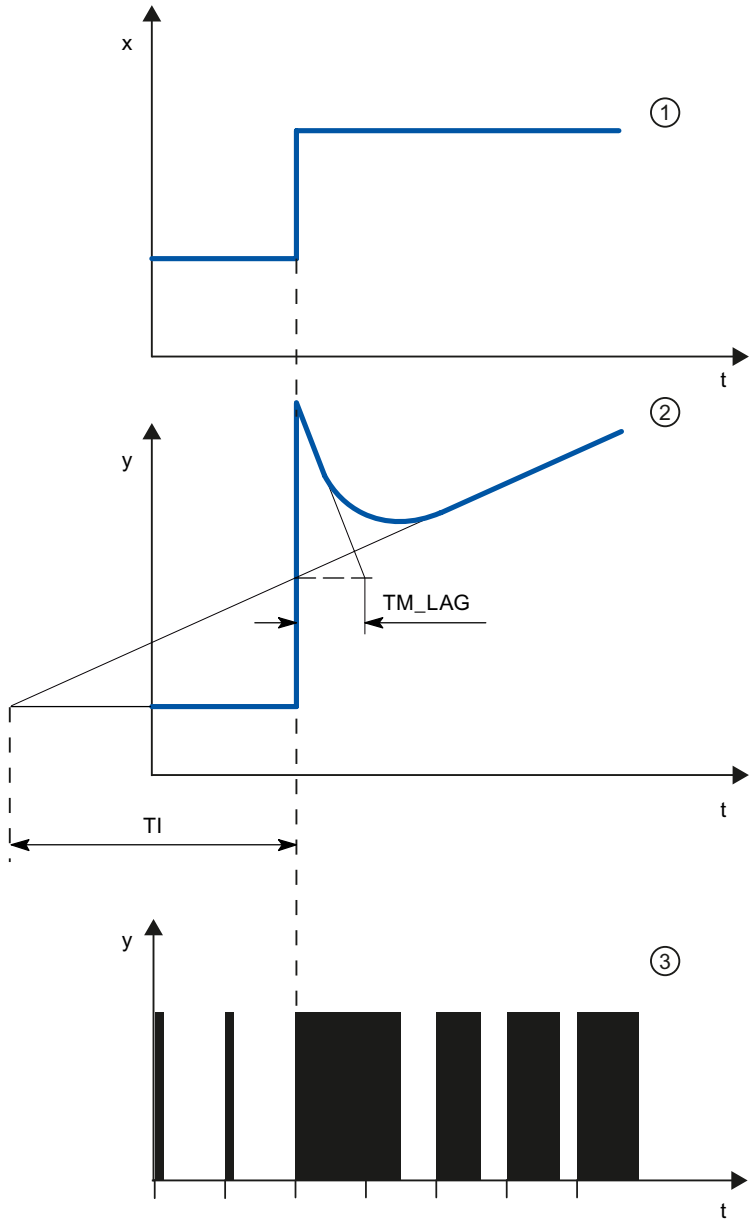

①	Control deviation
②	Output value of a continuous controller
③	Output value of a pulse controller
TM_LAG	Delay of the Derivative action
T_i	Integral action time

Equation for PID controller

The following applies for the step response of the PID controller in the time range:

$$y = GAIN \cdot X_w \cdot \left(1 + \frac{1}{TI \cdot t} + \frac{TD}{TM_LAG} \cdot e^{\frac{-t}{TM_LAG}}\right)$$

t = time interval since the step of the control deviation

Response of a controlled system with different controller structures

Most of the controller systems occurring in process engineering can be controlled by means of a controller with PI-action response. In the case of slow controlled system with a large dead time, for example temperature control systems, the control result can be improved by means of a controller with PID action.

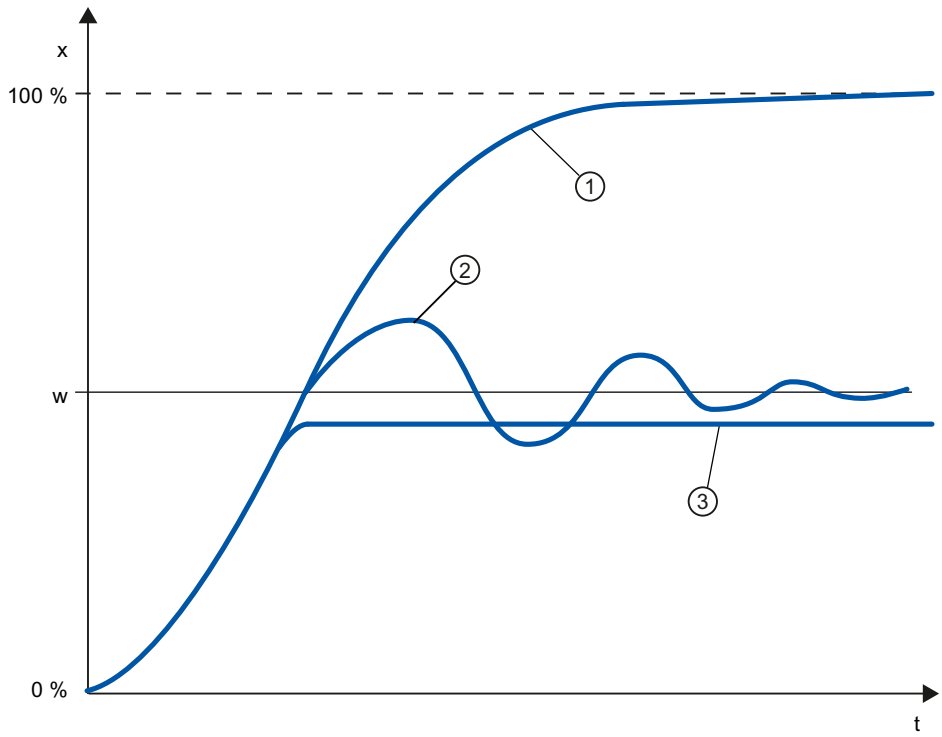

①	No controller
②	PID controller
③	PD-action controller
w	Setpoint
x	Process value

Controllers with PI and PID action have the advantage that the process value does not have any deviation from the setpoint value after settling. The process value oscillates over the setpoint during approach.

3.7 Selection of the controller structure for specified controlled systems

Selection of the Suitable Controller Structures

To achieve optimum control results, select a controller structure that is suitable for the controlled system and that you can adapt to the controlled system within specific limits.

The table below provides an overview of suitable combinations of a controller structure and controlled system.

Controlled system		Controller structure			
		P	**PD**	**PI**	**PID**
	With dead time only	Unsuitable	Unsuitable	Suitable	Unsuitable
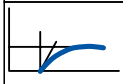	PT1 with dead time	Unsuitable	Unsuitable	Well suited	Well suited
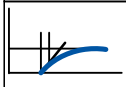	PT2 with dead time	Unsuitable	Suited conditionally	Well suited	Well suited
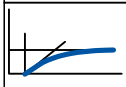	Higher order	Unsuitable	Unsuitable	Suited conditionally	Well suited
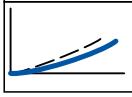	Not self-regulating	Well suited	Well suited	Well suited	Well suited

The table below provides an overview of suitable combinations of a controller structure and physical quantity.

Physical quantity	Controller structure			
	P	**PD**	**PI**	**PID**
	Sustained control deviation		**No sustained control deviation**	
Temperature	For low performance requirements and proportional action controlled systems with T_u/Tg < 0,1	Well suited	The most suitable controller structures for high performance requirements (except for specially adapted special controllers)	
Pressure	Suitable, if the delay time is inconsiderable	Unsuitable	The most suitable controller structures for high performance requirements (except for specially adapted special controllers)	
Flow rate	Unsuitable, because required GAIN range is usually too large	Unsuitable	Suitable, but integral action controller alone often better	Hardly required

3.8 PID parameter settings

Rule of Thumb for the Parameter Setting

Controller structure	Setting
P	GAIN ≈ $v_{max} \times T_u$ [° C]
PI	GAIN ≈ 1.2 × $v_{max} \times T_u$ [° C] TI ≈ 4 × T_u [min]
PD	GAIN ≈ 0.83 × $v_{max} \times T_u$ [° C] TD ≈ 0.25 × $v_{max} \times T_u$ [min] TM_LAG ≈ 0.5 × TD[min]
PID	GAIN ≈ 0.83 × $v_{max} \times T_u$ [° C] TI ≈ 2 × T_u [min] TD ≈ 0.4 × T_u [min] TM_LAG ≈ 0.5 × TD[min]
PD/PID	GAIN ≈ 0.4 × $v_{max} \times T_u$ [° C] TI ≈ 2 × T_u [min] TD ≈ 0.4 × T_u [min] TM_LAG ≈ 0.5 × TD[min]

Instead of $v_{max} = \Delta_x / \Delta_t$, you can use X_{max} / T_g.

In the case of controllers with PID structure the setting of the integral action time and differential-action time is usually coupled with each other.

The ratio TI / TD lies between 4 and 5 and is optimal for most controlled systems.

Non-observance of the differential-action time TD is uncritical at PD controllers.

In the case of PI and PID controllers, control oscillations occur if the integral action time TI has been select by more than half too small.

An integral action time that is too large slows down the settling times of disturbances. One cannot expect that the control loops operate "optimally" after the first parameter settings. Experience shows that adjusting is always necessary, when a system exists that is "difficult to control" with $T_u / T_g > 0.3$.

Configuring a software controller

4

4.1 Overview of software controller

For the configuration of a software controller, you need an instruction with the control algorithm and a technology object. The technology object for a software controller corresponds with the instance DB of the instruction. The configuration of the controller is saved in the technology object. In contrast to the instance DBs of other instructions, technology objects are not stored for the program resources, but rather under CPU > Technology objects.

Technology objects and instructions

CPU	Library	Instruction	Technology object	Description
S7-1200	Compact PID	PID_Compact V1.x	PID_Compact V1.x	Universal PID controller with integrated tuning
S7-1200		PID_3Step V1.x	PID_3Step V1.x	PID controller with integrated tuning for valves
S7-1500 S7-1200 V4.x		PID_Compact V2.x	PID_Compact V2.x	Universal PID controller with integrated tuning
S7-1500 S7-1200 V4.x		PID_3Step V2.x	PID_3Step V2.x	PID controller with integrated tuning for valves
S7-1500 ≥ V1.7 S7-1200 ≥ V4.1		PID_Temp V1.x	PID_Temp V1.x	Universal PID temperature controller with integrated tuning
S7-1500/300/40-0	PID basic functions	CONT_C	CONT_C	Continuous controller
S7-1500/300/40-0		CONT_S	CONT_S	Step controller for actuators with integrating behavior
S7-1500/300/40-0		PULSEGEN	-	Pulse generator for actuators with proportional behavior
S7-1500/300/40-0		TCONT_CP	TCONT_CP	Continuous temperature controller with pulse generator
S7-1500/300/40-0		TCONT_S	TCONT_S	Temperature controller for actuators with integrating behavior
S7-300/400	PID Self Tuner	TUN_EC	TUN_EC	Optimization of a continuous controller
S7-300/400		TUN_ES	TUN_ES	Optimization of a step controller
S7-300/400	Standard PID Control (PID Professional optional package)	PID_CP	PID_CP	Continuous controller with pulse generator
S7-300/400		PID_ES	PID_ES	Step controller for actuators with integrating behavior
S7-300/400		LP_SCHED	-	Distribute controller calls

CPU	Library	Instruction	Technology object	Description
S7-300/400	Modular PID Control (PID Professional optional package)	A_DEAD_B	-	Filter interfering signal from control deviation
S7-300/400		CRP_IN	-	Scale analog input signal
S7-300/400		CRP_OUT	-	Scale analog output signal
S7-300/400		DEAD_T	-	Delay output of input signal
S7-300/400		DEADBAND	-	Suppress small fluctuations to the process value
S7-300/400		DIF	-	Differentiate input signals over time
S7-300/400		ERR_MON		Monitor control deviation
S7-300/400		INTEG	-	Integrate input signals over time
S7-300/400		LAG1ST	-	First-order delay element
S7-300/400		LAG2ND	-	Second-order delay element
S7-300/400		LIMALARM	-	Report limit values
S7-300/400		LIMITER	-	Limiting the manipulated variable
S7-300/400		LMNGEN_C	-	Determine manipulated variable for continuous controller
S7-300/400		LMNGEN_S	-	Determine manipulated variable for step controller
S7-300/400		NONLIN	-	Linearize encoder signal
S7-300/400		NORM	-	Scale process value physically
S7-300/400		OVERRIDE	-	Switch manipulated variable from 2 PID controllers to 1 actuator
S7-300/400		PARA_CTL	-	Switch parameter sets
S7-300/400		PID	-	PID algorithm
S7-300/400		PUSLEGEN_M	-	Generate pulse for proportional actuators
S7-300/400		RMP_SOAK	-	Specify setpoint according to ramp / soak
S7-300/400		ROC_LIM	-	Limit rate of change
S7-300/400		SCALE_M	-	Scale process value
S7-300/400		SP_GEN	-	Specify setpoint manually
S7-300/400		SPLT_RAN	-	Split manipulated variable range
S7-300/400		SWITCH	-	Switch analog values
S7-300/400		LP_SCHED_M	-	Distribute controller calls

4.2 Steps for the configuration of a software controller

All SW-controllers are configured according to the same scheme:

Step	Description
1	Add technology object (Page 41)
2	Configure technology object (Page 42)

Step	Description
3	Call instruction in the user program (Page 43)
4	Download technology object to device (Page 44)
5	Commission software controller (Page 45)
6	Save optimized PID parameters in the project (Page 45)
7	Comparing values (Page 48)
8	Display instances of a technology object (Page 68)

4.3 Add technology objects

Add technology object in the project navigator

When a technology object is added, an instance DB is created for the instruction of this technology object. The configuration of the technology object is stored in this instance DB.

Requirement

A project with a CPU has been created.

Procedure

To add a technology object, proceed as follows:

1. Open the CPU folder in the project tree.
2. Open the "Technology objects" folder.
3. Double-click "Add new object".
   The "Add new object" dialog box opens.
4. Click on the "PID" button.
   All available PID-controllers for this CPU are displayed.
5. Select the instruction for the technology object, for example, PID_Compact.
6. Enter an individual name for the technology object in the "Name" input field.
7. Select the "Manual" option if you want to change the suggested data block number of the instance DB.
8. Click "Further information" if you want to add own information to the technology object.
9. Confirm with "OK".

Result

The new technology object has been created and stored in the project tree in the "Technology objects" folder. The technology object is used if the instruction for this technology object is called in a cyclic interrupt OB.

NOTE

You can select the "Add new and open" check box at the bottom of the dialog box. This opens the configuration of the technology object after adding has been completed.

4.4 Configure technology objects

The properties of a technology object on a S7-1200 CPU can be configured in two ways.

- In the Inspector window of the programming editor
- In the configuration editor

The properties of a technology object on a S7-300/400 CPU can only be configured in the configuration editor.

Inspector window of the programming editor

In the Inspector window of the programming editor you can only configure the parameters required for operation.
The offline values of the parameters are also shown in online mode. You can only change the online values in the commissioning window.
To open the Inspector window of the technology object, follow these steps:

1. Open the "Program blocks" folder in the project tree.
2. Double click the block (cyclic interrupt OB) in which you open the instruction of the SW-controller.
   The block is opened in the work area.
3. Click on the instruction of the SW-controller.
4. In the Inspector window, select the "Properties" and "Configuration" tabs consecutively.

Configuration window

For each technology object, there is a specific configuration window in which you can configure all properties.
To open the configuration window of the technology object, follow these steps:

1. Open the "Technology objects" folder in the project tree.
2. Open the technology object in the project tree.
3. Double-click the "Configuration" object.

Symbols

Icons in the area navigation of the configuration and in the Inspector window show additional details about the completeness of the configuration:

	The configuration contains default values and is complete. The configuration exclusively contains default values. With these default values the use of the technology object is possible without further changes.
	The configuration contains user-defined or automatically adjusted values and is complete All input fields of the configuration contain valid values and at least one default setting was changed.
	The configuration is incomplete or faulty At least one input field or a collapsible list contains no or one invalid value. The corresponding field or the drop-down list box has a red background. When clicked, the roll-out error message indicates the cause of the error.

The properties of a technology object are described in detail in the section for the technology object.

4.5 Call instruction in the user program

The instruction of the software controller must be called in a cyclic interrupt OB. The sampling time of the software controller is determined by the interval between the calls in the cyclic interrupt OB.

Requirement

The cyclic interrupt OB is created and the cycle time of the cyclic interrupt OB is correctly configured.

Procedure

Proceed as follows to call the instruction in the user program:

1. Open the CPU folder in the project tree.
2. Open the "Program blocks" folder.
3. Double-click the cyclic interrupt OB.
   The block is opened in the work area.
4. Open the "Technology" group in the "Instructions" window and the "PID Control" folder.
   The folder contains all instructions for software controllers that can be configured on the CPU.
5. Select the instruction and drag it to your cyclic interrupt OB.
   The "Call options" dialog box opens.
6. Select a technology object or type the name for a new technology object from the "Name" list.

Result

If the technology object does not exist yet, it is added. The instruction is added in the cyclic interrupt OB. The technology object is assigned to this call of the instruction.

4.6 Downloading technology objects to device

A new or modified configuration of the technology object must be downloaded to the CPU for the online mode. The following characteristics apply when downloading retentive data:

- **Software (changes only)**
  - S7-1200, S7-1500:
    Retentive data is retained.
  - S7-300/400:
    Retentive data is updated immediately. CPU does not change to Stop.
- **Download PLC program to device and reset**
  - S7-1200, S7-1500:
    Retentive data is updated at the next change from Stop to RUN. The PLC program can only be downloaded completely.
  - S7-300/400:
    Retentive data is updated at the next change from Stop to RUN.

Downloading retentive data to an S7-1200 or S7-1500 CPU

NOTE

The download and reset of the PLC program during ongoing system operation can result in serious damages or injuries in the case of malfunctions or program errors.

Make sure that dangerous states cannot occur before you download and reset the PLC program.

Proceed as follows to download the retentive data:

1. Select the entry of the CPU in the project tree.
2. Select the command "Download and reset PLC program" from the "Online" menu.
   - If you have not established an online connection yet, the "Extended download" dialog opens. In this case, set all required parameters for the connection and click "Download".
   - If the online connection has been defined, the project data is compiled, if necessary, and the dialog "Load preview" opens. This dialog displays messages and recommends actions necessary for download.
3. Check the messages.
   As soon as download is possible, the "Download" button becomes active.
4. Click on "Download".
   The complete PLC program is downloaded and the "Load results" dialog opens. This dialog displays the status and the actions after the download.
5. If the modules are to restart immediately after the download, select the check box "Start all".
6. Close the dialog "Download results" with "Finish".

Result

The complete PLC program is downloaded to the device. Blocks that only exist online in the device are deleted. By downloading all affected blocks and by deleting any blocks in the device that are not required, you avoid inconsistencies between the blocks in the user program.
The messages under "Info > General" in the Inspector window indicate whether the download was successful.

4.7 Commissioning software controller

Procedure

To open the "Commissioning" work area of the technology object, follow these steps:

1. Open the "Technology objects" folder in the project tree.
2. Open the technology object in the project tree.
3. Double-click the "Commissioning" object.

The commissioning functions are specific for each controller and are described there.

4.8 Save optimized PID parameter in the project

The software controller is optimized in the CPU. Through this, the values in the instance-DB on the CPU no longer agree with those in the project.
To update the PID parameter in the project with the optimized PID parameters, proceed as follows:

Requirement

- An online connection to the CPU is established and the CPU is in "RUN" mode.
- The functions of the commissioning window have been enabled by means of the "Start" button.

Procedure

1. Open the CPU folder in the project tree.
2. Open the "Technology objects" folder.
3. Open a technology object.
4. Double click on "Commissioning".
5. Click on the icon "Upload PID parameters".
6. Save the project.

Result

The currently active PID parameters are stored in the project data. When reloading the project data in the CPU, the optimized parameters are used.

4.9 Working with multi-instance objects

If a function block (FB) calls another FB, its instance data can also be saved in the instance DB of the calling FB. This type of block call is referred to as a multi-instance. The PID software controllers support this type of call and can be used as multi-instance.

Advantages

The use of multi-instances offers the following advantages:

- Good structuring possibility
- Lower number of instance DBs
- Individually configured FBs as template for a software controller than you can instantiate as often as you wish

Restrictions

When using multi-instances for PID software controllers, the following restrictions are in place compared to using a single instance:

- No support of Openness for PID multi-instance objects
- No comparison of PID multi-instance objects in a comparison editor. Comparison is only possible via the block containing the multi-instance objects.
- No technology object-specific Inspector window of the programming editor for calling the PID_Compact, PID_3Step and PID_Temp instructions

Configuration of multi-instance objects

The configuration and commissioning of PID multi-instance objects is not opened via the "Technology objects" folder in the project tree, as is the case with single-instance objects. For multi-instance objects, you can find configuration and commissioning in the "Technology objects" tab of the detail view.

To open the configuration of multi-instance objects, follow these steps:

1. Select the FB or instance DB with the multi-instance object in the project tree.
2. Click on the "Technology objects" tab in the detail view.
3. Navigate to the desired multi-instance object.
4. Open the configuration of the multi-instance object.

NOTE

The configuration editor does not offer online functionality for multi-instance objects in an FB. Instance DBs do not have this restriction.

Commissioning of multi-instance objects

To open the commissioning of multi-instance objects, follow these steps:

1. Select the instance DB with the multi-instance object in the project tree.
2. Click on the "Technology objects" tab in the detail view.
3. Navigate to the desired multi-instance object.
4. Open the commissioning of the multi-instance object.

This functionality is not available for PID multi-instance objects in FBs.

NOTE

If PID multi-instance objects are in an array, you can only navigate to these multi-instance objects in the detail view if the number of array elements does not exceed 100. For arrays with more than 100 elements, the individual PID multi-instance objects are not displayed and the editors for configuration and commissioning are not available.

Example for the use of PID multi-instance objects

To use PID multi-instance objects for your application, you can do the following:

1. Add a function block to your program.
2. Call one or multiple suitable PID controllers with the "Multi-instance" call option in this FB.
3. Add your own application-dependent functionality in the same FB, for example, pre-processing of the setpoint.
4. Select the FB in the project tree and then open the configuration editors of the PID multi-instance objects via the "Technology objects" tab of the detail view.
5. Perform the configuration, which should be identical for all instances of the FB, in the configuration editors.
6. Close the configuration editors.
7. Instantiate the FB as required in the user program so that instance DBs are created.
8. Select one of these instance DBs in the project tree and then open the configuration editors of the PID multi-instance objects via the "Technology objects" tab of the detail view.
9. Perform the configuration, which is individual for this instance DB, in the configuration editors.
10. Close the configuration editors.
11. Repeat steps 8 to 10 for the other instance DBs with PID multi-instance objects.
12. Compile the program, load it into the device and set up an online connection.
13. Select an instance DB that contains PID multi-instance objects in the project tree and then open the commissioning editors of the PID multi-instance objects via the "Technology objects" tab of the detail view.
14. Commission the PID multi-instance objects.
15. Close the commissioning editors.
16. Repeat steps 13 to 15 for the other instance DBs with PID multi-instance objects.

4.10 Comparing values

4.10.1 Comparison display and boundary conditions

The "Compare values" function provides the following options:

- Comparison of configured start values of the project with the start values in the CPU and the actual values
- Direct editing of actual values and the start values of the project
- Immediate detection and display of input errors with suggested corrections
- Backup of actual values in the project
- Transfer of start values of the project to the CPU as actual values

Icons and operator controls

The following icons and operator controls are available:

Icon	Function
	Start value in PLC matches the configured Start value in project
	Start value in PLC does not match the configured Start value in project
	The comparison of the Start value in PLC with the configured Start value in project cannot be performed
	At least one of the two comparison values has a process-related or syntax error.
	Create snapshot of monitor values and accept setpoints of this snapshot as start values
	Load start values of setpoints as actual values (initialize setpoints)
	Opens the "Compare values" dialog

Boundary conditions

The "Compare values" function is available for S7-1200 and S7-1500 without limitations.
The following limitation applies to S7-300 and S7-400:
In monitoring mode, an S7-300/S7-400 cannot transfer the start values to the CPU. These values cannot be displayed online with "Compare values".
The actual values of the technology object are displayed and can be changed directly.

4.10.2 Comparing values

The procedure is shown in the following using "PID Parameters" as an example.

Requirements

- A project with a software controller is configured.
- The project is downloaded to the CPU.
- The configuration dialog is open in the project navigator.

Procedure

1. Open the desired software controller in the project navigation.
2. Double-click the "Configuration" object.
3. Navigate within the configuration window to the "PID Parameters" dialog.
4. Click the icon to activate monitoring mode.
   The icons and operator controls (Page 48) of the "Compare values" function are shown behind the parameters.
5. Click the desired parameter in the input box and change the parameter values manually by entering them directly.
   – If the background of the input box is gray, this value is a read-only value and cannot be changed.
   – To change the values in the "PID Parameters" dialog, enable manual entry by selecting the "Enable manual entry" check box beforehand.
6. Click the icon to open the dialog for the start values.
   This dialog indicates two values of the parameter:
   – Start value in CPU: The start value in the CPU is shown in the top part.
   – Start value in the project: The configured start value in the project is shown in the bottom part.
7. Enter the desired value in the input box for the project.

Error detection

The input of incorrect values is detected. Corrections are suggested in this case.

If you enter a value with incorrect syntax, a rollout containing the corresponding error message opens below the parameter. The incorrect value is not applied.

If you enter a value that is incorrect for the process, a dialog opens containing the error message and a suggested correction:

- Click "No" to accept this suggested correction and correct your input.
- Click "OK" to apply the incorrect value.

NOTICE
Malfunctions of the controller Values incorrect for the process can result in controller malfunctions.

Backing up actual values

Click the icon to transfer the actual controller values to the start values of your configured project.

Transferring project values to the CPU

Click the icon to transfer the configured values of your project to the CPU.

> **CAUTION**
>
> **Prevent personal injury and property damage!**
>
> Downloading and resetting of the user program while the plant is operating may result in significant property damage and severe personal injuries in the event of malfunctions or program errors.
>
> Make sure that dangerous states cannot occur before you download and reset the user program.

4.11 Parameter view

4.11.1 Introduction to the parameter view

The Parameter view provides you with a general overview of all relevant parameters of a technology object. You obtain an overview of the parameter settings and can easily change them in offline and online mode.

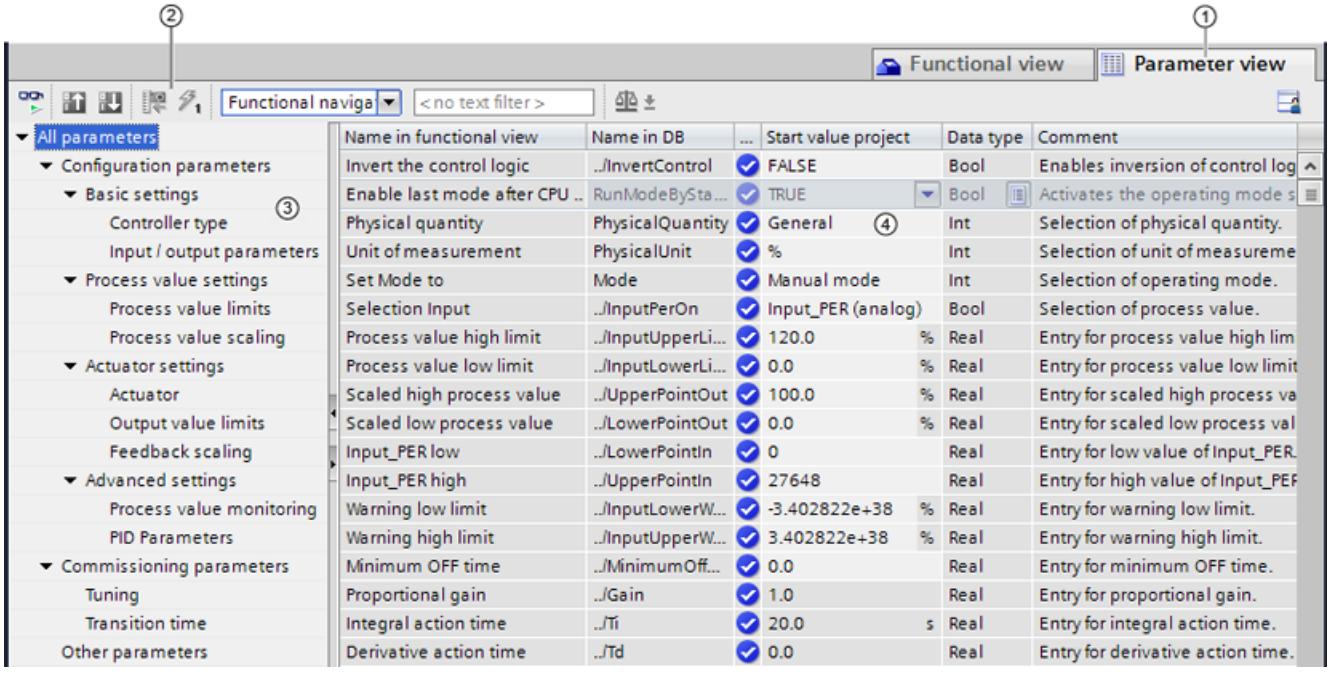

① "Parameter view" tab
② Toolbar (Page 51-52)
③ Navigation (Page 52)
④ Parameter table (Page 53)

Function scope

The following functions are available for analyzing the parameters of the technology objects and for enabling targeted monitoring and modification.

Display functions:

- Display of parameter values in offline and online mode
- Display of status information of the parameters
- Display of value deviations and option for direct correction
- Display of configuration errors
- Display of value changes as a result of parameter dependencies
- Display of all memory values of a parameter: Start value PLC, Start value project, Monitor value
- Display of the parameter comparison of the memory values of a parameter

Operator control functions:

- Navigation for quickly changing between the parameters and parameter structures.
- Text filter for faster searches for particular parameters.
- Sorting function for customizing the order of parameters and parameter groups to requirements.
- Memory function for backing up structural settings of the Parameter view.
- Monitoring and modifying of parameter values online.
- Change display format of value.
- Function for saving a snapshot of parameter values of the CPU in order to capture momentary situations and to respond to them.
- Function for applying a snapshot of parameter values as start values.
- Download of modified start values to the CPU.
- Comparison functions for comparing parameter values with one another.

Validity

The Parameter view described here is available for the following technology objects:

- PID_Compact
- PID_3Step
- PID_Temp
- CONT_C (S7-1500 only)
- CONT_S (S7-1500 only)
- TCONT_CP (S7-1500 only)
- TCONT_S (S7-1500 only)
- TO_Axis_PTO (S7-1200 Motion Control)
- TO_Positioning_Axis (S7-1200 Motion Control)
- TO_CommandTable_PTO (S7-1200 Motion Control)
- TO_CommandTable (S7-1200 Motion Control)

4.11.2 Structure of the parameter view

4.11.2.1 Toolbar

The following functions can be selected in the toolbar of the parameter view.

Icon	Function	Explanation
	Monitor all	Starts the monitoring of visible parameters in the active Parameter view (online mode).
	Create snapshot of monitor values and accept setpoints of this snapshot as start values	Applies the current monitor values to the “Snapshot” column and updates the start values in the project. Only in online mode for PID_Compact, PID_3Step and PID_Temp.
	Load start values of setpoints as actual values (initialize setpoints)	Transfers the start values updated in the project to the CPU. Only in online mode for PID_Compact, PID_3Step and PID_Temp.
	Create snapshot of monitor values	Applies the current monitor values to the “Snapshot” column. Only in online mode.
	Modify all selected parameters immediately and once	This command is executed once and as quickly as possible without reference to any particular point in the user program. Only in online mode.
Functional naviga	Select navigation structure	Toggles between functional navigation and data navigation.
< no text filter >	Text filter...	After entry of a character string: Display of all parameters containing the specified string in one of the currently visible columns.
	Selection of compare values	Selection of parameter values that are to be compared with one another in online mode (Start value in project, Start value in PLC, Snapshot) Only in online mode.
	Save window settings	Saves your display settings for the Parameter view (e.g., selected navigation structure, activated table columns, etc.)

4.11.2.2 Navigation

Within the "Parameter view" tab, the following alternative navigation structures can be selected.

Navigation		Explanation
Functional navigation	All parameters Configuration parameters Commissioning parameters Other parameters	In the functional navigation, the structure of the parameters is based on the structure in the configuration dialog ("Functional view" tab), commissioning dialog, and diagnostics dialog. The last group "Other parameters" contains all other parameters of the technology object.
Data navigation	All parameters Input Output InOut Static Other parameters	In the data navigation, the structure of the parameters is based on the structure in the instance DB / technology DB. The last group "Other parameters" contains the parameters that are not contained in the instance DB / technology DB.

You can use the "Select navigation structure" drop-down list to toggle the navigation structure.

4.11.2.3 Parameter table

The table below shows the meaning of the individual columns of the parameter table. You can show or hide the columns as required.

- Column "Offline" = X: Column is visible in offline mode.
- Column "Online" = X: Column is visible in online mode (online connection to the CPU).

Column	Explanation	Offline	Online
Name in functional view	Name of the parameter in the functional view. The display field is empty for parameters that are not configured via the technology object.	X	X
Full name in DB	Complete path of the parameter in the instance DB / technology DB. The display field is empty for parameters that are not contained in the instance DB / technology DB.	X	X
Name in DB	Name of the parameter in the instance DB / technology DB. If the parameter is part of a structure or UDT, the prefix ". ./" is added. The display field is empty for parameters that are not contained in the instance DB / technology DB.	X	X
Status of configuration	Display of the completeness of the configuration using status symbols. see Status of configuration (offline) (Page 60)	X	
Compare result	Result of the "Compare values" function. This column is shown if there is an online connection and the "Monitor all" button is selected.		X
Start value project	Configured start value in the project. Error indication if entered values have a syntax or process-related error.	X	X
Default value	Value that is pre-assigned to the parameter. The display field is empty for parameters that are not contained in the instance DB / technology DB.	X	X
Snapshot	Snapshot of the current values in the CPU (monitor values). Error indication if values have a process-related error.	X	X
Start value PLC	Start value in the CPU. This column is shown if there is an online connection and the "Monitor all" button is selected. Error indication if values have a process-related error.		X
Monitor value	Current value in the CPU. This column is shown if there is an online connection and the "Monitor all" button is selected. Error indication if values have a process-related error.		X
Modify value	Value that is to be used to change the monitor valuet. This column is shown if there is an online connection and the "Monitor all" button is selected. Error indication if entered values have a syntax or process-related error.		X
Selection for transmission	Selection of the Modify values that are to be transmitted using the "Modify all selected parameters immediately and once" button. This column is displayed together with the "Modify value" column.		X

Column	Explanation	Offline	Online
Minimum value	Minimum process-related value of the parameter. If the minimum value is dependent on other parameters, it is defined: • Offline: By the Start value project. • Online: By the Monitor values.	X	X
Maximum value	Maximum process-related value of the parameter. If the maximum value is dependent on other parameters, it is defined: • Offline: By the Start value project. • Online: By the Monitor values.	X	X
Setpoint	Designates the parameter as a setpoint. These parameters can be initialized online.	X	X
Data type	Data type of the parameter. The display field is empty for parameters that are not contained in the instance DB / technology DB.	X	X
Retain	Designates the value as a retentive value. The values of retentive parameters are retained even after the voltage supply is switched off.	X	X
Accessible from HMI	Indicates whether the HMI can access this parameter during runtime.	X	X
Visible in HMI	Indicates whether the parameter is visible in the selection list of the HMI by default.	X	X
Comment	Brief description of the parameter.	X	X

See also

Comparing values (Page 47)

4.11.3 Opening the parameter view

Requirement

The technology object has been added in the project tree, i.e., the associated instance DB / technology DB of the instruction has been created.

Procedure

1. Open the "Technology objects" folder in the project tree.
2. Open the technology object in the project tree.
3. Double-click the "Configuration" object.
4. Select the "Parameter view" tab in the top right corner.

Result

The Parameter view opens. Each displayed parameter is represented by one row in the parameter table.
The displayable parameter properties (table columns) vary depending on whether you are working with the Parameter view in offline or online mode.

In addition, you can selectively display and hide individual table columns.

See also

Default setting of the parameter view (Page 55)

4.11.4 Default setting of the parameter view

Default settings

To enable you to work efficiently with the Parameter view, you can customize the parameter display and save your settings.
The following customizations are possible and can be saved:

- Show and hide columns
- Change column width
- Change order of the columns
- Toggle navigation
- Select parameter group in the navigation
- Selection of compare values

Show and hide columns

To show or hide columns in the parameter table, follow these steps:

1. Position the cursor in the header of the parameter table.
2. Select the "Show/Hide" command in the shortcut menu.
   The selection of available columns is displayed.
3. To show a column, select the check box for the column.
4. To hide a column, clear the check box for the column.

or

1. Position the cursor in the header of the parameter table.
2. Select the "Show all columns" command in the shortcut menu if all columns of the offline or online mode are to be displayed.

Some columns can only be displayed in online mode: see Parameter table (Page 53).

Change column width

To customize the width of a column so that all texts in the rows can be read, follow these steps:

1. Position the cursor in the header of the parameter table to the right of the column to be customized until the shape of the cursor changes to a cross.
2. Then double-click this location.

or

1. Open the shortcut menu on the header of the parameter table.
2. Click
   - "Optimize column width" or
   - "Optimize width of all columns".

If the column width setting is too narrow, the complete content of individual fields are shown if you hover the cursor briefly over the relevant field.

Change order of the columns

The columns of the parameter table can be arranged in any way.

To change the order of the columns, follow these steps:

1. Click on the column header and use a drag-and-drop operation to move it to the desired location.
   When you release the mouse button, the column is anchored to the new position.

Toggle navigation

To toggle the display form of the parameters, follow these steps:

1. Select the desired navigation in the “Select navigation structure” drop-down list.
   - Data navigation
   - Functional navigation

See also Navigation (Page 52).

Select parameter group in the navigation

Within the selected navigation, you choose between the “All parameters” display or the display of a subordinate parameter group of your choice.

1. Click the desired parameter group in the navigation.
   The parameter table only displays the parameters of the parameter group.

Selection of compare values (online)

To set the compare values for the “Compare values” function, follow these steps:

1. Select the desired compare values in the “Selection of compare values” drop-down list.
   - Start value project / Start value PLC
   - Start value project / Snapshot
   - Start value PLC / Snapshot

The “Start value project / Start value PLC” option is set by default.

Saving the default setting of the Parameter view

To save the above customizations of the Parameter view, follow these steps:

1. Customize the Parameter view according to your requirements.
2. Click the “Save window settings” button at the top right of the Parameter view.

4.11.5 Working with the parameter view

4.11.5.1 Overview

The following table provides an overview of the functions of the Parameter view in online and offline mode described in the following.

- Column "Offline" = X: This function is possible in offline mode.
- Column "Online" = X: This function is possible in online mode.

Function/action	Offline	Online
Filtering the parameter table (Page 57)	X	X
Sorting the parameter table (Page 58)	X	X
Transferring parameter data to other editors (Page 58)	X	X
Indicating errors (Page 59)	X	X
Editing start values in the project (Page 59)	X	X
Status of configuration (offline) (Page 60)	X	
Monitoring values online in the parameter view (Page 61)		X
Create snapshot of monitor values (Page 63)		X
Modifying values (Page 63)		X
Comparing values (Page 65)		X
Applying values from the online program as start values (Page 66)		X
Initializing setpoints in the online program (Page 67)		X

4.11.5.2 Filtering the parameter table

You can filter the parameters in the parameter table in the following ways:

- With the text filter
- With the subgroups of the navigation

Both filter methods can be used simultaneously.

With the text filter

Texts that are visible in the parameter table can be filtered. This means only texts in displayed parameter rows and columns can be filtered.

1. Enter the desired character string for filtering in the “Text filter...” input box.
   The parameter table displays only the parameters containing the character string.

The text filtering is reset.

- When another parameter group is selected in the navigation.
- When navigation is changed from data navigation to functional navigation, or vice versa.

With the subgroups of the navigation

1. Click the desired parameter group in the navigation, e.g., "Static".
   The parameter table only shows the static parameters. You can select further subgroups for some groups of the navigation.
2. Click “All parameters” in the navigation if all parameters are to be shown again.

4.11.5.3 Sorting the parameter table

The values of the parameters are arranged in rows. The parameter table can be sorted by any displayed column.

- In columns containing numerical values, sorting is based on the magnitude of the numerical value.
- In text columns, sorting is alphabetical.

Sorting by column

1. Position the cursor in the header cell of the desired column.
   The background of this cell turns blue.
2. Click the column header.

Result

The entire parameter table is sorted by the selected column. A triangle with tip facing up appears in the column header.
Clicking the column header again changes the sorting as follows:

- Symbol “▲”: Parameter table is sorted in ascending order.
- Symbol “▼”: Parameter table is sorted in descending order.
- No symbol: The sorting is removed again. The parameter table assumes the default display.

The “../” prefix in the “Name in DB” column is ignored when sorting.

4.11.5.4 Transferring parameter data to other editors

After selecting an entire parameter row of the parameter table, you can use the following:

- Drag-and-drop
- <Ctrl+C>/<Ctrl+V>
- Copy/Paste via shortcut menu

Transfer parameters to the following editors of the TIA Portal:

- Program editor
- Watch table
- Signal table for trace function

The parameter is inserted with its full name: See information in “Full name in DB” column.

4.11.5.5 Indicating errors

Error indication

Parameter assignment errors that result in compilation errors (e.g. limit violation) are indicated in the Parameter view.
Every time a value is input in the Parameter view, a check is made for process-related and syntax errors and the result is indicated.
Bad values are indicated by:

- Red error symbol in the "Status of configuration" (offline mode) or "Compare result" (online mode, depending on the selected comparison type) columns

and/or

- Table field with red background
  If you click the bad field, a roll-out error message appears with information of the permissible value range or the required syntax (format)

Compilation error

From the error message of the compiler, you can directly open the Parameter view (functional navigation) containing the parameter causing the error in situations where the parameter is not displayed in the configuration dialog.

4.11.5.6 Editing start values in the project

With the Parameter view, you can edit the start values in the project in offline mode and online mode.

- You make value changes in the “Start value project” column of the parameter table.
- In the “Status of configuration” column of the parameter table, the progress of the configuration is indicated by the familiar status symbols from the configuration dialog of the technology object.

Boundary conditions

- If other parameters depend on the parameter whose start value was changed, the start value of the dependent parameters are also adapted.
- If a parameter of a technology object is not editable, it is also not editable in the parameter view. The ability to edit a parameter can also depend on the values of other parameters.

Defining new start values

To define start values for parameters in the Parameter view, follow these steps:

1. Open the Parameter view of the technology object.
2. Enter the desired start values in the "Start value project" column. The value must match the data type of the parameter and must not exceed the value range of the parameter. The limits of the value range can be seen in the “Maximum value” and “Minimum value” columns.

The "Status of configuration" column indicates the progress of the configuration with colored symbols.

See also Status of configuration (offline) (Page 60)

Following adaptation of the start values and downloading of the technology object to the CPU, the parameters take the defined value at startup if they are not declared as retentive (“Retain” column).

Error indication

When a start value is input, a check is made for process-related and syntax errors and the result is indicated.

Bad start values are indicated by:

- Red error symbol in the "Status of configuration" (offline mode) or "Compare result" (online mode, depending on the selected comparison type) columns

and/or

- Red background in the “Start value project” field
  If you click on the bad field, a roll-out error message appears with information of the permissible value range or the necessary syntax (format)

Correcting bad start values

1. Correct bad start values using information from the roll-out error message.
   Red error symbol, red field background, and roll-out error message are no longer displayed.

The project cannot be successfully compiled unless the start values are error-free.

4.11.5.7 Status of configuration (offline)

The status of the configuration is indicated by icons:

- In the “Status of configuration” column in the parameter table
- In the navigation structure of the functional navigation and data navigation

Symbol in “Status of configuration” column

Symbol	Meaning
✔	The start value of the parameter corresponds to the default value and is valid. A start value has not yet been defined by the user.

Symbol	Meaning
	The start value of the parameter contains a value defined by the user or an automatically adjusted value. The start value is different than the default value. The start value is error-free and valid.
	The start value of the parameter is invalid (syntax or process-related error). The input box has a red background. When clicked, the roll-out error message indicates the cause of the error.
	Only for S7-1200 Motion Control: The start value of the parameter is valid but contains warnings. The input box has a yellow background.
	The parameter is not relevant in the current configuration.

Symbol in the navigation

The symbols in the navigation indicate the progress of the configuration in the same way as in the configuration dialog of the technology object.

See also

Configure technology objects (Page 42)

4.11.5.8 Monitoring values online in the parameter view

You can monitor the values currently taken by the parameters of the technology object in the CPU (monitor values) directly in the Parameter view.

Requirements

- There is an online connection.
- The technology object is downloaded to the CPU.
- The program execution is active (CPU in "RUN").
- The Parameter view of the technology object is open.

Procedure

1. Start the monitoring by clicking .
   As soon as the Parameter view is online, the following columns are additionally displayed:
   – Compare result
   – Start value PLC
   – Monitor value
   – Modify value
   – Selection for transmission
   The "Monitor value" column shows the current parameter values on the CPU.
   Meaning of the additional columns: see Parameter table (Page 53)
2. Stop the monitoring by clicking again.

Display

All columns that are only available online have an orange background:

- Values in light-orange cells can be changed.
- Values in cells with a dark orange background cannot be changed.

4.11.5.9 Change display format of value

The display format of the value can be selected via the shortcut menu of a table row in the Parameter view of the technology object.

The display format of the following values can be changed both in online mode and in offline mode:

- Start value project
- Start value PLC
- Maximum value
- Minimum value
- Snapshot
- Monitor value
- Default value
- Modify value

The set display format applies to all values of the table row.

The following display formats of the value can be changed:

- Default
- Hex
- Octal
- Bin
- Dec (+/-)
- DEC

Depending on the parameter selected in the parameter view, only the supported display formats can be selected.

Requirements

- The Parameter view of the technology object is open.

Procedure

To change the display format of the value, proceed as follows:

1. Select one or more table rows in which you want to change the display format.
2. Select the "Display format" command in the shortcut menu.
3. Select the desired display format.

NOTE

To change the display format of a certain data type in multiple table rows, sort the Parameter view by this data type. Then select the first and last table row with this data type while keeping the <Shift> key pressed and change the display format for the selected table rows.

4.11.5.10 Create snapshot of monitor values

You can back up the current values of the technology object on the CPU (monitor values) and display them in the Parameter view.

Requirements

- There is an online connection.
- The technology object is downloaded to the CPU.
- The program execution is active (CPU in "RUN").
- The Parameter view of the technology object is open.
- The “Monitor all” button is selected.

Procedure

To show the current parameter values, follow these steps:

1. In the Parameter view, click the “Create snapshot of monitor values" icon .

Result

The current monitor values are transferred once to the "Snapshot" column of the parameter table.
You can analyze the values "frozen" in this way while the monitor values continue to be updated in the "Monitor values" column.

4.11.5.11 Modifying values

With the Parameter view, you can modify values of the technology object in the CPU.
You can assign values to the parameter once (Modify value) and modify them immediately. The modify request is executed as quickly as possible without reference to any particular point in the user program.

DANGER

Danger when modifying:

Changing the parameter values while the plant is operating may result in severe damage to property and personal injury in the event of malfunctions or program errors.

Make sure that dangerous states cannot occur before you use the "Modify" function.

Requirements

- There is an online connection.
- The technology object is downloaded to the CPU.
- The program execution is active (CPU in "RUN").
- The Parameter view of the technology object is open.
- The “Monitor all” button is selected.
- The parameter can be modified (associated field in the "Modify value" column has a light-orange background).

Procedure

To modify parameters immediately, follow these steps:

1. Enter the desired modify values in the “Modify values” column of the parameter table.
2. Check whether the check box for modifying is selected in the "Select for transmission" column.
   The modify values and associated check boxes of dependent parameters are automatically adapted at the same time.
3. Click the “Modify all selected parameters immediately and once” icon .

The selected parameters are modified once and immediately with the specified values and can be monitored in the "Modify values" column. The check boxes for modifying in the "Selection for transmission" column are automatically cleared after the modify request is complete.

Error indication

When a start value is input, a check is made immediately for process-related and syntax errors and the result is indicated.

Bad start values are indicated by:

- Red background in the “Modify value” field

and

- If you click the bad field, a roll-out error message appears with information of the permissible value range or the necessary syntax (format)

Bad modify values

- Modify values with process-related errors can be transmitted.
- Modify values with syntax errors **cannot** be transmitted.

4.11.5.12 Comparing values

You can use comparison functions to compare the following memory values of a parameter:

- Start value project
- Start value PLC
- Snapshot

Requirements

- There is an online connection.
- The technology object is downloaded to the CPU.
- The program execution is active (CPU in "RUN").
- The Parameter view of the technology object is open.
- The “Monitor all” button is selected.

Procedure

To compare the start values on the various target systems, follow these steps:

1. Click the "Selection of comparison values" icon .
   A selection list containing the comparison options opens:
   – Start value project - Start value PLC (default setting)
   – Start value project - Snapshot
   – Start value PLC - Snapshot
2. Select the desired comparison option.
   The selected comparison option is executed as follows:
   – A scales symbol appears in the header cells of the two columns selected for comparison.
   – Symbols are used in the "Compare result" column to indicate the result of the comparison of the selected columns.

Symbol in "Compare result" column

Symbol	Meaning
	The compare values are equal and error-free.
	The compare values are not equal and error-free.

Symbol	Meaning
	At least one of the two compare values has a process-related or syntax error.
	The comparison cannot be performed. At least one of the two comparison values is not available (e.g. snapshot).
	Comparison of the value is inappropriate since it is not relevant in one of the configurations.

Symbol in the navigation

The symbols are shown in the same way in the navigation if the comparison result applies to at least one of the parameters below the displayed navigation structure.

4.11.5.13 Applying values from the online program as start values

In order to apply optimized values from the CPU to the project as start values, you create a snapshot of the monitor values. Values of the snapshot marked as a "Setpoint" are then applied to the project as start values.

Requirements

- The technology object is of the type "PID_Compact", "PID_3Step" or "PID_Temp".
- There is an online connection.
- The technology object is downloaded to the CPU.
- The program execution is active (CPU in "RUN").
- The Parameter view of the technology object is open.
- The “Monitor all” button is selected.

Procedure

To apply optimized values from the CPU, follow these steps:

1. Click the "Create snapshot of monitor values and accept setpoints of this snapshot as start values" icon .

Result

The current monitor values are applied to the "Snapshot" column and their setpoints are copied to the "Start value in project" column as new start values.

NOTE

Applying values of individual parameters

You can also apply the values of individual parameters that are not marked as a setpoint from the "Snapshot" column to the "Start values project" column. To do so, copy the values and insert them into the "Start value in project" column using the "Copy" and "Paste" commands in the shortcut menu.

4.11.5.14 Initializing setpoints in the online program

You can initialize all parameters that are marked as a "Setpoint" in the Parameter view with new values in the CPU in one step. In so doing, the start values are downloaded from the project to the CPU. The CPU remains in "RUN" mode.

To avoid data loss on the CPU during a cold restart or warm restart, you must also download the technology object to the CPU.

DANGER

Danger when changing parameter values

Changing the parameter values while the plant is operating may result in severe damage to property and personal injury in the event of malfunctions or program errors.

Make sure that dangerous states cannot occur before you reinitialize the setpoints.

Requirements

- The technology object is of the type "PID_Compact", "PID_3Step" or "PID_Temp".
- There is an online connection.
- The technology object is downloaded to the CPU.
- The program execution is active (CPU in "RUN").
- The Parameter view of the technology object is open.
- The “Monitor all” button is selected.
- The parameters marked as " have a "Start value in project" that is free of process-related and syntax errors.

Procedure

To initialize all setpoints, follow these steps:

1. Enter the desired values in the "Start value in project" column.
   Ensure that the start values are free of process-related and syntax errors.
2. Click the icon "Load start values of setpoints as actual values".

Result

The setpoints in the CPU are initialized with the start values from the project.

4.12 Display instance DB of a technology object.

An instance DB, in which the parameter and static variables are saved, is created for each technology object.

Procedure

To display the instance DB of a technology object, proceed as follows:

1. Open the CPU folder in the project tree.
2. Open the "Technology objects" folder.
3. Highlight a technology object.
4. Select the command "Open DB editor" in the shortcut menu.

Using PID_Compact

5

5.1 Technology object PID_Compact

The technology object PID_Compact provides a continuous PID controller with integrated optimization. You can alternatively configure a pulse controller. Both manual and automatic mode are possible.

PID-Compact continuously acquires the measured process value within a control loop and compares it with the required setpoint. From the resulting control deviation, the instruction PID_Compact calculates an output value by which the process value is adapted as quickly and stable as possible to the setpoint. The output value for the PID controller consists of three actions:

- **Proportional** action
  The proportional action of the output value increases in proportion to the control deviation.
- **I** action
  The integral action of the output value increases until the control deviation has been balanced.
- **D** action
  The derivative action increases with the rate of change of control deviation. The process value is corrected to the setpoint as quickly as possible. The derivative action will be reduced again if the rate of change of control deviation drops.

The instruction PID_Compact calculates the proportional, integral and derivative parameters for your controlled system during pretuning. Fine tuning can be used to tune the parameters further. You do not need to manually determine the parameters.

Additional information

- Overview of software controller (Page 39)
- Add technology objects (Page 41)
- Configure technology objects (Page 42)
- Configuring PID_Compact V2 (Page 69-70)
- Configuring PID_Compact V1 (Page 87)

FAQ

For more information, see the following FAQs in the Siemens Industry Online Support:

- Entry ID 79047707 (https://support.industry.siemens.com/cs/ww/en/view/79047707)

5.2 PID_Compact V2

5.2.1 Configuring PID_Compact V2

5.2.1.1 Basic settings V2

Configure the following properties of the "PID_Compact" technology object under "Basic settings" in the Inspector window or in the configuration window:

- Physical quantity
- Control logic
- Start-up behavior after reset
- Setpoint (only in the Inspector window)
- Process value (only in the Inspector window)
- Output value (only in the Inspector window)

Setpoint, process value and output value

You can only configure the setpoint, process value and output value in the Inspector window of the programming editor. Select the source for each value:

- Instance DB
  The value saved in the instance DB is used.
  Value must be updated in the instance DB by the user program.
  There should be no value at the instruction.
  Change via HMI possible.
- Instruction
  The value connected to the instruction is used.
  The value is written to the instance DB each time the instruction is called.
  No change via HMI possible.

Physical quantity

Select the unit of measurement and physical quantity for the setpoint and the process value in the "Controller type" group. The setpoint and the process value are displayed in this unit.

Control logic

An increase of the output value is generally intended to cause an increase in the process value. This is referred to as a normal control logic.

PID_Compact does not work with negative proportional gain. Select the check box "Invert control logic" to reduce the process value with a higher output value.

Examples

- Opening the drain valve will reduce the level of a container's contents.
- Increasing cooling will reduce the temperature.

Startup characteristics

1. To switch to "Inactive" mode after CPU restart, clear the "Activate Mode after CPU restart" check box.
   To switch to the operating mode saved in the Mode parameter after CPU restart, select the "Activate Mode after CPU restart" check box.
2. In the "Set Mode to" drop-down list, select the mode that is to be enabled after a complete download to the device.
   After a complete download to the device, PID_Compact starts in the selected operating mode. With each additional restart, PID_Compact starts in the mode that was last saved in Mode.

Example

You have selected the "Activate Mode after CPU restart" check box and the entry "Pretuning" in the "Set Mode to" list. After a complete download to the device, PID_Compact starts in the "Pretuning" mode. If pretuning is still active, PID_Compact starts in "Pretuning" mode again after restart of the CPU. If pretuning was successfully completed and automatic mode is active, PID_Compact starts in "Automatic mode" after restart of the CPU.

Procedure

Proceed as follows to define a fixed setpoint:

1. Select "Instance DB".
2. Enter a setpoint, e.g. 80° C.
3. Delete any entry in the instruction.

Proceed as follows to define a variable setpoint:

1. Select "Instruction".
2. Enter the name of the REAL variable in which the setpoint is saved.
   Program-controlled assignment of various values to the REAL variable is possible, for example for the time controlled change of the setpoint.

PID_Compact will scale the value of the analog input to the physical quantity if you use the analog input value directly.

You will need to write a program for processing if you wish first to process the analog input value. The process value is, for example, not directly proportional to the value at the analog input. The processed process value must be in floating point format.

Procedure

Proceed as follows to use the analog input value without processing:

1. Select the entry "Input_PER" in the drop-down list "Input".
2. Select "Instruction" as source.
3. Enter the address of the analog input.

Proceed as follows to use the processed process value in floating point format:

1. Select the entry "Input" in the drop-down list "Input".
2. Select "Instruction" as source.
3. Enter the name of the variable in which the processed process value is saved.

PID_Compact offers three output values. Your actuator will determine which output value you use.

- Output_PER
  The actuator is triggered via an analog output and controlled with a continuous signal, e.g. 0...10V, 4...20mA.
- Output
  The output value needs to be processed by the user program, for example because of nonlinear actuator response.
- Output_PWM
  The actuator is controlled via a digital output. Pulse width modulation creates minimum ON and minimum OFF times.

Procedure

Proceed as follows to use the analog output value:

1. Select the entry "Output_PER (analog)" in the drop-down list "Output".
2. Select "Instruction".
3. Enter the address of the analog output.

Proceed as follows to process the output value using the user program:

1. Select the entry "Output" in the drop-down list "Output".
2. Select "Instance DB".
   The calculated output value is saved in the instance data block.
3. For the preparation of the output value, use the output parameter Output.
4. Transfer the processed output value to the actuator via a digital or analog CPU output.

Proceed as follows to use the digital output value:

1. Select the entry "Output_PWM" in the drop-down list "Output".
2. Select "Instruction".
3. Enter the address of the digital output.

5.2.1.2 Process value settings V2

If you have configured the use of Input_PER in the basic setting, you must convert the value of the analog input to the physical quantity of the process value. The current configuration is displayed in the Input_PER display.
Input_PER will be scaled using a low and high value pair if the process value is directly proportional to the value of the analog input.

Procedure

To scale the process value, follow these steps:

1. Enter the low pair of values in the "Scaled low process value" and "Low" input fields.
2. Enter the high pair of values in the "Scaled high process value" and "High" input boxes.

Default settings for the value pairs are stored in the hardware configuration. To use the value pairs from the hardware configuration, follow these steps:

1. Select the PID_Compact instruction in the programming editor.
2. Interconnect Input_PER with an analog input in the basic settings.
3. Click the "Automatic setting" button in the process value settings.

The existing values will be overwritten with the values from the hardware configuration.

You must specify an appropriate absolute high limit and low limit for the process value as limit values for your controlled system. As soon as the process value violates these limits, an error occurs (ErrorBits = 0001h). Tuning is canceled when the process value limits are violated. You can configure how PID_Compact reacts to an error in automatic mode in the output value settings.

5.2.1.3 Advanced settings V2

Configure a warning high and low limit for the process value in the "Process value monitoring" configuration window. If one of the warning limits is exceeded or undershot during operation, a warning will be displayed at the PID_Compact instruction:

- At the InputWarning_H output parameter if the warning high limit has been exceeded
- At the InputWarning_L output parameter if the warning low limit has been undershot

The warning limits must be within the process value high and low limits.
The process value high and low limits will be used if you do not enter values.

Example

Process value high limit = 98 °C; warning high limit = 90 °C
Warning low limit = 10 °C; process value low limit = 0 °C
PID_Compact will respond as follows:

Process value	InputWarning_H	InputWarning_L	ErrorBits	Operating mode
> 98 °C	TRUE	FALSE	0001h	Inactive or Substitute output value with error monitoring
≤ 98 °C and > 90 °C	TRUE	FALSE	0000h	Automatic mode
≤ 90 °C and ≥ 10 °C	FALSE	FALSE	0000h	Automatic mode
< 10 °C and ≥ 0 °C	FALSE	TRUE	0000h	Automatic mode
< 0 °C	FALSE	TRUE	0001h	Inactive or Substitute output value with error monitoring

In the output value settings, you can specify the reaction of PID_Compact when the process value high limit or low limit is violated.

See also

Parameters State and Mode V2 (Page 234)

Via pulse width modulation, the value at the output parameter Output is transformed into a pulse sequence that is output at output parameter Output_PWM.

Output is calculated in the PID algorithm sampling time. The sampling time is used as time period of the pulse width modulation.

The PID algorithm sampling time is determined during pretuning or fine tuning. If manually setting the PID parameters, you will also need to configure the PID algorithm sampling time.

Output_PWM is output in the PID_Compact sampling time. The PID_Compact sampling time is equivalent to the cycle time of the calling OB.

The pulse duration is proportional to the value at Output and is always an integer multiple of the PID_Compact sampling time.

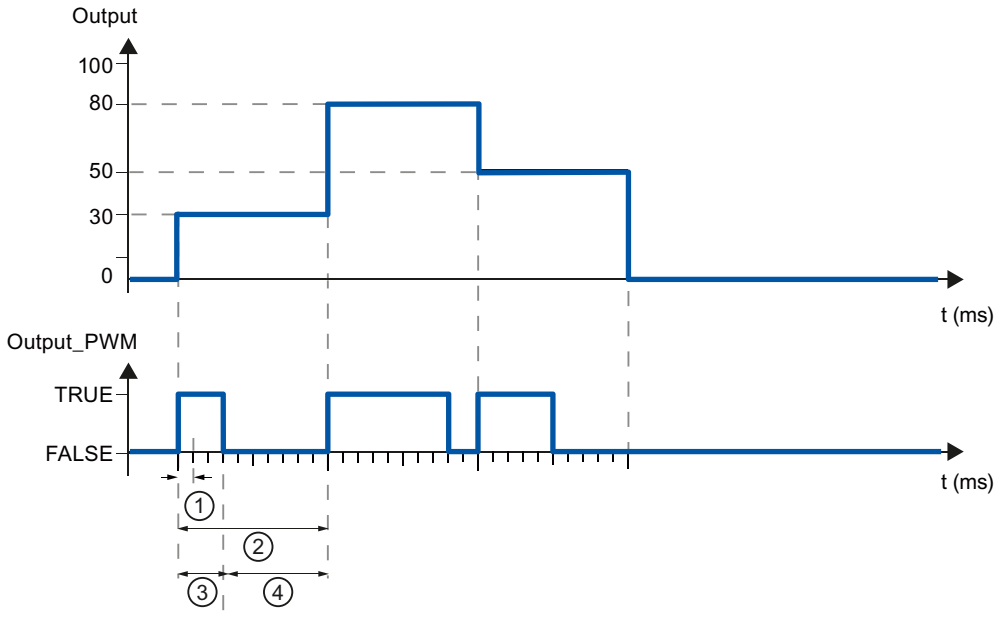

① PID_Compact sampling time

② PID algorithm sampling time

③ Pulse duration

④ Break time

The "Minimum ON time" and the "Minimum OFF time" are rounded to an integer multiple of the PID_Compact sampling time.

A pulse or a break is never shorter than the minimum ON or OFF time. The inaccuracies this causes are added up and compensated in the next cycle.

Example

PID_Compact sampling time (equivalent to the cycle time of the calling OB) = 100 ms

PID algorithm sampling time (equivalent to the time period)= 1000 ms

Minimum ON time = 200 ms

Output is a constant 15%. The smallest pulse that PID_Compact can output is 20%. In the first cycle, no pulse is output. In the second cycle, the pulse not output in the first cycle is added to the pulse of the second cycle.

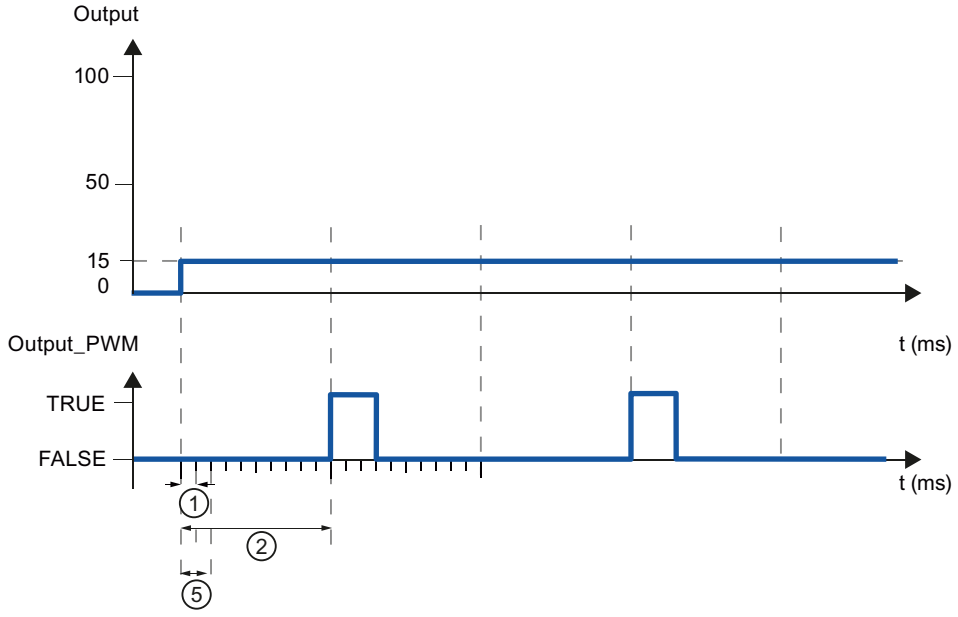

① PID_Compact sampling time

② PID algorithm sampling time

⑤ Minimum ON time

In order to minimize operation frequency and conserve the actuator, extend the minimum ON and OFF times.

If you are using "Output" or "Output_PER", you must configure the value 0.0 for the minimum ON and OFF times.

NOTE

The minimum ON and OFF times only affect the output parameter Output_PWM and are not used for any pulse generators integrated in the CPU.

Output value limits

In the "Output value limits" configuration window, configure the absolute limits of your output value in percent. Absolute output value limits are not violated in neither manual mode nor automatic mode. If an output value outside the limits is specified in manual mode, the effective value is limited in the CPU to the configured limits.

The output value limits must match the control logic.

The valid output value limit values depend on the Output used.

Output	-100.0 to 100.0%
Output_PER	-100.0 to 100.0%

Output_PWM	0.0 to 100.0%

Reaction to error

NOTICE
Your system may be damaged. If you output "Current value while error pending " or "Substitute output value while error pending" in the event of an error, PID_Compact remains in automatic mode. This may cause a violation of the process value limits and damage your system. It is essential to configure how your controlled system reacts in the event of an error to protect your system from damage.

PID_Compact is preset so that the controller stays active in most cases in the event of an error. If errors occur frequently in controller mode, this default reaction has a negative effect on the control response. In this case, check the Errorbits parameter and eliminate the cause of the error.

PID_Compact generates a programmable output value in response to an error:

- Zero (inactive)
  PID_Compact outputs 0.0 as output value for all errors and switches to "Inactive" mode. The controller is only reactivated by a falling edge at Reset or a rising edge at ModeActivate.
- Current value while error is pending
  If the following errors occur in **automatic mode**, PID_Compact returns to automatic mode as soon as the errors are no longer pending.
  If one or more of the following errors occur, PID_Compact stays in automatic mode:
  - 0001h: The "Input" parameter is outside the process value limits.
  - 0800h: Sampling time error
  - 40000h: Invalid value at Disturbance parameter.

  If one or more of the following errors occur in **automatic mode**, PID_Compact switches to "Substitute output value with error monitoring" mode and outputs the last valid output value:
  - 0002h: Invalid value at Input_PER parameter.
  - 0200h: Invalid value at Input parameter.
  - 0400h: Calculation of output value failed.
  - 1000h: Invalid value at Setpoint parameter.

  If an error occurs in **manual mode**, PID_Compact continues using the manual value as the output value. If the manual value is invalid, the substitute output value is used. If the manual value and substitute output value are invalid, the output value low limit is used.
  If the following error occurs during a **pretuning or fine tuning**, PID_Compact remains in active mode:
  - 0020h: Pretuning is not permitted during fine tuning.

  When any other error occurs, PID_Compact cancels the tuning and switches to the mode from which tuning was started.
  As soon as no errors are pending, PID_Compact returns to automatic mode.

- Substitute output value while error is pending
  PID_Compact outputs the substitute output value.
  If the following error occurs, PID_Compact stays in "Substitute output value with error monitoring" mode and outputs the output value low limit:
  – 20000h: Invalid value at SubstituteOutput tag.
  For all other errors, PID_Compact reacts as described for "Current value while error is pending".

See also

Parameters State and Mode V2 (Page 234)

The PID parameters are displayed in the "PID Parameters" configuration window. The PID parameters will be adapted to your controlled system during controller tuning. You do not need to enter the PID parameters manually.

NOTE

The currently active PID parameters are located for PID_Compact V1 in the sRet structure and for PID_Compact V2 in the Retain.CtrlParams structure.

Change the currently active PID parameters only in "Inactive" mode online to prevent malfunction of the PID controller.

If you want to change the PID parameters in "Automatic mode" or "Manual mode" online, change the PID parameters as follows:

- PID_Compact V1: Change the PID parameters in the sBackUp structure and apply these changes with sPid_Cmpt.b_LoadBackUp = TRUE to the sRet structure.
- PID_Compact V2: Change the PID parameters in the CtrlParamsBackUp structure and apply these changes with LoadBackUp = TRUE to the Retain.CtrlParams structure.

Online changes to the PID parameters in "Automatic mode" can result in jumps at the output value.

The PID algorithm operates according to the following equation:

$$y = K_p \left[(b \cdot w - x) + \frac{1}{T_I \cdot s} (w - x) + \frac{T_D \cdot s}{a \cdot T_D \cdot s + 1} (c \cdot w - x) \right]$$

y	Output value of the PID algorithm
K_p	Proportional gain
s	Laplace operator
b	Proportional action weighting
w	Setpoint
x	Process value
T_I	Integral action time
a	Derivative delay coefficient (derivative delay T1 = a × T_D)
T_D	Derivative action time
c	Derivative action weighting

The diagram below illustrates the integration of the parameters into the PID algorithm:

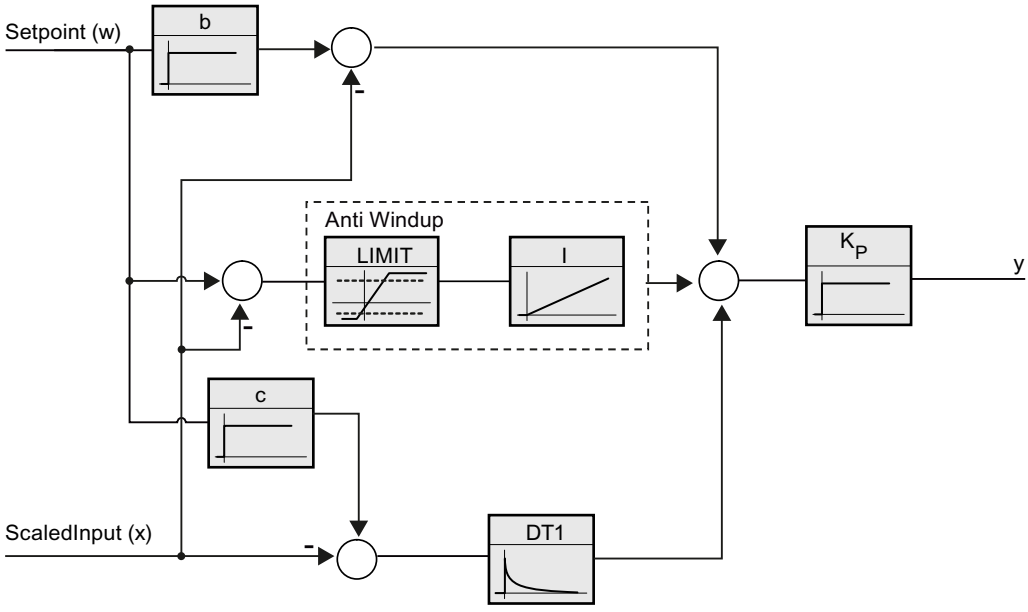

All PID parameters are retentive. If you enter the PID parameters manually, you must completely download PID_Compact.
Downloading technology objects to device (Page 44)

Proportional gain

The value specifies the proportional gain of the controller. PID_Compact does not work with a negative proportional gain. Control logic is inverted under Basic settings > Controller type.

Integral action time

The integral action time determines the time behavior of the integral action. The integral action is deactivated with integral action time = 0.0. When the integral action time is changed from a different value to 0.0 online in "Automatic mode", the previous integral action is deleted and the output value jumps.

Derivative action time

The derivative action time determines the time behavior of the derivative action. Derivative action is deactivated with derivative action time = 0.0.

Derivative delay coefficient

The derivative delay coefficient delays the effect of the derivative action.

Derivative delay = derivative action time × derivative delay coefficient

- 0.0: Derivative action is effective for one cycle only and therefore almost not effective.
- 0.5: This value has proved useful in practice for controlled systems with **one** dominant time constant.
- > 1.0: The greater the coefficient, the longer the effect of the derivative action is delayed.

Proportional action weighting

The proportional action may weaken with changes to the setpoint.
Values from 0.0 to 1.0 are applicable.

- 1.0: Proportional action for setpoint change is fully effective
- 0.0: Proportional action for setpoint change is not effective

The proportional action is always fully effective when the process value is changed.

Derivative action weighting

The derivative action may weaken with changes to the setpoint.
Values from 0.0 to 1.0 are applicable.

- 1.0: Derivative action is fully effective upon setpoint change
- 0.0: Derivative action is not effective upon setpoint change

The derivative action is always fully effective when the process value is changed.

PID algorithm sampling time

The controlled system needs a certain amount of time to respond to changes in the output value. It is therefore not advisable to calculate the output value in every cycle. The sampling time of the PID algorithm represents the time between two calculations of the output value. It is calculated during tuning and rounded to a multiple of the cycle time. All other functions of PID_Compact are executed at every call.

If you use Output_PWM, the sampling time of the PID algorithm is used as the time period of the pulse width modulation. The accuracy of the output signal is determined by the ratio of the PID algorithm sampling time to the cycle time of the OB. It is therefore recommended that the cycle time is a maximum of one tenth of the PID algorithm sampling time.

Rule for tuning

Select whether PI or PID parameters are to be calculated in the "Controller structure" drop-down list.

- **PID**
  Calculates PID parameters during pretuning and fine tuning.
- **PI**
  Calculates PI parameters during pretuning and fine tuning.
- **User-defined**
  The drop-down list displays "User-defined" if you have configured different controller structures for pretuning and fine tuning via a user program.

5.2.2 Commissioning PID_Compact V2

5.2.2.1 Pretuning V2

The pretuning determines the process response to a jump change of the output value and searches for the point of inflection. The PID parameters are calculated from the maximum rate of rise and dead time of the controlled system. You obtain the best PID parameters when you perform pretuning and fine tuning.
The more stable the process value is, the easier it is to calculate the PID parameters and the more precise the result will be. Noise on the process value can be tolerated as long as the rate of rise of the process value is significantly higher compared to the noise. This is most likely the case in operating modes "Inactive" and "manual mode". The PID parameters are backed up before being recalculated.

Requirement

- The "PID_Compact" instruction is called in a cyclic interrupt OB.
- ManualEnable = FALSE
- Reset = FALSE
- PID_Compact is in one of the following modes: "Inactive", "Manual mode", or "Automatic mode".
- The setpoint and the process value lie within the configured limits (see "Process value monitoring" configuration).
- The difference between setpoint and process value is greater than 30% of the difference between process value high limit and process value low limit.
- The distance between the setpoint and the process value is > 50% of the setpoint.

Procedure

To perform pretuning, follow these steps:

1. Double-click the "PID_Compact > Commissioning" entry in the project tree.
2. Select the entry "Pretuning" in the "Tuning mode" drop-down list.

3. Click the "Start" icon.
   - An online connection will be established.
   - Value recording is started.
   - Pretuning is started.
   - The "Status" field displays the current steps and any errors that may have occurred. The progress bar indicates the progress of the current step.

   NOTE

   Click the "Stop" icon when the progress bar has reached 100% and it can be assumed the controller tuning function is blocked. Check the configuration of the technology object and, if necessary, restart controller tuning.

Result

If pretuning was performed without an error message, the PID parameters have been tuned. PID_Compact switches to automatic mode and uses the tuned parameters. The tuned PID parameters will be retained during power OFF and a restart of the CPU.

If pretuning is not possible, PID_Compact responds with the configured reaction to errors.

See also

Parameters State and Mode V2 (Page 234)

5.2.2.2 Fine tuning V2

Fine tuning generates a constant, limited oscillation of the process value. The PID parameters are tuned for the operating point from the amplitude and frequency of this oscillation. All PID parameters are recalculated from the results. PID parameters from fine tuning usually have better master control and disturbance characteristics than PID parameters from pretuning. You obtain the best PID parameters when you perform pretuning and fine tuning.

PID_Compact automatically attempts to generate an oscillation greater than the noise of the process value. Fine tuning is only minimally influenced by the stability of the process value. The PID parameters are backed up before being recalculated.

Requirement

- The PID_Compact instruction is called in a cyclic interrupt OB.
- ManualEnable = FALSE
- Reset = FALSE
- The setpoint and the process value lie within the configured limits.
- The control loop has stabilized at the operating point. The operating point is reached when the process value corresponds to the setpoint.
- No disturbances are expected.
- PID_Compact is in one of the following operating modes: Inactive, automatic mode, or manual mode.

Process depends on initial situation

Fine tuning can be started from the following operating modes: "Inactive", "automatic mode", or "manual mode". Fine tuning proceeds as follows when started from:

- Automatic mode
  Start fine tuning from automatic mode if you wish to improve the existing PID parameters through tuning.
  PID_Compact controls the system using the existing PID parameters until the control loop has stabilized and the requirements for fine tuning have been met. Only then will fine tuning start.
- Inactive or manual mode
  If the requirements for pretuning are met, pretuning is started. The determined PID parameters will be used for control until the control loop has stabilized and the requirements for fine tuning have been met. Only then will fine tuning start. If pretuning is not possible, PID_Compact responds with the configured reaction to errors.
  An attempt is made to reach the setpoint with the minimum or maximum output value if the process value for pretuning is already too near the setpoint. This can produce increased overshoot.

Procedure

To perform fine tuning, follow these steps:

1. Select the entry "Fine tuning" in the "Tuning mode" drop-down list.
2. Click the "Start" icon.
   - An online connection will be established.
   - Value recording is started.
   - The process of fine tuning is started.
   - The "Status" field displays the current steps and any errors that may have occurred. The progress bar indicates the progress of the current step.

NOTE

Click the "Stop" icon in the "Tuning mode" group when the progress bar has reached 100% and it is to be assumed that tuning is blocked. Check the configuration of the technology object and, if necessary, restart controller tuning.

Result

If no errors occurred during fine tuning, the PID parameters have been tuned. PID_Compact switches to automatic mode and uses the tuned parameters. The tuned PID parameters will be retained during power OFF and a restart of the CPU.

If errors occurred during "fine tuning", PID_Compact responds with the configured response to errors.

See also

Parameters State and Mode V2 (Page 234)

5.2.2.3 "Manual" mode V1

The following section describes how you can use the "manual mode" operating mode in the commissioning window of the "PID_Compact" technology object. Manual mode is also possible when an error is pending.

Requirement

- The "PID_Compact" instruction is called in a cyclic interrupt OB.
- An online connection to the CPU has been established and the CPU is in the "RUN" mode.

Procedure

Use "Manual mode" in the commissioning window if you want to test the controlled system by specifying a manual value. To define a manual value, follow these steps:

1. Click the "Start" icon.
2. Select the "Manual mode" check box in the "Online status of controller" area.
   PID_Compact operates in manual mode. The most recent current output value remains in effect.
3. Enter the manual value in the "Output" field as a % value.
4. Click the icon.

Result

The manual value is written to the CPU and immediately goes into effect.
Clear the "Manual mode" check box if the output value is to be specified again by the PID controller. The switchover to automatic mode is bumpless.

See also

Parameters State and Mode V2 (Page 234)

5.2.3 Override control with PID_Compact V2

Override control

In case of override control, two or more controllers share one actuator. Only one controller has access to the actuator at any time and influences the process.
A logic operation decides which controller has access to the actuator. This decision is often made based on a comparison of the output values of all controllers, for example, in case of a maximum selection, the controller with the largest output value gets access to the actuator.
The selection based on the output value requires that all controllers operate in automatic mode. The controllers that do not have an effect on the actuator are updated. This is necessary to prevent windup effects and their negative impacts on the control response and the switchover between the controllers.

PID_Compact supports override controls as of version 2.3 by offering a simple process for updating the controllers that are not active:

- By using the OverwriteInitialOutputValue and PIDCtrl.PIDInit tags, you can preassign the integral action of the controller in automatic mode as though the PID algorithm had calculated Output = OverwriteInititalOutputValue for the output value in the last cycle.
- To do this, OverwriteInitialOutputValue is interconnected with the output value of the controller that currently has access to the actuator.
- By setting the bit PIDCtrl.PIDInit, you trigger the pre-assignment of the integral action as well as the restart of the controller cycle and the PWM period.
- The subsequent calculation of the output value in the current cycle takes place based on the pre-assigned (and synchronized for all controllers) integral action as well as the proportional action and integral action from the current control deviation.
- The derivative action is not active during the call with PIDCtrl.PIDInit = TRUE and therefore does not contribute to the output value.

This procedure ensures that the calculation of the current output value and thus the decision on which controller is to have access to the actuator is only based on the current process state and the PI parameters. Windup effects for controllers that are not active and thus incorrect decisions of the switchover logic are prevented.

Requirements

- PIDCtrl.PIDInit is only effective if the integral action is activated (Retain.CtrlParams.Ti tag > 0.0).
- You must assign PIDCtrl.PIDInit and OverwriteInitialOutputValue in your user program yourself (see example below). PID_Compact does not automatically change these tags.
- PIDCtrl.PIDInit is only effective when PID_Compact is in automatic mode (parameter State = 3)
- If possible, select the sampling time of the PID algorithm (Retain.CtrlParams.Cycle tag) in such a way that it is identical for all controllers, and call all controllers in the same cyclic interrupt OB. In this way, you ensure that the switchover does not take place within a controller cycle or a PWM period.

NOTE

Constant adaptation of the output value limits

Instead of the active updating of the controllers without access to the actuator described here, this is implemented alternatively by constant adaptation of the output value limits in other controller systems.

This is not possible with PID_Compact, because a change of the output value limits is not supported in automatic mode.

Example: Control of a gas pipeline

PID_Compact is used for control of a gas pipeline.
The main goal is to control the flow rate Input1. The controller PID_Compact_1 is used for this purpose. In addition, the pressure Input2 (measured in flow direction in front of the valve) is to be kept below the high limit with the limiting controller PID_Compact_2.

Flow rate and pressure are controlled by a single solenoid valve. The output value of the controller corresponds to the valve opening: The valve is opened when the output value increases. This means the flow rate increases (normal control logic) while the pressure drops (inverted control logic).

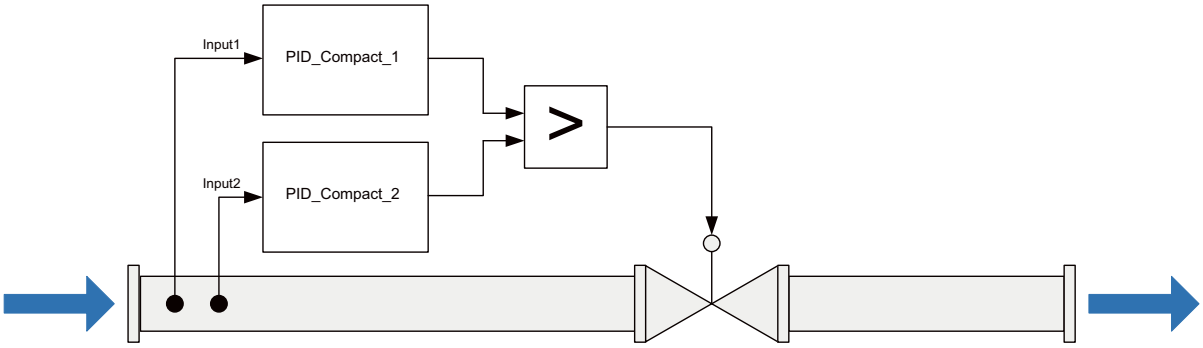
Input1
PID_Compact_1
Input2
PID_Compact_2
>
>
>

In normal operation of the plant, the actual value of the flow rate corresponds to the setpoint. The flow controller PID_Compact_1 has settled on a stationary output value PID_Compact_1.Output. The actual value of the pressure in normal operation is significantly below the high limit that is specified as setpoint for PID_Compact_2. The pressure regulator therefore wants to close the valve even further to increase the pressure, which means it will calculate an output value PID_Compact_2.Output that is smaller than the output value of the flow controller PID_Compact_1.Output. The maximum selection of the switchover logic therefore gives the flow controller PID_Compact_1 continued access to the actuator. In addition, it is ensured that PID_Compact_2 is updated by means of the assignments PID_Compact_2.OverwriteInitialOutputValue = PID_Compact_1.Output and PID_Compact_2.PIDCtrl.PIDInit = TRUE.

If the pressure now approaches the high limit or exceeds it, for example due to a fault, the pressure regulator PID_Compact_2 calculates a higher output value to open the valve even further and thus reduce the pressure. If PID_Compact_2.Output is greater than PID_Compact_1.Output, the pressure regulator PID_Compact_2 receives access to the actuator through the maximum selection and opens it. It is ensured that PID_Compact_1 is updated by means of the assignments PID_Compact_1.OverwriteInitialOutputValue = PID_Compact_2.Output and PID_Compact_1.PIDCtrl.PIDInit = TRUE.

The pressure is reduced while the flow rate increases and can no longer be kept at the setpoint.

Once the fault has been remedied, the pressure will continue to drop and the opening of the valve is reduced by the pressure regulator. If the flow controller calculates a larger opening as output value, the plant returns to normal operation so that the flow controller PID_Compact_1 once again has access to the actuator.

This example can be implemented with the following SCL program code:

```
"PID_Compact_1"(Input := "Input1");
"PID_Compact_2"(Input := "Input2");
IF "PID_Compact_1".Output >= "PID_Compact_2".Output THEN
  "ActuatorInput" := "PID_Compact_1".Output_PER;
  "PID_Compact_1".PIDCtrl.PIDInit := FALSE;
  "PID_Compact_2".PIDCtrl.PIDInit := TRUE;
  "PID_Compact_2".OverwriteInitialOutputValue :=
  "PID_Compact_1".Output;
ELSE
  "ActuatorInput" := "PID_Compact_2".Output_PER;
  "PID_Compact_1".PIDCtrl.PIDInit := TRUE;
  "PID_Compact_2".PIDCtrl.PIDInit := FALSE;
  "PID_Compact_1".OverwriteInitialOutputValue :=
  "PID_Compact_2".Output;
END_IF;
```

5.2.4 Simulating PID_Compact V2 with PLCSIM

NOTE

Simulation with PLCSIM

The simulation of PID_Compact V2.x with PLCSIM for CPU S7-1200 is not supported.

PID_Compact V2.x can only be simulated for CPU S7-1500 with PLCSIM.

For the simulation with PLCSIM, the time behavior of the simulated PLC is not exactly identical to that of a "real" PLC. The actual cycle clock of a cyclic interrupt OB can have larger fluctuations with a simulated PLC than with "real" PLCs.

In the standard configuration, PID_Compact determines the time between calls automatically and monitors them for fluctuations.

For the simulation of PID_Compact with PLCSIM, for example, a sampling time error (ErrorBits = DW#16#00000800) can therefore be detected.

This results in ongoing tuning being aborted.

The response in automatic mode depends on the value of the ActivateRecoverMode tag.

To prevent this from happening, you should configure PID_Compact for simulation with PLCSIM as follows:

- CycleTime.EnEstimation = FALSE
- CycleTime.EnMonitoring = FALSE
- CycleTime.Value: Assign the cycle clock of the calling cyclic interrupt OB in seconds to this tag.

5.3 PID_Compact V1

5.3.1 Configuring PID_Compact V1

5.3.1.1 Basic settings V1

Configure the following properties of the "PID_Compact" technology object under "Basic settings" in the Inspector window or in the configuration window:

- Physical quantity
- Control logic
- Start-up behavior after reset
- Setpoint (only in the Inspector window)
- Process value (only in the Inspector window)
- Output value (only in the Inspector window)

Setpoint, process value and output value

You can only configure the setpoint, process value and output value in the Inspector window of the programming editor. Select the source for each value:

- Instance DB
  The value saved in the instance DB is used.
  Value must be updated in the instance DB by the user program.
  There should be no value at the instruction.
  Change via HMI possible.
- Instruction
  The value connected to the instruction is used.
  The value is written to the instance DB each time the instruction is called.
  No change via HMI possible.

Physical quantity

Select the unit of measurement and physical quantity for the setpoint and process value in the "Controller type" group. The setpoint and process value will be displayed in this unit.

Control logic

An increase of the output value is generally intended to cause an increase in the process value. This is referred to as a normal control logic.
PID_Compact does not work with negative proportional gain. Select the check box "Invert control logic" to reduce the process value with a higher output value.
Examples

- Opening the drain valve will reduce the level of a container's contents.
- Increasing cooling will reduce the temperature.

Start-up behavior after reset

To change straight to the last active mode after restarting the CPU, select the "Enable last mode after CPU restart" check box.
PID_Compact will remain in "Inactive" mode if the check box is cleared.

Procedure

Proceed as follows to define a fixed setpoint:

1. Select "Instance DB".
2. Enter a setpoint, e.g. 80° C.
3. Delete any entry in the instruction.

Proceed as follows to define a variable setpoint:

1. Select "Instruction".
2. Enter the name of the REAL variable in which the setpoint is saved.
   Program-controlled assignment of various values to the REAL variable is possible, for example for the time controlled change of the setpoint.

PID_Compact will scale the value of the analog input to the physical quantity if you use the analog input value directly.
You will need to write a program for processing if you wish first to process the analog input value. The process value is, for example, not directly proportional to the value at the analog input. The processed process value must be in floating point format.

Procedure

Proceed as follows to use the analog input value without processing:

1. Select the entry "Input_PER" in the drop-down list "Input".
2. Select "Instruction" as source.
3. Enter the address of the analog input.

Proceed as follows to use the processed process value in floating point format:

1. Select the entry "Input" in the drop-down list "Input".
2. Select "Instruction" as source.
3. Enter the name of the variable in which the processed process value is saved.

PID_Compact offers three output values. Your actuator will determine which output value you use.

- Output_PER
  The actuator is triggered via an analog output and controlled with a continuous signal, e.g. 0...10V, 4...20mA.
- Output
  The output value needs to be processed by the user program, for example because of nonlinear actuator response.
- Output_PWM
  The actuator is controlled via a digital output. Pulse width modulation creates minimum ON and minimum OFF times.

Procedure

Proceed as follows to use the analog output value:

1. Select the entry "Output_PER (analog)" in the drop-down list "Output".
2. Select "Instruction".
3. Enter the address of the analog output.

Proceed as follows to process the output value using the user program:

1. Select the entry "Output" in the drop-down list "Output".
2. Select "Instance DB".
   The calculated output value is saved in the instance data block.
3. For the preparation of the output value, use the output parameter Output.
4. Transfer the processed output value to the actuator via a digital or analog CPU output.

Proceed as follows to use the digital output value:

1. Select the entry "Output_PWM" in the drop-down list "Output".
2. Select "Instruction".
3. Enter the address of the digital output.

5.3.1.2 Process value settings V1

Configure the scaling of your process value and specify the process value absolute limits In the "Process value settings" configuration window.

Scaling the process value

If you have configured the use of Input_PER in the basic settings, you will need to convert the value of the analog input into the physical quantity of the process value. The current configuration will be displayed in the Input_PER display.

Input_PER will be scaled using a low and high value pair if the process value is directly proportional to the value of the analog input.

1. Enter the low pair of values in the "Scaled low process value" and "Low" input fields.
2. Enter the high pair of values in the "Scaled high process value" and "High" input boxes.

Default settings for the value pairs are saved in the hardware configuration. Proceed as follows to use the value pairs from the hardware configuration:

1. Select the instruction PID_Compact in the programming editor.
2. Connect Input_PER with an analog input in the basic settings.
3. Click on the "Automatic setting" button in the process value settings.

The existing values will be overwritten with the values from the hardware configuration.

Monitoring process value

Specify the absolute high and low limit of the process value. As soon as these limits are violated during operation, the controller switches off and the output value is set to 0%. You must enter reasonable limits for your controlled system. Reasonable limits are important during optimization to obtain optimal PID parameters.

The default for the "High limit process value" is 120 %. At the I/O input, the process value can be a maximum of 18% higher than the standard range (overrange). An error is no longer reported for a violation of the "High limit process value". Only a wire-break and a short-circuit are recognized and the PID_Compact switches to "Inactive" mode.

⚠ WARNING

If you set very high process value limits (for example $-3.4*10^{38}...+3.4*10^{38}$), process value monitoring will be disabled. Your system may then be damaged if an error occurs.

See also

Process value monitoring V1 (Page 91)
PWM limits V1 (Page 91)
Output value limits V1 (Page 93)
PID parameters V1 (Page 94)

5.3.1.3 Advanced settings V1

Configure a warning high and low limit for the process value in the "Process value monitoring" configuration window. If one of the warning limits is exceeded or undershot during operation, a warning will be displayed at the PID_Compact instruction:

- At the InputWarning_H output parameter if the warning high limit has been exceeded
- At the InputWarning_L output parameter if the warning low limit has been undershot

The warning limits must be within the process value high and low limits.
The process value high and low limits will be used if you do not enter values.

Example

Process value high limit = 98° C; warning high limit = 90° C
Warning low limit = 10° C; process value low limit = 0° C
PID_Compact will respond as follows:

Process value	InputWarning_H	InputWarning_L	Operating mode
> 98° C	TRUE	FALSE	Inactive
≤ 98° C and > 90° C	TRUE	FALSE	Automatic mode
≤ 90° C and ≥ 10° C	FALSE	FALSE	Automatic mode
< 10° C and ≥ 0° C	FALSE	TRUE	Automatic mode
< 0° C	FALSE	TRUE	Inactive

See also

Process value settings V1 (Page 90)
PWM limits V1 (Page 91)
Output value limits V1 (Page 93)
PID parameters V1 (Page 94)

Via pulse width modulation, the value at the output parameter Output is transformed into a pulse sequence that is output at output parameter Output_PWM.

Output is calculated in the PID algorithm sampling time. The sampling time is used as time period of the pulse width modulation.

The PID algorithm sampling time is determined during pretuning or fine tuning. If manually setting the PID parameters, you will also need to configure the PID algorithm sampling time.

Output_PWM is output in the PID_Compact sampling time. The PID_Compact sampling time is equivalent to the cycle time of the calling OB.

The pulse duration is proportional to the value at Output and is always an integer multiple of the PID_Compact sampling time.

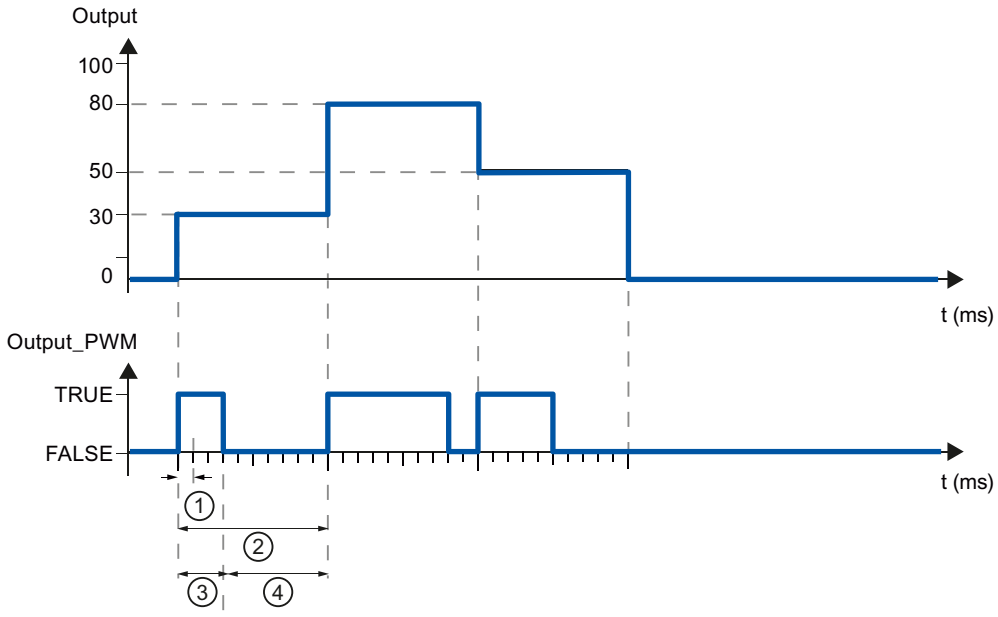

① PID_Compact sampling time

② PID algorithm sampling time

③ Pulse duration

④ Break time

The "Minimum ON time" and the "Minimum OFF time" are rounded to an integer multiple of the PID_Compact sampling time.

A pulse or a break is never shorter than the minimum ON or OFF time. The inaccuracies this causes are added up and compensated in the next cycle.

Example

PID_Compact sampling time (equivalent to the cycle time of the calling OB) = 100 ms

PID algorithm sampling time (equivalent to the time period)= 1000 ms

Minimum ON time = 200 ms

Output is a constant 15%. The smallest pulse that PID_Compact can output is 20%. In the first cycle, no pulse is output. In the second cycle, the pulse not output in the first cycle is added to the pulse of the second cycle.

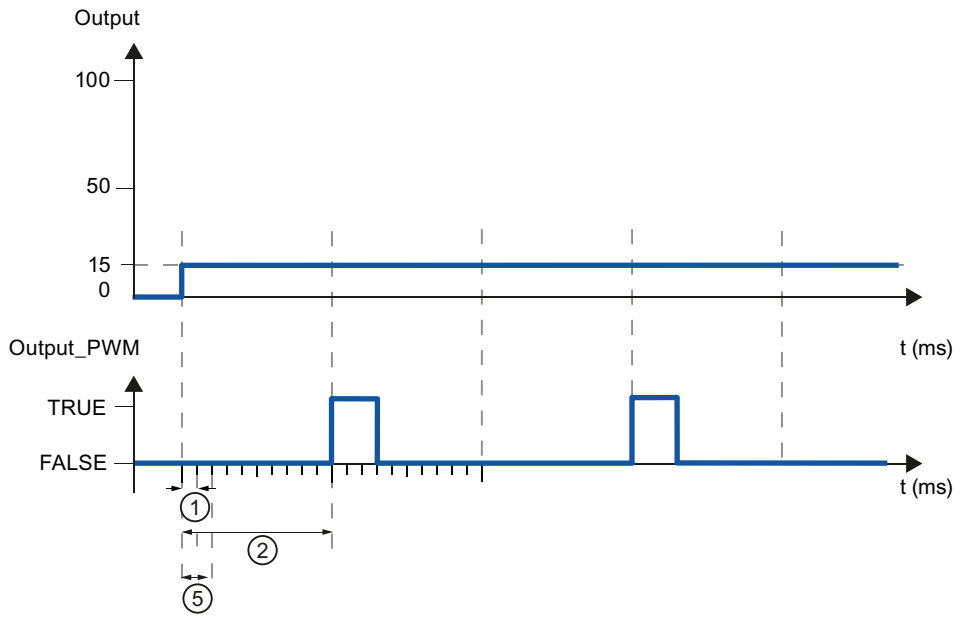

① PID_Compact sampling time

② PID algorithm sampling time

⑤ Minimum ON time

In order to minimize operation frequency and conserve the actuator, extend the minimum ON and OFF times.

If you are using "Output" or "Output_PER", you must configure the value 0.0 for the minimum ON and OFF times.

NOTE

The minimum ON and OFF times only affect the output parameter Output_PWM and are not used for any pulse generators integrated in the CPU.

See also

Process value settings V1 (Page 90)

Process value monitoring V1 (Page 91)

Output value limits V1 (Page 93)

PID parameters V1 (Page 94)

In the "Output value limits" configuration window, configure the absolute limits of your output value in percent. Absolute output value limits are not violated in neither manual mode nor in automatic mode. If a output value outside the limits is specified in manual mode, the effective value is limited in the CPU to the configured limits.

The valid output value limit values depend on the Output used.

Output	-100.0 to 100.0
Output_PER	-100.0 to 100.0
Output_PWM	0.0 to 100.0

PID_Compact sets the output value to 0.0 if an error occurs. 0.0 must therefore always be within the output value limits. You will need to add an offset to Output and Output_PER in the user program if you want an output value low limit of greater than 0.0.

See also

Process value settings V1 (Page 90)

Process value monitoring V1 (Page 91)

PWM limits V1 (Page 91)

PID parameters V1 (Page 94)

The PID parameters are displayed in the "PID Parameters" configuration window. The PID parameters will be adapted to your controlled system during controller tuning. You do not need to enter the PID parameters manually.

NOTE

The currently active PID parameters are located for PID_Compact V1 in the sRet structure and for PID_Compact V2 in the Retain.CtrlParams structure.

Change the currently active PID parameters only in "Inactive" mode online to prevent malfunction of the PID controller.

If you want to change the PID parameters in "Automatic mode" or "Manual mode" online, change the PID parameters as follows:

- PID_Compact V1: Change the PID parameters in the sBackUp structure and apply these changes with sPid_Cmpt.b_LoadBackUp = TRUE to the sRet structure.
- PID_Compact V2: Change the PID parameters in the CtrlParamsBackUp structure and apply these changes with LoadBackUp = TRUE to the Retain.CtrlParams structure.

Online changes to the PID parameters in "Automatic mode" can result in jumps at the output value.

The PID algorithm operates according to the following equation:

$$y = K_p \left[(b \cdot w - x) + \frac{1}{T_I \cdot s} (w - x) + \frac{T_D \cdot s}{a \cdot T_D \cdot s + 1} (c \cdot w - x) \right]$$

y	Output value of the PID algorithm
K_p	Proportional gain
s	Laplace operator
b	Proportional action weighting
w	Setpoint
x	Process value
T_I	Integral action time
a	Derivative delay coefficient (derivative delay T1 = a × T_D)
T_D	Derivative action time
c	Derivative action weighting

The diagram below illustrates the integration of the parameters into the PID algorithm:

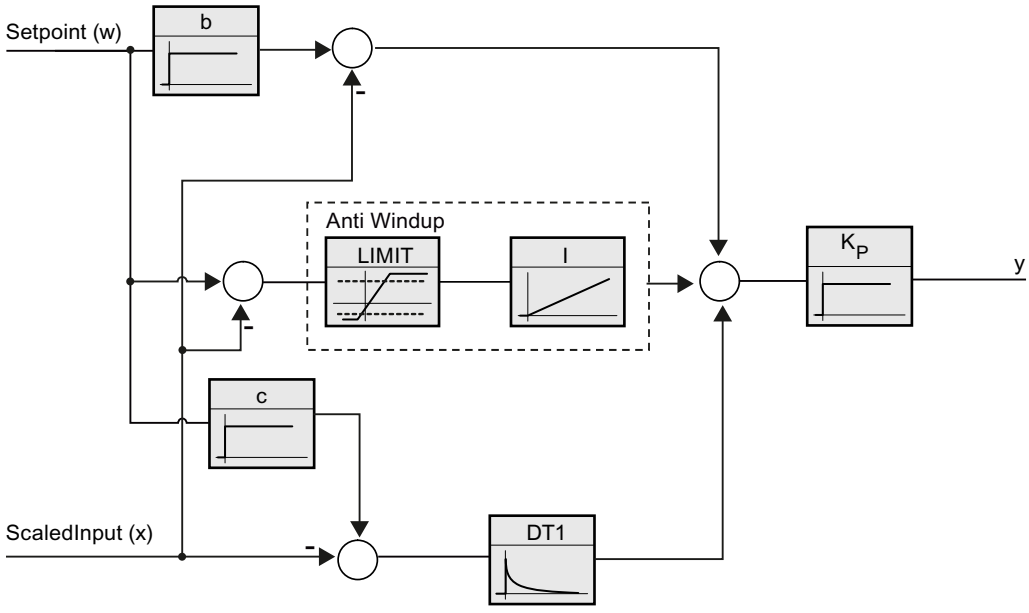

All PID parameters are retentive. If you enter the PID parameters manually, you must completely download PID_Compact.
Downloading technology objects to device (Page 44)

Proportional gain

The value specifies the proportional gain of the controller. PID_Compact does not work with a negative proportional gain. Control logic is inverted under Basic settings > Controller type.

Integral action time

The integral action time determines the time behavior of the integral action. The integral action is deactivated with integral action time = 0.0. When the integral action time is changed

from a different value to 0.0 online in "Automatic mode", the previous integral action is deleted and the output value jumps.

Derivative action time

The derivative action time determines the time behavior of the derivative action. Derivative action is deactivated with derivative action time = 0.0.

Derivative delay coefficient

The derivative delay coefficient delays the effect of the derivative action.
Derivative delay = derivative action time × derivative delay coefficient

- 0.0: Derivative action is effective for one cycle only and therefore almost not effective.
- 0.5: This value has proved useful in practice for controlled systems with **one** dominant time constant.
- > 1.0: The greater the coefficient, the longer the effect of the derivative action is delayed.

Proportional action weighting

The proportional action may weaken with changes to the setpoint.
Values from 0.0 to 1.0 are applicable.

- 1.0: Proportional action for setpoint change is fully effective
- 0.0: Proportional action for setpoint change is not effective

The proportional action is always fully effective when the process value is changed.

Derivative action weighting

The derivative action may weaken with changes to the setpoint.
Values from 0.0 to 1.0 are applicable.

- 1.0: Derivative action is fully effective upon setpoint change
- 0.0: Derivative action is not effective upon setpoint change

The derivative action is always fully effective when the process value is changed.

PID algorithm sampling time

The controlled system needs a certain amount of time to respond to changes in the output value. It is therefore not advisable to calculate the output value in every cycle. The sampling time of the PID algorithm represents the time between two calculations of the output value. It is calculated during tuning and rounded to a multiple of the cycle time. All other functions of PID_Compact are executed at every call.
If you use Output_PWM, the sampling time of the PID algorithm is used as the time period of the pulse width modulation. The accuracy of the output signal is determined by the ratio of the PID algorithm sampling time to the cycle time of the OB. It is therefore recommended that the cycle time is a maximum of one tenth of the PID algorithm sampling time.

Rule for tuning

Select whether PI or PID parameters are to be calculated in the "Controller structure" drop-down list.

- **PID**
  Calculates PID parameters during pretuning and fine tuning.
- **PI**
  Calculates PI parameters during pretuning and fine tuning.
- **User-defined**
  The drop-down list displays "User-defined" if you have configured different controller structures for pretuning and fine tuning via a user program.

5.3.2 Commissioning PID_Compact V1

5.3.2.1 Commissioning V1

The commissioning window helps you commission the PID controller. You can monitor the values for the setpoint, process value and output value along the time axis in the trend view. The following functions are supported in the commissioning window:

- Controller pretuning
- Controller fine tuning
  Use fine tuning for fine adjustments to the PID parameters.
- Monitoring the current closed-loop control in the trend view
- Testing the controlled system by specifying a manual output value

All functions require an online connection to the CPU to have been established.

Basic handling

- Select the desired sampling time in the "Sampling time" drop-down list.
  All values in the commissioning window are updated in the selected update time.
- Click the "Start" icon in the measuring group if you want to use the commissioning functions.
  Value recording is started. The current values for the setpoint, process value and output value are entered in the trend view. Operation of the commissioning window is enabled.
- Click the "Stop" icon if you want to end the commissioning functions.
  The values recorded in the trend view can continue to be analyzed.

Closing the commissioning window will terminate recording in the trend view and delete the recorded values.

See also

Pretuning V1 (Page 97)

Fine tuning V1 (Page 99)

"Manual" mode V1 (Page 100)

5.3.2.2 Pretuning V1

The pretuning determines the process response to a jump change of the output value and searches for the point of inflection. The tuned PID parameters are calculated as a function of the maximum slope and dead time of the controlled system.
The more stable the process value is, the easier it is to calculate the PID parameters and the more precise the result will be. Noise on the process value can be tolerated as long as the rate of rise of the process value is significantly higher compared to the noise. The PID parameters are backed up before being recalculated.

Requirement

- The "PID_Compact" instruction is called in a cyclic interrupt OB.
- ManualEnable = FALSE
- PID_Compact is in "inactive" or "manual" mode.
- The setpoint may not be changed during controller tuning. PID_Compact will otherwise be deactivated.
- The setpoint and the process value lie within the configured limits (see "Process value monitoring" configuration).
- The difference between setpoint and process value is greater than 30% of the difference between process value high limit and process value low limit.
- The distance between the setpoint and the process value is > 50% of the setpoint.

Procedure

To perform pretuning, follow these steps:

1. Double-click the "PID_Compact > Commissioning" entry in the project tree.
2. Select the entry "Pretuning" in the "Tuning mode" drop-down list.
3. Click the "Start" icon.
   - An online connection will be established.
   - Value recording is started.
   - Pretuning is started.
   - The "Status" field displays the current steps and any errors that may have occurred. The progress bar indicates the progress of the current step.

NOTE

Click the "Stop" icon when the progress bar has reached 100% and it is to be assumed the controller tuning function is blocked. Check the configuration of the technology object and, if necessary, restart controller tuning.

Result

If pretuning was performed without an error message, the PID parameters have been tuned. PID_Compact switches to automatic mode and uses the tuned parameters. The tuned PID parameters will be retained during power OFF and a restart of the CPU.
If pretuning is not possible, PID_Compact will change to "Inactive" mode.

See also

Parameters State and sRet.i_Mode V1 (Page 257)
Commissioning V1 (Page 97)
Fine tuning V1 (Page 99)
"Manual" mode V1 (Page 100)

5.3.2.3 Fine tuning V1

Fine tuning generates a constant, limited oscillation of the process value. The PID parameters are optimized for the operating point from the amplitude and frequency of this oscillation. All PID parameters are recalculated on the basis of the findings. PID parameters from fine tuning usually have better master control and disturbance behavior than PID parameters from pretuning.

PID_Compact automatically attempts to generate an oscillation greater than the noise of the process value. Fine tuning is only minimally influenced by the stability of the process value. The PID parameters are backed up before being recalculated.

Requirement

- The PID_Compact instruction is called in a cyclic interrupt OB.
- ManualEnable = FALSE
- The setpoint and the process value lie within the configured limits (see "Process value monitoring" configuration).
- The control loop has stabilized at the operating point. The operating point is reached when the process value corresponds to the setpoint.
- No disturbances are expected.
- The setpoint may not be changed during controller tuning.
- PID_Compact is in inactive mode, automatic mode or manual mode.

Process depends on initial situation

Fine tuning can be started in "inactive", "automatic" or "manual" mode. Fine tuning proceeds as follows when started in:

- Automatic mode
  Start fine tuning in automatic mode if you wish to improve the existing PID parameters using controller tuning.
  PID_Comact will regulate using the existing PID parameters until the control loop has stabilized and the requirements for fine tuning have been met. Only then will fine tuning start.
- Inactive or manual mode
  If the requirements for pretuning are met, pretuning is started. The PID parameters established will be used for adjustment until the control loop has stabilized and the requirements for fine tuning have been met. Only then will fine tuning start. If pretuning is not possible, PID_Compact will change to "Inactive" mode.

An attempt is made to reach the setpoint with a minimum or maximum output value if the process value for pretuning is already too near the setpoint. This can produce increased overshoot.

Procedure

Proceed as follows to carry out "fine tuning":

1. Select the entry "Fine tuning" in the "Tuning mode" drop-down list.
2. Click the "Start" icon.
   - An online connection will be established.
   - Value recording is started.
   - The process of fine tuning is started.
   - The "Status" field displays the current steps and any errors that may have occurred. The progress bar indicates the progress of the current step.

NOTE

Click the "Stop" icon in the "Tuning mode" group when the progress bar has reached 100% and it is to be assumed the controller tuning function is blocked. Check the configuration of the technology object and, if necessary, restart controller tuning.

Result

The PID parameters will have been optimized if fine tuning has been executed without errors. PID_Compact changes to automatic mode and uses the optimized parameters. The optimized PID parameters will be retained during power OFF and a restart of the CPU.

If errors occurred during "fine tuning", PID_Compact will change to "inactive" mode.

See also

Parameters State and sRet.i_Mode V1 (Page 257)

Commissioning V1 (Page 97)

Pretuning V1 (Page 97)

"Manual" mode V1 (Page 100)

5.3.2.4 "Manual" mode V1

The following section describes how you can use the "Manual" operating mode in the commissioning window of the "PID Compact" technology object.

Requirement

- The "PID_Compact" instruction is called in a cyclic interrupt OB.
- An online connection to the CPU has been established and the CPU is in the "RUN" mode.
- The functions of the commissioning window have been enabled via the "Start" icon.

Procedure

Use "Manual mode" in the commissioning window if you want to test the process by specifying a manual value. To define a manual value, proceed as follows:

1. Select the check box "Manual mode" in the "Online status of the controller" area.
   PID_Compact operates in manual mode. The most recent current output value remains in effect.
2. Enter the manual value in the "Output" field as a % value.
3. Click the control icon .

Result

The manual value is written to the CPU and immediately goes into effect.

NOTE

PID_Compact continues to monitor the process value. If the process value limits are exceeded, PID_Compact is deactivated.

Clear the "Manual mode" check box if the output value is to be specified again by the PID controller. The change to automatic mode is bumpless.

See also

Parameters State and sRet.i_Mode V1 (Page 257)
Commissioning V1 (Page 97)
Pretuning V1 (Page 97)
Fine tuning V1 (Page 99)

5.3.3 Simulating PID_Compact V1 with PLCSIM

NOTE

Simulation with PLCSIM

For the simulation with PLCSIM, the time behavior of the simulated PLC is not exactly identical to that of a "real" PLC. The actual cycle clock of a cyclic interrupt OB can have larger fluctuations with a simulated PLC than with "real" PLCs.

In the standard configuration, PID_Compact determines the time between calls automatically and monitors them for fluctuations.

For a simulation of PID_Compact with PLCSIM, for example, a sampling time error (ErrorBits = DW#16#00000800) can therefore be detected.

PID_Compact switches to "Inactive" mode (State = 0) in this case.

To prevent this from happening, you should configure PID_Compact for simulation with PLCSIM as follows:

- sb_EnCyclEstimation = FALSE
- sb_EnCyclMonitoring = FALSE
- sPid_Calc.r_Cycle: Assign the cycle clock of the calling cyclic interrupt OB in seconds to this tag.

Using PID_3Step

6

6.1 Technology object PID_3Step

The technology object PID_3Step provides a PID controller with tuning for valves or actuators with integral response.

You can configure the following controllers:

- Three-point step controller with position feedback
- Three-point step controller without position feedback
- Valve controller with analog output value

PID_3Step continuously acquires the measured process value within a control loop and compares it with the setpoint. From the resulting control deviation, PID_3Step calculates an output value through which the process value reaches the setpoint as quickly and steadily as possible. The output value for the PID controller consists of three actions:

- **Proportional** action
  The proportional action of the output value increases in proportion to the control deviation.
- **I** action
  The integral action of the output value increases until the control deviation has been balanced.
- **D** action
  The derivative action increases with the rate of change of control deviation. The process value is corrected to the setpoint as quickly as possible. The derivative action will be reduced again if the rate of change of control deviation drops.

The instruction PID_3Step calculates the proportional, integral and derivative parameters for your controlled system during pretuning. Fine tuning can be used to tune the parameters further. You do not need to manually determine the parameters.

Additional information

- Overview of software controller (Page 39)
- Add technology objects (Page 41)
- Configure technology objects (Page 42)
- Configuring PID_3Step V2 (Page 104)
- Configuring PID_3Step V1 (Page 120)

Principle

For more information, see the following FAQs in the Siemens Industry Online Support:

- Entry ID 68011827 (https://support.industry.siemens.com/cs/ww/en/view/68011827)

6.2 PID_3Step V2

6.2.1 Configuring PID_3Step V2

6.2.1.1 Basic settings V2

Configure the following properties of the "PID_3Step" technology object under "Basic settings" in the Inspector window or in the configuration window:

- Physical quantity
- Control logic
- Start-up behavior after reset
- Setpoint (only in the Inspector window)
- Process value (only in the Inspector window)
- Output value (only in the Inspector window)
- Position feedback (only in the Inspector window)

Setpoint, process value, output value and position feedback

You can only configure the setpoint, process value, output value and position feedback in the Inspector window of the programming editor. Select the source for each value:

- Instance DB
  The value saved in the instance DB is used.
  Value must be updated in the instance DB by the user program.
  There should be no value at the instruction.
  Change via HMI possible.
- Instruction
  The value connected to the instruction is used.
  The value is written to the instance DB each time the instruction is called.
  No change via HMI possible.

Physical quantity

Select the unit of measurement and physical quantity for the setpoint and the process value in the "Controller type" group. The setpoint and the process value are displayed in this unit.

Control logic

An increase of the output value is generally intended to cause an increase in the process value. This is referred to as a normal control logic.

PID_3Step does not work with negative proportional gain. Select the check box "Invert control logic" to reduce the process value with a higher output value.

Examples

- Opening the drain valve will reduce the level of a container's contents.
- Increasing cooling will reduce the temperature.

Startup characteristics

1. To switch to "Inactive" mode after CPU restart, clear the "Activate Mode after CPU restart" check box.
   To switch to the operating mode saved in the Mode parameter after CPU restart, select the "Activate Mode after CPU restart" check box.
2. In the "Set Mode to" drop-down list, select the mode that is to be enabled after a complete download to the device.
   After a complete download to the device, PID_3Step starts in the selected operating mode. With each additional restart, PID_3Step starts in the mode that was last saved in Mode.

Example

You have selected the "Activate Mode after CPU restart" check box and the entry "Pretuning" in the "Set Mode to" list. After a complete download to the device, PID_3Step starts in the "Pretuning" mode. If pretuning is still active, PID_3Step starts in "Pretuning" mode again after restart of the CPU. If pretuning was successfully completed and automatic mode is active, PID_3Step starts in "Automatic mode" after restart of the CPU.

Procedure

Proceed as follows to define a fixed setpoint:

1. Select "Instance DB".
2. Enter a setpoint, e.g. 80° C.
3. Delete any entry in the instruction.

Proceed as follows to define a variable setpoint:

1. Select "Instruction".
2. Enter the name of the REAL variable in which the setpoint is saved.
   Program-controlled assignment of various values to the REAL variable is possible, for example for the time controlled change of the setpoint.

PID_3Step will scale the value of the analog input to the physical quantity if you use the analog input value directly.

You will need to write a program for processing if you wish first to process the analog input value. The process value is, for example, not directly proportional to the value at the analog input. The processed process value must be in floating point format.

Procedure

Proceed as follows to use the analog input value without processing:

1. Select the entry "Input_PER" in the drop-down list "Input".
2. Select "Instruction" as source.
3. Enter the address of the analog input.

Proceed as follows to use the processed process value in floating point format:

1. Select the entry "Input" in the drop-down list "Input".
2. Select "Instruction" as source.
3. Enter the name of the variable in which the processed process value is saved.

Position feedback configuration depends upon the actuator used.

- Actuator without position feedback
- Actuator with digital endstop signals
- Actuator with analog position feedback
- Actuator with analog position feedback and endstop signals

Actuator without position feedback

Proceed as follows to configure PID_3Step for an actuator without position feedback:

1. Select the entry "No Feedback" in the drop-down list "Feedback".

Actuator with digital endstop signals

Proceed as follows to configure PID_3Step for an actuator with endstop signals:

1. Select the entry "No Feedback" in the drop-down list "Feedback".
2. Activate the "Actuator endstop signals" check box.
3. Select "Instruction" as source for Actuator_H and Actuator_L.
4. Enter the addresses of the digital inputs for Actuator_H and Actuator_L.

Actuator with analog position feedback

Proceed as follows to configure PID_3Step for an actuator with analog position feedback:

1. Select the entry "Feedback" or "Feedback_PER" in the drop-down list "Feedback".
   - Use the analog input value for Feedback_PER. Configure Feedback_PER scaling in the actuator settings.
   - Process the analog input value for Feedback using your user program.
2. Select "Instruction" as source.
3. Enter the address of the analog input or the variable of your user program.

Actuator with analog position feedback and endstop signals

Proceed as follows to configure PID_3Step for an actuator with analog position feedback and endstop signals:

1. Select the entry "Feedback" or "Feedback_PER" in the drop-down list "Feedback".
2. Select "Instruction" as source.
3. Enter the address of the analog input or the variable of your user program.
4. Activate the "Actuator endstop signals" check box.
5. Select "Instruction" as source for Actuator_H and Actuator_L.
6. Enter the addresses of the digital inputs for Actuator_H and Actuator_L.

PID_3Step offers an analog output value (Output_PER) and digital output values (Output_UP, Output_DN). Your actuator will determine which output value you use.

- Output_PER
  The actuator has a relevant motor transition time and is triggered via an analog output and controlled with a continuous signal, e.g. 0...10 V or 4...20 mA. The value at Output_PER corresponds to the target position of the valve, e.g. Output_PER = 13824, when the valve is to be opened by 50%.
  For auto-tuning and anti windup behavior, for example, PID_3Step takes into consideration that the analog output value has a delayed effect on the process due to the motor transition time. If no relevant motor transition time is in effect in your process (e.g. with solenoid valves), so that the output value has a direct and full effect on the process, use PID_Compact instead.
- Output_UP, Output_DN
  The actuator has a relevant motor transition time and is controlled by two digital outputs.
  Output_UP moves the valve in the open state direction.
  Output_DN moves the valve in the closed state direction.

The motor transition time is taken into consideration in the calculation of the analog output value as well as in the calculation of the digital output values. It is mainly required for correct operation during auto-tuning and the anti-windup behavior. You should therefore configure the motor transition time under "Actuator settings" with the value that the motor requires to move the actuator from the closed to the opened state.

Procedure

Proceed as follows to use the analog output value:

1. Select the entry "Output (analog)" in the drop-down list "Output".
2. Select "Instruction".
3. Enter the address of the analog output.

Proceed as follows to use the digital output value:

1. Select the entry "Output (digital)" in the drop-down list "Output".
2. Select "Instruction" for Output_UP and Output_DN.
3. Enter the addresses of the digital outputs.

Proceed as follows to process the output value using the user program:

1. Select the entry corresponding to the actuator in the drop-down list "Output".
2. Select "Instruction".
3. Enter the name of the tag you are using to process the output value.
4. Transfer the processed output value to the actuator by means of an analog or digital CPU output.

6.2.1.2 Process value settings V2

If you have configured the use of Input_PER in the basic setting, you must convert the value of the analog input to the physical quantity of the process value. The current configuration is displayed in the Input_PER display.
Input_PER will be scaled using a low and high value pair if the process value is directly proportional to the value of the analog input.

Procedure

To scale the process value, follow these steps:

1. Enter the low pair of values in the "Scaled low process value" and "Low" text boxs.
2. Enter the high pair of values in the "Scaled high process value" and "High" input boxes.

Default settings for the value pairs are stored in the hardware configuration. To use the value pairs from the hardware configuration, follow these steps:

1. Select the PID_3Step instruction in the programming editor.
2. Interconnect Input_PER with an analog input in the basic settings.
3. Click the "Automatic setting" button in the process value settings.

The existing values will be overwritten with the values from the hardware configuration.

You must specify an appropriate absolute high limit and low limit for the process value as limit values for your controlled system. As soon as the process value violates these limits, an error occurs (ErrorBits = 0001h). Tuning is canceled when the process value limits are violated. You can specify how PID_3Step responds to errors in automatic mode in the actuator settings.

6.2.1.3 Actuator settings V2

Actuator-specific times

Configure the motor transition time and the minimum ON and OFF times to prevent damage to the actuator. You can find the specifications in the actuator data sheet.

The motor transition time is the time in seconds the motor requires to move the actuator from the closed to the opened state. You can measure the motor transition time during commissioning.

The motor transition time is taken into consideration in the calculation of the analog output value as well as in the calculation of the digital output values. It is mainly required for correct operation during auto-tuning and the anti-windup behavior.

If no relevant motor transition time is in effect in your process (e.g. with solenoid valves), so that the output value has a direct and full effect on the process, use PID_Compact instead.

The motor transition time is retentive. If you enter the motor transition time manually, you must completely download PID_3Step.

Downloading technology objects to device (Page 44)

If you are using "Output_UP" or "Output_DN", you can reduce the switching frequency with the minimum on and minimum OFF time.

The on or off times calculated are totaled in automatic mode and only become effective when the sum is greater than or equal to the minimum on or OFF time.

Manual_UP = TRUE or Manual_DN = TRUE in manual mode operates the actuator for at least the minimum ON or OFF time.

If you have selected the analog output value Output_PER, the minimum ON time and the minimum OFF time are not evaluated and cannot be changed.

Reaction to error

PID_3Step is preset so that the controller stays active in most cases in the event of an error. If errors occur frequently in controller mode, this default reaction has a negative effect on the control response. In this case, check the Errorbits parameter and eliminate the cause of the error.

NOTICE
Your system may be damaged. If you output "Current value while error pending" or "Substitute output value while error pending" in the event of an error, PID_3Step remains in automatic mode even if the process value limits are violated. This may damage your system. It is essential to configure how your controlled system reacts in the event of an error to protect your system from damage.

PID_3Step generates a programmable output value in the case of an error:

- Current value
  PID_3Step is switched off and no longer modifies the actuator position.
- Current value for error while error is pending
  The controller functions of PID_3Step are switched off and the position of the actuator is no longer changed.
  If the following errors occur in automatic mode, PID_3Step returns to automatic mode as soon as the errors are no longer pending.
  - 0002h: Invalid value at Input_PER parameter.
  - 0200h: Invalid value at Input parameter.
  - 0400h: Calculation of output value failed.
  - 1000h: Invalid value at Setpoint parameter.
  - 2000h: Invalid value at Feedback_PER parameter.
  - 4000h: Invalid value at Feedback parameter.
  - 8000h: Error during digital position feedback.
  - 20000h: Invalid value at SavePosition tag.

  If one or more of the following errors occur, PID_3Step stays in automatic mode:
  - 0001h: The Input parameter is outside the process value limits.
  - 0800h: Sampling time error
  - 40000h: Invalid value at Disturbance parameter.

  PID_3Step remains in manual mode if an error occurs in manual mode.
  If an error occurs during tuning or transition time measurement, PID_3Step switches to the mode in which tuning or transition time measurement was started. Only in the event of the following error is tuning not aborted:
  - 0020h: Pretuning is not permitted during fine tuning.
- Substitute output value
  PID_3Step moves the actuator to the substitute output value and then switches off.
- Substitute output value while error is pending
  PID_3Step moves the actuator to the substitute output value. When the substitute output value is reached, PID_3Step reacts as it does with "Current value for while error is pending".

Enter the substitute output value in "%".

Only substitute output values 0% and 100% can be configured when using Output_UP and Output_DN without analog position feedback (Config.OutputPerOn = FALSE and Config.FeedbackOn = FALSE). To reach the high or low endstop, the actuator is moved in the corresponding direction. If endstops are available (Config.ActuatorEndStopOn = TRUE), Output_UP and Output_DN are reset with Actuator_H = TRUE or Actuator_L = TRUE. If no endstop signals are available (Config.ActuatorEndStopOn = FALSE), Output_UP and Output_DN are reset after a travel time of Config.VirtualActuatorLimit * Retain.TransitTime/100.

Any substitute output values within the output value limits can be configured when using Output_PER or analog position feedback (Config.OutputPerOn = TRUE or Config.FeedbackOn = TRUE).

Scaling position feedback

If you have configured the use of Feedback_PER in the basic settings, you will need to convert the value of the analog input into %. The current configuration will be displayed in the "Feedback" display.

Feedback_PER is scaled using a low and high value pair.

1. Enter the low pair of values in the "Low endstop" and "Low" input boxes.
2. Enter the high pair of values in the "High endstop" and "High" input boxes.

"Low endstop" must be less than "High endstop"; "Low" must be less than "High".

The valid values for "High endstop" and "Low endstop" depend upon:

- No Feedback, Feedback, Feedback_PER
- Output (analog), Output (digital)

Output	Feedback	Low endstop	High endstop
Output (digital)	No Feedback	Cannot be set (0.0%)	Cannot be set (100.0%)
Output (digital)	Feedback	-100.0% or 0.0%	0.0% or +100.0%
Output (digital)	Feedback_PER	-100.0% or 0.0%	0.0% or +100.0%
Output (analog)	No Feedback	Cannot be set (0.0%)	Cannot be set (100.0%)
Output (analog)	Feedback	-100.0% or 0.0%	0.0% or +100.0%
Output (analog)	Feedback_PER	-100.0% or 0.0%	0.0% or +100.0%

Limiting the output value

You can exceed or undershoot the output value limits during the transition time measurement and with mode = 10. The output value is limited to these values in all other modes.

Enter the absolute output value limits in the "Output value high limit" and "Output value low limit" input boxes. The output value limits must be within "Low endstop" and "High endstop".

If no Feedback is available and Output (digital) is set, you cannot limit the output value. Output_UP and Output_DN are then reset upon Actuator_H = TRUE or Actuator_L = TRUE. If no endstop signals are available, Output_UP and Output_DN are reset after a travel time of 150% of the motor actuating time.

The default value of 150% can be adjusted using the tagConfig.VirtualActuatorLimit. As of PID_3Step Version 2.3 the monitoring and limiting of the travel time can be deactivated with Config.VirtualActuatorLimit = 0.0.

6.2.1.4 Advanced settings V2

Configure a warning high and low limit for the process value in the "Process value monitoring" configuration window. If one of the warning limits is exceeded or undershot during operation, a warning will be displayed at the PID_3Step instruction:

- At the InputWarning_H output parameter if the warning high limit has been exceeded
- At the InputWarning_L output parameter if the warning low limit has been undershot

The warning limits must be within the process value high and low limits.
The process value high and low limits will be used if you do not enter values.

Example

Process value high limit = 98° C; warning high limit = 90° C
Warning low limit = 10° C; process value low limit = 0° C
PID_3Step will respond as follows:

Process value	InputWarning_H	InputWarning_L	ErrorBits	Operating mode
> 98° C	TRUE	FALSE	0001h	As configured
≤ 98° C and > 90° C	TRUE	FALSE	0000h	Automatic mode
≤ 90° C and ≥ 10° C	FALSE	FALSE	0000h	Automatic mode
< 10° C and ≥ 0° C	FALSE	TRUE	0000h	Automatic mode
< 0° C	FALSE	TRUE	0001h	As configured

In the actuator settings, you can configure the response of PID_3Step when the process value high limit or low limit is violated.

The PID parameters are displayed in the "PID Parameters" configuration window. The PID parameters will be adapted to your controlled system during controller tuning. You do not need to enter the PID parameters manually.

NOTE

The currently active PID parameters are located in the Retain.CtrlParams structure.

Change the currently active PID parameters only in "Inactive" mode online to prevent malfunction of the PID controller.

If you want to change the PID parameters in "Automatic mode" or "Manual mode" online, change the PID parameters in the CtrlParamsBackUp structure and apply these changes to the Retain.CtrlParams structure as follows:

- PID_3Step V1: Apply the changes with Config.LoadBackUp = TRUE
- PID_3Step V2: Apply the changes with LoadBackUp = TRUE

Online changes to the PID parameters in "Automatic mode" can result in jumps at the output value.

The PID algorithm operates according to the following equation:

$$\Delta y = K_p \cdot s \cdot \left[(b \cdot w - x) + \frac{1}{T_I \cdot s}(w - x) + \frac{T_D \cdot s}{a \cdot T_D \cdot s + 1}(c \cdot w - x) \right]$$

Δy	Output value of the PID algorithm
K_p	Proportional gain
s	Laplace operator
b	Proportional action weighting
w	Setpoint
x	Process value
T_I	Integration time
a	Derivative delay coefficient (derivative delay T1 = a × T_D)
T_D	Derivative action time
c	Derivative action weighting

The diagram below illustrates the integration of the parameters into the PID algorithm:

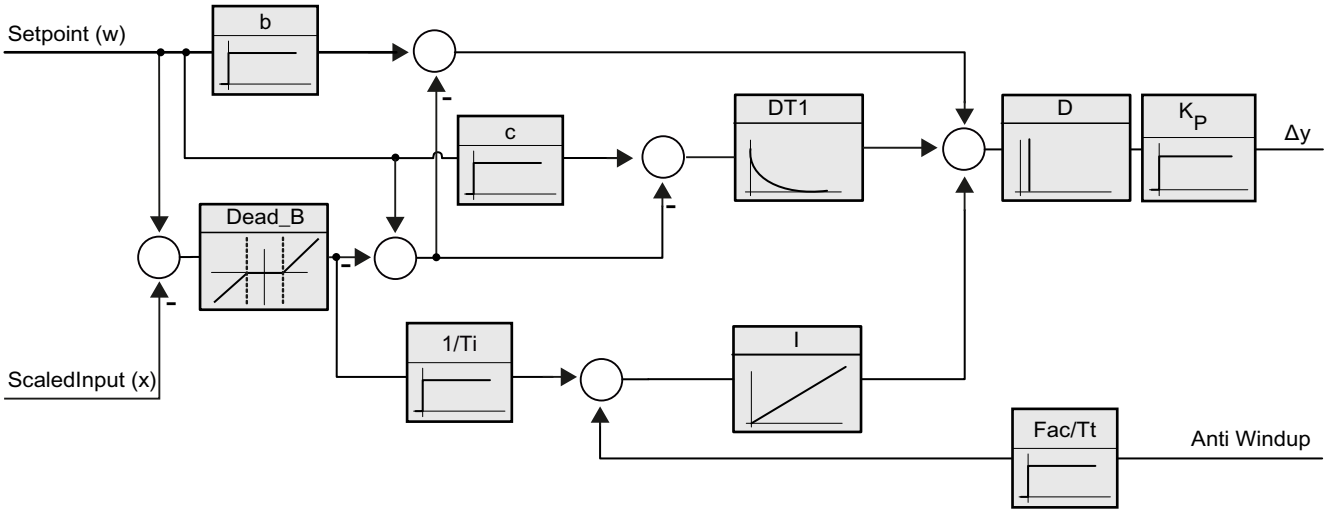

All PID parameters are retentive. If you enter the PID parameters manually, you must completely download PID_3Step.
Downloading technology objects to device (Page 44)

Proportional gain

The value specifies the proportional gain of the controller. PID_3Step does not work with a negative proportional gain. Control logic is inverted under Basic settings > Controller type.

Integration time

The integration time determines the time behavior of the integral action. The integral action is deactivated with integration time = 0.0. When the integral action time is changed from a different value to 0.0 online in "Automatic mode", the previous integral action is deleted and the output value jumps.

Derivative action time

The derivative action time determines the time behavior of the derivative action. Derivative action is deactivated with derivative action time = 0.0.

Derivative delay coefficient

The derivative delay coefficient delays the effect of the derivative action.

Derivative delay = derivative action time × derivative delay coefficient

- 0.0: Derivative action is effective for one cycle only and therefore almost not effective.
- 0.5: This value has proved useful in practice for controlled systems with **one** dominant time constant.
- > 1.0: The greater the coefficient, the longer the effect of the derivative action is delayed.

Proportional action weighting

The proportional action may weaken with changes to the setpoint.

Values from 0.0 to 1.0 are applicable.

- 1.0: Proportional action for setpoint change is fully effective
- 0.0: Proportional action for setpoint change is not effective

The proportional action is always fully effective when the process value is changed.

Derivative action weighting

The derivative action may weaken with changes to the setpoint.

Values from 0.0 to 1.0 are applicable.

- 1.0: Derivative action is fully effective upon setpoint change
- 0.0: Derivative action is not effective upon setpoint change

The derivative action is always fully effective when the process value is changed.

PID algorithm sampling time

The controlled system needs a certain amount of time to respond to changes in the output value. It is therefore not advisable to calculate the output value in every cycle. The sampling time of the PID algorithm represents the time between two calculations of the output value. It is calculated during tuning and rounded to a multiple of the PID_3Step sampling time. All other functions of PID_3Step are executed at every call.

Dead band width

The deadband suppresses the noise component in the steady controller state. The dead band width specifies the size of the dead band. The dead band is off if the dead band width is 0.0.

If values not equal to 1.0 are configured for the proportional action weighting or the derivative action weighting, setpoint changes even within the dead zone affect the output value.

Process value changes within the dead zone do not affect the output value, regardless of the weighting.

6.2.2 Commissioning PID_3Step V2

6.2.2.1 Pretuning V2

The pretuning determines the process response to a pulse of the output value and searches for the point of inflection. The tuned PID parameters are calculated as a function of the maximum slope and dead time of the controlled system. You obtain the best PID parameters when you perform pretuning and fine tuning.
The more stable the process value is, the easier it is to calculate the PID parameters and the more precise the result will be. Noise on the process value can be tolerated as long as the rate of rise of the process value is significantly higher compared to the noise. This is most likely the case in operating modes "Inactive" and "manual mode". The PID parameters are backed up before being recalculated.
The setpoint is frozen during pretuning.

Requirement

- The PID_3Step instruction is called in a cyclic interrupt OB.
- ManualEnable = FALSE
- Reset = FALSE
- The motor transition time has been configured or measured.
- PID_3Step is in one of the following modes: "Inactive", "Manual mode", or "Automatic mode".
- The setpoint and the process value lie within the configured limits (see "Process value settings" configuration).

Procedure

To perform pretuning, follow these steps:

1. Double-click the "PID_3Step > Commissioning" entry in the project tree.
2. Select the entry "Pretuning" in the "Tuning mode" drop-down list in the working area "Tuning".
3. Click the "Start" icon.
   - An online connection will be established.
   - Value recording is started.
   - Pretuning is started.

– The "Status" field displays the current steps and any errors that may have occurred. The progress bar indicates the progress of the current step.

NOTE

Click the "Stop" icon when the progress bar has reached 100% and it is to be assumed the controller tuning function is blocked. Check the configuration of the technology object and, if necessary, restart controller tuning.

Result

If pretuning was performed without an error message, the PID parameters have been tuned. PID_3Step switches to automatic mode and uses the tuned parameters. The tuned PID parameters will be retained during power OFF and a restart of the CPU.

If pretuning is not possible, PID_3Step responds with the configured reaction to errors.

6.2.2.2 Fine tuning V2

Fine tuning generates a constant, limited oscillation of the process value. The PID parameters are tuned for the operating point from the amplitude and frequency of this oscillation. All PID parameters are recalculated from the results. PID parameters from fine tuning usually have better master control and disturbance characteristics than PID parameters from pretuning. You obtain the best PID parameters when you perform pretuning and fine tuning.

PID_3Step automatically attempts to generate an oscillation greater than the noise of the process value. Fine tuning is only minimally influenced by the stability of the process value. The PID parameters are backed up before being recalculated.

The setpoint is frozen during fine tuning.

Requirement

- The PID_3Step instruction is called in a cyclic interrupt OB.
- ManualEnable = FALSE
- Reset = FALSE
- The motor transition time has been configured or measured.
- The setpoint and the process value lie within the configured limits (see "Process value settings" configuration).
- The control loop has stabilized at the operating point. The operating point is reached when the process value corresponds to the setpoint.
- No disturbances are expected.
- PID_3Step is in inactive mode, automatic mode or manual mode.

Process depends on initial situation

Fine tuning proceeds as follows when started from:

- Automatic mode
  Start fine tuning from automatic mode if you wish to improve the existing PID parameters through tuning.
  PID_3Step controls the system using the existing PID parameters until the control loop has stabilized and the requirements for fine tuning have been met. Only then will fine tuning start.
- Inactive or manual mode
  Pretuning is always started first. The determined PID parameters will be used for control until the control loop has stabilized and the requirements for fine tuning have been met. Only then will fine tuning start.

Procedure

To perform fine tuning, follow these steps:

1. Select the entry "Fine tuning" in the "Tuning mode" drop-down list.
2. Click the "Start" icon.
   - An online connection will be established.
   - Value recording is started.
   - The process of fine tuning is started.
   - The "Status" field displays the current steps and any errors that may have occurred. The progress bar indicates the progress of the current step.

NOTE

Click the "Stop" icon in the "Tuning mode" group when the progress bar has reached 100% and it is to be assumed the controller tuning function is blocked. Check the configuration of the technology object and, if necessary, restart controller tuning.

Result

If no errors occurred during fine tuning, the PID parameters have been tuned. PID_3Step switches to automatic mode and uses the tuned parameters. The tuned PID parameters will be retained during power OFF and a restart of the CPU.

If errors occurred during fine tuning, PID_3Step responds with the configured response to errors.

6.2.2.3 Commissioning with manual PID parameters V2

Requirement

- The PID_3Step instruction is called in a cyclic interrupt OB.
- ManualEnable = FALSE
- Reset = FALSE
- The motor transition time has been configured or measured.
- PID_3Step is in "inactive" mode.
- The setpoint and the process value lie within the configured limits (see "Process value settings" configuration).

Procedure

Proceed as follows to commission PID_3Step with manual PID parameters:

1. Double-click on "PID_3Step > Configuration" in the project tree.
2. Click on "Advanced settings > PID Parameters" in the configuration window.
3. Select the check box "Enable direct input".
4. Enter the PID parameters.
5. Double-click the "PID_3Step > Commissioning" entry in the project tree.
6. Establish an online connection to the CPU.
7. Load the PID parameters to the CPU.
8. Click the "Start PID_3Step" icon.

Result

PID_3Step changes to automatic mode and controls using the current PID parameters.

See also

PID parameters V2 (Page 111)

6.2.2.4 Measuring the motor transition time V2

Introduction

PID_3Step requires the motor transition time to be as accurate as possible for good controller results. The data in the actuator documentation contains average values for this type of actuator. The value for the specific actuator used may differ.

You can measure the motor transition time during commissioning if you are using actuators with position feedback or endstop signals. The output value limits are not taken into consideration during the motor transition time measurement. The actuator can travel to the high or the low endstop.

The motor transition time cannot be measured if neither position feedback nor endstop signals are available.

Actuators with analog position feedback

Proceed as follows to measure motor transition time with position feedback:

Requirement

- Feedback or Feedback_PER has been selected in the basic settings and the signal has been connected.
- An online connection to the CPU has been established.

1. Select the "Use position feedback" check box.
2. Enter the position to which the actuator is to be moved in the "Target position" input field.
   The current position feedback (starting position) will be displayed. The difference between "Target position" and "Position feedback" must be at least 50% of the valid output value range.
3. Click the "Start" icon.

Result

The actuator is moved from the starting position to the target position. Time measurement starts immediately and ends when the actuator reaches the target position. The motor transition time is calculated according to the following equation:

Motor transition time = (output value high limit – output value low limit) × Measuring time / AMOUNT (target position – starting position).

The progress and status of transition time measurement are displayed. The transition time measured is saved in the instance data block on the CPU and displayed in the "Measured transition time" field. When the transition time measurement is ended and ActivateRecoverMode = TRUE, PID_3Step switches to the operating mode from which the transition time measurement was started. If the transition time measurement is ended and ActivateRecoverMode = FALSE, PID_3Step changes to "Inactive" mode.

NOTE

Click on the icon "Upload measured transition time" to load the motor transition time measured to the project.

Actuators with endstop signals

Proceed as follows to measure the transition time of actuators with endstop signals:

Requirement

- The "Endstop signals" check box in the basic settings has been selected and Actuator_H and Actuator_L are connected.
- An online connection to the CPU has been established.

Proceed as follows to measure motor transition time with endstop signals:

1. Select the "Use actuator endstop signals" check box.
2. Select the direction in which the actuator is to be moved.
   - Open - Close - Open
     The actuator is moved first to the high endstop, then to the low endstop and then back to the high endstop.
   - Close - Open - Close
     The actuator is moved first to the low endstop, then to the high endstop and then back to the low endstop.
3. Click the "Start" icon.

Result

The actuator is moved in the selected direction. Time measurement will start once the actuator has reached the first endstop and will end when the actuator reaches this endstop for the second time. The motor transition time is equal to the time measured divided by two.

The progress and status of transition time measurement are displayed. The transition time measured is saved in the instance data block on the CPU and displayed in the "Measured transition time" field. When the transition time measurement is ended and ActivateRecoverMode = TRUE, PID_3Step switches to the operating mode from which the transition time measurement was started. If the transition time measurement is ended and ActivateRecoverMode = FALSE, PID_3Step changes to "Inactive" mode.

Cancelling transition time measurement

PID_3Step switches to "Inactive" mode if you cancel transition time measurement by pressing the Stop button.

6.2.3 Simulating PID_3Step V2 with PLCSIM

NOTE

Simulation with PLCSIM

The simulation of PID_3Step V2.x with PLCSIM for CPU S7-1200 is not supported.

PID_3Step V2.x can only be simulated for CPU S7-1500 with PLCSIM.

For the simulation with PLCSIM, the time behavior of the simulated PLC is not exactly identical to that of a "real" PLC. The actual cycle clock of a cyclic interrupt OB can have larger fluctuations with a simulated PLC than with "real" PLCs.

In the standard configuration, PID_3Step determines the time between calls automatically and monitors them for fluctuations.

For a simulation of PID_3Step with PLCSIM, for example, a sampling time error ((ErrorBits = DW#16#00000800) can therefore be detected.

This results in ongoing tuning being aborted.

The response in automatic mode depends on the value of the ActivateRecoverMode tag.

To prevent this from happening, you should configure PID_3Step for simulation with PLCSIM as follows:

- CycleTime.EnEstimation = FALSE
- CycleTime.EnMonitoring = FALSE
- CycleTime.Value: Assign the cycle clock of the calling cyclic interrupt OB in seconds to this tag.

6.3 PID_3Step V1

6.3.1 Configuring PID_3Step V1

6.3.1.1 Basic settings V1

Configure the following properties of the "PID_3Step" technology object under "Basic settings" in the Inspector window or in the configuration window:

- Physical quantity
- Control logic
- Start-up behavior after reset
- Setpoint (only in the Inspector window)
- Process value (only in the Inspector window)
- Output value (only in the Inspector window)
- Position feedback (only in the Inspector window)

Setpoint, process value, output value and position feedback

You can only configure the setpoint, process value, output value and position feedback in the Inspector window of the programming editor. Select the source for each value:

- Instance DB
  The value saved in the instance DB is used.
  Value must be updated in the instance DB by the user program.
  There should be no value at the instruction.
  Change via HMI possible.
- Instruction
  The value connected to the instruction is used.
  The value is written to the instance DB each time the instruction is called.
  No change via HMI possible.

Physical quantity

Select the unit of measurement and physical quantity for the setpoint and process value in the "Controller type" group. The setpoint and process value will be displayed in this unit.

Control logic

An increase of the output value is generally intended to cause an increase in the process value. This is referred to as a normal control logic.
PID_3Step does not work with negative proportional gain. Select the check box "Invert control logic" to reduce the process value with a higher output value.
Examples

- Opening the drain valve will reduce the level of a container's contents.
- Increasing cooling will reduce the temperature.

Start-up behavior after reset

To change straight to the last active mode after restarting the CPU, select the "Enable last mode after CPU restart" check box.
PID_3Step will remain in "Inactive" mode if the check box is cleared.

Procedure

Proceed as follows to define a fixed setpoint:

1. Select "Instance DB".
2. Enter a setpoint, e.g. 80° C.
3. Delete any entry in the instruction.

Proceed as follows to define a variable setpoint:

1. Select "Instruction".
2. Enter the name of the REAL variable in which the setpoint is saved.
   Program-controlled assignment of various values to the REAL variable is possible, for example for the time controlled change of the setpoint.

PID_3Step will scale the value of the analog input to the physical quantity if you use the analog input value directly.
You will need to write a program for processing if you wish first to process the analog input value. The process value is, for example, not directly proportional to the value at the analog input. The processed process value must be in floating point format.

Procedure

Proceed as follows to use the analog input value without processing:

1. Select the entry "Input_PER" in the drop-down list "Input".
2. Select "Instruction" as source.
3. Enter the address of the analog input.

Proceed as follows to use the processed process value in floating point format:

1. Select the entry "Input" in the drop-down list "Input".
2. Select "Instruction" as source.
3. Enter the name of the variable in which the processed process value is saved.

Position feedback configuration depends upon the actuator used.

- Actuator without position feedback
- Actuator with digital endstop signals
- Actuator with analog position feedback
- Actuator with analog position feedback and endstop signals

Actuator without position feedback

Proceed as follows to configure PID_3Step for an actuator without position feedback:

1. Select the entry "No Feedback" in the drop-down list "Feedback".

Actuator with digital endstop signals

Proceed as follows to configure PID_3Step for an actuator with endstop signals:

1. Select the entry "No Feedback" in the drop-down list "Feedback".
2. Activate the "Actuator endstop signals" check box.
3. Select "Instruction" as source for Actuator_H and Actuator_L.
4. Enter the addresses of the digital inputs for Actuator_H and Actuator_L.

Actuator with analog position feedback

Proceed as follows to configure PID_3Step for an actuator with analog position feedback:

1. Select the entry "Feedback" or "Feedback_PER" in the drop-down list "Feedback".
   - Use the analog input value for Feedback_PER. Configure Feedback_PER scaling in the actuator settings.
   - Process the analog input value for Feedback using your user program.
2. Select "Instruction" as source.
3. Enter the address of the analog input or the variable of your user program.

Actuator with analog position feedback and endstop signals

Proceed as follows to configure PID_3Step for an actuator with analog position feedback and endstop signals:

1. Select the entry "Feedback" or "Feedback_PER" in the drop-down list "Feedback".
2. Select "Instruction" as source.
3. Enter the address of the analog input or the variable of your user program.
4. Activate the "Actuator endstop signals" check box.
5. Select "Instruction" as source for Actuator_H and Actuator_L.
6. Enter the addresses of the digital inputs for Actuator_H and Actuator_L.

PID_3Step offers an analog output value (Output_PER) and digital output values (Output_UP, Output_DN). Your actuator will determine which output value you use.

- Output_PER
  The actuator has a relevant motor transition time and is triggered via an analog output and controlled with a continuous signal, e.g. 0...10 V or 4...20 mA. The value at Output_PER corresponds to the target position of the valve, e.g. Output_PER = 13824, when the valve is to be opened by 50%.
  For auto-tuning and anti windup behavior, for example, PID_3Step takes into consideration that the analog output value has a delayed effect on the process due to the motor transition time. If no relevant motor transition time is in effect in your process (e.g. with solenoid valves), so that the output value has a direct and full effect on the process, use PID_Compact instead.
- Output_UP, Output_DN
  The actuator has a relevant motor transition time and is controlled by two digital outputs.
  Output_UP moves the valve in the open state direction.
  Output_DN moves the valve in the closed state direction.

The motor transition time is taken into consideration in the calculation of the analog output value as well as in the calculation of the digital output values. It is mainly required for correct operation during auto-tuning and the anti-windup behavior. You should therefore configure the motor transition time under "Actuator settings" with the value that the motor requires to move the actuator from the closed to the opened state.

Procedure

Proceed as follows to use the analog output value:

1. Select the entry "Output (analog)" in the drop-down list "Output".
2. Select "Instruction".
3. Enter the address of the analog output.

Proceed as follows to use the digital output value:

1. Select the entry "Output (digital)" in the drop-down list "Output".
2. Select "Instruction" for Output_UP and Output_DN.
3. Enter the addresses of the digital outputs.

Proceed as follows to process the output value using the user program:

1. Select the entry corresponding to the actuator in the drop-down list "Output".
2. Select "Instruction".
3. Enter the name of the tag you are using to process the output value.
4. Transfer the processed output value to the actuator by means of an analog or digital CPU output.

6.3.1.2 Process value settings V1

Configure the scaling of your process value and specify the process value absolute limits In the "Process value settings" configuration window.

Scaling the process value

If you have configured the use of Input_PER in the basic settings, you will need to convert the value of the analog input into the physical quantity of the process value. The current configuration will be displayed in the Input_PER display.

Input_PER will be scaled using a low and high value pair if the process value is directly proportional to the value of the analog input.

1. Enter the low pair of values in the "Scaled low process value" and "Low" input fields.
2. Enter the high pair of values in the "Scaled high process value" and "High" input boxes.

Default settings for the value pairs are saved in the hardware configuration. Proceed as follows to use the value pairs from the hardware configuration:

1. Select the instruction PID_3Step in the programming editor.
2. Connect Input_PER to an analog input in the basic settings.
3. Click on the "Automatic setting" button in the process value settings.
   The existing values will be overwritten with the values from the hardware configuration.

Monitoring process value

Specify the absolute high and low limit of the process value. You must enter reasonable limits for your controlled system. Reasonable limits are important during optimization to obtain optimal PID parameters. The default for the "High limit process value" is 120 %. At the I/O input, the process value can be a maximum of 18% higher than the standard range (overrange). This setting ensures that an error is no longer signaled due to a violation of the

"Process value high limit". Only a wire-break and a short-circuit are recognized and PID_3Step reacts according to the configured reaction to error.

NOTICE
Your system may be damaged. If you set very high process value limits (for example $-3.4*10^{38}$...$+3.4*10^{38}$), process value monitoring will be disabled. Your system may then be damaged if an error occurs. You need to configure useful process value limits for your controlled system.

6.3.1.3 Actuator settings V1

Actuator-specific times

Configure the motor transition time and the minimum ON and OFF times to prevent damage to the actuator. You can find the specifications in the actuator data sheet.

The motor transition time is the time in seconds the motor requires to move the actuator from the closed to the opened state. The maximum time that the actuator is moved in one direction is 110% of the motor transition time. You can measure the motor transition time during commissioning.

The motor transition time is taken into consideration in the calculation of the analog output value as well as in the calculation of the digital output values. It is mainly required for correct operation during auto-tuning and the anti-windup behavior.

If no relevant motor transition time is in effect in your process (e.g. with solenoid valves), so that the output value has a direct and full effect on the process, use PID_Compact instead.

If you are using "Output_UP" or "Output_DN", you can reduce the switching frequency with the minimum on and minimum OFF time.

The on or off times calculated are totaled in automatic mode and only become effective when the sum is greater than or equal to the minimum on or OFF time.

A rising edge at Manual_UP or Manual_DN in manual mode will operate the actuator for at least the minimum on or OFF time.

If you have selected the analog output value Output_PER, the minimum ON time and the minimum OFF time are not evaluated and cannot be changed.

Reaction to error

PID_3Step is preset so that the controller stays active in most cases in the event of an error. If errors occur frequently in controller mode, this default reaction has a negative effect on the control response. In this case, check the Errorbits parameter and eliminate the cause of the error.

PID_3Step generates a programmable output value in response to an error:

- Current value
  PID_3Step is switched off and no longer modifies the actuator position.

- Current value for error while error is pending
  The controller functions of PID_3Step are switched off and the position of the actuator is no longer changed.
  If the following errors occur in automatic mode, PID_3Step returns to automatic mode as soon as the errors are no longer pending.
  - 0002h: Invalid value at Input_PER parameter.
  - 0200h: Invalid value at Input parameter.
  - 0800h: Sampling time error
  - 1000h: Invalid value at Setpoint parameter.
  - 2000h: Invalid value at Feedback_PER parameter.
  - 4000h: Invalid value at Feedback parameter.
  - 8000h: Error during digital position feedback.

  If one of these error occurs in manual mode, PID_3Step remains in manual mode.
  If an error occurs during the tuning or transition time measurement, PID_3Step is switched off.
- Substitute output value
  PID_3Step moves the actuator to the substitute output value and then switches off.
- Substitute output value while error is pending
  PID_3Step moves the actuator to the substitute output value. When the substitute output value is reached, PID_3Step reacts as it does with "Current value for while error is pending".

Enter the substitute output value in "%".

Only substitute output values 0% and 100% can be configured when using Output_UP and Output_DN without analog position feedback (Config.OutputPerOn = FALSE and Config.FeedbackOn = FALSE). The actuator is moved in one direction at 110% of the motor transition time to ensure the high or low endstop is reached. There endstop signals take priority.

Any substitute output values within the output value limits can be configured when using Output_PER or analog position feedback (Config.OutputPerOn = TRUE or Config.FeedbackOn = TRUE).

Feedback scaling

If you have configured the use of Feedback_PER in the basic settings, you will need to convert the value of the analog input into %. The current configuration will be displayed in the "Feedback" display.

Feedback_PER is scaled using a low and high value pair.

1. Enter the low pair of values in the "Low endstop" and "Low" input boxes.
2. Enter the high pair of values in the "High endstop" and "High" input boxes.

"Low endstop" must be less than "High endstop"; "Low" must be less than "High".

The valid values for "High endstop" and "Low endstop" depend upon:

- No Feedback, Feedback, Feedback_PER
- Output (analog), Output (digital)

Output	Feedback	Low endstop	High endstop
Output (digital)	No Feedback	Cannot be set (0.0%)	Cannot be set (100.0%)

Output	Feedback	Low endstop	High endstop
Output (digital)	Feedback	-100.0% or 0.0%	0.0% or +100.0%
Output (digital)	Feedback_PER	-100.0% or 0.0%	0.0% or +100.0%
Output (analog)	No Feedback	Cannot be set (0.0%)	Cannot be set (100.0%)
Output (analog)	Feedback	-100.0% or 0.0%	0.0% or +100.0%
Output (analog)	Feedback_PER	-100.0% or 0.0%	0.0% or +100.0%

Limiting the output value

You can only exceed or undershoot the output value limits during the transition time measurement. The output value is limited to these values in all other modes.

Enter the absolute output value limits in the "Output value high limit" and "Output value low limit" input boxes. The output value limits must be within "Low endstop" and "High endstop".

If no Feedback is available and Output (digital) is set, you cannot limit the output value. The digital outputs are reset with Actuator_H = TRUE or Actuator_L = TRUE, or after a travel time amounting to 110% of the motor transition time.

6.3.1.4 Advanced settings V1

Configure a warning high and low limit for the process value in the "Process value monitoring" configuration window. If one of the warning limits is exceeded or undershot during operation, a warning will be displayed at the PID_3Step instruction:

- At the InputWarning_H output parameter if the warning high limit has been exceeded
- At the InputWarning_L output parameter if the warning low limit has been undershot

The warning limits must be within the process value high and low limits.

The process value high and low limits will be used if you do not enter values.

Example

Process value high limit = 98° C; warning high limit = 90° C
Warning low limit = 10° C; process value low limit = 0° C
PID_3Step will respond as follows:

Process value	InputWarning_H	InputWarning_L	Operating mode
> 98° C	TRUE	FALSE	Inactive
≤ 98° C and > 90° C	TRUE	FALSE	Automatic mode
≤ 90° C and ≥ 10° C	FALSE	FALSE	Automatic mode
< 10° C and ≥ 0° C	FALSE	TRUE	Automatic mode
< 0° C	FALSE	TRUE	Inactive

The PID parameters are displayed in the "PID Parameters" configuration window. The PID parameters will be adapted to your controlled system during controller tuning. You do not need to enter the PID parameters manually.

NOTE

The currently active PID parameters are located in the Retain.CtrlParams structure.

Change the currently active PID parameters only in "Inactive" mode online to prevent malfunction of the PID controller.

If you want to change the PID parameters in "Automatic mode" or "Manual mode" online, change the PID parameters in the CtrlParamsBackUp structure and apply these changes to the Retain.CtrlParams structure as follows:

- PID_3Step V1: Apply the changes with Config.LoadBackUp = TRUE
- PID_3Step V2: Apply the changes with LoadBackUp = TRUE

Online changes to the PID parameters in "Automatic mode" can result in jumps at the output value.

The PID algorithm operates according to the following equation:

$$\Delta y = K_p \cdot s \cdot \left[(b \cdot w - x) + \frac{1}{T_I \cdot s} (w - x) + \frac{T_D \cdot s}{a \cdot T_D \cdot s + 1} (c \cdot w - x) \right]$$

Δy	Output value of the PID algorithm
K_p	Proportional gain
s	Laplace operator
b	Proportional action weighting
w	Setpoint
x	Process value
T_I	Integration time
a	Derivative delay coefficient (derivative delay T1 = a × T_D)
T_D	Derivative action time
c	Derivative action weighting

The diagram below illustrates the integration of the parameters into the PID algorithm:

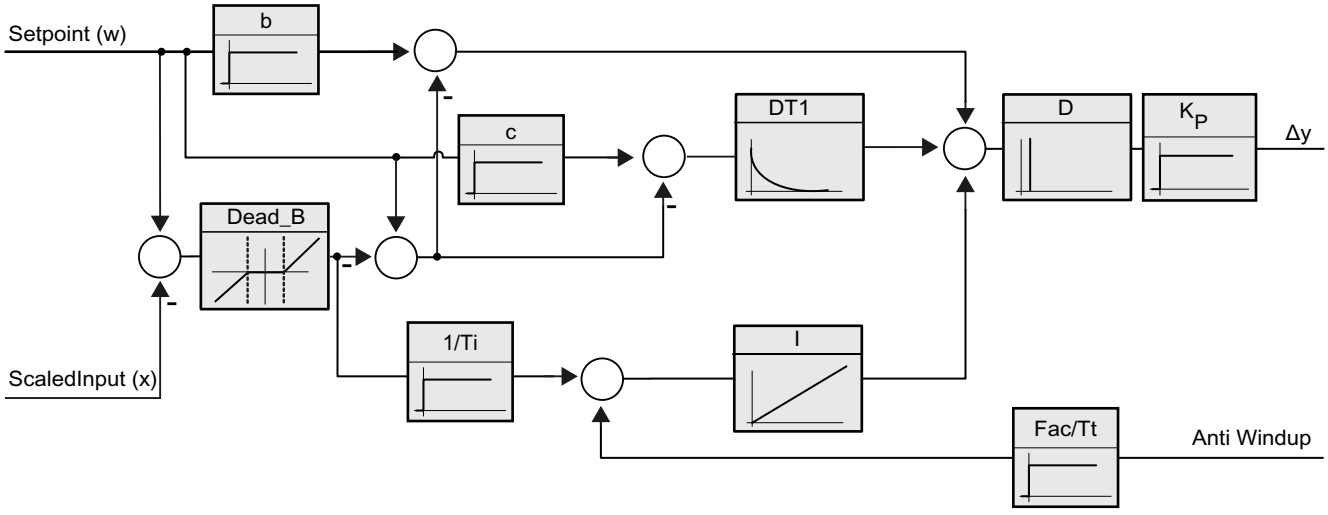

All PID parameters are retentive. If you enter the PID parameters manually, you must completely download PID_3Step.
Downloading technology objects to device (Page 44)

Proportional gain

The value specifies the proportional gain of the controller. PID_3Step does not work with a negative proportional gain. Control logic is inverted under Basic settings > Controller type.

Integration time

The integration time determines the time behavior of the integral action. The integral action is deactivated with integration time = 0.0. When the integral action time is changed from a different value to 0.0 online in "Automatic mode", the previous integral action is deleted and the output value jumps.

Derivative action time

The derivative action time determines the time behavior of the derivative action. Derivative action is deactivated with derivative action time = 0.0.

Derivative delay coefficient

The derivative delay coefficient delays the effect of the derivative action.
Derivative delay = derivative action time × derivative delay coefficient

- 0.0: Derivative action is effective for one cycle only and therefore almost not effective.
- 0.5: This value has proved useful in practice for controlled systems with **one** dominant time constant.
- > 1.0: The greater the coefficient, the longer the effect of the derivative action is delayed.

Proportional action weighting

The proportional action may weaken with changes to the setpoint.
Values from 0.0 to 1.0 are applicable.

- 1.0: Proportional action for setpoint change is fully effective
- 0.0: Proportional action for setpoint change is not effective

The proportional action is always fully effective when the process value is changed.

Derivative action weighting

The derivative action may weaken with changes to the setpoint.
Values from 0.0 to 1.0 are applicable.

- 1.0: Derivative action is fully effective upon setpoint change
- 0.0: Derivative action is not effective upon setpoint change

The derivative action is always fully effective when the process value is changed.

PID algorithm sampling time

The controlled system needs a certain amount of time to respond to changes in the output value. It is therefore not advisable to calculate the output value in every cycle. The sampling time of the PID algorithm represents the time between two calculations of the output value. It is calculated during tuning and rounded to a multiple of the PID_3Step sampling time. All other functions of PID_3Step are executed at every call.

Dead band width

The deadband suppresses the noise component in the steady controller state. The dead band width specifies the size of the dead band. The dead band is off if the dead band width is 0.0.

If values not equal to 1.0 are configured for the proportional action weighting or the derivative action weighting, setpoint changes even within the dead zone affect the output value.
Process value changes within the dead zone do not affect the output value, regardless of the weighting.

6.3.2 Commissioning PID_3Step V1

6.3.2.1 Commissioning V1

You can monitor the setpoint, process value and output value over time in the "Tuning" working area. The following commissioning functions are supported in the curve plotter:

- Controller pretuning
- Controller fine tuning
- Monitoring the current closed-loop control in the trend view

All functions require an online connection to the CPU to have been established.

Basic handling

- Select the desired sampling time in the "Sampling time" drop-down list.
  All values in the tuning working area are updated in the selected update time.
- Click the "Start" icon in the measuring group if you want to use the commissioning functions.
  Value recording is started. The current values for the setpoint, process value and output value are entered in the trend view. Operation of the commissioning window is enabled.
- Click the "Stop" icon if you want to end the commissioning functions.
  The values recorded in the trend view can continue to be analyzed.
- Closing the commissioning window will terminate recording in the trend view and delete the recorded values.

6.3.2.2 Pretuning V1

The pretuning determines the process response to a pulse of the output value and searches for the point of inflection. The tuned PID parameters are calculated as a function of the maximum slope and dead time of the controlled system.

The more stable the process value is, the easier it is to calculate the PID parameters and the more precise the result will be. Noise on the process value can be tolerated as long as the rate of rise of the process value is significantly higher compared to the noise. The PID parameters are backed up before being recalculated.

The setpoint is frozen during pretuning.

Requirement

- The PID_3Step instruction is called in a cyclic interrupt OB.
- ManualEnable = FALSE
- PID_3Step is in "inactive" or "manual" mode.
- The setpoint and the process value lie within the configured limits (see "Process value settings" configuration).

Procedure

To perform pretuning, follow these steps:

1. Double-click the "PID_3Step > Commissioning" entry in the project tree.
2. Select the entry "Pretuning" in the "Tuning mode" drop-down list in the working area "Tuning".
3. Click the "Start" icon.
   - An online connection will be established.
   - Value recording is started.
   - Pretuning is started.

– The "Status" field displays the current steps and any errors that may have occurred. The progress bar indicates the progress of the current step.

NOTE

Click the "Stop" icon when the progress bar has reached 100% and it is to be assumed the controller tuning function is blocked. Check the configuration of the technology object and, if necessary, restart controller tuning.

Result

If pretuning was performed without an error message, the PID parameters have been tuned. PID_3Step switches to automatic mode and uses the tuned parameters. The tuned PID parameters will be retained during power OFF and a restart of the CPU.

If pretuning is not possible, PID_3Step changes to "Inactive" mode.

6.3.2.3 Fine tuning V1

Fine tuning generates a constant, limited oscillation of the process value. The PID parameters are optimized for the operating point from the amplitude and frequency of this oscillation. All PID parameters are recalculated on the basis of the findings. PID parameters from fine tuning usually have better master control and disturbance behavior than PID parameters from pretuning.

PID_3Step automatically attempts to generate an oscillation greater than the noise of the process value. Fine tuning is only minimally influenced by the stability of the process value. The PID parameters are backed up before being recalculated.

The setpoint is frozen during fine tuning.

Requirement

- The PID_3Step instruction is called in a cyclic interrupt OB.
- ManualEnable = FALSE
- The motor transition time has been configured or measured.
- The setpoint and the process value lie within the configured limits (see "Process value settings" configuration).
- The control loop has stabilized at the operating point. The operating point is reached when the process value corresponds to the setpoint.
- No disturbances are expected.
- PID_3Step is in inactive mode, automatic mode or manual mode.

Process depends on initial situation

Fine tuning proceeds as follows when started in:

- Automatic mode
  Start fine tuning in automatic mode if you wish to improve the existing PID parameters using controller tuning.
  PID_3Step will regulate using the existing PID parameters until the control loop has stabilized and the requirements for fine tuning have been met. Only then will fine tuning start.
- Inactive or manual mode
  Pretuning is always started first. The PID parameters established will be used for adjustment until the control loop has stabilized and the requirements for fine tuning have been met. Only then will fine tuning start.

Procedure

Proceed as follows to carry out "fine tuning":

1. Select the entry "Fine tuning" in the "Tuning mode" drop-down list.
2. Click the "Start" icon.
   - An online connection will be established.
   - Value recording is started.
   - The process of fine tuning is started.
   - The "Status" field displays the current steps and any errors that may have occurred. The progress bar indicates the progress of the current step.

NOTE

Click the "Stop" icon in the "Tuning mode" group when the progress bar has reached 100% and it is to be assumed the controller tuning function is blocked. Check the configuration of the technology object and, if necessary, restart controller tuning.

Result

The PID parameters will have been optimized if fine tuning has been executed without errors. PID_3Step changes to automatic mode and uses the optimized parameters. The optimized PID parameters will be retained during power OFF and a restart of the CPU.
If errors occurred during fine tuning, PID_3Step will change to "inactive" mode.

6.3.2.4 Commissioning with manual PID parameters V1

Procedure

Proceed as follows to commission PID_3Step with manual PID parameters:

1. Double-click on "PID_3Step > Configuration" in the project tree.
2. Click on "Advanced settings > PID Parameters" in the configuration window.
3. Select the check box "Enable direct input".

4. Enter the PID parameters.
5. Double-click on "PID_3Step > Commissioning" in the project tree.
6. Establish an online connection to the CPU.
7. Load the PID parameters to the CPU.
8. Click on the "Activate controller" icon.

Result

PID_3Step changes to automatic mode and controls using the current PID parameters.

6.3.2.5 Measuring the motor transition time V1

Introduction

PID_3Step requires the motor transition time to be as accurate as possible for good controller results. The data in the actuator documentation contains average values for this type of actuator. The value for the specific actuator used may differ.

You can measure the motor transition time during commissioning if you are using actuators with position feedback or endstop signals. The output value limits are not taken into consideration during the motor transition time measurement. The actuator can travel to the high or the low endstop.

The motor transition time cannot be measured if neither position feedback nor endstop signals are available.

Actuators with analog position feedback

Proceed as follows to measure motor transition time with position feedback:

Requirement

- Feedback or Feedback_PER has been selected in the basic settings and the signal has been connected.
- An online connection to the CPU has been established.

1. Select the "Use position feedback" check box.
2. Enter the position to which the actuator is to be moved in the "Target position" input field.
   The current position feedback (starting position) will be displayed. The difference between "Target position" and "Position feedback" must be at least 50% of the valid output value range.
3. Click the ▶ "Start transition time measurement" icon.

Result

The actuator is moved from the starting position to the target position. Time measurement starts immediately and ends when the actuator reaches the target position. The motor transition time is calculated according to the following equation:

Motor transition time = (output value high limit – output value low limit) × Measuring time / AMOUNT (target position – starting position).

The progress and status of transition time measurement are displayed. The transition time measured is saved in the instance data block on the CPU and displayed in the "Measured transition time" field. PID_3Step will change to "Inactive" mode once transition time measurement is complete.

NOTE

Click on the icon "Upload measured transition time" to load the motor transition time measured to the project.

Actuators with endstop signals

Proceed as follows to measure the transition time of actuators with endstop signals:

Requirement

- The "Endstop signals" check box in the basic settings has been selected and Actuator_H and Actuator_L are connected.
- An online connection to the CPU has been established.

Proceed as follows to measure motor transition time with endstop signals:

1. Select the "Use actuator endstop signals" check box.
2. Select the direction in which the actuator is to be moved.
   - Open - Close - Open
     The actuator is moved first to the high endstop, then to the low endstop and then back to the high endstop.
   - Close - Open - Close
     The actuator is moved first to the low endstop, then to the high endstop and then back to the low endstop.
3. Click the "Start transition time measurement" icon.

Result

The actuator is moved in the selected direction. Time measurement will start once the actuator has reached the first endstop and will end when the actuator reaches this endstop for the second time. The motor transition time is equal to the time measured divided by two.

The progress and status of transition time measurement are displayed. The transition time measured is saved in the instance data block on the CPU and displayed in the "Measured transition time" field. PID_3Step will change to "Inactive" mode once transition time measurement is complete.

Cancelling transition time measurement

PID_3Step will change to "Inactive" mode immediately if you cancel transition time measurement. The actuator will stop being moved. You can reactive PID-3Step in the curve plotter.

6.3.3 Simulating PID_3Step V1 with PLCSIM

NOTE

Simulation with PLCSIM

For the simulation with PLCSIM, the time behavior of the simulated PLC is not exactly identical to that of a "real" PLC. The actual cycle clock of a cyclic interrupt OB can have larger fluctuations with a simulated PLC than with "real" PLCs.

In the standard configuration, PID_3Step determines the time between calls automatically and monitors them for fluctuations.

For a simulation of PID_3Step with PLCSIM, for example, a sampling time error (ErrorBits = DW#16#00000800) can therefore be detected.

This results in ongoing tuning being aborted.

The response in automatic mode depends on the value of the ActivateRecoverMode tag.

To prevent this from happening, you should configure PID_3Step for simulation with PLCSIM as follows:

- CycleTime.EnEstimation = FALSE
- CycleTime.EnMonitoring = FALSE
- CycleTime.Value: Assign the cycle clock of the calling cyclic interrupt OB in seconds to this tag.

Using PID_Temp 7

7.1 Technology object PID_Temp

The PID_Temp technology object provides a continuous PID controller with integrated tuning. PID_Temp is especially designed for temperature control and is suited for heating or heating/cooling applications. Two outputs are available for this purpose, one each for heating and cooling. PID_Temp can also be used for other control tasks. PID_Temp is cascadable and can be used in manual or automatic mode.

PID_Temp continuously acquires the measured process value within a control loop and compares it with the set setpoint. From the resulting control deviations, the instruction PID_Temp calculates the output value for heating and/or cooling which is used to adjust the process value to the setpoint. The output values for the PID controller consist of three actions:

- Proportional action
  The proportional action of the output value increases in proportion to the control deviation.
- Integral action
  The integral action of the output value increases until the control deviation has been balanced.
- Derivative action
  The derivative action increases with the rate of change of control deviation. The process value is corrected to the setpoint as quickly as possible. The derivative action will be reduced again if the rate of change of control deviation drops.

The instruction PID_Temp calculates the proportional, integral and derivative parameters for your controlled system during "pretuning". "Fine tuning" can be used to tune the parameters further. You do not need to manually determine the parameters.

Either a fixed cooling factor or two PID parameter sets can be used for heating-and-cooling applications.

Additional information

- Overview of software controller (Page 39)
- Add technology objects (Page 41)
- Configure technology objects (Page 42)
- Configuring PID_Temp (Page 137)

7.2 Configuring PID_Temp

7.2.1 Basic settings

7.2.1.1 Introduction

Configure the following properties of the "PID_Temp" technology object under "Basic settings" in the Inspector window or in the configuration window:

- Physical quantity
- Start-up behavior after reset
- Source and input of the setpoint (only in the Inspector window)
- Selection of the process value
- Source and input of the process value (only in the Inspector window)
- Selection of the heating output value
- Source and input of the heating output value (only in the Inspector window)
- Activation and selection of the cooling output value
- Source and input of the cooling output value (only in the Inspector window)
- Activation of PID_Temp as master or slave of a cascade
- Number of slaves
- Selection of the master (only in the Inspector window)

Setpoint, process value, heating output value and cooling output value

You can select the source and enter values or tags for the setpoint, process value, heating output value and cooling output value in the Inspector window of the programming editor.

Select the source for each value:

- Instance DB:
  The value saved in the instance DB is used. The value must be updated by the user program in the instance DB. There should be no value at the instruction. Can be changed using HMI.
- Instruction:
  The value connected to the instruction is used. The value is written to the instance DB each time the instruction is called. Cannot be changed using HMI.

7.2.1.2 Controller type

Physical quantity

Select the unit of measurement and physical quantity for the setpoint and the process value in the "Controller type" group. The setpoint and the process value are displayed in this unit.

Startup characteristics

1. To switch to "Inactive"mode after CPU restart, clear the "Activate Mode after CPU restart"check box.
   To switch to the operating mode saved in the Mode parameter after CPU restart, select the "Activate Mode after CPU restart" check box.
2. In the "Set Mode to" drop-down list, select the mode that is to be enabled after a complete download to the device.
   After a complete "Download to device", PID_Temp starts in the selected operating mode. With each additional restart, PID_Temp starts in the mode that was last saved in Mode.
   When selecting pretuning or fine tuning, you also have to set or reset the Heat.EnableTuning and Cool.EnableTuning tags in order to choose between tuning for heating and tuning for cooling.

Example:

You have selected the "Activate Mode after CPU restart" check box and the "Pretuning" entry in the "Set Mode to" list. After a complete "Download to device", PID_Temp starts in the "Pretuning" mode. If pretuning is still active, PID_Temp starts in "Pretuning" mode again after restart of the CPU (heating/cooling depends on the tags Heat.EnableTuning and Cool.EnableCooling). If pretuning was successfully completed and automatic mode is active, PID_Temp starts in "Automatic mode" after restart of the CPU.

7.2.1.3 Setpoint

Procedure

Proceed as follows to define a fixed setpoint:

1. Select "Instance DB".
2. Enter a setpoint, e.g. 80° C.
3. Delete any entry in the instruction.

Proceed as follows to define a variable setpoint:

1. Select "Instruction".
2. Enter the name of the REAL tag in which the setpoint is saved.
   Program-controlled assignment of various values to the REAL tag is possible, for example for the time-controlled change of the setpoint.

7.2.1.4 Process value

PID_Temp will scale the value of the analog input to the physical quantity if you use the analog input value directly.

You will need to write a program for processing if you wish first to process the analog input value. The process value is, for example, not directly proportional to the value at the analog input. The processed process value must be in floating point format.

Procedure

Proceed as follows to use the analog input value without processing:

1. Select the entry "Input_PER" in the drop-down list "Input".
2. Select "Instruction" as source.
3. Enter the address of the analog input.

Proceed as follows to use the processed process value in floating point format:

1. Select the entry "Input" in the drop-down list "Input".
2. Select "Instruction" as source.
3. Enter the name of the variable in which the processed process value is saved.

7.2.1.5 Heating and cooling output value

The PID_Temp instruction provides a PID controller with integrated tuning for temperature processes. PID_Temp is suitable for heating or heating-and-cooling applications.

PID_Temp provides the following output values. Your actuator will determine which output value you use.

- OutputHeat
  Heating output value (floating-point format): The output value for heating needs to be processed by the user program, for example, because of non-linear actuator response.
- OutputHeat_PER
  Analog heating output value: The actuator for heating is triggered via an analog output and controlled with a continuous signal, e.g. 0...10 V, 4...20 mA.
- OutputHeat_PWM
  Pulse-width modulated heating output value: The actuator for heating is controlled via a digital output. Pulse width modulation creates variable ON and OFF times.
- OutputCool
  Cooling output value (floating-point format): The output value for cooling needs to be processed by the user program, for example because of non-linear actuator response.
- OutputCool_PER
  Analog cooling output value: The actuator for cooling is triggered via an analog output and controlled with a continuous signal, e.g. 0...10 V, 4...20 mA.
- OutputCool_PWM
  Pulse-width modulated cooling output value: The actuator for cooling is controlled via a digital output. Pulse width modulation creates variable ON and OFF times.

The cooling output is only available if it was activated via the "Activate cooling" check box.

- If the check box is cleared, the output value of the PID algorithm (PidOutputSum) is scaled and output at the outputs for heating.
- If the check box is selected, positive output values of the PID algorithm (PidOutputSum) are scaled and output at the outputs for heating. Negative output values of the PID algorithm are scaled and output at the outputs for cooling. You can choose between two methods for output value calculation at the output settings.

NOTE

Note:

- The OutputHeat_PWM, OutputHeat_PER, OutputCool_PWM, OutputCool_PER outputs are only calculated if you select these correspondingly from the drop-down list.
- The OutputHeat output is always calculated.
- The OutputCool output is calculated if the check box for cooling is selected.
- The "Activate cooling" check box is only available if the controller is not configured as a master in a cascade.

Procedure

Proceed as follows to use the analog output value:

1. Select the entry "OutputHeat_PER" or "OutputCool_PER" in the drop-down list "OutputHeat" or "OutputCool".
2. Select "Instruction".
3. Enter the address of the analog output.

Proceed as follows to use the pulse-width modulated output value:

1. Select the entry "OutputHeat_PWM" or "OutputCool_PWM" in the drop-down list "OutputHeat" or "OutputCool".
2. Select "Instruction".
3. Enter the address of the digital output.

Proceed as follows to process the output value using the user program:

1. Select the entry "OutputHeat" or "OutputCool" in the drop-down list "OutputHeat" or "OutpuCool".
2. Select "Instruction".
3. Enter the name of the variable you are using to process the output value.
4. Transfer the processed output value to the actuator by means of an analog or digital CPU output.

7.2.1.6 Cascade

If a PID_Temp instance receives its setpoint from a higher-level master controller and outputs its output value in turn to a subordinate slave controller, this PID_Temp instance is both a master controller and a slave controller simultaneously. Both configurations listed below then have to be carried out for such a PID_Temp instance. This is the case, for example, for the middle PID_Temp instance in a cascade control system with three concatenated measured variables and three PID_Temp instances.

Configuring a controller as master in a cascade

A master controller defines the setpoint of a slave controller with its output.

In order to use PID_Temp as master in a cascade, you have to deactivate the cooling in the basic settings. In order to configure this PID_Temp instance as a master controller in a cascade, activate the "Controller is master" check box. The selection of the output value for heating is set automatically to OutputHeat.

OutputHeat_PWM and OutputHeat_PER cannot be used at a master in a cascade.

Subsequently specify the number of directly subordinate slave controllers that receive their setpoint from this master controller.

If no own scaling function is used when assigning the OutputHeat parameter of the master to the Setpoint parameter of the slave, it may be necessary to adapt the output value limits and the output scaling of the master to the setpoint/process value range of the slave. This can be done in the output settings of the master in the "OutputHeat / OutputCool" section.

Configuring a controller as a slave in a cascade

A slave controller receives its setpoint (Setpoint parameter) from the output of its master controller (OutputHeat parameter).

In order to configure this PID_Temp instance as a slave controller in a cascade, activate the "Controller is slave" check box in the basic settings.

Subsequently select the PID_Temp instance that is to be used as the master controller for this slave controller in the Inspector window of the programming editor. The Master and Setpoint parameters of the slave controller are interconnected with the selected master controller through this selection (the existing interconnections at these parameters are overwritten). This interconnection allows the exchange of information and the setpoint specification between master and slave. If required, the interconnection can be changed subsequently at the Setpoint parameter of the slave controller in order, for example, to insert an additional filter. The interconnection at the parameter Master may not be changed subsequently.

The "Controller is master" check box has to be selected and the number of slaves has to be configured correctly at the selected master controller. The master controller has to be called before the slave controller in the same cyclic interrupt OB.

Additional information

Additional information about program creation, configuration and commissioning when PID_Temp is used in cascade control systems is available under Cascade control with PID_Temp (Page 166).

7.2.2 Process value settings

7.2.2.1 Process value limits

You must specify an appropriate absolute high limit and low limit for the process value as limit values for your controlled system. As soon as the process value violates these limits, an error occurs (ErrorBits = 0001h). Tuning is canceled when the process value limits are violated. You can specify how PID_Temp responds to errors in automatic mode in the output settings.

7.2.2.2 Process value scaling

If you have configured the use of Input_PER in the basic settings, you will need to convert the value of the analog input into the physical quantity of the process value. The current configuration is displayed in the Input_PER display.
Input_PER is scaled using a low and high value pair if the process value is directly proportional to the value of the analog input.

Procedure

To scale the process value, follow these steps:

1. Enter the low pair of values in the "Scaled low process value" and "Low" input fields.
2. Enter the high pair of values in the "Scaled high process value" and "High" input fields.

Default settings for the value pairs are saved in the hardware configuration. Proceed as follows to use the value pairs from the hardware configuration:

1. Select the instruction PID_Temp in the programming editor.
2. Interconnect Input_PER with an analog input in the basic settings.
3. Click on the "Automatic setting" button in the process value settings.

The existing values are overwritten with the values from the hardware configuration.

7.2.3 Output settings

7.2.3.1 Basic settings of output

Method for heating and cooling

If cooling is activated in the basic settings, two methods are available for calculating the PID output value:

- PID parameter switching (Config.AdvancedCooling = TRUE):
  The output value calculation for cooling takes place by means of a separate PID parameter set. Based on the calculated output value and the control deviation, the PID algorithm decides whether the PID parameter for heating or cooling is used. This method is suitable if the heating and cooling actuators have different time responses and different gains.
  Pretuning and fine tuning for cooling are only available if this method is selected.
- Cooling factor (Config.AdvancedCooling = FALSE):
  Output value calculation for cooling is effected with the PID parameters for heating under consideration of the configurable cooling factor Config.CoolFactor. This method is suitable if the heating and cooling actuators have a similar time response but different gains. If this method is selected, pretuning and fine tuning for cooling as well as the PID parameter set for cooling are not available. You can only execute the tuning for heating.

Cooling factor

If the cooling factor is selected as the method for heating/cooling, this factor is used in the calculation of the output value for cooling. This allows different gains of heating and cooling actuators to be taken into account.

The cooling factor is not set automatically or adjusted during tuning. You have to configure the correct cooling factor manually by using the ratio "Heating actuator gain/Cooling actuator gain".

Example: Cooling factor = 2.0 means that the heating actuator gain is twice as high as the cooling actuator gain.

The cooling factor is only effective and can only be changed if "Cooling factor" is selected as the method for heating/cooling.

Reaction to error

NOTICE
Your system may be damaged. If you output "Current value while error is pending " or "Substitute output value while error is pending" in the event of an error, PID_Temp remains in automatic mode or in manual mode. This may cause a violation of the process value limits and damage your system. It is essential to configure how your controlled system reacts in the event of an error to protect your system from damage.

PID_Temp is preset so that the controller stays active in most cases in the event of an error.

If errors occur frequently in controller mode, this default reaction has a negative effect on the control response. In this case, check the ErrorBits parameter and eliminate the cause of the error.

PID_Temp generates a programmable output value in response to an error:

- Zero (inactive)

  At all errors, PID_Temp switches to the "Inactive" operating mode and outputs the following:
  - 0.0 as PID output value (PidOutputSum)
  - 0.0 as output value for heating (OutputHeat) and output value for cooling (OutputCool)
  - 0 as analog output value for heating (OutputHeat_PER) and analog output value for cooling (OutputCool_PER)
  - FALSE as PWM output value for heating (OutputHeat_PWM) and PWM output value for cooling (OutputCool_PWM)

  This is independent of the configured output value limits and the scaling. The controller is only reactivated by a falling edge at Reset or a rising edge at ModeActivate.
- Current value while error is pending

  The error response depends on the error occurring and the operating mode.

  If one or more of the following errors occur in automatic mode, PID_Temp stays in automatic mode:
  - 0000001h: The Input parameter is outside the process value limits.
  - 0000800h: Sampling time error
  - 0040000h: Invalid value at Disturbance parameter.
  - 8000000h: Error during the calculation of the PID parameters.

If one or more of the following errors occur in automatic mode, PID_Temp switches to "Substitute output value with error monitoring" mode and outputs the last valid PID output value (PidOutputSum):

- 0000002h: Invalid value at Input_PER parameter.
- 0000200h: Invalid value at Input parameter.
- 0000400h: Calculation of output value failed.
- 0001000h: Invalid value at Setpoint or SubstituteSetpoint parameter.

The values at the outputs for heating and cooling resulting from the PID output value are produced by the configured output scaling.

As soon as the errors are no longer pending, PID_Temp switches back to automatic mode.

If an error occurs during manual mode, PID_Temp remains in manual mode and continues to use the manual value as the PID output value.

If the manual value is invalid, the configured substitute output value is used.

If the manual value and substitute output value are invalid, the low limit of the PID output value for heating (Config.Output.Heat.PidLowerLimit) is used.

If the following error occurs during pretuning or fine tuning, PID_Temp remains in active mode:

- 0000020h: Pretuning is not permitted during fine tuning.

When any other error occurs, PID_Temp cancels the tuning and switches to the mode from which tuning was started.

- Substitute output value while error is pending

  PID_Temp behaves as described at "Current value while error is pending", but outputs the configured substitute output value (SubstituteOutput) as a PID output value (PidOutputSum) in "Substitute output value with error monitoring" operating mode.

  The values at the outputs for heating and cooling resulting from the PID output value are produced by the configured output scaling.

  In the case of controllers with activated cooling output (Config.ActivateCooling = TRUE), enter:

  - A positive substitute output value to output the value at the outputs for heating.
  - A negative substitute output value to output the value at the outputs for cooling.

  If the following error occurs, PID_Temp stays in "Substitute output value with error monitoring" mode and outputs the low limit of the PID output value for heating (Config.Output.Heat.PidLowerLimit):

  - 0020000h: Invalid value at SubstituteOutput tag.

7.2.3.2 Output value limits and scaling

Depending on the operating mode, the PID output value (PidOutputSum) is calculated automatically by the PID algorithm or by the manual value (ManualValue) or the configured substitute output value (SubstituteOutput).

The PID output value is limited depending on the configuration:

- If the cooling is deactivated in the basic settings (Config.ActivateCooling = FALSE), the value is limited to the high limit of the PID output value (heating) (Config.Output.Heat.PidUpperLimit) and the low limit of the PID output value (heating) (Config.Output.Heat.PidLowerLimit).

  You can configure both limits at the horizontal axis of the scaling characteristic line in the "OutputHeat / OutputCool" section. These are displayed in the "OutputHeat_PWM /

OutputCool_PWM" and "OutputHeat_PER / OutputCool_PER" sections, but cannot be changed.

- If the cooling is activated in the basic settings (Config.ActivateCooling = TRUE), the value is limited to the high limit of the PID output value (Config.Output.Heat.PidUpperLimit) and the low limit of the PID output value (cooling) (Config.Output.Cool.PidLowerLimit).

  You can configure both limits at the horizontal axis of the scaling characteristic line in the "OutputHeat / OutputCool" section. These are displayed in the "OutputHeat_PWM / OutputCool_PWM" and "OutputHeat_PER / OutputCool_PER" sections, but cannot be changed.

  The low limit of the PID output value (heating) (Config.Output.Heat.PidLowerLimit) and the high limit of the PID output value (cooling) (Config.Output.Cool.PidUpperLimit) cannot be changed and have to be assigned the value 0.0.

The PID output value is scaled and output at the outputs for heating and cooling. Scaling can be specified separately for each output and is specified across 2 value pairs each, consisting of a limit value of the PID output value and a scaling value:

Output	Value pair	Parameter
OutputHeat	Value pair 1	PID output value high limit (heating) Config.Output.Heat.PidUpperLimit, Scaled high output value (heating) Config.Output.Heat.UpperScaling
	Value pair 2	PID output value low limit (heating) Config.Output.Heat.PidLowerLimit, Scaled low output value (heating) Config.Output.Heat.LowerScaling
OutputHeat_PWM	Value pair 1	PID output value high limit (heating) Config.Output.Heat.PidUpperLimit, Scaled high PWM output value (heating) Config.Output.Heat.PwmUpperScaling
	Value pair 2	PID output value low limit (heating) Config.Output.Heat.PidLowerLimit, Scaled low PWM output value (heating) Config.Output.Heat.PwmLowerScaling
OutputHeat_PER	Value pair 1	PID output value high limit (heating) Config.Output.Heat.PidUpperLimit, Scaled high analog output value (heating) Config.Output.Heat.PerUpperScaling
	Value pair 2	PID output value low limit (heating) Config.Output.Heat.PidLowerLimit, Scaled low analog output value (heating) Config.Output.Heat.PerLowerScaling

The low limit of PID output value (heating) (Config.Output.Heat.PidLowerLimit) has to have the value 0.0, if the cooling is activated (Config.ActivateCooling = TRUE).

The high limit of PID output value (cooling) (Config.Output.Cool.PidUpperLimit) must always have the value 0.0.

Output	Value pair	Parameter
OutputCool	Value pair 1	PID output value low limit (cooling) Config.Output.Cool.PidLowerLimit, Scaled high output value (cooling) Config.Output.Cool.UpperScaling
	Value pair 2	PID output value high limit (cooling) Config.Output.Cool.PidUpperLimit, Scaled low output value (cooling) Config.Output.Cool.LowerScaling
OutputCool_PWM	Value pair 1	PID output value low limit (cooling) Config.Output.Cool.PidLowerLimit, Scaled high PWM output value (cooling) Config.Output.Cool.PwmUpperScaling
	Value pair 2	PID output value high limit (cooling) Config.Output.Cool.PidUpperLimit, Scaled low PWM output value (cooling) Config.Output.Cool.PwmLowerScaling
OutputCool_PER	Value pair 1	PID output value low limit (cooling) Config.Output.Cool.PidLowerLimit, Scaled high analog output value (cooling) Config.Output.Cool.PerUpperScaling
	Value pair 2	PID output value high limit (cooling) Config.Output.Cool.PidUpperLimit, Scaled low analog output value (cooling) Config.Output.Cool.PerLowerScaling

The low limit of PID output value (heating) (Config.Output.Heat.PidLowerLimit) has to have the value 0.0, if the cooling is activated (Config.ActivateCooling = TRUE).

The high limit of PID output value (cooling) (Config.Output.Cool.PidUpperLimit) must always have the value 0.0.

Example:

Output scaling when the OutputHeat output is used (cooling deactivated. The low limit of PID output value (heating) (Config.Output.Heat.PidLowerLimit) may be unequal to 0.0):

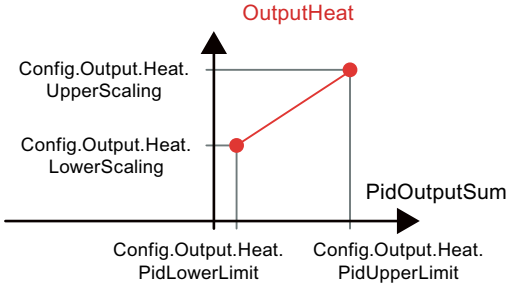

Example:

Output scaling when the OutputHeat_PWM and OutputCool_PER outputs are used (cooling activated. The low limit of PID output value (heating) (Config.Output.Heat.PidLowerLimit) must be 0.0):

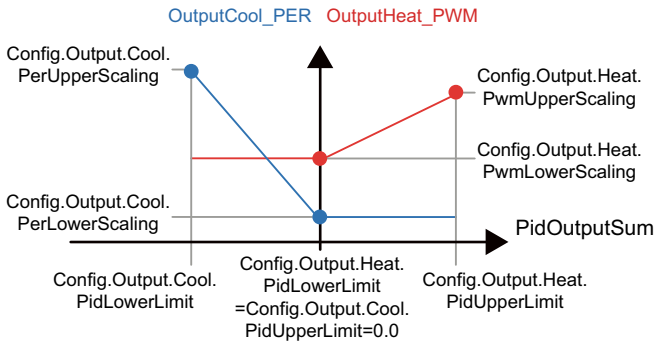

With the exception of the "Inactive" operating mode, the value at an output always lies between its scaled high output value and the scaled low output value, for example for OutputHeat always between the scaled high output value (heating) (Config.Output.Heat.UpperScaling) and the scaled low output value (heating) (Config.Output.Heat.LowerScaling).

If you want to limit the value at the associated output, you therefore have to adapt these scaling values as well.

You can configure the scaling values of an output at the vertical axes of the scaling characteristic line. Each output has two separate scaling values. These can only be changed for OutputHeat_PWM, OutputCool_PWM, OutputHeat_PER and OutputCool_PER if the corresponding output is selected in the basic settings. The cooling has to be activated additionally in the basic settings at all the outputs for cooling.

The trend view in the commissioning dialog box only records the values of OutputHeat and OutputCool, irrespective of the selected output in the basic settings. Therefore, if necessary, adapt the scaling values for OutputHeat or OutputCool if you use OutputHeat_PWM or OutputHeat_PER or OutputCool_PWM or OutputCool_PER and want to use the trend view in the commissioning dialog.

7.2.4 Advanced settings

7.2.4.1 Process value monitoring

Configure a warning high and low limit for the process value in the "Process value monitoring" configuration window. If one of the warning limits is exceeded or undershot during operation, a warning is displayed at the PID_Temp instruction:

- At the InputWarning_H output parameter if the warning high limit has been exceeded
- At the InputWarning_L output parameter if the warning low limit has been undershot

The warning limits must be within the process value high and low limits.

The process value high and low limits are used if you do not enter values.

Example

Process value high limit = 98° C; warning high limit = 90° C
Warning low limit = 10° C; process value low limit = 0° C

PID_Temp will respond as follows:

Process value	InputWarning_H	InputWarning_L	ErrorBits
> 98 °C	TRUE	FALSE	0001h
≤ 98° C and > 90° C	TRUE	FALSE	0000h
≤ 90° C and ≥ 10° C	FALSE	FALSE	0000h
< 10° C and ≥ 0° C	FALSE	TRUE	0000h
< 0° C	FALSE	TRUE	0001h

You can configure the response of PID_Temp when the process value high limit or low limit is violated in the output settings.

7.2.4.2 PWM limits

The PID output value PidOutputSum is scaled and transformed via a pulse width modulation into a pulse train that is output at the output parameter OutputHeat_PWM or OutputCool_PWM.

The "Sampling time of PID algorithm" represents the time between two calculations of the PID output value. The sampling time is used as time period of the pulse width modulation.

During heating, the PID output value is always calculated in the "Sampling time of PID algorithm for heating".

Calculation of the PID output value during cooling depends on the type of cooling selected in "Basic settings Output":

- If the cooling factor is used, the "Sampling time of PID algorithm for heating" applies.
- If the PID parameter switching is used, the "Sampling time of PID algorithm for cooling" applies.

The PID algorithm sampling time for heating or cooling is determined during pretuning or fine tuning. If you set the PID parameters manually, you will also need to configure the PID algorithm sampling time for heating or cooling.

OutputHeat_PWM and OutputCool_PWM are output in the PID_Temp sampling time. The PID_Temp sampling time is equivalent to the cycle time of the calling OB.

The pulse duration is proportional to the PID output value and is always an integer multiple of the PID_Temp sampling time.

Example for OutputHeat_PWM

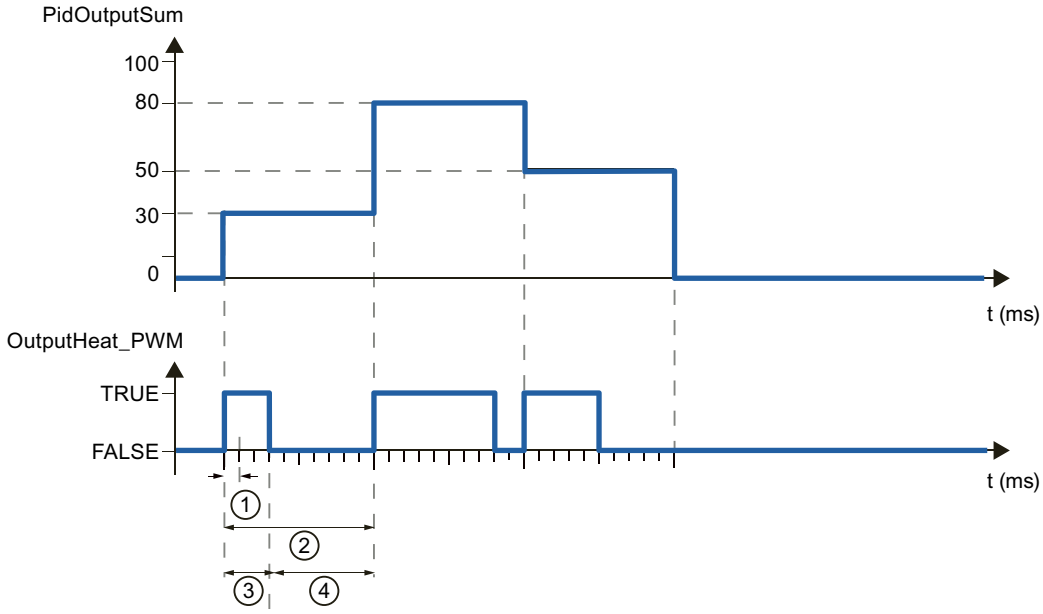

① PID_Temp sampling time

② PID algorithm sampling time for heating

③ Pulse duration

④ Break time

The "Minimum ON time" and the "Minimum OFF time" can be set separately for heating and cooling, rounded to an integer multiple of the PID_Temp sampling time.

A pulse or a break is never shorter than the minimum ON or OFF time. The inaccuracies this causes are added up and compensated in the next cycle.

Example for OutputHeat_PWM

PID_Temp sampling time (equivalent to the cycle time of the calling OB) = 100 ms

PID algorithm sampling time (equivalent to the time period) = 1000 ms

Minimum ON time = 200 ms

The PID output value PidOutputSum amounts to 15% constantly. The smallest pulse that PID_Temp can output corresponds to 20%. In the first cycle, no pulse is output. In the second cycle, the pulse not output in the first cycle is added to the pulse of the second cycle.

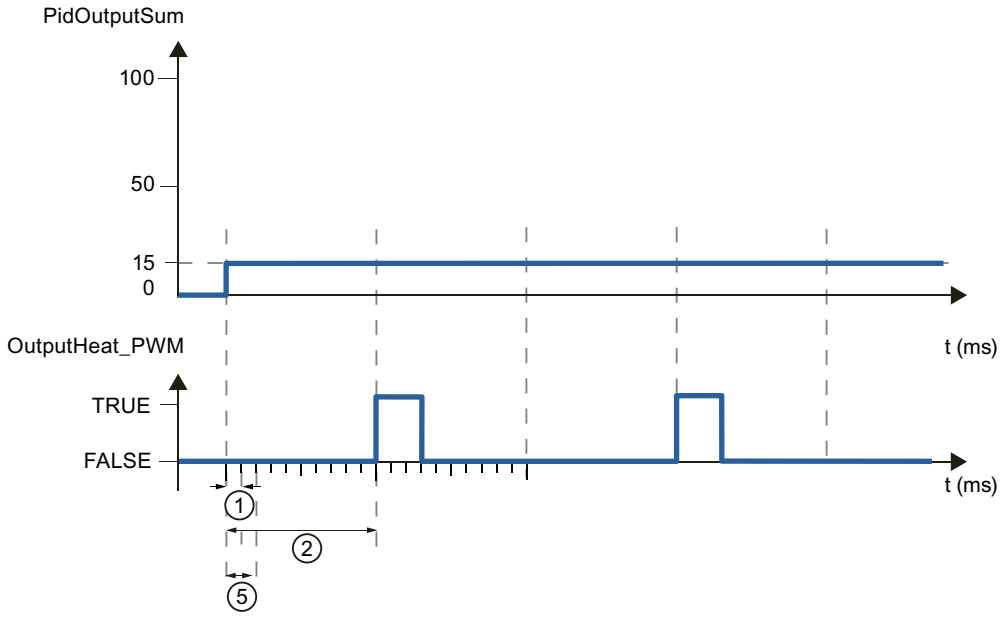

① PID_Temp sampling time

② PID algorithm sampling time for heating

⑤ Minimum ON time

In order to minimize operation frequency and conserve the actuator, extend the minimum ON and OFF times.

If you have selected OutputHeat/OutputCool or OutputHeat_PER/OutputCool_PER as the output in the basic settings, the minimum ON time and the minimum OFF time are not evaluated and cannot be changed.

If the "Sampling time of PID algorithm" (Retain.CtrlParams.Heat.Cycle or Retain.CtrlParams.Cool.Cycle) and thus the time period of the pulse width modulation is very high when OutputHeat_PWM or OutputCool_PWM is used, you can specify a deviating shorter time period at the parameters Config.Output.Heat.PwmPeriode or Config.Output.Cool.PwmPeriode in order to improve smoothness of the process value (see also PwmPeriode tag (Page 376)).

NOTE

The minimum ON and OFF times only affect the output parameters OutputHeat_PWM or OutputCool_PWM and are not used for any pulse generators integrated in the CPU.

7.2.4.3 PID parameters

The PID parameters are displayed in the "PID Parameters" configuration window.

If cooling is activated in the basic settings and PID parameter switching is selected as the method for heating/cooling in the output settings, two parameter sets are available: One for heating and one for cooling.

In this case, the PID algorithm decides on the basis of the calculated output value and the control deviation whether the PID parameters for heating or cooling are used.

If cooling is deactivated or the cooling factor is selected as the method for heating/cooling, the parameter set for heating is always used.

During tuning, the PID parameters are adapted to the controlled system with the exception of the dead zone width that has to be configured manually.

NOTE

The currently active PID parameters are located in the Retain.CtrlParams structure.

Change the currently active PID parameters only in "Inactive" mode online to prevent malfunction of the PID controller.

If you want to change the PID parameters in "Automatic mode" or "Manual mode" online, change the PID parameters in the CtrlParamsBackUp structure and apply these changes with LoadBackUp = TRUE to the Retain.CtrlParams structure.

Online changes to the PID parameters in "Automatic mode" can result in jumps at the output value.

PID_Temp is a PIDT1 controller with anti-windup and weighting of the proportional and derivative actions.

The PID algorithm operates according to the following equation (control zone and dead zone deactivated):

$$y = K_p \left[(b \cdot w - x) + \frac{1}{T_I \cdot s} (w - x) + \frac{T_D \cdot s}{a \cdot T_D \cdot s + 1} (c \cdot w - x) \right]$$

Symbol	Description	Associated parameters of the PID_Temp instruction
y	Output value of the PID algorithm	-
K_p	Proportional gain	Retain.CtrlParams.Heat.Gain Retain.CtrlParams.Cool.Gain CoolFactor
s	Laplace operator	-
b	Proportional action weighting	Retain.CtrlParams.Heat.PWeighting Retain.CtrlParams.Cool.PWeighting
w	Setpoint	CurrentSetpoint
x	Process value	ScaledInput
T_I	Integral action time	Retain.CtrlParams.Heat.Ti Retain.CtrlParams.Cool.Ti
T_D	Derivative action time	Retain.CtrlParams.Heat.Td Retain.CtrlParams.Cool.Td
a	Coefficient for derivative-action delay (Derivative delay T1 = a × T_D)	Retain.CtrlParams.Heat.TdFiltRatio Retain.CtrlParams.Cool.TdFiltRatio
c	Derivative action weighting	Retain.CtrlParams.Heat.DWeighting Retain.CtrlParams.Cool.DWeighting
DeadZone	Dead zone width	Retain.CtrlParams.Heat.DeadZone Retain.CtrlParams.Cool.DeadZone
ControlZone	Control zone width	Retain.CtrlParams.Heat.ControlZone Retain.CtrlParams.Cool.ControlZone

The diagram below illustrates the integration of the parameters into the PID algorithm:

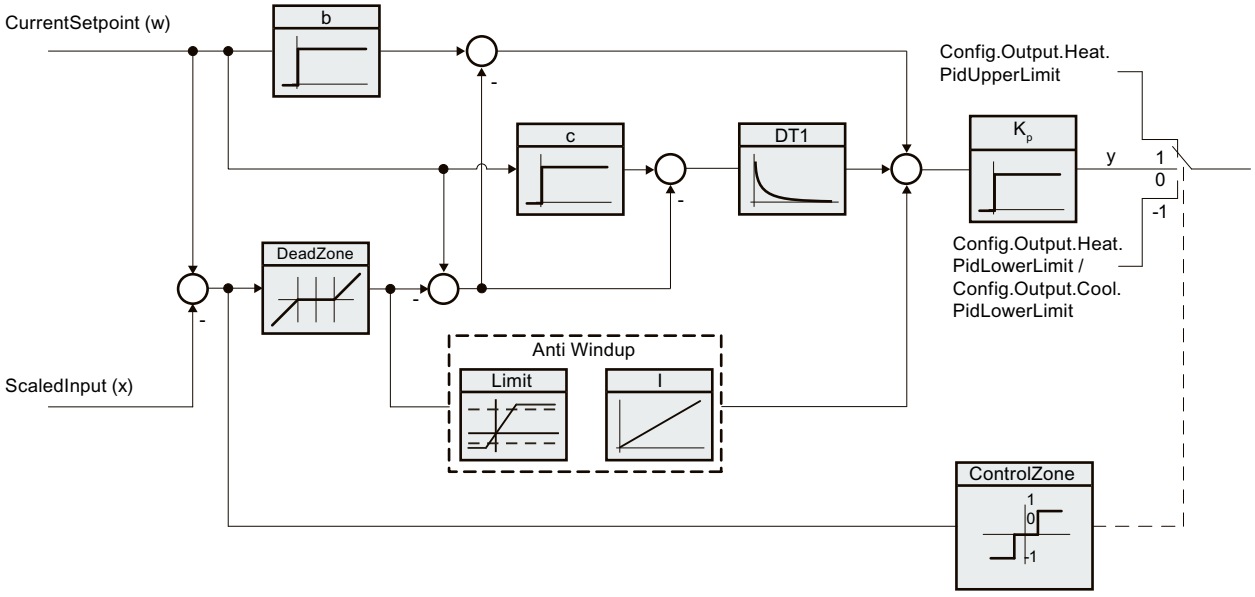

All PID parameters are retentive. If you enter the PID parameters manually, you must completely download PID_Temp (Downloading technology objects to device (Page 44)).

PID_Temp block diagram

The following block diagram shows how the PID algorithm is integrated in the PID_Temp.

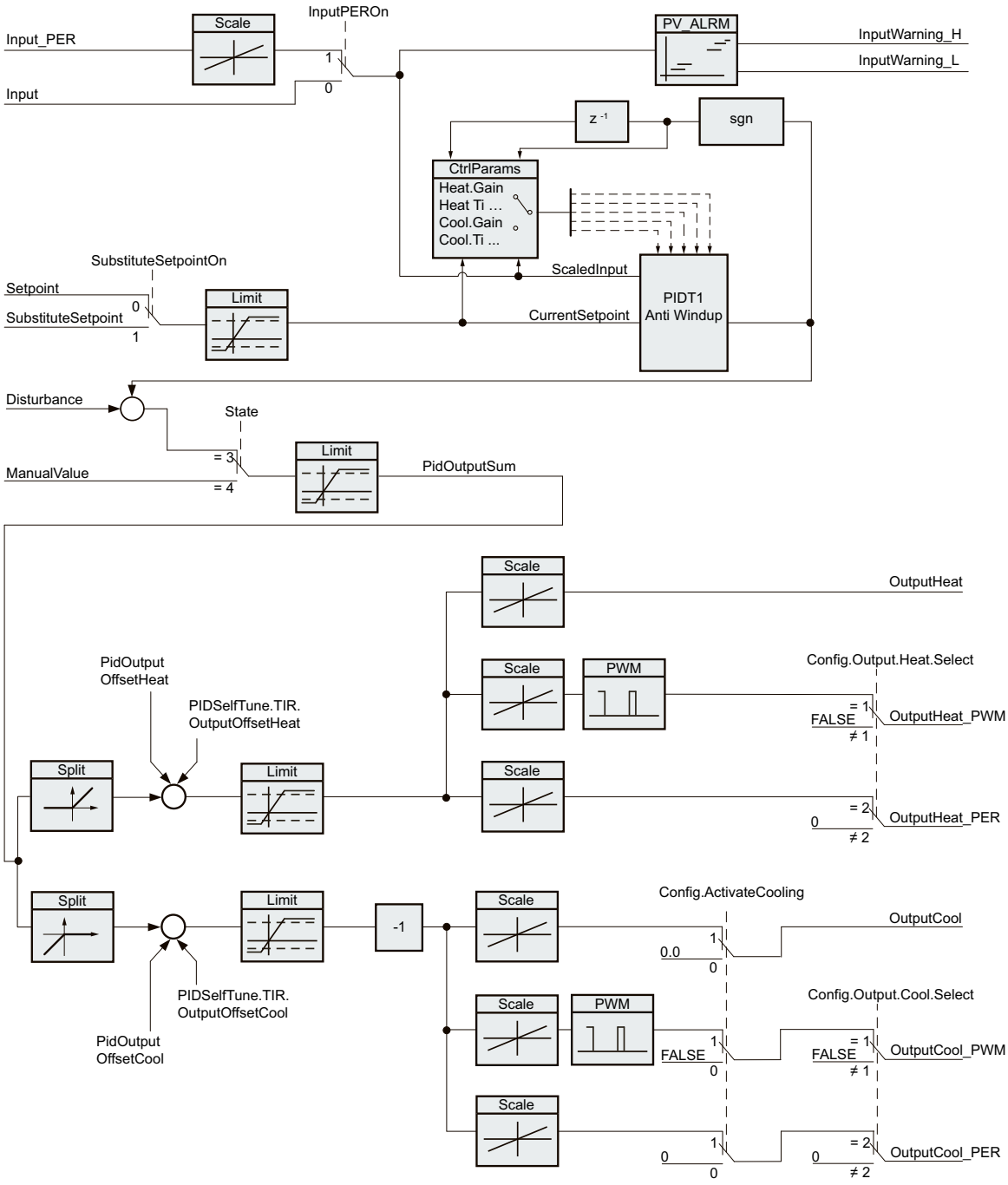

Proportional gain

The value specifies the proportional gain of the controller. PID_Temp does not operate with a negative proportional gain and only supports the normal control direction, meaning that an

increase in the process value is achieved by an increase in the PID output value (PidOutputSum).

Integral action time

The integral action time determines the time behavior of the integral action. The integral action is deactivated with integral action time = 0.0. When the integral action time is changed from a different value to 0.0 online in "Automatic mode", the previous integral action is deleted and the output value jumps.

Derivative action time

The derivative action time determines the time behavior of the derivative action. Derivative action is deactivated with derivative action time = 0.0.

Derivative delay coefficient

The derivative delay coefficient delays the effect of the derivative action.

Derivative delay = derivative action time × derivative delay coefficient

- 0.0: Derivative action is effective for one cycle only and therefore almost not effective.
- 0.5: This value has proved useful in practice for controlled systems with one dominant time constant.
- > 1.0: The greater the coefficient, the longer the effect of the derivative action is delayed.

Proportional action weighting

The proportional action may weaken with changes to the setpoint.

Values from 0.0 to 1.0 are applicable.

- 1.0: Proportional action for setpoint change is fully effective
- 0.0: Proportional action for setpoint change is not effective

The proportional action is always fully effective when the process value is changed.

Derivative action weighting

The derivative action may weaken with changes to the setpoint.

Values from 0.0 to 1.0 are applicable.

- 1.0: Derivative action is fully effective upon setpoint change
- 0.0: Derivative action is not effective upon setpoint change

The derivative action is always fully effective when the process value is changed.

PID algorithm sampling time

The controlled system needs a certain amount of time to respond to changes in the output value. It is therefore not advisable to calculate the output value in every cycle. The sampling

time of "PID algorithm" represents the time between two calculations of the PID output value. It is calculated during tuning and rounded to a multiple of the PID_Temp sampling time (cycle time of the cyclic interrupt OB). All other functions of PID_Temp are executed at every call.

If you use OutputHeat_PWM or OutputCool_PWM, the sampling time of the PID algorithm is used as the period duration of the pulse width modulation. The accuracy of the output signal is determined by the ratio of the PID algorithm sampling time to the cycle time of the OB. The cycle time should be no more than a tenth of the PID algorithm sampling time.

The sampling time of the PID algorithm that is used as the period duration of the pulse width modulation at OutputCool_PWM depends on the method for heating/cooling selected in "Basic settings Output":

- If the cooling factor is used, the "sampling time of the PID algorithm for heating" also applies to OutputCool_PWM.
- If PID parameter switching is used, the "sampling time PID algorithm for cooling" applies as the period duration for OutputCool_PWM.

If the sampling time of the PID algorithm and thus the period duration of the pulse width modulation is very high when OutputHeat_PWM or OutputCool_PWM is used, you can specify a deviating shorter period duration at the parameters Config.Output.Heat.PwmPeriode or Config.Output.Cool.PwmPeriode in order to improve smoothness of the process value.

Dead zone width

If the process value is affected by noise, the noise can also have an effect on the output value. The output value may fluctuate considerably when controller gain is high and the derivative action is activated. If the process value lies within the dead zone around the setpoint, the control deviation is suppressed so that the PID algorithm does not react and unnecessary fluctuations of the output value are reduced.

The dead zone width for heating or cooling is not set automatically during tuning. You have to correctly configure the dead zone width manually. The dead zone is deactivated by setting the dead zone width = 0.0.

When the dead zone is switched on, the result can be a permanent control deviation (deviation between setpoint and process value). This can have a negative effect on fine tuning.

If cooling is activated in the basic settings and PID parameter switching is selected as the method for heating/cooling in the output settings, the dead zone lies between "Setpoint - dead zone width (heating)" and "Setpoint + dead zone width (cooling)".

If cooling is deactivated in the basic settings or the cooling factor is used, the dead zone lies symmetrically between "Setpoint - dead zone width (heating)" and "Setpoint + dead zone width (heating)".

If values not equal to 1.0 are configured for the proportional action weighting or the derivative action weighting, setpoint changes even within the dead zone affect the output value.
Process value changes within the dead zone do not affect the output value, regardless of the weighting.

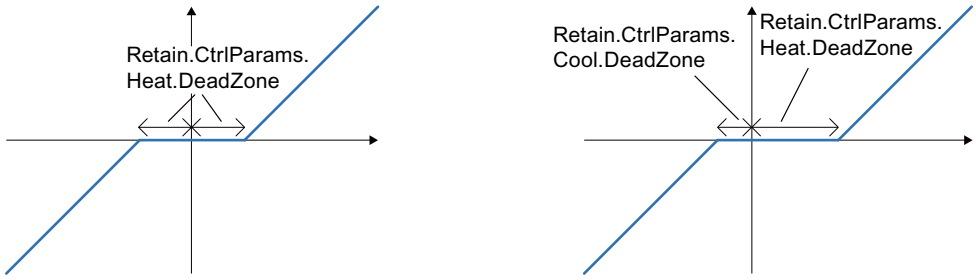

Dead zone with deactivated cooling or cooling factor (left) or activated cooling and PID parameter switching (right). The x / horizontal axis displays the control deviation = setpoint - process value. The y / vertical axis shows the output signal of the dead zone that is passed to the PID algorithm.

Control zone width

If the process value exits the control zone around the setpoint, the minimum or maximum output value is output. This means that the process value reaches the setpoint faster.

If the process value lies within the control zone around the setpoint, the output value is calculated by the PID algorithm.

The control zone width for heating or cooling is only set automatically during the pretuning, if "PID (temperature)" is selected as the controller structure for cooling or heating.

The control zone is deactivated by setting the control zone width = 3.402822e+38.

If cooling is deactivated in the basic settings or the cooling factor is used, the control zone lies symmetrically between "Setpoint - control zone width (heating)" and "Setpoint + control zone width (heating)".

If cooling is activated in the basic settings and PID parameter switching is selected as the method for heating/cooling in the output settings, the control zone lies between "Setpoint - control zone width (heating)" and "Setpoint + control zone width (cooling)".

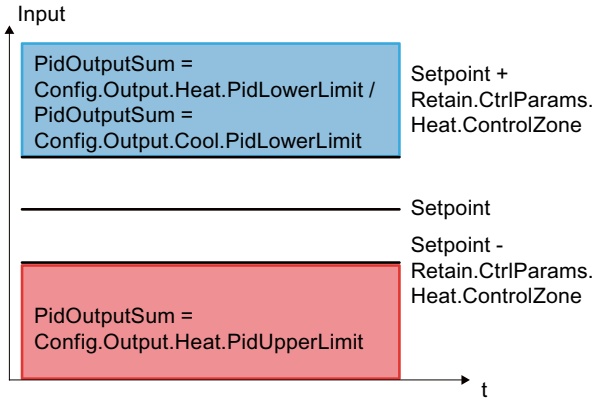

Control zone with deactivated cooling or cooling factor.

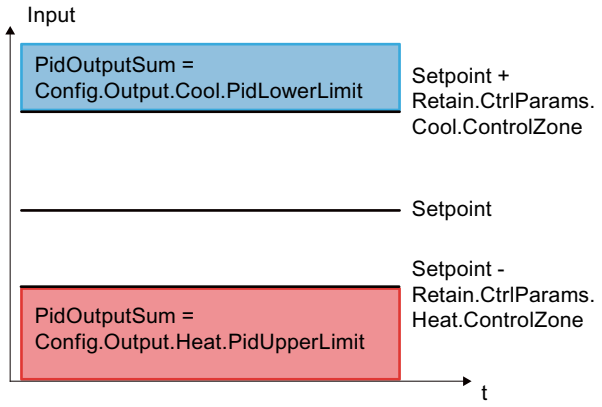

Control zone with activated cooling and PID parameter switching.

Rule for tuning

Select whether PI or PID parameters are to be calculated in the "Controller structure" drop-down list. You can specify the rules for tuning for heating and for tuning for cooling separately.

- PID (temperature)
  Calculates PID parameters during pretuning and fine tuning.
  Pretuning is designed for temperature processes and results in a slower and rather asymptotic control response with lower overshoot than with the "PID" option. Fine tuning is identical to the "PID" option.
  The control zone width is determined automatically during pretuning only if this option is selected.
- PID
  Calculates PID parameters during pretuning and fine tuning.
- PI
  Calculates PI parameters during pretuning and fine tuning.
- User-defined
  The drop-down list displays "User-defined" if you have configured different controller structures for pretuning and fine tuning via a user program or the parameter view.

7.3 Commissioning PID_Temp

7.3.1 Commissioning

The commissioning window helps you commission the PID controller. You can monitor the values for the setpoint, process value and the output values for heating and cooling along the time axis in the trend view. The following functions are supported in the commissioning window:

- Controller pretuning
- Controller fine tuning
  Use fine tuning for fine adjustments to the PID parameters.
- Monitoring the current closed-loop control in the trend view
- Testing the controlled system by specifying a manual PID output value and a substitute setpoint
- Saving the actual values of the PID parameters to an offline project.

All functions require an online connection to the CPU.
The online connection to the CPU is established, if it does not exist already, and operation of the commissioning window is enabled by means of the "Monitor all" or "Start" buttons of the trend view.

Operation of the trend view

- Select the desired sampling time in the "Sampling time" drop-down list.
  All the values of the trend view are updated in the selected sampling time.
- Click the "Start" icon in the Measurement group if you want to use the trend view.
  Value recording is started. The current values for the setpoint, process value and output values for heating and cooling are entered in the trend view.
- Click the "Stop" icon if you want to end the trend view.
  The values recorded in the trend view can continue to be analyzed.

Closing the commissioning window will terminate recording in the trend view and delete the recorded values.

7.3.2 Pretuning

The pretuning determines the process response to a jump change of the output value and searches for the point of inflection. The tuned PID parameters are calculated as a function of the maximum slope and dead time of the controlled system. You obtain the best PID parameters when you perform pretuning and fine tuning.
The more stable the process value is, the easier it is to calculate the PID parameters and the more precise the result will be. Noise on the process value can be tolerated as long as the rate of rise of the process value is significantly higher compared to the noise. This is most likely the case in operating modes "Inactive" or "Manual mode". The PID parameters are backed up before being recalculated.

PID_Temp offers different pretuning types depending on the configuration:

- Pretuning heating
  A jump is output at the output value heating, the PID parameters for heating are calculated and then the setpoint is used as the control variable in automatic mode.
- Pretuning heating and cooling
  A jump is output at the output value heating.
  As soon as the process value is close to the setpoint, a jump change is output at the output value cooling.
  The PID parameters for heating (Retain.CtrlParams.Heat structure) and cooling (Retain.CtrlParams.Cool structure) are calculated and then the setpoint is used as the control variable in automatic mode.
- Pretuning cooling
  A jump is output at the output value cooling.
  The PID parameters for cooling are calculated and then the setpoint is used as the control variable in automatic mode.

If you want to tune the PID parameters for heating and cooling, you can expect a better control response with "Pretuning heating" followed by "Pretuning cooling" rather than with "Pretuning heating and cooling". However, carrying out pretuning in two steps takes more time.

General requirements

- The PID_Temp instruction is called in a cyclic interrupt OB.
- ManualEnable = FALSE
- Reset = FALSE
- PID_Temp is in one of the following modes: "Inactive", "Manual mode", or "Automatic mode".
- The setpoint and the process value lie within the configured limits (see Process value monitoring (Page 148) configuration).

Requirements for pretuning heating

- The difference between setpoint and process value is greater than 30% of the difference between process value high limit and process value low limit.
- The distance between the setpoint and the process value is greater than 50% of the setpoint.
- The setpoint is greater than the process value.

Requirements for pretuning heating and cooling

- The cooling output in the "Basic settings" is activated (Config.ActivateCooling = TRUE).
- The PID parameter switching in the "Basic settings of output value" is activated (Config.AdvancedCooling = TRUE).
- The difference between setpoint and process value is greater than 30% of the difference between process value high limit and process value low limit.

- The distance between the setpoint and the process value is greater than 50% of the setpoint.
- The setpoint is greater than the process value.

Requirements for pretuning cooling

- The cooling output in the "Basic settings" is activated (Config.ActivateCooling = TRUE).
- The PID parameter switching in the "Basic settings of output value" is activated (Config.AdvancedCooling = TRUE).
- "Pretuning heating" or "Pretuning heating and cooling" has been carried out successfully (PIDSelfTune.SUT.ProcParHeatOk = TRUE). The same setpoint should be used for all tunings.
- The difference between setpoint and process value is smaller than 5% of the difference between process value high limit and process value low limit.

Procedure

To perform pretuning, follow these steps:

1. Double-click the "PID_Temp > Commissioning" entry in the project tree.
2. Activate the "Monitor all" button or start the trend view.
   An online connection will be established.
3. Select the desired pretuning entry from the "Tuning mode" drop-down list.
4. Click the "Start" icon.
   - Pretuning is started.
   - The "Status" field displays the current steps and any errors that may have occurred. The progress bar indicates the progress of the current step.

   NOTE

   Click the "Stop" icon when the progress bar ("Progress" tag) has not changed for a long period and it is to be assumed that the tuning function is blocked. Check the configuration of the technology object and, if necessary, restart controller tuning.

Result

If pretuning was performed without an error message, the PID parameters have been tuned. PID_Temp switches to automatic mode and uses the tuned parameters. The tuned PID parameters will be retained during power OFF and a restart of the CPU.
If pretuning is not possible, PID_Temp responds with the configured reaction to errors.

7.3.3 Fine tuning

Fine tuning generates a constant, limited oscillation of the process value. The PID parameters are tuned for the operating point from the amplitude and frequency of this oscillation. The PID parameters are recalculated from the results. PID parameters from fine tuning usually

have better master control and disturbance characteristics than PID parameters from pretuning. You obtain the best PID parameters when you perform pretuning and fine tuning.

PID_Temp automatically attempts to generate an oscillation greater than the noise of the process value. Fine tuning is only minimally influenced by the stability of the process value. The PID parameters are backed up before being recalculated.

PID_Temp offers different fine tuning types depending on the configuration:

- Fine tuning heating:
  PID_Temp generates an oscillation of the process value with periodic changes at the output value heating and calculates the PID parameters for heating.
- Fine tuning cooling:
  PID_Temp generates an oscillation of the process value with periodic changes at the output value cooling and calculates the PID parameters for cooling.

Temporary tuning offset for heating/cooling controllers

If PID_Temp is used as a heating/cooling controller (Config.ActivateCooling = TRUE), the PID output value (PidOutputSum) at the setpoint has to fulfill the following requirements so that process value oscillation can be generated and fine tuning can be carried out successfully:

- Positive PID output value for fine tuning heating
- Negative PID output value for fine tuning cooling

If this condition is not fulfilled, you can specify a temporary offset for fine tuning that is output at the opposing output.

- Offset for cooling output (PIDSelfTune.TIR.OutputOffsetCool) with fine tuning heating.
  Before starting tuning, enter a negative tuning offset cooling that is smaller than the PID output value (PidOutputSum) at the setpoint in the stationary state.
- Offset for heating output (PIDSelfTune.TIR.OutputOffsetHeat) at fine tuning cooling
  Before starting tuning, enter a positive tuning offset heating that is greater than the PID output value (PidOutputSum) at the setpoint in the stationary state.

The defined offset is balanced by the PID algorithm so that the process value remains at the setpoint. The height of the offset allows the PID output value to be adapted correspondingly so that it fulfills the requirement mentioned above.

To avoid larger overshoots of the process value when defining the offset, it can also be increased in several steps.

If PID_Temp exits the fine tuning mode, the tuning offset is reset.

Example: Specification of an offset for fine tuning cooling

- Without offset
  - Setpoint = Process value (ScaledInput) = 80 °C
  - PID output value (PidOutputSum) = 30.0
  - Output value heating (OutputHeat) = 30.0
  - Output value cooling (OutputCool) = 0.0
    Oscillation of the process value around the setpoint cannot be generated with the cooling output alone. Fine tuning would fail here.

- With offset for heating output (PIDSelfTune.TIR.OutputOffsetHeat) = 80.0
  - Setpoint = Process value (ScaledInput) = 80 °C
  - PID output value (PidOutputSum) = -50.0
  - Output value heating (OutputHeat) = 80.0
  - Output value cooling (OutputCool) = -50.0
    Thanks to the specification of an offset for the heating output, the cooling output can now generate oscillation of the process value around the setpoint. Fine tuning can now be carried out successfully.

General requirements

- The PID_Temp instruction is called in a cyclic interrupt OB.
- ManualEnable = FALSE
- Reset = FALSE
- The setpoint and the process value lie within the configured limits (see "Process value settings" configuration).
- The control loop has stabilized at the operating point. The operating point is reached when the process value corresponds to the setpoint.
  When the dead zone is switched on, the result can be a permanent control deviation (deviation between setpoint and actual value). This can have a negative effect on fine tuning.
- No disturbances are expected.
- PID_Temp is in inactive mode, automatic mode or manual mode.

Requirements for fine tuning heating

- Heat.EnableTuning = TRUE
- Cool.EnableTuning = FALSE
- If PID_Temp is configured as a heating-and-cooling controller (Config.ActivateCooling = TRUE), the heating output has to be active at the operating point where tuning is to be carried out.
  PidOutputSum > 0.0 (see tuning offset)

Requirements for fine tuning cooling

- Heat.EnableTuning = FALSE
- Cool.EnableTuning = TRUE
- The cooling output is activated (Config.ActivateCooling = TRUE).
- The PID parameter switching is activated (Config.AdvancedCooling = TRUE).
- The cooling output has to be active at the operating point where tuning is to be carried out.
  PidOutputSum < 0.0 (see tuning offset)

Process depends on initial situation

Fine tuning can be started from the following operating modes: "Inactive", "automatic mode", or "manual mode".

Fine tuning proceeds as follows when started from:

- Automatic mode with PIDSelfTune.TIR.RunIn = FALSE (default)

  Start fine tuning from automatic mode if you wish to improve the existing PID parameters through tuning.

  PID_Temp controls the system using the existing PID parameters until the control loop has stabilized and the requirements for fine tuning have been met. Only then will fine tuning start.
- Inactive, manual mode or automatic mode with PIDSelfTune.TIR.RunIn = TRUE

  An attempt is made to reach the setpoint with the minimum or maximum output value (two-point control):
  - With minimum or maximum output value heating at fine tuning heating.
  - With minimum or maximum output value cooling for fine tuning cooling.

  This can produce increased overshoot. Fine tuning starts when the setpoint is reached.

  If the setpoint cannot be reached, PID_Temp does not automatically abort tuning.

Procedure

To perform fine tuning, follow these steps:

1. Double-click the "PID_Temp > Commissioning" entry in the project tree.
2. Activate the "Monitor all" button or start the trend view.

   An online connection will be established.
3. Select the desired fine tuning entry from the "Tuning mode" drop-down list.
4. If required (see tuning offset), specify a tuning offset and wait until the stationary state is reached again.
5. Click the "Start" icon.
   - The process of fine tuning is started.
   - The "Status" field displays the current steps and any errors that may have occurred.

     The progress bar indicates the progress of the current step.

NOTE

Click the "Stop" icon in the "Tuning mode" group if the progress bar ("Progress" tag) has not changed for a long period and it is to be assumed that the tuning function is blocked. Check the configuration of the technology object and, if necessary, restart controller tuning.

In the following phases in particular, tuning is not aborted automatically if the setpoint cannot be reached.

- "Attempting to reach setpoint for heating with two-point control."
- "Attempting to reach setpoint for cooling with two-point control."

Result

If fine tuning was performed without errors, the PID parameters have been tuned. PID_Temp switches to automatic mode and uses the tuned parameters. The tuned PID parameters will be retained during power OFF and a restart of the CPU.
If errors occurred during fine tuning, PID_Temp responds with the configured response to errors.

7.3.4 "Manual" mode

The following section describes how you can use "Manual mode" in the commissioning window of the "PID_Temp" technology object.
Manual mode is also possible when an error is pending.

Requirement

- The "PID_Temp" instruction is called in a cyclic interrupt OB.
- An online connection to the CPU has been established.
- The CPU is in "RUN" mode.

Procedure

If you want to test the controlled system by specifying a manual value, use "Manual mode" in the commissioning window.
To define a manual value, follow these steps:

1. Double-click the "PID_Temp > Commissioning" entry in the project tree.
2. Activate the "Monitor all" button or start the trend view.
   An online connection will be established.
3. Select the "Manual mode" check box in the "Online status of controller" area.
   PID_Temp operates in manual mode. The most recent current output value remains in effect.
4. Enter the manual value in the editable field as a % value.
   If cooling is activated in the basic settings, enter the manual value as follows:
   – Enter a positive manual value to output the value at the outputs for heating.
   – Enter a negative manual value to output the value at the outputs for cooling.
5. Click the icon.

Result

The manual value is written to the CPU and immediately goes into effect.
Clear the "Manual mode" check box if the output value is to be specified again by the PID controller.
The switchover to automatic mode is bumpless.

7.3.5 Substitute setpoint

The following section describes how you can use the substitute setpoint in the commissioning window of the "PID_Temp" technology object.

Requirement

- The "PID_Temp" instruction is called in a cyclic interrupt OB.
- An online connection to the CPU has been established.
- The CPU is in "RUN" mode.

Procedure

If you want to use a different value as the setpoint than that specified at the "Setpoint" parameter (for example to tune a slave in a cascade), use the substitute setpoint in the commissioning window.

Proceed as follows to specify a substitute setpoint:

1. Double-click the "PID_Temp > Commissioning" entry in the project tree.
2. Activate the "Monitor all" button or start the trend view.
   An online connection will be established.
3. Select the "Subst.Setpoint" check box in the "Online status of controller" section.
   The substitute setpoint (SubstituteSetpoint tag) is initialized with the most recently updated setpoint and now used.
4. Enter the substitute setpoint in the editable field.
5. Click the icon.

Result

The substitute setpoint is written to the CPU and immediately goes into effect.

Clear the "Subst.Setpoint" check box if the value at the "Setpoint" parameter is to be used again as setpoint.

The switchover is not bumpless.

7.3.6 Cascade commissioning

Information about cascade commissioning with PID_Temp is available under Commissioning (Page 170).

7.4 Cascade control with PID_Temp

7.4.1 Introduction

In cascade control, several control loops are nested within each other. In the process, slaves receive their setpoint (Setpoint) from the output value (OutputHeat) of the respective higher-level master.

A prerequisite for establishing a cascade control system is that the controlled system can be divided into subsystems, each with its own measured variable.

Setpoint specification for the controlled variable is carried out at the outmost master.

The output value of the innermost slave is applied to the actuator and thus acts on the controlled system.

The following major advantages result from the use of a cascade control system in comparison with a single-loop control system:

- Thanks to the additional subordinate control loops, disturbances which occur there are corrected quickly. Their influence on the controlled variable is reduced considerably. The disturbance behavior is thus improved.
- The subordinate control loops act in linearizing form. The negative effects of such non-linearities on the controlled variable are thus moderated.

PID_Temp offers the following functionality especially for use in cascade control systems:

- Specification of a substitute setpoint
- Exchange of status information between master and slave (for example, current operating mode)
- Different Anti-Wind-Up modes (response of the master to limitation of its slave)

Example

The following block diagram shows a cascade control system with PID_Temp using the simplified example of a chocolate melting unit:

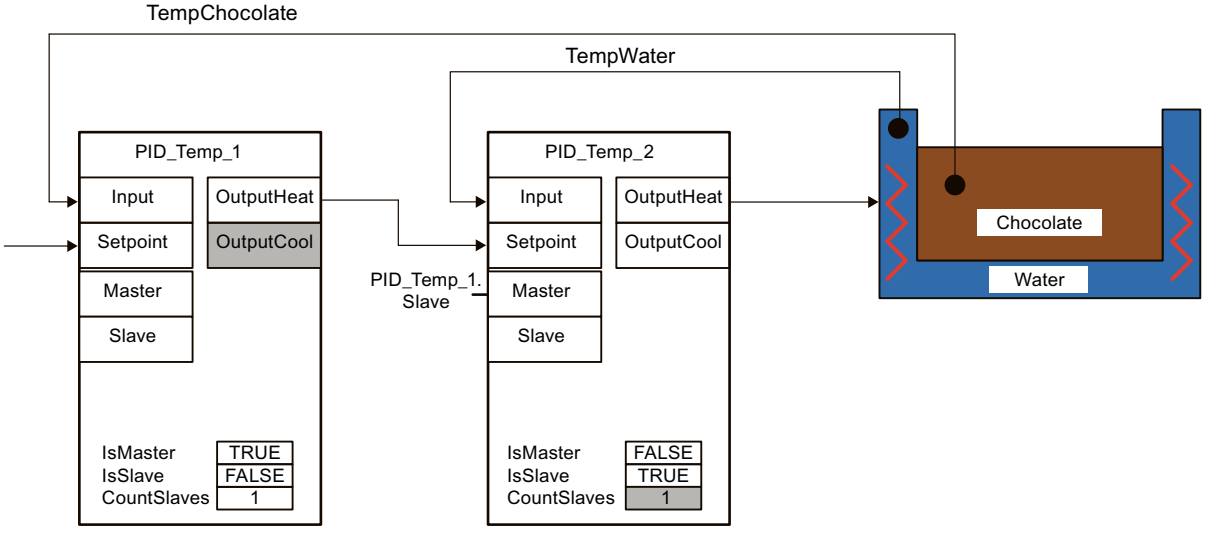

The PID_Temp_1 master compares the process value of the chocolate temperature (TempChocolate) with the setpoint specification by the user at the Setpoint parameter. Its output value OutputHeat forms the setpoint of the slave PID_Temp_2.

PID_Temp_2 attempts to regulate the process value of the water-bath temperature (TempWater) to this setpoint. The output value of PID_Temp_2 acts directly on the actuator of the controlled system (heating of the water bath) and thus influences the water-bath temperature. The water-bath temperature in turn has an effect on the chocolate temperature.

FAQ

For more information, see the following FAQs in the Siemens Industry Online Support:

- Entry ID 103526819 (https://support.industry.siemens.com/cs/ww/en/view/103526819)

See also

Program creation (Page 168)

7.4.2 Program creation

Observe the following points during program creation:

- Number of PID_Temp instances
  The number of different PID_Temp instances called up in a cyclic interrupt OB has to agree with the number of concatenated measured variables in the process.
  There are two concatenated measured variables in the example: TempChocolate and TempWater. Therefore two PID_Temp instances are required.
- Call sequence
  A master has to be called before its slaves in the same cyclic interrupt OB.
  The outermost master at which the user setpoint is specified is called first.
  The slave whose setpoint is specified by the outermost master is called next, etc.
  The innermost slave that acts on the actuator of the process with its output value is called last.
  In the example, PID_Temp_1 is called before PID_Temp_2.
- Interconnection of the measured variables
  The outermost master is interconnected with the outermost measured variable that is to be regulated to the user setpoint.
  The innermost slave is interconnected with the innermost measured variable that is influenced directly by the actuator.
  Interconnection of the measured variables with PID_Temp is carried out with the parameters Input or Input_PER.
  In the example, the outermost measured variable TempChocolate is interconnected with PID_Temp_1 and the innermost measured variable TempWater with PID_Temp_2.
- Interconnection of the output value of the master to the setpoint of the slave
  The output value (OutputHeat) of a master has to be assigned to the setpoint (Setpoint) of its slave.
  This interconnection can be carried out in the programming editor or automatically in the Inspector window of the slave in the basic settings via the selection of the master.
  If required, you can insert your own filter or scaling functions, for example in order to adapt the output value range of the master to the setpoint/process value range of the slave.
  In the example, OutputHeat of PID_Temp_1 is assigned to Setpoint of PID_Temp_2.

- Interconnection of the interface for information exchange between master and slave
  The "Slave" parameter of a master has to be assigned to the "Master" parameter of all its directly subordinate slaves (which receive their setpoint from this master). The assignment should be carried out via the interface of the slave in order to allow the interconnection of a master with multiple slaves and the display of the interconnection in the Inspector window of the slave in the basic settings.
  This interconnection can be carried out in the programming editor or automatically in the Inspector window of the slave in the basic settings via the selection of the master.
  The Anti-Wind-Up functionality and the evaluation of the slave operating modes at the master can only function correctly if this interconnection is carried out.
  In the example, the "Slave" parameter of PID_Temp_1 is assigned to the "Master" parameter of PID_Temp_2.

Program code of the example using SCL (without assignment of the output value of the slave to the actuator):

```
"PID_Temp_1"(Input:="TempChocolate");
"PID_Temp_2"(Input:="TempWater", Master := "PID_Temp_1".Slave,
Setpoint := "PID_Temp_1".OutputHeat);
```

See also

PID_Temp ActivateRecoverMode tag (Page 373)

7.4.3 Configuration

You can carry out the configuration via your user program, the configuration editor or the Inspector window of the PID_Temp call.

When using PID_Temp in a cascade control system, ensure the correct configuration of the settings specified below.

If a PID_Temp instance receives its setpoint from a superior master controller and outputs its output value in turn to a subordinate slave controller, this PID_Temp instance is both a master controller and a slave controller simultaneously. Both configurations listed below have to be carried out for such a PID_Temp instance. This is the case, for example, for the middle PID_Temp instance in a cascade control system with three concatenated measured variables and three PID_Temp instances.

Configuration of a master

Setting in the configuration editor or Inspector window	DB parameter	Explanation
Basic settings → Cascade: Activate "Controller is master" check box	Config.Cascade.IsMaster = TRUE	Activates this controller as a master in a cascade
Basic settings → Cascade: Number of slaves	Config.Cascade.CountSlaves	Number of directly subordinate slaves that receive their setpoint directly from this master
Basic settings → Input/output parameters: Selection of the output value (heating) = OutputHeat	Config.Output.Heat.Select = 0	The master only uses the output parameter OutputHeat. OutputHeat_PWM and OutputHeat_PER are deactivated.
Basic settings → Input/output parameters: Clear "Activate cooling" check box	Config.ActivateCooling = FALSE	The cooling has to be deactivated at a master.

Setting in the configuration editor or Inspector window	DB parameter	Explanation
Output settings → Output limits and scaling → OutputHeat / OutputCool: PID output value low limit (heating), PID output value high limit (heating), Scaled low output value (heating), Scaled high output value (heating)	Config.Output.Heat.PidLower-Limit, Config.Output.Heat.PidUpper-Limit, Config.Output.Heat.LowerScal-ing, Config.Output.Heat.UpperScal-ing	If no own scaling function is used when assign-ing OutputHeat of the master to Setpoint of the slave, it may be necessary to adapt the output value limits and the output scaling of the master to the setpoint/process value range of the slave.
This tag is not available in the Inspector window or in the functional view of the configuration editor. You can change it via the parameter view of the configuration editor.	Config.Cascade.AntiWindUp-Mode	The Anti-Wind-Up mode determines how the integral action of this master is treated if directly subordinate slaves reach their output value lim-its. Options are: • AntiWindUpMode = 0: The AntiWindUp functionality is deactivated. The master does not react to the limitation of its slaves. • AntiWindUpMode = 1 (default): The integral action of the master is reduced in the relationship "Slaves in limitation/Num-ber of slaves". This reduces the effects of the limitation on the control behavior. • AntiWindUpMode = 2: The integral action of the master is held as soon as a slave is in limitation.

Configuration of a slave

Setting in the configuration editor or Inspector window	DB parameter	Explanation
Basic settings → Cascade: Select the "Controller is slave" check box	Config.Cascade.IsSlave = TRUE	Activates this controller as a slave in a cascade

7.4.4 Commissioning

After compiling and loading of the program, you can start commissioning of the cascade control system.

Begin with the innermost slave at commissioning (implementation of tuning or change to automatic mode with existing PID parameters) and continue outwards until the outermost master has been reached.

In the above example, commissioning starts with PID_Temp_2 and is continued with PID_Temp_1.

Tuning the slave

Tuning of PID_Temp requires a constant setpoint. Therefore, activate the substitute setpoint of a slave (SubstituteSetpoint and SubstituteSetpointOn tags) to tune the slave or set the

associated master to manual mode with a corresponding manual value. This ensures that the setpoint of the slave remains constant during tuning.

Tuning the master

In order for a master to influence the process or to carry out tuning, all the downstream slaves have to be in automatic mode and their substitute setpoint has to be deactivated. A master evaluates these conditions through the interface for information exchange between master and slave (Master parameter and Slave parameter) and displays the current state at the AllSlaveAutomaticState and NoSlaveSubstituteSetpoint tags. Corresponding status messages are output in the commissioning editor.

Status message in the commissioning editor of the master	DB parameter of the master	Correction
One or more slaves are not in automatic mode.	AllSlaveAutomaticState = FALSE, NoSlaveSubstituteSetpoint = TRUE	First, carry out commissioning of all downstream slaves. Ensure that the following conditions are fulfilled before carrying out tuning or activating manual mode or automatic mode of the master: • All downstream slaves are in automatic mode (state = 3). • All downstream slaves have deactivated the substitute setpoint (SubstituteSetpointOn = FALSE).
One or more slaves have activated the substitute setpoint.	AllSlaveAutomaticState = TRUE, NoSlaveSubstituteSetpoint = FALSE	
One or more slaves are not in automatic mode and have activated the substitute setpoint.	AllSlaveAutomaticState = FALSE, NoSlaveSubstituteSetpoint = FALSE	

If pretuning or fine tuning is started for a master, PID_Temp aborts tuning in the following cases and displays an error with ErrorBits = DW#16#0200000:

- One or more slaves are not in automatic mode (AllSlaveAutomaticState = FALSE)
- One or more slaves have activated the substitute setpoint (NoSlaveSubstituteSetpoint = FALSE).

The subsequent operating mode changeover depends on ActivateRecoverMode.

7.4.5 Substitute setpoint

In order to specify a setpoint, PID_Temp offers a substitute setpoint at the SubstituteSetpoint tag in addition to the Setpoint parameter. This can be activated by setting SubstituteSetpointOn = TRUE or by selecting the corresponding check box in the commissioning editor.

The substitute setpoint allows you to specify the setpoint temporarily directly at the slave, for example during commissioning or tuning.

In this case, the interconnection of the output value of the master with the setpoint of the slave that is required for normal operation of the cascade control system does not have to be changed in the program

In order for a master to influence the process or to carry out tuning, the substitute setpoint has to be deactivated at all downstream slaves.

You can monitor the currently effective setpoint as it is used by the PID algorithm for calculation at the CurrentSetpoint tag.

7.4.6 Operating modes and fault response

The master or slave of a PID_Temp instance does not change the operating mode of this PID_Temp instance.

If a fault occurs at one of its slaves, the master remains in its current operating mode.

If a fault occurs at its master, the slave remains in its current operating mode. However, further operation of the slave then depends on the fault and the configured fault response of the master since the output value of the master is used as the setpoint of the slave:

- If ActivateRecoverMode = TRUE is configured at the master. and the fault does not prevent the calculation of OutputHeat, the fault does not have any effect on the slave.
- If ActivateRecoverMode = TRUE is configured at the master and the fault prevents the calculation of OutputHeat, the master outputs the last output value or the configured substitute output value SubstituteOutput, depending on SetSubstituteOutput. This is then used by the slave as the setpoint.

  PID_Temp is preconfigured so that the substitute output value 0.0 is output in this case (ActivateRecoverMode = TRUE, SetSubstituteOutput = TRUE, SubstituteOutput = 0.0). Configure a suitable substitute output value for your application or activate the use of the last valid PID output value (SetSubstituteOutput = FALSE).
- If ActivateRecoverMode = FALSE is configured at the master, the master changes to the "Inactive" mode when a fault occurs and outputs OutputHeat = 0.0. The slave then uses 0.0 as the setpoint.

The fault response is located in the output settings in the configuration editor.

7.5 Multi-zone controlling with PID_Temp

Introduction

In a multi-zone control system, several sections, so-called zones, of a plant are controlled simultaneously to different temperatures. A multi-zone control system is characterized by the mutual influence of the temperature zones through thermal coupling, i.e. the process value of one zone can influence the process value of a different zone through thermal coupling. The strength that this influence has depends on the structure of the plant and the selected operating points of the zones.

Example: Extrusion plant as it is used, for example, in plastics processing.

The substance mixture that passes through the extruder has to be controlled to different temperatures for optimal processing. For example, different temperatures can be required at the filling point of the extruder than at the outlet nozzle. The individual temperature zones mutually influence each other through thermal coupling.

When PID_Temp is used in multi-zone control systems, each temperature zone is controlled by a separate PID_Temp instance.

Observe the following explanations if you want to use the PID_Temp in a multi-zone control system.

Separate pretuning for heating and cooling

Initial commissioning of a plant as a rule begins with the carrying out of pretuning in order to carry out initial setting of the PID parameters and control to the operating point. The pretuning for multi-zone control systems is often carried out simultaneously for all zones.

PID_Temp offers the possibility of carrying out pretuning for heating and cooling in one step (Mode = 1, Heat.EnableTuning = TRUE, Cool.EnableTuning = TRUE) for controllers with activated cooling and PID parameter switching as the method for heating/cooling (Config.ActivateCooling = TRUE, Config.AdvancedCooling = TRUE).

However, it is advisable not to use this tuning for simultaneous pretuning of several PID_Temp instances in a multi-zone control system. Instead, first carry out the pretuning for heating (Mode = 1, Heat.EnableTuning = TRUE, Cool.EnableTuning = FALSE) and the pretuning for cooling (Mode = 1, Heat.EnableTuning = FALSE, Cool.EnableTuning = TRUE) separately.

Pretuning for cooling should not be started until all zones have completed pretuning for heating and have reached their operating points.

This reduces mutual influencing through thermal coupling between the zones during tuning.

Adapting the delay time

If PID_Temp is used in a multi-zone control system with strong thermal couplings between the zones, you should ensure that the adaption of the delay time is deactivated for pretuning with PIDSelfTune.SUT.AdaptDelayTime = 0. Otherwise, the determination of the delay time can be incorrect if the cooling of a zone is prevented by the thermal influence of other zones during the adapting of the delay time (heating is deactivated in this phase).

Temporary deactivation of cooling

PID_Temp offers the possibility of deactivating cooling temporarily in automatic mode for controllers with active cooling (Config.ActivateCooling = TRUE) by setting DisableCooling = TRUE.

This ensures that this controller does not cool in automatic mode during commissioning while the controllers of other zones have not yet completed tuning of heating. The tuning could otherwise be influenced negatively by the thermal coupling between the zones.

Procedure

You can proceed as follows during the commissioning of multi-zone control systems with relevant thermal couplings:

1. Set DisableCooling = TRUE for all controllers with activated cooling.
2. Set PIDSelfTune.SUT.AdaptDelayTime = 0 for all controllers.
3. Specify the desired setpoints (Setpoint parameter) and start pretuning for heating (Mode = 1, Heat.EnableTuning = TRUE, Cool.EnableTuning = FALSE) simultaneously for all controllers.
4. Wait until all the controllers have completed pretuning for heating.
5. Set DisableCooling = FALSE for all controllers with activated cooling.
6. Wait until the process values of all the zones are steady and close to the respective setpoint.
   If the setpoint cannot be reached permanently for a zone, the heating or cooling actuator is too weak.
7. Start pretuning for cooling (Mode = 1, Heat.EnableTuning = FALSE, Cool.EnableTuning = TRUE) for all controllers with activated cooling.

NOTE

Limit violation of the process value

If the cooling is deactivated in automatic mode with DisableCooling = TRUE, this can cause the process value to exceed the setpoint and the process value limits while DisableCooling = TRUE. Observe the process values and intervene, if appropriate, if you use DisableCooling.

NOTE

Multi-zone control systems

For multi-zone control systems, the thermal couplings between the zones can result in increased overshoots, permanent or temporary violation of limits and permanent or temporary control deviations during commissioning or operation. Observe the process values and be ready to intervene. Depending on the system, it can be necessary to deviate from the procedure described above.

Synchronization of several fine tuning processes

If fine tuning is started from automatic mode with PIDSelfTune.TIR.RunIn = FALSE, PID_Temp tries to reach the setpoint with PID controlling and the current PID parameters. The actual tuning does not start until the setpoint is reached. The time required to reach the setpoint can be different for the individual zones of a multi-zone control system.

If you want to carry out fine tuning for several zones simultaneously, PID_Temp offers the possibility to synchronize these by waiting with the further tuning steps after the setpoint has been reached.

Procedure

This ensures that all the controllers have reached their setpoint when the actual tuning steps start. This reduces mutual influencing through thermal coupling between the zones during tuning.

Proceed as follows for controllers for whose zones you want to carry out fine tuning simultaneously:

1. Set PIDSelfTune.TIR.WaitForControlIn = TRUE for all controllers.
   These controllers have to be in automatic mode with PIDSelfTune.TIR.RunIn = FALSE.
2. Specify the desired setpoints (Setpoint parameters) and start fine tuning for all controllers.
3. Wait until PIDSelfTune.TIR.ControlInReady = TRUE at all controllers.
4. Set PIDSelfTune.TIR.FinishControlIn = TRUE for all controllers.

All controllers then start the actual tuning simultaneously.

7.6 Override control with PID_Temp

Override control

In case of override control, two or more controllers share one actuator. Only one controller has access to the actuator at any time and influences the process.

A logic operation decides which controller has access to the actuator. This decision is often made based on a comparison of the output values of all controllers, for example, in case of a maximum selection, the controller with the largest output value gets access to the actuator.

The selection based on the output value requires that all controllers operate in automatic mode. The controllers that do not have an effect on the actuator are updated. This is necessary to prevent windup effects and their negative impacts on the control response and the switchover between the controllers.

PID_Temp supports override controls as of version 1.1 by offering a simple process for updating the controllers that are not active: By using the tags OverwriteInitialOutputValue and PIDCtrl.PIDInit, you can pre-assign the integral action of the controller in automatic mode as though the PID algorithm had calculated PidOutputSum = OverwriteInititalOutputValue for the PID output value in the last cycle. To do this, OverwriteInitialOutputValue is interconnected with the PID output value of the controller that currently has access to the actuator. By setting the bit PIDCtrl.PIDInit, you trigger the preassignment of the integral action as well as the restart of the controller cycle and the PWM period. The subsequent calculation of the PID output value in the current cycle takes place based on the preassigned (and synchronized for all controllers) integral action as well as the proportional action and integral action from the current control deviation. The derivative action is not active during the call with PIDCtrl.PIDInit = TRUE and therefore does not contribute to the output value.

This procedure ensures that the calculation of the current PID output value and thus the decision on which controller is to have access to the actuator is only based on the current process state and the PI parameters. Windup effects for controllers that are not active and thus incorrect decisions of the switchover logic are prevented.

Requirement

- PIDCtrl.PIDInit is only effective if the integral action is activated (tags Retain.CtrlParams.Heat.Ti and Retain.CtrlParams.Cool.Ti > 0.0).
- You must assign PIDCtrl.PIDInit and OverwriteInitialOutputValue in your user program yourself (see example below). PID_Temp does not automatically change these tags.
- PIDCtrl.PIDInit is only effective when PID_Temp is in automatic mode (parameter State = 3).
- If possible, select the sampling time of the PID algorithm (Retain.CtrlParams.Heat.Cycle and Retain.CtrlParams.Cool.Cycle tags) so that it is identical for all controllers, and call all controllers in the same cyclic interrupt OB. In this way, you ensure that the switchover does not take place within a controller cycle or a PWM period.

NOTE

Constant adaptation of the output value limits

Instead of the active updating of the controllers without access to the actuator described here, this is implemented alternatively by constant adaptation of the output value limits in other controller systems.

This is not possible with PID_Temp, because a change of the output value limits is not supported in automatic mode.

Example: Control of a large boiler

PID_Temp is used for control of a large boiler.

The main goal is to control the temperature Input1. The controller PID_Temp_1 is used for this purpose. In addition, the temperature Input2 is to be kept below a high limit at an additional measuring point with the limiting controller PID_Temp_2.

Both temperatures are influenced by only one heater. The output value of the controller corresponds to the heating power.

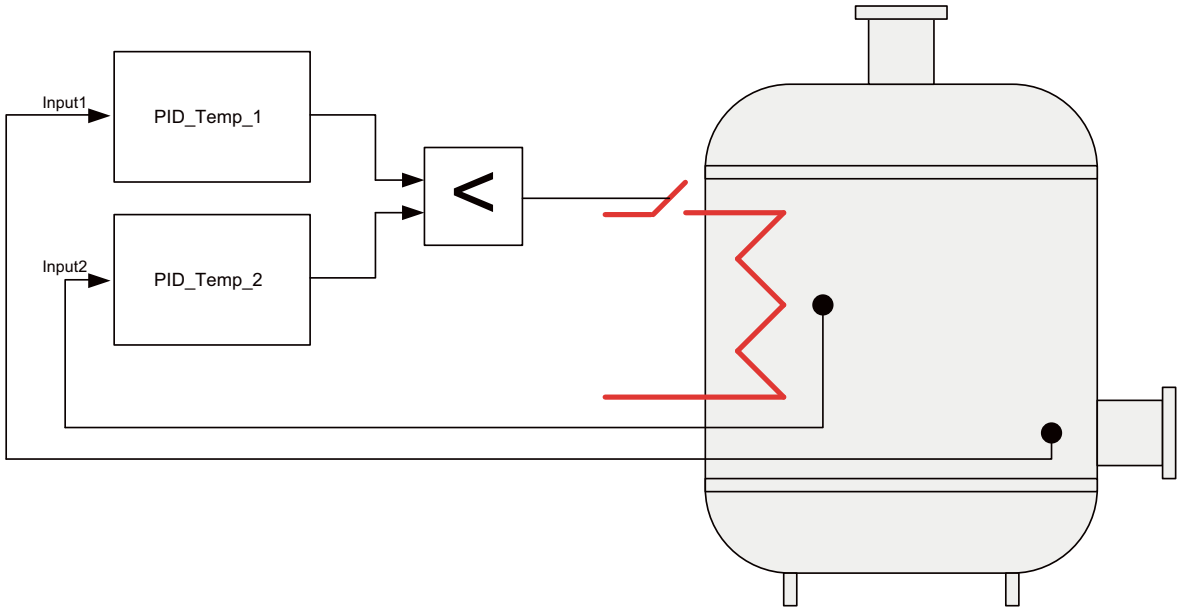

The heater is controlled with the pulse-width modulated output value of PID_Temp (parameter OutputHeat_PWM) by writing the program tag ActuatorInput. The setpoint for the temperature Input1 is specified at the parameter PID_Temp_1.Setpoint. The temperature high limit for the additional measuring point is specified as setpoint at the parameter PID_Temp_2.Setpoint.

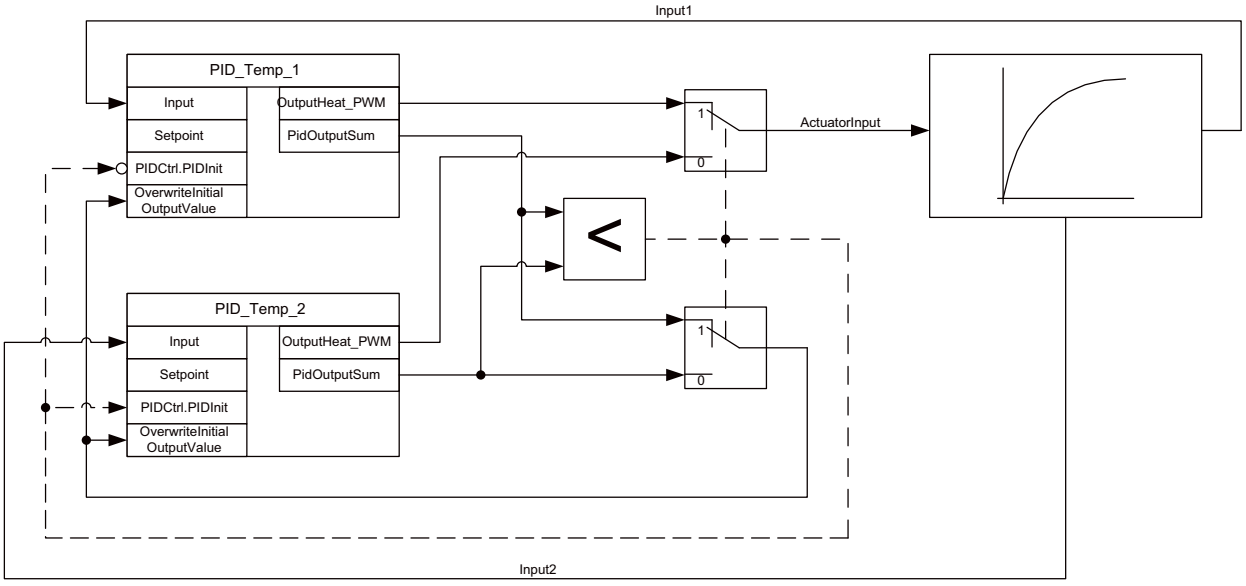

Both controllers must share one heater as shared actuator. The logic that decides which controller gets access to the actuator is implemented by a minimum selection of the PID output value (in Real format, parameter PidOutputSum) in this case. Because the PID output value corresponds to the heating power, the controller that requires lower heating power gets the control.

In normal operation of the plant, the process value of the main controlled variable corresponds to the setpoint. The main controller PID_Temp_1 has settled on a stationary PID output value PID_Temp_1.PidOutputSum. The process value of the limiting controller Input2 in normal operation is significantly below the high limit that is specified as setpoint for PID_Temp_2. The limiting controller therefore wants to increase the heating power to increase its process value, which means it will calculate a PID output value PID_Temp_2.PidOutputSum that is greater than the output value of the main controller PID_Temp_1.PidOutputSum. The minimum selection of the switchover logic therefore gives the main controller PID_Temp_1 continued access to the actuator. In addition, it is ensured that PID_Temp_2 is updated by means of the assignments PID_Temp_2.OverwriteInitialOutputValue = PID_Temp_1.PidOutputSum and PID_Temp_2.PIDCtrl.PIDInit = TRUE.

If Input2 now approaches the high limit or exceeds it, for example due to a fault, the limiting controller PID_Temp_2 calculates a smaller PID output value to restrict the heating power and thus reduce Input2. If PID_Temp_2.PidOutputSum is smaller than PID_Temp_1.PidOutputSum, the limiting controller PID_Temp_2 receives access to the actuator through the minimum selection and reduces the heating power. It is ensured that PID_Temp_1 is updated by means of the assignments PID_Temp_1.OverwriteInitialOutputValue = PID_Temp_2.PidOutputSum and PID_Temp_1.PIDCtrl.PIDInit = TRUE.

The temperature at the additional measuring point Input2 drops. The temperature of the main controlled variable Input1 drops as well and cannot be held at the setpoint any longer.

Once the fault has been remedied, the Input2 will continue to drop and the heating power is further increased by the limiting controller. As soon as the main controller has calculated a lower heating power as output value, the plant returns to normal operation so that the main controller PID_Temp_1 once again has access to the actuator. This example can be implemented with the following SCL program code:

```
"PID_Temp_1"(Input := "Input1");
"PID_Temp_2"(Input := "Input2");
IF "PID_Temp_1".PidOutputSum <= "PID_Temp_2".PidOutputSum THEN
  "ActuatorInput" := "PID_Temp_1".OutputHeat_PWM;
  "PID_Temp_1".PIDCtrl.PIDInit := FALSE;
  "PID_Temp_2".PIDCtrl.PIDInit := TRUE;
  "PID_Temp_2".OverwriteInitialOutputValue := "PID_Temp_1".PidOutputSum;
ELSE
  "ActuatorInput" := "PID_Temp_2".OutputHeat_PWM;
  "PID_Temp_1".PIDCtrl.PIDInit := TRUE;
  "PID_Temp_2".PIDCtrl.PIDInit := FALSE;
  "PID_Temp_1".OverwriteInitialOutputValue := "PID_Temp_2".PidOutputSum;
END_IF;
```

7.7 Simulating PID_Temp with PLCSIM

NOTE

Simulation with PLCSIM

The simulation of PID_Temp with PLCSIM for CPU S7-1200 is not supported.

PID_TEMP can be simulated only for CPU S7-1500 with PLCSIM.

For the simulation with PLCSIM, the time behavior of the simulated PLC is not exactly identical to that of a "real" PLC. The actual cycle clock of a cyclic interrupt OB can have larger fluctuations with a simulated PLC than with "real" PLCs.

In the standard configuration, PID_Temp determines the time between calls automatically and monitors them for fluctuations.

For the simulation of PID_Temp with PLCSIM, for example, a sampling time error (ErrorBits = DW#16#00000800) can therefore be detected.

This results in ongoing tuning being aborted.

The response in automatic mode depends on the value of the ActivateRecoverMode tag.

To prevent this from happening, you should configure PID_Temp for simulation with PLCSIM as follows:

- CycleTime.EnEstimation = FALSE
- CycleTime.EnMonitoring = FALSE
- CycleTime.Value: Assign the cycle clock of the calling cyclic interrupt OB in seconds to this tag.

Using PID basic functions

8

8.1 CONT_C

8.1.1 Technology object CONT_C

The technology object CONT_C provides a continual PID-controller for automatic and manual mode. It corresponds to the instance data block of the instruction CONT_C. You can configure a pulse controller using the PULSEGEN instruction.

The proportional, integral (INT) and differential components (DIF) are switched parallel to each other and can be turned on and off individually. With this, P-, I, PI-, PD- and PID-controller can be set.

S7-1500

All parameters and tags of the technology object are retentive and can only be changed during download to the device if you completely download CONT_C.

See also

Overview of software controller (Page 39)

Add technology objects (Page 41)

Configure technology objects (Page 42)

Downloading technology objects to device (Page 44)

CONT_C (Page 379)

8.1.2 Configure controller difference CONT_C

Use process value periphery

To use the process value in the periphery format at the PV_PER input parameter, follow these steps:

1. Select the "Enable I/O" check box.
2. If the process value is available as a physical size, enter the factor and offset for the scaling in percent.
   The process value is then determined according to the following formula:
   PV = PV_PER × PV_FAC + PV_OFF

Use internal process values

To use the process value in the floating-point format at the PV_IN input parameter, follow these steps:

1. Clear the "Enable I/O" check box.

Control deviation

Set a dead zone range under the following requirement:

- The process value signal is noisy.
- The controller gain is high.
- The derivative action is activated.

The noise component of the process value causes strong deviations of the output value in this case. The dead zone suppresses the noise component in the steady controller state. The dead zone range specifies the size of the dead zone. With a dead zone range of 0.0, the dead zone is turned off.

See also

How CONT_C works (Page 379)

8.1.3 Configure the controller algorithm CONT_C

General

To determine which components of the control algorithm are activated, proceed as follows:

1. Select an entry from the "Controller structure" list.
   You can only specify required parameters for the selected controller structure.

Proportional action

1. If the controller structure contains a proportional action, enter the "proportional gain".

Integral action

1. If the controller structure contains an integral action, enter the integral action time.
2. To give the integral action an initialization value, select the check box "Initialize integral action" and enter the initialization value.
3. In order to permanently set the integral action to this initialization value, select the "Integral action hold" check box.

Derivative action

1. If the controller structure contains a derivative action, enter the derivative action time, the derivative action weighting and the delay time.

See also

How CONT_C works (Page 379)

8.1.4 Configure the output value CONT_C

General

You can set CONT_C in the manual or automatic mode.

1. To set a manual manipulated value, activate the option "Activate manual mode" option check box.
   You can specify a manual manipulated value on the input parameter MAN.

Manipulated value limits

The manipulated value is limited at the top and bottom so that it can only accept valid values. You cannot turn off the limitation. Exceeding the limits is displayed through the output parameters QLMN_HLM and QLMN_LLM.

1. Enter a value for the high and low manipulated value limits.
   If the manipulated value is a physical size, the units for the high and low manipulated value limits must match.

Scaling

The manipulated value can be scaled for output as a floating point and periphery value through a factor and an offset according to the following formula.

Scaled manipulated value = manipulated value x factor + offset

Default is a factor of 1.0 and an offset of 0.0.

1. Enter a value for the factor and offset.

See also

How CONT_C works (Page 379)

8.1.5 Programming a pulse controller

With the continuous controller CONT_C and the pulse shaper PULSEGEN, you can implement a fixed setpoint controller with a switching output for proportional actuators. The following figure shows the signal flow of the control loop.

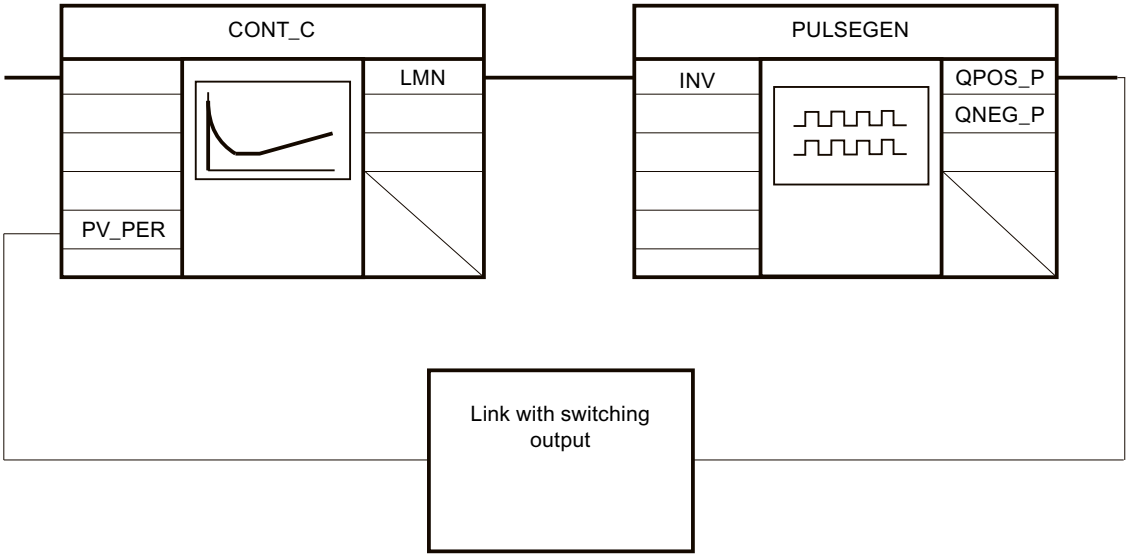

The continuous controller CONT_C forms the output value LMN that is converted by the pulse shaper PULSEGEN into pulse/break signals QPOS_P or QNEG_P.

See also

PULSEGEN (Page 389)

8.1.6 Commissioning CONT_C

Requirements

- The instruction and the technology object are loaded on the CPU.

Procedure

In order to manually determine the optimal PID parameter, proceed as follows:

1. Click the "Start" icon.
   If there is no online connection, this will be established. The current values for the setpoint, process value and output value are recorded.
2. Enter new PID parameters in the "P", "I", "D" and "Delay time" fields.
3. Click on the icon "Send parameter to CPU" in the "Tuning" group.
4. Select the "Change setpoint" check box in the "Current values" group.
5. Enter a new setpoint and click in the "Current Values" group on the icon .
6. Clear the "Manual mode" check box.
   The controller works with the new PID parameters and controls the new setpoint.

7. Check the quality of the PID parameter to check the curve points.
8. Repeat steps 2 to 6 until you are satisfied with the controller results.

8.2 CONT_S

8.2.1 Technology object CONT_S

The technology object CONT_S provides a step controller for actuators with integrating behavior and is used to control technical temperature processes with binary output value output signals. The technology object corresponds to the instance data block of the CONT_S instruction. The operating principle is based on the PI control algorithm of the sampling controller. The step controller operates without a position feedback signal. Both manual and automatic mode are possible.

S7-1500

All parameters and tags of the technology object are retentive and can only be changed during download to the device if you completely download CONT_S.

See also

Overview of software controller (Page 39)

Add technology objects (Page 41)

Configure technology objects (Page 42)

Downloading technology objects to device (Page 44)

CONT_S (Page 384)

8.2.2 Configure controller difference CONT_S

Use process value periphery

To use the process value in the periphery format at the PV_PER input parameter, follow these steps:

1. Select the "Enable I/O" check box.
2. If the process value is available as a physical quantity, enter the factor and offset for the scaling in percent.
   The process value is then determined according to the following formula:
   PV = PV_PER × PV_FAC + PV_OFF

Use internal process values

To use the process value in the floating-point format at the PV_IN input parameter, follow these steps:

1. Clear the "Enable I/O" check box.

Control deviation

Set a deadband range under the following requirement:

- The process value signal is noisy.
- The controller gain is high.
- The derivative action is activated.

The noise component of the process value causes strong deviations of the manipulated variable in this case. The deadband suppresses the noise component in the steady controller state. The deadband range specifies the size of the deadband. With a deadband range of 0.0, the deadband is turned off.

See also

Mode of operation CONT_S (Page 385)

8.2.3 Configuring control algorithm CONT_S

PID algorithm

1. Enter the "proportional amplification" for the P-component.
2. Enter the integration time for the time behavior of the I-component.
   With an integration time of 0.0, the I-component is switched off.

See also

Mode of operation CONT_S (Page 385)

8.2.4 Configure manipulated value CONT_S

General

You can set CONT_S in the manual or automatic mode.

1. To set a manual manipulated value, activate the "Activate manual mode" option check box.
   Enter a manual manipulated value for the input parameters LMNUP and LMNDN.

Pulse generator

1. Enter the minimum impulse duration and minimum pause duration.
   The values must be greater than or equal to the cycle time for the input parameter CYCLE.
   The frequency of operation is reduced through this.
2. Enter the motor setting time.
   The value must be greater than or equal to the cycle time of the input parameter CYCLE.

See also

Mode of operation CONT_S (Page 385)

8.2.5 Commissioning CONT_S

Requirements

- The instruction and the technology object have been loaded to the CPU.

Procedure

To manually determine the optimal PID parameters, proceed as follows:

1. Click the "Start" icon.
   If there is no online connection, this will be established. The current values for the setpoint, process value and output value are recorded.
2. In the fields "P" and "I", enter a new proportional value and a new integration time.
3. Click on the icon "Send parameter to CPU" in the "Tuning" group.
4. Select the "Change setpoint" check box in the "Current values" group.
5. Enter a new setpoint and click in the "Current Values" group on the icon .
6. Clear the "Manual mode" check box.
   The controller works with the new parameters and controls the new setpoint.
7. Check the quality of the PID parameter to check the curve points.
8. Repeat steps 2 to 6 until you are satisfied with the controller results.

8.3 TCONT_CP

8.3.1 Technology object TCONT_CP

The technology object TCONT_CP provides a continual temperature controller with pulse generator. It corresponds to the instance data block of the instruction TCONT_CP. The operation is based on the PID control algorithm of the sampling controller. Both manual and automatic mode are possible.

The instruction TCONT_CP calculates the proportional, integral and derivative parameters for your controlled system during pretuning. "Fine tuning" can be used to tune the parameters further. You can also enter the PID parameters manually.

S7-1500

All parameters and tags of the technology object are retentive and can only be changed during download to the device if you completely download TCONT_CP.

See also

Overview of software controller (Page 39)

Add technology objects (Page 41)

Configure technology objects (Page 42)

Downloading technology objects to device (Page 44)

TCONT_CP (Page 398)

8.3.2 Configure TCONT_CP

8.3.2.1 Controller difference

Use process value periphery

To use the input parameter PV_PER, proceed as follows:

1. Select the entry "Periphery" from the "Source" list.
2. Select the "sensor type".
   Depending on the sensor type, the process value is scaled according to different formulas.
   - Standard
     Thermoelements; PT100/NI100
     PV = 0.1 × PV_PER × PV_FAC + PV_OFFS
   - Cooling;
     PT100/NI100
     PV = 0.01 × PV_PER × PV_FAC + PV_OFFS
   - Current/voltage
     PV = 100/27648 × PV_PER × PV_FAC + PV_OFFS
3. Enter the factor and offset for the scaling of the process value periphery.

Use internal process values

To use the input parameter PV_IN, proceed as follows:

1. Select the entry "Internal" from the "Source" list.

Control deviation

Set a deadband range under the following requirement:

- The process value signal is noisy.
- The controller gain is high.
- The derivative action is activated.

The noise component of the process value causes strong deviations of the manipulated variable in this case. The deadband suppresses the noise component in the steady controller state. The deadband range specifies the size of the deadband. With a deadband range of 0.0, the deadband is turned off.

See also

Mode of operation TCONT_CP (Page 399)

8.3.2.2 Controlling algorithm

General

1. Enter the "Sampling time PID algorithm".
   A controller sampling time should not exceed 10 % of the determined integratl action time of the controller (TI).
2. If the controller structure contains a proportional action, enter the "proportional gain".
   A negative proportional gain inverts the rule meaning.

Proportional action

For changes of the setpoint, it may lead to overshooting of the proportional action. Through the weighting of the proportional action, you can select how strongly the proportional action should react when setpoint changes are made. The weakening of the proportional action is reached through a compensation of the integral action.

1. To weaken the proportional action for setpoint changes, enter a "Proportional action weighting".
   - 1.0: Proportional action for setpoint change is fully effective
   - 0.0: Proportional action for setpoint change is not effective

Integral action

With a limitation of the manipulated value, the integral action is stopped. With a control deviation that moves the integral action in the direction of an internal setting range, the integral action is released again.

1. If the controller structure contains an integral action, enter the "integral action time".
   With an integral action time of 0.0, the integral action is switched off.
2. To give the integral action an initialization value, select the "Initialize integral action" check box and enter the "Initialization value".
   Upon restart or COM_RST = TRUE, the integral action is set to this value.

Derivative action

1. If the controller structure contains a derivative action, enter the derivative action time (TD) and the coefficients DT1 (D_F).
   With switched derivative action, the following equation should be maintained:
   TD = 0.5 × CYCLE× D_F.
   The delay time is calculated from this according to the formula:
   delay time = TD/D_F

Set PD-controller with operating point

1. Enter the integral action time 0.0.
2. Activate the "Initialize integral action" check box.
3. Enter the operating point as the initialization value.

Set P-controller with operating point

1. Set a PD-controller with an operating point.
2. Enter the derivative action time 0.0.
   The derivative action is disabled.

Control zone

The control zone limits the value range of the control deviation. If the control deviation is outside of this value range, the manipulated value limits are used.

With an occurrence in the control zone, the derivative action leads to a very quick reduction of the manipulated variable. Thus, the control zone only makes sense for switched on derivative actions. Without control zone, only the reducing proportional action would reduce the manipulated value. The control zone leads to a quick oscillation without over/under shooting if the emitted minimum or maximum manipulated values are removed from the manipulated value required for the new operating point.

1. Activate the "Activate" check box in the "control zone" group.
2. Enter a setpoint value in the "Width" input field from which the process value may deviate above or below.

See also

Mode of operation TCONT_CP (Page 399)

8.3.2.3 Manipulated value continual controller

Manipulated value limits

The manipulated value is limited at the top and bottom so that it can only accept valid values. You cannot turn off the limitation. Exceeding the limits is displayed through the output parameters QLMN_HLM and QLMN_LLM.

1. Enter a value for the high and low manipulated value limits.

Scaling

The manipulated value can be scaled for output as a floating point and periphery value through a factor and an offset according to the following formula.

Scaled manipulated value = manipulated value x factor + offset

Default is a factor of 1.0 and an offset of 0.0.

1. Enter a value for the factor and offset.

Pulse generator

The pulse generator must be turned on for a continual controller.

1. Disable the "Activate" option check box in the "Pulse generator" group.

See also

Mode of operation TCONT_CP (Page 399)

8.3.2.4 Manipulated value pulse controller

Pulse generator

The analog manipulated value (LmnN) can be emitted through pulse-duration modulation on the output parameter QPULSE as an impulse sequence.

To use the pulse generator, proceed as follows:

1. Activate the "Activate" option check box in the "pulse generator" group.
2. Enter the "sampling time pulse generator", the "minimum impulse/break duration" and the "period duration".

The following graphics clarify the connection between the "sampling pulse generator" (CYCLE_P), the "minimum impulse/break duration" (P_B_TM) and the "period duration" (PER_TM):

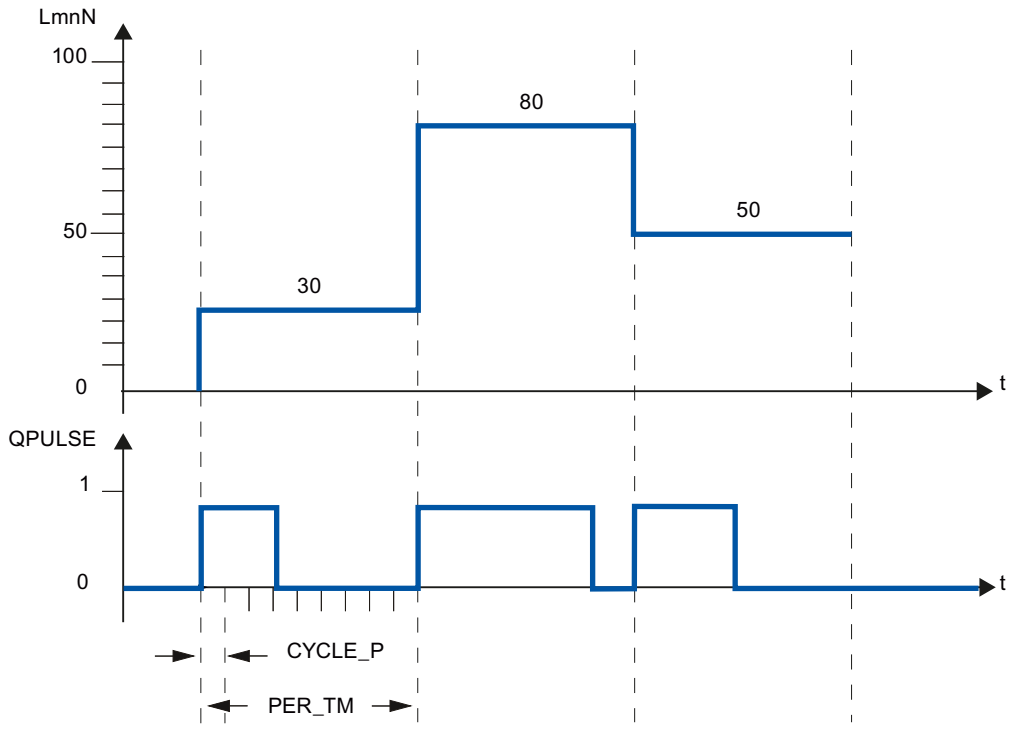

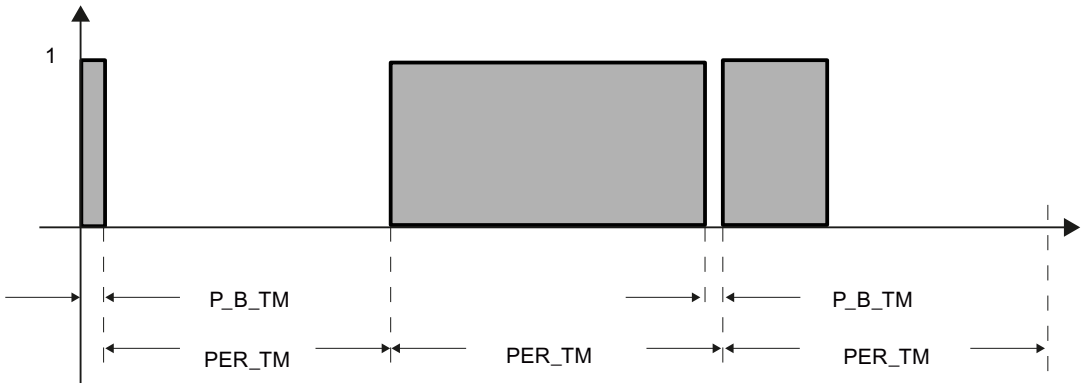

Sampling time pulse generator

The sampling time pulse generator must agree with the time tact of the cyclic interrupt OB being called. The duration of the created impulse is always a whole number factor of this value. For an adequately precise manipulated value resolution, the following relationship should apply:
CYCLE_P ≤ PER_TM/50

Minimum impulse/break duration

Through the minimum impulse/break duration, short on or off times on the actuator are avoided. An impulse smaller than P_B_TM is suppressed.
Recommended are values P_B_TM ≤ 0.1 × PER_TM.

Period duration

The period duration should not exceed 20% of the determined integration time of the controller (TI):
PER_TM ≤ TI/5

Example for the effect of the parameter CYCLE_P, CYCLE and PER_TM:

Period duration PER_TM = 10 s
Sampling time PID-algorithm CYCLE = 1 s
Sampling time pulse generator CYCLE_P = 100 ms.

Every second, a new manipulated value, every 100 ms the comparison of the manipulated value occurs with the previously emitted impulse length and break length.

- If an impulse is emitted, there are 2 possibilities:
  - The calculated manipulated value is larger than the previous impulse length/PER_TM. Then the impulse is extended.
  - The calculated manipulated value is less than or equal to the previous impulse length/PER_TM. Then no impulse signal will be emitted.
- If no impulse is emitted, there are also 2 possibilities:
  - The value (100 % - calculated manipulated value) is greater than the previous break length / PER_TM. Then the break is extended.
  - The value (100 % - calculated manipulated value) is less than or equal to the previous break length / PER_TM. Then an impulse signal will be emitted.

See also

Mode of operation TCONT_CP (Page 399)
Operating principle of the pulse generator (Page 407)

8.3.3 Commissioning TCONT_CP

8.3.3.1 Optimization of TCONT_CP

Application possibilities

The controller optimization for heating or cooling processes from process type I is applicable. But you can use the block for processes with higher levels like process type II or III.

The PI/PID parameters are automatically determined and set. The controller draft is designed for an optimal disruption behavior The "precise" parameters resulting from this lead to overshooting of 10% to 40% of the jump height for setpoint jump heights.

Phases of controller optimization

For the controller optimization, individual phases are run through, which you can read on the parameter PHASE .

PHASE = 0

No tuning is running. TCONT_CP works in automatic or manual mode.

During PHASE = 0, you can make sure that the controlled system fulfills the requirements for an optimization.

At the end of the optimization, TCONT_CP changes back into PHASE = 0.

PHASE = 1

TCONT_CP is prepared for optimization. PHASE = 1 may only be started if the requirements for an optimization are fulfilled.

During PHASE = 1, the following values are determined:

- Process value noise NOISE_PV
- Initial slope PVDT0
- Average of the manipulated variable
- Sampling time PID algorithm CYCLE
- Sampling time pulse generator CYCLE_P

PHASE = 2

In phase 2, the process value attempts to detect the point of inflection with a constant manipulated variable. This method prevents the point of inflection from being found too early as a result of process variable noise.

With the pulse controller, the process variable is averaged over N pulse cycles and then made available to the controller stage. There is a further averaging of the process variable in the controller stage: Initially, this averaging is inactive; in other words, averaging always takes place over 1 cycle. As long as the noise exceeds a certain level, the number of cycles is doubled.

The period and amplitude of the noise are calculated. The search for the point of inflection is canceled and phase 2 is exited only when the gradient is always smaller than the maximum rise during the estimated period. TU and T_P_INF are, however, calculated at the actual point of inflection.

Tuning, however, is only ended when the following two conditions are met:

1. The process value is more than 2*NOISE_PV away from the point of inflection.
2. The process value has exceeded the point of inflection by 20%.

NOTE

When exciting the process using a setpoint step change, tuning is ended at the latest when the process value exceeds 75% of the setpoint step change (SP_INT-PV0) (see below).

PHASE = 3, 4, 5

The phases 3, 4 and 5 last 1 cycle each.

In Phase 3, the valid PI/PID parameters are saved before the optimization and the process parameter is calculated.

In Phase 4, the new PI/PID parameters are calculated.

In Phase 5, the new manipulated variable is calculated and the controlled system is given.

PHASE = 7

The process type is inspected in Phase 7, because TCONT_CP always changes to automatic mode after optimization. The automatic mode starts with LMN = LMN0 + 0.75*TUN_DLMN as

a manipulated variable. The testing of the process type occurs **in the automatic mode** with the recently recalculated controller parameters and ends at the latest 0.35*TA (equilibrium time) after the point of inflection. If the process order deviates strongly from the estimated value, the controller parameters are newly calculated and STATUS_D is counted up by 1, otherwise, the controller parameters remain unchanged.

Then the optimization mode is complete and TCONT_CP is back in PHASE = 0. At the STATUS_H parameter, you can identify whether the tuning was successfully completed.

Premature cancellation of the optimization

In Phase 1, 2 or 3, you can cancel the optimization by resetting TUN_ON = FALSE without calculating new parameters. The controller starts in the automatic mode with LMN = LMN0 + TUN_DLMN. If the controller was in manual mode before the tuning, the old manual manipulated variable is output.

If the tuning is canceled in Phase 4, 5 or 7 with TUN_ON = FALSE, the determined controlled parameters are contained until then.

8.3.3.2 Requirements for an optimization

Transient response

The process must have a stable, asymptotic transient response with time lag.

The process value must settle to steady state after a step change of the manipulated variable. This therefore excludes processes that already show an oscillating response without control, as well as processes with no recovery (integrator in the control system).

⚠ WARNING

This may result in death, severe injury or considerable property damage.

During an tuning, the parameter MAN_ON is ineffective. Through this, the output value or process value may take on undesired - even extreme - values.

The output value is defined through the tuning. To cancel the tuning, you first have to set TUN_ON = FALSE. This makes MAN_ON effective again.

Guaranteeing a stationary initial state (phase 0)

With lower-frequency oscillations of the process value, for example, due to incorrect controller parameters, the controller must be put in manual mode before the tuning is started and wait for the oscillation to stop. Alternatively, you could switch to a "soft" set PI controller (small loop gain large integration time).

Now you have to wait until the stationary state is reached, this means, until the process value and output value have a steady state. It is also permissible to have an asymptotic transient oscillation or slow drifting of the process value (stationary state, see the following image). The output value must be constant or fluctuate by a constant average.

NOTE

Avoid changing the manipulated variable shortly before starting the tuning. A change of the manipulated variable can occur in an unintended manner through the establishment of the test conditions (for example, closing an oven door)! If this does happen, you have to at least wait until the process value has an asymptotic transient oscillation in a stationary state again. Better controller parameters can be reached if you wait until the transient effect has completely subsided.

In the following image, the transient oscillation is illustrated in the stationary state:

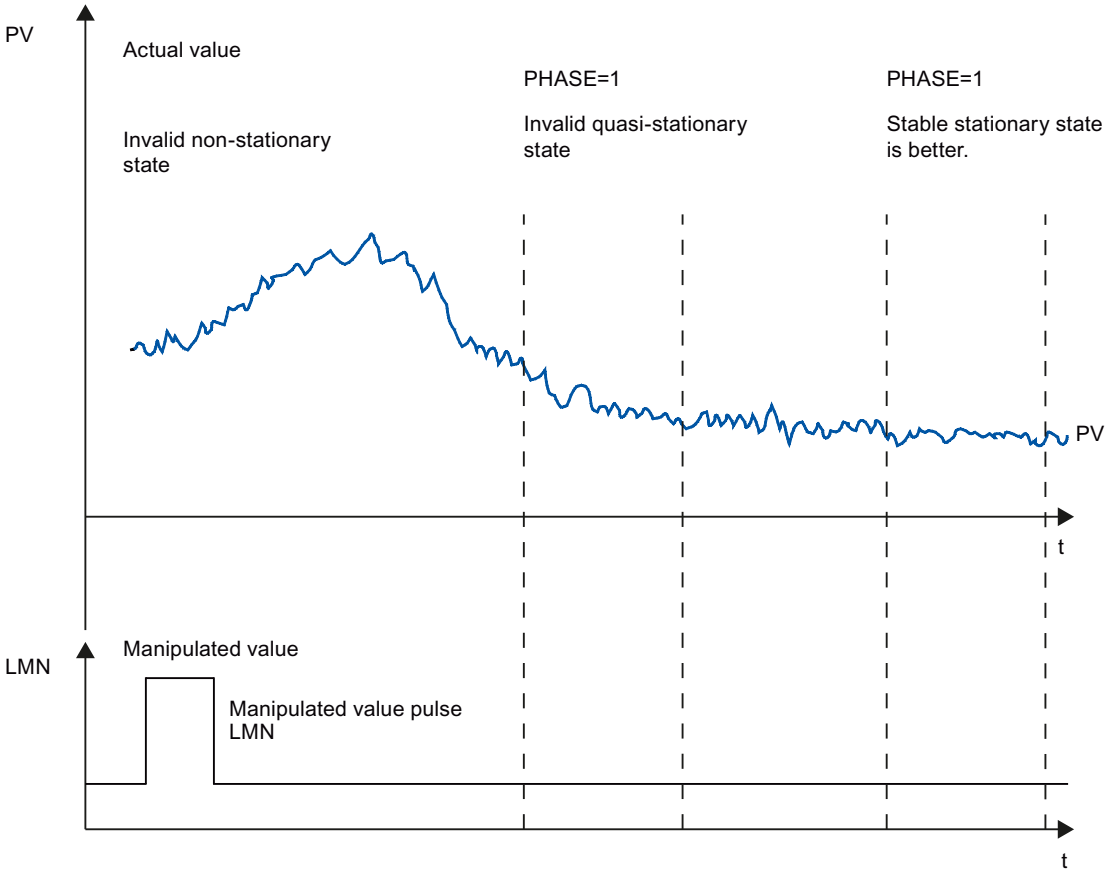

Linearity and operating range

The process response must be linear across the operating range. Non-linear response occurs, for example, when an aggregation state changes. Tuning must take place in a linear part of the operating range.

This means, during tuning and normal control operation non-linear effects within the operating range must be insignificant. It is, however possible to retune the process when the operating point changes, providing tuning is repeated in the close vicinity of the new operating point and non-linearity does not occur during tuning.
If a specific static non-linearity (e.g., valve characteristics) is known, it is always advisable to compensate this with a polyline to linearize the process response.

Disturbance in temperature processes

Disturbances such as the transfer of heat to neighboring zones must not affect the overall temperature process too much. For example, when optimizing the zones of an extruder, all zones must be heated simultaneously.

8.3.3.3 Possibilities for optimization

The following possibilities for tuning exist:

- Pretuning
- Fine tuning
- Manual fine-tuning in control mode

Pretuning

During this tuning, the working point is approached from the cold state through a setpoint jump.
With TUN_ON = TRUE, you can establish the tuning readiness. The controller switches from PHASE = 0 to PHASE = 1.

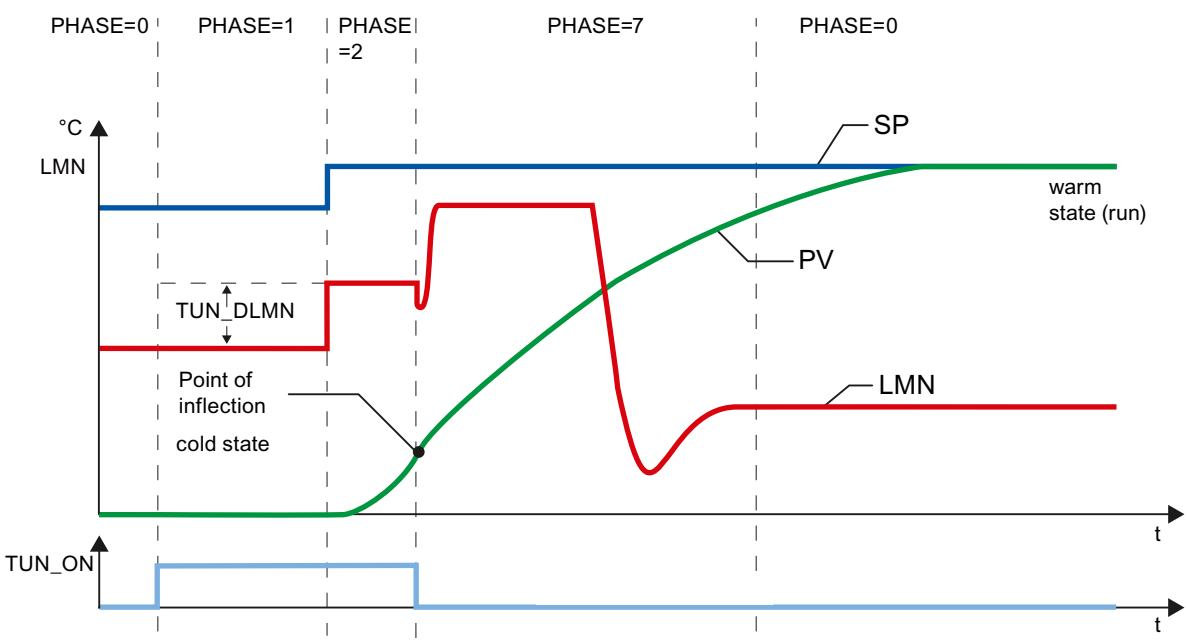

The tuning manipulated variable (LMN0 + TUN_DLMN) is activated by a setpoint change (transition phase 1 -> 2). The setpoint is not effective until the inflection point has been reached (automatic mode is not enabled until this point is reached).

The user is responsible for defining the output excitation delta (TUN_DLMN) according to the permitted process value change. The sign of TUN_DLMN must be set depending on the intended process value change (take into account the direction in which the control is operating).

The setpoint step change and TUN_DLMN must be suitably matched. If the value of TUN_DLMN is too high, there is a risk that the point of inflection will not be found before 75% of the setpoint step change is reached.

TUN_DLMN must nonetheless be high enough to ensure that the process value reaches at least 22 % of the setpoint step change. Otherwise, the process will remain in tuning mode (phase 2).

Remedy: Reduce the setpoint value during the inflection point search.

NOTE

If processes are extremely sluggish, it is advisable during tuning to specify a target setpoint that is somewhat lower than the desired operating point and to monitor the status bits and PV closely (risk of overshooting).

Tuning only in the linear range:

The signals of certain processes (e.g., zinc or magnesium smelters) will pass a non-linear area at the approach of the operating range (change in the state of aggregation).

By selecting a suitable setpoint step change, tuning can be limited to the linear range. When the process value has passed 75% of the setpoint step change (SP_INT-PV0), tuning is ended.

At the same time, TUN_DLMN should be reduced to the extent that the point of inflection is guaranteed to be found before 75% of the setpoint step change is reached.

Fine tuning

During this tuning, the process with a constant setpoint is activated through a output value jump.

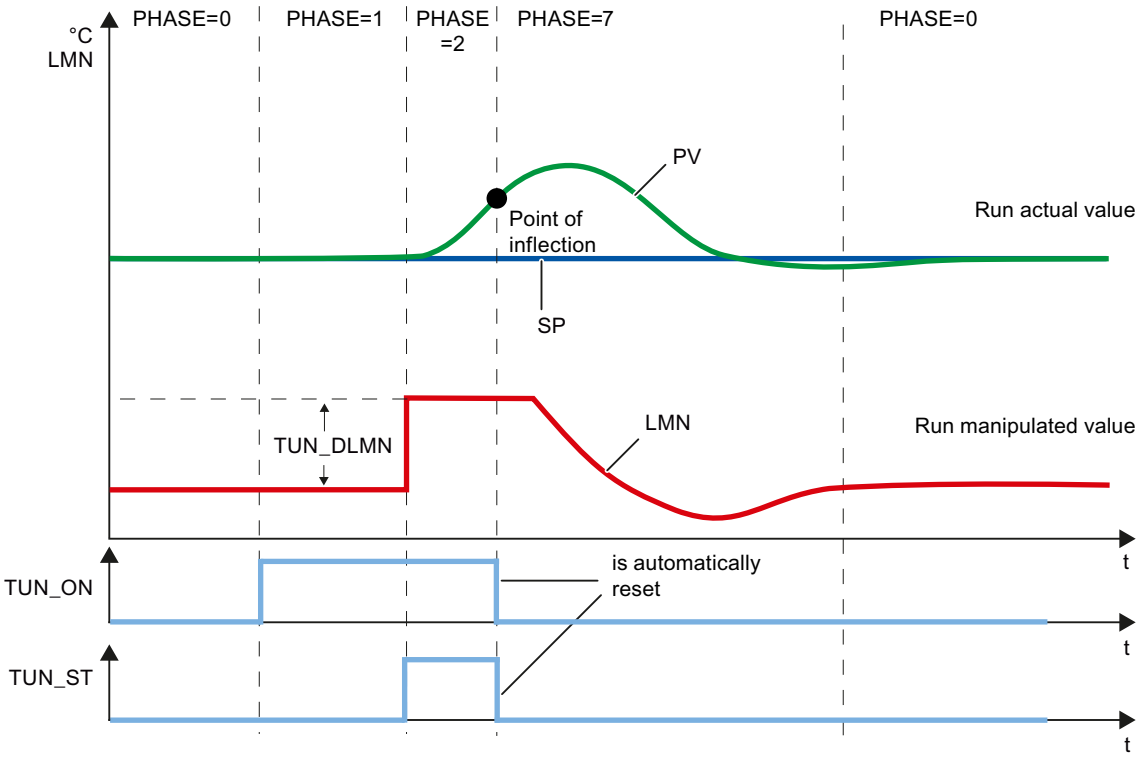

The tuning manipulated variable (LMN0 + TUN_DLMN) is activated by setting the start bit TUN_ST (transition from phase 1 -> 2). When you modify the setpoint value, the new value will not take effect until the point of inflection has been reached (automatic mode will not be enabled until this point has been reached).

The user is responsible for defining the output excitation delta (TUN_DLMN) according to the permitted process value change. The sign of TUN_DLMN must be set depending on the intended process value change (take into account the direction in which the control is operating).

NOTICE
Safety off at 75% is not available when you excite the process via TUN_ST. Tuning is ended when the point of inflection is reached. However, in noisy processes the point of inflection may be significantly exceeded.

Manual fine-tuning in control mode

The following measures can be employed to achieve an overshoot-free setpoint response:

- Adapting the control zone
- Optimize command action
- Attenuation of control parameters
- Modifying control parameters

8.3.3.4 Tuning result

The left cipher of STATUS_H displays the tuning status

STATUS_H	Result
0	Default, i.e., new controller parameters have not (yet) been found.
10000	Suitable control parameters found.
2xxxx	Control parameters have been found via estimated values; check the control response or check the STATUS_H diagnostic message and repeat controller tuning.
3xxxx	An operator error has occurred; check the STATUS_H diagnostic message and repeat controller tuning.

The CYCLE and CYCLE_P sampling times were already checked in phase 1.

The following controller parameters are updated on TCONT_CP:

- P (proportional GAIN)
- I (integration time TI)
- D (derivative time TD)
- Weighting of the proportional action PFAC_SP
- Coefficient DT1 (D_F)
- Control zone on/off CONZ_ON
- Control zone width CON_ZONE

The control zone is only activated if the process type is suitable (process type I and II) and a PID controller is used (CONZ_ON = TRUE).

Depending on PID_ON, control is implemented either with a PI or a PID controller. The old controller parameters are saved and can be retrieved with UNDO_PAR. A PI parameter record and a PID parameter record are saved additionally in the PI_CON and PID_CON structures. Using LOAD_PID and making a suitable setting for PID_ON, it is also possible to switch later between the tuned PI or PID parameters.

8.3.3.5 Parallel tuning of controller channels

Adjacent zones (strong heat coupling)

If two or more controllers are controlling the temperature, on a plate, for example (in other words, there are two heaters and two measured process values with strong heat coupling), proceed as follows:

1. OR the two outputs QTUN_RUN.
2. Interconnect each TUN_KEEP input with the output of the OR element.
3. Start both controllers by specifying a setpoint step change at the same time or by setting TUN_ST at the same time.

The following schematic illustrates the parallel tuning of controller channels.

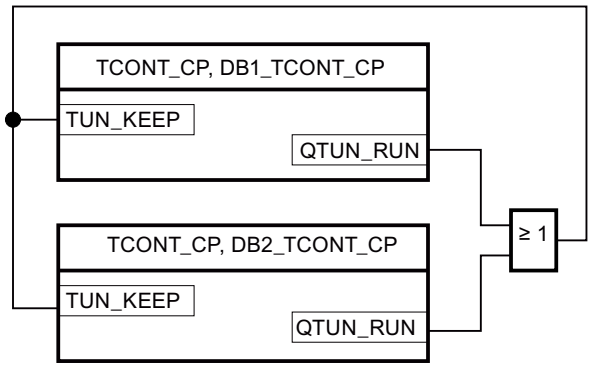

Advantage:

Both controllers output LMN0 + TUN_DLMN until both controllers have left phase 2. This prevents the controller that completes tuning first from falsifying the tuning result of the other controller due to the change in its manipulated variable.

NOTICE
Reaching 75% of the setpoint step change causes an exiting of phase 2 and resetting of output QTUN_RUN. However, automatic mode does not start until TUN_KEEP is also 0.

Adjacent zones (weak heat coupling)

In general terms, tuning should be carried out to reflect the way in which the controller will operate subsequently. If zones are operated together during production such that the temperature differences between the zones remain the same, the temperature of the adjacent zones ought to be increased accordingly during tuning.

Differences in temperature at the beginning of the tuning are irrelevant since they will be compensated by the initial heating (-> initial rise = 0).

8.3.3.6 Fault descriptions and corrective measures

Compensating operator errors

Operator error	STATUS and action	Comment
TUN_ON and setpoint step change or TUN_ST are set simultaneously	Transition to phase 1; however, tuning is not started. • SP_INT = SP_{old} or • TUN_ST = FALSE	The setpoint change is canceled. This prevents the controller from settling to the new setpoint value and from leaving the stationary operating point unnecessarily.
Effective TUN_DLMN < 5% (end of phase 1)	STATUS_H = 30002 • Transition to phase 0 • TUN_ON = FALSE • SP = SP_{old}	Tuning is canceled. The setpoint change is canceled. This prevents the controller from settling to the new setpoint value and from leaving the stationary operating point unnecessarily.

Point of inflection not reached (only if excited by setpoint step change)

At the latest, tuning is ended when the process value has passed 75% of the setpoint step change (SP_INT-PV0). This is signaled by "inflection point not reached" in STATUS_H (2xx2x).

The currently valid setpoint always applies. By reducing the setpoint, it is possible to achieve an earlier end of the tuning function.

In typical temperature processes, cancelation of tuning at 75% of the setpoint step change is normally adequate to prevent overshoot. However, **caution** is advised, particularly in processes with a greater delay (TU/TA > 0.1, process type III). If manipulated variable excitation is too strong compared to the setpoint step change, the process value can overshoot heavily (up to a factor of 3).

In higher-order processes, if the point of inflection is still a long way off after reaching 75% of the setpoint step change, there will be significant overshoot. In addition, the controller parameters are too stringent. In this case, you should reduce the controller parameters or repeat the attempt.

The following schematic illustrates the overshoot of the process variable when the excitation is too strong (process type III):

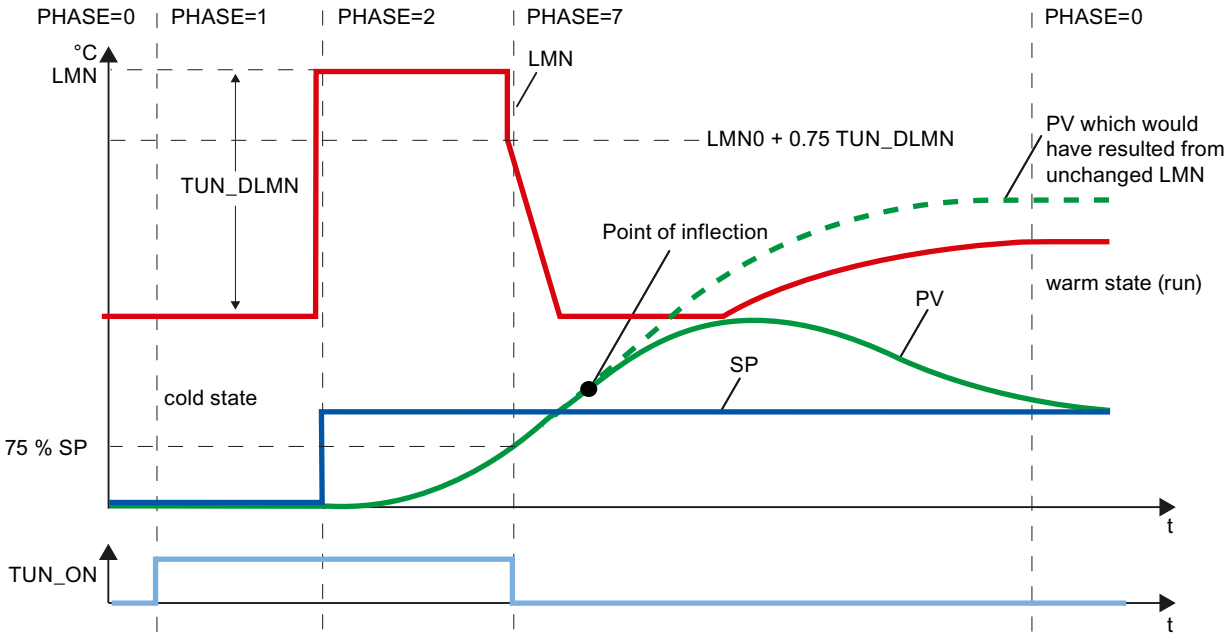

In typical temperature processes, cancelation shortly before reaching the point of inflection is not critical in terms of the controller parameters.

If you repeat the attempt, reduce TUN_DLMN or increase the setpoint step change.

Principle: The value of the manipulated variable used for tuning must be suitable for the setpoint step change.

Error estimating the delay time or order

The delay time (STATUS_H = 2x1xx or 2x3xx) or order (STATUS_H = 21xxx or 22xxx) were not acquired correctly. Operation continues with an estimate that can lead to non-optimum controller parameters.

Repeat the tuning procedure and ensure that disturbances do not occur at the process value.

NOTE

The special case of a PT1-only process is also indicated by STATUS_H = 2x1xx (TU <= 3*CYCLE). In this case, it is not necessary to repeat the attempt. Reduce the controller parameters if the control oscillates.

Quality of measuring signals (measurement noise, low-frequency interference)

The results of tuning can be distorted by measurement noise or by low-frequency interference. Note the following:

- If you encounter measurement noise, set the sampling frequency higher rather than lower. During one noise period, the process value should be sampled at least twice. In pulse mode, integrated mean value filtering can be helpful. This assumes, however, that the process variable PV is transferred to the instruction in the fast pulse cycle. The degree of noise should not exceed 5% of the useful signal change.
- High-frequency interference cannot be filtered out by TCONT_CP. This should be filtered earlier in the measuring sensor to prevent the aliasing effect.
  The following schematic illustrates the aliasing effect when the sampling time is too long:

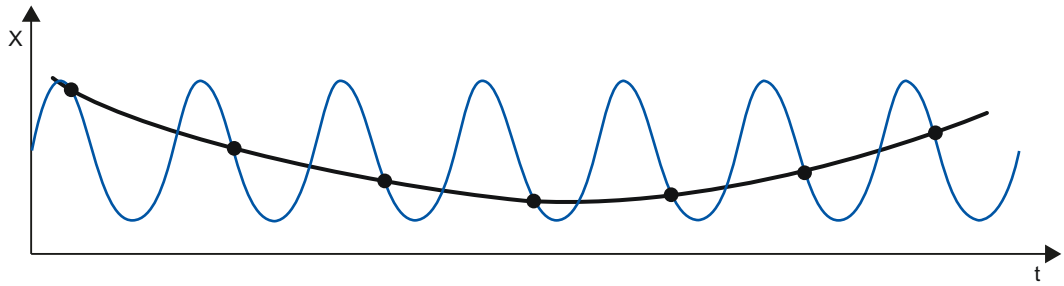

- With low-frequency interference, it is relatively easy to ensure an adequately high sampling rate. However, the TCONT_CP must then generate a uniform measuring signal by having a large interval in the mean value filtering. Mean value filtering must extend over at least two noise periods. Internally in the block, this soon results in higher sampling times such that the accuracy of the tuning is adversely affected. Adequate accuracy is guaranteed with at least 40 noise periods up to the point of inflection.
  Possible remedy when repeating the attempt:
  Increase TUN_DLMN.

Overshoot

Overshoot can occur in the following situations:

Situation	Cause	Remedy
End of tuning	• Excitation by a too high manipulated value change compared with the set-point step change (see above). • PI controller activated by PID_ON = FALSE.	• Increase the setpoint step change or reduce the manipulated value step change. • If the process permits a PID controller, start tuning with PID_ON = TRUE.
Tuning in phase 7	Initially, less aggressive controller parameters were determined (process type III); these can lead to an overshoot in phase 7.	-
Control mode	PI controller with PFAC_SP = 1.0 for process type I.	If the process permits a PID controller, start tuning with PID_ON = TRUE.

8.3.3.7 Performing pretuning

Requirements

- The instruction and the technology object are loaded on the CPU.

Procedure

To manually determine the optimum PID parameters for initial commissioning, follow these steps:

1. Click the "Start" icon.
   If there is no online connection, this will be established. The current values for the setpoint, process value and output value are recorded.
2. Select "Pretuning" from the "Mode" drop-down list.
   TCONT_CP is ready for tuning.
3. In the "Output value jump" field, specify how much the output value should be increased.
4. Enter a setpoint in the "Setpoint" field. The output value jump only takes effect when another setpoint is entered.
5. Click the ▶ "Start tuning" icon.
   The pretuning starts. The status of the tuning is displayed.

8.3.3.8 Performing fine tuning

Requirements

- The instruction and the technology object are loaded on the CPU.

Procedure

To determine the optimal PID parameters at the operating point, follow these steps:

1. Click the "Start" icon.
   If there is no online connection, this will be established. The current values for the setpoint, process value and output value are recorded.
2. Select "Fine tuning" from the "Mode" drop-down list.
   TCONT_CP is ready for tuning.
3. In the "Output value jump" field, specify how much the output value should be increased.
4. Click the ▶ "Start tuning" icon.
   Fine tuning starts. The status of the tuning is displayed.

8.3.3.9 Cancelling pretuning or fine tuning

To cancel pretuning or fine tuning, click on the ■ icon, "Stop tuning".

If the PID parameters have not yet been calculated and stored, TCONT_CP starts in automatic mode LMN = LMN0 + TUN_DLMN. If the controller was in manual mode before the tuning, the old manual manipulated variable is output.

If the calculated PID parameters have already been saved, TCONT_CP starts in automatic mode and works with the previously determined PID parameters.

8.3.3.10 Manual fine-tuning in control mode

The following measures can be employed to achieve an overshoot-free setpoint response:

Adapting the control zone

During tuning, "TCONT_CP" determines a control zone CON_ZONE and activated if the process type is suitable (process type I and II) and a PID controller is used (CONZ_ON = TRUE). In control mode, you can modify the control zone or switch it off completely (with CONZ_ON = FALSE).

NOTE

Activating the control zone with higher-order processes (process type III) does not normally provide any benefit since the control zone is then larger than the control range that can be achieved with a 100% manipulated variable. There is also no advantage in activating the control zone for PI controllers.

Before you switch on the control zone manually, make sure that the control zone is not too narrow. If the control zone is set too narrow, oscillations occur in the manipulated variable and the process value.

Continuous attenuation of the control response with PFAC_SP

The control response can be attenuated with the PFAC_SP parameter. This parameter specifies the percentage of proportional component that is effective for setpoint step changes.

Regardless of the process type, PFAC_SP is set to a default value of 0.8 by the tuning function; you can later modify this value if required. To limit overshoot during setpoint step changes (with otherwise correct controller parameters) to approximately 2%, the following values are adequate for PFAC_SP:

	Process type I	**Process type II**	**Process type III**
	Typical temperature process	Intermediate range	Higher-order temperature process
PI	0.8	0.82	0.8
PID	0.6	0.75	0.96

Adjust the default factor (0.8) in the following situations, in particular:

- Process type I with PID (0.8 →0.6): Setpoint step changes within the control zone still lead to approximately 18% overshoot with PFAC_SP = 0.8.
- Process type III with PID (0.8 →0.96): Setpoint step changes with PFAC_SP = 0.8 are attenuated too strongly. This leads to a significantly slower response time.

Attenuation of control parameters

When a closed-loop control circuit oscillates or if overshoot occurs after setpoint step changes, you can reduce the controller GAIN (e.g., to 80% of the original value) and increase integral time TI (e.g., to 150% of the original value). If the analog output value of the continuous controller is converted to binary actuating signals by a pulse shaper, quantization noise may cause minor permanent oscillation. You can eliminate this by increasing the controller deadband DEADB_W.

Modifying control parameters

Proceed as follows to modify control parameters:

1. Save the current parameters with SAVE_PAR.
2. Modify the parameters.
3. Test the control response.

If the new parameter settings are worse than the old ones, retrieve the old parameters with UNDO_PAR.

8.3.3.11 Performing fine tuning manually

Requirements

- The instruction and the technology object have been loaded to the CPU.

Procedure

To manually determine the optimal PID parameters, proceed as follows:

1. Click the "Start" icon.
   If there is no online connection, this will be established. The current values for the setpoint, process value and output value are recorded.
2. Select "Manual" from the "Mode" drop-down list.
3. Enter the new PID parameters.
4. Click on the icon "Send parameter to CPU" in the "Tuning" group.
5. Select the "Change setpoint" check box in the "Current values" group.
6. Enter a new setpoint and click in the "Current Values" group on the icon .
7. Clear the "Manual mode" check box.
   The controller works with the new PID parameters and controls the new setpoint.
8. Check the quality of the PID parameter to check the curve points.
9. Repeat steps 3 to 8 until you are satisfied with the controller results.

8.4 TCONT_S

8.4.1 Technology object TCONT_S

The technology object TCONT_S provides a step controller for actuators with integrating behavior and is used to control technical temperature processes with binary output value output signals. The technology object corresponds to the instance data block of the TCONT_S instruction. The operating principle is based on the PI control algorithm of the sampling controller. The step controller operates without a position feedback signal. Both manual and automatic mode are possible.

S7-1500

All parameters and tags of the technology object are retentive and can only be changed during download to the device if you completely download TCONT_S.

See also

Overview of software controller (Page 39)

Add technology objects (Page 41)

Configure technology objects (Page 42)

Downloading technology objects to device (Page 44)

TCONT_S (Page 419)

8.4.2 Configure controller difference TCONT_S

Use process value periphery

To use the input parameter PV_PER, proceed as follows:

1. Select the entry "Periphery" from the "Source" list.
2. Select the "sensor type".
   Depending on the sensor type, the process value is scaled according to different formulas.
   - Standard
     Thermoelements; PT100/NI100
     PV = 0.1 × PV_PER × PV_FAC + PV_OFFS
   - Cooling;
     PT100/NI100
     PV = 0.01 × PV_PER × PV_FAC + PV_OFFS
   - Current/voltage
     PV = 100/27648 × PV_PER × PV_FAC + PV_OFFS
3. Enter the factor and offset for the scaling of the process value periphery.

Use internal process values

To use the input parameter PV_IN, proceed as follows:

1. Select the entry "Internal" from the "Source" list.

Control deviation

Set a dead zone range under the following requirement:

- The process value signal is noisy.
- The controller gain is high.
- The derivative action is activated.

The noise component of the process value causes strong deviations of the output value in this case. The dead zone suppresses the noise component in the steady controller state. The dead zone range specifies the size of the dead zone. With a dead zone range of 0.0, the dead zone is turned off.

See also

Mode of operation TCONT_S (Page 420)

8.4.3 Configure controller algorithm TCONT_S

General

1. Enter the "Sampling time PID algorithm".
   A controller sampling time should not exceed 10 % of the determined integral action time of the controller (TI).
2. If the controller structure contains a proportional action, enter the "proportional gain".
   A negative proportional gain inverts the rule meaning.

Proportional action

For changes of the setpoint, it may lead to overshooting of the proportional action. Through the weighting of the proportional action, you can select how strongly the proportional action should react when setpoint changes are made. The weakening of the proportional action is reached through a compensation of the integral action.

1. To weaken the proportional action for setpoint changes, enter a "Proportional action weighting".
   - 1.0: Proportional action for setpoint change is fully effective
   - 0.0: Proportional action for setpoint change is not effective

Integral action

1. If the controller structure contains an integral action, enter the "integral action time".
   With an integral action time of 0.0, the integral action is switched off.

See also

Mode of operation TCONT_S (Page 420)

8.4.4 Configure manipulated value TCONT_S

Pulse generator

1. Enter the minimum impulse duration and minimum pause duration.
   The values must be greater than or equal to the cycle time for the input parameter CYCLE.
   The frequency of operation is reduced through this.
2. Enter the motor setting time.
   The value must be greater than or equal to the cycle time of the input parameter CYCLE.

See also

Mode of operation TCONT_S (Page 420)

8.4.5 Commissioning TCONT_S

Requirements

- The instruction and the technology object have been loaded to the CPU.

Procedure

To manually determine the optimal PID parameters, proceed as follows:

1. Click the "Start" icon.
   If there is no online connection, this will be established. The current values for the setpoint, process value and output value are recorded.
2. Enter new PID parameters in the "P", "I" and weighting proportional action fields.
3. Click on the icon "Send parameter to CPU" in the "Tuning" group.
4. Select the "Change setpoint" check box in the "Current values" group.
5. Enter a new setpoint and click in the "Current Values" group on the icon .
6. Clear the "Manual mode" check box.
   The controller works with the new parameters and controls the new setpoint.
7. Check the quality of the PID parameter to check the curve points.
8. Repeat steps 2 to 6 until you are satisfied with the controller results.

Auxiliary functions

9

9.1 Polyline

Polyline

The Polyline instruction provides a function with the characteristic curve of the polyline whose points can be used, for example, to linearize the behavior of non-linear sensors.

The Polyline instruction can be used with an S7-1500 CPU Firmware 2.0 and higher and an S7-1200 CPU Firmware 4.2 and higher.

Additional information

Description Polyline (Page 429)
Operating principle Polyline (Page 431)
Input parameters of Polyline (Page 434)
Output parameters of Polyline (Page 434)
Static tags of Polyline (Page 435)
ErrorBits parameter (Page 436)

9.2 SplitRange

SplitRange

The SplitRange instruction splits the output value range of the PID controller into multiple subranges. These subranges enable control of a process that is influenced by multiple actuators.

The SplitRange instruction can be used with an S7-1500 CPU Firmware 2.0 and higher and an S7-1200 CPU Firmware 4.2 and higher.

Additional information

SplitRange description (Page 439)
SplitRange input parameters (Page 441)
SplitRange static tags (Page 442)
SplitRange output parameters (Page 442)
ErrorBits parameter (Page 442)

9.3 RampFunction

RampFunction

The RampFunction instruction limits the slew rate of a signal. A signal jump at the input is output as ramp function of the output value, to achieve a smoother response, for example, without influencing the disturbance reaction.
The RampFunction instruction can be used with an S7-1500 CPU Firmware 2.0 and higher and an S7-1200 CPU Firmware 4.2 and higher.

Additional information

RampFunction description (Page 444)
RampFunction mode of operation (Page 449)
RampFunction input parameters (Page 452)
RampFunction output parameters (Page 452)
RampFunction static tags (Page 453)
ErrorBits parameter (Page 454)

9.4 RampSoak

RampSoak

You can use this instruction to generate an output value that follows a configurable profile on a time-dependent basis. Every point of this profile has a target value and a time value. When the profile is executed, the target value of the current point is reached within the time value. The instruction can be used, for example, to provide a setpoint value profile for regulating a temperature process.
The RampSoak instruction can be used with S7-1500 CPU firmware 2.0 and higher and S7-1200 CPU firmware 4.2 and higher.

More information

Description of RampSoak (Page 457)
Operating principle RampSoak (Page 459)
Input parameter RampSoak (Page 472)
Output parameter RampSoak (Page 473)
In-out parameter RampSoak (Page 473)
Static tags RampSoak (Page 473)
ErrorBits parameter (Page 475)

9.5 Filter_PT1

Filter_PT1

The instruction Filter_PT1 is a proportional transfer element with a first-order lag. You can use Filter_PT1 as a low-pass filter, delay element or process simulation block.
The Filter_PT1 instruction can be used with an S7-1500 CPU firmware 2.0 and higher and an S7-1200 CPU firmware 4.2 and higher.

Additional information

Description of Filter_PT1 (Page 479)
Mode of operation of Filter_PT1 (Page 485)
Input parameter Filter_PT1 (Page 487)
Output parameter Filter_PT1 (Page 487)
Static tags Filter_PT1 (Page 488)
Parameter ErrorBits (Page 488)

9.6 Filter_PT2

Filter_PT2

The instruction Filter_PT2 is a proportional transfer element with a second-order lag. You can use Filter_PT2 as a low-pass filter, delay element or process simulation block.
The Filter_PT2 instruction can be used with S7-1500 CPU firmware 2.0 and higher and S7-1200 CPU firmware 4.2 and higher.

More information

Description of Filter_PT2 (Page 491)
Mode of operation of Filter_PT2 (Page 497)
Input parameter Filter_PT2 (Page 499)
Output parameter Filter_PT2 (Page 499)
Static tags Filter_PT2 (Page 500)
Parameter ErrorBits (Page 500)

9.7 Filter_DT1

Filter_DT1

The instruction Filter_DT1 is a differentiator with a first-order lag. You can use Filter_DT1 as a high-pass filter, differentiator, or feed-forward control.
The Filter_DT1 instruction can be used with S7-1500 CPU firmware 2.0 and higher and S7-1200 CPU firmware 4.2 and higher.

More information

Description of Filter_DT1 (Page 504)
Mode of operation of Filter_DT1 (Page 510)
Input parameter Filter_DT1 (Page 511)
Output parameter Filter_DT1 (Page 512)
Static tags Filter_DT2 (Page 512)
Parameter ErrorBits (Page 513)

Instructions 10

10.1 PID_Compact

10.1.1 New features of PID_Compact

PID_Compact V2.4

- **Initialization of the integral action**
  PID_Compact now initializes the integral action if you use OverwriteInitialOutputValue together with inverted control logic.
  If you have been using OverwriteInitialOutputValue together with inverted control logic up to now, please note that the sign of the output value changes with PID_Compact V2.4.

PID_Compact V2.3

- **Response of the output value when switching from "Inactive" operating mode to "Automatic mode"**
  The new option IntegralResetMode = 4 was added and defined as default. With IntegralResetMode = 4, the integral action is automatically preassigned when switching from "Inactive" operating mode to "Automatic mode" so that a control deviation results in a jump of the output value with identical sign.
- **Initialization of the integral action in automatic mode**
  The integral action can be initialized in automatic mode with the tags OverwriteInitialOutputValue and PIDCtrl.PIDInit. This simplifies the use of PID_Compact for override controls.

PID_Compact V2.2

- **Use with S7-1200**
  As of PID_Compact V2.2, the instruction with V2 functionality can also be used on S7-1200 with firmware version 4.0 or higher.

PID_Compact V2.0

- **Reaction to error**
  The reaction to error has been completely overhauled. PID_Compact now reacts in a more fault-tolerant manner in the default setting. This reaction is set when copying PID_Compact V1.X from an S7-1200 CPU to an S7-1500 CPU.

NOTICE
Your system may be damaged. If you use the default setting, PID_Compact remains in automatic mode when the process value limits are exceeded. This may damage your system. It is essential to configure how your controlled system reacts in the event of an error to protect your system from damage.

  The Error parameter indicates if an error is pending. When the error is no longer pending, Error = FALSE. The ErrorBits parameter shows which errors have occurred. Use ErrorAck to acknowledge the errors and warnings without restarting the controller or clearing the integral action. Switching operating modes no longer clears errors that are no longer pending.
  You can configure the reaction to error with SetSubstituteOutput and ActivateRecoverMode.
- **Substitute output value**
  You can configure a substitute output value that is to be output if an error occurs.
- **Switching the operating mode**
  You specify the operating mode at the Mode in/out parameter and use a positive edge at ModeActivate to start the operating mode. The sRet.i_Mode tag has been omitted.
- **Multi-instance capability**
  You can call up PID_Compact as multi-instance DB.
- **Startup characteristics**
  The operating mode specified at the Mode parameter is also started on a falling edge at Reset and during a CPU cold restart, if RunModeByStartup = TRUE.
- **ENO characteristics**
  ENO is set depending on the operating mode.
  If State = 0, then ENO = FALSE.
  If State ≠ 0, then ENO = TRUE.
- **Setpoint value specification during tuning**
  You configure the permitted fluctuation of the setpoint during tuning at the CancelTuningLevel tag.
- **Value range for output value limits**
  The value 0.0 no longer has to fall within the output value limits.
- **Preassigning the integral action**
  Using the tags IntegralResetMode and OverwriteInitialOutputValue, you can determine the preassignment of the integral action when switching from "Inactive" operating mode to "Automatic mode".
- **Switching a disturbance variable on**
  You can switch a disturbance variable on at the Disturbance parameter.

- **Default value of PID parameters**
  The following default settings have been changed:
  - Proportional action weighting (PWeighting) from 0.0 to 1.0
  - Derivative action weighting (DWeighting) from 0.0 to 1.0
  - Coefficient for derivative delay (TdFiltRatio) from 0.0 to 0.2
- **Renaming tags**
  The static tags have been given new names that are compatible with PID_3Step.

PID_Compact V1.2

- **Manual mode on CPU startup**
  If ManualEnable = TRUE when the CPU starts, PID_Compact starts in manual mode. A rising edge at ManualEnable is not necessary.
- **Pretuning**
  If the CPU is switched off during pretuning, pretuning starts again when the CPU is switched back on.

PID_Compact V1.1

- **Manual mode on CPU startup**
  When the CPU starts up, PID_Compact only switches to manual mode with a rising edge at ManualEnable. Without rising edge, PID_Compact starts in the last operating mode in which ManualEnable was FALSE.
- **Reaction to reset**
  A rising edge at Reset resets the errors and warnings and clears the integral action. A falling edge at Reset triggers a switchover to the most recently active operating mode.
- **Default of process value high limit**
  The default value of r_Pv_Hlm has been changed to 120.0.
- **Monitoring the sampling time**
  - An error is no longer output when the current sampling time is ≥ 1.5 x current mean value or when the current sampling time is ≤ 0.5 x current mean value. The sampling time may deviate much more in automatic mode.
  - PID_Compact is compatible with FW, V2.0 or higher.
- **Access to tags**
  The following tags can now be used in the user program.
  - i_Event_SUT
  - i_Event_TIR
  - r_Ctrl_Ioutv
- **Troubleshooting**
  PID_Compact now outputs the correct pulses when the shortest ON time is not equal to the shortest OFF time.

10.1.2 Compatibility with CPU and FW

The following table shows which version of PID_Compact can be used on which CPU.

CPU	FW	PID_Compact
S7-1200	V4.2 or higher	V2.3 V2.2 V1.2
	V4.0 to V4.1	V2.2 V1.2
	V3.x	V1.2 V1.1
	V2.x	V1.2 V1.1
	V1.x	V1.0
S7-1500	V3.0 or higher	V2.4
	V2.5 to V2.9	V2.4 V2.3 V2.2 V2.1 V2.0
	V2.0 and V2.1	V2.3 V2.2 V2.1 V2.0
	V1.5 to V1.8	V2.2 V2.1 V2.0
	V1.1	V2.1 V2.0
	V1.0	V2.0

10.1.3 CPU processing time and memory requirement PID_Compact V2.x

CPU processing time

Typical CPU processing times of the PID_Compact technology object as of Version V2.0, depending on CPU type and operating mode for standard, F, T and TF CPUs.

CPU	FW	Typ. CPU processing time Automatic mode	Typ. CPU processing time pre-tuning and fine tuning
CPU 1211	≥ V4.0	190 µs	270 µs
CPU 1212			
CPU 1214			
CPU 1215			
CPU 1217			

CPU 1510SP	≤ V2.9	65 µs	80 µs
CPU 1511			
CPU 1511C			
CPU 1512C			
CPU 1512SP			
CPU 1513			
CPU 1515		50 µs	65 µs
CPU 1516			
CPU 1517	Every	8 µs	12 µs
CPU 1518		4 µs	6 µs
CPU 1510SP	≥ V3.0	50 µs	65 µs
CPU 1511			
CPU 1512SP			
CPU 1513			
CPU 1514SP			
CPU 1515		40 µs	55 µs
CPU 1516			

Memory requirement

Memory requirement of an instance DB of the PID_Compact technology object as of Version V2.0.

Memory requirement	**Memory requirement of the instance DB of PID_Compact V2.x**
Load memory requirement	Approx. 12000 bytes
Total work memory requirement	788 bytes
Retentive work memory requirement	44 bytes

10.1.4 PID_Compact V2

10.1.4.1 Description of PID_Compact V2

Description

The PID_Compact instruction provides a PID controller with integrated tuning for actuators with proportional action.

The following operating modes are possible:

- Inactive
- Pretuning
- Fine tuning
- Automatic mode
- Manual mode
- Substitute output value with error monitoring

For a more detailed description of the operating modes, see the State parameter.

PID algorithm

PID_Compact is a PIDT1 controller with anti-windup and weighting of the proportional and derivative actions. The PID algorithm operates according to the following equation:

$$y = K_p \left[(b \cdot w - x) + \frac{1}{T_I \cdot s} (w - x) + \frac{T_D \cdot s}{a \cdot T_D \cdot s + 1} (c \cdot w - x) \right]$$

Symbol	Description
y	Output value of the PID algorithm
K_p	Proportional gain
s	Laplace operator
b	Proportional action weighting
w	Setpoint
x	Process value
T_I	Integral action time
T_D	Derivative action time
a	Derivative delay coefficient (derivative delay T1 = a × T_D)
c	Derivative action weighting

Block diagram of PID_Compact

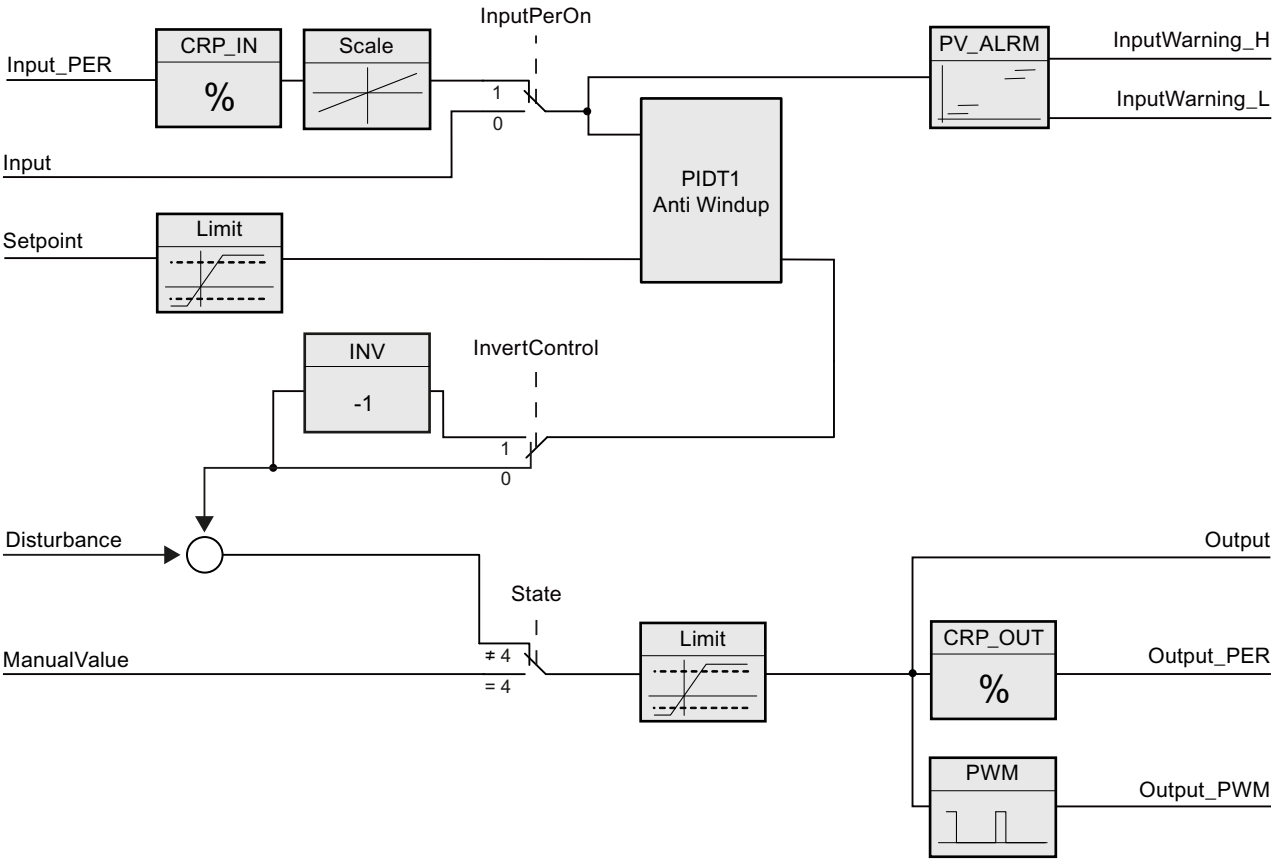

Block diagram of PIDT1 with anti-windup

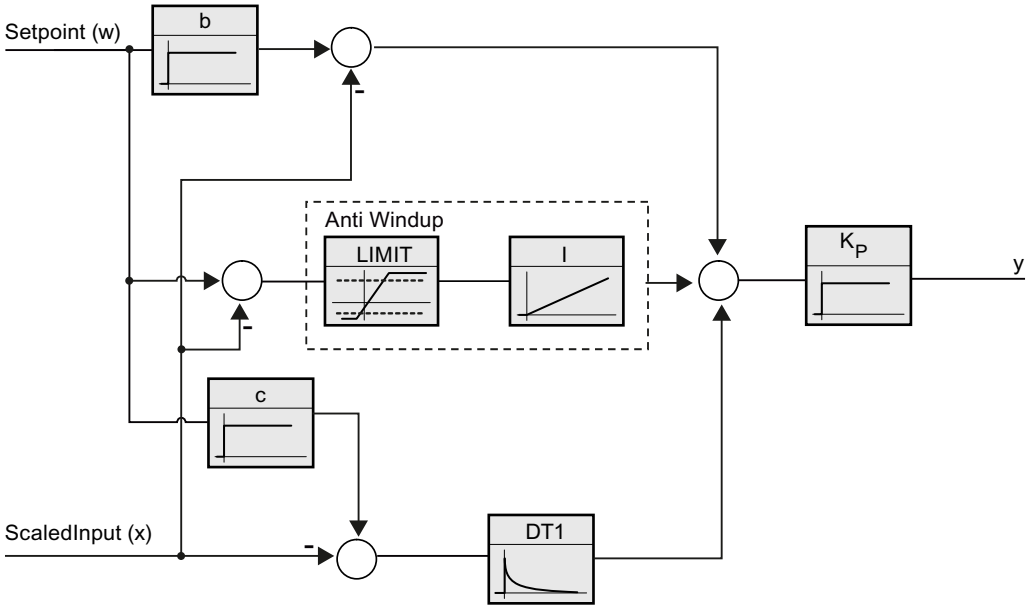

Call

PID_Compact is called in the constant time scale of a cycle interrupt OB.

Download to device

The actual values of retentive variables are only updated when you download PID_Compact completely.

Downloading technology objects to device (Page 44)

Startup

When the CPU starts up, PID_Compact starts in the operating mode that is saved in the Mode in/out parameter. To switch to "Inactive" operating mode during startup, set RunModeByStartup = FALSE.

Reaction to error

In automatic mode and during commissioning, the reaction to error depends on the SetSubstituteOutput and ActivateRecoverMode variables. In manual mode, the reaction is independent of SetSubstituteOutput and ActivateRecoverMode. If ActivateRecoverMode = TRUE, the reaction additionally depends on the error that occurred.

SetSubstitu-teOutput	**ActivateR-ecoverMode**	**Configuration editor > output value > Set Output to**	**Reaction**
Not relevant	FALSE	Zero (inactive)	Switch to "Inactive" mode (State = 0) The value 0.0 0 is transferred to the actuator.
FALSE	TRUE	Current output value while error is pending	Switch to "Substitute output value with error monitoring" mode (State = 5) The current output value is transferred to the actuator while the error is pending.
TRUE	TRUE	Substitute output value while error is pending	Switch to "Substitute output value with error monitoring" mode (State = 5) The value at SubstituteOutput is transferred to the actuator while the error is pending.

In manual mode, PID_Compact uses ManualValue as output value, unless ManualValue is invalid. If ManualValue is invalid, SubstituteOutput is used. If ManualValue and SubstituteOutput are invalid, Config.OutputLowerLimit is used.

The Error parameter indicates if an error is pending. When the error is no longer pending, Error = FALSE. The ErrorBits parameter shows which errors have occurred. ErrorBits is reset by a rising edge at Reset or ErrorAck.

10.1.4.2 Mode of operation of PID_Compact V2

Monitoring process value limits

You specify the high limit and low limit of the process value in the Config.InputUpperLimit and Config.InputLowerLimit tags. If the process value is outside these limits, an error occurs (ErrorBits = 0001h).

You specify a high and low warning limit of the process value in the Config.InputUpperWarning and Config.InputLowerWarning tags. If the process value is outside these warning limits, a warning occurs (Warning = 0040h), and the InputWarning_H or InputWarning_L output parameter changes to TRUE.

Limiting the setpoint

You specify a high limit and low limit of the setpoint in the Config.SetpointUpperLimit and Config.SetpointLowerLimit tags. PID_Compact automatically limits the setpoint to the process value limits. You can limit the setpoint to a smaller range. PID_Compact checks whether this range falls within the process value limits. If the setpoint is outside these limits, the high or low limit is used as the setpoint, and output parameter SetpointLimit_H or SetpointLimit_L is set to TRUE.

The setpoint is limited in all operating modes.

Limiting the output value

You specify a high limit and low limit of the output value in the Config.OutputUpperLimit and Config.OutputLowerLimit tags. Output, ManualValue and SubstituteOutput are limited to these values. The output value limits must match the control logic.

The valid output value limit values depend on the Output used.

Output	-100.0 to 100.0%
Output_PER	-100.0 to 100.0%
Output_PWM	0.0 to 100.0%

Rule:

OutputUpperLimit > OutputLowerLimit

NOTE

Use with two or more actuators

PID_Compact is not suitable for use with two or more actuators (for example, in heating/cooling applications), because different actuators need different PID parameters to achieve a good control response. Use PID_Temp for applications with two actuators acting in opposite directions.

Substitute output value

In the event of an error, PID_Compact can output a substitute output value that you define at the SubstituteOutput tag. The substitute output value must be within the output value limits.

Monitoring signal validity

The values of the following parameters are monitored for validity when used:

- Setpoint
- Input
- Input_PER
- Disturbance
- ManualValue
- SubstituteOutput
- Output
- Output_PER
- Output_PWM

Monitoring of the sampling time PID_Compact

Ideally, the sampling time is equivalent to the cycle time of the calling OB. The PID_Compact instruction measures the time interval between two calls. This is the current sampling time. On every switchover of operating mode and during the initial startup, the mean value is formed from the first 10 sampling times. Too great a difference between the current sampling time and this mean value triggers an error (Error = 0800h).

The error occurs during tuning if:

- New mean value >= 1.1 x old mean value
- New mean value <= 0.9 x old mean value

The error occurs in automatic mode if:

- New mean value >= 1.5 x old mean value
- New mean value <= 0.5 x old mean value

If you deactivate the sampling time monitoring (CycleTime.EnMonitoring = FALSE), you can also call PID_Compact in OB1. You must then accept a lower control quality due to the deviating sampling time.

Sampling time of the PID algorithm

The controlled system needs a certain amount of time to respond to changes in the output value. It is therefore not advisable to calculate the output value in every cycle. The sampling time of the PID algorithm represents the time between two calculations of the output value. It is calculated during tuning and rounded to a multiple of the cycle time. All other functions of PID_Compact are executed at every call.

If you use Output_PWM, the sampling time of the PID algorithm is used as the period duration of the pulse width modulation. The accuracy of the output signal is determined by the ratio of the PID algorithm sampling time to the cycle time of the OB. It is therefore recommended that the cycle time is a maximum of one tenth of the PID algorithm sampling time.

Control logic

An increase of the output value is generally intended to cause an increase in the process value. This is referred to as a normal control logic. For cooling and discharge control systems, it may be necessary to invert the control logic. PID_Compact does not work with negative proportional gain. If InvertControl = TRUE, an increasing control deviation causes a reduction in the output value. The control logic is also taken into account during pretuning and fine tuning.

10.1.4.3 Input parameters of PID_Compact V2

The names of the following parameters apply both to the data block and to access via the Openness API.

Table 10-1

Parameter	Data type	Default	Description
Setpoint	REAL	0.0	Setpoint of the PID controller in automatic mode
Input	REAL	0.0	A tag of the user program is used as source for the process value. If you are using parameter Input, then Config.InputPerOn = FALSE must be set.
Input_PER	INT	0	An analog input is used as the source of the process value. If you are using parameter Input_PER, then Config.InputPerOn = TRUE must be set.
Disturbance	REAL	0.0	Disturbance variable or precontrol value
ManualEnable	BOOL	FALSE	• A FALSE -> TRUE edge activates "manual mode", while State = 4, Mode remains unchanged. As long as ManualEnable = TRUE, you cannot change the operating mode via a rising edge at ModeActivate or use the commissioning dialog. • A TRUE -> FALSE edge activates the operating mode that is specified by Mode. We recommend that you change the operating mode using ModeActivate only.
ManualValue	REAL	0.0	Manual value This value is used as the output value in manual mode. Values from Config.OutputLowerLimit to Config.OutputUpperLimit are permitted.
ErrorAck	BOOL	FALSE	• FALSE -> TRUE edge ErrorBits and Warning are reset.
Reset	BOOL	FALSE	Restarts the controller.

Parameter	Data type	Default	Description
			• FALSE -> TRUE edge – Switch to "Inactive" mode – ErrorBits and Warnings are reset. • As long as Reset = TRUE, – PID_Compact remains in "Inactive" mode (State = 0). – You cannot change the operating mode with Mode and ModeActivate or ManualEnable. – You cannot use the commissioning dialog. • TRUE -> FALSE edge – If ManualEnable = FALSE, PID_Compact switches to the operating mode that is saved in Mode. – If Mode = 3, the integral action is treated as configured with the tag IntegralResetMode.
ModeActivate	BOOL	FALSE	• FALSE -> TRUE edge PID_Compact switches to the operating mode that is saved in the Mode parameter.

10.1.4.4 Output parameters of PID_Compact V2

The names of the following parameters apply both to the data block and to access via the Openness API.

Table 10-2

Parameter	Data type	Default	Description
ScaledInput	REAL	0.0	Scaled process value
The "Output", "Output_PER", and "Output_PWM" outputs can be used concurrently.			
Output	REAL	0.0	Output value in REAL format
Output_PER	INT	0	Analog output value
Output_PWM	BOOL	FALSE	Pulse-width-modulated output value The output value is formed by by variable On and Off times.
SetpointLimit_H	BOOL	FALSE	If SetpointLimit_H = TRUE, the absolute setpoint high limit is reached (Setpoint ≥ Config.SetpointUpperLimit). The setpoint is limited to Config.SetpointUpperLimit .
SetpointLimit_L	BOOL	FALSE	If SetpointLimit_L = TRUE, the absolute setpoint low limit has been reached (Setpoint ≤ Config.SetpointLowerLimit). The setpoint is limited to Config.SetpointLowerLimit .
InputWarning_H	BOOL	FALSE	If InputWarning_H = TRUE, the process value has reached or exceeded the warning high limit.
InputWarning_L	BOOL	FALSE	If InputWarning_L = TRUE, the process value has reached or fallen below the warning low limit.
State	INT	0	The State parameter (Page 234) shows the current operating mode of the PID controller. You can change the operating mode using the input parameter Mode and a rising edge at ModeActivate.

Parameter	Data type	Default	Description
			• State = 0: Inactive • State = 1: Pre-tuning • State = 2: Fine tuning • State = 3: Automatic mode • State = 4: Manual mode • State = 5: Substitute output value with error monitoring
Error	BOOL	FALSE	If Error = TRUE, at least one error message is pending in this cycle.
ErrorBits	DWORD	DW#16#0	The ErrorBits parameter (Page 237) shows which error messages are pending. ErrorBits is retentive and is reset upon a rising edge at Reset or ErrorAck.

10.1.4.5 In/out parameters of PID_Compact V2

The names of the following parameters apply both to the data block and to access via the Openness API.

Table 10-3

Parameter	Data type	Default	Description
Mode	INT	4	At Mode, specify the operating mode to which PID_Compact is to switch. Options are: • Mode = 0: Inactive • Mode = 1: Pre-tuning • Mode = 2: Fine tuning • Mode = 3: Automatic mode • Mode = 4: Manual mode The operating mode is activated by: • Rising edge at ModeActivate • Falling edge at Reset • Falling edge at ManualEnable • Cold restart of CPU if RunModeByStartup = TRUE Mode is retentive. A detailed description of the operating modes can be found in Parameters State and Mode V2 (Page 234).

See also

Parameters State and Mode V2 (Page 234)

10.1.4.6 Static tags of PID_Compact V2

NOTE

Change the tags identified with (1) only in "Inactive" mode to prevent malfunction of the PID controller.

Unless otherwise specified, the names of the following variables apply both to the data block and to access via the Openness API.

Tag	Data type	Default	Description
IntegralResetMode	INT	Up to V2.2: 1, V2.3 or higher: 4	The IntegralResetMode V2 tag (Page 241) determines how the integral action PIDCtrl.IntegralSum is preassigned when switching from "Inactive" operating mode to "Automatic mode". This setting only works for one cycle. Options are: • IntegralResetMode = 0: Smooth • IntegralResetMode = 1: Delete • IntegralResetMode = 2: Hold • IntegralResetMode = 3: Pre-assign • IntegralResetMode = 4: Like setpoint change (only for PID_Compact with version ≥ 2.3)
OverwriteInitialOutputValue	REAL	0.0	If one of the following conditions is met, the integral action PIDCtrl.IntegralSum is preassigned automatically as if Output = OverwriteInitialOutputValue in the previous cycle: • IntegralResetMode = 3 when switching from "Inactive" operating mode to "Automatic mode" • IntegralResetMode = 3, TRUE -> FALSE edge at parameter Reset and parameter Mode = 3 • PIDCtrl.PIDInit = TRUE in "Automatic mode" (available as of PID_Compact version 2.3)
RunModeByStartup	BOOL	TRUE	Activate operating mode at Mode parameter after CPU restart If RunModeByStartup = TRUE, PID_Compact starts in the operating mode saved in the Mode parameter after CPU startup. If RunModeByStartup = FALSE, PID_Compact remains in "Inactive" mode after CPU startup.
LoadBackUp	BOOL	FALSE	If LoadBackUp = TRUE, the last set of PID parameters is reloaded. The set was saved prior to the last tuning. LoadBackUp is automatically set back to FALSE.
PhysicalUnit	INT	0	Unit of measurement of the process value and setpoint, e.g., °C, or °F. PhysicalUnit serves the display in the editors and has no influence on the behavior of the control algorithm in the CPU. When importing PID_Compact via the Openness API, PhysicalUnit is reset to the default value.
PhysicalQuantity	INT	0	Physical quantity of the process value and setpoint, e.g., temperature. PhysicalQuantity serves the display in the editors and has no influence on the behavior of the control algorithm in the CPU. When importing PID_Compact via the Openness API, PhysicalQuantity is reset to the default value.
ActivateRecoverMode	BOOL	TRUE	The Tag ActivateRecoverMode V2 (Page 239) determines the reaction to error.

Tag	Data type	Default	Description
Warning	DWORD	0	Tag Warning V2 (Page 241) shows the warnings since Reset = TRUE or ErrorAck =TRUE. Warning is retentive.
Progress	REAL	0.0	Progress of tuning as a percentage (0.0 - 100.0)
CurrentSetpoint	REAL	0.0	CurrentSetpoint always displays the current setpoint. This value is frozen during tuning.
CancelTuningLevel	REAL	10.0	Permissible fluctuation of setpoint during tuning. Tuning is not canceled until: • Setpoint > CurrentSetpoint + CancelTuningLevel or • Setpoint < CurrentSetpoint - CancelTuningLevel
SubstituteOutput	REAL	0.0	Substitute output value When the following conditions are met, the substitute output value is used: • An error has occurred in automatic mode. • SetSubstituteOutput = TRUE • ActivateRecoverMode = TRUE
SetSubstituteOutput	BOOL	TRUE	If SetSubstituteOutput = TRUE and ActivateRecoverMode = TRUE, the substitute output value configured is output as long as an error is pending. If SetSubstituteOutput = FALSE and ActivateRecoverMode = TRUE, the actuator remains at the current output value as long as an error is pending. If ActivateRecoverMode = FALSE, SetSubstituteOutput is not effective. If SubstituteOutput is invalid (ErrorBits = 20000h), the substitute output value cannot be output.
Config.InputPerOn(1)	BOOL	TRUE	If InputPerOn = TRUE, the Input_PER parameter is used. If InputPerOn = FALSE, the Input parameter is used.
Config.InvertControl(1)	BOOL	FALSE	Invert control logic If InvertControl = TRUE, an increasing control deviation causes a reduction in the output value.
_Config.OutputSelect	INT	0	Selection of the output value: • OutputSelect = 0: Output_PER (analog) • OutputSelect = 1: Output • OutputSelect = 2: Output_PWM _Config.OutputSelect is used for configuring the controller in the TIA Portal and has no influence on the calculation of the output values in the CPU. _Config.OutputSelect is not available in the data block and can only be configured in the configuration editor or via the Openness API. When importing PID_Compact via the Openness API, _Config.OutputSelect is reset to the default value.
Config.InputUpperLimit(1)	REAL	120.0	High limit of the process value Input and Input_PER are monitored to ensure adherence to this limit. At the I/O input, the process value can be a maximum of 18% higher than the standard range (overrange). This preassignment ensures that an error is no longer signaled due to a violation of the "Process value high limit". Only a wire-break and a short-circuit are recog-

Tag	Data type	Default	Description
			nized and PID_Compact reacts according to the configured reaction to error. InputUpperLimit > InputLowerLimit
Config.InputLowerLimit(1)	REAL	0.0	Low limit of the process value Input and Input_PER are monitored to ensure adherence to this limit. InputLowerLimit < InputUpperLimit
Config.InputUpperWarning(1)	REAL	3.402822e+38	Warning high limit of the process value If you set InputUpperWarning outside the process value limits, the configured absolute process value high limit is used as the warning high limit. If you configure InputUpperWarning within the process value limits, this value is used as the warning high limit. InputUpperWarning > InputLowerWarning InputUpperWarning ≤ InputUpperLimit
Config.InputLowerWarning(1)	REAL	-3.402822e+38	Warning low limit of the process value If you set InputLowerWarning outside the process value limits, the configured absolute process value low limit is used as the warning low limit. If you configure InputLowerWarning within the process value limits, this value is used as the warning low limit. InputLowerWarning < InputUpperWarning InputLowerWarning ≥ InputLowerLimit
Config.OutputUpperLimit(1)	REAL	100.0	High limit of output value For details, see OutputLowerLimit OutputUpperLimit > OutputLowerLimit
Config.OutputLowerLimit(1)	REAL	0.0	Low limit of output value For Output and Output_PER, the range of values from -100.0 to +100.0, including zero, is valid. At -100.0, Output_PER = -27648; at +100.0, Output_PER = 27648. For Output_PWM, the value range 0.0 to +100.0 applies. The output value limits must match the control logic. OutputLowerLimit < OutputUpperLimit
Config.SetpointUpperLimit(1)	REAL	3.402822e+38	High limit of setpoint If you configure SetpointUpperLimit outside the process value limits, the configured process value absolute high limit is used as the setpoint high limit. If you configure SetpointUpperLimit within the process value limits, this value is used as the setpoint high limit.
Config.SetpointLowerLimit(1)	REAL	-3.402822e+38	Low limit of the setpoint If you set SetpointLowerLimit outside the process value limits, the configured process value absolute low limit is used as the setpoint low limit. If you set SetpointLowerLimit within the process value limits, this value is used as the setpoint low limit.
Config.MinimumOnTime(1)	REAL	0.0	The minimum ON time of the pulse width modulation in seconds is rounded to MinimumOnTime = n×CycleTime.Value
Config.MinimumOffTime(1)	REAL	0.0	The minimum OFF time of the pulse width modulation in seconds is rounded to MinimumOffTime = n×CycleTime.Value

Tag	Data type	Default	Description
Config.InputScaling.UpperPointIn(1)	REAL	27648.0	Scaling Input_PER high Input_PER is converted to percent based on the two value pairs UpperPointOut, UpperPointIn and LowerPointOut, LowerPointIn.
Config.InputScaling.LowerPointIn(1)	REAL	0.0	Scaling Input_PER low Input_PER is converted to percent based on the two value pairs UpperPointOut, UpperPointIn and LowerPointOut, LowerPointIn.
Config.InputScaling.UpperPointOut(1)	REAL	100.0	Scaled high process value Input_PER is converted to percent based on the two value pairs UpperPointOut, UpperPointIn and LowerPointOut, LowerPointIn.
Config.InputScaling.LowerPointOut(1)	REAL	0.0	Scaled low process value Input_PER is converted to percent based on the two value pairs UpperPointOut, UpperPointIn and LowerPointOut, LowerPointIn.
CycleTime.StartEstimation	BOOL	TRUE	If CycleTime.StartEstimation = TRUE, the automatic determination of the cycle time is started. CycleTime.StartEstimation = FALSE once measurement is complete.
CycleTime.EnEstimation	BOOL	TRUE	If CycleTime.EnEstimation = TRUE, the PID_Compact sampling time is calculated. If CycleTime.EnEstimation = FALSE, the PID_Compact sampling time is not calculated and you need to correct the configuration of CycleTime.Value manually.
CycleTime.EnMonitoring	BOOL	TRUE	If CycleTime.EnMonitoring = FALSE, the PID_Compact sampling time is not monitored. If it is not possible to execute PID_Compact within the sampling time, no error (ErrorBits=0800h) is output and PID_Compact does not switch to "Inactive" mode.
CycleTime.Value(1)	REAL	0.1	PID_Compact sampling time in seconds CycleTime.Value is determined automatically and is usually equivalent to the cycle time of the calling OB.
CtrlParamsBackUp.Gain	REAL	1.0	Saved proportional gain You can reload values from the CtrlParamsBackUp structure with LoadBackUp = TRUE.
CtrlParamsBackUp.Ti	REAL	20.0	Saved integral action time [s]
CtrlParamsBackUp.Td	REAL	0.0	Saved derivative action time [s]
CtrlParamsBackUp.TdFiltRatio	REAL	0.2	Saved derivative delay coefficient
CtrlParamsBackUp.PWeighting	REAL	1.0	Saved proportional action weighting factor
CtrlParamsBackUp.DWeighting	REAL	1.0	Saved derivative action weighting factor
CtrlParamsBackUp.Cycle	REAL	1.0	Saved sampling time of PID algorithm
PIDSelfTune.SUT.CalculateParams	BOOL	FALSE	The properties of the controlled system are saved during tuning. If SUT.CalculateParams = TRUE, the parameters for pretuning are recalculated according to these properties. This enables you to change the parameter calculation method without having to repeat controller tuning.

Tag	Data type	Default	Description
			SUT.CalculateParams is set to FALSE after the calculation.
PIDSelfTune.SUT.TuneRule	INT	0	Methods used to calculate parameters during pretuning: • SUT.TuneRule = 0: PID according to Chien, Hrones and Reswick • SUT.TuneRule = 1: PI according to Chien, Hrones and Reswick
PIDSelfTune.SUT.State	INT	0	The SUT.State tag indicates the current phase of pretuning: • State = 0: Initialize pretuning • State = 100: Calculate the standard deviation • State = 200: Find the point of inflection • State = 9900: Pretuning successful • State = 1: Pretuning not successful
PIDSelfTune.TIR.RunIn	BOOL	FALSE	With the RunIn tag, you can specify that fine tuning can also be performed without pretuning. • RunIn = FALSE Pretuning is started when fine tuning is started from inactive or manual mode. If the requirements for pretuning are not met, PID_Compact reacts as if RunIn = TRUE. If fine tuning is started from automatic mode, the system uses the existing PID parameters to control to the setpoint. Only then will fine tuning start. If pretuning is not possible, PID_Compact switches to the mode from which tuning was started. • RunIn = TRUE The pre-tuning is skipped. PID_Compact attempts to reach the setpoint with the minimum or maximum output value. This can produce increased overshoot. Fine tuning then starts automatically. RunIn is set to FALSE after fine tuning.
PIDSelfTune.TIR.CalculateParams	BOOL	FALSE	The properties of the controlled system are saved during tuning. If TIR.CalculateParams = TRUE, the parameters for fine tuning are recalculated according to these properties. This enables you to change the parameter calculation method without having to repeat controller tuning. TIR.CalculateParams is set to FALSE after the calculation.
PIDSelfTune.TIR.TuneRule	INT	0	Methods used to calculate parameters during fine tuning: • TIR.TuneRule = 0: PID automatic • TIR.TuneRule = 1: PID fast (faster control response with higher amplitudes of the output value than with TIR.TuneRule = 2) • TIR.TuneRule = 2: PID slow (slower control response with lower amplitudes of the output value than with TIR.TuneRule = 1) • TIR.TuneRule = 3: Ziegler-Nichols PID • TIR.TuneRule = 4: Ziegler-Nichols PI • TIR.TuneRule = 5: Ziegler-Nichols P

Tag	Data type	Default	Description
			To be able to repeat the calculation of the PID parameters with TIR.CalculateParams and TIR.TuneRule = 0, 1 or 2, the previous fine tuning also has to have been executed with TIR.TuneRule = 0, 1 or 2. If this is not the case, TIR.TuneRule = 3 is used. The recalculation of the PID parameters with TIR.CalculateParams and TIR.TuneRule = 3, 4 or 5 is always possible.
PIDSelfTune.TIR.State	INT	0	The TIR.State tag indicates the current phase of fine tuning: • State = -100 Fine tuning is not possible. Pretuning will be performed first. • State = 0: Initialize fine tuning • State = 200: Calculate the standard deviation • State = 300: Attempt to reach setpoint • State = 400: Attempt to reach setpoint with existing PID parameters (if pretuning was successful) • State = 500: Determine oscillation and calculate parameters • State = 9900: Fine tuning successful • State = 1: Fine tuning not successful
PIDCtrl.IntegralSum(1)	REAL	0.0	Current integral action
PIDCtrl.PIDInit	BOOL	FALSE	PIDCtrl.PIDInit is available as of PID_Compact version 2.3. If PIDCtrl.PIDInit = TRUE in "Automatic mode", the integral action PIDCtrl.IntegralSum is preassigned automatically as if Output = OverwriteInitialOutputValue in the previous cycle. This can be used for a Override control with PID_Compact V2 (Page 83).
_Retain.CtrlParams.SetByUser	BOOL	FALSE	Enable manual input of PID parameters If _Retain.CtrlParams.SetByUser = TRUE, the PID parameters are editable. _Retain.CtrlParams.SetByUser is used for configuring the controller in the TIA Portal and has no influence on the behavior of the control algorithm in the CPU. _Retain.CtrlParams.SetByUser is not available in the data block and can only be configured in the configuration editor or via the Openness API. When importing PID_Compact via the Openness API, _Retain.CtrlParams.SetByUser is reset to the default value.
Retain.CtrlParams.Gain(1)	REAL	1.0	Active proportional gain To invert the control logic, use the Config.InvertControl tag. Negative values at Gain also invert the control logic. We recommend you use only InvertControl to set the control logic. The control logic is also inverted if InvertControl = TRUE and Gain < 0.0. Gain is retentive.
Retain.CtrlParams.Ti(1)	REAL	20.0	• CtrlParams.Ti > 0.0: Active integral action time • CtrlParams.Ti = 0.0: Integral action is deactivated Ti is retentive.

Tag	Data type	Default	Description
Retain.CtrlParams.Td(1)	REAL	0.0	• CtrlParams.Td > 0.0: Active derivative action time • CtrlParams.Td = 0.0: Derivative action is deactivated Td is retentive.
Retain.CtrlParams.TdFiltRatio(1)	REAL	0.2	Active derivative delay coefficient The derivative delay coefficient delays the effect of the derivative action. Derivative delay = derivative action time × derivative delay coefficient • 0.0: Derivative action is effective for one cycle only and therefore almost not effective. • 0.5: This value has proved useful in practice for controlled systems with **one** dominant time constant. • > 1.0: The greater the coefficient, the longer the effect of the derivative action is delayed. TdFiltRatio is retentive.
Retain.CtrlParams.PWeighting(1)	REAL	1.0	Active proportional action weighting The proportional action may weaken with changes to the setpoint. Values from 0.0 to 1.0 are applicable. • 1.0: Proportional action for setpoint change is fully effective • 0.0: Proportional action for setpoint change is not effective The proportional action is always fully effective when the process value is changed. PWeighting is retentive.
Retain.CtrlParams.DWeighting(1)	REAL	1.0	Active derivative action weighting The derivative action may weaken with changes to the setpoint. Values from 0.0 to 1.0 are applicable. • 1.0: Derivative action is fully effective upon setpoint change • 0.0: Derivative action is not effective upon setpoint change The derivative action is always fully effective when the process value is changed. DWeighting is retentive.
Retain.CtrlParams.Cycle(1)	REAL	1.0	Active sampling time of the PID algorithm CtrlParams.Cycle is calculated during tuning and rounded to an integer multiple of CycleTime.Value. CtrlParams.Cycle is used as time period of the pulse width modulation. Cycle is retentive.

See also

Tag ActivateRecoverMode V2 (Page 239)
Tag Warning V2 (Page 241)
Downloading technology objects to device (Page 44)

10.1.4.7 Changing the PID_Compact V2 interface

The following table shows what has changed in the PID_Compact instruction interface.

PID_Compact V1	PID_Compact V2	Change
Input_PER	Input_PER	Data type from Word to Int
	Disturbance	New
	ErrorAck	New
	ModeActivate	New
Output_PER	Output_PER	Data type from Word to Int
Error	ErrorBits	Renamed
	Error	New
	Mode	New
sb_RunModeByStartup	RunModeByStartup	Function
	IntegralResetMode	
	OverwriteInitialOutputValue	New
	SetSubstituteOutput	New
	CancelTuningLevel	New
	SubstituteOutput	New

The following table shows which variables have been renamed.

PID_Compact V1.x	PID_Compact V2
sb_GetCycleTime	CycleTime.StartEstimation
sb_EnCyclEstimation	CycleTime.EnEstimation
sb_EnCyclMonitoring	CycleTime.EnMonitoring
sb_RunModeByStartup	RunModeByStartup
si_Unit	PhysicalUnit
si_Type	PhysicalQuantity
sd_Warning	Warning
sBackUp.r_Gain	CtrlParamsBackUp.Gain
sBackUp.r_Ti	CtrlParamsBackUp.Ti
sBackUp.r_Td	CtrlParamsBackUp.Td
sBackUp.r_A	CtrlParamsBackUp.TdFiltRatio
sBackUp.r_B	CtrlParamsBackUp.PWeighting
sBackUp.r_C	CtrlParamsBackUp.DWeighting
sBackUp.r_Cycle	CtrlParamsBackUp.Cycle
sPid_Calc.r_Cycle	CycleTime.Value
sPid_Calc.b_RunIn	PIDSelfTune.TIR.RunIn
sPid_Calc.b_CalcParamSUT	PIDSelfTune.SUT.CalculateParams
sPid_Calc.b_CalcParamTIR	PIDSelfTune.TIR.CalculateParams

PID_Compact V1.x	PID_Compact V2
sPid_Calc.i_CtrlTypeSUT	PIDSelfTune.SUT.TuneRule
sPid_Calc.i_CtrlTypeTIR	PIDSelfTune.TIR.TuneRule
sPid_Calc.r_Progress	Progress
sPid_Cmpt.r_Sp_Hlm	Config.SetpointUpperLimit
sPid_Cmpt.r_Sp_Llm	Config.SetpointLowerLimit
sPid_Cmpt.r_Pv_Norm_IN_1	Config.InputScaling.LowerPointIn
sPid_Cmpt.r_Pv_Norm_IN_2	Config.InputScaling.UpperPointIn
sPid_Cmpt.r_Pv_Norm_OUT_1	Config.InputScaling.LowerPointOut
sPid_Cmpt.r_Pv_Norm_OUT_2	Config.InputScaling.UpperPointOut
sPid_Cmpt.r_Lmn_Hlm	Config.OutputUpperLimit
sPid_Cmpt.r_Lmn_Llm	Config.OutputLowerLimit
sPid_Cmpt.b_Input_PER_On	Config.InputPerOn
sPid_Cmpt.b_LoadBackUp	LoadBackUp
sPid_Cmpt.b_InvCtrl	Config.InvertControl
sPid_Cmpt.r_Lmn_Pwm_PPTm	Config.MinimumOnTime
sPid_Cmpt.r_Lmn_Pwm_PBTm	Config.MinimumOffTime
sPid_Cmpt.r_Pv_Hlm	Config.InputUpperLimit
sPid_Cmpt.r_Pv_Llm	Config.InputLowerLimit
sPid_Cmpt.r_Pv_HWrn	Config.InputUpperWarning
sPid_Cmpt.r_Pv_LWrn	Config.InputLowerWarning
sParamCalc.i_Event_SUT	PIDSelfTune.SUT.State
sParamCalc.i_Event_TIR	PIDSelfTune.TIR.State
sRet.i_Mode	sRet.i_Mode has been omitted. The operating mode is changed using Mode and ModeActivate.
sRet.r_Ctrl_Gain	Retain.CtrlParams.Gain
sRet.r_Ctrl_Ti	Retain.CtrlParams.Ti
sRet.r_Ctrl_Td	Retain.CtrlParams.Td
sRet.r_Ctrl_A	Retain.CtrlParams.TdFiltRatio
sRet.r_Ctrl_B	Retain.CtrlParams.PWeighting
sRet.r_Ctrl_C	Retain.CtrlParams.DWeighting
sRet.r_Ctrl_Cycle	Retain.CtrlParams.Cycle

10.1.4.8 Parameters State and Mode V2

Correlation of the parameters

The State parameter shows the current operating mode of the PID controller. You cannot change the State parameter.

With a rising edge at ModeActivate, PID_Compact switches to the operating mode saved in the Mode in-out parameter.

When the CPU is switched on or switches from Stop to RUN mode, PID_Compact starts in the operating mode that is saved in the Mode parameter. To leave PID_Compact in "Inactive" mode, set RunModeByStartup = FALSE.

Meaning of values

State / Mode	Description of operating mode
0	Inactive In "Inactive" operating mode, the output value 0.0 is always output, regardless of Config.OutputUpperLimit and Config.OutputLowerLimit. Pulse width modulation is off.
1	Pretuning The pretuning determines the process response to a jump change of the output value and searches for the point of inflection. The PID parameters are calculated from the maximum rate of rise and dead time of the controlled system. You obtain the best PID parameters when you perform pretuning and fine tuning. Pretuning requirements: • Inactive (State = 0), manual mode (State = 4), or automatic mode (State = 3) • ManualEnable = FALSE • Reset = FALSE • The process value must not be too close to the setpoint. |Setpoint - Input| > 0.3 * | Config.InputUpperLimit - Config.InputLowerLimit| and |Setpoint - Input| > 0.5 * |Setpoint| • The setpoint and the process value lie within the configured limits. The more stable the process value is, the easier it is to calculate the PID parameters and the more precise the result will be. Noise on the process value can be tolerated as long as the rate of rise of the process value is significantly higher compared to the noise. The setpoint is frozen in the CurrentSetpoint tag. Tuning is canceled when: • Setpoint > CurrentSetpoint + CancelTuningLevel or • Setpoint < CurrentSetpoint - CancelTuningLevel Before the PID parameters are recalculated, they are backed up and can be reactivated with LoadBackUp. The controller switches to automatic mode following successful pretuning. If pretuning is unsuccessful, the switchover of the operating mode is dependent on ActivateRecoverMode. The phase of pretuning is indicated with PIDSelfTune.SUT.State. For starting pretuning in Automatic mode, it is recommended to perform the required setpoint change simultaneously with the rising edge at ModeActivate. If the setpoint is changed first and the pretuning is started later, the output value in automatic mode is adjusted accordingly and causes a change to the process value. This can have a negative effect on the subsequent pretuning or prevent it from starting.
2	Fine tuning Fine tuning generates a constant, limited oscillation of the process value. The PID parameters are recalculated based on the amplitude and frequency of this oscillation. PID parameters from fine tuning usually have better master control and disturbance characteristics than PID parameters from pretuning. You obtain the best PID parameters when you perform pretuning and fine tuning. PID_Compact automatically attempts to generate an oscillation greater than the noise of the process value. Fine tuning is only minimally influenced by the stability of the process value. The setpoint is frozen in the CurrentSetpoint tag. Tuning is canceled when: • Setpoint > CurrentSetpoint + CancelTuningLevel or • Setpoint < CurrentSetpoint - CancelTuningLevel Before the PID parameters are recalculated, they are backed up and can be reactivated with LoadBackUp.

State / Mode	Description of operating mode
	Requirements for fine tuning: • No disturbances are expected. • The setpoint and the process value lie within the configured limits. • ManualEnable = FALSE • Reset = FALSE • Automatic (State = 3), inactive (State = 0) or manual (State = 4) mode Fine tuning proceeds as follows when started from: • Automatic mode (State = 3) Start fine tuning from automatic mode if you wish to improve the existing PID parameters through tuning. PID_Compact controls the system using the existing PID parameters until the control loop has stabilized and the requirements for fine tuning have been met. Only then will fine tuning start. • Inactive (State = 0) or manual mode (State = 4) If the requirements for pretuning are met, pretuning is started. The determined PID parameters will be used for control until the control loop has stabilized and the requirements for fine tuning have been met. If the process value for pretuning is already too near the setpoint or PIDSelfTune.TIR.RunIn = TRUE, an attempt is made to reach the setpoint with the minimum or maximum output value. This can produce increased overshoot. Only then will fine tuning start. The controller switches to automatic mode following successful fine tuning. If fine tuning is unsuccessful, the switchover of the operating mode is dependent on ActivateRecoverMode. The "Fine tuning" phase is indicated with PIDSelfTune.TIR.State.
3	Automatic mode In automatic mode, PID_Compact corrects the controlled system in accordance with the parameters specified. The controller switches to automatic mode if one the following requirements is fulfilled: • Pretuning successfully completed • Fine tuning successfully completed • Changing of the Mode in-out parameter to the value 3 and a rising edge at ModeActivate. The switchover from automatic mode to manual mode is only bumpless if carried out in the commissioning editor. The ActivateRecoverMode tag is taken into consideration in automatic mode.
4	Manual mode In manual mode, you specify a manual output value in the ManualValue parameter. You can also activate this operating mode using ManualEnable = TRUE. We recommend that you change the operating mode using Mode and ModeActivate only. The switchover from manual mode to automatic mode is bumpless. Manual mode is also possible when an error is pending.
5	Substitute output value with error monitoring The control algorithm is deactivated. The SetSubstituteOutput tag determines which output value is output in this operating mode. • SetSubstituteOutput = FALSE: Last valid output value • SetSubstituteOutput = TRUE: Substitute output value You cannot activate this operating mode using Mode = 5. In the event of an error, it is activated instead of "Inactive" operating mode if all the following conditions are met: • Automatic mode (Mode = 3) • ActivateRecoverMode = TRUE • One or more errors have occurred in which ActivateRecoverMode is effective. As soon as the errors are no longer pending, PID_Compact switches back to automatic mode.

ENO characteristics

If State = 0, then ENO = FALSE.

If State ≠ 0, then ENO = TRUE.

Automatic switchover of operating mode during commissioning

Automatic mode is activated following successful pretuning or fine tuning. The following table shows how Mode and State change during successful pretuning.

Cycle no.	Mode	State	Action
0	4	4	Set Mode = 1
1	1	4	Set ModeActivate = TRUE
1	4	1	Value of State is saved in Mode parameter Pretuning is started
n	4	1	Pretuning successfully completed
n	3	3	Automatic mode is started

PID_Compact automatically switches the operating mode in the event of an error. The following table shows how Mode and State change during pretuning with errors.

Cycle no.	Mode	State	Action
0	4	4	Set Mode = 1
1	1	4	Set ModeActivate = TRUE
1	4	1	Value of State is saved in Mode parameter Pretuning is started
n	4	1	Pretuning canceled
n	4	4	Manual mode is started

If ActivateRecoverMode = TRUE, the operating mode that is saved in the Mode parameter is activated. At the start of pretuning or fine tuning, PID_Compact has saved the value of State in the Mode in/out parameter. PID_Compact therefore switches to the operating mode from which tuning was started.

If ActivateRecoverMode = FALSE, the system switches to "Inactive" operating mode.

See also

Output parameters of PID_Compact V2 (Page 224)

10.1.4.9 Parameter ErrorBits V2

If several errors are pending simultaneously, the values of the ErrorBits are displayed with binary addition. The display of ErrorBits = 0003h, for example, indicates that the errors 0001h and 0002h are pending simultaneously.

In manual mode, PID_Compact uses ManualValue as output value. The exception is Errorbits = 10000h.

ErrorBits (DW#16#...)	Description
0000	There is no error.

ErrorBits (DW#16#...)	Description
0001	The "Input" parameter is outside the process value limits. • Input > Config.InputUpperLimit or • Input < Config.InputLowerLimit If automatic mode was active before the error occurred and ActivateRecoverMode = TRUE, PID_Compact remains in automatic mode. If pretuning or fine tuning mode was active before the error occurred and ActivateRecoverMode = TRUE, PID_Compact switches to the operating mode that is saved in the Mode parameter.
0002	Invalid value at "Input_PER" parameter. Check whether an error is pending at the analog input. If automatic mode was active before the error occurred and ActivateRecoverMode = TRUE, PID_Compact outputs the configured substitute output value. As soon as the error is no longer pending, PID_Compact switches back to automatic mode. If pretuning or fine tuning mode was active before the error occurred and ActivateRecoverMode = TRUE, PID_Compact switches to the operating mode that is saved in the Mode parameter.
0004	Error during fine tuning. The oscillation of the process value could not be maintained. If ActivateRecoverMode = TRUE before the error occurred, PID_Compact cancels the tuning and switches to the operating mode that is saved in the Mode parameter.
0008	Error at start of pretuning. The process value is too close to the setpoint. Start fine tuning. If ActivateRecoverMode = TRUE before the error occurred, PID_Compact cancels the tuning and switches to the operating mode that is saved in the Mode parameter.
0010	The setpoint was changed during tuning. You can set the permitted fluctuation of the setpoint at the CancelTuningLevel tag. If ActivateRecoverMode = TRUE before the error occurred, PID_Compact cancels the tuning and switches to the operating mode that is saved in the Mode parameter.
0020	Pretuning is not permitted during fine tuning. If ActivateRecoverMode = TRUE before the error occurred, PID_Compact remains in fine tuning mode.
0080	Error during pretuning. The output value limits are not configured correctly or the process value is not reacting as expected. Make sure that: • The limits of the output value are configured correctly and match the control logic. • It is possible to change the output value so that the process value approaches the setpoint. The output value is not already limited by the corresponding output value limit before the pretuning. Example: With normal control logic and a process value that is below the setpoint, the output value must not have reached the high limit before the start of the pretuning. • The process value does not show a strong oscillation before the start of the pretuning. For starting a pretuning in automatic mode, it is recommended to perform the required setpoint change simultaneously with the rising edge at ModeActivate. This prevents the output value from running into the limitation between the setpoint change and the start of the pretuning. Alternatively, this can also be achieved by starting from manual mode or "Inactive" mode. If ActivateRecoverMode = TRUE before the error occurred, PID_Compact cancels the tuning and switches to the operating mode that is saved in the Mode parameter.
0100	Error during fine tuning resulted in invalid parameters. If ActivateRecoverMode = TRUE before the error occurred, PID_Compact cancels the tuning and switches to the operating mode that is saved in the Mode parameter.
0200	Invalid value at "Input" parameter: Value has an invalid number format. If automatic mode was active before the error occurred and ActivateRecoverMode = TRUE, PID_Compact outputs the configured substitute output value. As soon as the error is no longer pending, PID_Compact switches back to automatic mode. If pretuning or fine tuning mode was active before the error occurred and ActivateRecoverMode = TRUE, PID_Compact switches to the operating mode that is saved in the Mode parameter.

ErrorBits (DW#16#...)	Description
0400	Calculation of output value failed. Check the PID parameters. If automatic mode was active before the error occurred and ActivateRecoverMode = TRUE, PID_Compact outputs the configured substitute output value. As soon as the error is no longer pending, PID_Compact switches back to automatic mode. If pretuning or fine tuning mode was active before the error occurred and ActivateRecoverMode = TRUE, PID_Compact switches to the operating mode that is saved in the Mode parameter.
0800	Sampling time error: PID_Compact is not called within the sampling time of the cyclic interrupt OB. It is recommended to call PID_Compact in a cyclic interrupt OB without conditions and to activate or deactivate it via the operating mode at the Mode parameter. Conditional calls or the call in OB1 can have a negative effect on the control quality. Monitoring of the sampling time can be disabled with CycleTime.EnMonitoring = FALSE. If automatic mode was active before the error occurred and ActivateRecoverMode = TRUE, PID_Compact remains in automatic mode. If pretuning or fine tuning mode was active before the error occurred and ActivateRecoverMode = TRUE, PID_Compact switches to the operating mode that is saved in the Mode parameter. If this error occurred during simulation with PLCSIM, see the notes under Simulating PID_Compact V2 with PLCSIM (Page 86).
1000	Invalid value at "Setpoint" parameter: Value has an invalid number format. If automatic mode was active before the error occurred and ActivateRecoverMode = TRUE, PID_Compact outputs the configured substitute output value. As soon as the error is no longer pending, PID_Compact switches back to automatic mode. If pretuning or fine tuning mode was active before the error occurred and ActivateRecoverMode = TRUE, PID_Compact switches to the operating mode that is saved in the Mode parameter.
10000	Invalid value at ManualValue parameter. Value has an invalid number format. If ActivateRecoverMode = TRUE before an error occurred, PID_Compact uses SubstituteOutput as the output value. As soon as you specify a valid value in ManualValue, PID_Compact uses it as the output value.
20000	Invalid value at SubstituteOutput tag. Value has an invalid number format. PID_Compact uses the output value low limit as the output value. If automatic mode was active before the error occurred, ActivateRecoverMode = TRUE, and the error is no longer pending, PID_Compact switches back to automatic mode.
40000	Invalid value at Disturbance parameter. Value has an invalid number format. If automatic mode was active and ActivateRecoverMode = TRUE before the error occurred, Disturbance is set to zero. PID_Compact remains in automatic mode. If pretuning or fine tuning mode was active and ActivateRecoverMode = TRUE before the error occurred, PID_Compact switches to the operating mode saved in the Mode parameter. If Disturbance in the current phase has no effect on the output value, tuning is not be canceled.

10.1.4.10 Tag ActivateRecoverMode V2

The ActivateRecoverMode tag determines the reaction to error. The Error parameter indicates if an error is pending. When the error is no longer pending, Error = FALSE. The ErrorBits parameter shows which errors have occurred.

Automatic mode

NOTICE
Your system may be damaged. If ActivateRecoverMode = TRUE, PID_Compact remains in automatic mode even if there is an error and the process limit values are exceeded. This may damage your system. It is essential to configure how your controlled system reacts in the event of an error to protect your system from damage.

ActivateRecover-Mode	Description
FALSE	PID_Compact automatically switches to "Inactive" mode in the event of an error. The controller is only activated by a falling edge at Reset or a rising edge at ModeActivate.
TRUE	If errors occur frequently in automatic mode, this setting has a negative effect on the control response, because PID_Compact switches between the calculated output value and the substitute output value at each error. In this case, check the ErrorBits parameter and eliminate the cause of the error. If one or more of the following errors occur, PID_Compact stays in automatic mode: • 0001h: The "Input" parameter is outside the process value limits. • 0800h: Sampling time error • 40000h: Invalid value at parameter Disturbance. If one or more of the following errors occur, PID_Compact switches to "Substitute output value with error monitoring" mode: • 0002h: Invalid value at Input_PER parameter. • 0200h: Invalid value at Input parameter. • 0400h: Calculation of output value failed. • 1000h: Invalid value at Setpoint parameter. If the following error occurs, PID_Compact switches to "Substitute output value with error monitoring" mode and moves the actuator to Config.OutputLowerLimit: • 20000h: Invalid value at SubstituteOutput tag. Value has an invalid number format. This characteristics are independent of SetSubstituteOutput. As soon as the errors are no longer pending, PID_Compact switches back to automatic mode.

Pretuning and fine tuning

ActivateRecover-Mode	Description
FALSE	PID_Compact automatically switches to "Inactive" mode in the event of an error. The controller is only activated by a falling edge at Reset or a rising edge at ModeActivate.
TRUE	If the following error occurs, PID_Compact remains in the active mode: • 0020h: Pretuning is not permitted during fine tuning. The following errors are ignored: • 10000h: Invalid value at ManualValue parameter. • 20000h: Invalid value at SubstituteOutput tag. When any other error occurs, PID_Compact cancels the tuning and switches to the mode from which tuning was started.

Manual mode

ActivateRecoverMode is not effective in manual mode.

10.1.4.11 Tag Warning V2

If several warnings are pending simultaneously, the values of the Warning tag are displayed with binary addition. The display of warning 0003h, for example, indicates that the warnings 0001h and 0002h are pending simultaneously.

Warning (DW#16#....)	Description
0000	No warning pending.
0001	The point of inflection was not found during pretuning.
0004	The setpoint was limited to the configured limits.
0008	Not all the necessary controlled system properties were defined for the selected method of calculation. Instead, the PID parameters were calculated using the TIR.TuneRule = 3 method.
0010	The operating mode could not be changed because Reset = TRUE or ManualEnable = TRUE.
0020	The cycle time of the calling OB limits the sampling time of the PID algorithm. Improve results by using shorter OB cycle times.
0040	The process value exceeded one of its warning limits.
0080	Invalid value at Mode. The operating mode is not switched.
0100	The manual value was limited to the limits of the controller output.
0200	The specified rule for tuning is not supported. No PID parameters are calculated.
1000	The substitute output value cannot be reached because it is outside the output value limits.

The following warnings are deleted as soon as the cause is eliminated:

- 0001h
- 0004h
- 0008h
- 0040h
- 0100h

All other warnings are cleared with a rising edge at Reset or ErrorAck.

10.1.4.12 IntegralResetMode V2 tag

The IntegralResetMode tag determines how the integral action PIDCtrl.IntegralSum is pre-assigned:

- When switching from "Inactive" operating mode to "Automatic mode"
- With edge TRUE -> FALSE at parameter Reset and parameter Mode = 3

This setting only works for one cycle and is only effective if the integral action is activated (Retain.CtrlParams.Ti > 0.0 tag).

IntegralReset-Mode	Description
0	Smooth The value of PIDCtrl.IntegralSum is pre-assigned so that the switchover is bumpless, which means "Automatic mode" starts with the output value = 0.0 (parameter Output) and there is no jump of the output value regardless of the control deviation (setpoint – actual value).
1	Delete We recommend setting the weighting of the proportional action (Retain.CtrlParams.PWeighting) to 1.0 if this option is used. The value of PIDCtrl.IntegralSum is deleted. Any control deviation will cause a jump change of the output value. The direction of the output value jump depends on the configured weighting of the proportional action (Retain.CtrlParams.PWeighting tag) and the control deviation: • Proportional action weighting = 1.0: Output value jump and control deviation have identical signs. Example: If the actual value value is smaller than the setpoint (positive control deviation), the output value jumps to a positive value. • Proportional action weighting < 1.0: For large control deviations, the output value jump and control deviation have identical signs. Example: If the actual value is much smaller than the setpoint (positive control deviation), the output value jumps to a positive value. For small control deviations, the output value jump and control deviation have different signs. Example: If the actual value value is just below the setpoint (positive control deviation), the output value jumps to a negative value. This is usually not desirable, because it results in a temporary increase in the control deviation. The smaller the configured weighting of the proportional action, the greater the control deviation must be to receive an output value jump with identical sign. We recommend setting the weighting of the proportional action (Retain.CtrlParams.PWeighting) to 1.0 when this option is used. Otherwise, you may experience the undesirable behavior described for small control deviations. Alternatively, you can also use IntegralResetMode = 4. This option guarantees identical signs of the output value jump and control deviation independent of the configured weighting of the proportional action and the control deviation.
2	Hold The value of PIDCtrl.IntegralSum is not changed. You can define a new value using the user program.
3	Pre-assign The value of PIDCtrl.IntegralSum is automatically pre-assigned as if Output = OverwriteInitialOutputValue in the last cycle.
4	Like setpoint change (only for PID_Compact with version ≥ 2.3) The value of PIDCtrl.IntegralSum is automatically pre-assigned so that a similar output value jump results as for a PI controller in automatic mode in case of a setpoint change from the current actual value to the current setpoint. Any control deviation will cause a jump of the output value. Output value jump and control deviation have identical signs. Example: If the actual value value is smaller than the setpoint (positive control deviation), the output value jumps to a positive value. This is independent of the configured weighting of the proportional action and the control deviation.

If IntegralResetMode is assigned a value outside the valid value range, PID_Compact behaves as with the pre-assignment of IntegralResetMode:

- PID_Compact up to V2.2: IntegralResetMode = 1
- PID_Compact V2.3 and higher: IntegralResetMode = 4

All statements made above regarding the sign of the output value jump are based on a normal control logic (Config.InvertControl = FALSE tag). With an inverted control logic (Config.InvertControl = TRUE), the output value jump will have a reverse sign.

10.1.4.13 Sample program for PID_Compact

In the following example, you are controlling temperature values with the technology object of the instruction "PID_Compact". The temperature values are simulated based on a block which simulates a delay element of the third order (PT3 element). The PID parameters of the technology object can be set automatically via the pretuning.

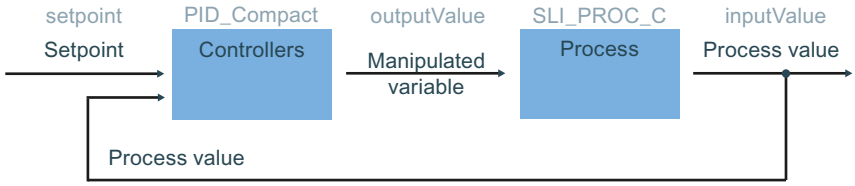

Data storage

Create seven tags in a global data block for storage of the interconnection data.

SLI_gDB_PID_Compact

		Name	Data type	Start value
1		Static		
2		setpoint	Real	75.0
3		inputValue	Real	0.0
4		outputValue	Real	0.0
5		state	Int	0
6		error	Bool	false
7		errorBits	DWord	16#0
8		resetAll	Bool	false

Interconnection of the parameters

You call the following interconnections in a cyclic interrupt OB.

Network 1: You interconnect the parameters of the instruction "PID_Compact" as follows.

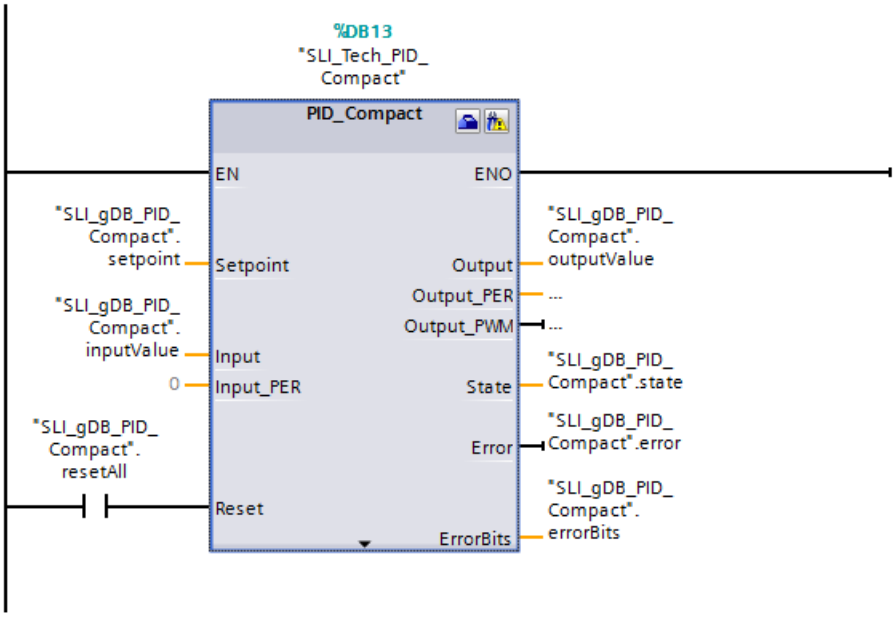

Network 2: You interconnect the parameters of the block simulating the temperature values "SLI_PROC_C" as follows.

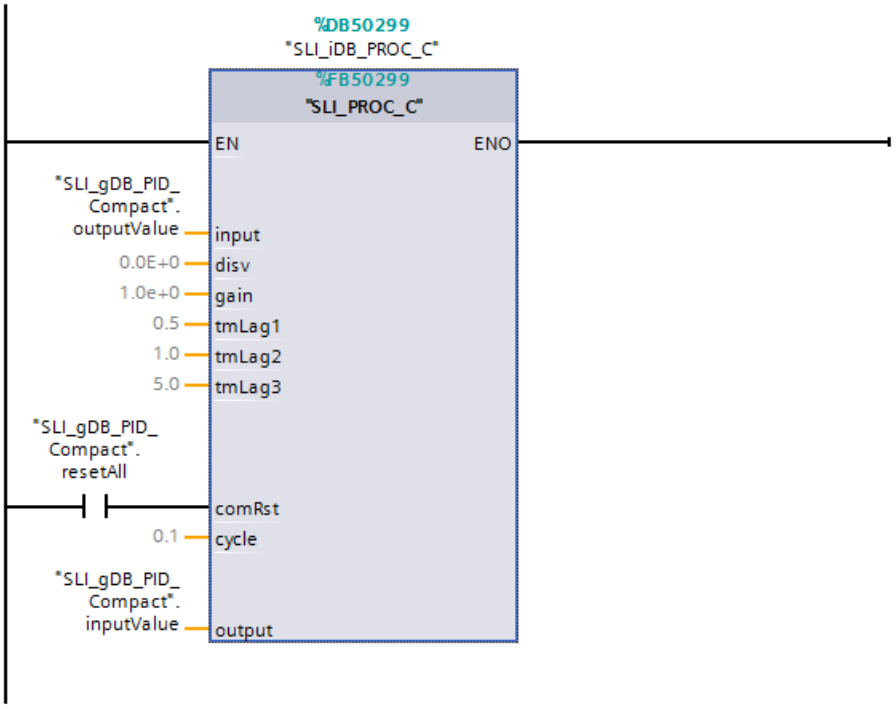

Technology object

You configure the technology object with the properties of the instruction "PID_Compact" or by using the path Technology object > Configuration. The controller type and the

input/output parameters are important for the example. With the controller type, you make a preselection for the unit of the value to the controlled. In this example, "Temperature" with the unit "°C" is used as controller type. The parameters of the "PID_Compact" are already interconnected with global tags. Therefore, the information on use of the parameters Input and Output is sufficient.

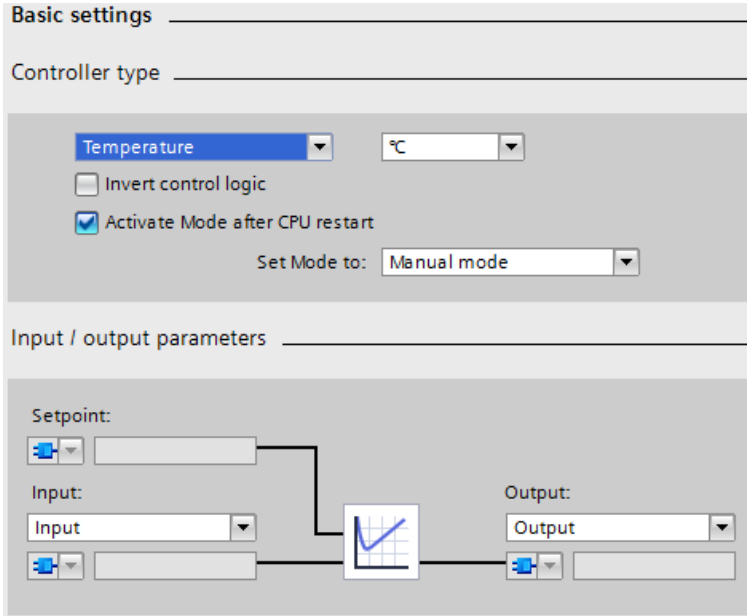

Procedure for starting the control

After the download to the CPU the PID_Compact is in manual mode with manual value 0.0. To start the control, follow these steps:

1. Open the Commissioning of the technology object "SLI_Tech_PID_Compact".
2. Click the "Start" button in the "Measurement" area.

   Measurement starts and PID_Compact can be activated.

3. Pretuning is selected.
   Click the "Start" button in the "Tuning mode" area.
   A pretuning is performed. The PID parameters are automatically adjusted to the process. After the completion of the pretuning PID_Compact switches to automatic mode.

NOTE

Alternative to start PID_Compact

Alternatively, you can switch PID_Compact to automatic mode in the "Online status of controller" area with the "Stop PID_Compact" / "Start PID_Compact" without pretuning. In this case the controller uses default values for the PID parameters and shows a worse controller behavior for the application case.

Procedure for stopping control

To stop and exit PID_Compact and the program, follow these steps:

1. Click the "Stop PID_Compact" button in the technology object "SLI_Tech_PID_Compact" in the "Online status of controller" area.

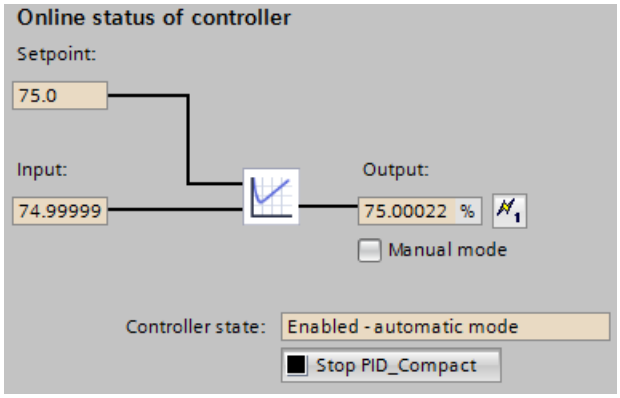

   The instruction "PID_Compact" exits the control and outputs the value "0.0" as manipulated variable.

2. Click the "Stop" button in the "Measurement" area.
3. To set the process value immediately to the value "0.0", follow these steps:
   In the block "SLI_OB_PID_Compact", set the "resetAll" tag to the value "TRUE", and then to the value "FALSE".

"PID_Compact" instruction

The setpoint for the temperature that is to be controlled is specified at the parameter Setpoint ("setpoint"). The control is started when the instruction "PID_Compact" was started with the technology object. The instruction "PID_Compact" outputs a manipulated variable at the output parameter Output ("outputValue"). The process value of the temperature is transferred to the instruction "PID_Compact" with the input parameter Input ("inputValue").

The instruction "PID_Compact" adjusts the manipulated variable ("outputValue") depending on the history of the difference between setpoint ("setpoint") and process value ("inputValue") . The process is repeated so that the process value ("inputValue") approaches the setpoint ("setpoint") through the manipulated variable ("outputValue").

The current operating mode of the instruction "PID_Compact" is displayed at the output parameter State ("state"). After pretuning (the value of "state" is "1"), the PID_Compact switches to automatic mode (the value is "3").

The output parameter Error ("error") currently shows that no error is pending. The output parameter ErrorBits ("errorBits") provides information on the error type in case of error. If an error occurs, this can be acknowledged in the technology object, in the optimization status area with the "ErrorAck" button.

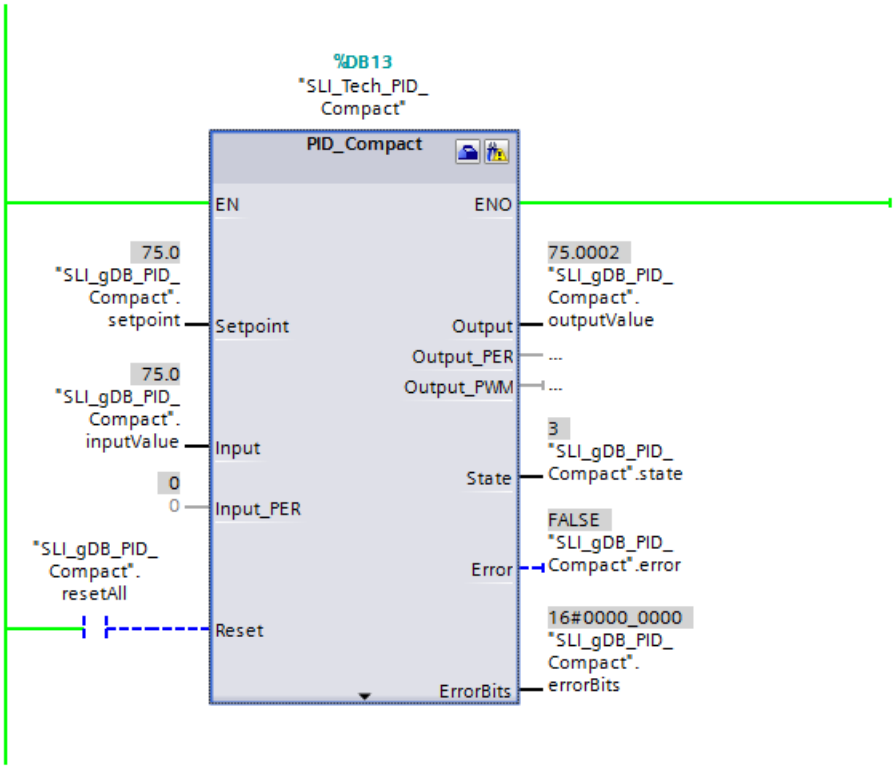

"SLI_PROC_C" block

The "SLI_PROC_C" block simulates the process value ("inputValue") of the rising temperature of a plant. The block "SLI_PROC_C" contains the manipulated variable of the controller ("outputValue) and simulates the temperature behavior of the process. This temperature is fed as process value ("inputValue") into the controller.

A change in the values of the "resetAll" tag (of the comRst parameter) has the following effects:

Parameter comRst ("resetAll")	The instruction "PID_Compact" is running	The instruction "PID_Compact" was stopped
comRst ("resetAll") remains set to the value "FALSE"	The "SLI_PROC_C" block outputs a new process value ("inputValue") based on a manipulated variable ("output-Value").	The "SLI_PROC_C" block does not receive a manipulated variable > "0.0", but it still outputs a new process value > "0.0".
comRst ("resetAll"): Change from "FALSE" to the value "TRUE"	Both manipulated variable ("output-Value") and output process value ("inputValue") are reset to "0.0".	The output process value ("input-Value") / the temperature of the "SLI_PROC_C" block is reset to "0.0".
comRst ("resetAll"): Change from "TRUE" to the value "FALSE"	Temperature control starts again.	The output process value / the tem-perature ("inputValue") remains "0.0".

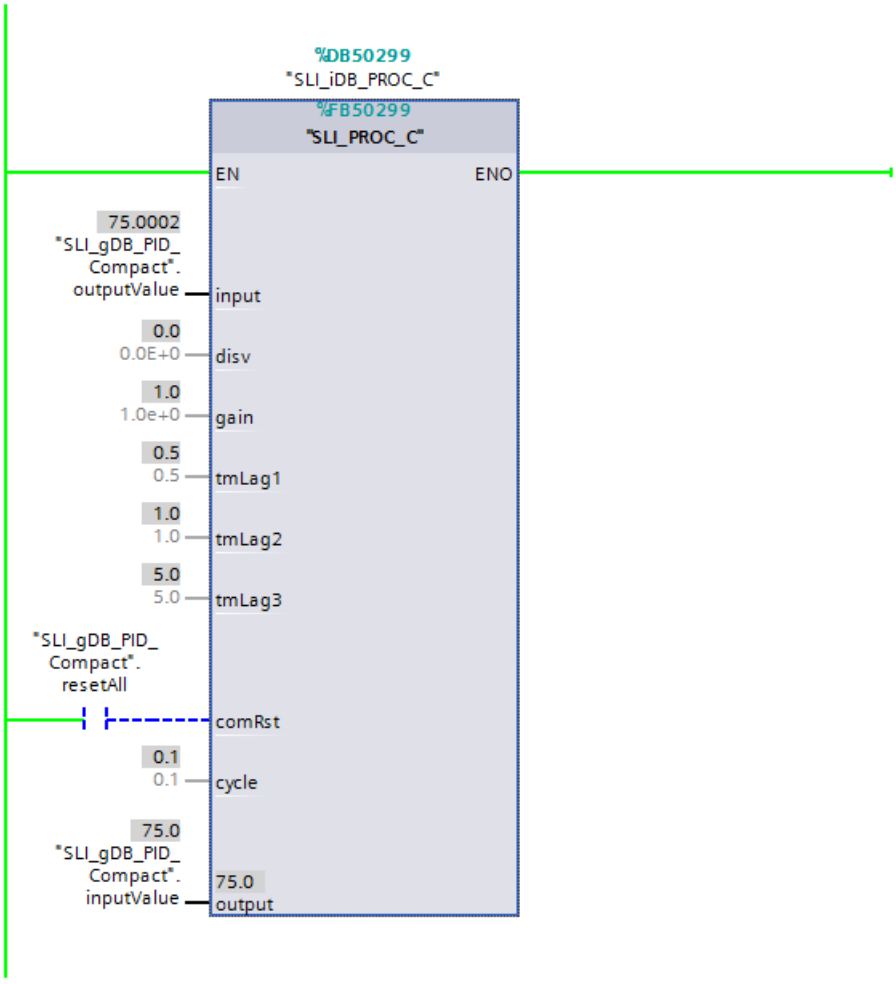

Program code

You can find additional information about the program code for the above-named example under the keyword "Sample Library for Instructions".

10.1.5 PID_Compact V1

10.1.5.1 Description of PID_Compact V1

Description

The PID_Compact instruction provides a PID controller with integrated tuning for automatic and manual mode.

Call

PID_Compact is called in the constant interval of the cycle time of the calling OB (preferably in a cyclic interrupt OB).

Download to device

The actual values of retentive tags are only updated when you download PID_Compact completely.
Downloading technology objects to device (Page 44)

Startup

At the startup of the CPU, PID_Compact starts in the operating mode that was last active. To retain PID_ Compact in "Inactive" mode, set sb_RunModeByStartup = FALSE.

Monitoring of the sampling time PID_Compact

Ideally, the sampling time is equivalent to the cycle time of the calling OB. The PID_Compact instruction measures the time interval between two calls. This is the current sampling time. On every switchover of operating mode and during the initial startup, the mean value is formed from the first 10 sampling times. If the current sampling time deviates too much from this mean value, Error = 0800 hex occurs and PID_Compact switches to "Inactive" mode.

PID_Compact, Version 1.1 or higher is set to "Inactive" mode during controller tuning under the following conditions:

- New mean value >= 1.1 x old mean value
- New mean value <= 0.9 x old mean value

In automatic mode, PID_Compact, Version 1.1 or higher, is set to "Inactive" mode under the following conditions:

- New mean value >= 1.5 x old mean value
- New mean value <= 0.5 x old mean value

During controller tuning and in automatic mode, PID_Compact 1.0 is set to "Inactive" operating mode under the following conditions:

- New mean value >= 1.1 x old mean value
- New mean value <= 0.9 x old mean value
- Current sampling time >= 1.5 x current mean value
- Current sampling time <= 0.5 x current mean value

Sampling time of the PID algorithm

The controlled system needs a certain amount of time to respond to changes in the output value. It is therefore not advisable to calculate the output value in every cycle. The sampling time of the PID algorithm represents the time between two calculations of the output value. It is calculated during tuning and rounded to a multiple of the cycle time. All other functions of PID_Compact are executed at every call.

PID algorithm

PID_Compact is a PIDT1 controller with anti-windup and weighting of the proportional and derivative actions. The following equation is used to calculate the output value.

$$y = K_p \left[(b \cdot w - x) + \frac{1}{T_I \cdot s}(w - x) + \frac{T_D \cdot s}{a \cdot T_D \cdot s + 1}(c \cdot w - x) \right]$$

Symbol	Description
y	Output value
K_p	Proportional gain
s	Laplace operator
b	Proportional action weighting
w	Setpoint
x	Process value
T_I	Integral action time
a	Derivative delay coefficient (T1 = a × T_D)
	Derivative action time
c	Derivative action weighting

Block diagram of PID_Compact

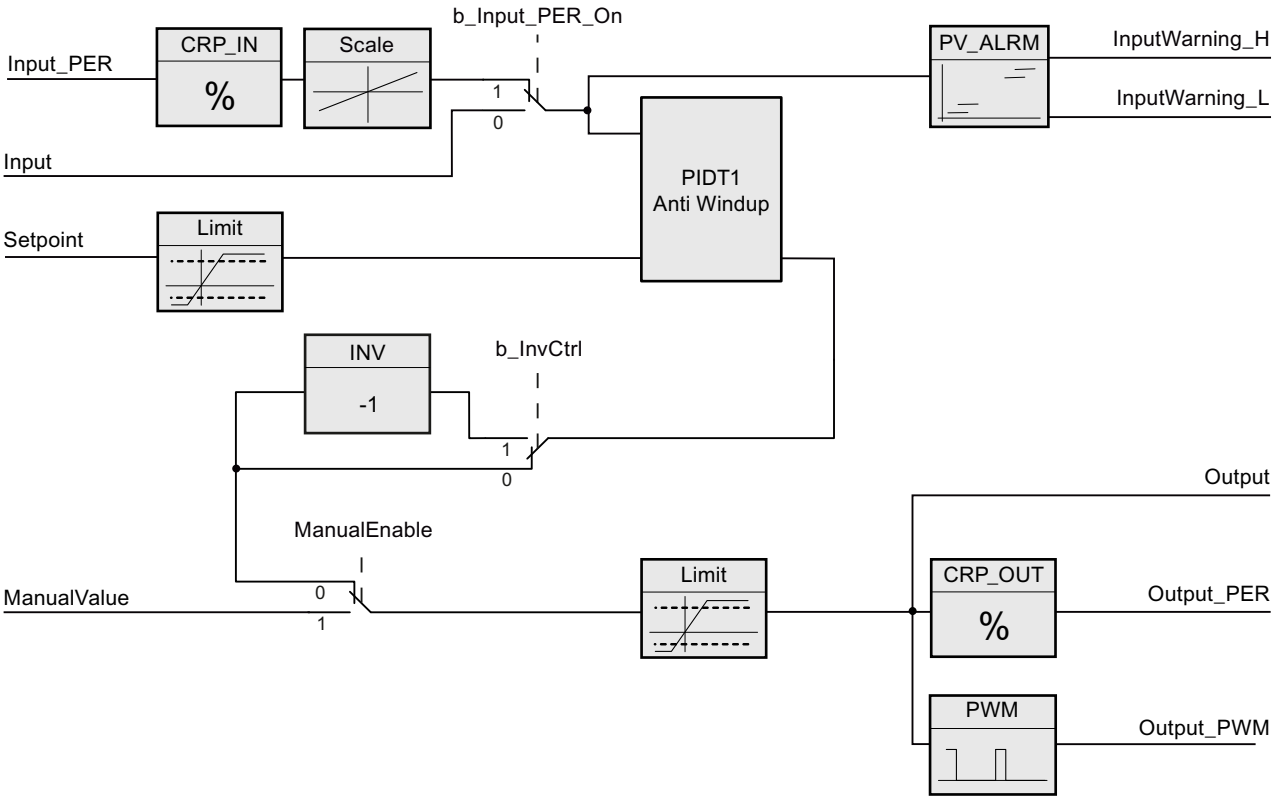

Block diagram of PIDT1 with anti-windup

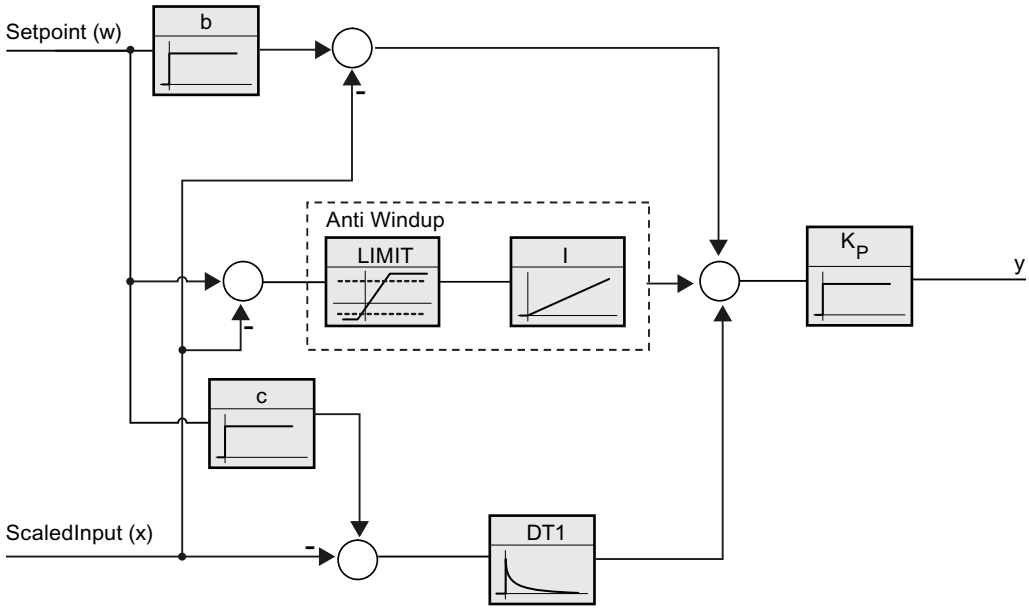

Reaction to error

If errors occur, they are output in parameter Error, and PID_Compact changes to "Inactive" mode. Reset the errors using the Reset parameter.

Control logic

An increase of the output value is generally intended to cause an increase in the process value. This is referred to as a normal control logic. For cooling and discharge control systems, it may be necessary to invert the control logic. PID_Compact does not work with negative proportional gain. If InvertControl = TRUE, an increasing control deviation causes a reduction in the output value. The control logic is also taken into account during pretuning and fine tuning.

See also

Control mode V1 (Page 88)

10.1.5.2 Input parameters of PID_Compact V1

Table 10-4

Parameter	Data type	Default	Description
Setpoint	REAL	0.0	Setpoint of the PID controller in automatic mode
Input	REAL	0.0	A variable of the user program is used as source for the process value. If you are using parameter Input, then sPid_Cmpt.b_Input_PER_On = FALSE must be set.

Parameter	Data type	Default	Description
Input_PER	WORD	W#16#0	Analog input as the source of the process value If you are using parameter Input_PER, then sPid_Cmpt.b_Input_PER_On = TRUE must be set.
ManualEnable	BOOL	FALSE	• A FALSE -> TRUE edge selects "Manual mode", while State = 4, sRet.i_Mode remains unchanged. • A TRUE -> FALSE edge selects the most recently active operating mode, State =sRet.i_Mode. A change of sRet.i_Mode will not take effect during ManualEnable = TRUE. The change of sRet.i_Mode will only be considered upon a TRUE -> FALSE edge at ManualEnable . **PID_Compact V1.2 and PID_Compact V1.0** If at start of the CPU ManualEnable = TRUE, PID_Compact starts in manual mode. A rising edge (FALSE > TRUE) at ManualEnable is not necessary. **PID_Compact V1.1** At the start of the CPU, PID_Compact only switches to manual mode with a rising edge (FALSE->TRUE) at ManualEnable . Without rising edge, PID_Compact starts in the last operating mode in which ManualEnable was FALSE.
ManualValue	REAL	0.0	Manual value This value is used as the output value in manual mode.
Reset	BOOL	FALSE	The Reset parameter (Page 260) restarts the controller.

10.1.5.3 Output parameters of PID_Compact V1

Table 10-5

Parameter	Data type	Default	Description
ScaledInput	REAL	0.0	Output of the scaled process value
Outputs "Output", "Output_PER", and "Output_PWM" can be used concurrently.			
Output	REAL	0.0	Output value in REAL format
Output_PER	WORD	W#16#0	Analog output value
Output_PWM	BOOL	FALSE	Pulse-width-modulated output value The output value is formed by minimum On and Off times.
SetpointLimit_H	BOOL	FALSE	If SetpointLimit_H = TRUE, the setpoint absolute high limit is reached. The setpoint in the CPU is limited to the configured setpoint absolute high limit. The configured process value absolute high limit is the default for the setpoint high limit. If you set sPid_Cmpt.r_Sp_Hlm to a value within the process value limits, this value is used as the setpoint high limit.
SetpointLimit_L	BOOL	FALSE	If SetpointLimit_L = TRUE, the setpoint absolute low limit has been reached. In the CPU, the setpoint is limited to the configured setpoint absolute low limit. The configured process value absolute low limit is the default setting for the setpoint low limit. If you set sPid_Cmpt.r_Sp_Llm to a value within the process value limits, this value is used as the setpoint low limit.
InputWarning_H	BOOL	FALSE	If InputWarning_H = TRUE, the process value has reached or exceeded the warning high limit.

Parameter	Data type	Default	Description
InputWarning_L	BOOL	FALSE	If InputWarning_L = TRUE, the process value has reached or fallen below the warning low limit.
State	INT	0	The State parameter (Page 257) shows the current operating mode of the PID controller. To change the operating mode, use variable sRet.i_Mode. • State = 0: Inactive • State = 1: pretuning • State = 2: fine tuning • State = 3: Automatic mode • State = 4: Manual mode
Error	DWORD	W#16#0	The Error parameter (Page 260) indicates the error messages. Error = 0000: No error pending.

10.1.5.4 Static tags of PID_Compact V1

NOTE

You must not change tags that are not listed. These are used for internal purposes only.

Change the tags identified with (1) only in "Inactive" mode to prevent malfunction of the PID controller. "Inactive" mode is forced by setting the "sRet.i_Mode" tag to "0".

Table 10-6

Tag	Data type	Default	Description
sb_GetCycleTime	BOOL	TRUE	If sb_GetCycleTime = TRUE, the automatic determination of the cycle time is started. CycleTime.StartEstimation = FALSE once measurement is complete.
sb_EnCyclEstimation	BOOL	TRUE	If sb_EnCyclEstimation = TRUE, the PID_Compact sampling time is calculated.
sb_EnCyclMonitoring	BOOL	TRUE	If sb_EnCyclMonitoring = FALSE, the PID_Compact sampling time is not monitored. If it is not possible to execute PID_Compact within the sampling time, an 0800 error is not output and PID_Compact does not change to "Inactive" mode.
sb_RunModeByStartup	BOOL	TRUE	Activate Mode after CPU restart If sb_RunModeByStartup = FALSE, the controller remains inactive after a CPU startup. If sb_RunModeByStartup = TRUE, the controller returns to the last active operating mode after a CPU restart.
si_Unit	INT	0	Unit of measurement of the process value and setpoint, e.g., °C, or °F.
si_Type	INT	0	Physical quantity of the process value and setpoint, e.g., temperature.
sd_Warning	DWORD	DW#16#0	Variable sd_warning (Page 262) displays the warnings generated since the reset, or since the last change of the operating mode.

Tag	Data type	Default	Description
sBackUp.r_Gain	REAL	1.0	Saved proportional gain You can reload values from the sBackUp structure with sPid_Cmpt.b_LoadBackUp = TRUE.
sBackUp.r_Ti	REAL	20.0	Saved integral action time [s]
sBackUp.r_Td	REAL	0.0	Saved derivative action time [s]
sBackUp.r_A	REAL	0.0	Saved derivative delay coefficient
sBackUp.r_B	REAL	0.0	Saved proportional action weighting factor
sBackUp.r_C	REAL	0.0	Saved derivative action weighting factor
sBackUp.r_Cycle	REAL	1.0	Saved sampling time of PID algorithm
sPid_Calc.r_Cycle(1)	REAL	0.1	Sampling time of the PID_Compact instruction r_Cycle is determined automatically and is usually equivalent to the cycle time of the calling OB.
sPid_Calc.b_RunIn	BOOL	FALSE	• b_RunIn = FALSE Pretuning is started when fine tuning is started from inactive or manual mode. If the requirements for pretuning are not met, PID_Compact reacts as if b_RunIn = TRUE. If fine tuning is started from automatic mode, the system uses the existing PID parameters to control to the setpoint. Only then will fine tuning start. If pretuning is not possible, PID_Compact switches to "Inactive" mode. • b_RunIn = TRUE The pretuning is skipped. PID_3Compact tries to reach the setpoint with minimum or maximum output value. This can produce increased overshoot. Fine tuning then starts automatically. b_RunIn is set to FALSE after fine tuning.
sPid_Calc.b_CalcParamSUT	BOOL	FALSE	The parameters for pretuning will be recalculated if b_CalcParamSUT = TRUE. This enables you to change the parameter calculation method without having to repeat controller tuning. b_CalcParamSUT is set to FALSE after the calculation.
sPid_Calc.b_CalcParamTIR	BOOL	FALSE	The parameters for fine tuning will be recalculated if b_CalcParamTIR = TRUE. This enables you to change the parameter calculation method without having to repeat controller tuning. b_CalcParamTIR will be set to FALSE after calculation.
sPid_Calc.i_CtrlTypeSUT	INT	0	Methods used to calculate parameters during pretuning: • i_CtrlTypeSUT = 0: PID according to Chien, Hrones and Reswick • i_CtrlTypeSUT = 1: PI according to Chien, Hrones and Reswick

Tag	Data type	Default	Description
sPid_Calc.i_CtrlTypeTIR	INT	0	Methods used to calculate parameters during fine tuning: • i_CtrlTypeTIR = 0: PID automatic • i_CtrlTypeTIR = 1: PID fast (faster control response with higher amplitudes of the output value than with i_CtrlTypeTIR = 2) • i_CtrlTypeTIR = 2: PID slow (slower control response with lower amplitudes of the output value than with i_CtrlTypiTIR = 1) • i_CtrlTypeTIR = 3: Ziegler-Nichols PID • i_CtrlTypeTIR = 4: Ziegler-Nichols PI • i_CtrlTypeTIR = 5: Ziegler-Nichols P To be able to repeat the calculation of the PID parameters with b_CalcParamTIR and i_CtrlTypeTIR = 0, 1 or 2, the previous fine tuning also has to have been executed with i_CtrlTypeTIR = 0, 1 or 2. If this is not the case, i_CtrlTypeTIR = 3 is used. The recalculation of the PID parameters with b_CalcParamTIR and i_CtrlTypeTIR = 3, 4 or 5 is always possible.
sPid_Calc.r_Progress	REAL	0.0	Progress of tuning as a percentage (0.0 - 100.0)
sPid_Cmpt.r_Sp_Hlm(1)	REAL	+3.402822e+-38	High limit of setpoint If you configure sPid_Cmpt.r_Sp_Hlm outside the process value limits, the configured process value absolute high limit is used as the setpoint high limit. If you configure sPid_Cmpt.r_Sp_Hlm within the process value limits, this value is used as the setpoint high limit.
sPid_Cmpt.r_Sp_Llm(1)	REAL	-3.402822e+3-8	Low limit of the setpoint If you set sPid_Cmpt.r_Sp_Llm outside the process value limits, the configured process value absolute low limit is used as the setpoint low limit. If you set sPid_Cmpt.r_Sp_Llm within the process value limits, this value is used as the setpoint low limit.
sPid_Cmpt.r_Pv_Norm_IN_1(1)	REAL	0.0	Scaling Input_PER low Input_PER is converted to a percentage based on the two value pairs r_Pv_Norm_OUT_1, r_Pv_Norm_IN_1 and r_Pv_Norm_OUT_2, r_Pv_Norm_IN_2 of the sPid_Cmpt structure.
sPid_Cmpt.r_Pv_Norm_IN_2(1)	REAL	27648.0	Scaling Input_PER high Input_PER is converted to a percentage based on the two value pairs r_Pv_Norm_OUT_1, r_Pv_Norm_IN_1 and r_Pv_Norm_OUT_2, r_Pv_Norm_IN_2 of the sPid_Cmpt structure.
sPid_Cmpt.r_Pv_Norm_OUT_1(1)	REAL	0.0	Scaled low process value Input_PER is converted to a percentage based on the two value pairs r_Pv_Norm_OUT_1, r_Pv_Norm_IN_1 and r_Pv_Norm_OUT_2, r_Pv_Norm_IN_2 of the sPid_Cmpt structure.

Tag	Data type	Default	Description
sPid_Cmpt.r_Pv_Norm_OUT_2(1)	REAL	100.0	Scaled high process value Input_PER is converted to a percentage based on the two value pairs r_Pv_Norm_OUT_1, r_Pv_Norm_IN_1 and r_Pv_Norm_OUT_2, r_Pv_Norm_IN_2 of the sPid_Cmpt structure.
sPid_Cmpt.r_Lmn_Hlm(1)	REAL	100.0	Output value high limit for output parameter "Output"
sPid_Cmpt.r_Lmn_Llm(1)	REAL	0.0	Low output value limit for output parameter "Output"
sPid_Cmpt.b_Input_PER_On(1)	BOOL	TRUE	If b_Input_PER_On = TRUE, the Input_PER parameter is used. If b_Input_PER_On = FALSE, the Input parameter is used.
sPid_Cmpt.b_LoadBackUp	BOOL	FALSE	Activate the back-up parameter set. If an optimization has failed, you can reactivate the previous PID parameters by setting this bit.
sPid_Cmpt.b_InvCtrl(1)	BOOL	FALSE	Invert control logic If b_InvCtrl = TRUE, an increasing control deviation causes a reduction in the output value.
sPid_Cmpt.r_Lmn_Pwm_PPTm(1)	REAL	0.0	The minimum ON time of the pulse width modulation in seconds is rounded to r_Lmn_Pwm_PPTm = r_Cycle or r_Lmn_Pwm_PPTm = n*r_Cycle
sPid_Cmpt.r_Lmn_Pwm_PBTm(1)	REAL	0.0	The minimum OFF time of the pulse width modulation in seconds is rounded to r_Lmn_Pwm_PBTm = r_Cycle or r_Lmn_Pwm_PBTm = n*r_Cycle
sPid_Cmpt.r_Pv_Hlm(1)	REAL	120.0	High limit of the process value At the I/O input, the process value can be a maximum of 18% higher than the standard range (overrange). An error is no longer reported for a violation of the "Process value high limit". Only a wire-break and a short-circuit are recognized and the PID_Compact switches to "Inactive" mode. r_Pv_Hlm > r_Pv_Llm
sPid_Cmpt.r_Pv_Llm(1)	REAL	0.0	Low limit of the process value r_Pv_Llm < r_Pv_Hlm
sPid_Cmpt.r_Pv_HWrn(1)	REAL	+3.402822e+-38	Warning high limit of the process value If you set r_Pv_HWrn outside the process value limits, the configured process value absolute high limit is used as the warning high limit. If you configure r_Pv_HWrn within the process value limits, this value is used as the warning high limit. r_Pv_HWrn > r_Pv_LWrn r_Pv_HWrn ≤ r_Pv_Hlm
sPid_Cmpt.r_Pv_LWrn(1)	REAL	-3.402822e+3-8	Warning low limit of the process value If you set r_Pv_LWrn outside the process value limits, the configured process value absolute low limit is used as the warning low limit. If you configure r_Pv_LWrn within the process value limits, this value is used as the warning low limit. r_Pv_LWrn < r_Pv_HWrn r_Pv_LWrn ≥ r_Pv_LWrn
sPidCalc.i_Ctrl_IOutv(1)	REAL	0.0	Current integral action

Tag	Data type	Default	Description
sParamCalc.i_Event_SUT	INT	0	Variable i_Event_SUT (Page 263) indicates the current phase of "pretuning":
sParamCalc.i_Event_TIR	INT	0	Variable i_Event_TIR (Page 263) indicates the current phase of "fine tuning":
sRet.i_Mode	INT	0	The operating mode is changed edge-triggered. The following operating mode is enabled on a change to • i_Mode = 0: "Inactive" mode (controller stop) • i_Mode = 1: "Pretuning" mode • i_Mode = 2: "Fine tuning" mode • i_Mode = 3: "Automatic" mode • i_Mode = 4: "Manual" mode i_Mode is retentive.
sRet.r_Ctrl_Gain(1)	REAL	1.0	Active proportional gain Gain is retentive.
sRet.r_Ctrl_Ti(1)	REAL	20.0	• r_Ctrl_Ti > 0.0: Active integral action time • r_Ctrl_Ti = 0.0: Integral action is deactivated r_Ctrl_Ti is retentive.
sRet.r_Ctrl_Td(1)	REAL	0.0	• r_Ctrl_Td > 0.0: Active derivative action time • r_Ctrl_Td = 0.0: Derivative action is deactivated r_Ctrl_Td is retentive.
sRet.r_Ctrl_A(1)	REAL	0.0	Active derivative delay coefficient r_Ctrl_A is retentive.
sRet.r_Ctrl_B(1)	REAL	0.0	Active proportional action weighting r_Ctrl_B is retentive.
sRet.r_Ctrl_C(1)	REAL	0.0	Active derivative action weighting r_Ctrl_C is retentive.
sRet.r_Ctrl_Cycle(1)	REAL	1.0	Active sampling time of the PID algorithm r_Ctrl_Cycle is calculated during tuning and rounded to an integer multiple of r_Cycle. r_Ctrl_Cycle is used as time period of the pulse width modulation. r_Ctrl_Cycle is retentive.

See also

Downloading technology objects to device (Page 44)

10.1.5.5 Parameters State and sRet.i_Mode V1

Correlation of the parameters

The State parameter indicates the current operating mode of the PID controller. You cannot modify the State parameter.

You need to modify the sRet.i_Mode tag to change the operating mode. This also applies when the value for the new operating mode is already in sRet.i_Mode. First set sRet.i_Mode = 0 and then sRet.i_Mode = 3. Provided the current operating mode of the controller supports this change, State is set to the value of sRet.i_Mode.

When PID_Compact automatically switches the operating mode, the following applies: State != sRet.i_Mode.

Examples:

- Successful pretuning
  State = 3 and sRet.i_Mode = 1
- Error
  State = 0 and sRet.i_Mode remains at the same value, e.g sRet.i_Mode = 3
- ManualEnalbe = TRUE
  State = 4 and sRet.i_Mode remain at the previous value, for example, sRet.i_Mode = 3

NOTE

You wish to repeat successful fine tuning without exiting automatic mode with i_Mode = 0.

Setting sRet.i_Mode to an invalid value such as 9999 for one cycle has no effect on State. Set Mode = 2 in the next cycle. You can generate a change to sRet.i_Mode without first switching to "inactive" mode.

Meaning of values

State / sRet.i_Mode	Description of the operating mode
0	Inactive The controller is switched off. The controller was in "inactive" mode before pretuning was performed. The PID controller will change to "inactive" mode when running if an error occurs or if the "Deactivate controller" icon is clicked in the commissioning window.
1	Pretuning The pretuning determines the process response to a jump of the output value and searches for the point of inflection. The optimized PID parameters are calculated as a function of the maximum rate of rise and dead time of the controlled system. Pretuning requirements: • The controller is in inactive mode or manual mode • ManualEnable = FALSE • The process value must not be too close to the setpoint. |Setpoint - Input| > 0.3 * |sPid_Cmpt.r_Pv_Hlm - sPid_Cmpt.r_Pv_Llm| and |Setpoint - Input| > 0.5 * |Setpoint| • The setpoint may not be changed during pretuning. The higher the stability of the process value, the easier it is to calculate the PID parameters and increase precision of the result. Noise on the process value can be tolerated as long as the rate of rise of the process value is significantly higher compared to the noise. PID parameters are backed up before they are recalculated and can be reactivated with sPid_Cmpt.b_LoadBackUp. There is a change to automatic mode following successful pretuning and to "inactive" mode following unsuccessful pretuning. The phase of pretuning is indicated with Tag i_Event_SUT V1 (Page 263).

State / sRet.i_Mode	Description of the operating mode
2	Fine tuning Fine tuning generates a constant, limited oscillation of the process value. The PID parameters are optimized based on the amplitude and frequency of this oscillation. The differences between the process response during pretuning and fine tuning are analyzed. All PID parameters are recalculated on the basis of the findings. PID parameters from fine tuning usually have better master control and disturbance behavior than PID parameters from pretuning. PID_Compact automatically attempts to generate an oscillation greater than the noise of the process value. Fine tuning is only minimally influenced by the stability of the process value. PID parameters are backed up before they are recalculated and can be reactivated with sPid_Cmpt.b_LoadBackUp. Requirements for fine tuning: • No disturbances are expected. • The setpoint and the process value lie within the configured limits. • The setpoint may not be changed during fine tuning. • ManualEnable = FALSE • Automatic (State = 3), inactive (State = 0) or manual (State = 4) mode Fine tuning proceeds as follows when started in: • Automatic mode (State = 3) Start fine tuning in automatic mode if you wish to improve the existing PID parameters using controller tuning. PID_Comact will regulate using the existing PID parameters until the control loop has stabilized and the requirements for fine tuning have been met. Only then will fine tuning start. • Inactive (State = 0) or manual (State = 4) mode If the requirements for pretuning are met, pretuning is started. The PID parameters established will be used for adjustment until the control loop has stabilized and the requirements for fine tuning have been met. Only then will fine tuning start. If pretuning is not possible, PID_Compact will change to "Inactive" mode. An attempt is made to reach the setpoint with a minimum or maximum output value if the process value for pretuning is already too near the setpoint or sPid_Calc.b_RunIn = TRUE. This can produce increased overshoot. The controller will change to "automatic mode" after successfully completed "fine tuning" and to "inactive" mode if "fine tuning" has not been successfully completed. The "Fine tuning" phase is indicated with Tag i_Event_TIR V1 (Page 263).
3	Automatic mode In automatic mode, PID_Compact corrects the controlled system in accordance with the parameters specified. The controller changes to automatic mode if one the following conditions is fulfilled: • Pretuning successfully completed • Fine tuning successfully completed • Change of variable sRet.i_Mode to the value 3. After CPU startup or change from Stop to RUN mode, PID_Compact will start in the most recently active operating mode. To retain PID_Compact in "Inactive" mode, set sb_RunModeByStartup = FALSE.
4	Manual mode In manual mode, you specify a manual output value in the ManualValue parameter. This operating mode is enabled if sRet.i_Mode = 4, or at the rising edge on ManualEnable. If ManualEnable changes to TRUE, only State will change. sRet.i_Mode will retain its current value. PID_Compact will return to the previous operating mode upon a falling edge at ManualEnable. The change to automatic mode is bumpless.

See also

Output parameters of PID_Compact V1 (Page 252)
Pretuning V1 (Page 97)
Fine tuning V1 (Page 99)
"Manual" mode V1 (Page 100)
Tag i_Event_SUT V1 (Page 263)
Tag i_Event_TIR V1 (Page 263)

10.1.5.6 Parameter Error V1

If several errors are pending simultaneously, the values of the error codes are displayed with binary addition. The display of error code 0003, for example, indicates that the errors 0001 and 0002 are pending simultaneously.

Error (DW#16#...)	Description
0000	There is no error.
0001	The "Input" parameter is outside the process value limits. • Input > sPid_Cmpt.r_Pv_Hlm or • Input < sPid_Cmpt.r_Pv_Llm You cannot move the actuator again until you eliminate the error.
0002	Invalid value at "Input_PER" parameter. Check whether an error is pending at the analog input.
0004	Error during fine tuning. Oscillation of the process value could not be maintained.
0008	Error at start of pretuning. The process value is too close to the setpoint. Start fine tuning.
0010	The setpoint was changed during tuning.
0020	Pretuning is not permitted in automatic mode or during fine tuning.
0080	Error during pretuning. The output value limits are not configured correctly or the actual value does not react as expected. Check whether the limits of the output value are configured correctly and match the control logic. Also make sure that the actual value does not oscillate strongly before starting pretuning.
0100	Error during tuning resulted in invalid parameters.
0200	Invalid value at "Input" parameter: Value has an invalid number format.
0400	Calculation of output value failed. Check the PID parameters.
0800	Sampling time error: PID_Compact is not called within the sampling time of the cyclic interrupt OB. If this error occurred during simulation with PLCSIM, see the notes under Simulating PID_Compact V1 with PLCSIM (Page 101).
1000	Invalid value at "Setpoint" parameter: Value has an invalid number format.

See also

Output parameters of PID_Compact V1 (Page 252)

10.1.5.7 Parameter Reset V1

The response to Reset = TRUE depends on the version of the PID_Compact instruction.

Reset response PID_Compact V.1.1 or higher

A rising edge at Reset triggers a change to "Inactive" mode; errors and warnings are reset and the integral action is deleted. A falling edge at Reset triggers a change to the most recently active operating mode. If automatic mode was active before, the integral action is pre-assigned in such a way that the switchover is bumpless.

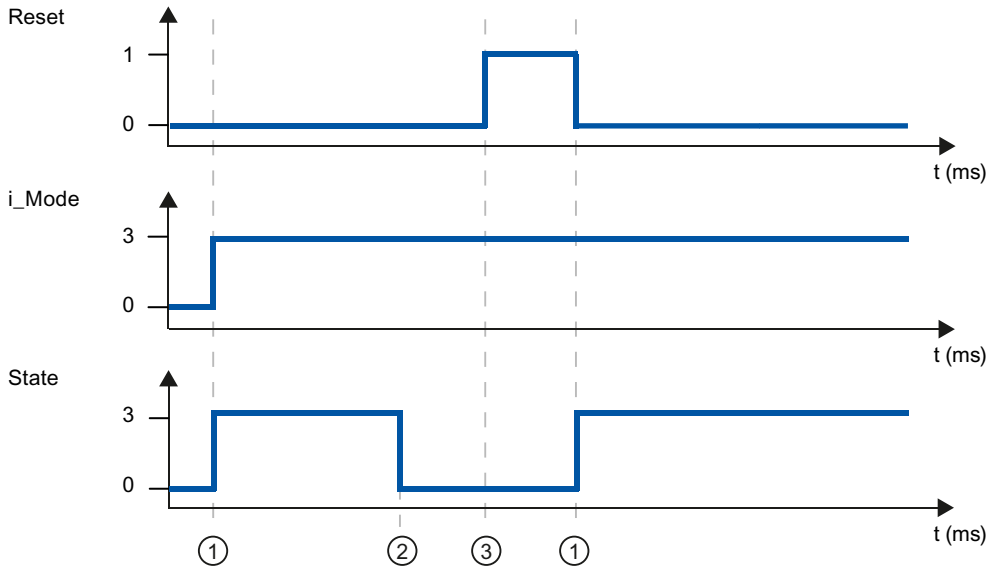

① Activation
② Error
③ Reset

Reset response PID_Compact V.1.0

A rising edge at Reset triggers a change to "Inactive" mode; errors and warnings are reset and the integral action is deleted. The controller is not reactivated until the next edge at i_Mode.

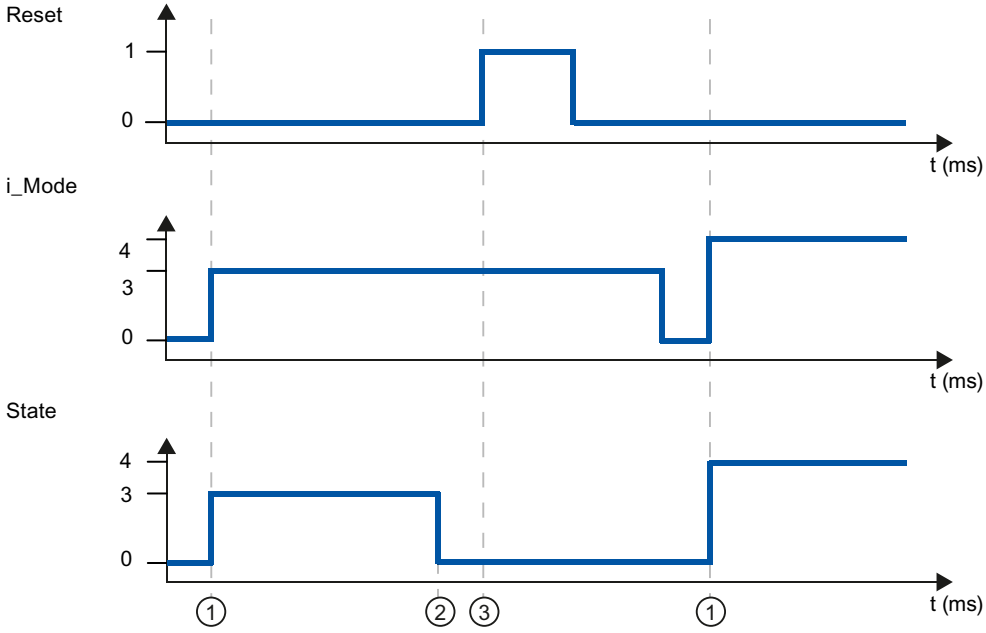

① Activation
② Error
③ Reset

10.1.5.8 Tag sd_warning V1

If several warnings are pending, the values of variable sd_warning are displayed by means of binary addition. The display of warning 0003, for example, indicates that the warnings 0001 and 0002 are also pending.

sd_warning (DW#16#....)	Description
0000	No warning pending.
0001	The point of inflection was not found during pretuning.
0002	Oscillation increased during fine tuning.
0004	The setpoint was outside the set limits.
0008	Not all the necessary controlled system properties were defined for the selected method of calculation. The PID parameters were instead calculated using the "i_CtrlTypeTIR = 3" method.
0010	The operating mode could not be changed because ManualEnable = TRUE.
0020	The cycle time of the calling OB limits the sampling time of the PID algorithm. Improve results by using shorter OB cycle times.
0040	The process value exceeded one of its warning limits.

The following warnings are deleted as soon as the cause is dealt with:

- 0004
- 0020
- 0040

All other warnings are cleared with a rising edge at Reset.

10.1.5.9 Tag i_Event_SUT V1

i_Event_SUT	Name	Description
0	SUT_INIT	Initialize pretuning
100	SUT_STDABW	Calculate the standard deviation
200	SUT_GET_POI	Find the point of inflection
9900	SUT_IO	Pretuning successful
1	SUT_NIO	Pretuning not successful

See also

Static tags of PID_Compact V1 (Page 253)
Parameters State and sRet.i_Mode V1 (Page 257)

10.1.5.10 Tag i_Event_TIR V1

i_Event_TIR	Name	Description
-100	TIR_FIRST_SUT	Fine tuning is not possible. Pretuning will be executed first.
0	TIR_INIT	Initialize fine tuning
200	TIR_STDABW	Calculate the standard deviation
300	TIR_RUN_IN	Attempt to reach the setpoint
400	TIR_CTRLN	Attempt to reach the setpoint with the existing PID parameters (if pretuning has been successful)
500	TIR_OSZIL	Determine oscillation and calculate parameters
9900	TIR_IO	Fine tuning successful
1	TIR_NIO	Fine tuning not successful

See also

Static tags of PID_Compact V1 (Page 253)
Parameters State and sRet.i_Mode V1 (Page 257)

10.2 PID_3Step

10.2.1 New features of PID_3Step

PID_3Step V2.3

- As of PID_3Step Version 2.3 the monitoring and limiting of the travel time can be deactivated with Config.VirtualActuatorLimit = 0.0.

PID_3Step V2.2

- **Use with S7-1200**
  As of PID_3Step V2.2, the instruction with V2 functionality can also be used on S7-1200 with firmware version 4.0 or higher.

PID_3Step V2.0

- **Reaction to error**
  The reaction to ActivateRecoverMode = TRUE has been completely overhauled. PID_3Step reacts in a more fault tolerant manner in the default setting.

NOTICE
Your system may be damaged. If you use the default setting, PID_3Step remains in automatic mode even if the process value limits are exceeded. This may damage your system. It is essential to configure how your controlled system reacts in the event of an error to protect your system from damage.

  You use the ErrorAck input parameter to acknowledge the errors and warnings without restarting the controller or clearing the integral action.
  Switching operating modes does not acknowledge errors that are no longer pending.
- **Switching the operating mode**
  You specify the operating mode at the Mode in/out parameter and use a positive edge at ModeActivate to start the operating mode. The Retain.Mode tag has been omitted.
  The transition time measurement can no longer be started with GetTransitTime.Start, but only with Mode = 6 and a positive edge at ModeActivate.
- **Multi-instance capability**
  You can call up PID_3Step as multi-instance DB.
- **Startup characteristics**
  The operating mode specified at the Mode parameter is also started on a negative edge at Reset and during a CPU cold restart, if RunModeByStartup = TRUE.
- **ENO characteristics**
  ENO is set depending on the operating mode.
  If State = 0, then ENO = FALSE.
  If State ≠ 0, then ENO = TRUE.

- **Manual mode**
  The Manual_UP and Manual_DN input parameters no longer function as edge-triggered parameters. Edge-triggered manual mode continues to be possible using the ManualUpInternal and ManualDnInternal tags.
  In "Manual mode without endstop signals" (Mode = 10), the endstop signals Actuator_H and Actuator_L are ignored even though they are activated.
- **Default value of PID parameters**
  The following default settings have been changed:
  – Proportional action weighting (PWeighting) from 0.0 to 1.0
  – Derivative action weighting (DWeighting) from 0.0 to 1.0
  – Coefficient for derivative delay (TdFiltRatio) from 0.0 to 0.2
- **Limiting of motor transition time**
  You configure the maximum percentage of the motor transition time that the actuator will travel in one direction in the Config.VirtualActuatorLimit tag.
- **Setpoint value specification during tuning**
  You configure the permitted fluctuation of the setpoint during tuning at the CancelTuningLevel tag.
- **Switching a disturbance variable on**
  You can switch a disturbance variable on at the Disturbance parameter.
- **Troubleshooting**
  If the endstop signals are not activated (ActuatorEndStopOn = FALSE), ScaledFeedback is determined without Actuator_H or Actuator_L.

PID_3Step V1.1

- **Manual mode on CPU startup**
  If ManualEnable = TRUE when the CPU starts, PID_3Step starts in manual mode. A positive edge at ManualEnable is not necessary.
- **Reaction to error**
  The ActivateRecoverMode tag is no longer effective in manual mode.
- **Troubleshooting**
  The Progress tag is reset following successful tuning or transition time measurement.

10.2.2 Compatibility with CPU and FW

The following table shows which version of PID_3Step can be used on which CPU.

CPU	FW	PID_3Step
S7-1200	V4.2 or higher	V2.3 V2.2 V1.1
	V4.0 to V4.1	V2.2 V1.1
	V3.x	V1.1 V1.0

CPU	FW	PID_3Step
S7-1200	V2.x	V1.1 V1.0
	V1.x	-
S7-1500	V3.0 or higher	V2.3
	V2.0 to V2.9	V2.3 V2.2 V2.1 V2.0
	V1.5 to V1.8	V2.2 V2.1 V2.0
	V1.1	V2.1 V2.0
	V1.0	V2.0

10.2.3 CPU processing time and memory requirement PID_3Step V2.x

CPU processing time

Typical CPU processing times of the PID_3Step technology object as of Version V2.0, depending on CPU type and operating mode for standard, F, T and TF CPUs.

CPU	FW	Typ. CPU processing time Automatic mode	Typ. CPU processing time pre-tuning and fine tuning
CPU 1211	≥ V4.0	260 µs	310 µs
CPU 1212			
CPU 1214			
CPU 1215			
CPU 1217			
CPU 1510SP	≤ V2.9	80 µs	95 µs
CPU 1511			
CPU 1511C			
CPU 1512C			
CPU 1512SP			
CPU 1513			
CPU 1515		70 µs	80 µs
CPU 1516			
CPU 1517	Every	11 µs	15 µs
CPU 1518		5 µs	7 µs

CPU 1510SP	≥ V3.0	65 µs	80 µs
CPU 1511			
CPU 1512SP			
CPU 1513			
CPU 1514SP			
CPU 1515		50 µs	70 µs
CPU 1516			

Memory requirement

Memory requirement of an instance DB of the PID_3Step technology object as of Version V2.0.

Memory requirement	Memory requirement of the instance DB of PID_3Step V2.x
Load memory requirement	Approx. 15000 bytes
Total work memory requirement	1040 bytes
Retentive work memory requirement	60 bytes

10.2.4 PID_3Step V2

10.2.4.1 Description of PID_3Step V2

Description

You use the PID_3Step instruction to configure a PID controller with self tuning for valves or actuators with integrating behavior.

The following operating modes are possible:

- Inactive
- Pretuning
- Fine tuning
- Automatic mode
- Manual mode
- Approach substitute output value
- Transition time measurement
- Error monitoring
- Approach substitute output value with error monitoring
- Manual mode without endstop signals

For a more detailed description of the operating modes, see the State parameter.

PID algorithm

PID_3Step is a PIDT1 controller with anti-windup and weighting of the proportional and derivative actions. The PID algorithm operates according to the following equation:

$$\Delta y = K_p \cdot s \cdot \left[(b \cdot w - x) + \frac{1}{T_I \cdot s} (w - x) + \frac{T_D \cdot s}{a \cdot T_D \cdot s + 1} (c \cdot w - x) \right]$$

Δy	Output value of the PID algorithm
K_p	Proportional gain
s	Laplace operator
b	Proportional action weighting
w	Setpoint
x	Process value
T_I	Integral action time
T_D	Derivative action time
a	Derivative delay coefficient (derivative delay T1 = a × T_D)
c	Derivative action weighting

Block diagram without position feedback

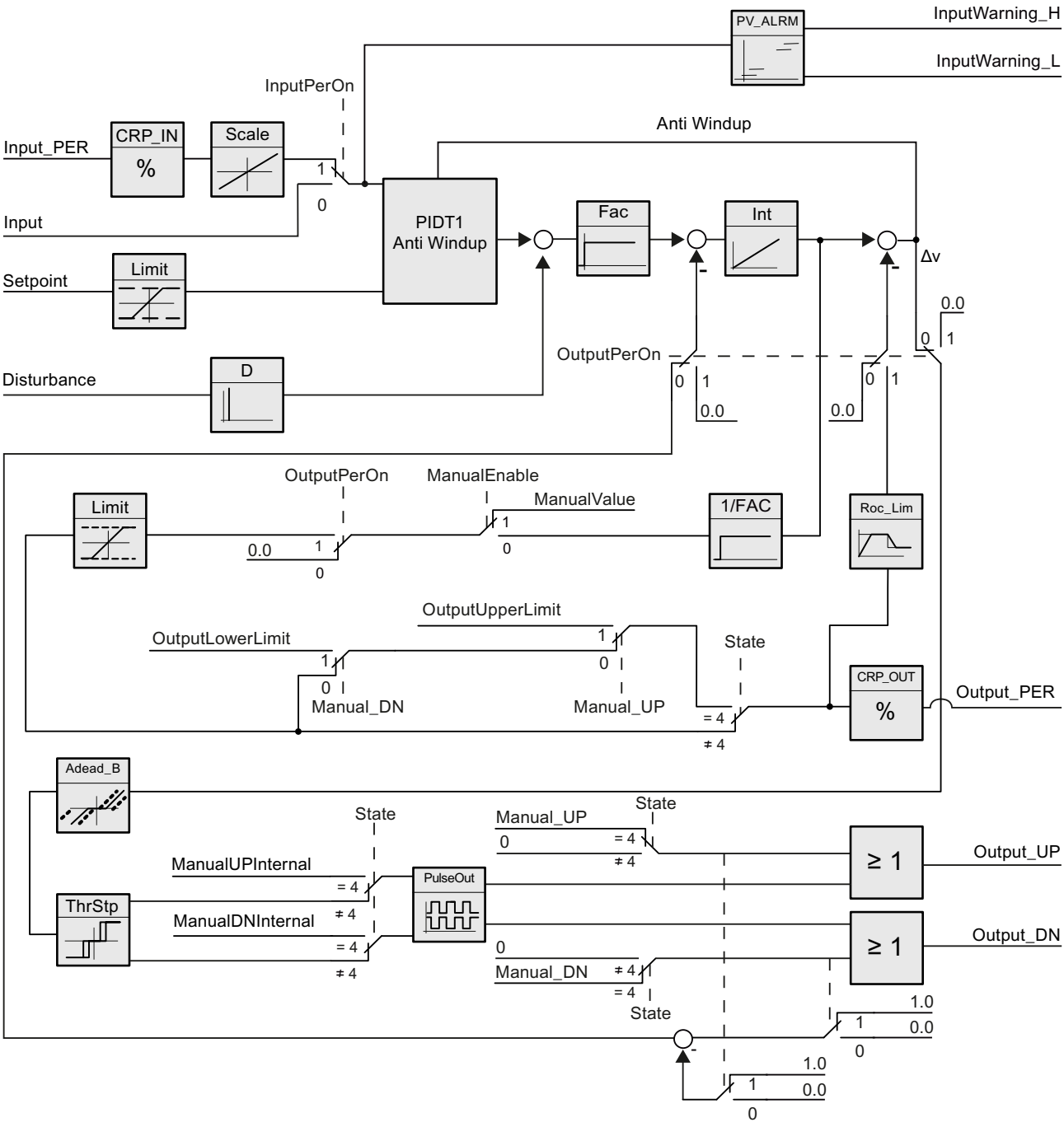

Block diagram with position feedback

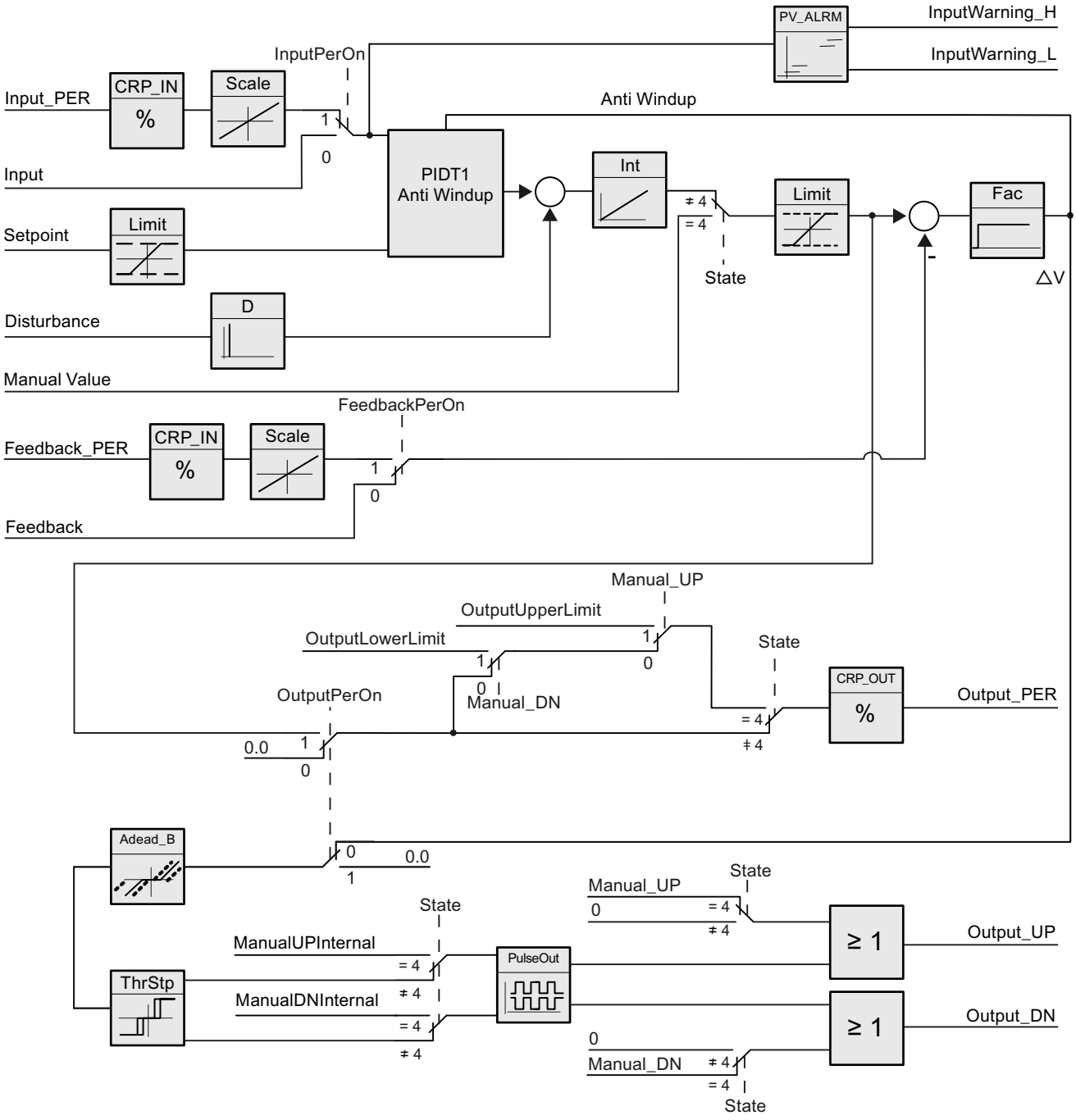

Block diagram of PIDT1 with anti-windup

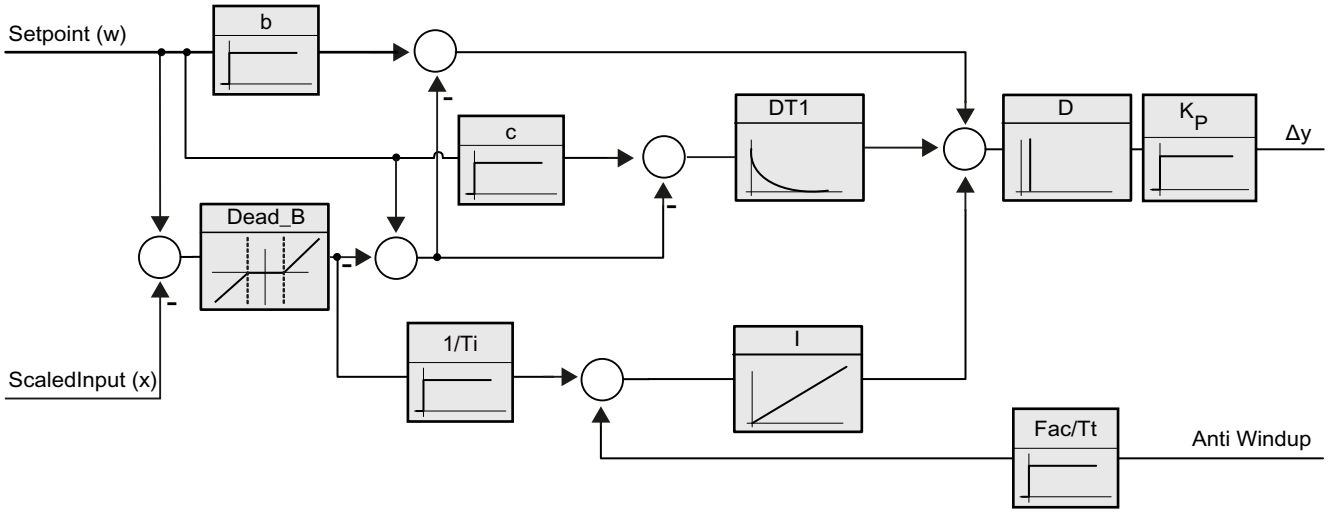

Call

PID_3Step is called in the constant time scale of a cycle interrupt OB.

Download to device

The actual values of retentive tags are only updated when you download PID_3Step completely.
Downloading technology objects to device (Page 44)

Startup

When the CPU starts up, PID_3Step starts in the operating mode that is saved in the Mode in/out parameter. To leave PID_3Step in "Inactive" mode, set RunModeByStartup = FALSE.

Reaction to error

In automatic mode and during commissioning, the reaction to error depends on the ErrorBehaviour and ActivateRecoverMode tags. In manual mode, the reaction is independent of ErrorBehaviour and ActivateRecoverMode. If ActivateRecoverMode = TRUE, the reaction additionally depends on the error that occurred.

ErrorBehaviour	ActivateRecoverMode	Configuration editor > actuator setting > Set Output to	Reaction
FALSE	FALSE	Current output value	Switch to "Inactive" mode (State = 0) The actuator remains in the current position.
FALSE	TRUE	Current output value while error is pending	Switch to "Error monitoring" mode (State = 7) The actuator remains in the current position while the error is pending.
TRUE	FALSE	Substitute output value	Switch to "Approach substitute output value" mode (State = 5) The actuator moves to the configured substitute output value. Switch to "Inactive" mode (State = 0) The actuator remains in the current position.
TRUE	TRUE	Substitute output value while error is pending	Switch to "Approach substitute output value with error monitoring" mode (State = 8) The actuator moves to the configured substitute output value. Switch to "Error monitoring" mode (State = 7)

In manual mode, PID_3Step uses ManualValue as output value, unless the following errors occur:

- 2000h: Invalid value at Feedback_PER parameter.
- 4000h: Invalid value at Feedback parameter.
- 8000h: Error during digital position feedback.

You can only change the position of the actuator with Manual_UP and Manual_DN, not with ManualValue.

The Error parameter indicates whether an error has occurred in this cycle. The ErrorBits parameter shows which errors have occurred. ErrorBits is reset by a rising edge at Reset or ErrorAck.

See also

Parameters State and Mode V2 (Page 288)

Parameter ErrorBits V2 (Page 293)

Configuring PID_3Step V2 (Page 104)

10.2.4.2 Mode of operation of PID_3Step V2

Monitoring process value limits

You specify the high limit and low limit of the process value in the Config.InputUpperLimit and Config.InputLowerLimit tags. If the process value is outside these limits, an error occurs (ErrorBits = 0001h).

You specify a high and low warning limit of the process value in the Config.InputUpperWarning and Config.InputLowerWarning tags. If the process value is outside these warning limits, a warning occurs (Warning = 0040h), and the InputWarning_H or InputWarning_L output parameter changes to TRUE.

Limiting the setpoint

You specify a high limit and low limit of the setpoint in the Config.SetpointUpperLimit and Config.SetpointLowerLimit tags. PID_3Step automatically limits the setpoint to the process value limits. You can limit the setpoint to a smaller range. PID_3Step checks whether this range falls within the process value limits. If the setpoint is outside these limits, the high or low limit is used as the setpoint, and output parameter SetpointLimit_H or SetpointLimit_L is set to TRUE.

The setpoint is limited in all operating modes.

Limiting the output value

You specify a high limit and low limit of the output value in the Config.OutputUpperLimit and Config.OutputLowerLimit tags. The output value limits must be within "Low endstop" and "High endstop".

- High endstop: Config.FeedbackScaling.UpperPointOut
- Low endstop: Config.FeedbackScaling.LowerPointOut

Rule:

UpperPointOut ≥ OutputUpperLimit > OutputLowerLimit ≥ LowerPointOut

The valid values for "High endstop" and "Low endstop" depend upon:

- FeedbackOn
- FeedbackPerOn
- OutputPerOn

OutputPerOn	FeedbackOn	FeedbackPerOn	LowerPointOut	UpperPointOut
FALSE	FALSE	FALSE	Cannot be set (0.0%)	Cannot be set (100.0%)
FALSE	TRUE	FALSE	-100.0% or 0.0%	0.0% or +100.0%
FALSE	TRUE	TRUE	-100.0% or 0.0%	0.0% or +100.0%
TRUE	FALSE	FALSE	Cannot be set (0.0%)	Cannot be set (100.0%)
TRUE	TRUE	FALSE	-100.0% or 0.0%	0.0% or +100.0%
TRUE	TRUE	TRUE	-100.0% or 0.0%	0.0% or +100.0%

If OutputPerOn = FALSE and FeedbackOn = FALSE, you cannot limit the output value. Output_UP and Output_DN are then reset upon Actuator_H = TRUE or Actuator_L = TRUE. If

endstop signals are also not present, Output_UP and Output_DN are reset after a travel time of Config.VirtualActuatorLimit × Retain.TransitTime/100. As of PID_3Step Version 2.3 the monitoring and limiting of the travel time can be deactivated with Config.VirtualActuatorLimit = 0.0.

The output value is 27648 at 100% and -27648 at -100%. PID_3Step must be able to completely close the valve.

NOTE

Use with two or more actuators

PID_3 Step is not suitable for use with two or more actuators (for example, in heating/cooling applications), because different actuators need different PID parameters to achieve a good control response.

Substitute output value

If an error has occurred, PID_3Step can output a substitute output value and move the actuator to a safe position that is specified in the SavePosition tag. The substitute output value must be within the output value limits.

Monitoring signal validity

The values of the following parameters are monitored for validity when used:

- Setpoint
- Input
- Input_PER
- Input_PER
- Feedback
- Feedback_PER
- Disturbance
- ManualValue
- SavePosition
- Output_PER

Monitoring the PID_3Step sampling time

Ideally, the sampling time is equivalent to the cycle time of the calling OB. The PID_3Step instruction measures the time interval between two calls. This is the current sampling time. On every switchover of operating mode and during the initial startup, the mean value is formed from the first 10 sampling times. Too great a difference between the current sampling time and this mean value triggers an error (ErrorBits = 0800h).

The error occurs during tuning if:

- New mean value >= 1.1 x old mean value
- New mean value <= 0.9 x old mean value

The error occurs in automatic mode if:

- New mean value >= 1.5 x old mean value
- New mean value <= 0.5 x old mean value

If you deactivate the sampling time monitoring (CycleTime.EnMonitoring = FALSE), you can also call PID_3Step in OB1. You must then accept a lower control quality due to the deviating sampling time.

Sampling time of the PID algorithm

The controlled system needs a certain amount of time to respond to changes in the output value. It is therefore not advisable to calculate the output value in every cycle. The sampling time of the PID algorithm represents the time between two calculations of the output value. It is calculated during tuning and rounded to a multiple of the cycle time. All other functions of PID_3Step are executed at every call.

Measuring the motor transition time

The motor transition time is the time in seconds the motor requires to move the actuator from the closed to the opened state. The actuator is moved in one direction for a maximum time of Config.VirtualActuatorLimit × Retain.TransitTime/100. PID_3Step requires the motor transition time to be as accurate as possible for good controller results. The data in the actuator documentation contains average values for this type of actuator. The value for the specific actuator used may differ. You can measure the motor transition time during commissioning. The output value limits are not taken into consideration during the motor transition time measurement. The actuator can travel to the high or the low endstop.

The motor transition time is taken into consideration in the calculation of the analog output value as well as in the calculation of the digital output values. It is mainly required for correct operation during auto-tuning and the anti-windup behavior. You should therefore configure the motor transition time with the value that the motor requires to move the actuator from the closed to the opened state.

If no relevant motor transition time is in effect in your process (e.g. with solenoid valves), so that the output value has a direct and full effect on the process, use PID_Compact instead.

Control logic

An increase of the output value is generally intended to cause an increase in the process value. This is referred to as a normal control logic. For cooling and discharge control systems, it may be necessary to invert the control logic. PID_3Step does not work with negative proportional gain. If InvertControl = TRUE, an increasing control deviation causes a reduction in the output value. The control logic is also taken into account during pretuning and fine tuning.

See also

Configuring PID_3Step V1 (Page 120)

10.2.4.3 Changing the PID_3Step V2 interface

The following table shows what has changed in the PID_3Step instruction interface.

PID_3Step V1	PID_3Step V2	Change
Input_PER	Input_PER	Data type from Word to Int
Feedback_PER	Feedback_PER	Data type from Word to Int
	Disturbance	New
Manual_UP	Manual_UP	Function
Manual_DN	Manual_DN	Function
	ErrorAck	New
	ModeActivate	New
Output_PER	Output_PER	Data type from Word to Int
	ManualUPInternal	New
	ManualDNInternal	New
	CancelTuningLevel	New
	VirtualActuatorLImit	New
Config.Loadbackup	Loadbackup	Renamed
Config.TransitTime	Retain.TransitTime	Renamed and retentivity added
GetTransitTime.Start		Replaced by Mode and ModeActivate
SUT.CalculateSUTParams	SUT.CalculateParams	Renamed
SUT.TuneRuleSUT	SUT.TuneRule	Renamed
TIR.CalculateTIRParams	TIR.CalculateParams	Renamed
TIR.TuneRuleTIR	TIR.TuneRule	Renamed
Retain.Mode	Mode	Function Declaration of static for in-out parameters

10.2.4.4 Input parameters of PID_3Step V2

The names of the following parameters apply both to the data block and to access via the Openness API.

Table 10-7

Parameter	Data type	Default	Description
Setpoint	REAL	0.0	Setpoint of the PID controller in automatic mode
Input	REAL	0.0	A tag of the user program is used as source for the process value. If you are using parameter Input, then Config.InputPer-On = FALSE must be set.
Input_PER	INT	0	An analog input is used as the source of the process value. If you are using parameter Input_PER, then Config.InputPer-On = TRUE must be set.

Parameter	Data type	Default	Description
Actuator_H	BOOL	FALSE	Digital position feedback of the valve for the high endstop If Actuator_H = TRUE, the valve is at the high endstop and is no longer moved towards this direction.
Actuator_L	BOOL	FALSE	Digital position feedback of the valve for the low endstop If Actuator_L = TRUE, the valve is at the low endstop and is no longer moved towards this direction.
Feedback	REAL	0.0	Position feedback of the valve If you are using parameter Feedback, then Config.FeedbackPer-On = FALSE must be set.
Feedback_PER	INT	0	Analog position feedback of a valve If you are using parameter Feedback_PER, then Config.Feed-backPerOn = TRUE must be set. Feedback_PER is scaled based on the tags: • Config.FeedbackScaling.LowerPointIn • Config.FeedbackScaling.UpperPointIn • Config.FeedbackScaling.LowerPointOut • Config.FeedbackScaling.UpperPointOut
Disturbance	REAL	0.0	Disturbance variable or precontrol value
ManualEnable	BOOL	FALSE	• A FALSE -> TRUE edge activates "manual mode", while State = 4, Mode remains unchanged. As long as ManualEnable = TRUE, you cannot change the operating mode via a rising edge at ModeActivate or use the commissioning dialog. • A TRUE -> FALSE edge activates the operating mode that is specified by Mode. We recommend that you change the operating mode using ModeActivate only.
ManualValue	REAL	0.0	In manual mode, the absolute position of the valve is specified. ManualValue is only evaluated if you are using Output_PER, **or** if position feedback is available.
Manual_UP	BOOL	FALSE	• Manual_UP = TRUE The valve is opened even if you are using Output_PER or a position feedback. The valve is no longer moved if the high endstop has been reached. See also Config.VirtualActuatorLimit • Manual_UP = FALSE If you are using Output_PER or a position feedback, the valve is moved to ManualValue. Otherwise, the valve is no longer moved. If Manual_UP and Manual_DN are set to TRUE simultaneously, the valve is not moved.
Manual_DN	BOOL	FALSE	• Manual_DN = TRUE The valve is closed even if you are using Output_PER or a position feedback. The valve is no longer moved if the low endstop has been reached. See also Config.VirtualActuatorLimit • Manual_DN = FALSE If you are using Output_PER or a position feedback, the valve is moved to ManualValue. Otherwise, the valve is no longer moved.

Parameter	Data type	Default	Description
ErrorAck	BOOL	FALSE	• FALSE -> TRUE edge ErrorBits and Warning are reset.
Reset	BOOL	FALSE	Restarts the controller. • FALSE -> TRUE edge – Switch to "Inactive" mode – ErrorBits and Warnings are reset. • As long as Reset = TRUE, – PID_3Step remains in "Inactive" mode (State = 0). – You cannot change the operating mode with Mode and ModeActivate or ManualEnable. – You cannot use the commissioning dialog. • TRUE -> FALSE edge – If ManualEnable = FALSE, PID_3Step switches to the operating mode that is saved in Mode. – If Mode = 3, the switchover to Automatic mode is bumpless.
ModeActivate	BOOL	FALSE	• FALSE -> TRUE edge PID_3Step switches to the operating mode that is saved in the Mode parameter.

10.2.4.5 Output parameters of PID_3Step V2

The names of the following parameters apply both to the data block and to access via the Openness API.

Table 10-8

Parameter	Data type	Default	Description
ScaledInput	REAL	0.0	Scaled process value
ScaledFeedback	REAL	0.0	Scaled position feedback For an actuator without position feedback, the position of the actuator indicated by ScaledFeedback is very imprecise. ScaledFeedback may only be used for rough estimation of the current position in this case.
Output_UP	BOOL	FALSE	Digital output value for opening the valve If Config.OutputPerOn = FALSE, the Output_UP parameter is used.
Output_DN	BOOL	FALSE	Digital output value for closing the valve If Config.OutputPerOn = FALSE, the Output_DN parameter is used.
Output_PER	INT	0	Analog output value If Config.OutputPerOn = TRUE, Output_PER is used. Use Output_PER if you are using a valve as actuator which is triggered via an analog output and controlled with a continuous signal, e.g. 0...10 V or 4...20 mA. The value at Output_PER corresponds to the target position of the valve, e.g. Output_PER = 13824, when the valve is to be opened by 50%.

Parameter	Data type	Default	Description
SetpointLimit_H	BOOL	FALSE	If SetpointLimit_H = TRUE, the absolute setpoint high limit is reached (Setpoint ≥ Config.SetpointUpperLimit). The setpoint is limited to Config.SetpointUpperLimit .
SetpointLimit_L	BOOL	FALSE	If SetpointLimit_L = TRUE, the absolute setpoint low limit has been reached (Setpoint ≤ Config.SetpointLowerLimit). The setpoint is limited to Config.SetpointLowerLimit .
InputWarning_H	BOOL	FALSE	If InputWarning_H = TRUE, the process value has reached or exceeded the warning high limit.
InputWarning_L	BOOL	FALSE	If InputWarning_L = TRUE, the process value has reached or fallen below the warning low limit.
State	INT	0	The State parameter (Page 288) shows the current operating mode of the PID controller. You can change the operating mode using the input parameter Mode and a rising edge at ModeActivate. • State = 0: Inactive • State = 1: Pretuning • State = 2: Fine tuning • State = 3: Automatic mode • State = 4: Manual mode • State = 5: Approach substitute output value • State = 6: Transition time measurement • State = 7: Error monitoring • State = 8: Approach substitute output value with error monitoring • State = 10: Manual mode without endstop signals
Error	BOOL	FALSE	If Error = TRUE, at least one error message is pending in this cycle.
ErrorBits	DWORD	DW#16#0	The ErrorBits parameter (Page 293) shows which error messages are pending. ErrorBits is retentive and is reset upon a rising edge at Reset or ErrorAck.

See also

Parameters State and Mode V2 (Page 288)
Parameter ErrorBits V2 (Page 293)

10.2.4.6 In/out parameters of PID-3Step V2

The names of the following parameters apply both to the data block and to access via the Openness API.

Table 10-9

Parameter	Data type	Default	Description
Mode	INT	4	At the Mode parameter, you specify the operating mode to which PID_3Step is to switch. Options are: • Mode = 0: Inactive • Mode = 1: Pretuning • Mode = 2: Fine tuning • Mode = 3: Automatic mode • Mode = 4: Manual mode • Mode = 6: Transition time measurement • Mode = 10: Manual mode without endstop signals The operating mode is activated by: • Rising edge at ModeActivate • Falling edge at Reset • Falling edge at ManualEnable • Cold restart of CPU if RunModeByStartup = TRUE Mode is retentive. A detailed description of the operating modes can be found in Parameters State and Mode V2 (Page 288).

10.2.4.7 Static tags of PID_3Step V2

NOTE

Change the tags identified with (1) only in "Inactive" mode to prevent malfunction of the PID controller.

The names of the following variables apply both to the data block and to access via the Openness API.

Tag	Data type	Default	Description
ManualUpInternal	BOOL	FALSE	In manual mode, each rising edge opens the valve by 5% of the total control range or for the duration of the minimum motor transition time. ManualUpInternal is only evaluated if you are not using Output_PER or a position feedback. This tag is used in the commissioning dialog.
ManualDnInternal	BOOL	FALSE	In manual mode, every rising edge closes the valve by 5% of the total control range or for the duration of the minimum motor transition time. ManualDnInternal is only evaluated if you are not using Output_PER or position feedback. This tag is used in the commissioning dialog.
ActivateRecoverMode	BOOL	TRUE	The ActivateRecoverMode V2 (Page 295) tag determines the reaction to error.

Tag	Data type	Default	Description
RunModeByStartup	BOOL	TRUE	Activate operating mode at Mode parameter after CPU restart If RunModeByStartup = TRUE, PID_3Step starts in the operating mode saved in the Mode parameter after CPU startup. If RunModeByStartup = FALSE, PID_3Step remains in "Inactive" mode after CPU startup.
LoadBackUp	BOOL	FALSE	If LoadBackUp = TRUE, the last set of PID parameters is reloaded. The set was saved prior to the last tuning. LoadBackUp is automatically set back to FALSE.
PhysicalUnit	INT	0	Unit of measurement of the process value and setpoint, e.g., °C, or °F. PhysicalUnit serves the display in the editors and has no influence on the behavior of the control algorithm in the CPU. When importing PID_3Step via the Openness API, PhysicalUnit is reset to the default value.
PhysicalQuantity	INT	0	Physical quantity of the process value and setpoint, e.g., temperature PhysicalQuantity serves the display in the editors and has no influence on the behavior of the control algorithm in the CPU. When importing PID_3Step via the Openness API, PhysicalQuantity is reset to the default value.
ErrorBehaviour	BOOL	FALSE	If ErrorBehaviour = FALSE and an error has occurred, the valve stays at its current position and the controller switches directly to "Inactive" or "Error monitoring" mode. If ErrorBehaviour = TRUE and an error occurs, the actuator moves to the substitute output value and only then switches to "Inactive" or "Error monitoring" mode. If the following errors occur, you can no longer move the valve to a configured substitute output value. • 2000h: Invalid value at Feedback_PER parameter. • 4000h: Invalid value at Feedback parameter. • 8000h: Error during digital position feedback. • 20000h: Invalid value at SavePosition tag.
Warning	DWORD	DW#16#0	The Warning tag (Page 288) shows the warnings since Reset = TRUE or ErrorAck =TRUE. Warning is retentive. Cyclic warnings (for example, process value warning) are shown until the cause of the warning is removed. They are automatically deleted once their cause has gone. Non-cyclic warnings (for example, point of inflection not found) remain and are deleted like errors.
SavePosition	REAL	0.0	Substitute output value If ErrorBehaviour = TRUE, the actuator is moved to a position that is safe for the plant when an error occurs. As soon as the substitute output value has been reached, PID_3Step switches the operating mode according to ActivateRecoverMode. The permitted value range is determined by the configuration. • Config.FeedbackOn = FALSE and Config.OutputPerOn = FALSE: SavePosition = 0.0 or 100.0 • Config.FeedbackOn = TRUE or Config.OutputPerOn = TRUE: Config.OutputUpperLimit ≥ SavePosition ≥ Config.OutputLowerLimit
CurrentSetpoint	REAL	0.0	Currently active setpoint. This value is frozen at the start of tuning.

Tag	Data type	Default	Description
CancelTuningLevel	REAL	10.0	Permissible fluctuation of setpoint during tuning. Tuning is not canceled until: • Setpoint > CurrentSetpoint + CancelTuningLevel or • Setpoint < CurrentSetpoint - CancelTuningLevel
Progress	REAL	0.0	Progress of tuning as a percentage (0.0 - 100.0)
Config.InputPerOn(1)	BOOL	TRUE	If InputPerOn = TRUE, the Input_PER parameter is used. If InputPerOn = FALSE, the Input parameter is used.
Config.OutputPerOn(1)	BOOL	FALSE	If OutputPerOn = TRUE, the Output_PER parameter is used. If OutputPerOn = FALSE, the Ouput_UP and Output_DN parameters are used.
Config.InvertControl(1)	BOOL	FALSE	Invert control logic If InvertControl = TRUE, an increasing control deviation causes a reduction in the output value.
Config.FeedbackOn(1)	BOOL	FALSE	If FeedbackOn = FALSE, a position feedback is simulated. Position feedback is generally activated when FeedbackOn = TRUE.
Config.FeedbackPerOn(1)	BOOL	FALSE	FeedbackPerOn is only effective when FeedbackOn = TRUE. If FeedbackPerOn = TRUE, the analog input is used for the position feedback (Feedback_PER parameter). If FeedbackPerOn = FALSE, the Feedback parameter is used for the position feedback.
Config.ActuatorEndStopOn(1)	BOOL	FALSE	If ActuatorEndStopOn = TRUE, the digital position feedback Actuator_L and Actuator_H are taken into consideration.
Config.InputUpperLimit(1)	REAL	120.0	High limit of the process value Input and Input_PER are monitored to ensure adherence to this limit. At the I/O input, the process value can be a maximum of 18% higher than the standard range (overrange). An error is no longer signaled due to a violation of the "Process value high limit". Only a wire-break and a short-circuit are recognized and PID_3Step reacts according to the configured reaction to error. InputUpperLimit > InputLowerLimit
Config.InputLowerLimit(1)	REAL	0.0	Low limit of the process value InputLowerLimit < InputUpperLimit
Config.InputUpperWarning(1)	REAL	+3.40282-2e+38	Warning high limit of the process value If you set InputUpperWarning outside the process value limits, the configured absolute process value high limit is used as the warning high limit. If you configure InputUpperWarning within the process value limits, this value is used as the warning high limit. InputUpperWarning > InputLowerWarning InputUpperWarning ≤ InputUpperLimit
Config.InputLowerWarning(1)	REAL	-3.40282-2e+38	Warning low limit of the process value If you set InputLowerWarning outside the process value limits, the configured absolute process value low limit is used as the warning low limit. If you configure InputLowerWarning within the process value limits, this value is used as the warning low limit. InputLowerWarning < InputUpperWarning InputLowerWarning ≥ InputLowerLimit

Tag	Data type	Default	Description
Config.OutputUpperLimit(1)	REAL	100.0	High limit of output value The following value range is permitted: UpperPointOut ≥ OutputUpperLimit > OutputLowerLimit For more details, see OutputLowerLimit.
Config.OutputLowerLimit(1)	REAL	0.0	Low limit of output value The following value range is permitted: OutputUpperLimit > OutputLowerLimit ≥ LowerPointOut When using Output_PER, an output value limit of -100% corresponds to the value Output_PER = -27648; 100% correspond to the value Output_PER = 27648. If OutputPerOn = FALSE and FeedbackOn = FALSE, OutputLowerLimit and OutputUpperLimit are not evaluated. Output_UP and Output_DN are then reset at Actuator_H = TRUE or Actuator_L = TRUE (if ActuatorEndStopOn = TRUE) or after a travel time of Config.VirtualActuatorLimit * Retain.TransitTime/100 (if ActuatorEndStopOn = FALSE).
Config.SetpointUpperLimit(1)	REAL	+3.40282-2e+38	High limit of setpoint If you set SetpointUpperLimit outside the process value limits, the configured absolute process value high limit is preassigned as the setpoint high limit. If you configure SetpointUpperLimit within the process value limits, this value is used as the setpoint high limit.
Config.SetpointLowerLimit(1)	REAL	-3.402822-e+38	Low limit of the setpoint If you set SetpointLowerLimit outside the process value limits, the configured absolute process value low limit is preassigned as the setpoint low limit. If you set SetpointLowerLimit within the process value limits, this value is used as the setpoint low limit.
Config.MinimumOnTime(1)	REAL	0.0	Minimum ON time Minimum time in seconds for which the servo drive must be switched on. Config.MinimumOnTime is only effective if Output_UP and Output_DN are used (Config.OutputPerOn = FALSE).
Config.MinimumOffTime(1)	REAL	0.0	Minimum OFF time Minimum time in seconds for which the servo drive must be switched off. Config.MinimumOffTime is only effective if Output_UP and Output_DN are used (Config.OutputPerOn = FALSE).
Config.VirtualActuatorLimit(1)	REAL	150.0	If all the following conditions have been satisfied, the actuator is moved in one direction for the maximum period of VirtualActuatorLimit × Retain.TransitTime/100 and the warning 2000h is output: • Config.OutputPerOn = FALSE • Config.ActuatorEndStopOn = FALSE • Config.FeedbackOn = FALSE If Config.OutputPerOn = FALSE and Config.ActuatorEndStopOn = TRUE or Config.FeedbackOn = TRUE, only the warning 2000h is output. If Config.OutputPerOn = TRUE, VirtualActuatorLimit is not taken into consideration. As of PID_3Step Version 2.3 the monitoring and limiting of the travel time can be deactivated with Config.VirtualActuatorLimit = 0.0.

Tag	Data type	Default	Description
Config.InputScaling.UpperPointIn(1)	REAL	27648.0	Scaling Input_PER high Input_PER is converted to a percentage based on the two value pairs UpperPointOut, UpperPointIn and LowerPointOut, LowerPointIn of the InputScaling structure.
Config.InputScaling.LowerPointIn(1)	REAL	0.0	Scaling Input_PER low Input_PER is converted to a percentage based on the two value pairs UpperPointOut, UpperPointIn and LowerPointOut, LowerPointIn of the InputScaling structure.
Config.InputScaling.UpperPointOut(1)	REAL	100.0	Scaled high process value Input_PER is converted to a percentage based on the two value pairs UpperPointOut, UpperPointIn and LowerPointOut, LowerPointIn of the InputScaling structure.
Config.InputScaling.LowerPointOut(1)	REAL	0.0	Scaled low process value Input_PER is converted to a percentage based on the two value pairs UpperPointOut, UpperPointIn and LowerPointOut, LowerPointIn of the InputScaling structure.
Config.FeedbackScaling.UpperPointIn(1)	REAL	27648.0	Scaling Feedback_PER high Feedback_PER is converted to a percentage based on the two value pairs UpperPointOut, UpperPointIn and LowerPointOut, LowerPointIn of the FeedbackScaling structure.
Config.FeedbackScaling.LowerPointIn(1)	REAL	0.0	Scaling Feedback_PER low Feedback_PER is converted to a percentage based on the two value pairs UpperPointOut, UpperPointIn and LowerPointOut, LowerPointIn of the FeedbackScaling structure.
Config.FeedbackScaling.UpperPointOut(1)	REAL	100.0	High endstop Feedback_PER is converted to a percentage based on the two value pairs UpperPointOut, UpperPointIn and LowerPointOut, LowerPointIn of the FeedbackScaling structure. The permitted value range is determined by the configuration. • FeedbackOn = FALSE: UpperPointOut = 100.0 • FeedbackOn = TRUE: UpperPointOut = 100.0 or 0.0 UpperPointOut ≠ LowerPointOut
Config.FeedbackScaling.LowerPointOut(1)	REAL	0.0	Low endstop Feedback_PER is converted to a percentage based on the two value pairs UpperPointOut, UpperPointIn and LowerPointOut, LowerPointIn of the FeedbackScaling structure. The permitted value range is determined by the configuration. • FeedbackOn = FALSE: LowerPointOut = 0.0 • FeedbackOn = TRUE: LowerPointOut = 0.0 or -100.0 LowerPointOut ≠ UpperPointOut
GetTransitTime.InvertDirection	BOOL	FALSE	If InvertDirection = FALSE, the valve is fully opened, closed, and then reopened in order to determine the valve transition time. If InvertDirection = TRUE, the valve is fully closed, opened, and then closed again.

Tag	Data type	Default	Description
GetTransitTime.SelectFeedback	BOOL	FALSE	If SelectFeedback = TRUE, then Feedback_PER, or Feedback is taken into consideration in the transition time measurement. If SelectFeedback = FALSE, then Actuator_H and Actuator_L are taken into consideration in the transition time measurement.
GetTransitTime.State	INT	0	Current phase of the transition time measurement • State = 0: Inactive • State = 1: Open valve completely • State = 2: Close valve completely • State = 3: Move valve to target position (NewOutput) • State = 4: Transition time measurement successfully completed • State = 5: Transition time measurement canceled
GetTransitTime.NewOutput	REAL	0.0	Target position for transition time measurement with position feedback The target position must be between "High endstop" and "Low endstop". The difference between NewOutput and ScaledFeedback must be at least 50% of the permissible control range.
CycleTime.StartEstimation	BOOL	TRUE	If StartEstimation = TRUE, the measurement of the PID_3Step sampling time is started. CycleTime.StartEstimation = FALSE once measurement is complete.
CycleTime.EnEstimation	BOOL	TRUE	If EnEstimation = TRUE, the PID_3Step sampling time is calculated. If CycleTime.EnEstimation = FALSE, the PID_3Step sampling time is not calculated and you need to correct the configuration of CycleTime.Value manually.
CycleTime.EnMonitoring	BOOL	TRUE	If EnMonitoring = TRUE, the PID_3Step sampling time is monitored. If it is not possible to execute PID_3Step within the sampling time, the error 0800h is output and the operating mode is switched. ActivateRecoverMode and ErrorBehaviour determine which operating mode is switched to. If EnMonitoring = FALSE, the PID_3Step sampling time is not monitored, the error 0800h is not output, and the operating mode is not switched.
CycleTime.Value(1)	REAL	0.1	PID_3Step sampling time in seconds CycleTime.Value is determined automatically and is usually equivalent to the cycle time of the calling OB.
CtrlParamsBackUp.SetByUser	BOOL	FALSE	Saved value of Retain.CtrlParams.SetByUser You can reload values from the CtrlParamsBackUp structure with LoadBackUp = TRUE.
CtrlParamsBackUp.Gain	REAL	1.0	Saved proportional gain
CtrlParamsBackUp.Ti	REAL	20.0	Saved integration time in seconds
CtrlParamsBackUp.Td	REAL	0.0	Saved derivative action time in seconds
CtrlParamsBackUp.TdFiltRatio	REAL	0.2	Saved derivative delay coefficient
CtrlParamsBackUp.PWeighting	REAL	1.0	Saved proportional action weighting
CtrlParamsBackUp.DWeighting	REAL	1.0	Saved derivative action weighting
CtrlParamsBackUp.Cycle	REAL	1.0	Saved sampling time of PID algorithm in seconds
CtrlParamsBackUp.InputDeadBand	REAL	0.0	Saved deadzone width of the control deviation

Tag	Data type	Default	Description
PIDSelfTune.SUT.Calculate-Params	BOOL	FALSE	The properties of the controlled system are saved during tuning. If CalculateParams = TRUE, the PID parameters are recalculated on the basis of these properties. The PID parameters are calculated using the method set in TuneRule. CalculateParams is set to FALSE following calculation.
PIDSelfTune.SUT.TuneRule	INT	1	Methods used to calculate parameters during pretuning: • SUT.TuneRule = 0: PID fast I (faster control response with higher amplitudes of the output value than with SUT.TuneRule =1) • SUT.TuneRule = 1: PID slow I (slower control response with lower amplitudes of the output value than with SUT.TuneRule = 0) • SUT.TuneRule = 2: Chien, Hrones and Reswick PID • SUT.TuneRule = 3: Chien, Hrones, Reswick PI • SUT.TuneRule = 4: PID fast II (faster control response with higher amplitudes of the output value than with SUT.TuneRule = 5) • SUT.TuneRule = 5: PID slow II (slower control response with lower amplitudes of the output value than with SUT.TuneRule = 4) The methods SUT.TuneRule = 0 and 1 differ from the methods SUT.TuneRule = 4 and 5 only in the calculation of the proportional gain: When SUT.TuneRule = 0 and 1, the proportional gain is calculated based on the compensation time of the process. When SUT.TuneRule = 4 and 5, this happens based on the delay time of the process. SUT.TuneRule = 4 and 5 returns a higher value for the proportional gain and thus a faster control response with higher amplitudes of the output value than with SUT.TuneRule = 0 and 1.
PIDSelfTune.SUT.State	INT	0	The SUT.State tag indicates the current phase of pretuning: • State = 0: Initialize pretuning • State = 50: Determine start position without position feedback • State = 100: Calculate the standard deviation • State = 200: Find the point of inflection • State = 300: Determine the rise time • State = 9900: Pretuning successful • State = 1: Pretuning not successful
PIDSelfTune.TIR.RunIn	BOOL	FALSE	With the RunIn tag, you can specify that fine tuning can also be performed without pretuning. • RunIn = FALSE Pretuning is started when fine tuning is started from inactive or manual mode. If fine tuning is started from automatic mode, the system uses the existing PID parameters to control to the setpoint. Only then will fine tuning start. If pretuning is not possible, PID_3Step switches to the mode from which tuning was started. • RunIn = TRUE The pretuning is skipped. PID_3Step attempts to reach the setpoint with the minimum or maximum output value. This can produce increased overshoot. Only then will fine tuning start. RunIn is set to FALSE after fine tuning.
PIDSelfTune.TIR.Calculate-Params	BOOL	FALSE	The properties of the controlled system are saved during tuning. If CalculateParams = TRUE, the PID parameters are recalculated on the basis of these properties. The PID parameters are calculated using the method set in TuneRule. CalculateParams is set to FALSE following calculation.

Tag	Data type	Default	Description
PIDSelfTune.TIR.TuneRule	INT	0	Methods used to calculate parameters during fine tuning: • TIR.TuneRule = 0: PID automatic • TIR.TuneRule = 1: PID fast (faster control response with higher amplitudes of the output value than with TIR.TuneRule = 2) • TIR.TuneRule = 2: PID slow (slower control response with lower amplitudes of the output value than with TIR.TuneRule = 1) • TIR.TuneRule = 3: Ziegler-Nichols PID • TIR.TuneRule = 4: Ziegler-Nichols PI • TIR.TuneRule = 5: Ziegler-Nichols P To be able to repeat the calculation of the PID parameters with TIR.CalculateParams and TIR.TuneRule = 0, 1 or 2, the previous fine tuning also has to have been executed with TIR.TuneRule = 0, 1 or 2. If this is not the case, TIR.TuneRule = 3 is used. The recalculation of the PID parameters with TIR.CalculateParams and TIR.TuneRule = 3, 4 or 5 is always possible.
PIDSelfTune.TIR.State	INT	0	The TIR.State tag indicates the current phase of fine tuning: • State = -100 Fine tuning is not possible. Pretuning will be performed first. • State = 0: Initialize fine tuning • State = 200: Calculate the standard deviation • State = 300: Attempt to reach the setpoint with the maximum or minimum output value • State = 400: Attempt to reach the setpoint with existing PID parameters (if pretuning was successful) • State = 500: Determine oscillation and calculate parameters • State = 9900: Fine tuning successful • State = 1: Fine tuning not successful
Retain.TransitTime(1)	REAL	30.0	Motor transition time in seconds Time in seconds the actuating drive requires to move the valve from the closed to the opened state. TransitTime is retentive.
Retain.CtrlParams.SetByUser(1)	BOOL	FALSE	If SetByUser = FALSE, the PID parameters are determined automatically and PID_3Step operates with a dead zone at the output value. The deadzone width is calculated during tuning on the basis of the standard deviation of the output value and saved in Retain.CtrlParams.OutputDeadBand. If SetByUser = TRUE, the PID parameters are entered manually and PID_3 Step operates without a dead zone at the output value. Retain.CtrlParams.OutputDeadBand = 0.0 SetByUser is retentive.
Retain.CtrlParams.Gain(1)	REAL	1.0	Active proportional gain To invert the control logic, use the Config.InvertControl tag. Negative values at Gain also invert the control logic. We recommend you use only InvertControl to set the control logic. The control logic is also inverted if InvertControl = TRUE and Gain < 0.0. Gain is retentive.
Retain.CtrlParams.Ti(1)	REAL	20.0	• Ti > 0.0: Active integration time in seconds • Ti = 0.0: Integral action is deactivated Ti is retentive.
Retain.CtrlParams.Td(1)	REAL	0.0	• Td > 0.0: Active derivative action time in seconds • Td = 0.0: Derivative action is deactivated Td is retentive.

Tag	Data type	Default	Description
Retain.CtrlParams.TdFiltRatio(1)	REAL	0.2	Active derivative delay coefficient The derivative delay coefficient delays the effect of the derivative action. Derivative delay = derivative action time × derivative delay coefficient • 0.0: Derivative action is effective for one cycle only and therefore almost not effective. • 0.5: This value has proved useful in practice for controlled systems with **one** dominant time constant. • > 1.0: The greater the coefficient, the longer the effect of the derivative action is delayed. TdFiltRatio is retentive.
Retain.CtrlParams.PWeighting(1)	REAL	1.0	Active proportional action weighting The proportional action may weaken with changes to the setpoint. Values from 0.0 to 1.0 are applicable. • 1.0: Proportional action for setpoint change is fully effective • 0.0: Proportional action for setpoint change is not effective The proportional action is always fully effective when the process value is changed. PWeighting is retentive.
Retain.CtrlParams.DWeighting(1)	REAL	1.0	Active derivative action weighting The derivative action may weaken with changes to the setpoint. Values from 0.0 to 1.0 are applicable. • 1.0: Derivative action is fully effective upon setpoint change • 0.0: Derivative action is not effective upon setpoint change The derivative action is always fully effective when the process value is changed. DWeighting is retentive.
Retain.CtrlParams.Cycle(1)	REAL	1.0	Active sampling time of PID algorithm in seconds, rounded to an integer multiple of the cycle time of the calling OB. Cycle is retentive.
Retain.CtrlParams.InputDeadBand(1)	REAL	0.0	Deadzone width of the control deviation InputDeadBand is retentive.

See also

Parameters State and Mode V2 (Page 288)
Tag ActivateRecoverMode V2 (Page 295)
Downloading technology objects to device (Page 44)

10.2.4.8 Parameters State and Mode V2

Correlation of the parameters

The State parameter shows the current operating mode of the PID controller. You cannot change the State parameter.

With a rising edge at ModeActivate, PID_3Step switches to the operating mode saved in the Mode in-out parameter.

When the CPU is switched on or switches from Stop to RUN mode, PID_3Step starts in the operating mode that is saved in the Mode parameter. To leave PID_3Step in "Inactive" mode, set RunModeByStartup = FALSE.

Meaning of values

State	Description of operating mode
0	Inactive The controller is switched off and no longer changes the valve position. The change from Inactive mode to Automatic mode is bumpless.
1	Pretuning The pretuning determines the process response to a pulse of the output value and searches for the point of inflection. The PID parameters are calculated from the maximum rate of rise and dead time of the controlled system. You obtain the best PID parameters when you perform pretuning and fine tuning. Pretuning requirements: • The motor transition time has been configured or measured. • Inactive (State = 0), manual mode (State = 4), or automatic mode (State = 3) • ManualEnable = FALSE • Reset = FALSE • The setpoint and the process value lie within the configured limits. The more stable the process value is, the easier it is to calculate the PID parameters and the more precise the result will be. Noise on the process value can be tolerated as long as the rate of rise of the process value is significantly higher as compared to the noise. This is most likely the case in operating modes "Inactive" and "manual mode". The setpoint is frozen in the CurrentSetpoint tag. Tuning is canceled when: • Setpoint > CurrentSetpoint + CancelTuningLevel or • Setpoint < CurrentSetpoint - CancelTuningLevel Before the PID parameters are recalculated, they are backed up and can be reactivated with LoadBackUp. The controller switches to automatic mode following successful pretuning. If pretuning is unsuccessful, the switchover of operating mode is dependent on ActivateRecoverMode and ErrorBehaviour. The pretuning phase is indicated with the SUT.State tag.
2	Fine tuning Fine tuning generates a constant, limited oscillation of the process value. The PID parameters are recalculated based on the amplitude and frequency of this oscillation. PID parameters from fine tuning usually have better master control and disturbance characteristics than PID parameters from pretuning. You obtain the best PID parameters when you perform pretuning and fine tuning. PID_3Step automatically attempts to generate an oscillation greater than the noise of the process value. Fine tuning is only minimally influenced by the stability of the process value. The setpoint is frozen in the CurrentSetpoint tag. Tuning is canceled when: • Setpoint > CurrentSetpoint + CancelTuningLevel or • Setpoint < CurrentSetpoint - CancelTuningLevel The PID parameters are backed up before fine tuning. They can be reactivated with LoadBackUp. Requirements for fine tuning: • The motor transition time has been configured or measured. • The setpoint and the process value lie within the configured limits. • ManualEnable = FALSE • Reset = FALSE • Automatic (State = 3), inactive (State = 0) or manual (State = 4) mode

State	Description of operating mode
	Fine tuning proceeds as follows when started from: • Automatic mode (State = 3) Start fine tuning from automatic mode if you wish to improve the existing PID parameters through tuning. PID_3Step controls the system using the existing PID parameters until the control loop has stabilized and the requirements for fine tuning have been met. Only then will fine tuning start. • Inactive (State = 0) or manual mode (State = 4) If the requirements for pretuning are met, pretuning is started. The determined PID parameters will be used for control until the control loop has stabilized and the requirements for fine tuning have been met. If PIDSelfTune.TIR.RunIn = TRUE, pretuning is skipped and an attempt is made to reach the setpoint with the minimum or maximum output value. This can produce increased overshoot. Fine tuning then starts automatically. The controller switches to automatic mode following successful fine tuning. If fine tuning is unsuccessful, the switchover of operating mode is dependent on ActivateRecoverMode and ErrorBehaviour. The fine tuning phase is indicated with the TIR.State tag.
3	Automatic mode In automatic mode, PID_3Step controls the controlled system in accordance with the parameters specified. The controller switches to automatic mode if one the following requirements is fulfilled: • Pretuning successfully completed • Fine tuning successfully completed • Changing of the Mode in-out parameter to the value 3 and a rising edge at ModeActivate. The switchover from automatic mode to manual mode is only bumpless if carried out in the commissioning editor. The ActivateRecoverMode tag is taken into consideration in automatic mode.
4	Manual mode In manual mode, you specify manual output values in the Manual_UP and Manual_DN parameters or Manual-Value parameter. Whether or not the actuator can be moved to the output value in the event of an error is described in the ErrorBits parameter. You can also activate this operating mode using ManualEnable = TRUE. We recommend that you change the operating mode using Mode and ModeActivate only. The switchover from manual mode to automatic mode is bumpless. Manual mode is also possible when an error is pending.
5	Approach substitute output value This operating mode is activated in the event of an error, if Errorbehaviour = TRUE and ActivateRecoverMode = FALSE.. PID_3Step moves the actuator to the substitute output value and then switches to "Inactive" mode.
6	Transition time measurement The time that the motor needs to completely open the valve from the closed condition is determined. This operating mode is activated when Mode = 6 and ModeActivate = TRUE is set. If endstop signals are used to measure the transition time, the valve will be opened completely from its current position, closed completely, and opened completely again. If GetTransitTime.InvertDirection = TRUE, this behavior is inverted. If position feedback is used to measure the transition time, the actuator will be moved from its current position to a target position. The output value limits are not taken into consideration during the transition time measurement. The actuator can travel to the high or the low endstop.
7	Error monitoring The control algorithm is switched off and no longer changes the valve position. This operating mode is activated instead of "Inactive" mode in the event of an error. All the following conditions must be met: • Automatic mode (Mode = 3) • Errorbehaviour = FALSE • ActivateRecoverMode = TRUE • One or more errors have occurred in which ActivateRecoverMode (Page 295) is effective.

State	Description of operating mode
	As soon as the errors are no longer pending, PID_3Step switches back to automatic mode.
8	Approach substitute output value with error monitoring This operating mode is activated instead of "approach substitute output value" mode when an error occurs. PID_3Step moves the actuator to the substitute output value and then switches to "error monitoring" mode. All the following conditions must be met: • Automatic mode (Mode = 3) • Errorbehaviour = TRUE • ActivateRecoverMode = TRUE • One or more errors have occurred in which ActivateRecoverMode (Page 295) is effective. As soon as the errors are no longer pending, PID_3Step switches back to automatic mode.
10	Manual mode without endstop signals The endstop signals are **not** taken into consideration, even though Config.ActuatorEndStopOn = TRUE. The output value limits are not taken into consideration. Otherwise, PID_3Step behaves the same as in manual mode.

ENO characteristics

If State = 0, then ENO = FALSE.
If State ≠ 0, then ENO = TRUE.

Automatic switchover of operating mode during commissioning

Automatic mode is activated following successful pretuning or fine tuning. The following table shows how Mode and State change during successful pretuning.

Cycle no.	Mode	State	Action
0	4	4	Set Mode = 1
1	1	4	Set ModeActivate = TRUE
1	4	1	Value of State is saved in Mode parameter Pretuning is started
n	4	1	Pretuning successfully completed
n	3	3	Automatic mode is started

PID_3Step automatically switches the operating mode in the event of an error. The following table shows how Mode and State change during pretuning with errors.

Cycle no.	Mode	State	Action
0	4	4	Set Mode = 1
1	1	4	Set ModeActivate = TRUE
1	4	1	Value of State is saved in Mode parameter Pretuning is started
n	4	1	Pretuning canceled
n	4	4	Manual mode is started

If ActivateRecoverMode = TRUE, the operating mode that is saved in the Mode parameter is activated. At the start of transition time measurement, pretuning, or fine tuning, PID_3Step

saved the value of State in the Mode in/out parameter. PID_3Step therefore switches to the operating mode from which transition time measurement or tuning was started.
If ActivateRecoverMode = FALSE, "Inactive" or "Approach substitute output value" mode is activated.

Automatic switchover of operating mode after transition time measurement

If ActivateRecoverMode = TRUE, the operating mode that is saved in the Mode parameter is activated after successful transition time measurement.
If ActivateRecoverMode = FALSE, the system switches to "Inactive" operating mode after successful transition time measurement.

Automatic switchover of operating mode in automatic mode

PID_3Step automatically switches the operating mode in the event of an error. The following diagram illustrates the influence of ErrorBehaviour and ActivateRecoverMode on this switchover of operating mode.

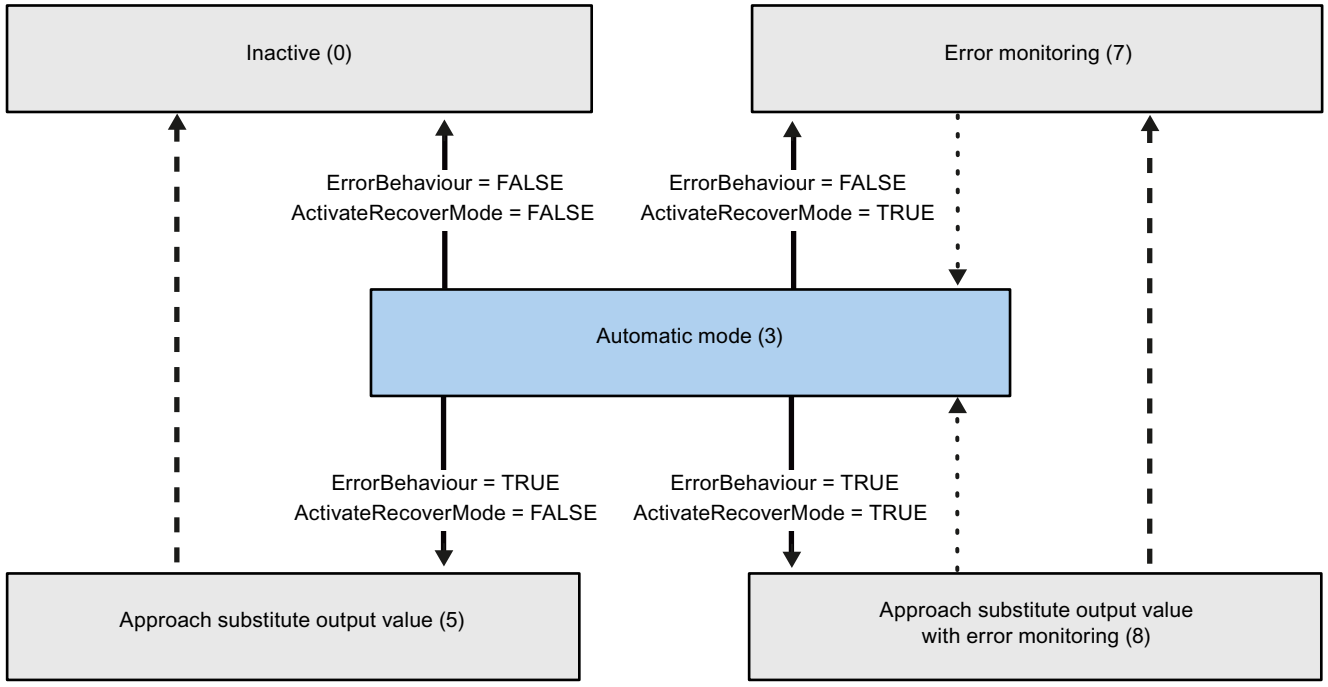

Automatic switchover of operating mode in the event of an error

Automatic switchover of operating mode once the current operation has been completed.

Automatic switchover of operating mode when error is no longer pending.

See also

Tag ActivateRecoverMode V2 (Page 295)
Parameter ErrorBits V2 (Page 293)

10.2.4.9 Parameter ErrorBits V2

If several errors are pending simultaneously, the values of the ErrorBits are displayed with binary addition. The display of ErrorBits = 0003h, for example, indicates that the errors 0001h and 0002h are pending simultaneously.

If there is a position feedback, PID_3Step uses ManualValue as output value in manual mode. The exception is Errorbits = 10000h.

ErrorBits (DW#16#...)	Description
0000	There is no error.
0001	The "Input" parameter is outside the process value limits. • Input > Config.InputUpperLimit or • Input < Config.InputLowerLimit If automatic mode was active before the error occurred and ActivateRecoverMode = TRUE, PID_3Step remains in automatic mode. If pretuning, fine tuning, or transition time measurement mode and ActivateRecoverMode = TRUE were active before the error occurred, PID_3Step switches to the operating mode that is saved in the Mode parameter.
0002	Invalid value at "Input_PER" parameter. Check whether an error is pending at the analog input. If automatic mode was active before the error occurred and ActivateRecoverMode = TRUE, PID_3Step switches to "Approach substitute output value with error monitoring" or "Error monitoring" mode. As soon as the error is no longer pending, PID_3Step switches back to automatic mode. If pretuning, fine tuning, or transition time measurement mode and ActivateRecoverMode = TRUE were active before the error occurred, PID_3Step switches to the operating mode that is saved in the Mode parameter.
0004	Error during fine tuning. The oscillation of the process value could not be maintained. If ActivateRecoverMode = TRUE before the error occurred, PID_3Step cancels the tuning and switches to the operating mode that is saved in the Mode parameter.
0010	The setpoint was changed during tuning. You can set the permitted fluctuation of the setpoint at the CancelTuningLevel tag. If ActivateRecoverMode = TRUE before the error occurred, PID_3Step cancels the tuning and switches to the operating mode that is saved in the Mode parameter.
0020	Pretuning is not permitted during fine tuning. If ActivateRecoverMode = TRUE before the error occurred, PID_3Step remains in fine tuning mode.
0080	Error during pretuning. The output value limits are not configured correctly or the process value is not reacting as expected. Make sure that: • The limits of the output value are configured correctly and match the control logic. • It is possible to change the output value so that the process value approaches the setpoint. The output value is not already limited by the corresponding output value limit before the start of pretuning and the actuator has not yet reached the corresponding endstop. Example: With normal control logic and a process value that is below the setpoint, the output value must not have reached the high limit and the actuator must not have reached the high endstop before the start of the pretuning. • The process value does not show a strong oscillation before the start of the pretuning. If ActivateRecoverMode = TRUE before the error occurred, PID_3Step cancels the tuning and switches to the operating mode that is saved in the Mode parameter.
0100	Error during fine tuning resulted in invalid parameters. If ActivateRecoverMode = TRUE before the error occurred, PID_3Step cancels the tuning and switches to the operating mode that is saved in the Mode parameter.

ErrorBits (DW#16#...)	Description
0200	Invalid value at "Input" parameter: Value has an invalid number format. If automatic mode was active before the error occurred and ActivateRecoverMode = TRUE, PID_3Step switches to "Approach substitute output value with error monitoring" or "Error monitoring" mode. As soon as the error is no longer pending, PID_3Step switches back to automatic mode. If pretuning, fine tuning, or transition time measurement mode and ActivateRecoverMode = TRUE were active before the error occurred, PID_3Step switches to the operating mode that is saved in the Mode parameter.
0400	Calculation of output value failed. Check the PID parameters. If automatic mode was active before the error occurred and ActivateRecoverMode = TRUE, PID_3Step switches to "Approach substitute output value with error monitoring" or "Error monitoring" mode. As soon as the error is no longer pending, PID_3Step switches back to automatic mode. If pretuning, fine tuning, or transition time measurement mode and ActivateRecoverMode = TRUE were active before the error occurred, PID_3Step switches to the operating mode that is saved in the Mode parameter.
0800	Sampling time error: PID_3Step is not called within the sampling time of the cyclic interrupt OB. It is recommended to call PID_3Step in a cyclic interrupt OB without conditions and to activate or deactivate it via the operating mode at the Mode parameter. Conditional calls or the call in OB1 can have a negative effect on the control quality. Monitoring of the sampling time can be disabled with CycleTime.EnMonitoring = FALSE. If automatic mode was active before the error occurred and ActivateRecoverMode = TRUE, PID_3Step remains in automatic mode. If pretuning, fine tuning, or transition time measurement mode and ActivateRecoverMode = TRUE were active before the error occurred, PID_3Step switches to the operating mode that is saved in the Mode parameter. If this error occurred during simulation with PLCSIM, see the notes under Simulating PID_3Step V2 with PLCSIM (Page 119).
1000	Invalid value at "Setpoint" parameter: Value has an invalid number format. If automatic mode was active before the error occurred and ActivateRecoverMode = TRUE, PID_3Step switches to "Approach substitute output value with error monitoring" or "Error monitoring" mode. As soon as the error is no longer pending, PID_3Step switches back to automatic mode. If pretuning, fine tuning, or transition time measurement mode and ActivateRecoverMode = TRUE were active before the error occurred, PID_3Step switches to the operating mode that is saved in the Mode parameter.
2000	Invalid value at Feedback_PER parameter. Check whether an error is pending at the analog input. The actuator cannot be moved to the substitute output value and remains in its current position. In manual mode, you can change the position of the actuator only with Manual_UP and Manual_DN, and not with ManualValue. If automatic mode was active before the error occurred, ActivateRecoverMode = TRUE, and the error is no longer pending, PID_3Step switches back to automatic mode. If pretuning, fine tuning, or transition time measurement mode and ActivateRecoverMode = TRUE were active before the error occurred, PID_3Step switches to the operating mode that is saved in the Mode parameter.
4000	Invalid value at Feedback parameter. Value has an invalid number format. The actuator cannot be moved to the substitute output value and remains in its current position. In manual mode, you can change the position of the actuator only with Manual_UP and Manual_DN, and not with ManualValue. If automatic mode was active before the error occurred, ActivateRecoverMode = TRUE, and the error is no longer pending, PID_3Step switches back to automatic mode. If pretuning, fine tuning, or transition time measurement mode and ActivateRecoverMode = TRUE were active before the error occurred, PID_3Step switches to the operating mode that is saved in the Mode parameter.

ErrorBits (DW#16#...)	Description
8000	Error during digital position feedback. Actuator_H = TRUE and Actuator_L = TRUE. The actuator cannot be moved to the substitute output value and remains in its current position. Manual mode is not possible in this state. In order to move the actuator from this state, you must deactivate the "Actuator endstop" (Config.ActuatorEndStopOn = FALSE) or switch to manual mode without endstop signals (Mode = 10). If automatic mode was active before the error occurred, ActivateRecoverMode = TRUE, and the error is no longer pending, PID_3Step switches back to automatic mode. If pretuning, fine tuning, or transition time measurement mode and ActivateRecoverMode = TRUE were active before the error occurred, PID_3Step switches to the operating mode that is saved in the Mode parameter.
10000	Invalid value at ManualValue parameter. Value has an invalid number format. The actuator cannot be moved to the manual value and remains in its current position. Specify a valid value in ManualValue or move the actuator in manual mode with Manual_UP and Manual_DN.
20000	Invalid value at SavePosition tag. Value has an invalid number format. The actuator cannot be moved to the substitute output value and remains in its current position.
40000	Invalid value at Disturbance parameter. Value has an invalid number format. If automatic mode was active and ActivateRecoverMode = TRUE before the error occurred, Disturbance is set to zero. PID_3Step remains in automatic mode. If pretuning or fine tuning mode was active and ActivateRecoverMode = TRUE before the error occurred, PID_3Step switches to the operating mode saved in the Mode parameter. If Disturbance in the current phase has no effect on the output value, tuning is not be canceled. The error has no effect during transition time measurement.

10.2.4.10 Tag ActivateRecoverMode V2

The ActivateRecoverMode tag determines the reaction to error. The Error parameter indicates if an error is pending. When the error is no longer pending, Error = FALSE. The ErrorBits parameter shows which errors have occurred.

NOTICE
Your system may be damaged. If ActivateRecoverMode = TRUE, PID_3Step remains in automatic mode even if the process limit values are exceeded. This may damage your system. It is essential to configure how your controlled system reacts in the event of an error to protect your system from damage.

Automatic mode

ActivateRecover-Mode	Description
FALSE	In the event of an error, PID_3Step switches to "Inactive" or "Approach substitute output value" mode. The controller is only activated by a falling edge at Reset or a rising edge at ModeActivate.

ActivateRecover-Mode	Description
TRUE	If errors occur frequently in automatic mode, this setting has a negative effect on the control response, because PID_3Step switches between the calculated output value and the substitute output value at each error. In this case, check the ErrorBits parameter and eliminate the cause of the error. If one or more of the following errors occur, PID_3Step stays in automatic mode: • 0001h: The "Input" parameter is outside the process value limits. • 0800h: Sampling time error • 40000h: Invalid value at Disturbance parameter. If one or more of the following errors occur, PID_3Step switches to "Approach substitute output value with error monitoring" or "Error monitoring" mode: • 0002h: Invalid value at Input_PER parameter. • 0200h: Invalid value at Input parameter. • 0400h: Calculation of output value failed. • 1000h: Invalid value at Setpoint parameter. If one or more of the following errors occur, PID_3Step can no longer move the actuator: • 2000h: Invalid value at Feedback_PER parameter. • 4000h: Invalid value at Feedback parameter. • 8000h: Error during digital position feedback. • 20000h: Invalid value at SavePosition tag. Value has an invalid number format. The characteristics are independent of ErrorBehaviour. As soon as the errors are no longer pending, PID_3Step switches back to automatic mode.

Pretuning, fine tuning, and transition time measurement

ActivateRecover-Mode	Description
FALSE	In the event of an error, PID_3Step switches to "Inactive" or "Approach substitute output value" mode. The controller is only activated by a falling edge at Reset or a rising edge at ModeActivate. The controller changes to "Inactive" mode after successful transition time measurement.
TRUE	If the following error occurs, PID_3Step remains in the active mode: • 0020h: Pretuning is not permitted during fine tuning. The following errors are ignored: • 10000h: Invalid value at ManualValue parameter. • 20000h: Invalid value at SavePosition tag. When any other error occurs, PID_3Step cancels the tuning and switches to the mode from which tuning was started.

Manual mode

ActivateRecoverMode is not effective in manual mode.

See also

Static tags of PID_3Step V2 (Page 280)
Parameters State and Mode V2 (Page 288)

10.2.4.11 Tag Warning V2

If several warnings are pending simultaneously, their values are displayed with binary addition. The display of warning 0005h, for example, indicates that the warnings 0001h and 0004h are pending simultaneously.

Warning (DW#16#...)	Description
0000	No warning pending.
0001	The point of inflection was not found during pretuning.
0004	The setpoint was limited to the configured limits.
0008	Not all the necessary controlled system properties were defined for the selected method of calculation. Instead, the PID parameters were calculated using the TIR.TuneRule = 3 method.
0010	The operating mode could not be changed because Reset = TRUE or ManualEnable = TRUE.
0020	The cycle time of the calling OB limits the sampling time of the PID algorithm. Improve results by using shorter OB cycle times.
0040	The process value exceeded one of its warning limits.
0080	Invalid value at Mode. The operating mode is not switched.
0100	The manual value was limited to the limits of the controller output.
0200	The specified rule for tuning is not supported. No PID parameters are calculated.
0400	The transition time cannot be measured because the actuator settings do not match the selected measuring method.
0800	The difference between the current position and the new output value is too small for transition time measurement. This can produce incorrect results. The difference between the current output value and new output value must be at least 50% of the entire control range.
1000	The substitute output value cannot be reached because it is outside the output value limits.
2000	The actuator was moved in one direction for longer than Config.VirtualActuatorLimit × Retain.TransitTime. Check whether the actuator has reached an endstop signal.

The following warnings are deleted as soon as the cause is eliminated:

- 0001h
- 0004h
- 0008h
- 0040h
- 0100h
- 2000h

All other warnings are cleared with a rising edge at Reset or ErrorAck.

10.2.5 PID_3Step V1

10.2.5.1 Description PID_3Step V1

Description

You use the PID_3Step instruction to configure a PID controller with self tuning for valves or actuators with integrating behavior.

The following operating modes are possible:

- Inactive
- Pretuning
- Fine tuning
- Automatic mode
- Manual mode
- Approach substitute output value
- Transition time measurement
- Approach substitute output value with error monitoring
- Error monitoring

For a more detailed description of the operating modes, see the State parameter.

PID algorithm

PID_3Step is a PIDT1 controller with anti-windup and weighting of the proportional and derivative actions. The following equation is used to calculate the output value.

$$\Delta y = K_p \cdot s \cdot \left[(b \cdot w - x) + \frac{1}{T_I \cdot s} (w - x) + \frac{T_D \cdot s}{a \cdot T_D \cdot s + 1} (c \cdot w - x) \right]$$

Δy	Output value of the PID algorithm
K_p	Proportional gain
s	Laplace operator
b	Proportional action weighting
w	Setpoint
x	Process value
T_I	Integral action time
a	Derivative delay coefficient ($T1 = a \times T_D$)
T_D	Derivative action time
c	Derivative action weighting

Block diagram without position feedback

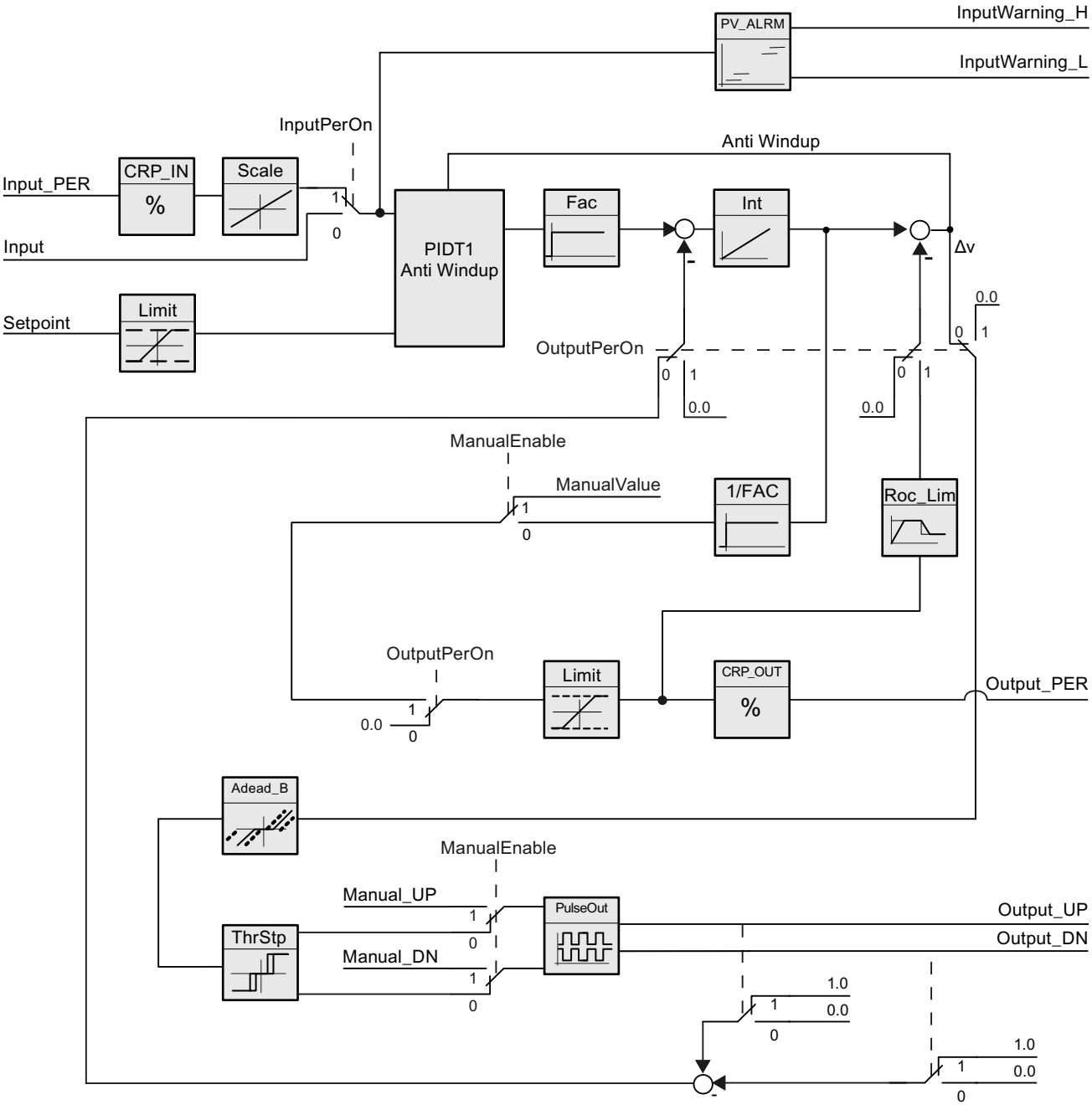

Block diagram with position feedback

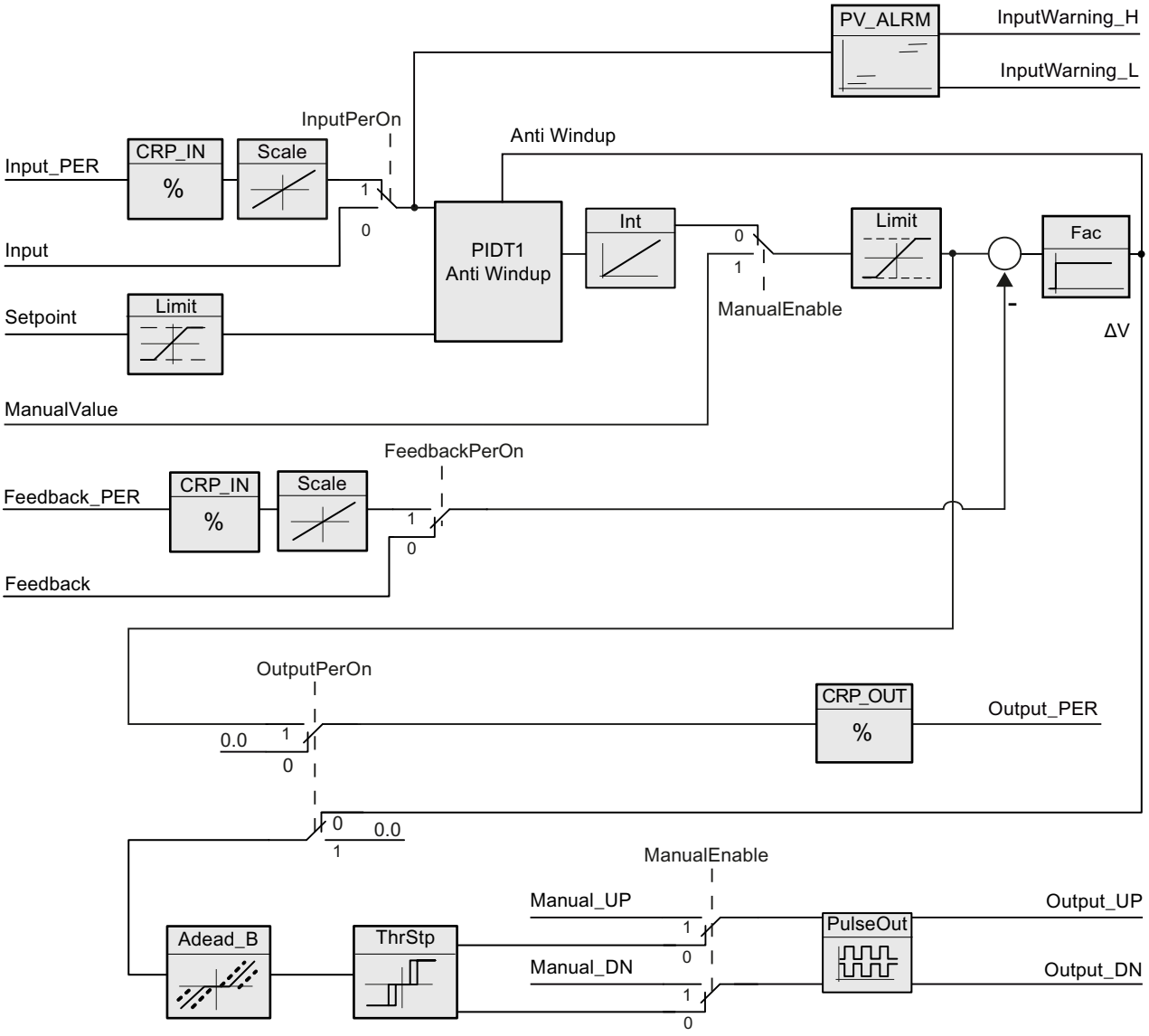

Block diagram of PIDT1 with anti-windup

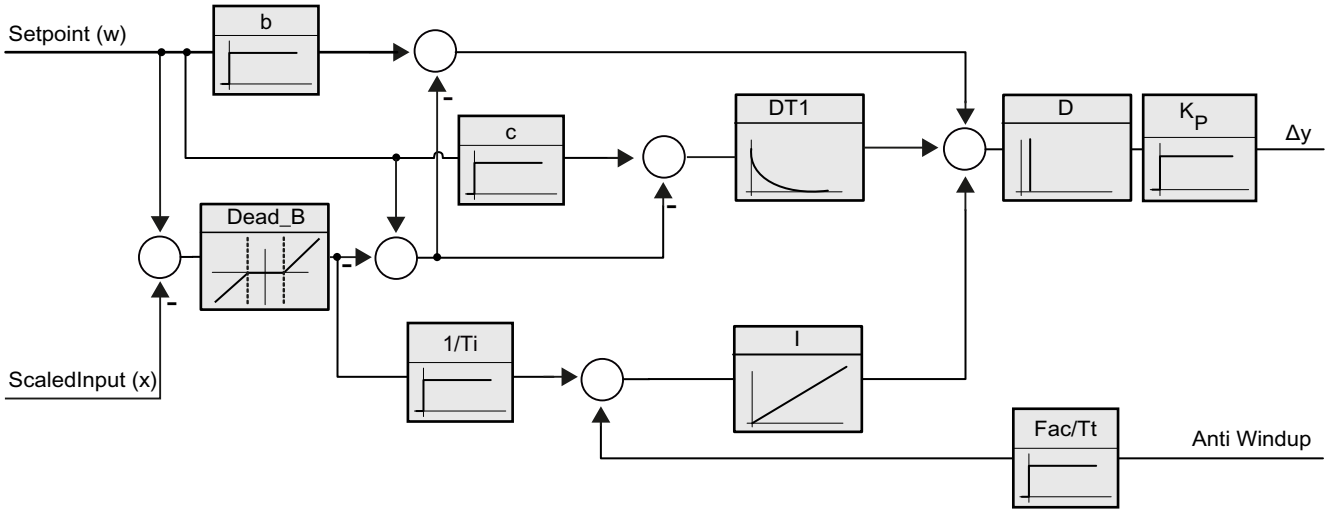

Call

PID_3Step is called in a constant time interval of the cycle time of the calling OB (preferably in a cyclic interrupt OB).

Download to device

The actual values of retentive tags are only updated when you download PID_3Step completely.

Downloading technology objects to device (Page 44)

Startup

At the startup of the CPU, PID_3Step starts in the operating mode that was last active. To leave PID_3Step in "Inactive" mode, set RunModeByStartup = FALSE.

Reaction to error

If errors occur, these are output in the Error parameter. You configure the reaction of PID_3Step using the ErrorBehaviour and ActivateRecoverMode tags.

ErrorBehaviour	ActivateRecoverMode	Actuator setting configuration Set Output to	Reaction
0	FALSE	Current output value	Switch to "Inactive" mode (Mode = 0)
0	TRUE	Current output value while error is pending	Switch to "Error monitoring" mode (Mode = 7)
1	FALSE	Substitute output value	Switch to "Approach substitute output value" mode (Mode = 5) Switch to "Inactive" mode (Mode = 0)
1	TRUE	Substitute output value while error is pending	Switch to "Approach substitute output value with error monitoring" mode (Mode = 8) Switch to "Error monitoring" mode (Mode = 7)

The ErrorBits parameter shows which errors have occurred.

See also

Parameter State and Retain.Mode V1 (Page 314)

Parameter ErrorBits V1 (Page 320)

Configuring PID_3Step V1 (Page 120)

10.2.5.2 Operating principle PID_3Step V1

Monitoring process value limits

You specify the high limit and low limit of the process value in the Config.InputUpperLimit and Config.InputLowerLimit tags. If the process value is outside these limits, an error occurs (ErrorBits = 0001hex).

You specify a high and low warning limit of the process value in the Config.InputUpperWarning and Config.InputLowerWarning tags. If the process value is outside these warning limits, a warning occurs (Warnings = 0040hex), and the InputWarning_H or InputWarning_L output parameter changes to TRUE.

Limiting the setpoint

You specify a high limit and low limit of the setpoint in the Config.SetpointUpperLimit and Config.SetpointLowerLimit tags. PID_3Step automatically limits the setpoint to the process value limits. You can limit the setpoint to a smaller range. PID_3Step checks whether this range falls within the process value limits. If the setpoint is outside these limits, the high or low limit is used as the setpoint, and output parameter SetpointLimit_H or SetpointLimit_L is set to TRUE.

The setpoint is limited in all operating modes.

Limiting the output value

You specify a high limit and low limit of the output value in the Config.OutputUpperLimit and Config.OutputLowerLimit tags. The output value limits must be within "Low endstop" and "High endstop".

- High endstop: Config.FeedbackScaling.UpperPointOut
- Low endstop: Config.FeedbackScaling.LowerPointOut

Rule:
UpperPointOut ≥ OutputUpperLimit > OutputLowerLimit ≥ LowerPointOut
The valid values for "High endstop" and "Low endstop" depend upon:

- FeedbackOn
- FeedbackPerOn
- OutputPerOn

OutputPerOn	FeedbackOn	FeedbackPerOn	LowerPointOut	UpperPointOut
FALSE	FALSE	FALSE	Cannot be set (0.0%)	Cannot be set (100.0%)
FALSE	TRUE	FALSE	-100.0% or 0.0%	0.0% or +100.0%
FALSE	TRUE	TRUE	-100.0% or 0.0%	0.0% or +100.0%
TRUE	FALSE	FALSE	Cannot be set (100.0%)	Cannot be set (100.0%)
TRUE	TRUE	FALSE	-100.0% or 0.0%	0.0% or +100.0%
TRUE	TRUE	TRUE	-100.0% or 0.0%	0.0% or +100.0%

If OutputPerOn = FALSE and FeedbackOn = FALSE, you cannot limit the output value. The digital outputs are reset with Actuator_H = TRUE or Actuator_L = TRUE, or after a travel time amounting to 110% of the motor transition time.
The output value is 27648 at 100% and -27648 at -100%. PID_3Step must be able to completely close the valve. Therefore, zero must be included in the output value limits.

NOTE
Use with two or more actuators
PID_3 Step is not suitable for use with two or more actuators (for example, in heating/cooling applications), because different actuators need different PID parameters to achieve a good control response.

Substitute output value

If an error has occurred, PID_3Step can output a substitute output value and move the actuator to a safe position that is specified in the SavePosition tag. The substitute output value must be within the output value limits.

Monitoring signal validity

The values of the following parameters are monitored for validity:

- Setpoint
- Input
- Input_PER
- Feedback
- Feedback_PER
- Output

Monitoring the PID_3Step sampling time

Ideally, the sampling time is equivalent to the cycle time of the calling OB. The PID_3Step instruction measures the time interval between two calls. This is the current sampling time. On every switchover of operating mode and during the initial startup, the mean value is formed from the first 10 sampling times. Too great a difference between the current sampling time and this mean value triggers an error (ErrorBits = 0800 hex).

PID_3Step is set to "Inactive" mode during tuning under the following conditions:

- New mean value >= 1.1 x old mean value
- New mean value <= 0.9 x old mean value

In automatic mode, PID_3Step is set to "Inactive" mode under the following conditions:

- New mean value >= 1.5 x old mean value
- New mean value <= 0.5 x old mean value

Sampling time of the PID algorithm

The controlled system needs a certain amount of time to respond to changes in the output value. It is therefore not advisable to calculate the output value in every cycle. The sampling time of the PID algorithm represents the time between two calculations of the output value. It is calculated during tuning and rounded to a multiple of the cycle time. All other functions of PID_3Step are executed at every call.

Measuring the motor transition time

The motor transition time is the time in seconds the motor requires to move the actuator from the closed to the opened state. The maximum time that the actuator is moved in one direction is 110% of the motor transition time. PID_3Step requires the motor transition time to be as accurate as possible for good controller results. The data in the actuator documentation contains average values for this type of actuator. The value for the specific actuator used may differ. You can measure the motor transition time during commissioning. The output value limits are not taken into consideration during the motor transition time measurement. The actuator can travel to the high or the low endstop.

The motor transition time is taken into consideration in the calculation of the analog output value as well as in the calculation of the digital output values. It is mainly required for correct operation during auto-tuning and the anti-windup behavior. You should therefore configure the motor transition time with the value that the motor requires to move the actuator from the closed to the opened state.

If no relevant motor transition time is in effect in your process (e.g. with solenoid valves), so that the output value has a direct and full effect on the process, use PID_Compact instead.

Control logic

An increase of the output value is generally intended to cause an increase in the process value. This is referred to as a normal control logic. For cooling and discharge control systems, it may be necessary to invert the control logic. PID_3Step does not work with negative proportional gain. If InvertControl = TRUE, an increasing control deviation causes a reduction in the output value. The control logic is also taken into account during pretuning and fine tuning.

See also

Configuring PID_3Step V1 (Page 120)

10.2.5.3 PID_3Step V1 input parameters

Table 10-10

Parameters	Data type	Default	Description
Setpoint	REAL	0.0	Setpoint of the PID controller in automatic mode
Input	REAL	0.0	A tag of the user program is used as source for the process value. If you are using parameter Input, then Config.InputPer-On = FALSE must be set.
Input_PER	WORD	W#16#0	An analog input is used as the source of the process value. If you are using parameter Input_PER, then Config.InputPer-On = TRUE must be set.
Actuator_H	BOOL	FALSE	Digital position feedback of the valve for the high endstop If Actuator_H = TRUE, the valve is at the high endstop and is no longer moved towards this direction.
Actuator_L	BOOL	FALSE	Digital position feedback of the valve for the low endstop If Actuator_L = TRUE, the valve is at the low endstop and is no longer moved towards this direction.
Feedback	REAL	0.0	Position feedback of the valve If you are using parameter Feedback, then Config.FeedbackPer-On = FALSE must be set.
Feedback_PER	WORD	W#16#0	Analog position feedback of a valve If you are using parameter Feedback_PER, then Config.Feed-backPerOn = TRUE must be set. Feedback_PER is scaled based on the tags: • Config.FeedbackScaling.LowerPointIn • Config.FeedbackScaling.UpperPointIn • Config.FeedbackScaling.LowerPointOut • Config.FeedbackScaling.UpperPointOut

Parameters	Data type	Default	Description
ManualEnable	BOOL	FALSE	• A FALSE -> TRUE edge selects "Manual mode", while State = 4, Retain.Mode remains unchanged. • A TRUE -> FALSE edge selects the most recently active operating mode A change of Retain.Mode will not take effect during ManualEnable = TRUE. The change of Retain.Mode will only be considered upon a TRUE -> FALSE edge at ManualEnable . **PID_3Step V1.1**If ManualEnable = TRUE when the CPU starts, PID_3Step starts in manual mode. A rising edge (FALSE > TRUE) at ManualEnable is not necessary. **PID_3Step V1.0** At the start of the CPU, PID_3Step only switches to manual mode with a rising edge (FALSE->TRUE) at ManualEnable . Without rising edge, PID_3Step starts in the last operating mode in which ManualEnable was FALSE.
ManualValue	REAL	0.0	In manual mode, you specify the absolute position of the valve. ManualValue will only be evaluated if you are using OutputPer, **or** if position feedback is available.
Manual_UP	BOOL	FALSE	In manual mode, every rising edge opens the valve by 5% of the total control range, or for the duration of the minimum motor transition time. Manual_UP is evaluated only if you are not using Output_PER and there is no position feedback available.
Manual_DN	BOOL	FALSE	In manual mode, every rising edge closes the valve by 5% of the total control range, or for the duration of the minimum motor transition time. Manual_DN is evaluated only if you are not using Output_PER and there is no position feedback available.
Reset	BOOL	FALSE	Restarts the controller. • FALSE -> TRUE edge – Switch to "Inactive" mode – ErrorBits and Warning are reset – Intermediate controller values are reset (PID parameters are retained) • TRUE -> FALSE edge – Change in most recent active mode – If automatic mode was active before, switchover to automatic mode is bumpless.

10.2.5.4 PID_3Step V1 output parameters

Table 10-11

Parameter	Data type	Default	Description
ScaledInput	REAL	0.0	Scaled process value
ScaledFeedback	REAL	0.0	Scaled position feedback For an actuator without position feedback, the position of the actuator indicated by ScaledFeedback is very imprecise. ScaledFeedback may only be used for rough estimation of the current position in this case.

Parameter	Data type	Default	Description
Output_UP	BOOL	FALSE	Digital output value for opening the valve If Config.OutputPerOn = FALSE, the Output_UP parameter is used.
Output_DN	BOOL	FALSE	Digital output value for closing the valve If Config.OutputPerOn = FALSE, the Output_DN parameter is used.
Output_PER	WORD	W#16#0	Analog output value If Config.OutputPerOn = TRUE, Output_PER is used. Use Output_PER if you are using a valve as actuator which is triggered via an analog output and controlled with a continuous signal, e.g. 0...10 V or 4...20 mA. The value at Output_PER corresponds to the target position of the valve, e.g. Output_PER = 13824, when the valve is to be opened by 50%.
SetpointLimit_H	BOOL	FALSE	If SetpointLimit_H = TRUE, the absolute setpoint high limit is reached. In the CPU, the setpoint is limited to the configured absolute setpoint high limit. The configured absolute process value high limit is the default for the setpoint high limit. If you configure Config.SetpointUpperLimit to a value within the process value limits, this value is used as the setpoint high limit.
SetpointLimit_L	BOOL	FALSE	If SetpointLimit_L = TRUE, the absolute setpoint low limit has been reached. In the CPU, the setpoint is limited to the configured absolute setpoint low limit. The configured absolute process value low limit is the default setting for the setpoint low limit. If you configure Config.SetpointLowerLimit to a value within the process value limits, this value is used as the setpoint low limit.
InputWarning_H	BOOL	FALSE	If InputWarning_H = TRUE, the process value has reached or exceeded the warning high limit.
InputWarning_L	BOOL	FALSE	If InputWarning_L = TRUE, the process value has reached or fallen below the warning low limit.
State	INT	0	The State parameter (Page 314) shows the current operating mode of the PID controller. You change the operating mode with the Retain.Mode tag. • State = 0: Inactive • State = 1: Pretuning • State = 2: Fine tuning • State = 3: Automatic mode • State = 4: Manual mode • State = 5: Approach substitute output value • State = 6: Transition time measurement • State = 7: Error monitoring • State = 8: Approach substitute output value with error monitoring
Error	BOOL	FALSE	If Error = TRUE, at least one error message is pending.
ErrorBits	DWORD	DW#16#0	The ErrorBits parameter (Page 320) indicates the error messages.

See also

Parameter State and Retain.Mode V1 (Page 314)
Parameter ErrorBits V1 (Page 320)

10.2.5.5 PID_3Step V1 static tags

NOTE

You must not change tags that are not listed. These are used for internal purposes only.

Change the tags identified with (1) only in "Inactive" mode to prevent malfunction of the PID controller. "Inactive" mode is forced by setting the "Retain.Mode" tag to "0".

Table 10-12

Tag	Data type	Default	Description
ActivateRecoverMode	BOOL	TRUE	The ActivateRecoverMode tag (Page 322) determines the reaction to error.
RunModeByStartup	BOOL	TRUE	Activate Mode after CPU restart If RunModeByStartup = TRUE, the controller returns to the last active operating mode after a CPU restart. If RunModeByStartup = FALSE, the controller remains inactive after a CPU startup.
PhysicalUnit	INT	0	Unit of measurement of the process value and setpoint, e.g., °C, or °F.
PhysicalQuantity	INT	0	Physical quantity of the process value and setpoint, e.g., temperature
ErrorBehaviour	INT	0	If ErrorBehaviour = 0 and an error has occurred, the valve stays at its current position and the controller switches directly to "Inactive" or "Error monitoring" mode. If ErrorBehaviour = 1 and an error occurs, the actuator moves to the substitute output value and only then switches to "Inactive" or "Error monitoring" mode. If the following errors occur, you can no longer move the valve to a configured substitute output value. • 2000h: Invalid value at Feedback_PER parameter. • 4000h: Invalid value at Feedback parameter. • 8000h: Error during digital position feedback.
Warning	DWORD	DW#16#0	The Warning tag (Page 314) displays the warnings generated since a Reset or since the last operating mode switchover. Cyclic warnings (for example, process value warning) are shown until the cause of the warning is removed. They are automatically deleted once their cause has gone. Non-cyclic warnings (for example, point of inflection not found) remain and are deleted like errors.

Tag	Data type	Default	Description
SavePosition	REAL	0.0	Substitute output value If ErrorBehaviour = 1 and an error occurs, the actuator moves to a safe position for the plant and only then switches to "Inactive" mode. The permitted value range is determined by the configuration. • Config.FeedbackOn = FALSE and Config.OutputPerOn = FALSE: SavePosition = 0.0 or 100.0 • Config.FeedbackOn = TRUE or Config.OutputPerOn = TRUE: Config.OutputUpperLimit ≥ SavePosition ≥ Config.OutputLower-Limit
CurrentSetpoint	REAL	0.0	Currently active setpoint. This value is frozen at the start of tuning.
Progress	REAL	0.0	Progress of tuning as a percentage (0.0 - 100.0)
Config.InputPerOn(1)	BOOL	TRUE	If InputPerOn = TRUE, the Input_PER parameter is used. If InputPer-On = FALSE, the Input parameter is used.
Config.OutputPerOn(1)	BOOL	FALSE	If OutputPerOn = TRUE, the Output_PER parameter is used. If Out-putPerOn = FALSE, the Ouput_UP and Output_DN parameters are used.
Config.LoadBackUp	BOOL	FALSE	If LoadBackUp = TRUE, the last set of PID parameters is reloaded. The set was saved prior to the last tuning. LoadBackUp is automatically set back to FALSE.
Config.InvertControl(1)	BOOL	FALSE	Invert control logic If InvertControl = TRUE, an increasing control deviation causes a reduction in the output value.
Config.FeedbackOn(1)	BOOL	FALSE	If FeedbackOn = FALSE, a position feedback is simulated. Position feedback is generally activated when FeedbackOn = TRUE.
Config.FeedbackPerOn(1)	BOOL	FALSE	FeedbackPerOn is only effective when FeedbackOn = TRUE. If FeedbackPerOn = TRUE, the analog input is used for the position feedback (Feedback_PER parameter). If FeedbackPerOn = FALSE, the Feedback parameter is used for the position feedback.
Config.ActuatorEndStopOn(1)	BOOL	FALSE	If ActuatorEndStopOn = TRUE, the digital position feedback Actuator_L and Actuator_H are taken into consideration.
Config.InputUpperLimit(1)	REAL	120.0	High limit of the process value At the I/O input, the process value can be a maximum of 18% higher than the standard range (overrange). An error is no longer signaled due to a violation of the "Process value high limit". Only a wire-break and a short-circuit are recognized and PID_3Step reacts according to the configured reaction to error. InputUpperLimit > InputLowerLimit
Config.InputLowerLimit(1)	REAL	0.0	Low limit of the process value InputLowerLimit < InputUpperLimit
Config.InputUpperWarning(1)	REAL	+3.40282-2e+38	Warning high limit of the process value If you set InputUpperWarning outside the process value limits, the configured absolute process value high limit is used as the warning high limit. If you configure InputUpperWarning within the process value limits, this value is used as the warning high limit. InputUpperWarning > InputLowerWarning InputUpperWarning ≤ InputUpperLimit

Tag	Data type	Default	Description
Config.InputLowerWarning(1)	REAL	-3.40282-2e+38	Warning low limit of the process value If you set InputLowerWarning outside the process value limits, the configured absolute process value low limit is used as the warning low limit. If you configure InputLowerWarning within the process value limits, this value is used as the warning low limit. InputLowerWarning < InputUpperWarning InputLowerWarning ≥ InputLowerLimit
Config.OutputUpperLimit(1)	REAL	100.0	High limit of output value The following value range is permitted: UpperPointOut ≥ OutputUpperLimit > OutputLowerLimit For more details, see OutputLowerLimit.
Config.OutputLowerLimit(1)	REAL	0.0	Low limit of output value The following value range is permitted: OutputUpperLimit > OutputLowerLimit ≥ LowerPointOut When using Output_PER, an output value limit of -100% corresponds to the value Output_PER = -27648; 100% correspond to the value Output_PER = 27648. If OutputPerOn = FALSE and FeedbackOn = FALSE, OutputLowerLimit and OutputUpperLimit are not evaluated. Output_UP and Output_DN are then reset at Actuator_H = TRUE or Actuator_L = TRUE (if ActuatorEndStopOn = TRUE) or after a travel time of 110% * Config.TransitTime (if ActuatorEndStopOn = FALSE).
Config.SetpointUpperLimit(1)	REAL	+3.40282-2e+38	High limit of setpoint If you set SetpointUpperLimit outside the process value limits, the configured absolute process value high limit is preassigned as the setpoint high limit. If you configure SetpointUpperLimit within the process value limits, this value is used as the setpoint high limit.
Config.SetpointLowerLimit(1)	REAL	-3.402822-e+38	Low limit of the setpoint If you set SetpointLowerLimit outside the process value limits, the configured absolute process value low limit is preassigned as the setpoint low limit. If you set SetpointLowerLimit within the process value limits, this value is used as the setpoint low limit.
Config.MinimumOnTime(1)	REAL	0.0	Minimum ON time Minimum time in seconds for which the servo drive must be switched on. Config.MinimumOnTime is only effective if Output_UP and Output_DN are used (Config.OutputPerOn = FALSE).
Config.MinimumOffTime(1)	REAL	0.0	Minimum OFF time Minimum time in seconds for which the servo drive must be switched off. Config.MinimumOffTime is only effective if Output_UP and Output_DN are used (Config.OutputPerOn = FALSE).
Config.TransitTime(1)	REAL	30.0	Motor transition time Time in seconds the actuating drive requires to move the valve from the closed to the opened state.
Config.InputScaling.UpperPointIn(1)	REAL	27648.0	Scaling Input_PER high Input_PER is converted to a percentage based on the two value pairs UpperPointOut, UpperPointIn and LowerPointOut, LowerPointIn of the InputScaling structure.

Tag	Data type	Default	Description
Config.InputScaling.LowerPointIn(1)	REAL	0.0	Scaling Input_PER low Input_PER is converted to a percentage based on the two value pairs UpperPointOut, UpperPointIn and LowerPointOut, LowerPointIn of the InputScaling structure.
Config.InputScaling.UpperPointOut(1)	REAL	100.0	Scaled high process value Input_PER is converted to a percentage based on the two value pairs UpperPointOut, UpperPointIn and LowerPointOut, LowerPointIn of the InputScaling structure.
Config.InputScaling.LowerPointOut(1)	REAL	0.0	Scaled low process value Input_PER is converted to a percentage based on the two value pairs UpperPointOut, UpperPointIn and LowerPointOut, LowerPointIn of the InputScaling structure.
Config.FeedbackScaling.UpperPointIn(1)	REAL	27648.0	Scaling Feedback_PER high Feedback_PER is converted to a percentage based on the two value pairs UpperPointOut, UpperPointIn and LowerPointOut, LowerPointIn of the FeedbackScaling structure.
Config.FeedbackScaling.LowerPointIn(1)	REAL	0.0	Scaling Feedback_PER low Feedback_PER is converted to a percentage based on the two value pairs UpperPointOut, UpperPointIn and LowerPointOut, LowerPointIn of the FeedbackScaling structure.
Config.FeedbackScaling.UpperPointOut(1)	REAL	100.0	High endstop Feedback_PER is converted to a percentage based on the two value pairs UpperPointOut, UpperPointIn and LowerPointOut, LowerPointIn of the FeedbackScaling structure. The permitted value range is determined by the configuration. • FeedbackOn = FALSE: UpperPointOut = 100.0 • FeedbackOn = TRUE: UpperPointOut = 100.0 or 0.0 UpperPointOut ≠ LowerPointOut
Config.FeedbackScaling.LowerPointOut(1)	REAL	0.0	Low endstop Feedback_PER is converted to a percentage based on the two value pairs UpperPointOut, UpperPointIn and LowerPointOut, LowerPointIn of the FeedbackScaling structure. The permitted value range is determined by the configuration. • FeedbackOn = FALSE: LowerPointOut = 0.0 • FeedbackOn = TRUE: LowerPointOut = 0.0 or -100.0 LowerPointOut ≠ UpperPointOut
GetTransitTime.InvertDirection	BOOL	FALSE	If InvertDirection = FALSE, the valve is fully opened, closed, and then reopened in order to determine the valve transition time. If InvertDirection = TRUE, the valve is fully closed, opened, and then closed again.
GetTransitTime.SelectFeedback	BOOL	FALSE	If SelectFeedback = TRUE, then Feedback_PER, or Feedback is taken into consideration in the transition time measurement. If SelectFeedback = FALSE, then Actuator_H and Actuator_L are taken into consideration in the transition time measurement.
GetTransitTime.Start	BOOL	FALSE	If Start = TRUE, the transition time measurement is started.

Tag	Data type	Default	Description
GetTransitTime.State	INT	0	Current phase of the transition time measurement • State = 0: Inactive • State = 1: Open valve completely • State = 2: Close valve completely • State = 3: Move valve to target position (NewOutput) • State = 4: Transition time measurement successfully completed • State = 5: Transition time measurement canceled
GetTransitTime.NewOutput	REAL	0.0	Target position for transition time measurement with position feedback The target position must be between "High endstop" and "Low endstop". The difference between NewOutput and ScaledFeedback must be at least 50% of the permissible control range.
CycleTime.StartEstimation	BOOL	TRUE	If StartEstimation = TRUE, the measurement of the PID_3Step sampling time is started. CycleTime.StartEstimation = FALSE once measurement is complete.
CycleTime.EnEstimation	BOOL	TRUE	If EnEstimation = TRUE, the PID_3Step sampling time is calculated.
CycleTime.EnMonitoring	BOOL	TRUE	If EnMonitoring = TRUE, the PID_3Step sampling time is monitored. If it is not possible to execute PID_3Step within the sampling time, the error 0800h is output and the operating mode is switched. ActivateRecoverMode and ErrorBehaviour determine which operating mode is switched to. If EnMonitoring = FALSE, the PID_3Step sampling time is not monitored, the error 0800h is not output, and the operating mode is not switched.
CycleTime.Value(1)	REAL	0.1	PID_3Step sampling time in seconds CycleTime.Value is determined automatically and is usually equivalent to the cycle time of the calling OB.
CtrlParamsBackUp.SetByUser	BOOL	FALSE	Saved value of Retain.CtrlParams.SetByUser You can reload values from the CtrlParamsBackUp structure with Config.LoadBackUp = TRUE.
CtrlParamsBackUp.Gain	REAL	1.0	Saved proportional gain
CtrlParamsBackUp.Ti	REAL	20.0	Saved integral action time
CtrlParamsBackUp.Td	REAL	0.0	Saved derivative action time
CtrlParamsBackUp.TdFiltRatio	REAL	0.0	Saved derivative delay coefficient
CtrlParamsBackUp.PWeighting	REAL	0.0	Saved proportional action weighting
CtrlParamsBackUp.DWeighting	REAL	0.0	Saved derivative action weighting
CtrlParamsBackUp.Cycle	REAL	1.0	Saved sampling time of PID algorithm
CtrlParamsBackUp.InputDeadBand	REAL	0.0	Saved deadzone width of the control deviation
PIDSelfTune.SUT.CalculateSUTParams	BOOL	FALSE	The properties of the controlled system are saved during tuning. If CalculateSUTParams = TRUE, the PID parameters are recalculated on the basis of these properties. The PID parameters are calculated using the method set in TuneRuleSUT. CalculateSUTParams is set to FALSE following calculation.

Tag	Data type	Default	Description
PIDSelfTune.SUT.TuneRuleSUT	INT	1	Methods used to calculate parameters during pretuning: • TuneRuleSUT = 0: PID fast I (faster control response with higher amplitudes of the output value than with TuneRuleSUT = 1) • TuneRuleSUT = 1: PID slow I (slower control response with lower amplitudes of the output value than with TuneRuleSUT = 0) • TuneRuleSUT = 2: Chien, Hrones and Reswick PID • TuneRuleSUT = 3: Chien, Hrones, Reswick PI • TuneRuleSUT = 4: PID fast II (faster control response with higher amplitudes of the output value than with TuneRuleSUT = 5) • TuneRuleSUT = 5: PID slow II (slower control response with lower amplitudes of the output value than with TuneRuleSUT = 4) The methods TuneRuleSUT = 0 and 1 differ from the methods TuneRuleSUT = 4 and 5 only in the calculation of the proportional gain: When TuneRuleSUT = 0 and 1, the proportional gain is calculated based on the compensation time of the process. When TuneRuleSUT = 4 and 5, this happens based on the delay time of the process. TuneRuleSUT = 4 and 5 returns a higher value for the proportional gain and thus a faster control response with higher amplitudes of the output value than with TuneRuleSUT = 0 and 1.
PIDSelfTune.SUT.State	INT	0	The SUT.State tag indicates the current phase of pretuning:
PIDSelfTune.TIR.RunIn	BOOL	FALSE	• RunIn = FALSE Pretuning is started when fine tuning is started from inactive or manual mode. If fine tuning is started from automatic mode, the system uses the existing PID parameters to control to the setpoint. Only then will fine tuning start. If pretuning is not possible, PID_3Step switches to "Inactive" mode. • RunIn = TRUE The pretuning is skipped. PID_3Step attempts to reach the setpoint with the minimum or maximum output value. This can produce increased overshoot. Only then will fine tuning start. RunIn is set to FALSE after fine tuning.
PIDSelfTune.TIR.CalculateTIR-Params	BOOL	FALSE	The properties of the controlled system are saved during tuning. If CalculateTIRParams = TRUE, the PID parameters are recalculated on the basis of these properties. The PID parameters are calculated using the method set in TuneRuleTIR. CalculateTIRParams is set to FALSE following calculation.
PIDSelfTune.TIR.TuneRuleTIR	INT	0	Methods used to calculate parameters during fine tuning: • TuneRuleTIR = 0: PID automatic • TuneRuleTIR = 1: PID fast (faster control response with higher amplitudes of the output value than with TuneRuleTIR = 2) • TuneRuleTIR = 2: PID slow (slower control response with lower amplitudes of the output value than with TuneRuleTIR = 1) • TuneRuleTIR = 3: Ziegler-Nichols PID • TuneRuleTIR = 4: Ziegler-Nichols PI • TuneRuleTIR = 5: Ziegler-Nichols P To be able to repeat the calculation of the PID parameters with CalculateTIRParams and TuneRuleTIR = 0, 1 or 2, the previous fine tuning also has to have been executed with TuneRuleTIR = 0, 1 or 2. If this is not the case, TuneRuleTIR = 3 is used. The recalculation of the PID parameters with CalculateTIRParams and TuneRuleTIR = 3, 4 or 5 is always possible.

Tag	Data type	Default	Description
PIDSelfTune.TIR.State	INT	0	The TIR.State tag indicates the current phase of "fine tuning":
Retain.Mode	INT	0	A change to the value of Retain.Mode initiates a switch to another operating mode. The following operating mode is enabled upon a change of Mode to: • Mode = 0: Inactive • Mode = 1: Pretuning • Mode = 2: Fine tuning • Mode = 3: Automatic mode • Mode = 4: Manual mode • Mode = 5: Approach substitute output value • Mode = 6: Transition time measurement • Mode = 7: Error monitoring • Mode = 8: Approach substitute output value with error monitoring Mode is retentive.
Retain.CtrlParams.SetByUser(1)	BOOL	FALSE	If SetByUser = FALSE, the PID parameters are determined automatically and PID_3Step operates with a dead zone at the output value. The deadzone width is calculated during tuning on the basis of the standard deviation of the output value and saved in Retain.CtrlParams.OutputDeadBand. If SetByUser = TRUE, the PID parameters are entered manually and PID_3 Step operates without a dead zone at the output value. Retain.CtrlParams.OutputDeadBand = 0.0 SetByUser is retentive.
Retain.CtrlParams.Gain(1)	REAL	1.0	Active proportional gain Gain is retentive.
Retain.CtrlParams.Ti(1)	REAL	20.0	• Ti > 0.0: Active integral action time • Ti = 0.0: Integral action is deactivated Ti is retentive.
Retain.CtrlParams.Td(1)	REAL	0.0	• Td > 0.0: Active derivative action time • Td = 0.0: Derivative action is deactivated Td is retentive.
Retain.CtrlParams.TdFiltRatio(1)	REAL	0.0	Active derivative delay coefficient TdFiltRatio is retentive.
Retain.CtrlParams.PWeighting(1)	REAL	0.0	Active proportional action weighting PWeighting is retentive.
Retain.CtrlParams.DWeighting(1)	REAL	0.0	Active derivative action weighting DWeighting is retentive.
Retain.CtrlParams.Cycle(1)	REAL	1.0	Active sampling time of PID algorithm in seconds, rounded to an integer multiple of the cycle time of the calling OB. Cycle is retentive.
Retain.CtrlParams.InputDeadBand(1)	REAL	0.0	Deadzone width of the control deviation InputDeadBand is retentive.

See also

Parameter State and Retain.Mode V1 (Page 314)
Tag ActivateRecoverMode V1 (Page 322)
Downloading technology objects to device (Page 44)

10.2.5.6 Parameter State and Retain.Mode V1

Correlation of the parameters

The State parameter shows the current operating mode of the PID controller. You cannot change the State parameter.

To switch from one operating mode to another, you must change the Retain.Mode tag. This also applies when the value for the new operating mode is already in Retain.Mode. For example, set Retain.Mode = 0 first and then Retain.Mode = 3. Provided the current operating mode of the controller permits this switchover, State will be set to the value of Retain.Mode.

When PID_3Step automatically switches from one operating mode to another, the following applies: State != Retain.Mode.

Examples:

- After successful pretuning
  State = 3 and Retain.Mode = 1
- In the event of an error
  State = 0 and Retain.Mode remain at the previous value, for example, Retain.Mode = 3
- ManualEnalbe = TRUE
  State = 4 and Retain.Mode remain at the previous value, e.g., Retain.Mode = 3

NOTE

You want, for example, to repeat successful fine tuning without exiting automatic mode with Mode = 0.

Setting Retain.Mode to an invalid value such as 9999 for one cycle has no effect on State. Set Mode = 2 in the next cycle. In this way, you can generate a change to Retain.Mode without first switching to "Inactive" mode.

Meaning of values

State / Retain.Mode	Description
0	Inactive The controller is switched off and no longer changes the valve position.
1	Pretuning The pretuning determines the process response to a pulse of the output value and searches for the point of inflection. The optimized PID parameters are calculated as a function of the maximum rate of rise and dead time of the controlled system. Pretuning requirements: • State = 0 or State = 4 • ManualEnable = FALSE • The motor transition time has been configured or measured. • The setpoint and the process value lie within the configured limits. The more stable the process value is, the easier it is to calculate the PID parameters and the more precise the result will be. Noise on the process value can be tolerated as long as the rate of rise of the process value is significantly higher as compared to the noise. Before the PID parameters are recalculated, they are backed up and can be reactivated with Config.LoadBackUp. The setpoint is frozen in the CurrentSetpoint tag.

State / Retain.Mode	Description
	The controller switches to automatic mode following successful pretuning and to "Inactive" mode following unsuccessful pretuning. The pretuning phase is indicated with the SUT.State tag.
2	Fine tuning Fine tuning generates a constant, limited oscillation of the process value. The PID parameters are tuned based on the amplitude and frequency of this oscillation. The differences between the process response during pre-tuning and fine tuning are analyzed. All PID parameters are recalculated from the results. PID parameters from fine tuning usually have better master control and disturbance characteristics than PID parameters from pre-tuning. PID_3Step automatically attempts to generate an oscillation greater than the noise of the process value. Fine tuning is only minimally influenced by the stability of the process value. The PID parameters are backed up before fine tuning. They can be reactivated with Config.LoadBackUp. The setpoint is frozen in the CurrentSetpoint tag. Requirements for fine tuning: • The motor transition time has been configured or measured. • The setpoint and the process value lie within the configured limits. • ManualEnable = FALSE • Automatic (State = 3), inactive (State = 0) or manual (State = 4) mode Fine tuning proceeds as follows when started from: • Automatic mode (State = 3) Start fine tuning from automatic mode if you wish to improve the existing PID parameters through tuning. PID_3Step controls the system using the existing PID parameters until the control loop has stabilized and the requirements for fine tuning have been met. Only then will fine tuning start. • Inactive (State = 0) or manual mode (State = 4) Pretuning is always started first. The determined PID parameters will be used for control until the control loop has stabilized and the requirements for fine tuning have been met. If PIDSelfTune.TIR.RunIn = TRUE, pretuning is skipped and an attempt is made to reach the setpoint with the minimum or maximum output value. This can produce increased overshoot. Fine tuning then starts automatically. The controller switches to automatic mode following successful fine tuning. If fine tuning was not successful, the controller switches to "Inactive" mode. The fine tuning phase is indicated with the TIR.State tag.
3	Automatic mode In automatic mode, PID_3Step controls the controlled system in accordance with the parameters specified. The controller switches to automatic mode if one the following requirements is fulfilled: • Pretuning successfully completed • Fine tuning successfully completed • Changing the Retain.Mode tag to the value 3. When the CPU is switched on or switches from Stop to RUN mode, PID_3Step starts in the most recently active operating mode. To leave PID_3Step in "Inactive" mode, set RunModeByStartup = FALSE. The ActivateRecoverMode tag is taken into consideration in automatic mode.
4	Manual mode In manual mode, you specify manual output values in the Manual_UP and Manual_DN parameters or Manual-Value parameter. Whether or not the actuator can be moved to the output value in the event of an error is described in the ErrorBits parameter. This operating mode is enabled if Retain.Mode = 4, or on a rising edge at ManualEnable. If ManualEnable changes to TRUE, only State changes. Retain.Mode retains its current value. On a falling edge at ManualEnable, PID_3Step returns to the previous operating mode. The switchover to automatic mode is bumpless. **PID_3Step V1.1** Manual mode is always possible in the event of an error. **PID_3Step V1.0** Manual mode is dependent on the ActivateRecoverMode tag in the event of an error.

State / Retain.Mode	Description
5	Approach substitute output value This operating mode is activated in the event of an error or when Reset = TRUE if Errorbehaviour = 1 and ActivateRecoverMode = FALSE.. PID_3Step moves the actuator to the substitute output value and then switches to "Inactive" mode.
6	Transition time measurement The time that the motor needs to completely open the valve from the closed condition is determined. This operating mode is activated when GetTransitTime.Start = TRUE is set. If endstop signals are used to measure the transition time, the valve will be opened completely from its current position, closed completely, and opened completely again. If GetTransitTime.InvertDirection = TRUE, this behavior is inverted. If position feedback is used to measure the transition time, the actuator will be moved from its current position to a target position. The output value limits are not taken into consideration during the transition time measurement. The actuator can travel to the high or the low endstop.
7	Error monitoring The control algorithm is switched off and no longer changes the valve position. This operating mode is activated instead of "Inactive" mode in the event of an error. All the following conditions must be met: • Mode = 3 (automatic mode) • Errorbehaviour = 0 • ActivateRecoverMode = TRUE • One or more errors have occurred in which ActivateRecoverMode (Page 322) is effective. As soon as the errors are no longer pending, PID_3Step switches back to automatic mode.
8	Approach substitute output value with error monitoring This operating mode is activated instead of "Approach substitute output value" mode in the event of an error. PID_3Step moves the actuator to the substitute output value and then switches to "Error monitoring" mode. All the following conditions must be met: • Mode = 3 (automatic mode) • Errorbehaviour = 1 • ActivateRecoverMode = TRUE • One or more errors have occurred in which ActivateRecoverMode (Page 322) is effective. As soon as the errors are no longer pending, PID_3Step switches back to automatic mode.

Automatic switchover of operating mode during commissioning

PID_3Step automatically switches the operating mode in the event of an error. The following diagram illustrates the influence of ErrorBehaviour on the switchover of operating mode from transition time measurement, pretuning, and fine tuning modes.

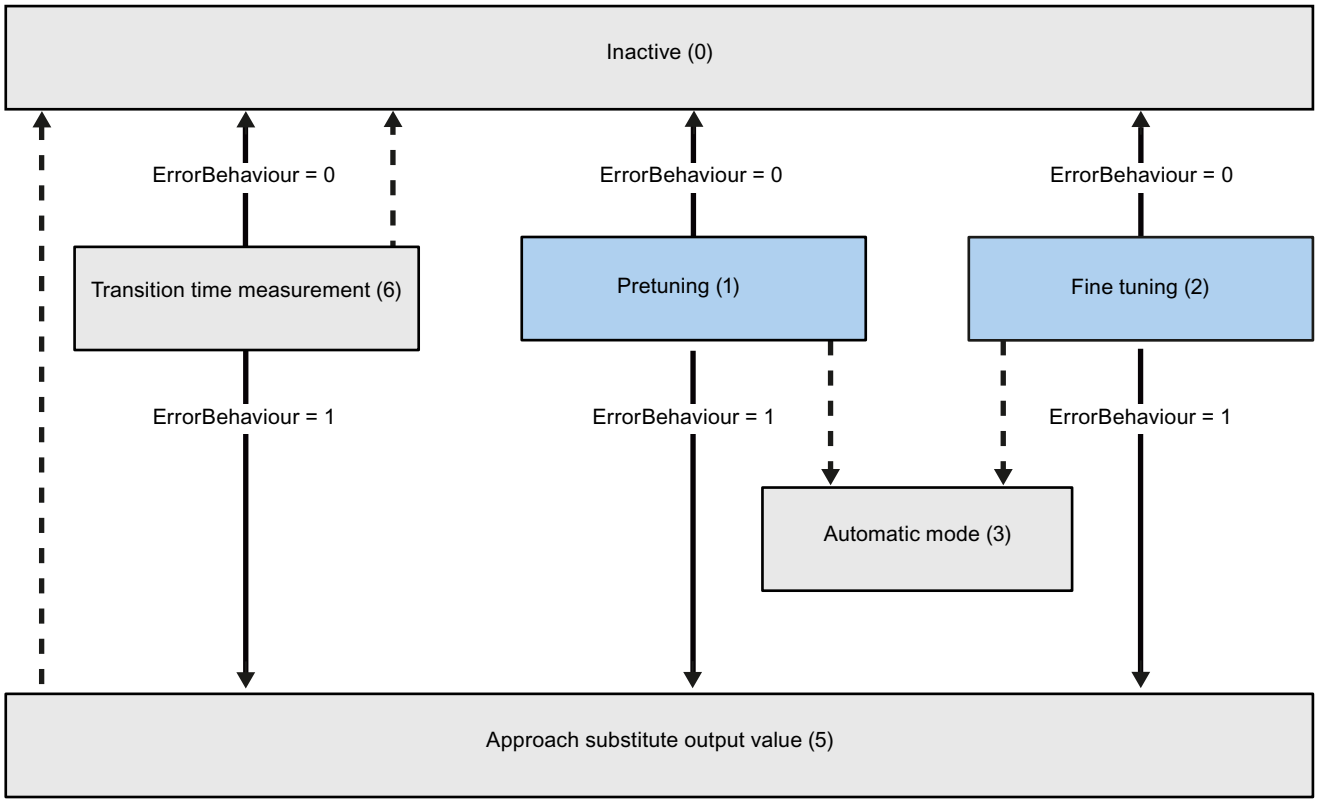

Automatic switchover of operating mode in the event of an error

Automatic switchover of operating mode once the current operation has been completed.

Automatic switchover of operating mode in automatic mode (PID_3Step V1.1)

PID_3Step automatically switches the operating mode in the event of an error. The following diagram illustrates the influence of ErrorBehaviour and ActivateRecoverMode on this switchover of operating mode.

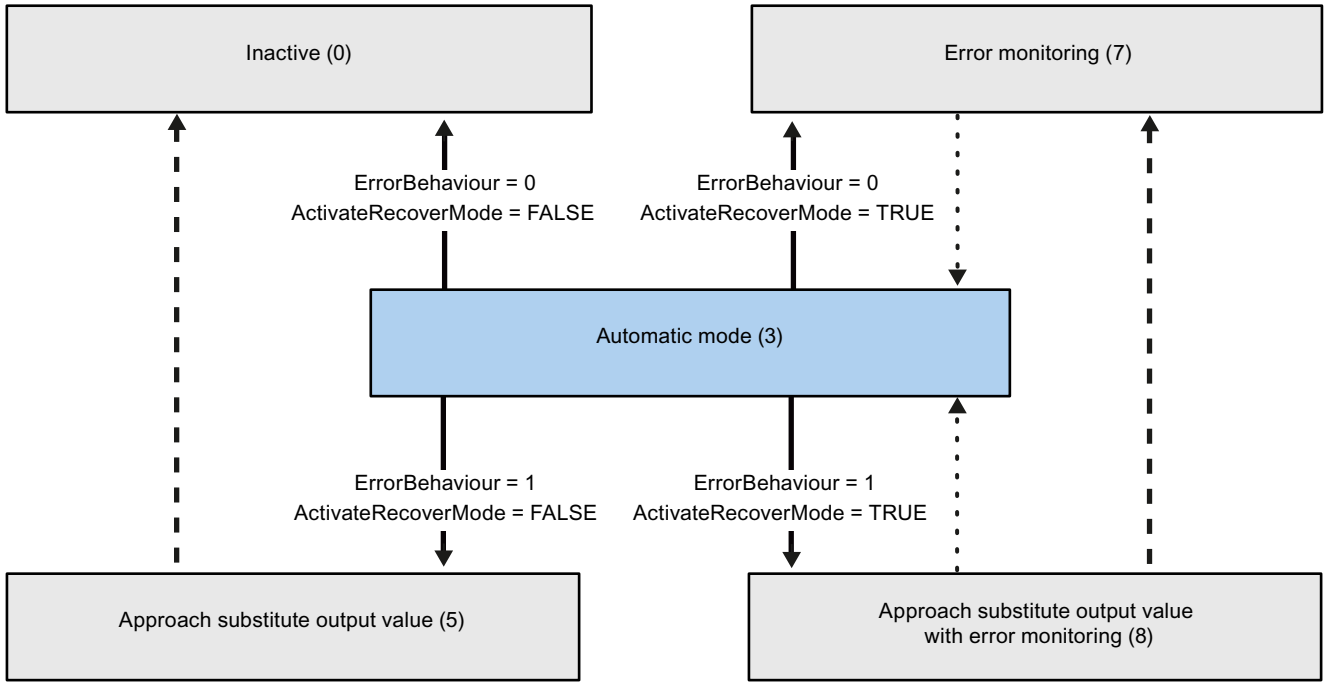

Automatic switchover of operating mode in the event of an error

Automatic switchover of operating mode once the current operation has been completed.

Automatic switchover of operating mode in automatic and manual modes (PID_3Step V1.0)

PID_3Step automatically switches the operating mode in the event of an error. The following diagram illustrates the influence of ErrorBehaviour and ActivateRecoverMode on this switchover of operating mode.

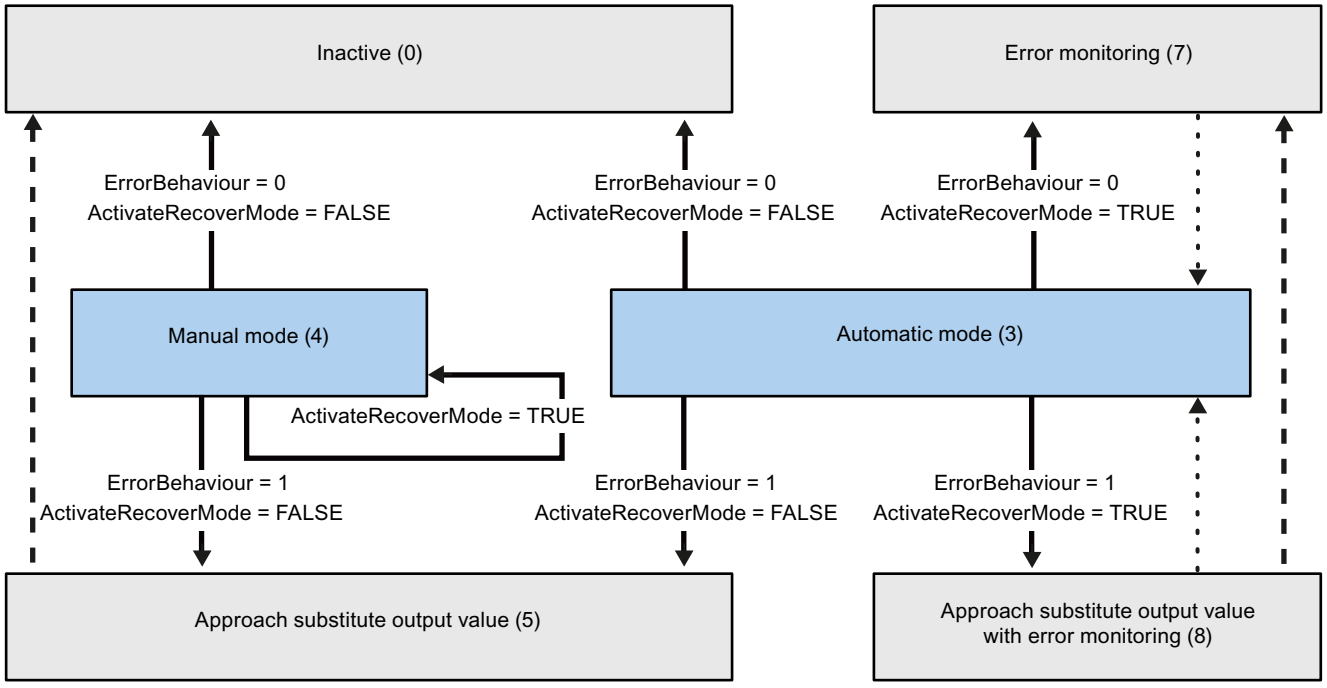

Automatic switchover of operating mode in the event of an error

Automatic switchover of operating mode once the current operation has been completed.

Automatic switchover of operating mode when error is no longer pending.

See also

Tag ActivateRecoverMode V1 (Page 322)
Parameter ErrorBits V1 (Page 320)

10.2.5.7 Parameter ErrorBits V1

If several errors are pending simultaneously, the values of the error codes are displayed with binary addition. The display of error code 0003, for example, indicates that the errors 0001 and 0002 are pending simultaneously.

ErrorBits (DW#16#...)	Description
0000	There is no error.

ErrorBits (DW#16#...)	Description
0001	The "Input" parameter is outside the process value limits. • Input > Config.InputUpperLimit or • Input < Config.InputLowerLimit If ActivateRecoverMode = TRUE and ErrorBehaviour = 1, the actuator moves to the substitute output value. If ActivateRecoverMode = TRUE and ErrorBehaviour = 0, the actuator stops in its current position. If ActivateRecoverMode = FALSE, the actuator stops in its current position. PID_3Step V1.1 You can move the actuator in manual mode. PID_3Step V1.0 Manual mode is not possible in this state. You cannot move the actuator again until you eliminate the error.
0002	Invalid value at "Input_PER" parameter. Check whether an error is pending at the analog input. If automatic mode was active before the error occurred, ActivateRecoverMode = TRUE, and the error is no longer pending, PID_3Step switches back to automatic mode.
0004	Error during fine tuning. Oscillation of the process value could not be maintained.
0020	Pretuning is not permitted in automatic mode or during fine tuning.
0080	Error during pretuning. The output value limits are not configured correctly or the actual value does not react as expected. Check whether the limits of the output value are configured correctly and match the control logic. Also make sure that the actual value does not oscillate strongly before starting pretuning.
0100	Error during fine tuning resulted in invalid parameters.
0200	Invalid value at "Input" parameter: Value has an invalid number format. If automatic mode was active before the error occurred, ActivateRecoverMode = TRUE, and the error is no longer pending, PID_3Step switches back to automatic mode.
0400	Calculation of output value failed. Check the PID parameters.
0800	Sampling time error: PID_3Step is not called within the sampling time of the cyclic interrupt OB. If automatic mode was active before the error occurred, ActivateRecoverMode = TRUE, and the error is no longer pending, PID_3Step switches back to automatic mode. If this error occurred during simulation with PLCSIM, see the notes under Simulating PID_3Step V1 with PLCSIM (Page 135).
1000	Invalid value at "Setpoint" parameter: Value has an invalid number format. If automatic mode was active before the error occurred, ActivateRecoverMode = TRUE, and the error is no longer pending, PID_3Step switches back to automatic mode.
2000	Invalid value at Feedback_PER parameter. Check whether an error is pending at the analog input. The actuator cannot be moved to the substitute output value and remains in its current position. Manual mode is not possible in this state. You must deactivate position feedback (Config. FeedbackOn = FALSE) to move the actuator from this state. If automatic mode was active before the error occurred, ActivateRecoverMode = TRUE, and the error is no longer pending, PID_3Step switches back to automatic mode.
4000	Invalid value at Feedback parameter. Value has an invalid number format. The actuator cannot be moved to the substitute output value and remains in its current position. Manual mode is not possible in this state. You must deactivate position feedback (Config. FeedbackOn = FALSE) to move the actuator from this state. If automatic mode was active before the error occurred, ActivateRecoverMode = TRUE, and the error is no longer pending, PID_3Step switches back to automatic mode.

ErrorBits (DW#16#...)	Description
8000	Error during digital position feedback. Actuator_H = TRUE and Actuator_L = TRUE. The actuator cannot be moved to the substitute output value and remains in its current position. Manual mode is not possible in this state. In order to move the actuator from this state, you must deactivate the "Actuator endstop" (Config.ActuatorEndStopOn = FALSE). If automatic mode was active before the error occurred, ActivateRecoverMode = TRUE, and the error is no longer pending, PID_3Step switches back to automatic mode.

10.2.5.8 Parameter Reset V1

A rising edge at Reset triggers a change to "Inactive" mode, and errors and warnings are reset. A falling edge at Reset triggers a change to the most recently active operating mode. If automatic mode was active before, switchover to automatic mode is bumpless.

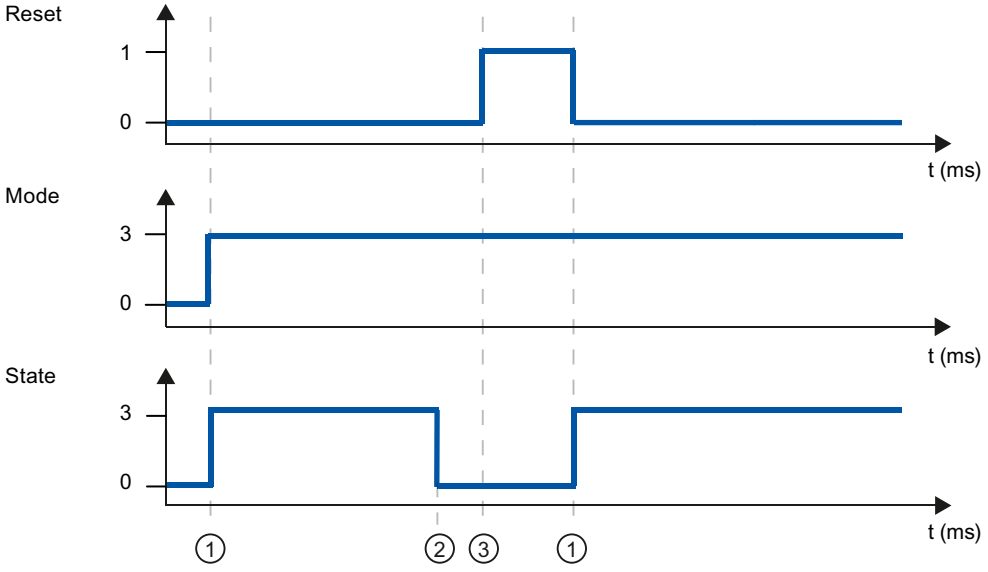

① Activation
② Error
③ Reset

10.2.5.9 Tag ActivateRecoverMode V1

The effect of the ActivateRecoverMode variable depends on the version of the PID_3Step.

Behavior in version 1.1

The ActivateRecoverMode variable determines the behavior in the event of an error in automatic mode. ActivateRecoverMode is not effective during pretuning, fine tuning and transition time measurement.

ActivateRecover-Mode	Description
FALSE	In the event of an error, PID_3Step switches to "Inactive" or "Approach substitute output value" operating mode. The controller is activated by a reset or a change in Retain.Mode.
TRUE	If errors occur frequently in automatic mode, this setting has a negative effect on the control response. In this case, check the ErrorBits parameter and eliminate the cause of the error. If one or more errors occur, PID_3Step switches to "Approach substitute output value with error monitoring" or "Error monitoring" mode: • 0002h: Invalid value at parameter Input_PER. • 0200h: Invalid value at parameter Input. • 0800h: Sampling time error • 1000h: Invalid value at parameter Setpoint. • 2000h: Invalid value at parameter Feedback_PER. • 4000h: Invalid value at parameter Feedback. • 8000h: Error in digital position feedback. With errors 2000h, 4000h and 8000h, PID_3Step **cannot** approach the configured substitute output value. As soon as the errors are no longer pending, PID_3Step switches back to automatic mode.

Behavior in version 1.0

The ActivateRecoverMode variable determines the behavior in the event of an error in automatic and manual mode. ActivateRecoverMode is not effective during pretuning, fine tuning and transition time measurement.

ActivateRecover-Mode	Description
FALSE	In the event of an error, PID_3Step switches to "Inactive" or "Approach substitute output value" operating mode. The controller is activated by a reset or a change in Retain.Mode.
TRUE	**Errors in automatic mode** If errors occur frequently in automatic mode, this setting has a negative effect on the control response. In this case, check the ErrorBits parameter and eliminate the cause of the error. If one or more errors occur, PID_3Step switches to "Approach substitute output value with error monitoring" or "Error monitoring" mode: • 0002h: Invalid value at parameter Input_PER. • 0200h: Invalid value at parameter Input. • 0800h: Sampling time error • 1000h: Invalid value at parameter Setpoint. • 2000h: Invalid value at parameter Feedback_PER. • 4000h: Invalid value at parameter Feedback. • 8000h: Error in digital position feedback. With errors 2000h, 4000h and 8000h, PID_3Step **cannot** approach the configured substitute output value. As soon as the errors are no longer pending, PID_3Step switches back to automatic mode. **Errors in manual mode**

ActivateRecover-Mode	Description
	If one or more of the following errors occur, PID_3Step stays in manual mode: • 0002h: Invalid value at parameter Input_PER. • 0200h: Invalid value at parameter Input. • 0800h: Sampling time error • 1000h: Invalid value at parameter Setpoint. • 2000h: Invalid value at parameter Feedback_PER. • 4000h: Invalid value at parameter Feedback. • 8000h: Error in digital position feedback. With errors 2000h, 4000h and 8000h, you **cannot** move the valve to a suitable position.

See also

PID_3Step V1 static tags (Page 308)

Parameter State and Retain.Mode V1 (Page 314)

10.2.5.10 Tag Warning V1

If several warnings are pending simultaneously, their values are displayed with binary addition. The display of warning 0003, for example, indicates that the warnings 0001 and 0002 are pending simultaneously.

Warning (DW#16#...)	Description
0000	No warning pending.
0001	The point of inflection was not found during pretuning.
0002	Oscillation increased during fine tuning.
0004	The setpoint was limited to the configured limits.
0008	Not all the necessary controlled system properties were defined for the selected method of calculation. The PID parameters were instead calculated using the TuneRuleTIR = 3 method.
0010	The operating mode could not be changed because ManualEnable = TRUE.
0020	The cycle time of the calling OB limits the sampling time of the PID algorithm. Improve results by using shorter OB cycle times.
0040	The process value exceeded one of its warning limits.
0080	Invalid value at Retain.Mode. The operating mode is not switched.
0100	The manual value was limited to the limits of the controller output.
0200	The rule used for tuning produces an incorrect result, or is not supported.
0400	Method selected for transition time measurement not suitable for actuator. The transition time cannot be measured because the actuator settings do not match the selected measuring method.
0800	The difference between the current position and the new output value is too small for transition time measurement. This can produce incorrect results. The difference between the current output value and new output value must be at least 50% of the entire control range.
1000	The substitute output value cannot be reached because it is outside the output value limits.

The following warnings are deleted as soon as the cause is eliminated:

- 0004
- 0020
- 0040
- 0100

All other warnings are cleared with a rising edge at Reset.

10.2.5.11 Tag SUT.State V1

SUT.State	Name	Description
0	SUT_INIT	Initialize pretuning
50	SUT_TPDN	Determine start position without position feedback
100	SUT_STDABW	Calculate the standard deviation
200	SUT_GET_POI	Find the point of inflection
300	SUT_GET_RISETM	Determine the rise time
9900	SUT_IO	Pretuning successful
1	SUT_NIO	Pretuning not successful

10.2.5.12 Tag TIR.State V1

TIR.State	Name	Description
-100	TIR_FIRST_SUT	Fine tuning is not possible. Pretuning will be executed first.
0	TIR_INIT	Initialize fine tuning
200	TIR_STDABW	Calculate the standard deviation
300	TIR_RUN_IN	Attempt to reach the setpoint with the maximum or minimum output value
400	TIR_CTRLN	Attempt to reach the setpoint with the existing PID parameters (if pretuning has been successful)
500	TIR_OSZIL	Determine oscillation and calculate parameters
9900	TIR_IO	Fine tuning successful
1	TIR_NIO	Fine tuning not successful

10.3 PID_Temp

10.3.1 New features of PID_Temp

PID_Temp V1.1

- **Response of the output value on switchover from "Inactive" operating mode to "Automatic mode"**
  The new option IntegralResetMode = 4 was added and defined as default. With IntegralResetMode = 4, the integral action is automatically pre-assigned when switching from "Inactive" operating mode to "Automatic mode" so that a control deviation results in a jump of the PID output value with identical sign.
- **Initialization of the integral action in automatic mode**
  The integral action can be initialized in automatic mode with the tags OverwriteInitialOutputValue and PIDCtrl.PIDInit. This simplifies the use of PID_Temp for override controls.

10.3.2 Compatibility with CPU and FW

The following table shows which version of PID_Temp can be used on which CPU.

CPU	FW	PID_Temp
S7-1200	V4.2 or higher	V1.1 V1.0
	V4.1	V1.0
S7-1500	V3.0 or higher	V1.1
	V2.0 to V2.9	V1.1 V1.0
	V1.7 to V1.8	V1.0

10.3.3 CPU processing time and memory requirement PID_Temp V1

CPU processing time

Typical CPU processing times of the PID_Temp technology object as of Version V1.0, depending on CPU type and operating mode for standard, F, T and TF CPUs.

CPU	FW	Typ. CPU processing time Automatic mode	Typ. CPU processing time pre-tuning and fine tuning
CPU 1211	≥ V4.1	290 µs	450 µs
CPU 1212			
CPU 1214			
CPU 1215			
CPU 1217			

CPU 1510SP	≤ V2.9	85 µs	140 µs
CPU 1511			
CPU 1511C			
CPU 1512C			
CPU 1512SP			
CPU 1513			
CPU 1515		80 µs	110 µs
CPU 1516			
CPU 1517	≥ V1.7	12 µs	18 µs
CPU 1518		6 µs	9 µs
CPU 1510SP	≥ V3.0	70 µs	110 µs
CPU 1511			
CPU 1512SP			
CPU 1513			
CPU 1514SP			
CPU 1515		55 µs	90 µs
CPU 1516			

Memory requirement

Memory requirement of an instance DB of the PID_Temp technology object as of Version V1.0.

Memory requirement	Memory requirement of the instance DB of PID_Temp V1
Load memory requirement	Approx. 17000 bytes
Total work memory requirement	1280 bytes
Retentive work memory requirement	100 bytes

10.3.4 PID_Temp

10.3.4.1 Description of PID_Temp

Description

The PID_Temp instruction provides a PID controller with integrated tuning for temperature processes. PID_Temp can be used for pure heating or heating/cooling applications.

The following operating modes are possible:

- Inactive
- Pretuning
- Fine tuning
- Automatic mode
- Manual mode
- Substitute output value with error monitoring

For a more detailed description of the operating modes, see the State parameter.

PID algorithm

PID_Temp is a PIDT1 controller with anti-windup and weighting of the proportional and derivative actions. The PID algorithm operates according to the following equation (control zone and dead zone deactivated):

$$y = K_p \left[(b \cdot w - x) + \frac{1}{T_I \cdot s} (w - x) + \frac{T_D \cdot s}{a \cdot T_D \cdot s + 1} (c \cdot w - x) \right]$$

The table below shows the meaning of the icons used in the equation and in the subsequent figures.

Icon	Description	Associated parameters of the PID_Temp instruction
y	Output value of the PID algorithm	-
K_p	Proportional gain	Retain.CtrlParams.Heat.Gain Retain.CtrlParams.Cool.Gain CoolFactor
s	Laplace operator	-
b	Proportional action weighting	Retain.CtrlParams.Heat.PWeighting Retain.CtrlParams.Cool.PWeighting
w	Setpoint	CurrentSetpoint
x	Process value	ScaledInput
T_I	Integral action time	Retain.CtrlParams.Heat.Ti Retain.CtrlParams.Cool.Ti
T_D	Derivative action time	Retain.CtrlParams.Heat.Td Retain.CtrlParams.Cool.Td
a	Derivative delay coefficient (derivative delay T1 = a × T_D)	Retain.CtrlParams.Heat.TdFiltRatio Retain.CtrlParams.Cool.TdFiltRatio
c	Derivative action weighting	Retain.CtrlParams.Heat.DWeighting Retain.CtrlParams.Cool.DWeighting
DeadZone	Dead zone width	Retain.CtrlParams.Heat.DeadZone Retain.CtrlParams.Cool.DeadZone
ControlZone	Control zone width	Retain.CtrlParams.Heat.ControlZone Retain.CtrlParams.Cool.ControlZone

PID_Temp block diagram

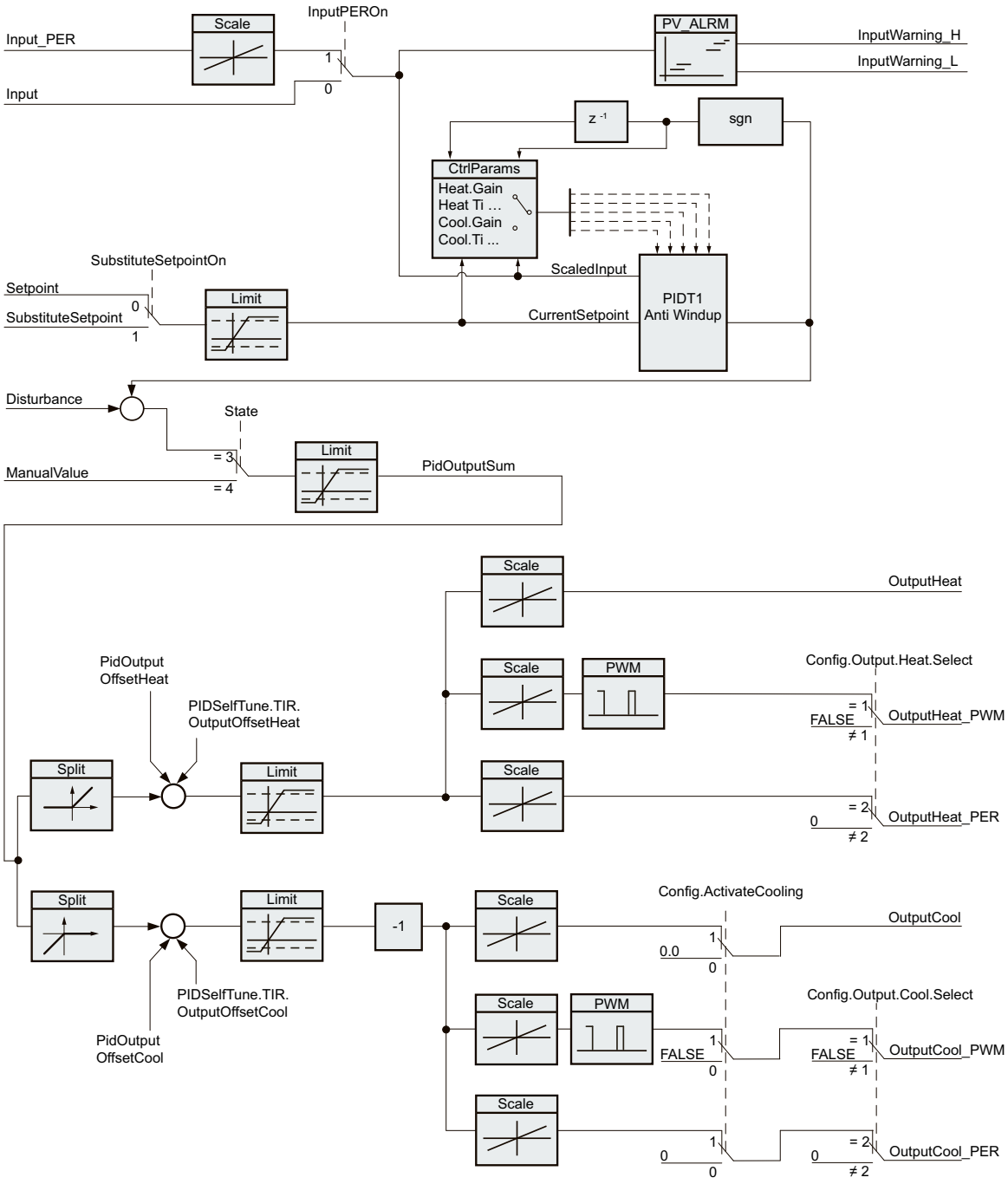

Block diagram of PIDT1 with anti-windup

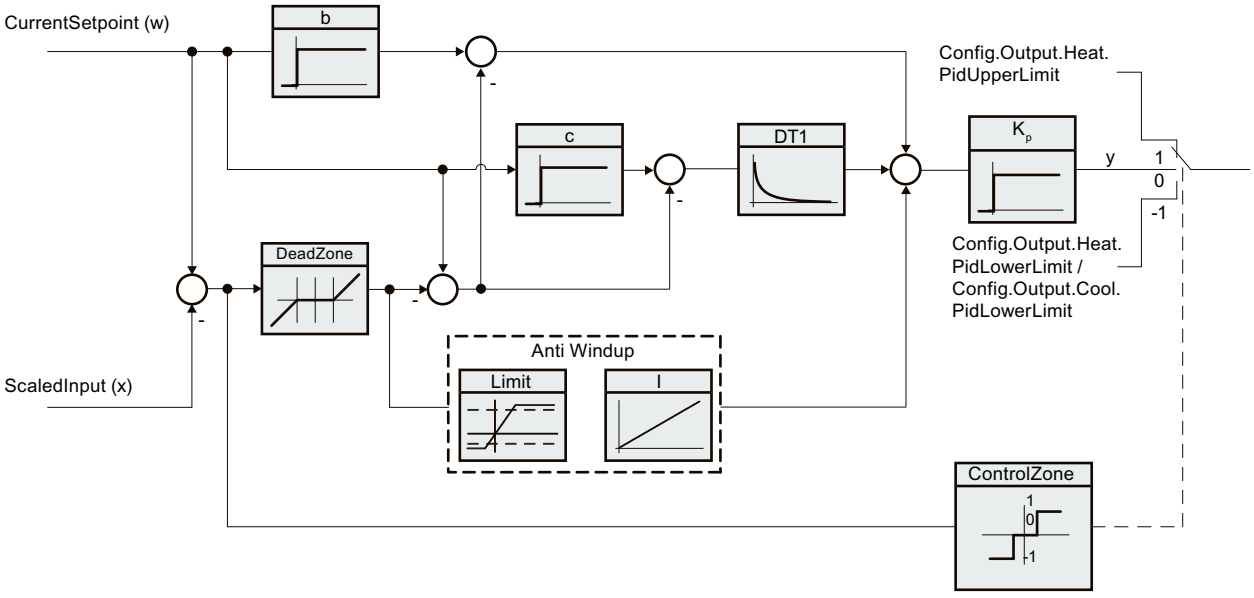

Call

PID_Temp is called in the constant time scale of a cyclic interrupt OB.

Download to device

The process values of retentive tags are only updated when you download PID_Temp completely.
Download technology object to device (Page 44)

Startup

When the CPU starts up, PID_Temp starts in the operating mode that is saved in the Mode in/out parameter. To switch to "Inactive" operating mode during startup, set RunModeByStartup = FALSE.

Reaction to error

The behavior in the case of an error is determined by the tags SetSubstituteOutput and ActivateRecoverMode. If ActivateRecoverMode = TRUE, the behavior also depends on the error that occurred.

SetSubstitu-teOutput	ActivateR-ecoverMode	Configuration editor > Basic settings of output > Set PidOutputSum to	Reaction
Not relevant	FALSE	Zero (inactive)	Switch to "Inactive" (State = 0) mode The output value of the PID algorithm and all outputs for heating and cooling are set to 0. The scaling of the outputs for heating and cooling is not active.
FALSE	TRUE	Current value for error while error is pending	Switch to "Substitute output value with error monitoring" mode (State = 5) The current output value is transferred to the actuator while the error is pending.
TRUE	TRUE	Substitute output value while error is pending	Switch to "Substitute output value with error monitoring" mode (State = 5) The value at SubstituteOutput is transferred to the actuator while the error is pending.

In manual mode, PID_Temp uses ManualValue as output value, unless ManualValue is invalid.

- If ManualValue is invalid, SubstituteOutput is used.
- If ManualValue and SubstituteOutput are invalid, Config.Output.Heat.PidLowerLimit is used.

The Error parameter indicates if an error is pending. When the error is no longer pending, Error = FALSE. The ErrorBits parameter shows which errors have occurred. ErrorBits is reset by a rising edge at Reset or ErrorAck.

10.3.4.2 Mode of operation of PID_Temp

Monitoring process value limits

You specify the high limit and low limit of the process value in the Config.InputUpperLimit and Config.InputLowerLimit tags. If the process value is outside these limits, an error occurs (ErrorBits = 0000001h).

You specify a high and low warning limit of the process value in the Config.InputUpperWarning and Config.InputLowerWarning tags. If the process value is outside these warning limits, a warning occurs (Warning = 0000040h), and the InputWarning_H or InputWarning_L output parameter changes to TRUE.

Limiting the setpoint

You specify a high limit and low limit of the setpoint in the Config.SetpointUpperLimit and Config.SetpointLowerLimit tags. PID_Temp automatically limits the setpoint to the process value limits. You can limit the setpoint to a smaller area. PID_Temp checks whether this area is within the process value limits. If the setpoint is outside these limits, the high or low limit is used as the setpoint, and output parameter SetpointLimit_H or SetpointLimit_L is set to TRUE.

The setpoint is limited in all operating modes.

Substitute setpoint

You can specify a substitute setpoint at the SubstituteSetpoint tag and activate it with SubstituteSetpointOn = TRUE. In this way, you can temporarily specify the setpoint directly, for example for a slave controller in a cascade, without having to change the user program. The limits set for the setpoint also apply to the substitute setpoint.

Heating and cooling

With the default setting, PID_Temp only uses the outputs for heating (OutputHeat, OutputHeat_PWM, OutputHeat_PER). The output value of the PID algorithm (PidOutputSum) is scaled and output at the outputs for heating. You specify with Config.Output.Heat.Select if OutputHeat_PWM or OutputHeat_PER is calculated. OutputHeat is always calculated.

With Config.ActivateCooling = TRUE, you can also activate the outputs for cooling (OutputCool, OutputCool_PWM, OutputCool_PER). Positive output values of the PID algorithm (PidOutputSum) are scaled and output at the outputs for heating. Negative output values of the PID algorithm are scaled and output at the outputs for cooling. You specify with Config.Output.Cool.Select if OutputCool_PWM or OutputCool_PER is calculated. OutputCool is always calculated.

Two methods are available to calculate the PID output value with activated cooling:

- Cooling factor (Config.AdvancedCooling = FALSE):
  The output value calculation for cooling takes place with the PID parameters for heating, taking into consideration the configurable cooling factor Config.CoolFactor. This method is suitable if the heating and cooling actuators have a similar time response but different gains. If this method is selected, pretuning and fine tuning for cooling as well as the PID parameter set for cooling are not available. You can only execute the tuning for heating.
- PID parameter switching (Config.AdvancedCooling = TRUE):
  The output value calculation for cooling takes place by means of a separate PID parameter set. Based on the calculated output value and the control deviation, the PID algorithm decides whether the PID parameter for heating or cooling is used. This method is suitable if the heating and cooling actuator have different time responses and different gains. Pretuning and fine tuning for cooling are only available if this method is selected.

Output value limits and scaling

Depending on the operating mode, the PID output value (PidOutputSum) is calculated automatically by the PID algorithm or defined by the manual value (ManualValue) or the configured substitute output value (SubstituteOutput).

The PID output value is limited according to the configuration:

- If cooling is deactivated (Config.ActivateCooling = FALSE), Config.Output.Heat.PidUpperLimit is the high limit and Config.Output.Heat.PidLowerLimit the low limit.
- If cooling is activated (Config.ActivateCooling = TRUE), Config.Output.Heat.PidUpperLimit is the high limit and Config.Output.Cool.PidLowerLimit the low limit.

The PID output value is scaled and output at the outputs for heating and cooling. Scaling can be defined separately for each output and is specified in the structures Config.Output.Heat or Config.Output.Cool with 2 value pairs each:

Output	Value pair	Parameter
OutputHeat	Value pair 1	PID output value high limit (heating) Config.Output.Heat.PidUpperLimit, Scaled high output value (heating) Config.Output.Heat.UpperScaling
	Value pair 2	PID output value low limit (heating) Config.Output.Heat.PidLowerLimit, Scaled low output value (heating) Config.Output.Heat.LowerScaling
OutputHeat_PWM	Value pair 1	PID output value high limit (heating) Config.Output.Heat.PidUpperLimit, Scaled high PWM output value (heating) Config.Output.Heat.PwmUpperScaling
	Value pair 2	PID output value low limit (heating) Config.Output.Heat.PidLowerLimit, Scaled low PWM output value (heating) Config.Output.Heat.PwmLowerScaling
OutputHeat_PER	Value pair 1	PID output value high limit (heating) Config.Output.Heat.PidUpperLimit, Scaled high analog output value (heating) Config.Output.Heat.PerUpperScaling
	Value pair 2	PID output value low limit (heating) Config.Output.Heat.PidLowerLimit, Scaled low analog output value (heating) Config.Output.Heat.PerLowerScaling
OutputCool	Value pair 1	PID output value low limit (cooling) Config.Output.Cool.PidLowerLimit, Scaled high output value (cooling) Config.Output.Cool.UpperScaling
	Value pair 2	PID output value high limit (cooling) Config.Output.Cool.PidUpperLimit, Scaled low output value (cooling) Config.Output.Cool.LowerScaling
OutputCool_PWM	Value pair 1	PID output value low limit (cooling) Config.Output.Cool.PidLowerLimit, Scaled high PWM output value (cooling) Config.Output.Cool.PwmUpperScaling

If cooling is activated (Config.ActivateCooling = TRUE), Config.Output.Heat.PidLowerLimit must have the value 0.0.

Config.Output.Cool.PidUpperLimit must always have the value 0.0.

Output	Value pair	Parameter
OutputCool_PWM	Value pair 2	PID output value high limit (cooling) Config.Output.Cool.PidUpperLimit, Scaled low PWM output value (cooling) Config.Output.Cool.PwmLowerScaling
OutputCool_PER	Value pair 1	PID output value low limit (cooling) Config.Output.Cool.PidLowerLimit, Scaled high analog output value (cooling) Config.Output.Cool.PerUpperScaling
	Value pair 2	PID output value high limit (cooling) Config.Output.Cool.PidUpperLimit, Scaled low analog output value (cooling) Config.Output.Cool.PerLowerScaling

If cooling is activated (Config.ActivateCooling = TRUE), Config.Output.Heat.PidLowerLimit must have the value 0.0.

Config.Output.Cool.PidUpperLimit must always have the value 0.0.

Example:
Output scaling when using output OutputHeat (cooling deactivated; Config.Output.Heat.PidLowerLimit may be unequal to 0.0):

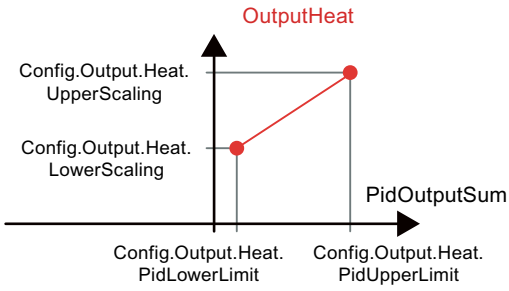

Example:
Output scaling when using output OutputHeat_PWM and OutputCool_PER (cooling activated; Config.Output.Heat.PidLowerLimit must be 0.0):

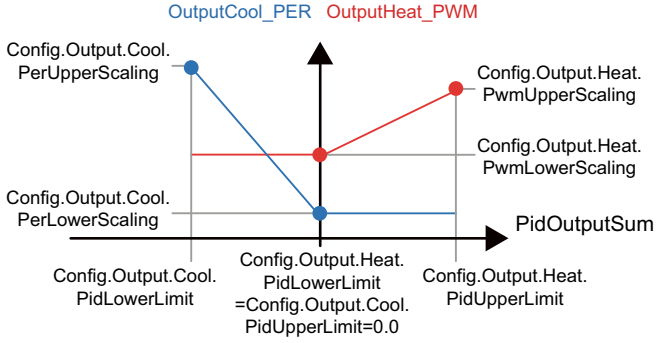

With the exception of the "Inactive" operating mode, the value at an output is always located between its scaled high output value and scaled low output value, for example, for OutputHeat always between Config.Output.Heat.UpperScaling and Config.Output.Heat.LowerScaling.
If you want to limit the value at the associated output, you therefore have to adapt these scaling values as well.

Cascading

PID_Temp supports you when you use cascade control (see: Program creation (Page 168)).

Substitute output value

In the event of an error, PID_Temp can output a substitute output value that you define at the SubstituteOutput tag. The substitute output value must be within the limits for the PID output value. The values at the outputs for heating and cooling resulting from the substitute output value are the result of the configured output scaling.

Monitoring signal validity

The values of the following parameters are monitored for validity when used:

- Setpoint
- SubstituteSetpoint
- Input
- Input_PER
- Disturbance
- ManualValue
- SubstituteOutput
- PID parameters in the structures Retain.CtrlParams.Heat and Retain.CtrlParams.Cool.

Monitoring the sampling time PID_Temp

Ideally, the sampling time is equivalent to the cycle time of the cyclic interrupt OB. The PID_Temp instruction measures the time interval between two calls. This is the current sampling time. On every switchover of operating mode and during the initial startup, the mean value is formed from the first 10 sampling times. Too great a difference between the current sampling time and this mean value triggers an error (Error = 0000800h).

The error occurs during tuning if:

- New mean value >= 1.1 x old mean value
- New mean value <= 0.9 x old mean value

The error occurs in automatic mode if:

- New mean value >= 1.5 x old mean value
- New mean value <= 0.5 x old mean value

If you deactivate the sampling time monitoring (CycleTime.EnMonitoring = FALSE), you can also call PID_Temp in OB1. You must then accept a lower control quality due to the deviating sampling time.

Sampling time of the PID algorithm

The controlled system needs a certain amount of time to respond to changes in the output value. It is therefore not advisable to calculate the output value in every cycle. The sampling time of the PID algorithm represents the time between two calculations of the output value. It is calculated during tuning and rounded to a multiple of the cycle time of the cyclic

interrupt OB (sampling time PID_Temp). All other functions of the PID_Temp are executed at every call.

If cooling and PID parameter switching are activated, PID_Temp uses a separate sampling time of the PID algorithm for heating and cooling. In all other configurations, only the sampling time of the PID algorithm for heating is used.

If you use OutputHeat_PWM or OutputCool_PWM, the sampling time of the PID algorithm is used as time period of the pulse width modulation. The accuracy of the output signal is determined by the ratio of the PID algorithm sampling time to the cycle time of the OB. The cycle time should be no more than a tenth of the PID algorithm sampling time.

If the PID algorithm sampling time and thus the time period of the pulse width modulation is very high when you use OutputHeat_PWM or OutputCool_PWM, you can define a deviating shorter period duration at the Config.Output.Heat.PwmPeriode or Config.Output.Cool.PwmPeriode parameters to improve the smoothness of the process value.

Control logic

PID_Temp can be used for heating or heating/cooling applications and always works with normal control logic.

An increase of the PID output value (PidOutputSum) is intended to increase the process value. The values at the outputs for heating and cooling resulting from the PID output value are the result of the configured output scaling.

An inverted control logic or negative proportional gain are not supported.

If you only need an output value for your application in which an increase is to reduce the process value (for example, discharge control), you can use PID_Compact with inverted control logic.

10.3.4.3 Input parameters of PID_Temp

The names of the following parameters apply both to the data block and to access via the Openness API.

Parameter	Data type	Default	Description
Setpoint	REAL	0.0	Setpoint of the PID controller in automatic mode Valid range of values: Config.SetpointUpperLimit ≥ Setpoint ≥ Config.SetpointLowerLimit Config.InputUpperLimit ≥ Setpoint ≥ Config.InputLowerLimit
Input	REAL	0.0	A tag of the user program is used as source for the process value. If you are using the Input parameter, Config.InputPerOn = FALSE must be set.
Input_PER	INT	0	An analog input is used as the source of the process value. If you are using the Input_PER parameter, Config.InputPerOn = TRUE must be set.
Disturbance	REAL	0.0	Disturbance variable or precontrol value
ManualEnable	BOOL	FALSE	• A FALSE -> TRUE edge activates "Manual mode", whileState = 4, Mode remains unchanged. As long as ManualEnable = TRUE, you cannot change the operating mode via a rising edge at ModeActivate or use the commissioning dialog. • A TRUE -> FALSE edge activates the operating mode that is specified by Mode.

Parameter	Data type	Default	Description
			We recommend that you change the operating mode using Mode and ModeActivate only.
ManualValue	REAL	0.0	Manual value This value is used in manual mode as PID output value (PidOutputSum). The values at the outputs for heating and cooling resulting from this manual value are the result of the configured output scaling (structures Config.Output.Heat and Config.Output.Cool). For controllers with activated cooling output (Config.ActivateCooling = TRUE), define: • a positive manual value to output the value at the outputs for heating • a negative manual value to output the value at the outputs for cooling The permitted value range is determined by the configuration. • Cooling output deactivated (Config.ActivateCooling = FALSE): Config.Output.Heat.PidUpperLimit ≥ ManualValue ≥ Config.Output.Heat.PidLowerLimit • Cooling output activated (Config.ActivateCooling = TRUE): Config.Output.Heat.PidUpperLimit ≥ ManualValue ≥ Config.Output.Cool.PidLowerLimit
ErrorAck	BOOL	FALSE	• FALSE -> TRUE edge ErrorBits and Warning are reset.
Reset	BOOL	FALSE	Restarts the controller. • FALSE -> TRUE edge – Switch to "Inactive" mode – ErrorBits and Warning are reset. • As long as Reset = TRUE, – PID_Temp remains in "Inactive" mode (State = 0). – you cannot change the operating mode with Mode and ModeActivate or ManualEnable – You cannot use the commissioning dialog. • TRUE -> FALSE edge – If ManualEnable = FALSE, PID_Temp switches to the operating mode that is saved in Mode. – If Mode = 3 (automatic mode), the integral action is treated as configured with the tag IntegralResetMode.
ModeActivate	BOOL	FALSE	• FALSE -> TRUE edge PID_Temp switches to the operating mode that is saved at the Mode input.

10.3.4.4 Output parameters of PID_Temp

The names of the following parameters apply both to the data block and to access via the Openness API.

Parameter	Data type	Default	Description
ScaledInput	REAL	0.0	Scaled process value
OutputHeat	REAL	0.0	Output value (heating) in REAL format The PID output value (PidOutputSum) is scaled with the two value pairs Config.Output.Heat.PidUpperLimit, Config.Output.Heat.UpperScaling and Config.Output.Heat.PidLowerLimit, Config.Output.Heat.LowerScaling and output in REAL format at OutputHeat. OutputHeat is always calculated.

Parameter	Data type	Default	Description
OutputCool	REAL	0.0	Output value (cooling) in REAL format The PID output value (PidOutputSum) is scaled with the two value pairs Config.Output.Cool.PidUpperLimit, Config.Output.Cool.LowerScaling and Config.Output.Cool.PidLowerLimit, Config.Output.Cool.UpperScaling and output in REAL format at OutputCool. OutputCool is only calculated if the cooling output is activated (Config.ActivateCooling = TRUE).
OutputHeat_PER	INT	0	Analog output value (heating) The PID output value (PidOutputSum) is scaled with the two value pairs Config.Output.Heat.PidUpperLimit, Config.Output.Heat.PerUpperScaling and Config.Output.Heat.PidLowerLimit, Config.Output.Heat.PerLowerScaling and output as analog value at OutputHeat_PER. OutputHeat_PER is only calculated if Config.Output.Heat.Select = 2.
OutputCool_PER	INT	0	Analog output value (cooling) The PID output value (PidOutputSum) is scaled with the two value pairs Config.Output.Cool.PidUpperLimit, Config.Output.Cool.PerLowerScaling and Config.Output.Cool.PidLowerLimit, Config.Output.Cool.PerUpperScaling and output as analog value at OutputCool_PER. OutputCool_PER is only calculated if the cooling output is activated (Config.ActivateCooling = TRUE) and Config.Output.Cool.Select = 2.
OutputHeat_PWM	BOOL	FALSE	Pulse-width modulated output value (heating) The PID output value (PidOutputSum) is scaled with the two value pairs Config.Output.Heat.PidUpperLimit, Config.Output.Heat.PwmUpperScaling and Config.Output.Heat.PidLowerLimit, Config.Output.Heat.PwmLowerScaling and output as pulse-width modulated value (variable switch on and switch off times) at OutputHeat_PWM. OutputHeat_PWM is only calculated if Config.Output.Heat.Select = 1.
OutputCool_PWM	BOOL	FALSE	Pulse-width modulated output value (cooling) The PID output value (PidOutputSum) is scaled with the two value pairs Config.Output.Cool.PidUpperLimit, Config.Output.Cool.PwmLowerScaling and Config.Output.Cool.PidLowerLimit, Config.Output.Cool.PwmUpperScaling and output as pulse-width modulated value (variable switch on and switch off times) at OutputCool_PWM. OutputCool_PWM is only calculated if the cooling output is activated (Config.ActivateCooling = TRUE) and Config.Output.Cool.Select = 1.
SetpointLimit_H	BOOL	FALSE	If SetpointLimit_H = TRUE, the absolute setpoint high limit is reached (Setpoint ≥ Config.SetpointUpperLimit) or Setpoint ≥ Config.InputUpperLimit. The setpoint high limit is the minimum of Config.SetpointUpperLimit and Config.InputUpperLimit.
SetpointLimit_L	BOOL	FALSE	If SetpointLimit_L = TRUE, the absolute setpoint low limit is reached (Setpoint ≤ Config.SetpointLowerLimit) or Setpoint ≤ Config.InputLowerLimit. The setpoint low limit is the maximum of Config.SetpointLowerLimit and Config.InputLowerLimit.
InputWarning_H	BOOL	FALSE	If InputWarning_H = TRUE, the process value has reached or exceeded the warning high limit (ScaledInput ≥ Config.InputUpperWarning).
InputWarning_L	BOOL	FALSE	If InputWarning_L = TRUE, the process value has reached or fallen below the warning low limit (ScaledInput ≤ Config.InputLowerWarning).

Parameter	Data type	Default	Description
State	INT	0	The PID_Temp state and mode parameters (Page 365) shows the current operating mode of the PID controller. You can change the operating mode using the input parameter Mode and a rising edge at ModeActivate. For pretuning and fine tuning, you specify with Heat.EnableTuning and Cool.EnableTuning whether tuning takes place for heating or cooling. • State = 0: Inactive • State = 1: Pre-tuning • State = 2: Fine tuning • State = 3: Automatic mode • State = 4: Manual mode • State = 5: Substitute output value with error monitoring
Error	BOOL	FALSE	If Error = TRUE, at least one error message is pending in this cycle.
ErrorBits	DWORD	DW#16#0	The PID_Temp ErrorBits parameter (Page 370) shows the pending error messages. ErrorBits is retentive and is reset with a rising edge at Reset or ErrorAck.

10.3.4.5 In/out parameters of PID_Temp V2

The names of the following parameters apply both to the data block and to access via the Openness API.

Parameter	Data type	Default	Description
Mode	INT	4	At Mode, specify the operating mode to which PID_Temp is to switch. Options are: • Mode = 0: Inactive • Mode = 1: Pretuning • Mode = 2: Fine tuning • Mode = 3: Automatic mode • Mode = 4: Manual mode The operating mode is activated by: • Rising edge at ModeActivate • Falling edge at Reset • Falling edge at ManualEnable • Cold restart of CPU if RunModeByStartup = TRUE For pretuning and fine tuning, you specify with Heat.EnableTuning and Cool.EnableTuning whether tuning takes place for heating or cooling. Mode is retentive. A detailed description of the operating modes can be found in State and Mode parameters (Page 365).
Master	DWORD	DW#16#0	Interface for cascade control If this PID_Temp instance is used as slave controller in a cascade (Config.Cascade.IsSlave = TRUE), assign the Master parameter at the instruction call with the Slave parameter of the master controller. Example: Call of a slave controller "PID_Temp_2" with master controller "PID_Temp_1" in SCL: ---------- `"PID_Temp_2"(Master := "PID_Temp_1".Slave, Setpoint := "PID_Temp_1".OutputHeat);` ---------- You use this interface to exchange slave controller information about operating mode, limit and substitute setpoint with your master controller. Keep in mind that

Parameter	Data type	Default	Description
			the call of the master controller has to take place before the call of the slave controller in the same cyclic interrupt OB. Assignment: • Bits 0 to 15: Unassigned • Bits 16 to 23 – Limit counter: A slave controller whose output value is limited increments this counter. Depending on the configured number of slaves (Config.Cascade.CountSlaves) and of the anti-windup mode (Config.Cascade.AntiWindUpMode), the master controller reacts accordingly. • Bit 24 – Automatic mode of the slave controllers: TRUE, if all slave controllers are in automatic mode • Bit 25 – Substitute setpoint of the slave controllers: TRUE, if a slave controller has activated the substitute setpoint (SubstituteSetpointOn = TRUE)
Slave	DWORD	DW#16#0	Interface for cascade control You use this interface to exchange slave controller information about operating mode, limit and substitute setpoint with your master controller. See description of Master parameter

See also

PID_Temp state and mode parameters (Page 365)
Program creation (Page 168)
Cascade control with PID_Temp (Page 166)

10.3.4.6 PID_Temp static tags

NOTE

Change the tags identified with (1) only in "Inactive" mode to prevent malfunction of the PID controller.

The names of the following variables apply both to the data block and to access via the Openness API.

Tag	Data type	Default	Description
IntegralResetMode	Int	V1.0: 1, V1.1 or higher: 4	The IntegralResetMode tag (Page 377) determines how the integral action PIDCtrl.IOutputOld is preassigned when switching from "Inactive" operating mode to "Automatic mode". This setting only works for one cycle. • IntegralResetMode = 0: Smooth • IntegralResetMode = 1: Delete • IntegralResetMode = 2: Hold • IntegralResetMode = 3: Pre-assign • IntegralResetMode = 4: Like setpoint change (only for PID_Temp with version ≥ 1.1)

Tag	Data type	Default	Description
OverwriteInitialOutputValue	REAL	0.0	If one of the following conditions is met, the integral action PIDCtrl.IOutputOld is preassigned automatically as if PIDOutputSum = OverwriteInitialOutputValue in the previous cycle: • IntegralResetMode = 3 when switching from "Inactive" operating mode to "Automatic mode" • IntegralResetMode = 3, TRUE -> FALSE edge at parameter Reset and parameter Mode = 3 • PIDCtrl.PIDInit = TRUE in "Automatic mode" (available as of PID_Temp version 1.1)
RunModeByStartup	BOOL	TRUE	Activate operating mode at Mode parameter after CPU restart • If RunModeByStartup = TRUE, PID_Temp starts in the operating mode saved in the Mode parameter after CPU startup. • If RunModeByStartup = FALSE, PID_Temp remains in "Inactive" mode after CPU startup.
LoadBackUp	BOOL	FALSE	If LoadBackUp = TRUE, the last set of PID parameters is reloaded from the CtrlParamsBackUp structure. The set was saved prior to the last tuning. LoadBackUp is automatically set back to FALSE. The acceptance is bumpless.
SetSubstituteOutput	BOOL	TRUE	Selection of the output value while an error is pending (State = 5): • If SetSubstituteOutput = TRUE and ActivateRecoverMode = TRUE, the configured substitute output value SubstituteOutput is output as PID output value as long as an error is pending. • If SetSubstituteOutput = FALSE and ActivateRecoverMode = TRUE, the actuator remains at the current PID output value as long as an error is pending. • If ActivateRecoverMode = FALSE, SetSubstituteOutput is not effective. • If SubstituteOutput is invalid (ErrorBits = 0020000h), the substitute output value cannot be output. In this case, the low limit of the PID output value for heating (Config.Output.Heat.PidLowerLimit) is used as PID output value.
PhysicalUnit	INT	0	Unit of measurement of the process value and setpoint, e.g., °C, or °F. PhysicalUnit serves the display in the editors and has no influence on the behavior of the control algorithm in the CPU. When importing PID_Temp via the Openness API, PhysicalUnit is reset to the default value.
PhysicalQuantity	INT	0	Physical quantity of the process value and setpoint, e.g., temperature. PhysicalQuantity serves the display in the editors and has no influence on the behavior of the control algorithm in the CPU. When importing PID_Temp via the Openness API, PhysicalQuantity is reset to the default value.
ActivateRecoverMode	BOOL	TRUE	The ActivateRecoverMode tag determines the reaction to error.
Warning	DWORD	0	The Warning tag shows the warnings since Reset = TRUE or ErrorAck =TRUE. Warning is retentive.
Progress	REAL	0.0	Progress of current tuning phase as a percentage (0.0 - 100.0)

Tag	Data type	Default	Description
CurrentSetpoint	REAL	0.0	CurrentSetpoint always displays the currently effective setpoint. This value is frozen during tuning.
CancelTuningLevel	REAL	10.0	Permissible fluctuation of setpoint during tuning. Tuning is not canceled until: • Setpoint > CurrentSetpoint + CancelTuningLevel or • Setpoint < CurrentSetpoint - CancelTuningLevel
SubstituteOutput	REAL	0.0	The substitute output value is used as PID output value as long as the following conditions are met: • One or more errors are pending in automatic mode for which ActivateRecoverMode is in effect • SetSubstituteOutput = TRUE • ActivateRecoverMode = TRUE The values at the outputs for heating and cooling resulting from the substitute output value are the result of the configured output scaling (structures Config.Output.Heat and Config.Output.Cool). For controllers with activated cooling output (Config.ActivateCooling = TRUE), define: • a positive substitute output value to output the value at the outputs for heating • a negative substitute output value to output the value at the outputs for cooling The permitted value range is determined by the configuration. • Cooling output deactivated (Config.ActivateCooling = FALSE): Config.Output.Heat.PidUpperLimit ≥ SubstituteOutput ≥ Config.Output.Heat.PidLowerLimit • Cooling output activated (Config.ActivateCooling = TRUE): Config.Output.Heat.PidUpperLimit ≥ SubstituteOutput ≥ Config.Output.Cool.PidLowerLimit
PidOutputSum	REAL	0.0	PID output value PidOutputSum displays the output value of the PID algorithm. Depending on the operating mode, it is either calculated automatically or defined by the manual value or the configured substitute output value. The values at the outputs for heating and cooling resulting from the PID output value are the result of the configured output scaling (structures Config.Output.Heat and Config.Output.Cool). The PidOutputSum is limited as defined in the configuration. • Cooling output deactivated (Config.ActivateCooling = FALSE): Config.Output.Heat.PidUpperLimit ≥ PidOutputSum ≥ Config.Output.Heat.PidLowerLimit • Cooling output activated (ConfigActivateCooling = TRUE): Config.Output.Heat.PidUpperLimit ≥ PidOutputSum ≥ Config.Output.Cool.PidLowerLimit

Tag	Data type	Default	Description
PidOutputOffsetHeat	REAL	0.0	Offset of the PID output value heating PidOutputOffsetHeat is added to the value that results from PidOutputSum for the heating branch. Enter a positive value for PidOutputOffsetHeat to receive a positive offset at the outputs for heating. The resulting values at the outputs for heating are the result of the configured output scaling (Config.Output.Heat structure). This offset can be used for actuators which need a fixed minimum value, for example, fans with minimum speed.
PidOutputOffsetCool	REAL	0.0	Offset of the PID output value cooling PidOutputOffsetCool is added to the value that results from PidOutputSum for the cooling branch. Enter a negative value for PidOutputOffsetCool to receive a positive offset at the outputs for cooling. The resulting values at the outputs for cooling are the result of the configured output scaling (Config.Output.Cool structure). This offset can be used for actuators which need a fixed minimum value, for example, fans with minimum speed.
SubstituteSetpointOn	BOOL	FALSE	Activates the substitute setpoint as controller setpoint. • FALSE = the Setpoint parameter is used. • TRUE = the SubstituteSetpoint parameter is used as setpoint SubstituteSetpointOn can be used to specify the setpoint of a slave controller in a cascade directly without having to change the user program.
SubstituteSetpoint	REAL	0.0	Substitute setpoint If SubstituteSetpointOn = TRUE, the SubstituteSetpoint parameter is used as setpoint. Valid range of values: Config.SetpointUpperLimit ≥ SubstituteSetpoint ≥ Config.SetpointLowerLimit, Config.InputUpperLimit ≥ SubstituteSetpoint ≥ Config.InputLowerLimit
DisableCooling	BOOL	FALSE	DisableCooling = TRUE deactivates the cooling branch for heating/cooling controllers (Config.ActivateCooling = TRUE) in Automatic mode by setting PidOutputSum to 0.0 as low limit. PidOutputOffsetCool and the output scaling for the cooling outputs remain active. DisableCooling can be used for tuning of multi-zone applications to temporarily deactivate the cooling branch as long as all controllers have not completed their tuning yet. This parameter is set/reset by the user manually and is not automatically reset by the PID_Temp instruction.
AllSlaveAutomaticState	BOOL	FALSE	If this PID_Temp instance is used as master controller in a cascade (Config.Cascade.IsMaster = TRUE), AllSlaveAutomaticState = TRUE indicates that all slave controllers are in automatic mode. Tuning, manual mode or automatic mode of the master controller can only be executed accurately if all slave controllers are in automatic mode. AllSlaveAutomaticState is only determined if you interconnect the master controller and slave controller with the Master and Slave parameters. For details, see the Master parameter.

Tag	Data type	Default	Description
NoSlaveSubstituteSetpoint	BOOL	FALSE	If this PID_Temp instance is used as master controller in a cascade (Config.Cascade.IsMaster = TRUE), NoSlaveSubstituteSetpoint = TRUE indicates that no slave controller has activated its substitute setpoint. Tuning, manual mode or automatic mode of the master controller can only be executed accurately if no slave controller has activated its substitute setpoint. NoSlaveSubstituteSetpoint is only determined if you interconnect the master controller and slave controller with the Master and Slave parameters. For details, see the Master parameter.
Heat.EnableTuning	BOOL	TRUE	Enabling of tuning for heating Heat.EnableTuning must be set for the following tunings (at the same time or prior to the start with Mode and ModeActivate): • Pretuning heating • Pretuning heating and cooling • Fine tuning heating This parameter is not automatically reset by the PID_Temp instruction.
Cool.EnableTuning	BOOL	FALSE	Enabling of tuning for cooling Cool.EnableTuning must be set for the following tunings (simultaneously with or prior to the start with Mode and ModeActivate): • Pretuning cooling • Pretuning heating and cooling • Fine tuning cooling Only effective if the cooling output and PID parameter switching are activated ("Config.ActivateCooling" = TRUE and "Config.AdvancedCooling" = TRUE). This parameter is not automatically reset by the PID_Temp instruction.
Config.InputPerOn(1)	BOOL	TRUE	If InputPerOn = TRUE, the Input_PER parameter is used for detecting the process value. If InputPerOn = FALSE, the Input parameter is used.
Config.InputUpperLimit(1)	REAL	120.0	High limit of the process value Input and Input_PER are monitored to ensure adherence to this limit. If the limit is exceeded, an error is output and the reaction is determined by ActivateRecoverMode. At the I/O input, the process value can be a maximum of 18% higher than the nominal range (overrange). This means the limit cannot be exceeded when you use an I/O input with the pre-setting for high limit and process value scaling. When pretuning is started, the difference between high and low limit of the process value is checked to determine whether the distance between setpoint and process value meets the necessary requirements. InputUpperLimit > InputLowerLimit

Tag	Data type	Default	Description
Config.InputLowerLimit(1)	REAL	0.0	Low limit of the process value Input and Input_PER are monitored to ensure adherence to this limit. If the limit is undershot, an error is output and the reaction is determined by ActivateRecoverMode. InputLowerLimit < InputUpperLimit
Config.InputUpperWarning(1)	REAL	3.402822e+-38	Warning high limit of the process value Input and Input_PER are monitored to ensure adherence to this limit. If the limit is exceeded, a warning is output at the Warning parameter. • If you set InputUpperWarning outside the process value limits, the configured absolute process value high limit is used as the warning high limit. • If you configure InputUpperWarning within the process value limits, this value is used as the warning high limit. InputUpperWarning > InputLowerWarning
Config.InputLowerWarning(1)	REAL	-3.402822e-+38	Warning low limit of the process value Input and Input_PER are monitored to ensure adherence to this limit. If the limit is undershot, a warning is output at the Warning parameter. • If you set InputLowerWarning outside the process value limits, the configured absolute process value low limit is used as the warning low limit. • If you configure InputLowerWarning within the process value limits, this value is used as the warning low limit. InputLowerWarning < InputUpperWarning
Config.SetpointUpperLimit(1)	REAL	3.402822e+-38	High limit of setpoint Setpoint and SubstituteSetpoint are monitored to ensure adherence to this limit. If the limit is exceeded, a warning is output at the Warning parameter. • If you configure SetpointUpperLimit outside the process value limits, the configured absolute process value high limit is used as the setpoint high limit. • If you configure SetpointUpperLimit within the process value limits, this value is used as the setpoint high limit. SetpointUpperLimit > SetpointLowerLimit
Config.SetpointLowerLimit(1)	REAL	-3.402822e-+38	Low limit of the setpoint Setpoint and SubstituteSetpoint are monitored to ensure adherence to this limit. If the limit is undershot, a warning is output at the Warning parameter. • If you set SetpointLowerLimit outside the process value limits, the configured process value absolute low limit is used as the setpoint low limit. • If you configure SetpointLowerLimit within the process value limits, this value is used as the setpoint low limit. SetpointLowerLimit < SetpointUpperLimit

Tag	Data type	Default	Description
Config.ActivateCooling(1)	BOOL	FALSE	Activate cooling output • Config.ActivateCooling = FALSE Only the outputs for heating are used. • Config.ActivateCooling = TRUE The outputs for heating and cooling are used. If you are using the cooling output, the controller must not be configured as master controller (Config.Cascade.IsMaster must be FALSE) .
Config.AdvancedCooling(1)	BOOL	TRUE	Method for heating/cooling • Cooling factor (Config.AdvancedCooling = FALSE) The output value calculation for cooling takes place with the PID parameters for heating (Retain.CtrlParams.Heat structure) taking into consideration the configurable cooling factor Config.CoolFactor. This method is suitable if the heating and cooling actuators have a similar time response but different gains. Pretuning and fine tuning for cooling are not available when you select this method. You can only execute the tuning for heating. • PID parameter switching (Config.AdvancedCooling = TRUE) The output value calculation for cooling takes place by means of a separate PID parameter set (Retain.CtrlParams.Cool structure). This method is suitable if the heating and cooling actuator have different time responses and different gains. Pretuning and fine tuning for cooling are only available when you select this method (Mode = 1 or 2, Cool.EnableTuning = TRUE). Config.AdvancedCooling is only calculated if the cooling output is activated (Config.ActivateCooling = TRUE).
Config.CoolFactor(1)	REAL	1.0	Cooling factor If Config.AdvancedCooling = FALSE, Config.CoolFactor is considered as factor in the calculation of the output value for cooling. This allows different gains of heating and cooling actuators to be taken into account. Config.CoolFactor is not set automatically or adjusted during tuning. You must correctly configure Config.CoolFactor manually with the ratio "heating actuator gain/cooling actuator gain". Example: Config.CoolFactor = 2.0 means that the gain of the heating actuator is twice as high as the gain of the cooling actuator. Config.CoolFactor is only effective if the cooling output is activated (Config.ActivateCooling = TRUE) and cooling factor is selected as method for heating/cooling (Config.AdvancedCooling = FALSE). Config.CoolFactor > 0.0
Config.InputScaling.UpperPointIn(1)	REAL	27648.0	Scaling Input_PER high Input_PER is scaled based on the two value pairs UpperPointOut, UpperPointIn and LowerPointOut, LowerPointIn. Only effective if Input_PER is used for process value detection (Config.InputPerOn = TRUE). UpperPointIn > LowerPointIn

Tag	Data type	Default	Description
Config.InputScaling.LowerPointIn(1)	REAL	0.0	Scaling Input_PER low Input_PER is scaled based on the two value pairs UpperPoin-tOut, UpperPointIn and LowerPointOut, LowerPointIn. Only effective if Input_PER is used for process value detection (Config.InputPerOn = TRUE). LowerPointIn < UpperPointIn
Config.InputScaling.UpperPointOut (1)	REAL	100.0	Scaled high process value Input_PER is scaled based on the two value pairs UpperPoin-tOut, UpperPointIn and LowerPointOut, LowerPointIn. Only effective if Input_PER is used for process value detection (Config.InputPerOn = TRUE). UpperPointOut > LowerPointOut
Config.InputScaling.LowerPointOut (1)	REAL	0.0	Scaled low process value Input_PER is scaled based on the two value pairs UpperPoin-tOut, UpperPointIn and LowerPointOut, LowerPointIn. Only effective if Input_PER is used for process value detection (Config.InputPerOn = TRUE). LowerPointOut < UpperPointOut
Config.Output.Heat.Select(1)	INT	1	Selecting the output value for heating Config.Output.Heat.Select specifies which outputs are used for heating: • Heat.Select = 0 - OutputHeat is used • Heat.Select = 1 - OutputHeat and OutputHeat_PWM are used • Heat.Select = 2 -OutputHeat and OutputHeat_PER are used Outputs that are not used are not calculated and remain at their default value.
Config.Output.Heat.PwmPeriode(1)	REAL	0.0	Period duration of the pulse width modulation (PWM) for heat-ing (OutputHeat_PWM output) in seconds: • Heat.PwmPeriode = 0.0 The sampling time of the PID algorithm for heating (Retain.CtrlParams.Heat.Cycle) is used as period duration of the PWM. • Heat.PwmPeriode > 0.0 The value is rounded off to an integer multiple of the PID_Temp sampling time (CycleTime.Value) and used as period duration of the PWM. This setting can be used to improve the smoothing of the process value with a long sampling time of the PID algorithm. The value must meet the following conditions: – Heat.PwmPeriode ≤ Retain.CtrlParams.Heat.Cycle, – Heat.PwmPeriode > Config.Output.Heat.MinimumOn-Time – Heat.PwmPeriode > Config.Output.Heat.MinimumOff-Time

Tag	Data type	Default	Description
Config.Output.Heat.PidUpperLimit(-1)	REAL	100.0	High limit of the PID output value for heating The PID output value (PidOutputSum) is limited to the high limit. Heat.PidUpperLimit forms a value pair together with the following parameters for scaling of the PID output value (PidOutputSum) to the outputs for heating: • Heat.UpperScaling for OutputHeat • Heat.PwmUpperScaling for OutputHeat_PWM • Heat.PerUpperScaling for OutputHeat_PER If you want to limit the value at the associated output, you must also adjust these scaling values. Heat.PidUpperLimit > Heat.PidLowerLimit
Config.Output.Heat.PidLowerLimit(-1)	REAL	0.0	Low limit of the PID output value for heating For controllers with **deactivated** cooling output (Config.ActivateCooling = FALSE), the PID output value (PidOutputSum) is limited to this low limit. For controllers with **activated** cooling output (Config.ActivateCooling = TRUE), the value must be 0.0. Heat.PidLowerLimit forms a value pair together with the following parameters for scaling of the PID output value (PidOutputSum) to the outputs for heating: • Heat.LowerScaling for OutputHeat • Heat.PwmLowerScaling for OutputHeat_PWM • Heat.PerLowerScaling for OutputHeat_PER If you want to limit the value at the associated output, you must also adjust these scaling values. The permitted value range is determined by the configuration. • Cooling output deactivated (Config.ActivateCooling = FALSE): Heat.PidLowerLimit < Heat.PidUpperLimit • Cooling output activated (Config.ActivateCooling = TRUE): Heat.PidLowerLimit = 0.0
Config.Output.Heat.UpperScaling(1)	REAL	100.0	Scaled high output value for heating Heat.UpperScaling and Heat.PidUpperLimit form a value pair for scaling of the PID output value (PidOutputSum) to the output value for heating (OutputHeat). The OutputHeat value is always located between Heat.UpperScaling and Heat.LowerScaling. Heat.UpperScaling ≠ Heat.LowerScaling
Config.Output.Heat.LowerScaling(1)	REAL	0.0	Scaled low output value for heating Heat.LowerScaling and Heat.PidLowerLimit form a value pair for scaling of the PID output value (PidOutputSum) to the output value for heating (OutputHeat). The OutputHeat value is always located between Heat.UpperScaling and Heat.LowerScaling. Heat.UpperScaling ≠ Heat.LowerScaling

Tag	Data type	Default	Description
Config.Output.Heat.PwmUpperScaling(1)	REAL	100.0	Scaled high PWM output value for heating Heat.PwmUpperScaling and Heat.PidUpperLimit form a value pair for scaling of the PID output value (PidOutputSum) to the pulse-width modulated output value for heating (OutputHeat_PWM). The OutputHeat_PWM value is always located between Heat.PwmUpperScaling and Heat.PWMLowerScaling. Heat.PwmUpperScaling is only effective if OutputHeat_PWM is selected as output for heating (Heat.Select = 1) 100.0 ≥ Heat.PwmUpperScaling ≥ 0.0 Heat.PwmUpperScaling ≠ Heat.PwmLowerScaling
Config.Output.Heat.PwmLowerScaling(1)	REAL	0.0	Scaled low PWM output value for heating Heat.PwmLowerScaling and Heat.PidLowerLimit form a value pair for scaling of the PID output value (PidOutputSum) to the pulse-width modulated output value for heating (OutputHeat_PWM). The OutputHeat_PWM value is always located between Heat.PwmUpperScaling and Heat.PwmLowerScaling. Heat.PwmLowerScaling is only effective if OutputHeat_PWM is selected as output for heating (Heat.Select = 1) 100.0 ≥ Heat.PwmLowerScaling ≥ 0.0 Heat.PwmUpperScaling ≠ Heat.PwmLowerScaling
Config.Output.Heat.PerUpperScaling(1)	REAL	27648.0	Scaled high analog output value for heating Heat.PerUpperScaling and Heat.PidUpperLimit form a value pair for scaling of the PID output value (PidOutputSum) to the analog output value for heating (OutputHeat_PER). The OutputHeat_PER value is always located between Heat.PerUpperScaling and Heat.PerLowerScaling. Heat.PerUpperScaling is only effective if OutputHeat_PER is selected as output for heating (Heat.Select = 2) 32511.0 ≥ Heat.PerUpperScaling ≥ -32512.0 Heat.PerUpperScaling ≠ Heat.PerLowerScaling
Config.Output.Heat.PerLowerScaling(1)	REAL	0.0	Scaled low analog output value for heating Heat.PerLowerScaling and Heat.PidLowerLimit form a value pair for scaling of the PID output value (PidOutputSum) to the analog output value for heating (OutputHeat_PER). The OutputHeat_PER value is always located between Heat.PerUpperScaling and Heat.PerLowerScaling. Heat.PerLowerScaling is only effective if OutputHeat_PER is selected as output for heating (Heat.Select = 2) 32511.0 ≥ Heat.PerLowerScaling ≥ -32512.0 Heat.PerUpperScaling ≠ Heat.PerLowerScaling
Config.Output.Heat.MinimumOnTime(1)	REAL	0.0	Minimum on time of the pulse width modulation for heating (OutputHeat_PWM output) A PWM pulse is never shorter than this value. The value is rounded off to: Heat.MinimumOnTime = n × CycleTime.Value Heat.MinimumOnTime is only effective if the output for heating OutputHeat_PWM is selected (Heat.Select = 1)". 100000.0 ≥ Heat.MinimumOnTime ≥ 0.0

Tag	Data type	Default	Description
Config.Output.Heat.MinimumOff-Time(1)	REAL	0.0	Minimum off time of the pulse width modulation for heating (OutputHeat_PWM output) A PWM pause is never shorter than this value. The value is rounded off to: Heat.MinimumOffTime = n × CycleTime.Value Heat.MinimumOffTime is only effective if the output for heating OutputHeat_PWM is selected (Heat.Select = 1)". 100000.0 ≥ Heat.MinimumOffTime ≥ 0.0
Config.Output.Cool.Select(1)	INT	1	Selecting the output value for cooling Config.Output.Cool.Select specifies which outputs are used for cooling: • Cool.Select = 0 - OutputCool is used • Cool.Select = 1 -OutputCool and OutputCool_PWM are used • Cool.Select = 2 - OutputCool and OutputCool_PER are used Outputs that are not used are not calculated and remain at their default value. Only effective if the cooling output is activated (Config.ActivateCooling = TRUE).
Config.Output.Cool.PwmPeriode(1)	REAL	0.0	Period duration of the pulse width modulation for cooling (OutputCool_PWM output) in seconds: • Cool.PwmPeriode = 0.0 and Config.AdvancedCooling = FALSE: sampling time of the PID algorithm for heating (Retain.CtrlParams.Heat.Cycle) is used as period duration of the PWM. • Cool.PwmPeriode = 0.0 and Config.AdvancedCooling = TRUE: The sampling time of the PID algorithm for cooling (Retain.CtrlParams.Cool.Cycle) is used as period duration of the PWM. • Cool.PwmPeriode > 0.0: The value is rounded off to an integer multiple of the PID_Temp sampling time (CycleTime.Value) and used as period duration of the PWM. This setting can be used to improve the smoothing of the process value with a long sampling time of the PID algorithm. The value must meet the following conditions: – Cool.PwmPeriode ≤ Retain.CtrlParams.Cool.Cycle or Retain.CtrlParams.Heat.Cycle – Cool.PwmPeriode > Config.Output.Cool.MinimumOn-Time – Cool.PwmPeriode > Config.Output.Cool.MinimumOff-Time Only effective if the cooling output is activated (Config.ActivateCooling = TRUE).
Config.Output.Cool.PidUpperLimit(1)	REAL	0.0	High limit of the PID output value for cooling The value must be 0.0.

Tag	Data type	Default	Description
			Cool.PidUpperLimit forms a value pair together with the following parameters for scaling of the PID output value (PidOutputSum) to the outputs for cooling: • Cool.LowerScaling for OutputCool • Cool.PwmLowerScaling for OutputCool_PWM • Cool.PerLowerScaling for OutputCool_PER If you want to limit the value at the associated output, you must also adjust these scaling values. Only effective if the cooling output is activated (Config.ActivateCooling = TRUE). Cool.PidUpperLimit = 0.0
Config.Output.Cool.PidLowerLimit(1)	REAL	-100.0	Low limit of the PID output value for cooling For controllers with activated cooling output (Config.ActivateCooling = TRUE), the PID output value (PidOutputSum) is limited to this low limit. Cool.PidLowerLimit forms a value pair together with the following parameters for scaling of the PID output value (PidOutputSum) to the outputs for cooling: • Cool.UpperScaling for OutputCool • Cool.PwmUpperScaling for OutputCool_PWM • Cool.PerUpperScaling for OutputCool_PER If you want to limit the value at the associated output, you must also adjust these scaling values. Only effective if the cooling output is activated (Config.ActivateCooling = TRUE). Cool.PidLowerLimit < Cool.PidUpperLimit
Config.Output.Cool.UpperScaling(1)	REAL	100.0	Scaled high output value for cooling Cool.UpperScaling and Cool.PidLowerLimit form a value pair for scaling of the PID output value (PidOutputSum) to the output value for cooling (OutputCool). The OutputCool value is always located between Cool.UpperScaling and Cool.LowerScaling. Only effective if the cooling output is activated (Config.ActivateCooling = TRUE). Cool.UpperScaling ≠ Cool.LowerScaling
Config.Output.Cool.LowerScaling(1)	REAL	0.0	Scaled low output value for cooling Cool.LowerScaling and Cool.PidUpperLimit form a value pair for scaling of the PID output value (PidOutputSum) to the output value for cooling (OutputCool). The OutputCool value is always located between Cool.UpperScaling and Cool.LowerScaling. Only effective if the cooling output is activated (Config.ActivateCooling = TRUE). Cool.UpperScaling ≠ Cool.LowerScaling
Config.Output.Cool.PwmUpperScaling(1)	REAL	100.0	Scaled high PWM output value for cooling Cool.PwmUpperScaling and Cool.PidLowerLimit form a value pair for scaling of the PID output value (PidOutputSum) to the pulse-width modulated output value for cooling (OutputCool_PWM). The OutputCool_PWM value is always located between Cool.PwmUpperScaling and Cool.PwmLowerScaling. Cool.PwmUpperScaling is only effective if the cooling output is activated (Config.ActivateCooling = TRUE) and

Tag	Data type	Default	Description
			OutputCool_PWM is selected as output for cooling (Cool.Select = 1). 100.0 ≥ Cool.PwmUpperScaling ≥ 0.0 Cool.PwmUpperScaling ≠ Cool.PwmLowerScaling
Config.Output.Cool.PwmLowerScaling(1)	REAL	0.0	Scaled low PWM output value for cooling Cool.PwmLowerScaling and Cool.PidUpperLimit form a value pair for scaling of the PID output value (PidOutputSum) to the pulse-width modulated output value for cooling (OutputCool_PWM). The OutputCool_PWM value is always located between Cool.PwmUpperScaling and CoolPwm.LowerScaling. Cool.PwmLowerScaling is only effective if the cooling output is activated (Config.ActivateCooling = TRUE) and OutputCool_PWM is selected as output for cooling (Cool.Select = 1). 100.0 ≥ Cool.PwmLowerScaling ≥ 0.0 Cool.PwmUpperScaling ≠ Cool.PwmLowerScaling
Config.Output.Cool.PerUpperScaling(1)	REAL	27648.0	Scaled high analog output value for cooling Cool.PerUpperScaling and Cool.PidLowerLimit form a value pair for scaling of the PID output value (PidOutputSum) to the analog output value for cooling (OutputCool_PER). The OutputCool_PER value is always located between Cool.PerUpperScaling and Cool.PerLowerScaling. Cool.PerUpperScaling is only effective if the cooling output is activated (Config.ActivateCooling = TRUE) and OutputCool_PER is selected as output for cooling (Cool.Select = 2). 32511.0 ≥ Cool.PerUpperScaling ≥ -32512.0 Cool.PerUpperScaling ≠ Cool.PerLowerScaling
Config.Output.Cool.PerLowerScaling(1)	REAL	0.0	Scaled low analog output value for cooling Cool.PerLowerScaling and Cool.PidUpperLimit form a value pair for scaling of the PID output value (PidOutputSum) to the analog output value for cooling (OutputCool_PER). The OutputCool_PER value is always located between Cool.PerUpperScaling and Cool.PerLowerScaling. Cool.PerLowerScaling is only effective if the cooling output is activated (Config.ActivateCooling = TRUE) and OutputCool_PER is selected as output for cooling (Cool.Select = 2). 32511.0 ≥ Cool.PerLowerScaling ≥ -32512.0 Cool.PerUpperScaling ≠ Cool.PerLowerScaling
Config.Output.Cool.MinimumOnTime(1)	REAL	0.0	Minimum on time of the pulse width modulation for cooling (OutputCool_PWM output) A PWM pulse is never shorter than this value. The value is rounded off to: Cool.MinimumOnTime = n × CycleTime.Value Cool.MinimumOnTime is only effective if the output for cooling OutputCool_PWM is selected (Cool.Select = 1). Only effective if the cooling output is activated (Config.ActivateCooling = TRUE). 100000.0 ≥ Cool.MinimumOnTime ≥ 0.0

Tag	Data type	Default	Description
Config.Output.Cool.MinimumOff-Time(1)	REAL	0.0	Minimum off time of the pulse width modulation for cooling (OutputCool_PWM output) A PWM pause is never shorter than this value. The value is rounded off to: Cool.MinimumOffTime = n × CycleTime.Value Cool.MinimumOffTime is only effective if the output for cooling OutputCool_PWM is selected (Cool.Select = 1). Only effective if the cooling output is activated (Config.Activ-ateCooling = TRUE). 100000.0 ≥ Cool.MinimumOffTime ≥ 0.0
If you are using PID_Temp in a cascade, the master controller and slave controller exchange information via the Master and Slave parameters. You need to make the interconnection. For details, see the Master parameter.			
Config.Cascade.IsMaster(1)	BOOL	FALSE	The controller is master in a cascade and provides the slave set-point. Set IsMaster = TRUE if you are using this PID_Temp instance as master controller in a cascade. A master controller defines the setpoint of a slave controller with its output. A PID_Temp instance can be master controller and slave controller at the same time. If the controller is used as master controller, the cooling output must be deactivated (Config.ActivateCooling = FALSE).
Config.Cascade.IsSlave(1)	BOOL	FALSE	The controller is slave in a cascade and receives its setpoint from the master. Set IsSlave = TRUE if you are using this PID_Temp instance as slave controller in a cascade. A slave controller receives its setpoint (Setpoint parameter) from the output of its master controller (OutputHeat paramet-er). A PID_Temp instance can be master controller and slave controller at the same time.
Config.Cascade.AntiWindUpMode(1)	INT	1	Anti-windup behavior in the cascade Options are: • Anti-windup = 0 The AntiWindUp functionality is deactivated. The master controller does not respond to the limit of its slave control-lers. • Anti-windup = 1 The integral action of the master controller is reduced in the ratio "Slaves in limit" to "Number of slaves" ("CountSlaves" parameter). This reduces the effects of the limitation on the control behavior. • Anti-windup = 2 The integral action of the master controller is held as soon as a slave controller is in the limit. Only effective if the controller is configured as master control-ler (Config.Cascade.IsMaster = TRUE).
Config.Cascade.CountSlaves(1)	INT	1	Number of subordinate slaves Here you enter the number of directly subordinate slave con-trollers which receive their setpoint from this master controller. Only effective if the controller is configured as master control-ler (Config.Cascade.IsMaster = TRUE). 255 ≥ CountSlaves ≥ 1

Tag	Data type	Default	Description
CycleTime.StartEstimation	BOOL	TRUE	If CycleTime.EnEstimation = TRUE, CycleTime.StartEstimation = TRUE starts automatic determination of the PID_Temp sampling time (cycle time of the calling OB). CycleTime.StartEstimation = FALSE is set once measurement is complete.
CycleTime.EnEstimation	BOOL	TRUE	If CycleTime.EnEstimation = TRUE, the PID_Temp sampling time is determined automatically. If CycleTime.EnEstimation = FALSE, the sampling time PID_Temp is not determined automatically and must be configured correctly manually with CycleTime.Value.
CycleTime.EnMonitoring	BOOL	TRUE	If CycleTime.EnMonitoring = FALSE, the PID_Temp sampling time is not monitored. If PID_Temp cannot be executed within the sampling time, no error (ErrorBits=0000800h) is output and PID_Temp does not respond as configured with ActivateRecoverMode.
CycleTime.Value(1)	REAL	0.1	PID_Temp sampling time (cycle time of the calling OB) in seconds CycleTime.Value is determined automatically and is usually equivalent to the cycle time of the calling OB.
You can reload values from the CtrlParamsBackUp structure with LoadBackUp = TRUE.			
CtrlParamsBackUp.SetByUser	BOOL	FALSE	Saved value of Retain.CtrlParams.SetByUser
CtrlParamsBackUp.Heat.Gain	REAL	1.0	Saved proportional gain for heating
CtrlParamsBackUp.Heat.Ti	REAL	20.0	Saved integral action time for heating in seconds
CtrlParamsBackUp.Heat.Td	REAL	0.0	Saved derivative action time for heating in seconds
CtrlParamsBackUp.Heat.TdFiltRatio	REAL	0.2	Saved derivative delay coefficient for heating
CtrlParamsBackUp.Heat.PWeighting	REAL	1.0	Saved weighting of the proportional action for heating
CtrlParamsBackUp.Heat.DWeighting	REAL	1.0	Saved weighting of the derivative action for heating
CtrlParamsBackUp.Heat.Cycle	REAL	1.0	Saved sampling time of the PID algorithm for heating in seconds
CtrlParamsBackUp.Heat.ControlZone	REAL	3.402822e+-38	Saved control zone width for heating
CtrlParamsBackUp.Heat.DeadZone	REAL	0.0	Saved dead zone width for heating
CtrlParamsBackUp.Cool.Gain	REAL	1.0	Saved proportional gain for cooling
CtrlParamsBackUp.Cool.Ti	REAL	20.0	Saved integral action time for cooling in seconds
CtrlParamsBackUp.Cool.Td	REAL	0.0	Saved derivative action time for cooling in seconds
CtrlParamsBackUp.Cool.TdFiltRatio	REAL	0.2	Saved derivative delay coefficient for cooling
CtrlParamsBackUp.Cool.PWeighting	REAL	1.0	Saved proportional action weighting factor for cooling
CtrlParamsBackUp.Cool.DWeighting	REAL	1.0	Saved derivative action weighting factor for cooling
CtrlParamsBackUp.Cool.Cycle	REAL	1.0	Saved sampling time of the PID algorithm for cooling in seconds
CtrlParamsBackUp.Cool.ControlZone	REAL	3.402822e+-38	Saved control zone width for cooling
CtrlParamsBackUp.Cool.DeadZone	REAL	0.0	Saved dead zone width for cooling

Tag	Data type	Default	Description
PIDSelfTune.SUT.CalculateParam-sHeat	BOOL	FALSE	The properties of the heating branch of the controlled system are saved during pretuning for heating. If SUT.CalculateParam-sHeat = TRUE, the PID parameters for heating (Retain.Ctrl-Params.Heat structure) are recalculated on the basis of these properties. This enables you to change the parameter calcula-tion method (PIDSelfTune.SUT.TuneRuleHeat parameter) without having to repeat the tuning. SUT.CalculateParamsHeat is set to FALSE after the calculation. Only possible if the pretuning was successful (SUT.ProcParHea-tOk = TRUE).
PIDSelfTune.SUT.CalculateParams-Cool	BOOL	FALSE	The properties of the cooling branch of the controlled system are saved during tuning for cooling. If SUT.CalculateParams-Cool = TRUE, the PID parameters for cooling (Retain.Ctrl-Params.Cool structure) are recalculated on the basis of these properties. This enables you to change the parameter calcula-tion method (PIDSelfTune.SUT.TuneRuleCool parameter) without having to repeat the tuning. SUT.CalculateParamsCool is set to FALSE after the calculation. Only possible if the pretuning was successful (SUT.ProcParCoo-lOk = TRUE). Only effective if Config.ActivateCooling = TRUE and Con-fig.AdvancedCooling = TRUE.
PIDSelfTune.SUT.TuneRuleHeat	INT	2	Method for PID parameter calculation with pretuning for heat-ing Options are: • SUT.TuneRuleHeat = 0: PID according to CHR • SUT.TuneRuleHeat = 1: PI according to CHR • SUT.TuneRuleHeat = 2: PID for temperature processes according to CHR (results in a slower and rather asympto-matic control response with lower overshoot than SUT.TuneRuleHeat = 0) (CHR = Chien, Hrones and Reswick) Only with SUT.TuneRuleHeat = 2 is the control zone Retain.Ctrl-Params.Heat.ControlZone automatically set during pretuning for heating.
PIDSelfTune.SUT.TuneRuleCool	INT	2	Method for PID parameter calculation with pretuning for cool-ing Options are: • SUT.TuneRuleCool = 0: PID according to CHR • SUT.TuneRuleCool = 1: PI according to CHR • SUT.TuneRuleCool = 2: PID for temperature processes according to CHR (results in a slower and rather asympto-matic control response with lower overshoot than SUT.TuneRuleCool = 0) (CHR = Chien, Hrones and Reswick) Only with SUT.TuneRuleCool = 2 is the control zone Retain.Ctrl-Params.Cool.ControlZone automatically set during pretuning for cooling. SUT.TuneRuleCool is only effective if the cooling output and PID parameter switching are activated (Config.ActivateCooling = TRUE, Config.AdvancedCooling = TRUE).

Tag	Data type	Default	Description
PIDSelfTune.SUT.State	INT	0	The SUT.State tag indicates the current phase of pretuning: • State = 0: Initialize pretuning • State = 100: Calculate standard deviation for heating • State = 200: Calculate standard deviation for cooling • State = 300: Determine point of inflection for heating • State = 400: Determine point of inflection for cooling • State = 500: Set heating to setpoint after reaching point of inflection • State = 600: Set cooling to setpoint after reaching point of inflection • State = 700: Compare efficiency of the heating actuator and cooling actuator • State = 800: Heating and cooling activated • State = 900: Cooling activated • State = 1000: Determine delay time after switching off heating • State = 9900: Pretuning successful • State = 1: Pretuning not successful
PIDSelfTune.SUT.ProcParHeatOk	BOOL	FALSE	TRUE: The calculation of the process parameters for pretuning heating was successful. This tag is set during tuning. It must be TRUE for calculation of the PID parameters for heating.
PIDSelfTune.SUT.ProcParCoolOk	BOOL	FALSE	TRUE: The calculation of the process parameters for pretuning cooling was successful. This tag is set during tuning. It must be TRUE for calculation of the PID parameters for cooling.
PIDSelfTune.SUT.AdaptDelayTime	INT	0	The AdaptDelayTime tag determines the adaptation of the delay time for heating at the operating point (for "Pretuning heating" and "Pretuning heating and cooling"). Options are: • SUT.AdaptDelayTime = 0: No adaptation of delay time. The SUT.State = 1000 phase is skipped. This option results in a shorter tuning time than with SUT.AdaptDelayTime = 1. • SUT.AdaptDelayTime = 1: Adaptation of the delay time to the setpoint in SUT.State = 1000 phase by switching off heating temporarily. This option results in a longer tuning time than with-SUT.AdaptDelayTime = 0. It can improve the control response if the process behavior depends significantly on the operating point (non-linearity). This option should not be used for multi-zone applications with strong thermal connections.
PIDSelfTune.SUT.CoolingMode	INT	0	The CoolingMode tag determines the manipulated variable output to determine the cooling parameters (for pretuning heating and cooling). Options are: • SUT.CoolingMode = 0: Switch off heating and switch on cooling after reaching the setpoint.

Tag	Data type	Default	Description
			The SUT.State = 700 phase is skipped. Phase SUT.State = 500 is followed by phase SUT.State = 900. This option can improve the control response if the gain of the cooling actuator is low compared to the gain of the heating actuator. It results in a shorter tuning time than with SUT.CoolingMode = 1 or 2. • SUT.CoolingMode = 1: Switch on cooling in addition to heating after reaching the setpoint. The SUT.State = 700 phase is skipped. Phase SUT.State = 500 is followed by phase SUT.State = 800. This option can improve the control response if the gain of the cooling actuator is high compared to the gain of the heating actuator. • SUT.CoolingMode = 2: After heating up to the setpoint, a decision is automatically made in phase SUT.State = 700 as to whether heating is switched off. Phase SUT.State = 500 is followed by phase SUT.State = 700 and then SUT.State = 800 or SUT.State = 900. This option requires more time than options 0 and 1.
PIDSelfTune.TIR.RunIn	BOOL	FALSE	Use the RunIn tag to specify the sequence of fine tuning during start from automatic mode. • RunIn = FALSE If fine tuning is started from automatic mode, the system uses the existing PID parameters to control to the setpoint (TIR.State = 500 or 600). Only then will fine tuning start. • RunIn = TRUE PID_Temp tries to reach the setpoint with minimum or maximum output value (TIR.State = 300 or 400). This can produce increased overshoot. Fine tuning then starts automatically. RunIn is set to FALSE after fine tuning. During start of fine tuning from Inactive or Manual mode, PID_Temp reacts as described under RunIn = TRUE.
PIDSelfTune.TIR.CalculateParamsHeat	BOOL	FALSE	The properties of the heating branch of the controlled system are saved during fine tuning for heating. If TIR.CalculateParamsHeat= TRUE, the PID parameters for heating (Retain.CtrlParams.Heat structure) are recalculated on the basis of these properties. This enables you to change the parameter calculation method (PIDSelfTune.TIR.TuneRuleHeat parameter) without having to repeat the tuning. TIR.CalculateParamsHeat is set to FALSE after the calculation. Only possible if fine tuning heating was successful beforehand (TIR.ProcParHeatOk = TRUE).

Tag	Data type	Default	Description
PIDSelfTune.TIR.CalculateParams-Cool	BOOL	FALSE	The properties of the cooling branch of the controlled system are saved during fine tuning for cooling. If TIR.CalculateParamsCool= TRUE, the PID parameters for cooling (Retain.CtrlParams.Cool structure) are recalculated on the basis of these properties. This enables you to change the parameter calculation method (PIDSelfTune.TIR.TuneRuleCool parameter) without having to repeat the tuning. TIR.CalculateParamsCool is set to FALSE after the calculation. Only possible if fine tuning cooling was successful beforehand (TIR.ProcParCoolOk = TRUE). Only effective if Config.ActivateCooling = TRUE and Con-fig.AdvancedCooling = TRUE
PIDSelfTune.TIR.TuneRuleHeat	INT	0	Method for parameter calculation during fine tuning for heat-ing Options are: • TIR.TuneRuleHeat = 0: PID automatic • TIR.TuneRuleHeat = 1: PID fast (faster control response with higher amplitudes of the output value than with TIR.TuneR-uleHeat = 2) • TIR.TuneRuleHeat = 2: PID slow (slower control response with lower amplitudes of the output value than with TIR.TuneRuleHeat = 1) • TIR.TuneRuleHeat = 3: ZN PID • TIR.TuneRuleHeat = 4: ZN PI • TIR.TuneRuleHeat = 5: ZN P (ZN=Ziegler-Nichols) To be able to repeat the calculation of the PID parameters for heating with TIR.CalculateParamsHeat and TIR.TuneRuleHeat = 0, 1 or 2, the previous fine tuning also has to have been executed with TIR.TuneRuleHeat = 0, 1 or 2. If this is not the case, TIR.TuneRuleHeat = 3 is used. The recalculation of the PID parameters for heating with TIR.CalculateParamsHeat and TIR.TuneRuleHeat = 3, 4 or 5 is always possible.
PIDSelfTune.TIR.TuneRuleCool	INT	0	Method for parameter calculation during fine tuning for cool-ing Options are: • TIR.TuneRuleCool = 0: PID automatic • TIR.TuneRuleCool = 1: PID fast (faster control response with higher amplitudes of the output value than with TIR.TuneR-uleCool = 2) • TIR.TuneRuleCool = 2: PID slow (slower control response with lower amplitudes of the output value than with TIR.TuneRuleCool = 1) • TIR.TuneRuleCool = 3: ZN PID • TIR.TuneRuleCool = 4: ZN PI • TIR.TuneRuleCool = 5: ZN P (ZN=Ziegler-Nichols) To be able to repeat the calculation of the PID parameters for cooling with TIR.CalculateParamsCool and TIR.TuneRuleCool = 0, 1 or 2, the previous fine tuning also has to have been executed with TIR.TuneRuleCool = 0, 1 or 2. If this is not the case, TIR.TuneRuleCool = 3 is used.

Tag	Data type	Default	Description
			The recalculation of the PID parameters for cooling with TIR.CalculateParamsCool and TIR.TuneRuleCool = 3, 4 or 5 is always possible. Only effective if the cooling output and PID parameter switching are activated (ConfigActivateCooling = TRUE and Config.AdvancedCooling = TRUE).
PIDSelfTune.TIR.State	INT	0	The TIR.State tag indicates the current phase of "fine tuning": • State = 0: Initialize fine tuning • State = 100: Calculate standard deviation for heating • State = 200: Calculate standard deviation for cooling • State = 300: Attempting to reach setpoint for heating with two-step control using heating • State = 400: Attempting to reach setpoint for cooling with two-step control using cooling • State = 500: Attempting to reach setpoint for heating with PID control • State = 600: Attempting to reach setpoint for cooling with PID control • State = 700: Calculate standard deviation for heating • State = 800: Calculate standard deviation for cooling • State = 900: Determine oscillation and calculate parameters for heating • State = 1000: Determine oscillation and calculate parameters for cooling • State = 9900: Fine tuning successful • State = 1: Fine tuning not successful
PIDSelfTune.TIR.ProcParHeatOk	BOOL	FALSE	TRUE: The calculation of the process parameters for fine tuning heating was successful. This tag is set during tuning. It must be met for calculation of the PID parameters for heating.
PIDSelfTune.TIR.ProcParCoolOk	BOOL	FALSE	TRUE: The calculation of the process parameters for fine tuning cooling was successful. This tag is set during tuning. It must be met for calculation of the PID parameters for cooling.
PIDSelfTune.TIR.OutputOffsetHeat	REAL	0.0	Tuning offset heating of the PID output value TIR.OutputOffsetHeat is added to the value that results from PidOutputSum for the heating branch. To receive a positive offset at the outputs for heating, define a positive value for TIR.OutputOffsetHeat. The resulting values at the outputs for heating are the result of the configured output scaling (Struktur Config.Output.Heat). This tuning offset can be used in controllers with activated cooling output and PID parameter switching (Config.ActivateCooling = TRUE, Config.AdvancedCooling = TRUE) for fine tuning cooling. If the outputs for cooling are not active at the setpoint that is to be tuned (PidOutputSum > 0.0), fine tuning cooling is not possible. In this case, define a positive tuning offset heating which is greater than the PID output value (PidOutputSum) at the setpoint in the steady state before you start tuning. This step increases the values at the outputs for heating and activates the outputs for cooling (PidOutputSum < 0.0). Fine tuning cooling is now possible.

Tag	Data type	Default	Description
			When fine tuning is complete, TIR.OutputOffsetHeat is reset to 0.0. Major changes at TIR.OutputOffsetHeat in one step can result in temporary overshoots. Config.Output.Heat.PidUpperLimit ≥ PIDSelfTune.TIR.OutputOffsetHeat ≥ Config.Output.Heat.PidLowerLimit
PIDSelfTune.TIR.OutputOffsetCool	REAL	0.0	Tuning offset cooling of the PID output value TIR.OutputOffsetCool is added to the value that results from PidOutputSum for the cooling branch. To receive a positive offset at the outputs for cooling, define a negative value for TIR.OutputOffsetCool. The resulting values at the outputs for cooling are the result of the configured output scaling (Struktur Config.Output.Coool). This tuning offset can be used in controllers with activated cooling output (Config.ActivateCooling = TRUE) for fine tuning heating. If the outputs for heating are not active at the setpoint that is to be tuned (PidOutputSum < 0.0), fine tuning heating is not possible. In this case, define a negative tuning offset cooling which is less than the PID output value (PidOutputSum) at the setpoint in the steady state before you start tuning. This step increases the values at the outputs for cooling and activates the outputs for heating (PidOutputSum > 0.0). Fine tuning heating is now possible. When fine tuning is complete, TIR.OutputOffsetCool is reset to 0.0. Major changes at TIR.OutputOffsetCool in one step can result in temporary overshoots. Config.Output.Cool.PidUpperLimit ≥ PIDSelfTune.TIR.OutputOffsetCool ≥ Config.Output.Cool.PidLowerLimit
PIDSelfTune.TIR.WaitForControlIn	BOOL	FALSE	Waiting with fine tuning after reaching the setpoint If TIR.WaitForControlIn = TRUE, fine tuning waits in between reaching the setpoint (TIR.State = 500 or 600) and calculation of the standard deviation (TIR.State = 700 or 800) until a FALSE -> TRUE edge is given at TIR.FinishControlIn. TIR.WaitForControlIn can be used for simultaneous fine tuning of several controllers in multi-zone applications to synchronize tuning of the individual zones. It ensures that all zones have reached their setpoints before the actual tuning starts. The influence of thermal connections between the zones on tuning can be reduced in this way. TIR.WaitForControlIn is only effective if fine tuning is started from automatic mode with PIDSelfTune.TIR.RunIn = FALSE.
PIDSelfTune.TIR.ControlInReady	BOOL	FALSE	If TIR.WaitForControlIn = TRUE, PID_Temp sets TIR.ControlInReady = TRUE as soon as the setpoint has been reached and waits with additional tuning steps until a FALSE -> TRUE edge is given at TIR.FinishControlIn.
PIDSelfTune.TIR.FinishControlIn	BOOL	FALSE	If TIR.ControlInReady = TRUE, a FALSE -> TRUE edge at TIR.FinishControlIn stops the wait and fine tuning resumes.
PIDCtrl.IOutputOld(1)	REAL	0.0	Integral action in last cycle

Tag	Data type	Default	Description
PIDCtrl.PIDInit	BOOL	FALSE	PIDCtrl.PIDInit is available as of PID_Temp version 1.1. If PIDCtrl.PIDInit = TRUE in "Automatic mode", the integral action PIDCtrl.IOutputOld is preassigned automatically as if PidOutputSum = OverwriteInitialOutputValue in the previous cycle. This can be used for a Override control with PID_Temp (Page 175).
Retain.CtrlParams.SetByUser(1)	BOOL	FALSE	Enable manual input of PID parameters If Retain.CtrlParams.SetByUser = TRUE, the PID parameters are editable. Retain.CtrlParams.SetByUser serves the configuring of the controller in the TIA Portal and has no influence on the behavior of the control algorithm in the CPU. SetByUser is retentive.
Retain.CtrlParams.Heat.Gain(1)	REAL	1.0	Active proportional gain for heating Heat.Gain is retentive. Heat.Gain ≥ 0.0
Retain..CtrlParams.Heat.Ti(1)	REAL	20.0	Active integral action time for heating in seconds The integral action for heating is switched off with Heat.CtrlParams.Ti = 0.0. Heat.Ti is retentive. 100000.0 ≥ Heat.Ti ≥ 0.0
Retain.CtrlParams.Heat.Td(1)	REAL	0.0	Active derivative action time for heating in seconds The derivative action for heating is switched off with Heat.CtrlParams.Td = 0.0. Heat.Td is retentive. 100000.0 ≥ Heat.Td ≥ 0.0
Retain.CtrlParams.Heat.TdFiltRatio(1)	REAL	0.2	Active derivative delay coefficient for heating The derivative delay coefficient delays the effect of the derivative action. Derivative delay = derivative action time × derivative delay coefficient • 0.0: Derivative action is effective for one cycle only and therefore almost not effective. • 0.5: This value has proved useful in practice for controlled systems with **one** dominant time constant. • > 1.0: The greater the coefficient, the longer the effect of the derivative action is delayed. Heat.TdFiltRatio is retentive. Heat.TdFiltRatio ≥ 0.0
Retain.CtrlParams.Heat.PWeighting(1)	REAL	1.0	Active weighting of the proportional action for heating The proportional action may weaken with changes to the setpoint. Values from 0.0 to 1.0 are applicable. • 1.0: Proportional action for setpoint change is fully effective • 0.0: Proportional action for setpoint change is not effective The proportional action is always fully effective when the process value is changed. Heat.PWeighting is retentive. 1.0 ≥ Heat.PWeighting ≥ 0.0

Tag	Data type	Default	Description
Retain.CtrlParams.Heat.DWeighting (1)	REAL	1.0	Active weighting of the derivative action for heating The derivative action may weaken with changes to the setpoint. Values from 0.0 to 1.0 are applicable. • 1.0: Derivative action is fully effective upon setpoint change • 0.0: Derivative action is not effective upon setpoint change The derivative action is always fully effective when the process value is changed. Heat.DWeighting is retentive. 1.0 ≥ Heat.DWeighting ≥ 0.0
Retain.CtrlParams.Heat.Cycle(1)	REAL	1.0	Active sampling time of the PID algorithm for heating in seconds CtrlParams.Heat.Cycle is calculated during tuning and rounded to an integer multiple of CycleTime.Value. If Config.Output.Heat.PwmPeriode = 0.0, Heat.Cycle is used as period duration of the pulse width modulation for heating. If Config.Output.Cool.PwmPeriode = 0.0 and Config.AdvancedCooling = FALSE, Heat.Cycle is used as period duration of the pulse width modulation for cooling. Heat.Cycle is retentive. 100000.0 ≥ Heat.Cycle > 0.0
Retain.CtrlParams.Heat.ControlZone (1)	REAL	3.402822e+38	Active control zone width for heating The control zone for heating is switched off with Heat.ControlZone = 3.402822e+38. Heat.ControlZone is only set automatically during pretuning heating or pretuning heating and cooling if PIDSelfTune.SUT.TuneRuleHeat = 2 is selected as method of the parameter calculation. For controllers with deactivated cooling output (Config.ActivateCooling = FALSE) or controllers with activated cooling output and cooling factor (Config.AdvancedCooling = FALSE), the control zone is symmetrically located between Setpoint – Heat.ControlZone and Setpoint + Heat.ControlZone. For controllers with activated cooling output and PID parameter switching (Config.ActivateCooling = TRUE, Config.AdvancedCooling = TRUE), the control zone is located between Setpoint – Heat.ControlZone and Setpoint + Cool.ControlZone. Heat.ControlZone is retentive. Heat.ControlZone > 0.0
Retain.CtrlParams.Heat.DeadZone(1)	REAL	0.0	Active dead zone width for heating (see PID parameters (Page 151)) The dead zone for heating is switched off with Heat.DeadZone = 0.0. Heat.DeadZone is not set automatically or adjusted during tuning. You must correctly configure Heat.DeadZone manually. When the dead zone is switched on, the result can be a permanent control deviation (deviation between setpoint and process value). This can have a negative effect on fine tuning. For controllers with deactivated cooling output (Config.ActivateCooling = FALSE) or controllers with activated cooling output and cooling factor (Config.AdvancedCooling = FALSE), the dead zone is symmetrically located between Setpoint – Heat.DeadZone and Setpoint + Heat.DeadZone.

Tag	Data type	Default	Description
			For controllers with activated cooling output and PID parameter switching (Config.ActivateCooling = TRUE, Config.AdvancedCooling = TRUE), the dead zone is located between Setpoint – Heat.DeadZone and Setpoint + Cool.DeadZone. Heat.DeadZone is retentive. Heat.DeadZone ≥ 0.0
Retain.CtrlParams.Cool.Gain(1)	REAL	1.0	Active proportional gain for cooling Cool.Gain is retentive. Only effective if the cooling output and PID parameter switching are activated (Config.ActivateCooling = TRUE and Config.AdvancedCooling = TRUE). Cool.Gain ≥ 0.0
Retain.CtrlParams.Cool.Ti(1)	REAL	20.0	Active integral action time for cooling in seconds The integral action for cooling is switched off with Cool.CtrlParams.Ti = 0.0. Cool.Ti is retentive. Only effective if the cooling output and PID parameter switching are activated (Config.ActivateCooling = TRUE and Config.AdvancedCooling = TRUE). 100000.0 ≥ Cool.Ti ≥ 0.0
Retain.CtrlParams.Cool.Td(1)	REAL	0.0	Active derivative action time for cooling in seconds The derivative action for cooling is switched off with Cool.CtrlParams.Td = 0.0. Cool.Td is retentive. Only effective if the cooling output and PID parameter switching are activated (Config.ActivateCooling = TRUE and Config.AdvancedCooling = TRUE). 100000.0 ≥ Cool.Td ≥ 0.0
Retain.CtrlParams.Cool.TdFiltRatio(1)	REAL	0.2	Active derivative delay coefficient for cooling The derivative delay coefficient delays the effect of the derivative action. Derivative delay = derivative action time × derivative delay coefficient • 0.0: Derivative action is effective for one cycle only and therefore almost not effective. • 0.5: This value has proved useful in practice for controlled systems with one dominant time constant. • > 1.0: The greater the coefficient, the longer the effect of the derivative action is delayed. Cool.TdFiltRatio is retentive. Only effective if the cooling output and PID parameter switching are activated (Config.ActivateCooling = TRUE and Config.AdvancedCooling = TRUE). Cool.TdFiltRatio ≥ 0.0
Retain.CtrlParams.Cool.PWeighting(1)	REAL	1.0	Active weighting of the proportional action for cooling The proportional action may weaken with changes to the setpoint. Values from 0.0 to 1.0 are applicable. • 1.0: Proportional action for setpoint change is fully effective • 0.0: Proportional action for setpoint change is not effective The proportional action is always fully effective when the process value is changed. Cool.PWeighting is retentive.

Tag	Data type	Default	Description
			Only effective if the cooling output and PID parameter switching are activated (Config.ActivateCooling = TRUE and Config.AdvancedCooling = TRUE). 1.0 ≥ Cool.PWeighting ≥ 0.0
Retain.CtrlParams.Cool.DWeighting (1)	REAL	1.0	Active weighting of the derivative action for cooling The derivative action may weaken with changes to the setpoint. Values from 0.0 to 1.0 are applicable. • 1.0: Derivative action is fully effective upon setpoint change • 0.0: Derivative action is not effective upon setpoint change The derivative action is always fully effective when the process value is changed. Cool.DWeighting is retentive. Only effective if the cooling output and PID parameter switching are activated (Config.ActivateCooling = TRUE and Config.AdvancedCooling = TRUE). 1.0 ≥ Cool.DWeighting ≥ 0.0
Retain.CtrlParams.Cool.Cycle(1)	REAL	1.0	Active sampling time of the PID algorithm for cooling in seconds CtrlParams.Cool.Cycle is calculated during tuning and rounded off to an integer multiple of CycleTime.. If Config.Output.Cool.PwmPeriode = 0.0 and Config.AdvancedCooling = TRUE, Cool.Cycle is used as period duration of the pulse width modulation for cooling. If Config.Output.Cool.PwmPeriode = 0.0 and Config.AdvancedCooling = FALSE, Heat.Cycle is used as period duration of the pulse width modulation for cooling. Cool.Cycle is retentive. Only effective if the cooling output and PID parameter switching are activated (Config.ActivateCooling = TRUE and Config.AdvancedCooling = TRUE). 100000.0 ≥ Cool.Cycle > 0.0
Retain.CtrlParams.Cool.ControlZone (1)	REAL	3.402822e+38	Active control zone width for cooling The control zone for cooling is switched off with Cool.ControlZone = 3.402822e+38. Cool.ControlZone is only set automatically during pretuning cooling or pretuning heating and cooling if PIDSelfTune.SUT.TuneRuleCool = 2 is selected as method of the parameter calculation. Cool.ControlZone is retentive. Only effective if the cooling output and PID parameter switching are activated (Config.ActivateCooling = TRUE and Config.AdvancedCooling = TRUE). Cool.ControlZone > 0.0
Retain.CtrlParams.Cool.DeadZone(1)	REAL	0.0	Active dead zone width for cooling (see PID parameters (Page 151)) The dead zone for cooling is switched off with Cool.DeadZone = 0.0. Cool.DeadZone is not set automatically or adjusted during tuning. You must correctly configure Cool.DeadZone manually. When the dead zone is switched on, the result can be a permanent control deviation (deviation between setpoint and process value). This can have a negative effect on fine tuning.

Tag	Data type	Default	Description
			Cool.DeadZone is retentive. Only effective if the cooling output and PID parameter switching are activated (Config.ActivateCooling = TRUE and Config.AdvancedCooling = TRUE). Cool.DeadZone ≥ 0.0

See also

PID_Temp ActivateRecoverMode tag (Page 373)
PID_Temp Warning tag (Page 375)
Multi-zone controlling with PID_Temp (Page 172)

10.3.4.7 PID_Temp state and mode parameters

Correlation of the parameters

The State parameter shows the current operating mode of the PID controller. You cannot change the State parameter.
With a rising edge at ModeActivate, PID_Temp switches to the operating mode saved in the Mode in-out parameter.
Heat.EnableTuning and Cool.EnableTuning specify for pretuning and fine tuning, if tuning takes place for heating or cooling.
If the CPU is switched on or switches from Stop to RUN mode, PID_Temp starts in the operating mode that is saved in the Mode parameter. To leave PID_Temp in "Inactive" mode, set RunModeByStartup = FALSE.

Meaning of values

State / Mode	Description of operating mode
0	**Inactive** The following output values are output in "Inactive" mode: • 0.0 as PID output value (PidOutputSum) • 0.0 as output value for heating (OutputHeat) and output value for cooling (OutputCool) • 0 as analog output value for heating (OutputHeat_PER) and analog output value for cooling (OutputCool_PER) • FALSE as PWM output value for heating (OutputHeat_PWM) and PWM output value for cooling (OutputCool_PWM) This does not depend on the configured output value limits and scaling in the structures Config.Output.Heat and Config.Output.Cool.
1	**Pretuning** The pretuning determines the process response to a jump change of the output value and searches for the point of inflection. The PID parameters are calculated from the maximum rate of rise and dead time of the controlled system. You obtain the best PID parameters when you perform pretuning and fine tuning.

State / Mode	Description of operating mode
	PID_Temp offers different pretuning types depending on the configuration: • Pretuning heating: A jump change is output at the output value heating, the PID parameters for heating are calculated (Retain.CtrlParams.Heat structure), and control to the setpoint then takes place in automatic mode. If the process behavior strongly depends on the operating point, an adaptation of the delay time can be activated at the setpoint with PIDSelfTune.SUT.AdaptDelayTime. • Pretuning heating and cooling: A jump is output at the output value heating. As soon as the process value is close to the setpoint, a jump change is output at the output value cooling. The PID parameters for heating (Retain.CtrlParams.Heat structure) and cooling (Retain.CtrlParams.Cool structure) are calculated. Then, control to the setpoint takes place in automatic mode. If the process behavior strongly depends on the operating point, an adaptation of the delay time can be activated at the setpoint with PIDSelfTune.SUT.AdaptDelayTime. Depending on the effect of the cooling actuator compared to the heating actuator, the quality of tuning can be influenced by whether or not the heating and cooling outputs are operated simultaneously during tuning. You can specify this with PIDSelfTune.SUT.CoolingMode. • Pretuning cooling: A jump change is output at the output value cooling and the PID parameters for cooling are calculated (Struktur Retain.CtrlParams.Cool). Then, control to the setpoint takes place in automatic mode. If you want to tune the PID parameters for heating and cooling, you can expect a better control response with "Pretuning heating" followed by "Pretuning cooling" rather than with "Pretuning heating and cooling". However, carrying out pretuning in two steps takes more time. **General requirements for pretuning:** • The PID_Temp instruction is called in a cyclic interrupt OB. • Inactive (State = 0), manual mode (State = 4), or automatic mode (State = 3) • ManualEnable = FALSE • Reset = FALSE • The setpoint and the process value lie within the configured limits. **Requirements for pretuning heating:** • Heat.EnableTuning = TRUE • Cool.EnableTuning = FALSE • The process value must not be too close to the setpoint. |Setpoint - Input| > 0.3 * |Config.InputUpperLimit - Config.InputLowerLimit| and |Setpoint - Input| > 0.5 * |Setpoint| • The setpoint is greater than the process value. Setpoint > Input **Requirements for pretuning heating and cooling:** • Heat.EnableTuning = TRUE· • Cool.EnableTuning = TRUE • The cooling output is activated (Config.ActivateCooling = TRUE). • The PID parameter switching is activated (Config.AdvancedCooling = TRUE). • The process value must not be too close to the setpoint. |Setpoint - Input| > 0.3 * |Config.InputUpperLimit - Config.InputLowerLimit| and |Setpoint - Input| > 0.5 * |Setpoint| • The setpoint is greater than the process value. Setpoint > Input **Requirements for pretuning cooling:** • Heat.EnableTuning = FALSE· • Cool.EnableTuning = TRUE· • The cooling output is activated (Config.ActivateCooling = TRUE). • The PID parameter switching is activated (Config.AdvancedCooling = TRUE).

State / Mode	Description of operating mode
	• A "pretuning heating" or "pretuning heating and cooling" has been successful (PIDSelfTune.SUT.ProcParHeatOk = TRUE), if possible at the same setpoint. • The process value must be close to the setpoint. |Setpoint - Input| < 0.05 * |Config.InputUpperLimit - Config.InputLowerLimit| The more stable the process value is, the easier it is to calculate the PID parameters and the more precise the result will be. Noise on the process value can be tolerated as long as the rate of rise of the process value is significantly higher compared to the noise. This is most likely the case in operating modes "Inactive" or "Manual mode". The setpoint is frozen in the CurrentSetpoint tag. Tuning is canceled when: • Setpoint > CurrentSetpoint + CancelTuningLevel or • Setpoint < CurrentSetpoint - CancelTuningLevel The method for calculation of the PID parameters can be specified separately for heating and cooling with PIDSelfTune.SUT.TuneRuleHeat and PIDSelfTune.SUT.TuneRuleCool. Before the PID parameters are recalculated, they are backed up in the CtrlParamsBackUp structure and can be reactivated with LoadBackUp. After successful pretuning, the switch is made to automatic mode. After unsuccessful pretuning, the switch to the mode is determined by ActivateRecoverMode. The phase of pretuning is indicated with PIDSelfTune.SUT.State. For starting pretuning of heating or pretuning of heating and cooling in Automatic mode, it is recommended to perform the required setpoint change simultaneously with the rising edge at ModeActivate. If the setpoint is changed first and the pretuning is started later, the output value in automatic mode is adjusted accordingly and causes a change to the process value. This can have a negative effect on the subsequent pretuning or prevent it from starting.
2	**Fine tuning** Fine tuning generates a constant, limited oscillation of the process value. The PID parameters are tuned for the operating point from the amplitude and frequency of this oscillation. PID parameters from fine tuning usually have better master control and disturbance characteristics than PID parameters from pretuning. You obtain the best PID parameters when you perform pretuning and fine tuning. PID_Temp automatically attempts to generate an oscillation greater than the noise of the process value. Fine tuning is only minimally influenced by the stability of the process value. PID_Temp offers different fine tuning types depending on the configuration: • Fine tuning heating: PID_Temp generates an oscillation of the process value with periodic changes at the output value heating and calculates the PID parameters for heating (Struktur Retain.CtrlParams.Heat). • Fine tuning cooling: PID_Temp generates an oscillation of the process value with periodic changes at the output value cooling and calculates the PID parameters for cooling (Struktur Retain.CtrlParams.Cool). **Temporary tuning offset for heating/cooling controllers** If PID_Temp is used as heating/cooling controller (Config.ActivateCooling = TRUE), the PID output value (PidOutputSum) at the setpoint must meet the following requirements for a process value oscillation to be generated and fine tuning to be successful: • Positive PID output value for fine tuning heating • Negative PID output value for fine tuning cooling If this requirement is not met, you can define a temporary offset for fine tuning which is output at the output with the opposite effect: • Offset for cooling output (PIDSelfTune.TIR.OutputOffsetCool) with fine tuning heating. Define a negative tuning offset cooling which is less than the PID output value (PidOutputSum) at the setpoint in the steady state before you start tuning. • Offset for heating output (PIDSelfTune.TIR.OutputOffsetHeat) with fine tuning cooling. Define a positive tuning offset heating which is greater than the PID output value (PidOutputSum) at the setpoint in the steady state before you start tuning.

State / Mode	Description of operating mode
	The defined offset is balanced by the PID algorithm so that the process value remains at the setpoint. The height of the offset allows the PID output value to be adapted correspondingly so that it fulfills the requirement mentioned above. To avoid larger overshoots of the process value when defining the offset, it can also be increased in several steps. If PID_Temp exits the fine tuning mode, the tuning offset is reset. Example for definition of an offset for fine tuning cooling: • Without offset: – Setpoint = Process value (ScaledInput) = 80°C – PID output value (PidOutputSum) = 30.0 – Output value heating (OutputHeat) = 30.0 – Output value cooling (OutputCool) = 0.0 Oscillation of the process value around the setpoint cannot be generated with the cooling output alone. Fine tuning would fail here. • With definition of an offset for heating output (PIDSelfTune.TIR.OutputOffsetHeat) = 80.0 – Setpoint = process value (ScaledInput) = 80°C – PID output value (PidOutputSum) = -50.0 – Output value heating (OutputHeat) = 80.0 – Output value cooling (OutputCool) = -50.0 By defining an offset for the heating output, the cooling output can now create an oscillation of the process value around the setpoint. Fine tuning can now be carried out successfully. **General requirements for fine tuning:** • The PID_Temp instruction is called in a cyclic interrupt OB. • No disturbances are expected. • The setpoint and the process value lie within the configured limits. • The control loop has stabilized at the operating point. The operating point is reached when the process value corresponds to the setpoint. When the dead zone is switched on, the result can be a permanent control deviation (deviation between setpoint and actual value). This can have a negative effect on fine tuning. • ManualEnable = FALSE • Reset = FALSE • Automatic (State = 3), inactive (State = 0) or manual (State = 4) mode **Requirements for fine tuning heating:** • Heat.EnableTuning = TRUE • Cool.EnableTuning = FALSE • If PID_Temp is configured as heating/cooling controller (Config.ActivateCooling = TRUE), the heating output must be active at the operating point at which tuning is to take place (PidOutputSum > 0.0 (see tuning offset)). **Requirements for fine tuning cooling:** • Heat.EnableTuning = FALSE • Cool.EnableTuning = TRUE • The cooling output is activated (Config.ActivateCooling = TRUE). • The PID parameter switching is activated (Config.AdvancedCooling = TRUE) • The cooling output must be active at the operating point at which tuning is to take place (PidOutputSum < 0.0 (see tuning offset)).

State / Mode	Description of operating mode
	The course of fine tuning is determined by the mode from which it is started: • Automatic mode (State = 3) with PIDSelfTune.TIR.RunIn = FALSE (default) Start fine tuning from automatic mode if you wish to improve the existing PID parameters through tuning. PID_Temp controls the system using the existing PID parameters until the control loop has stabilized and the requirements for fine tuning have been met. Only then will fine tuning start. • Inactive (State = 0), manual mode (State = 4), or automatic mode (State = 3) with PIDSelfTune.TIR.RunIn = TRUE Attempts are made to reach the setpoint with the minimum or maximum output value: – with minimum or maximum output value heating for fine tuning heating – With minimum or maximum output value cooling for fine tuning cooling. This can produce increased overshoot. Fine tuning starts when the setpoint is reached. If the setpoint cannot be reached, PID_Temp does not automatically abort tuning. The setpoint is frozen in the CurrentSetpoint tag. Tuning is canceled when: • Setpoint > CurrentSetpoint + CancelTuningLevel or • Setpoint < CurrentSetpoint - CancelTuningLevel The method for calculation of the PID parameters can be specified separately for heating and cooling with PIDSelfTune.TIR.TuneRuleHeat and PIDSelfTune.TIR.TuneRuleCool. Before the PID parameters are recalculated, they are backed up in the CtrlParamsBackUp structure and can be reactivated with LoadBackUp. The controller changes to automatic mode after successful fine tuning. After unsuccessful fine tuning, the switch to the mode is determined by ActivateRecoverMode. The "Fine tuning" phase is indicated with PIDSelfTune.TIR.State.
3	**Automatic mode** In automatic mode, PID_Temp corrects the controlled system in accordance with the parameters specified. The controller switches to automatic mode if one the following requirements is met: • Pretuning successfully completed • Fine tuning successfully completed • Changing of the Mode in-out parameter to the value 3 and a rising edge at ModeActivate. The switchover from automatic mode to manual mode is only bumpless if carried out in the commissioning editor. The ActivateRecoverMode tag is taken into consideration in automatic mode.
4	**Manual mode** In manual mode, you specify a manual PID output value in the ManualValue parameter. The values at the outputs for heating and cooling resulting from this manual value are the result of the configured output scaling. You can also activate this operating mode using ManualEnable = TRUE. We recommend that you change the operating mode using Mode and ModeActivate only. The switchover from manual mode to automatic mode is bumpless. The ActivateRecoverMode tag is taken into consideration in manual mode.
5	**Substitute output value with error monitoring** The control algorithm is deactivated. The SetSubstituteOutput tag determines which PID output value (PidOutputSum) is output in this operating mode. • SetSubstituteOutput = FALSE: Last valid PID output value • SetSubstituteOutput = TRUE: Substitute output value (SubstituteOutput) You cannot activate this operating mode using Mode = 5. In the event of an error, it is activated instead of "Inactive" operating mode if all the following conditions are met: • Automatic mode (State = 3) • ActivateRecoverMode = TRUE • One or more errors have occurred in which ActivateRecoverMode is effective. As soon as the errors are no longer pending, PID_Temp switches back to automatic mode.

ENO characteristics

If State = 0, then ENO = FALSE.
If State ≠ 0, then ENO = TRUE.

Automatic switchover of operating mode during commissioning

Automatic mode is activated following successful pretuning or fine tuning. The following table shows how Mode and State change during successful pretuning.

Cycle no.	Mode	State	Action
0	4	4	Set Mode = 1
1	1	4	Set ModeActivate = TRUE
1	4	1	Value of State is saved in Mode parameter Pretuning is started
n	4	1	Pretuning successfully completed
n	3	3	Automatic mode is started

PID_Temp automatically switches the operating mode in the event of an error.
The following table shows how Mode and State change during pretuning with errors.

Cycle no.	Mode	State	Action
0	4	4	Set Mode = 1
1	1	4	Set ModeActivate = TRUE
1	4	1	Value of State is saved in Mode parameter Pretuning is started
n	4	1	Pretuning canceled
n	4	4	Manual mode is started

If ActivateRecoverMode = TRUE, the operating mode that is saved in the Mode parameter is activated. When you start pretuning or fine tuning, PID_Temp has saved the value of State in the Mode in-out parameter. This means PID_Temp switches to the mode from which tuning was started.
If ActivateRecoverMode = FALSE, the system switches to "Inactive" operating mode.

See also

Output parameters of PID_Temp (Page 337)
In/out parameters of PID_Temp V2 (Page 339)

10.3.4.8 PID_Temp ErrorBits parameter

If several errors are pending simultaneously, the values of the ErrorBits are displayed with binary addition. The display of ErrorBits = 0000003h, for example, indicates that the errors 0000001h and 0000002h are pending simultaneously.

ErrorBits (DW#16#...)	Description
0000000	There is no error.
0000001	The "Input" parameter is outside the process value limits. • Input > Config.InputUpperLimit or • Input < Config.InputLowerLimit If automatic mode was active before the error occurred and ActivateRecoverMode = TRUE, PID_Temp remains in automatic mode. If manual mode was active before the error occurred and ActivateRecoverMode = TRUE, PID_Temp remains in manual mode. If pretuning or fine tuning mode was active before the error occurred and ActivateRecoverMode = TRUE, PID_Temp switches to the operating mode that is saved in the Mode parameter.
0000002	Invalid value at "Input_PER" parameter. Check whether an error is pending at the analog input. If automatic mode was active before the error occurred and ActivateRecoverMode = TRUE, PID_Temp outputs the configured substitute output value. As soon as the error is no longer pending, PID_Temp switches back to automatic mode. If manual mode was active before the error occurred and ActivateRecoverMode = TRUE, PID_Temp remains in manual mode. If pretuning or fine tuning mode was active before the error occurred and ActivateRecoverMode = TRUE, PID_Temp switches to the operating mode that is saved in the Mode parameter.
0000004	Error during fine tuning. The oscillation of the process value could not be maintained. If PID_Temp is used as a heating cooling controller (Config.ActivateCooling = TRUE), then in order to generate a process value oscillation and successfully carry out the fine tuning, the PID output value (PidOutputSum) at the setpoint must be • positive for fine tuning heating • negative for fine tuning cooling If this requirement is not met, use the tuning offsets (PIDSelfTune.TIR.OutputOffsetCool and PIDSelfTune.TIR.OutputOffsetHeat tags), see Fine tuning (Page 161). If ActivateRecoverMode was = TRUE before the error occurred, PID_Temp cancels the tuning and switches to the operating mode that is saved in the Mode parameter.
0000008	Error at start of pretuning. The process value is too close to the setpoint or greater than the setpoint. Start fine tuning. If ActivateRecoverMode = TRUE before the error occurred, PID_Temp cancels the tuning and switches to the operating mode that is saved in the Mode parameter.
0000010	The setpoint was changed during tuning. You can set the permitted fluctuation of the setpoint at the CancelTuningLevel tag. If ActivateRecoverMode = TRUE before the error occurred, PID_Temp cancels the tuning and switches to the operating mode that is saved in the Mode parameter.
0000020	Pretuning is not permitted during fine tuning. If ActivateRecoverMode = TRUE before the error occurred, PID_Temp remains in fine tuning mode.
0000040	Error during pretuning. Cooling could not reduce the process value. If ActivateRecoverMode = TRUE before the error occurred, PID_Temp cancels the tuning and switches to the operating mode that is saved in the Mode parameter.
0000100	Error during fine tuning resulted in invalid parameters. If ActivateRecoverMode = TRUE before the error occurred, PID_Temp cancels the tuning and switches to the operating mode that is saved in the Mode parameter.

ErrorBits (DW#16#...)	Description
0000200	Invalid value at "Input" parameter: Value has an invalid number format. If automatic mode was active before the error occurred and ActivateRecoverMode = TRUE, PID_Temp outputs the configured substitute output value. As soon as the error is no longer pending, PID_Temp switches back to automatic mode. If manual mode was active before the error occurred and ActivateRecoverMode = TRUE, PID_Temp remains in manual mode. If pretuning or fine tuning mode was active before the error occurred and ActivateRecoverMode = TRUE, PID_Temp switches to the operating mode that is saved in the Mode parameter.
0000400	Calculation of output value failed. Check the PID parameters. If automatic mode was active before the error occurred and ActivateRecoverMode = TRUE, PID_Temp outputs the configured substitute output value. As soon as the error is no longer pending, PID_Temp switches back to automatic mode. If pretuning or fine tuning mode was active before the error occurred and ActivateRecoverMode = TRUE, PID_Temp switches to the operating mode that is saved in the Mode parameter.
0000800	Sampling time error: PID_Temp is not called within the sampling time of the cyclic interrupt OB. It is recommended to call PID_Temp in a cyclic interrupt OB without conditions and to activate or deactivate it via the operating mode at the Mode parameter. Conditional calls or the call in OB1 can have a negative effect on the control quality. Monitoring of the sampling time can be disabled with CycleTime.EnMonitoring = FALSE. If automatic mode was active before the error occurred and ActivateRecoverMode = TRUE, PID_Temp remains in automatic mode. If manual mode was active before the error occurred and ActivateRecoverMode = TRUE, PID_Temp remains in manual mode. If pretuning or fine tuning mode was active before the error occurred and ActivateRecoverMode = TRUE, PID_Temp switches to the operating mode that is saved in the Mode parameter. If this error occurred during simulation with PLCSIM, see the notes under Simulating PID_Temp with PLCSIM (Page 178).
0001000	Invalid value at "Setpoint" parameter or "SubstituteSetpoint": Value has an invalid number format. If automatic mode was active before the error occurred and ActivateRecoverMode = TRUE, PID_Temp outputs the configured substitute output value. As soon as the error is no longer pending, PID_Temp switches back to automatic mode. If manual mode was active before the error occurred and ActivateRecoverMode = TRUE, PID_Temp remains in manual mode. If pretuning or fine tuning mode was active before the error occurred and ActivateRecoverMode = TRUE, PID_Temp switches to the operating mode that is saved in the Mode parameter.
0010000	Invalid value at ManualValue parameter. Value has an invalid number format. If ActivateRecoverMode = TRUE before the error occurred, PID_Temp remains in manual mode and uses SubstituteOutput as PID output value. As soon as you specify a valid value in ManualValue, PID_Temp uses it as the PID output value.
0020000	Invalid value at SubstituteOutput tag. Value has an invalid number format. PID_Temp remains in the "Substitute output value with error monitoring" mode or manual mode and uses the low limit of the PID output value for heating (Config.Output.Heat.PidLowerLimit) as PID output value. As soon as you specify a valid value in SubstituteOutput, PID_Temp uses it as the PID output value.
0040000	Invalid value at Disturbance parameter. Value has an invalid number format. If automatic mode was active and ActivateRecoverMode = TRUE before the error occurred, Disturbance is set to zero. PID_Temp remains in automatic mode. If pretuning or fine tuning mode was active before the error occurred and ActivateRecoverMode = TRUE, PID_Temp switches to the operating mode that is saved in the Mode parameter. If Disturbance in the current phase has no effect on the output value, tuning is not be canceled.

ErrorBits (DW#16#...)	Description
0200000	Error in master in the cascade: Slaves are not in automatic mode or have enabled a substitute setpoint and are preventing tuning of the master. If ActivateRecoverMode = TRUE before the error occurred, PID_Temp cancels the tuning and switches to the operating mode that is saved in the Mode parameter.
0400000	Pretuning heating is not permitted while cooling is active. If ActivateRecoverMode = TRUE before the error occurred, PID_Temp cancels the tuning and switches to the operating mode that is saved in the Mode parameter.
0800000	The process value must be close to the setpoint to start pretuning cooling. If ActivateRecoverMode = TRUE before the error occurred, PID_Temp cancels the tuning and switches to the operating mode that is saved in the Mode parameter.
1000000	Error at start of tuning: Heat.EnableTuning and Cool.EnableTuning are not set or do not match the configuration. If ActivateRecoverMode = TRUE before the error occurred, PID_Temp cancels the tuning and switches to the operating mode that is saved in the Mode parameter.
2000000	Pretuning cooling requires successful pretuning heating. If ActivateRecoverMode = TRUE before the error occurred, PID_Temp cancels the tuning and switches to the operating mode that is saved in the Mode parameter.
4000000	Error at start of fine tuning: Heat.EnableTuning and Cool.EnableTuning must not be set simultaneously. If ActivateRecoverMode = TRUE before the error occurred, PID_Temp cancels the tuning and switches to the operating mode that is saved in the Mode parameter.
8000000	Error during calculation of the PID parameters resulted in invalid parameters. The invalid parameters are discarded and the original PID parameters are retained unchanged. If this error occurs during pretuning, make sure that: • Pretuning heating or pretuning heating and cooling: The PID output value is not already limited by the high limit for heating before the start of the pretuning. • Pretuning cooling: The PID output value is not already limited by the low limit for cooling before the start of the pretuning. For starting a pretuning of heating or pretuning of heating and cooling in automatic mode, it is recommended to perform the required setpoint change simultaneously with the rising edge at ModeActivate. This prevents the PID output value from running into the limitation between the setpoint change and the start of the pretuning. Alternatively, this can also be achieved by starting from manual mode or "Inactive" mode. A distinction is made between the following scenarios: • If automatic mode was active before the error occurred and ActivateRecoverMode = TRUE, PID_Temp remains in automatic mode. • If manual mode was active before the error occurred and ActivateRecoverMode = TRUE, PID_Temp remains in manual mode. • If pretuning or fine tuning mode was active before the error occurred and ActivateRecoverMode = TRUE, PID_Temp switches to the operating mode that is saved in the Mode parameter.

10.3.4.9 PID_Temp ActivateRecoverMode tag

The ActivateRecoverMode tag determines the reaction to error. The Error parameter indicates if an error is pending. When the error is no longer pending, Error = FALSE. The ErrorBits parameter shows which errors have occurred.

Automatic mode and manual mode

NOTICE
Your system may be damaged. If ActivateRecoverMode = TRUE, PID_Temp remains in automatic mode or in manual mode even if there is an error and the process limit values are exceeded. This may damage your system. It is essential to configure how your controlled system reacts in the event of an error to protect your system from damage.

ActivateRecover-Mode	Description
FALSE	PID_Temp switches to "Inactive" mode in the event of an error. The controller is only activated by a falling edge at Reset or a rising edge at ModeActivate.
TRUE	**Automatic mode** If errors occur frequently in automatic mode, this setting has a negative effect on the control response, because PID_Temp switches between the calculated PID output value and the substitute output value at each error. In this case, check the ErrorBits parameter and eliminate the cause of the error. If one or several of the following errors occur and automatic mode was active before the error occurred, PID_Temp remains in automatic mode: • 0000001h: The "Input" parameter is outside the process value limits. • 0000800h: Sampling time error • 0040000h: Invalid value at Disturbance parameter. • 8000000h: Error during calculation of the PID parameters If one or several of the following errors occur and automatic mode was active before the error occurred, PID_Temp switches to "Substitute output value with error monitoring" mode: • 0000002h: Invalid value at Input_PER parameter. • 0000200h: Invalid value at Input parameter. • 0000400h: Calculation of output value failed. • 0001000h: Invalid value at Setpoint parameter or SubstituteSetpoint. As soon as the errors are no longer pending, PID_Temp switches back to automatic mode. If the following error occurs in "Substitute output value with error monitoring" mode, PID_Temp sets the PID output value to Config.Output.Heat.PidLowerLimit as long as this error is pending: • 0020000h: Invalid value at SubstituteOutput tag. Value has an invalid number format. This behavior is independent of SetSubstituteOutput.
	Manual mode If one or several errors occur and manual mode was active before the error occurred, PID_Temp remains in manual mode. If the following error occurs in manual mode, as long as this error is pending, PID_Temp sets the PID output value to SubstituteOutput: • 0010000h: Invalid value at ManualValue parameter. Value has an invalid number format. If the error 0010000h is pending in manual mode and the following error occurs, PID_Temp sets the PID output value to Config.Output.Heat.PidLowerLimit as long as this error is pending: • 0020000h: Invalid value at SubstituteOutput tag. Value has an invalid number format. This behavior is independent of SetSubstituteOutput.

Pretuning and fine tuning

ActivateRecover-Mode	Description
FALSE	PID_Temp switches to "Inactive" mode in the event of an error. The controller is only activated by a falling edge at Reset or a rising edge at ModeActivate.
TRUE	If the following error occurs, PID_Temp remains in the active mode: • 0000020h: Pretuning is not permitted during fine tuning. The following errors are ignored: • 0010000h: Invalid value at ManualValue parameter. • 0020000h: Invalid value at SubstituteOutput tag. When any other error occurs, PID_Temp cancels the tuning and switches to the mode from which tuning was started.

10.3.4.10 PID_Temp Warning tag

If several warnings are pending simultaneously, the values of the Warning tag are displayed with binary addition. If the warning 0000003h is displayed, for example, the warnings 0000001h and 0000002h are pending simultaneously.

Warning (DW#16#....)	Description
0000000	No warning pending.
0000001	The point of inflection was not found during pretuning.
0000004	The setpoint was limited to the configured limits.
0000008	Not all the necessary controlled system properties were defined for the selected method of calculation. Instead, the PID parameters were calculated using the method TIR.TuneRuleHeat = 3 or TIR.TuneRule-Cool = 3.
0000010	The operating mode could not be changed because Reset = TRUE or ManualEnable = TRUE.
0000020	The cycle time of the calling OB limits the sampling time of the PID algorithm. Improve results by using shorter OB cycle times.
0000040	The process value exceeded one of its warning limits.
0000080	Invalid value at Mode. The operating mode is not switched.
0000100	The manual value was limited to the limits of the PID output value.
0000200	The specified rule for tuning is not supported. No PID parameters are calculated.
0001000	The substitute output value cannot be reached because it is outside the output value limits.
0004000	The specified selection of the output value for heating and/or cooling is not supported. Only the output OutputHeat or OutputCool is used.
0008000	Invalid value at PIDSelfTune.SUT.AdaptDelayTime. The default value 0 is used.
0010000	Invalid value at PIDSelfTune.SUT.CoolingMode. The default value 0 is used.
0020000	The activation of cooling (Config.ActivateCooling tag) is not supported by the controller that is used as master (Config.Cascade.IsMaster tag). PID_Temp works as heating controller. Set the Config.ActivateCooling tag to FALSE.
0040000	Invalid value at Retain.CtrlParams.Heat.Gain, Retain.CtrlParams.Cool.Gain or Config.CoolFactor. PID_Temp supports only positive values for proportional gain (heating and cooling) and cooling factor. Automatic mode remains active with PID output value 0.0. The integral component is stopped.

The following warnings are deleted as soon as the cause has been remedied or you repeat the action with valid parameters:

- 0000001h
- 0000004h
- 0000008h
- 0000040h
- 0000100h

All other warnings are cleared with a rising edge at Reset or ErrorAck.

10.3.4.11 PwmPeriode tag

If the PID algorithm sampling time (Retain.CtrlParams.Heat.Cycle or Retain.CtrlParams.Heat.Cycle) and thus the time period of the pulse width modulation is very high when you use OutputHeat_PWM or OutputCool_PWM, you can define a deviating shorter time period at the Config.Output.Heat.PwmPeriode or Config.Output.Cool.PwmPeriode parameters to improve the smoothness of the process value.

Time period of the pulse width modulation at OutputHeat_PWM

Time period of the PWM at output OutputHeat_PWM depending on Config.Output.Heat.PwmPeriode:

- Heat.PwmPeriode = 0.0 (default)
  The sampling time of the PID algorithm for heating (Retain.CtrlParams.Heat.Cycle) is used as time period of the PWM.
- Heat.PwmPeriode > 0.0
  The value is rounded off to an integer multiple of the PID_Temp sampling time (CycleTime.Value) and used as time period of the PWM.
  The value must meet the following conditions:
  - Heat.PwmPeriode ≤ Retain.CtrlParams.Heat.Cycle
  - Heat.PwmPeriode > Config.Output.Heat.MinimumOnTime
  - Heat.PwmPeriode > Config.Output.Heat.MinimumOffTime

Time period of the pulse width modulation at OutputCool_PWM

Time period of the PWM at output OutputCool_PWM depending on Config.Output.Cool.PwmPeriode and the method for heating/cooling:

- Cool.PwmPeriode = 0.0 and cooling factor (Config.AdvancedCooling = FALSE):
  The sampling time of the PID algorithm for heating (Retain.CtrlParams.Heat.Cycle) is used as time period of the PWM.
- Cool.PwmPeriode = 0.0 and PID parameter switching (Config.AdvancedCooling = TRUE):
  The sampling time of the PID algorithm for cooling (Retain.CtrlParams.Cool.Cycle) is used as time period of the PWM.

- Cool.PwmPeriode > 0.0:
  The value is rounded off to an integer multiple of the PID_Temp sampling time (CycleTime.Value) and used as time period of the PWM.
  The value must meet the following conditions:
  – Cool.PwmPeriode ≤ Retain.CtrlParams.Cool.Cycle or Retain.CtrlParams.Heat.Cycle
  – Cool.PwmPeriode > Config.Output.Cool.MinimumOnTime
  – Cool.PwmPeriode > Config.Output.Cool.MinimumOffTime

Config.Output.Cool.PwmPeriode is only effective if the cooling output is activated (Config.ActivateCooling =TRUE).

When you use PwmPeriode, the accuracy of the PWM output signal is determined by the relationship of PwmPeriode to the PID_Temp sampling time (cycle time of the OB). PwmPeriode should be at least 10 times the PID_Temp sampling time.

If the sampling time of the PID algorithm is not an integer multiple of PwmPeriode, each last period of the PWM within the sampling time of the PID algorithm is extended accordingly.

Example for OutputHeat_PWM

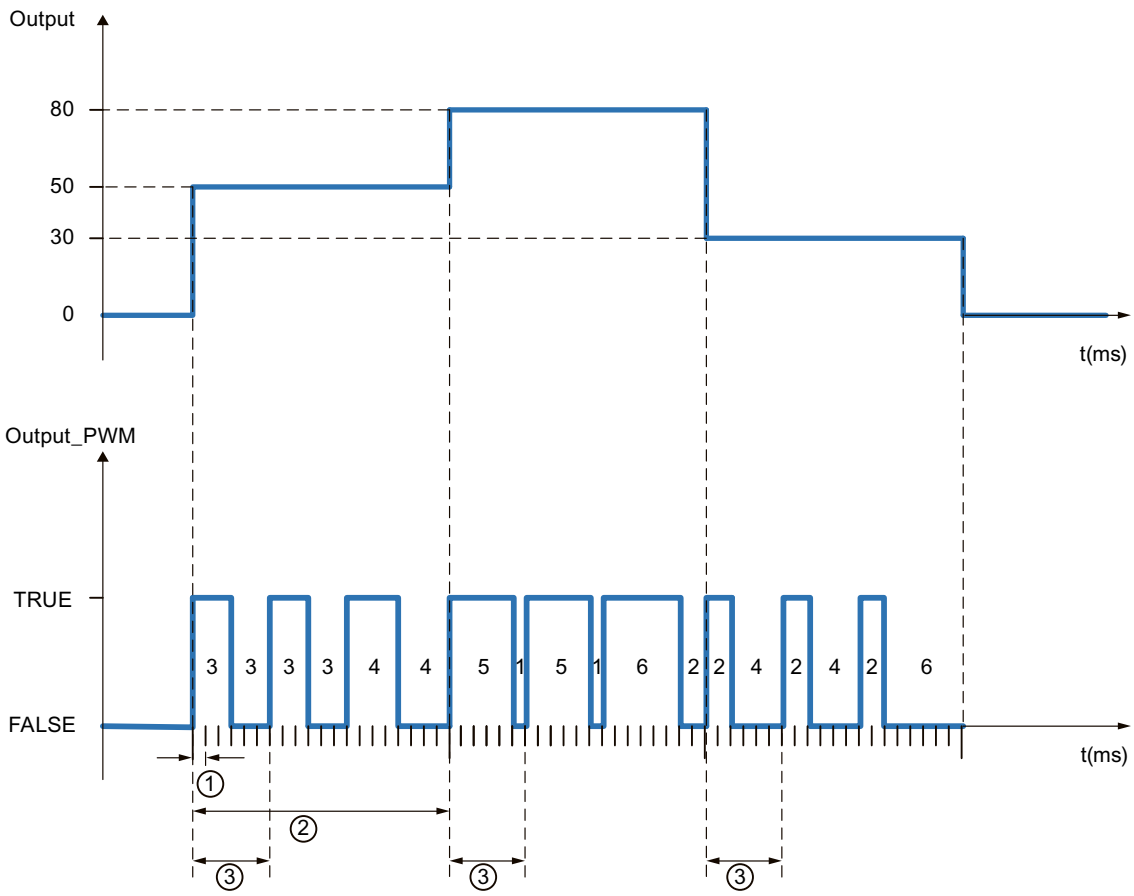

① PID_Temp sampling time = 100.0 ms (cycle time of the calling cyclic interrupt OB, CycleTime.Value tag)

② PID algorithm sampling time = 2000.0 ms (Retain.CtrlParams.Heat.Cycle tag)

③ Time period of the PWM for heating = 600.0 ms (Config.Output.Heat.PwmPeriode tag)

10.3.4.12 IntegralResetMode tag

The IntegralResetMode tag determines how the integral action PIDCtrl.IOutputOld is pre-assigned:

- When switching from "Inactive" operating mode to "Automatic mode"
- With edge TRUE -> FALSE at parameter Reset and parameter Mode = 3

This setting only works for one cycle and is only effective if the integral action is activated (Retain.CtrlParams.Heat.Ti and Retain.CtrlParams.Cool.Ti > 0.0 tags).

IntegralReset-Mode	Description
0	Smooth The value of PIDCtrl.IOutputOld is pre-assigned so that the switchover is bumpless, which means "Automatic mode" starts with the output value = 0.0 (parameter PidOutputSum) and there is no jump of the output value regardless of the control deviation (setpoint – process value).
1	Delete We recommend setting the weighting of the proportional action (Retain.CtrlParams.Heat.PWeighting and Retain.CtrlParams.Cool.PWeighting tags) to 1.0 if this option is used. The value of PIDCtrl.IOutputOld is deleted. Any control deviation will cause a jump of the PID output value. The direction of the output value jump depends on the active weighting of the proportional action (Retain.CtrlParams.Heat.PWeighting and Retain.CtrlParams.Cool.PWeighting tags) and the control deviation: • Active proportional action weighting = 1.0: Output value jump and control deviation have identical signs. Example: If the process value value is smaller than the setpoint (positive control deviation), the PID output value jumps to a positive value. • Active proportional action weighting < 1.0: For large control deviations, the PID output value jump and control deviation have identical signs. Example: If the process value is much smaller than the setpoint (positive control deviation), the PID output value jumps to a positive value. For small control deviations, the PID output value jump and control deviation have different signs. Example: If the process value is just below the setpoint (positive control deviation), the PID output value jumps to a negative value. This is usually not desirable, because it results in a temporary increase in the control deviation. The smaller the configured weighting of the proportional action, the greater the control deviation must be to receive a PID output value jump with identical sign. We recommend setting the weighting of the proportional action (Retain.CtrlParams.Heat.PWeighting and Retain.CtrlParams.Cool.PWeighting tags) to 1.0 when this option is used. Otherwise, you may experience the undesirable behavior described for small control deviations. Alternatively, you can also use IntegralResetMode = 4. This option guarantees identical signs of the PID output value jump and control deviation independent of the configured weighting of the proportional action and the control deviation.
2	Hold The value of PIDCtrl.IOutputOld is not changed. You can define a new value using the user program.
3	Pre-assign The value of PIDCtrl.IOutputOld is automatically pre-assigned as if PidOutputSum = OverwriteInitialOutputValue in the last cycle.
4	Like setpoint change (only for PID_Temp with version ≥ 1.1) The value of PIDCtrl.IOutputOld is automatically pre-assigned so that a similar PID output value jump results as for a PI controller in automatic mode in case of a setpoint change from the current process value to the current setpoint. Any control deviation will cause a jump of the PID output value. The PID output value jump and control deviation have identical signs. Example: If the process value value is smaller than the setpoint (positive control deviation), the PID output

IntegralReset-Mode	Description
	value jumps to a positive value. This is independent of the configured weighting of the proportional action and the control deviation.

If IntegralResetMode is assigned a value outside the valid value range, PID_Temp behaves as with the pre-assignment of IntegralResetMode:

- PID_Temp up to V1.0: IntegralResetMode = 1
- PID_Temp as of V1.1: IntegralResetMode = 4

10.4 PID basic functions

10.4.1 CONT_C

10.4.1.1 Description CONT_C

The CONT_C instruction is used on SIMATIC S7 automation systems to control technical processes with continuous input and output variables. You can assign parameters to enable or disable sub-functions of the PID controller and adapt it to the process. In addition to the functions in the setpoint and process value branches, the instruction implements a complete PID controller with continuous output value output and the option of manually influencing the value of the output value.

Application

You can use the controller as a PID fixed setpoint controller, or in multi-loop control systems, also as a cascade, blending or ratio controller. The functions of the controller are based on the PID control algorithm of the sampling controller with an analog signal, if necessary extended by including a pulse shaper stage to generate pulse-width modulated output signals for two or three step controllers with proportional actuators.

Call

The CONT_C instruction has an initialization routine that is run through when input parameter COM_RST = TRUE is set. During initialization, the integral action is set to the initialization value I_ITVAL. All the signal outputs are set to zero. COM_RST = FALSE has to be set after the initialization routine has been completed.
The calculation of the values in the control blocks is only correct if the block is called at regular intervals. You should therefore call the control blocks in a cyclic interrupt OB (OB 30 to OB 38). Enter the sampling time in the CYCLE parameter.

Error information

The error message word RET_VAL is not evaluated by the block.

10.4.1.2 How CONT_C works

Setpoint branch

The setpoint is entered in floating-point format at the SP_INT input.

Process value branch

The process value can be input in I/O or floating-point format. The function CRP_IN converts the I/O value PV_PER to a floating-point format -100 to +100 % in accordance with the following rule:

Output of CRP_IN = PV_PER * 100 / 27648

The PV_NORM function scales the output of CRP_IN according to the following rule:

Output of PV_NORM = (output of CRP_IN) *PV_FAC + PV_OFF

PV_FAC has a default of 1 and PV_OFF a default of 0.

Forming the error signal

The difference between the setpoint and process value is the error signal. To suppress a minor sustained oscillation due to manipulated variable quantization (e.g. with a pulse width modulation with PULSEGEN), the error signal is applied to a dead band (DEADBAND). With DEADB_W = 0, the dead band is switched off.

PID Algorithm

The PID algorithm operates as a position algorithm. The proportional, integral (INT), and differential (DIF) actions are connected in parallel and can be activated or deactivated individually. This allows P, PI, PD, and PID controllers to be configured. Pure I controllers are also possible.

Manual value processing

It is possible to switch over between manual and automatic mode. In manual mode, the manipulated variable is corrected to a manually selected value.

The integral action (INT) is set internally to LMN - LMN_P - DISV and the derivative action (DIF) is set to 0 and synchronized internally. Changeover to automatic mode is therefore bumpless.

Manipulated value processing

You can use the LMNLIMIT function to limit the manipulated value to selected values. Alarm bits indicate when a limit is exceeded by the input variable.

The LMN_NORM function normalizes the output of LMNLIMIT according to the following rule:

LMN = (output of LMNLIMIT) * LMN_FAC + LMN_OFF

LMN_FAC has a default of 1 and LMN_OFF a default of 0.

The manipulated value is also available in I/O format. The CRP_OUT function converts the LMN floating-point value to a I/O value according to the following rule:

LMN_PER = LMN * 27648 / 100

Feedforward control

A disturbance variable can be added at the DISV input.

10.4.1.3 CONT_C block diagram

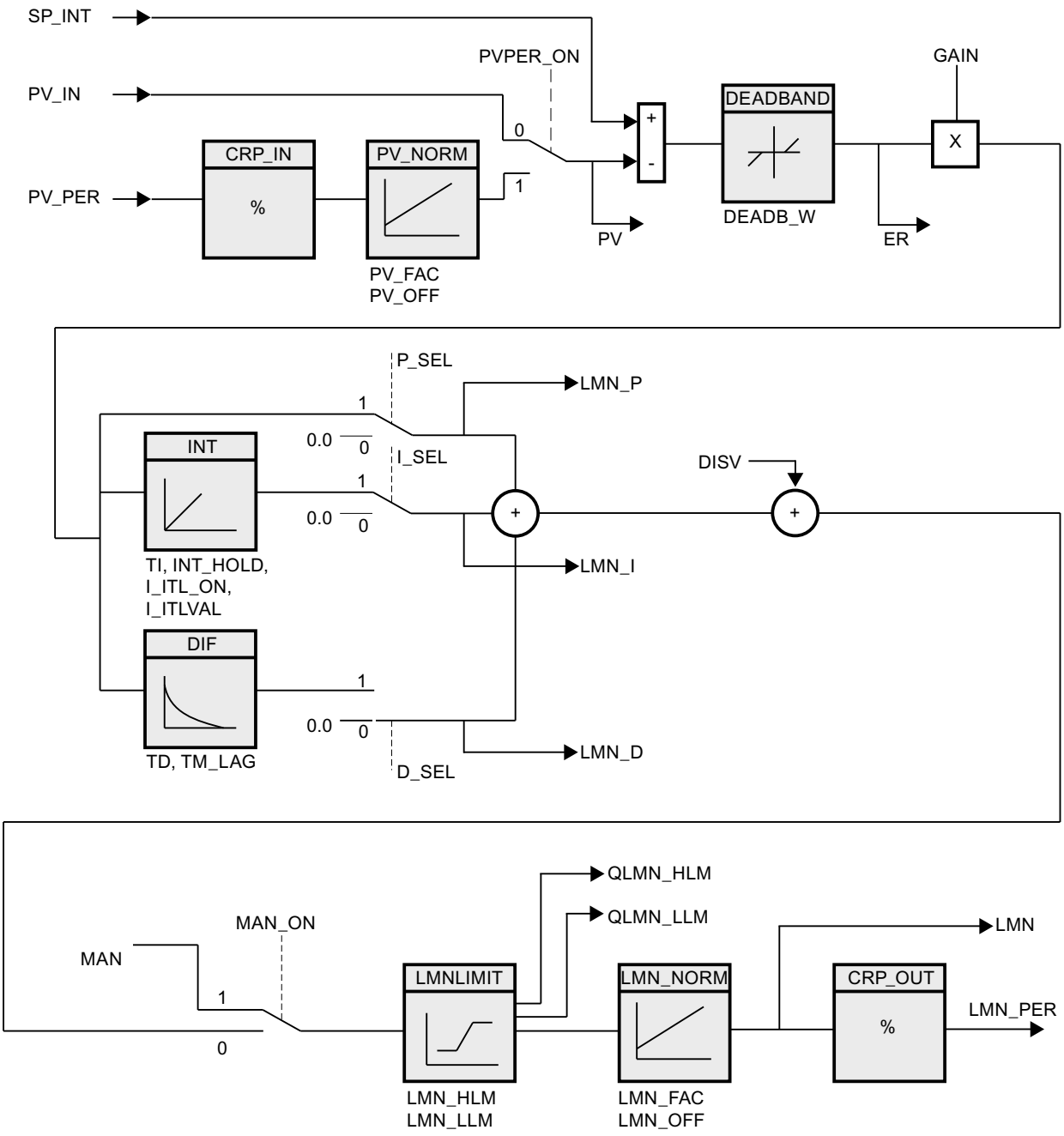

10.4.1.4 Input parameter CONT_C

The names of the following parameters apply both to the data block and to access via the Openness API.

Table 10-13

Parameters	Data type	Default	Description
COM_RST	BOOL	FALSE	The instruction has an initialization routine that is processed when the "Restart" input is set.
MAN_ON	BOOL	TRUE	If the input "Enable manual mode" is set then the control loop is interrupted. A manual value is set as the manipulated value.
PVPER_ON	BOOL	FALSE	If the process value is to be read in from the I/Os, the PV_PER input must be interconnected with the I/Os and the "Enable process value I/Os" input must be set.
P_SEL	BOOL	TRUE	The PID actions can be switched on and off individually in the PID algorithm. P-action is on when the "Enable P-action" input is set.
I_SEL	BOOL	TRUE	The PID actions can be switched on and off individually in the PID algorithm. I action is on when the input "I-action on" is set.
INT_HOLD	BOOL	FALSE	The output of the integral action can be frozen. For this the input "I-action hold" must be set.
I_ITL_ON	BOOL	FALSE	The output of the integral action can be set at the I_ITLVAL input. For this the input "Set I-action" must be set.
D_SEL	BOOL	FALSE	The PID actions can be switched on and off individually in the PID algorithm. D-action is on when the input "Enable D-action" is set.
CYCLE	TIME	T#1s	The time between block calls must be constant. The "Sampling time" input specifies the time between block calls. CYCLE >= 1ms
SP_INT	REAL	0.0	The input "Internal setpoint" is used to specify a setpoint. Permissible are values from -100 to 100 % or a physical variable 1).
PV_IN	REAL	0.0	At the "Process value input" you can assign parameters to a commissioning value or you can interconnect an external process value in floating-point format. Permissible are values from -100 to 100 % or a physical variable 1).
PV_PER	WORD	W#16#-0000	The process value in I/O format is interconnected with the controller at the "Process value I/0" input.
MAN	REAL	0.0	The "Manual value" input is used to set a manual value using the operator interface functions. Permissible are values from -100 to 100 % or a physical variable 2).
GAIN	REAL	2.0	The "Proportional gain" input specifies controller amplification.
TI	TIME	T#20s	The "Integration time" input determines the time response of the integral action. TI >= CYCLE
TD	TIME	T#10s	The "Derivative action time" input determines the time response of the derivative action. TD >= CYCLE
TM_LAG	TIME	T#2s	Time lag of the D-action The algorithm of the D-action contains a delay for which parameters can be assigned at the input "Time lag of the D-action". TM_LAG >= CYCLE/2
DEADB_W	REAL	0.0	A dead band is applied to the system deviation. The "Dead band width" input determines the size of the dead band. DEADB_W >= 0.0 (%) or a physical variable 1)

Parameters	Data type	Default	Description
LMN_HLM	REAL	100.0	The manipulated value is always restricted to a high limit and low limit. The "High limit of manipulated value" input specifies the high limit. Permissible are real values starting at LMN_LLM (%) or a physical variable 2).
LMN_LLM	REAL	0.0	The manipulated value is always restricted to a high limit and low limit. The "Low limit of manipulated value" input specifies the low limit. Permissible are real values up to LMN_HLM (%) or a physical variable 2).
PV_FAC	REAL	1.0	The "Process value factor" input is multiplied by the process value. The input is used to scale the process value range.
PV_OFF	REAL	0.0	The input "Process value offset" is added to the process value. The input is used to scale the process value range.
LMN_FAC	REAL	1.0	The "Manipulated value factor" input is multiplied with the manipulated value. The input is used to scale the manipulated value range.
LMN_OFF	REAL	0.0	The input "Manipulated value offset" is added to the process value. The input is used to scale the manipulated value range.
I_ITLVAL	REAL	0.0	The output of the integral action can be set at the I_ITL_ON input. The initialization value is indicated at the input "Initialization value of the integral-action." Permissible are values of -100.0 to 100.0 (%) or a physical variable 2).
DISV	REAL	0.0	For feedforward control, the disturbance variable is interconnected to the "Disturbance variable" input. Permissible are values of -100.0 to 100.0 (%) or a physical variable 2).

1) Parameters in the setpoint and process value branches with the same unit
2) Parameters in the manipulated value branch with the same unit

10.4.1.5 Output parameters CONT_C

The names of the following parameters apply both to the data block and to access via the Openness API.

Table 10-14

Parameter	Data type	Default	Description
LMN	REAL	0.0	The effective "Manipulated value" is output in floating point format at the "Manipulated value" output.
LMN_PER	WORD	W#16#-0000	The manipulated value in I/O format is interconnected on the input "Manipulated value I/O" with the controller.
QLMN_HLM	BOOL	FALSE	The manipulated value is always restricted to a high limit and low limit. The output "High limit of manipulated value reached" indicates that the high limit has been reached.
QLMN_LLM	BOOL	FALSE	The manipulated value is always restricted to a high limit and low limit. The output "Low limit of manipulated value reached" indicates that the low limit has been reached.
LMN_P	REAL	0.0	The "P-action" output contains the proportional action of the manipulated variable.
LMN_I	REAL	0.0	The "I-action" output contains the integral action of the manipulated variable.
LMN_D	REAL	0.0	The "D-action" output contains the derivative action of the manipulated variable.
PV	REAL	0.0	The effective process value is output at the "Process value" output.
ER	REAL	0.0	The effective system deviation is output at the "Error signal" output.

10.4.2 CONT_S

10.4.2.1 Description CONT_S

The CONT_S instruction is used on SIMATIC S7 automation systems to control technical processes with binary output value output signals for actuators with integrating behavior. During parameter assignment, you can activate or deactivate sub-functions of the PI step controller to adapt the controller to the controlled system. In addition to the functions in the process value branch, the instruction implements a complete proportional-plus-integral-action controller with binary output value output and the option of manually influencing the value of the output value. The step controller operates without a position feedback signal.

Application

You can use the controller as a PI fixed setpoint controller or in secondary control loops in cascade, blending or ratio controllers, however you cannot use it as the primary controller. The functions of the controller are based on the PI control algorithm of the sampling controller supplemented by the functions for generating the binary output signal from the analog actuating signal.

Call

The CONT_S instruction has an initialization routine that is run through when input parameter COM_RST = TRUE is set. All the signal outputs are set to zero. COM_RST = FALSE has to be set after the initialization routine has been completed.
The calculation of the values in the control blocks is only correct if the block is called at regular intervals. You should therefore call the control blocks in a cyclic interrupt OB (OB 30 to OB 38). Enter the sampling time in the CYCLE parameter.

Error information

The error message word RET_VAL is not evaluated by the block.

10.4.2.2 Mode of operation CONT_S

Setpoint branch

The setpoint is entered in floating-point format at the SP_INT input.

Process value branch

The process value can be input in I/O or floating-point format. The function CRP_IN converts the I/O value PV_PER to a floating-point format -100 to +100 % in accordance with the following rule:
Output of CRP_IN = PV_PER * 100 / 27648
The PV_NORM function normalizes the output of CRP_IN according to the following rule:
Output of PV_NORM = (output of CRP_IN) * PV_FAC + PV_OFF

PV_FAC has a default of 1 and PV_OFF a default of 0.

Forming the error signal

The difference between the setpoint and process value is the error signal. To suppress a small constant oscillation due to the manipulated variable quantization (for example, due to a limited resolution of the manipulated value by the control valve), a dead band is applied to the error signal (DEADBAND). With DEADB_W = 0, the dead band is switched off.

PI step algorithm

The instruction operates without position feedback. The I-action of the PI algorithm and the assumed position feedback signal are calculated in **one** integral action (INT) and compared with the remaining P-action as a feedback value. The difference is applied to a three-step element (THREE_ST) and a pulse shaper (PULSEOUT) that generates the pulses for the control valve. The switching frequency of the controller can be reduced by adapting the response threshold of the three-step element.

Feedforward control

A disturbance variable can be added at the DISV input.

10.4.2.3 Block diagram CONT_S

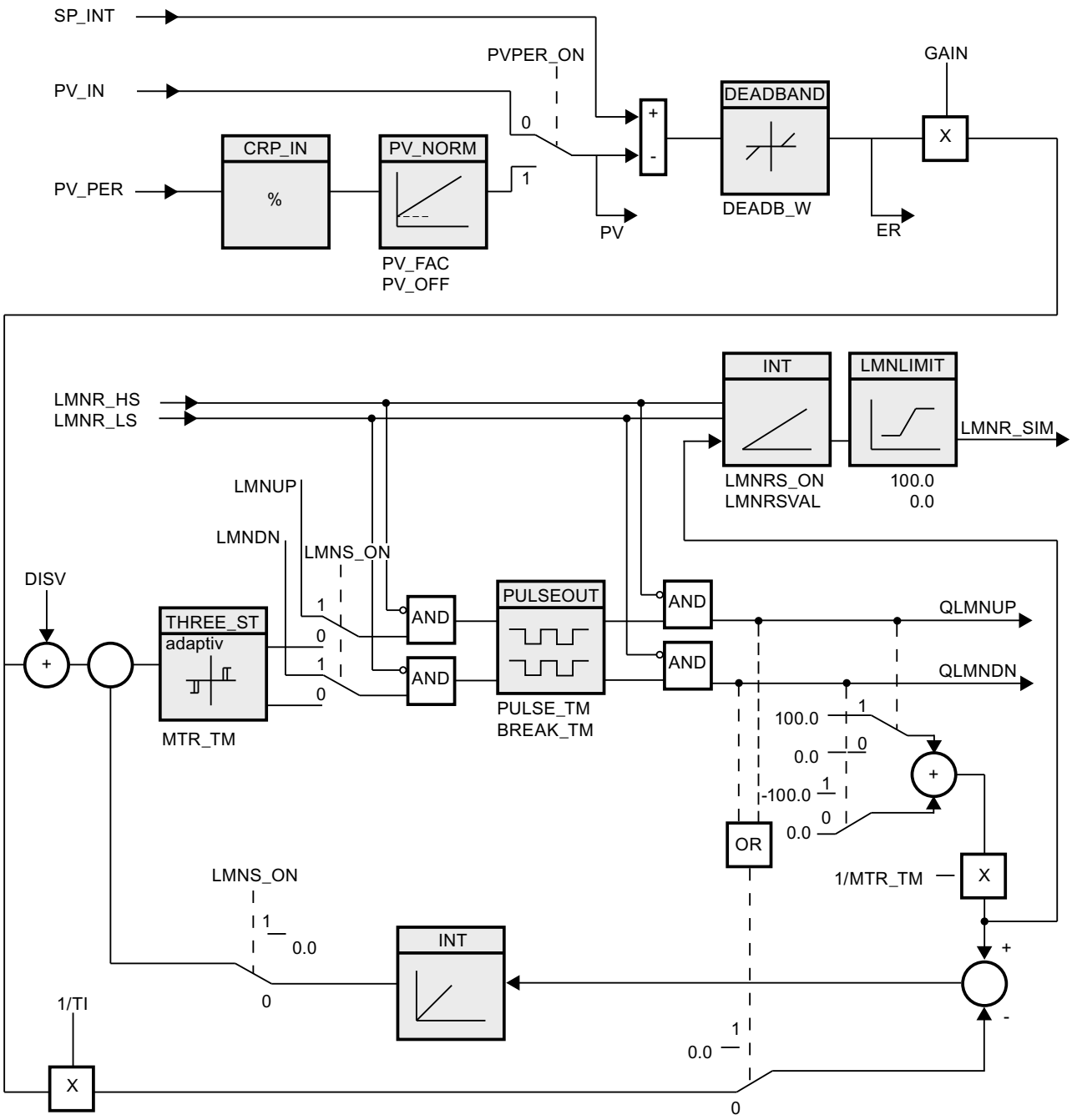

10.4.2.4 Input parameters CONT_S

The names of the following parameters apply both to the data block and to access via the Openness API.

Table 10-15

Parameters	Data type	Default	Description
COM_RST	BOOL	FALSE	The block has an initialization routine that is processed when the "Restart" input is set.
LMNR_HS	BOOL	FALSE	The signal "Control valve at high endstop" is interconnected at the input "High endstop signal of position feedback". LMNR_HS=TRUE means: The control valve is at high end-stop.
LMNR_LS	BOOL	FALSE	The signal "Control valve at low endstop" is interconnected on the input "Low endstop signal of position feedback". LMNR_LS=TRUE means The control valve is at low endstop.
LMNS_ON	BOOL	FALSE	Manipulated value signal processing is switched to manual mode at the "Enable manual mode of manipulated signal".
LMNUP	BOOL	FALSE	The output signal QLMNUP is operated in manual mode of the manipulated value signals at the input "Manipulated value signal up".
LMNDN	BOOL	FALSE	The output signal QLMNDN is operated in manual mode of the manipulated value signals at the input "Manipulated value signal down"
PVPER_ON	BOOL	FALSE	If the process value is to be read from the I/O then the input PV_PER must be interconnected with the I/O and the input "Enable process value I/O" must be set.
CYCLE	TIME	T#1s	The time between block calls must be constant. The "Sampling time" input specifies the time between block calls. CYCLE >= 1ms
SP_INT	REAL	0.0	The input "Internal setpoint" is used to specify a setpoint. Permissible are values from -100 to 100 % or a physical variable [1].
PV_IN	REAL	0.0	At the "Process value input" you can assign parameters to a commissioning value or you can interconnect an external process value in floating-point format. Permissible are values from -100 to 100 % or a physical variable [1].
PV_PER	WORD	W#16#0-000	The process value in I/O format is interconnected with the controller at the "Process value I/O" input.
GAIN	REAL	2.0	The "Proportional gain" input specifies controller amplification.
TI	TIME	T#20s	The "Integration time" input determines the time response of the integral action. TI >= CYCLE
DEADB_W	REAL	1.0	A dead band is applied to the system deviation. The "Dead band width" input determines the size of the dead band. Permissible are values from 0 to 100 % or a physical variable [1].
PV_FAC	REAL	1.0	The "Process value factor" input is multiplied by the process value. The input is used to scale the process value range.
PV_OFF	REAL	0.0	The input "Process value offset" is added to the process value. The input is used to scale the process value range.
PULSE_TM	TIME	T#3s	You can assign a minimum pulse time at the parameter "Minimum pulse time". PULSE_TM >= CYCLE
BREAK_TM	TIME	T#3s	You can assign a minimum break time at the parameter "Minimum break time". BREAK_TM >= CYCLE
MTR_TM	TIME	T#30s	The time required by the actuator to move from limit stop to limit stop is entered at the "Motor actuating time" parameter. MTR_TM >= CYCLE

Parameters	Data type	Default	Description
DISV	REAL	0.0	For feedforward control, the disturbance variable is interconnected to the "Disturbance variable" input. Permissible are values from -100 to 100 % or a physical variable [2].

[1] Parameters in setpoint and process value branches with identical unit
[2] Parameters in the manipulated value branch with same unit

10.4.2.5 Output parameters CONT_S

The names of the following parameters apply both to the data block and to access via the Openness API.

Table 10-16

Parameters	Data type	Default	Description
QLMNUP	BOOL	FALSE	If the output "Manipulated value signal up" is set then the control valve should be open.
QLMNDN	BOOL	FALSE	If the output "Manipulated value signal down" is set then the control valve should be closed.
PV	REAL	0.0	The effective process value is output at the "Process value" output.
ER	REAL	0.0	The effective system deviation is output at the "Error signal" output.

10.4.3 PULSEGEN

10.4.3.1 Description PULSEGEN

The instruction PULSEGEN serves as the structure of a PID controller with impulse output for proportional actuators. PULSEGEN transforms the input value INV (= LMN of the PID controller) through modulation of the impulse width in an impulse sequence with a constant period duration, which corresponds with the cycle time with which the input value is updated.

Application

You can use the PULSEGEN instruction to configure two- or three-step PID controllers with pulse width modulation. The function is normally used in conjunction with the continuous controller CONT_C.

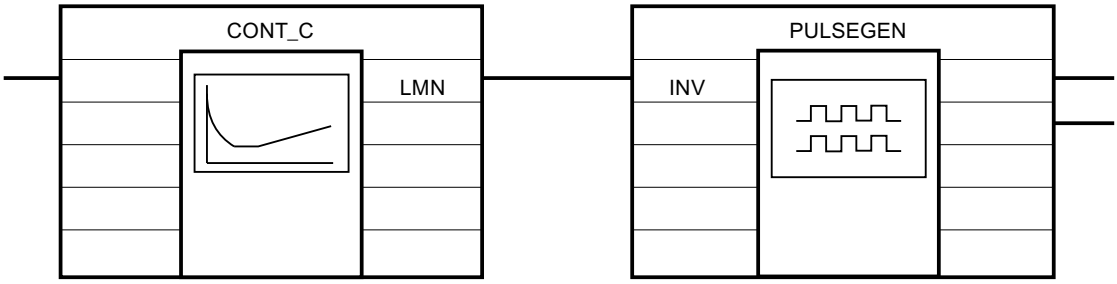

Call

The PULSEGEN instruction has an initialization routine that is run through when input parameter COM_RST = TRUE is set. All the signal outputs are set to zero. COM_RST = FALSE has to be set after the initialization routine has been completed.

The calculation of the values in the control blocks is only correct if the block is called at regular intervals. You should therefore call the control blocks in a cyclic interrupt OB (OB 30 to OB 38). Enter the sampling time in the CYCLE parameter.

Responses in the event of an error

The error message word RET_VAL is not evaluated by the block.

10.4.3.2 Mode of operation PULSEGEN

Impulse width modulation

The duration of a pulse per period duration is proportional to the input variable. The cycle assigned via PER_TM is not identical to the processing cycle of the PULSEGEN instruction. Rather, a PER_TM cycle is made up of several processing cycles of the PULSEGEN instruction, whereby the number of PULSEGEN calls per PER_TM cycle determines the accuracy of the pulse width.

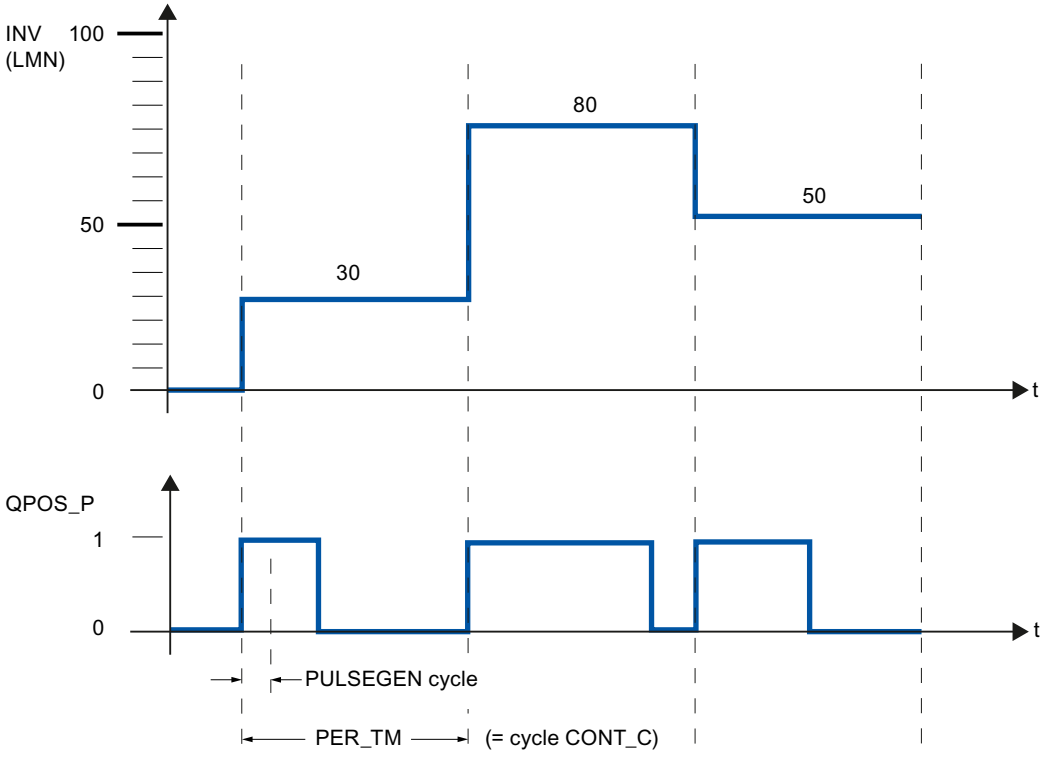

An input variable of 30% and 10 PULSEGEN calls per PER_TM mean the following:

- "One" at the QPOS_P output for the first three calls of PULSEGEN (30% of 10 calls)
- "Zero" at the QPOS_P output for seven further calls of PULSEGEN (70% of 10 calls)

Block diagram

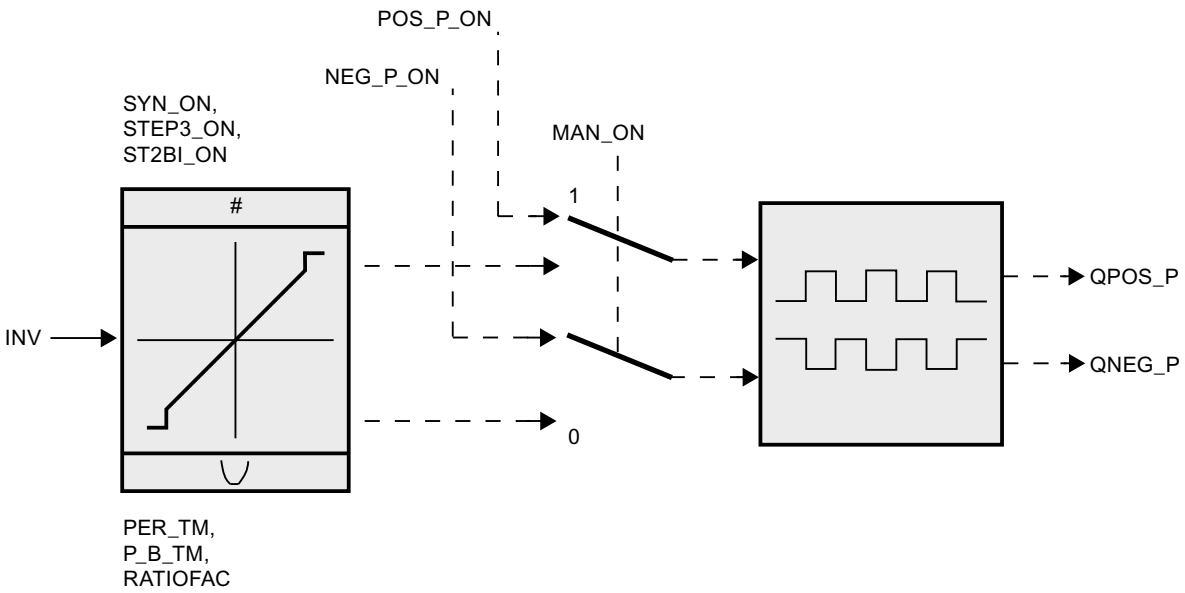

Accuracy of the manipulated value

With a "Sampling ratio" of 1:10 (CONT_C calls to PULSEGEN calls) the accuracy of the manipulated value in this example is restricted to 10%, in other words, set input values INV can only be simulated by a pulse duration at the QPOS_P output in steps of 10 %.

The accuracy is increased as the number of PULSEGEN calls per CONT_C call is increased.

If PULSEGEN is called, for example, 100 times more often than CONT_C, a resolution of 1 % of the manipulated value range is achieved.

NOTE

The reduction ratio of the call frequency must be programmed by the user.

Automatic synchronization

It is possible to automatically synchronize the pulse output with the instruction that updates the input variable INV (e.g. CONT_C). This ensures that a change in the input variable is output as quickly as possible as a pulse.

The pulse shaper evaluates the input value INV at intervals corresponding to the period duration PER_TM and converts the value into a pulse signal of corresponding length.

Since, however, INV is usually calculated in a slower cyclic interrupt class, the pulse shaper should start the conversion of the discrete value into a pulse signal as soon as possible after the updating of INV.

To allow this, the block can synchronize the start of the period using the following procedure:

If INV changes and if the block call is not in the first or last two call cycles of a period, a synchronization is performed. The pulse duration is recalculated and in the next cycle is output with a new period.

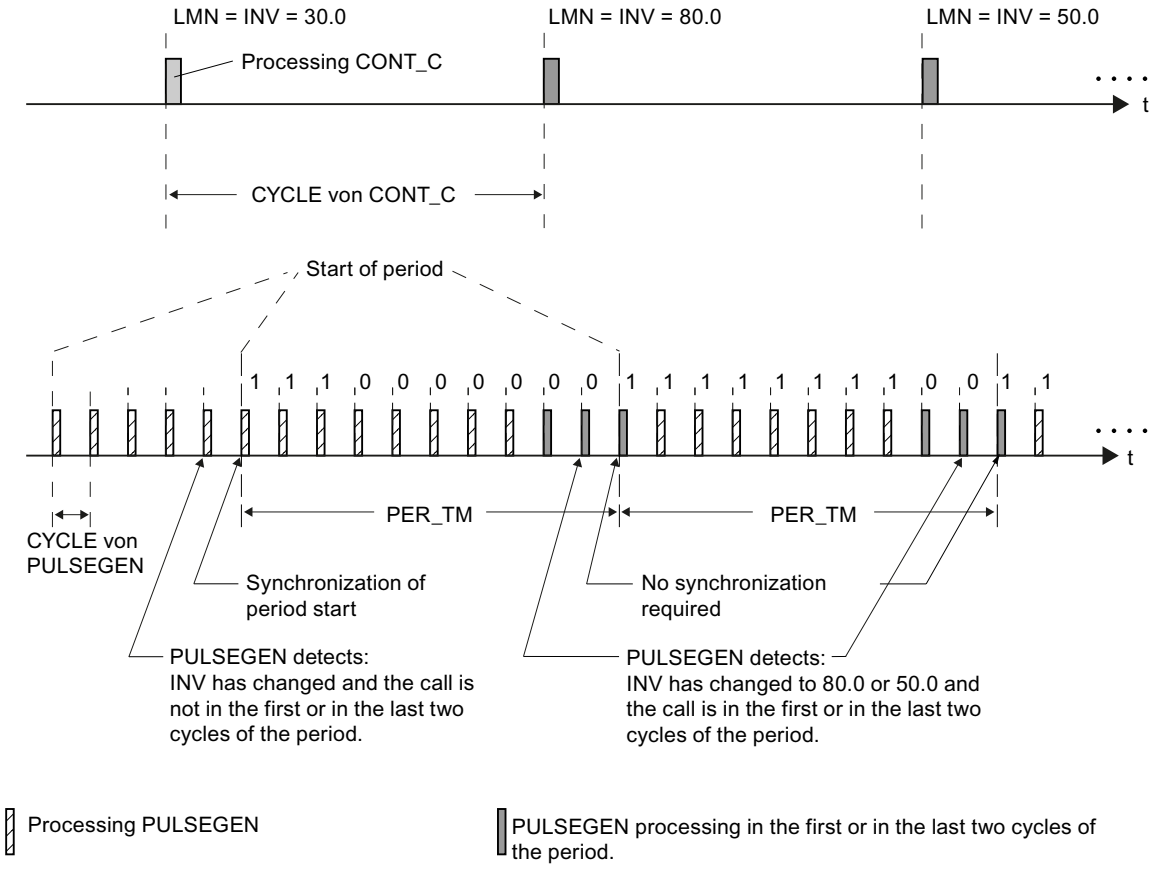

The automatic synchronization is switched off, if SYN_ON = FALSE.

NOTE

The start of a new period and subsequent synchronization usually leads to a certain imprecision when the old value of INV (i.e. of LMN) is mapped to the pulse signal.

10.4.3.3 Mode of operation PULSEGEN

Modes

Depending on the parameters assigned to the pulse shaper, PID controllers with a three-step output or with a bipolar or unipolar two-step output can be configured. The following table illustrates the setting of the switch combinations for the possible modes.

Mode	MAN_ON	STEP3_ON	ST2BI_ON
Three-step control	FALSE	TRUE	Any
Two-step control with bi-polar Manipulating range (-100 % to 100 %)	FALSE	FALSE	TRUE
Two-step control with unipolar Manipulating range (0 % to 100 %)	FALSE	FALSE	FALSE
Manual mode	TRUE	Any	Any

Manual mode in two/three-step control

In the manual mode (MAN_ON = TRUE), the binary outputs of the three-step or two-step controller can be set using the signals POS_P_ON and NEG_P_ON regardless of INV.

Control	POS_P_ON	NEG_P_ON	QPOS_P	QNEG_P
Three-step control	FALSE	FALSE	FALSE	FALSE
	TRUE	FALSE	TRUE	FALSE
	FALSE	TRUE	FALSE	TRUE
	TRUE	TRUE	FALSE	FALSE
Two-step control	FALSE	Any	FALSE	TRUE
	TRUE	Any	TRUE	FALSE

10.4.3.4 Three-step control

Three-step control

In "Three-step control" mode, it is possible to generate three statuses of the actuating signal. For this, the status values of the binary output signals QPOS_P and QNEG_P are assigned to the respective operating statuses of the actuator. The table shows the example of a temperature control:

Output signals	Heat	Off	Cool
QPOS_P	TRUE	FALSE	FALSE
QNEG_P	FALSE	FALSE	TRUE

The pulse duration is calculated from the input variable via a characteristic curve. The form of the characteristic curve is defined by the minimum pulse duration or minimum interval and the ratio factor. The normal value for the ratio factor is 1.

The "doglegs" in the curves are caused by the minimum pulse duration or minimum interval.

Minimum pulse duration or minimum interval

A correctly assigned minimum pulse duration or minimum interval P_B_TM can prevent short on/off times, which reduce the working life of switching elements and actuators. Small absolute values of input variable LMN that would otherwise generate a pulse duration shorter than P_B_TM are suppressed. Large input values that would generate a pulse duration longer than PER_TM - P_B_TM are set to 100% or -100%.

The duration of positive or negative pulses is calculated by multiplying the input variable (in %) by the period duration:

Pulse duration = INV / 100 * PER_TM

The following figure shows a symmetrical characteristic curve of the three-step controller (ratio factor = 1).

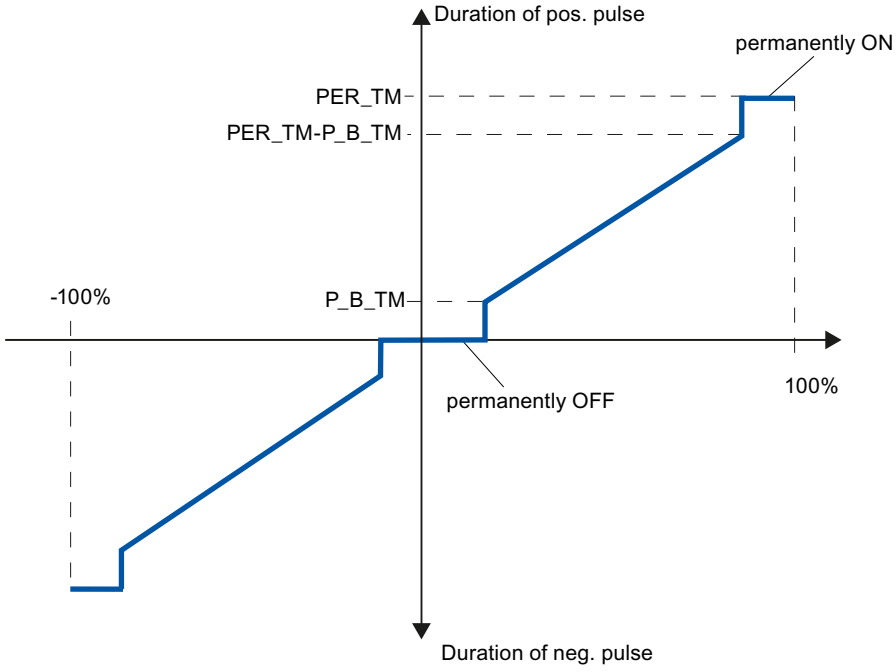

Asymmetrical three-step control

Using the ratio factor RATIOFAC, the ratio of the duration of positive to negative pulses can be changed. In a thermal process, for example, this would allow different system time constants for heating and cooling.

Ratio factor < 1

The pulse duration at the negative pulse output, calculated by multiplying the input variable by the period duration, is multiplied by the ratio factor.

Positive pulse duration = INV /100 * PER_TM

Negative pulse duration = INV / 100 * PER_TM * RATIOFAC

The following figure shows the asymmetrical characteristic curve of the three-step controller (ratio factor = 0.5):

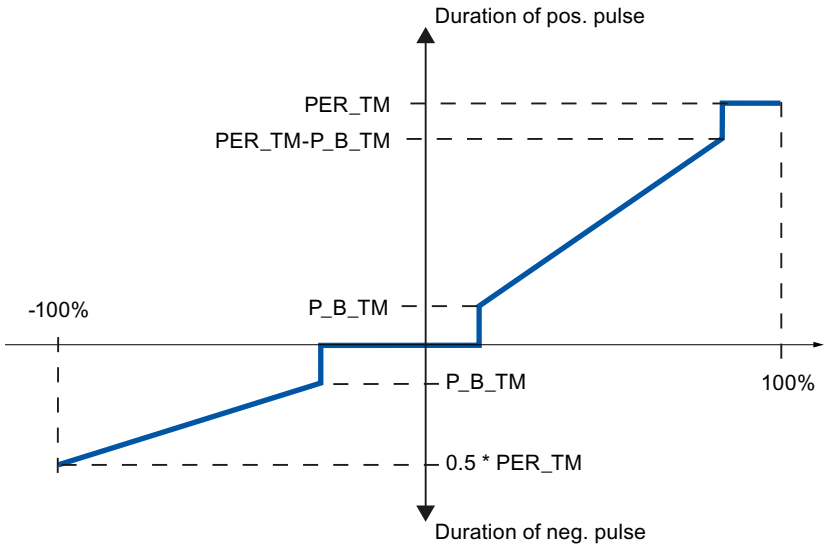

Ratio factor > 1

The pulse duration at the positive pulse output, calculated by multiplying the input variable by the period duration, is divided by the ratio factor.

Positive pulse duration = INV / 100 * PER_TM / RATIOFAC

Negative pulse duration = INV / 100 * PER_TM

10.4.3.5 Two-step control

In two-step control, only the positive pulse output QPOS_P of PULSEGEN is connected to the on/off actuator. Depending on the manipulated value range used, the two-step controller has a bipolar or a unipolar manipulated value range.

Two-step control with bipolar manipulated variable range (-100% to 100%)

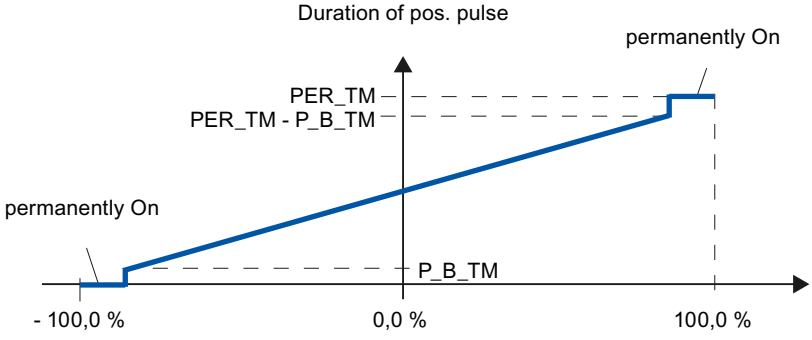

Two-step control with unipolar manipulated variable range (0% to 100%)

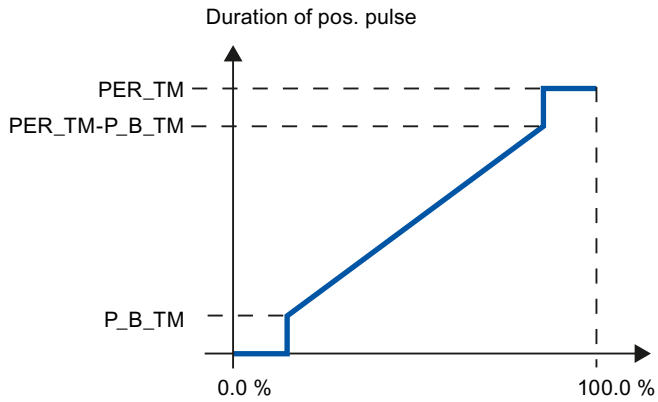

The negated output signal is available at QNEG_P if the connection of the two-step controller in the control loop requires a logically inverted binary signal for the actuating pulses.

Pulse	Actuator On	Actuator Off
QPOS_P	TRUE	FALSE
QNEG_P	FALSE	TRUE

10.4.3.6 Input parameters PULSEGEN

The values of the input parameters are not limited in the block. There is no parameter check.

Table 10-17

Parameters	Data type	Default	Description
INV	REAL	0.0	At the input parameter "Input variable" an analog manipulated variable is connected. Values from -100 to 100 % are permitted.
PER_TM	TIME	T#1s	At the parameter "Period duration" the constant period duration of the pulse width modulation is entered. This corresponds to the sampling time of the controller. The ratio between the sampling time of the pulse shaper and the sampling time of the controller determines the accuracy of the pulse width modulation. PER_TM >=20*CYCLE
P_B_TM	TIME	T#50 ms	You can assign a minimum pulse/break time at the parameter "Minimum pulse/break time". P_B_TM >= CYCLE
RATIOFAC	REAL	1.0	Using the "Ratio factor" input parameter the ratio of the duration of positive to negative pulses can be changed. In a thermal process, this would, for example, allow different time constants for heating and cooling to be compensated (for example, in a process with electrical heating and water cooling). Values from 0.1 to 10.0 are permitted.
STEP3_ON	BOOL	TRUE	At the input parameter "Enable three-step control" the appropriate mode is activated. In three-step control both output signals are active.
ST2BI_ON	BOOL	FALSE	At the input parameter "Enable two-step control for bipolar manipulated value range" you can select from the modes "Two-step control for bipolar manipulated value range" and "Two-step control for unipolar manipulated value range". STEP3_ON = FALSE is required.

Parameters	Data type	Default	Description
MAN_ON	BOOL	FALSE	Setting the input parameter "Enable manual mode" allows the output signals to be set manually.
POS_P_ON	BOOL	FALSE	For manual mode three-step control, the output signal QPOS_P can be operated on the input parameter "Positive pulse on". In manual mode with two-step control, QNEG_P is always set inversely to QPOS_P.
NEG_P_ON	BOOL	FALSE	For manual mode three-step control, the output signal QNEG_P can be operated on the input parameter "Negative pulse on". In manual mode with two-step control, QNEG_P is always set inversely to QPOS_P.
SYN_ON	BOOL	TRUE	By setting the input parameter "Enable synchronization", it is possible to synchronize the pulse output automatically with the block that updates the input variable INV. This ensures that a change in the input variable is output as quickly as possible as a pulse.
COM_RST	BOOL	FALSE	The block has an initialization routine that is processed when the input "Restart" is set.
CYCLE	TIME	T#10ms	The time between block calls must be constant. The "Sampling time" input specifies the time between block calls. CYCLE >= 1ms

10.4.3.7 Output parameter PULSEGEN

Table 10-18

Parameters	Data type	Default	Description
QPOS_P	BOOL	FALSE	The output parameter "Output signal positive pulse" is set if a pulse will be output. In three-step control, this is always the positive pulse. In two-step control, the QNEG_P is always set inversely to QPOS_P.
QNEG_P	BOOL	FALSE	The output parameter "Output signal negative pulse" is set if a pulse will be output. In three-step control, this is always the negative pulse. In two-step control, QNEG_P is always set inversely to QPOS_P.

10.4.4 TCONT_CP

10.4.4.1 Description TCONT_CP

The instruction TCONT_CP is used to control temperature processes with continuous or pulsed control signals. The controller functionality is based on the PID control algorithm with additional functions for temperature processes. To improve the control response with temperature processes, the block includes a control zone and reduction of the proportional component if there is a setpoint step change.

The instruction can set the PI/PID parameters itself using the controller optimization function.

Application

The controller controls one actuator; in other words, with one controller you can either heat or cool but not both. If you use the block for cooling, GAIN must be assigned a negative

value. This inversion of the controller means that if the temperature rises, for example, the manipulated variable LMN and with it the cooling action is increased.

Call

The instruction TCONT_CP must be called with a constant bus cycle time. To achieve this, use a cyclic interrupt priority class (for example, OB35 for an S7-300).

The TCONT_CP instruction has an initialization routine that is run through when input parameter COM_RST = TRUE is set. During initialization, the integral action is set to the initialization value I_ITVAL. All the signal outputs are set to zero. Following execution of the initialization routine, the block sets COM_RST back to FALSE. If you require initialization when the CPU restarts, call the block in OB100 with COM_RST = TRUE.

See also

Operating principle of the pulse generator (Page 407)
Block diagram TCONT_CP (Page 410)

10.4.4.2 Mode of operation TCONT_CP

Setpoint branch

The setpoint is entered at input SP_INT in floating-point format as a physical value or percentage. The setpoint and process value used to form the control deviation must have the same unit.

Process value options (PVPER_ON)

Depending on PVPER_ON, the process value can be read in, in the I/O or floating-point format.

PVPER_ON	Process Value Input
TRUE	The process value is read in via the analog I/Os (PIW xxx) at input PV_PER.
FALSE	The process value is acquired in floating-point format at input PV_IN.

Process value format conversion CRP_IN (PER_MODE)

The CRP_IN function converts the I/O value PV_PER to floating-point format depending on the PER_MODE switch according to the following rules:

PER_MODE	Output of CRP_IN	Analog Input Type	Unit
0	PV_PER * 0.1	Thermoelements; PT100/NI100; standard	°C;°F
1	PV_PER * 0.01	PT100/NI100; climate;	°C;°F
2	PV_PER * 100/27648	Voltage/current	%

Process value scaling PV_NORM (PF_FAC, PV_OFFS)

The PV_NORM function calculates the output of CRP_IN according to the following rule:
"Output of PV_NORM" = "Output of CRP_IN)" * PV_FAC + PV_OFFS
It can be used for the following purposes:

- Process value adjustment with PV_FAC as process value factor and PV_OFFS as process value offset.
- Scaling of temperature to percentage
  You want to enter the setpoint as a percentage and must now convert the measured temperature value to a percentage.
- Scaling of percentage to temperature
  You want to enter the setpoint in the physical temperature unit and must now convert the measured voltage/current value to a temperature.

Calculation of the parameters:

- PV_FAC = range of PV_NORM/range of CRP_IN;
- PV_OFFS = LL (PV_NORM) - PV_FAC * LL(CRP_IN);
  where LL: Low limit

The scaling is switched off with the default values (PV_FAC = 1.0 and PV_OFFS = 0.0). The effective process value is output at the PV output.

NOTE

With pulse control, the process value must be transferred to the block in the fast pulse call (reason: mean value filtering). Otherwise, the control quality can deteriorate.

Example of Process Value Scaling

If you want to enter the setpoint as a percentage, and you have a temperature range of -20 to 85 °C applied to , CRP_IN you must normalize the temperature range as a percentage.
The diagram below shows an example of adapting the temperature range -20 to 85 °C to an internal scale of 0 to 100 %:

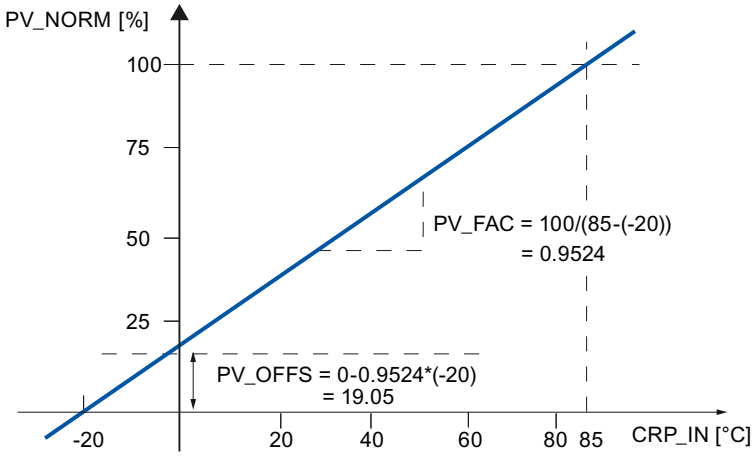

Forming the control deviation

The difference between the setpoint and process value is the control deviation before the dead band.
The setpoint and process value must exist in the same unit.

Dead band (DEADB_W)

To suppress a minor sustained oscillation due to the manipulated variable quantization (for example, in pulse width modulation with PULSEGEN) a dead band is applied to the (DEADBAND) control deviation. With DEADB_W = 0.0, the dead band is disabled. The effective control deviation is indicated by the ER parameter.

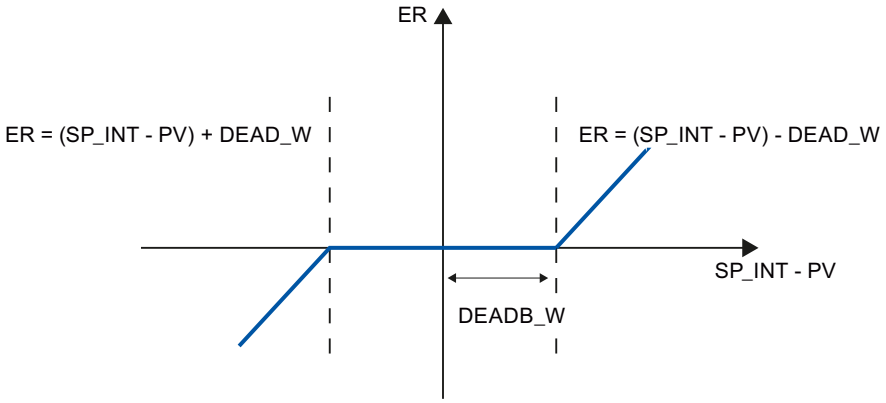

PID Algorithm

The following figure shows the block diagram of the PID algorithm.

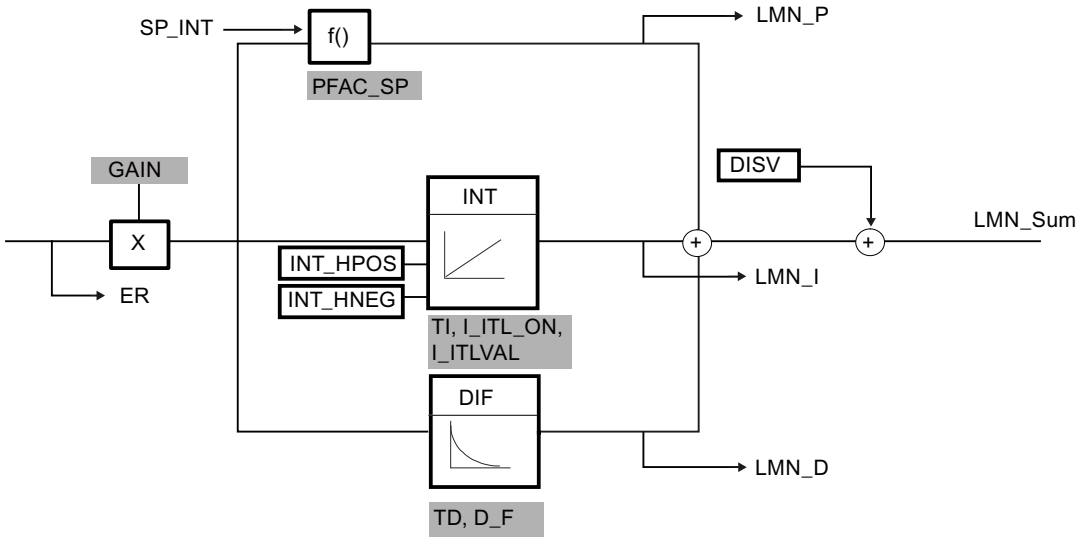

PID Algorithm (GAIN, TI, TD, D_F)

The PID algorithm operates as a position algorithm. The proportional, integral (INT), and derivative (DIF) actions are connected in parallel and can be activated or deactivated individually. This allows P, PI, PD, and PID controllers to be configured.
Controller tuning supports PI and PID controllers. Controller inversion is implemented using a negative GAIN (cooling controller).
If you set TI and TD to 0.0, you obtain a pure P controller at the operating point.
The step response in the time range is:

$$LMN_Sum(t) = GAIN \cdot ER(0) \cdot \left(1 + \frac{1}{TI} \cdot t + D_F \cdot e^{\frac{-t}{TD\ /\ D_F}} \right)$$

Where:
LMN_Sum(t) the manipulated variable in the controller's automatic mode
ER (0) is the step height of the normalized control deviation
GAIN is the controller gain
TI is the integration time
TD is the derivative action time
D_F is the derivative factor

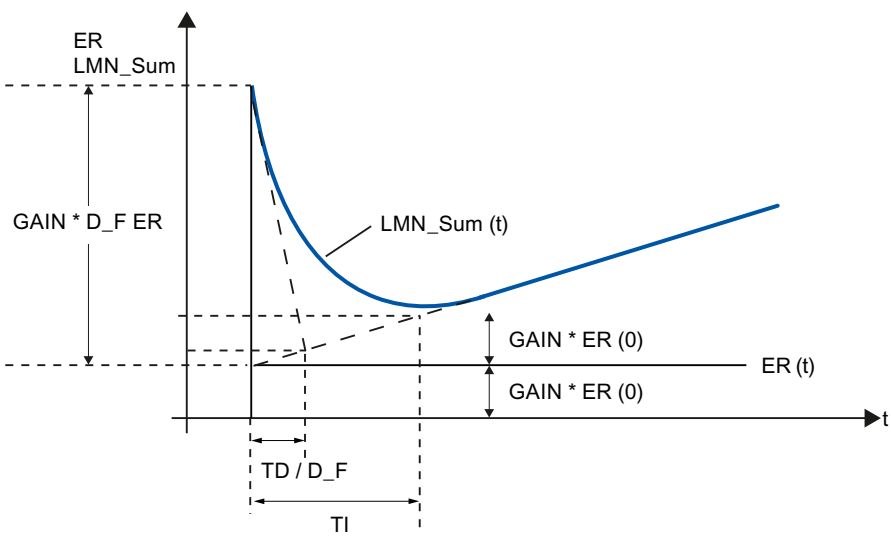

Integral action (TI, I_ITL_ON, I_ITLVAL)

In manual mode, it is corrected as follows: LMN_I = LMN - LMN_P - DISV.
If the output value is limited, the integral action is halted. If the control deviation moves the integral action back in the direction of the output range, the integral action is enabled again.
The integral action is also modified by the following measures:

- The integral action of the controller is deactivated by TI = 0.0
- Weakening of the proportional action when setpoint changes occur
- Control zone
- The output value limits can be modified online

Weakening of the proportional action when setpoint changes occur (PFAC_SP)

To prevent overshoot, you can weaken the proportional action using the parameter "Proportional factor for setpoint changes" (PFAC_SP). Using PFAC_SP, you can select continuously between 0.0 and 1.0 to decide the effect of the proportional action when the setpoint changes:

- PFAC_SP = 1.0: Proportional action has full effect if the setpoint changes
- PFAC_SP = 0.0: Proportional action has no effect if the setpoint changes

The weakening of the proportional action is achieved by compensating the integral action.

Derivative action (TD, D_F)

- The derivative action of the controller is deactivated by TD = 0.0
- If the derivative action is active, the following relationship should apply:
  TD = 0.5 * CYCLE * D_F

Parameter Settings of a P or PD Controller with Operating Point

In the user interface, deactivate the integral action (TI = 0.0) and possibly also the derivative action (TD = 0.0). Then make the following parameter settings:

- I_ITL_ON = TRUE
- I_ITLVAL = operating point;

Feedforward control (DISV)

A disturbance variable can be added at the DISV input.

Calculating the output value

The diagram below is the block diagram of the output value calculation:

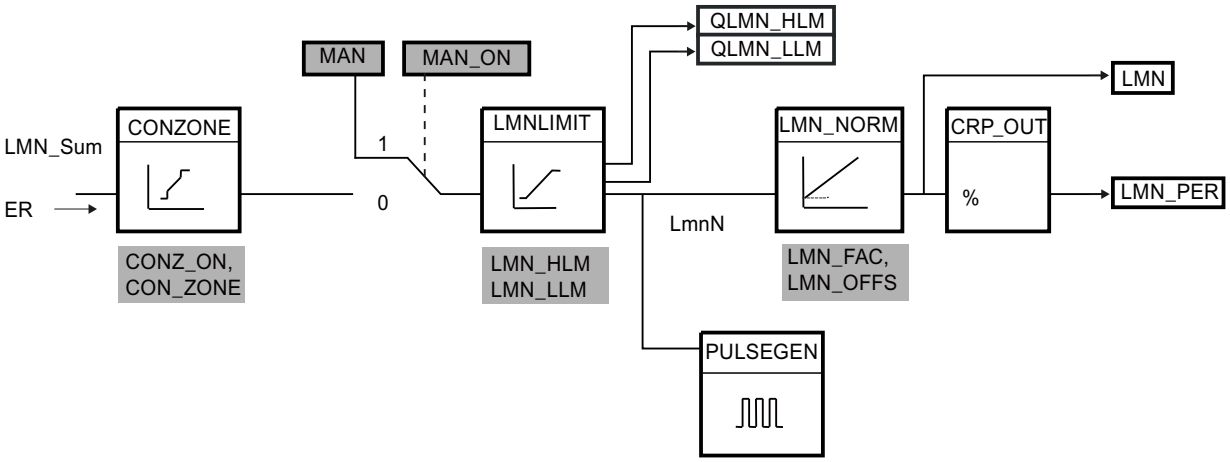

Parameter configuration interface

Instruction call interface

Parameter configuration interface, call interface

Control zone (CONZ_ON, CON_ZONE)

If CONZ_ON = TRUE, the controller operates with a control zone. This means that the controller operates according to the following algorithm:

- If process value PV exceeds the setpoint SP_INT by more than CON_ZONE, the value LMN_LLM is output as the manipulated variable.
- If the process value PV falls below setpoint SP_INT by more than CON_ZONE, LMN_HLM is output.
- If the process value PV is within the control zone (CON_ZONE), the output value takes its value from the PID algorithm LMN_Sum.

NOTE

Changing the manipulated variable from LMN_LLM or LMN_HLM to LMN_Sum occurs under compliance of a hysteresis of 20% of the control zone.

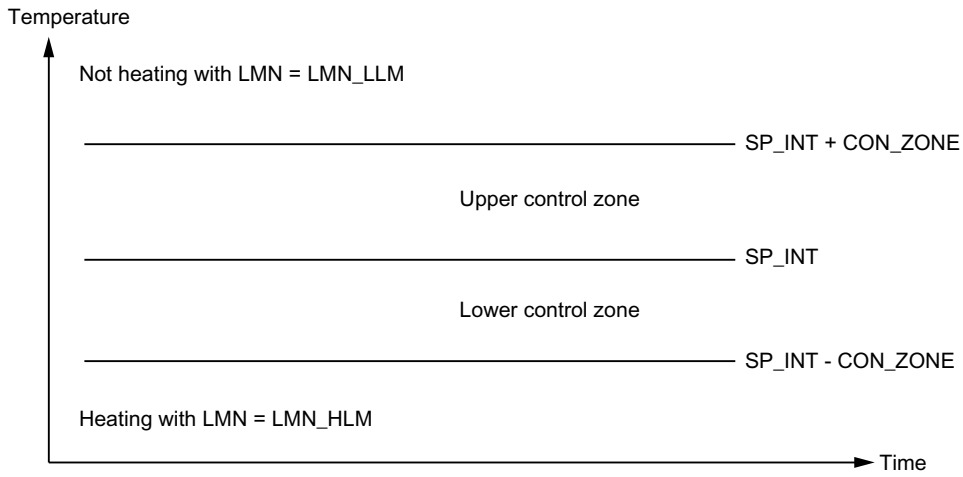

NOTE

Before enabling the control zone manually, make sure that the control zone band is not too narrow. If the control zone band is too small, oscillations will occur in the manipulated variable and process value.

Advantage of the Control Zone

When the process value enters the control zone, the D-action causes an extremely fast reduction of the manipulated variable. This means that the control zone is only useful when the D-action is activated. Without a control zone, only the reducing P-action would essentially reduce the manipulated variable. The control zone leads to faster settling without overshoot or undershoot if the output minimum or maximum manipulated variable is a long way from the manipulated variable required for the new operating point.

Manual value processing (MAN_ON, MAN)

You can change over between manual and automatic mode. In manual mode, the manipulated variable is corrected to a manually selected value.

The integral action (INT) is set internally to LMN - LMN_P - DISV and the derivative action (DIF) is set to 0 and synchronized internally. Changeover to automatic mode is therefore bumpless.

NOTE

The MAN_ON parameter has no effect during tuning.

Output value limit LMNLIMIT (LMN_HLM, LMN_LLM)

The LMNLIMIT function is used to limit the output value to the limits LMN_HLM and LMN_LLM. If these limits are reached, this is indicated by the message bits QLMN_HLM and QLMN_LLM.

If the output value is limited, the integral action is halted. If the control deviation moves the integral action back in the direction of the output range, the integral action is enabled again.

Changing the Manipulated Value Limits Online

If the range of the output value is reduced and the new unlimited value of the output value is outside the limits, the integral action and therefore the output value shifts.

The output value is reduced by the same amount as the output value limit changed. If the output value was unlimited prior to the change, it is set exactly to the new limit (described here for the high output value limit).

Scaling of output value LMN_NORM (LMN_FAC, LMN_OFFS)

The LMN_NORM function normalizes the output value according to the following rule:

LMN = LmnN * LMN_FAC + LMN_OFFS

It can be used for the following purposes:

- Output value scaling with LMN_FAC as output value factor and LMN_OFFS as output value offset.

The output value is also available in I/O format. The CRP_OUT function converts the LMN floating-point value to an I/O value according to the following rule:

LMN_PER = LMN * 27648/100

The scaling is switched off with the default values (LMN_FAC = 1.0 and LMN_OFFS = 0.0). The effective output value is sent to output LMN.

Save controller parameters SAVE_PAR

If you classify the current controller parameters as utilizable, you can save these before a manual change in structure parameters provided specifically for this in the instance DB of the instruction TCONT_CP. If you optimize the controller, the saved parameters are overwritten by the values that were valid prior to tuning.

PFAC_SP, GAIN, TI, TD, D_F, CONZ_ON and CONZONE are written to the structure PAR_SAVE.

Reloading Saved Controller Parameters UNDO_PAR

The last controller parameter settings you saved can be activated for the controller again using this function (in manual mode only).

Change between PI and PID parameters LOAD_PID (PID_ON)

Following tuning, the PI and PID parameters are stored in the PI_CON and PID_CON structures. Depending on PID_ON, you can use LOAD_PID in manual mode to write the PI or PID parameters to the effective controller parameters.

PID parameters PID_ON = TRUE	PI parameters PID_ON = FALSE
• GAIN = PID_CON.GAIN • TI = PID_CON.TI • TD = PID_CON.TD	• GAIN = PI_CON.GAIN • TI = PI_CON.TI

NOTE

The controller parameters are only written back to the controller with UNDO_PAR or LOAD_PID, if the controller gain is not equal to 0:

With LOAD_PID, the parameters are only copied if the corresponding GAIN <> 0 is (either the PI or PID parameters). This strategy takes into account the situation that no tuning has yet been made or that PID parameters are missing. If PID_ON = TRUE and PID.GAIN = FALSE, PID_ON is set to FALSE and the PI parameter is copied.

- D_F, PFAC_SP are preset by the the tuning. These can then be modified by the user. LOAD_PID does not change these parameters.
- With LOAD_PID, the control zone is always recalculated (CON_ZONE = 250/GAIN), even if CONZ_ON = FALSE.

See also

Operating principle of the pulse generator (Page 407)

Block diagram TCONT_CP (Page 410)

10.4.4.3 Operating principle of the pulse generator

The function PULSEGEN transforms the analog manipulated value LmnN through pulse width module into an impulse sequence with the period duration PER_TM. PULSEGEN is switched on with PULSE_ON = TRUE and is processed in the cycle CYCLE_P.

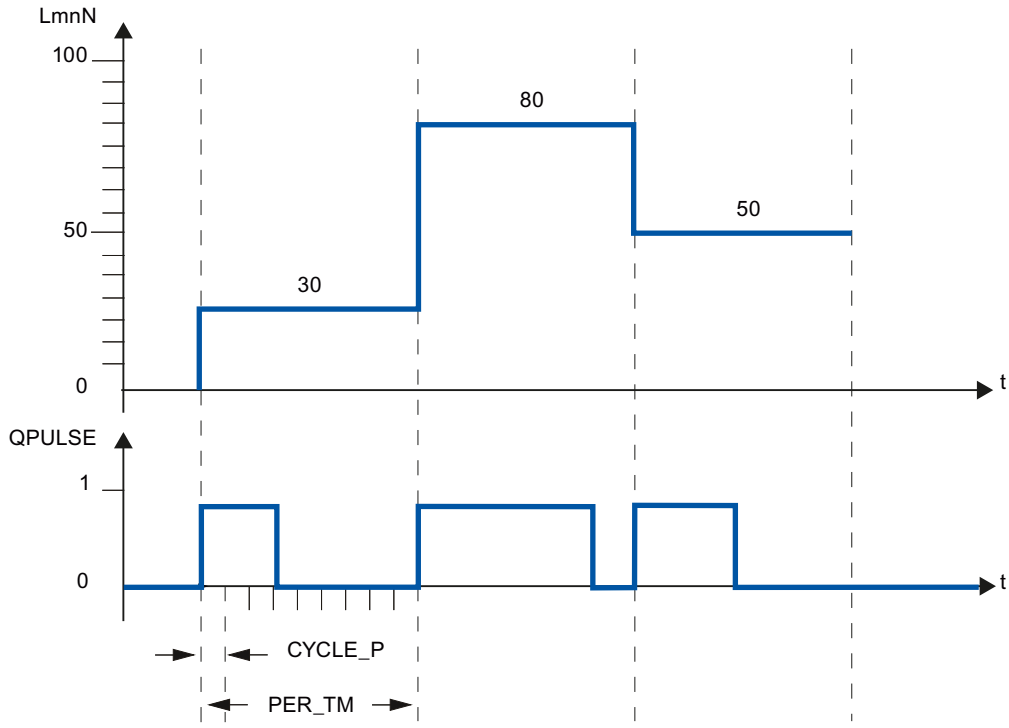

A manipulated value of LmnN = 30% and 10 PULSEGEN calls per PER_TM therefore means:

- TRUE at output QPULSE for the first three PULSEGEN calls
  (30% of 10 calls)
- FALSE at output QPULSE for seven further PULSEGEN calls
  (70% of 10 calls)

The duration of a pulse per pulse repetition period is proportional to the manipulated variable and is calculated as follows:

Pulse duration = PER_TM * LmnN /100

By suppressing the minimum pulse or break time, the characteristic curve of the conversion develops "knees" in the start and end regions.

The following diagram illustrates two-step control with a unipolar manipulated variable range (0% to 100%):

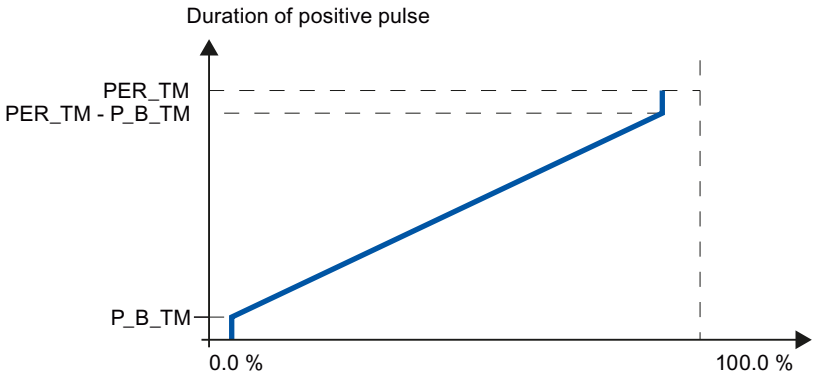

Minimum pulse or minimum break time (P_B_TM)

Short on or off times hinder the lifespan of actuators and fine controlling units. These can be avoided by setting a minimum pulse duration or minimum break time P_B_TM.

Small absolute values at the input variable LmnN that could otherwise generate a pulse duration shorter than P_B_TM are suppressed.

Large input values that would generate a pulse duration greater than PER_TM - P_B_TM are set to 100%. This reduces the dynamics of pulse generation.

Set values of P_B_TM ≤ 0,1 * PER_TM are recommended for the minimum pulse duration and the minimum break duration.

The "knees" in the curves in the diagram above are caused by the minimum pulse or minimum break times.

The following schematic illustrates the switching response of the pulse output:

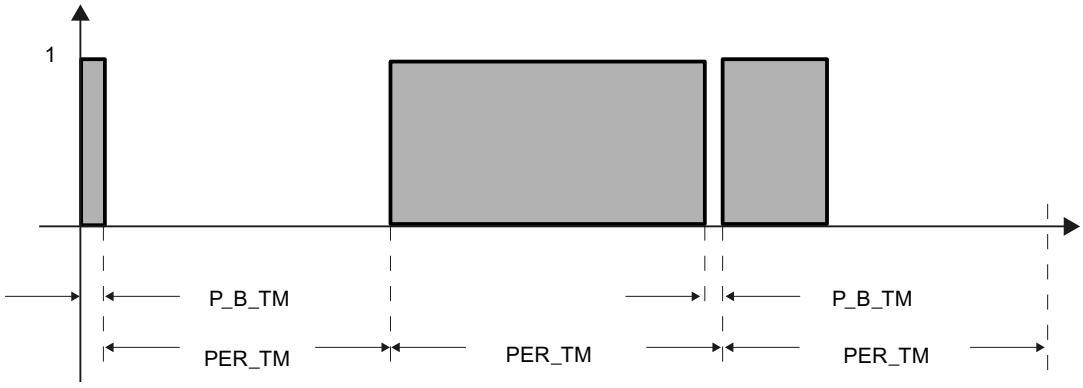

Accuracy of pulse generation

The smaller the pulse generator CYCLE_P is compared to the period duration PER_TM, the more precise the pulse width modulation is. To achieve sufficiently accurate control, the following relationship should apply:

CYCLE_P ≤ PER_TM/50

The manipulated value is transformed with a resolution of ≤ 2 % into an impulse.

NOTE

When calling the controller in the pulse shaper cycle, you must note the following:

Calling the controller in the pulse shaper cycle will cause the process value to be averaged. As a result, at output PV, different values may be at input PV_IN and PV_PER. If you want to track the setpoint value, you must save the process value at input parameter PV_IN at the call times for complete controller processing (QC_ACT = TRUE). For pulse shaper calls occurring between these times, you must supply the input parameters PV_IN and SP_INT with the saved process value.

See also

Description TCONT_CP (Page 398)
Mode of operation TCONT_CP (Page 399)
Block diagram TCONT_CP (Page 410)
Input parameters TCONT_CP (Page 412)
Output parameters TCONT_CP (Page 412)
In/out parameters TCONT_CP (Page 413)
Static variables TCONT_CP (Page 414)
Parameter STATUS_H (Page 418)
Parameters STATUS_D (Page 419)

10.4.4.4 Block diagram TCONT_CP

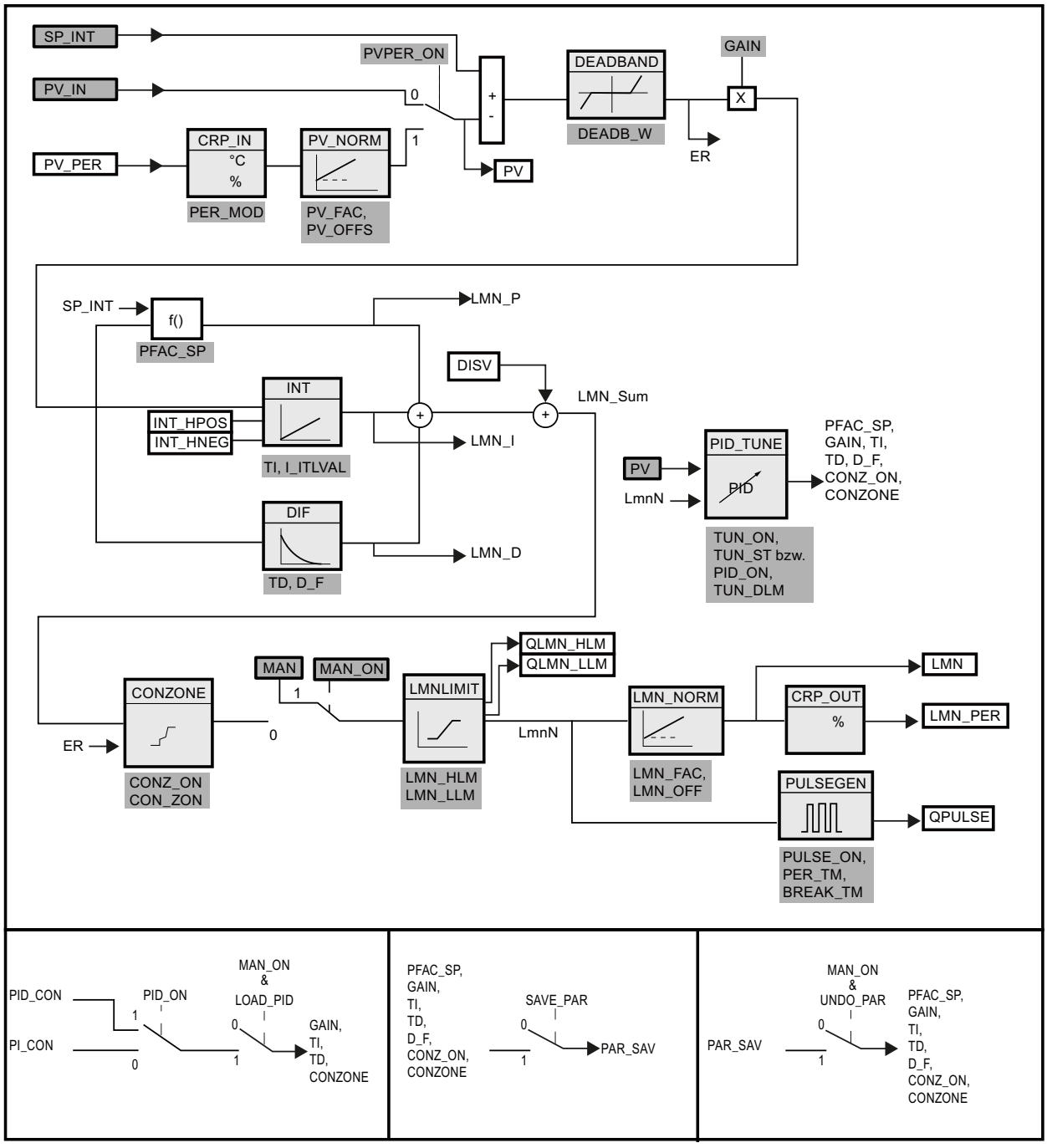

See also

Description TCONT_CP (Page 398)
Mode of operation TCONT_CP (Page 399)
Operating principle of the pulse generator (Page 407)
Input parameters TCONT_CP (Page 412)

Output parameters TCONT_CP (Page 412)
In/out parameters TCONT_CP (Page 413)
Static variables TCONT_CP (Page 414)
Parameter STATUS_H (Page 418)
Parameters STATUS_D (Page 419)

10.4.4.5 Input parameters TCONT_CP

The names of the following parameters apply both to the data block and to access via the Openness API.

Table 10-19

Parameters	Address	Data type	Default	Description
PV_IN	0.0	REAL	0.0	At the "Process value input" you can assign parameters to a commissioning value or you can interconnect an external process value in floating-point format. The valid values depend on the sensors used.
PV_PER	4.0	INT	0	The process value in I/O format is interconnected with the controller at the "Process value I/O" input.
DISV	6.0	REAL	0.0	For feedforward control, the disturbance variable is interconnected to the "Disturbance variable" input.
INT_HPOS	10.0	BOOL	FALSE	The output of the integral action can be held in the positive direction. For this, the input INT_HPOS must be set to TRUE. In a cascade control, INT_HPOS of the primary controller is connected to QLMN_HLM of the secondary controller.
INT_HNEG	10.1	BOOL	FALSE	The output of the integral action can be held in the negative direction. For this, the input INT_HNEG must be set to TRUE. In a cascade control, INT_HNEG of the primary controller is connected to QLMN_LLM of the secondary controller.
SELECT	12.0	INT	0	If the pulse shaper is on, there are several ways of calling the PID algorithm and pulse shaper: • SELECT = 0: The controller is called in a fast cyclic interrupt priority class and the PID algorithm and pulse shaper are processed. • SELECT = 1: The controller is called in OB1 and only the PID algorithm is processed. • SELECT = 2: The controller is called in a fast cyclic interrupt priority class and only the pulse shaper is processed. • SELECT = 3: The controller is called a slow cyclic interrupt priority class and only the PID algorithm is processed.

See also

Operating principle of the pulse generator (Page 407)
Block diagram TCONT_CP (Page 410)

10.4.4.6 Output parameters TCONT_CP

The names of the following parameters apply both to the data block and to access via the Openness API.

Table 10-20

Parameter	Address	Data type	Default	Description
PV	14.0	REAL	0.0	The effective process value is output at the "Process value" output. The valid values depend on the sensors used.
LMN	18.0	REAL	0.0	The effective "Manipulated value" is output in floating point format at the "Manipulated value" output.
LMN_PER	22.0	INT	0	The manipulated value in I/O format is interconnected with the controller on the output "Manipulated value I/O".
QPULSE	24.0	BOOL	FALSE	The manipulated value is pulse-width-modulated at the QPULSE output.
QLMN_HLM	24.1	BOOL	FALSE	The manipulated value is always restricted to a high limit and low limit. The output QLMN_HLM signals that the high limit has been reached.
QLMN_LLM	24.2	BOOL	FALSE	The manipulated value is always restricted to a high limit and low limit. The output QLMN_LLM signals that the low limit has been reached.
QC_ACT	24.3	BOOL	TRUE	This parameter indicates whether continuous control component will be processed the next time the block is called (relevant only when SELECT has the value 0 or 1).

See also

Operating principle of the pulse generator (Page 407)
Block diagram TCONT_CP (Page 410)
Parameter STATUS_H (Page 418)
Parameters STATUS_D (Page 419)

10.4.4.7 In/out parameters TCONT_CP

The names of the following parameters apply both to the data block and to access via the Openness API.

Table 10-21

Parameters	Address	Data type	Default	Description
CYCLE	26.0	REAL	0.1 s	Sets the sampling time for the PID algorithm. In phase 1, the tuner calculates the sampling time and enters it in CYCLE. CYCLE > 0.001 s
CYCLE_P	30.0	REAL	0.02 s	At this input, you set the sampling time for the pulse shaper action. In phase 1, the TCONT_CP instruction calculates the sampling time and enters it in CYCLE_P. CYCLE_P > 0.001 s
SP_INT	34.0	REAL	0.0	The input "Internal setpoint" is used to specify a setpoint. The valid values depend on the sensors used.

Parameters	Addres-s	Data type	Default	Description
MAN	38.0	REAL	0.0	The "Manual value" input is used to set a manual value. In automatic mode, it tracks the manipulated value.
COM_RST	42.0	BOOL	FALSE	The block has an initialization routine that is processed when the COM_RST input is set.
MAN_ON	42.1	BOOL	TRUE	If the input "Enable manual mode" is set then the control loop is interrupted. The manual value MAN is set as manipulated value.

See also

Operating principle of the pulse generator (Page 407)
Block diagram TCONT_CP (Page 410)

10.4.4.8 Static variables TCONT_CP

The names of the following variables apply both to the data block and to access via the Openness API.

Table 10-22

Parameters	Address	Data type	Default	Description
DEADB_W	44.0	REAL	0.0	A deadband is applied to the control deviation. The "Deadband width" input determines the size of the deadband. The valid values depend on the sensors used.
I_ITLVAL	48.0	REAL	0.0	The output of the integrator can be set at the I_ITL_ON input. The initialization value is applied to the "Initialization value of the I-action" input. During a restart COM_RST = TRUE, the I-action is set to the initialization value. Values from -100 to 100 % are permitted.
LMN_HLM	52.0	REAL	100.0	The output value is always restricted to a high limit and low limit. The "Manipulated value high limit" input specifies the high limit. LMN_HLM > LMN_LLM
LMN_LLM	56.0	REAL	0.0	The output value is always restricted to a high limit and low limit. The "Manipulated value low limit" input specifies the low limit. LMN_LLM < LMN_HLM
PV_FAC	60.0	REAL	1.0	The "Process value factor" input is multiplied by the "Process value I/O". The input is used to scale the process value range.
PV_OFFS	64.0	REAL	0.0	The "Process value offset" input is added to the "Process value I/O". The input is used to scale the process value range.
LMN_FAC	68.0	REAL	1.0	The "Output value factor" input is multiplied with the output value. The input is used to scale the output value range.
LMN_OFFS	72.0	REAL	0.0	The "Output value offset" input is added to the output value. The input is used to scale the output value range.
PER_TM	76.0	REAL	1.0 s	The period duration of the pulse width modulation is entered at the PER_TM parameter. The relationship of the period duration to the sampling time of the pulse shaper determines the accuracy of the pulse width modulation. PER_TM ≥ CYCLE
P_B_TM	80.0	REAL	0.02 s	You can assign a minimum pulse or break time at the parameter "Minimum pulse/break time". P_B_TM is internally limited to > CYCLE_P.

Parameters	Address	Data type	Default	Description
TUN_DLMN	84.0	REAL	20.0	Process excitation for controller tuning results from a output value step change at TUN_DLMN. Values from -100 to 100 % are permitted.
PER_MODE	88.0	INT	0	You can use this switch to enter the type of I/O module. The process value at input PV_PER is then scaled as follows at the PV output. • PER_MODE = 0: Thermocouples; PT100/NI100; standard PV_PER * 0.1 Unit: C, °F • PER_MODE = 1: PT100/NI100; climate PV_PER * 0.01 Unit: C, °F • PER_MODE = 2: Current/voltage PV_PER * 100/27648 Unit: %
PVPER_ON	90.0	BOOL	FALSE	If the process value is to be read in from the I/Os, the PV_PER input must be interconnected with the I/Os and the "Enable process value I/Os" input must be set.
I_ITL_ON	90.1	BOOL	FALSE	The output of the integrator can be set at the I_ITLVAL input. The "Set I-action" input must be set for this.
PULSE_ON	90.2	BOOL	FALSE	If PULSE_ON = TRUE is set, the pulse shaper is activated.
TUN_KEEP	90.3	BOOL	FALSE	The mode changes to automatic only when TUN_KEEP changes to FALSE.
ER	92.0	REAL	0.0	The effective control deviation is output at the "Control deviation" output. The valid values depend on the sensors used.
LMN_P	96.0	REAL	0.0	The "P-action" output contains the proportional action of the manipulated tag.
LMN_I	100.0	REAL	0.0	The "integral action" output contains the integral action of the manipulated tag.
LMN_D	104.0	REAL	0.0	The "D-action" output contains the derivative action of the manipulated tag.
PHASE	108.0	INT	0	The current phase of controller tuning is indicated at the PHASE output. • PHASE = 0: No optimization mode; automatic or manual mode • PHASE = 1: Ready to start tuning; check parameters, wait for excitation, measure the sampling times • PHASE = 2: Actual tuning: Searching for point of inflection with constant output value. Entering the sampling time in instance DB. • PHASE = 3: Calculating the process parameters. Saving valid controller parameters prior to tuning. • PHASE = 4: Controller design • PHASE = 5: Following up the controller to the new manipulated variable • PHASE = 7: Validating the process type
STATUS_H	110.0	INT	0	STATUS_H indicates the diagnostic value via the search for the point of inflection during the heating process.
STATUS_D	112.0	INT	0	STATUS_D indicates the diagnostic value via the controller design during the heating process.
QTUN_RUN	114.0	BOOL	0	The tuning manipulated tag has been applied, tuning has started and is still in phase 2 (searching for point of inflection).
PI_CON	116.0	STRUCT		PI controller parameters
GAIN	+0.0	REAL	0.0	PI controller gain %/phys. Unit
TI	+4.0	REAL	0.0 s	PI integration time [s]

Parameters	Address	Data type	Default	Description
PID_CON	124.0	STRUCT		PID controller parameters
GAIN	+0.0	REAL	0.0	PID controller gain
TI	+4.0	REAL	0.0s	PID integration time [s]
TD	+8.0	REAL	0.0s	PID derivative action time [s]
PAR_SAVE	136.0	STRUCT		The PID parameters are saved in this structure.
PFAC_SP	+0.0	REAL	1.0	Proportional factor for setpoint changes Values from 0.0 to 1.0 are permitted.
GAIN	+4.0	REAL	0.0	Controller gain %/phys. Unit
TI	+8.0	REAL	40.0 s	Integration time [s]
TD	+12.0	REAL	10.0 s	Derivative action time (s)
D_F	+16.0	REAL	5.0	Derivative factor Values from 5.0 to 10.0 are permitted.
CON_ZONE	+20.0	REAL	100.0	Control zone band If the control deviation is greater than the control zone band, the high output value limit is output as output value. If the control deviation is less than the negative control zone band, the low output value limit is output as the output value. CON_ZONE ≥ 0.0
CONZ_ON	+24.0	BOOL	FALSE	Enable control zone
PFAC_SP	162.0	REAL	1.0	PFAC_SP specifies the effective P-action when there is a setpoint change. This is set between 0 and 1. • 1: P-action has full effect if the setpoint changes. • 0: P-action has no effect if the setpoint changes. Values from 0.0 to 1.0 are permitted.
GAIN	166.0	REAL	2.0	The "Proportional gain" input specifies controller amplification. The direction of control can be reversed by giving GAIN a negative sign. %/phys. Unit
TI	170.0	REAL	40.0 s	The "Integration time" (integral-action time) input defines the integrator's time response.
TD	174.0	REAL	10.0 s	The "Derivative-action time" (rate time) input decides the time response of the differentiator.
D_F	178.0	REAL	5.0	The derivative factor decides the lag of the D-action. D_F = derivative-action time/"Lag of the D-action" Values from 5.0 to 10.0 are permitted.
CON_ZONE	182.0	REAL	100.0	If the control deviation is greater than the control zone band, the high output value limit is output as output value. If the control deviation is less than the negative control zone band, the low output value limit is output as the output value. The valid values depend on the sensors used.
CONZ_ON	186.0	BOOL	FALSE	You can use CONZ_ON =TRUE to enable the control zone.
TUN_ON	186.1	BOOL	FALSE	If TUN_ON=TRUE, the output value is averaged until the output value excitation TUN_DLMN is enabled either by a setpoint step-change or by TUN_ST=TRUE.
TUN_ST	186.2	BOOL	FALSE	If the setpoint is to remain constant during controller tuning at the operating point, a output value step-change by the amount of TUN_DLMN is activated by TUN_ST=1.

Parameters	Address	Data type	Default	Description
UNDO_PAR	186.3	BOOL	FALSE	Loads the controller parametersPFAC_SP, GAIN, TI, TD, D_FCONZ_ON and CON_ZONE from the data structure PAR_SAVE (only in manual mode).
SAVE_PAR	186.4	BOOL	FALSE	Saves the controller parameters PFAC_SP, GAIN, TI, TD, D_F, CONZ_ON and CON_ZONE in the data structure PAR_SAVE.
LOAD_PID	186.5	BOOL	FALSE	Loads the controller parametersGAIN, TI,TD depending on PID_ON from the data structure PI_CON or PID_CON (only in manual mode)
PID_ON	186.6	BOOL	TRUE	At the PID_ON input, you can specify whether or not the tuned controller will operate as a PI or PID controller. • PID controller: PID_ON = TRUE • PI controller: PID_ON = FALSE With certain process types it is nevertheless possible that only a PI controller will be designed despite PID_ON = TRUE.
GAIN_P	188.0	REAL	0.0	Identified process gain. In the case of process type I, GAIN_P tends to be estimated too low.
TU	192.0	REAL	0.0	Identified time lag of the process. TU ≥ 3*CYCLE
TA	196.0	REAL	0.0	Identified recovery time of the process. In the case of process type I, TA tends to be estimated too low.
KIG	200.0	REAL	0.0	Maximum process value rise at manipulated tag excitation from 0 to 100 % [1/s] GAIN_P = 0.01 * KIG * TA
N_PTN	204.0	REAL	0.0	The parameter specifies the order of the process. "Non-integer values" are also possible. Values from 1.01 to 10.0 are permitted.
TM_LAG_P	208.0	REAL	0.0	Time constants of a PTN model (practical values only for N_PTN >= 2).
T_P_INF	212.0	REAL	0.0	Time from process excitation until the point of inflection.
P_INF	216.0	REAL	0.0	Process value change from process excitation until the point of inflection. The valid values depend on the sensors used.
LMN0	220.0	REAL	0.0	Output value at the start of tuning Detected in phase 1 (mean value). Values from 0 to 100 % are permitted.
PV0	224.0	REAL	0.0	Process value at the start of tuning
PVDT0	228.0	REAL	0.0	Process value slew rate at start of tuning [1/s] Sign adapted.
PVDT	232.0	REAL	0.0	Current process value slew rate [1/s] Sign adapted.
PVDT_MAX	236.0	REAL	0.0	Max. change in the process value per second [1/s] Maximum derivative of the process value at the point of inflection (sign adapted, always > 0); is used to calculate TU and KIG.
NOI_PVDT	240.0	REAL	0.0	Noise action in PVDT_MAX in % The higher the noise action, the less accurate (less aggressive) the control parameters.
NOISE_PV	244.0	REAL	0.0	Absolute noise in process value Difference between maximum and minimum process value in phase 1.

Parameters	Address	Data type	Default	Description
FIL_CYC	248.0	INT	1	Number of cycles of the mean value filter The process value is determined through FIL_CYC cycles. FIL_CYC is increased from 1 to a max. of 1024 if needed.
POI_CMAX	250.0	INT	2	Maximum number of cycles after point of inflection This time is used to find another (i.e. better) inflection point for measuring noise. The tuning is completed only after this time.
POI_CYCL	252.0	INT	0	Number of cycles after inflection point

See also

Operating principle of the pulse generator (Page 407)
Block diagram TCONT_CP (Page 410)

10.4.4.9 Parameter STATUS_H

STATUS_H	Description	Remedy
0	Default, or no/no new controller parameters	
10000	Tuning completed + suitable controller parameters found	
2xxxx	Tuning completed + controller parameters uncertain	
2xx2x	Point of inflection not reached (only if excited via setpoint step-change)	If the controller oscillates, weaken the controller parameters, or repeat the test with a smaller manipulated value difference TUN_DLMN.
2x1xx	Estimation error (TU < 3*CYCLE)	Reduce CYCLE and repeat attempt. Special case for PT1-only process: Do not repeat test, if necessary reduce controller parameters.
2x3xx	Estimation error TU too high	Repeat test under better conditions.
21xxx	Estimation error N_PTN < 1	Repeat test under better conditions.
22xxx	Estimation error N_PTN > 10	Repeat test under better conditions.
3xxxx	Tuning canceled in phase 1 owing to faulty parameter assignment:	
30002	Effective manipulated value differential < 5%	Correct manipulated value differential TUN_DLMN.
30005	The sampling times CYCLE and CYCLE_P differ by more than 5% of the measured values.	Compare CYCLE and CYCLE_P with the cycle time of the cyclic interrupt priority class and note any loop scheduler. Check CPU load. An excessively loaded CPU can result in prolonged sampling times that are inconsistent with CYCLE or CYCLE_P.

NOTE

If you cancel tuning in phase 1 or 2, STATUS_H = 0 is set. However, STATUS_D still displays the status of the last controller calculation.

The higher the value of STATUS_D, the higher the order of the control process, the greater the TU/TA ratio and the gentler the controller parameters will be.

See also

Operating principle of the pulse generator (Page 407)
Block diagram TCONT_CP (Page 410)

10.4.4.10 Parameters STATUS_D

STATUS_D	Description
0	No controller parameters were calculated.
110	N_PTN <= 1.5 Process type I fast
121	N_PTN > 1.5 Process type I
200	N_PTN > 1.9 Process type II (transition range)
310	N_PTN >= 2.1 Process type III fast
320	N_PTN > 2.6 Process type III
111, 122, 201, 311, 321	Parameters have been corrected from phase 7.

NOTE

The higher the value of STATUS_D, the higher the order of the control process, the greater the TU/TA ratio and the gentler the controller parameters will be.

See also

Operating principle of the pulse generator (Page 407)
Block diagram TCONT_CP (Page 410)

10.4.5 TCONT_S

10.4.5.1 Description TCONT_S

The TCONT_S instruction is used on SIMATIC S7 automation systems to control technical temperature processes with binary manipulated value output signals for actuators with integrating behavior. The functionality is based on the PI control algorithm of the sampling controller. The step controller operates without a position feedback signal.

Application

You can also use the controller in a cascade control as a secondary position controller. You specify the actuator position via the setpoint input SP_INT. In this case, you must set the process value input and the parameter TI (integration time) to zero. An application might be, for example, temperature control with heating power control using pulse-break activation and cooling control using a butterfly valve. To close the valve completely, the manipulated variable (ER*GAIN) should be negative.

Call

The instruction TCONT_S must be called with a constant bus cycle time. To achieve this, use a cyclic interrupt level (e.g. OB35 with S7-300). The sampling time is specified at the CYCLE parameter.

CYCLE sampling time

The CYCLE sampling time match the time difference between two calls (cycle time of the cyclic interrupt OB taking into account the reduction ratios).
The controller sampling time should not exceed 10% of the calculated integration time of the controller (TI). Generally, you must set the sampling time to a much lower value to achieve the required accuracy of the step controller.

Required accuracy G	MTR_TM	CYCLE = MTR_TM*G	Comment
0.5%	10 s	0.05 s	The sampling time is determined by the required accuracy of the step controller.

Start-up

The TCONT_S instruction has an initialization routine that is run through when input parameter COM_RST = TRUE is set. Following execution of the initialization routine, the block sets COM_RST back to FALSE. All outputs are set to their initial values. If you require initialization when the CPU restarts, call the block in OB100 with COM_RST = TRUE.

See also

Block diagram TCONT_S (Page 423)

10.4.5.2 Mode of operation TCONT_S

Setpoint branch

The setpoint is entered at input SP_INT in floating-point format as a physical value or percentage. The setpoint and process value used to form the control deviation must have the same unit.

Process value options (PVPER_ON)

Depending on PVPER_ON, the process value can be read in, in the I/O or floating-point format.

PVPER_ON	Process Value Input
TRUE	The process value is read in via the analog I/Os (PIW xxx) at input PV_PER.
FALSE	The process value is acquired in floating-point format at input PV_IN.

Process value format conversion CRP_IN (PER_MODE)

The CRP_IN function converts the I/O value PV_PER to floating-point format depending on the PER_MODE switch according to the following rules:

PER_MODE	Output of CRP_IN	Analog Input Type	Unit
0	PV_PER * 0.1	Thermoelements; PT100/NI100; standard	°C;°F
1	PV_PER * 0.01	PT100/NI100; climate;	°C;°F
2	PV_PER * 100/27648	Voltage/current	%

Process value scaling PV_NORM (PF_FAC, PV_OFFS)

The PV_NORM function calculates the output of CRP_IN according to the following rule:
"Output of PV_NORM" = "Output of CRP_IN)" * PV_FAC + PV_OFFS
It can be used for the following purposes:

- Process value adjustment with PV_FAC as process value factor and PV_OFFS as process value offset.
- Normalization of temperature to percentage
  You want to enter the setpoint as a percentage and must now convert the measured temperature value to a percentage.
- Normalization of percentage to temperature
  You want to enter the setpoint in the physical temperature unit and must now convert the measured voltage/current value to a temperature.

Calculation of the parameters:

- PV_FAC = range of PV_NORM/range of CRP_IN;
- PV_OFFS = LL (PV_NORM) - PV_FAC * LL(CRP_IN);
  where LL: low limit

The normalization is switched off with the default values (PV_FAC = 1.0 and PV_OFFS = 0.0). The effective process value is output at the PV output.

Example of Process Value Normalization

If you want to enter the setpoint as a percentage, and you have a temperature range of -20 to 85 °C applied to , CRP_IN you must normalize the temperature range as a percentage.

The following diagram shows an example of adapting the temperature range -20 to 85 °C to an internal scale of 0 to 100 %:

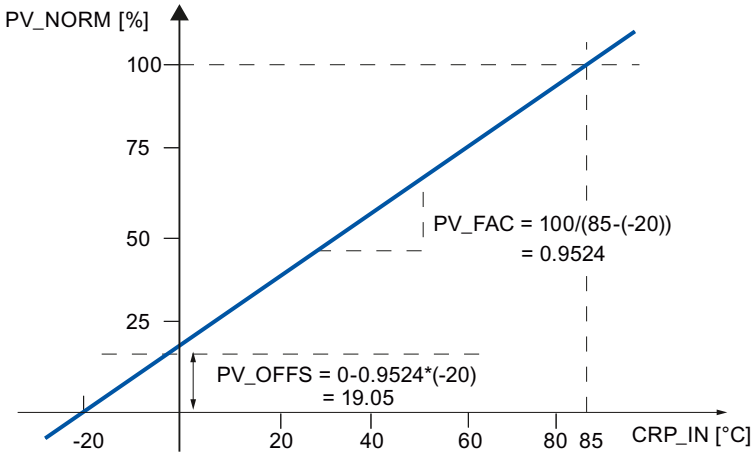

Forming the control deviation

The difference between the setpoint and process value is the control deviation before the dead band.

The setpoint and process value must exist in the same unit.

Dead band (DEADB_W)

To suppress a minor sustained oscillation due to the manipulated variable quantization (for example, in pulse width modulation with PULSEGEN) a dead band is applied to the (DEADBAND) control deviation. With DEADB_W = 0.0, the dead band is switched off.

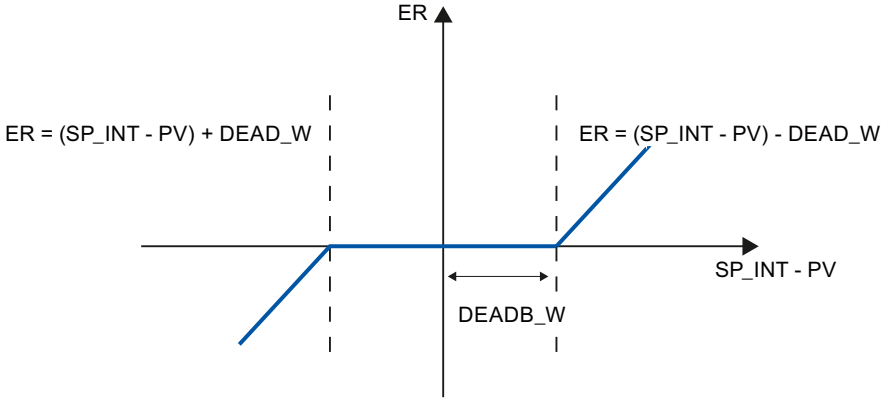

PI step controller algorithm

The instruction TCONT_S operates without position feedback. The I-action of the PI algorithm and the assumed position feedback signal are calculated in an integrator (INT) and compared as a feedback value with the remaining P-action. The difference is applied to a three-step element (THREE_ST) and a pulse shaper (PULSEOUT) that generates the pulses for the control

valve. Adapting the response threshold of the three-step element reduces the switching frequency of the controller.

Weakening of the P-action when setpoint changes occur

To prevent overshoot, you can weaken the P-action using the "Proportional factor for setpoint changes" parameter (PFAC_SP). Using PFAC_SP, you can now select continuously between 0.0 and 1.0 to decide the effect of the P-action when the setpoint changes:

- PFAC_SP = 1.0: Proportional action for setpoint change is fully effective
- PFAC_SP = 0.0: Proportional action has no effect in the setpoint change

As in the case of the continuous controller, a value of PFAC_SP < 1.0 can reduce the overshoot if the motor run time MTR_TM is small compared with the recovery time TA and the ratio is TU/TA < 0.2. If MTR_TM reaches 20% of TA, only a slight improvement can still be achieved.

Feedforward control

A disturbance variable can be added at the DISV input.

Manual value processing (LMNS_ON, LMNUP, LMNDN)

With LMNS_ON, you can change between manual and automatic mode. In manual mode, the actuator is halted and the integral action (INT) is set to 0 internally. Using LMNUP and LMNDN, the actuator can be adjusted to OPEN and CLOSED. Switching over to automatic mode therefore involves a bump. As a result of the GAIN, the existing control deviation leads to a step change in the internal manipulated variable. The integral component of the actuator, however, results in a ramp-shaped excitation of the process.

See also

Block diagram TCONT_S (Page 423)

10.4.5.3 Block diagram TCONT_S

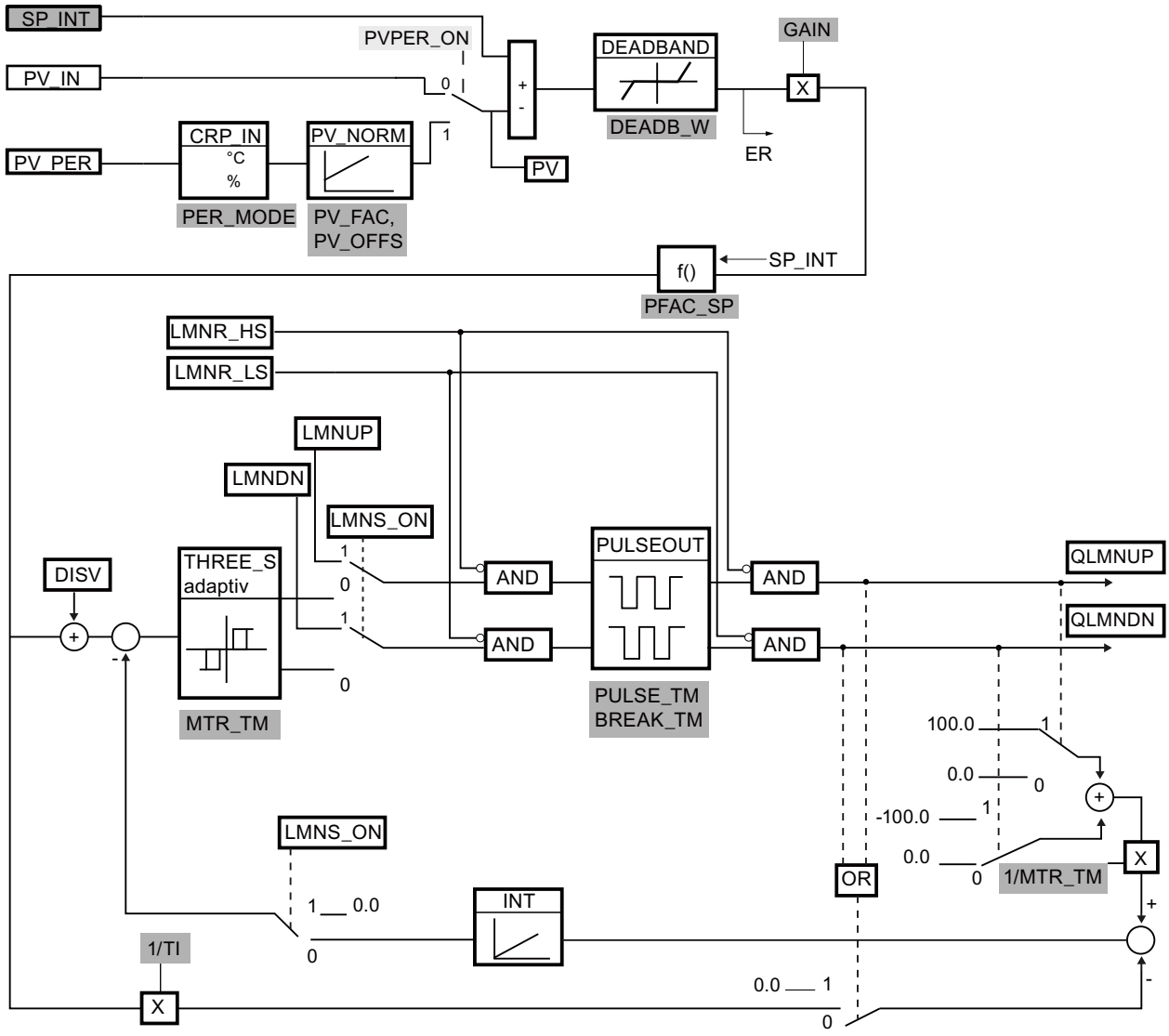

Parameter configuration interface

Instruction call interface

Parameter configuration interface, call interface

See also

Description TCONT_S (Page 419)
Mode of operation TCONT_S (Page 420)
Input paramters TCONT_S (Page 425)
Output parameters TCONT_S (Page 425)
In/out parameters TCONT_S (Page 426)
Static variables TCONT_S (Page 426)

10.4.5.4 Input paramters TCONT_S

The names of the following parameters apply both to the data block and to access via the Openness API.

Table 10-23

Parameters	Address	Data type	Default	Description
CYCLE	0.0	REAL	0.1 s	At this input, you enter the sampling time for the controller. CYCLE ≥ 0.001
SP_INT	4.0	REAL	0.0	The input "Internal setpoint" is used to specify a setpoint. The valid values depend on the sensors used.
PV_IN	8.0	REAL	0.0	At the "Process variable input" you can assign parameters to a commissioning value or you can interconnect an external process value in floating-point format. The valid values depend on the sensors used.
PV_PER	12.0	INT	0	The process value in I/O format is interconnected with the controller at the "Process value I/O" input.
DISV	14.0	REAL	0.0	For feedforward control, the disturbance variable is interconnected to the "Disturbance variable" input.
LMNR_HS	18.0	BOOL	FALSE	The signal "Control valve at high endstop" is interconnected on the input "High endstop signal of position feedback". • LMNR_HS=TRUE: The control valve is located at the high endstop.
LMNR_LS	18.1	BOOL	FALSE	The signal "Control valve at low endstop" is interconnected on the input "Low endstop signal of position feedback". • LMNR_LS=TRUE: The control valve is located at the low endstop.
LMNS_ON	18.2	BOOL	TRUE	Manipulated value signal processing is switched to manual mode at the "Enable manual mode of manipulated signal".
LMNUP	18.3	BOOL	FALSE	In manual mode of manipulated signals, the output parameter QLMNUP is operated at the input parameter "Manipulated signal up".
LMNDN	18.4	BOOL	FALSE	In manual mode of the manipulated signals, the output parameter QLMNDN is operated at the input parameter "Manipulated signal down".

See also

Block diagram TCONT_S (Page 423)

10.4.5.5 Output parameters TCONT_S

The names of the following parameters apply both to the data block and to access via the Openness API.

Table 10-24

Parameters	Address	Data type	Default	Description
QLMNUP	20.0	BOOL	FALSE	If the output "Manipulated value signal up" is set then the control valve should be open.
QLMNDN	20.1	BOOL	FALSE	If the output "Manipulated value signal down" is set then the control valve should be closed.
PV	22.0	REAL	0.0	The effective process value is output at the "Process value" output.
ER	26.0	REAL	0.0	The effective system deviation is output at the "Error signal" output.

See also

Block diagram TCONT_S (Page 423)

10.4.5.6 In/out parameters TCONT_S

The names of the following parameters apply both to the data block and to access via the Openness API.

Table 10-25

Parameters	Address	Data type	Default	Description
COM_RST	30.0	BOOL	FALSE	The block has an initialization routine that is processed when the COM_RST input is set.

See also

Block diagram TCONT_S (Page 423)

10.4.5.7 Static variables TCONT_S

The names of the following variables apply both to the data block and to access via the Openness API.

Table 10-26

Parameters	Address	Data type	Default	Description
PV_FAC	32.0	REAL	1.0	The "Process value factor" input is multiplied by the process value. The input is used to scale the process value range.
PV_OFFS	36.0	REAL	0.0	The input "Process value offset" is added to the process value. The input is used to scale the process value range. The valid values depend on the sensors used.

Parameters	Addre-ss	Data type	Default	Description
DEADB_W	40.0	REAL	0.0	A deadband is applied to the control deviation. The "Deadband width" input determines the size of the deadband. DEADB_W ≥ 0.0
PFAC_SP	44.4	REAL	1.0	PFAC_SP specifies the effective P-action when there is a setpoint change. • 1: P-action has full effect if the setpoint changes. • 0: P-action has no effect if the setpoint changes. Values from 0.0 to 1.0 are permitted.
GAIN	48.0	REAL	2.0	The "Proportional gain" input specifies controller amplification. The direction of control can be reversed by giving GAIN a negative sign. %/phys. Unit
TI	52.0	REAL	40.0 s	The "Integration time" (integral-action time) input defines the integrator's time response.
MTR_TM	56.0	REAL	30 s	The runtime from endstop to endstop of the control valve is entered at the "Motor actuating time" parameter. MTR_TM ≥ CYCLE
PULSE_TM	60.0	REAL	0.0 s	A minimum pulse time can be configured at the "Minimum pulse time" parameter.
BREAK_TM	64.0	REAL	0.0 s	You can assign a minimum break time at the parameter "Minimum break time".
PER_MODE	68.0	INT	0	You can use this switch to enter the type of I/O module. The process value at input PV_PER is then scaled as follows at the PV output. • PER_MODE = 0: Thermocouples; PT100/NI100; standard PV_PER * 0.1 Unit: C, °F • PER_MODE = 1: PT100/NI100; climate PV_PER * 0.01 Unit: C, °F • PER_MODE = 2: Current/voltage PV_PER * 100/27648 Unit: %
PVPER_ON	70.0	BOOL	FALSE	If the process value is to be read in from the I/Os, the PV_PER input must be inter-connected with the I/Os and the "Enable process value I/Os" input must be set.

See also

Block diagram TCONT_S (Page 423)

10.4.6 Integrated system functions

10.4.6.1 CONT_C_SF

CONT_C_SF

The instruction CONT_C_SF is integrated in the S7-300 compact CPUs. The instruction must not be transmitted to the S7-300 CPU during loading. The scope of function corresponds with the instruction CONT_C.

See also

Description CONT_C (Page 379)
How CONT_C works (Page 379)
CONT_C block diagram (Page 381)
Input parameter CONT_C (Page 382)
Output parameters CONT_C (Page 384)

10.4.6.2 CONT_S_SF

CONT_S_SF

The instruction CONT_S_SF is integrated in the S7-300 compact CPUs. The instruction must not be transmitted to the S7-300 CPU during loading. The scope of function corresponds with the instruction CONT_S.

See also

Description CONT_S (Page 385)
Mode of operation CONT_S (Page 385)
Block diagram CONT_S (Page 386)
Input parameters CONT_S (Page 387)
Output parameters CONT_S (Page 389)

10.4.6.3 PULSEGEN_SF

PULSEGEN_SF

The instruction PULSEGEN_SF is integrated in the S7-300 compact CPUs. The instruction must not be transmitted to the S7-300 CPU during loading. The scope of function corresponds with the instruction PULSEGEN.

See also

Description PULSEGEN (Page 389)
Mode of operation PULSEGEN (Page 390)
Mode of operation PULSEGEN (Page 393)
Three-step control (Page 394)
Two-step control (Page 396)
Input parameters PULSEGEN (Page 397)
Output parameter PULSEGEN (Page 398)

10.5 Polyline

10.5.1 Compatibility with CPU and FW

The following table shows which version of Polyline can be used on which CPU:

CPU	FW	Polyline
S7-1200	V4.2 or higher	V1.0
S7-1500-based CPUs	V2.0 or higher	V1.0

10.5.2 Description Polyline

Description

The Polyline instruction maps input value Input onto output value Output using a characteristic curve. The characteristic curve is defined as a polyline with maximum 50 points. Linear interpolation is performed between the points. You can fit the polyline to the desired characteristic curve using the number and configuration of the points.
The Polyline instruction can be used, for example, to linearize non-linear characteristics of sensors or actuators.

Interpolation calculation

Polyline calculates the output value at the Output parameter for the input value at the Input parameter that lies between point values x_i and x_{i+1} with a linear interpolation. The linear interpolation is calculated according to the following formula:

$$Output = \frac{(Input - x_i)}{(x_{i+1} - x_i)} (y_{i+1} - y_i) + y_i$$

With parameter Reset = TRUE, an alternative output value can also be specified using the SubstituteOutput parameter.

Polyline data

The value pairs for the polyline are contained in the Static area of the instruction.

NOTE

- The minimum number of value pairs to be configured is 2.
- The maximum number of value pairs to be configured is 50.
- For a valid configuration, the x values must be specified in ascending order.

To allow the polyline data to be changed without the changes taking effect immediately, the value pairs of the polyline are duplicated and contained in the following structures:

- UserData
  The polyline data in this structure can be edited.
  Make use of this structure to specify or change the polyline data. Changes in this structure do not affect the interpolation calculation until the check and duplication of the data to the WorkingData structure is initiated. This happens by setting Validate = TRUE or automatically during the first processing of Polyline after the operating state transition of the CPU from STOP to RUN.
  The preassignment of values in this structure does not represent a valid configuration. To use the values for the interpolation calculation, change the tags to valid values.
- WorkingData
  The polyline data in this structure cannot be edited. This data is used for the interpolation calculation. Do not manually change the data in this structure.

Both structures have the same data type and thus the same content:

- NumberOfUsedPoints
  Number of points used for the interpolation calculation.
- Point
  The array with 50 elements contains value pairs of points Point[i].x and Point[i].y with index "i" from 1 to 50.

The following figure shows a polyline with four points.

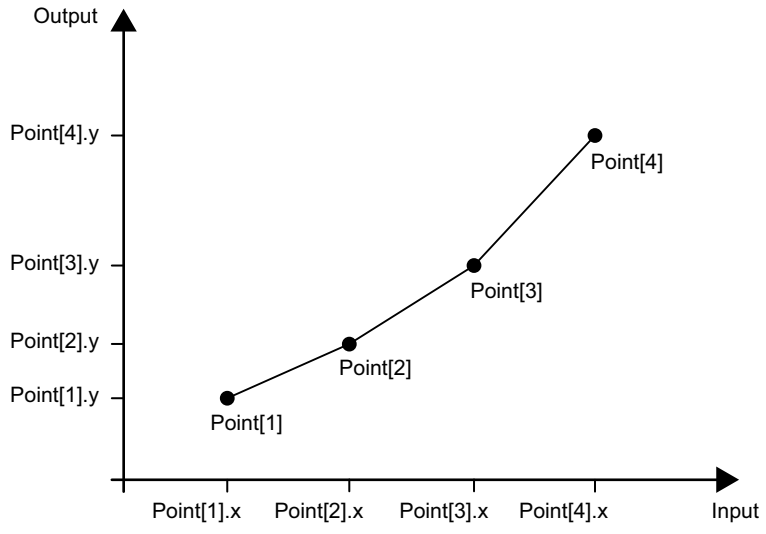

Call

Polyline is called in an OB as a single-instance DB, Polyline is called in an FC as a single-instance DB or parameter instance DB; Polyline can be called as a single-instance DB, as a multi-instance DB and as a parameter instance DB in an FB.

When the instruction is called, no technology object is created. Polyline configuration is available in the Inspector window of the programming editor.

Startup

The tags in the UserData and WorkingData structures are not retentive. These tags are initialized with the start values after each operating state transition of the CPU from STOP to RUN.

If you change the actual values in the UserData structure in online mode and these values are to be retained after the operating state transition of the CPU from STOP to RUN, back up these values in the start values of the data block.

At the first call of the Polyline instruction after the operating state transition of the CPU from STOP to RUN, the data in the UserData structure is automatically checked for validity. If the check is successful, the data is transferred to the WorkingData structure.

Reaction to error

The Polyline instruction detects different errors that may occur during interpolation calculation. The result of the interpolation calculation can be output at the output despite a pending error. If an error prevents correct calculation of the interpolation result, a substitute output value is output at the output.

You specify the substitute output value that is output if an error occurs that prevents correct calculation of the interpolation result as follows at the ErrorMode tag:

ErrorMode	Output
0	Value of the Input parameter
1	Value of the SubstituteOutput parameter
2	The last valid result of interpolation calculation 0.0 if there is no valid result

The following applies in addition for all values of the ErrorMode tag:

- If the substitute output value is not a valid REAL value, 0.0 is output as output value.
- The substitute output value is limited to the value range of the data type REAL. Only then is the substitute output value output at the Output parameter.
- The ErrorMode tag is only effective when the Reset = FALSE parameter is set. If the Reset = TRUE parameter is set, the value of the SubstituteOutput parameter is output at the Output parameter.

The Error parameter indicates if an error is pending. When the error is no longer pending, Error is set to FALSE. The ErrorBits parameter shows which errors have occurred. ErrorBits is retentive and is reset only by a positive edge at the Reset or ErrorAck parameter.

10.5.3 Operating principle Polyline

Polyline data

To change the polyline, you edit the values in the UserData structure. The values are then checked for validity and transferred to the WorkingData structure. Only in the WorkingData structure are the values used for the interpolation calculation.

The values are checked and transferred when

- You set the Validate parameter to TRUE while the Reset parameter is set to FALSE.
- Polyline is called for the first time after the change of operating state of the CPU from STOP to RUN while the Reset parameter is set to FALSE.

  If Polyline has already been called, for example in OB100, another automatic check of the values is not performed at the subsequent calls.

If the polyline data in the UserData structure is invalid, the previous polyline data in the WorkingData structure remains unchanged and a corresponding error message is output. If the check was performed for the first time, no valid values are available in the WorkingData structure and a corresponding error message is output. In this case, the Output parameter is specified with the substitute output value that you configure with the ErrorMode tag.

The check and transfer of the values from the UserData structure requires more CPU processing time than the interpolation calculation. In time-critical applications, the first execution of Polyline can be in startup OB 100. In this way, the time-consuming one-time check and transfer of the polyline data can be completed before the cyclic application program sections.

Validity of the polyline data

When the values in the UserData structure are checked, they must meet the following conditions so that a valid polyline is available for the interpolation calculation:

- 2 ≤ UserData.NumberOfUsedPoints ≤ 50
- UserData.Point[j].x < UserData.Point[j+1].x with index j = 1..(UserData.NumberOfUsedPoints – 1)
- -3.402823e+38 ≤ UserData.Point[i].x ≤ 3.402823e+38 with index i = 1..UserData.NumberOfUsedPoints
- -3.402823e+38 ≤ UserData.Point[i].y ≤ 3.402823e+38 with index i = 1..UserData.NumberOfUsedPoints
- UserData.Point[i].x and UserData.Point[i].y are valid REAL values (≠ NaN) with index i = 1..UserData.NumberOfUsedPoints

If one or more conditions are not met during the check, the values in the UserData structure are not transferred to the WorkingData structure. A corresponding error message is output at the ErrorBits (Page 436) parameter.

The preassignment of values in the UserData structure does not represent a valid configuration. Change the tags to valid values so that the tags can be used for the interpolation calculation.

NOTE

If more than the maximum number of 50 points are needed for your application, use two or more instances of Polyline.

Calculating the output value

If the input value at the Input parameter is below the first x-value or above the last x-value of the utilized points, configure the preassignment of the Output parameter with the following settings at the OutOfRangeMode tag:

- OutOfRangeMode = 0
  The output value is extrapolated with the slope of the first or last two points.

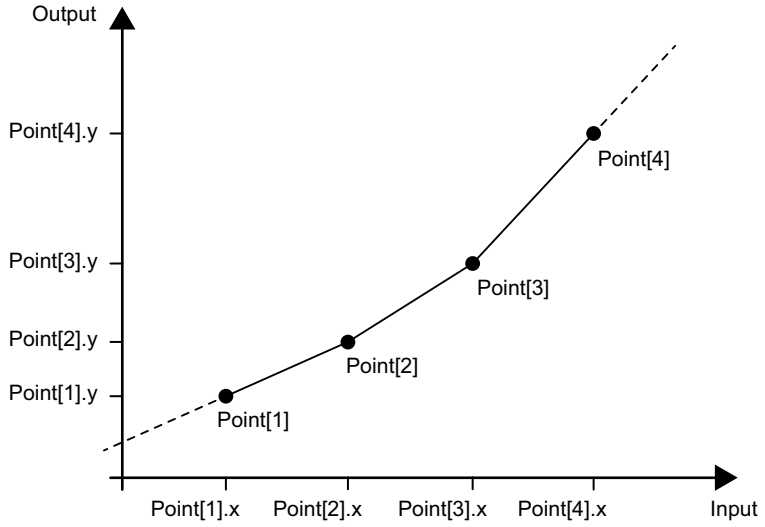

  If the OutOfRangeMode tag lies outside the permissible value range of 0 to 1, the default preassignment 0 becomes effective.

- OutOfRangeMode = 1
  The output value is limited to the y-value of the first or last point.

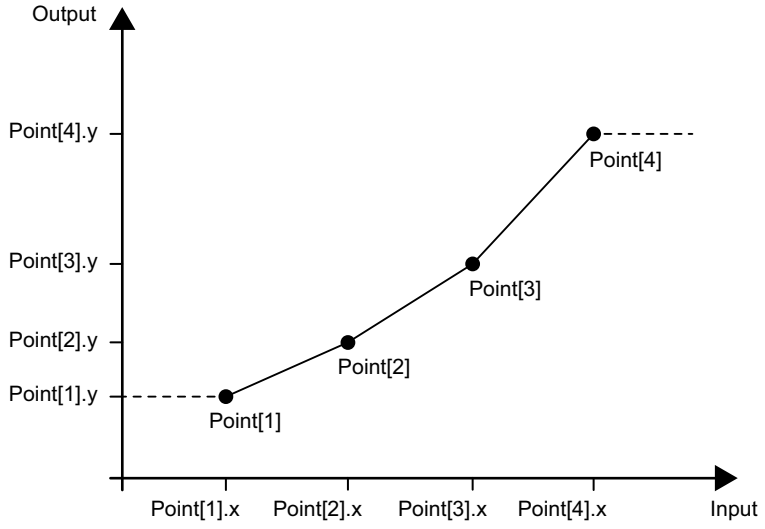

The Output parameter has a permissible value range of a REAL data type of -3.402823e+38 to 3.402823e+38. The output value at the Output parameter is checked for validity each time the Polyline instruction is executed. If the interpolation calculation yields an invalid REAL value, the output value is replaced with the setting at the ErrorMode tag.

Enable behavior EN/ENO

If one of the following conditions is met, enable output ENO is set to FALSE.

- Enable input EN is set to TRUE and the Output parameter is specified by a substitute output value in case of error messages ErrorBits ≥ 16#0001_0000.
- Enable input EN is set to FALSE.

Otherwise, the enable output ENO is set to TRUE.

Currently utilized points

The NextXIndex index outputs the index of the next higher x-value for the current input value. You can use this to determine the points that are being used for the current interpolation calculation.

WorkingData.Point[NextXIndex-1].x < Input ≤ WorkingData.Point[NextXIndex].x

Example:

- If the value of the Input parameter is between WorkingData.Point[3].x and WorkingData.Point[4].x, the NextXIndex tag has the value 4.
- If the value of the Input parameter is less than WorkingData.Point[1].x, the NextXIndex tag has the value 1.
- If the value of the Input parameter is greater than WorkingData.Point[WorkingData.NumberOfUsedPoints].x and is thus greater than the last x-value of the polyline, the NextXIndex tag has the value of the WorkingData.NumberOfUsedPoints + 1 tag. Consequently, maximum permissible value of the NextXIndex tag is 51.

10.5.4 Input parameters of Polyline

Parameter	Data type	Default	Description
Input	REAL	0.0	Input value
Substitu-teOutput	REAL	0.0	SubstituteOutput is used as the substitute output value when • Reset = TRUE or • An error with error message ErrorBits ≥ 16#0001_0000 prevents correct calculation of the interpolation result, and the configured value of ErrorMode is 1 .
Validate	BOOL	FALSE	If Validate is set to TRUE, the polyline data in UserData is checked for validity and transferred to WorkingData.
ErrorAck	BOOL	FALSE	Deletes the error messages • Edge FALSE -> TRUE ErrorBits is reset
Reset	BOOL	FALSE	Performs a restart of the instruction • Edge FALSE -> TRUE ErrorBits is reset. • As long as Reset is set to TRUE, the substitute output value SubstituteOutput is output at the output. • As long as Reset is set to FALSE, the interpolation calculation is performed.

10.5.5 Output parameters of Polyline

Parameter	Data type	Default	Description
Output	REAL	0.0	Output value
Error	BOOL	FALSE	When Error is set to TRUE, at least one error is currently pending.
ErrorBits	DWORD	DW#16#0	The ErrorBits parameter (Page 436) shows which error messages are pending. ErrorBits is retentive and is reset at a positive edge at Reset or ErrorAck .

10.5.6 Static tags of Polyline

Tag	Data type	Default	Description
UserData	AuxFct_PointTabl-e	-	Input area for polyline data The polyline data in the UserData structure can be edited. Changes in this structure do not affect the interpolation calculation until the check and duplication of the data to the WorkingData structure is initiated.
UserData.NumberOfUsedPoints	INT	0	Number of points used for the interpolation calculation Permissible value range: 2 to 50
UserData.Point	Array[1..50] of AuxFct_Point	-	Points for the interpolation calculation The array with 50 elements of data type AuxFct_Point contains the value pairs of the points.
UserData.Point[i]	AuxFct_Point	-	Point for the interpolation calculation An element with index "i" from the "Point" array.
UserData.Point[i].x	REAL	0.0	x-value of the point Permissible value range: Point[i].x < Point[i+1].x
UserData.Point[i].y	REAL	0.0	y-value of the point
WorkingData	AuxFct_PointTabl-e	-	Display area of the currently active polyline data The polyline data in the WorkingData structure cannot be edited. It is used for the interpolation calculation.
WorkingData.NumberOfUsedPoints	INT	0	Number of points used for the interpolation calculation Permissible value range: 2 to 50
WorkingData.Point	Array[1..50] of AuxFct_Point	-	Points for the interpolation calculation The array with 50 elements of type AuxFct_Point contains the value pairs of the points.
WorkingData.Point[i]	AuxFct_Point	-	Point for the interpolation calculation An element with index "i" from the "Point" array.
WorkingData.Point[i].x	REAL	0.0	x-value of the point Permissible value range: Point[i].x < Point[i+1].x
WorkingData.Point[i].y	REAL	0.0	y-value of the point

Tag	Data type	Default	Description
ErrorMode	INT	0	Selection of the substitute output value following an error • 0 = Input • 1 = SubstituteOutput • 2 = Last valid output value Permissible value range: 0 to 2
OutOfRangeMode	INT	0	Selection of the output value if the input value lies outside the defined x-values • 0 = Maintain slope • 1 = y-value of the first/last point Permissible value range: 0 to 1
NextXIndex	INT	2	Index of the next x-value Used for monitoring the index of the breakpoints that are being used for the current interpolation calculation. The following condition applies: WorkingData.Point[NextXIndex-1].x < Input ≤ WorkingData.Point[NextXIndex].x Do not change this value manually.

10.5.7 ErrorBits parameter

If several errors are pending simultaneously, the values of the ErrorBits are displayed with binary addition. The display of ErrorBits = 16#0000_0003, for example, indicates that the errors 16#0000_0001 and 16#0000_0002 are pending simultaneously.

For Polyline, the errors output at the ErrorBits parameter are divided into two categories:

- Errors with error messages ErrorBits < 16#0001_0000
- Errors with error messages ErrorBits ≥ 16#0001_0000

Errors with error messages ErrorBits < 16#0001_0000

If one or more errors with error messages ErrorBits < 16#0001_0000 are pending, Polyline reacts as follows:

- The output value is determined as follows despite this error:
  - When Reset = FALSE, interpolation calculation
  - When Reset = TRUE, output of SubstituteOutput
- The output parameter Error is set.
- The enable output ENO is not changed.

The output parameter Error is deleted as soon as there are no longer any errors.

ErrorBits (DW#16#...)	Description
0000_0000	No error is pending.

ErrorBits (DW#16#...)	Description
0000_0001	**Cause of error and response to error:** The Output parameter was limited to -3.402823e+38 or +3.402823e+38. **Solution:** If the interpolation value is output at the output (Reset = FALSE and ErrorBits < 16#0001_0000), check the following tags used in the interpolation calculation: • Input • WorkingData.Point[i].x • WorkingData.Point[i].y When ErrorBits ≥ 16#0001_0000 and Reset = FALSE, the substitute output value is limited on its output. In this case, check the following parameters depending on the set value at the ErrorMode tag: • Input • SubstituteOutput When Reset = TRUE, check the SubstituteOutput parameter.
0000_0002	**Cause of error:** One or more tags in the UserData structure have invalid values while the polyline data is checked (Validate = TRUE and Reset = FALSE). **Response to error:** The polyline data in the UserData structure is not transferred to the WorkingData structure so that the changes made in the UserData structure will not become effective. The Polyline FB continues the interpolation calculation with the unchanged and valid polyline data in the WorkingData structure. **Solution:** Ensure that the following conditions are met when the Validate parameter is set to TRUE: • 2 ≤ UserData.NumberOfUsedPoints ≤ 50 • UserData.Point[j].x < UserData.Point[j+1].x with index j = 1..(UserData.NumberOfUsedPoints - 1) • -3.402823e+38 ≤ UserData.Point[i].x ≤ 3.402823e+38 with index i = 1..UserData.NumberOfUsedPoints • -3.402823e+38 ≤ UserData.Point[i].y ≤ 3.402823e+38 with index i = 1..UserData.NumberOfUsedPoints • UserData.Point[i].x and UserData.Point[i].y are valid REAL values (≠ NaN) with index i = 1..UserData.NumberOfUsedPoints

Errors with error messages ErrorBits ≥ 16#0001_0000

If one or more errors with error messages ErrorBits ≥ 16#0001_0000 are pending, Polyline reacts as follows:

- The output value cannot be determined as expected. The substitute output value is output instead.
- The output parameter Error is set.
- The enable output ENO is set to FALSE.

As soon as there are no longer errors with error messages ErrorBits ≥ 16#0001_0000, Polyline reacts as follows:

- The output value is determined as follows:
  - When Reset = FALSE, interpolation calculation
  - When Reset = TRUE, output of SubstituteOutput
- The enable output ENO is set to TRUE.

The output parameter Error is deleted as soon as there are no longer any errors.

<table>
<tr><th>ErrorBits (DW#16#...)</th><th>Description</th></tr>
<tr><td>0001_0000</td><td>Cause of error:
The SubstituteOutput or Input parameter that is being used as the output value has no valid REAL value.
Response to error:
The output is set to 0.0.
Solution:
Make sure that the parameter used as output value is a valid REAL value (≠ NaN e.g. 16#7FFF_FFFF). The parameter that is used as output value depends on Reset and ErrorMode:
<table>
<tr><th>Reset</th><th>ErrorMode</th><th>Output value</th></tr>
<tr><td>FALSE</td><td>0</td><td>Input</td></tr>
<tr><td>FALSE</td><td>1</td><td>SubstituteOutput</td></tr>
<tr><td>TRUE</td><td>-</td><td>SubstituteOutput</td></tr>
</table></td></tr>
<tr><td>0002_0000</td><td>Cause of error:
The Input parameter has no valid REAL value, while the interpolation calculation is being performed (Reset = FALSE).
Response to error:
The substitute output value that is configured at the ErrorMode tag is output at the Output parameter. When ErrorMode = 0, 0.0 is used as output value.
The NextXIndex tag is not updated as long as the Input parameter has an invalid REAL value
Solution:
Make sure that the parameter Input is a valid REAL value (≠ NaN e.g. 16#7FFF_FFFF).</td></tr>
<tr><td>0004_0000</td><td>Cause of error:
The interpolation calculation yields an invalid REAL value for the Output parameter.
Response to error:
The substitute output value that is configured at the ErrorMode tag is output at the Output parameter. The NextXIndex tag can have an invalid value as long as this error is pending.
Solution:
Check the REAL values in the WorkingData structure for validity.
Additional information:
If you want to change the polyline data, first edit the UserData structure and then set parameter Validate = TRUE. Do not manually change the data of the WorkingData structure.</td></tr>
<tr><td>0008_0000</td><td>Cause of error:
One or more tags in the UserData structure have invalid values while the polyline data is checked.
Response to error:
The polyline data in the UserData structure is not transferred to the WorkingData structure so that the values in the UserData structure do not become effective.
FB Polyline does not output the interpolation value at the Output parameter because no valid polyline data is contained in the WorkingData structure. The substitute output value that is configured at the ErrorMode tag is output at the Output parameter.
Solution:
Ensure that the following conditions are met when the polyline data is checked:
• 2 ≤ UserData.NumberOfUsedPoints ≤ 50
• UserData.Point[j].x < UserData.Point[j+1].x with index j = 1..(UserData.NumberOfUsedPoints – 1)
• -3.402823e+38 ≤ UserData.Point[i].x ≤ 3.402823e+38 with index i = 1..UserData.NumberOfUsedPoints
• -3.402823e+38 ≤ UserData.Point[i].y ≤ 3.402823e+38 with index i = 1..UserData.NumberOfUsedPoints
• UserData.Point[i].x and UserData.Point[i].y are valid REAL values (≠ NaN) with index i = 1..UserData.NumberOfUsedPoints
Additional information:</td></tr>
</table>

ErrorBits (DW#16#...)	Description
	The polyline data in the UserData structure is checked when • The Validate parameter is set to TRUE while the Reset parameter is set to FALSE or • Polyline is called for the first time with parameter Reset = FALSE after the operating state transition of the CPU from STOP to RUN. Note that all tags in the UserData and WorkingData structures are not retentive. These tags are initialized with the start values after each operating state transition of the CPU from STOP to RUN.

10.6 SplitRange

10.6.1 Compatibility with CPU and FW

The following table shows which version of SplitRange can be used on which CPU:

CPU	FW	SplitRange
S7-1200	V4.2 or higher	V1.0
S7-1500-based CPUs	V2.0 or higher	V1.0

10.6.2 SplitRange description

Description

The SplitRange instruction converts the input value into an output value. The input value is located in the value range that is limited by Points.x1 and Points.x2. The output value is located in the value range that is limited by Points.y1 and Points.y2.

The following figure shows the relevant characteristic of an example configuration of the SplitRange instruction:

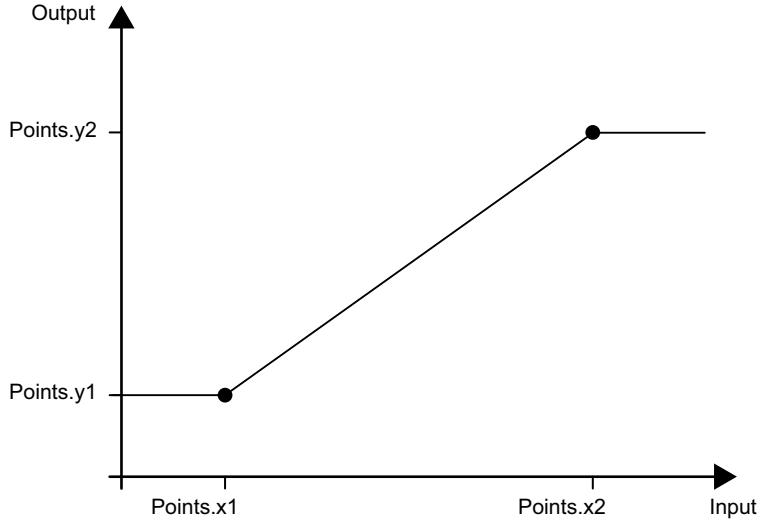

Use SplitRange when you need to control a process that is influenced by multiple actuators. SplitRange splits the output value range of the PID controller into multiple subranges. Assign a subrange to each actuator. The user program calls the block once per subrange. The input value of each SplitRange instance is connected to the output value of the PID controller.

The figure below shows an example of a control loop with two SplitRange instances and two actuators:

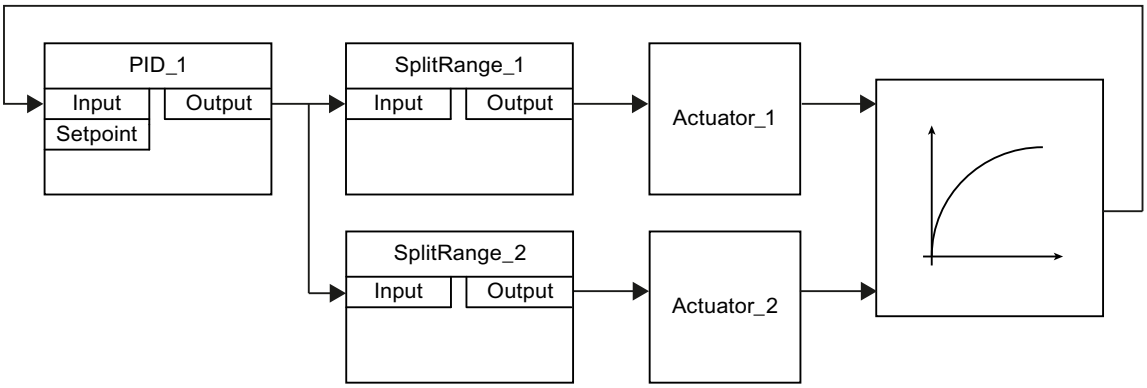

Validity of the SplitRange data

The value pairs in the Points structure define the input and output value range of SplitRange. The two value pairs are located in the static area of the block SplitRange.

SplitRange checks whether the following conditions are met for each call so that valid values are available for the calculation of the output value:

- Points.x1 < Points.x2
- Points.x1, Points.y1, Points.x2 and Points.y2 are within the permitted value range from -3.402823e+38 to 3.402823e+38
- Points.x1, Points.y1, Points.x2 and Points.y2 are valid REAL values (≠ NaN e.g. 16#7FFF_FFFF)

If one or more of these conditions are not met, correct calculation of the output value is not possible. A corresponding error message is output at the ErrorBits parameter.

The preassignment of the x and y values with 0.0 does not represent a valid configuration. Change the tags to valid values so that the tags can be used for the calculation of the output value.

Enable behavior EN/ENO

If one of the following conditions is met, enable output ENO is set to FALSE.

- Enable input EN is set to TRUE and the Output parameter is specified by a substitute output value in case of error messages ErrorBits ≥ 16#0001_0000.
- Enable input EN is set to FALSE.

Otherwise, the enable output ENO is set to TRUE.

Call

In an OB or FC, SplitRange is called as single-instance DB. In an FB, SplitRange can be called as a single-instance DB, as a multi-instance DB and as a parameter-instance DB.

When the instruction is called, no technology object is created. No parameter assignment interface or commissioning interface is available. You assign the SplitRange parameters directly using the instance DB and commission SplitRange using a watch table of the user program in the CPU or HMI.

Startup

The tags in the static area of SplitRange are not retentive. These tags are initialized with the start values after each operating state transition of the CPU from STOP to RUN.

If you change the actual values in the Points structure in online mode and these values are to be retained after the operating state transition of the CPU from STOP to RUN, back up these values in the start values of the data block.

Reaction to error

The SplitRange instruction detects different errors that can occur during the calculation of the output value. The result of the calculation can be output at the output despite a pending error. If an error prevents correct calculation of the output value, a substitute output value is output at the output.

You specify the substitute output value that is output if an error occurs that prevents correct calculation of the output value as follows at the ErrorMode tag:

ErrorMode	Output
0	Value of the Input parameter
1	Value of the SubstituteOutput parameter
2	The last valid result of output value calculation 0.0 if there is no valid result

The following applies in addition for all values of the ErrorMode tag:

- If the substitute output value is not a valid REAL value, 0.0 is output as output value.
- The substitute output value is limited to the value range of the data type REAL. Only then is the substitute output value output at the Output parameter.
- The ErrorMode tag is only effective when the Reset = FALSE parameter is set. If the Reset = TRUE parameter is set, the value of the SubstituteOutput parameter is output at the Output parameter.

The Error parameter indicates if an error is pending. When the error is no longer pending, Error is set to FALSE. The ErrorBits parameter shows which errors have occurred. ErrorBits is retentive and is reset only by a positive edge at the Reset or ErrorAck parameter.

10.6.3 SplitRange input parameters

Parameter	Data type	Default	Description
Input	REAL	0.0	Input value

Parameter	Data type	Default	Description
Substitu-teOutput	REAL	0.0	SubstituteOutput is used as the substitute output value when • Reset = TRUE or • An error with error message ErrorBits ≥ 16#0001_0000 prevents correct calculation of the output value, and the configured value of ErrorMode is 1.
ErrorAck	BOOL	FALSE	Deletes the error messages • Edge FALSE -> TRUE ErrorBits is reset
Reset	BOOL	FALSE	Performs a restart of the instruction • Edge FALSE -> TRUE ErrorBits is reset. • As long as Reset is set to TRUE, the substitute output value SubstituteOutput is output at the output. • As long as Reset is set to FALSE, the calculation of the output value is performed.

10.6.4 SplitRange output parameters

Parameter	Data type	Default	Description
Output	REAL	0.0	Output value
ErrorBits	DWORD	DW#16#0	The ErrorBits parameter (Page 442) shows which error messages are pending. ErrorBits is retentive and is reset at a positive edge at Reset or ErrorAck .
Error	BOOL	FALSE	When Error is set to TRUE, at least one error is currently pending.

10.6.5 SplitRange static tags

Tag	Data type	Default	Description
Points	AuxFct_SplitRang-e_Points	-	Points data
Points.x1	REAL	0.0	x-value of point 1 Permissible value range: Points.x1 < Points.x2
Points.y1	REAL	0.0	y-value of point 1
Points.x2	REAL	0.0	x-value of point 2 Permissible value range: Points.x1 < Points.x2
Points.y2	REAL	0.0	y-value of point 2
ErrorMode	INT	0	Selection of the substitute output value following an error • 0 = Input • 1 = SubstituteOutput • 2 = Last valid output value Permissible value range: 0 to 2

10.6.6 ErrorBits parameter

If several errors are pending simultaneously, the values of the ErrorBits are displayed with binary addition. The display of ErrorBits = 16#0000_0003, for example, indicates that the errors 16#0000_0001 and 16#0000_0002 are pending simultaneously.

For SplitRange, the errors output at the ErrorBits parameter are divided into two categories:

- Errors with error messages ErrorBits < 16#0001_0000
- Errors with error messages ErrorBits ≥ 16#0001_0000

Errors with error messages ErrorBits < 16#0001_0000

If one or more errors with error messages ErrorBits < 16#0001_0000 are pending, SplitRange reacts as follows:

- The output value is determined as follows despite this error:
  - When Reset = FALSE, output value calculation
  - When Reset = TRUE, output of SubstituteOutput
- The output parameter Error is set.
- The enable output ENO is not changed.

The output parameter Error is deleted as soon as there are no longer any errors.

ErrorBits (DW#16#...)	Description
0000_0000	No error is pending.
0000_0001	**Cause of error and response to error:** The Output parameter was limited to -3.402823e+38 or +3.402823e+38. **Solution:** When ErrorBits ≥ 16#0001_0000 and Reset = FALSE, the substitute output value is limited on its output. In this case, check the following parameters depending on the set value at the ErrorMode tag: • Input • SubstituteOutput When Reset = TRUE, check the SubstituteOutput parameter.

Errors with error messages ErrorBits ≥ 16#0001_0000

If one or more errors with error messages ErrorBits ≥ 16#0001_0000 are pending, SplitRange reacts as follows:

- The output value cannot be determined as expected. The substitute output value is output instead.
- The output parameter Error is set.
- The enable output ENO is set to FALSE.

As soon as there are no longer errors with error messages ErrorBits ≥ 16#0001_0000, SplitRange reacts as follows:

- The output value is determined as follows:
  - When Reset = FALSE, output value calculation
  - When Reset = TRUE, output of SubstituteOutput
- The enable output ENO is set to TRUE.

The output parameter Error is deleted as soon as there are no longer any errors.

<table>
<tr><th>ErrorBits (DW#16#...)</th><th>Description</th></tr>
<tr><td>0001_0000</td><td>Cause of error:
The SubstituteOutput or Input parameter that is being used as the output value has no valid REAL value.
Response to error:
The output is set to 0.0.
Solution:
Make sure that the parameter used as output value is a valid REAL value (≠ NaN e.g. 16#7FFF_FFFF). The parameter that is used as output value depends on Reset and ErrorMode:
<table>
<tr><td>Reset</td><td>ErrorMode</td><td>Output value</td></tr>
<tr><td>FALSE</td><td>0</td><td>Input</td></tr>
<tr><td>FALSE</td><td>1</td><td>SubstituteOutput</td></tr>
<tr><td>TRUE</td><td>-</td><td>SubstituteOutput</td></tr>
</table></td></tr>
<tr><td>0002_0000</td><td>Cause of error:
The Input parameter has no valid REAL value while the calculation of the output value is being performed (Reset = FALSE).
Response to error:
The substitute output value that is configured at the ErrorMode tag is output at the Output parameter. When ErrorMode = 0, 0.0 is used as output value.
Solution:
Make sure that the parameter Input is a valid REAL value (≠NaN e.g. 16#7FFF_FFFF).</td></tr>
<tr><td>0004_0000</td><td>Possible causes of error:
• One or more tags in the Points structure have invalid values.
• The calculation of the output value yields an invalid REAL value for the Output parameter.
Response to error:
The substitute output value that is configured at the ErrorMode tag is output at the Output parameter.
Solution:
Ensure that the following conditions are met:
1. Points.x1 < Points.x2
2. Points.x1, Points.y1, Points.x2 and Points.y2 are within the permitted value range from -3.402823e+38 to 3.402823e+38
3. Points.x1, Points.y1, Points.x2 and Points.y2 are valid REAL values (≠ NaN e.g. 16#7FFF_FFFF)
Additional information:
Note that all tags in the Points structure are not retentive. These tags are initialized with the start values after each operating state transition of the CPU from STOP to RUN.</td></tr>
</table>

10.7 RampFunction

10.7.1 Compatibility with CPU and FW

The following table shows which version of RampFunction can be used on which CPU:

CPU	FW	RampFunction
S7-1200	V4.2 or higher	V1.0
S7-1500-based CPUs	V2.0 or higher	V1.0

10.7.2 RampFunction description

Description

The RampFunction instruction limits the slew rate of a signal. RampFunction outputs a signal jump at the input as ramp function of the output value.

Use the RampFunction to prevent signal jumps, for example, in the following cases:

- Between setpoint source and setpoint input of the controller to achieve a smoother response without influencing the disturbance reaction.
- Between the controller output and the actuator input to preserve the actuator, for example, a motor with gears or the process.

The following limits can be set for the slew rate:

- Increasing slew rate in positive value range
- Decreasing slew rate in positive value range
- Increasing slew rate in negative value range
- Decreasing slew rate in negative value range

In addition, the RampFunction instruction limits the output value to the high and low limit.

When the slew rate limit or the low or high limit are reached, RampFunction sets the associated output bit to TRUE.

Function chart

The following figure shows the RampFunction instruction and a function chart as an example:

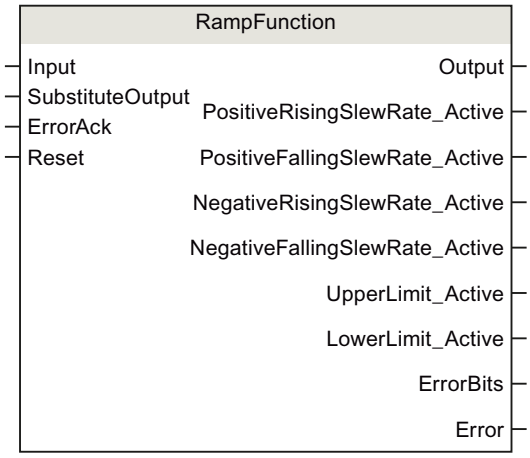

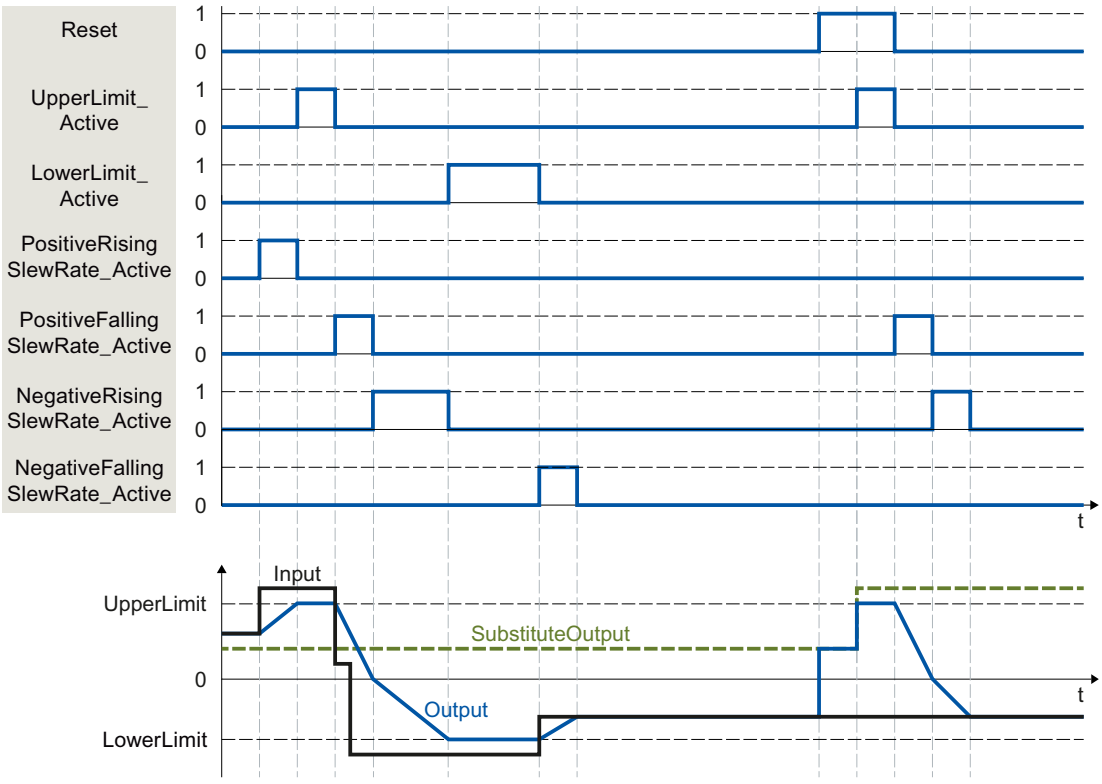

Call

In an OB or FC, RampFunction is called as single-instance DB. In an FB, RampFunction can be called as a single-instance DB, as a multi-instance DB and as a parameter-instance DB.
When the instruction is called, no technology object is created. No parameter assignment interface or commissioning interface is available. You assign the RampFunction parameters

directly using the instance DB and commission RampFunction using a watch table of the user program in the CPU or HMI.

Startup

The tags in the static area of RampFunction are not retentive. These tags are initialized with the start values after each operating state transition of the CPU from STOP to RUN.
If you change the actual values of the limits in online mode and these values are to be retained after the operating state transition of the CPU, back up these values in the start values of the data block.
Specify the initialization value for the Output parameter at the StartMode tag.
During the first call of RampFunction after the

- Operating state transition of the CPU

or

- Execution of "Load start values as actual values" (only with "All values" option, not with "Only setpoints" option)

the initialization value is output at the Output parameter.
For subsequent calls, RampFunction calculates the output value, starting from this initialization value, based on the input value and the slew rate limits.
The following table shows the dependency between the StartMode tag and the Output parameter. The values in the Output column are output at the Output parameter after the operating state transition of the CPU.

StartMode	Output	Example
0	Value of the Input parameter	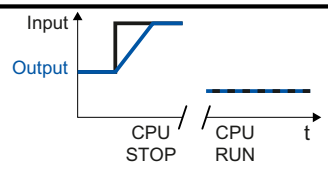
1	Value of the SubstituteOutput parameter	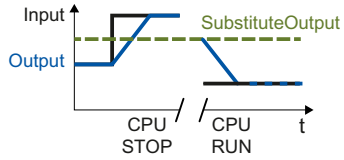
2	Remains unchanged. Output parameter is retentive.	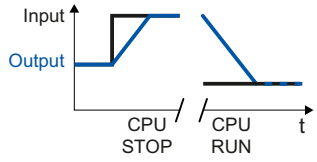
3	0.0	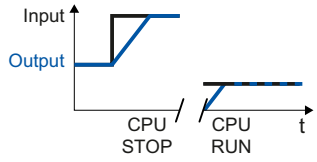

StartMode	Output	Example
4	Value of the LowerLimit tag	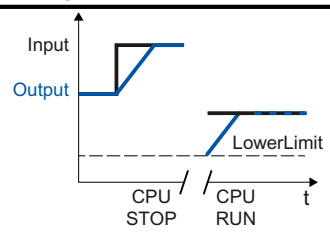
5	Value of the UpperLimit tag	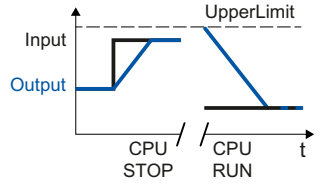

The following applies in addition for all values of the StartMode tag:

- When the values of the UpperLimit and LowerLimit tags are valid, the initialization value is limited to the value range of these tags. Only then is the initialization value output at the Output parameter.
- If the initialization value is not a valid REAL value, the substitute output value is output at the Output parameter. The substitute output value is configured by the ErrorMode tag. The substitute output value is limited by the value range of the tags UpperLimit and LowerLimit. If the substitute output value is also not a valid REAL value, 0.0 is output at the Output parameter. For subsequent calls, the instruction calculates the output value starting from this substitute output value.
- The StartMode tag is only effective when the Reset = FALSE parameter is set at the first call of the instruction and at the same time no error with error message ErrorBits ≥ 16#0002_0000 is pending. If the Reset = TRUE parameter is set, the value of the SubstituteOutput parameter is output at the Output parameter. If an error is pending with ErrorBits ≥ 16#0002_0000, the substitute output value that is configured at the ErrorMode tag is output at the Output parameter.

Reaction to error

The RampFunction instruction detects different errors that can occur during the calculation of the output value. The result of this calculation can be output at the output despite a pending error. If an error prevents correct calculation of the output value, a substitute output value is output at the output.

Specify the substitute output value that is output if an error occurs that prevents correct calculation of the output value at the ErrorMode tag.

The following table shows the dependency between the ErrorMode tag and the substitute output value that is output by the RampFunction at the Output parameter:

ErrorMode	Output
0	Value of the Input parameter
1	Value of the SubstituteOutput parameter
2	The last valid output value at the Output parameter

ErrorMode	Output
3	0.0
4	Value of the LowerLimit tag
5	Value of the UpperLimit tag

The following applies in addition for all values of the ErrorMode tag:

- If the substitute output value is not a valid REAL value, 0.0 is output as output value.
- When the values of the UpperLimit and LowerLimit tags are valid, the substitute output value is limited to the value range of these tags. Only then is the substitute output value output at the Output parameter.
- The ErrorMode tag is only effective when the Reset = FALSE parameter is set. If the Reset = TRUE parameter is set, the value of the SubstituteOutput parameter is output at the Output parameter.
- If an error is pending that prevents correct calculation of the output value, RampFunction changes at the Output parameter from the calculated output value to the substitute output value. A jump of the output value can occur, depending on the value of the ErrorMode tag.

The Error parameter indicates if an error is pending. When the error is no longer pending, Error is set to FALSE. The ErrorBits parameter shows which errors have occurred. ErrorBits is retentive and is reset only by a positive edge at the Reset or ErrorAck parameter.

10.7.3 RampFunction mode of operation

Limiting the slew rate

You can configure four limits for the slew rate of the input signal. The following factors determine which limit is currently in effect:

- Sign of the output value at the Output parameter
- Change of direction of the absolute value of the output value at the Output parameter

The following table shows the effective tags for the slew rate limit depending on the Output parameter:

Output	Effective tag
Output ≥ 0 and |Output| rising	PositiveRisingSlewRate
Output ≥ 0 and |Output| falling	PositiveFallingSlewRate
Output < 0 and |Output| rising	NegativeRisingSlewRate
Output < 0 and |Output| falling	NegativeFallingSlewRate

The absolute value of the slew rate limits defines the maximum change of the output value per second.

Example:

The following scenario applies for the example:

- PositiveRisingSlewRate = 10.0
- Call time of RampFunction = 0.1 s
- Input > Output ≥ 0.0

Result:

The output value Output increases by 1.0 per call (10.0 per second) until the value at the Input parameter has been reached.

To disable the slew rate limit for one or more areas, set the corresponding tag to the value 3.402823e+38.

When the output value Output is currently limited by a slew rate limit, RampFunction sets the associated output bit to TRUE:

- PositiveRisingSlewRate_Active
- PositiveFallingSlewRate_Active
- NegativeRisingSlewRate_Active
- NegativeFallingSlewRate_Active

When the Reset parameter is set to TRUE, the slew rate limits are not in effect. This means jumps at the SubstituteOutput parameter result in jumps at the Output parameter.

RampFunction checks whether the following conditions for the tags PositiveRisingSlewRate, PositiveFallingSlewRate, NegativeRisingSlewRate and NegativeFallingSlewRate are met for each call:

- Values are within the permitted value range greater than 0.0 up to 3.402823e+38
- Values are valid REAL values (≠ NaN e.g. 16#7FFF_FFFF)

If one or more conditions are not met, the substitute output value is output at the Output parameter. A corresponding error message is output at the ErrorBits parameter.

Limiting the output value

The output value Output is always limited to the value range of the tags UpperLimit and LowerLimit as long as these tags have valid values.

When the output value Output is currently limited by this value range, RampFunction sets the associated output bit to TRUE:

- UpperLimit_Active
- LowerLimit_Active

The limit of the output value has a higher priority than the limit of the slew rate. Changes of the tags UpperLimit and LowerLimit therefore result in jumps of the output value Output, if this is required to observe the limits of the tags UpperLimit and LowerLimit. The limiting of the slew rate is not taken into account in this case.

Example:

If the UpperLimit is reduced from 100.0 to 80.0 while the values of the parameters Input and Output are 90.0, the output value Output jumps to 80.0. The output value Output jumps to 80.0 regardless whether or not it violates the configured limit for the slew rate.

RampFunction checks whether the following conditions are met for each call:

- LowerLimit < UpperLimit
- LowerLimit and UpperLimit are within the permitted value range from -3.402823e+38 to 3.402823e+38
- LowerLimit and UpperLimit are valid REAL values (≠ NaN e.g. 16#7FFF_FFFF)

If one or more conditions are not met, the substitute output value is output at the Output parameter. A corresponding error message is output at the ErrorBits parameter.

In addition, RampFunction checks for each call whether the output value Output has the permitted value range of a REAL data type from -3.402823e+38 to 3.402823e+38. If the calculation of the output value yields an invalid REAL value, the substitute output value is

output at the Output parameter. You configure the substitute output value at the ErrorMode tag.

Enable behavior EN/ENO

If one of the following conditions is met, enable output ENO is set to FALSE.

- Enable input EN is set to TRUE and the Output parameter is specified by a substitute output value in case of error messages ErrorBits ≥ 16#0001_0000.
- Enable input EN is set to FALSE.

Otherwise, the enable output ENO is set to TRUE.

Measuring the cycle time automatically

To calculate the slew rate of the output value RampFunction needs the time that has expired since the last call of RampFunction.

By default, the cycle time is measured automatically and output as of the second call at the CycleTime.Value tag. RampFunction measures the cycle time for each call of the instruction and can therefore be used in non-isochronous call cycles, e.g. in OB1.

Note that conditional calls of the instruction, active breakpoints, or the loading of snapshots as actual values during automatic measurement of the cycle time will extend the cycle time value.

If measurement of the cycle time returns no valid result, RampFunction calculates the current output value with the last valid cycle time. In addition, RampFunction outputs an error message at the ErrorBits parameter.

When you disable automatic measurement of the cycle time by setting the CycleTime.EnableMeasurement tag = FALSE, you must enter the cycle time manually at the CycleTime.Value tag. RampFunction checks the CycleTime.Value tag for validity at each call.

Automatic measurement of the cycle time with breakpoints

When breakpoints are active between two calls of RampFunction, automatic measurement of the cycle time results in the actual time that has elapsed between two calls. When one breakpoint is active, the CPU is in HOLD operating state.

NOTE

The active breakpoints extend the time period between two calls of RampFunction.

The longer the time period between two calls, the greater the maximum permitted change of the output value at the Output parameter.

Example:

The following scenario applies for the example:

- PositiveRisingSlewRate = 10.0
- Call time of RampFunction = 0.1 s
- Input > Output ≥ 0.0

Result without breakpoints:

The output value Output increases by 1.0 per call until the value at the Input parameter has been reached.

Result with an active breakpoint of ten seconds:
With the next call, the output value Output increases by 100.0.
If you do not need the calculation of the output value based on the actual time with active breakpoints, follow these steps:

- Disable automatic measurement of the cycle time by setting the tag CycleTime.EnableMeasurement = FALSE.
- Enter the cycle time manually at the CycleTime.Value tag.

10.7.4 RampFunction input parameters

Parameter	Data type	Default	Description
Input	REAL	0.0	Input value
SubstituteOutput	REAL	0.0	SubstituteOutput is used as the substitute output value when • Reset = TRUE or • An error with error message ErrorBits ≥ 16#0001_0000 prevents correct calculation of the output value, and the configured value of ErrorMode is 1.
ErrorAck	BOOL	FALSE	Deletes the error messages • Edge FALSE -> TRUE ErrorBits is reset
Reset	BOOL	FALSE	Performs a restart of the instruction • Edge FALSE -> TRUE ErrorBits is reset. • As long as Reset is set to TRUE, the substitute output value SubstituteOutput is output at the output. • As long as Reset is set to FALSE, the calculation of the output value is performed.

10.7.5 RampFunction output parameters

Parameter	Data type	Default	Description
Output	REAL	0.0	Output value
PositiveRisingSlewRate_Active	BOOL	FALSE	When PositiveRisingSlewRate_Active = TRUE, the output value is currently limited by PositiveRisingSlewRate .
PositiveFallingSlewRate_Active	BOOL	FALSE	When PositiveFallingSlewRate_Active = TRUE, the output value is currently limited by PositiveFallingSlewRate.
NegativeRisingSlewRate_Active	BOOL	FALSE	When NegativeRisingSlewRate_Active = TRUE, the output value is currently limited by NegativeRisingSlewRate.
NegativeFallingSlewRate_Active	BOOL	FALSE	When NegativeFallingSlewRate_Active = TRUE, the output value is currently limited by NegativeFallingSlewRate.
UpperLimit_Active	BOOL	FALSE	When UpperLimit_Active = TRUE, the output value is currently limited by UpperLimit.

Parameter	Data type	Default	Description
LowerLimit_Active	BOOL	FALSE	When LowerLimit_Active = TRUE, the output value is currently limited by LowerLimit.
ErrorBits	DWORD	DW#16#0	The ErrorBits parameter (Page 454) shows which error messages are pending. ErrorBits is retentive and is reset at a positive edge at Reset or ErrorAck .
Error	BOOL	FALSE	When Error = TRUE, at least one error is currently pending.

10.7.6 RampFunction static tags

Tag	Data type	Default	Description
PositiveRisingSlewRate	REAL	10.0	Limit for slew rate of the output value per second in positive range with rising absolute value With PositiveRisingSlewRate = 3.402823e+38, this slew rate limit is disabled. Permissible value range: > 0.0
PositiveFallingSlewRate	REAL	10.0	Limit for slew rate of the output value per second in positive range with falling absolute value With PositiveFallingSlewRate = 3.402823e+38, this slew rate limit is disabled. Permissible value range: > 0.0
NegativeRisingSlewRate	REAL	10.0	Limit for slew rate of the output value per second in negative range with rising absolute value With NegativeRisingSlewRate = 3.402823e+38, this slew rate limit is disabled. Permissible value range: > 0.0
NegativeFallingSle-wRate	REAL	10.0	Limit for slew rate of the output value per second in negative range with falling absolute value With NegativeFallingSlewRate = 3.402823e+38, this slew rate limit is disabled. Permissible value range: > 0.0
UpperLimit	REAL	100.0	High limit of output value Permissible value range: > LowerLimit
LowerLimit	REAL	0.0	Low limit of output value Permissible value range: < UpperLimit
ErrorMode	INT	2	Selection of the substitute output value following an error • 0 = Input • 1 = SubstituteOutput • 2 = Last valid output value • 3 = 0.0 • 4 = LowerLimit • 5 = UpperLimit Permissible value range: 0 to 5

Tag	Data type	Default	Description
StartMode	INT	2	Selecting the output value for the first call of the instruction • 0 = Input • 1 = SubstituteOutput • 2 = Last output value • 3 = 0.0 • 4 = LowerLimit • 5 = UpperLimit Permissible value range: 0 to 5
CycleTime	AuxFct_CycleTime	-	Cycle time data
CycleTime.Value	REAL	0.1	Time interval between two calls of the instruction in seconds Permissible value range: > 0.0
CycleTime.EnableMeas-urement	BOOL	TRUE	Automatic measurement of the cycle time • FALSE = Deactivated • TRUE = Activated

10.7.7 ErrorBits parameter

If several errors are pending simultaneously, the values of the ErrorBits are displayed with binary addition. The display of ErrorBits = 16#0000_0003, for example, indicates that the errors 16#0000_0001 and 16#0000_0002 are pending simultaneously.

For RampFunction, the errors output at the ErrorBits parameter are divided into two categories:

- Errors with error messages ErrorBits < 16#0001_0000
- Errors with error messages ErrorBits ≥ 16#0001_0000

Errors with error messages ErrorBits < 16#0001_0000

If one or more errors with error messages ErrorBits < 16#0001_0000 are pending, RampFunction reacts as follows:

- The output value is determined as follows despite this error:
  - When Reset = FALSE, output value calculation
  - When Reset = TRUE, output of SubstituteOutput
- The output parameter Error is set.
- The enable output ENO is not changed.

The output parameter Error is deleted as soon as there are no longer any errors.

ErrorBits (DW#16#...)	Description
0000_0000	No error is pending.
0000_0002	**Cause of error:** The measurement of the cycle time yields in an invalid value while the output value is being calculated (Reset = FALSE). **Response to error:** If a valid value of the cycle time has already been measured, RampFunction calculates the output value based on the last value of the CycleTime.Value tag. If no valid value of the cycle time was previously measured, RampFunction still outputs the output value configured with the StartMode tag at the Output parameter.

Errors with error messages ErrorBits ≥ 16#0001_0000

If one or more errors with error messages ErrorBits ≥ 16#0001_0000 are pending, RampFunction reacts as follows:

- The output value cannot be determined as expected. The substitute output value is output instead.
- The output parameter Error is set.
- The enable output ENO is set to FALSE.
- The output value limit remains active as long as the tags LowerLimit and UpperLimit have valid values.
- The slew rate limit is no longer active. Jumps at the output value can occur in one of the following scenarios:
  - When the error is detected, RampFunction switches from the calculated output value to the replacement output value. Whether a jump occurs depends on the value of the tag ErrorMode.
  - The substitute output value is changed while it is active.

As soon as there are no longer errors with error messages ErrorBits ≥ 16#0001_0000, RampFunction reacts as follows:

- The output value is determined as follows:
  - When Reset = FALSE, output value calculation
  - When Reset = TRUE, output of SubstituteOutput
- The enable output ENO is set to TRUE.

The output parameter Error is deleted as soon as there are no longer any errors.

<table>
<tr><th>ErrorBits (DW#16#...)</th><th colspan="3">Description</th></tr>
<tr><td rowspan="6">0001_0000</td><td colspan="3">Cause of error:
The SubstituteOutput parameter or a different tag that is being used as output value has no valid REAL value.
Response to error:
The output is set to 0.0 and limited by the tags LowerLimit and UpperLimit.
Solution:
Make sure that the tag used as output value is a valid REAL value (≠ NaN e.g. 16#7FFF_FFFF). The tag that is used as output value depends on Reset and ErrorMode:</td></tr>
<tr><td>Reset</td><td>ErrorMode</td><td>Output value</td></tr>
<tr><td>FALSE</td><td>0</td><td>Input</td></tr>
<tr><td>FALSE</td><td>1</td><td>SubstituteOutput</td></tr>
<tr><td>FALSE</td><td>4</td><td>LowerLimit</td></tr>
<tr><td>FALSE</td><td>5</td><td>UpperLimit</td></tr>
<tr><td>TRUE</td><td>-</td><td>SubstituteOutput</td></tr>
<tr><td>0002_0000</td><td colspan="3">Cause of error:
The Input parameter has no valid REAL value while the calculation of the output value is being performed (Reset = FALSE).
Response to error:
The substitute output value is output at the Output parameter that is configured at the ErrorMode tag and is limited by the tags UpperLimit and LowerLimit.
When ErrorMode = 0, 0.0 is used as output value.
Solution:</td></tr>
</table>

ErrorBits (DW#16#...)	Description
	Make sure that the parameter Input is a valid REAL value (≠ NaN e.g. 16#7FFF_FFFF).
0004_0000	**Cause of error:** The calculation of the output value yields an invalid REAL value for the Output parameter. **Response to error:** The substitute output value is output at the Output parameter that is configured at the ErrorMode tag and is limited by the tags UpperLimit and LowerLimit. **Solution:** Check all tags involved in the calculation of the output value: • Input • PositiveRisingSlewRate • PositiveFallingSlewRate • NegativeRisingSlewRate • NegativeFallingSlewRate • CycleTime.Value These tags have valid values. The calculation of the output value fails in this combination of tags.
0008_0000	**Cause of error:** The LowerLimit or UpperLimit tag has an invalid value. **Response to error:** The following value is output at the Output parameter, depending on the Reset parameter: • Reset = FALSE The substitute output value that is configured at the ErrorMode tag is output at the Output parameter. • Reset = TRUE The value of the SubstituteOutput parameter is output at the Output parameter. In both cases, the Ouput parameter is limited to the value range of the REAL data type from -3.402823e+38 to 3.402823e+38. **Solution:** Ensure that the following conditions are met: 1. LowerLimit < UpperLimit 2. LowerLimit and UpperLimit are within the permitted value range from -3.402823e+38 to 3.402823e+38 3. LowerLimit and UpperLimit are valid REAL values (≠ NaN e.g. 16#7FFF_FFFF)
0010_0000	**Cause of error:** At least one of the following tags has invalid values while the calculation of the output value is being performed (Reset = FALSE): 1. PositiveRisingSlewRate 2. PositiveFallingSlewRate 3. NegativeRisingSlewRate 4. NegativeFallingSlewRate **Response to error:** The substitute output value is output at the Output parameter that is configured at the ErrorMode tag and is limited by the tags UpperLimit and LowerLimit. **Solution:** Ensure that the following conditions are met for all four tags listed above: • The values are within the permitted value range greater than 0.0 up to 3.402823e+38 • The values are valid REAL values (≠ NaN e.g. 16#7FFF_FFFF)

ErrorBits (DW#16#...)	Description
0020_0000	**Cause of error:** The tag (configured with StartMode) for the initialization of the Output parameter at the first call of the instruction does not have a valid REAL value. **Response to error:** The substitute output value is output with the first call of the instruction at the Output parameter that is configured at the ErrorMode tag and is limited by the tags LowerLimit and UpperLimit. For subsequent calls, RampFunction calculates the output value starting from this substitute output value. **Solution:** Make sure that the tag for initializing the parameter Output is a valid REAL value (≠ NaN e.g. 16#7FFF_FFFF). When Reset = FALSE is set, the initialization takes effect with the first call of the instruction after the operating state transition of the CPU from STOP to RUN. The tag that is used for the initialization of the Output parameter depends on StartMode: • StartMode = 1: Substitute Output • StartMode = 2: Output
0040_0000	**Cause of error:** The CycleTime.Value tag has an invalid value, while the calculation of the output value is being performed (Reset = FALSE). **Response to error:** The substitute output value is output at the Output parameter that is configured at the ErrorMode tag and is limited by the tags UpperLimit and LowerLimit. **Solution:** Ensure that the following conditions are met: • 0.0 < CycleTime.Value ≤ 3.402823e+38 • CycleTime.Value is a valid REAL value (≠ NaN e.g. 16#7FFF_FFFF) **Additional information:** To automatically calculate the value of the CycleTime.Value tag, set the CycleTime.EnableMeasurement tag to TRUE.

10.8 RampSoak

10.8.1 Compatibility with CPU and FW

The following table shows which version of RampSoak can be used on which CPU:

CPU	FW	RampSoak
S7-1200	V4.2 or higher	V1.0
S7-1500-based CPUs	V2.0 or higher	V1.0

10.8.2 Description of RampSoak

Description

You can use the RampSoak instruction to generate an output value that follows a configurable profile on a time-dependent basis. Every point of this profile has a target value and a time value. When the profile is executed, the target value of the current point is reached within the time value.

The following figure shows a profile with 4 points:

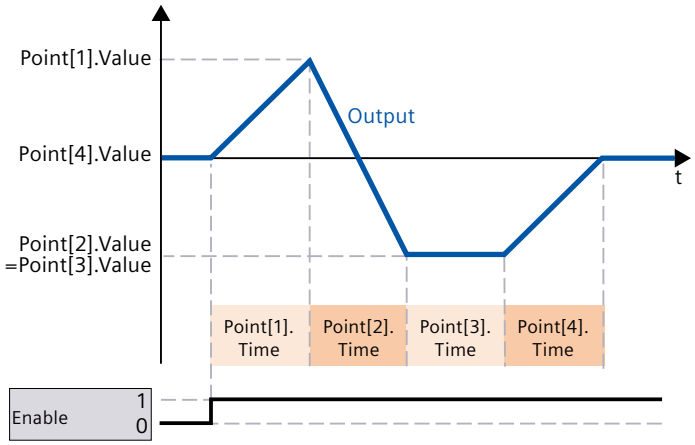

The RampSoak instruction can be used, for example, to provide a setpoint value profile for regulating a temperature process.

Calculation of the output value

The output value is calculated with an interpolation between the current point and the previous point according to the following formula:

$$\text{Output}(t) = \text{Point}[i].\text{Value} - \frac{\text{RemainingTime_Point}}{\text{Point}[i].\text{Time}} (\text{Point}[i].\text{Value} - \text{Point}[i-1].\text{Value})$$

The *i* represents the value of the CurrentPoint parameter.
On the basis of the time that has elapsed, a determination is made as to which points from the profile are currently used for calculating the output value.

Call

In an OB or FC, RampSoak is called as a single-instance DB. In a function block, RampSoak can be called as a single-instance DB, as a multi-instance DB, and as a parameter instance DB.
No technology object is created when the instruction is called. No parameter assignment interface or commissioning interface is available. You assign the RampSoak parameters directly using the instance DB and commission RampSoak using a watch table of the user program in the CPU or HMI.

Startup

The tags in the static area of RampSoak and hence also the profile data in the UserData and WorkingData structures are not retentive. These tags are initialized with the start values after each operating state transition of the CPU from STOP to RUN.
If you change the actual values in the UserData structure in online mode and these values are to be retained after the operating state transition of the CPU from STOP to RUN, back up these values in the start values of the data block.

At the first call of the RampSoak instruction after the operating state transition of the CPU from STOP to RUN, the data in the UserData structure is automatically validated. If the validation is successful, the data is transferred to the WorkingData structure.
With the tag StartMode (Page 465), you can define the starting behavior of the RampSoak instruction at the first call after the operating state transition of the CPU from STOP to RUN.

Reaction to error

If the output value cannot be correctly calculated, the RampSoak instruction instead outputs a substitute output value and an error with an error message ErrorBits >= 16#0002_0000. You can use the tag ErrorMode (Page 475) to define the substitute output value as follows:

Error-Mode	Output
0	Value of the WorkingData.StartValue tag Make sure that the profile data in UserData is validated with the Validate parameter and accepted after WorkingData. If the profile data has never been verified and accepted, the default value 0.0 of WorkingData.StartValue is used.
1	Value of the SubstituteOutput parameter
2	The last valid output value of the profile execution 0.0, if no valid output value of the profile execution is available.
3	0.0

The following applies in addition for all values of the ErrorMode tag:

- If the substitute output value is not a valid REAL value, 0.0 is output as output value.
- The substitute output value is limited to the value range -3.402823e+38 .. +3.402823e+38 of the data type REAL. Only then is the substitute output value output at the Output parameter.
- The ErrorMode tag is only effective when the Reset = FALSE parameter is set. If the Reset = TRUE parameter is set, the value of the SubstituteOutput parameter or 0.0 is output at the Output parameter.

The Error parameter indicates if an error is pending. If the error is no longer pending, Error is set to FALSE. The ErrorBits parameter shows which errors have occurred. ErrorBits is retentive and is reset only by a positive edge at the Reset or ErrorAck parameter.

10.8.3 Operating principle RampSoak

10.8.3.1 Configuring and validating profile data

Configuring profile data

You can configure the profile in the static structure UserData.

It contains the following elements:

- NumberOfUsedPoints
  Number of points used for the profile.
- StartValue
  Optional output value when the profile execution is started (Page 465), stopped (Page 469) or ended.
- Point
  The array with 50 elements contains value pairs of the points Point[i].Value and Point[i].Time:
  – Point[i].Value
    The output value is changed to this value in steps as long as the point is active, and reaches this value within the time Point[i].Time.
  – Point[i].Time
    This value defines the duration of the point in seconds.

The following figure shows a profile with 6 points. Point number 5 has a duration of 0 seconds, which results in skipping of the output value.

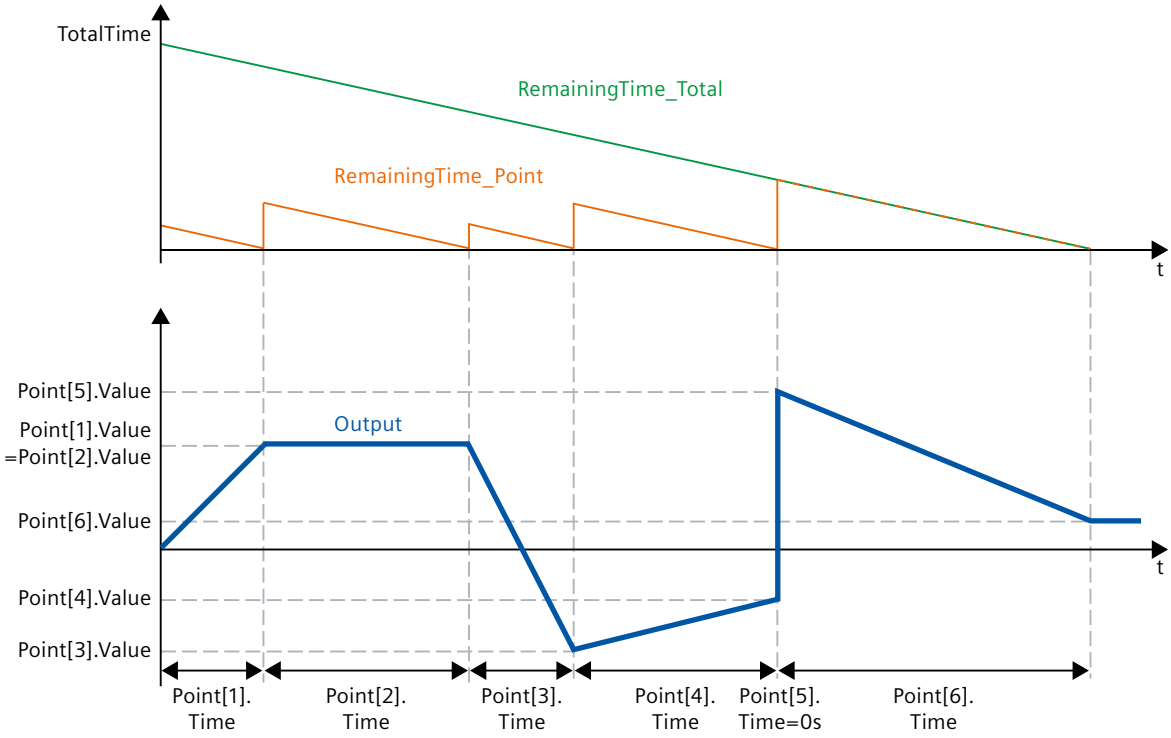

Validating the profile data

Before the profile data is used for the profile execution, a validation of the profile data in the UserData structure is necessary.

The validation is triggered as follows:

- When you set the Validate parameter to TRUE.
- When the parameter Enable is set to TRUE for the first time after the operating state change of the CPU from STOP to RUN and no validation of the profile data has been carried out previously.

The following conditions are checked for the profile data in the UserData structure:

- 1 ≤ UserData.NumberOfUsedPoints ≤ 50
- NextPoint ≤ UserData.NumberOfUsedPoints
- When the profile execution is activated (Enable = TRUE):
  - CurrentPoint ≤ UserData.NumberOfUsedPoints
- -3.402823e+38 ≤ UserData.StartValue ≤ 3.402823e+38
- -3.402823e+38 ≤ UserData.Point[i].Value ≤ 3.402823e+38 with index *i* = 1..UserData.NumberOfUsedPoints
- 0.0 ≤ UserData.Point[i].Time ≤ 3.402823e+38 with index *i* = 1..UserData.NumberOfUsedPoints
- 0.0 < UserData.Point[1].Time + UserData.Point[2].Time +...+ UserData.Point[UserData.NumberOfUsedPoints].Time ≤ 3.402823e+38

Effects of the profile data validation and possible error messages

When the conditions are fulfilled, the new profile data in the UserData structure is transferred to the WorkingData structure and used for the profile execution. The TotalTime parameter is updated. The RemainingTime_Total parameter is updated when the profile is executed.

NOTE

The value and duration of the current point are temporarily stored and also remain unchanged after a successful validation of the new profile data until the current point is completed. The new profile data is used from the start of the next point.

If one of the conditions is not fulfilled, the existing profile data in the WorkingData structure remains unchanged. An error with the error message ErrorBits = 16#0000_0004 (Page 475) is pending.

If the Enable parameter or the Next parameter is set to TRUE, but there is no valid profile data present in the WorkingData structure, then an error with the error message ErrorBits = 16#0008_0000 (Page 475) will be pending.

NOTE

If you do not change the default values in the UserData structure, the validation of the profile data fails.

NOTE

You cannot change the offline values of the WorkingData structure. If you want to change the profile data, first edit the UserData structure and then set parameter Validate = TRUE.

10.8.3.2 Executing a profile

To execute a profile and calculate the output value, you need validated profile data and a positive edge at the Enable parameter.

Starting and stopping profile execution - Enable parameter

You can start the profile execution and calculation of the output value with a positive edge at the Enable parameter. The profile execution starts with the point that is specified at the in-out parameter NextPoint.

You can stop the profile execution with a negative edge at the parameter Enable.

If the profile is stopped or completely run, the in-out parameter NextPoint is automatically set to 1. Thus, the next profile execution starts from the first point of the profile if the in-out parameter NextPoint is not changed.

You can configure the behavior at the start, stop and completion of the profile execution with the static tags StartMode (Page 465) and StopMode (Page 469).

The profile execution only determines the output value at the Output parameter, if Reset = FALSE. If RESET = TRUE is set, then an activated profile execution is continued in the background.

The following graphic shows how the input parameters Enable, Reset and Hold determine the execution of the profile:

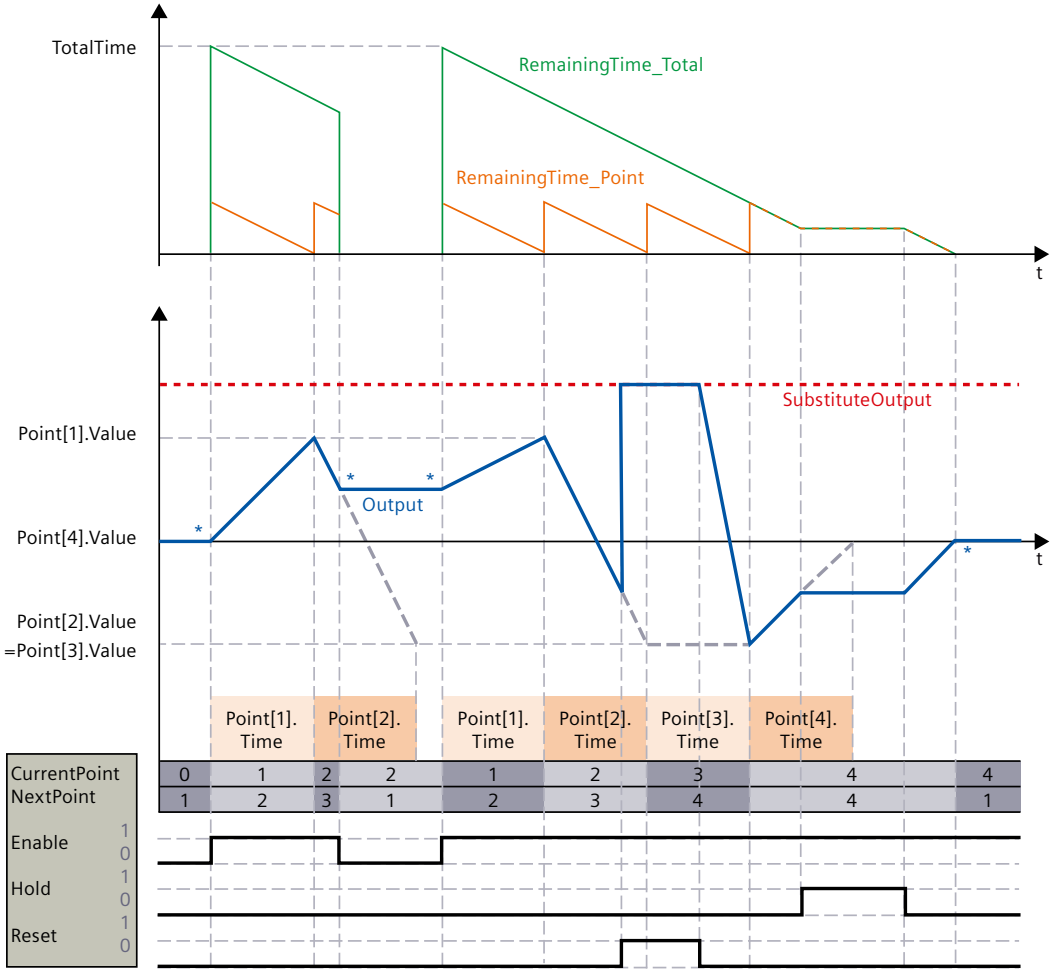

In this example, the starting and stopping behavior of the profile execution (marked with an *) is shown with the default StartMode = StopMode = 2 (start from last output value / keep last output value).

Holding profile execution - Hold parameter

You can use the parameter Hold = TRUE to pause the activated profile execution.

The Hold = TRUE parameter has the following effect:

- The Output, CurrentPoint, NextPoint, RemainingTime_Total, and RemainingTime_Point parameters remain unchanged.
- An edge at the parameters Enable or Next is delayed and only becomes effective when Hold = FALSE.
- If the Reset parameter changes from TRUE to FALSE, the Hold parameter influences the changes at the Output parameter. You can find more information in the description of the Reset parameter.

The Hold parameter has no effect on the processing of the Validate and ErrorAck parameters.

Overwrite output value - Reset parameter

With the parameter Reset = TRUE, you can reset the instruction and overwrite the output value at the Output parameter with the value of the SubstituteOutput parameter.

An activated profile execution is continued in the background. Using the parameters Enable, Hold and Next continues to be possible.

If the profile execution is still active (Enable=TRUE and the profile not yet fully run through) and the parameter Reset changes from TRUE to FALSE, the behavior depends on the Hold parameter:

- Hold = FALSE
  The Output parameter is changed in increments from the SubstituteOutput to the value of the current point and reaches it within the remaining time of the current point (RemainingTime_Point).
- Hold = TRUE
  The Output parameter jumps from the SubstituteOutput to the value of the paused profile execution.

If the profile execution is no longer active (Enable=FALSE or the profile fully run through) and the Reset parameter changes from TRUE to FALSE, the Output parameter jumps to the last value of the profile execution.

Continuing the profile execution with a certain point - Next parameter

With a positive edge at the Next parameter, you can continue the profile execution with Point[NextPoint].

When the profile execution is deactivated, the parameter Next = TRUE has the following effect:

- The Output parameter assumes the value of Point[NextPoint].Value.
- The CurrentPoint parameter assumes the value of NextPoint.
- The NextPoint parameter is increased. If NextPoint is the last point of the profile, then the value of NextPoint becomes 1.

When the profile execution is activated, the parameter Next = TRUE has the following effect:

- The Output parameter is changed in increments from its current value to the value of Point[NextPoint].Value and reaches it during Point[NextPoint].Time.
- The RemainingTime_Point parameter assumes the value of Point[NextPoint].Time.
- The RemainingTime_Total parameter is updated accordingly.
- The CurrentPoint parameter assumes the value of NextPoint.
- The NextPoint parameter is increased. If NextPoint is the last point of the profile, then the new value is dependent on StopMode. You can find more information in the description of the NextPoint parameter.

NOTE

At the first call of the RampSoak instruction after the operating state transition of the CPU from STOP to RUN, the behavior is determined by StartMode. The Next parameter is only effective with the following calls.

An example profile with the Next parameter is available in the following section "Continuing the profile execution with a certain point - NextPoint parameter".

Continuing the profile execution with a certain point - NextPoint parameter

The NextPoint parameter determines with which point the profile execution is continued.
If the current point has been completed, the RampSoak instruction automatically updates the value of the NextPoint parameter to the next point of the profile.
Through a change in the value of the NextPoint parameter, you can determine that the profile execution should be continued with another point.

The NextPoint parameter can influence the behavior of the profile execution in the following manner, if it is deactivated:

- If there is a positive edge at parameter Next then parameter Output assumes the value of Point[NextPoint].Value.
- When the profile execution is started, NextPoint represents the first CurrentPoint. The Output parameter is changed in increments from the value that is defined by StartMode to the value of Point[NextPoint].Value and reaches it during Point[NextPoint].Time.

The NextPoint parameter can influence the behavior of the profile execution in the following manner, if it is activated:

- Without positive edge at parameter Next:
  When the current point has been completed, the process continues with NextPoint.
- With positive edge at parameter Next:
  The process continues with NextPoint.

While the last point of the profile execution is active (CurrentPoint = WorkingData.NumberOfUsedPoints), StopMode determines, in the following manner, how the value of NextPoint is updated automatically:

- StopMode <> 4
  While the last point is active: NextPoint = CurrentPoint = WorkingData.NumberOfUsedPoints.
  The profile execution finished after the last point.
- StopMode = 4
  While the last point is active: NextPoint = 1.
  The profile execution restarts after the last point.

If the profile is stopped or completely run, the in-out parameter NextPoint is automatically set to 1. Thus, the next profile execution starts from the first point of the profile if the in-out parameter NextPoint is not changed.
The following graphic shows how the Next and NextPoint parameters determine the profile execution: If the automatic change of NextPoint is subsequently overwritten by a user input, this is marked with →:

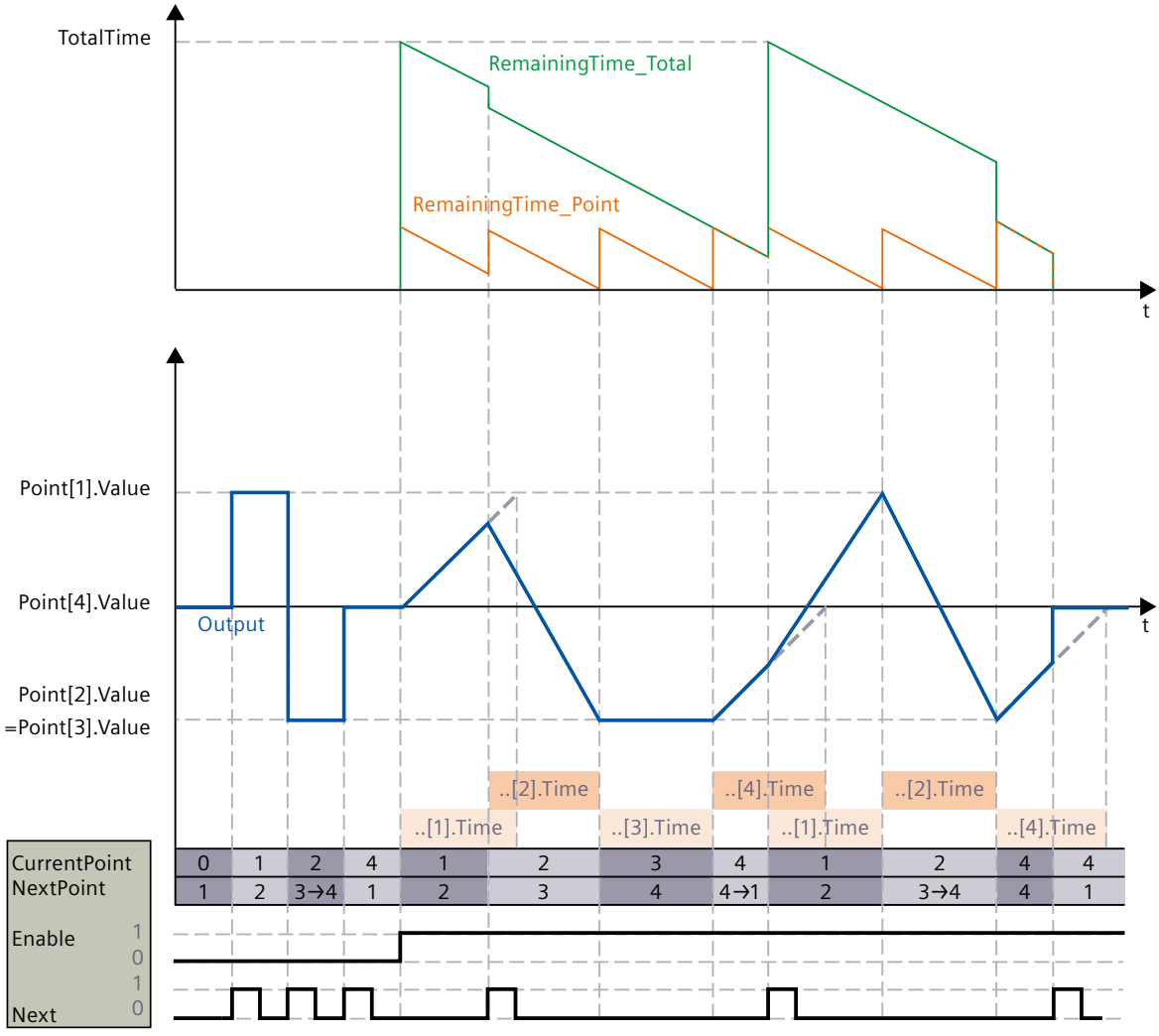

In this example, the stopping behavior of the profile execution is shown with StopMode <> 4.

10.8.3.3 Configuring the starting behavior - static tag StartMode

With the StartMode tag, you can define the behavior of the RampSoak instruction in the following cases.

- When the RampSoak instruction is executed after the operating state transition of the CPU from STOP to RUN (restart).
- The profile execution is started.
- Execution of "Load start values as actual values" (only with "All values" option, not with "Only setpoints" option).

The following settings of the StartMode tag are possible:

- StartMode = 0
  The Output parameter assumes the value of WorkingData.StartValue.
  The profile execution starts from this value if, after a restart of the CPU, Enable = TRUE is set or if Enable changes from FALSE to TRUE.
  The following graphic shows the start of the profile execution and restart of the CPU with StartMode = 0:

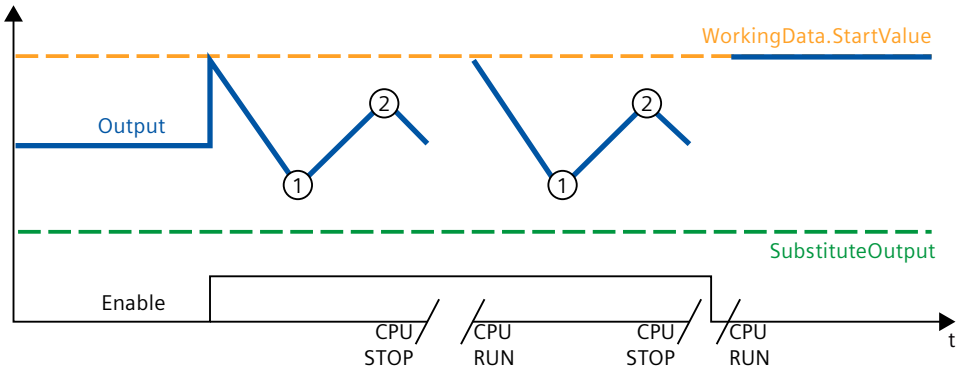

NOTE

With this setting, the profile data must be validated with the first call of the instruction after the CPU restart and assumed by the WorkingData. Otherwise, the default value 0.0 of WorkingData.StartValue is used.

- StartMode = 1
  The Output parameter assumes the value of SubstituteOutput.
  The profile execution starts from this value if, after a restart of the CPU, Enable = TRUE is set or if Enable changes from FALSE to TRUE.
  The following graphic shows the start of the profile execution and restart of the CPU with StartMode = 1:

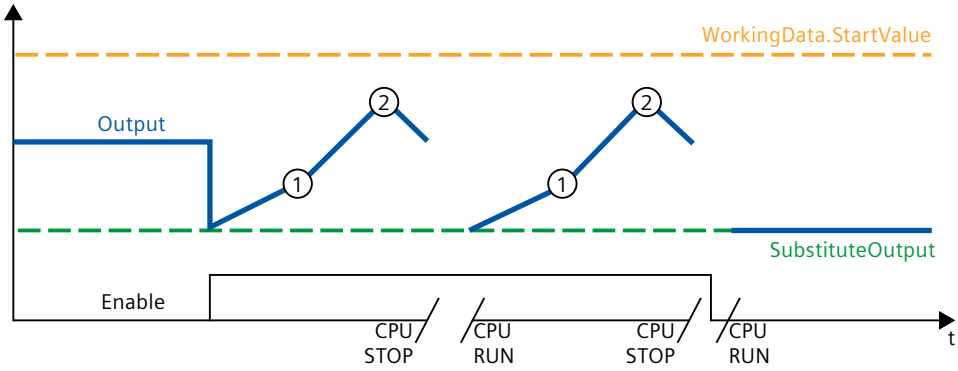

- StartMode = 2
  The Output parameter remains unchanged.
  The profile execution starts from the unchanged value of the Output parameter, if, after a restart of the CPU, Enable = TRUE is set or if Enable changes from FALSE to TRUE.
  The following graphic shows the start of the profile execution and restart of the CPU with StartMode = 2:

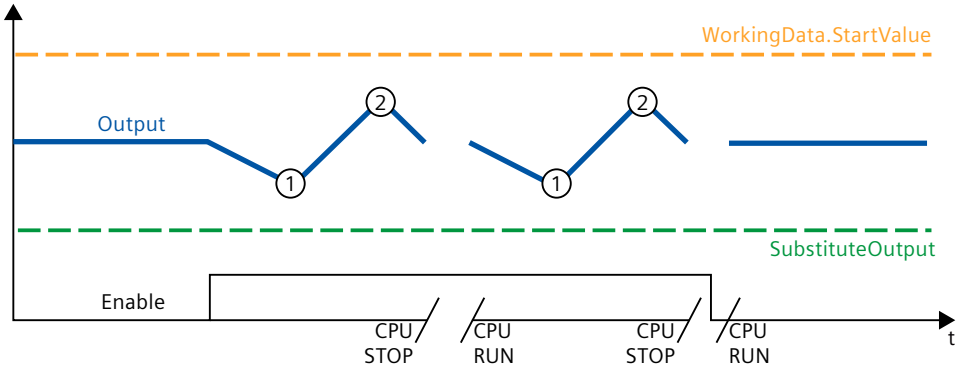

- StartMode = 3
  The Output parameter adopts the value 0.0.
  The profile execution starts from this value if, after a restart of the CPU, Enable = TRUE is set or if Enable changes from FALSE to TRUE.
  The following graphic shows the start of the profile execution and restart of the CPU with StartMode = 3:

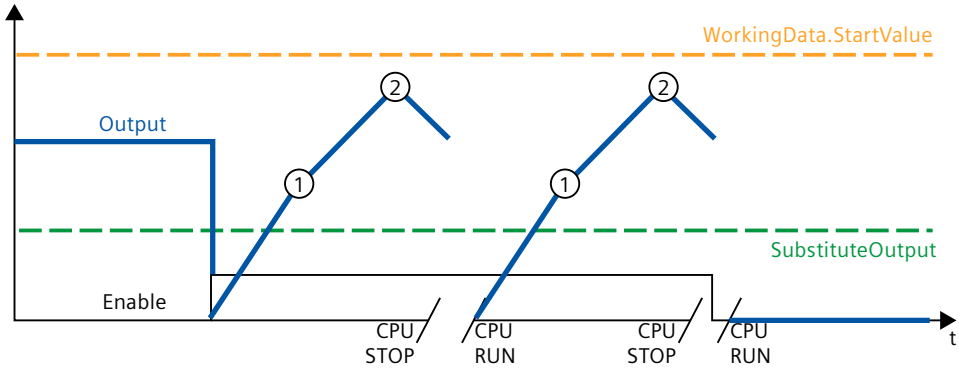

- StartMode = 4
  The Output parameter remains unchanged.
  The profile execution continues if, after the restart of the CPU, Enable = TRUE remains set and the profile execution was activated before the restart.
  The profile execution starts from the unchanged value of the Output parameter, if, after a restart of the CPU, Enable = TRUE is set and the profile execution was deactivated before the restart or if Enable changes from FALSE to TRUE.
  The following graphic shows the start of the profile execution and restart of the CPU with StartMode = 4:

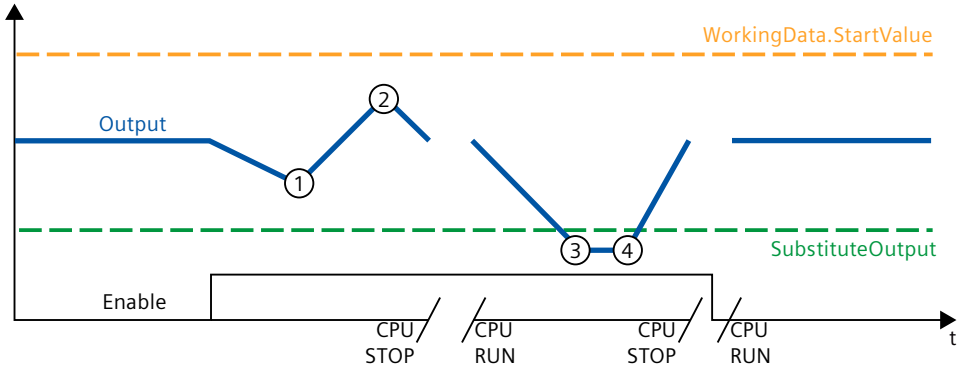

The following applies in addition for all values of the StartMode tag:

- The Enable parameter, the StartMode tag and the profile data in the UserData and WorkingData structures are not retentive. These tags are initialized with the start values after each operating state transition of the CPU from STOP to RUN. Make sure that at the first call of the RampSoak instruction, after the operating status transition of the CPU from STOP to RUN, these tags have suitable values to achieve the desired behavior.
- The value selected through StartMode is limited to the value range of the REAL data type. Only then is it output at the Output parameter.

- If the value selected through StartMode is not a valid REAL value, the substitute output value is output at the Output parameter. The substitute output value is configured by means of the ErrorMode tag and is limited to the value range of the REAL data type. If the profile execution is activated, it starts from this substitute output value.
- Only if the parameter Reset = FALSE has been set and, at the same time, there is no error pending with an error message ErrorBits ≥ 16#0002_0000, does the StartMode tag act on the Output parameter. If the Reset = TRUE parameter is set, the value of the SubstituteOutput parameter is output at the Output parameter. If an error with error message ErrorBits ≥ 16#0002_0000 is pending, the substitute output value that is configured at the ErrorMode tag is output at the Output parameter.

10.8.3.4 Configuring the stopping behavior - static tag StopMode

With the StopMode tag, you can define the behavior of the RampSoak instruction in the following cases.

- The profile execution is finished in that the last point has been reached.
- The profile execution is stopped by resetting Enable.

The value that is set through StopMode is used as the output value until a new action, for example the start of the profile execution, is triggered.

The following settings of the StopMode tag are possible:

- StopMode = 0
  The Output parameter assumes the value of WorkingData.StartValue.
  The following graphic shows how the execution of a profile with 5 points is ended and stopped with StopMode = 0:

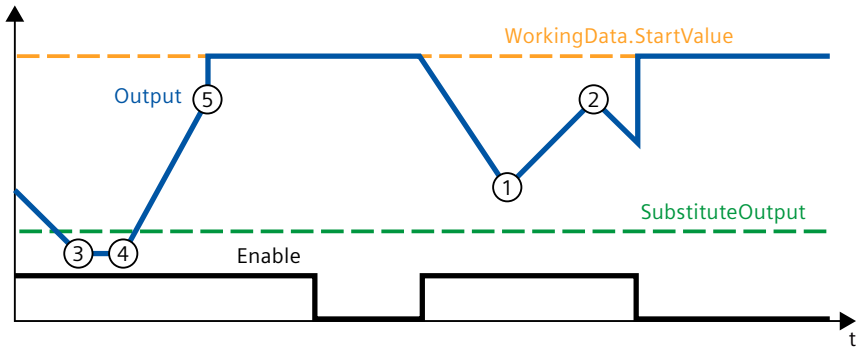

- StopMode = 1
  The Output parameter assumes the value of SubstituteOutput.
  The following graphic shows how the execution of a profile with 5 points is ended and stopped with StopMode = 1:

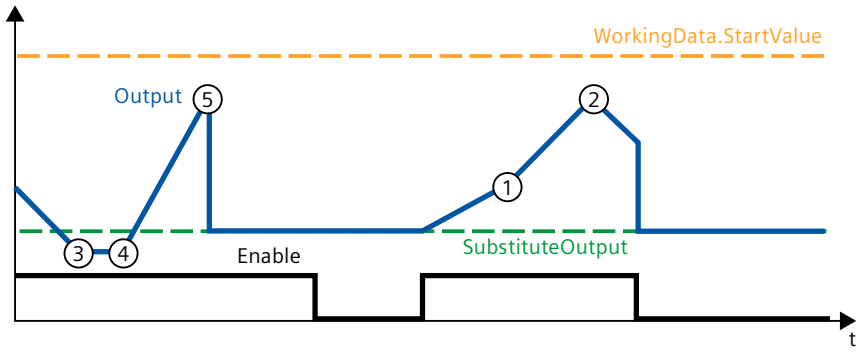

- StopMode = 2
  The Output parameter assumes the last valid value of the profile execution.
  The following graphic shows how the execution of a profile with 5 points is ended and stopped with StopMode = 2:

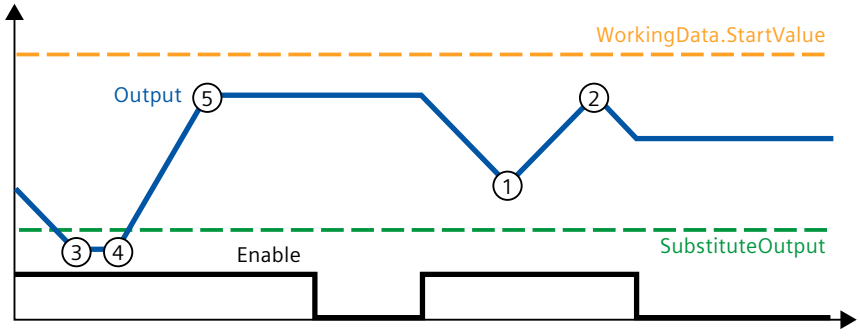

- StopMode = 3
  The Output parameter adopts the value 0.0.
  The following graphic shows how the execution of a profile with 5 points is ended and stopped with StopMode = 3:

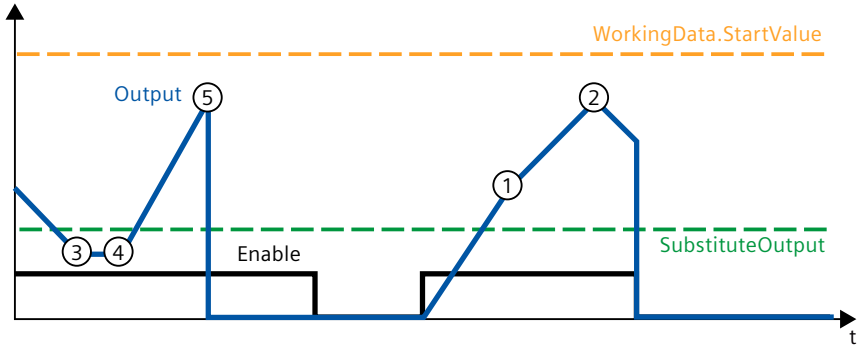

- StopMode = 4
  If the profile execution has ended with the last point, it is automatically restarted and it is continued with WorkingData.Point[1]. As long as Enable is not reset, the profile execution is repeated.
  If the profile execution is stopped with Enable = FALSE, then the Output parameter assumes the last valid value of the profile execution.
  The following graphic shows how the execution of a profile with 5 points is ended and stopped with StopMode = 4:

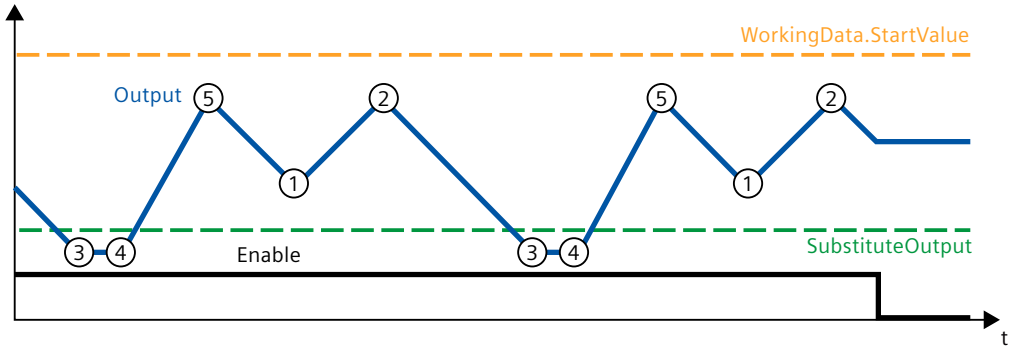

The following applies in addition for all values of the StopMode tag:

- The value selected through StopMode is limited to the value range of the REAL data type. Only then is it output at the Output parameter.
- If the value selected through StopMode is not a valid REAL value, the substitute output value is output at the Output parameter and then retained. The substitute output value is configured by means of the ErrorMode tag and is limited to the value range of the REAL data type.
- Only if the parameter Reset = FALSE has been set and, at the same time, there is no error pending with an error message ErrorBits ≥ 16#0002_0000, does the StopMode tag act on the Output parameter. If the Reset = TRUE parameter is set, the value of the SubstituteOutput parameter is output at the Output parameter. If an error with error message ErrorBits ≥ 16#0002_0000 is pending, the substitute output value that is configured at the ErrorMode tag is output at the Output parameter.

10.8.3.5 Measuring the cycle time

Measuring the cycle time automatically

To calculate the output value, RampSoak needs the time that has expired since the last call of RampSoak.

By default, the cycle time is measured automatically and output as of the second call at the CycleTime.Value tag. RampSoak measures the cycle time for each call of the instruction and can therefore be used in non-isochronous call cycles, e.g. in OB1.

Note that conditional calls of the instruction, active breakpoints, or the loading of snapshots as actual values during automatic measurement of the cycle time will extend the cycle time value.

If measurement of the cycle time does not return a valid result, RampSoak calculates the current output value with the last valid cycle time. In addition, RampSoak outputs an error message at the ErrorBits parameter.

When you disable automatic measurement of the cycle time by setting the CycleTime.EnableMeasurement = FALSE tag, you must enter the cycle time manually at the CycleTime.Value tag. RampSoak checks the CycleTime.Value tag for validity at each call.

Automatic measurement of the cycle time with breakpoints

When breakpoints are active between two calls of RampSoak, automatic measurement of the cycle time gives the actual time that has elapsed between two calls. When one breakpoint is active, the CPU is in the HOLD operating state.

NOTE

The active breakpoints extend the time period between two calls of RampSoak.

The longer the time period between two calls, the greater the change of the output value at the Output parameter. Points can be skipped depending on the elapsed time and the configured profile data.

If you do not need the calculation of the output value based on the actual time with active breakpoints, follow these steps:

- Disable automatic measurement of the cycle time by setting the tag CycleTime.EnableMeasurement = FALSE.
- Enter the cycle time manually for the CycleTime.Value tag.

10.8.3.6 Enable behavior EN/ENO

If one of the following conditions is met, enable output ENO is set to FALSE.

- Enable input EN is set to TRUE and an error with the error message ErrorBits ≥ 16#0001_0000 is pending.
- Enable input EN is set to FALSE.

In all other cases the enable output ENO is set to TRUE.

10.8.4 Input parameter RampSoak

Parameter	Data type	Default	Description
Enable	BOOL	FALSE	The profile execution and calculation of the output value is started with a positive edge at the Enable parameter. The profile execution is stopped with a negative edge at the Enable parameter.
Hold	BOOL	FALSE	If Hold is set to TRUE, the execution of the profile is paused. The output value remains constant.
Next	BOOL	FALSE	With a positive edge at the Next parameter the profile execution is continued with Point[NextPoint].
SubstituteOutput	REAL	0.0	SubstituteOutput is used as a substitute output value when Reset = TRUE or one of the following modes is currently in effect: • ErrorMode = 1 • StartMode = 1 • StopMode = 1

Parameter	Data type	Default	Description
Validate	BOOL	FALSE	If Validate is set to TRUE, the profile data in UserData is checked for validity and transferred to WorkingData.
ErrorAck	BOOL	FALSE	Deletes the error messages • Edge FALSE -> TRUE ErrorBits is reset.
Reset	BOOL	FALSE	Resets the instruction. • Edge FALSE -> TRUE ErrorBits is reset. • As long as Reset is set to TRUE, the substitute output value SubstituteOutput is output at the output. If the profile is executed at the same time, then that process runs in the background. • As long as Reset is set to FALSE, the output value is determined by the profile execution.

10.8.5 Output parameter RampSoak

Parameter	Data type	Default	Description
Output	REAL	0.0	Output value The output value is retentive.
CurrentPoint	INT	0	Number of the point that is currently being used for the profile execution and calculation of the output value.
TotalTime	REAL	0.0	Total time of the profile (summation of the times of all the points used) in seconds
RemainingTi-me_Total	REAL	0.0	Remaining time of the profile in seconds
RemainingTi-me_Point	REAL	0.0	Remaining time of the current point in seconds
ErrorBits	DWORD	16#0	The ErrorBits parameter shows which error messages are present. ErrorBits is retentive and is reset when there is a positive edge at Reset or ErrorAck.
Error	BOOL	FALSE	When Error is set to TRUE, at least one error is currently pending.

See also

ErrorBits parameter (Page 475)

10.8.6 In-out parameter RampSoak

Parameter	Data type	Default	Description
NextPoint	Int	1	Number of the point that will be used next. Permissible value range: 1 to WorkingData.NumberOfUsedPoints

10.8.7 Static tags RampSoak

Tag	Data type	Default	Description
UserData	AuxFct_RampSoak_Profile	-	The profile data is input in the UserData structure. The profile data in the UserData structure can be edited. Changes in this structure affect the execution of the profile only when the validation and copying of the data into the WorkingData structure are initiated.
UserData.NumberOfUsedPoints	INT	0	Number of points of the profile used Permissible value range: 1 to 50
UserData.StartValue	REAL	0.0	StartValue is used as an optional output value if one of the following modes is currently in effect: • ErrorMode = 0 • StartMode = 0 • StopMode = 0
UserData.Point	Array[1..50] of AuxFct_RampSoak_Point	-	Points of the profile
UserData.Point[i].Value	REAL	0.0	Output value of this point
UserData.Point[i].Time	REAL	0.0	Duration of this point in seconds Permissible value range: Point[i].Time ≥ 0.0
WorkingData	AuxFct_RampSoak_Profile	-	The profile data currently in effect is displayed in the WorkingData structure. The profile data in the WorkingData structure cannot be edited.
WorkingData.NumberOfUsedPoints	INT	0	Number of points of the profile used Permissible value range: 1 to 50
WorkingData.StartValue	REAL	0.0	WorkingData.StartValue is used as an optional output value if one of the following modes is currently in effect: • ErrorMode = 0 • StartMode = 0 • StopMode = 0
WorkingData.Point	Array[1..50] of AuxFct_RampSoak_Point	-	Points of the profile
WorkingData.Point[i].Value	REAL	0.0	Output value of this point
WorkingData.Point[i].Time	REAL	0.0	Duration of this point in seconds Permissible value range: Point[i].Time ≥ 0.0
ErrorMode	INT	2	Selection of the substitute output value following an error • 0 = WorkingData.StartValue • 1 = SubstituteOutput • 2 = last valid output value of the profile execution • 3 = 0.0 Permissible value range: 0 to 3 If the value of ErrorMode does not correspond to the valid range of values, then ErrorMode = 2.

Tag	Data type	Default	Description
StartMode	INT	2	Selection of the starting behavior • 0 = WorkingData.StartValue • 1 = SubstituteOutput • 2 = start from the last output value • 3 = 0.0 • 4 = continue from the last output value Permissible value range: 0 to 4 If the value of StartMode does not correspond to the valid range of values, then StartMode = 2.
StopMode		2	Selection of the stopping behavior • 0 = WorkingData.StartValue • 1 = SubstituteOutput • 2 = last valid output value of the profile execution • 3 = 0.0 • 4 = cyclical operation Permissible value range: 0 to 4 If the value of StopMode does not correspond to the valid range of values, then StopMode = 2.
CycleTime	AuxFct_CycleTime	-	Cycle time data
CycleTime.Value	REAL	0.1	Cycle time in seconds (time interval between two calls) Permissible value range: CycleTime.Value > 0.0
Cycle-Time.Enable-Measurement	BOOL	TRUE	Automatic measurement of the cycle time • FALSE = Deactivated • TRUE = Activated

10.8.8 ErrorBits parameter

If several errors are pending simultaneously, the values of the ErrorBits are displayed with binary addition. The display of ErrorBits = 16#0000_0003, for example, indicates that the errors 16#0000_0001 and 16#0000_0002 are pending simultaneously.

With RampSoak, the errors output at the ErrorBits parameter are divided into two categories:

- Errors with error messages ErrorBits < 16#0001_0000
  The output value can be calculated despite the error.
- Errors with error messages ErrorBits ≥ 16#0001_0000
  The error prevents a calculation of the output value. A substitute output value is output.

Errors with error messages ErrorBits < 16#0001_0000

If one or more errors with error messages ErrorBits < 16#0001_0000 is/are pending, RampSoak reacts as follows:

- The output value is determined as follows despite this error:
  - If Reset = FALSE output value calculation through the execution of the profile
  - When Reset = TRUE, output of SubstituteOutput
- The output parameter Error is set.
- The enable output ENO is not changed.

The output parameter Error is deleted as soon as there are no longer any errors.

ErrorBits (DW#16#...)	Description
0000_0000	No error is pending.
0000_0001	**Cause of error and response to error:** The Output parameter was limited to -3.402823e+38 or +3.402823e+38. **Solution:** If ErrorBits < 16#0001_0000 and Reset = FALSE, the output value is limited, while it is determined through StartMode or StopMode. In this case, check the following parameters depending on the set value at the StartMode or StopMode tags: • WorkingData.StartValue • SubstituteOutput When ErrorBits ≥ 16#0001_0000 and Reset = FALSE, the substitute output value is limited on its output. In this case, check the following parameters depending on the set value at the tag ErrorMode: • WorkingData.StartValue • SubstituteOutput When Reset = TRUE, check the SubstituteOutput parameter. **Additional information:** If you want to change the WorkingData.StartValue, first edit the UserData.StartValue and then set the parameter Validate = TRUE. Do not manually change the data of the WorkingData structure.
0000_0002	**Cause of error:** The measurement of the cycle time yields an invalid value while the execution of the profile is activated (Enable = TRUE). **Response to error:** If a valid value of the cycle time has already been measured, RampSoak continues execution of the profile based on this last value of the CycleTime.Value tag. If no valid value of the cycle time was previously measured, RampSoak still outputs the output value configured with the tag StartMode at the Output parameter.
0000_0004	**Cause of error:** One or more tags in the UserData structure have invalid values while the profile data is checked. **Response to error:** The profile data in the UserData structure is not transferred to the WorkingData structure, so the changes made in the UserData structure do not become effective. **Solution:** Ensure that the following conditions are met when the profile data is checked: • 1 ≤ UserData.NumberOfUsedPoints ≤ 50 • -3.402823e+38 ≤ UserData.Point[i].Value ≤ 3.402823e+38 with index *i* = 1..UserData.NumberOfUsedPoints • 0.0 ≤ UserData.Point[i].Time ≤ 3.402823e+38 with index *i* = 1..UserData.NumberOfUsedPoints • -3.402823e+38 ≤ UserData.StartValue ≤ 3.402823e+38 • NextPoint ≤ UserData.NumberOfUsedPoints • 0.0 < UserData.Point[1].Time + UserData.Point[2].Time +...+ UserData.Point[UserData.NumberOfUsedPoints].Time ≤ 3.402823e+38 • With execution of the profile activated: CurrentPoint ≤ UserData.NumberOfUsedPoints **Additional information:** The profile data in the UserData structure are checked in the following cases: • If the Validate parameter is set to TRUE. • Or if RampSoak is called after the operating state transition of the CPU from STOP to RUN for the first time with the parameter Enable = TRUE and there was no validation of the profile data carried out previously. Note that all tags in the UserData and WorkingData structures are not retentive. These tags are initialized with the start values after each operating state transition of the CPU from STOP to RUN.

ErrorBits (DW#16#...)	Description
0000_0008	**Cause of error:** The NextPoint parameter has an invalid value. **Response to error:** NextPoint is reset to the last valid value. **Solution:** Ensure that the following condition is met: • 1 ≤ NextPoint ≤ WorkingData.NumberOfUsedPoints

Errors with error messages ErrorBits ≥ 16#0001_0000

If one or more errors with error messages ErrorBits ≥ 16#0001_0000 is/are pending, RampSoak reacts as follows:

- The output value cannot be determined as expected. The table below shows the reaction of the Output parameter and the execution of the profile.
- The output parameter Error is set.
- The enable output ENO is set to FALSE.

As soon as there are no longer errors with error messages ErrorBits ≥ 16#0001_0000, RampSoak reacts as follows:

- The output value is determined as follows:
  - If Reset = FALSE, output value through the execution of the profile
  - When Reset = TRUE, output of SubstituteOutput
- The enable output ENO is set to TRUE.

The output parameter Error is deleted as soon as there are no longer any errors.

<table>
<tr><th>ErrorBits (DW#16#...)</th><th colspan="4">Description</th></tr>
<tr><td rowspan="6">0001_0000</td><td colspan="4">Cause of error:
The SubstituteOutput parameter or the WorkingData.StartValue tag is currently used for determining the output value, but does not have any valid REAL value.
Response to error:
If Reset = TRUE and SubstituteOutput is a valid REAL value, then SubstituteOutput continues to be output at the parameter Output.
In all other cases, parameter Output is set to 0.0.
Solution:
Make sure that the SubstituteOutput parameter and the WorkingData.StartValue tag are valid REAL values (≠NaN, e.g. 16#7FFF_FFFF). The tag that is used depends on Reset the pending errors and ErrorMode:</td></tr>
<tr><td>Reset</td><td>ErrorBits</td><td>ErrorMode</td><td>Tag used</td></tr>
<tr><td>-</td><td>>= 16#0002_0000</td><td>0</td><td>WorkingData.StartValue</td></tr>
<tr><td>-</td><td>>= 16#0002_0000</td><td>1</td><td>SubstituteOutput</td></tr>
<tr><td>TRUE</td><td>-</td><td>-</td><td>SubstituteOutput</td></tr>
<tr><td colspan="4">Additional information:
If you want to change the WorkingData.StartValue, first edit the UserData.StartValue and then set the parameter Validate = TRUE. Do not manually change the data of the WorkingData structure.</td></tr>
</table>

ErrorBits (DW#16#...)	Description
0004_0000	**Cause of error:** The calculation during the execution of the profile yields an invalid REAL value. **Response to error:** Execution of the profile is aborted. If Reset = FALSE, the substitute output value that is configured at the ErrorMode tag is output at the Output parameter and then retained. If Reset = TRUE, then SubstituteOutput continues to be output at the Output parameter. **Solution:** Validate the REAL values in the WorkingData structure and, if required, start execution of the profile once again. **Additional information:** If you want to change the profile data, first edit the UserData structure and then set parameter Validate = TRUE. Do not manually change the data of the Struktur WorkingData.
0008_0000	**Cause of error:** The Enable parameter or the Next parameter is set to TRUE, but there is no valid profile data present in the WorkingData structure. **Response to error:** Parameter Enable and parameter Next are not effective. If Reset = FALSE, the substitute output value that is configured at the ErrorMode tag is output at the Output parameter. If Reset = TRUE, then SubstituteOutput continues to be output at the Output parameter. **Solution:** Input valid profile data in the UserData structure and then set the parameter Validate = TRUE. In this manner, the profile data is transferred after validation to the WorkingData structure. **Additional information:** If parameter Enable or parameter Next is still set to TRUE, they become effective as soon as valid profile data is present in the WorkingData structure. A fresh positive edge is not required. Note that all tags in the UserData and WorkingData structures are not retentive. These tags are initialized with the start values after each operating state transition of the CPU from STOP to RUN.
0010_0000	**Cause of error:** The tag (configured with StopMode) which determines the output value when the execution of the profile has ended or been stopped does not have any valid REAL value. **Response to error:** If Reset = FALSE, the substitute output value that is configured at the ErrorMode tag is output at the Output parameter and then retained. If Reset = TRUE, then SubstituteOutput continues to be output at the Output parameter. **Solution:** Make sure that the tag is a valid REAL value (≠ NaN for example, 16#7FFF_FFFF). The tag that is used depends on StopMode: • StopMode = 0: WorkingData.StartValue • StopMode = 1: SubstituteOutput **Additional information:** If you want to change the WorkingData.StartValue, first edit the UserData.StartValue and then set the parameter Validate = TRUE. Do not manually change the data of the WorkingData structure.
0020_0000	**Cause of error:** The tag (configured with StartMode), which determines the output value when the instruction is called for the first time, or the execution of the profile is started, does not have a valid REAL value. **Response to error:** If Reset = FALSE, the substitute output value that is configured at the ErrorMode tag is output at the Output parameter and then retained. If the execution of the profile is activated (Enable = TRUE), it starts initially from this substitute output value. If Reset = TRUE, then SubstituteOutput continues to be output at the Output parameter. **Solution:**

ErrorBits (DW#16#...)	Description
	Make sure that the tag is a valid REAL value (≠ NaN for example, 16#7FFF_FFFF). The tag that is used depends on StartMode: • StartMode = 0: WorkingData.StartValue • StartMode = 1: SubstituteOutput • StartMode = 2: Output **Additional information:** If you want to change the WorkingData.StartValue, first edit the UserData.StartValue and then set the parameter Validate = TRUE. Do not manually change the data of the WorkingData structure.
0040_0000	**Cause of error:** The CycleTime.Value tag has an invalid value while the execution of the profile is activated (Enable = TRUE). **Response to error:** Execution of the profile is paused. If Reset = FALSE, the substitute output value that is configured at the ErrorMode tag is output at the Output parameter. If Reset = TRUE, then SubstituteOutput continues to be output at the Output parameter. Execution of the profile is continued as soon as this error is not present any more. If execution of the profile is stopped beforehand, the substitute output value is retained. **Solution:** Ensure that the following conditions are met: • 0.0 < CycleTime.Value ≤ 3.402823e+38 • CycleTime.Value is a valid REAL value (≠ NaN e.g. 16#7FFF_FFFF) **Additional information:** To automatically calculate the value of the tag CycleTime.Value, set the tag CycleTime.EnableMeasurement to TRUE.

10.9 Filter_PT1

10.9.1 Compatibility with CPU and FW

The following table shows which version of Filter_PT1 can be used on which CPU:

CPU	FW	Filter_PT1
S7-1200	V4.2 or higher	V1.0
S7-1500-based CPUs	V2.0 or higher	V1.0

10.9.2 Description of Filter_PT1

Description

The instruction Filter_PT1 is a proportional transfer element with a first-order lag, also referred to as PT1 element.

You can use Filter_PT1 for the following purposes:

- Low-pass filter to attenuate high frequency components, such as noise, in a signal.
- Delay element to smooth signal step changes, for example, from the setpoint or the output value of a controller.
- Process simulation block to implement a closed control loop within the CPU. This means, for example, that you can test controllers before commissioning.

You can specify the following filter parameters:

- Proportional gain (Gain)
- Lag time constant (Lag)

NOTE

Differences between a continuous-time PT1 element and Filter_PT1

Because Filter_PT1 is executed in a PLC program, Filter_PT1 is a discrete-time implementation of a PT1 element. Discrete-time systems cannot have the same properties as the corresponding continuous-time model. Depending on the cycle time, discrete-time systems can emulate a continuous-time system well: The smaller and more constant the cycle time, the smaller the conformity error between the properties of Filter_PT1 and the properties of a continuous-time PT1 element. The properties of a continuous-time PT1 element are the transfer function, the time response and the frequency response which are described below.

For a good simulation of the frequency response, a maximum cycle time of one-tenth of the shortest period duration of the input signal components is recommended. For example, a signal with frequency components of up to 50 Hz has a minimum period duration of 20 ms. To achieve good simulation of the frequency response, a maximum cycle time of 2 ms is recommended for this example.

Transfer function of a PT1 element

The following formula shows the transfer function of a PT1 element, whereby s is equal to the Laplace operator:

$$G(s) = \frac{\text{Output}(s)}{\text{Input}(s)} = \frac{\text{Gain}}{1 + \text{Lag} \cdot s}$$

Time response of a PT1 element

The step response is the response of the output value to a step change of the input value.

The step response for a step change of the input value from 0 to ΔInput can be calculated using the following formula:

$$Output(t) = \Delta Input \cdot Gain \cdot (1 - e^{-\frac{t}{Lag}})$$

The following figure shows the step response of a PT1 element:

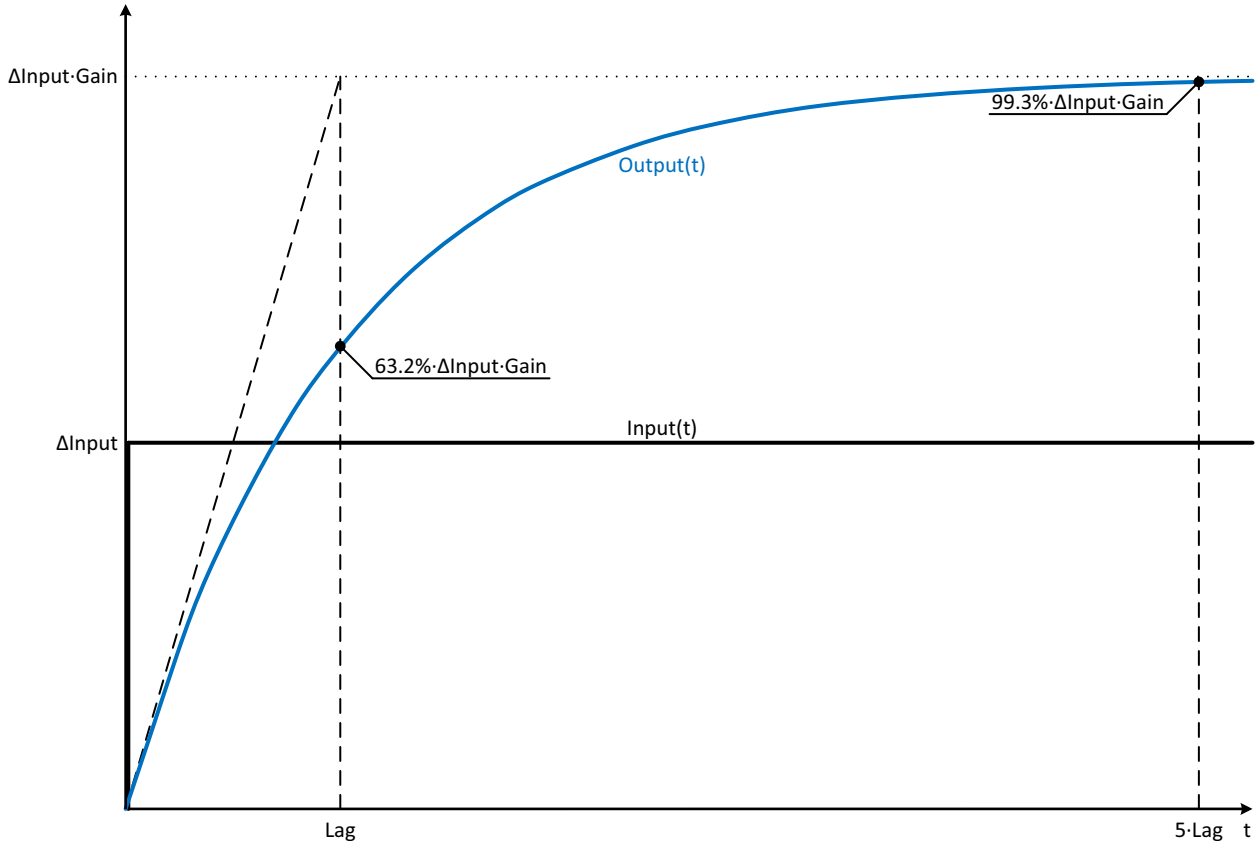

Frequency response of a PT1 element

The frequency response of a transfer element is described by the amplitude response and the phase response.

The amplitude response describes the gain of a signal through the transfer element depending on the angular frequency of the signal.

The following equation describes the amplitude response of a PT1 element:

$$|G(\omega)| = \frac{\text{Gain}}{\sqrt{1 + (\omega \cdot \text{Lag})^2}}$$

$\lvert G(\omega)\rvert$	Signal gain as a function of the angular frequency
ω	Angular frequency

The following figure shows the amplitude response of a PT1 element:

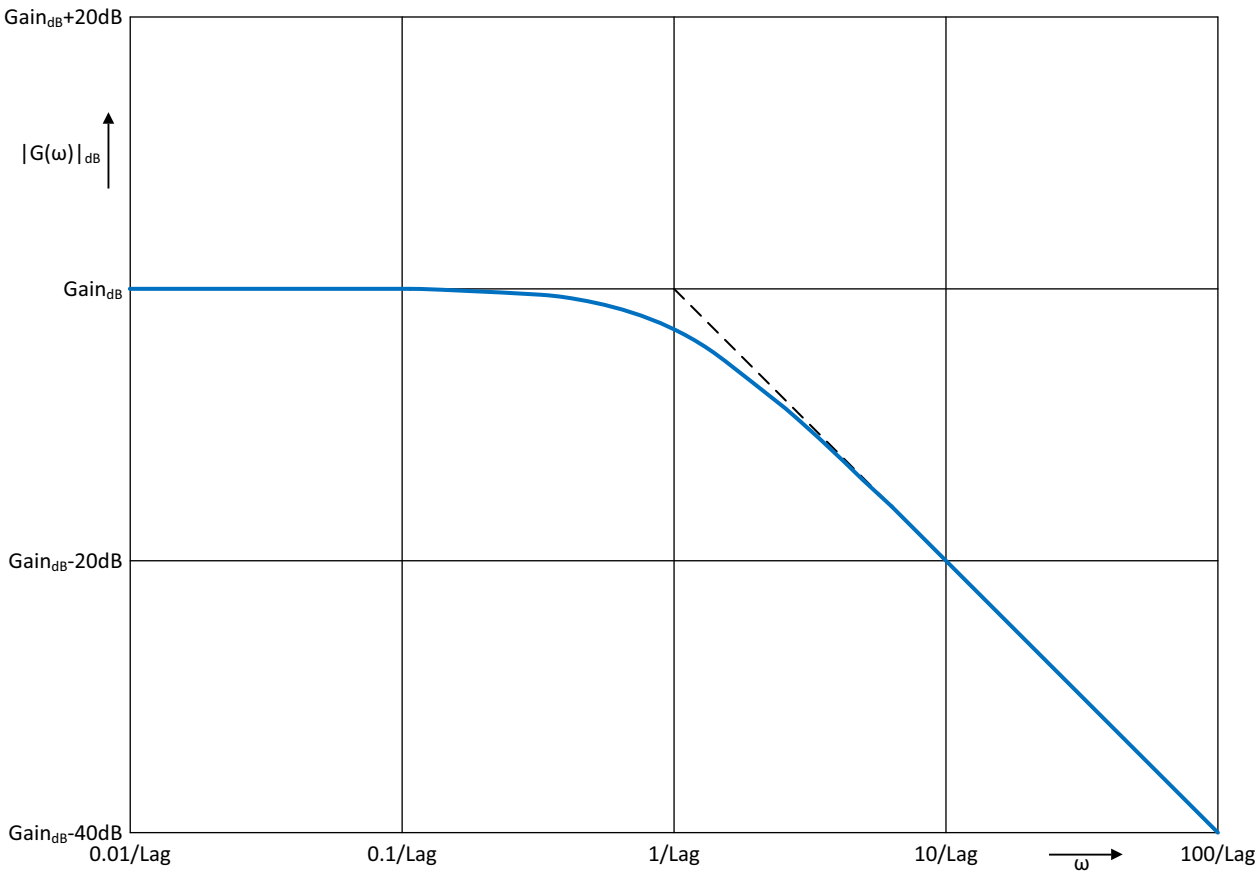

The phase response describes the phase offset of a signal through the transfer element depending on the angular frequency of the signal.
The following equation describes the phase response of a PT1 element:

$$\varphi(\omega) = -\tan^{-1}(\omega \cdot \text{Lag})$$

φ(ω)	Phase offset as a function of the angular frequency
ω	Angular frequency

The following figure shows the phase response of a PT1 element:

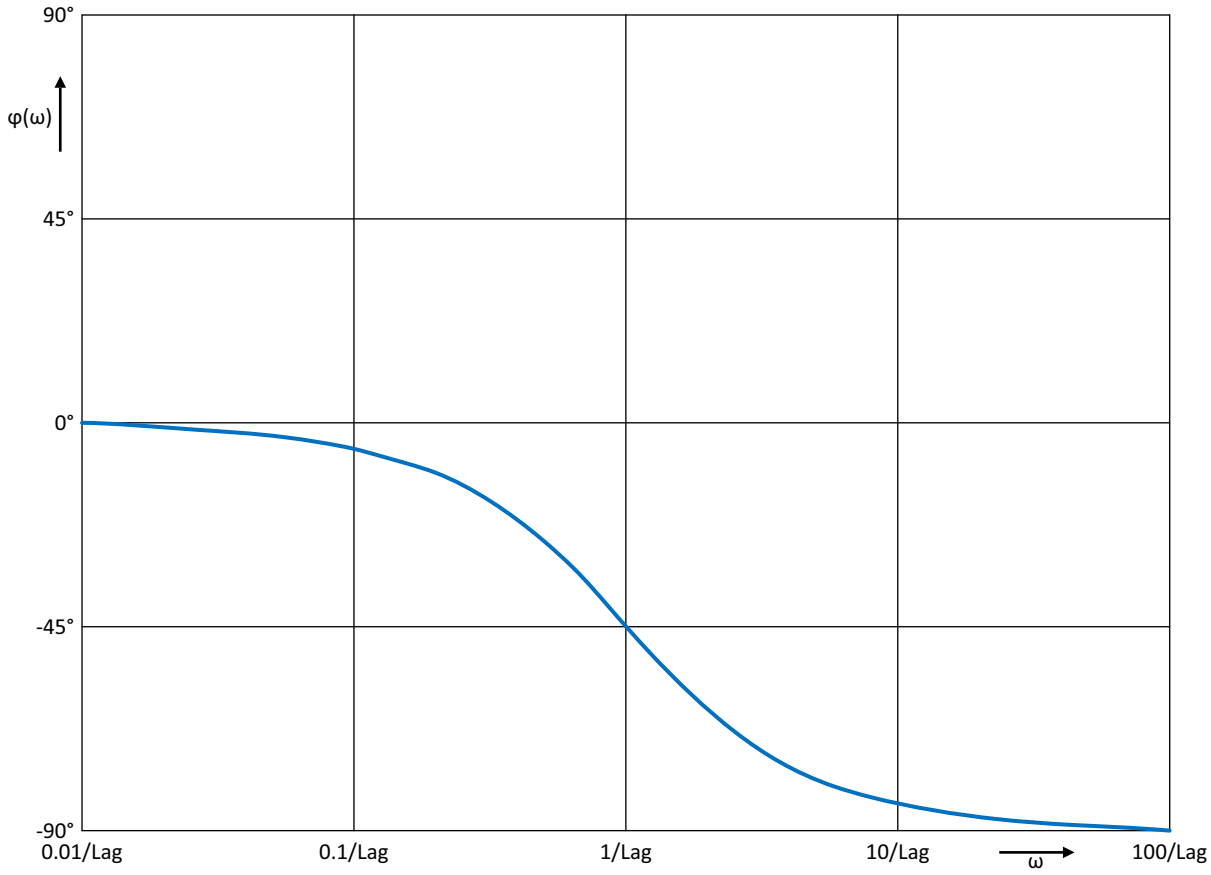

Call

In an OB or FC, Filter_PT1 is called as single-instance DB. In an FB, Filter_PT1 can be called as a single-instance DB, as a multi-instance DB and as a parameter-instance DB.
When the instruction is called, no technology object is created. No parameter assignment interface or commissioning interface is available. You assign the Filter_PT1 parameters directly using the instance DB and commission Filter_PT1 using a watch table of the user program in the CPU or HMI.

Startup

The tags in the static area of Filter_PT1 are not retentive. These tags are initialized with the start values after each operating state transition of the CPU from STOP to RUN. If you change the actual values in online mode and these values are to be retained after the operating state transition of the CPU, back up these values in the start values of the data block.
Specify the initialization value for the Output parameter at the StartMode tag.
During the first call of Filter_PT1 after the

- Operating state transition of the CPU

or

- Execution of "Load start values as actual values" (only with "All values" option, not with "Only setpoints" option)

the initialization value is output at the Output parameter.

For subsequent calls, Filter_PT1 calculates the output value, starting from this initialization value, based on the input value and the filter configuration.

The following table shows the dependency between the StartMode tag and the Output parameter. The values in the Output column are output at the Output parameter after the operating state transition of the CPU.

StartMode	Output	Example
0	Value of the Input parameter	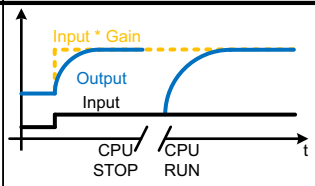
1	Value of the SubstituteOutput parameter	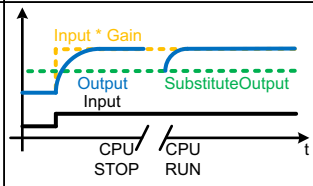
2	Remains unchanged Output parameter is retentive Default setting Is used when StartMode is not in the range 0...4	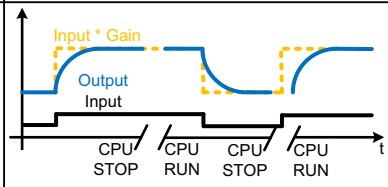
3	0.0	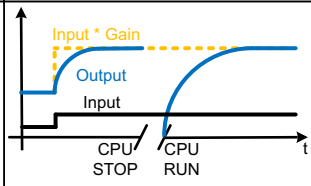
4	Value of the Input * Gain product	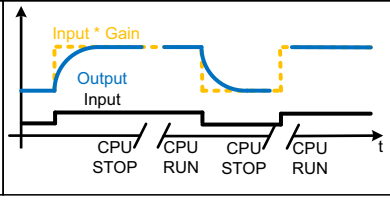

The following applies in addition for all values of the StartMode tag:

- The initialization value is limited to the value range of the data type REAL. Only then is the initialization value output at the Output parameter.
- If the initialization value is not a valid REAL value, the substitute output value is output at the Output parameter. The substitute output value is configured by the ErrorMode tag. The substitute output value is limited to the value range of the data type REAL before it is output at the Output parameter. If the substitute output value is also not a valid REAL value, 0.0 is output at the Output parameter. For subsequent calls, the instruction calculates the output value starting from this substitute output value.

- The StartMode tag is only effective when the Reset = FALSE parameter is set at the first call of the instruction and at the same time no error with error message ErrorBits ≥ 16#0002_0000 is pending. If the Reset = TRUE parameter is set, the value of the SubstituteOutput parameter is output at the Output parameter. If an error is pending with ErrorBits ≥ 16#0002_0000, the substitute output value that is configured at the ErrorMode tag is output at the Output parameter.

Reaction to error

The Filter_PT1 instruction detects different errors that can occur during the calculation of the output value. The result of this calculation can be output at the output despite a pending error. If an error prevents correct calculation of the output value, a substitute output value is output at the output.

Specify the substitute output value that is output if an error occurs that prevents correct calculation of the output value at the ErrorMode tag.
The following table shows the dependency between the ErrorMode tag and the substitute output value that is output by the Filter_PT1 at the Output parameter:

ErrorMode	Output
0	Value of the Input parameter
1	Value of the SubstituteOutput parameter
2	The last valid filter output value 0.0, if no valid filter output value exists Default setting Is used when ErrorMode is not in the range 0...4
3	0.0
4	Value of the Input * Gain product

The following applies in addition for all values of the ErrorMode tag:

- If the substitute output value is not a valid REAL value, 0.0 is output as output value.
- The substitute output value is limited to the value range of the data type REAL. Only then is the substitute output value output at the Output parameter.
- The ErrorMode tag is only effective when the Reset = FALSE parameter is set. If the Reset = TRUE parameter is set, the value of the SubstituteOutput parameter is output at the Output parameter.

The Error parameter indicates if an error is pending. When the error is no longer pending, Error is set to FALSE. The ErrorBits parameter shows which errors have occurred. ErrorBits is retentive and is reset only by a positive edge at the Reset or ErrorAck parameter.

10.9.3 Operating principle Filter_PT1

Reset response

Filter_PT1 behaves as follows depending on the Reset parameter:

- If the Reset =TRUE parameter is set, the value of the SubstituteOutput parameter is output at the Output parameter.
- If the Reset = FALSE parameter is set, the value that is output at the Output parameter is calculated by the filter algorithm.
- When the Reset parameter is set from FALSE to TRUE, the value at the Output parameter changes directly to the value of the SubstituteOutput parameter. An output jump can occur during this transition. In addition, the ErrorBits parameter is reset.
- When the Reset parameter is set from TRUE to FALSE, the filtering algorithm is added so that the transition is bumpless.

Enable behavior EN/ENO

If one of the following conditions is met, enable output ENO is set to FALSE.

- Enable input EN is set to TRUE and the Output parameter is specified by a substitute output value in case of error messages ErrorBits ≥ 16#0001_0000.
- Enable input EN is set to FALSE.

Otherwise, the enable output ENO is set to TRUE.

Measuring the cycle time automatically

To calculate the output value, Filter_PT1 needs the time that has expired since the last call of Filter_PT1.

By default, the cycle time is measured automatically and output as of the second call at the CycleTime.Value tag. Filter_PT1 measures the cycle time for each call of the instruction and can therefore be used in non-isochronous call cycles, e.g. in OB1.

Note that conditional calls of the instruction, active breakpoints, or the loading of snapshots as actual values during automatic measurement of the cycle time will extend the cycle time value. A cycle time that is too long is identified as error with error message ErrorBits = 16#0008_0000.

If measurement of the cycle time returns no valid result, Filter_PT1 calculates the current output value with the last valid cycle time. In addition, Filter_PT1 outputs an error message at the ErrorBits parameter.

When you disable automatic measurement of the cycle time by setting the CycleTime.EnableMeasurement tag = FALSE, you must enter the cycle time manually at the CycleTime.Value tag. Filter_PT1 checks the CycleTime.Value tag for validity at each call.

Automatic measurement of the cycle time with breakpoints

When breakpoints are active between two calls of Filter_PT1, automatic measurement of the cycle time results in the actual time that has elapsed between two calls. When one breakpoint is active, the CPU is in HOLD operating state.

NOTE

The active breakpoints extend the time period between two calls of Filter_PT1.

The longer the time period between two calls, the greater the change of the output value at the Output parameter.

Furthermore, it is possible that the longer time intervals violate the condition Lag ≥ CycleTime.Value/2 and an error with the error message ErrorBits = 16#0008_0000 is therefore identified.

If you do not need the calculation of the output value based on the actual time with active breakpoints, follow these steps:

- Disable automatic measurement of the cycle time by setting the tag CycleTime.EnableMeasurement = FALSE.
- Enter the cycle time manually at the CycleTime.Value tag.

10.9.4 Input parameter Filter_PT1

Parameter	Data type	Default	Description
Input	REAL	0.0	Input value
Substitu-teOutput	REAL	0.0	SubstituteOutput is used as the substitute output value when • Reset = TRUE or • An error with error message ErrorBits ≥ 16#0001_0000 prevents the correct calculation of the output value, and ErrorMode is configured to the value 1.
ErrorAck	BOOL	FALSE	Deletes the error messages • Edge FALSE -> TRUE ErrorBits is reset.
Reset	BOOL	FALSE	Performs a restart of the instruction • Edge FALSE -> TRUE ErrorBits is reset. • As long as Reset is set to TRUE, the substitute output value SubstituteOutput is output at the output. • As long as Reset is set to FALSE, the calculation of the output value is performed.

10.9.5 Output parameter Filter_PT1

Parameter	Data type	Default	Description
Output	REAL	0.0	Output value The output value is retentive.
ErrorBits	DWORD	DW#16#0	The ErrorBits parameter (Page 488) shows which error messages are pending. ErrorBits is retentive and is reset upon a positive edge at Reset or ErrorAck.
Error	BOOL	FALSE	When Error is set to TRUE, at least one error is currently pending.

10.9.6 Static tags Filter_PT1

Tag	Data type	Default	Description
Gain	REAL	1.0	Proportional gain
Lag	REAL	25.0	Lag time constant in seconds Permissible value range: Lag ≥ CycleTime.Value/2
ErrorMode	INT	2	Selection of the substitute output value following an error • 0 = Input • 1 = SubstituteOutput • 2 = Last valid filter output value • 3 = 0.0 • 4 = Input * Gain Permissible value range: 0 to 4
StartMode	INT	2	Selecting the output value for the first call of the instruction • 0 = Input • 1 = SubstituteOutput • 2 = Last output value • 3 = 0.0 • 4 = Input * Gain Permissible value range: 0 to 4
CycleTime	AuxFct_CycleTime	-	Cycle time data
CycleTime.Value	REAL	0.1	Cycle time in seconds (time interval between two calls) Permissible value range: CycleTime.Value > 0.0
Cycle-Time.Enable-Measurement	BOOL	TRUE	Automatic measurement of the cycle time • FALSE = Deactivated • TRUE = Activated

10.9.7 ErrorBits parameter

If several errors are pending simultaneously, the values of the ErrorBits are displayed with binary addition. The display of ErrorBits = 16#0000_0003, for example, indicates that the errors 16#0000_0001 and 16#0000_0002 are pending simultaneously.

For Filter_PT1, the errors output at the ErrorBits parameter are divided into two categories:

- Errors with error messages ErrorBits < 16#0001_0000
- Errors with error messages ErrorBits ≥ 16#0001_0000

Errors with error messages ErrorBits < 16#0001_0000

If one or more errors with error messages ErrorBits < 16#0001_0000 are pending, Filter_PT1 reacts as follows:

- The output value is determined as follows despite this error:
  - When Reset = FALSE, output value calculation by the filter algorithm
  - When Reset = TRUE, output of SubstituteOutput
- The output parameter Error is set.
- The enable output ENO is not changed.

The output parameter Error is deleted as soon as there are no longer any errors.

ErrorBits (DW#16#...)	Description
0000_0000	No error is pending.
0000_0001	**Cause of error and response to error:** The Output parameter was limited to -3.402823e+38 or +3.402823e+38. **Solution:** If the value determined by the filter function is output at the output (Reset = FALSE and ErrorBits < 16#0001_0000), check the following tags used in the filter calculation: • Input • Gain • Lag • CycleTime.Value When ErrorBits ≥ 16#0001_0000 and Reset = FALSE, the substitute output value is limited on its output. In this case, check the following parameters depending on the set value at the tag ErrorMode: • Input • SubstituteOutput • The product of Input and Gain When Reset = TRUE, check the SubstituteOutput parameter.
0000_0002	**Cause of error:** The measurement of the cycle time yields in an invalid value while the output value is being calculated (Reset = FALSE). **Response to error:** If a valid value of the cycle time has already been measured, Filter_PT1 calculates the output value based on the last value of the CycleTime.Value tag. If no valid value of the cycle time was previously measured, Filter_PT1 still outputs the output value configured with the StartMode tag at the Output parameter.

Errors with error messages ErrorBits ≥ 16#0001_0000

If one or more errors with error messages ErrorBits ≥ 16#0001_0000 are pending, Filter_PT1 reacts as follows:

- The output value cannot be determined as expected. The substitute output value is output instead.
- The output parameter Error is set.
- The enable output ENO is set to FALSE.

As soon as there are no longer errors with error messages ErrorBits ≥ 16#0001_0000, Filter_PT1 reacts as follows:

- The output value is determined as follows:
  - When Reset = FALSE, output value calculation by the filter algorithm
  - When Reset = TRUE, output of SubstituteOutput
- The enable output ENO is set to TRUE.

The output parameter Error is deleted as soon as there are no longer any errors.

<table>
<tr><th>ErrorBits (DW#16#...)</th><th>Description</th></tr>
<tr><td>0001_0000</td><td>Cause of error:
The SubstituteOutput parameter or a different tag that is being used as output value has no valid REAL value.
Response to error:
The output is set to 0.0.
Solution:
Make sure that the tag used as output value is a valid REAL value (≠NaN e.g. 16#7FFF_FFFF). The tag that is used as output value depends on Reset and ErrorMode:
<table>
<tr><th>Reset</th><th>ErrorMode</th><th>Output value</th></tr>
<tr><td>FALSE</td><td>0</td><td>Input</td></tr>
<tr><td>FALSE</td><td>1</td><td>SubstituteOutput</td></tr>
<tr><td>FALSE</td><td>4</td><td>Product of Input and Gain</td></tr>
<tr><td>TRUE</td><td>-</td><td>SubstituteOutput</td></tr>
</table></td></tr>
<tr><td>0002_0000</td><td>Cause of error:
The Input parameter has no valid REAL value while the calculation of the output value is being performed (Reset = FALSE).
Response to error:
The substitute output value that is configured at the ErrorMode tag is output at the Output parameter. When ErrorMode = 0, 0.0 is used as output value.
Solution:
Make sure that the parameter Input is a valid REAL value (≠NaN e.g. 16#7FFF_FFFF).</td></tr>
<tr><td>0004_0000</td><td>Cause of error:
The calculation of the output value yields an invalid REAL value for the Output parameter.
Response to error:
The substitute output value that is configured at the ErrorMode tag is output at the Output parameter.
Solution:
Check all tags involved in the calculation of the output value:
• Input
• Gain
• Lag
• CycleTime.Value
These tags have valid values. The calculation of the output value fails in this combination of tags.</td></tr>
<tr><td>0008_0000</td><td>Cause of error:
The Lag or Gain tag has an invalid value, while the calculation of the output value is being performed (Reset = FALSE).
Response to error:
The substitute output value that is configured at the ErrorMode tag is output at the Output parameter.
Solution:
Ensure that the following conditions for the values of the Gain and Lag tags are met:
• -3.402823e+38 ≤ Gain ≤ 3.402823e+38
• CycleTime.Value/2 ≤ Lag ≤ 3.402823e+38
• The values are valid REAL values (≠ NaN, for example 16#7FFF_FFFF)</td></tr>
</table>

ErrorBits (DW#16#...)	Description
	Additional information: Note that the condition CycleTime.Value/2 ≤ Lag may be violated in the following scenarios: • The time interval between two calls of Filter_PT1 is longer than 2 * Lag, for example, due to conditional calls in the program sequence or active breakpoints. • A snapshot of the Filter_PT1 instance DB is loaded into the CPU as actual values, and the snapshot was created more than 2 * Lag ago. In these scenarios, an error message ErrorBits = 16#0008_0000 is detected during automatic measurement of the cycle time.
0020_0000	**Cause of error:** The tag (configured with StartMode) for the initialization of the Output parameter at the first call of the instruction does not have a valid REAL value. **Response to error:** The substitute output value is output with the first call of the instruction at the Output parameter that is configured at the ErrorMode tag. For subsequent calls, Filter_PT1 calculates the output value starting from this substitute output value. **Solution:** Make sure that the tag for initializing the parameter Output is a valid REAL value (≠ NaN e.g. 16#7FFF_FFFF). When Reset = FALSE is set, the initialization takes effect with the first call of the instruction after the operating state transition of the CPU from STOP to RUN. The tag that is used for the initialization of the Output parameter depends on StartMode: • StartMode = 1: SubstituteOutput • StartMode = 2: Output • StartMode = 4: Product of Input and Gain
0040_0000	**Cause of error:** The CycleTime.Value tag has an invalid value, while the calculation of the output value is being performed (Reset = FALSE). **Response to error:** The substitute output value that is configured at the ErrorMode tag is output at the Output parameter. **Solution:** Ensure that the following conditions are met: • 0.0 < CycleTime.Value ≤ 3.402823e+38 • CycleTime.Value is a valid REAL value (≠ NaN e.g. 16#7FFF_FFFF) **Additional information:** To automatically calculate the value of the CycleTime.Value tag, set the CycleTime.EnableMeasurement tag to TRUE.

10.10 Filter_PT2

10.10.1 Compatibility with CPU and FW

The following table shows which version of Filter_PT2 can be used on which CPU:

CPU	FW	Filter_PT2
S7-1200	V4.2 or higher	V1.0
S7-1500-based CPUs	V2.0 or higher	V1.0

10.10.2 Description of Filter_PT2

Description

The instruction Filter_PT2 is a proportional transfer element with a second-order lag, also referred to as PT2 element.

You can use Filter_PT2 for the following purposes:

- Low-pass filter to attenuate high frequency components, such as noise, in a signal.
- Delay element to smooth signal step changes, for example, from the setpoint or the output value of a controller.
- Process simulation block to implement a closed control loop within the CPU. This means, for example, that you can test controllers before commissioning.

You can specify the following filter parameters:

- Proportional gain (Gain)
- Time constant (TimeConstant)
- Damping (Damping)

NOTE

Differences between a continuous-time PT2 element and Filter_PT2

Because Filter_PT2 is executed in a PLC program, Filter_PT2 is a discrete-time implementation of a PT2 element. Discrete-time systems cannot have the same properties as the corresponding continuous-time model. Depending on the cycle time, discrete-time systems can emulate a continuous-time system well: The smaller and more constant the cycle time, the smaller the conformity error between the properties of Filter_PT2 and the properties of a continuous-time PT2 element. The properties of a continuous-time PT2 element are the transfer function, the time response and the frequency response which are described below.

For a good simulation of the frequency response, a maximum cycle time of one-tenth of the shortest period duration of the input signal components is recommended. For example, a signal with frequency components of up to 50 Hz has a minimum period duration of 20 ms. To achieve good simulation of the frequency response, a maximum cycle time of 2 ms is recommended for this example.

Transfer function of a PT2 element

The following formula shows the transfer function of a PT2 element, whereby s is equal to the Laplace operator:

$$G(s) = \frac{\text{Output(s)}}{\text{Input(s)}} = \frac{\text{Gain}}{1 + 2 \cdot \text{Damping} \cdot \text{TimeConstant} \cdot s + \text{TimeConstant}^2 \cdot s^2}$$

If Damping ≥ 1, the PT2 element can be described as two PT1 elements switched in series:

$$G(s) = \frac{\text{Output(s)}}{\text{Input(s)}} = \frac{\text{Gain}}{(1 + \text{Lag}_1 \cdot s) \cdot (1 + \text{Lag}_2 \cdot s)}$$

The lag time constants of the PT1 elements switched in series are calculated as follows:

$$Lag_{1/2} = TimeConstant \cdot \left(Damping \pm \sqrt{Damping^2 - 1}\right)$$

Time response of a PT2 element

The step response is the response of the output value to a step change of the input value. The step response for a step change of the input value from 0 to ΔInput can be calculated using the following formulas:
The following formula applies to Damping < 1:

$$Output(t) = \Delta Input \cdot Gain \cdot \left(1 - e^{-\frac{Damping}{TimeConstant} \cdot t} \cdot \left[\cos\left(\frac{\sqrt{1 - Damping^2}}{TimeConstant} \cdot t\right) + \frac{Damping}{\sqrt{1 - Damping^2}} \cdot \sin\left(\frac{\sqrt{1 - Damping^2}}{TimeConstant} \cdot t\right)\right]\right)$$

The following formula applies to Damping = 1:

$$Output(t) = \Delta Input \cdot Gain \cdot \left(1 - e^{-\frac{t}{TimeConstant}} - \frac{t}{TimeConstant} \cdot e^{-\frac{t}{TimeConstant}}\right)$$

The following formula with the above calculated Lag_1 and Lag_2 applies to Damping > 1:

$$Output(t) = \Delta Input \cdot Gain \cdot \left(1 - \frac{Lag_1}{Lag_1 - Lag_2} \cdot e^{-\frac{t}{Lag_1}} + \frac{Lag_2}{Lag_1 - Lag_2} \cdot e^{-\frac{t}{Lag_2}}\right)$$

The following figure shows the step response of a PT2 element with various values for the damping:

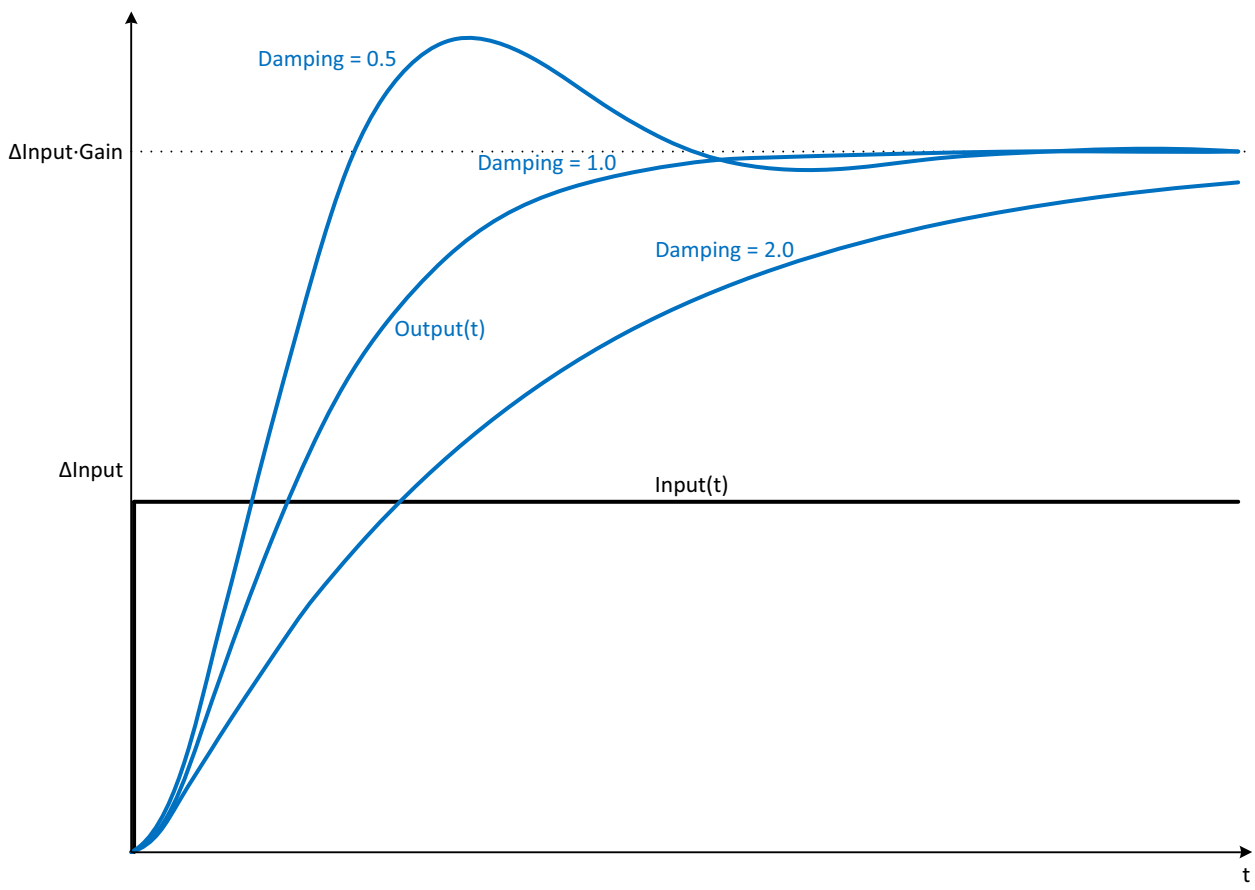

Frequency response of a PT2 element

The frequency response of a transfer element is described by the amplitude response and the phase response.
The amplitude response describes the gain of a signal through the transfer element depending on the angular frequency of the signal.
The following equation describes the amplitude response of a PT2 element:

$$|G(\omega)| = \frac{\text{Gain}}{\sqrt{(1 - [\omega \cdot \text{TimeConstant}]^2)^2 + (\omega \cdot 2 \cdot \text{Damping} \cdot \text{TimeConstant})^2}}$$

|G(ω)| Signal gain as a function of the angular frequency

ω Angular frequency

The following figure shows the amplitude response of a PT2 element with a damping of 0.4 and 1.0:

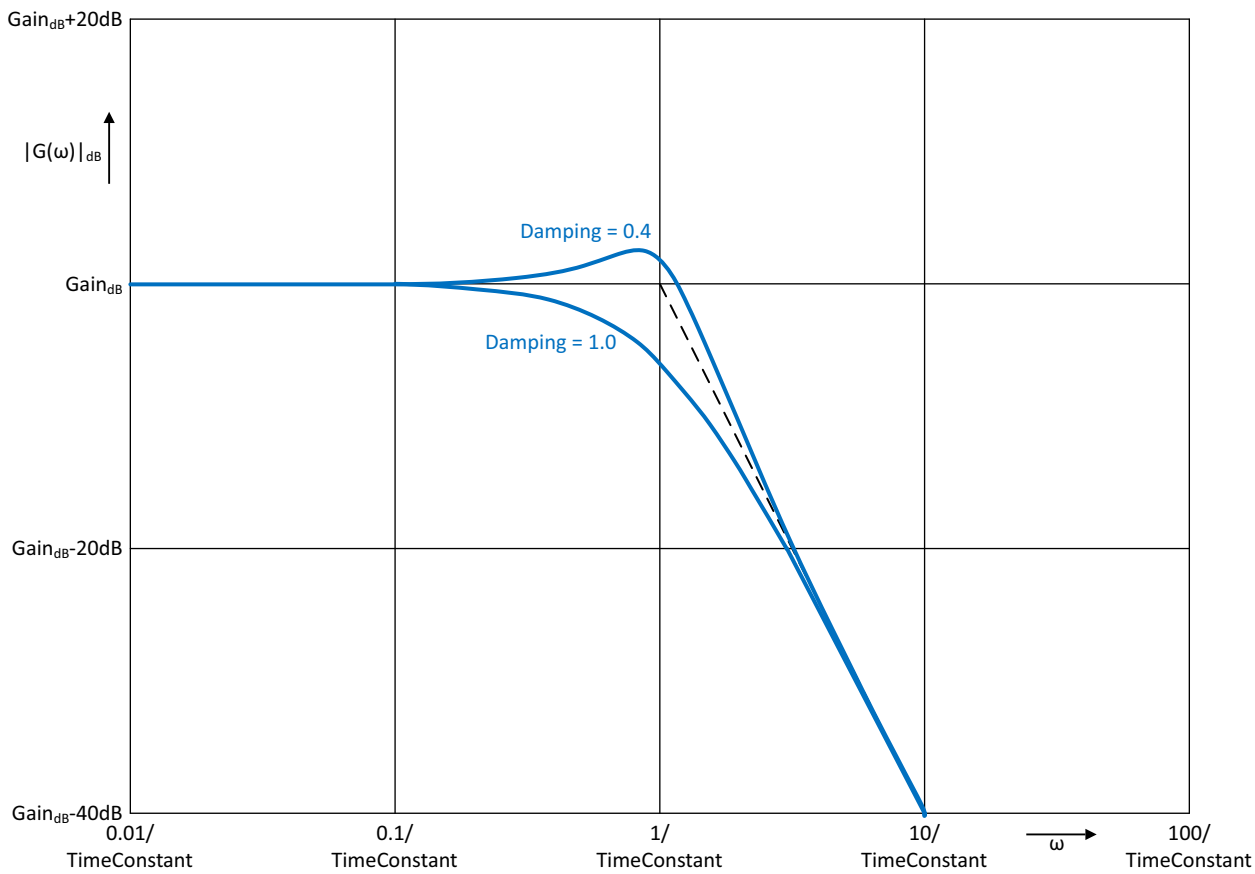

NOTE

When Damping < 1/√2, a resonance peak appears in the amplitude response.

The phase response describes the phase offset of a signal through the transfer element depending on the angular frequency of the signal.

The following equation describes the phase response of a PT2 element:

$$\varphi(\omega) = -\tan^{-1}\left(\frac{\omega \cdot 2 \cdot \text{Damping} \cdot \text{TimeConstant}}{1 - (\omega \cdot \text{TimeConstant})^2}\right)$$

φ(ω) Phase offset as a function of the angular frequency

ω Angular frequency

The following figure shows the phase response of a PT2 element:

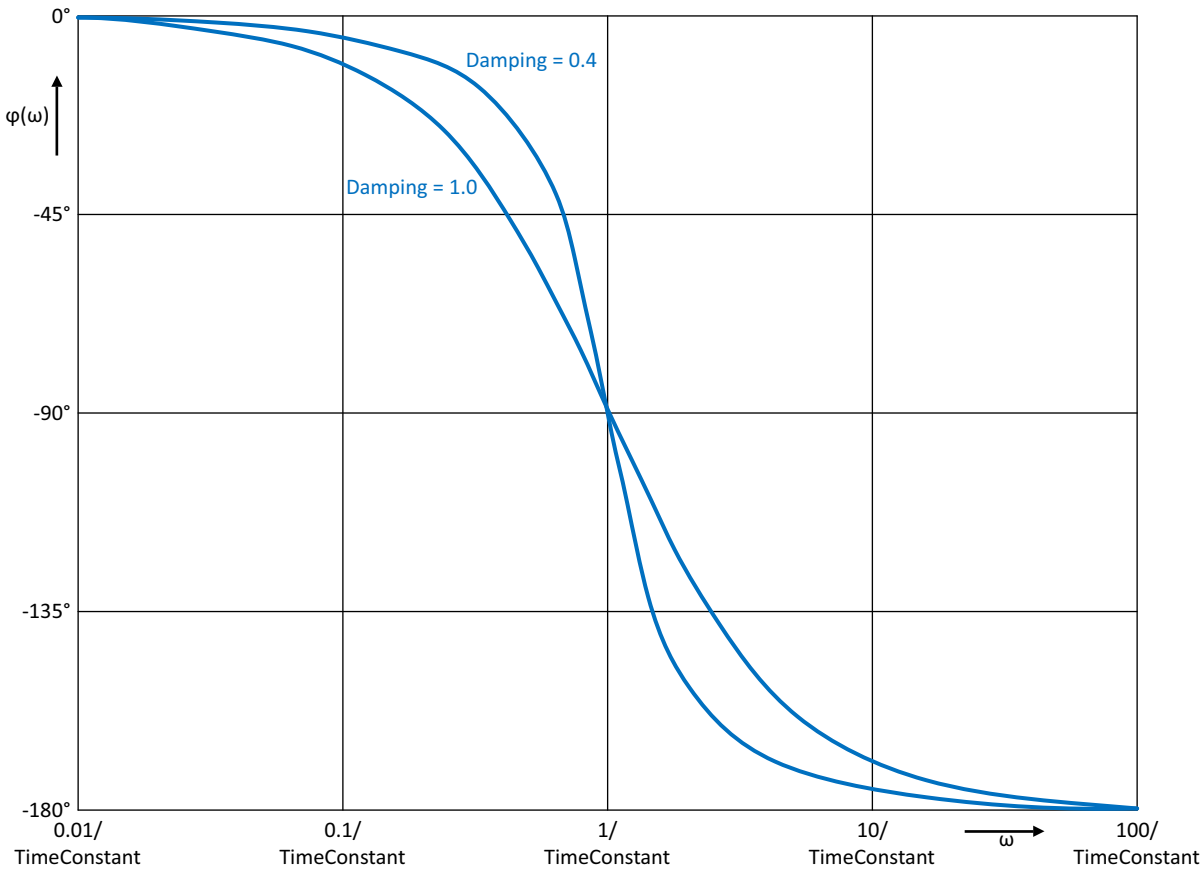

Call

In an OB or FC, Filter_PT2 is called as single-instance DB. In an FB, Filter_PT2 can be called as a single-instance DB, as a multi-instance DB and as a parameter-instance DB.
When the instruction is called, no technology object is created. No parameter assignment interface or commissioning interface is available. You assign the Filter_PT2 parameters directly using the instance DB and commission Filter_PT2 using a watch table of the user program in the CPU or HMI.

Startup

The tags in the static area of Filter_PT2 are not retentive. These tags are initialized with the start values after each operating state transition of the CPU from STOP to RUN. If you change

the actual values in online mode and these values are to be retained after the operating state transition of the CPU, back up these values in the start values of the data block.

Specify the initialization value for the Output parameter at the StartMode tag.

During the first call of Filter_PT2 after the

- Operating state transition of the CPU

or

- Execution of "Load start values as actual values" (only with "All values" option, not with "Only setpoints" option)

the initialization value is output at the Output parameter.

For subsequent calls, Filter_PT2 calculates the output value, starting from this initialization value, based on the input value and the filter configuration.

The following table shows the dependency between the StartMode tag and the Output parameter. The values in the Output column are output at the Output parameter after the operating state transition of the CPU.

StartMode	Output	Example
0	Value of the Input parameter	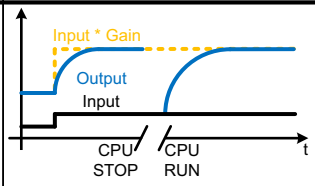
1	Value of the SubstituteOutput parameter	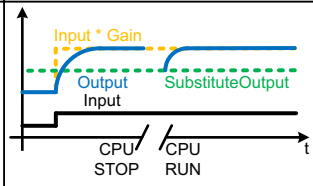
2	Remains unchanged Output parameter is retentive Default setting Is used when StartMode is not in the range 0...4	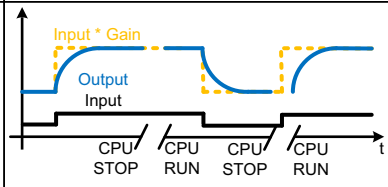
3	0.0	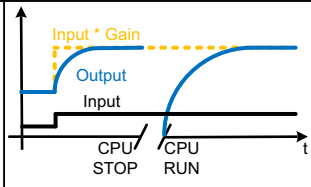
4	Value of the Input * Gain product	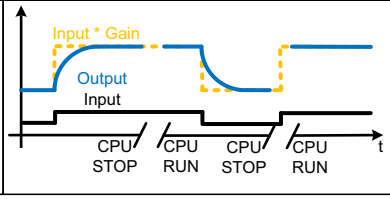

The following applies in addition for all values of the StartMode tag:

- The initialization value is limited to the value range of the data type REAL. Only then is the initialization value output at the Output parameter.
- If the initialization value is not a valid REAL value, the substitute output value is output at the Output parameter. The substitute output value is configured by the ErrorMode tag. The substitute output value is limited to the value range of the data type REAL before it is output at the Output parameter. If the substitute output value is also not a valid REAL value, 0.0 is output at the Output parameter. For subsequent calls, the instruction calculates the output value starting from this substitute output value.
- The StartMode tag is only effective when the Reset = FALSE parameter is set at the first call of the instruction and at the same time no error with error message ErrorBits ≥ 16#0002_0000 is pending. If the Reset = TRUE parameter is set, the value of the SubstituteOutput parameter is output at the Output parameter. If an error is pending with ErrorBits ≥ 16#0002_0000, the substitute output value that is configured at the ErrorMode tag is output at the Output parameter.

Reaction to error

The Filter_PT2 instruction detects different errors that can occur during the calculation of the output value. The result of this calculation can be output at the output despite a pending error. If an error prevents correct calculation of the output value, a substitute output value is output at the output.

Specify the substitute output value that is output if an error occurs that prevents correct calculation of the output value at the ErrorMode tag.

The following table shows the dependency between the ErrorMode tag and the substitute output value that is output by the Filter_PT2 at the Output parameter:

ErrorMode	Output
0	Value of the Input parameter
1	Value of the SubstituteOutput parameter
2	The last valid filter output value 0.0, if no valid filter output value exists Default setting Is used when ErrorMode is not in the range 0...4
3	0.0
4	Value of the Input * Gain product

The following applies in addition for all values of the ErrorMode tag:

- If the substitute output value is not a valid REAL value, 0.0 is output as output value.
- The substitute output value is limited to the value range of the data type REAL. Only then is the substitute output value output at the Output parameter.
- The ErrorMode tag is only effective when the Reset = FALSE parameter is set. If the Reset = TRUE parameter is set, the value of the SubstituteOutput parameter is output at the Output parameter.

The Error parameter indicates if an error is pending. When the error is no longer pending, Error is set to FALSE. The ErrorBits parameter shows which errors have occurred. ErrorBits is retentive and is reset only by a positive edge at the Reset or ErrorAck parameter.

10.10.3 Operating principle Filter_PT2

Reset response

Filter_PT2 behaves as follows depending on the Reset parameter:

- If the Reset =TRUE parameter is set, the value of the SubstituteOutput parameter is output at the Output parameter.
- If the Reset = FALSE parameter is set, the value that is output at the Output parameter is calculated by the filter algorithm.
- When the Reset parameter is set from FALSE to TRUE, the value at the Output parameter changes directly to the value of the SubstituteOutput parameter. An output jump can occur during this transition. In addition, the ErrorBits parameter is reset.
- When the Reset parameter is set from TRUE to FALSE, the filtering algorithm is added so that the transition is bumpless.

Enable behavior EN/ENO

If one of the following conditions is met, enable output ENO is set to FALSE.

- Enable input EN is set to TRUE and the Output parameter is specified by a substitute output value in case of error messages ErrorBits ≥ 16#0001_0000.
- Enable input EN is set to FALSE.

Otherwise, the enable output ENO is set to TRUE.

Measuring the cycle time automatically

To calculate the output value, Filter_PT2 needs the time that has expired since the last call of Filter_PT2.

By default, the cycle time is measured automatically and output as of the second call at the CycleTime.Value tag. Filter_PT2 measures the cycle time for each call of the instruction and can therefore be used in non-equidistant call cycles, e.g. in OB1.

Note that conditional calls of the instruction, active breakpoints, or the loading of snapshots as actual values during automatic measurement of the cycle time will extend the cycle time value. A cycle time that is too long is identified as error with error message ErrorBits = 16#0008_0000.

If measurement of the cycle time returns no valid result, Filter_PT2 calculates the current output value with the last valid cycle time. In addition, Filter_PT2 outputs an error message at the ErrorBits parameter.

When you disable automatic measurement of the cycle time by setting the CycleTime.EnableMeasurement tag = FALSE, you must enter the cycle time manually at the CycleTime.Value tag. Filter_PT2 checks the CycleTime.Value tag for validity at each call.

Automatic measurement of the cycle time with breakpoints

When breakpoints are active between two calls of Filter_PT2, automatic measurement of the cycle time results in the actual time that has elapsed between two calls. When one breakpoint is active, the CPU is in HOLD operating state.

NOTE

The active breakpoints extend the time period between two calls of Filter_PT2.

The longer the time period between two calls, the greater the change of the output value at the Output parameter.

Furthermore, it is possible that the longer time intervals violate the condition TimeConstant ≥ CycleTime.Value/2 and an error with the error message ErrorBits = 16#0008_0000 is therefore identified.

If you do not need the calculation of the output value based on the actual time with active breakpoints, follow these steps:

- Disable automatic measurement of the cycle time by setting the CycleTime.EnableMeasurement tag = FALSE.
- Enter the cycle time manually at the CycleTime.Value tag.

10.10.4 Input parameter Filter_PT2

Parameter	Data type	Default	Description
Input	REAL	0.0	Input value
Substitu-teOutput	REAL	0.0	SubstituteOutput is used as the substitute output value when • Reset = TRUE or • An error with error message ErrorBits ≥ 16#0001_0000 prevents the correct calculation of the output value, and ErrorMode is configured to the value 1.
ErrorAck	BOOL	FALSE	Deletes the error messages • Edge FALSE -> TRUE ErrorBits is reset.
Reset	BOOL	FALSE	Performs a restart of the instruction • Edge FALSE -> TRUE ErrorBits is reset. • As long as Reset is set to TRUE, the substitute output value SubstituteOutput is output at the output. • As long as Reset is set to FALSE, the calculation of the output value is performed.

10.10.5 Output parameter Filter_PT2

Parameter	Data type	Default	Description
Output	REAL	0.0	Output value The output value is retentive.
ErrorBits	DWORD	DW#16#0	The ErrorBits parameter (Page 500) shows which error messages are pending. ErrorBits is retentive and is reset upon a positive edge at Reset or ErrorAck.
Error	BOOL	FALSE	When Error is set to TRUE, at least one error is currently pending.

10.10.6 Static tags Filter_PT2

Tag	Data type	Default	Description
Gain	REAL	1.0	Proportional gain
TimeConstant	REAL	25.0	Time constant in seconds Permissible value range: TimeConstant ≥ CycleTime.Value/2
Damping	REAL	1.0	Damping Permissible value range: Damping > 0.0
ErrorMode	INT	2	Selection of the substitute output value following an error • 0 = Input • 1 = SubstituteOutput • 2 = Last valid filter output value • 3 = 0.0 • 4 = Input * Gain Permissible value range: 0 to 4
StartMode	INT	2	Selecting the output value for the first call of the instruction • 0 = Input • 1 = SubstituteOutput • 2 = Last output value • 3 = 0.0 • 4 = Input * Gain Permissible value range: 0 to 4
CycleTime	AuxFct_CycleTime	-	Cycle time data
CycleTime.Value	REAL	0.1	Cycle time in seconds (time interval between two calls) Permissible value range: CycleTime.Value > 0.0
Cycle-Time.Enable-Measurement	BOOL	TRUE	Automatic measurement of the cycle time • FALSE = Deactivated • TRUE = Activated

10.10.7 ErrorBits parameter

If several errors are pending simultaneously, the values of the ErrorBits are displayed with binary addition. The display of ErrorBits = 16#0000_0003, for example, indicates that the errors 16#0000_0001 and 16#0000_0002 are pending simultaneously.

For Filter_PT2, the errors output at the ErrorBits parameter are divided into two categories:

- Errors with error messages ErrorBits < 16#0001_0000
- Errors with error messages ErrorBits ≥ 16#0001_0000

Errors with error messages ErrorBits < 16#0001_0000

If one or more errors with error messages ErrorBits < 16#0001_0000 are pending, Filter_PT2 reacts as follows:

- The output value is determined as follows despite this error:
  - When Reset = FALSE, output value calculation by the filter algorithm
  - When Reset = TRUE, output of SubstituteOutput
- The output parameter Error is set.
- The enable output ENO is not changed.

The output parameter Error is deleted as soon as there are no longer any errors.

ErrorBits (DW#16#...)	Description
0000_0000	No error is pending.
0000_0001	**Cause of error and response to error:** The Output parameter was limited to -3.402823e+38 or +3.402823e+38. **Solution:** If the value determined by the filter function is output at the output (Reset = FALSE and ErrorBits < 16#0001_0000), check the following tags used in the filter calculation: • Input • Gain • TimeConstant • Damping • CycleTime.Value When ErrorBits ≥ 16#0001_0000 and Reset = FALSE, the substitute output value is limited on its output. In this case, check the following parameters depending on the set value at the tag ErrorMode: • Input • SubstituteOutput • The product of Input and Gain When Reset = TRUE, check the SubstituteOutput parameter.
0000_0002	**Cause of error:** The measurement of the cycle time yields in an invalid value while the output value is being calculated (Reset = FALSE). **Response to error:** If a valid value of the cycle time has already been measured, Filter_PT2 calculates the output value based on the last value of the CycleTime.Value tag. If no valid value of the cycle time was previously measured, Filter_PT2 still outputs the output value configured with the StartMode tag at the Output parameter.

Errors with error messages ErrorBits ≥ 16#0001_0000

If one or more errors with error messages ErrorBits ≥ 16#0001_0000 are pending, Filter_PT2 reacts as follows:

- The output value cannot be determined as expected. The substitute output value is output instead.
- The output parameter Error is set.
- The enable output ENO is set to FALSE.

As soon as there are no longer errors with error messages ErrorBits ≥ 16#0001_0000, Filter_PT2 reacts as follows:

- The output value is determined as follows:
  - When Reset = FALSE, output value calculation by the filter algorithm
  - When Reset = TRUE, output of SubstituteOutput
- The enable output ENO is set to TRUE.

The output parameter Error is deleted as soon as there are no longer any errors.

<table>
<tr><th>ErrorBits (DW#16#...)</th><th>Description</th></tr>
<tr><td>0001_0000</td><td>Cause of error:
The SubstituteOutput parameter or a different tag that is being used as output value has no valid REAL value.
Response to error:
The output is set to 0.0.
Solution:
Make sure that the tag used as output value is a valid REAL value (≠NaN e.g. 16#7FFF_FFFF). The tag that is used as output value depends on Reset and ErrorMode:
<table>
<tr><th>Reset</th><th>ErrorMode</th><th>Output value</th></tr>
<tr><td>FALSE</td><td>0</td><td>Input</td></tr>
<tr><td>FALSE</td><td>1</td><td>SubstituteOutput</td></tr>
<tr><td>FALSE</td><td>4</td><td>Product of Input and Gain</td></tr>
<tr><td>TRUE</td><td>-</td><td>SubstituteOutput</td></tr>
</table></td></tr>
<tr><td>0002_0000</td><td>Cause of error:
The Input parameter has no valid REAL value while the calculation of the output value is being performed (Reset = FALSE).
Response to error:
The substitute output value that is configured at the ErrorMode tag is output at the Output parameter. When ErrorMode = 0, 0.0 is used as output value.
Solution:
Make sure that the parameter Input is a valid REAL value (≠NaN e.g. 16#7FFF_FFFF).</td></tr>
<tr><td>0004_0000</td><td>Cause of error:
The calculation of the output value yields an invalid REAL value for the Output parameter.
Response to error:
The substitute output value that is configured at the ErrorMode tag is output at the Output parameter.
Solution:
Check all tags involved in the calculation of the output value:
• Input
• Gain
• TimeConstant
• Damping
• CycleTime.Value
These tags have valid values. The calculation of the output value fails in this combination of tags.</td></tr>
<tr><td>0008_0000</td><td>Cause of error:
The Gain, TimeConstant or Damping tag has an invalid value, while the calculation of the output value is being performed (Reset = FALSE).
Response to error:
The substitute output value that is configured at the ErrorMode tag is output at the Output parameter.
Solution:</td></tr>
</table>

ErrorBits (DW#16#...)	Description
	Ensure that the following conditions for the values of the Gain, TimeConstant and Damping tags are met: • -3.402823e+38 ≤ Gain ≤ 3.402823e+38 • CycleTime.Value/2 ≤ TimeConstant ≤ 3.402823e+38 • 0.0 < Damping ≤ 3.402823e+38 • The values are valid REAL values (≠ NaN, for example 16#7FFF_FFFF) **Additional information:** Note that the condition CycleTime.Value/2 ≤ TimeConstant may be violated in the following scenarios: • The time interval between two calls of Filter_PT2 is longer than 2 * TimeConstant, for example, due to conditional calls in the program sequence or active breakpoints. • A snapshot of the Filter_PT2 instance DB is loaded into the CPU as actual values, and the snapshot was created more than 2 * TimeConstant ago. In these scenarios, an error message ErrorBits = 16#0008_0000 is detected during automatic measurement of the cycle time.
0020_0000	**Cause of error:** The tag (configured with StartMode) for the initialization of the Output parameter at the first call of the instruction does not have a valid REAL value. **Response to error:** The substitute output value is output with the first call of the instruction at the Output parameter that is configured at the ErrorMode tag. For subsequent calls, Filter_PT2 calculates the output value starting from this substitute output value. **Solution:** Make sure that the tag for initializing the parameter Output is a valid REAL value (≠ NaN e.g. 16#7FFF_FFFF). When Reset = FALSE is set, the initialization takes effect with the first call of the instruction after the operating state transition of the CPU from STOP to RUN. The tag that is used for the initialization of the Output parameter depends on StartMode: • StartMode = 1: SubstituteOutput • StartMode = 2: Output • StartMode = 4: Product of Input and Gain
0040_0000	**Cause of error:** The CycleTime.Value tag has an invalid value, while the calculation of the output value is being performed (Reset = FALSE). **Response to error:** The substitute output value that is configured at the ErrorMode tag is output at the Output parameter. **Solution:** Ensure that the following conditions are met: • 0.0 < CycleTime.Value ≤ 3.402823e+38 • CycleTime.Value is a valid REAL value (≠ NaN e.g. 16#7FFF_FFFF) **Additional information:** To automatically calculate the value of the CycleTime.Value tag, set the CycleTime.EnableMeasurement tag to TRUE.

10.11 Filter_DT1

10.11.1 Compatibility with CPU and FW

The following table shows which version of Filter_DT1 can be used on which CPU:

CPU	FW	Filter_DT1
S7-1200	V4.2 or higher	V1.0
S7-1500-based CPUs	V2.0 or higher	V1.0

10.11.2 Description of Filter_DT1

Description

The instruction Filter_DT1 is a differentiator with a first-order lag, also referred to as DT1 element.

You can use Filter_DT1 for the following purposes:

- High-pass filter to attenuate low frequency components in a signal.
- Differentiator to calculate the derivation of a signal, such as the speed from position values.
- Feedforward control to lessen the effect of measurable disturbances on the process.

You can specify the following filter parameters:

- Derivative action time (Td)
- Lag time constant (Lag)

NOTE

Differences between a continuous-time DT1 element and Filter_DT1

Because Filter_DT1 is executed in a PLC program, Filter_DT1 is a discrete-time implementation of a DT1 element. Discrete-time systems cannot have the same properties as the corresponding continuous-time model. Depending on the cycle time, discrete-time systems can emulate a continuous-time system well: The smaller and more constant the cycle time, the smaller the conformity error between the properties of Filter_DT1 and the properties of a continuous-time DT1 element. The properties of a continuous-time DT1 element are the transfer function, the time response and the frequency response which are described below.

For a good simulation of the frequency response, a maximum cycle time of one-tenth of the shortest period duration of the input signal components is recommended. For example, a signal with frequency components of up to 50 Hz has a minimum period duration of 20 ms. To achieve good simulation of the frequency response, a maximum cycle time of 2 ms is recommended for this example.

Transfer function of a DT1 element

The following formula shows the transfer function of a DT1 element, whereby s is equal to the Laplace operator:

$$G(s) = \frac{\text{Output(s)}}{\text{Input(s)}} = \frac{\text{Td} \cdot \text{s}}{1 + \text{Lag} \cdot \text{s}}$$

Time response of a DT1 element

The step response is the response of the output value to a step change of the input value. The step response for a step change of the input value from 0 to ΔInput can be calculated using the following formula:

$$\text{Output(t)} = \Delta\text{Input} \cdot \frac{\text{Td}}{\text{Lag}} \cdot e^{-\frac{t}{\text{Lag}}}$$

The following figure shows the step response of a DT1 element:

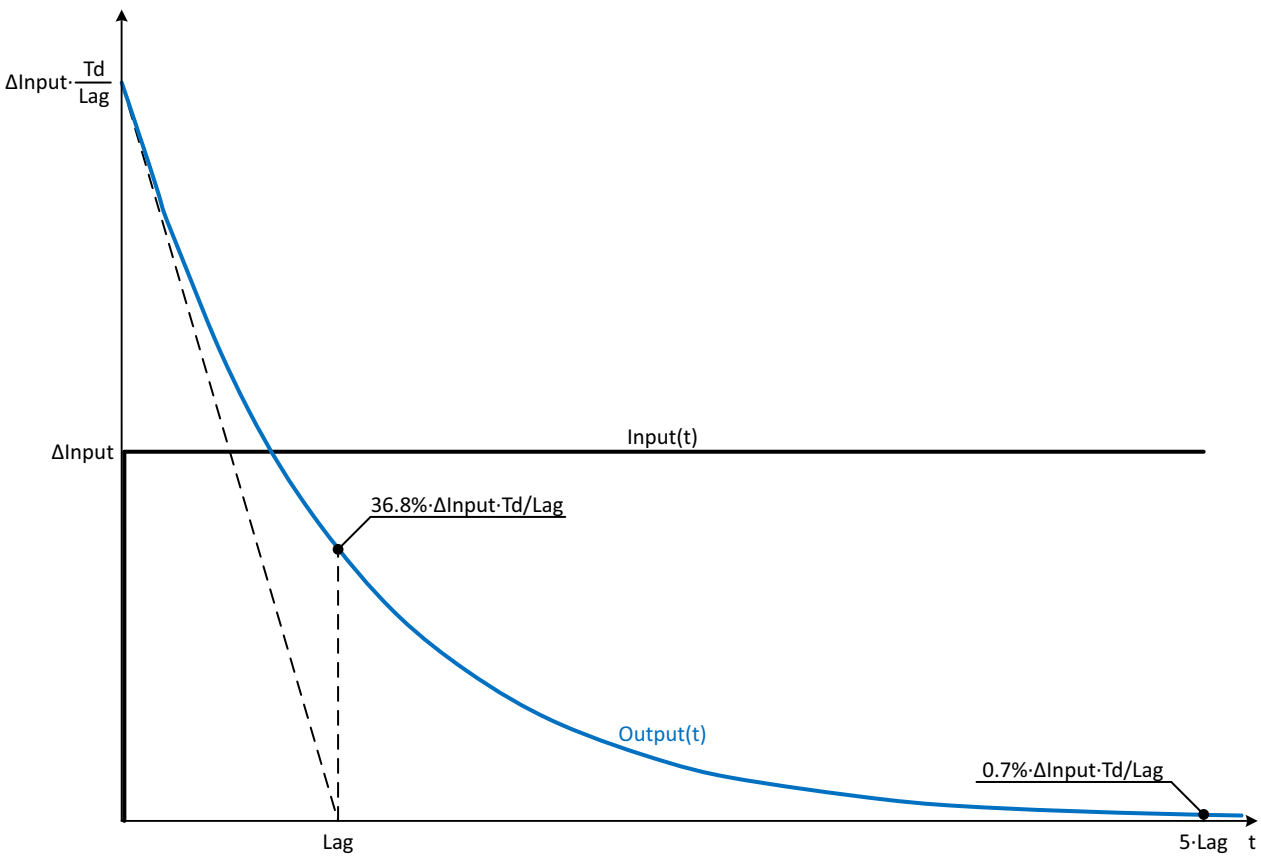

To disable the lag, set the Lag parameter to the minimum value CycleTime.Value / 2. In this case, changes to the input value are multiplied by Td / CycleTime.Value and output at the Output parameter. After one cycle, the output value is 0.0.

The following figure shows the step response in case of Lag = CycleTime.Value / 2:

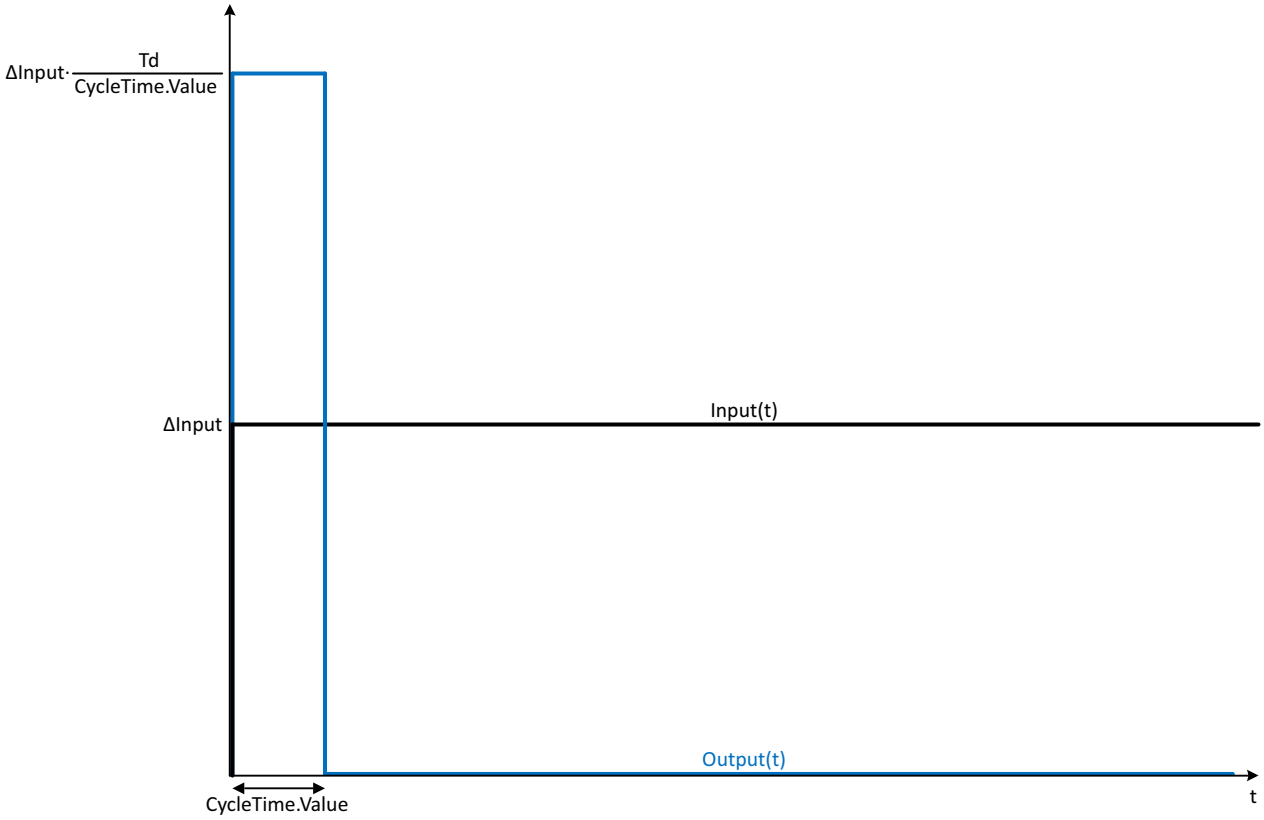

Frequency response of a DT1 element

The frequency response of a transfer element is described by the amplitude response and the phase response.
The amplitude response describes the gain of a signal through the transfer element depending on the angular frequency of the signal.
The following equation describes the amplitude response of a DT1 element:

$$|G(\omega)| = \frac{\omega \cdot Td}{\sqrt{1 + (\omega \cdot Lag)^2}}$$

$\lvert G(\omega)\rvert$	Signal gain as a function of the angular frequency
ω	Angular frequency

The following figure shows the amplitude response of a DT1 element:

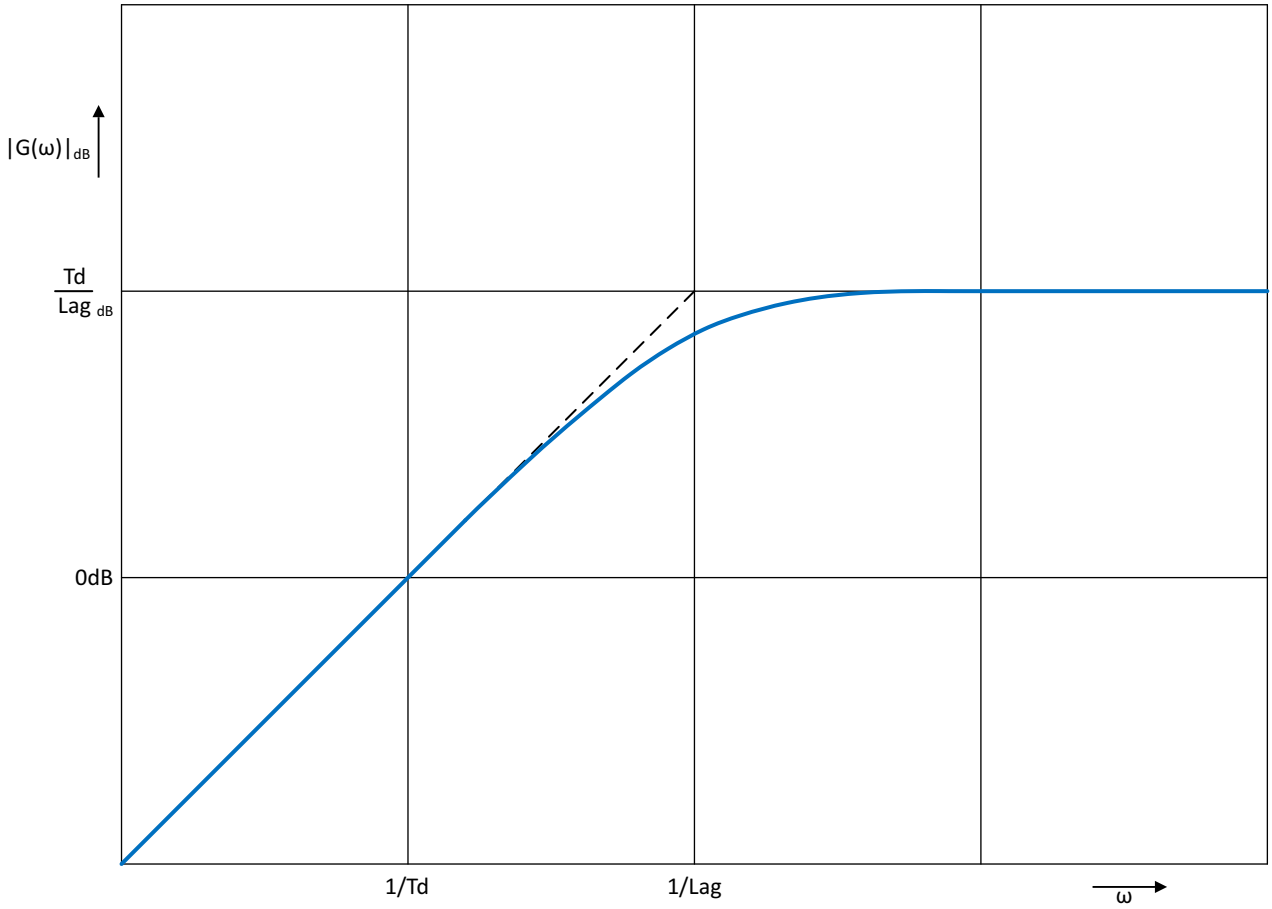

The phase response describes the phase offset of a signal through the transfer element depending on the angular frequency of the signal.
The following equation describes the phase response of a DT1 element:

$$\varphi(\omega) = \tan^{-1}(\omega \cdot \mathrm{Lag})$$

φ(ω)	Phase offset as a function of the angular frequency
ω	Angular frequency

The following figure shows the phase response of a DT1 element:

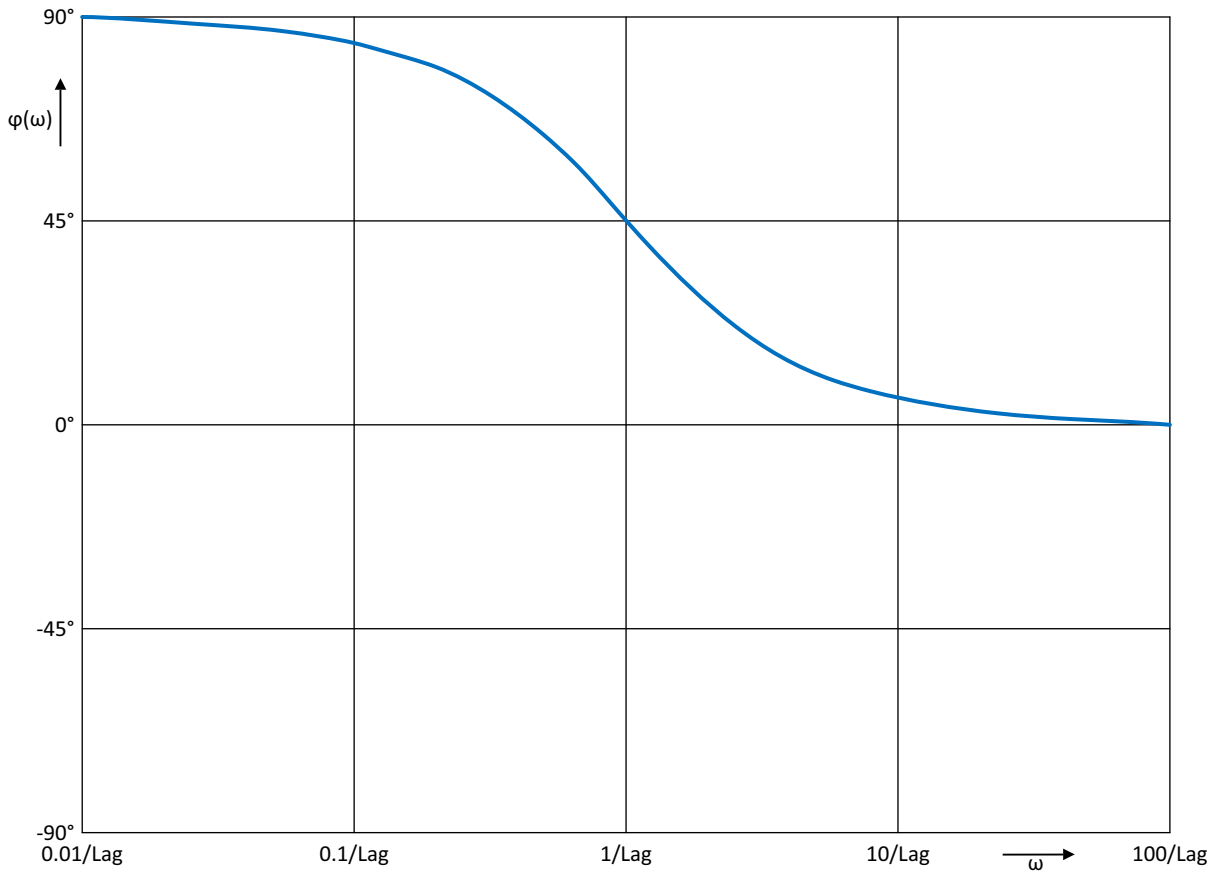

Call

In an OB or FC, Filter_DT1 is called as single-instance DB. In an FB, Filter_DT1 can be called as a single-instance DB, as a multi-instance DB and as a parameter-instance DB.
When the instruction is called, no technology object is created. No parameter assignment interface or commissioning interface is available. You assign the Filter_DT1 parameters directly using the instance DB and commission Filter_DT1 using a watch table of the user program in the CPU or HMI.

Startup

The tags in the static area of Filter_DT1 are not retentive. These tags are initialized with the start values after each operating state transition of the CPU from STOP to RUN. If you change the actual values in online mode and these values are to be retained after the operating state transition of the CPU, back up these values in the start values of the data block.
Specify the initialization value for the Output parameter at the StartMode tag.
During the first call of Filter_DT1 after the

- Operating state transition of the CPU

or

- Execution of "Load start values as actual values" (only with "All values" option, not with "Only setpoints" option)

the initialization value is output at the Output parameter.

For subsequent calls, Filter_DT1 calculates the output value, starting from this initialization value, based on the input value and the filter configuration.

The following table shows the dependency between the StartMode tag and the Output parameter. The values in the Output column are output at the Output parameter after the operating state transition of the CPU.

StartMode	Output	Example
0	Value of the Input parameter	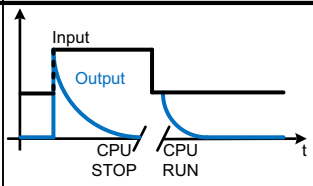
1	Value of the SubstituteOutput parameter	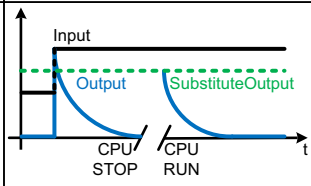
2	Remains unchanged Output parameter is retentive Default setting Is used when StartMode is not in the range 0...3	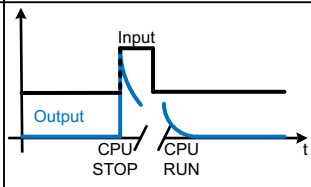
3	0.0	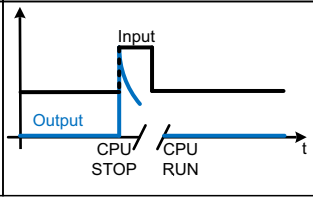

The following applies in addition for all values of the StartMode tag:

- The initialization value is limited to the value range of the data type REAL. Only then is the initialization value output at the Output parameter.
- If the initialization value is not a valid REAL value, the substitute output value is output at the Output parameter. The substitute output value is configured by the ErrorMode tag. The substitute output value is limited to the value range of the data type REAL before it is output at the Output parameter. If the substitute output value is also not a valid REAL value, 0.0 is output at the Output parameter. For subsequent calls, the instruction calculates the output value starting from this substitute output value.
- The StartMode tag is only effective when the Reset = FALSE parameter is set at the first call of the instruction and at the same time no error with error message ErrorBits ≥ 16#0002_0000 is pending. If the Reset = TRUE parameter is set, the value of the SubstituteOutput parameter is output at the Output parameter. If an error is pending with ErrorBits ≥ 16#0002_0000, the substitute output value that is configured at the ErrorMode tag is output at the Output parameter.

Reaction to error

The Filter_DT1 instruction detects different errors that can occur during the calculation of the output value. The result of this calculation can be output at the output despite a pending error. If an error prevents correct calculation of the output value, a substitute output value is output at the output.
Specify the substitute output value that is output if an error occurs that prevents correct calculation of the output value at the ErrorMode tag.
The following table shows the dependency between the ErrorMode tag and the substitute output value that is output by the Filter_DT1 at the Output parameter:

ErrorMode	Output
0	Value of the Input parameter
1	Value of the SubstituteOutput parameter
2	The last valid filter output value 0.0, if no valid filter output value exists Default setting Is used when ErrorMode is not in the range 0...3
3	0.0

The following applies in addition for all values of the ErrorMode tag:

- If the substitute output value is not a valid REAL value, 0.0 is output as output value.
- The substitute output value is limited to the value range of the data type REAL. Only then is the substitute output value output at the Output parameter.
- The ErrorMode tag is only effective when the Reset = FALSE parameter is set. If the Reset = TRUE parameter is set, the value of the SubstituteOutput parameter is output at the Output parameter.

The Error parameter indicates if an error is pending. When the error is no longer pending, Error is set to FALSE. The ErrorBits parameter shows which errors have occurred. ErrorBits is retentive and is reset only by a positive edge at the Reset or ErrorAck parameter.

10.11.3 Operating principle Filter_DT1

Reset response

Filter_DT1 behaves as follows depending on the Reset parameter:

- If the Reset =TRUE parameter is set, the value of the SubstituteOutput parameter is output at the Output parameter.
- If the Reset = FALSE parameter is set, the value that is output at the Output parameter is calculated by the filter algorithm.
- When the Reset parameter is set from FALSE to TRUE, the value at the Output parameter changes directly to the value of the SubstituteOutput parameter. An output jump can occur during this transition. In addition, the ErrorBits parameter is reset.
- When the Reset parameter is set from TRUE to FALSE, the filtering algorithm is added so that the transition is bumpless.

Enable behavior EN/ENO

If one of the following conditions is met, enable output ENO is set to FALSE.

- Enable input EN is set to TRUE and the Output parameter is specified by a substitute output value in case of error messages ErrorBits ≥ 16#0001_0000.
- Enable input EN is set to FALSE.

Otherwise, the enable output ENO is set to TRUE.

Measuring the cycle time automatically

To calculate the output value, Filter_DT1 needs the time that has expired since the last call of Filter_DT1.

By default, the cycle time is measured automatically and output as of the second call at the CycleTime.Value tag. Filter_DT1 measures the cycle time for each call of the instruction and can therefore be used in non-isochronous call cycles, e.g. in OB1.

Note that conditional calls of the instruction, active breakpoints, or the loading of snapshots as actual values during automatic measurement of the cycle time will extend the cycle time value. A cycle time that is too long is identified as error with error message ErrorBits = 16#0008_0000.

If measurement of the cycle time returns no valid result, Filter_DT1 calculates the current output value with the last valid cycle time. In addition, Filter_DT1 outputs an error message at the ErrorBits parameter.

When you disable automatic measurement of the cycle time by setting the CycleTime.EnableMeasurement tag = FALSE, you must enter the cycle time manually at the CycleTime.Value tag. Filter_DT1 checks the CycleTime.Value tag for validity at each call.

Automatic measurement of the cycle time with breakpoints

When breakpoints are active between two calls of Filter_DT1, automatic measurement of the cycle time results in the actual time that has elapsed between two calls. When one breakpoint is active, the CPU is in HOLD operating state.

NOTE

The active breakpoints extend the time period between two calls of Filter_DT1.

The longer the time period between two calls, the greater the change of the output value at the Output parameter.

Furthermore, it is possible that the longer time intervals violate the conditions Lag ≥ CycleTime.Value/2 or Td ≥ CycleTime.Value. An error is then detected with the error message ErrorBits = 16#0008_0000 .

If you do not need the calculation of the output value based on the actual time with active breakpoints, follow these steps:

- Disable automatic measurement of the cycle time by setting the CycleTime.EnableMeasurement tag = FALSE.
- Enter the cycle time manually at the CycleTime.Value tag.

10.11.4 Input parameter Filter_DT1

Parameter	Data type	Default	Description
Input	REAL	0.0	Input value
Substitu-teOutput	REAL	0.0	SubstituteOutput is used as the substitute output value when • Reset = TRUE or • An error with error message ErrorBits ≥ 16#0001_0000 prevents the correct calculation of the output value, and ErrorMode is configured to the value 1.
ErrorAck	BOOL	FALSE	Deletes the error messages • Edge FALSE -> TRUE ErrorBits is reset.
Reset	BOOL	FALSE	Performs a restart of the instruction • Edge FALSE -> TRUE ErrorBits is reset. • As long as Reset is set to TRUE, the substitute output value SubstituteOutput is output at the output. • As long as Reset is set to FALSE, the calculation of the output value is performed.

10.11.5 Output parameter Filter_DT1

Parameter	Data type	Default	Description
Output	REAL	0.0	Output value The output value is retentive.
ErrorBits	DWORD	DW#16#0	The ErrorBits parameter (Page 513) shows which error messages are pending. ErrorBits is retentive and is reset upon a positive edge at Reset or ErrorAck.
Error	BOOL	FALSE	When Error is set to TRUE, at least one error is currently pending.

10.11.6 Static tags Filter_DT1

Tag	Data type	Default	Description
Td	REAL	25.0	Derivative action time in seconds Permissible value range: Td ≥ CycleTime.Value
Lag	REAL	5.0	Lag time constant in seconds Permissible value range: Lag ≥ CycleTime.Value/2
ErrorMode	INT	2	Selection of the substitute output value following an error • 0 = Input • 1 = SubstituteOutput • 2 = Last valid filter output value • 3 = 0.0 Permissible value range: 0 to 3

Tag	Data type	Default	Description
StartMode	INT	2	Selecting the output value for the first call of the instruction • 0 = Input • 1 = SubstituteOutput • 2 = Last output value • 3 = 0.0 Permissible value range: 0 to 3
CycleTime	AuxFct_CycleTime	-	Cycle time data
CycleTime.Value	REAL	0.1	Cycle time in seconds (time interval between two calls) Permissible value range: CycleTime.Value > 0.0
Cycle-Time.Enable-Measurement	BOOL	TRUE	Automatic measurement of the cycle time • FALSE = Deactivated • TRUE = Activated

10.11.7 ErrorBits parameter

If several errors are pending simultaneously, the values of the ErrorBits are displayed with binary addition. The display of ErrorBits = 16#0000_0003, for example, indicates that the errors 16#0000_0001 and 16#0000_0002 are pending simultaneously.

For Filter_DT1, the errors output at the ErrorBits parameter are divided into two categories:

- Errors with error messages ErrorBits < 16#0001_0000
- Errors with error messages ErrorBits ≥ 16#0001_0000

Errors with error messages ErrorBits < 16#0001_0000

If one or more errors with error messages ErrorBits < 16#0001_0000 are pending, Filter_DT1 reacts as follows:

- The output value is determined as follows despite this error:
  - When Reset = FALSE, output value calculation by the filter algorithm
  - When Reset = TRUE, output of SubstituteOutput
- The output parameter Error is set.
- The enable output ENO is not changed.

The output parameter Error is deleted as soon as there are no longer any errors.

ErrorBits (DW#16#...)	Description
0000_0000	No error is pending.
0000_0001	**Cause of error and response to error:** The Output parameter was limited to -3.402823e+38 or +3.402823e+38. **Solution:** If the value determined by the filter function is output at the output (Reset = FALSE and ErrorBits < 16#0001_0000), check the following tags used in the filter calculation: • Input • Td • Lag • CycleTime.Value

ErrorBits (DW#16#...)	Description
	When ErrorBits ≥ 16#0001_0000 and Reset = FALSE, the substitute output value is limited on its output. In this case, check the following parameters depending on the set value at the tag ErrorMode: • Input • SubstituteOutput When Reset = TRUE, check the SubstituteOutput parameter.
0000_0002	**Cause of error:** The measurement of the cycle time yields in an invalid value while the output value is being calculated (Reset = FALSE). **Response to error:** If a valid value of the cycle time has already been measured, Filter_DT1 calculates the output value based on the last value of the CycleTime.Value tag. If no valid value of the cycle time was previously measured, Filter_DT1 still outputs the output value configured with the StartMode tag at the Output parameter.

Errors with error messages ErrorBits ≥ 16#0001_0000

If one or more errors with error messages ErrorBits ≥ 16#0001_0000 are pending, Filter_DT1 reacts as follows:

- The output value cannot be determined as expected. The substitute output value is output instead.
- The output parameter Error is set.
- The enable output ENO is set to FALSE.

As soon as there are no longer errors with error messages ErrorBits ≥ 16#0001_0000, Filter_DT1 reacts as follows:

- The output value is determined as follows:
  - When Reset = FALSE, output value calculation by the filter algorithm
  - When Reset = TRUE, output of SubstituteOutput
- The enable output ENO is set to TRUE.

The output parameter Error is deleted as soon as there are no longer any errors.

ErrorBits (DW#16#...)	Description		
0001_0000	**Cause of error:** The SubstituteOutput parameter or a different tag that is being used as output value has no valid REAL value. **Response to error:** The output is set to 0.0. **Solution:** Make sure that the tag used as output value is a valid REAL value (≠NaN e.g. 16#7FFF_FFFF). The tag that is used as output value depends on Reset and ErrorMode:		
	Reset	**ErrorMode**	**Output value**
	FALSE	0	Input
	FALSE	1	SubstituteOutput
	TRUE	-	SubstituteOutput

ErrorBits (DW#16#...)	Description
0002_0000	**Cause of error:** The Input parameter has no valid REAL value while the calculation of the output value is being performed (Reset = FALSE). **Response to error:** The substitute output value that is configured at the ErrorMode tag is output at the Output parameter. When ErrorMode = 0, 0.0 is used as output value. **Solution:** Make sure that the parameter Input is a valid REAL value (≠NaN e.g. 16#7FFF_FFFF).
0004_0000	**Cause of error:** The calculation of the output value yields an invalid REAL value for the Output parameter. **Response to error:** The substitute output value that is configured at the ErrorMode tag is output at the Output parameter. **Solution:** Check all tags involved in the calculation of the output value: • Input • Td • Lag • CycleTime.Value These tags have valid values. The calculation of the output value fails in this combination of tags.
0008_0000	**Cause of error:** The Lag or Td tag has an invalid value, while the calculation of the output value is being performed (Reset = FALSE). **Response to error:** The substitute output value that is configured at the ErrorMode tag is output at the Output parameter. **Solution:** Ensure that the following conditions for the values of the Td and Lag tags are met: • CycleTime.Value ≤ Td ≤ 3.402823e+38 • CycleTime.Value/2 ≤ Lag ≤ 3.402823e+38 • The values are valid REAL values (≠ NaN, for example 16#7FFF_FFFF) Additional information: Note that the conditions CycleTime.Value/2 ≤ Lag and CycleTime.Value ≤ Td may be violated in the following scenarios: • The time interval between two calls of Filter_DT1 is longer than 2 * Lag or Td, for example, due to conditional calls in the program sequence or active breakpoints. • A snapshot of the Filter_DT1 instance DB is loaded into the CPU as actual values, and the snapshot was created more than 2 * Lag or Td ago. In these scenarios, an error message ErrorBits = 16#0008_0000 is detected during automatic measurement of the cycle time.
0020_0000	**Cause of error:** The tag (configured with StartMode) for the initialization of the Output parameter at the first call of the instruction does not have a valid REAL value. **Response to error:** The substitute output value is output with the first call of the instruction at the Output parameter that is configured at the ErrorMode tag. For subsequent calls, Filter_DT1 calculates the output value starting from this substitute output value. **Solution:** Make sure that the tag for initializing the parameter Output is a valid REAL value (≠ NaN e.g. 16#7FFF_FFFF). When Reset = FALSE is set, the initialization takes effect with the first call of the instruction after the operating state transition of the CPU from STOP to RUN. The tag that is used for the initialization of the Output parameter depends on StartMode: • StartMode = 1: SubstituteOutput • StartMode = 2: Output

ErrorBits (DW#16#...)	Description
0040_0000	**Cause of error:** The CycleTime.Value tag has an invalid value, while the calculation of the output value is being performed (Reset = FALSE). **Response to error:** The substitute output value that is configured at the ErrorMode tag is output at the Output parameter. **Solution:** Ensure that the following conditions are met: • 0.0 < CycleTime.Value ≤ 3.402823e+38 • CycleTime.Value is a valid REAL value (≠ NaN e.g. 16#7FFF_FFFF) **Additional information:** To automatically calculate the value of the CycleTime.Value tag, set the CycleTime.EnableMeasurement tag to TRUE.

Index

C

CONT_C
- Mode of operation, 380
- Block diagram, 382
- Input parameters, 383
- Output parameters, 384

CONT_S
- Instruction, 385
- Mode of operation, 385
- Block diagram, 387
- Input parameters, 388
- Output parameters, 389

F

Filter_DT1, 504

Filter_PT1, 479

Filter_PT2, 491

I

Icon
- For value comparison, 48

P

PID_3Step
- Instruction, 267
- Input parameters, 276
- Output parameters, 278
- In/out parameters, 280
- Instruction, 298
- Input parameters, 305
- Output parameters, 306
- Static tags, 308

PID_Compact
- Input parameters, 223
- Output parameters, 224
- In/out parameters, 225
- Instruction, 248
- Input parameters, 251
- Output parameters, 252
- Static tags, 253

PID_Temp
- Cascading, 167
- Multi-zone applications, 172
- Operating principle, 331
- Input parameters, 336
- Output parameters, 337
- In/out parameters, 339
- Mode, 339
- Cascade, 339
- PID_Temp state and mode parameters, 365
- Parameter ErrorBits, 371
- ActivateRecoverMode tag, 373
- Tag Warning, 375
- PwmPeriode, 376

Polyline, 429

PULSEGEN
- Instruction, 389
- Mode of operation, 391

PULSEGEN
- Input parameters, 397
- Output parameters, 398

R

RampFunction, 444

RampSoak, 457

S

Software controller
- Configuring, 39

SplitRange, 439

T

TCONT_CP
- Instruction, 398
- Mode of operation, 399
- Input parameters, 412
- Output parameters, 413
- In/out parameters, 413
- Static tags, 414

TCONT_S
Instruction, 419
Operating principle, 420
Input parameters, 425
Output parameters, 426
In/out parameters, 426
Static tags, 426
Technology objects
PID_Compact, 69
PID_3Step, 103
PID_Temp, 137
CONT_C, 179
CONT_S, 183
TCONT_CP, 185
TCONT_S, 206

V

Values
Comparing, 48

SIEMENS

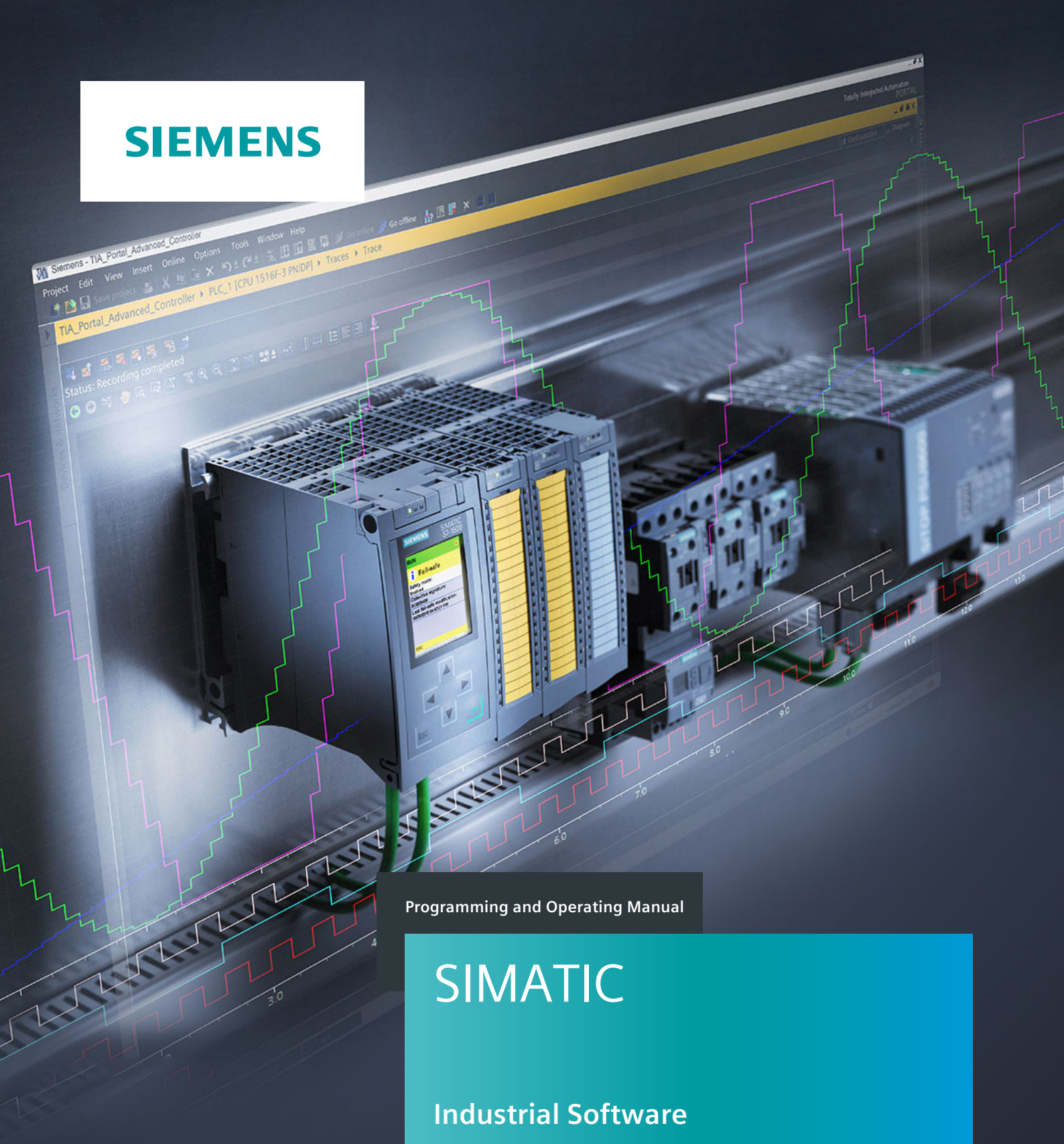

Programming and Operating Manual

SIMATIC

Industrial Software

SIMATIC Safety - Configuring and Programming

Edition 11/2022

siemens.com

SIEMENS

SIMATIC

Industrial Software SIMATIC Safety - Configuring and Programming

Programming and Operating Manual

Product Overview 1

Configuring 2

Safety Administration Editor 3

Access protection 4

Programming 5

F-I/O access 6

Implementation of user acknowledgment 7

Data exchange between standard user program and safety program 8

Safety-related communication 9

Compiling and commissioning a safety program 10

System acceptance 11

Operation and Maintenance 12

STEP 7 Safety V18 instructions 13

Monitoring and response times A

Checklist B

11/2022
A5E02714440-AM

Legal information

Warning notice system

This manual contains notices you have to observe in order to ensure your personal safety, as well as to prevent damage to property. The notices referring to your personal safety are highlighted in the manual by a safety alert symbol, notices referring only to property damage have no safety alert symbol. These notices shown below are graded according to the degree of danger.

⚠ DANGER
indicates that death or severe personal injury **will** result if proper precautions are not taken.

⚠ WARNING
indicates that death or severe personal injury **may** result if proper precautions are not taken.

⚠ CAUTION
indicates that minor personal injury can result if proper precautions are not taken.

NOTICE
indicates that property damage can result if proper precautions are not taken.

If more than one degree of danger is present, the warning notice representing the highest degree of danger will be used. A notice warning of injury to persons with a safety alert symbol may also include a warning relating to property damage.

Qualified Personnel

The product/system described in this documentation may be operated only by **personnel qualified** for the specific task in accordance with the relevant documentation, in particular its warning notices and safety instructions. Qualified personnel are those who, based on their training and experience, are capable of identifying risks and avoiding potential hazards when working with these products/systems.

Proper use of Siemens products

Note the following:

⚠ WARNING
Siemens products may only be used for the applications described in the catalog and in the relevant technical documentation. If products and components from other manufacturers are used, these must be recommended or approved by Siemens. Proper transport, storage, installation, assembly, commissioning, operation and maintenance are required to ensure that the products operate safely and without any problems. The permissible ambient conditions must be complied with. The information in the relevant documentation must be observed.

Trademarks

All names identified by ® are registered trademarks of Siemens AG. The remaining trademarks in this publication may be trademarks whose use by third parties for their own purposes could violate the rights of the owner.

Disclaimer of Liability

We have reviewed the contents of this publication to ensure consistency with the hardware and software described. Since variance cannot be precluded entirely, we cannot guarantee full consistency. However, the information in this publication is reviewed regularly and any necessary corrections are included in subsequent editions.

Siemens AG
Digital Industries
Postfach 48 48
90026 NÜRNBERG
GERMANY

A5E02714440-AM
Ⓟ 09/2022 Subject to change

Copyright © Siemens AG 2011 - 2022.
All rights reserved

Important notes

Purpose of this documentation

The information in this documentation enables you to configure (Page 39) and program (Page 96) SIMATIC Safety fail-safe systems. In addition, you will obtain information on acceptance (Page 329) of a SIMATIC Safety F-system.

NOTE

The Programming and Operating Manual "SIMATIC Safety - Configuring and Programming" in its latest version (possibly including product information for the manual) is the relevant source of all information on functional safety regarding configuring and programming. This also applies in the event of discrepancies between this manual and other documentation on functional safety regarding configuring and programming of SIMATIC Safety.

You must heed all warnings in the Programming and Operating Manual "SIMATIC Safety - Configuring and Programming".

NOTE

Version designation *STEP 7 Safety Advanced V18* and *STEP 7 Safety Basic V18*

The delivered *STEP 7 Safety Advanced V18* and *STEP 7 Safety Basic V18* have the version designation V18.0.1.0.
For this reason, the version designation, e.g. in the display and the safety summary, is shown as V18 SP1.

Basic knowledge requirements

General basic knowledge of automation engineering is needed to understand this documentation. Basic knowledge of the following is also necessary:

- Fail-safe automation systems
- Automation systems
  - S7-300
  - S7-400
  - S7-1200
  - S7-1500
  - S7-1500H
  - S7-1500 Software Controller
  - SIMATIC Drive Controller
  - WinAC RTX F

- Distributed I/O systems on
  - PROFIBUS DP
  - PROFINET IO
- Totally Integrated Automation Portal, including:
  - Hardware configuration with the *hardware and network editor*
  - Programming in the LAD and FBD programming languages using the *program editor*.
  - Communication between CPUs

Scope of this documentation

This documentation is valid for *STEP 7 Safety Advanced V18* and *STEP 7 Safety Basic V18*.
STEP 7 Safety Advanced V18 and *STEP 7 Safety Basic V18* are used for the configuration and programming of the fail-safe SIMATIC Safety system.
In this context, integration of the F-I/O listed below in SIMATIC Safety is also addressed:

- S7-1500/ET 200MP fail-safe modules
- ET 200SP fail-safe modules
- ET 200S fail-safe modules
- ET 200eco fail-safe I/O modules
- ET 200eco PN fail-safe I/O modules
- ET 200AL fail-safe I/O modules
- ET 200pro fail-safe modules
- ET 200iSP fail-safe modules
- S7-300 fail-safe signal modules
- S7-1200 fail-safe modules
- Fail-safe GSD based DP slaves
- Fail-safe GSD based I/O devices

Approvals

The SIMATIC Safety F-system is certified for use in safety mode up to:

- Safety Integrity Level SIL3 in accordance with IEC 61508:2010
- Performance Level (PL) e and category 4 in accordance with ISO 13849-1:2015 or EN ISO 13849-1:2015

Incorporation in the information landscape

Depending on your application, you will need the following supplementary documentation when working with *STEP 7 Safety*.

This documentation includes references to the supplementary documentation where appropriate.

Documentation	Brief description of relevant content
For the SIMATIC Safety F-system	Depending on which F-CPU you are using, you will need the following documentation: • For the F-CPUs S7-1200/1500, a Product Information (http://support.automation.siemens.com/WW/view/en/109478599) describes all deviations from the respective standard CPUs. • Each F-CPU S7-300/400 that can be used has its own product information. The product information describes the deviations from the respective standard CPUs. • The Device manuals (http://support.automation.siemens.com/WW/view/en/67295862/133300) describe the S7-1500 CPUs. • The "S7-300, CPU 31xC and CPU 31x: Installation" (http://support.automation.siemens.com/WW/view/en/13008499) operating instructions describe the installation and wiring of S7-300 systems. • The "CPU 31xC and CPU 31x, Technical Data" (http://support.automation.siemens.com/WW/view/en/12996906) device manual describes the CPUs 315-2 DP and PN/DP, the CPU 317-2 DP and PN/DP, and the CPU 319-3 PN/DP. • The "S7-400 Automation System, Installation (http://support.automation.siemens.com/WW/view/en/1117849) installation manual describes the installation and wiring of S7-400 systems. • The "S7-400 Automation System, CPU Data" (http://support.automation.siemens.com/WW/view/en/23904550) reference manual describes the CPUs 414-3 PN/DP, the CPU 416-2, and the CPU 416-3 PN/DP. • The "ET 200S Interface Module IM 151-7 CPU" (http://support.automation.siemens.com/WW/view/en/12714722) manual describes the IM 151-7 CPU. • The "ET 200S, Interface Module IM 151-8 PN/DP CPU" (http://support.automation.siemens.com/WW/view/en/47409312) manual describes the IM 151-8 PN/DP CPU. • The "ET 200S, Interface Module IM 154-8 CPU" (http://support.automation.siemens.com/WW/view/de/24363739/0/en) manual describes the IM 154-8 CPU. • The Manual "Windows Automation Center RTX WinAC RTX (F) 2010 (http://support.automation.siemens.com/WW/view/en/43715176)" describes the WinAC RTX 2010 and the WinAC RTX F 2010. • The "S7-1500 Software Controller CPU 1505SP, CPU 1507S (http://support.automation.siemens.com/WW/view/en/109249299)" manual describes the SIMATIC S7-1500 Software Controller 1505SP and CPU 1507S.
"S7-1200 Functional Safety manual (http://support.automation.siemens.com/WW/view/en/104547552)" system manual	Describes the F-CPUs S7-1200 and the fail-safe modules S7-1200 (including installation, wiring, and technical specifications)

Documentation	Brief description of relevant content
"S7-1500/ET200MP system manual (http://support.automation.siemens.com/WW/view/en/59191792)" system manual and the product manuals (https://support.industry.siemens.com/cs/ww/en/ps/14141/man) for the corresponding S7-1500/ET 200MP fail-safe modules	Describes the hardware of the S7-1500 systems and the S7-1500/ET 200MP fail-safe modules (including installation, wiring, and technical specifications)
System manual "Redundant System S7-1500R/H (https://support.industry.siemens.com/cs/ww/en/view/109754833)"	Describes the hardware of S7-1500R/H systems (including design, wiring and technical specifications)
"SIMATIC Drive Controller (https://support.industry.siemens.com/cs/ww/en/view/109766665)" system manual and "SIMATIC Drive Controller (https://support.industry.siemens.com/cs/ww/en/view/109766666)" equipment manual	Describes the hardware of the SIMATIC Drive Controller (including design, wiring and technical specifications)
"SIMATIC S7-1500 S7-PLCSIM Advanced (https://support.industry.siemens.com/cs/ww/en/view/109798879)" function manual	Describes the operation of S7 PLCSIM Advanced
"ET 200SP distributed I/O system (http://support.automation.siemens.com/WW/view/en/58649293)" system manual and the product manuals (https://support.industry.siemens.com/cs/ww/en/ps/14059/man) for the corresponding ET 200SP fail-safe modules	Describes the hardware of the ET 200SP fail-safe modules (including installation, wiring, and technical specifications)
"ET 200eco Distributed I/O Station Fail-safe I/O Block (http://support.automation.siemens.com/WW/view/en/19033850)" manual	Describes the hardware of the ET 200eco fail-safe I/O module (including installation, wiring, and technical specifications)
Manual "ET 200eco PN F-DI 8 x 24 VDC, 4xM12 / F-DQ 3 x 24 VDC/2.0A PM, 3xM12 (https://support.industry.siemens.com/cs/ww/en/view/109765611)"	Describes the hardware of the ET 200eco PN fail-safe I/O module (including installation, wiring, and technical specifications)
System manual "ET 200AL system manual (https://support.industry.siemens.com/cs/ww/en/view/89254965)" and equipment manual "Digital I/O Module F-DI 4+F-DQ 2x24VDC/2A, 4xM12"	Describes the hardware of the ET 200AL fail-safe signal module (including installation, wiring, and technical specifications)
"Distributed I/O System ET 200S, Fail-Safe Modules (http://support.automation.siemens.com/WW/view/en/27235629)" operating instructions	Describes the hardware of the ET 200S fail-safe modules (including installation, wiring, and technical specifications)

Documentation	Brief description of relevant content
"S7-300 Automation System, ET 200M Distributed I/O System, Fail-safe Signal Modules (http://support.automation.siemens.com/WW/view/en/19026151)" manual	Describes the hardware of the S7-300 fail-safe signal modules (including installation, wiring, and technical specifications)
"Distributed I/O system ET 200pro, fail-safe I/O modules (http://support.automation.siemens.com/WW/view/en/22098524)" operating instructions	Describes the hardware of the ET 200pro fail-safe modules (including installation, wiring, and technical specifications)
"ET 200iSP distributed I/O device - Fail-safe modules (http://support.automation.siemens.com/WW/view/en/47357221)" operating instructions	Describes the hardware of the ET 200iSP fail-safe modules (including installation, wiring, and technical specifications)
Help on *STEP 7*	• Describes the operation of the standard tools in *STEP 7* • Contains information regarding configuration and parameter assignment of hardware • Contains a description of the FBD and LAD programming languages

The complete *SIMATIC S7* documentation is available on DVD. You can find more information on the Internet (http://www.automation.siemens.com/mcms/industrial-automation-systems-simatic/en/manual-overview/manual-collection/Pages/Default.aspx).

Guide

This documentation describes how to work with *STEP 7 Safety*. It includes instructions and reference sections (description of the instructions for the safety program).

The following topics are addressed:

- Configuration of SIMATIC Safety
- Access protection for SIMATIC Safety
- Programming of the safety program (safety-related user program)
- Safety-related communication
- Instructions for the safety program
- Support for the system acceptance
- Operation and maintenance of SIMATIC Safety
- Monitoring and response times

Conventions

The following conventions apply:

- In this documentation, the terms "safety engineering" and "fail-safe engineering" are used synonymously. The same applies to the terms "fail-safe" and "F-".
- "F-systems" include redundant S7-1500HF systems. Special features and restrictions of H systems are described in the system manual "Redundant S7-1500R/H system (https://support.industry.siemens.com/cs/ww/en/view/109754833)" and also apply to the redundant S7-1500HF systems.
- *"STEP 7 Safety V18"* stands for *"STEP 7 Safety Advanced V18"* and *"STEP 7 Safety Basic V18"*.
- "(S7-300)" indicates that the section **only** applies to S7-300 F-CPUs. S7-300 F-CPUs also includes the F-CPUs ET 200S and ET 200pro (IM F-CPUs).
- "(S7-400)" indicates that the section **only** applies to S7-400 as well as WinAC RTX F.
- "(S7-1200)" indicates that the section **only** applies to S7-1200 F-CPUs.
- "(S7-1500)" indicates that the section **only** applies to S7-1500 F-CPUs. S7-1500 F-CPUs also includes S7-1500 HF-CPUs, ET 200SP F-CPUs, the CPU 151xpro F-2 PN, the S7-1500 F Software Controller and the SIMATIC Drive Controller. In the case of exceptions, these are indicated.

The scopes can be combined.

The term **Safety program** refers to the fail-safe portion of the user program and is used instead of "fail-safe user program," "F-program," etc. For purposes of contrast, the non-safety-related part of the user program is referred to as the "standard user program".

The **hardware configuration** includes the configuration of standard CPUs and standard I/Os as well as the configuration of F-CPUs and F-I/Os.

The **safety-related hardware configuration** includes the safety-related parameters of the F-CPUs and F-I/Os.

The **safety-related project data** includes the safety-related hardware configuration as well as the safety program.

NOTE

Each warning is marked with a unique number at the end of the text. This enables you to easily reference other documents, for example, to obtain an overview of the safety requirements for the system.

Additional support

If you have further questions about the use of products presented in this manual, contact your local Siemens representative.

You can find information on whom to contact on the Web (http://www.siemens.com/automation/partner).

A guide to the technical documentation for the various SIMATIC products and systems is available on the Web (http://www.siemens.com/simatic-tech-doku-portal).

You can find the online catalog and online ordering system on the Web (www.siemens.com/industrymall).

Training center

We offer courses to help you get started with the S7 automation system. To do this, contact your regional training center or the central training center in Nuremberg, Germany.
You can find more information on the Internet (http://www.sitrain.com).

Technical Support

To contact Technical Support for all Industry Automation products, use the Support Request Web form (http://www.siemens.com/automation/support-request).
You can find additional information about our Technical Support on the Web (http://www.siemens.com/automation/service).

Important note for maintaining the operational safety of your system

NOTE

The operators of systems with safety-related characteristics must adhere to operational safety requirements. The supplier is also obliged to comply with special product monitoring measures. Siemens informs system operators in the form of personal notifications about product developments and properties which could be or become important issues in terms of operational safety.

You should subscribe to the corresponding notifications in order to obtain the latest information and to allow you to make any necessary modifications to your system.

Log in in the Industry Online Support. Follow the links below and click on "Email on update" on the right-hand side in each case:

- SIMATIC S7-300/S7-300F (https://support.industry.siemens.com/cs/products?pnid=13751&lc=en-WW)
- SIMATIC S7-400/S7-400H/S7-400F/FH (https://support.industry.siemens.com/cs/products?pnid=13828&lc=en-WW)
- SIMATIC S7-1500/SIMATIC S7-1500F/SIMATIC S7-1500HF (https://support.industry.siemens.com/cs/products?pnid=13716&lc=en-WW)
- SIMATIC S7-1200/SIMATIC S7-1200F (https://support.industry.siemens.com/cs/products?pnid=13683&lc=en-WW)
- Software Controller (https://support.industry.siemens.com/cs/products?pnid=13911&lc=en-WW)
- Distributed I/O (https://support.industry.siemens.com/cs/products?pnid=14029&lc=en-WW)
- STEP 7 (TIA Portal) (https://support.industry.siemens.com/cs/products?pnid=14340&lc=en-WW)

Security information

Siemens provides products and solutions with industrial security functions that support the secure operation of plants, systems, machines and networks.

In order to protect plants, systems, machines and networks against cyber threats, it is necessary to implement – and continuously maintain – a holistic, state-of-the-art industrial security concept. Siemens' products and solutions constitute one element of such a concept.

Customers are responsible for preventing unauthorized access to their plants, systems, machines and networks. Such systems, machines and components should only be connected to an enterprise network or the internet if and to the extent such a connection is necessary and only when appropriate security measures (e.g. firewalls and/or network segmentation) are in place.

For additional information on industrial security measures that may be implemented, please visit (https://www.siemens.com/industrialsecurity).

Siemens' products and solutions undergo continuous development to make them more secure. Siemens strongly recommends that product updates are applied as soon as they are available and that the latest product versions are used. Use of product versions that are no longer supported, and failure to apply the latest updates may increase customers' exposure to cyber threats.

To stay informed about product updates, subscribe to the Siemens Industrial Security RSS Feed visit (https://www.siemens.com/cert).

Siemens Industry Online Support

You can find current information on the following topics quickly and easily here:

- **Product support**
  All the information and extensive know-how on your product, technical specifications, FAQs, certificates, downloads, and manuals.
- **Application examples**
  Tools and examples to solve your automation tasks – as well as function blocks, performance information and videos.
- **Services**
  Information about Industry Services, Field Services, Technical Support, spare parts and training offers.
- **Forums**
  For answers and solutions concerning automation technology.
- **mySupport**
  Your personal working area in Industry Online Support for messages, support queries, and configurable documents.

This information is provided by the Siemens Industry Online Support in the Internet (http://www.siemens.com/automation/service&support).

Industry Mall

The Industry Mall is the catalog and order system of Siemens AG for automation and drive solutions on the basis of Totally Integrated Automation (TIA) and Totally Integrated Power (TIP).

Catalogs for all the products in automation and drives are available on the Internet (https://mall.industry.siemens.com).

Table of contents

1 Product Overview 22

1.1 Overview 22

1.2 Hardware and Software Components 23

1.3 Installing/uninstalling the STEP 7 Safety Basic V18 license 29

1.4 Installing/uninstalling the STEP 7 Safety Advanced V18 license 29

1.5 Installing/uninstalling STEP 7 Safety PowerPack 30

1.6 Migrating projects from S7 Distributed Safety V5.4 SP5 to STEP 7 Safety Advanced 30

1.7 Migrating PLC programs to a n F-CPU S7-1500 33

1.8 Upgrading projects to STEP 7 Safety V18 34
1.8.1 Upgrading projects from STEP 7 Safety as of V14 SP1 to V18 34
1.8.2 Upgrading projects from STEP 7 Safety V13 SP1/SP2 to V18 35
1.8.3 Upgrading projects from STEP 7 Safety prior to V13 SP1 36

1.9 First steps 37

2 Configuring 39

2.1 Overview of Configuration 39

2.2 Particularities for configuring the F-System 42

2.3 Configuring an F-CPU 43

2.4 Configuring F-I/O 47

2.5 Configuration control (option handling) for F-I/Os 51
2.5.1 Example 52

2.6 Configuring shared device 56

2.7 Configuring isochronous mode (S7-1500) 57

2.8 Recommendation for PROFIsafe address assignment 57

2.9 Configurations supported by the SIMATIC Safety F-system 59

2.10 PROFIsafe addresses for F-I/O of PROFIsafe address type 1 61

2.11 PROFIsafe addresses for F-I/O of PROFIsafe address type 2 62

2.12 Setting the F-destination address for F-I/O with DIP switches 64

2.13 Assigning a PROFIsafe address of the F-I/Os with SIMATIC Safety 64
2.13.1 Identifying F-modules 66
2.13.2 Assign PROFIsafe address 67
2.13.3 Assigning a PROFIsafe address to an F-module in a cross-project shared device 68
2.13.4 Changing the PROFIsafe address 69

2.14 Peculiarities when configuring fail-safe GSD based DP slaves and fail-safe GSD based I/O devices 69

3 Safety Administration Editor 72

3.1 Opening the Safety Administration Editor 74

3.2 "General" area 75

3.3 "F-runtime group" area 77
3.3.1 "F-runtime group" area 77
3.3.2 Pre-/postprocessing (S7-1200, S7-1500) 77

3.4 "F-blocks" area 78

3.5 "F-compliant PLC data types" area (S7-1200, S7-1500) 80

3.6 “Web server F-Admins” area (S7-1200, S7-1500) 80

3.7 "Settings" area 81

3.8 "Flexible F-Link" area (S7-1200, S7-1500) 85

4 Access protection 88

4.1 Overview of access protection 88

4.2 Access protection for the safety-related project data 89
4.2.1 CPU-wide access protection for the safety-related project data 89
4.2.2 Project-wide access protection for the safety-related project data 91

4.3 Access protection for the F-CPU 91

4.4 Access protection through organizational measures 94

5 Programming 96

5.1 Overview of Programming 96
5.1.1 Program structure of the safety program (S7-300, S7-400) 96
5.1.2 Program structure of the safety program (S7-1200, S7-1500) 98
5.1.3 Safety program in Software Unit (Safety Unit) (S7-1500) 101
5.1.4 Fail-Safe Blocks 102
5.1.5 Restrictions in the programming languages FBD/LAD 103
5.1.6 F-compliant PLC data types (UDT) (S7-1200, S7-1500) 110
5.1.6.1 Grouping PLC tags for inputs and outputs of F-I/O in structures (S7-1200, S7-1500) 111
5.1.6.2 Example of structured PLC tags for inputs and outputs of F-I/O (S7-1200, S7-1500) 112
5.1.7 Editing PLC tags with external editors 115
5.1.8 Using Multiuser engineering 115
5.1.9 Deleting the safety program 115

5.2 Defining F-Runtime Groups 117
5.2.1 Rules for F-Runtime Groups of the Safety Program 117
5.2.2 Procedure for defining an F-runtime group (S7-300, S7-400) 118
5.2.3 Procedure for defining an F-runtime group (S7-1200, S7-1500) 122
5.2.4 F-runtime group communication (S7-300, S7-400) 126
5.2.5 F-runtime group communication (S7-1200, S7-1500) 129
5.2.6 Deleting an F-runtime group 131
5.2.7 Changing the F-runtime group (S7-300, S7-400) 132

5.2.8 Changing the F-runtime group (S7-1200, S7-1500) ... 132

5.3 Creating F-blocks in FBD / LAD ... 132
5.3.1 Creating F-blocks ... 132
5.3.2 Know-how protection ... 134
5.3.3 Reuse of F-blocks ... 135

5.4 Information interface to the safety program ... 136
5.4.1 F-shared DB (S7-300, S7-400) ... 136
5.4.2 F-runtime group information DB (S7-1200, S7-1500) ... 136

5.5 Programming startup protection ... 138

6 F-I/O access ... 139

6.1 Addressing F-I/O ... 139

6.2 Value status (S7-1200, S7-1500) ... 140

6.3 Process Data or Fail-Safe Values ... 143

6.4 F-I/O DB ... 145
6.4.1 Name and number of the F-I/O DB ... 145
6.4.2 Tags of the F-I/O DB ... 146
6.4.2.1 PASS_ON ... 147
6.4.2.2 ACK_NEC ... 148
6.4.2.3 ACK_REI ... 148
6.4.2.4 IPAR_EN ... 149
6.4.2.5 DISABLE ... 150
6.4.2.6 QBAD/PASS_OUT/DISABLED/QBAD_I_xx/QBAD_O_xx and value status ... 151
6.4.2.7 ACK_REQ ... 151
6.4.2.8 IPAR_OK ... 152
6.4.2.9 DIAG ... 152
6.4.3 Accessing tags of the F-I/O DB ... 153

6.5 Passivation and reintegration of F-I/O ... 154
6.5.1 After startup of F-system ... 154
6.5.2 After communication errors ... 157
6.5.3 After F-I/O or channel faults ... 159
6.5.4 Group passivation ... 163

7 Implementation of user acknowledgment ... 165

7.1 Implementing User Acknowledgment in the Safety Program of the F-CPU of a DP Master or IO controller ... 165

7.2 Implementing user acknowledgment in the safety program of the F-CPU of a I-slave or I-device ... 169

8 Data exchange between standard user program and safety program ... 172

8.1 Data Transfer from the Safety Program to the Standard User Program ... 172

8.2 Data Transfer from Standard User Program to Safety Program ... 173

9 Safety-related communication ... 176

9.1 Configuring and programming communication (S7-300, S7-400) ... 176
9.1.1 Overview of communication ... 176
9.1.2 Safety-related IO controller-IO controller communication ... 179
9.1.2.1 Configure safety-related IO controller-IO controller communication ... 179
9.1.2.2 Safety-related IO controller-IO controller communication via SENDDP and RCVDP ... 183
9.1.2.3 Program safety-related IO controller-IO controller communication ... 183
9.1.2.4 Safety-related IO controller-IO controller communication - Limits for data transfer ... 187
9.1.3 Safety-related master-master communication ... 187
9.1.3.1 Configure safety-related master-master communication ... 187
9.1.3.2 Safety-related master-master communication via SENDDP and RCVDP ... 192
9.1.3.3 Program safety-related master-master communication ... 192
9.1.3.4 Safety-related master-master communication:Limits for data transfer ... 196
9.1.4 Safety-related IO controller-I-device communication ... 196
9.1.4.1 Configuring safety-related communication between IO controller and I-device ... 196
9.1.4.2 Safety-related IO controller-I-device communication via SENDDP and RCVDP ... 199
9.1.4.3 Programming safety-related IO controller I-device communication ... 199
9.1.4.4 Safety-related IO-Controller-IO-Device communication - Limits for data transfer ... 201
9.1.5 Safety-related master-I-slave communication ... 202
9.1.5.1 Configuring safety-related master-I-slave communication ... 202
9.1.5.2 Safety-related master-I-slave or I-slave-I-slave communication via SENDDP and RCVDP ... 204
9.1.5.3 Program the safety-related master-I-slave or I-slave-I-slave communication ... 204
9.1.5.4 Limits for data transfer of safety-related master-I-slave or I-slave-I-slave communication ... 207
9.1.6 Safety-related I-slave-I-slave communication ... 208
9.1.6.1 Configure safety-related I-slave-I-slave communication ... 208
9.1.6.2 Safety-related I-slave-I-slave communication via SENDDP and RCVDP ... 211
9.1.6.3 Programming safety-related I-slave-I-slave communication ... 212
9.1.6.4 Limits for data transfer of safety-related I-slave-I-slave communication ... 212
9.1.7 Safety-Related I-Slave-Slave Communication ... 212
9.1.7.1 Configuring Safety-Related I-Slave-Slave Communication ... 212
9.1.7.2 Safety-Related I-Slave-Slave Communication - F-I/O Access ... 217
9.1.7.3 Limits for data transfer of safety-related I-slave-I-slave communication ... 218
9.1.8 Safety-related IO controller-I-slave communication ... 218
9.1.9 Safety-related communication via S7 connections ... 219
9.1.9.1 Configuring safety-related communication via S7 connections ... 219
9.1.9.2 Communication via SENDS7, RCVS7, and F-Communication DB ... 220
9.1.9.3 Programming safety-related communication via S7 connections ... 221
9.1.9.4 Safety-related communication via S7 connections - Limits of data transfer ... 225
9.1.10 Safety-related communication with other S7 F-systems ... 225
9.1.10.1 Introduction ... 225
9.1.10.2 Communication with S7 Distributed Safety via PN/PN coupler (IO controller-IO controller communication) ... 226
9.1.10.3 Communication with S7 Distributed Safety via DP/DP coupler (master-master communication) ... 227
9.1.10.4 Communication with S7 Distributed Safety via S7 connections ... 228
9.1.10.5 Communication with S7 F/FH Systems via S7 connections ... 229

9.2 Configuring and programming communication (S7-1200, S7-1500) ... 231
9.2.1 Overview of communication ... 231
9.2.2 Safety-related IO controller-IO controller communication ... 234
9.2.2.1 Configure safety-related IO controller-IO controller communication ... 234

9.2.2.2 Safety-related IO controller-IO controller communication via SENDDP and RCVDP 237
9.2.2.3 Program safety-related IO controller-IO controller communication 238
9.2.2.4 Safety-related IO controller-IO controller communication - Limits for data transfer 241
9.2.3 Safety-related master-master communication 242
9.2.3.1 Configure safety-related master-master communication 242
9.2.3.2 Safety-related master-master communication via SENDDP and RCVDP 245
9.2.3.3 Program safety-related master-master communication 245
9.2.3.4 Safety-related master-master communication:Limits for data transfer 249
9.2.4 Safety-related IO controller-I-device communication 249
9.2.4.1 Configuring safety-related communication between IO controller and I-device 249
9.2.4.2 Safety-related IO controller-I-device communication via SENDDP and RCVDP 252
9.2.4.3 Programming safety-related IO controller I-device communication 252
9.2.4.4 Safety-related IO-Controller-IO-Device communication - Limits for data transfer 254
9.2.5 Safety-related master-I-slave communication 255
9.2.5.1 Configuring safety-related master-I-slave communication 255
9.2.5.2 Safety-related master-I-slave communication via SENDDP and RCVDP 257
9.2.5.3 Programming safety-related master-I-slave communication 257
9.2.5.4 Limits for data transfer of safety-related master-I-slave communication 260
9.2.6 Safety-related IO controller-I-slave communication 261
9.2.6.1 Safety-related IO controller-I-slave communication 261
9.2.7 Safety-related communication to S7 F-System S7 Distributed Safety 261
9.2.7.1 Introduction 261
9.2.7.2 Communication with S7 Distributed Safety via PN/PN coupler (IO controller-IO controller communication) 262
9.2.7.3 Communication with S7 Distributed Safety via DP/DP coupler (master-master communication) 263

9.3 Configuring and programming communication with Flexible F-Link (S7-1200, S7-1500) 263
9.3.1 Flexible F-Link 263
9.3.2 F-communication DB (S7-1200, S7-1500) 267

9.4 Configuring and programming communication between S7-300/400 and S7-1200/1500 F-CPUs 269
9.4.1 Overview of communication 269

9.5 Configuring and programming communication in several projects 270
9.5.1 Safety-oriented IO Controller I device communication in several projects 270
9.5.1.1 Configuring safety-related communication between IO controller and I-device 270
9.5.1.2 Programming safety-related IO Controller I-device communication 271

10 Compiling and commissioning a safety program 272

10.1 Compiling the safety program 272

10.2 Safety program work memory requirements (S7-300, S7-400) 272

10.3 Downloading project data 273
10.3.1 Downloading project data to an S7-300/400 F-CPU 277
10.3.1.1 Downloading project data to an S7-300/400 F-CPU with memory card inserted (SIMATIC Micro memory card or flash card) 277
10.3.1.2 Downloading project data to an S7-400 F-CPU without flash card inserted 277
10.3.1.3 Downloading project data to a WinAC RTX F 278
10.3.1.4 Downloading individual F-blocks to an S7-300/400 F-CPU 278

10.3.1.5 Downloading project data to a memory card or removable storage device and inserting a memory card 279
10.3.2 Downloading project data into an F-CPU S7-1200 281
10.3.2.1 Downloading project data to an S7-1200 F-CPU without program card inserted 281
10.3.2.2 Downloading project data to an S7-1200 F-CPU with program card inserted 282
10.3.2.3 Inserting a transfer card into an S7-1200 F-CPU 284
10.3.2.4 Downloading project data of an S7-1200 F-CPU from the internal load memory to an empty SIMATIC Memory Card 286
10.3.2.5 Updating project data on an S7-1200 F-CPU using a transfer card 287
10.3.2.6 Downloading project data to a SIMATIC Memory Card and inserting the SIMATIC Memory Card 287
10.3.3 Downloading project data to an S7-1500 F-CPU 288
10.3.3.1 Downloading project data to an S7-1500 F-CPU 288
10.3.3.2 Downloading project data into a redundant S7-1500HF system 288
10.3.3.3 Downloading project data to an S7-1500 F Software Controller 289
10.3.3.4 Downloading project data to a SIMATIC Memory Card and inserting the SIMATIC Memory Card or removable storage devices 291
10.3.4 Restoring a backup of the safety program to an F-CPU 293
10.3.5 Special features when creating and importing images of an S7-1500 F Software Controller 294
10.3.6 Load project data (including safety-related project data) from an F-CPU into a PG/PC (S7-1500) 295
10.3.7 Load project data (including safety-related project data) from a memory card into a PG/PC (S7-1500) 296
10.3.8 Loading PC station via the configuration file 297
10.3.8.1 Creating a configuration file 298
10.3.8.2 Importing the configuration file 298

10.4 Program identification 302

10.5 Comparing Safety Programs 304

10.6 Creating a safety summary 306

10.7 Testing the safety program 308
10.7.1 Overview of Testing the Safety Program 308
10.7.2 Disabled safety mode 309
10.7.2.1 Configuring the time limit for disabled safety mode (S7-1200, S7-1500) 310
10.7.2.2 Disabling safety mode 310
10.7.3 Testing the safety program 313
10.7.4 Testing the safety program with S7-PLCSIM 316
10.7.5 Changing the safety program in RUN mode (S7-300, S7-400) 320
10.7.6 Safety program in RUN mode (S7-1200, S7-1500) 322

10.8 F-change history 328

11 System acceptance 329

11.1 Overview of System Acceptance 329

11.2 Correctness of the safety program including hardware configuration (including testing) 330

11.3 Completeness of the safety summary 331

11.4 Compliance of the system library elements used in the safety program with Annex 1 of the Report for the TÜV certificate 332

11.5 Compliance of the know-how protected F-blocks used in the safety program with their safety documentation. 332
11.6 Completeness and correctness of the hardware configuration.... 334
11.7 Correctness and completeness of the communication configuration.... 340
11.8 Identity of online and offline program.... 342
11.9 Other characteristics.... 343
11.10 Acceptance of Changes.... 345

12 Operation and Maintenance.... 350

12.1 Notes on startup of the F-system.... 350
12.2 Notes on Safety Mode of the Safety Program.... 350
12.3 Replacing Software and Hardware Components.... 353
12.4 Guide to diagnostics (S7-300, S7-400).... 356
12.5 Guide to diagnostics (S7-1500).... 358
12.6 Guide to diagnostics (S7-1200).... 358

13 STEP 7 Safety V18 instructions.... 359

13.1 General.... 359
13.1.1 LAD.... 359
13.1.1.1 New network (STEP 7 Safety V18).... 359
13.1.1.2 Empty box (STEP 7 Safety V18).... 360
13.1.1.3 Open branching (STEP 7 Safety V18).... 361
13.1.1.4 Close branching (STEP 7 Safety V18).... 361
13.1.2 FBD.... 362
13.1.2.1 New network (STEP 7 Safety V18).... 362
13.1.2.2 Empty box (STEP 7 Safety V18).... 363
13.1.2.3 Open branching (STEP 7 Safety V18).... 363
13.1.2.4 Insert binary input (STEP 7 Safety V18).... 364
13.1.2.5 Invert RLO (STEP 7 Safety V18).... 365

13.2 Bit logic operations.... 365
13.2.1 LAD.... 365
13.2.1.1 ---| |---: NO contact (STEP 7 Safety V18).... 365
13.2.1.2 ---| / |---: NC contact (STEP 7 Safety V18).... 366
13.2.1.3 --|NOT|--: Invert RLO (STEP 7 Safety V18).... 367
13.2.1.4 ---( )---: Assignment (STEP 7 Safety V18).... 368
13.2.1.5 ---(R)---: Reset output (STEP 7 Safety V18).... 368
13.2.1.6 ---(S)---: Set output (STEP 7 Safety V18).... 369
13.2.1.7 SR: Set/reset flip-flop (STEP 7 Safety V18).... 371
13.2.1.8 RS: Reset/set flip-flop (STEP 7 Safety V18).... 372
13.2.1.9 --|P|--: Scan operand for positive signal edge (STEP 7 Safety V18).... 374
13.2.1.10 --|N|--: Scan operand for negative signal edge (STEP 7 Safety V18).... 375
13.2.1.11 P_TRIG: Scan RLO for positive signal edge (STEP 7 Safety V18).... 376
13.2.1.12 N_TRIG: Scan RLO for negative signal edge (STEP 7 Safety V18).... 377
13.2.2 FBD.... 379
13.2.2.1 AND logic operation (STEP 7 Safety V18).... 379
13.2.2.2 OR logic operation (STEP 7 Safety V18).... 380
13.2.2.3 X: EXCLUSIVE OR logic operation (STEP 7 Safety V18).... 381

13.2.2.4 =: Assignment (STEP 7 Safety V18) ... 382
13.2.2.5 R: Reset output (STEP 7 Safety V18) ... 383
13.2.2.6 S: Set output (STEP 7 Safety V18) ... 384
13.2.2.7 SR: Set/reset flip-flop (STEP 7 Safety V18) ... 385
13.2.2.8 RS: Reset/set flip-flop (STEP 7 Safety V18) ... 386
13.2.2.9 P: Scan operand for positive signal edge (STEP 7 Safety V18) ... 387
13.2.2.10 N: Scan operand for negative signal edge (STEP 7 Safety V18) ... 388
13.2.2.11 P_TRIG: Scan RLO for positive signal edge (STEP 7 Safety V18) ... 390
13.2.2.12 N_TRIG: Scan RLO for negative signal edge (STEP 7 Safety V18) ... 391

13.3 Safety functions ... 392
13.3.1 ESTOP1: Emergency STOP/OFF up to stop category 1 (STEP 7 Safety V18) ... 392
13.3.2 TWO_HAND: Two-hand monitoring (STEP 7 Safety Advanced V18) (S7-300, S7-400) ... 397
13.3.3 TWO_H_EN: Two-hand monitoring with enable (STEP 7 Safety V18) ... 400
13.3.4 MUTING: Muting (STEP 7 Safety Advanced V18) (S7-300, S7-400) ... 404
13.3.5 MUT_P: Parallel muting (STEP 7 Safety V18) ... 414
13.3.6 EV1oo2DI: 1oo2 evaluation with discrepancy analysis (STEP 7 Safety V18) ... 425
13.3.7 FDBACK: Feedback monitoring (STEP 7 Safety V18) ... 432
13.3.8 SFDOOR: Protective door monitoring (STEP 7 Safety V18) ... 438
13.3.9 ACK_GL: Global acknowledgment of all F-I/O in an F-runtime group (STEP 7 Safety V18) ... 443

13.4 Timer operations ... 445
13.4.1 TP: Generate pulse (STEP 7 Safety V18) ... 445
13.4.2 TON: Generate ON delay (STEP 7 Safety V18) ... 449
13.4.3 TOF: Generate OFF delay (STEP 7 Safety V18) ... 453

13.5 Counter operations ... 457
13.5.1 CTU: Count up (STEP 7 Safety V18) ... 457
13.5.2 CTD: Count down (STEP 7 Safety V18) ... 459
13.5.3 CTUD: Count up and down (STEP 7 Safety V18) ... 461

13.6 Comparator operations ... 463
13.6.1 CMP ==: Equal (STEP 7 Safety V18) ... 463
13.6.2 CMP <>: Not equal (STEP 7 Safety V18) ... 464
13.6.3 CMP >=: Greater or equal (STEP 7 Safety V18) ... 466
13.6.4 CMP <=: Less or equal (STEP 7 Safety V18) ... 467
13.6.5 CMP >: Greater than (STEP 7 Safety V18) ... 468
13.6.6 CMP <: Less than (STEP 7 Safety V18) ... 469

13.7 Math functions ... 470
13.7.1 ADD: Add (STEP 7 Safety V18) ... 470
13.7.2 SUB: Subtract (STEP 7 Safety V18) ... 472
13.7.3 MUL: Multiply (STEP 7 Safety V18) ... 475
13.7.4 DIV: Divide (STEP 7 Safety V18) ... 478
13.7.5 NEG: Create two's complement (STEP 7 Safety V18) ... 481
13.7.6 ABS: Form absolute value (STEP 7 Safety V18) (S7-1200, S7-1500) ... 484

13.8 Move operations ... 485
13.8.1 MOVE: Move value (STEP 7 Safety V18) ... 485
13.8.2 RD_ARRAY_I: Read value from INT F-array (STEP 7 Safety V18) (S7-1500) ... 486
13.8.3 RD_ARRAY_DI: Read value from DINT F-array (STEP 7 Safety V18) (S7-1500) ... 489
13.8.4 WR_FDB: Write value indirectly to an F-DB (STEP 7 Safety V18) (S7-300, S7-400) ... 491
13.8.5 RD_FDB: Read value indirectly from an F-DB (STEP 7 Safety Advanced V18) (S7-300, S7-400) ... 493

13.9 Conversion operations ... 494
13.9.1 CONVERT: Convert value (STEP 7 Safety V18) ... 494
13.9.2 BO_W: Convert 16 data elements of data type BOOL to a data element of data type WORD (STEP 7 Safety V18) ... 496
13.9.3 W_BO: Convert a data element of data type WORD to 16 data elements of data type BOOL (STEP 7 Safety V18) ... 498
13.9.4 SCALE: Scale value (STEP 7 Safety V18) ... 500
13.9.5 SCALE_D: Scale value to data type DINT (STEP 7 Safety V18) (S7-1200, S7-1500) ... 502

13.10 Program control operations ... 504
13.10.1 JMP: Jump if RLO = 1 (STEP 7 Safety V18) ... 504
13.10.2 JMPN: Jump if RLO = 0 (STEP 7 Safety V18) ... 506
13.10.3 LABEL: Jump label (STEP 7 Safety V18) ... 508
13.10.4 RET: Return (STEP 7 Safety V18) ... 510
13.10.5 OPN: Open global data block (STEP 7 Safety Advanced V18) (S7-300, S7-400) ... 511

13.11 Word logic operations ... 512
13.11.1 AND: AND logic operation (STEP 7 Safety V18) ... 512
13.11.2 OR: OR logic operation (STEP 7 Safety V18) ... 513
13.11.3 XOR: EXCLUSIVE OR logic operation (STEP 7 Safety V18) ... 514

13.12 Shift and rotate ... 515
13.12.1 SHR: Shift right (STEP 7 Safety V18) ... 515
13.12.2 SHL: Shift left (STEP 7 Safety V18) ... 518

13.13 Operating ... 520
13.13.1 ACK_OP: Fail-safe acknowledgment (STEP 7 Safety V18) ... 520

13.14 Additional instructions ... 527
13.14.1 LAD ... 527
13.14.1.1 ---| |--- OV: Get status bit OV (STEP 7 Safety Advanced V18) (S7-300, S7-400) ... 527
13.14.1.2 ---| / |--- OV: Get negated status bit OV (STEP 7 Safety Advanced V18) (S7-300, S7-400) ... 528
13.14.2 FBD ... 529
13.14.2.1 OV: Get status bit OV (STEP 7 Safety Advanced V18) (S7-300, S7-400) ... 529

13.15 Communication ... 530
13.15.1 PROFIBUS/PROFINET ... 530
13.15.1.1 SENDDP and RCVDP: Send and receive data via PROFIBUS DP/PROFINET IO (STEP 7 Safety V18) ... 530
13.15.2 S7 communication ... 539
13.15.2.1 SENDS7 and RCVS7: Communication via S7 connections (STEP 7 Safety Advanced V18) (S7-300, S7-400) ... 539

A Monitoring and response times ... 546

A.1 Configuring monitoring times ... 546
A.1.1 Minimum monitoring time for the F-runtime group cycle time ... 548
A.1.2 Minimum monitoring time for safety-related communication between F-CPU and F-I/O ... 549
A.1.3 Minimum monitoring time of safety-related CPU-CPU communication ... 550
A.1.4 Monitoring Time for Safety-Related Communication between F-Runtime Groups ... 551

A.2 Response Times of Safety Functions ... 551

B Checklist ... 555

Glossary ... 560

Index ... 572

Product Overview 1

1.1 Overview

SIMATIC Safety fail-safe system See SIMATIC Safety

The SIMATIC Safety fail-safe system is available to implement safety concepts in the area of machine and personnel protection (for example, for emergency STOP devices for machining and processing equipment) and in the process industry (for example, for implementation of protection functions for safety devices of instrumentation and controls and of burners).

WARNING

The SIMATIC Safety F-system is used to control processes that have a safe state that can be reached immediately through shutdown. This also applies in particular to redundant S7-1500HF systems.

SIMATIC Safety can only be used for controlling processes in which an immediate shutdown does not pose a danger to persons or the environment.

When realizing safety applications including the creation of the safety-relevant project data you have to take into consideration the standards, directives and guidelines relevant for your application. In particular include standards in which the software creation process is described (for example IEC 61508-3 or ISO 13849-1). *(S062)*

Achievable safety requirements

SIMATIC Safety F-systems can satisfy the following safety requirements:

- Safety integrity level SIL3 in accordance with IEC 61508:2010
- Performance Level (PL) e and category 4 in accordance with ISO 13849-1:2015 or EN ISO 13849-1:2015

Functional safety in SIMATIC Safety

Functional safety is implemented primarily in the software. The SIMATIC Safety F-System brings the plant into a safe state in the event of a hazardous event and maintains this state. Safety mechanisms are contained mainly in the following components:

- In the safety-related user program (safety program) in the F-CPU
- In the fail-safe inputs and outputs (F-I/O)

The F-I/O ensure the safe processing of field information (sensors: e.g. emergency STOP pushbutton, light barriers; actuators, e.g. for motor control). They have all of the required hardware and software components for safe processing, in accordance with the required Safety Integrity Level. The user only has to program the user safety function. Functional

safety for the process can be provided by a user safety function or a fault reaction function. The F-system cyclically checks the integrity of the safety program and the safety-related data. This check is generally always performed when safety-related data leaves an F-runtime group via safety-related communication or F-I/O access. If this check detects a fault, the F-system executes the fault reaction function, which switches off the associated outputs and, if necessary, sets the F-CPU to STOP.

NOTE

If the F-CPU switches to STOP mode due to a fault reaction function, with a redundant S7-1500HF system, it leads to the STOP of the primary CPU **and** the backup CPU.

Example of user safety function and fault reaction function

In the event of overpressure, the F-system will open a valve (user safety function). In the event of a hazardous fault in the F-CPU, all outputs are deactivated (fault reaction function), whereby the valve is opened, and the other actuators also attain a safe state. For a non-faulty F-system, only the valve would be opened.

1.2 Hardware and Software Components

Hardware and software components of SIMATIC Safety

The following schematic diagram provides an overview of the hardware and software components required to configure and operate a SIMATIC Safety F-system.

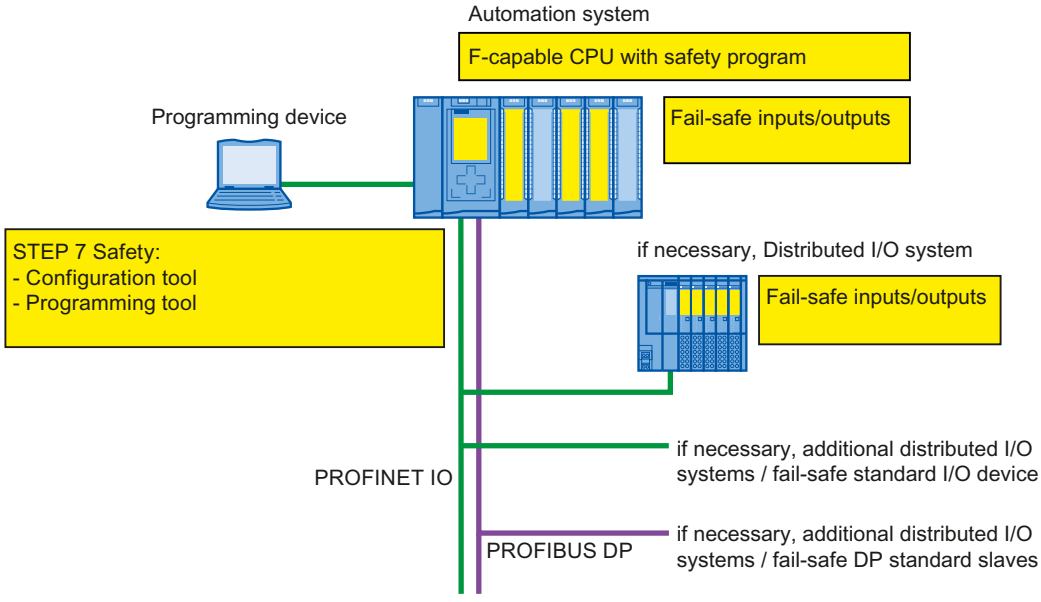

Hardware components for PROFIBUS DP

You can use the following fail-safe components in SIMATIC Safety F-systems on PROFIBUS DP:

- F-CPUs with DP interface, such as CPU 1516F-3 PN/DP
- SIMATIC Drive Controller, for example, CPU 1504D TF
- Fail-safe inputs and outputs (F-I/O), such as:
  - S7-300 fail-safe signal modules in ET 200M
  - S7-1500/ET 200MP fail-safe modules
  - ET 200SP fail-safe modules
  - ET 200S fail-safe modules
  - ET 200pro fail-safe modules
  - ET 200iSP fail-safe modules
  - Fail-safe I/O modules ET 200eco (S7-300, S7-400)
  - Fail-safe GSD based DP slaves (light grid, laser scanner, etc.)

You have the option to expand the configuration with standard I/O.

The following CPs/CMs can be used in a SIMATIC Safety F-system on PROFIBUS DP for connection to distributed F-I/O:

- CP 443-5 Extended
- CM 1243-5
- CM 1542-5
- CP 1542-5
- SP CM DP

Hardware components for PROFINET IO

You can use the following fail-safe components in SIMATIC Safety F-systems on PROFINET IO:

- F-CPUs with PN interface, e.g. CPU 1214FC DC/DC/DC
- SIMATIC Drive Controller, for example, CPU 1504D TF
- Fail-safe inputs and outputs (F-I/O), such as:
  - S7-300 fail-safe signal modules in ET 200M
  - S7-1500/ET 200MP fail-safe modules
  - ET 200SP fail-safe modules
  - ET 200S fail-safe modules
  - ET 200pro fail-safe modules
  - ET 200eco PN fail-safe I/O modules
  - ET 200AL fail-safe I/O modules
  - Fail-safe GSD based I/O devices (light grid, laser scanner, etc.)

You have the option to expand the configuration with standard I/O.

The following CPs/CMs can be used in a SIMATIC Safety F-system on PROFINET IO for connection to distributed F-I/O:

- CP 443-1
- CP 443-1 Advanced-IT
- CM 1542-1

Hardware components for central configuration

You can use the following fail-safe components in SIMATIC Safety F-systems centrally on an F-CPU (not HF-CPU):

- S7-300 fail-safe signal modules
- S7-1200 fail-safe modules
- S7-1500 fail-safe modules
- ET 200SP fail-safe modules
- ET 200S fail-safe modules
- ET 200pro fail-safe modules (can also be used with CPU 1516proF-2)

You have the option to expand the configuration with standard I/O.

STEP 7 Safety

This documentation describes *STEP 7 Safety Advanced V18* and *STEP 7 Safety Basic V18*. *STEP 7 Safety* is the configuration and programming software for the SIMATIC Safety F-system. With *STEP 7 Safety*, you receive the following:

- Support for configuring the F-I/O in the *hardware and network editor* of TIA Portal
- Support for creating the safety program using LAD and FBD and integrating error detection functions into the safety program
- Instructions for programming your safety program in LAD and FBD, which you are familiar with from the standard user programs
- Instructions for programming your safety program in LAD and FBD with special safety functions

Moreover, *STEP 7 Safety* offers functions for comparing safety programs and for assisting you with the system acceptance.

⚠ WARNING

The configuration of F-CPUs and F-I/Os as well as the programming of F-blocks must be carried out in TIA Portal as described in this documentation. You must observe all aspects described in the section System acceptance (Page 329) to ensure safe operation with the system SIMATIC SAFETY. Any other procedures are not permitted. *(S056)*

Optional packages

In addition to the *STEP 7 Safety*, you can use optional packages with F-I/O and F-CPUs and use instructions for programming your safety program with special safety functions within the SIMATIC Safety F-system. For example, SINUMERIK or Failsafe HMI Mobile Panels.

The installation, parameter assignment and programming as well as what is important to note during system acceptance, is described in the documentation for the specific optional packages.

Also read the notes in "Configurations supported by the SIMATIC Safety F-system (Page 58)".

TIA Portal Cloud Connector

WARNING

Use of the TIA Portal Cloud Connector is only intended for engineering work with TIA Portal. This means online access in productive operation (e.g. SCADA) is not permitted. This is particularly true for safety programs. *(S068)*

Openness

Openness (https://support.industry.siemens.com/cs/ww/en/view/109798533) as part of *STEP 7 Safety* is supported with the functions listed below. The use of Openness in productive operation is not permitted.

As part of *STEP 7 Safety* the following is supported:

- Inserting / removing F-CPUs and F-I/Os
- Copying / deleting F-CPUs and F-I/Os from templates
- Compiling hardware
- Compiling software (incl. safety program)
- Handling access protection for the safety-related project data (for TIA projects not protected by project protection)
- Reading / configuring fail-safe parameters of the F-CPU
- Reading / configuring fail-safe parameters of F-IOs
- Reading / configuring fail-safe modules of ET 200SP
- Reading, declaring or deleting fail-safe variables in the PLC variable table
- Updating projects to the latest type versions of F-blocks
- Consistent station upload
- Export and import of F-blocks and F-compliant PLC data types (UDT)
- Comparison of hardware and software
- Version control interface (VCI) support
- Reading out PLC online fingerprint for the safety program

The following are not supported.

- Downloading to device

WARNING

When using Openness or other tools for operating the TIA Portal to handle safety-related project data, integrity of the data must be ensured (for example, as part of the save or transfer functions of "Source Code Management" applications). If there is a connection of external tools, the requirements for offline support tools according to IEC 61508-3 must be observed. A violation of the integrity of the safety-related project data either offline or online cannot be detected by *STEP 7 Safety*. A final verification of the correctness of the safety-related project data has to be carried out as described in the section System acceptance (Page 329). *(S070)*

Openness programs can also be integrated into TIA Portal as an add-in. It is also possible to include so-called workflow add-ins, which are automatically called before a safety program is compiled. See "Extending workflows" in the standard help.
If you have included such a workflow add-in, this will be output in the safety summary for documentation purposes.

Openness service

The Openness interface (Siemens.Engineering.dll) has been expanded to include the following services:

- `GlobalSettings` (see name area **Siemens.Engineering.Safety**) which provides the following actions:
  - `SafetyModificationsPossible(bool safetyModificationsPossible)`
  - `UsernameForFChangeHistory(string userName)`
  - `bool SafetyModificationsPossible()`
  - `string UsernameForFChangeHistory()`
- `SafetySignatureProvider` which provides the following actions and properties:
  - `SafetySignatureComposition Signatures`
  - `UInt64 SafetySignature.Value`
  - `SafetySignatureType SafetySignature.Type`
- `SafetyAdministration` with the following actions and properties in the name area **Siemens.Engineering.Safety**.
  - `bool IsSafetyOfflineProgramPasswordSet`
  - `void SetSafetyOfflineProgramPassword(SecureString newPassword)`
  - `void RevokeSafetyOfflineProgramPassword(SecureString currentPassword)`
  - `bool IsLoggedOnToSafetyOfflineProgram`
  - `void LoginToSafetyOfflineProgram(SecureString currentPassword)`
  - `void LogoffFromSafetyOfflineProgram()`
- `Safety Administration`, which can be accessed from the `PLc-DeviceItem`.
  The `SafetyAdministration` service offers the following properties in the **Siemens.Engineering.Safety** namespace. These two properties include additional properties that are listed in the description.
  - `RuntimegroupComposition RuntimeGroups { get; }`
  - `SafetySettings Settings { get; }`
- `SafetyPrintout` with the following action in the name area **Siemens.Engineering.Safety**:
  - `bool Print(SafetyPrintoutFilePrinter filePrinter, FileInfo fullOutputPath, SafetyPrintoutOption documentationOption, string documentLayout);`

You can find more information in the System Manual "SIMATIC TIA Portal Openness: Automating creation of projects (https://support.industry.siemens.com/cs/ww/en/view/109798533)" in the section "F-specific openness".

Virtual environments

WARNING

Use of virtual environments in the engineering system

Note that a hypervisor or a client software of a hypervisor is not permitted to perform any function that reproduces recorded message frame sequences with correct time response in a network with real F-CPUs and F-I/Os.

Make sure that this condition is met, for example, when using the following functions:

- Reset of captured statuses (snapshots) of the virtual machines (VMs)
- Suspending and resuming the VMs
- Replay of recorded sequences in the VMs
- Moving VMs between hosts in productive operation (e.g. Fault Tolerance (FT))
- Digital twins of VMs in the virtual environment

If in doubt, disable these functions in the settings (Hypervisor administration console). *(S067)*

Operating system installations with S7-150xS(P) F or WinAC RTX F

WARNING

When using a PC with several Windows or Linux operating system installations (e.g. via boot manager), only one S7-150xS(P) F or one WinAC RTX F may be installed on this PC. *(S095)*

Safety program

You can create a safety program using the *program editor*. You can program fail-safe FBs and FCs in the FBD or LAD programming languages using the instructions from *STEP 7 Safety* and create fail-safe DBs.

Safety checks are automatically performed and additional fail-safe blocks for error detection and fault reaction are inserted when the safety program is compiled. This ensures that failures and errors are detected and appropriate reactions are triggered to maintain the F-system in the safe state or bring it to a safe state.

In addition to the safety program, a standard user program can be run on the F-CPU. A standard program can coexist with a safety program in an F-CPU because unintentional influencing of the safety-related data of the safety program is uncovered by the standard user program.

Data can be exchanged between the safety program and the standard user program in the F-CPU by means of bit memory or data of a standard DB or by accessing the process image input and output.

Note possible restrictions/particularities when using Software Units or a Safety Unit (Page 100).

See also

Data Transfer from the Safety Program to the Standard User Program (Page 172)

1.3 Installing/uninstalling the STEP 7 Safety Basic V18 license

After the installation of the *STEP 7 Safety Basic V18* license, the functional scope of *STEP 7 Safety Basic V18* is available to you.

Software requirements for *STEP 7 Safety Basic V18*

At a minimum, the following software package must be installed on the programming device or PC:

- *SIMATIC STEP 7 Basic V18*

Installing the *STEP 7 Safety Basic V18* license

1. Start the *Automation License Manager* on the programming device/PC on which the *"SIMATIC STEP 7 Basic V18"* or *"SIMATIC STEP 7 Advanced V18"* software package is installed.
2. Install the *STEP 7 Safety Basic V18* license as described in the *Automation License Manager help*.

Uninstalling the *STEP 7 Safety Basic V18* license

To uninstall the *STEP 7 Safety Basic V18* license, proceed as described in the *Automation License Manager help*.

1.4 Installing/uninstalling the STEP 7 Safety Advanced V18 license

After the installation of the *STEP 7 Safety Advanced V18* license, the functional scope of *STEP 7 Safety Advanced V18* is available to you.

Software requirements for *STEP 7 Safety Advanced V18*

At a minimum, the following software package must be installed on the programming device or PC:

- *SIMATIC STEP 7 Professional V18*

Installing the *STEP 7 Safety Advanced V18* license

1. Start the *Automation License Manager* on the programming device/PC on which the *"SIMATIC STEP 7 Professional V18"* software package is installed.
2. Install the *STEP 7 Safety Advanced V18* license as described in the *Automation License Manager help*.

Uninstalling the *STEP 7 Safety Advanced V18* license

To uninstall the *STEP 7 Safety Advanced V18* license, proceed as described in the *Automation License Manager help*.

1.5 Installing/uninstalling STEP 7 Safety PowerPack

After the installation of the *STEP 7 Safety PowerPack* the functional scope of *STEP 7 Safety Advanced V18* is available to you.

Software requirements for *STEP 7 Safety PowerPack*

At a minimum, the following software package must be installed on the programming device or PC:

- *SIMATIC STEP 7 Professional V18*

Installing *STEP 7 Safety PowerPack*

1. Start the *Automation License Manager* on the programming device/PC on which the *"SIMATIC STEP 7 Professional V18"* software package is installed.
2. Install the license included in the *STEP 7 Safety PowerPack* as described in the *Automation License Manager help*.

Uninstalling *STEP 7 Safety PowerPack*

To uninstall the license included in the *STEP 7 Safety PowerPack*, proceed as described in the *Automation License Manager help*.

1.6 Migrating projects from S7 Distributed Safety V5.4 SP5 to STEP 7 Safety Advanced

Introduction

In *STEP 7 Safety Advanced*, you can continue to use projects with safety programs that you created with *S7 Distributed Safety V5.4 SP5*.

Requirement

STEP 7 Safety Advanced, *S7 Distributed Safety V5.4 SP5*, and the *F-Configuration Pack* used to create the project must all be installed on the computer you are using for migration. The *F-Configuration Pack V5.4 SP5* to *V5.5 SP13* is supported.

To that end, the projects must have been compiled in *S7 Distributed Safety V5.4 SP5* **and with the** *F-Configuration Pack***.**

Prior to migration

Delete all F-blocks not required by the safety program in your *S7 Distributed Safety V5.4 SP5* project prior to migration.

Procedure as in *STEP 7 Professional*

Proceed just as you would for standard projects to migrate projects from *S7 Distributed Safety V5.4 SP5* to *STEP 7 Safety Advanced*. Once the migration is complete, you should verify using the Collective F-Signature whether the project was migrated unchanged.

NOTE

If you use the safety program to migrate F-blocks with know-how protection, remove the know-how protection prior to migration.

You can assign the F-blocks know-how protection again once the migration is completed.

This migration approach is described in the "Migration" section of the *STEP 7 Professional* Help. Special considerations about *STEP 7 Safety Advanced* are described below.

NOTE

We recommend that you enable the "Include hardware configuration" option in the "Migrating project" window.

Older hardware versions

Older versions of F-hardware may not be supported by *STEP 7 Safety Advanced* .
If you have used and configured versions of F-CPUs and F-I/O in S7 Distributed Safety projects that are not approved for *STEP 7 Safety Advanced*, you will need to upgrade this hardware to the new version in *S7 Distributed Safety V5.4 SP5* and the corresponding *F-Configuration Pack*. Once the upgrade is completed, migration to *STEP 7 Safety Advanced* is feasible. A Product Information with a list of approved hardware is available on the Internet (https://support.industry.siemens.com/cs/ww/de/view/109481784):

Particularities for safety-related CPU-CPU communication via S7 connections

You can find information about the special considerations for migrated projects with safety-related CPU-CPU communication via S7 connections in Safety-related communication via S7 connections (Page 219). Please also note Communication with S7 Distributed Safety via S7 connections (Page 227).

Particularities for ESTOP1 or FDBACK instructions

Information on the special considerations when using the ESTOP1 and FDBACK instructions can be found in the "Instruction versions" section in ESTOP1: Emergency STOP/OFF up to stop category 1 (STEP 7 Safety V18) (Page 392) and FDBACK: Feedback monitoring (STEP 7 Safety V18) (Page 432).

Post-migration procedures

Once migration is complete, you have a complete project with a safety program which has retained the program structure of *S7 Distributed Safety* and the Collective F-Signature. F-blocks from the S7 Distributed Safety F-library (V1) are converted into instructions that are provided by *STEP 7 Safety Advanced*.
The migrated project therefore does not need to be re-accepted; it can be loaded as is to the F-CPU as long as it has not been modified or compiled since migration.

NOTE

Safety summary

You cannot create a safety summary in *STEP 7 Safety Advanced* for a migrated project. The printout of the project created with *S7 Distributed Safety V5.4 SP5* and the corresponding acceptance documents are still valid, because the Collective F-Signature has been retained.

Compiling of the migrated hardware configuration

If you receive an error message after migration and subsequent compilation of the hardware configuration stating that the F-source address does not match the "Central F-source address" parameter of the F-CPU, change the "Central F-source address" parameter.
The F-source addresses of all F-I/Os assigned to the F-CPU are reassigned in the process.
If after migration of an SM 326; DI 24 x DC 24V (6ES7 326-1BK01-0AB0 and 6ES7 326-1BK02-0AB0) and subsequent compilation of the hardware configuration, the error message "F_IParam_ID_1: Value outside the permitted range" is displayed, delete the F-SM and reinsert it.
In both cases, subsequent compilation of the safety program is required.

Compiling the migrated safety programs

As a result of compilation of the migrated project with *STEP 7 Safety Advanced*, the existing program structure (with F-CALL) is converted to the new program structure of *STEP 7 Safety Advanced* (with main safety block). This changes the Collective F-Signature and the safety program has to be validated and acceptance may have to be carried out again.
(S7-300, S7-400) You must call up the main safety block according to the F-CALL from an arbitrary block of the standard user program. We recommend a call from an OB 3x.

NOTE

During the first-time compiling of the migrated safety program the call of the F-CALL is replaced automatically by a call of the main safety block, if the calling block of the F-CALL was created using the programming language LAD, FBD or STL.

NOTE

Changing the Safety system version

Before compiling with *STEP 7 Safety Advanced* for the first time, you must change the safety system version to a version which is not equal to 1.0 in the "Settings" area of the *Safety Administration Editor*. We recommend that you use the highest available version.

NOTE

Using the latest version of instructions

If you want to expand the migrated safety program, we recommend that you update to the latest version of the instructions used before compiling with *STEP 7 Safety Advanced* for the first time. Read the information on instruction versions for each instruction.

NOTE

Note that compiling the migrated safety program extends the runtime of the F-runtime group(s) and increases the memory requirements of the safety program (see also Excel file for calculating response time (https://support.industry.siemens.com/cs/ww/en/view/109783831)).

See also

Application example "Migration of a safety program to TIA Portal" (https://support.industry.siemens.com/cs/ww/en/view/109475826)

1.7 Migrating PLC programs to a n F-CPU S7-1500

To migrate an F-CPU S7-300/400 onto an F-CPU S7-1500, proceed as with the migration of a standard CPU S7-300/400 onto a CPU S7-1500.

Points to note after migration:

- Non-automatable actions
  - Creating an F-runtime group and assigning it to the main safety block.
  - The hardware configuration including the I/O of the initial F-CPU is not automatically transferred to an S7-1500 F-CPU. Implement the hardware configuration of the new CPU manually after migration.

    Please also read the sections "Specify F-destination address for F-I/O of PROFIsafe address type 1" and "Specify F-destination address for F-I/O of PROFIsafe address type 2" in chapter "Configuring an F-CPU (Page 43)". Otherwise, this can lead to a reassignment of the F-destination addresses in the configuration.
  - When using F-I/Os with PROFIsafe Protocol Version = Expanded Protocol (XP) (for example S7-1500/ET 200MP F-modules) keep in mind that you need one byte more in the address area of S7-1200/1500 F-CPUs than in S7-300/400 F-CPUs.
  - Replacement of the OV instruction by the connection of the ENO output for mathematical functions (Page 469).
  - Replacement of the RD_FDB instruction by the instructions RD_ARRAY_I (Page 486) and RD_ARRAY_DI (Page 488).
  - Replacement of the F-runtime group communication through Communication via Flexible F-Link (Page 128).

- Instructions not supported:
  - MUTING
  - TWO_HAND
  - WR_FDB
  - OPN
  - SENDS7
  - RCVS7
- Data types not supported
  - DWORD
- Changes to safety program programming
  - F_GLOBDB.VKE0/1 replaced by FALSE/TRUE (Page 103).
  - Readable values from the F_GLOBDB replaced by the F-runtime group information DB. Additional information is available under F-shared DB (S7-300, S7-400) (Page 136) and F-runtime group information DB (S7-1200, S7-1500) (Page 136).
  - Replacement of the QBAD_I_xx or QBAD_O_xx tag by the value status. Additional information is available under Value status (S7-1200, S7-1500) (Page 140) and F-I/O DB (Page 145).
- New naming convention when naming the F-I/O DBs
- Modified behavior of QBAD and PASS_OUT (Page 150) tags for F-I/O with "RIOforFA safety" profile.

Compile the safety program and eliminate any compilation errors displayed.

NOTE

A new acceptance must be carried out following F-CPU migration.

See also

Programming (Page 96)

1.8 Upgrading projects to STEP 7 Safety V18

1.8.1 Upgrading projects from STEP 7 Safety as of V14 SP1 to V18

If you want to continue working with a project from *STEP 7 Safety* as of *V14 SP1*, you must first upgrade the project to *STEP 7 Safety V18*.

Perform the upgrade following the usual procedure for *STEP 7*. After upgrading to V18, you must compile your safety program.

If you have upgraded and compiled a project <= V17 to V18, the Collective F-Signature remains the same, but the version comparison between the online and offline programs shows a change. Here, follow the procedure described in section "Identity of online and offline program (Page 342)".

Keep in mind that existing change histories are not upgraded. All previous entries are deleted after the upgrade. If required, print out the change log before you upgrade.

1.8.2 Upgrading projects from STEP 7 Safety V13 SP1/SP2 to V18

If you want to continue to work with a project from *STEP 7 Safety V13 SP1*, you must first upgrade the project to *STEP 7 Safety V18*.

Perform the upgrade following the usual procedure for *STEP 7*. After upgrading to V18, you must compile your safety program.

(S7-300/400): After compilation, the safety program is consistent and the Collective F-Signature of the upgraded safety program corresponds to the Collective F-Signature of the safety program from V13 SP1. Acceptance of changes is not required

(S7-1200/1500): After compiling, your safety program is consistent and the Collective F-Signature of the upgraded safety program has changed for system reasons. The new Collective F-Signature of the safety program with *STEP 7 Safety V18* replaces the former Collective F-Signature of the safety program with *STEP 7 Safety V13 SP1*.

You can find an overview of all system-related changes under "Common data/Protocols/F-Convert Log+CPU name+time stamp". One of the system-related changes is that *STEP 7 Safety V18* automatically replaces versions of instructions no longer supported with new, functionally identical versions. The overview contains a comparison of the previous signatures with *STEP 7 Safety V13 SP1* to the new signatures with *STEP 7 Safety V18* and displays the automatically changed instruction versions. Print out the overview and store this printout with your acceptance documents or your machine documentation. Change acceptance is not required, since the "Collective F-Signature with *STEP 7 Safety V13 SP1*" contained in the overview matches the Collective F-Signature in your current acceptance documents.

Keep in mind that existing change histories are not upgraded. All previous entries are deleted after the upgrade. If required, print out the change log before you upgrade.

Special features for user acknowledgment and reintegration of F-I/O after F-I/O or channel faults and PASS_ON = 1 (S7-1200, S7-1500)

The following applies to F-I/Os:

- S7-300 fail-safe signal modules
- ET 200SP fail-safe modules
- ET 200S fail-safe modules
- ET 200pro fail-safe modules
- ET 200iSP fail-safe modules

Keep in mind the changed behavior for user acknowledgment and reintegration when configuring "Behavior after channel fault" = "Passivation of the channel" and tag ACK_NEC (F-I/O DB) = 1. The behavior was adapted to the behavior when configuring "Behavior after channel fault" = "Passivate the entire module":

As of *STEP 7 Safety V14* or higher, user acknowledgment of a corrected F-I/O or channel fault is **possible** even when the tag PASS_ON (F-I/O DB) = 1. A reintegration (provision of process values) takes place **as soon as the tag PASS_ON = 0**.

Until *STEP 7 Safety V13 SP1*, user acknowledgment of a corrected F-I/O or channel fault was **not possible** as long as the tag PASS_ON (F-I/O DB) = 1. A user acknowledgment was only possible once the tag PASS_ON = 0. The reintegration (provision of process values) took place immediately after the user acknowledgment.

Special features when using instruction profiles

If you want to use an instruction profile in your project from *STEP 7 Safety V13 SP1*, delete the instruction profile before you upgrade to *STEP 7 Safety V18*. Before deleting, make a note of your settings. After upgrading create a new instruction profile, if required, and enter the noted settings there, if applicable. Note that some instruction versions are no longer supported under *STEP 7 Safety V18*. You will find additional information about the supported instruction versions in the description of the respective instruction.

1.8.3 Upgrading projects from STEP 7 Safety prior to V13 SP1

If you want to upgrade from a project **prior to** *STEP 7 Safety V13 SP1* to *STEP 7 Safety V18*, you must upgrade the project as in standard to *STEP 7 Safety V13 SP1* via an intermediate step.

The safety program signature does not change after upgrading the safety program to *STEP 7 Safety V13 SP1*. Acceptance of changes is therefore not required.

Perform the upgrade following the usual procedure for *STEP 7 Professional*.

When upgrading a project that was created with *STEP 7 Safety Advanced V11* . note the following information:

NOTE

Adjustments are required before you can continue working on a project upgraded from *STEP 7 Safety Advanced V11*:

There was a product warning for *STEP 7 Safety Advanced V11* regarding setting the parameters "Discrepancy behavior" and "Reintegration after discrepancy error" for the fail-safe digital input and output modules 4F-DI/3F-DO DC24V/2A (6ES7138-4FC01-0AB0, 6ES7138-4FC00-0AB0). These parameters could be displayed incorrectly in certain combinations.

Based on the handling instructions in this product warning, you used a conversion table to set the affected parameters so that they were displayed incorrectly in the safety summary and hardware configuration in order for them to have the correct effect in the F-module. You also corrected the safety summary to document the actual behavior of F-modules.

To reverse these changes, follow these steps:

1. Compile the upgraded project with *STEP 7 Safety Advanced V13 SP1*. An error message is displayed for each F-module in *STEP 7 Safety Advanced V11* the parameters of which you have corrected: "The CRC (F_Par_CRC) of the module (xxx) does not match the calculated value (yyy)."
2. Adapt the parameter assignment of each F-module for which this error message is displayed to match your corrections in the safety summary.
3. Do this for each F-CPU and then compile the safety program.
4. If the Collective F-Signature following compiling corresponds to the Collective F-Signature on the safety summary, you have made all the necessary corrections.

Use of CPs

F-I/Os operated downstream from a CP443-5 Extended, CP443-1 or CP 443-1 Advanced-IT were not automatically assigned a unique F-destination address.

As soon as you compile the hardware in a project with such F-I/Os in *STEP 7 Safety V13 SP1*, you are notified for the affected F-I/Os. You have to assign new, unique F-destination addresses for the reported F-I/Os. Additional information is available under PROFIsafe addresses for F-I/O of PROFIsafe address type 1 (Page 61), PROFIsafe addresses for F-I/O of PROFIsafe address type 2 (Page 62) and Peculiarities when configuring fail-safe GSD based DP slaves and fail-safe GSD based I/O devices (Page 69).

This changes the Collective F-Signature of the safety program. Because the Collective F-SW-Signature is unchanged, it is documented that the safety program has remained unchanged. The changed Collective F-HW-Signature indicates that the safety-related hardware configuration has changed. You can now verify that solely the changed F-destination addresses have caused this change:

- The F-parameter signature (without address) for each changed F-I/O remains the same.
- Only the affected F-I/O DBs are listed in the comparison editor of the safety program with the filter set to "Compare only F-blocks relevant for certification".

Changed names of F-I/O DBs

Prior to *STEP 7 Safety V13 SP1* it was possible to change the name of an F-I/O DB. This change results in a changed Collective F-Signature during upgrading.

If a changed Collective F-Signature is unwanted during upgrading, follow these steps:

1. Under *STEP 7 Safety V13*, rename the changed names of the F-I/O DBs back to the original names.
2. Compile the safety program.
   The Collective F-Signature does not change as a result.
3. Perform an offline-offline comparison between the upgraded program and the program compiled in step 2.
4. Create a comparison printout (Page 303) (electronic/paper form).
   Use the comparison printout to ensure that you have only changed the names of the F-F-I/O DBs.
5. Upgrading the safety program to *STEP 7 Safety V13 SP1*. After upgrading, the safety program has the Collective F-Signature from step 2.

1.9 First steps

Getting Started in SIMATIC Safety

Three Getting Started documents are available to help you begin using SIMATIC Safety.

The Getting Started documentation is an instruction manual that provides a step-by-step description of how to create a project with SIMATIC Safety. It gives you the opportunity to quickly become familiar with the scope of features of SIMATIC Safety.

Contents

The Getting Started documentation describes the creation of a single, continuous project that is extended with each section. Based on the configuration, you program a fail-safe shutdown, make changes to the programming, and accept the system.

In addition to the step-by-step instructions, the Getting Started documentation also gives you background information for every new topic, which explains the functions used in more detail and how they interrelate.

Target audience

The Getting Started documentation is intended for beginners but is also suitable for users who are switching from *S7 Distributed Safety*.

Download

Three Getting Started documents are available as PDF files for free download in the Industry Online Support:

- STEP 7 Safety Advanced V11 with S7-300/400 F-CPUs (http://support.automation.siemens.com/WW/view/en/49972838)
- STEP 7 Safety Basic V13 SP1 with S7-1200 F-CPUs (http://support.automation.siemens.com/WW/view/en/34612486/133300) (part of the manual "S7-1200 Functional Safety manual")
- STEP 7 Safety Advanced V13 with S7-1500 F-CPUs (http://support.automation.siemens.com/WW/view/en/101177693)

Configuring 2

2.1 Overview of Configuration

IntroductionSee F-CPU

You basically configure a SIMATIC Safety F-system in the same way as a standard S7-300, S7-400, S7-1200, S7-1500 or ET 200MP, ET 200SP, ET 200AL, ET 200S, ET 200iSP, ET 200eco, ET 200eco PN or ET 200pro automation system in *STEP 7*.

This section presents only the essential differences compared to standard configuration you encounter when configuring a SIMATIC Safety F-system.

This documentation distinguishes between two groups of F-I/O:

F-I/Os of PROFIsafe address type 1

F-I/Os which ensure the uniqueness of the PROFIsafe address solely with the F-destination address, for example, ET 200S F-modules. The PROFIsafe address is usually assigned by DIP switches.

F-I/Os of PROFIsafe address type 2

F-I/Os which can ensure the uniqueness of the PROFIsafe address with a combination of F-source address and F-destination address, for example, S7-1500/ET 200MP F-modules. The PROFIsafe address is usually assigned with *STEP 7 Safety*.

Which F-components can you configure with the *STEP 7 Safety* ?

The table below shows you which F-CPUs you can configure with *STEP 7 Safety Basic* and which with *STEP 7 Safety Advanced*:

F-CPUs	*STEP 7 Safety Basic*	*STEP 7 Safety Advanced*
S7-300	—	x
S7-400	—	x
S7-1200	x	x
S7-1500(H)	—	x
SIMATIC Drive Controller	—	x
WinAC RTX F	—	x
S7-1500 F Software Controller	—	x

The table below shows you which F-I/Os you can configure with *STEP 7 Safety Basic* and which with *STEP 7 Safety Advanced* as well as which PROFIsafe address type they support:

F-I/O	***STEP 7 Safety Basic***	***STEP 7 Safety Advanced***	***PROFIsafe address type***
S7-300 F-SMs	x**	x**	1
ET 200S F-modules	x	x	1
ET 200pro F-modules	x	x	1
ET 200iSP F-modules	x	x	1
ET 200eco DP F-I/Os	—	With S7-300/400 F-CPUs (only PROFIsafe V1 mode)	1
ET 200eco PN F-I/Os	x	x	2
S7-1200 F-modules (centrally on S7-1200 F-CPUs)	x	x	2
ET 200SP F-modules	x	x	2
S7-1500/ET 200MP F-modules	x	x	2
ET 200AL F-modules	x	x	2
fail-safe GSD based DP slaves	x	x	*
fail-safe GSD based I/O devices	x	x	*

* Consult the respective documentation to determine the PROFIsafe address type of a GSD based DP slave/GSD based I/O device. If in doubt, assume that the PROFIsafe address is type 1.

*** F-SMs that only support PROFIsafe V1 mode can only be used on F-CPUs S7-300/400.

Example: Configured F-system in *STEP 7 Professional*

The following figure presents a configured F-system. You choose the fail-safe components in the "Hardware catalog" task card as you would do with standard components and place them in the work area of the network or device view. F-components are shown in yellow.

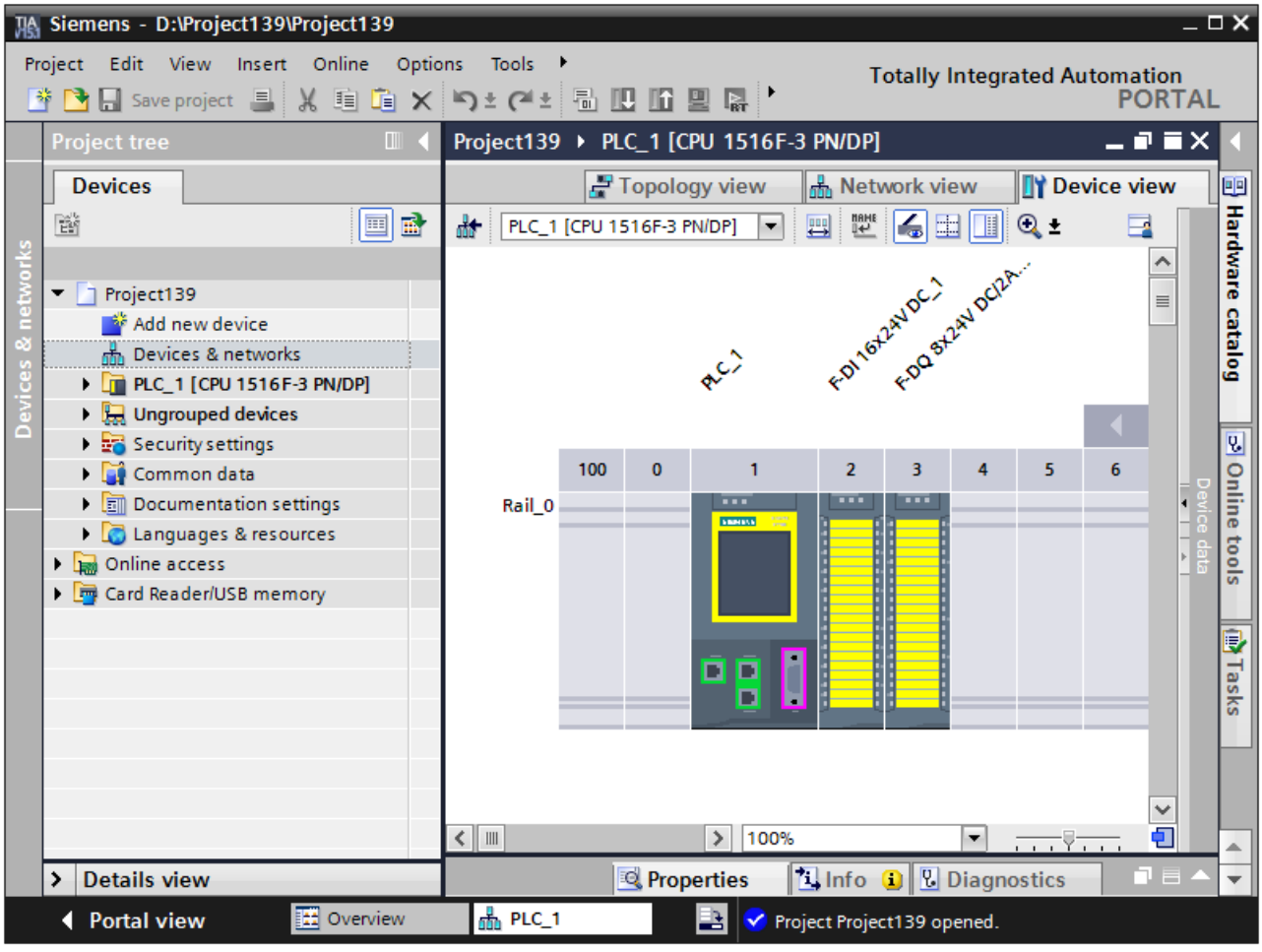

Additional information

For detailed information on F-I/O, refer to the *manuals for the relevant F-I/O*.

Which safety-related communication options can you configure?

You need to use the *hardware and network editor* to configure the following safety-related communication options (see Configuring and programming communication (S7-300, S7-400) (Page 176) or Configuring and programming communication (S7-1200, S7-1500) (Page 231)):

- Communication with Flexible F-Link (Page 263)
- Safety-related master-master communication
- Safety-related master-master communication for *S7 Distributed Safety*

- Safety-related master-I-slave communication
- Safety-related I-slave-I-slave communication
- Safety-related I-slave-slave communication
- Safety-related IO controller-IO controller communication
- Safety-related IO controller-IO controller communication for *S7 Distributed Safety*
- Safety-related IO controller-I-device communication
- Safety-related IO controller-I-slave communication
- Safety-related communication via S7 connections
- Safety-related communication via S7 connections for *S7 Distributed Safety* or *S7 F Systems*

2.2 Particularities for configuring the F-System

Configuring is the same as for standard components

You configure a SIMATIC Safety F-system in the same way as a standard S7 system. This means that you configure and assign parameters for the hardware in the *hardware and network editor* as a centralized system (F-CPU and if required F-IO for example CPU 1516F-3 PN/DP and F-modules S7-1500/ET 200MP) and/or as a distributed system (F-CPU, F-SMs in ET 200M, F-modules ET 200MP, ET 200SP, ET 200AL, ET 200S, ET 200pro, ET 200iSP, ET 200eco, ET 200eco PN, fail-safe GSD-based DP slaves and/or fail-safe GSD-based I/O devices).

Special F-parameters

For the F-functionality there are special F-parameters that you can review and set in the "Properties" of the fail-safe components (F-CPU and F-I/O). F-parameters are marked in yellow.

F-parameters are explained in "Configuring an F-CPU (Page 43)" and "Configuring F-I/O (Page 47)".

Compiling the hardware configuration

You must compile the hardware configuration of the SIMATIC Safety F-system (shortcut menu "Compile > Hardware configuration"). A configured F-CPU with enabled F-capability is the only prerequisite for programming the safety program.

NOTE

Inconsistencies are possible when configuring the hardware and can also be saved. A full consistency check of the hardware configuration and possible connection data is performed only during compilation. Therefore, perform "Edit > Compile" regularly.

Changing safety-related parameters

NOTE

If you change a safety-related parameter (marked in yellow) for an F-I/O or an F-CPU, you must then compile the modified hardware configuration and the Compiling the safety program (Page 272) (shortcut menu "Compile > Hardware and software (only changes)") and download. This also applies for changes to the F-I/O which are not used in the safety program. F-I/O in standard operation is not affected by this.

2.3 Configuring an F-CPU

Introduction

You configure the F-CPU basically in the same way as a standard automation system.

F-CPUs are always configurable in *STEP 7*, regardless of whether or not the *STEP 7 Safety* license is installed. Without an installed *STEP 7 Safety* license, the F-CPU can only be used as a standard CPU.

With installed *STEP 7 Safety* license, you can enable or disable the F-capability for the F-CPU.

If you want to use the F-I/O in safety mode or in safety-related communication, the F-capability of the F-CPU must be enabled.

F-capability is activated by default when *STEP 7 Safety* license is installed.

Enabling/disabling F-capability

If you want to modify the F-capability setting, proceed as follows:

1. Select the F-CPU in the device or network view, and select the "Properties" tab in the inspector window.
2. Select "Fail-safe" in the area navigation.
3. Use the appropriate button to enable/disable the F-capability.
4. If you want to disable F-capability, confirm the "Disable F-activation" dialog with "Yes".

Disabling F-capability for an existing safety program

If you want to disable the F-capability for an F-CPU because you intend to use the F-CPU as a standard CPU although a safety program is installed, you must note the following:

- You need the password for the safety program, if assigned.
- The Safety Administration Editor (Page 72) is deleted from the project tree.
- The F-OBs are deleted. (S7-1200, S7-1500)
- All F-blocks are deleted.
- From now on you cannot use F-I/O in safety mode with this F-CPU.

Configuring the F-parameters of the F-CPU

In the "Properties" tab of the F-CPU, you can change or apply the default settings for the following parameters:

- The F-destination address range
  - Low limit for F-destination addresses
  - High limit for F-destination addresses
- The default F-monitoring time for central or distributed F-I/O at the F-CPU
  (For HF-CPUs, only the default F-monitoring time for distributed F-I/O.)

NOTE

A change of the F-monitoring time for central or distributed F-I/O at the F-CPU results in modifications to the safety program when it is recompiled. A new acceptance may therefore be required.

Specify F-destination address for F-I/O of PROFIsafe address type 1

With the parameters "Low limit for F-destination addresses" and "High limit for F-destination addresses" you specify a range for this F-CPU in which the F-destination address of newly inserted F-I/Os of PROFIsafe address type 1 (Page 61) is assigned automatically. An F-destination address that is not within the F-destination address range yet, is also reassigned when you reassign a DP slave/IO device with the F-CPU or switch on the F-activation of the F-CPU or change the logical address of this F-module.

The F-destination address is assigned in ascending order starting at the "Low limit for F-destination addresses". When no free F-destination address is available in the F-destination address range, the next available free F-destination address outside the F-destination address range is assigned and a warning is output during compilation.

The maximum possible F-destination address for ET 200S, ET 200eco, ET 200pro, ET 200iSP F-modules and S7-300 F-SMs is 1022.

The F-destination addresses for F-I/O of PROFIsafe address type 1 must be unique network-wide and CPU-wide.

By selecting different F-destination address ranges for different F-CPUs, you can define different ranges for the automatic assignment of the F-destination address. This is useful when you are operating multiple F-CPUs in one network. Subsequent manual address changes are possible. (see also Recommendation for PROFIsafe address assignment (Page 57))

Example:

You have configured the F-destination address range as follows:

- Low limit for F-destination addresses = 100
- High limit for F-destination addresses = 199

When inserting the first F-I/O of PROFIsafe address type 1, the F-destination address 100 is assigned. When inserting an additional F-I/O of PROFIsafe address type 1, the F-destination address 101 is assigned.

NOTE

The parameters "Low limit for F-destination addresses" and "High limit for F-destination addresses" have no effect on the following F-I/Os:

- SM 326; DI 8 x NAMUR (as of article number 6ES7326-1RF00-0AB0)
- SM 326; DO 10 x DC 24V/2A (article number 6ES7326-2BF01-0AB0)
- SM 336; AI 6 x 13 bit (article number 6ES7336-1HE00-0AB0)

Specify F-destination address for F-I/O of PROFIsafe address type 2

The F-destination address of F-I/O of PROFIsafe address type 2 (Page 62) is assigned automatically for each F-CPU in descending order starting with 65534. The low limit is the value configured with the parameter "Low limit for F-destination addresses" (for F-I/O of PROFIsafe address type 1) + 1.

When the value configured with the "High limit for F-destination addresses" parameter is reached, a warning is output during compilation. (See also Recommendation for PROFIsafe address assignment (Page 57))

Specify F-source address for F-I/O of PROFIsafe address type 2

You specify the F-source address for F-I/O of PROFIsafe address type 2 (Page 62) assigned to this F-CPU with the "Central F-source address" parameter. The F-source address must be unique throughout the network. (see also Recommendation for PROFIsafe address assignment (Page 57))

NOTE

A change to the "Central F-source address" parameter results in modifications to the safety program when it is recompiled. A new acceptance may therefore be required because the F-source addresses of all F-I/Os of address type 2 are changed centrally by this step.

"Default F-monitoring time" parameter

Configure the "Default F-monitoring time" for monitoring the communication between the F-CPU and F-I/O.

You can adjust the F-monitoring time via the following parameters:

- "Default F-monitoring time for central F-I/O"
- "Default F-monitoring time for F-I/O of this interface"

The **default F-monitoring time for the central F-I/O** acts on the F-I/O that is arranged centrally, i.e. near the F-CPU. You set this parameter in the properties of the F-CPU (select F-CPU, then select "Properties > Fail-safe > F-parameters").

The **default F-monitoring time for the F-I/O of this interface** acts on the F-I/O that is assigned to this interface of the F-CPU (PROFIBUS or PROFINET). You change this parameter in the properties of the relevant interface (selection of the interface in the "Device view" tab, then "F-parameters").

The various settings available allow you to flexibly adapt the F-monitoring time to the conditions of your F-system, for example to take account of different bus cycles.

You can also change the F-monitoring time individually for each F-I/O in the F-I/O properties (see Configuring F-I/O (Page 47) or Peculiarities when configuring fail-safe GSD based DP slaves and fail-safe GSD based I/O devices (Page 69)).

NOTE

A change of the F-monitoring time for central or distributed F-I/O at the F-CPU results in modifications to the safety program when it is recompiled. A new acceptance may therefore be required.

NOTE

The default value for the "Default F-monitoring time for the F-I/O" for an HF-system is 2300 ms and is designed for an MRP ring. For line topology, you can set the "Default F-monitoring time for the F-I/O" smaller by a factor of approx. 2. You can determine the exact value as described in section "Monitoring and response times (Page 546)". You can set this value in the properties of the F-CPU (selection of the F-CPU, then "Properties > Fail-safe > F-parameters > PROFINET interface [X1]").

⚠ WARNING

It can only be ensured (from a fail-safe standpoint) that a signal state to be transferred will be acquired and transferred to the receiver if the signal level is pending for at least as long as the assigned monitoring time. *(S018)*

You can find additional information in Monitoring and response times (Page 546).

Automatic generation of the safety program

The safety program of an F-CPU consists of one or two F-runtime groups that contain the F-blocks (see also Defining F-Runtime Groups (Page 116)). When the F-CPU (with activated F-capability) is inserted into the work area of the device view or network view, a safety program with an F-runtime group is generated automatically.

You can define in *STEP 7 Safety* that no F-runtime group is generated while inserting the F-CPU (with activated F-capability).

Proceed as follows:

1. Select the "Options > Settings" menu command.
2. Select the "STEP 7 Safety" area.
3. If it is not already disabled, disable automatic generation of an F-runtime group by deselecting the "Generate default fail-safe program" option.

This change has no influence on any existing safety programs; it only defines whether an F-runtime group is automatically generated for each one of the subsequently inserted F-CPUs.

Configuring the protection level of the F-CPU

WARNING

(S7-300, S7-400) When the standard user program is changed in productive operation, access permission must not be granted by the CPU password, as it would also allow changes to the safety program. To rule out this possibility, you must configure the protection level "Write protection for fail-safe blocks" and configure a password for the F-CPU. If only one person is authorized to change the standard user program and the safety program, the protection level "Write protection" or "Read/write protection" should be configured so that other persons have only limited access or no access at all to the entire user program (standard and safety programs). *(S001)*

WARNING

(S7-1200, S7-1500) In productive operation, the safety-related project data must be protected by a password. For this purpose, configure at most the access level "Full access (no protection)" and assign a password under "Full access incl. fail-safe (no protection)". This access level only allows full access to the standard project data, not to F-blocks.

If you select a lower access level, for example, to protect the standard project data, you must assign an additional password for "Full access (no protection)".

Assign different passwords for the individual access levels. *(S041)*

You configure the protection level following the same procedure as for standard CPUs.
For information on the password for the F-CPU, refer to Access protection (Page 88). Pay special attention to the warnings in Access protection for the F-CPU (Page 91).

2.4 Configuring F-I/O

Introduction

You configure the S7-1500/ET 200MP, ET 200SP, ET 200AL, ET 200S, ET 200eco (S7-300, S7-400), ET 200eco PN, ET 200pro and ET 200iSP, the S7-300 F-SMs and the S7-1200 F-modules as usual in *STEP 7*.
After you have inserted the F-I/O in the work area of the *device or network view*, you access the configuration dialogs by selecting the relevant F-I/O and the "Properties" tab.

NOTE

Changes to the parameter assignment result in modifications to the safety program when it is recompiled. A new acceptance may therefore be required.

The ET 200SP F-modules can be used in distributed system with:

- IM 155-6 PN ST as of firmware V1.1
- IM 155-6 PN HF
- IM 155-6 PN/2 HF as of firmware V4.2

- IM 155-6 PN/3 HF as of firmware V4.2
- IM 155-6 MF HF
- IM 155-6 PN HS
- IM 155-6 DP HF
- IM 155-6 PN R1
  You can find information on whether operation with R1 is supported for an ET 200SP F-module on the Internet. (https://support.industry.siemens.com/cs/ww/en/view/73021864)

The distributed use of S7-1500/ET 200MP F-modules is possible with:

- IM 155-5 PN BA as of firmware V4.3
- IM 155-5 PN ST as of firmware V3.0
- IM 155-5 PN HF as of firmware V2.0
- IM 155-5 DP ST as of firmware V3.0

The central use of S7-1500/ET 200MP F-modules is possible with S7-1500 F-CPUs as of firmware V1.7, distributed use as of firmware V1.5.

(S7-1200) We recommend you limit the total number of F-I/Os that are used centrally or distributed in an S7-1200 F-CPU to 12. Depending on the volume of project data, the maximum number of F-I/Os can be smaller.

WARNING

When you make changes in which the assignment of input/output addresses and wiring can change, then you must perform a wiring test (Page 313).

Examples for such changes are:

- Adding F-I/O
- Changing the start address of F-I/O
- Changing the slot position of F-I/O
- Changing
  - the rack
  - the slave/device address
  - the PROFIBUS DP/PROFINET IO subnet
  - the IP address
  - the device name

(S071)

Channel-granular passivation after channel faults

You can configure how the F-I/O will respond to channel faults, such as a short-circuit, overload, discrepancy error, or wire break, provided the F-I/O supports this parameter (e.g. for ET 200S or ET 200pro F-modules). You configure this response in the properties for the relevant F-I/O ("Behavior after channel fault" parameter). This parameter is used to specify whether the entire F-I/O or just the faulty channel(s) are passivated in the event of channel faults.

NOTE

(S7-300, S7-400) Note that channel-granular passivation increases the runtime of the F-runtime group(s) compared to passivation of the entire F-I/O (see also Excel file for response time calculation (https://support.industry.siemens.com/cs/ww/en/view/109783831)).

"Channel failure acknowledge" parameter (S7-1200, S7-1500)

In the case of F-I/Os that support the "Channel failure acknowledge" channel parameter (for example S7-1500/ET 200MP F-modules, S7-1200 F-modules and ET 200AL F-modules), this replaces the ACK_NEC tag of the F-IO data block.
If an F-I/O fault is detected by the F-I/O, passivation of all channels of the relevant F-I/O occurs. If channel faults are detected, the relevant channels are passivated if "Passivate channel" is configured. If "Passivate the entire module" is configured, all channels of the relevant F-I/O are passivated. Once the F-I/O fault or channel fault has been eliminated, reintegration of the relevant F-I/O/the relevant channel occurs in line with the "Channel failure acknowledge" parameter.

- Automatically
- Manually

The parameter "Channel failure acknowledge" can be set individually for each channel with channel-granular passivation if "Adjustable" has been parameterized at the "Reintegration after channel fault" parameter.

⚠ WARNING

The parameter assignment "Channel failure acknowledge = Automatic" is only allowed if automatic reintegration is permitted for the relevant process from a safety standpoint.*(S045)*

NOTE

The default assignment for the "Channel failure acknowledge" parameter when the F-module is created is "Manually".

Organization block/Process image (S7-1200, S7-1500)

If you use F-I/O in standard mode, you can select the organization block/process image as you do for standard I/O.

If you use F-I/O in safety mode, no selection is possible. The process image is always updated automatically at the beginning or end of the F-runtime group (see section Program structure of the safety program (S7-1200, S7-1500) (Page 98)).

Contrary to F-I/O operated in non-isochronous mode, you need to selected a process image partition, such as PIP 1 for F-I/O that is operated in isochronous mode (see "Configuring isochronous mode (S7-1500) (Page 56)").

Changing the name and number of the F-I/O DB

For more information, refer to the section "Fail-safe I/O data block (Page 145)".

Customizing the F-monitoring time for F-I/O

You can customize the F-monitoring time in the properties of the F-I/O under "F-parameters". This may be necessary to prevent a timeout being triggered when no error occurs and the F-I/O requires a longer F-monitoring time or assignment with a default F-monitoring time is not possible. For this purpose, activate the corresponding check box and assign an F-monitoring time.

NOTE

A change of the F-monitoring time for central or distributed F-I/O at the F-CPU results in modifications to the safety program when it is recompiled. A new acceptance may therefore be required.

⚠ WARNING

It can only be ensured (from a fail-safe standpoint) that a signal state to be transferred will be acquired and transferred to the receiver if the signal level is pending for at least as long as the assigned monitoring time. *(S018)*

You can find additional information in Monitoring and response times (Page 546).

Group diagnostics for fail-safe S7-300 signal modules

By disabling a channel of the fail-safe signal module in the module properties, you also disable the group diagnostics for this channel.

Exception for S7-300/400 F-CPUs:

For the following S7-300 fail-safe signal modules

- SM 326; DI 8 x NAMUR (as of article number 6ES7326-1RF00-0AB0)
- SM 326; DO 10 x DC 24V/2A (article number 6ES7326-2BF01-0AB0) and
- SM 336; AI 6 x 13Bit (article number 6ES7336-1HE00-0AB0)

the "Group diagnostics" parameter enables and disables the monitoring of channel-specific diagnostic messages of F-SMs (such as wire break and short-circuit) to the F-CPU. You should disable group diagnostics for **unused** input or output channels.

WARNING

(S7-300, S7-400) For the following S7-300 fail-safe signal modules (F-SMs) with activated safety mode, "Group diagnostics" must be enabled for all connected channels:

- SM 326; DI 8 x NAMUR (article numbers 6ES7326-1RF00-0AB0 and 6ES7326-1RF01-0AB0)
- SM 326; DO 10 x DC 24V/2A (article number 6ES7326-2BF01-0AB0)
- SM 336; AI 6 x 13 Bit (article number 6ES7336-1HE00-0AB0)

Check to verify that you have only disabled group diagnostics for these F-SMs for input and output channels that are actually unused. *(S003)*

Diagnostic interrupts can be enabled optionally.

Additional information

For detailed description of the **parameters**, refer to the help on the properties of the respective F-I/O and in the respective *manual for the F-I/O*.

2.5 Configuration control (option handling) for F-I/Os

For configuration control (option handling) with F-I/Os proceed as with the standard I/O devices. Detailed information can be obtained by searching for "Configuration control (option handling)" in the help of *STEP 7*.
The following section describes what you have to observe additionally for F-I/Os.

Requirements

- The requirements that are specified under "Configuration control (option handling)" in the help of *STEP 7* are fulfilled.
- The requirements that are specified under "Configuration control (option handling)" in the help of *STEP 7* are fulfilled. Handle the F-I/O as standard I/O.
- V2.1 or higher is set as the safety system version.

- The F-I/Os for which you use the configuration control (option handling) are located
  - Distributed at an F-CPU S7-300/400/1200/1500
  - Centrally at an F-CPU S7-1500

  The PROFIsafe address of the F-I/Os are set or assigned.

NOTE

The assignment of the PROFIsafe addresses (Page 64) is only possible if the maximum configuration actually exists.

Procedure

(S7-1200, S7-1500) Disable the F-I/Os not existing in the respective variant (option) by setting the DISABLE (Page 150) variable in the associated F-I/O DB (Page 145) to "1". This prevents the flashing of the error LED of the F-CPU and diagnostic entries of the safety program that reference these F-I/Os. With the DISABLED (Page 150) variable of the associated F-IO data block, you can evaluate whether an F-module is deactivated.

(S7-300, S7-400) To prevent the flashing of the error LEDs of the F-CPUs you do not have to observe anything further. You cannot suppress diagnostics entries.

WARNING

If configuration control is used, your actual configuration deviates from the configured maximum configuration. You identify F-I/Os that do not exist in the current option (station option) via control record as "not available".

If an F-I/O marked as "not available" is possibly nevertheless in the real system, it has to be ensured that substitute values (0) are provided for these F-I/Os in the safety program or output at the outputs. This is achieved by setting the DISABLE tag (S7-1200/1500) or respectively PASS_ON tag (S7-300/400) in the associated F-I/O DB to "1". *(S077)*

2.5.1 Example

Introduction

The following example shows how you to

- Select/detect a station option
- Disable F-I/Os that are not present in a station option (S7-1200/1500)
- Provide your safety program for various station options

Safe selection/detection of the station option

You carry out a safe selection/detection of a station option with inputs of an F-I/O wired fixed to M/L+.

For example, you can select up to 4 station options with 2 inputs of an F-I/O.

Option	OptionSelection_Bit_0	OptionSelection_Bit_1
Q	0	0
B	0	1
C	1	0
D	1	1

Note when detecting the station option that substitute values (0) are used for the inputs of the F-I/O in certain situations, e.g. during startup of the F-system or when F-I/O channel errors occur.

In these situations, the present station option cannot be detected. You should therefore also evaluate the value status of inputs and only apply the station option one-time after startup of the F-system.

For one-time recognition of the station option, define a static local datum, for example, OptionSelectionRuns with default value "TRUE".

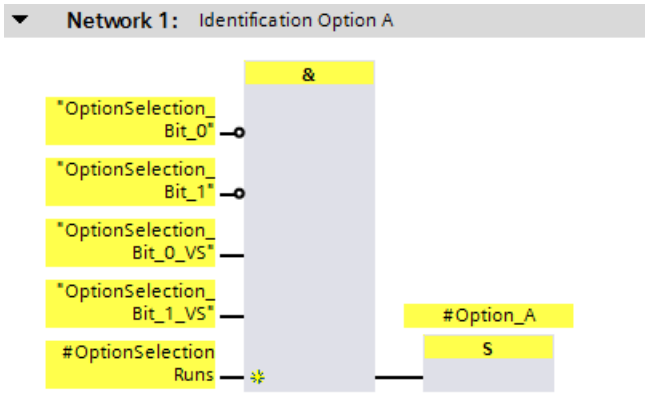

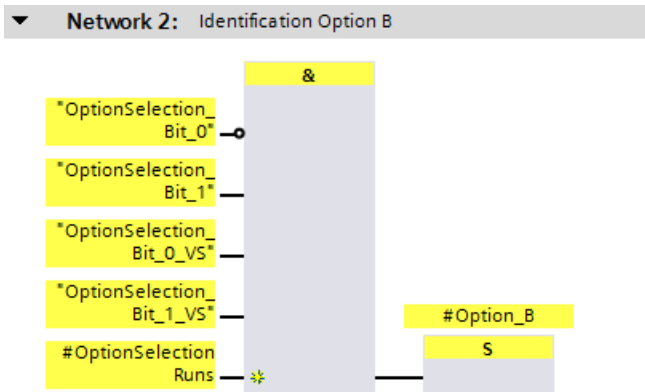

Correspondingly for options C and D.

As soon as a station option is detected, reset the static local datum for one-time detection of the station option:

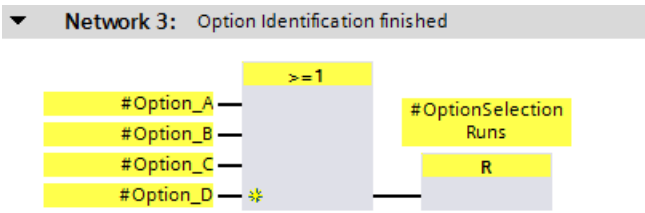

NOTE

When you make the selection/detection of a station option only in the standard user program, only the "Station option" is available to you as a standard datum that is not secured.

Make sure that no dangerous states arise from this.

Read the section "Data exchange between standard user program and safety program (Page 172)".

Disabling F-I/Os that are not present in a station option

If one or more F-I/Os are not present in a station option, you can prevent the blinking of the error LED of the F-CPU by disabling these F-I/Os.
In addition, diagnostic messages of the safety program that refer to these F-I/Os are suppressed.

NOTE

As long as the detection of the station option (during startup of the F-system) is not yet complete (OptionSelectionRuns = TRUE), you should disable all "optional" F-I/O devices.

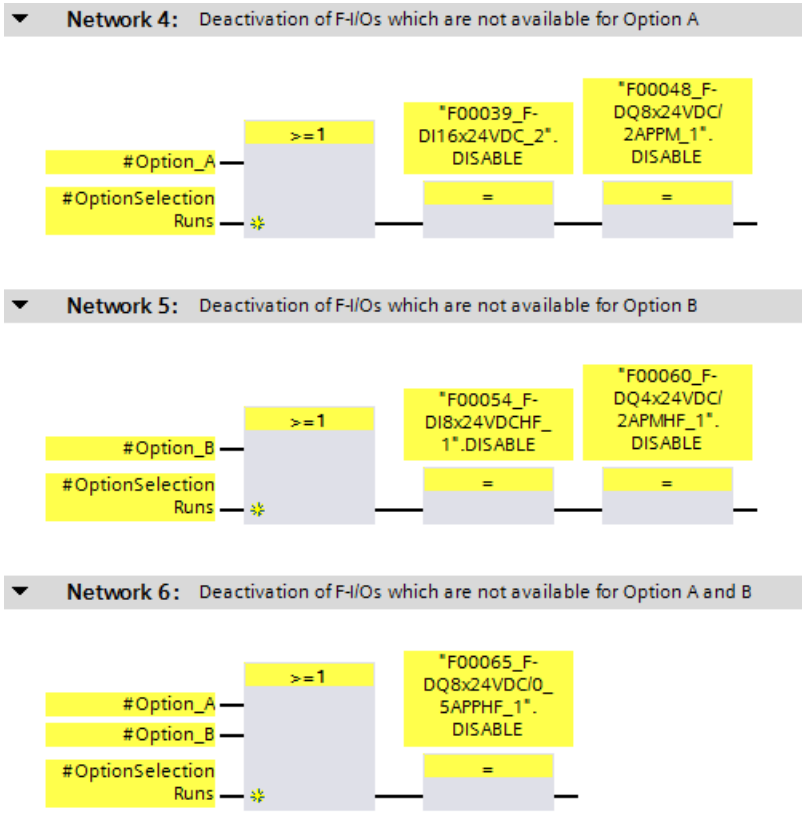

Providing the safety program for various station options

In the following example, the EMERGENCY STOP signals of different plant units or machines are combined into a collective EMERGENCY STOP signal.

Machines I and III and the corresponding F-I/O with the EMERGENCY STOP signal for machines I and III are not present with station option A.

Machine II and the corresponding F-I/O with the EMERGENCY STOP signal for machine II is not present with station option B.

The substitute values (0) are therefore used in the safety program for the EMERGENCY STOP signals from the respective unavailable machines.

In order to prevent the collective EMERGENCY STOP from being triggered because machines / EMERGENCY STOP signals are not present with certain station options, you can suppress the evaluation of the EMERGENCY STOP signal for unavailable machines by taking into account the present station option.

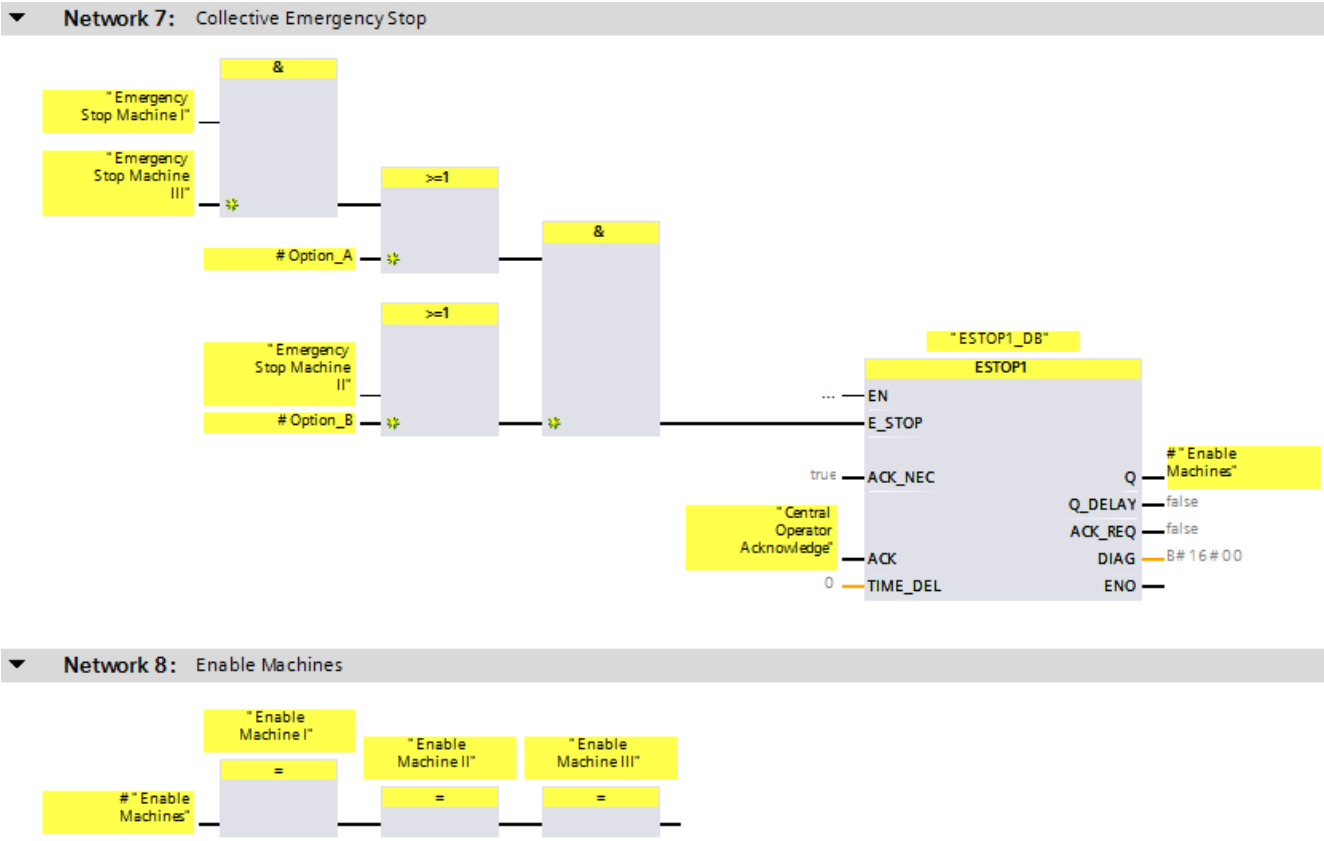

2.6 Configuring shared device

To configure shared devices follow the procedure as in the standard. The configuration is described in the *STEP 7* help under "Configuring shared devices".

Only cross-project shared devices are supported. Project-internal shared devices are not supported.

F-destination addresses

Please also read the chapter "Recommendation for PROFIsafe address assignment (Page 57)" for assigning the F-destination address.

See also

Assigning a PROFIsafe address to an F-module in a cross-project shared device (Page 68)

2.7 Configuring isochronous mode (S7-1500)

To configure isochronous mode for F-I/Os that support this mode, e.g. "Profisafe Telgr 902" submodule of the SINAMICS S120 CU310-2 PN V5.1 drive, proceed as in the standard. The configuration is described in the *STEP 7* help under "Configuring isochronous mode".

Note the following:

- Contrary to F-I/O operated in non-isochronous mode, you need to selected a process image partition, such as PIP 1 for F-I/O that is operated in isochronous mode.
  This process image partition must contain only F-I/O operated in isochronous mode and no standard I/O.
- The assigned isochronous mode interrupt OB must first be generated as F-OB by specifying a F-runtime group (see Procedure for defining an F-runtime group (S7-1200, S7-1500) (Page 122)). It is not possible to add an F-OB with event class "Synchronous Cycle" directly during the configuration of the isochronous mode.

Requirement

S7-1500 F-CPUs as of firmware V2.0 that support IRT.

Connection of F-I/O operated in isochronous mode to the isochronous mode interrupt OB

You access F-I/O operated in isochronous mode in the same way as you do standard I/O operated in isochronous mode, via the select process image partition.

Contrary to standard I/O that is operated in isochronous mode, the process image partition is updated by the F-system at the beginning or end of the F-OB (see Program structure of the safety program (S7-1200, S7-1500) (Page 98)).

No calling of the instructions SYNC_PI and SYNC_PO is required in the F-OB.

NOTE

With isochronously operated F-I/O, it is not ensured (fail-safe) that all input data of the F-I/Os assigned to the process image partition are consistently available at the beginning of the main safety block or all output data is transferred consistently to the F-I/Os, in other words, logically and temporally together. The consistency is only ensured within an F-I/O.

The consistency of all isochronous F-I/Os of the process image partition usually depends on the number of isochronous F-I/Os and the scope of the safety program in the isochronous mode interrupt OB.

If there are corresponding consistency requirements, you must check the consistency of the input and output data yourself. You can do this, for example, by additionally transferring and evaluating time stamps in the input and output data of the isochronous F-I/Os.

2.8 Recommendation for PROFIsafe address assignment

Before inserting the F-I/O, specify an address range for each F-CPU for the F-destination addresses of the F-I/O of PROFIsafe address type 1 (Page 61) that does not overlap with the address range of any other F-CPU network-wide or CPU-wide (system-wide). You define the range for F-I/Os of PROFIsafe address type 1 with the parameters "Low limit for F-destination

addresses" and "High limit for F-destination addresses" (see also section Configuring an F-CPU (Page 43)).

In a redundant S7-1500HF system, consider both F-CPUs of the redundant S7-1500HF system as one F-CPU with regard to the PROFIsafe addresses. The "Low/high limit for F-destination addresses" or the "Central F-source address" is therefore set identically by the system for both F-CPUs.

The F-destination addresses of F-I/O of PROFIsafe address type 2 (Page 62) must not overlap with any address range of the F-I/O of PROFIsafe address type 1. The ranges of the F-destination addresses of the F-I/O of PROFIsafe address type 2 may overlap if the F-source addresses are different. This is the case for supported configurations (Page 58) if the "Central F-source address" parameter has been set differently for each F-CPU.

Assign relatively low F-destination addresses for F-I/O of PROFIsafe address type 1 and relatively high F-destination addresses for F-I/O of PROFIsafe address type 2.

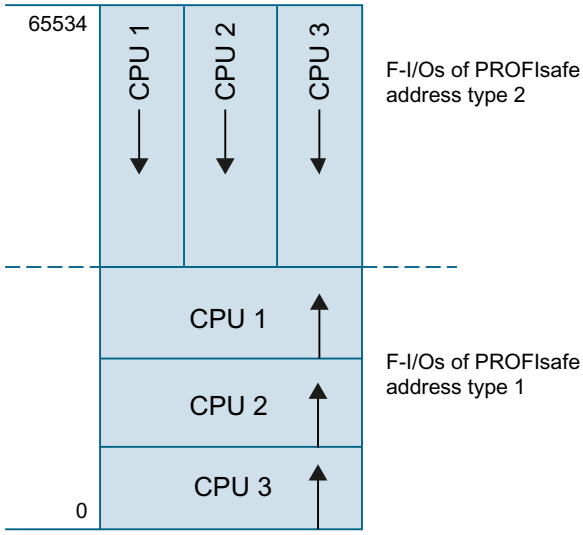

Figure 2-1 Address assignment for F-I/O of PROFIsafe address types 1 and 2

The safety summary (Page 331) lists the following information for each F-CPU:

- "Central F-source address" parameter (F-source address for F-I/O of PROFIsafe address type 2)
- Actually used range of the F-destination addresses of the assigned F-I/O of PROFIsafe address type 1
- Actually used range of the F-destination addresses of the assigned F-I/O of PROFIsafe address type 2

Any F-I/O configured using I-slave-slave communication is taken into consideration in the safety summary as part of the F-destination address range of the I-slave.

Any F-I/O configured in a shared device is taken is specified in the safety summary as part of the F-destination address range of the F-CPU to which this F-I/O is assigned.

2.9 Configurations supported by the SIMATIC Safety F-system

Supported configurations

F-I/Os (see Overview of Configuration (Page 39)) are supported in the following configurations:

central configuration (also I-slave):

- The F-I/O is in the same rack as the associated F-CPU.
- The F-I/O is located in a subrack of the rack of the associated F-CPU.

distributed configuration (at integrated DP-/PN interface of the CPU or at CP/CM):

- PROFIBUS DP (also after IE/PB link)
  - The F-I/O is located on a DP Slave.
  - The F-I/O is located on a DP Slave and is addressed via I-slave-slave communication. The assigned DP master (of the assigned IO controller of the IE/PB link) can be a standard CPU or an F-CPU.
- PROFINET IO
  - The F-I/O is located on an IO Device.
  - The F-I/O is located in a cross-project shared device. Project-internal shared devices do not represent supported configurations.

For a redundant S7-1500HF system the only supported configuration is:

distributed configuration (on integrated PN interface of the HF-CPU)

- PROFINET IO
  - The F-I/O is located in an IO device that is assigned to the IO systems of both F-CPUs. More information on IO devices for R1, S1 and S2 redundancy is available in the PROFINET Function Manual (https://support.industry.siemens.com/cs/ww/en/view/49948856) in section "PROFINET with the redundant S7-1500R/H system".

For F-I/O not listed in "Overview of Configuration (Page 39)", check the relevant documentation to see whether it is supported by the SIMATIC Safety F-system. If in doubt, treat these F-I/Os as part of a configuration that is not supported.

Checks performed by the SIMATIC Safety F-system

For supported configuration, the F-system checks:

- Whether the PROFIsafe operating mode parameter (F_Par_Version) is set to V2 mode in the PROFINET IO environment**.
- Whether the F-destination addresses have been assigned uniquely CPU-wide.
  You yourself must ensure the network-wide uniqueness of the PROFIsafe address.
- Whether the F-source address for the F-I/O of PROFIsafe address type 2 corresponds to the "Central F-source address" parameter of the F-CPU.

WARNING

Note the following when using configurations that are not included in supported configurations:

- Make sure that the F-I/O of this configuration appears in the safety summary and that an F-I/O DB has been created for it. Otherwise, you cannot use the F-I/O in this configuration. (Contact Customer Support.)
- For F-I/Os in the PROFINET IO environment**, you must check the PROFIsafe operating mode parameter (F_Par_Version) against the safety summary to make sure that it is correct. V2 mode must be set in the PROFINET IO environment. F-I/O which only support V1 mode must not be used in the PROFINET IO environment.
- You must ensure that the PROFIsafe address assignment is unique CPU-wide*/**** and network-wide***:
  - Check the correctness of the PROFIsafe addresses with the help of the safety summary.
  - Use the safety summary to check that the F-source address corresponds to the "Central F-source address" parameter of the F-CPU for F-I/O of PROFIsafe address type 2.
  - For F-I/O of PROFIsafe address type 1 or if you cannot set the F-source address in accordance with the "Central F-source address" parameter of the F-CPU, you will have to ensure the uniqueness of the PROFIsafe address solely by assigning a unique F-destination address.

  You must check the uniqueness of the F-destination address individually for each F-I/O based on the safety summary in a configuration that is not supported. (see Completeness and correctness of the hardware configuration (Page 334)) *(S050)*

* "CPU-wide" means all F-I/Os assigned to an F-CPU: Central F-I/O of this F-CPU as well as F-I/Os for which the F-CPU is DP master/IO controller and assigned F-I/O in a shared device. An F-I/O that is addressed using I-slave-slave communication is assigned to the F-CPU of the I-slave and not to the F-CPU of the DP master / IO controller.

** The F-I/O is located in the "PROFINET IO environment" if at least part of safety-related communication with the F-CPU takes place via PROFINET IO. If the F-I/O is connected via I-slave-slave communication, also keep in mind the communication line to the DP master/IO controller.

*** A network consists of one or more subnets. "Network-wide" means beyond the boundaries of the subnet. In PROFIBUS, a network includes all the nodes accessible via PROFIBUS DP. In PROFINET IO, a network includes all nodes accessible via RT_Class_1/2/3 (Ethernet/WLAN/Bluetooth, Layer 2) and if applicable RT_Class_UDP (IP, Layer 3).

**** With a redundant S7-1500HF system, both F-CPUs of the redundant S7-1500HF system are to be regarded as one F-CPU with regard to the PROFIsafe addresses. Therefore, the "Central F-source address" is set identically by the system for both F-CPUs.

NOTE

For more information on the assignment of PROFIsafe addresses that are unique for the CPU and across the network, see this FAQ (https://support.industry.siemens.com/cs/ww/en/view/109740240).

2.10 PROFIsafe addresses for F-I/O of PROFIsafe address type 1

F-destination address

The uniqueness of the PROFIsafe address is ensured solely with the F-destination address. The F-source address is not displayed and has no effect on whether or not the PROFIsafe address is unique.

Therefore, the F-destination address must be unique network-wide and CPU-wide (see the following rules for address assignment).

To prevent incorrect parameter assignment, an F-destination address which is unique CPU-wide is automatically assigned during placement of the F-I/O in the work area of the device or network view as long as you only configure supported configurations (Page 58).

To ensure a network-wide unique F-destination address assignment when multiple DP master systems and PROFINET IO systems are operated on one network, you must set the "Low limit for F-destination addresses" and "High limit for F-destination addresses" in the properties of the F-CPU in SIMATIC Safety F-systems appropriately, before placing the F-I/O (see section "Recommendations for address assignment") so that the F-destination address ranges do not overlap.

When you change the F-destination address of an F-I/O, the CPU-wide uniqueness of the F-destination address is checked automatically for supported configurations. You yourself must ensure the network-wide uniqueness of the F-destination address.

For ET 200S, ET 200eco (PROFIBUS), ET 200pro, ET 200iSP F-modules and S7-300 F-SMs: You must set the F-destination address at the F-I/O with the DIP switch before you install the F-I/O. You can assign up to 1022 different F-destination addresses.

NOTE

(S7-300, S7-400) For the following fail-safe S7-300 signal modules, the F-destination address is the start address of the F-SM divided by 8:

- SM 326; DI 8 x NAMUR (as of article number 6ES7326-1RF00-0AB0)
- SM 326; DO 10 x DC 24V/2A (article number 6ES7326-2BF01-0AB0)
- SM 336; AI 6 x 13 Bit (article number 6ES7336-1HE00-0AB0)

You can show the columns "F-source address" and "F-destination address" in the device view of the device overview. The addresses displayed in these columns are for information purposes only. You have to check the F-destination addresses in the safety summary when you accept the system.

Rules for address assignment

WARNING

F-I/Os of PROFIsafe address type 1 are uniquely addressed by their F-destination address (e.g. with the switch setting on the address switch).

The F-destination address (and therefore also the switch setting on the address switch) of the F-I/O must be unique network-wide* and CPU-wide**/*** (system-wide) **for the entire** F-I/O. The F-I/O of PROFIsafe address type 2 must also be considered. *(S051)*

* A network consists of one or more subnets. "Network-wide" means beyond the boundaries of the subnet. In PROFIBUS, a network includes all nodes accessible via PROFIBUS DP. In PROFINET IO, a network includes all nodes accessible via RT_Class_1/2/3 (Ethernet/WLAN/Bluetooth, Layer 2) and if applicable RT_Class_UDP (IP, Layer 3).

** "CPU-wide" means all F-I/Os assigned to an F-CPU: Central F-I/O of this F-CPU as well as F-I/Os for which the F-CPU is DP master/IO controller and assigned F-I/O in a shared device. An F-I/O that is addressed using I-slave-slave communication is assigned to the F-CPU of the I-slave and not to the F-CPU of the DP master / IO controller.

*** With a redundant S7-1500HF system, both F-CPUs of the redundant S7-1500HF system are to be regarded as one F-CPU with regard to the PROFIsafe addresses. Therefore, the "Central F-source address" is set identically by the system for both F-CPUs.

Also note Recommendation for PROFIsafe address assignment (Page 57).

NOTE

For more information on the assignment of PROFIsafe addresses that are unique for the CPU and across the network, see this FAQ (https://support.industry.siemens.com/cs/ww/en/view/109740240).

See also

Completeness of the safety summary (Page 331)

2.11 PROFIsafe addresses for F-I/O of PROFIsafe address type 2

F-source address and F-destination address

The uniqueness of the PROFIsafe address is ensured by the combination of F-source address and F-destination address.

The PROFIsafe address must be unique network-wide and CPU-wide. This is the case if the following two conditions are met:

- The F-source address ("Central F-source address" parameter) of the F-CPU is unique network-wide. Keep this in mind for changes.
- The F-destination address of the F-module is unique CPU-wide.

You define the F-source address using the "Central F-source address" parameter in the F-CPU. Provided you only configure supported configurations (Page 58), this parameter is automatically applied as the F-source address and a CPU-wide unique F-destination address is assigned (usually in descending order starting with 65534).

When you change the F-destination address, the CPU-wide uniqueness of the F-destination address is checked automatically for supported configurations.

You must assign the F-source address and F-destination address to the F-I/O before you commission the F-I/O. You can find additional information in Assigning a PROFIsafe address of the F-I/Os with SIMATIC Safety (Page 64).

You can show the columns "F-source address" and "F-destination address" in the device view of the device overview. The addresses displayed in these columns are for information purposes only. You have to check the F-source and F-destination addresses in the safety summary when you accept the system.

Rules for address assignment

WARNING

F-I/O of PROFIsafe address type 2 is uniquely addressed using a combination of F-source address ("Central F-source address" parameter of the assigned F-CPU) and F-destination address.

The combination of F-source address and F-destination address for each F-I/O must be unique network-wide* and CPU-wide**/*** (system-wide). In addition, the F-destination address must not be occupied by F-I/O of PROFIsafe address type 1.

To ensure that addresses are unique across F-CPUs for supported configurations (Page 58), you need to ensure that the "Central F-source address" parameter of all F-CPUs is unique network-wide*. This is achieved through different settings for the "Central F-source address" parameter of the F-CPUs. *(S052)*

* A network consists of one or more subnets. "Network-wide" means beyond the boundaries of the subnet. In PROFIBUS, a network includes all nodes accessible via PROFIBUS DP. In PROFINET IO, a network includes all nodes accessible via RT_Class_1/2/3 (Ethernet/WLAN/Bluetooth, Layer 2) and if applicable RT_Class_UDP (IP, Layer 3).

** "CPU-wide" means all F-I/Os assigned to an F-CPU: Central F-I/O of this F-CPU as well as F-I/Os for which the F-CPU is DP master/IO controller and assigned F-I/O in a shared device. An F-I/O that is addressed using I-slave-slave communication is assigned to the F-CPU of the I-slave and not to the F-CPU of the DP master / IO controller.

*** With a redundant S7-1500HF system, both F-CPUs of the redundant S7-1500HF system are to be regarded as one F-CPU with regard to the PROFIsafe addresses. Therefore, the "Central F-source address" is set identically by the system for both F-CPUs.

Also note Recommendation for PROFIsafe address assignment (Page 57).

NOTE

For more information on the assignment of PROFIsafe addresses that are unique for the CPU and across the network, see this FAQ (https://support.industry.siemens.com/cs/ww/en/view/109740240).

See also

Completeness of the safety summary (Page 331)

2.12 Setting the F-destination address for F-I/O with DIP switches

Information on how to set the F-destination address for F-I/O with DIP switches is available in the documentation of the respective F-I/O.

2.13 Assigning a PROFIsafe address of the F-I/Os with SIMATIC Safety

Introduction

You assign the PROFIsafe address (Page 62), consisting of F-source address and F-destination address for

- ET 200SP fail-safe modules
- S7-1500/ET 200MP fail-safe modules
- ET 200AL fail-safe I/O modules
- ET 200eco PN fail-safe I/O modules

directly from *STEP 7 Safety*.

The PROFIsafe addresses for S7-1200 F-modules are automatically assigned during download of the hardware configuration.

None of these F-I/O modules have a DIP switch for setting the unique F-destination address for each module.

In the following cases it is necessary to reassign the addresses for fail-safe ET 200SP modules, fail-safe S7-1500/ET 200MP modules, fail-safe ET 200AL I/O modules, and fail-safe ET 200eco PN I/O modules:

- Later placement of a fail-safe module during initial commissioning (not for ET 200eco PN)
- Intentional modification of the F-destination address
- Modification of the "Central F-source address" parameter for the associated F-CPU (changes the F-source address).
- Replacement of the coding element
- Commissioning of a mass-produced machine

In the following cases it is not necessary to reassign the addresses of the fail-safe ET 200SP and fail-safe S7-1500/ET 200MP modules:

- POWER OFF/POWER ON
- Replacement of an F-module (repair) without PG/PC
- Replacement of the BaseUnit (transferring the coding element with assigned F-source address and F-destination address to the new BaseUnit)
- Replacement of a BaseUnit without coding element
- Changes in the design in case a new BaseUnit is inserted in front of a fail-safe module
- Repair/replacement of the interface module

Reassignment is not required for fail-safe ET 200eco PN and ET 200AL I/O modules in the following cases:

- POWER OFF/POWER ON
- Replacement of the compact device (transferring the coding element with assigned F-source address and F-destination address to the new compact device)

Basic procedure

NOTE

Assigning the PROFIsafe address for S7-1200 fail-safe modules

The procedure described below for identifying and assigning the PROFIsafe addresses is not required for S7-1200 fail-safe modules.

Note that an S7-1200 F-CPU must not include an additional unconfigured F-module.

1. Set the F-destination address (Page 62) and F-source address (Page 62) in the hardware configuration in *STEP 7 Safety*.
2. Identify the fail-safe modules ET 200SP, S7-1500/ET 200MP, fail-safe I/O modules ET 200AL or the fail-safe I/O modules ET 200eco PN to which you want to assign the PROFIsafe address.
3. Assign the PROFIsafe address to the F-I/Os.

Assigning the PROFIsafe address for F-I/Os via a redundant S7-1500HF system

In the "Assign PROFIsafe address" dialog under "Select PLC of HF-System", select the HF-CPU of the redundant S7-1500HF system via which you want to assign the PROFIsafe address.

The following table uses the system status to show you via which HF-CPU of the redundant S7-1500HF system you can assign the PROFIsafe address.

System status/F-CPU role	Primary	Backup
RUN-Redundant	x	x
RUN-Solo	x	-
STOP	x	-

x: Assignment possible, -: Assignment not possible

NOTE

Use of R1 devices

Assigning the PROFIsafe address for F-I/Os in an R1 device is only possible via the left interface module of the R1 device. Therefore, the left interface module is always displayed in the "Assign PROFIsafe address" dialog. The left interface module must be supplied with voltage for the assignment of the PROFIsafe address.

If the two HF-CPUs of the redundant S7-1500HF system are located in two separate subnets, the PG and the HF-CPU via which the assignment of the PROFIsafe address is to be performed must be located in the same subnet.

2.13.1 Identifying F-modules

Requirement

The following requirements must be met:

- The F-CPU and fail-safe modules are configured.
- When using an ET 200SP Open Controller, the hardware configuration of the ET 200SP Open Controller **and** of the fail-safe Software Controller must be downloaded.
- The F-CPU and fail-safe modules can be reached online.

WARNING

Make sure that the latest hardware configuration has been downloaded to the F-CPU before identification. By clicking the "Identification" button and then clicking on "Assign PROFIsafe address", you confirm the fail-safe correctness of the PROFIsafe addresses for the F-I/Os.

Therefore, proceed carefully when confirming the F-I/Os by LED flashing or the serial number of the F-CPU with central F-I/Os or the serial number of the interface module with F-I/Os.

An assignment of the PROFIsafe addresses with the serial number of the interface module is only permitted when the assignment is made for all F-I/Os of a station. To do this, you must read and write down the serial number directly at the F-CPU* or the interface module**. Reading out the serial number via the online and diagnostics view of the TIA Portal is not permitted.

A special rule applies for F-I/Os of the ET 200AL distributed I/O system. For these F-I/Os, only identification by flashing is permissible and only exactly one F-I/O may be selected for the assignment of the PROFIsafe address.

* When an ET 200SP Open Controller is used, you must read and write down the serial number from the display of the S7-1500 Fail-safe Software Controller in menu "Overview > CPU".

** When an R1 device is used, you must read and write down the serial number of the left interface module. *(S046)*

Procedure

Proceed as follows to identify the F-modules:

1. Establish an online connection to the F-CPU to which the F-modules are assigned.
2. In the network view, select
   - the F-CPU with F-modules,
   - the interface module with F-modules,

   to which you want to assign PROFIsafe addresses.
   Alternatively, you can select only a single F-module.

3. Select "Assign PROFIsafe address" from the shortcut menu.

NOTE

If you integrate a fail-safe ET 200AL module into a configuration of the ET 200SP distributed I/O system (mixed configuration ET 200AL/ET 200SP with ET connection), you must open the dialog "Assign PROFIsafe address" in the device view of the ET 200SP separately for each fail-safe ET 200AL module.

4. Under "Assign PROFIsafe address by", select the method to be used for identifying the F-modules.
   - "Identification by LED flashing"
     This is the default setting. The DIAG and STATUS LEDs of the F-modules to be identified flash upon identification.
   - "Identification by serial number"
     If you cannot see the fail-safe modules directly, you can identify the fail-safe modules by the noted serial number of the F-CPU or interface module.

     NOTE

     The displayed serial number may be amended with a year number compared to the serial number printed on the F-CPU or the interface module. The serial numbers are nevertheless identical.

5. In case of "Identification by LED flashing", select all fail-safe modules to which you want to assign the PROFIsafe address in the "Assign" column.
   If you select the F-CPU or the interface module in the "Assign" column, all F-modules of the station are selected.
6. Click the "Identification" button. Check whether the DIAG and STATUS LEDs for the F-modules whose PROFIsafe address you want to assign are flashing green. If you identify using the serial number, compare the displayed serial number to the noted serial number of the F-CPU with central fail-safe modules or the interface module with fail-safe modules.
   Observe the following behavior for certain F-modules and configuration variants:
   - If you have configured more F-modules than actually exist, a dialog is displayed. In this dialog, enter the number of F-modules actually existing and confirm the dialog.
   - If you have configured fewer F-modules than are actually available, an online-offline difference is shown and the assignment of the PROFIsafe address is not possible.

2.13.2 Assign PROFIsafe address

Requirement

The F-modules have been successfully identified.

Procedure

To assign a PROFIsafe address, proceed as follows:

1. In the "Confirm" column, select all the fail-safe modules to which you want to assign the F-source address and F-destination address.
2. Use the "Assign PROFIsafe address" button to assign the PROFIsafe address to the fail-safe modules. You may have to enter the password of the F-CPU.
   To assign the PROFIsafe address, you must confirm the "Confirm PROFIsafe address assignment" dialog within 60 seconds.

2.13.3 Assigning a PROFIsafe address to an F-module in a cross-project shared device

Introduction

The PROFIsafe address for an F-module in a cross-project shared device can only be assigned from the project in which the IO controller (F-CPU) to which the F-module is assigned is located.
Therefore, in the "Assign PROFIsafe address" dialog, only the F-modules that are assigned to an IO controller (F-CPU) of this project can be selected for assigning the PROFIsafe address.

Requirement

The following requirements must be met:

- All requirements from the sections "Identifying F-modules (Page 65)" and "Assign PROFIsafe address (Page 67)".
- The hardware configuration of all IO controllers (F-CPUs) to which an F-module from the shared device has been assigned is loaded.
- All IO controllers (F-CPUs) to which an F-module from the shared device has been assigned and the shared device must be located in the same subnet.

Procedure

To identify the F-modules and assign the PROFIsafe address, proceed as described in sections "Identifying F-modules (Page 65)" and "Assign PROFIsafe address (Page 67)".
If the F-modules in a cross-project shared device are assigned to several IO controllers (F-CPUs) in different projects, make the assignment from the different projects one after the other.

See also

Configuring shared device (Page 56)

2.13.4 Changing the PROFIsafe address

Changing the PROFIsafe address

NOTE

Keep in mind that after changing the PROFIsafe address of an F-I/O you must also conduct an acceptance (Page 334) including check of your change (Page 345) per safety summary (Page 306).

1. You change the PROFIsafe address (F-destination address, F-source address) in the hardware configuration.
2. Compile the hardware configuration.
3. Download the hardware configuration to the F-CPU.
4. Select "Assign PROFIsafe address" from the shortcut menu.
5. Proceed as described under Identifying F-modules (Page 65) and Assign PROFIsafe address (Page 67).

2.14 Peculiarities when configuring fail-safe GSD based DP slaves and fail-safe GSD based I/O devices

Requirement

In order to use fail-safe GSD based DP slaves for SIMATIC Safety, these GSD based slaves must be operated on PROFIBUS DP and support the PROFIsafe bus profile. When used in an S7-1200/1500 F-CPU, they must support the PROFIsafe bus profile in V2 mode.

Fail-safe GSD based DP slaves used in hybrid configurations on PROFIBUS DP and PROFINET IO downstream from a IE/PB link must support the PROFIsafe bus profile in V2 mode.

In order to use fail-safe GSD based I/O devices for SIMATIC Safety, the GSD based devices must be operated on PROFINET IO and support the PROFIsafe bus profile in V2 mode.

Configuration with GSD files

As is the case in a standard system, the basis for configuring fail-safe GSD based DP slaves/IO devices is the device specification in the GSD file (device master file).

A GSD file contains all of the properties of a GSD based DP slave or GSD based I/O device. For fail-safe GSD based DP slaves/GSD based I/O devices, certain parts are protected by a CRC.

The GSD files are supplied by the device manufacturers.

Protection of the data structure of the device in GSD files

The only GSD files supported are those that satisfy the requirements for protection defined as of *PROFIsafe Specification* V2.0 using a CRC stored in this file ("setpoint" for F_IO_StructureDescCRC).

The data structure described in the GSD file is checked when the F-I/O is added to the hardware configuration and when the hardware configuration is compiled. When an error is detected, you should clarify whether the GSD file provided by the device manufacturer contains the setpoint for F_IO_StructureDescCRC.

Assignment and setting of the PROFIsafe address

WARNING

Check the documentation for your fail-safe GSD based DP slaves / fail-safe GSD based I/O devices to find out the valid PROFIsafe address type. If you do not find the necessary information, assume PROFIsafe address type 1. Proceed as described under PROFIsafe addresses for F-I/O of PROFIsafe address type 1 (Page 61) or PROFIsafe addresses for F-I/O of PROFIsafe address type 2 (Page 62).

Set the F-source address for fail-safe GSD based DP slaves / fail-safe GSD based I/O devices according to the manufacturer's specifications. If the F-source address needs to correspond to the "Central F-source address" parameter of the F-CPU (PROFIsafe address type 2), you will find the latter in the "Properties" tab of the F-CPU. In this case, also check in the safety summary that the value of the F-CPU for the "Central F-source address" parameter matches the value of the F-source address of the fail-safe GSD based DP slave / fail-safe GSD based I/O device. *(S053)*

Configuration procedure with GSD files

You import the GSD files to your project (see *Help on STEP 7 "GSD files"*).

1. Select the fail-safe GSD based DP slave / GSD based I/O device in the "Hardware catalog" task card and connect it to the relevant subnet in the network view.
2. Select the fail-safe GSD based DP slave/GSD based I/O device and insert the necessary F-modules, if this does not occur automatically.
3. Select the relevant F-module and open the "Properties" tab in the inspector window.

For fail-safe GSD based DP slaves/GSD based I/O devices (contrary to other F-I/O), the "Manual assignment of F-monitoring time" parameter is enabled. The result is that the value specified in the GSD file for the F-monitoring time is used as default value when the slaves/devices are plugged. You can change both values (time and type of assignment) later manually.

F-parameter "F_CRC_Seed" and "F_Passivation" for fail-safe GSD based I/O devices

The F-parameters "F_CRC_Seed" and "F_Passivation" influence the behavior of a fail-safe GSD based I/O device. The combination of the F-parameters cannot be set but is specified by selecting a corresponding F-module. Up to three F-module variants can be used, depending on the S7-300/400 or S7-1200/1500 F-CPU used.

F-module variant	F_CRC_Seed	F_Passivation	Behavior of the fail-safe GSD based I/O device	Can be used with F-CPU
1	Parameter does not exist	Parameter does not exist	The GSD based I/O device works with the Basic Protocol (BP) from PROFIsafe. The "RIOforFA-Safety" profile is not supported.	S7-300/400/1200/1-500*
2	CRC-Seed24/32	Device/module	The GSD based I/O device works with the Expanded Protocol (XP) from PROFIsafe. The "RIOforFA-Safety" profile is not supported.	S7-1200/1500
3	CRC-Seed24/32	Channel	The GSD based I/O device works with the Expanded Protocol (XP) from PROFIsafe. The "RIOforFA-Safety" profile is supported.	S7-1200/1500

* Only use the F-module variant 1 with S7-1200/1500 F-CPUs if neither F-module variant 2 nor 3 exists.

Additional information

You can find the description of the parameters in the Help on fail-safe GSD based DP slaves and GSD based I/O devices.

Safety Administration Editor

3

Overview

The *Safety Administration Editor* supports you as follows:

- Displaying of status of safety mode
- Disabling safety mode
- (S7-1200, S7-1500) Displaying and changing the Fast Commissioning Status
- Displaying of status of the safety program
- Displaying of Collective F-Signature
- (S7-1200, S7-1500) Show Collective F-SW-Signature
- (S7-1200, S7-1500) Show Collective F-HW-Signature
- (S7-1200, S7-1500) F-communication address signature
- Creating and organizing of F-runtime groups
- Displaying information on the F-blocks
- Displaying information about F-compliant PLC data types (UDT)
- Specifying/changing access protection
- Information for users with F-Admin permission
- Set/modify settings for the safety program, e.g. Enable F-change history
- (S7-1200, S7-1500) Create/display/delete F-communications via Flexible F-Link

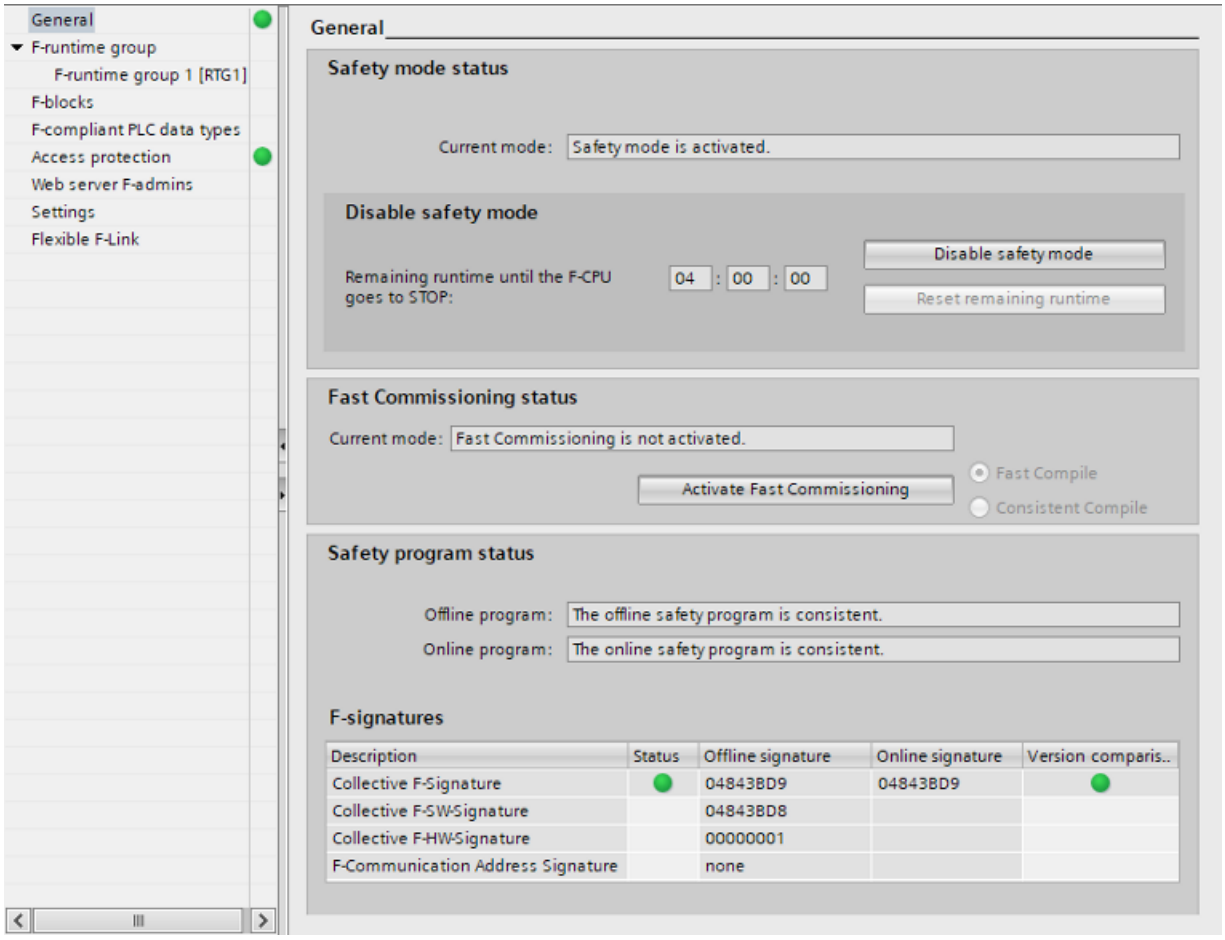

The *Safety Administration Editor* is divided into the following areas:

- General
  Under "General" the following is displayed:
  – Safety mode status
  – Fast Commissioning Status
  – Safety program status
  – F-signatures
  More information on the "General" area can be obtained in ""General" area (Page 74)".
- F-runtime group
  You define the blocks and properties of an F-runtime under "F-runtime group".
  You can find information on F-runtime groups at ""F-runtime group" area (Page 76-77)".
- F-blocks
  Under "F-blocks", you can find information on the F-blocks used in your safety program and their properties . More information on the "F-blocks" area can be obtained in ""F-blocks" area (Page 78)".
- F-compliant PLC data types
  Under "F-compliant PLC data types", you obtain information on the created F-compliant PLC data types (UDT). There you also obtain information whether or not an F-compliant PLC data type (UDT) is used in the safety program. More information on "F-compliant PLC data types" can be found in ""F-compliant PLC data types" area (S7-1200, S7-1500) (Page 79)".

- Access protection
  Under "Access protection", you can set up, change, or revoke the password for the safety program. Alternatively, you can set up access protection for safety-related project data via project protection. Access protection is mandatory for productive operation. More information on access protection can be found in "CPU-wide access protection for the safety-related project data (Page 89)".
- Web server F-Admins
  Under "Web server F-admins", you obtain information on users with the F-Admin attribute for the Web server of the F-CPU. More information on the "Web server F-Admins" area can be obtained in ""Web server F-Admins" area (S7-1200, S7-1500) (Page 80)".
- Settings
  Under "Settings", you set the parameters for the safety program. Information on the settings for your safety program can be found in ""Settings" area (Page 80)".
- Flexible F-Link
  In the "Flexible F-Link" area, you will find information about the configured F-communications via Flexible F-Link in tabular form and create F-communications. You can obtain information at ""Flexible F-Link" area (S7-1200, S7-1500) (Page 85)".

See also

Program structure of the safety program (S7-1200, S7-1500) (Page 98)

Program structure of the safety program (S7-300, S7-400) (Page 96)

Defining F-Runtime Groups (Page 116)

3.1 Opening the Safety Administration Editor

Requirement

The *Safety Administration Editor* is visible as an element in the project tree, if you have configured a CPU as an F-CPU in the project, which means the "F-capability activated" option must be selected (in the properties of the F-CPU).

Procedure

To open the *Safety Administration Editor*, follow these steps:

1. Open the folder for your F-CPU in the project tree.
2. Double-click on "Safety administration" or right-click and select the corresponding shortcut menu for the *Safety Administration Editor*.

Result

The *Safety Administration Editor* for your F-CPU opens in the work area.

3.2 "General" area

"Safety mode status"

The "Safety mode status" shows the current status of safety mode. The prerequisite is an existing online connection to the selected F-CPU.
The following statuses are possible:

- "Safety mode is activated"
- "The safety mode is not activated"
- "F-CPU is in STOP"
- "No active F-CPU available"
- "F-runtime group was not called"
- "The safety program is not called"
- "(No online connection)"

"Disable safety mode"

For existing online connection and active safety mode operation, you have the option of using the "Disable safety mode" button to disable safety mode for the selected F-CPU. Safety mode can be deactivated only for the entire safety program and not for individual F-runtime groups.
For more information, refer to the section "Disabling safety mode (Page 310)".

"Fast Commissioning Status"

To use the Fast Commissioning mode, make sure that the option "Safety mode can be disabled" is selected in the "Settings" area (Page 80) and that the safety program was compiled consistently. The Fast Commissioning mode can be executed with "Fast Compile" (default setting) or with "Consistent Compile". For more information, refer to the section "Safety program in RUN mode (S7-1200, S7-1500) (Page 321)".

"Safety program status"

"Safety program status" displays the current status of your online and offline program.
The following statuses are possible:

- Consistent
  (With information if no password has been assigned. This information does not apply when project protection is used.)
- Inconsistent
- Modified
- Fast Commissioning mode is active
  (If Fast Commissioning mode with "Fast Compile" was activated and a change has been made in the program)

If no connection to the online program could been established, the message "(no online connection)" will be shown.

"F-signatures"

For a non-existing online connection

Under "F-signatures" multiple signatures are displayed. Each signature is formed from different parts of the fail-safe project data.

- Collective F-Signature: This signature changes with each change of the fail-safe project data. It contains the signatures described below.
- Collective F-SW-Signature (S7-1200/1500): This signature changes with each change of the safety program.
- Collective F-HW-Signature (S7-1200/1500): This signature changes with each change of the fail-safe HW configuration.
- F-communication address signature (S7-1200/1500): This signature changes with each change of the name or the F-communication UUID of communication connections with Flexible F-Link.

The time of the last compilation process is displayed for the Collective F-Signature in the "Time stamp" column.

For an existing online connection

For an existing online connection, the following is displayed under the "Program signature":

- The status of safety program

Status	Meaning
🟢	The online and offline Collective F-Signatures match.
🟠	The online and offline Collective F-Signatures *do not* match.
—	The safety program status could not be determined.

- The online and offline Collective F-Signatures
- When the Collective F-signatures match: Information on whether the F-block versions are consistent online and offline.

Status	Version comparison	Statement
🟠	Not relevant	The online and offline Collective F-signatures *do not* match.
🟢	🟠	The online and offline Collective F-Signatures match, but the online versions of F-blocks differ from the offline versions.
🟢	🟢	The online and offline Collective F-Signatures match, identical versions of F-blocks are being used online and offline.
Not relevant	—	The safety system versions could not be determined.

You can find more information on the consistency of the online safety program at under Identity of online and offline program (Page 342).

See also

Program identification (Page 302)

3.3 "F-runtime group" area

3.3.1 "F-runtime group" area

A safety program consists of one or two F-runtime groups.
General information on F-runtime groups can be found in "Program structure of the safety program (S7-300, S7-400) (Page 96)" and "Program structure of the safety program (S7-1200, S7-1500) (Page 98)".
You can find information on creating F-runtime groups at Defining F-Runtime Groups (Page 116)

(S7-1200, S7-1500) "Creating a global F-I/O status block"

You can create a standard block (FB) with the name "RTGx_GLOB_FIO_STATUS", which evaluates whether substitute values are output instead of process values for at least one F-I/O or at least one channel of an F-I/O of an F-runtime group x. The result of the evaluation is available at the "QSTATUS" output. The F-I/O that you have disabled with the DISABLE variable in the F-I/O DB are then ignored.
The "RIOforFA_VALUE_STATUS" output corresponds to the "QSTATUS" output, but only takes F-I/Os into account with the "RIOforFA-Safety" profile.
To generate this standard FB, you use the "Create global F-I/O status block" button. You can only create the standard FB when your safety program has been compiled. You can call the standard FB anywhere in your standard user program.

NOTE

When adding or deleting an F-I/O, you have to generate "RTGx_GLOB_FIO_STATUS" again.

See also

Process Data or Fail-Safe Values (Page 143)

3.3.2 Pre-/postprocessing (S7-1200, S7-1500)

With preprocessing and postprocessing you have the option of calling standard blocks (FCs) directly before or after an F-runtime group, for example for data transfer with fail-safe communication via Flexible F-Link (Page 263).

Requirement

- Only standard-FCs usable.
- Only temporary local data and constants are permitted in the block interface of a standard-FC.
- (S7-1500) If the F-runtime group is located in a Safety Unit and FCs are to be used outside the Safety Unit, these FCs must be published and their Software Unit must be connected to the Safety Unit via a relation.

Procedure

1. Create the standard-FCs for the preprocessing and the postprocessing.
2. Assign the standard-FCs in the Safety Administration Editor under "Pre-/postprocessing of the F-runtime group".

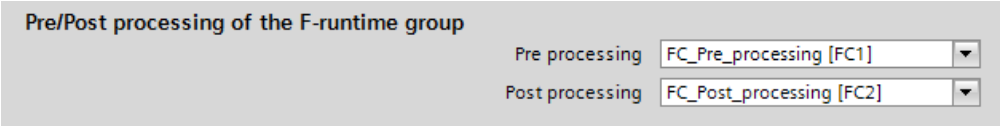

NOTE

When you delete an assigned FC or overwrite it by copying, its selection as a pre-processing / post-processing block is automatically reset.

Effect on the safety program

- The runtime of the F-runtime group is extended by the runtime of the standard FCs for pre-/postprocessing (influence on TRTG_CURR and TRTG_LONG in the F-runtime group information DB).
- Because the preprocessing / postprocessing does not change the functionality of the safety program, the Collective F-Signature remains unchanged after compilation.

Load behavior

The calls of the selected standard FCs are placed during compiling or after the call of the main safety block in the F-OB.
This means that the STOP operating state is required during a subsequent download.
Changes in the contents at the selected standard FCs can take place in RUN.
Exceptions are changes of the block name and block numbers which also include the compilation of the safety program.
When a preprocessing/postprocessing block is uploaded individually by the F-CPU, it does not automatically connect to the F-runtime group in the *Safety Administration Editor*.
If consistent loading of the F-CPU into the PG/PC is performed instead, the settings for preprocessing and postprocessing are updated according to the online CPU.

3.4 "F-blocks" area

Overview

The "F-Blocks" area helps you in the following tasks:

- Displaying the F-blocks used in your safety programs.
- Displaying the F-blocks used in the F-runtime groups.
- Displaying additional information about the F-blocks.

The F-blocks are hierarchically displayed as in the "Program blocks" folder.

A description of the F-blocks is available in "Creating F-blocks in FBD / LAD (Page 132)".

Displayed information

The following information is displayed in offline mode:

- Have displayed F-blocks been compiled and used?
- Function of F-blocks in safety program
- Block signature
- Group signature
- Change time stamp of the F-blocks

The following information is displayed in online mode:

- Status (whether block has the same time stamp online and offline)
- Function of F-block in the safety program
- Block signature offline
- Group signature offline
- Block signature online
- Group signature online

NOTE

During the offline-online comparison, the comparison statuses may occasionally differ between the *comparison editor* and status display in the *Safety Administration Editor*. The decisive status is the result of the comparison in the *comparison editor*, since this is the only comparison that takes into account the contents of the F-blocks.

NOTE

Group signatures are formed from the signatures of the F-blocks contained in the group and in subgroups. Only F-blocks that are used in the safety program are taken into account. Only the group signatures up to the 6th hierarchy level are displayed.

Filter function

Using the filter function, you can select whether you want to view all F-blocks of a certain F-runtime group or the entire safety program.

- Select "All F-blocks " from the drop-down list to view all F-blocks.
- Select an F-runtime group from the drop-down list to see all F-blocks of this F-runtime group.

3.5 "F-compliant PLC data types" area (S7-1200, S7-1500)

Overview

Under "F-compliant PLC Data Types" you obtain information on the F-compliant PLC data types (UDT) you have defined.

You can delete F-compliant PLC data types (UDT) from the shortcut menu.

A description of F-compliant PLC data types (UDT) is available in "F-compliant PLC data types (UDT) (S7-1200, S7-1500) (Page 109)".

Displayed information

The following information is displayed for F-compliant PLC data types (UDT) in offline mode:

- Is the F-compliant PLC data type used in the safety program?
- Time stamp of the last change.

The following information is displayed for F-compliant PLC data types (UDT) in online mode:

- Status (whether the F-compliant PLC data types (UDT) have the same time stamp online and offline)

The F-compliant PLC data types (UDT) are displayed hierarchically as in the folder "PLC Data Types".

Double-click the F-compliant PLC data type (UDT) to open it for editing.

The description of the symbols in the "Status" column can be found in "Comparing Safety Programs (Page 303)".

NOTE

During offline-online comparison, the comparison statuses between the *comparison editor* and status display in the *Safety Administration Editor* can be different under certain circumstances. The comparison result in the *comparison editor* is decisive, since this is the only comparison that takes into account the contents of the F-compliant PLC data types (UDT).

3.6 “Web server F-Admins” area (S7-1200, S7-1500)

You require the "F-admin" right in order to carry out restoration of a backup (Page 293) via the Web server of your F-CPU. You assign the "F-admin" right in the hardware configuration of the F-CPU under the user management of the Web server.

In this section, you obtain information on which users have the "F-admin" right online or offline for F-CPUs that support this right. You can see from this whether a change to the "F-admin" right is active on the F-CPU. In order to make a change to the "F-admin" right effective, you have to load the configuration to the F-CPU.

See also

Completeness and correctness of the hardware configuration (Page 334)

3.7 "Settings" area

"Number ranges of the generated F-system blocks"

The number ranges assigned here are used by the F-System for new, automatically generated F-blocks.

At this point, you can select whether the number ranges are managed by the F-system or if a fixed range specified by you is used.

- "F-system managed"
  The number ranges are managed automatically by the F-system, depending on the F-CPU used. The F-system selects an available number range. The start and end ranges of the number ranges are displayed.
- "Fixed range"
  You can select the start and end ranges of the number ranges from the available range. The available range depends on the F-CPU used.
  An invalid number range selection is indicated by an error message.
  The only check performed during configuration is whether the configured low limit is less than or equal to the high limit and within the available range of the F-CPU. The check as to whether the configured range is sufficiently large is first made during compiling. You need to ensure a sufficiently large range. Where the available range is insufficient, a compiling error occurs. Not all blocks are generated and the safety program is not executable.

Changes will become valid only during the next compilation. The automatically created F-blocks may be moved into the new area during compilation. The F-I/O DBs are an exception. They always retain their original number that you may change in the properties of the F-I/O.

"Safety system version"

This parameter is used to specify the safety system version (including version of the F-system blocks and automatically generated F-blocks, see Overview of Programming (Page 96)).

A number of versions are available:

Version[3]	S7-300/400	S7-1200	S7-1500	Function
1.6	—	x	x	These versions have identical functions. Depending on the set version, the result may be different runtimes of the F-runtime group(s) (see Excel file for response time calculation on the Internet (https://support.industry.siemens.com/cs/ww/en/view/109783831)).
2.0	x	x[1]	x[2]	
2.1	—	x[1]	x[2]	Additionally supports the variables "DISABLE" and "DISABLED" in the F-I/O DB
2.2	—	x[1]	x[2]	Supports the safety-related CPU-CPU communication and F-runtime group communication with Flexible F-Link.
2.3	—	x[1]	x[2]	This version has identical functions to version 2.2.
2.4	—	x[1, 4]	x[2]	Additionally supports: • F-CPUs • Fast Commissioning mode with "Fast Compile" • Runtime for the deactivated safety mode

Version[3]	S7-300/400	S7-1200	S7-1500	Function
2.5	—	—	x[5]	Additionally supports: • Fast Commissioning mode with "Consistent Compile"

1 supported as of firmware V4.2

2 supported as of firmware V2.0

3 After the migration of projects that were created with

4 Fast Commissioning mode with "Fast Compile" is supported as of firmware V4.5.

5 Fast Commissioning mode with "Consistent Compile" is supported as of firmware V3.0. With the S7-1500 F-Software Controller, it is available only for approved IPCs as of firmware V30.0.

Usually, you do not need to make any settings for this parameters.
When a new F-CPU is created with *STEP 7 Safety*, the latest available version for the F-CPU created is automatically preset.

"Local data used in safety program" (S7-300, S7-400)

You use this parameter to specify the amount of temporary local data (in bytes) that is available for the call hierarchy below the main safety block.
The setting applies to each F-runtime group of a safety program. More information on F-runtime groups can be found in "Program structure of the safety program (S7-1200, S7-1500) (Page 98)" and "Program structure of the safety program (S7-300, S7-400) (Page 96)".
The **minimum possible amount** is determined by the local data requirement of the F-blocks generated automatically when the safety program is compiled.
For this reason, you must provide at least 440 bytes. However, the local data requirement for the automatically added F-blocks may be higher depending on the local data requirement of the F-blocks you created with FBD or LAD.
Therefore, provide as much local data as possible. If there is not enough local data available for the automatically added F-blocks (440 bytes or more), the safety program will be compiled nevertheless.
Data in automatically added F-DBs are then used instead of local data. However, this increases the runtime of the F-runtime group(s). You will receive a notice when the automatically added F-blocks require more local data than configured.

WARNING

The calculated maximum runtime of the F-runtime group using the Excel file for response time calculation (https://support.industry.siemens.com/cs/ww/en/view/109783831) is no longer correct in this case because the calculation assumes sufficient availability of F-local data.

In this case, use the value you configured for the maximum cycle time of the F-runtime group (F-monitoring time) as the maximum runtime of the F-runtime group when calculating the maximum response times in the event of an error and for any runtimes of the standard system using the above-mentioned Excel file. *(S004)*

The maximum possible amount depends on:

- Local data requirement of the main safety block and the higher-level standard user program. For this reason, you should call the main safety blocks directly in OBs (cyclic interrupt OBs, whenever possible), and additional local data should not be declared in these cyclic interrupt OBs.
- Maximum volume of local data of the utilized F-CPU (see Technical Specifications in the product information for the utilized F-CPU). For S7-400 F-CPUs, you can configure the local data for each priority class. Therefore, assign the largest possible local data volume for the priority classes in which the safety program (the main safety blocks) is called (e.g., OB 35).

Maximum possible amount of local data as a function of local data requirement of main safety block and higher-level standard user program (S7-300, S7-400):

Case 1: Main safety block called directly from OBs

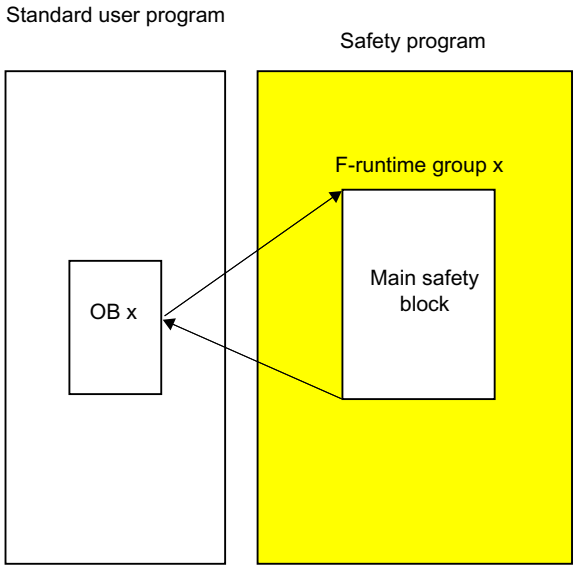

Set the "Local data used in safety program" parameter to the maximum amount of local data of the utilized F-CPU minus the local data requirement of the main safety block (if the main safety block has 2 F-runtime groups, use the largest local data requirement) and minus the local data requirement of the calling OBx (if there are 2 F-runtime groups, use the OB with the largest local data requirement).

Note: If you have not declared any temporary local data in the main safety blocks and calling OBx, the local data requirement of the main safety blocks is 6 bytes and the local data requirement of the calling OBx is 26 bytes. You can derive the local data requirement of the main safety blocks and calling OBx from the program structure.

Select the utilized F-CPU in the project tree and then "Tools > Call structure". The table gives the local data requirement in the path or for the individual blocks (see also the help on *STEP 7*).

Case 2: Main safety block not called directly from OBs

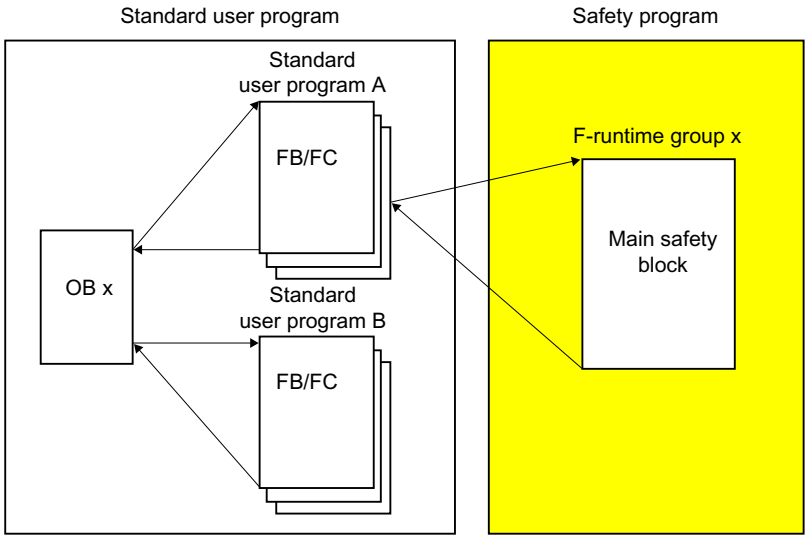

Set the "Local data settings" parameter to the value calculated for Case 1, minus the local data requirement of standard user program A (if standard user program A has 2 F-runtime groups, use the largest local data requirement).

Note: You can derive the local data requirement of the standard user program A from the program structure.

Select the utilized F-CPU in the project tree and then "Tools > Call structure". The table gives the local data requirement in the path or for the individual blocks (see also the help on *STEP 7*).

"Advanced settings"

"Safety mode can be disabled"

With this option you can prevent the safety mode for a safety program from being disabled.

Under "Runtime for the deactivated safety mode", you set the time after which the F-CPU goes to STOP after safety mode is deactivated.

When you change the setting for this option, you need to recompile the safety program and download it to the F-CPU for the change to become effective. This changes the Collective F-Signature and the Collective F-SW-Signatures of your safety program.

To exclude an unintentional disabling of the safety mode, make sure that the option is disabled in productive operation.

"Enable F-change history"

Enable the logging of changes to the safety program by using the "Enable F-change history" option. For more information, refer to the section "F-change history (Page 328)".

"Enable consistent upload from the F-CPU" (S7-1500)

This option allows you to load the loaded project data (including safety-related project data) consistently from the F-CPU to the PG/PC.

The option can only be activated if the F-CPU and the firmware of the F-CPU supports the loading of the project data (including safety-related project data).

F-CPUs S7-1500 as of firmware V2.1 are supported. S7-1500 F Software Controllers are not supported.

At every change to this option you have to load the project data to the F-CPU.
Note that the activation of this option extends the loading of the safety-related project data into the F-CPU.

"Activate variable F-communication- IDs" (S7-1200, S7-1500)
If you activate this option, you can supply the DP_DP_ID input of the SENDDP or RCVDP instructions with the variable values from a global F-DB.

WARNING

The value of the respective F-communication ID (input DP_DP_ID; data type: INT) can be freely selected**; however, it must be unique for all safety-related communication connections network-wide* and CPU-wide**** at all times. The uniqueness must be checked in the safety summary during acceptance of the safety program.
You must supply constant values*** to the inputs DP_DP_ID and LADDR when calling the instruction. Direct write accesses in the associated instance DB to DP_DP_ID and LADDR are not permitted in the safety program! *(S016)*

* A network consists of one or more subnets. "Network-wide" means beyond the boundaries of the subnet. In PROFIBUS, a network includes all the nodes accessible via PROFIBUS DP. In PROFINET IO, a network includes all nodes accessible via RT_Class_1/2/3 (Ethernet/WLAN/Bluetooth, Layer 2) and if applicable RT_Class_UDP (IP, Layer 3).
** S7-1200/1500: As of version V3.0 of the SENDDP and RCVDP instructions, no connection is established at the DP_DP_ID input for a F-communication ID "0".
*** S7-1200/1500: As of version V3.0 of the SENDDP and RCVDP instructions, the DP_DP_ID input can also be supplied with variable values from a global F-DB. In this case as well you have to check during the acceptance of the safety program that the uniqueness is ensured *at every moment*, by checking the algorithm for the creation of the variable value accordingly. If you cannot ensure a unique F-communication ID during startup of the safety program, because it is only specified after startup of the safety program, you must make sure that the value at the DP_DP_ID input is "0" during this phase.
**** With a redundant S7-1500HF system, both F-CPUs of the redundant S7-1500HF system are to be regarded as one F-CPU with regard to the DP_DP_ID.

"System-generated objects" (S7-1200, S7-1500)

"Creates F-I/O DBs without prefix"
When you select this option, the names of the F-I/O DBs (Page 145) are created without prefix.
"Clean up"
The "Clean up" button is provided for service and support purposes and cleans up the result of the fail-safe compilation.

3.8 "Flexible F-Link" area (S7-1200, S7-1500)

In the "Flexible F-Link" area, you create new F-communications, obtain information on existing F-communications and delete F-communications.

Requirement

- S7-1500 F-CPUs as of firmware V2.0
- S7-1200 F-CPUs as of firmware V4.2
- Safety system version as of V2.2

Information on created F-communications

In the "Flexible F-Link" area, you receive information on configured F-communications in tabular form:

- CPU-wide unique name of F-communication
- F-compliant PLC data type (UDT) for send/receive data
- Direction of F-communication: Transmitting/receiving
- F-monitoring time of F-communication
- F-Communication UUID
- Tag for send data
- Tag for receive data

Creating F-communication

1. In an empty row of the table click "<Add new>"
2. Assign a name to the communication connection.
3. Select an F-compliant PLC data type (UUID) for the communication connection.
   If you have not yet created an F-compliant PLC data type (UDT) for the communication connection or wish to create a new one, create a new F-compliant PLC data type (UDT) (Page 109) with any structure. Note that the size can be a up to 100 bytes.
4. Select the direction of the communication connection ("Send" or "Receive").
5. Select the F-monitoring time of the communication connection (Page 546).

The UUID of the F-communication is displayed via Flexible F-Link in the "F communication UUID" column. The F-communication UUID ensures sufficient uniqueness of the safety-related communication ID even across network limits.

The "Tag for send data" column shows you the newly created tag for send data of the F-communication DB (Page 266).

The "Tag for receive data" column shows you the newly created tag for receive data of the F-communication DB (Page 266).

You can find the newly created F-communication DB for this F-communication under "Program blocks\System blocks\STEP 7 Safety\F-communication DBs".

Deleting F-communication

1. Select the entire row and confirm "Delete" in the shortcut menu. You can also delete multiple F-communications at the same time.

Copying F-communication

1. Select the entire row and confirm "Copy" in the shortcut menu. You can also copy multiple F-communications at the same time.
2. With the "Paste" menu command, you can paste the copied F-communications into the table as often as needed. The UUID for the respective F-communication is retained during copying. If necessary, re-generate the UUID.

Generating a new F-communication-UUID

1. Select the entire row and confirm "Generate UUID" in the shortcut menu. You can also generate multiple UUIDs at the same time.

See also

Flexible F-Link (Page 263)

F-runtime group communication (S7-1200, S7-1500) (Page 128)

Access protection

4

Access protection is necessary for productive operation

Access protection to the SIMATIC Safety F-system is mandatory for productive operation.

No access protection is initially necessary for test purposes, commissioning, etc. This means you can execute all offline and online actions without access protection, i.e., without password prompt.

⚠ WARNING

Access to the SIMATIC Safety F-system without access protection is intended for test purposes, commissioning, etc., when the system is not in productive operation. Without access protection, you need to ensure the safety of the plant through other organizational measures (Page 560).

Before you transition into productive operation, you must have set up and activated access protection. *(S005)*

4.1 Overview of access protection

Introduction

You can control access to the SIMATIC Safety F-system with the access protection for the safety-related project data and the password for the F-CPU.

Access protection for the safety-related project data

Access protection for the safety-related project data (Page 88) is available in two forms:

- Assignment of a password for the safety-related project data (F-CPU-granular), assigned in the *Safety Administration Editor*
- Setup of project protection for all safety-related project data in the TIA project

Access protection for the F-CPU

The access protection (Page 91) is set at the F-CPU level. To do so, you assign a password for the F-CPU in the F-CPU configuration. This password is also used to identify the F-CPU and must therefore be unique network-wide.

4.2 Access protection for the safety-related project data

The access protection for the safety-related project data is effective for all operations in which the safety-related project data can be changed offline, for example:

- When modifying the safety program
- When changing and deleting F-runtime groups
- When changing safety-related parameters of F-I/O
- When compiling

Safety program recompilation is required after changes to standard DBs to which the safety program has read or write access. These standard DBs are not subject to the access protection for the safety-related project data.

4.2.1 CPU-wide access protection for the safety-related project data

Setting up CPU-wide access protection for safety-related project data

To set up CPU-wide access protection for safety-related project data, assign a password for the safety program. Proceed as follows:

1. Open the folder for your F-CPU in the project tree.
2. Select "Safety Administration" and select "Go to access protection" in the shortcut menu. Alternatively, double-click on "Safety Administration". The *Safety Administration Editor* of the F-CPU will open. Select "Access protection" in the navigation area.
3. Under "Offline safety program protection", click "Setup" and enter the password (max. 30 characters) for the safety program in the following dialog in the "New password" and "Confirm password" fields.
4. Confirm the assigned password with "OK".

You have set up CPU-wide access protection for safety-related project data and have gained access permission for the safety-related project data.

NOTE

Use different passwords for the F-CPU and the safety program to optimize access protection.

Changing the password for safety-related project data

You can change the password for the safety-related project data as long as you have the necessary access permissions. It also takes place in the "Access protection" area (via "Change" button) and is carried out as usual under Windows through entry of the old and double entry of the new password.

Deleting CPU-wide access protection for safety-related project data

To delete CPU-wide access protection for safety-related project data, delete the password for the safety program. Proceed as follows:

1. Open the folder for your F-CPU in the project tree.
2. Select "Safety Administration" and select "Go to access protection" in the shortcut menu. Alternatively, double-click on "Safety Administration". The *Safety Administration Editor* of the F-CPU will open.
3. Select "Access protection" in the navigation area.
4. Click the "Change" button.
5. Under "Old password", enter the password for the safety program.
6. Click "Revoke" and then on "OK".

Gaining access permission through login to the safety program

Log in to the safety program as follows:

1. Open the folder for your F-CPU in the project tree.
2. Select "Safety Administration" and select "Go to access protection" in the shortcut menu. Alternatively, double-click on "Safety Administration". The *Safety Administration Editor* of the F-CPU will open.
3. Select "Access protection" in the navigation area.
4. Enter the password for the safety program in the "Password" input field.
5. Select the "Login" button.

Validity of access permission for safety-related project data

If access permission for safety-related project data was obtained by entering the password, this remains until the project is closed. When the TIA Portal is closed, any project that is still open is automatically closed and any access permission granted is canceled.

Cancelling access permission through logoff

The access permission for safety-related project data can be cancelled as follows:

- By clicking the "Log off" button in the "Access protection" area in the "*Safety Administration Editor*".
- In the shortcut menu for the *Safety Administration Editor* (access by right-clicking).
- By using the lock symbol in the line of the *Safety Administration Editor*.

The user will then be prompted to enter the password for the safety program again the next time an action requiring a password is performed.

Displaying the validity of access permission

The validity of the access permission is displayed in the project tree as follows:

- The access permission is valid, if the lock symbol in the line of the *Safety Administration Editor* is shown unlocked.
- The access permission is not available, if the lock symbol shows a closed lock.
- If no lock symbol is shown, no password was assigned.

4.2.2 Project-wide access protection for the safety-related project data

As an alternative to CPU-wide access protection for the safety-related project data with a password in the *Safety Administration Editor*, you can use the project protection for the TIA project.
To do this, assign the "Edit safety-related project data" function right to users who are allowed to edit safety-related project data. To do this, proceed as usual for function rights. You can find additional information in the help for STEP 7 under "Managing users and roles".

NOTE

When project-wide project access protection is activated, any existing passwords for safety-related project data for all F-CPUs are deleted.

Users who need the "Edit safety-related project data" function right may require additional function rights, for example:

- "Modify PLC program" to change the safety program
- "Downloading to PLC" to load the safety-related project data into the F-CPU
- "Modify hardware configuration" to make changes to the safety-related hardware configuration

4.3 Access protection for the F-CPU

The access protection for the F-CPU is effective for all operations in which the safety-related project data can be changed online, for example:

- when downloading the safety program to the F-CPU
- (S7-300, S7-400) when downloading the hardware configuration to the F-CPU, also when changes are made to fail-safe I/O that are not used in the safety program
- (S7-1200, S7-1500) when downloading a hardware configuration to the F-CPU that contains safety-related changes
- When PROFIsafe address is assigned
- When F-blocks that are used in the safety program are downloaded or deleted
- When disabling safety mode or when resetting the remaining runtime (The password must always be entered, even if access permission for the F-CPU is still valid.)
- When restoring a backup of the F-CPU
  Exception with S7-1200/1500 F-CPUs: If neither the safety program nor the F-CPU password is changed by the restore process, you are not prompted for the F-CPU password.

Setting up access protection for the F-CPU

To set up access protection for the F-CPU, assign a password for the F-CPU in the F-CPU configuration.

You arrive there directly, if you click the link "Go to the "Protection" area of the F-CPU" in the "Access protection" area in the *Safety Administration Editor*. Proceed as described in the *STEP 7* help under "Configuring access levels".

WARNING

(S7-300, S7-400) When the standard user program is changed in productive operation, access permission must not be granted by the CPU password, as it would also allow changes to the safety program. To rule out this possibility, you must configure the protection level "Write protection for fail-safe blocks" and configure a password for the F-CPU. If only one person is authorized to change the standard user program and the safety program, the protection level "Write protection" or "Read/write protection" should be configured so that other persons have only limited access or no access at all to the entire user program (standard and safety programs). *(S001)*

WARNING

(S7-1200, S7-1500) In productive operation, the safety-related project data must be protected by a password. For this purpose, configure at most the access level "Full access (no protection)" and assign a password under "Full access incl. fail-safe (no protection)". This access level only allows full access to the standard user program, not to F-blocks.

If you select a lower access level, for example to protect the standard user program, you must assign an additional password for "Full access (no protection)".

Assign different passwords for the individual access levels. *(S041)*

You enable access protection by downloading (Page 273) the hardware configuration to the F-CPU.

WARNING

If **multiple F-CPUs** can be reached over a network (e.g. Industrial Ethernet) by **the same programming device or PC**, you must take the following actions to ensure that the safety-related project data is downloaded to the correct F-CPU:

Use passwords specific to each F-CPU, such as a uniform password for the F-CPUs with attached Ethernet address for each.

Note the following:

- A point-to-point connection must be used to activate the access protection of an F-CPU when the hardware configuration is loaded for the first time (similar to assigning an MPI address to an F-CPU for the first time).
- Before downloading the safety-related project data to an F-CPU, existing access permission for any other F-CPU must first be cancelled.
- The last download of the safety-related project data prior to switching to productive operation must be made with enabled access protection. *(S021)*

WARNING

When using tools for the automation or operation (of TIA Portal or web server) which allow access protection for the F-CPU to be bypassed (e.g. saving or automatic entry of a CPU password for the protection level "Full access incl. fail-safe (no protection)" or web server password), the safety relevant project data may not be protected against unintentional changes anymore. *(S078)*

Changing the password for the F-CPU

For the new password to become valid after a password change for the F-CPU, you must download the changed configuration into the F-CPU. If necessary, you must enter the "old" password for the F-CPU for this load operation. The F-CPU must be in STOP mode.

Deleting access protection for the F-CPU

To delete access protection for the F-CPU, delete the password for the F-CPU. To do this, proceed as in the standard.

Obtaining access permission for the F-CPU

You obtain access permission for the F-CPU - depending on the configured protection level - by entering the password for the F-CPU prior to performing an action requiring a password.

Validity of access permission for the F-CPU

Access permission for the F-CPU remains valid until the project is closed in the TIA Portal or access permission is canceled.

Canceling access permission for the F-CPU

You cancel the access permission with the menu command "Online > Delete access rights" auf.

WARNING

The validity of the access permission is not limited in time.

Once access permission for the F-CPU has been obtained, it must be cancelled before leaving the PG/PC or other organizational measures (Page 560) must be taken. *(S006)*

4.4 Access protection through organizational measures

To prevent that a safety program is swapped without authorization by exchanging removable media (e.g. flash card, SIMATIC Micro Memory Card or hard disk with WinAC RTX F or S7-1500 F Software Controller), you must observe the following warning:

WARNING

You must limit access to the F-CPU through organizational measures (Page 560) to persons who are authorized to plug in removable devices. *(S079)*

To prevent that a WinAC RTX F or an S7-1500 F Software Controller is accidentally uninstalled or installed, you must observe the following warning:

WARNING

You must limit access to a WinAC RTX F or an S7-1500 F Software Controller by organizational measures (Page 560) to persons who are authorized to uninstall and install or repair a WinAC RTX F or an S7-1500 F Software Controller (e.g. via the Windows administrator privileges (ADMIN)). *(S075)*

With an S7-1500 F-Software Controller with a PC station version up to incl. V2.1, the function "Delete Configuration" on the PC Station Panel is only offered when no access protection (no protection) is set up on the F-CPU.

With a PC station as of V2.2, it is checked whether the current Windows user is a member of the "Failsafe Operators" Windows user group. When the logged-on Windows user is a member of the group, he/she can execute the "Delete Configuration" function even when the F-password is set. If the logged-on Windows user is not a member of the group, the PC station behaves as up to V2.1.

We therefore recommend that you do not set up F-access protection until after commissioning.

To prevent unintentional restoration of the safety-relevant project data, formatting of the F-CPU and deletion of program folders via the display of an S7-1500 F-CPU, you must observe the following warning:

WARNING

The password of the display may only be disclosed to persons who are authorized to restore safety-related project data, to format the F-CPU and to delete program folders. If a password is not set up for the display, you must protect the display through organizational measures (Page 560) against unauthorized operation. *(S063)*

To prevent unintentional restoration of the safety-relevant project data of the safety program with the web server in an S7-1200/1500 F-CPU, you must observe the following warning:

WARNING

The "F-Admin" authorization for the web server without password protection ("Everybody" user) is only intended for test purposes, commissioning, etc. This means only when the system is not in productive operation. In this case, you must ensure the safety of the system through other organizational measures (Page 560).

Before the transition into productive operation, you must remove the "F-Admin" right for the "Everybody" user.

Only authorized personnel are permitted to have access to the password of the web server user with "F-Admin" right. After downloading the hardware configuration, check whether only permitted users of the web server have the "F-Admin" right on the F-CPU. To do so, use the online mode of the *Safety Administration Editor*.

Saving the login file and the password of the web server in the web browser is only permitted when usage by unauthorized persons is prevented through other organizational measures (Page 560).

If you use the ticket mechanism, handling of the tickets must be just as restrictive as handling of the password of the web server user with the "F-Admin" right. *(S064)*

Programming 5

5.1 Overview of Programming

Introduction

A safety program consists of F-blocks that you create using the FBD or LAD programming language and F-blocks that are automatically added. Fault detection and reaction measures are automatically added to the safety program you create, and additional safety-related tests are performed. Moreover, you have the option to incorporate special ready-made safety functions in the form of instructions into your safety program.

An overview of the following is given below:

- The structure of the safety program
- The fail-safe blocks
- Differences in the programming of the safety program with FBD/LAD compared to programming of standard user programs

5.1.1 Program structure of the safety program (S7-300, S7-400)

Representation of program structure

For structuring purposes, a safety program consists of one or two F-runtime groups.

Each F-runtime group contains:

- F-blocks that you create using FBD or LAD or that are inserted from the project library or global libraries
- F-blocks that are added automatically (F-system blocks, automatically generated F-blocks, and F-I/O DBs)

Below is a schematic diagram of a safety program or an F-runtime group for an S7-300/400 F-CPU.

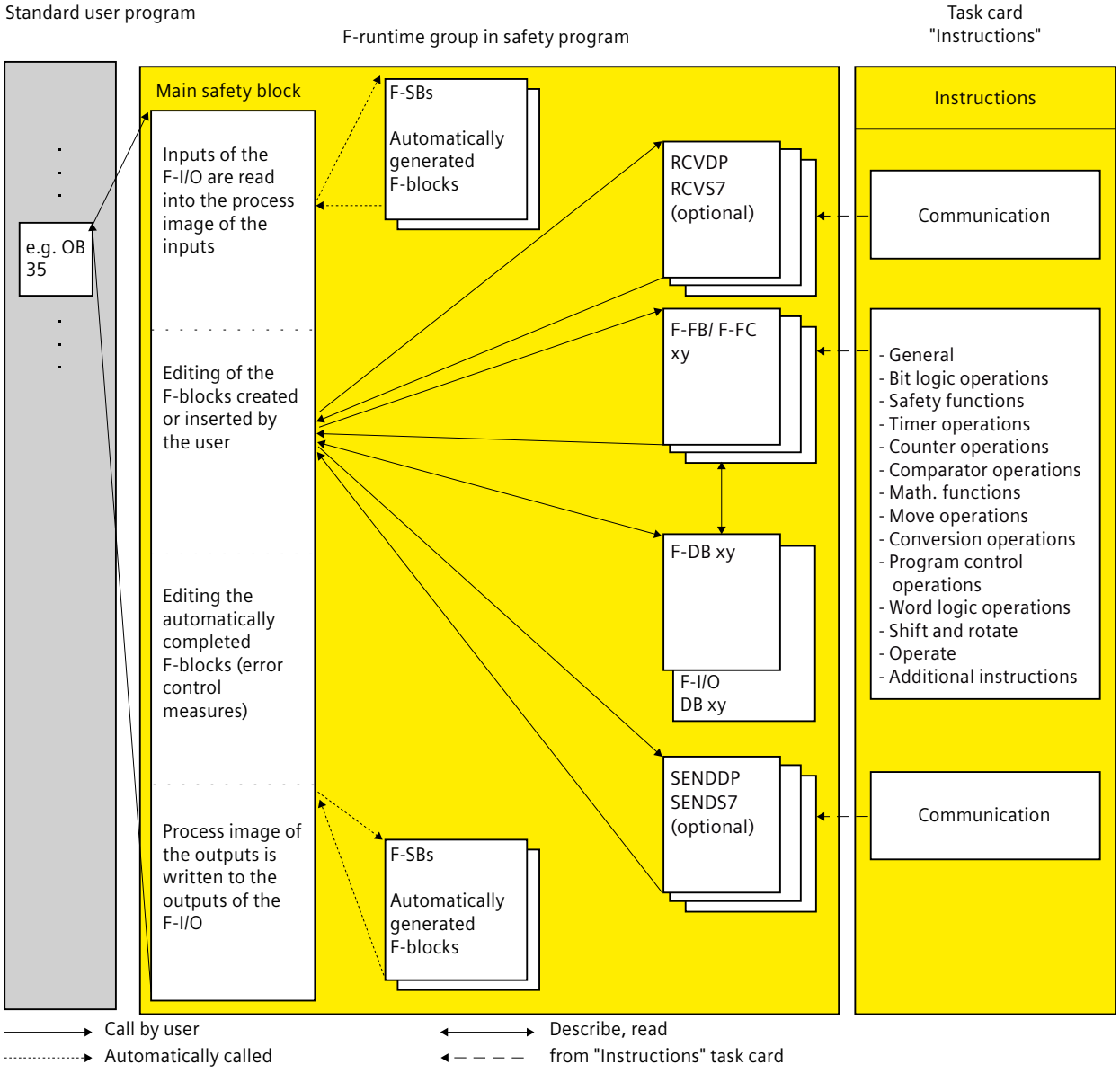

Main safety block

The main safety block is the first F-block of the safety program that you program yourself. During compiling, it is supplemented by additional invisible calls of F-system blocks.

You must assign the main safety block to an F-runtime group (Page 116).

The main safety block in an S7-300/400 F-CPU is called from any block in the standard user program. We recommend a call from an OB 3x.

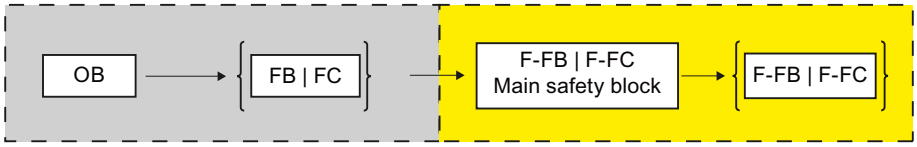

F-runtime groups

To improve handling, a safety program consists of one or two "F-runtime groups". An F-runtime group is a logical construct of several related F-blocks that is formed internally by the F-system.

An F-runtime group consists of the following:

- A main safety block (an F-FB/F-FC that you assign to the calling OB (FB/FC) as needed)
- Any additional F-FBs or F-FCs that you program using FBD or LAD and call from the main safety block
- One or more F-DBs, as needed
- F-I/O DBs
- F-blocks from the project library or global libraries
- F-system blocks F-SBs
- Automatically generated F-blocks

Structuring the safety program in two F-runtime groups

You can divide your safety program into two F-runtime groups. By having parts of the safety program (one F-runtime group) run in a faster priority class, you achieve faster safety circuits with shorter response times.

5.1.2 Program structure of the safety program (S7-1200, S7-1500)

Representation of program structure

For structuring purposes, a safety program consists of one or two F-runtime groups.

Each F-runtime group contains:

- F-blocks that you create using FBD or LAD or that are inserted from the project library or global libraries
- F-blocks that are added automatically (F-system blocks F-SBs, automatically generated F-blocks, F-runtime DB, and F-I/O DBs)

Below is a schematic diagram of a safety program or an F-runtime group for an S7-1200/1500 F-CPU.

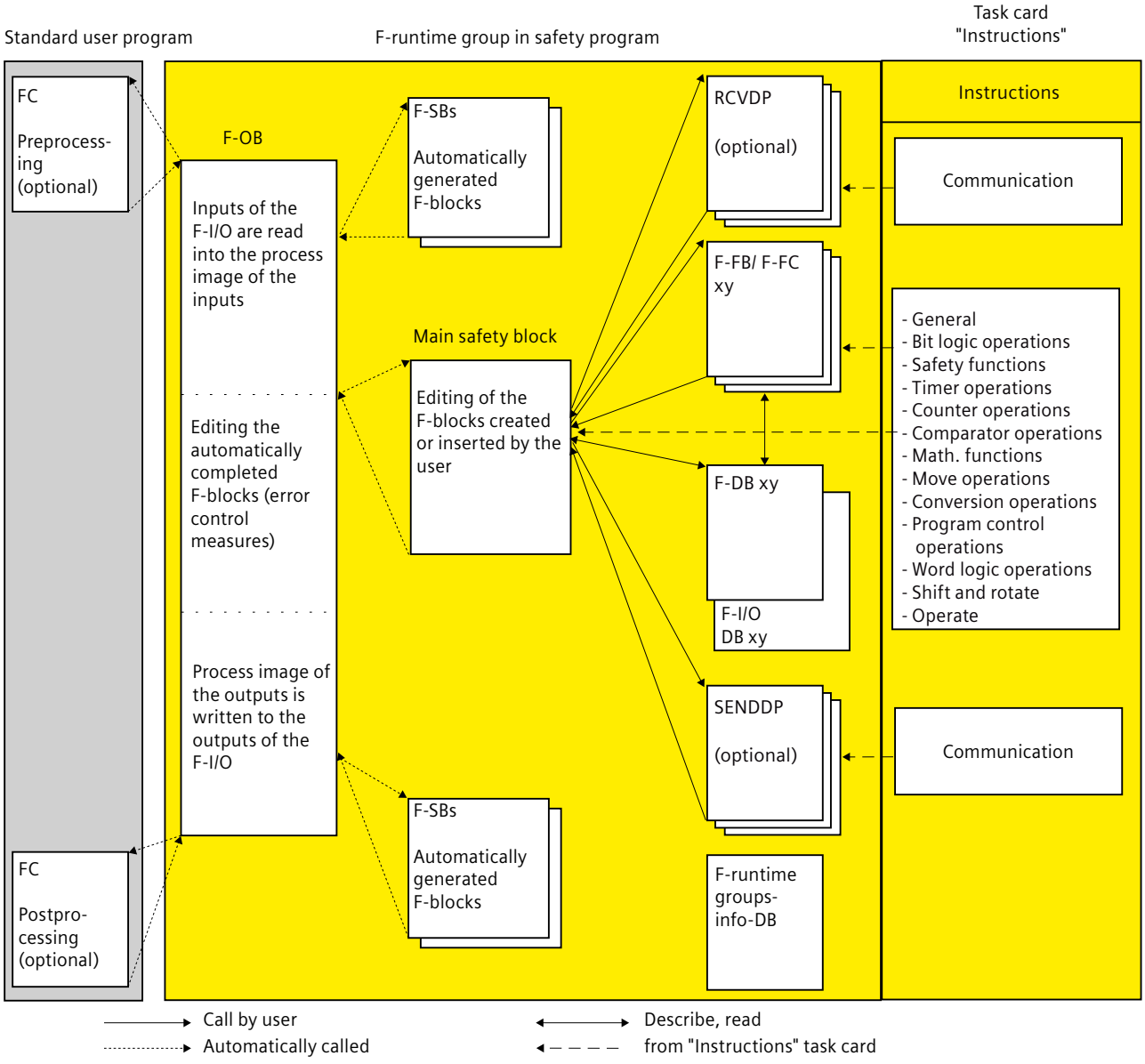

Main safety block

The main safety block is the first F-block of the safety program that you program yourself. You must assign the main safety block to an F-runtime group (Page 116).

The main safety block in an S7-1200/1500 F-CPU is called by the F-OB assigned to the F-runtime group.

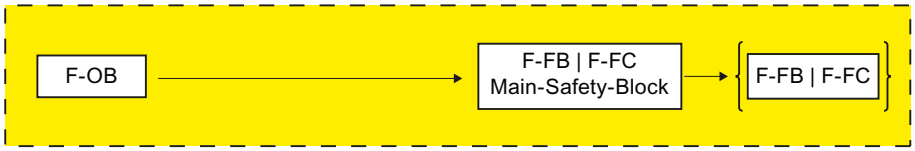

F-runtime groups

To improve handling, a safety program consists of one or two "F-runtime groups". An F-runtime group is a logical construct of several related F-blocks that is formed internally by the F-system.

An F-runtime group consists of the following:

- An F-OB which calls the main safety block
- A main safety block (an F-FB/F-FC that you assign to the F-OB)
- Any additional F-FBs or F-FCs that you program using FBD or LAD and call from the main safety block
- One or more F-DBs, as needed
- F-I/O DBs
- F-runtime group information DB
- F-blocks from the project library or global libraries
- F-system blocks F-SBs
- Automatically generated F-blocks
- A preprocessing and/or postprocessing block, as needed (see Pre-/postprocessing (S7-1200, S7-1500) (Page 77))

Pre-/postprocessing of an F-runtime group

You have the option of calling blocks of the standard user program (FCs) directly before or after an F-runtime group, for example, for data transfer during fail-safe communication via Flexible F-Link. (see Pre-/postprocessing (S7-1200, S7-1500) (Page 77))

Structuring the safety program in two F-runtime groups

You can divide your safety program into two F-runtime groups. By having parts of the safety program (one F-runtime group) run in a faster priority class, you achieve faster safety circuits with shorter response times.

See also

F-runtime group information DB (S7-1200, S7-1500) (Page 136)

5.1.3 Safety program in Software Unit (Safety Unit) (S7-1500)

Introduction

You can use Safety Units if you want to use the advantages of the Software Units for the safety program as well, e.g. independent compiling and loading.
The blocks of the safety program are then located exclusively in the Safety Unit and can no longer be created in the "Program blocks" folder directly below the F-CPU.
You must make the decision for the Safety Unit before creating the F-CPU. After creating the F-CPU, the decision for this F-CPU can no longer be changed.

Requirement

- F-CPU S7-1500 as of FW V2.6
- The check box "Manages safety program in 'Safety Units' environment" is selected under "Options/Settings/STEP 7 Safety".
- The F-CPU is newly created.

Safety program in the Safety Unit

After a new F-CPU has been created, the safety program is located in the Safety Unit.

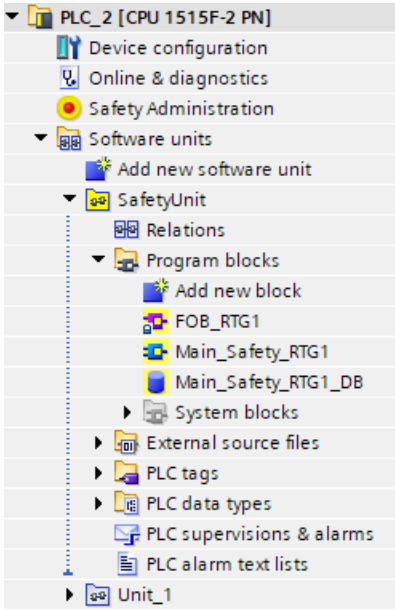

For data exchange between the safety program and the standard user program, use a transfer data block (Page 172) which you create as a global standard DB in the Safety Unit.
Information on Software Units is available in the help for *STEP 7* under "Using Software Units".

Particularities

- You cannot store the Safety Unit in a library.
- System blocks in the Safety Unit cannot be published.

5.1.4 Fail-Safe Blocks

F-blocks of an F-runtime group

The following table shows the F-blocks that you use in an F-runtime group:

F-block	Function	S7-300/400 F-CPUs	S7-1200/1-500 F-CPUs
Main safety block	The first step in programming of the safety program is the main safety block. The main safety block in S7-300/400 F-CPUs is an F-FC or F-FB (with instance DB), which is called by a standard block (recommendation: OB 35) from the standard user program. The main safety block in S7-1200/1500 F-CPUs is an F-FC or F-FB (with instance DB), which is called by the F-OB.	X	X
F-FB/F-FC	Both in the main safety block as well as additional F-FBs and F-FCs, you can perform the following: • Program the safety program with the instructions available for F-blocks in FBD or LAD • Call other created F-FBs/F-FCs for structuring the safety program • Insert F-blocks from the project library or global libraries	X	X
F-DB	Optional fail-safe data blocks that can be read- and write-accessed within the entire safety program.	X	X
F-I/O DB	An F-I/O DB is automatically generated for each F-I/O when it is configured. You can or you must access the tags of the F-I/O DB in conjunction with F-I/O accesses.	X	X
F-shared DB	The F-shared DB is a fail-safe data block that contains all of the shared data of the safety program and additional information needed by the F-system.	X	—
F-runtime group information DB	An F-runtime group information DB is created when you create an F-runtime group. The F-runtime group information DB provides information on the F-runtime group and on the safety program as a whole.	—	X

NOTE

You are not permitted to insert F-system blocks from the "System blocks" folder in a main safety block/F-FB/F-FC.

Instructions for the safety program

In the "Instructions" task card, you can find instructions for the F-CPU used and which you can to use program the safety program.

You can find instructions that you know from the standard user program, such as bit logic operations, mathematical functions, functions for program control, and word logic operations.
Moreover, there are instructions with safety functions, e.g., for two-hand monitoring, discrepancy analysis, muting, emergency STOP/emergency OFF, safety door monitoring, feedback monitoring and instructions for safety-related communication between F-CPUs.

More information

For a detailed description of the instructions for the safety program, refer to Overview of instructions (Page 359).

Using instruction versions

As with the instructions for the standard user program, there may also be different versions of the instructions for the safety program.
More information on instruction versions can be found in the help on STEP 7 in "Basics for instruction versions".
More information on the differences of the individual versions of the instructions for the safety program can be found in the relevant chapter of the instructions.

NOTE

Note the following:

- If you change the version of an instruction used in the safety program in the task card "Instructions" to a version which does not have identical functions, the functioning of your safety program may change after recompiling the safety program. In addition to the signature of the F-block that uses the instruction, the Collective F-Signature and the Collective F-SW-Signature of your safety program also change. You may have to perform an acceptance test (Page 345).
- (S7-300/400) If you use a know-how protected F-block in your safety program which uses an instruction which is not the same version as that set in the task card "Instructions", when the program is compiled without entering the password for the know-how protected F-block, it is adjusted to the version set in the task card "Instructions", providing the interfaces of the instruction versions are identical. If the instruction versions do not have identical functions, the functioning of the know-how protected F-block may change and always its signature.

5.1.5 Restrictions in the programming languages FBD/LAD

LAD and FBD programming languages

The user program in the F-CPU typically consists of a standard user program and a safety program.
The standard user program is created using standard programming languages such as SCL, STL, LAD, or FBD.

For the safety program, LAD or FBD may be used with certain restrictions in the instructions and the applicable data types and operand areas. Also note the restrictions for the individual instructions.

Supported instructions

The instructions available depend on the F-CPU used. You can find the supported instructions in the description of the instructions (starting from STEP 7 Safety V18 instructions (Page 359)).

NOTE

Enable input EN and enable output ENO cannot be connected.

Exception:

(S7-1200, S7-1500) With the following instructions you can program overflow detection by connecting the enable output ENO:

- ADD: Add (STEP 7 Safety V18) (Page 470)
- SUB: Subtract (STEP 7 Safety V18) (Page 472)
- MUL: Multiply (STEP 7 Safety V18) (Page 475)
- DIV: Divide (STEP 7 Safety V18) (Page 478)
- NEG: Create two's complement (STEP 7 Safety V18) (Page 481)
- ABS: Form absolute value (STEP 7 Safety V18) (S7-1200, S7-1500) (Page 484)
- CONVERT: Convert value (STEP 7 Safety V18) (Page 494)

Supported data types and parameter types

Only the following data types are supported:

- BOOL
- INT
- WORD
- DINT
- DWORD (S7-300, S7-400)
- TIME

- ARRAY, ARRAY[*] when using the instructions RD_ARRAY_I: Read value from INT F-array (STEP 7 Safety V18) (S7-1500) (Page 486) and RD_ARRAY_DI: Read value from DINT F-array (STEP 7 Safety V18) (S7-1500) (Page 488).
  Restrictions:
  - ARRAY only in F-global DBs
  - ARRAY limits: 0 up to max. 10000
  - ARRAY[*] only as in-out parameter (InOut) in F-FCs and F-FBs
  - ARRAY of UDT is not permitted
  - ARRAY of Bool is not permitted
  - ARRAY of Word is not permitted
  - ARRAY of Time is not permitted
- F-compliant PLC data type (UDT) (S7-1200, S7-1500)

NOTE

If the result of an instruction is located outside the permitted range for this data type, the F-CPU may switch to STOP. The cause of the diagnostics event is entered in the diagnostics buffer of the F-CPU.
You must therefore ensure that the permitted range for the data type is observed when creating the program, or select a matching data type or use the ENO output.

Note the description of the individual instructions.

Non-permitted data and parameter types

The following types are **not** permitted:

- All types not listed in the section "Supported data types and parameters types" (e.g. BYTE, REAL)
- Complex data types (for example, STRING, ARRAY (S7-300, S7-400, S7-1200), STRUCT, PLC data type (UDT) (S7-300, S7-400))
- Parameter types (e.g. BLOCK_FB, BLOCK_DB, ANY)

Supported operand areas

The system memory of an F-CPU is divided into the same operand areas as the system memory of a standard CPU. You can access the operand areas listed in the table below from within the safety program.

Table 5-1 Supported operand areas

Operand area	Description
Process image of the inputs	
• Of F-I/O	Only read-only access to input channels of F-I/O is possible. Transfer to IN_OUT parameters of an F-FB or F-FC is therefore not valid either. The process image of the inputs of F-I/O is updated prior to the start of the main safety block.

Operand area	Description
• Of standard I/O	Input channels of standard I/O can only be accessed read-only. Transfer to IN_OUT parameters of an F-FB or F-FC is therefore not valid either. In addition, a process-specific validity check is required. See the *STEP 7 help* for the update times of the process image of the inputs of standard I/O.
Process image of the outputs	
• Of F-I/O	Only write-only access to output channels of F-I/O is possible. Transfer to IN_OUT parameters of an F-FB or F-FC is therefore not valid either. In the safety program, the values for the outputs of the F-I/O are calculated and stored in the process image of the outputs. The process image of the outputs for F-I/O is updated after the end of the main safety block.
• Of standard I/O	Output channels of standard I/O are write-only channels. Transfer to IN_OUT parameters of an F-FB or F-FC is therefore not valid either. In the safety program, the values for the outputs of the standard I/O are also calculated and stored in the process image of the outputs, if needed. See the *STEP 7 help* for the update times of the process image of the outputs of standard I/O.
Bit memory	This area is used for data exchange with the standard user program. In addition, read access requires a process-specific validity check. A particular element of the bit memory can be either read- or write-accessed in the safety program. Transfer to IN_OUT parameters of an F-FB or F-FC is therefore not valid either. Note that it is only permitted to use bit memory for connecting the standard user program and the safety program; it must not be used as a buffer for F-data.
Data blocks	
• F-DB	Data blocks store information for the program. They can either be defined as global data blocks such that all F-FBs, F-FCs, or main safety blocks can access them or assigned to a particular F-FB or main safety block (instance DB). A tag of a shared DB can only be accessed from one F-runtime group, and an instance DB only from the F-runtime group in which the corresponding F-FB/instruction is called.
• DB	This area is used for data exchange with the standard user program. In addition, read access requires a process-specific validity check. For a tag of a DB, either read access or write access is possible in the safety program. Transfer to IN_OUT parameters of an F-FB or F-FC is therefore not valid either. Note that the tags of a DB can only be used for transferring data between the standard user program and the safety program; DBs must not be used as a buffer for F-data.
Temporary local data	This memory area holds the temporary tags of a block (or F-block) while the (F-) block is being executed. The local data stack also provides memory for transferring block parameters and for saving intermediate results.

Data type conversion

As with the standard user program, there are two possibilities for data type conversion in the safety program:

- Implicit conversion
  The implicit conversion is executed as in the standard user program with the following restrictions: The bit length of the source data type has to match the bit length of the destination data type.
- Explicit conversion
  You use an explicit conversion instruction (Page 494) before the actual instruction is executed.

Slice access

Slice access is not possible in the safety program.

Non-permitted operand areas

Access via units other than those listed in the table above is **not** permitted. The same applies to access to operand areas not listed, in particular:

- Data blocks that were automatically added
  Exception: Certain tags in the F-I/O DB (Page 145) and in the F-shared DB (S7-300, S7-400) (Page 136) or F-runtime group information DB (S7-1200, S7-1500) (Page 136)
- I/O area: Inputs
- I/O area: Outputs

Boolean constants "0" or "FALSE" and "1" or "TRUE" (S7-300, S7-400)

The Boolean constants "0" or "FALSE" and "1" or "TRUE" are available for S7-300/400 F-CPUs as "Tags" "RLO0" and "RLO1" in the F-global DB. You access them through a fully qualified DB access ("F_GLOBDB".RLO0 or "F_GLOBDB".RLO1).

Boolean constants "0" or "FALSE" and "1" or "TRUE" (S7-1200, S7-1500)

The Boolean constants "0" or "FALSE" and "1" or "TRUE" are available for S7-1200/1500 F-CPUs to assign parameters during block calls. You can enter this directly in FBD or LAD at the respective block inputs.

Example FBD:

Example LAD:

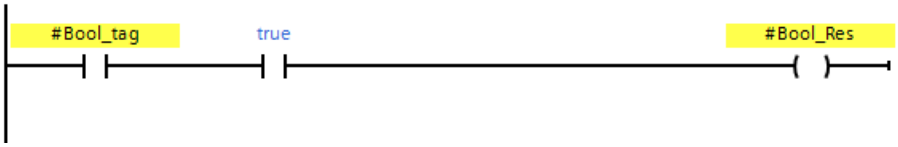

As an alternative, as before you have the option to also set "1" or "TRUE" in a tag using the "Assignment (Page 367)" instruction.

To do so, do not interconnect the box input of the "Assignment" instruction in FBD. In LAD, you interconnect the input directly with the supply rail.

You obtain a tag with "0" or "FALSE" by subsequent inversion with the instruction "Invert RLO (Page 365)".

Example FBD:

Example LAD:

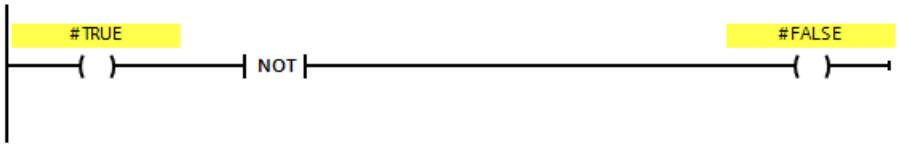

Operand area of temporary local data: Particularities

NOTE

Note when using the operand area of temporary local data that the first access of a local data element in a main safety block/F-FB/F-FC must always be a write access. This initializes the local data element.

Make sure that a temporary local data element is initialized prior to the first JMP, JMPN, or RET instruction.

The "local data bit" should be initialized with the Assign ("=") (FBD) or ("--( )") (LAD) instruction. Assign the local data bit a signal state of "0" or "1" as a Boolean constant.

Local data bits cannot be initialized with the Flip Flop (SR, RS), Set Output (S) or Reset Output (R) instructions.

The F-CPU can go to STOP if this is not observed. The cause of the diagnostics event is entered in the diagnostics buffer of the F-CPU.

"Fully qualified DB access"

Access to tags of a data block in an F-FB/F-FC is "fully qualified DB access". This also applies to initial access to tags of a data block after a jump label.

For S7-300/400 F-CPUs, only initial access needs to be "fully qualified DB access". Alternatively, you can use the instruction "OPN".

Example of "fully qualified DB access":

Assign a name for the F-DB, e.g. "F_Data_1". Use the names assigned in the declaration of the F-DB instead of the absolute addresses.

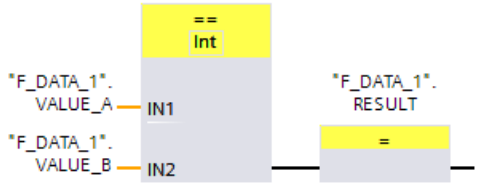

Figure 5-1 Example with fully-qualified access

Example of "non-fully qualified DB access" (S7-300, S7-400):

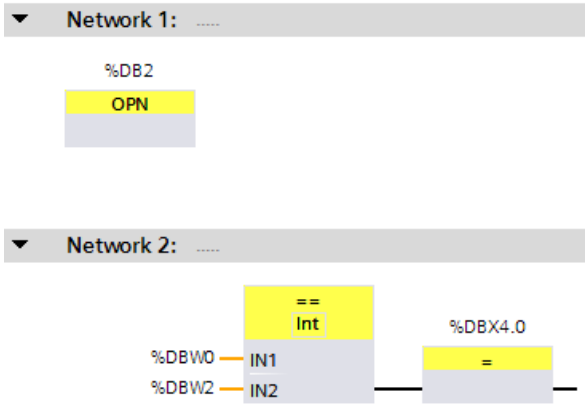

Figure 5-2 Example without fully-qualified access

Access to instance DBs

You can also access instance DBs of F-FBs with fully qualified access, e.g., for transfer of block parameters. It is not possible to access static local data in single/multi-instances of other F-FBs.

(S7-300, S7-400) Note that accessing instance DBs of F-FBs that are not called in the safety program can cause the F-CPU to go to STOP mode.

Note the following warning for S7-1200/1500 F-CPUs:

⚠ WARNING

When you program global access to instance DBs of F-FBs, you must ensure that the associated F-FB in the safety program is called. *(S096)*

5.1.6 F-compliant PLC data types (UDT) (S7-1200, S7-1500)

Introduction

You declare and use F-compliant PLC data types (UDT) as you would standard PLC data types (UDT). You can use F-compliant PLC data types (UDT) in the safety program as well as in the standard user program.

Differences to standard PLC data types (UDT) are described in this chapter.

Information on the use and declaration of standard PLC data types (UDT) is available in the *STEP 7 help* under "Declaring PLC data types".

Declaring F-compliant PLC data types (UDT)

You declare F-compliant PLC data types (UDT) as you would PLC data types (UDT).

In F-compliant PLC data types (UDT), you can use all data types (Page 103) that you can also use in safety programs. Exception: ARRAY.

Proceed as follows for declaration:

1. Click on "Add new PLC data type" in the "PLC Data Types" folder in the project tree.
2. To create an F-compliant PLC data type (UDT), enable the option "Create F-compliant PLC data type" in the "Add new PLC data type" dialog.
3. Proceed as described in the *STEP 7 help* under "Programming structure of PLC data types".

You specify default values for F-compliant PLC data types (UDT) during the declaration.

Using F-compliant PLC data types (UDT)

You use F-compliant PLC data types as you would standard PLC data types (UDT).

Nesting depth for F-compliant PLC data types

For F-compliant PLC data types, the maximum nesting depth is limited compared to the standard PLC data types (maximum nesting depth = 8). There is a dependency on the call sequence of the block in which a tag of the nested F-compliant PLC data type is declared. Each call level of F-FCs or multi-instance F-FBs reduces the maximum nesting depth of the F-compliant PLC data type used. For multi-instance F-FBs, the caller counts as an additional level.

When a tag of a nested F-compliant PLC data type is declared in a global F-DB, its maximum nesting depth is 7.

Example 1

The main safety block (level 1) calls an F-FB as multi-instance (level 2) which, in turn, calls an F-FC (level 3) in which a tag of the type of a nested F-compliant PLC data type is declared. This means a maximum nesting depth of 5 is available for the fail-safe compliant PLC data type used by the tag.

Example 2

The main safety block calls an F-FB as a single instance (level 1) which, in turn, calls an F-FC (level 2) in which a tag of the type of a nested F-compliant PLC data type is declared. This

means a maximum nesting depth of 6 is available for the fail-safe compliant PLC data type used by the tag.

Changes to F-compliant PLC data types (UDT)

You need the password for the safety program to change F-compliant PLC data types (UDT). Regardless if you are using the F-compliant PLC data type (UDT) in an F-block, in a standard block or not at all.

See also

"F-compliant PLC data types" area (S7-1200, S7-1500) (Page 79)

5.1.6.1 Grouping PLC tags for inputs and outputs of F-I/O in structures (S7-1200, S7-1500)

You group PLC tags for inputs and outputs of F-I/O in structures (structured PLC tag) as you would for inputs and outputs of standard I/O.
Use F-compliant PLC data types (UDT).

Rules

When creating structured PLC tags for inputs and outputs of F-I/O, you must also observe the following rules in addition to the rules in the standard:

- You must not group inputs/outputs of standard I/O and F-I/O at the same time in a structured PLC tag.
- You may only group inputs/outputs of actually existing channels (channel value and value status) in a structured PLC tag.
  See also Addressing F-I/O (Page 139)
- You may only group inputs/outputs of channels (channel value and value status) that are enabled in the hardware configuration in a structured PLC tag.
  See also Addressing F-I/O (Page 139)
- You may only group inputs of channels (channel value and value status) that provide the result of the "1oo2 sensor evaluation" with set "1oo2 sensor evaluation".
  See also Addressing F-I/O (Page 139)
- You should combine all inputs and outputs of an F-I/O in a structured PLC tag. When divided into several structured PLC tags, these can only begin with multiples of 16 bits. This also applies to nested F-compliant PLC data types (UDT). See rules in the standard.
  The F-CPU can go to STOP mode if this is disregarded. The cause of the diagnostics event is entered in the diagnostics buffer of the F-CPU.
- A structured PLC tag that groups outputs of an F-I/O must not overlap with other PLC tags.
  The F-CPU can go to STOP mode if this is disregarded. The cause of the diagnostics event is entered in the diagnostics buffer of the F-CPU.

NOTE

To observe these rules, you must declare the F-compliant PLC data type that is used for the structured PLC tag accordingly.

You can find the addresses allocated to a structured PLC tag in the "IO tags" tab of an F-I/O configuration.

5.1.6.2 Example of structured PLC tags for inputs and outputs of F-I/O (S7-1200, S7-1500)

Introduction

This example uses the F-module 4 F-DI/3 F-DO DC24V/2A with 1oo2 evaluation to demonstrate how you use structured PLC tags for access to F-I/O.

Channel structure of the 4 F-DI/3 F-DO DC24V/2A F-module

The table below sets out the channel structure and address assignment of the F-module 4 F-DI/3 F-DO DC24V/2A with 1oo2 evaluation. You may only access existing and enabled channels (addresses I15.0 to I15.3 and I16.0 to I16.3). These channels provide the result of 1oo2 evaluation generated internally in the F-module.

Table 5-2 Channel structure and addresses of the channel values of inputs with 1oo2 evaluation

Channel	Address
DI channel 0 channel value	I15.0
DI channel 1 channel value	I15.1
DI channel 2 channel value	I15.2
DI channel 3 channel value	I15.3
—	I15.4
—	I15.5
—	I15.6
—	I15.7

Table 5-3 Channel structure and addresses of the value status of the inputs with 1oo2 evaluation

Channel	Address
DI channel 0 value status	I16.0
DI channel 1 value status	I16.1
DI channel 2 value status	I16.2
DI channel 3 value status	I16.3
—	I16.4
—	I16.5
—	I16.6
—	I16.7

Table 5-4 Channel structure and addresses of the value status of outputs

Channel	Address
DO channel 0 value status	I17.0
DO channel 1 value status	I17.1
DO channel 2 value status	I17.2
DO channel 3 value status	I17.3

Table 5-5 Channel structure and addresses of the channel values of outputs

Channel	Address
DO channel 0 channel value	Q15.0
DO channel 1 channel value	Q15.1
DO channel 2 channel value	Q15.2
DO channel 3 channel value	Q15.3

Creating F-compliant PLC data types (UDT)

Create two F-compliant PLC data types (UDT), for example, for access to all channels.

The figure below shows an F-compliant PLC data type (UDT) for access to the channel values and value status of the inputs with 1oo2 evaluation:

4 F-DI/3 F-DO DC24V/2A_DI

		Name	Data type	Comment
1		CH_DI_0	Bool	Channel 0 (DI)
2		CH_DI_1	Bool	Channel 1 (DI)
3		CH_DI_2	Bool	Channel 2 (DI)
4		CH_DI_3	Bool	Channel 3 (DI)

The figure below shows the F-compliant PLC data type (UDT) for access to the channel values and value status of the outputs:

4 F-DI/3 F-DO DC24V/2A_DO

		Name	Data type	Comment
1		CH_DO_0	Bool	Channel 0 (DO)
2		CH_DO_1	Bool	Channel 1 (DO)
3		CH_DO_2	Bool	Channel 2 (DO)

Using F-compliant PLC data types (UDT)

As demonstrated in the figure below, you can use the two F-compliant PLC data types (UDT) that you have created in an F-FC (e.g. "Motor"):

Motor

	Name	Data type	Comment
1	Input		
2	Motor SS DI	"4 F-DI/3 F-DO DC24V/2A_DI"	Motor interface channel values DI
3	CH_DI_0	Bool	Kanal 0 (DI)
4	CH_DI_1	Bool	Kanal 1 (DI)
5	CH_DI_2	Bool	Kanal 2 (DI)
6	CH_DI_3	Bool	Kanal 3 (DI)
7	Motor SS DI VS	"4 F-DI/3 F-DO DC24V/2A_DI"	Motor interface value status DI
8	CH_DI_0	Bool	Kanal 0 (DI)
9	CH_DI_1	Bool	Kanal 1 (DI)
10	CH_DI_2	Bool	Kanal 2 (DI)
11	CH_DI_3	Bool	Kanal 3 (DI)
12	Motor SS DO VS	"4 F-DI/3 F-DO DC24V/2A_DO"	Motor interface value status DI
13	CH_DO_0	Bool	Kanal 0 (DO)
14	CH_DO_1	Bool	Kanal 1 (DO)
15	CH_DO_2	Bool	Kanal 2 (DO)
16	Output		
17	Motor SS DO	"4 F-DI/3 F-DO DC24V/2A_DO"	Motor interface channel values DO
18	CH_DO_0	Bool	Kanal 0 (DO)
19	CH_DO_1	Bool	Kanal 1 (DO)
20	CH_DO_2	Bool	Kanal 2 (DO)

Creating structured PLC tag for the F-module 4 F-DI/3 F-DO DC24V/2A

Create structured PLC tags for the F-module 4 F-DI/3 F-DO DC24V/2A:

Tag table_1

	Name	Data type	Address	Comment
1	TagDI_4 F-DI/3 F-DO	"4 F-DI/3 F-DO DC24V/2A_DI"	%I15.0	Motor 1 DI
2	TagDI_VS_4 F-DI/3 F-DO	"4 F-DI/3 F-DO DC24V/2A_DI"	%I16.0	Motor 1 DI VS
3	TagDO_VS_4 F-DI/3 F-DO	"4 F-DI/3 F-DO DC24V/2A_DO"	%I17.0	Motor 1 DO VS
4	TagDO_4 F-DI/3 F-DO	"4 F-DI/3 F-DO DC24V/2A_DO"	%Q15.0	Motor 1 DO

Accessing the F-FC

Transfer the structured PLC tags you have created when you call the F-FC (e.g. "Motor"):

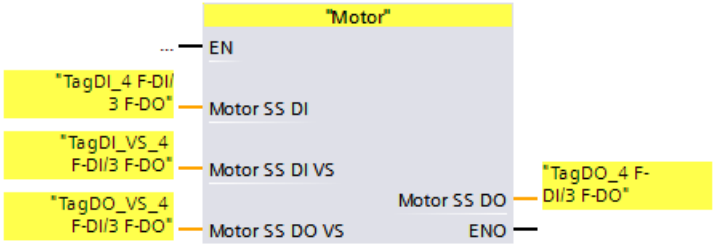

See also

Addressing F-I/O (Page 139)
Value status (S7-1200, S7-1500) (Page 140)

5.1.7 Editing PLC tags with external editors

To edit PLC tags with external editors follow the procedure as in the standard. Additional information can be found in the *STEP 7* help in "Editing PLC tags with external editors".
Note the following:

NOTE

After importing a tag table which contains tags used in the safety program, the collective F-signature of the safety program is reset.

To form the collective F-signature again you have to recompile the project data. For this, with access protection set up for the safety program, you need a valid access authorization for the safety program.

If you would like to edit PLC tags with external editors, we therefore recommend that you store PLC tags to be used in the safety program in a separate tag table.

5.1.8 Using Multiuser engineering

If you want to use Multiuser engineering, proceed as described in the STEP 7 help under "Using Multiuser engineering".

5.1.9 Deleting the safety program

Deleting individual F-blocks

To delete an F-block, follow the same procedure as in *STEP 7*.

Deleting an F-runtime group

See Deleting an F-runtime group (Page 131)
(S7-300, S7-400) Remove all calls that you have used to call the safety program (Main_Safety).

Deleting the entire safety program for S7-300/400 F-CPUs *with* inserted memory card (SIMATIC Micro Memory Card or flash card)

To delete an entire safety program, proceed as follows:

1. Delete all F-blocks (shown with yellow symbol) in the project tree.
2. Remove all calls that you have used to call the safety program (Main_Safety).

3. Select the F-CPU in the *hardware and network editor* and clear the "F-capability activated" option in the properties of the F-CPU.
4. Compile the project data of the F-CPU
   The offline project no longer contains a safety program.
5. To delete a safety program on the Memory Card (SIMATIC Micro Memory Card or Flash Card), insert the Memory Card (SIMATIC Micro Memory Card or Flash Card) in the programming device or PC or in a SIMATIC USB prommer.
6. Select the menu command "Project > Card Reader/USB memory > Show Card Reader/USB memory" in the menu bar.
7. Open the "SIMATIC Card Reader" folder and delete the Memory Card.
8. Insert the Memory Card into the F-CPU.
9. Perform a memory reset of the F-CPU (flashing of the STOP LED requests a memory reset).

You can then download the offline standard user program to the F-CPU.

Deleting the entire safety program for S7-400 F-CPUs *without* inserted flash card

To delete an entire safety program, proceed as follows:

1. Delete all F-blocks (shown with yellow symbol) in the project tree.
2. Remove all calls that you have used to call the safety program (Main_Safety).
3. Select the F-CPU in the *hardware and network editor* and clear the "F-capability activated" option in the properties of the F-CPU.
4. Compile the project data of the F-CPU
   The offline project no longer contains a safety program.
5. Perform a memory reset on the F-CPU (in the "Online tools" task card of the F-CPU).

You can then download the offline standard user program to the F-CPU.

Delete the entire safety program for SIMATIC S7-1200/1500 F-CPUs

To delete an entire safety program, proceed as follows:

1. Delete all F-blocks (shown with yellow symbol) in the project tree.
2. Select the F-CPU in the *hardware and network editor* and clear the "F-capability activated" option in the properties of the F-CPU.
3. Compile the project data of the F-CPU
   The offline project no longer contains a safety program.

You can then download the offline standard user program to the F-CPU.

5.2 Defining F-Runtime Groups

5.2.1 Rules for F-Runtime Groups of the Safety Program

Rules

Note the following:

- The channels (channel values and value status) of an F-I/O can only be accessed from a single F-runtime group.
- Tags of the F-I/O DB of an F-I/O can only be accessed from one F-runtime group and only from that F-runtime group from which the channels or value status of this F-I/O are also accessed (if access is made).
- F-FBs can be used in more than one F-runtime group but they must be called with different instance DBs.
- Instance DBs of F-FB can only be accessed from the F-runtime group in which the associated F-FB is called.
- A tag of a global F-DB (except the F-global DB) can only be accessed from one F-runtime group (however, a global F-DB can be used in more than one F-runtime group).
- (S7-300, S7-400) A DB for F-runtime group communication can be read and write accessed by the F-runtime group to which it was assigned as "DB for runtime group communication", but only read-accessed by the "receiver" F-runtime group.
- (S7-300, S7-400) An F-communication DB can only be accessed from one F-runtime group.
- (S7-1200, S7-1500) You must not call the main safety block yourself. It is automatically called by the assigned F-OB.

  NOTE

  F-OBs are protected by F-system know-how. The OB start information of F-OBs therefore cannot be evaluated.

- (S7-1200, S7-1500). The F-OB should be created with the highest priority of all OBs.

  NOTE

  The cycle time/runtime of an F-OB can be prolonged by, among other things, communication load, the processing of higher-priority interrupts, as well as by test and commissioning functions. In a redundant S7-1500HF system, it is also dependent on the current system state.

- (S7-300, S7-400) The main safety block may only be called once from a standard block. Multiple calls can cause the F-CPU to go to STOP mode.
- (S7-300, S7-400) For optimal use of temporary local data, you must call the F-runtime group (the main safety block) directly in an OB (cyclic interrupt OB, if possible); you should not declare any additional temporary local data in this cyclic interrupt OB.

- (S7-300, S7-400) Within a cyclic interrupt OB, the F-runtime group should be executed **before** the standard user program; i.e. it should be called at the very beginning of the OB, so that the F-runtime group is always called at fixed time intervals, regardless of how long it takes to process the standard user program.

  For this reason, the cyclic interrupt OB should also not be interrupted by higher priority interrupts.
- The process image of the inputs and outputs of standard I/O, bit memory, and tags of DBs in the standard user program may be accessed either as read-only or read/write from more than one F-runtime group. (see also Data exchange between standard user program and safety program (Page 172))
- F-FCs can generally be called in more than one F-runtime group.

NOTE

You can improve performance by writing sections of the program that are not required for the safety function in the standard user program.

When determining which elements to include in the standard user program and which to include in the safety program, you should keep in mind that the standard user program can be modified and downloaded to the F-CPU more easily. In general, changes in the standard user program do not require an acceptance.

5.2.2 Procedure for defining an F-runtime group (S7-300, S7-400)

Requirements

- You have inserted an S7-300/400 F-CPU in your project.
- In the "Properties" tab of the F-CPU, the "F-capability activated" check box is selected (default setting).

F-runtime group created by default

STEP 7 Safety inserts F-blocks for an F-runtime group in the project tree by default after an F-CPU has been added. When you open the "Program blocks" folder, you see the (F-)blocks of the F-runtime group (CYC_INT5 [OB 35], Main_Safety [FB 1], and Main_Safety_DB [DB1]) in the project tree.

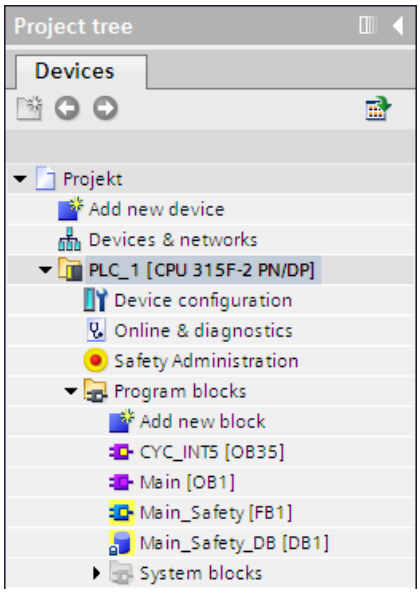

The following section describes how you modify the settings / parameters of the F-runtime group created by default or add and additional F-runtime group.

Procedure for defining an F-runtime group

Proceed as follows to define an F-runtime group:

1. Open the *Safety Administration Editor* by double-clicking in the project tree.

2. Select "F-runtime group" in the area navigation.
   Result: The work area for defining an F-runtime group with the (default) settings for F-runtime group 1 opens.

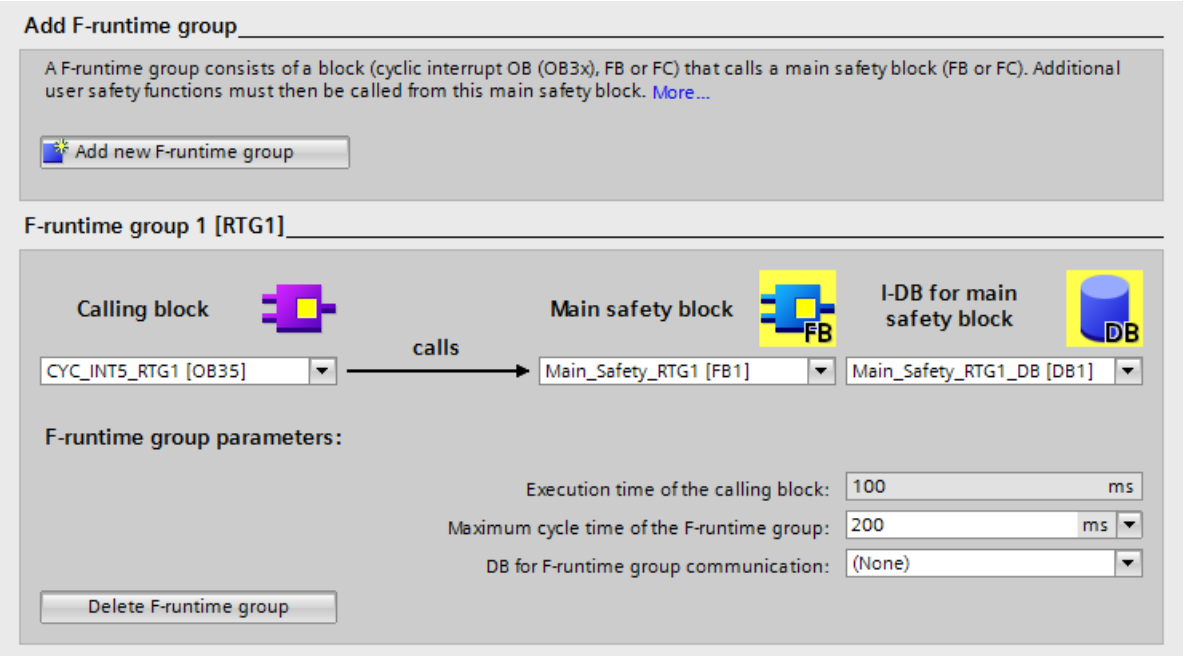

3. Specify the block in which the main safety block is to be called.
   Cyclic interrupt OB 35 is suggested here by default. The advantage of cyclic interrupt OBs is that they interrupt the cyclic program processing in OB 1 of the standard user program at fixed intervals. This means that the safety program is called and run at fixed time intervals in a cyclic interrupt OB.
   In this input field, you can select only those blocks that were created in the LAD, FBD, or STL programming language. If you select a block here, the call is inserted automatically into the selected block and, if necessary, removed from a previously selected block.
   If you want to call the main safety block in a block that was created in another programming language, you must program this call itself. The input field is then not editable (grayed out), and you can change the call only in the calling block and not the *Safety Administration Editor*.
4. Assign the desired main safety block to the F-runtime group. If the main safety block is an FB, you must also assign an instance DB.
   Main_Safety [FB1] and Main_Safety_DB [DB1] are suggested by default.

5. The F-CPU monitors the F-cycle time of the F-runtime group. For "Maximum cycle time of F-runtime group", enter the maximum permitted time between two calls of the F-runtime group.

WARNING

The call interval of the F-runtime group is monitored for a maximum value. This means that monitoring is performed to determine whether the call is executed often enough, but not whether it is executed too often or, for example, isochronously. Fail-safe timers must therefore be implemented using the TP, TON, or TOF instructions (Page 445) from the "Instructions" task card and not using counters (OB calls). *(S007)*

WARNING

The response time of your safety function depends, among other things, on the cycle time of the F-OB, the runtime of the F-runtime group and, when distributed F-I/O is used, the parameter assignment of PROFINET/PROFIBUS.

Therefore, the configuration/parameter assignment of the standard system influences the response time of your safety function.

Examples:

- Increasing the priority of a standard OB compared to an F-OB can extend the cycle time of the F-OB or the runtime of the F-runtime group due to the higher-priority processing of the standard OB. Note that during the creation of technology objects, OBs with very high priority may be created automatically.
- The change of the send clock cycle of PROFINET changes the cycle time of an F-OB with event class "Synchronous cycle".

Note that the configuration / parameter assignment of the standard system is not subject to access protection for the safety program and does not lead to a modification of the Collective F-Signature.

If you do not take organizational measures to prevent changes in the configuration / parameter assignment of the standard system with influence on the response time, you must always use the monitoring times for the calculation of the maximum response time of a safety function (see Configuring monitoring times (Page 546)).

The monitoring times are protected against change with the access protection of the safety program and are recorded by the Collective F-Signature as well as the Collective F-SW-Signature.

When calculating with the Excel file for response time calculation (https://support.industry.siemens.com/cs/ww/en/view/109783831) you need to consider the value that is specified for "Any standard system runtimes" as value for the maximum response time. *(S085)*

6. If one F-runtime group is to provide tags for evaluation to another F-runtime group of the safety program, assign a DB for F-runtime group communication. Select an F-DB for "DB for F-runtime group communication". (See also F-runtime group communication (S7-300, S7-400) (Page 126))
7. If you want to create a **second F-runtime group**, click the "Add new F-runtime group" button.

8. Assign an F-FB or F-FC as the main safety block to a calling block. This F-FB or F-FC is automatically generated in the project tree, if not already present.
9. If the main safety block is an F-FB, assign an instance DB to the main safety block. The instance DB is generated automatically in the project tree.
10. Follow steps 3 to 5 above to complete generation of the second F-runtime group.

5.2.3 Procedure for defining an F-runtime group (S7-1200, S7-1500)

Requirements

- You have inserted an S7-1200/1500 F-CPU in your project.
- In the "Properties" tab of the F-CPU, the "F-capability activated" check box is selected (default setting).

F-runtime group created by default

STEP 7 Safety inserts F-blocks for an F-runtime group in the project tree by default after an F-CPU has been added. When you open the "Program blocks", you see the (F-)blocks of the F-runtime group (FOB_RTG1 [OB123], Main_Safety_RTG1 [FB1] and Main_Safety_RTG1_DB [DB1]) in the project tree.

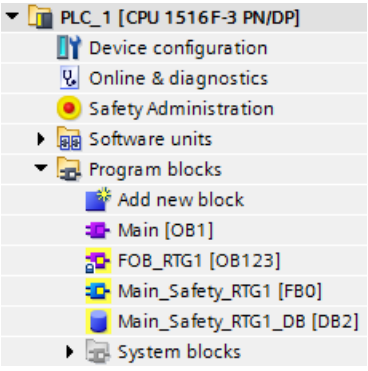

The following section describes how you modify the settings / parameters of the F-runtime group created by default or add and additional F-runtime group.

Procedure for defining an F-runtime group

Proceed as follows to define an F-runtime group:

1. Open the *Safety Administration Editor* by double-clicking in the project tree.

2. Select "F-runtime group" in the area navigation.
   Result: The work area for defining an F-runtime group with the (default) settings for F-runtime group 1 opens.

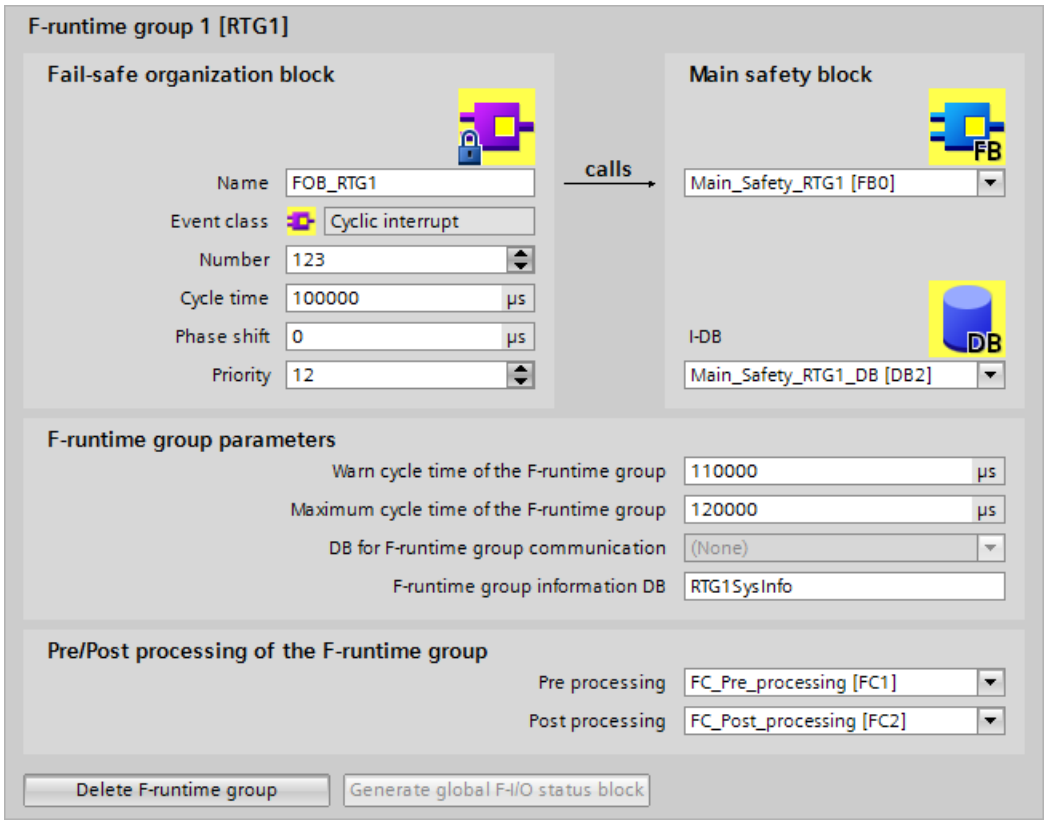

3. Assign a name for the F-OB under "F-OB".
4. Specify the event class of the F-OB when you create a new F-runtime group.
   For an F-OB you can select between the event classes "Program cycle", "Cyclic interrupt" or "Synchronous cycle".
   In the case of the F-runtime group created by default, the F-OB has the event class "Cyclic interrupt". To change the event class of the F-OB of an already created F-runtime group, you need to delete and F-runtime group and create a new one.

NOTE

We recommend creating the F-OB with the event class "Cyclic interrupt". The safety program will then be called and executed at fixed time intervals.

F-OBs with the event class "Synchronous cycle" are only recommended in conjunction with F-IOs that support isochronous mode, for example submodule "Profisafe Telgr 902" of drive SINAMICS S120 CU310-2 PN V5.1.

F-OBs with the event class "Program cycle" are not recommended, as these have the lowest priority "1" (see below).

NOTE

Note the maximum permissible number of OBs (incl. F-OBs) with event class "Synchronous cycle" (see technical specifications in the product manuals of the S7-1500 CPUs).

5. If required, you can manually change the number of the F-OB proposed by the system. To do so, note the number ranges valid for the relevant event class.
6. Assign cycle time, phase shift and priority parameters for F-OBs with event class "Cyclic interrupt".
   Assign the priority parameter for F-OBs with event class "Synchronous cycle".
   – Select a cycle time which is less than the "Maximum cycle time of F-runtime group" and less than the "Cycle time warning limit of F-runtime group".
   – Select a phase shift which is less than the cycle time.
   – If possible, select a priority that is higher than the priority of all other OBs.

NOTE

Through a high priority of the F-OB you ensure that the run time of the safety program and the reaction time of your safety functions (Page 546) are influenced as little as possibly by the standard user program.

NOTE

For F-OBs with event class "Synchronous cycle" you need to also assign parameters for application cycle (ms) and possibly delay time (ms) after defining the F-runtime group and the connection of the isochronous F-I/O to the isochronous mode interrupt OB. You can find these parameters in the "Properties" dialog box of the isochronous mode interrupt OB in the "Isochronous mode" group. Proceed as described in the STEP 7 help under "Configuring isochronous mode interrupt OBs".

7. Assign the calling main safety block to the F-OB. If the main safety block is an FB, you must also assign an instance DB.
   Main_Safety_RTG1 [FB1] and Main_Safety_RTG1_DB [DB1] are suggested by default.
8. The F-CPU monitors the F-cycle time of the F-runtime group. Two parameters are available:
   – If the "Warn cycle time of the F-runtime group" is exceeded, a maintenance demanded is written to the diagnostics buffer of the F-CPU and the MAINT LED of the F-CPU is activated. This parameter can, for example, be used to determine whether the cycle time exceeds a required value without the F-CPU switching to STOP mode.

     NOTE

     The maintenance demanded is marked as an outgoing event by a STOP/RUN transition of the F-CPU. In an HF-system you must set both HF-CPUs or the redundant S7-1500HF system to STOP before you restart the HF-CPUs.

     As an alternative, you can mark the maintenance demanded as outgoing with the standard instruction "ACK_FCT_WARN". To do so, call the instruction "ACK_FCT_WARN" with a rising edge at the input parameter "ACK_WARN" in your standard user program.

     A renewed violation of the warning limit is not signaled until after a STOP/RUN transition of the F-CPU.

– If the "Maximum cycle time of F-runtime group" is exceeded, the F-CPU will go to STOP. For "Maximum cycle time of F-runtime group", select the maximum permitted time between two calls of this F-runtime group (maximum of 20000000 µs).

WARNING

The call interval of the F-runtime group is monitored for a maximum value. This means that monitoring is performed to determine whether the call is executed often enough, but not whether it is executed too often or, for example, isochronously. Fail-safe timers must therefore be implemented using the TP, TON, or TOF instructions (Page 445) from the "Instructions" task card and not using counters (OB calls). *(S007)*

WARNING

The response time of your safety function depends, among other things, on the cycle time of the F-OB, the runtime of the F-runtime group and, when distributed F-I/O is used, the parameter assignment of PROFINET/PROFIBUS.

Therefore, the configuration/parameter assignment of the standard system influences the response time of your safety function.

Examples:

– Increasing the priority of a standard OB compared to an F-OB can extend the cycle time of the F-OB or the runtime of the F-runtime group due to the higher-priority processing of the standard OB. Note that during the creation of technology objects, OBs with very high priority may be created automatically.

– The change of the send clock cycle of PROFINET changes the cycle time of an F-OB with event class "Synchronous cycle".

Note that the configuration / parameter assignment of the standard system is not subject to access protection for the safety program and does not lead to a modification of the Collective F-Signature.

If you do not take organizational measures to prevent changes in the configuration / parameter assignment of the standard system with influence on the response time, you must always use the monitoring times for the calculation of the maximum response time of a safety function (see Configuring monitoring times (Page 546)).

The monitoring times are protected against change with the access protection of the safety program and are recorded by the Collective F-Signature as well as the Collective F-SW-Signatures.

When calculating with the Excel file for response time calculation (https://support.industry.siemens.com/cs/ww/en/view/109783831) you need to consider the value that is specified for "Any standard system runtimes" as value for the maximum response time. *(S085)*

The "Cycle time warning limit of F-runtime group" must be configured as less than or equal to the "Maximum cycle time of F-runtime group".

9. If necessary, you can change the name suggested by the system for the F-runtime group information DB (Page 136) under "F-runtime group information DB".

10. If required, you can select blocks of the standard program (FCs) with regard to preprocessing or postprocessing of an F-runtime group (see Pre-/postprocessing (S7-1200, S7-1500) (Page 77))
11. If you want to create a **second F-runtime group**, click the "Add new F-runtime group" button. Follow steps 3 to 10 above.

5.2.4 F-runtime group communication (S7-300, S7-400)

Safety-related communication between F-runtime groups

Safety-related communication can take place between the two F-runtime groups of a safety program. This means fail-safe tags can be provided by one F-runtime group in an F-DB and read in another F-runtime group.

NOTE

A DB for F-runtime group communication can be read and write accessed by the F-runtime group to which it was assigned as "DB for runtime group communication", while it can only be read-accessed by the "receiver" F-runtime group.

Tip: You can improve performance by structuring your safety program in such a way that as few tags as possible are exchanged between the F-runtime groups.

Procedure for defining a DB for F-runtime group communication

You define the DB for F-runtime group communication in the work area "F-runtime groups". Proceed as follows:

1. Click "F-runtime groups" in "*Safety Administration Editor*".
2. Select an existing F-DB in the "DB for F-runtime group communication" field or assign a new one.
3. Assign a name to the F-DB.

Up-to-dateness of tags read from another F-runtime group

NOTE

Tags read are up-to-date as at the time of the last completed processing cycle of the F-runtime group providing the tags prior to start-up of the F-runtime group reading the tags.

If the tags supplied undergo multiple changes during runtime of the F-runtime group supplying the tags, the F-runtime group reading the tags only receives the last change (see figure below).

Assignment of fail-safe values

After F-system start-up, fail-safe values are supplied to the F-runtime group which has read access to tags in the DB for F-runtime group communication of another F-runtime group (for

example, F-runtime group 2). These are the values you specified as initial values in the DB for F-runtime group communication of F-runtime group 1.

F-runtime group 2 reads the fail-safe values the first time it is called. The second time the F-runtime group 2 is called, it reads the latest tags if F-runtime group 1 has been processed completely between the two calls of F-runtime group 2. If F-runtime group 1 has not been processed completely, F-runtime group 2 continues to read the fail-safe values until F-runtime group 1 is completely processed.

The behavior is illustrated in the two figures below.

Reading tags from F-runtime group 1, which has a longer OB cycle and lower priority than F-runtime group 2

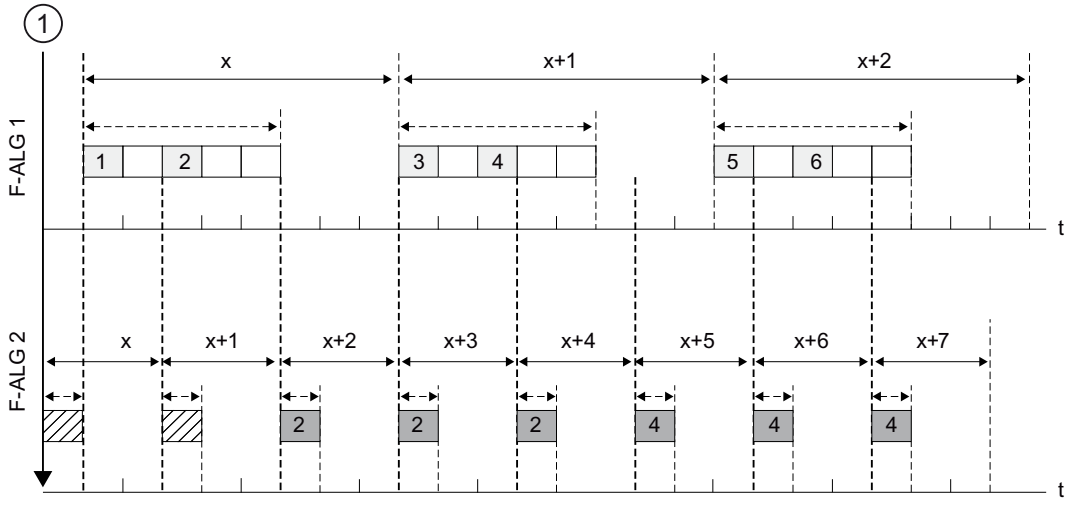

①	Startup of F-system
←→	Cycle time of the (F-)OB in which the F-runtime group is called.
←- - -→	Runtime of the F-runtime group
1	... Tag of F-runtime group 1, written to DB for F-runtime group communication of F-runtime group 1
2	...Tag of F-runtime group 2, read in DB for F-runtime group communication of F-runtime group 1
▨	Initial value in the DB for F-runtime group communication

Reading tags from F-runtime group 1, which has a shorter OB cycle and higher priority than F-runtime group 2

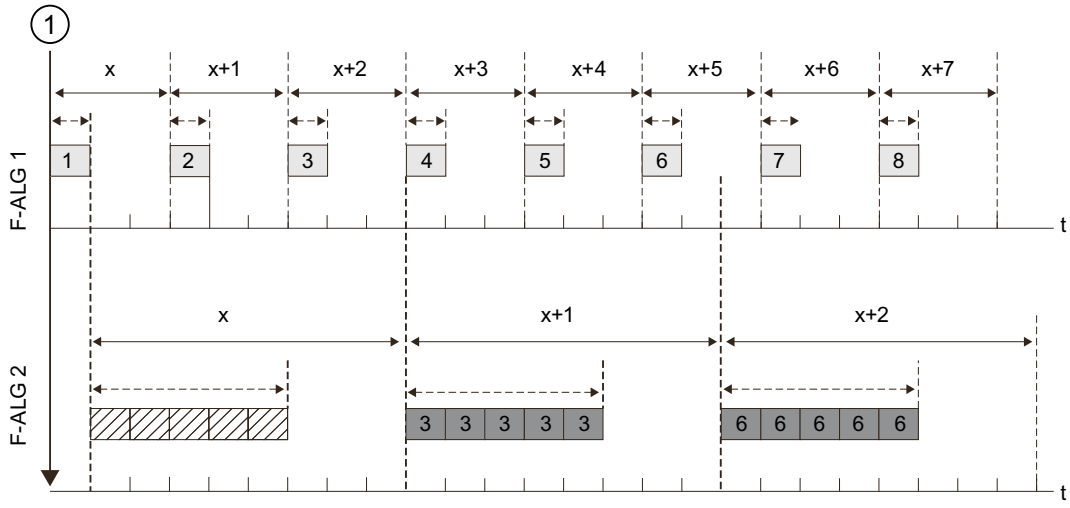

①	Startup of F-system
←→	Cycle time of the (F-)OB in which the F-runtime group is called.
←- - -→	Runtime of the F-runtime group
1	... Tag of F-runtime group 1, written to DB for F-runtime group communication of F-runtime group 1
2	... Tag of F-runtime group 2, read in DB for F-runtime group communication of F-runtime group 1
▨	Initial value in the DB for F-runtime group communication

F-runtime group supplying tags is not processed

NOTE

If the F-runtime group whose DB for F-runtime group communication is to supply the tags is not processed (the main safety block of the F-runtime group is not called), the F-CPU goes to STOP mode. One of the following diagnostics events is then entered in the diagnostics buffer of the F-CPU:

- Error in safety program: cycle time exceeded
- Number of the relevant main safety block (of F-runtime group that is not processed)
- Current cycle time in ms: "0"

5.2.5 F-runtime group communication (S7-1200, S7-1500)

Introduction

With the help of Flexible F-Link you realize a F-runtime group communication.
With Flexible F-Link a coded F-array is made available for the send data of the F-runtime group. The coded F-array is transferred to the other F-runtime group with standard instructions such as UNMOVE_BLK.

Requirement

- S7-1500 F-CPUs as of firmware V2.0
- S7-1200 F-CPUs as of firmware V4.2
- Safety system version as of V2.2

F-runtime group communication

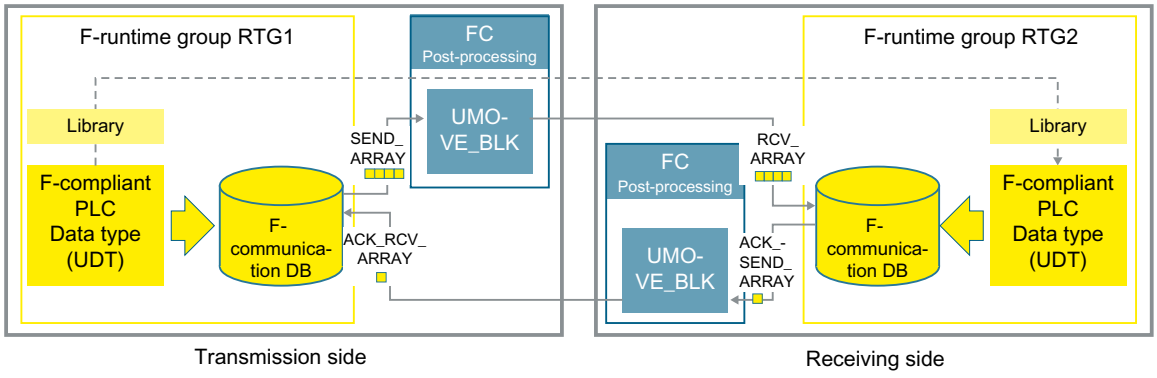

If you want to send a data fail-safe from one F-runtime group to another F-runtime group, follow these steps:

1. Create a non-nested F-compliant PLC data type (UDT) for the F-runtime group communication. The size can be up to 100 bytes.
2. Create two F-communications for an F-runtime group communication in the Safety Administration Editor in the "Flexible F-Link" area. One F-communication each for the send and receive side.
3. Configure the same F-monitoring time and F-communication UUID for each F-runtime group communication relationship.
   Information on calculating the F-monitoring times can be found in Monitoring and response times (Page 546).
   For example:

Flexible F-Link settings

	Name	PLC Data Type	Direction	F-monitoring time: (ms)	F-communication UUID
1	Send	Data	Send	500	5d61f443-ede6-4e4e-9db6-e79af634f9ad
2	Receive	Data	Receive	500	5d61f443-ede6-4e4e-9db6-e79af634f9ad

4. On the send side (e.g. RTG1) supply the data of the F-communication DB (Page 266) for the send direction with the data to be sent.
   For example:

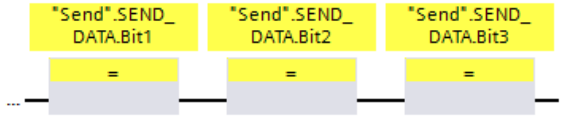

5. On the receive side (e.g. RTG2) , read the received data from the F-communication DB (Page 266) for the receive direction.
   For example:

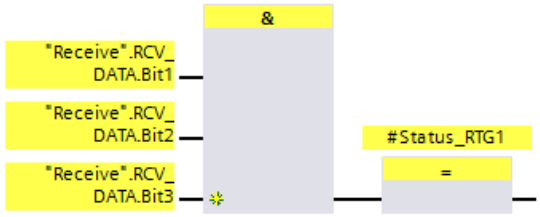

6. Call the instruction "UMOVE_BLK" in the F-runtime group for the send data (e.g. RTG1) in the FC for post processing (Page 77).
7. Interconnect the "UMOVE_BLK" instruction for the data to be sent as follows:

   "Send" is the F-communication DB (Page 266) of the F-runtime group that sends the data.
   "Receive" is the F-communication DB (Page 266) of the F-runtime group that receives the data.
8. Call the instruction "UMOVE_BLK" in the F-runtime group for acknowledgment (e.g. RTG2) in the FC for post processing (Page 85).
9. Interconnect the "UMOVE_BLK" instruction for the acknowledgment connection as follows:

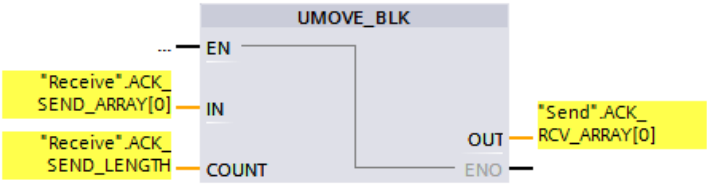

   "Receive" is the F-communication DB (Page 266) of the F-runtime group that sends the acknowledgment telegram.
   "Send" is the F-communication DB (Page 266) of the F-runtime group that receives the acknowledgment telegram.
10. Compile the user program.
11. Download the user program to the F-CPU.

WARNING

During acceptance, use the safety summary to verify that the offsets of all elements of the F-compliant PLC data types (UDT) match for the send and receive data within the safety message frame. For this purpose, all members and addresses are listed in the safety summary per UDT. *(S088)*

WARNING

When a new Flexible F-Link communication is created in the Safety Administration Editor, a unique F-communication UUID for the communication is provided by the system. By copying communications in the Safety Administration Editor within the parameterization table or when copying to another F-CPU, the F-communication UUIDs are not regenerated and are therefore not unique anymore. If the copy is used to configure a new communication relationship, you yourself must ensure the uniqueness. To do this, select the affected UUIDs and regenerate via the "Generate UUID" shortcut menu. The uniqueness must be checked in the safety summary during acceptance. *(S087)*

WARNING

It can only be ensured (from a fail-safe standpoint) that a signal state to be transferred will be acquired and transferred to the receiver if the signal level is pending for at least as long as the assigned monitoring time. *(S018)*

Up-to-dateness of tags read from another F-runtime group

The same statements as those in the section "F-runtime group communication (S7-300, S7-400) (Page 126)" apply (except for the storage locations written or read or initial values).

5.2.6 Deleting an F-runtime group

Deleting an F-runtime group

To delete an F-runtime group, proceed as follows:

1. In the area navigation of the *Safety Administration Editor*, click on the F-runtime group to be deleted.
2. Select the "Delete F-runtime group" button in the work area.
3. Confirm the dialog with "Yes".
4. Compile the safety program (Page 272) (menu command "Edit > Compile") to put your changes into effect.

The assignment of the F-blocks to an F-runtime group (to the calling block of the main safety block) is deleted. However, the F-blocks continue to exist.

5.2.7 Changing the F-runtime group (S7-300, S7-400)

Changing an F-runtime group

You can make the following changes for each F-runtime group in your safety program in the corresponding "F-runtime group" work area:

- Specify another block as the calling block of the main safety block.
- Specify another F-FB or F-FC as main safety block.
- Enter a different or new I-DB for the main safety block.
- Change the value for the maximum cycle time of the F-runtime group
- Specify another DB as a data block for F-runtime group communication.

5.2.8 Changing the F-runtime group (S7-1200, S7-1500)

Changing an F-runtime group

You can make the following changes for each F-runtime group in your safety program in the corresponding "F-runtime group" work area:

- Change the name, number, cycle time, phase shift and priority of the F-OB.
- Specify another F-FB or F-FC as main safety block.
- Enter a different or new I-DB for the main safety block.
- Change the value for the maximum cycle time and the cycle time warning limit of the F-runtime group.
- Assign another name for the F-runtime group information DB.
- Specify an FC for the preprocessing and postprocessing.

5.3 Creating F-blocks in FBD / LAD

5.3.1 Creating F-blocks

Introduction

In order to create F-FBs, F-FCs, and F-DBs for the safety program, you should follow the same basic procedure as in the standard. In the following, only the deviations from the procedure for standard blocks are presented.

Creating F-FBs, F-FCs, and F-DBs

You create F-blocks in the same way as for standard blocks. Proceed as follows:

1. In the project tree of the F-CPU or the Safety Unit, double-click on "Add new block" under "Program blocks".
2. In the dialog that appears, specify the type, name, and language and select the "Create F-block" check box. (If you do not select the check box, a standard block is created.)
3. After the dialog is confirmed, the F-block is opened in the *Program editor*.

Note the following

Note the following important instructions:

NOTE

- You may not declare block parameters in the block interface of the main safety block because they cannot be supplied.
- (S7-1200, S7-1500) You can edit start values in instance DBs.
- The function "Apply actual values" is not supported.
- You may not access static local data in single instances or multi-instances of other F-FBs.
- You must always initialize outputs of F-FCs.

  The F-CPU can go to STOP mode if the information above is not observed. The cause of the diagnostics event is entered in the diagnostics buffer of the F-CPU.
- (S7-300, S7-400) If you wish to assign an address from the data area (data block) to a formal parameter of an F-FC as an actual parameter, you have to use fully qualified DB access.
- Its inputs may only be accessed by a block in reading mode and its outputs only in writing mode.

  Use an in/out if you wish to have both read and write access.
- For greater clarity, assign meaningful names to the F-blocks you have created.

Copying/pasting F-blocks

You can copy F-FBs, F-FCs, and F-DBs in exactly the same was as blocks of the standard user program.
(S7-1200, S7-1500) You may not copy an F-OB.

Exceptions:

- You cannot copy blocks from the folder "Program blocks > System blocks".
- F-blocks cannot be copied from the Safety Unit to a standard unit and between the Safety Unit and the "Program blocks" folder of the F-CPU.

See also

Changing the F-runtime group (S7-1200, S7-1500) (Page 132)

5.3.2 Know-how protection

For know-how protection of F-blocks, proceed as described in the *STEP 7* help under "Protecting blocks".

Requirements

Note the following with regard to know-how protection of F-blocks for S7-1200/1500 F-CPUs:

- An F-block to which you wish to assign know-how protection must be called in the safety program.
- Before you can set up the know-how protection for an F-block, the safety program must be consistent. For this purpose, compile (Page 272) the safety program.

NOTE

No source code is output for know-how protected F-blocks in the safety summary. Therefore, create the safety summary (for example to carry out a code review or accept the F-block) before you set up the know-how protection.

NOTE

If you want to edit the program code and/or the block interface of a know-how protected F-block, we recommend that you do not open the F-block by entering a password, but rather remove the know-how protection completely and set it up again after compiling.

NOTE

(S7-1200, S7-1500) When a know-how protected F-block or F-blocks called by it are renamed, the signature of the know-how protected F-block is not changed until the password is entered when opening or removing the know-how protection.

NOTE

When know-how protected F-blocks are used, warnings and error messages whose cause can lie in the know-how protected F-blocks can be displayed during compilation of the safety program. The warnings and error messages contain corresponding information. Example: In a know-how protected F-block, you perform read access to a tag of the standard user program to which write access is taking place in a different (know-how protected) F-block.

For S7-1200/1500 F-CPUs, you can obtain additional information from the safety summary in the section "Know-how protected F-blocks in the safety program".

See also

Reuse of F-blocks (Page 134)

5.3.3 Reuse of F-blocks

Introduction

You can reuse F-blocks that you have already tested and, if applicable, approved, in other safety programs – without having to test and approve them again.

You can protect the content of the F-block by setting up the know-how protection. You may only set this protection after the acceptance of the F-block to ensure that the safety summary contains this F-block in its entirety.

Like standard blocks, you can store F-blocks as master copies or types in global libraries or in the project library.

Additional information can be found in the *STEP 7 help* under "Using libraries".

Creating safety documentation for the F-block to be reused

Create safety documentation with the following information for F-blocks that you want to reuse.

S7-300/400 F-CPUs

- Signature and initial value signature of the know-how protected F-block
- Versions of all the used versioned LAD/FBD instructions
- Signatures and initial value signatures of all called F-FBs and F-FCs
- Signatures of all F-DBs accessed by the fail-safe block to be reused.

S7-1200/1500 F-CPUs

- Signature of the know-how protected F-block
- Safety system version when setting up the know-how protection
- Versions of all the used versioned LAD/FBD instructions
- Signatures of all called F-FBs and F-FCs
- Signatures of all F-DBs accessed by the fail-safe block to be reused.

The safety documentation should also contain a description of the functionality of the F-block, in particular if it is know-how protected.

The required information is obtained by creating a safety summary of the safety program in which you originally created, tested and approved the F-block to be reused.

This safety summary can also serve directly as the safety documentation for the F-block to be reused.

Checks when using the F-block to be reused

When reusing the F-block, ensure the following:

- The signature and initial value signature (S7-300/400) of the F-block are unchanged.
- (SIMATIC S7-1200, S7-1500) The documented safety system version is set.
- The documented (or functionally identical) versions of the versioned LAD/FBD instructions are set. You can find information about the instruction versions in the description of the instructions.

- (S7-1200, S7-1500) The called and accessed F-blocks with the documented signatures are used.
- (S7-300, S7-400) The called F-blocks with the documented signatures and initial value signatures are used.

If the version conflicts cannot be eliminated due to other dependencies, please contact the author of the know-how protected block in order to obtain a compatible approved version.

See also

Compliance of the know-how protected F-blocks used in the safety program with their safety documentation. (Page 332)

5.4 Information interface to the safety program

5.4.1 F-shared DB (S7-300, S7-400)

Function

The F-shared DB is a fail-safe data block that contains all of the shared data of the safety program and additional information needed by the F-system. The F-shared DB is automatically inserted when the hardware configuration is compiled.

Using its name F_GLOBDB, you can evaluate certain data elements of the safety program in the standard user program.

Reading an F-shared DB in the standard user program

You can read out the following information in the F-shared DB in the standard user program or on an operator control and monitoring system:

- Operating mode: safety mode or disabled safety mode ("MODE" tag)
- Error information "Error occurred when executing safety program" ("ERROR" tag)
- Collective F-Signature ("F_PROG_SIG" tag)
- Compilation date of the safety program ("F_PROG_DAT" tag, DATE_AND_TIME data type)

You use fully qualified access to access these tags (e.g. ""F_GLOBDB".MODE").

5.4.2 F-runtime group information DB (S7-1200, S7-1500)

Introduction

The F-runtime group information DB provides key information on the corresponding F-runtime group and on the safety program as a whole.

The F-runtime group information DB is generated automatically when an F-runtime group is created. A symbol, for example, "RTG1SysInfo", is assigned for the F-runtime group information DB. You can change the name in the *Safety Administration Editor*.

You must not access the information in the "F_SYSINFO" parameter from the safety program.

Information in the F-runtime group information DB

The F-runtime group information DB provides the following information:

Name		Data type	For processing in the safety program	For processing in the standard user program	Description
MODE		BOOL	x	x	1 = Disabled safety mode
MODE_REMAINING_TIME		TIME	x	x	Remaining runtime in deactivated safety mode until the F-CPU switches to STOP *
F_SYSINFO					
	MODE	BOOL	—	x	1 = Disabled safety mode
	TCYC_CURR	DINT	—	x	Current cycle time of the F-runtime group, in ms
	TCYC_LONG	DINT	—	x	Longest cycle time of the F-runtime group, in ms
	TRTG_CURR	DINT	—	x	Current runtime of the F-runtime group, in ms
	TRTG_LONG	DINT	—	x	Longest runtime of the F-runtime group, in ms
	T1RTG_CURR	DINT	—	x	Not supported by *STEP 7 Safety V18*.
	T1RTG_LONG	DINT	—	x	Not supported by *STEP 7 Safety V18*.
	F_PROG_SIG	DWORD	—	x	Collective F-Signature of the safety program
	F_PROG_DAT	DTL	—	x	Compilation date of the safety program
	F_RTG_SIG	DWORD	—	x	F-runtime groups signature
	F_RTG_DAT	DTL	—	x	Compilation date of the F-runtime group
	VERS_S7SAF	DWORD	—	x	Version identifier for *STEP 7 Safety*

* When the F-CPU switches to STOP after the runtime for the deactivated safety mode has expired, the remaining time still present in the last cycle is displayed.

You access the content of the F-runtime group information DB with fully qualified addressing. Either collectively with the F_SYSINFO PLC data type (UDT), for example, "RTG1SysInfo.F_SYSINFO", provided by the F-system or individual information, for example, "RTG1SysInfo.F_SYSINFO.MODE".

See also

Program identification (Page 302)

5.5 Programming startup protection

Introduction

WARNING

STOP, for example, via programming device/PC, mode switch, communication function or "STP" instruction

Initiating STOP, for example, by means of programming device/PC operation, mode switch, communication function or "STP" instruction, as well as maintaining the STOP state is not safety-related. This STOP state can be easily (and unintentionally) revoked, for example, by programming device/PC operation.

When an F-CPU is switched from STOP to RUN mode, the standard user program starts up in the usual way. When the safety program is started, all DB contents of the F-DBs are generally reset to their start values from load memory. This means that saved error information is lost. The F-system automatically reintegrates the F-I/O.

If your process does not allow such a startup, you must program a restart/startup protection in the safety program: The output of process values must be blocked until a user acknowledgment is made (see "Implementation of user acknowledgment"). This user acknowledgment must not take place until it is possible to safely output process values and errors have been eliminated. *(S031)*

Example of restart/startup prevention

In order to implement a restart/startup prevention, it must be possible to detect a startup. To detect a startup, you declare a tag of data type BOOL with initial value "TRUE" in an F-DB.

Block the output of process data when this tag has the value "1," for example, by passivating F-I/O using the PASS_ON tag in the F-I/O DB.

If the output of the process values is safely possible and errors have been corrected, reset this tag by a user acknowledgment.

See also

Implementing User Acknowledgment in the Safety Program of the F-CPU of a DP Master or IO controller (Page 165)

Implementing user acknowledgment in the safety program of the F-CPU of a I-slave or I-device (Page 169)

F-I/O DB (Page 145)

F-I/O access

6

The following sections contain a general description of F-I/O access.
The following sections are only valid to a limited extent for technology modules (e.g. F-TM Count 1x1Vpp sin/cos HF). You can find more detailed information in the respective equipment manuals.

6.1 Addressing F-I/O

Overview

Below you will find a description of how to address the F-I/O in the safety program and which rules must be observed in the process.

Addressing via the process image

As with standard I/O, you access F-I/O (e.g., S7-1500/ET 200MP fail-safe modules) via the **process image** (PII and PIQ).
Direct reading (with I/O identification ":P") of inputs or writing of outputs is not possible in the safety program.

Updating the process image

The process image of the inputs of F-I/O is updated at the start of the F-runtime group. The process image of the outputs of F-I/O is updated at the end of the F-runtime group (see Program structure of the safety program (S7-300, S7-400) (Page 96) or Program structure of the safety program (S7-1200, S7-1500) (Page 98)). For more information on updating the process image, refer to the note in Data Transfer from the Safety Program to the Standard User Program (Page 172).
The communication required between the F-CPU (process image) and the F-I/O to update the process image uses a special safety protocol in accordance with PROFIsafe.

Rules

- You may only address a channel (channel value and value status) of an F-I/O in **one** F-runtime group. The first programmed addressing defines the assignment for the F-runtime group.
- You may only address a channel (channel value and value status) of an F-I/O with a unit that matches the data type of the channel.
  Example: To access input channels of data type BOOL, you must use the "input (bit)" (I x.y) unit. Access to the 16 consecutive input channels of the data type BOOL via the unit "input word" (IW x) is not possible.

- Analog channels always need to be entered in the tag table with data type INT or DINT. The data types WORD, DWORD and TIME are not permissible.
- Address only inputs and outputs that reference an actually existing channel (channel value and value status) (e.g. for an F-DO 10xDC24V with start address 10 only the outputs Q10.0 to Q11.1 for the channel values and the inputs I10.0 to I11.1 for the value status). Keep in mind that due to the special safety protocol, the F-I/O occupies a larger area of the process image than is required for the existing and enabled channels on the F-I/O (channel values and value status). To find the area of the process image where the channels (channel values and value status) are stored (channel structure), refer to the relevant manuals for the F-I/O.
- Channels can be disabled for certain F-I/O (such as ET 200SP fail-safe modules or S7-1500/ET 200MP fail-safe modules). Address only channels (channel value and value status) that are enabled in the hardware configuration. When you address channels that are disabled in the hardware configuration, a warning may be output when compiling the safety program.
- For certain F-I/O (such as ET 200SP fail-safe modules or S7-1500/ET 200MP fail-safe modules), a "1oo2 (2v2) sensor evaluation" can be specified. Two channels are grouped into one channel pair in this case, and the result of the "1oo2 sensor evaluation" is usually provided under the address of the channel with the lower channel number (see relevant manuals of the F-I/O). Address only this channel (channel value and value status) of the channel pair. When you address a different channel, a warning may be output when compiling the safety program.

⚠ WARNING

If you use an additional component between the F-CPU (S7-300/400) and the F-I/O that copies the safety message frame in accordance with PROFIsafe between the F-CPU (S7-300/400) and F-I/O per user program, you must test all safety functions affected by the copy function whenever you change the user-programmed copy function. *(S049)*

See also

Safety-Related I-Slave-Slave Communication - F-I/O Access (Page 217)
Value status (S7-1200, S7-1500) (Page 140)

6.2 Value status (S7-1200, S7-1500)

Properties

The value status is additional binary information for the channel value of an F-I/O. The value status is entered in the process image input (PII).

The value status is supported by S7-1500/ET 200MP, ET 200SP, ET 200AL, ET 200eco PN, ET 200S, ET 200iSP, ET 200pro, S7-1200 fail-safe modules or S7-300 F-SMs, fail-safe I/O standard devices as well as fail-safe DP standard slaves that support the "RIOforFA-Safety" profile. Information about the value status can be found in the documentation of the respective F-I/O.

We recommend you amend the name of the channel value with "_VS" for the value status, for example, "TagIn_1_VS".

The value status provides information on the validity of the corresponding channel value:

- 1: A valid process value is output for the channel.
- 0: A fail-safe value is output for the channel.

The channel value and value status of an F-I/O can only be accessed from the same F-runtime group.

Location of value status bits in the PII for F-I/O with digital inputs

The value status bits come straight after the channel values in the PII.

Table 6-1 Example: Address assignment in PII for F-I/O with 16 digital input channels

Byte in the F-CPU	Assigned bits in F-CPU per F-I/O:							
	7	6	5	4	3	2	1	0
x + 0	DI_7	DI_6	DI_5	DI_4	DI_3	DI_2	DI_1	DI_0
x + 1	DI_{15}	DI_{14}	DI_{13}	DI_{12}	DI_{11}	DI_{10}	DI_9	DI_8
x + 2	Value status DI_7	Value status DI_6	Value status DI_5	Value status DI_4	Value status DI_3	Value status DI_2	Value status DI_1	Value status DI_0
x + 3	Value status DI_{15}	Value status DI_{14}	Value status DI_{13}	Value status DI_{12}	Value status DI_{11}	Value status DI_{10}	Value status DI_9	Value status DI_8

x = Module start address

The location of the channel values in the PII can be found in the device manual for the F-I/O.

Location of value status bits in the PII for F-I/O with digital outputs

The value status bits in the PII are mapped with the same structure as the channel values in the PIQ.

Table 6-2 Example: Address assignment in PIQ for F-I/O with 4 digital output channels

Byte in the F-CPU	Assigned bits in F-CPU per F-I/O:							
	7	6	5	4	3	2	1	0
x + 0	—	—	—	—	DQ_3	DQ_2	DQ_1	DQ_0

x = Module start address

Table 6-3 Example: Address assignment in PII for F-I/O with 4 digital output channels

Byte in the F-CPU	Assigned bits in F-CPU per F-I/O:							
	7	6	5	4	3	2	1	0
x + 0	—	—	—	—	Value status DQ_3	Value status DQ_2	Value status DQ_1	Value status DQ_0

x = Module start address

The location of the channel values in the PIQ can be found in the device manual for the F-I/O.

Location of value status bits in the PII for F-I/O with digital outputs and digital inputs

The value status bits come directly after the channel values in the PII in the following order:

- Value status bits for the digital inputs
- Value status bits for the digital outputs

Table 6-4 Example: Address assignment in PIQ for F-I/O with 2 digital input channels and 1 digital output channel

Byte in the F-CPU	Assigned bit in the F-CPU per F-I/O:							
	7	6	5	4	3	2	1	0
x + 0	—	—	—	—	—	—	—	DQ_0

x = Module start address

Table 6-5 Example: Address assignment in PII for F-I/O with 2 digital input channels and 1 digital output channel

Byte in the F-CPU	Assigned bits in F-CPU per F-I/O:							
	7	6	5	4	3	2	1	0
x + 0	—	—	—	—	—	—	DI_1	DI_0
x + 1	—	—	—	—	—	—	Value status DI_1	Value status DI_0
x + 2	—	—	—	—	—	—	—	Value status DQ_0

x = Module start address

The location of the channel values in the PII and PIQ can be found in the device manual for the F-I/O.

Location of value status bits in the PII for F-I/O with analog inputs

The value status bits come straight after the channel values in the PII.

Table 6-6 Example: Address assignment in PII for F-I/O with 6 analog input channels (data type INT)

Byte in the F-CPU	Assigned bytes/bits in the F-CPU per F-I/O:							
	7	6	5	4	3	2	1	0
x + 0	Channel value AI_0							
...	...							
x + 10	Channel value AI_5							
x + 12	—	—	Value status AI_5	Value status AI_4	Value status AI_3	Value status AI_2	Value status AI_1	Value status AI_0

x = Module start address

The location of the channel values in the PII can be found in the device manual for the F-I/O.

Location of value status bits in the PII for F-I/O with analog outputs

The value status bits are mapped in the PII.

Table 6-7 Example: Address assignment in PIQ for F-I/O with 6 analog output channels (data type INT)

Byte in the F-CPU	Assigned bytes in the F-CPU per F-I/O:							
	7	6	5	4	3	2	1	0
x + 0	Channel value AO_0							
...	...							
x + 10	Channel value AO_5							

x = Module start address

Table 6-8 Example: Address assignment in PII for F-I/O with 6 analog output channels (data type INT)

Byte in the F-CPU	Assigned bits in F-CPU per F-I/O:							
	7	6	5	4	3	2	1	0
x + 0	—	—	Value status AO_5	Value status AO_4	Value status AO_3	Value status AO_2	Value status AO_1	Value status AO_0

x = Module start address

The location of the channel values in the PIQ can be found in the device manual for the F-I/O.

6.3 Process Data or Fail-Safe Values

When are fail-safe values used?

The safety function requires that fail-safe values (0) be used instead of process data for passivation of the entire F-I/O or individual channels of an F-I/O in the following cases. This applies both to digital channels (data type BOOL) as well as for analog channels (data type INT or DINT):

- When the F-system starts up
- When errors occur during safety-related communication (communication errors) between the F-CPU and F-I/O using the safety protocol in accordance with PROFIsafe
- When F-I/O faults and channel faults occur (such as wire break, short circuit, and discrepancy errors)
- As long as you enable passivation of the F-I/O with PASS_ON = 1 in the F-I/O DB (see below)
- As long as you disable the F-I/O with DISABLE = 1 in the F-I/O DB (see below)

Fail-safe value output for F-I/O/channels of an F-I/O

When **passivation** occurs for an **F-I/O with inputs**, the F-system provides the safety program with fail-safe values (0) in the PII instead of the process data pending at the fail-safe inputs of the F-I/O.

The overflow or underflow of a channel of the **SM 336; AI 6 x 13Bit** or **SM 336; F-AI 6 x 0/4 ... 20 mA HART** is recognized by the F-system as an F-I/O/channel fault. The fail-safe value 0 is provided in place of $7FFF_H$ (for overflow) or 8000_H (for underflow) in the PII for the safety program.

If you want to process fail-safe values other than "0" in the safety program for an F-I/O with inputs **for analog channels of data type INT or DINT**, you can assign individual fail-safe values for QBAD = 1 and value status = 0 or QBAD_I_xx/QBAD_O_xx = 1 (instructions JMP/JMPN, LABEL and MOVE). For details about the characteristics go to QBAD/PASS_OUT/DISABLED/QBAD_I_xx/QBAD_O_xx and value status (Page 150).

WARNING

For an F-I/O with digital input channels (data type BOOL), the value provided in the PII must always be processed in the safety program, regardless of the value status or QBAD/QBAD_I_xx. *(S009)*

When **passivation** occurs in an **F-I/O with outputs**, the F-system outputs fail-safe values (0) at the fail-safe outputs instead of the output values provided by the safety program in the PIQ.

<table>
<tr><th>State of associated PAA/PIQ by ...</th><th>F-I/O with "RIOforFA-Safety" profile with S7-1200/1500 F-CPUs</th><th>F-I/O without "RIOforFA-Safety" profile with S7-1200/1500 F-CPUs</th><th>F-I/O with S7-300/400 F-CPUs</th></tr>
<tr><td>Startup of F-system</td><td colspan="3" rowspan="2">The F-system overwrites the PII/PIQ with fail-safe values (0).</td></tr>
<tr><td>Communication errors</td></tr>
<tr><td>F-I/O faults</td><td rowspan="3">The F-system overwrites the PII with fail-safe values (0). In the PII the values formed in the safety program are retained.</td><td colspan="2" rowspan="2">The F-system overwrites the PII/PIQ with fail-safe values (0).</td></tr>
<tr><td>Channel faults in configuration of passivation for complete F-I/O</td></tr>
<tr><td>Channel faults during configuration of channel-granular passivation</td><td colspan="2">For the affected channels: The F-system overwrites the PII/PIQ with fail-safe values (0).</td></tr>
<tr><td>As long as passivation of the F-I/O is activated in the F-I/O DB with PASS_ON = 1</td><td colspan="3">The F-system overwrites the PII/PIQ with fail-safe values (0).</td></tr>
<tr><td>As long as the F-I/O is deactivated in the F-I/O DB with DISABLE = 1</td><td colspan="2">The F-system overwrites the PII/PIQ with fail-safe values (0).</td><td>-</td></tr>
</table>

Reintegration of F-I/O/channels of an F-I/O

The switchover from fail-safe values (0) to process data (**reintegration of an F-I/O**) takes place **automatically** or following **user acknowledgment** in the F-I/O DB. The reintegration method depends on the following:

- The reason for passivation of the F-I/O or channels of the F-I/O
- At F-I/Os without the "Channel failure acknowledge" channel parameter on the value of the ACK_NEC variable of the associated F-IO data blocks (Page 145).
- At F-I/Os with the "Channel failure acknowledge" channel parameter (for example F-modules S7-1500 / ET 200 MP / F-modules SIMATIC S7-1200) on the value of the channel parameter.

For fail-safe GSD based DP slaves / GSD based I/O devices with "RIOforFA-Safety" profile, consult the respective documentation.

NOTE

Note that for channel faults in the F-I/O, channel-granular passivation takes place if configured accordingly in the *hardware and network editor*. For the concerned channels, fail-safe values (0) are output.

Reintegration after channel faults reintegrates all channels whose faults were eliminated; faulty channels remain passivated.

See also

Configuring F-I/O (Page 47)

6.4 F-I/O DB

Introduction

An F-I/O DB is automatically generated for each F-I/O (in safety mode) when the F-I/O is configured in the *hardware and network editor*. The F-I/O DB contains tags that you can evaluate or can/must write to in the safety program. It is not permitted to change the initial values of the tags directly in the F-I/O DB. When an F-I/O is deleted, the associated F-I/O DB is also deleted.

Access to an F-I/O DB

You access tags of the F-I/O DB for the following reasons:

- For reintegration of F-I/O after communication errors, F-I/O faults, or channel faults
- If you want to passivate the F-I/O depending on particular states of your safety program (for example, group passivation)
- If you want to deactivate the F-I/O (for example, configuration control)
- For changing parameters for fail-safe GSD based DP slaves/GSD based I/O devices
- If you want to evaluate whether fail-safe values or process data are output

6.4.1 Name and number of the F-I/O DB

The name of the F-I/O DB is formed by:

- the fixed prefix "F"
- the start address of the F-I/O, and the names entered in the properties of the F-I/O in the *hardware and network editor* or in the device view (max. the first 24 characters)

Example: F00004_F-DI24xDC24V_1

The number is assigned within the number range defined in the "Settings" area (Page 80) of the *Safety Administration Editor*.

Option "Creates F-I/O DBs without prefix" (S7-1200, S7-1500)

When you select the option "Creates F-I/O DBs without prefix" in the "Settings" (Page 80) area in the *Safety Administration Editor*, the name is formed only from:

- the name entered in the properties of the F-I/O in the *hardware and network editor* or in the device view (max. 117 characters)

Example: F-DI24xDC24V_1

Changing the name and number of the F-I/O DB

You change the name by changing the name entered in the properties of the F-I/O in the *hardware and network editor* or in the device view.
You change the number in the "Properties"/"F-parameters" tab of the associated F-I/O.

6.4.2 Tags of the F-I/O DB

The following table presents the variables of an F-I/O DB:

	Tag	Data type	Function	Initial value
Tags that you can or must write	PASS_ON	BOOL	1=enable passivation	0
	ACK_NEC	BOOL	1=acknowledgment for reintegration required in the event of F-I/O or channel faults	1
	ACK_REI	BOOL	1=acknowledgment for reintegration	0
	IPAR_EN	BOOL	Tag for parameter reassignment of fail-safe GSD based DP slaves/GSD based I/O devices or, in the case of SM 336; F-AI 6 x 0/4 ... 20 mA HART, for enabling HART communication	0
	DISABLE*	BOOL	1=Deactivate F-I/O	0
Tags that you can evaluate	PASS_OUT	BOOL	Passivation output	1
	QBAD	BOOL	1=Fail-safe values are output	1
	ACK_REQ	BOOL	1=Acknowledgment request for reintegra-tion	0
	IPAR_OK	BOOL	Tag for parameter reassignment of fail-safe GSD based DP slaves/GSD based I/O devices or, in the case of SM 336; F-AI 6 x 0/4 ... 20 mA HART, for enabling HART communication	0
	DIAG	BYTE	Non-fail safe service information	0
	DISABLED*	BOOL	1=F-I/O is deactivated	0
	QBAD_I_xx	BOOL	1=fail-safe values are output to input chan-nel xx (S7-300/400)	1

* as of Safety system version V2.1 for S7-1200/1500

	Tag	Data type	Function	Initial value
Tags that you can evaluate	QBAD_O_xx	BOOL	1=fail-safe values are output to output channel xx (S7-300/400)	1

* as of Safety system version V2.1 for S7-1200/1500

Differences in evaluation in S7-1200/1500 F-CPUs and S7-300/400

The following table describes the differences in the evaluation of tags of the F-I/O DB and the value status depending on the F-I/O and F-CPU used.

Tag in the F-I/O DB or value status	F-I/O with "RIOforFA-Safety" profile with S7-1200/1500 F-CPU	F-I/O without "RIOforFA-Safety" profile with S7-1200/1500 F-CPU	F-I/O with S7-300/400 F-CPU
ACK_NEC	—[2]	x	x
QBAD[3]	x	x	x
PASS_OUT[3]	x	x	x
QBAD_I_xx[1]	—	—	x
QBAD_O_xx[1]	—	—	x
Wertstatus[1]	x	x	—

1 QBAD_I_xx and QBAD_O_xx display the validity of the channel value channel-granular and thus correspond to the inverted value status with S7-1200/1500. Value status or QBAD_I_xx and QBAD_O_xx are not available with fail-safe DP GSD based slaves or fail-safe GSD based I/O devices without the "RIOforFA-Safety" profile.

2 In the case of F-I/Os that support the "Channel failure acknowledge" channel parameter (for example S7-1500/ET 200MP F-modules or S7-1200 F-modules), this replaces the ACK_NEC variable of the F-IO data block.

3 For details about the characteristics, see "QBAD/PASS_OUT/DISABLED/QBAD_I_xx/QBAD_O_xx and value status"

6.4.2.1 PASS_ON

The PASS_ON tag allows you to enable passivation of an F-I/O, for example, depending on particular states in your safety program.
Using the PASS_ON tag in the F-I/O DB, you can passivate F-I/O; channel-granular passivation is not possible.
As long as PASS_ON = 1, **passivation** of the associated F-I/O occurs.

6.4.2.2 ACK_NEC

If an F-I/O fault is detected by the F-I/O, **passivation** of the relevant F-I/O occurs. If channel faults are detected and channel granular passivation is configured, the relevant channels are passivated. If passivation of the entire F-I/O is configured, all channels of the relevant F-I/O are passivated. Once the F-I/O fault or channel fault has been eliminated, **reintegration** of the relevant F-I/O occurs, depending on ACK_NEC:

- With ACK_NEC = 0, you can assign an **automatic reintegration**.
- With ACK_NEC = 1, you can assign a **reintegration** by **user acknowledgment**.

WARNING

The parameter assignment of the ACK_NEC = 0 tag is only allowed if automatic reintegration is permitted for the relevant process from a safety standpoint. *(S010)*

NOTE

The initial value for ACK_NEC is 1 after creation of the F-I/O DB. If you do not require automatic reintegration, you do not have to write ACK_NEC.

See also

After F-I/O or channel faults (Page 158)

6.4.2.3 ACK_REI

When the F-system detects a communication error or an F-I/O fault for an F-I/O, the relevant F-I/O is passivated. If channel faults are detected and channel granular passivation is configured, the relevant channels are passivated. If passivation of the entire F-I/O is configured, all channels of the relevant F-I/O are passivated. **Reintegration** of the F-I/O/channels of the F-I/O after the fault has been eliminated requires a **user acknowledgment** with a positive edge at variable ACK_REI of the F-I/O DB:

- After every communication error
- After F-I/O or channel faults only with parameter assignment "Channel failure acknowledgement = manual" or ACK_NEC = 1

Reintegration after channel faults reintegrates all channels whose faults were eliminated.

Acknowledgment is not possible until tag ACK_REQ = 1.

In your safety program, you must provide a user acknowledgment by means of the ACK_REI tag for each F-I/O.

WARNING

For the user acknowledgement, you must interconnect the ACK_REI tag of the F--I/O DB with a signal generated by an operator input. An interconnection with an automatically generated signal is not permitted. *(S011)*

NOTE

Alternatively, you can use the "ACK_GL" instruction to carry out reintegration of the F-I/O following communication errors or F-I/O/channel faults (ACK_GL: Global acknowledgment of all F-I/O in an F-runtime group (STEP 7 Safety V18) (Page 443)).

6.4.2.4 IPAR_EN

The IPAR_EN tag corresponds to the iPar_EN_C tag in the PROFIsafe bus profile as of PROFIsafe Specification V1.20 and higher.

Fail-safe GSD based DP slaves/GSD based I/O devices

To find out when this tag must be set or reset when parameters of fail-safe GSD based DP slaves/GSD based I/O devices are reassigned, consult the PROFIsafe Specification V1.20 or higher or the documentation for the fail-safe GSD based DP slave/GSD based I/O device.

Note that IPAR_EN = 1 does not trigger passivation of the relevant F-I/O.

If passivation is to occur when IPAR_EN = 1, you must also set tag PASS_ON = 1.

HART communication with SM 336; F-AI 6 x 0/4 ... 20 mA HART

If you set the IPAR_EN tag to "1" while parameter "HART_Tor" = "switchable" is assigned, the HART communication for the SM 336; F-AI 6 x 0/4 ... 20 mA HART is enabled. Setting this tag to "0" disables the HART communication. The F-SM acknowledges the enabled or disabled HART communication with tag IPAR_OK = 1 or 0.

Enable HART communication only when your system is in a status, in which any reassignment of parameters for an associated HART device can be done without any risk.

If you want to evaluate the "HART communication enabled" status in your safety program, e.g., for the purpose of programming interlocks, you must build up the information as shown in the following example. This is necessary to ensure that the information is properly available even if communication errors occur while the HART communication is enabled with IPAR_EN = 1. Only change the status of the IPAR_EN tag during this evaluation if there is no passivation due to a communication error or F-I/O or channel fault.

Example of enabling HART communication

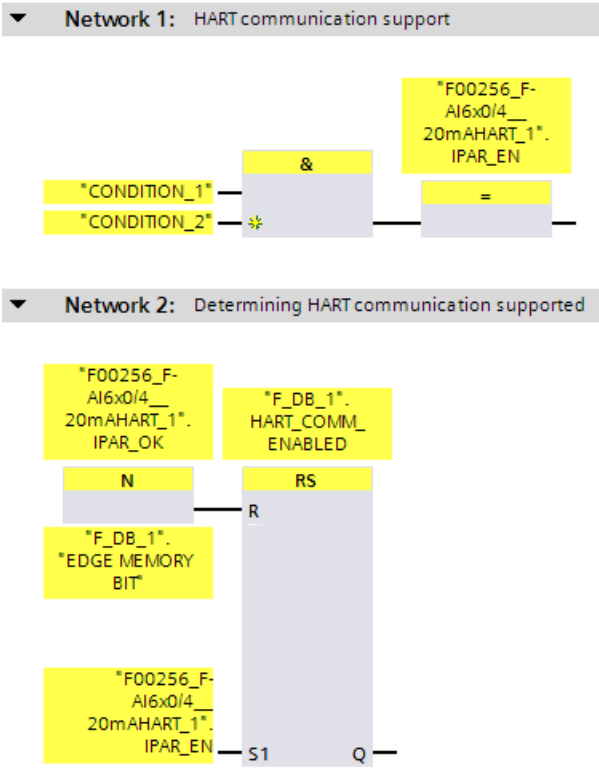

Additional information on HART communication with SM 336; F-AI 6 x 0/4 ... 20 mA HART can be found in the Automation System S7-300, ET 200M Distributed I/O System manual, Fail-Safe Signal Modules (http://support.automation.siemens.com/WW/view/en/19026151) manual and in the help on the F-module.

6.4.2.5 DISABLE

The DISABLE variable allows you to deactivate an F-I/O.
As long as DISABLI = 1, the associated F-I/Os are **passivated**.
Diagnostics entries of the safety program may no longer be entered in the diagnostics buffer of the F-CPU for this F-I/O (for example, due to communication error).
Existing diagnostics entries are marked as outgoing.

6.4.2.6 QBAD/PASS_OUT/DISABLED/QBAD_I_xx/QBAD_O_xx and value status

The following table set outs differences in the reaction of the channel values and QBAD, PASS_OUT, DISABLED, QBAD_I_xx/QBAD_O_xx variables and of the value status depending on the F-I/O and F-CPU used.

<table>
<tr><th>Fail-safe value output after...</th><th>F-I/O with "RIOforFA-Safety" profile with S7-1200/1500 F-CPU</th><th>F-I/O without profile "RIOforFA-Safety" with S7-1200/1500 F-CPUs</th><th>F-I/O with S7-300/400 F-CPU</th></tr>
<tr><td>Startup of F-system</td><td colspan="2" rowspan="4">QBAD and PASS_OUT = 1
DISABLED unchanged
For all channels:
Channel value = fail-safe value (0)
Value status = 0*</td><td rowspan="4">QBAD and PASS_OUT = 1
For all channels:
Channel value = fail-safe value (0)
QBAD_I_xx and QBAD_O_xx = 1*</td></tr>
<tr><td>Communication errors</td></tr>
<tr><td>F-I/O faults</td></tr>
<tr><td>Channel faults
in configuration of passivation for complete F-I/O</td></tr>
<tr><td>Channel faults during configuration of channel-granular passivation</td><td>QBAD, PASS_OUT and DISABLED unchanged
For the affected channels:
Channel value = fail-safe value (0)
Value status = 0</td><td>QBAD and PASS_OUT = 1
DISABLED unchanged
For the affected channels:
Channel value = fail-safe value (0)
Value status = 0*</td><td>QBAD and PASS_OUT = 1
For the affected channels:
Channel value = fail-safe value (0)
QBAD_I_xx and QBAD_O_xx = 1*</td></tr>
<tr><td>As long as passivation of the F-I/O is activated in the F-I/O DB with PASS_ON = 1</td><td colspan="2">QBAD = 1, PASS_OUT and DISABLED unchanged
For all channels:
Channel value = fail-safe value (0)
Value status = 0*</td><td>QBAD = 1, PASS_OUT unchanged
For all channels:
Channel value = fail-safe value (0)
QBAD_I_xx and QBAD_O_xx = 1*</td></tr>
<tr><td>As long as the F-I/O is deactivated in the F-I/O DB with DISABLE = 1</td><td colspan="2">QBAD, PASS_OUT and DISABLED = 1
For all channels:
Channel value = fail-safe value (0)
Value status = 0*</td><td>-</td></tr>
</table>

* Value status or QBAD_I_xx and QBAD_O_xx are not available for fail-safe GSD based DP slaves and fail-safe GSD based I/O devices without the "RIOforFA-Safety" profile.

6.4.2.7 ACK_REQ

When the F-system detects a communication error or an F-I/O fault or channel fault for an F-I/O, the relevant F-I/O or individual channels of the F-I/O are passivated. ACK_REQ = 1 signals that **user acknowledgment** is required for reintegration of the relevant F-I/O or channels of the F-I/O.

The F-system sets ACK_REQ = 1 as soon as the fault has been eliminated and user acknowledgment is possible. For channel-granular passivation, the F-system sets ACK_REQ = 1 as soon as the channel fault is corrected. User acknowledgment is possible for this fault. Once acknowledgment has occurred, the F-system resets ACK_REQ to 0.

NOTE

For F-I/O with outputs, acknowledgment after F-I/O or channel faults may only be possible some minutes after the fault has been eliminated, until the necessary test signal is applied (see *F-I/O manuals*).

6.4.2.8 IPAR_OK

The IPAR_OK tag corresponds to the iPar_OK_S tag in the PROFIsafe bus profile, PROFIsafe Specification V1.20 and higher.

Fail-safe GSD based DP slaves/GSD based I/O devices

To find out how to evaluate this tag when parameters of fail-safe GSD based DP slaves or GSD based I/O devices are reassigned, consult the PROFIsafe Specification V1.20 or higher or the documentation for the fail-safe GSD based DP slave/GSD based I/O device.

For HART communication with SM 336; F-AI 6 x 0/4 ... 20 mA HART see Chapter IPAR_EN (Page 149).

6.4.2.9 DIAG

The DIAG tag provides non-fail-safe information (1 byte) about errors or faults that have occurred for service purposes. You can read out this information by means of operator control and monitoring systems or, if applicable, you can evaluate it in your standard user program. DIAG bits are saved until you perform an acknowledgment with the ACK_REI tag or until automatic reintegration takes place.

Structure of DIAG

Bit no.	Assignment	Possible error causes	Remedies
Bit 0	Timeout detected by F-I/O	The PROFIBUS/PROFINET connection between F-CPU and F-I/O is faulty. The value of the F-monitoring time for the F-I/O is set too low. The F-I/O are receiving invalid parameter assignment data or	• Check the PROFIBUS/PROFINET connection and ensure that there are no external sources of interference. • Check the parameter assignment of the F-I/O. If necessary, set a higher value for the monitoring time. Recompile the hardware configuration, and download it to the F-CPU. Recompile the safety program. • Check the diagnostics buffer of the F-I/O. • Turn the power of the F-I/O off and back on.
		Internal F-I/O fault or	Replace F-I/O

[1] Not for F-I/O that support the "RIOforFA-Safety" profile.

[2] For S7-300/400 F-CPUs only

[3] For S7-1200/1500 F-CPUs only

Bit no.	Assignment	Possible error causes	Remedies
Bit 0	Timeout detected by F-I/O	Internal F-CPU fault	Replace F-CPU
Bit 1	F-I/O fault or channel fault detected by F-I/O[1]	See *F-I/O manuals*	See *F-I/O manuals*
Bit 2	CRC error or sequence number error detected by F-I/O	See description for bit 0	See description for bit 0
Bit 3	Reserved	—	—
Bit 4	Timeout detected by F-system	See description for bit 0	See description for bit 0
Bit 5	Sequence number error detected by F-system[2]	See description for bit 0	See description for bit 0
Bit 6	CRC-error detected by F-system	See description for bit 0	See description for bit 0
Bit 7	Addressing error[3]	—	Contact Service & Support

[1] Not for F-I/O that support the "RIOforFA-Safety" profile.

[2] For S7-300/400 F-CPUs only

[3] For S7-1200/1500 F-CPUs only

6.4.3 Accessing tags of the F-I/O DB

Rule for accessing tags of the F-I/O DB

Tags of the F-I/O DB of an F-I/O can only be accessed from the F-runtime group from which the channels of this F-I/O are accessed (if access is made).

"Fully qualified DB access"

You can access the tags of the F-I/O DB via a "fully qualified DB access" (that is, by specifying the name of the F-I/O DB and by specifying the name of the tag).

Example of evaluating the QBAD tag

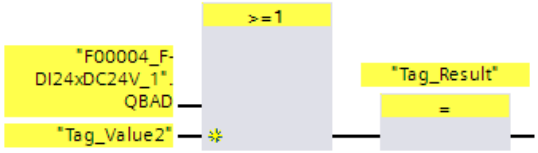

See also

F-I/O DB (Page 145)

6.5 Passivation and reintegration of F-I/O

Overview

In the following you can find information on passivation and reintegration of F-I/O.

Signal sequence charts

The signal sequences presented below represent typical signal sequences for the indicated behavior.

Actual signal sequences and, in particular, the relative position of the status change of individual signals can deviate from the given signal sequences within the scope of known "fuzzy" cyclic program execution factors, depending on the following:

- The F-I/O used
- The F-CPU used
- The cycle time of the (F-)OB in which the associated F-runtime group is called
- The target rotation time of the PROFIBUS DP or the update time of the PROFINET IO

NOTE

The signal sequences shown refer to the status of signals in the user's safety program.

6.5.1 After startup of F-system

Behavior after a startup

Fail-safe value output after startup of the F-system	F-I/O with "RIOforFA-Safety" profile with S7-1200/1500 F-CPU	F-I/O without profile "RIOforFA-Safety" with S7-1200/1500 F-CPU	Every F-I/O with S7-300/400 F-CPU
Passivation of the entire F-I/O occurs during startup.	QBAD and PASS_OUT = 1 For **all** channels: Channel value = fail-safe value (0) Value status = 0*		QBAD and PASS_OUT = 1 For **all** channels: Channel value = fail-safe value (0) QBAD_I_xx and QBAD_O_xx = 1*

* Value status or QBAD_I_xx and QBAD_O_xx are not available for fail-safe GSD based DP slaves and fail-safe GSD based I/O devices without the "RIOforFA-Safety" profile.

Reintegration of F-I/O

Reintegration of the F-I/O, i.e. the provision of process values in the PII or the output of process values provided in the PIQ at the fail-safe outputs, takes place **automatically**, regardless of the setting at the ACK_NEC tag or the configuration "Channel failure acknowledge", no sooner than the second cycle of the F-runtime group after F-system startup.

You can find additional information on pending F-communication, F-I/O or channel errors during startup of the F-system in the sections After communication errors (Page 156) and After F-I/O or channel faults (Page 158).

For fail-safe GSD based DP slaves/GSD based I/O devices with "RIOforFA-Safety" profile, consult the respective documentation for the fail-safe GSD based DP slave/GSD based I/O device.

Depending on the F-I/O you are using and the cycle time of the F-runtime group and PROFIBUS DP/PROFINET IO, several cycles of the F-runtime group can elapse before reintegration occurs.

If communication between the F-CPU and F-I/O takes longer to establish than the F-monitoring time set in the properties for the F-I/O, automatic reintegration does not take place.

Signal sequence for passivation and reintegration of F-I/O after F-system startup

Example for an F-I/O with inputs:

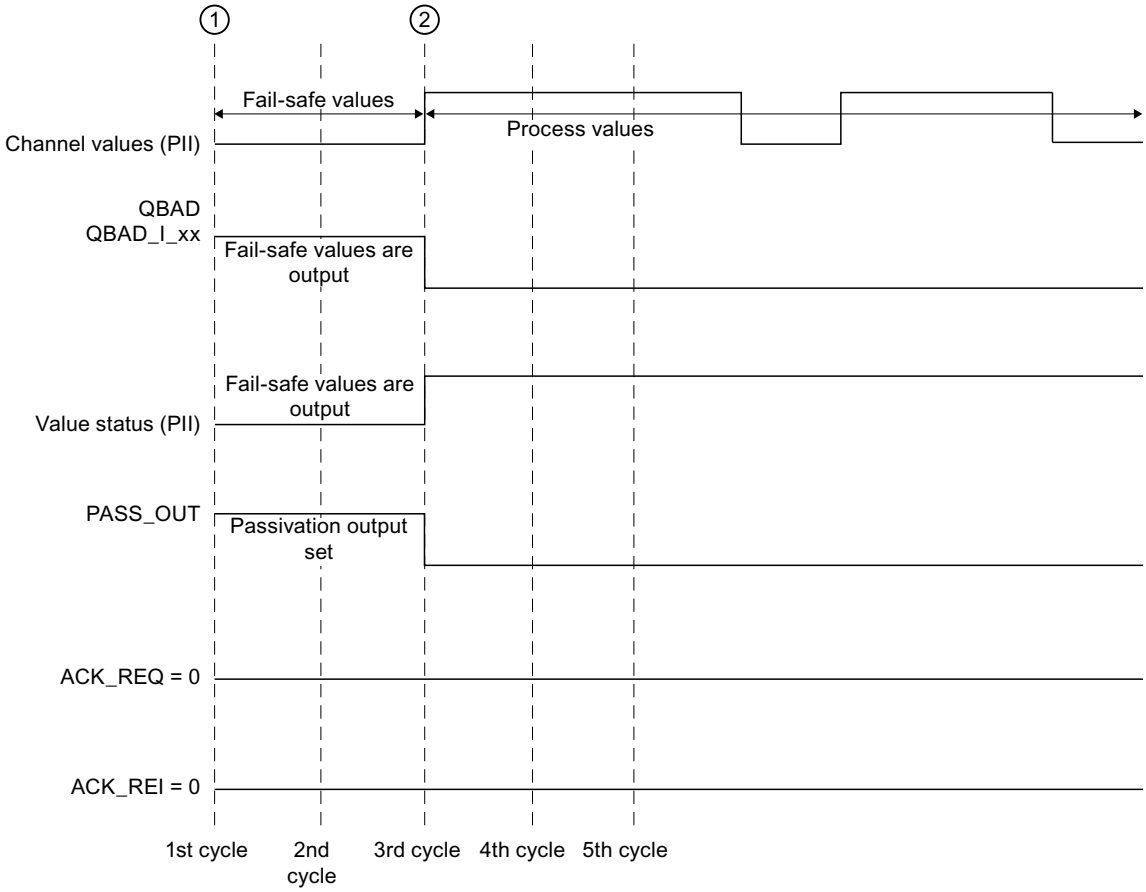

① Startup of F-system/passivation

② Automatic reintegration (e.g. third cycle)

WARNING

When an F-CPU is switched from STOP to RUN mode, the standard user program starts up in the usual way. When the safety program is started up, all F-DBs are initialized with the values from the load memory - as is the case with a cold restart. This means that saved error information is lost.

The F-system automatically reintegrates the F-I/O, as described above.

An operating error or an internal error can also trigger a startup of the safety program with the values from the load memory. If your process does not allow such a startup, you must program a restart/startup protection in the safety program: The output of process values must be blocked until a user acknowledgment is made (see "Implementation of user acknowledgment"). This user acknowledgment must not take place until it is possible to safely output process values and errors have been eliminated. *(S008)*

6.5.2 After communication errors

Behavior after communication errors

Fail-safe value output after communication errors	F-I/O with "RIOforFA-Safety" profile with S7-1200/1500 F-CPU	F-I/O without profile "RIOforFA-Safety" with S7-1200/1500 F-CPU	Every F-I/O with S7-300/400 F-CPU
If a communication error between the F-CPU and the F-I/O is detected, all channels of the entire F-I/O are passivated.	QBAD and PASS_OUT = 1 For **all** channels: Channel value = fail-safe value (0) Value status = 0*		QBAD and PASS_OUT = 1 For **all** channels: Channel value = fail-safe value (0) QBAD_I_xx and QBAD_O_xx = 1*

* Value status or QBAD_I_xx and QBAD_O_xx are not available for fail-safe GSD based DP slaves and fail-safe GSD based I/O devices without the "RIOforFA-Safety" profile.

Reintegration of F-I/O

Reintegration of the relevant F-I/O, that is, provision of process values in the PII or output of process data provided in the PIQ at the fail-safe outputs, takes place only when the following occurs:

- All communication errors have been eliminated and the F-system has set tag ACK_REQ = 1
- A **user acknowledgment** with a positive edge has occurred:
  - At the ACK_REI tag of the F-I/O DB (Page 148) or
  - At the ACK_REI_GLOB input of the "ACK_GL" instruction (ACK_GL: Global acknowledgment of all F-I/O in an F-runtime group (STEP 7 Safety V18) (Page 443))

Signal sequence for passivation and reintegration of F-I/O after communication errors

Example for an F-I/O with inputs:

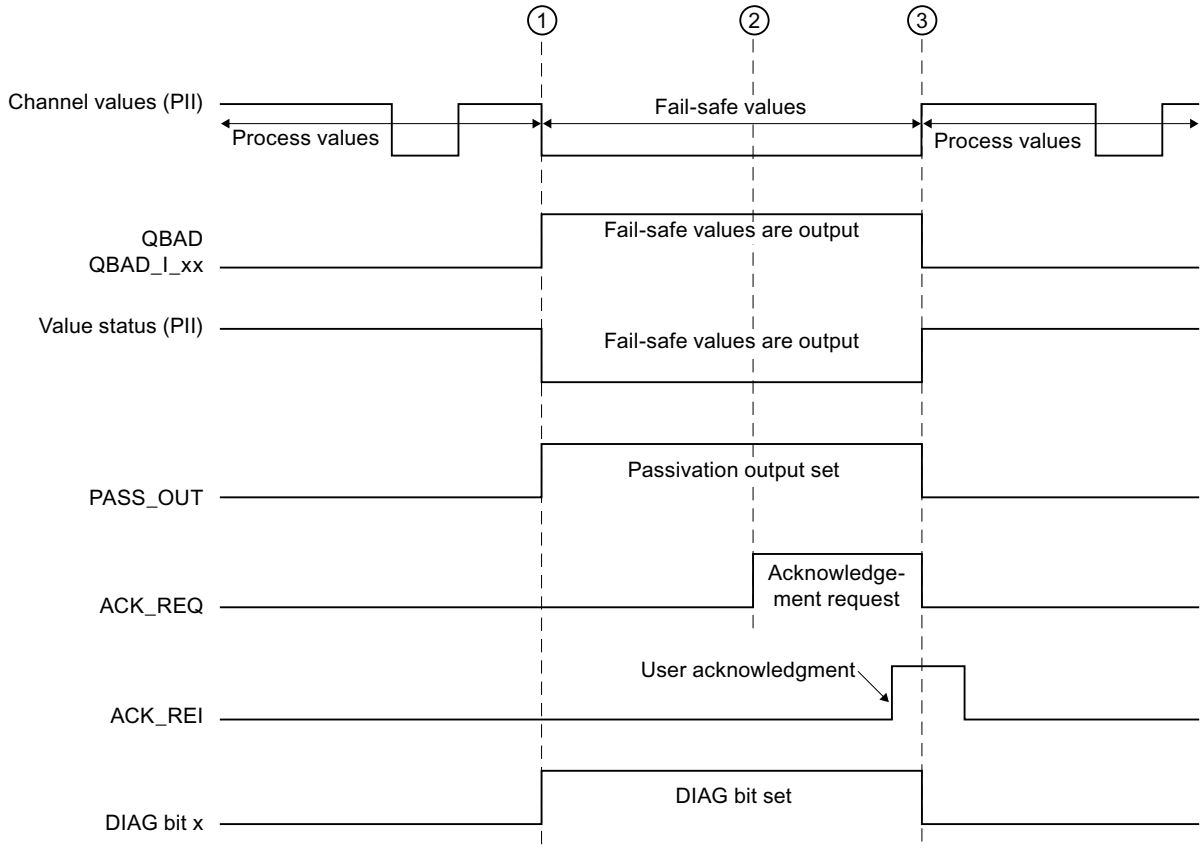

① Communication error/passivation

② All communication errors have been eliminated

③ Reintegration

See also

Implementing User Acknowledgment in the Safety Program of the F-CPU of a DP Master or IO controller (Page 165)

Implementing user acknowledgment in the safety program of the F-CPU of a I-slave or I-device (Page 169)

6.5.3 After F-I/O or channel faults

Behavior after F-I/O faults

Fail-safe value output after F-I/O faults	F-I/O with "RIOforFA-Safety" profile with S7-1200/1500 F-CPU	F-I/O without profile "RIOforFA-Safety" with S7-1200/1500 F-CPU	Every F-I/O with S7-300/400 F-CPU
If an F-I/O fault is detected by the F-system, passivation of all channels of the entire F-I/O occurs.	QBAD and PASS_OUT = 1 For **all** channels: Channel value = fail-safe value (0) Value status = 0*		QBAD and PASS_OUT = 1 For **all** channels: Channel value = fail-safe value (0) QBAD_I_xx and QBAD_O_xx = 1*

* Value status or QBAD_I_xx and QBAD_O_xx are not available for fail-safe GSD based DP slaves and fail-safe GSD based I/O devices without the "RIOforFA-Safety" profile.

Behavior after channel fault

Fail-safe value output after channel faults	F-I/O with "RIOforFA-Safety" profile with S7-1200/1500 F-CPU	F-I/O without profile "RIOforFA-Safety" with S7-1200/1500 F-CPU	Every F-I/O with S7-300/400 F-CPU
When passivation for **complete** F-I/O is configured: If a channel fault is detected by the F-system, passivation of all channels of the entire F-I/O occurs.	QBAD and PASS_OUT = 1 For **all** channels: Channel value = fail-safe value (0) Value status = 0*		QBAD and PASS_OUT = 1 For **all** channels: Channel value = fail-safe value (0) QBAD_I_xx and QBAD_O_xx = 1*
With configuration of **channel-granular** passivation: If a channel fault is detected by the F-system, passivation of all the affected channels of the entire F-I/O occurs.	QBAD and PASS_OUT **unchanged** For the **affected** channels: Channel value = fail-safe value (0) Value status = 0	QBAD and PASS_OUT = 1 For the **affected** channels: Channel value = fail-safe value (0) Value status = 0*	QBAD and PASS_OUT = 1 For the **affected** channels: Channel value = fail-safe value (0) QBAD_I_xx and QBAD_O_xx = 1*

* Value status or QBAD_I_xx and QBAD_O_xx are not available for fail-safe GSD based DP slaves and fail-safe GSD based I/O devices without the "RIOforFA-Safety" profile.

Reintegration of F-I/O

Reintegration of the relevant F-I/O or the relevant channels of the F-I/O, that is, provision of process data in the PII or output of process data provided in the PIQ at the failsafe outputs, takes place only when the following occurs:

- All F-I/O or channel faults have been eliminated.

If you have configured channel-granular passivation for the F-I/O, the relevant channels are reintegrated once the fault is corrected; any faulty channels remain passivated.

Reintegration is performed depending on your setting for the ACK_NEC tag or the "Channel failure acknowledge" parameter (configuration of the S7-1500/ET 200MP F-module and S7-1200 F-module)

- With ACK_NEC = 0 or the configuration "Channel failure acknowledge = automatic", **automatic reintegration** is performed as soon as the F-system detects that the fault has been corrected. For F-I/O with inputs, reintegration takes place right away. For F-I/O with outputs or F-I/O with inputs and outputs, depending on the F-I/O you are using, reintegration can take several minutes, first after the necessary test signals have been applied, which are used by the F-I/O to determine that the fault has been eliminated.
- With ACK_NEC = 1 or the configuration "Channel failure acknowledge = manual", reintegration is performed only as a result of user acknowledgment with a positive edge at the ACK_REI tag of the F-I/O DB or at the ACK_REI_GLOB input of the "ACK_GL" instruction. Acknowledgment can be made as soon as the F-system detects that the fault has been eliminated and tag ACK_REQ = 1 has been set.

  For fail-safe GSD based I/O devices with "RIOforFA-Safety" profile, consult the respective documentation for the fail-safe GSD based I/O device .

⚠ WARNING

Following a power failure of the F-I/O lasting less than the assigned F-monitoring time for the F-I/O, automatic reintegration can occur regardless of your setting for the ACK_NEC tag or "Channel failure acknowledge" parameter, as described for the case when ACK_NEC = 0 or configuration "Channel failure acknowledge = automatic".

If automatic reintegration is not permitted for the relevant process in this case, you must program startup protection by evaluating tags QBAD or QBAD_I_xx and QBAD_O_xx or value status or PASS_OUT.

In the event of a power failure of the F-I/O lasting longer than the specified F-monitoring time for the F-I/O, the F-system detects a communication error. *(S012)*

Signal sequence for passivation and reintegration of F-I/O after F-I/O faults or channel faults when ACK_NEC = 0 or configuration "Channel failure acknowledge = automatic" (for passivation of entire F-I/O after channel faults)

Example for an F-I/O with inputs:

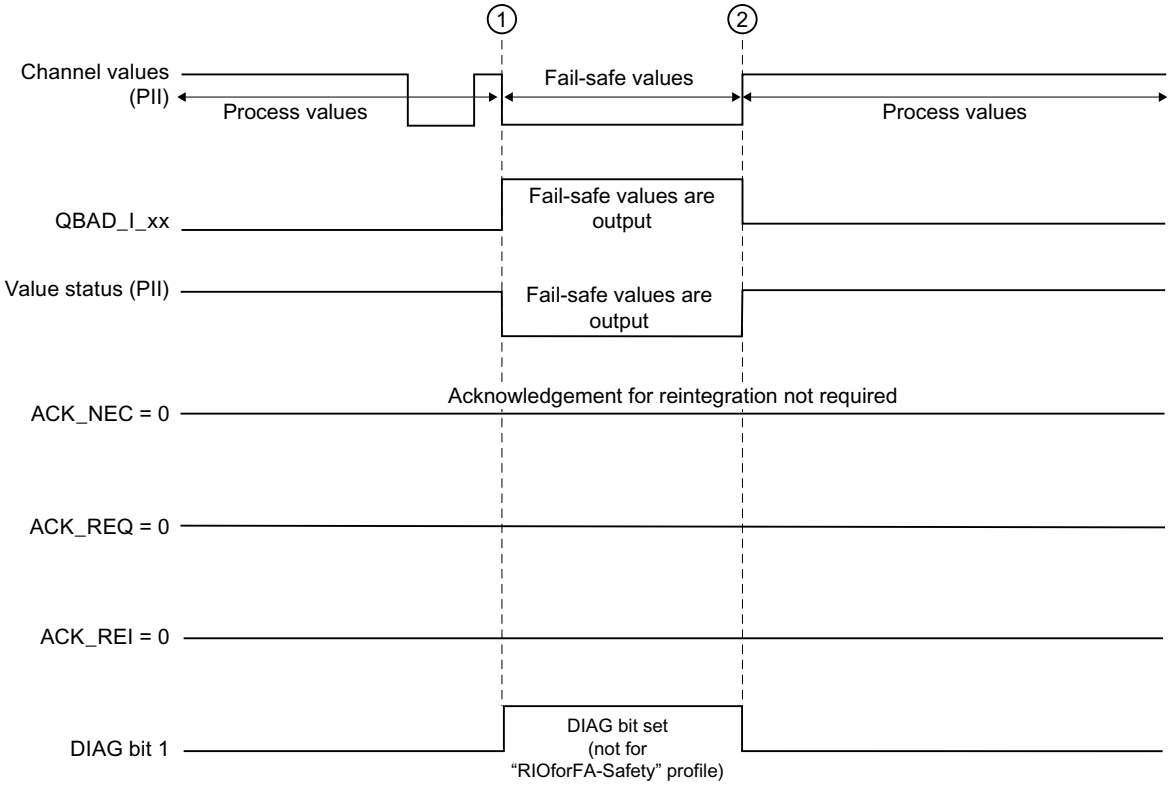

① F-I/O or channel faults
Passivation

② F-I/O or channel faults corrected
Automatic reintegration

Signal sequence for passivation and reintegration of F-I/O after F-I/O faults or channel faults when ACK_NEC = 1 or configuration "Channel failure acknowledge = manual" (for passivation of entire F-I/O after channel faults)

For the signal sequence for passivation and reintegration of F-I/O after F-I/O or channel faults when ACK_NEC = 1 or configuration "Channel failure acknowledge = manual" (initial value), see After communication errors (Page 156).

Signal sequence for passivation and reintegration of F-I/O after channel faults when ACK_NEC = 1 or configuration "Channel failure acknowledge = manual" (for channel-granular passivation)

Example for an F-I/O with inputs:

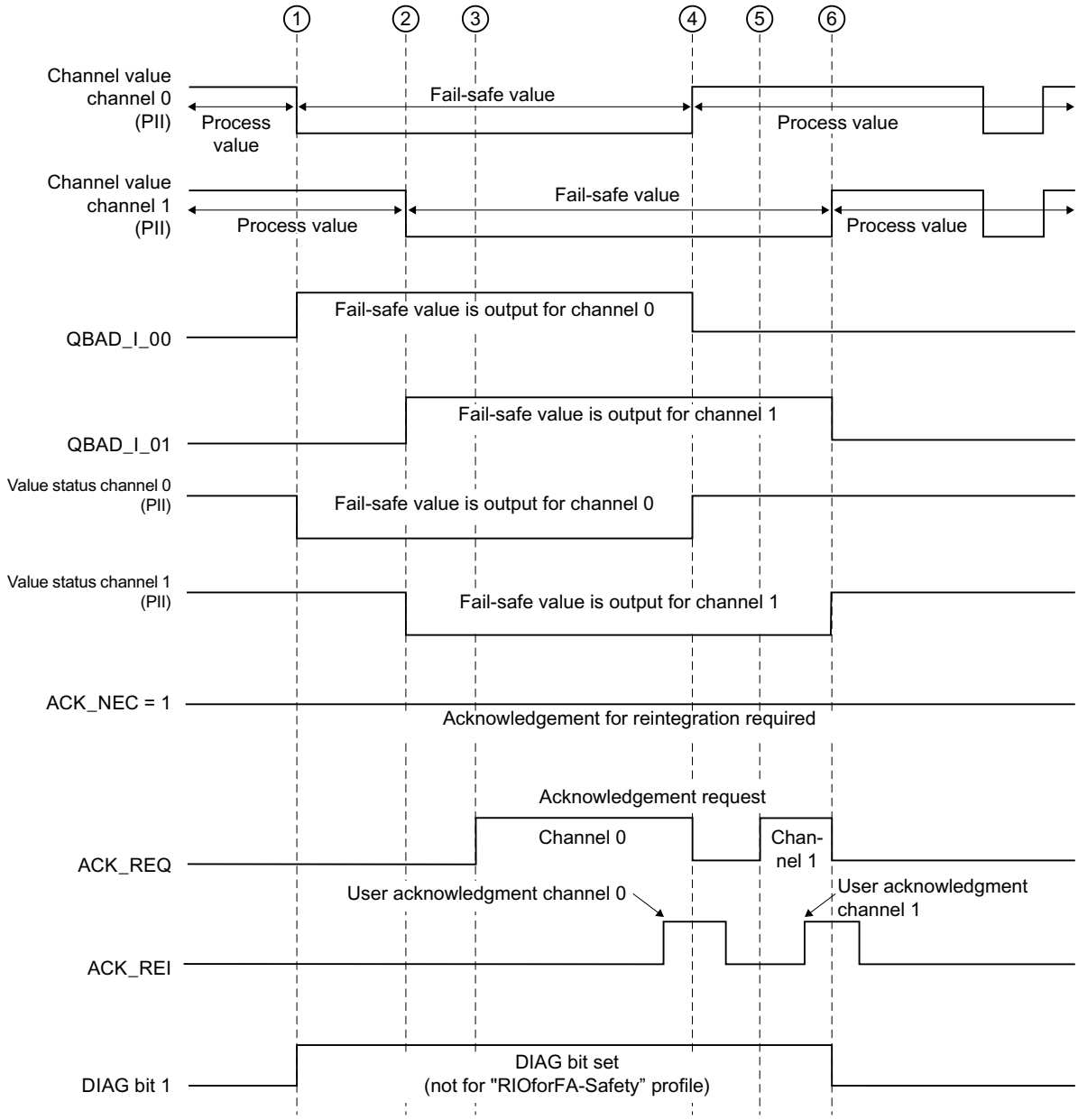

① Channel fault for channel 0/passivation of channel 0
② Channel fault for channel 1/passivation of channel 1
③ Channel fault eliminated for channel 0
④ Reintegration of channel 0
⑤ Channel fault eliminated for channel 1
⑥ Reintegration of channel 1

6.5.4 Group passivation

Programming a group passivation

If you want to enable passivation of additional F-I/O when an F-I/O or a channel of an F-I/O is passivated by the F-system, you can use the PASS_OUT/PASS_ON tags to perform **group passivation** of the associated F-I/O.

Group passivation by means of PASS_OUT/PASS_ON can, for example, be used to force simultaneous reintegration of all F-I/O after startup of the F-system.

For group passivation, you must OR all PASS_OUT tags of the F-I/O in the group and assign the result to all PASS_ON tags of the F-I/O in the group.

During use of fail-safe values (0) due to group passivation by means of PASS_ON = 1, the QBAD tag of the F-I/O of this group = 1.

NOTE

Note the different behavior of PASS_OUT for F-I/O with/without "RIOforFA-Safety" profile (see table in section QBAD/PASS_OUT/DISABLED/QBAD_I_xx/QBAD_O_xx and value status (Page 150)).

Example of group passivation

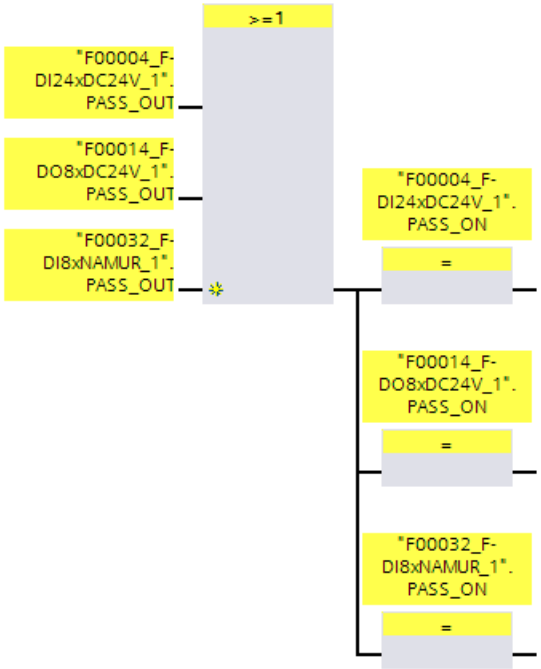

Reintegration of F-I/O

Reintegration of F-I/O passivated by group passivation occurs **automatically**, if a reintegration (**automatic** or **through user acknowledgment**) occurs for the F-I/O that triggered the group passivation (PASS_OUT = 0).

Signal sequence for group passivation following communication error

Example for two F-I/O with inputs:

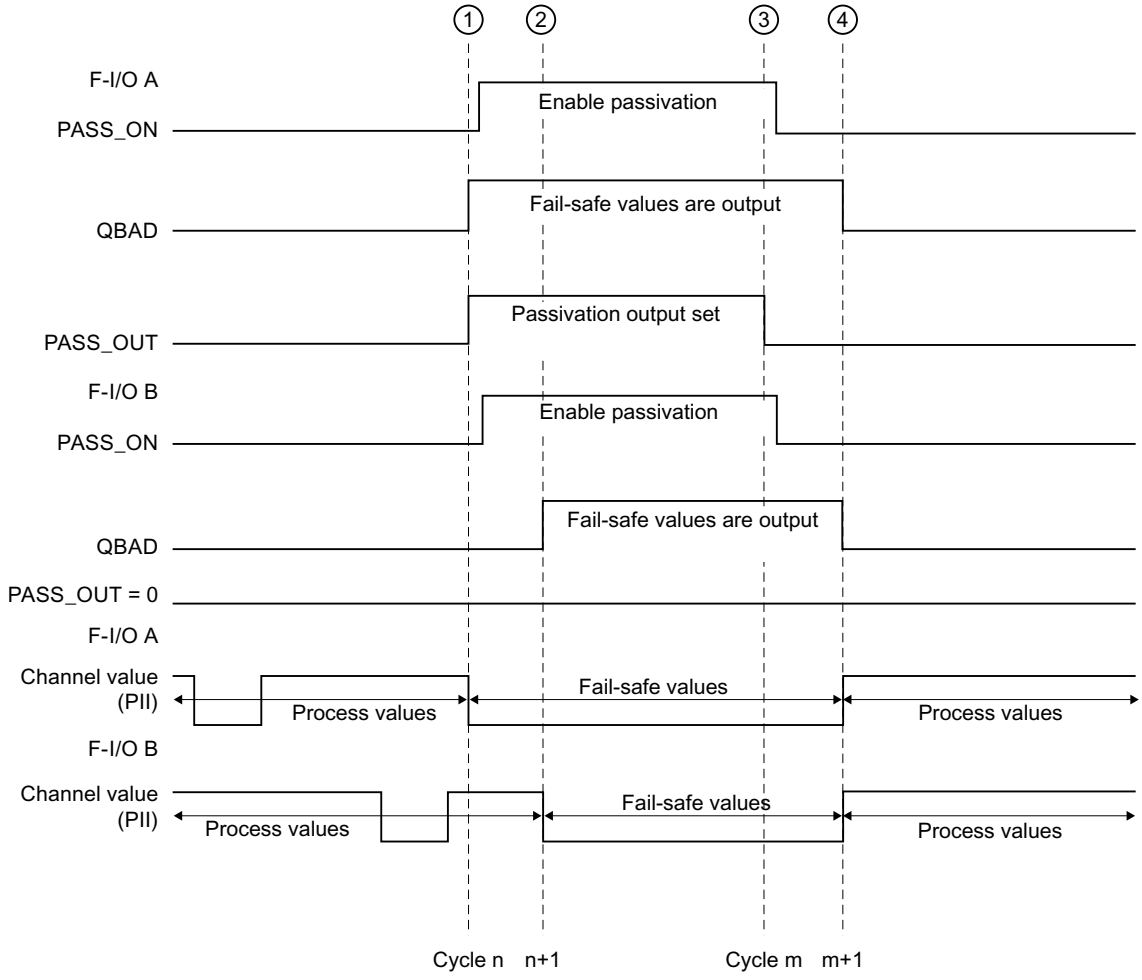

① Communication error in F-I/O A
Passivation of F-I/O A

② Passivation of F-I/O B

③ Communication error in F-I/O A corrected and acknowledged

④ Reintegration F-I/O A and B

Implementation of user acknowledgment 7

7.1 Implementing User Acknowledgment in the Safety Program of the F-CPU of a DP Master or IO controller

Options for user acknowledgment

Depending on the result of the risk analysis, you have the following options for implementing a user acknowledgment:

- With an acknowledgment key that you connect to an F-I/O with inputs.
- With an operator control and monitoring system.
- With an acknowledgment key that you connect to a standard I/O with inputs.
- By other mechanisms for reading in the user acknowledgment.

User acknowledgment by means of acknowledgment key

NOTE

When you implement user acknowledgment by means of acknowledgment key, and a communication error, an F-I/O fault, or a channel fault occurs in the F-I/O to which the acknowledgment key is connected, then it will not be possible to acknowledge the reintegration of this F-I/O.

This "blocking" can only be removed by a STOP-to-RUN transition of the F-CPU. In a redundant S7-1500HF system, you must set both HF CPUs or the redundant S7-1500HF system to STOP before you restart the HF CPUs.

Consequently, it is recommended that you also provide for an acknowledgment by means of an HMI system, in order to acknowledge reintegration of an F-I/O to which an acknowledgment key is connected.

A user acknowledgment may be issued using an acknowledgment key connected to a standard I/O with inputs or other mechanisms for reading the user acknowledgment if the risk analysis allows this.

User acknowledgment by means of an HMI system

For implementation of a user acknowledgment by means of an HMI system, the ACK_OP: Fail-safe acknowledgment (STEP 7 Safety V18) (Page 520) instruction is required.

Procedure for programming user acknowledgment by means of an HMI system (S7-300, S7-400)

1. Select the "ACK_OP" instruction in the "Instructions" task card and place it in your safety program. The acknowledgment signal for evaluating user acknowledgments is provided at output OUT of ACK_OP.
2. On your HMI system, set up a field for manual entry of an "acknowledgment value" of "6" (1st step in acknowledgment) and an "acknowledgment value" of "9" (2nd step in acknowledgment).
   or
   Assign function key 1 to transfer an "acknowledgment value" of "6" (1st step in acknowledgment) once, and function key 2 to transfer an "acknowledgment value" of "9" (2nd step in acknowledgment) once. You need to assign the in/out IN (in the data area of the ACK_OP instruction) to the field or the function keys.
3. Optional: In your HMI system, evaluate output Q in the instance DB of ACK_OP to show the time frame within which the 2nd step in acknowledgment must occur or to indicate that the 1st step in acknowledgment has already occurred.

If you want to perform a user acknowledgment exclusively from a programming device or PC using the watch table (monitor/modify tag) without having to disable safety mode, then you must transfer an operand (memory word or DBW of a DB of the standard user program) at in/out IN when calling ACK_OP. You can then transfer "acknowledgment values" "6" and "9" on the programming device or PC by modifying the memory word or DBW of a DB once. The memory word or DBW of a DB must not be written by the program.

NOTE

If you connect the in/out IN to a memory word or DBW of a DB, you have use a separate memory word or DBW of a DB of the standard user program for each instance of the ACK_OP instruction at the in/out IN.

⚠ WARNING

The two acknowledgment steps must **not** be triggered by one single operation, for example by automatically storing them along with the time conditions in a program and using a single key to trigger them.
Having two separate acknowledgment steps also prevents erroneous triggering of an acknowledgment by your non-fail-safe HMI system. *(S013)*

WARNING

If you have HMI systems and F-CPUs that are interconnected and use the ACK_OP instruction for fail-safe acknowledgment, you need to ensure that the intended F-CPU will be addressed **before** you perform the two acknowledgment steps.

- To do this, store a network-wide* unique name for the F-CPU in a DB of your standard user program in each F-CPU.
- In your HMI system, set up a field from which you can read out the F-CPU name from the DB online before executing the two acknowledgment steps.
- Optional:

  in your HMI system, set up a field to permanently store the F-CPU name. Then, you can determine whether the intended F-CPU is being addressed by simply comparing the F-CPU name read out online with the permanently stored name. *(S014)*

* A network consists of one or more subnets. "Network-wide" means beyond the boundaries of the subnet.

NOTE

The configuration of your operator control and monitoring system does not have any effect on the Collective F-Signature.

Procedure for programming user acknowledgment by means of an HMI system (S7-1200, S7-1500)

1. Select the "ACK_OP" instruction in the "Instructions" task card and place it in your safety program. The acknowledgment signal for evaluating user acknowledgments is provided at output OUT of ACK_OP.
2. Assign the ACK_ID input an identifier between 9 and 30000 for the acknowledgment.
3. Assign the in/out IN a memory word or DBW of a DB of the standard user program.

   NOTE

   You need to provide the in/out parameter IN with a separate memory word or DBW of a DB of the standard user program for each instance of the ACK_OP instruction.

4. On your HMI system, set up a field for manual entry of an "acknowledgment value" of "6" (1st step in acknowledgment) and the "Identifier" configured at the ACK_ID input (2nd step in acknowledgment).

   or

   Allocate a function key 1 for a one-time transfer of the "acknowledgment value" of "6" (1st step in acknowledgment) and a function key 2 for a one-time transfer of the "Identifier" set at the ACK_ID input (2nd step in acknowledgment).
   You need to assign memory word or the DBW of the DB of the standard user program assigned to the in/out IN to the field or the function keys.
5. Optional: In your HMI system, evaluate output Q in the instance DB of ACK_OP to show the time frame within which the 2nd step in acknowledgment must occur or to indicate that the 1st step in acknowledgment has already occurred.

WARNING

The two acknowledgment steps must **not** be triggered by one single operation, for example by automatically storing them along with the time conditions in a program and using a single key to trigger them.
Having two separate acknowledgment steps also prevents erroneous triggering of an acknowledgment by your non-fail-safe HMI system. *(S013)*

WARNING

If you have HMI systems and F-CPUs that are interconnected and use the ACK_OP instruction for fail-safe acknowledgment, you need to ensure that the intended F-CPU will be addressed **before** you perform the two acknowledgment steps.

Alternative 1:

- The value for each identifier of the acknowledgment (ACK_ID input; data type: INT) can be freely selected in the range from 9 to 30000, but must be unique network-wide* for all instances of the ACK_OP instruction.
  You must supply the ACK_ID input with constant values when calling the instruction. Direct read or write access in the associated instance DB is not permitted in the safety program!

Alternative 2:

- Store a network-wide* unique name for the F-CPU in a DB of your standard user program in each F-CPU.
- In your HMI system, set up a field from which you can read out the F-CPU name from the DB online before executing the two acknowledgment steps.
- Optional:
  in your HMI system, set up a field to permanently store the F-CPU name. Then, you can determine whether the intended F-CPU is being addressed by simply comparing the F-CPU name read out online with the permanently stored designation. *(S047)*

* A network consists of one or more subnets. "Network-wide" means beyond the boundaries of the subnet.

NOTE

The supply of the IN input/output of the ACK_OP instruction as well as the configuration of your operator control and monitoring system do not have any effect on the Collective F-Signature, the Collective F-SW-Signature or the signature of the block that calls the ACK_OP instruction.

Changes to the supply of the IN input/output or to the configuration of your operator control and monitoring system therefore do not result in a changed Collective F-Signature/Collective F-SW-Signature/signature of the calling block.

Example of procedure for programming a user acknowledgment for reintegrating an F-I/O

1. Optional: set the ACK_NEC tag in the respective F-I/O DB (Page 147) to "0" if automatic reintegration (without user acknowledgment) is to take place after an F-I/O fault or a channel fault.

   WARNING

   The parameter assignment of the ACK_NEC = 0 tag is only allowed if automatic reintegration is permitted for the relevant process from a safety standpoint. *(S010)*

2. Optional: Evaluate the QBAD or QBAD_I_xx/QBAD_O_xx (S7-300/400) tags or value status (S7-1200, S7-1500) or DIAG in the respective F-I/O DB to trigger an indicator light in the event of an error, and/or generate error messages on the HMI system in your standard user program by evaluating the above tags or the value status. These messages can be evaluated before performing the acknowledgment operation. Alternatively, you can evaluate the diagnostic buffer of the F-CPU.
3. Optional: Evaluate the ACK_REQ tag in the respective F-I/O DB, for example, in the standard user program or on the HMI system, to query or to indicate whether user acknowledgment is required.
4. Assign the input of the acknowledgment key or the OUT output of the ACK_OP instruction to the ACK_REI tag in the respective F-I/O DB or the ACK_REI_GLOB input of the ACK_GL instruction (see above).

7.2 Implementing user acknowledgment in the safety program of the F-CPU of a I-slave or I-device

Options for user acknowledgment

You can implement a user acknowledgment by means of:

- An HMI system that you can use to access the F-CPU of the I-slave/I-Device
- An acknowledgment key that you connect to an F-I/O with inputs that is assigned to the F-CPU of the I-slave/I-Device
- An acknowledgment key that you connect to an F-I/O with inputs that is assigned to the F-CPU of the DP master/IO controller

These three options are illustrated in the figure below.

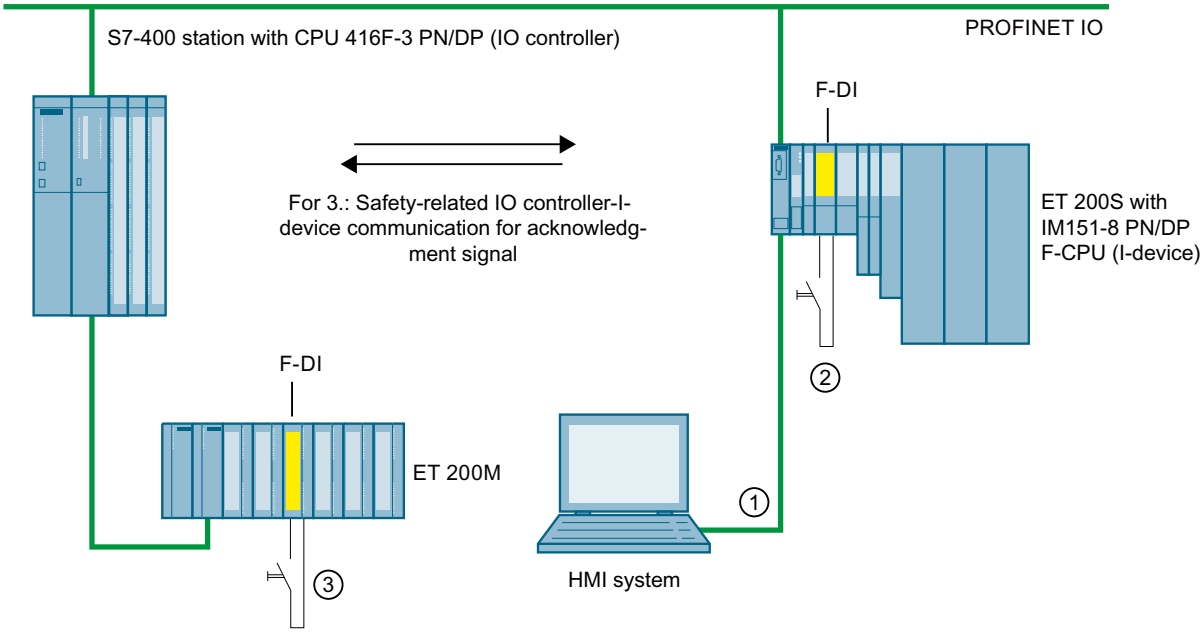

1. User acknowledgment by means of an HMI system with which you can access the F-CPU of the I-slave/I-device

The ACK_OP: Fail-safe acknowledgment (STEP 7 Safety V18) (Page 520) instruction is required to implement user acknowledgment with an HMI system that you can use to access the F-CPU of the I-slave/I-device.

Programming procedure

Follow the procedure described in "Implementing User Acknowledgment in the Safety Program of the F-CPU of a DP Master or IO controller (Page 165)" under "Programming procedure ...".

From your HMI system, you can then directly access the instance DB of ACK_OP in the I-slave/I-Device.

2. User acknowledgment by means of an acknowledgment key at an F-I/O with inputs that are assigned to the F-CPU of the I-slave/I-device

NOTE

In the event of a communication error, F-I/O fault, or channel fault in the F-I/O to which the acknowledgment key is connected, an acknowledgment for reintegration of this F-I/O is no longer possible.

This "blocking" can only be removed by a STOP-to-RUN transition of the F-CPU of the I-slave/I-Device.

Consequently, it is recommended that you also provide for an acknowledgment by means of an HMI system that you can use to access the F-CPU of the I-slave/I-device, in order to acknowledge reintegration of an F-I/O to which an acknowledgment key is connected (see 1).

3. User acknowledgment by means of an acknowledgment key at an F-I/O with inputs that are assigned to the F-CPU of the DP master/IO controller

If you want to use the acknowledgment key that is assigned to the F-CPU at the DP master/IO controller to perform user acknowledgment in the safety program of the F-CPU of an I-slave/I-device as well, you must transmit the acknowledgment signal from the safety program in the F-CPU of the DP master/IO controller to the safety program in the F-CPU of the I-slave/I-device using safety-related master-I-slave/IO controller-I-device communication.

Programming procedure

1. Place the SENDDP (Page 529-530) instruction in the safety program in the F-CPU of the DP master/IO controller.
2. Place the RCVDP (Page 529-530) instruction in the safety program in the F-CPU of the I-slave/I-Device.
3. Supply an input SD_BO_xx of SENDDP with the input of the acknowledgment key.
4. The acknowledgment signal for evaluating user acknowledgments is now available at the corresponding RD_BO_xx output of RCVDP.
   The acknowledgment signal can now be read in the program sections in which further processing is to take place with fully qualified access directly in the associated instance DB (for example, "RCVDP_DB".RD_BO_02).
5. Supply the corresponding input SUBBO_xx of RCVDP with FALSE (fail-safe value 0) to ensure that user acknowledgment is not accidentally triggered before communication is established for the first time after startup of the sending and receiving F-systems, or in the event of a safety-related communication error.

NOTE

If a communication error, an F-I/O error, or a channel fault occurs at the F-I/O to which the acknowledgment key is connected, then an acknowledgment for reintegration of this F-I/O will no longer be possible.

This "blocking" can only be removed by a STOP-to-RUN transition of the F-CPU of the DP master/IO controller.

Consequently, it is recommended that you also provide for an acknowledgment by means of an HMI system that you can use to access the F-CPU of the DP master/IO controller, in order to acknowledge reintegration of the F-I/O to which an acknowledgment key is connected.

If a safety-related master-I-slave/IO controller-I-Device communication error occurs, the acknowledgment signal cannot be transmitted, and an acknowledgment for reintegration of safety-related communication is no longer possible.

This "blocking" can only be removed by a STOP-to-RUN transition of the F-CPU of the I-slave/I-Device.

Consequently, it is recommended that you also provide for an acknowledgment by means of an HMI system that you can use to access the F-CPU of the I-slave/I-Device, in order to acknowledge reintegration of the safety-related communication for transmission of the acknowledgment signal (see 1).

Data exchange between standard user program and safety program 8

You have the option of transferring data between the safety program and the standard user program. Tags can be transferred using DBs, F-DBs and bit memory:

	From the standard user program		From the safety program	
	Read access	**Write access**	**Read access**	**Write access**
Tag from DB	Permitted	Permitted	A tag from the DB can be read-accessed *or* write-accessed	
Tag from F-DB	Permitted	**Not permitted**	Permitted	Permitted
Bit memory	Permitted	Permitted	Bit memory can be read-accessed *or* write-accessed	

You can also access the process image of the standard I/O and F-I/O:

		From the standard user program		From the safety program	
		Read access	**Write access**	**Read access**	**Write access**
Process image of standard I/O	PII	Permitted	Permitted	Permitted	**Not permitted**
	PIQ	Permitted	Permitted	**Not permitted**	Permitted
Process image of F-I/O	PII	Permitted	**Not permitted**	Permitted	**Not permitted**
	PIQ	Permitted	**Not permitted**	**Not permitted**	Permitted

Note possible restrictions/particularities when using Software Units or a Safety Unit.

Decoupling of the safety program from the standard user program

For data exchange between standard user program and safety program, we recommend that you define special data blocks (transfer data blocks) in which the data to be exchanged is stored. This action allows you to decouple the blocks of the standard user program and the safety program. The changes in the standard user program do not affect the safety program (and vice versa) provided these data blocks are not modified.

8.1 Data Transfer from the Safety Program to the Standard User Program

Reading data of the safety program in the standard user program

The standard user program can read all data of the safety program, for example using symbolic (fully qualified) accesses to the following:

- The instance DBs of the F-FBs ("Name of instance DB".Signal_x)
- F-DBs (for example "Name of F_DB".Signal_1)

- The process image input and output of F-I/O (for example "Emergency_Stop_Button_1" (I 5.0))

NOTE

For S7-300/400 F-CPUs

The process image input of F-I/O is updated not only at the start of the F-runtime group, but also by the standard operating system.

To find the standard operating system update times, refer to the *Help on STEP 7* under "Process image input and output". For F-CPUs that support process image partitions, also bear in mind the update times when process image partitions are used. For this reason, when the process image input of F-I/O is accessed in the standard user program, it is possible to obtain different values than in the safety program. The differing values can occur due to:

– Different update times
– Use of fail-safe values in the safety program

To obtain the same values in the standard user program as in the safety program, you must not access the process image input in the standard program until after execution of an F-runtime group. In this case, you can also evaluate the QBAD or QBAD_I_xx tag in the associated F-I/O DB in the standard user program, in order to find out whether the process image input is receiving fail-safe values (0) or process data. When using process image partitions, also make sure that the process image is not updated by the standard operating system or by the UPDAT_PI instruction between execution of an F-runtime group and evaluation of the process image input in the standard user program.

NOTE

For S7-1200/1500 F-CPUs

The process image input of F-I/O is updated prior to processing the main safety block.

During the data transfer from the safety program to the standard user program, the integrity of the safety program and the safety-related data is not checked (see also section "Product Overview (Page 22)").

Writing data from the safety program to the standard user program

You can also write safety program data directly in the safety program to the standard user program (see also the table of supported operand areas in: Restrictions in the programming languages FBD/LAD (Page 103)).

This is also true for non-fail-safe service information (e.g. outputs DIAG of the fail-safe instructions).

Note the table in section "Data exchange between standard user program and safety program (Page 172)".

When writing to a tag of the ARRAY data type, the index can either be a constant or a tag.

8.2 Data Transfer from Standard User Program to Safety Program

As a basic principle, only fail-safe data or fail-safe signals from F-I/O and other safety programs (in other F-CPUs) can be processed in the safety program, as standard tags are unsafe.

If you have to process tags from the standard user program in the safety program, however, you can evaluate either bit memory from the standard user program, tags from a standard DB, or the process image input (PII) of standard I/O in the safety program (see table of supported operand areas in: Restrictions in the programming languages FBD/LAD (Page 103)).

Note the table in section "Data exchange between standard user program and safety program (Page 172)".

When reading a tag of the ARRAY data type, the index must be a constant. Tags are not permitted as index.

Note that structural changes to standard data blocks which are used in the safety program lead to inconsistencies of the safety program and can therefore only be executed if access permission for the safety-related project data is available. In this case the Collective F-Signature is the same as the original again after compilation. To prevent this effect, use "transfer data blocks" between the standard user program and the safety program.

WARNING

Because these tags are not generated safely, you must carry out additional process-specific plausibility checks in the safety program to ensure that no dangerous states can arise. If bit memory, a tag of a standard DB, or an input of standard I/O is used in both F-runtime groups, you must perform the plausibility check separately in each F-runtime group. *(S015)*

To facilitate checks, all PLC tags from the standard user program that are evaluated in the safety program are printed out when creating the safety documentation. (Page 306)

PLC tags from the standard user program that are evaluated in know-how-protected F-blocks are not included in the safety documentation. The plausibility check must already be ensured by the creator of the know-how-protected F-blocks.

Examples: Programming plausibility checks

- Use Comparison (Page 463) instructions to check whether tags from the standard user program exceed or fall below permitted high and low limits. You can then influence your safety function with the result of the comparison.
- Use the ---(S)---: Set output (STEP 7 Safety V18) (Page 369), ---(R)---: Reset output (STEP 7 Safety V18) (Page 368) or SR: Set/reset flip-flop (STEP 7 Safety V18) (Page 371) instructions, for example, with tags from the standard user program to allow a motor to be switched off, but not switched on.
- For switch-on sequences, use the AND logic operation instruction, for example, to logically combine tags from the standard user program with switch-on conditions that you derive from fail-safe tags.

If you want to process tags from the standard user program in the safety program, bear in mind that there is not a sufficiently simple method of checking plausibility for all tags.

Reading tags from the standard user program that can change during the runtime of an F-runtime group

If you want to read tags from the standard user program (bit memory, tags of a standard DB, or PII of standard I/O) in the safety program, and these tags can be changed - either by the standard user program or an operator control and monitoring system - during runtime of the F-runtime group in which they are read (for example because your standard user program is being processed by a higher-priority cyclic interrupt), you must use bit memory or tags of a standard DB for this purpose. We recommend using standard FCs for preprocessing (Page 77) for S7-1200/1500 F-CPUs.

(S7-300/400) You must write the bit memory or tags of a standard DB with the tags from the standard user program immediately before calling the F-runtime group.

You are then permitted to access only this bit memory or these tags of a standard DB in the safety program.

Also note that **clock memory** that you defined when configuring your F-CPU in the "Properties" tab can change during runtime of the F-runtime group, since clock memory runs asynchronously to the F-CPU cycle.

NOTE

The F-CPU can go to STOP if this is not observed. The cause of the diagnostics event is entered in the diagnostics buffer of the F-CPU.

Safety-related communication 9

9.1 Configuring and programming communication (S7-300, S7-400)

9.1.1 Overview of communication

Introduction

This section gives an overview of the safety-related communication options in SIMATIC Safety F-systems.

Options for safety-related communication

Safety-related communication	On subnet	Additional hardware required
I-slave-slave communication	PROFIBUS DP	—
Safety-related CPU-CPU communication:		
IO controller-IO controller communication	PROFINET IO	PN/PN coupler
Master-master communication	PROFIBUS DP	DP/DP coupler
IO controller-I-device communication	PROFINET IO	—
Master-I-slave communication	PROFIBUS DP	—
I-slave-I-slave communication	PROFIBUS DP	—
IO controller-I-slave communication	PROFINET IO and PROFIBUS DP	IE/PB link
Safety-related communication via S7 connections	Industrial Ethernet	—
IO controller-IO controller communication for S7 Distributed Safety	PROFINET IO	PN/PN coupler
Master-master communication for S7 Distributed Safety	PROFIBUS DP	DP/DP coupler
Safety-related communication to S7 Distributed Safety or S7 F Systems via S7 connections	Industrial Ethernet	—

Overview of safety-related communication via PROFIBUS DP

The figure below presents an overview of the 4 options for safety-related communication via PROFIBUS DP in SIMATIC Safety F-systems with S7-300/400 F-CPUs.

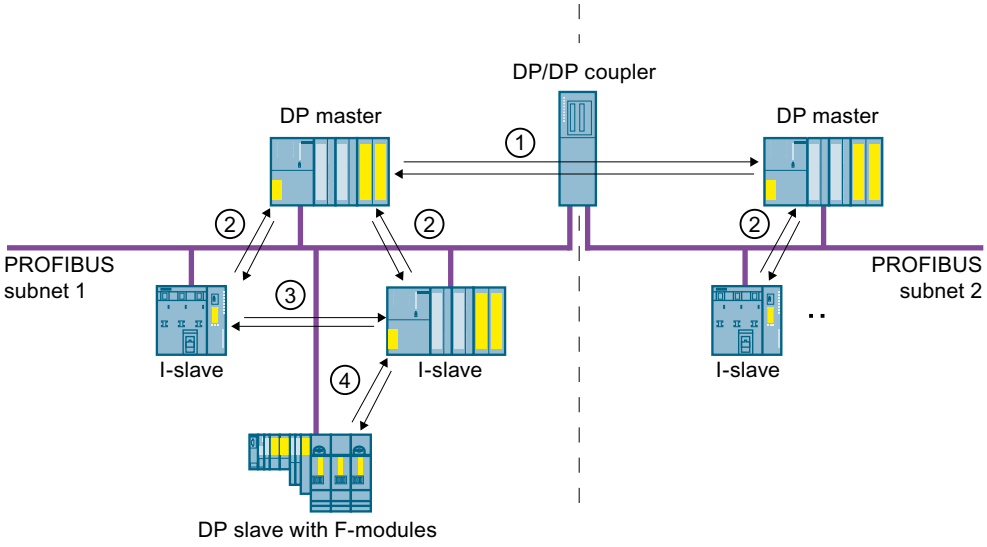

① Safety-related master-master communication
② Safety-related master-I-slave communication
③ Safety-related I-slave-I-slave communication
④ Safety-related I-slave-slave communication

Overview of safety-related communication via PROFINET IO

The figure below presents an overview of the four options for safety-related communication via PROFINET IO in SIMATIC Safety F-systems with S7-300/400 F-CPUs. If an IE/PB-link is used, safety-related communication is possible between assigned I-slaves.

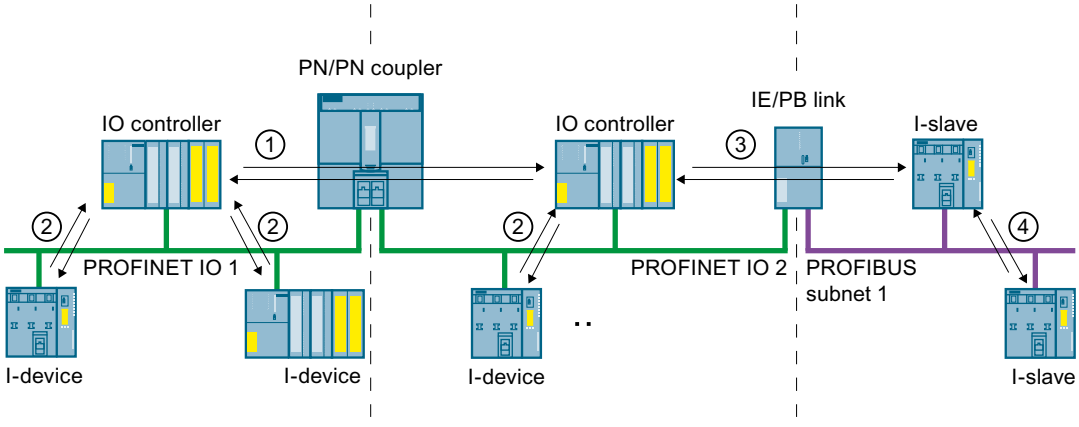

① Safety-related IO controller-IO controller communication
② Safety-related IO controller-I-device communication
③ Safety-related IO controller-I-slave communication
④ Safety-related I-slave-I-slave communication integrating an IO controller

Safety-related CPU-CPU communication via PROFIBUS DP or PROFINET IO

In safety-related CPU-CPU communication, a fixed amount of fail-safe data of the data type INT or BOOL is transmitted fail-safe between the safety programs in F-CPUs of DP masters/I-slaves or IO controllers/I-devices.

The data are transferred using the SENDDP instruction for sending and the RCVDP instruction for receiving. The data are stored in configured transfer areas of the devices. Each transfer area consists of one input and one output address area.

Safety-related I-slave-slave communication via PROFIBUS DP

Safety-related I-slave-slave communication with F-I/O is possible in a DP slave that supports safety-related I-slave-slave communication, for example with all ET 200SP F-modules with IM 155-6 DP HF, firmware > V3.1, with all ET 200S F-modules with IM 151-1 HF, with all fail-safe S7-300 signal modules with IM 153-2, as of article number 6ES7153-2BA01-0XB0, firmware > V4.0.0.

Safety-related communication between the safety program of the F-CPU of an I-slave and F-I/O of a DP slave takes place using direct data exchange, as in the standard program. The process image is used to access the channels of the F-I/O in the safety program of the F-CPU of the I-slave.

Safety-related CPU-CPU communication via Industrial Ethernet

Safety-related CPU-CPU communication via Industrial Ethernet is possible using S7 connections, both from and to the following:

- S7-300 F-CPUs via the integrated PROFINET interface
- S7-400 F-CPUs via the integrated PROFINET interface or a CP 443-1 or CP 443-1 Advanced-IT

In safety-related communication via S7 connections, a specified amount of fail-safe data of data type BOOL, INT, WORD, DINT, DWORD, or TIME is transferred fail-safe between the safety programs of the F-CPUs linked by the S7 connection.

The data transfer makes use of the SENDS7 instruction for sending and the RCVS7 instruction for receiving. Data are exchanged using one F-DB ("F-communication DB") each at the sender and receiver ends.

Safety-related CPU-CPU communication to *S7 Distributed Safety* or *F-systems*

Safety-related communication is possible from F-CPUs in *SIMATIC Safety* to F-CPUs in *S7 Distributed Safety* or *S7 F-systems*.

9.1.2 Safety-related IO controller-IO controller communication

9.1.2.1 Configure safety-related IO controller-IO controller communication

Introduction

Safety-related communication between safety programs of the F-CPUs of IO controllers takes place over a PN/PN coupler that you set up between the F-CPUs.

For 416F-2 DP CPUs without an integrated PROFINET interface, use a CP 443-1 or CP 443-1 Advanced-IT.

NOTE

Deactivate the "Data validity display DIA" parameter in the properties for the PN/PN coupler in the *hardware and network editor*. This is the default setting. Otherwise, safety-related IO controller-IO controller communication is not possible.

Configuring transfer areas

You must configure one transfer area for output data and one transfer area for input data in the *hardware and network editor* for each safety-related communication connection between two F-CPUs in the PN/PN coupler. The figure below shows how both of the F-CPUs are able to send **and** receive data (bidirectional communication). One transfer area for output data and one transfer area for input data must be configured in the PN/PN coupler for each of the two communication connections.

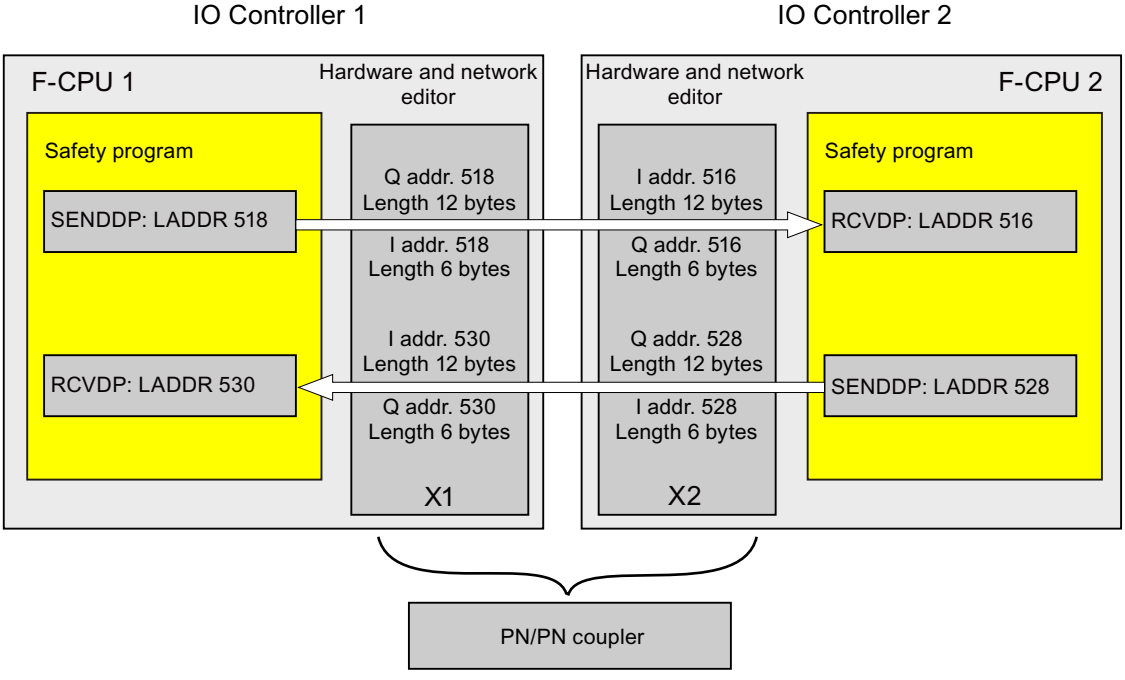

Rules for defining transfer areas

The transfer area for output data and the transfer area for input data for the **data to be sent** must begin with the same start address. A total of 12 bytes (consistent) is required for the transfer area for output data; 6 bytes (consistent) are required for the transfer area for input data.

The transfer area for input data and the transfer area for output data for the **data to be received** must begin with the same start address. A total of 12 bytes (consistent) is required for the transfer area for input data; 6 bytes (consistent) are required for the transfer area for output data.

Procedure for configuration

The procedure for configuring safety-related IO controller-IO controller communication is identical to that in the standard system.

Proceed as follows:

1. Insert two F-CPUS from the "Hardware catalog" task card into the project.
2. Switch to the network view of the *hardware and network editor*.
3. Select a PN/PN Coupler X1 and a PN/PN Coupler X2 from "Other field devices\PROFINET IO\Gateway\Siemens AG\PN/PN Coupler" in the "Hardware catalog" task card and insert them into the network view of the hardware and network editor.
4. Connect the PN interface of the F-CPU 1 with the PN interface of the PN/PN Coupler X1 and the PN interface of the F-CPU 2 with the PN interface of PN/PN Coupler X2.

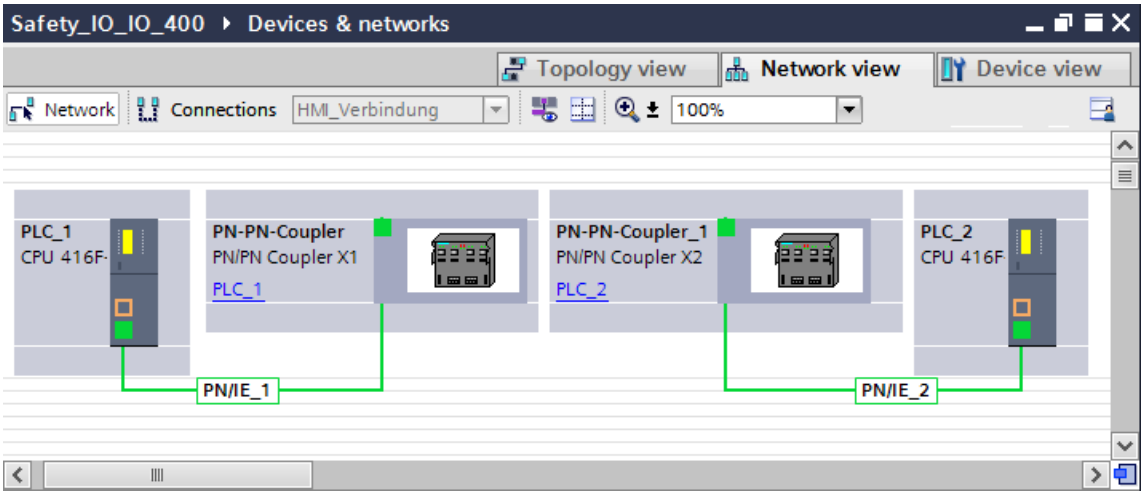

5. Switch to the device view of PN/PN Coupler X1 for bidirectional communication connections i.e. where each F-CPU is both to send and to receive data. Select the following modules from "IN/OUT" in the "Hardware catalog" task card (with filter activated), and insert them in the "Device overview" tab:
   - One "IN/OUT 6 bytes / 12 bytes" module and
   - One "IN/OUT 12 bytes / 6 bytes" module

6. In the properties of the modules, assign the addresses outside the process image as follows:
   For the "IN/OUT 6 bytes / 12 bytes" module for sending data for example:
   – Input addresses: Start address 518
   – Output addresses: Start address 518
   For the "IN/OUT 12 bytes / 6 bytes" module for receiving data for example:
   – Input addresses: Start address 530
   – Output addresses: Start address 530

NOTE

Make sure that you assign identical start addresses for the address areas of the output and input data.

Tip: Make a note of the start addresses of the transfer areas. You need these to program the SENDDP and RCVDP blocks (LADDR input).

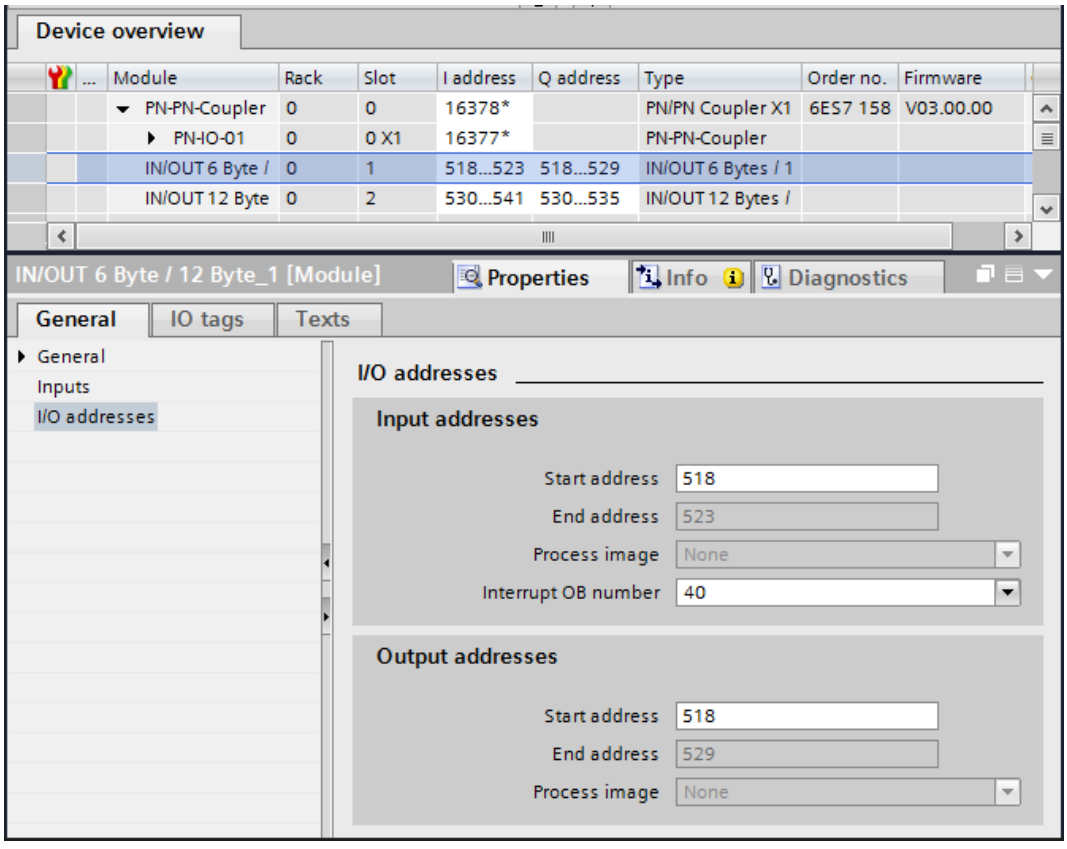

7. Select the following modules from "IN/OUT" in the device view of PN/PN coupler X2 and insert them in the "Device overview" tab:
   – One "IN/OUT 12 bytes / 6 bytes" module and
   – One "IN/OUT 6 bytes / 12 bytes" module

8. In the properties of the modules, assign the addresses outside the process image as follows:
   For the "IN/OUT 12 bytes / 6 bytes" module for receiving data for example:
   – Input addresses: Start address 516
   – Output addresses: Start address 516
   For the "IN/OUT 6 bytes / 12 bytes" module for sending data for example:
   – Input addresses: Start address 528
   – Output addresses: Start address 528

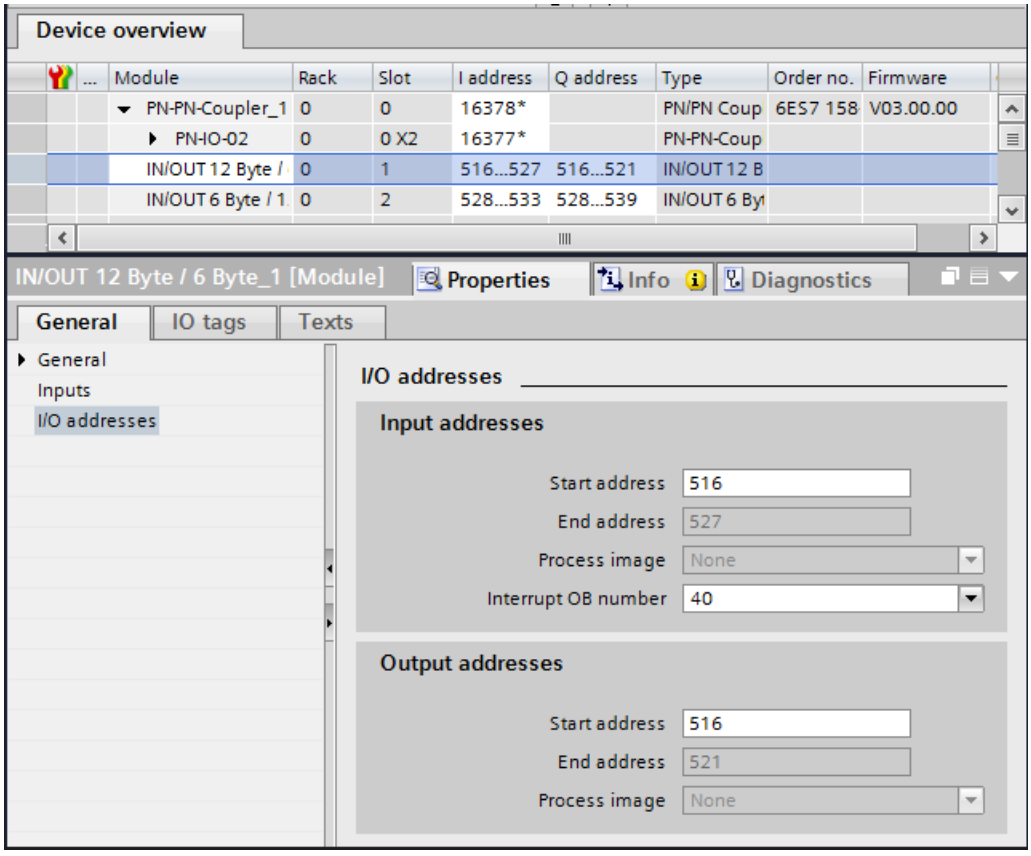

9.1.2.2 Safety-related IO controller-IO controller communication via SENDDP and RCVDP

Communication via SENDDP and RCVDP instructions

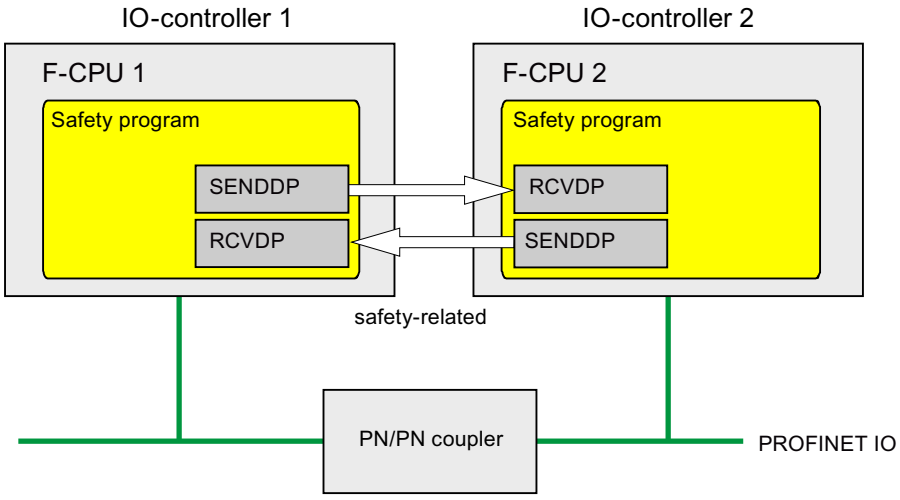

Safety-related communication between the F-CPUs of the IO controllers uses the SENDDP and RCVDP instructions for sending and receiving, respectively. These can be used to perform a fail-safe transfer of a *fixed* amount of fail-safe data of the data type INT or BOOL.

You can find these instructions in the "Instructions" task card under "Communication". The RCVDP instruction **must** be called at the start of the main safety block. The SENDDP instruction **must** be called at the end of the main safety block.

Note that the send signals are not sent until after the SENDDP instruction call at the end of execution of the relevant F-runtime group.

A detailed description of the SENDDP and RCVDP instructions can be found in SENDDP and RCVDP: Send and receive data via PROFIBUS DP/PROFINET IO (STEP 7 Safety V18) (Page 529-530).

9.1.2.3 Program safety-related IO controller-IO controller communication

Requirement for programming

The transfer areas for input and output data for the PN/PN coupler must be configured.

Programming procedure

You program safety-related IO controller-IO controller communication as follows:

1. In the safety program from which data is to be sent, call the SENDDP instruction (Page 529-530) for sending at the end of the main safety block.
2. In the safety program in which data is to be received, call the RCVDP instruction (Page 529-530) for receiving at the start of the main safety block.

3. Assign the start addresses of the output and input data transfer areas of the PN/PN coupler configured in the *hardware and network editor* to the respective LADDR inputs.
   You must carry out this assignment for every communication connection for each of the F-CPUs involved.

4. Assign the value for the respective F-communication ID to the DP_DP_ID inputs. This establishes the communication relationship between the SENDDP instruction in one F-CPU and the RCVDP instruction in the other F-CPU: The associated instructions receive the same value for DP_DP_ID.
   The figure below contains an example of how to specify the F-communication IDs at the inputs of the SENDDP and RCVDP instructions for 5 safety-related IO controller-IO controller communication relationships.

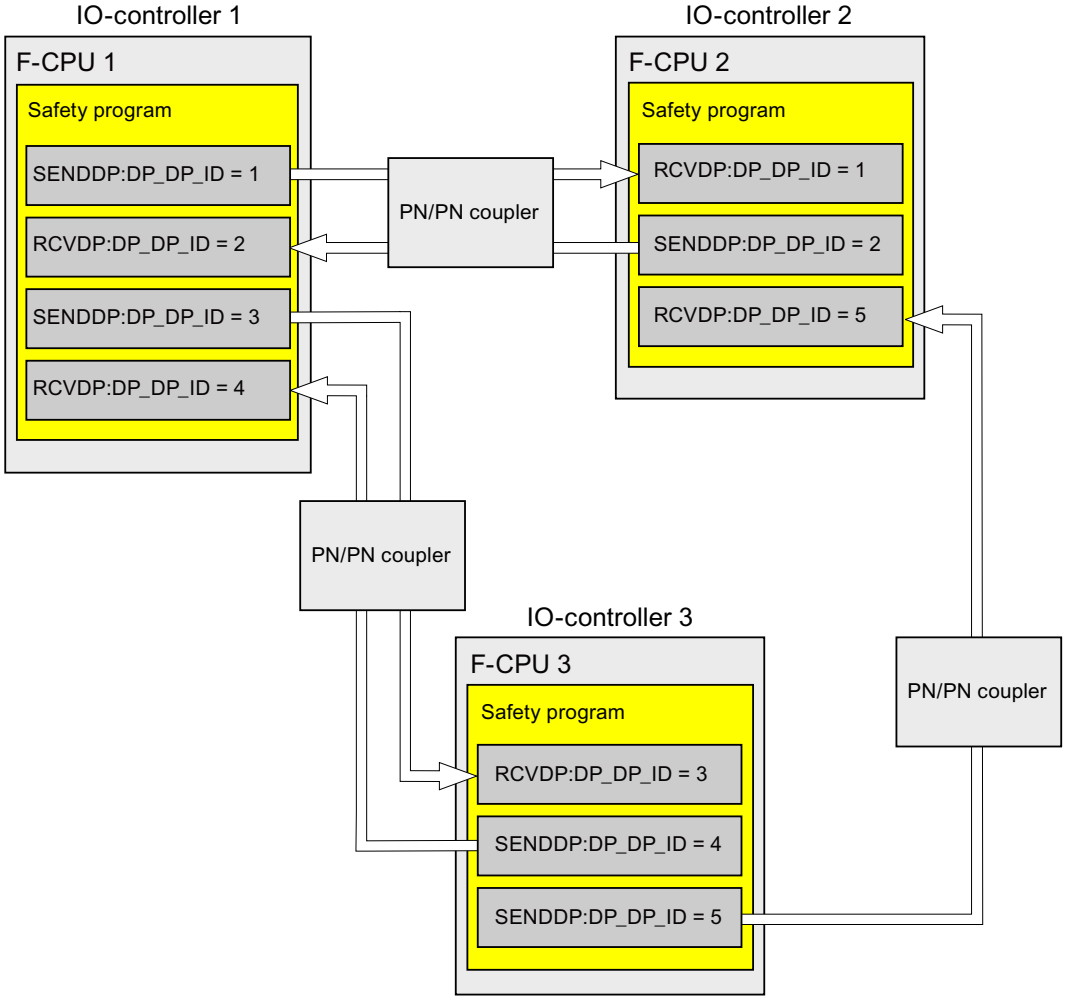

WARNING

The value of the respective F-communication ID (input DP_DP_ID; data type: INT) can be freely selected; however, it must be unique for all safety-related communication connections network-wide* and CPU-wide at all times. The uniqueness must be checked in the safety summary during acceptance of the safety program.

You must supply constant values to the inputs DP_DP_ID and LADDR when calling the instruction. Direct write accesses in the associated instance DB to DP_DP_ID and LADDR are not permitted in the safety program! *(S016)*

* A network consists of one or more subnets. "Network-wide" means beyond the boundaries of the subnet. In PROFIBUS, a network includes all the nodes accessible via PROFIBUS DP. In PROFINET IO, a network includes all nodes accessible via RT_Class_1/2/3 (Ethernet/WLAN/Bluetooth, Layer 2) and if applicable RT_Class_UDP (IP, Layer 3).

5. Supply the SD_BO_xx and SD_I_xx inputs of SENDDP with the send signals. To cut down on intermediate signals when transferring block parameters, you can write the value directly to the instance DB of SENDDP using fully qualified access (for example, "Name SENDDP_1".SD_BO_02) before calling SENDDP.
6. Supply the RD_BO_xx and RD_I_xx outputs of RCVDP with the signals that you want to process further in other program sections or use fully qualified access to read the received signals directly in the associated instance DB in the program sections to be processed further (e.g., "Name RCVDP_1".RD_BO_02).
7. Supply the SUBBO_xx and SUBI_xx inputs of RCVDP with the fail-safe values that are to be output by RCVDP in place of the process data until communication is established for the first time after startup of the sending and receiving F-systems or in the event of an error in safety-related communication.
   - Specification of constant fail-safe values:
     For data of data type INT, you can enter constant fail-safe values directly as constants in the SUBI_xx input (initial value = "0"). If you want to specify a constant fail-safe value "TRUE" for data of the data type BOOL, provide the tag "F_GOBDB".VKE1 for the SUBBO_xx input (initial value = "FALSE").
   - Specification of variable substitute values:
     If you want to specify variable substitute values, define a tag that you calculate through your safety program in an F-DB and specify this tag (fully qualified) in the SUBI_xx or SUBBO_xx input.

⚠ WARNING

Note: The program logic for calculating variable substitute values can only be inserted after the RCVDP calls, because there must be no program logic before the RCVDP calls. This is why the initial values of the substitute values are active in all RCVDP instructions in the first cycle after a startup of the F-system. You must therefore assign appropriate initial values for these tags. *(S017)*

8. Configure the TIMEOUT inputs of the RCVDP and SENDDP instructions with the required monitoring time.

⚠ WARNING

It can only be ensured (from a fail-safe standpoint) that a signal state to be transferred will be acquired and transferred to the receiver if the signal level is pending for at least as long as the assigned monitoring time. *(S018)*

Information on calculating the monitoring times can be found in Monitoring and response times (Page 546).

9. Optional: Evaluate the ACK_REQ output of the RCVDP instruction, for example, in the standard user program or on the HMI system in order to query or to indicate whether user acknowledgment is required.

10. Supply the ACK_REI input of the RCVDP instruction with the acknowledgment signal for reintegration.
11. Optional: Evaluate the SUBS_ON output of the RCVDP or SENDDP instruction in order to query whether the RCVDP instruction is outputting the fail-safe values assigned in the SUBBO_xx and SUBI_xx inputs.
12. Optional: Evaluate the ERROR output of the RCVDP or SENDDP instruction, for example, in the standard user program or on the HMI system in order to query or to indicate whether a communication error has occurred.
13. Optional: Evaluate the SENDMODE output of the RCVDP instruction in order to query whether the F-CPU with the associated SENDDP instruction is in disabled safety mode (Page 310).

9.1.2.4 Safety-related IO controller-IO controller communication - Limits for data transfer

NOTE

If the data quantities to be transmitted exceed the capacity of the SENDDP / RCVDP correlated instructions, a second (or third) SENDDP / RCVDP call can be used. This requires configuration of an additional communication connection via the PN/PN coupler. Whether or not this is possible with one single PN/PN coupler depends on the capacity restrictions of the PN/PN coupler.

9.1.3 Safety-related master-master communication

9.1.3.1 Configure safety-related master-master communication

Introduction

Safety-related communication between safety programs of the F-CPUs of DP masters takes place via a DP/DP coupler.

NOTE

Switch the data validity indicator "DIA" on the DIP switch of the DP/DP coupler to "OFF". Otherwise, safety-related CPU-CPU communication is not possible.

Configuring transfer areas

You must configure one transfer area for output data and one transfer area for input data in the *hardware and network editor* for each safety-related communication connection between two F-CPUs in the DP/DP coupler. The figure below shows how both of the F-CPUs are able to send and receive data (bidirectional communication). One transfer area for output data and one transfer area for input data must be configured in the DP/DP coupler for each of the two communication connections.

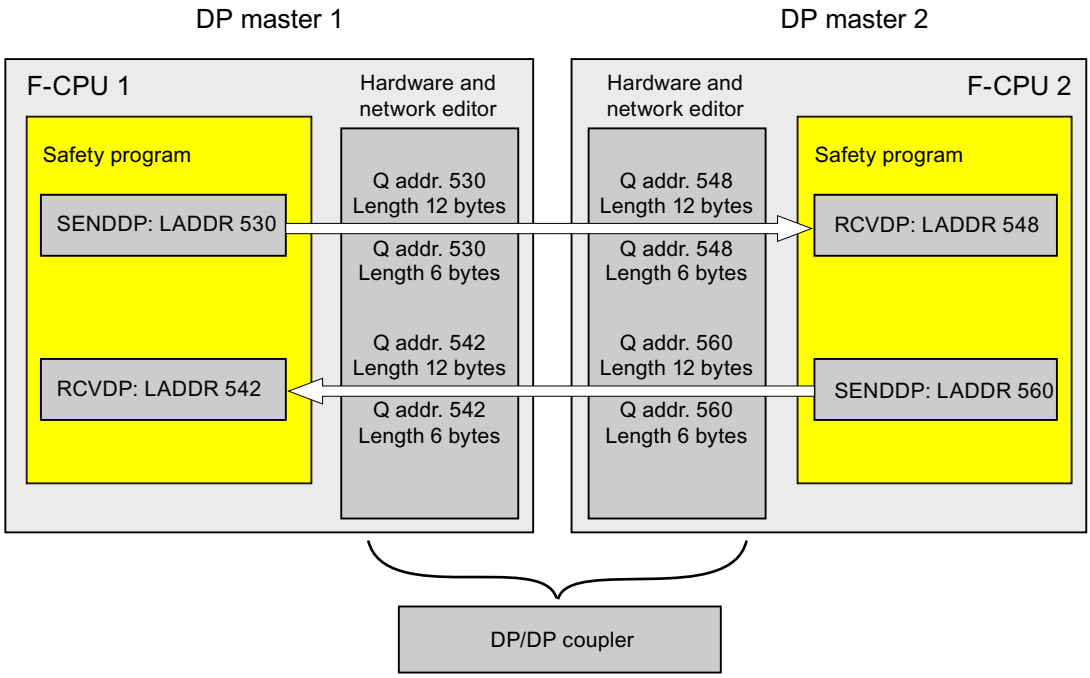

Rules for defining transfer areas

The transfer area for input data and the transfer area for output data for the **data to be sent** must begin with the same start address. A total of 6 bytes (consistent) is required for the transfer area for input data; 12 bytes (consistent) are required for the transfer area for output data.

The transfer area for input data and the transfer area for output data for the **data to be received** must begin with the same start address. A total of 12 bytes (consistent) is required for the transfer area for input data; 6 bytes (consistent) are required for the transfer area for output data.

Procedure for configuration

The procedure for configuring safety-related master-master communication is identical to that in the standard system.

Proceed as follows:

1. Insert two F-CPUS from the "Hardware catalog" task card into the project.
2. Switch to the network view of the *hardware and network editor*.

3. Select a DP/DP coupler from "Other field devices\PROFIBUS DP\Gateways\Siemens AG\DP/DP Coupler" in the "Hardware catalog" task card and insert it into the network view of the hardware and network editor.
4. Insert a second DP/DP coupler.
5. Connect a DP interface of F-CPU 1 to the DP interface of a DP/DP coupler and a DP interface of F-CPU 2 to the DP interface of the other DP/DP coupler.

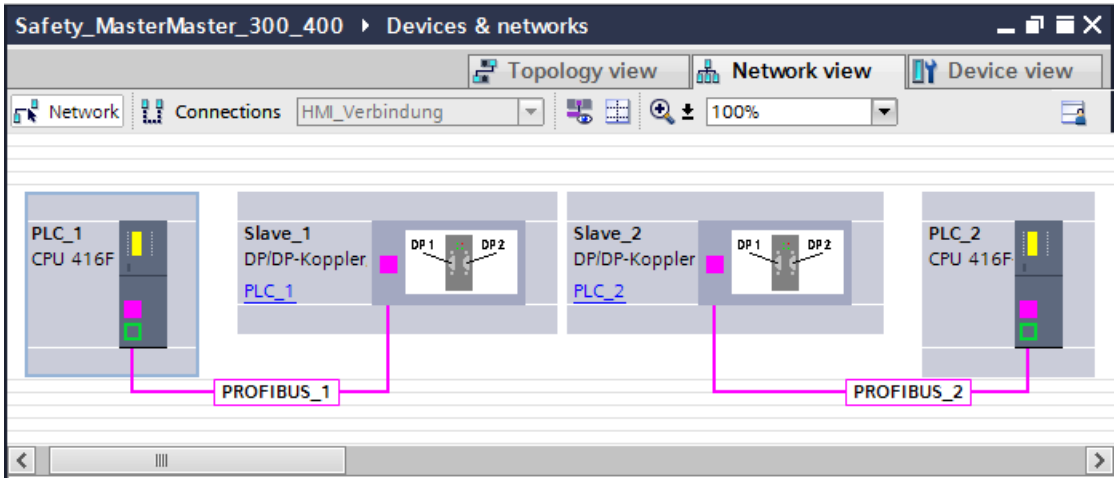

6. A free PROFIBUS address is assigned automatically in the properties of the DP/DP-coupler in the device view. You must set this address on the DP/DP coupler of PLC 1, either by using the DIP switch on the device or in the configuration of the DP/DP coupler (see DP/DP Coupler (http://support.automation.siemens.com/WW/view/en/1179382) manual).
7. Switch to the device view of the DP/DP coupler for PLC1 for bidirectional communication connections i.e. where each F-CPU is both to send and to receive data. Select the following modules from the "Hardware catalog" task card (with filter activated), and insert them in the "Device overview" tab:
   - One "6 bytes I/12 bytes Q consistent" module, and
   - One "12 bytes I/6 bytes Q consistent" module
8. In the properties of the modules, assign the addresses outside the process image as follows:

   For "6 bytes I/12 bytes Q consistent" module for sending data for example:
   - Input addresses: Start address 530
   - Output addresses: Start address 530

   For "12 bytes I/6 bytes Q consistent" module for receiving data for example:
   - Input addresses: Start address 542
   - Output addresses: Start address 542

NOTE

Make sure that you assign identical start addresses for the address areas of the output and input data.

Tip: Make a note of the start addresses of the transfer areas. You need these to program the SENDDP and RCVDP blocks (LADDR input).

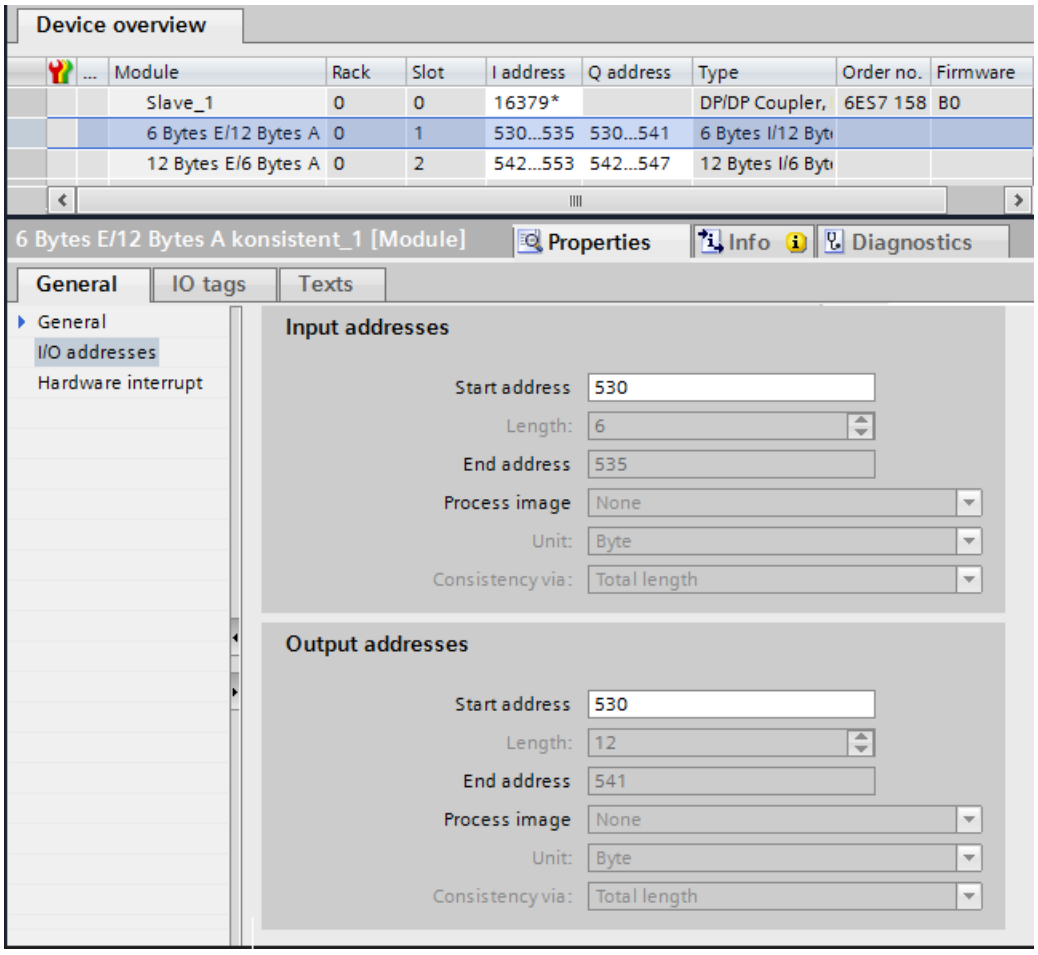

9. Select the following modules from the "Hardware catalog" task card (with filter activated) in the device view of DP/DP coupler PLC2, and insert them in the "Device overview" tab:
   - One "12 bytes I/6 bytes Q consistent" module, and
   - One "6 bytes I/12 bytes Q consistent" module
10. In the properties of the modules, assign the addresses outside the process image as follows:
    For "12 bytes I/6 bytes Q consistent" module for receiving data for example:
    - Input addresses: Start address 548
    - Output addresses: Start address 548

    For "6 bytes I/12 bytes Q consistent" module for sending data for example:
    - Input addresses: Start address 560
    - Output addresses: Start address 560

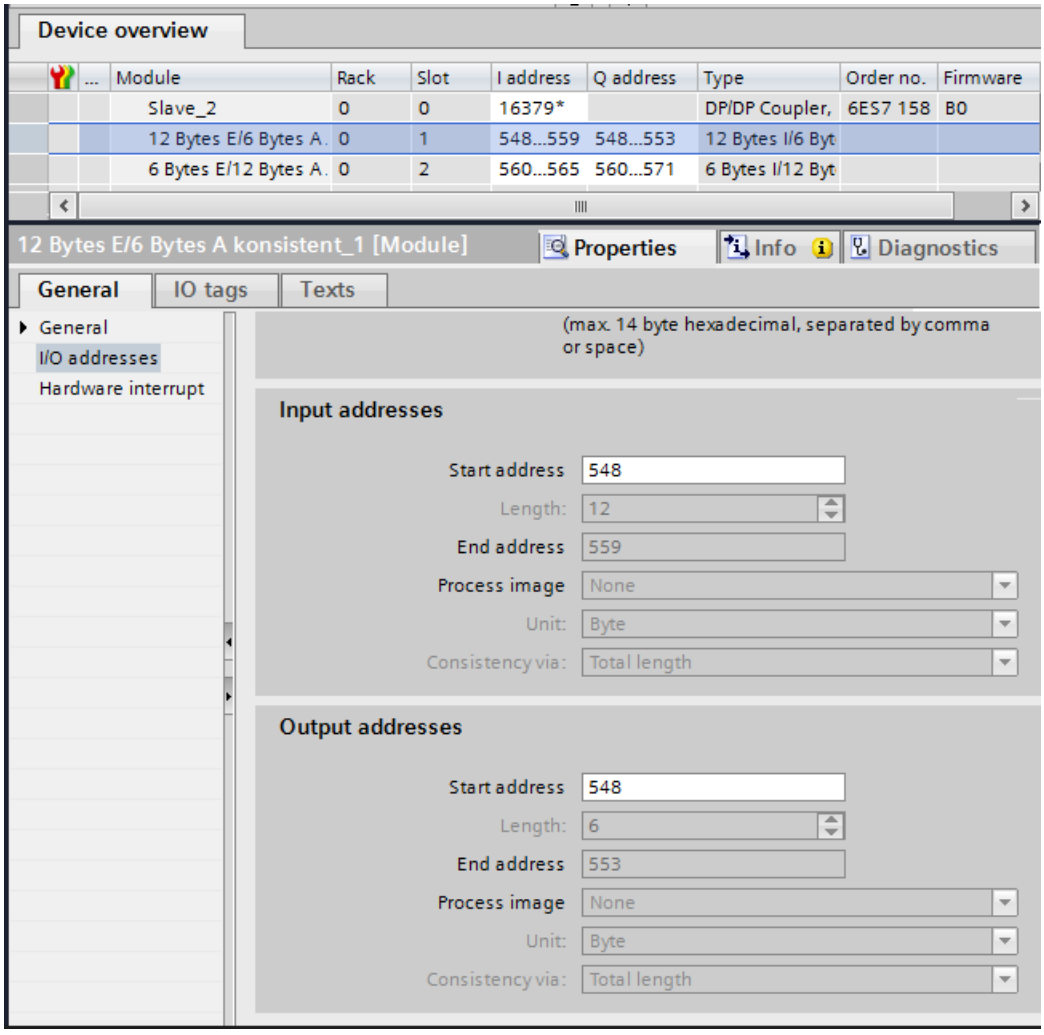
Device overview
... Module Rack Slot I address Q address Type Order no. Firmware
Slave_2 0 0 16379* DP/DP Coupler, 6ES7 158 B0
12 Bytes E/6 Bytes A. 0 1 548...559 548...553 12 Bytes I/6 Byt
6 Bytes E/12 Bytes A. 0 2 560...565 560...571 6 Bytes I/12 Byt
12 Bytes E/6 Bytes A konsistent_1 [Module]
Properties
Info
Diagnostics
General
IO tags
Texts
General
I/O addresses
Hardware interrupt
(max. 14 byte hexadecimal, separated by comma or space)
Input addresses
Start address 548
Length: 12
End address 559
Process image None
Unit: Byte
Consistency via: Total length
Output addresses
Start address 548
Length: 6
End address 553
Process image None
Unit: Byte
Consistency via: Total length

9.1.3.2 Safety-related master-master communication via SENDDP and RCVDP

Communication via SENDDP and RCVDP instructions

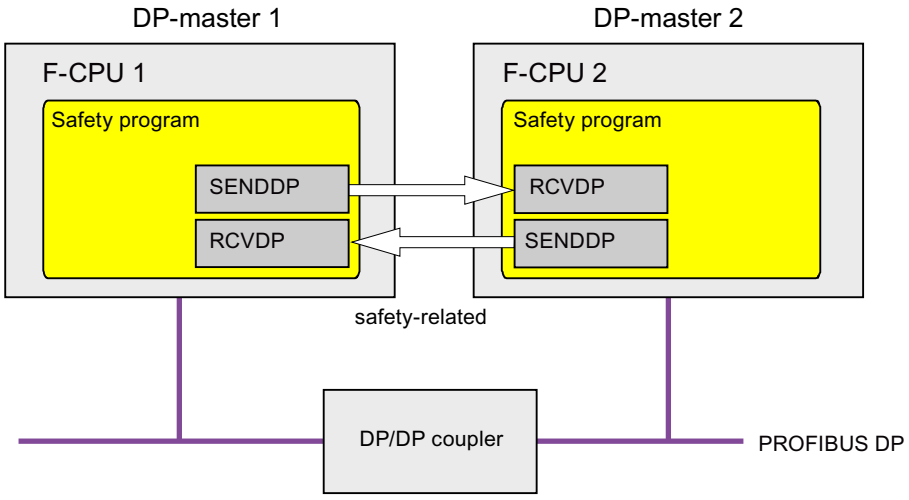

Safety-related communication between the F-CPUs of the DP master uses the SENDDP and RCVDP instructions for sending and receiving, respectively. These can be used to perform a fail-safe transfer of a *fixed* amount of fail-safe data of the data type INT or BOOL.

You can find these instructions in the "Instructions" task card under "Communication". The RCVDP instruction **must** be called at the start of the main safety block. The SENDDP instruction **must** be called at the end of the main safety block.

Note that the send signals are not sent until after the SENDDP instruction call at the end of execution of the relevant F-runtime group.

A detailed description of the SENDDP and RCVDP instructions can be found in SENDDP and RCVDP: Send and receive data via PROFIBUS DP/PROFINET IO (STEP 7 Safety V18) (Page 529-530).

9.1.3.3 Program safety-related master-master communication

Requirement for programming

The transfer areas for input and output data for the DP/DP coupler must be configured.

Programming procedure

You program safety-related master-master communication as follows:

1. In the safety program from which data is to be sent, call the SENDDP instruction (Page 529-530) for sending at the end of the main safety block.
2. In the safety program in which data is to be received, call the RCVDP instruction (Page 529-530) for receiving at the start of the main safety block.

3. Assign the start addresses of the transfer areas for output and input data of the DP/DP coupler configured in the *hardware and network editor* to the respective LADDR inputs.
   You must carry out this assignment for every communication connection for each of the F-CPUs involved.

4. Assign the value for the respective F-communication ID to the DP_DP_ID inputs. This establishes the communication relationship between the SENDDP instruction in one F-CPU and the RCVDP instruction in the other F-CPU: The associated instructions receive the same value for DP_DP_ID.
   The figure below contains an example of how to specify the F-communication IDs at the inputs of the SENDDP and RCVDP instructions for 5 safety-related master-master communications relationships.

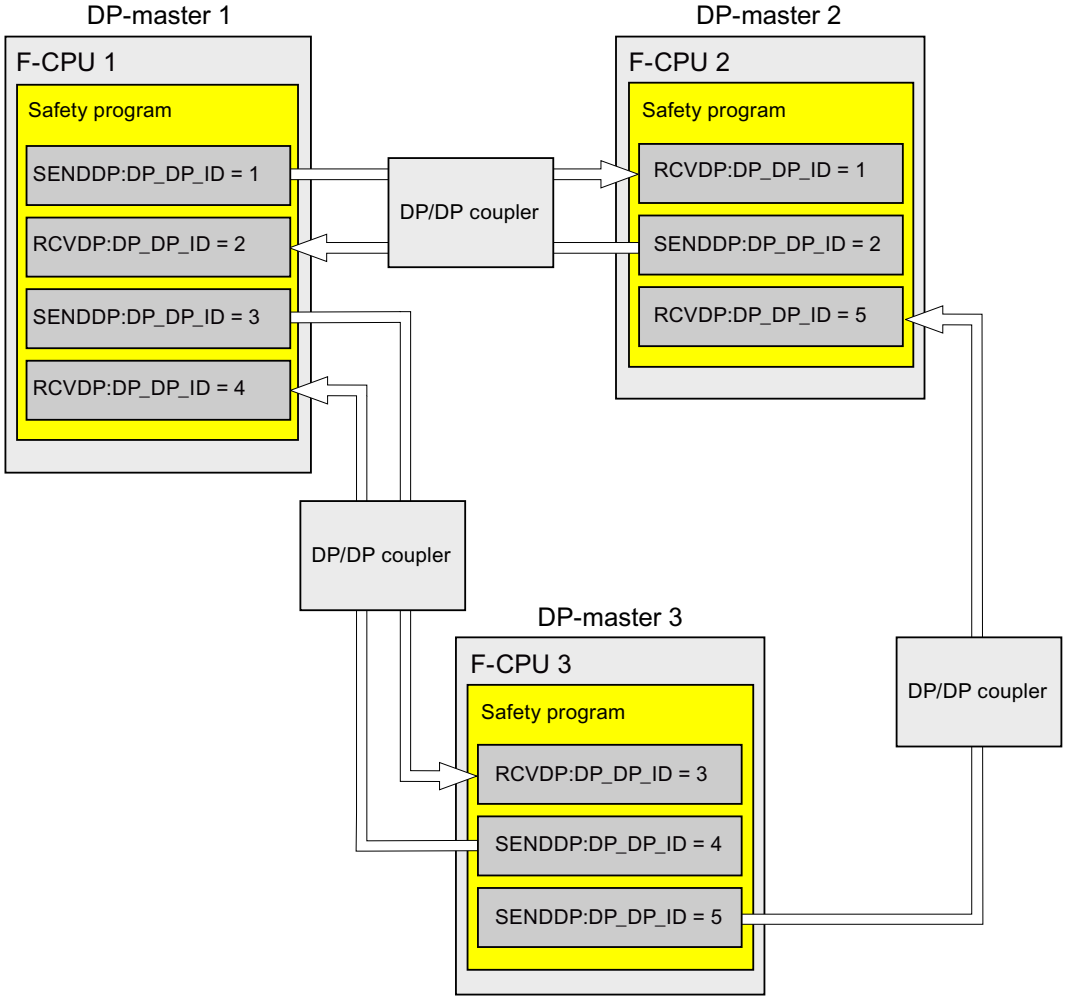

WARNING

The value of the respective F-communication ID (input DP_DP_ID; data type: INT) can be freely selected; however, it must be unique for all safety-related communication connections network-wide* and CPU-wide at all times. The uniqueness must be checked in the safety summary during acceptance of the safety program.

You must supply constant values to the inputs DP_DP_ID and LADDR when calling the instruction. Direct write accesses in the associated instance DB to DP_DP_ID and LADDR are not permitted in the safety program! *(S016)*

* A network consists of one or more subnets. "Network-wide" means beyond the boundaries of the subnet. In PROFIBUS, a network includes all the nodes accessible via PROFIBUS DP. In PROFINET IO, a network includes all nodes accessible via RT_Class_1/2/3 (Ethernet/WLAN/Bluetooth, Layer 2) and if applicable RT_Class_UDP (IP, Layer 3).

5. Supply the SD_BO_xx and SD_I_xx inputs of SENDDP with the send signals. To cut down on intermediate signals when transferring block parameters, you can write the value directly to the instance DB of SENDDP using fully qualified access (for example, "Name SENDDP_1".SD_BO_02) before calling SENDDP.
6. Supply the RD_BO_xx and RD_I_xx outputs of RCVDP with the signals that you want to process further in other program sections or use fully qualified access to read the received signals directly in the associated instance DB in the program sections to be processed further (e.g. "Name RCVDP_1".RD_BO_02).
7. Supply the SUBBO_xx and SUBI_xx inputs of RCVDP with the fail-safe values that are to be output by RCVDP in place of the process data until communication is established for the first time after startup of the sending and receiving F-systems or in the event of an error in safety-related communication.
   - Specification of constant fail-safe values:
     For data of data type INT, you can enter constant fail-safe values directly as constants in the SUBI_xx input (initial value = "0"). If you want to specify a constant fail-safe value for data of the data type BOOL, provide the tag "F_GLOBDB".VKE1 for the SUBBO_xx input (initial value = "FALSE").
   - Specification of variable substitute values:
     If you want to specify variable substitute values, define a tag that you calculate through your safety program in an F-DB and specify this tag (fully qualified) in the SUBI_xx or SUBBO_xx input.

     ⚠ WARNING

     Note: The program logic for calculating variable substitute values can only be inserted after the RCVDP calls, because there must be no program logic before the RCVDP calls. This is why the initial values of the substitute values are active in all RCVDP instructions in the first cycle after a startup of the F-system. You must therefore assign appropriate initial values for these tags. *(S017)*

8. Configure the TIMEOUT inputs of the RCVDP and SENDDP instructions with the required monitoring time.

   ⚠ WARNING

   It can only be ensured (from a fail-safe standpoint) that a signal state to be transferred will be acquired and transferred to the receiver if the signal level is pending for at least as long as the assigned monitoring time. *(S018)*

   Information on calculating the monitoring times can be found in Monitoring and response times (Page 546).
9. Optional: Evaluate the ACK_REQ output of the RCVDP instruction, for example, in the standard user program or on the HMI system in order to query or to indicate whether user acknowledgment is required.

10. Supply the ACK_REI input of the RCVDP instruction with the acknowledgment signal for reintegration.
11. Optional: Evaluate the SUBS_ON output of the RCVDP or SENDDP instruction in order to query whether the RCVDP instruction is outputting the fail-safe values assigned in the SUBBO_xx and SUBI_xx inputs.
12. Optional: Evaluate the ERROR output of the RCVDP or SENDDP instruction, for example, in the standard user program or on the HMI system in order to query or to indicate whether a communication error has occurred.
13. Optional: Evaluate the SENDMODE output of the RCVDP instruction in order to query whether the F-CPU with the associated SENDDP instruction is in disabled safety mode (Page 310).

9.1.3.4 Safety-related master-master communication:Limits for data transfer

NOTE

If the data quantities to be transmitted exceed the capacity of the SENDDP / RCVDP correlated instructions, a second (or third) SENDDP / RCVDP call can be used. This requires configuration of an additional connection via the DP/DP coupler. Whether or not this is possible with one single DP/DP coupler depends on the capacity restrictions of the DP/DP coupler.

9.1.4 Safety-related IO controller-I-device communication

9.1.4.1 Configuring safety-related communication between IO controller and I-device

Introduction

Safety-related communication between the safety program of the F-CPU of an IO controller and the safety program(s) of the F-CPU(s) of one or more I-devices takes place via IO controller-I-device connections (**F**-CD) in PROFINET IO, in the same way as in standard systems.

You do not need any additional hardware for IO controller-I-device communication.

The F-CPU to be used as an I-device must support the "IO-device" operating mode.

Configuring transfer areas

For every safety-related communication connection between two F-CPUs, you must configure transfer areas in the *hardware and network editor*. The figure below shows how both of the F-CPUs are able to send and receive data (bidirectional communication).

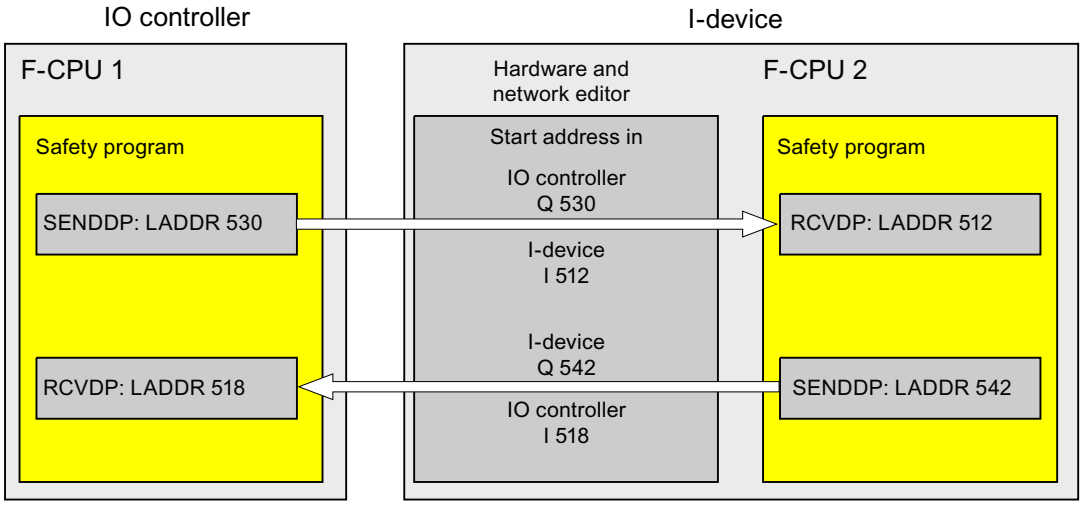

The transfer area is assigned a label when it is created to identify it as the communication relationship. For example, "F-CD_PLC_2 PLC_1_1" for the first F-CD connection between IO controller F-CPU 1 and I-device F-CPU 2.

You assign the start addresses of the transfer areas to the LADDR input of the SENDDP and RCVDP instructions in the safety programs.

Procedure for configuration

The procedure for configuring safety-related IO controller-I-device communication is identical to that in the standard system.

Proceed as follows:

1. Insert two F-CPUS from the "Hardware catalog" task card into the project.
2. Enable the "IO Device" mode for F-CPU 2 in the properties of its PN interface and assign this PN interface to a PN interface of F-CPU 1.
3. Select the PROFINET interface of F-CPU 2. Under "Transfer areas", you create an F-CD connection (type "F-CD") for sending to the IO controller (←). The F-CD connection is shown in yellow in the table and the address areas in the I-device and IO controller assigned outside of the process image are displayed.
   In addition, an acknowledgment connection is created automatically for each F-CD connection. (see "Transfer area details").
4. Create an additional F-CD connection for receiving from the IO controller.

5. In the transfer area you just created, click the arrow in order to change the transfer direction to receiving from IO controller (→).

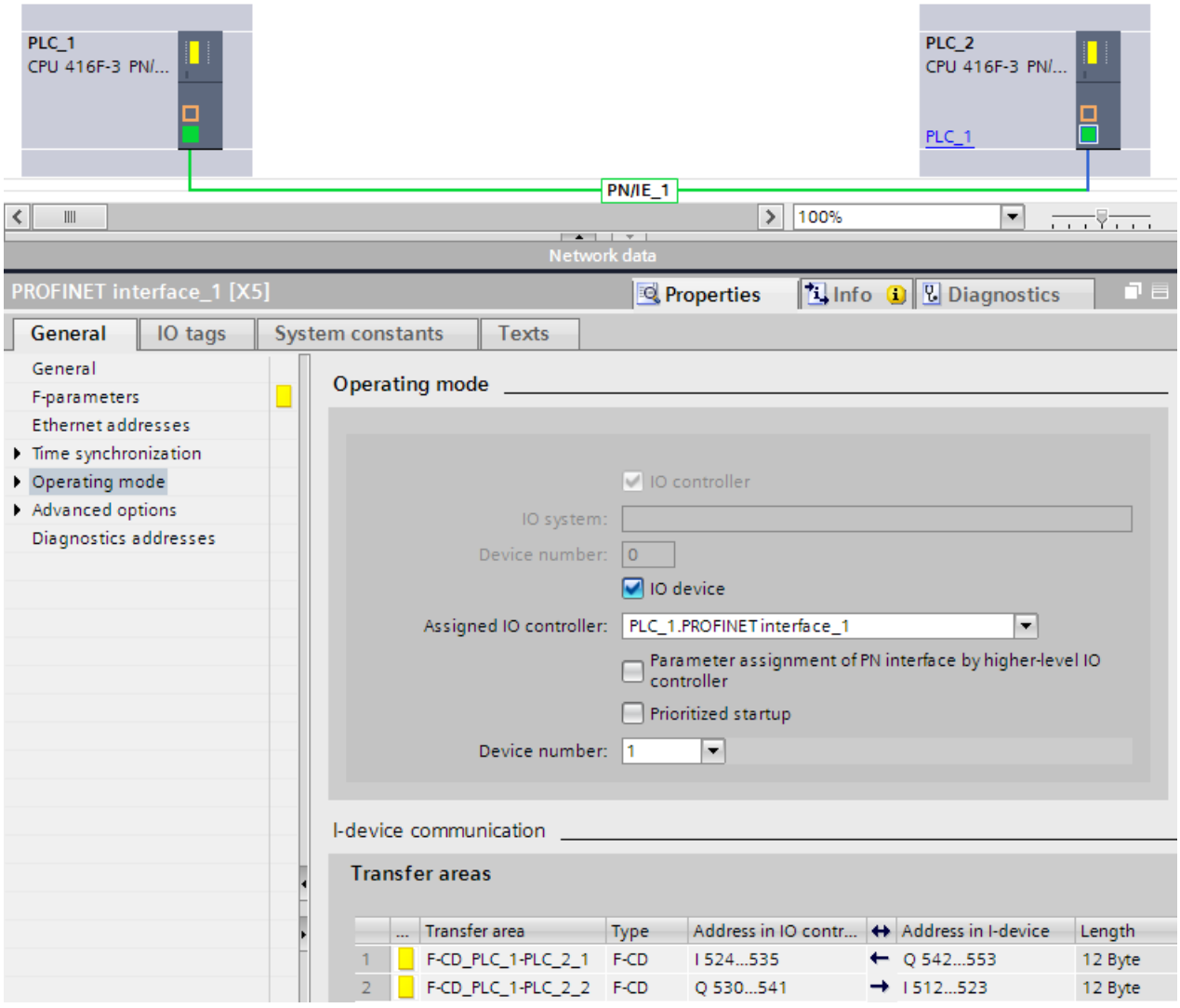

9.1.4.2 Safety-related IO controller-I-device communication via SENDDP and RCVDP

Communication via SENDDP and RCVDP instructions

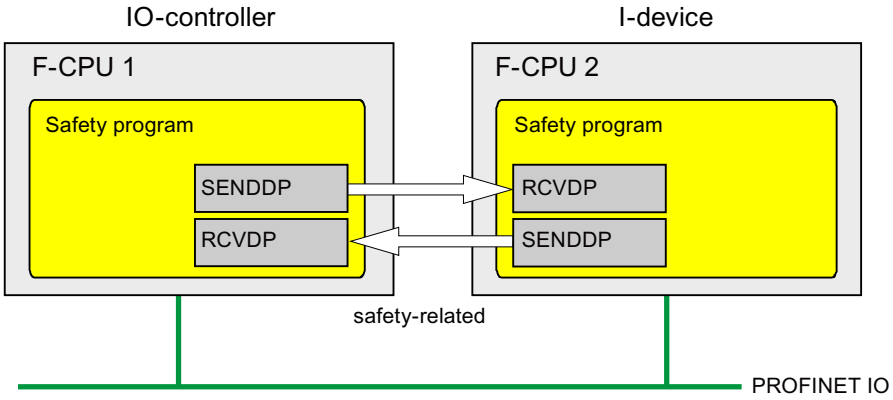

Safety-related communication between the F-CPUs of the IO controller and an I-device makes use of the SENDDP and RCVDP instructions for sending and receiving, respectively. These can be used to perform a fail-safe transfer of a *fixed* amount of fail-safe data of the data type INT or BOOL.

You can find these instructions in the "Instructions" task card under "Communication". The RCVDP instruction **must** be called at the start of the main safety block. The SENDDP instruction **must** be called at the end of the main safety block.

Note that the send signals are not sent until after the SENDDP instruction call at the end of execution of the relevant F-runtime group.

A detailed description of the SENDDP and RCVDP instructions can be found in SENDDP and RCVDP: Send and receive data via PROFIBUS DP/PROFINET IO (STEP 7 Safety V18) (Page 529-530).

9.1.4.3 Programming safety-related IO controller I-device communication

Requirement for programming

The transfer areas must be configured.

Programming procedure

The procedure for programming safety-related IO controller-I-device communication is the same as that for programming safety-related IO controller-IO controller communication (see Program safety-related IO controller-IO controller communication (Page 183)).

The assignment of the start addresses of the transfer areas to the LADDR input of the SENDDP/RCVDP instructions can be obtained from the following table.

Instruction	Start address LADDR	
	From row	From column
SENDDP in the IO controller	→	Address in the IO controller
RCVDP in the IO controller	←	Address in the IO controller
SENDDP in the I-device	←	Address in the IO device
RCVDP in the I-device	→	Address in the IO device

The figure below contains an example of how to specify the F-communication IDs for the inputs of the SENDDP and RCVDP instructions for 4 safety-related IO controller-I-device communication relationships.

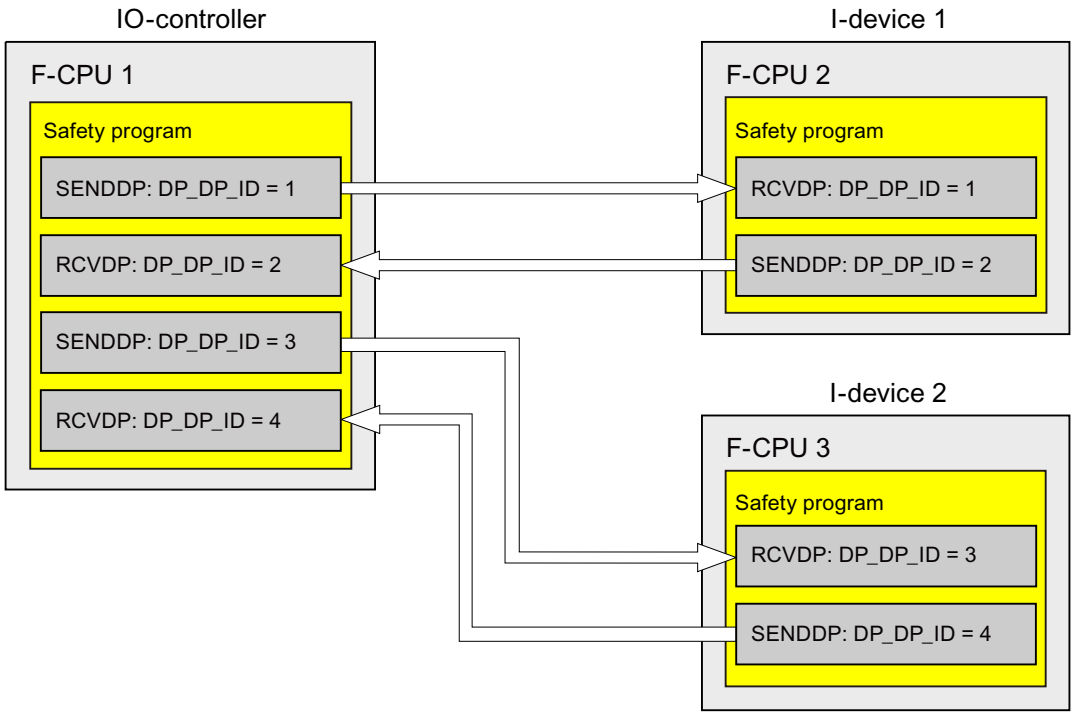

WARNING

The value of the respective F-communication ID (input DP_DP_ID; data type: INT) can be freely selected; however, it must be unique for all safety-related communication connections network-wide* and CPU-wide at all times. The uniqueness must be checked in the safety summary during acceptance of the safety program.

You must supply constant values to the inputs DP_DP_ID and LADDR when calling the instruction. Direct write accesses in the associated instance DB to DP_DP_ID and LADDR are not permitted in the safety program! *(S016)*

* A network consists of one or more subnets. "Network-wide" means beyond the boundaries of the subnet. In PROFIBUS, a network includes all the nodes accessible via PROFIBUS DP. In

PROFINET IO, a network includes all nodes accessible via RT_Class_1/2/3 (Ethernet/WLAN/Bluetooth, Layer 2) and if applicable RT_Class_UDP (IP, Layer 3).

WARNING

It can only be ensured (from a fail-safe standpoint) that a signal state to be transferred will be acquired and transferred to the receiver if the signal level is pending for at least as long as the assigned monitoring time. *(S018)*

Information on calculating the monitoring times can be found in Monitoring and response times (Page 546).

9.1.4.4 Safety-related IO-Controller-IO-Device communication - Limits for data transfer

Limits for data transfer

If the amount of data to be transferred is greater than the capacity of related SENDDP/RCVDP instructions, you can use additional SENDDP/RCVDP instructions. Configure additional transfer areas for this purpose. Remember the maximum limit of 1440 bytes of input data or 1440 bytes of output data for transfer between an I-device and a IO controller.
The following table shows the amount of output and input data assigned in safety-related communication connections:

Safety-related communication	Communication connection	Assigned input and output data			
		In the IO controller		In the I-device	
		Output data	Input data	Output data	Input data
IO controller-I-Device	**Sending:** I-Device 1 to IO controller	6 bytes	12 bytes	12 bytes	6 bytes
	Receiving: I-Device 1 from IO controller	12 bytes	6 bytes	6 bytes	12 bytes

Consider all additional configured safety-related and standard communication connections (transfer areas of type F-CD and CD) for the maximum limit of 1440 bytes of input data or 1440 bytes of output data for transfer between an I-device and an IO controller. In addition, data are assigned for internal purposes such that the maximum limit may be reached sooner. When the limit is exceeded, a corresponding error message is displayed.

9.1.5 Safety-related master-I-slave communication

9.1.5.1 Configuring safety-related master-I-slave communication

Introduction

Safety-related communication between the safety program of the F-CPU of a DP master and the safety program(s) of the F-CPU(s) of one or more I-slaves takes place over master-I-slave connections (**F**-MS), as in standard systems.

You do not need a DP/DP coupler for master-I-slave communication.

Configuring transfer areas

For every safety-related communication connection between two F-CPUs, you must configure transfer areas in the *hardware and network editor*. The figure below shows how both of the F-CPUs are able to send and receive data (bidirectional communication).

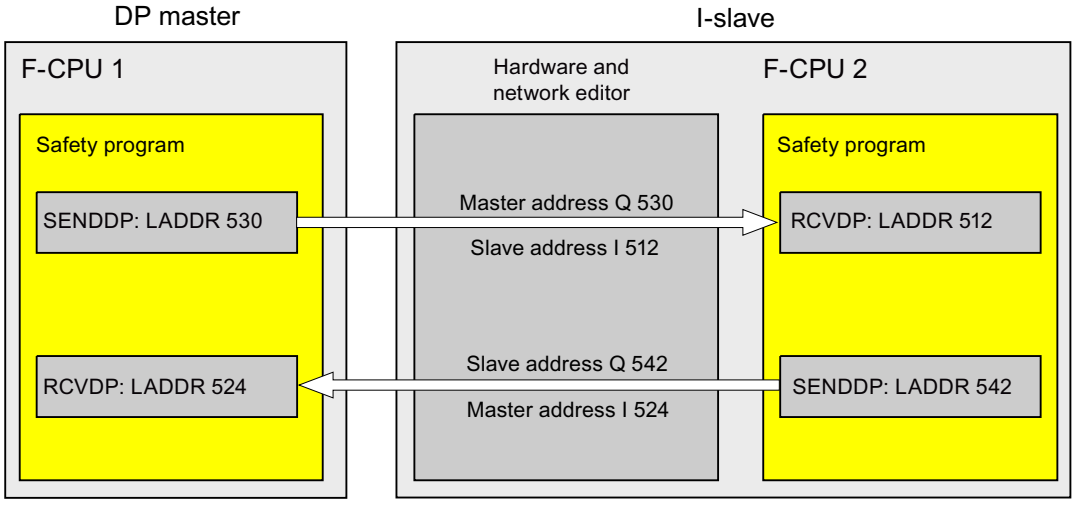

The transfer area is assigned a label when it is created to identify it as the communication relationship. For example, "F-MS_PLC_2-PLC_1_1" for the first F-MS connection between DP master F-CPU 1 and I-slave F-CPU 2.

You assign the start addresses of the transfer areas to the LADDR input of the SENDDP and RCVDP instructions in the safety programs.

Procedure for configuration

The procedure for configuring safety-related master-I-slave communication is identical to that in the standard system.

Proceed as follows:

1. Insert two F-CPUS from the "Hardware catalog" task card into the project.
2. Activate the "DP slave" mode (I-slave) for F-CPU 2 in the properties of its DP interface and assign this DP interface to a DP interface of F-CPU 1.

3. Select the PROFIBUS interface of F-CPU 2. Under "Transfer areas", you create an F-MS connection (type "F-MS") for sending to the DP master (←). The F-MS connection is shown in yellow in the table and the transfer areas in the I-slave and DP master assigned outside of the process image are displayed.
   In addition, an acknowledgment connection is created automatically for each F-MS connection. (see "Transfer area details").
4. Create an additional F-MS connection for receiving from the DP master.
5. In the transfer area you just created, click the arrow in order to change the transfer direction to receiving from DP master (→).

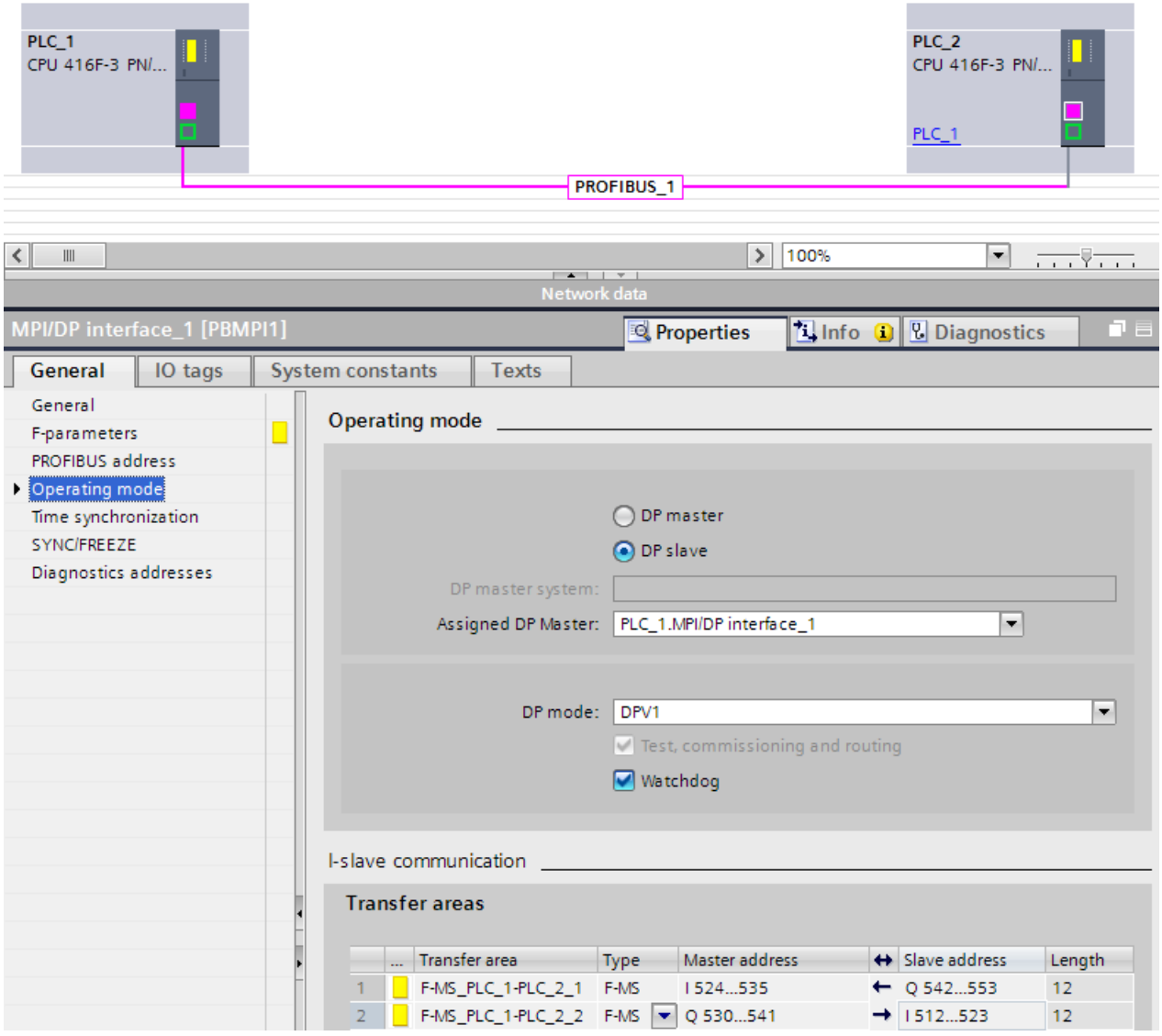

9.1.5.2 Safety-related master-I-slave or I-slave-I-slave communication via SENDDP and RCVDP

Communication via SENDDP and RCVDP instructions

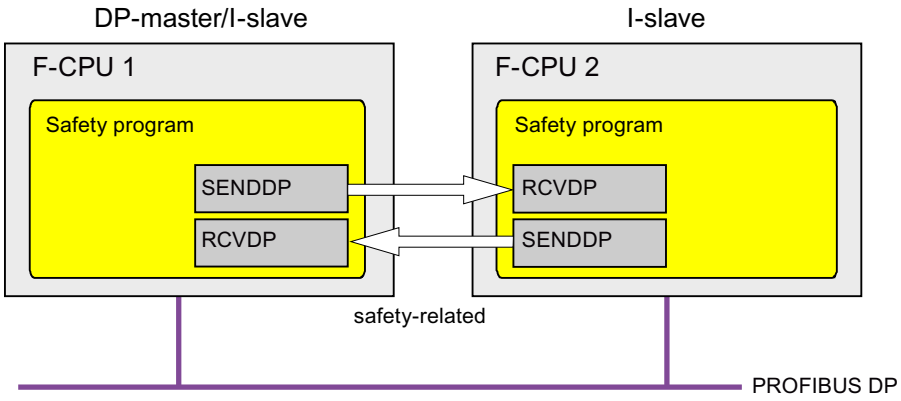

Safety-related communication between the F-CPUs of the DP master and an I-slave or between the F-CPUs of multiple I-slaves makes use of the SENDDP and RCVDP instructions for sending and receiving, respectively. These can be used to perform a fail-safe transfer of a *fixed* amount of fail-safe data of the data type INT or BOOL.

You can find these instructions in the "Instructions" task card under "Communication". The RCVDP instruction **must** be called at the start of the main safety block. The SENDDP instruction **must** be called at the end of the main safety block.

Note that the send signals are not sent until after the SENDDP instruction call at the end of execution of the relevant F-runtime group.

A detailed description of the SENDDP and RCVDP instructions can be found in SENDDP and RCVDP: Send and receive data via PROFIBUS DP/PROFINET IO (STEP 7 Safety V18) (Page 529-530).

9.1.5.3 Program the safety-related master-I-slave or I-slave-I-slave communication

Requirements

The transfer areas must be configured.

Programming procedure

The procedure for programming safety-related master-I-slave communication or I-slave-I-slave communication is the same as that for programming safety-related master-master communication (see Program safety-related master-master communication (Page 192)).

The assignment of the start addresses of the transfer areas to the LADDR input of the SENDDP/RCVDP instructions can be obtained from the following table.

Instruction	Start address LADDR	
	From row	From column
SENDDP in the DP master	→	Master address
RCVDP in the DP master	←	Master address
SENDDP in the I-slave	←	Slave address
RCVDP in the I-slave	→	Slave address

The figure below contains an example of how to specify the F-communication IDs at the inputs of SENDDP and RCVDP instructions for four safety-related master-I-slave and two I-slave-I-slave communications relationships.

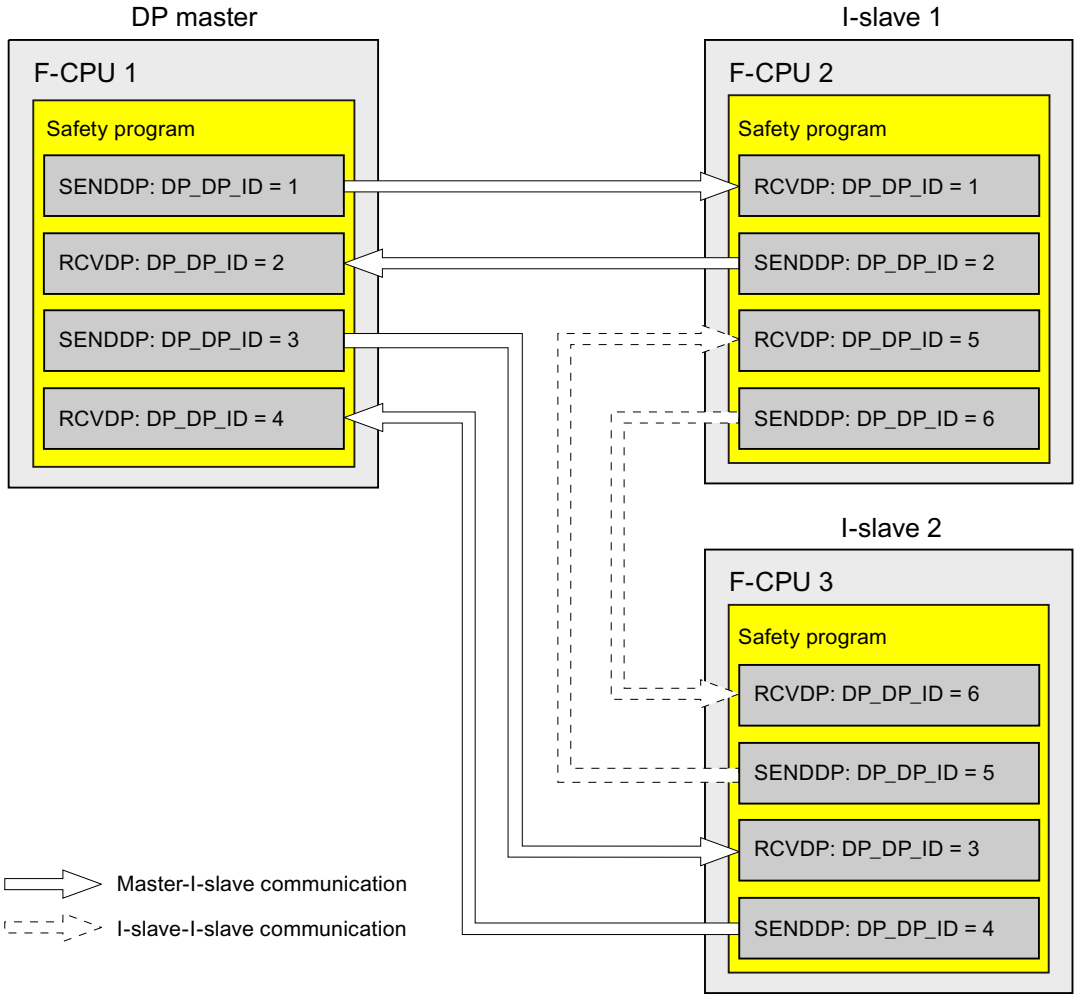

WARNING

The value of the respective F-communication ID (input DP_DP_ID; data type: INT) can be freely selected; however, it must be unique for all safety-related communication connections network-wide* and CPU-wide at all times. The uniqueness must be checked in the safety summary during acceptance of the safety program.

You must supply constant values to the inputs DP_DP_ID and LADDR when calling the instruction. Direct write accesses in the associated instance DB to DP_DP_ID and LADDR are not permitted in the safety program! *(S016)*

* A network consists of one or more subnets. "Network-wide" means beyond the boundaries of the subnet. In PROFIBUS, a network includes all the nodes accessible via PROFIBUS DP. In PROFINET IO, a network includes all nodes accessible via RT_Class_1/2/3 (Ethernet/WLAN/Bluetooth, Layer 2) and if applicable RT_Class_UDP (IP, Layer 3).

WARNING

It can only be ensured (from a fail-safe standpoint) that a signal state to be transferred will be acquired and transferred to the receiver if the signal level is pending for at least as long as the assigned monitoring time. *(S018)*

Information on calculating the monitoring times can be found in Monitoring and response times (Page 546).

9.1.5.4 Limits for data transfer of safety-related master-I-slave or I-slave-I-slave communication

Limits for data transfer

If the amount of data to be transferred is greater than the capacity of related SENDDP/RCVDP instructions, you can use additional SENDDP/RCVDP instructions. Configure additional transfer areas for this purpose. Note the maximum limit of 244 bytes of input data or 244 bytes of output data for transfer between an I-slave and a DP master.

The following table shows the amount of output and input data assigned in safety-related communication connections:

Safety-related communication	Communication connection	Assigned input and output data					
		DP master		I-slave 1		I-slave 2	
		Output data	Input data	Output data	Input data	Output data	Input data
Master-I-slave	**Sending:** I-slave 1 to DP master	6 bytes	12 bytes	12 bytes	6 bytes	—	—
	Receiving: I-slave 1 from DP master	12 bytes	6 bytes	6 bytes	12 bytes	—	—
I-slave-I-slave	**Sending:** I-slave 1 to I-slave 2	—	18 bytes	12 bytes	6 bytes	6 bytes	12 bytes
	Receiving: I-slave 1 from I-slave 2	—	18 bytes	6 bytes	12 bytes	12 bytes	6 bytes

Consider all additional configured safety-related and standard communication connections (transfer areas of type F-MS-, F-DX-, F-DX-Mod., MS-, DX- and DX-Mod) for the maximum limit of 244 bytes of input data or 244 bytes of output data for transfer between an I-device and a DP master F-MS, F-DX, F-DX-Mod., MS, DX). If the maximum limit of 244 bytes of input data or 244 bytes of output data is exceeded, you will receive a corresponding error message.

9.1.6 Safety-related I-slave-I-slave communication

9.1.6.1 Configure safety-related I-slave-I-slave communication

Introduction

Safety-related communication between the safety program of the F-CPUs of I-slaves takes place using direct data exchange (**F**-DX) – same as in standard programs.

You do not need any additional hardware for I-slave-I-slave communication.

I-slave-I-slave communication is also possible:

- If the assigned DP master is a standard CPU that supports direct data exchange
- when instead of a DP master, an IO controller is networked with the I-slaves via an IE/PB link

Configuring transfer areas

For every safety-related communication connection between two I-slaves, you must configure transfer areas in the *hardware and network editor*. In the figure below, both of the I-slaves are to be able to send and receive data (bidirectional communication).

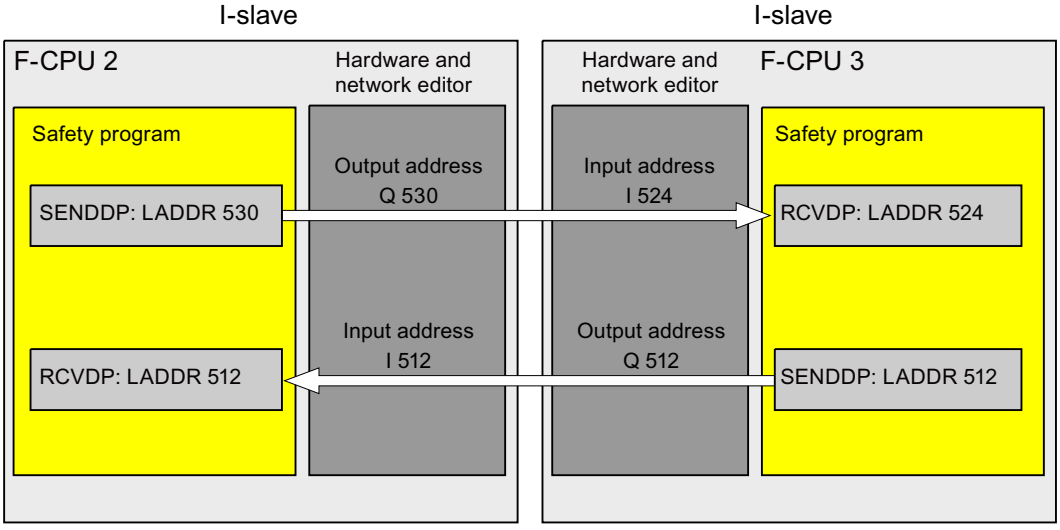

The transfer area is assigned a label when it is created to identify it as the communication relationship. For example, "F-DX_PLC_2-PLC_1_1" for the first F-DX connection between F-CPU 1 and F-CPU 2.

You assign the start addresses of the transfer areas to the LADDR input of the SENDDP and RCVDP instructions in the safety programs.

Procedure for configuration

The procedure for configuring safety-related I-slave-I-slave communication is identical to that in the standard system. Proceed as follows:

1. Insert three F-CPUS from the "Hardware catalog" task card in the project.
2. Activate "DP slaves" mode (I-slave) for F-CPU 2 and F-CPU 3 in the properties of their DP interfaces and assign these DP interfaces to a DP interface of F-CPU 1.
3. Select the DP interface of F-CPU 3 in the network view.
4. Select the "I/O communication" tab.
5. Use a drag-and-drop operation in the network view to move F-CPU 2 to the "Partner 2" column on the "I/O-communication" tab.
   This creates a line with "Direct data exchange" mode for sending to the I-slave (F-CPU 2) (→).

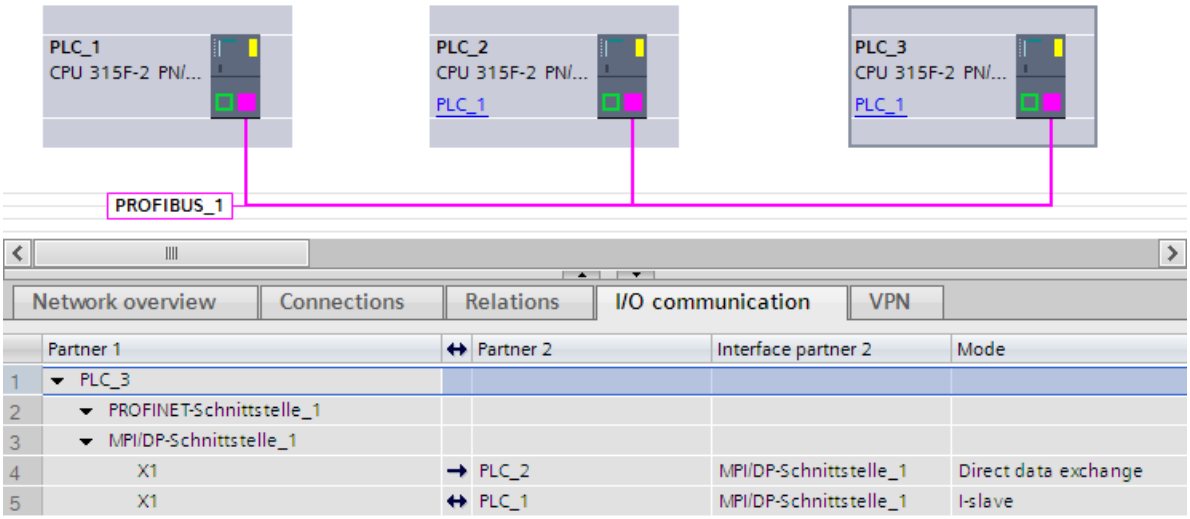

6. Click in the newly created line (→).
7. In "Transfer areas" ("Direct data exchange" table), create an F-DX connection (type "F-DX") for sending to the I-slave (F-CPU 2) (→). The F-DX connection is shown in yellow in the table and the transfer areas in the I-slaves assigned outside of the process image (PLC_2 and PLC_3) are displayed.
   In addition, a line with "Direct data exchange" mode for receiving from the I-slave (F-CPU 2) (←) is created automatically in the "I/O communication" tab, and an acknowledgment connection (→, transfer area x_Ack) is created automatically in the associated "Direct data exchange" table.
   One transfer area (type F-MS) for the master CPU is created in the "I-slave communication table" of each I-slave.

This completes the configuration for sending to F-CPU 2.

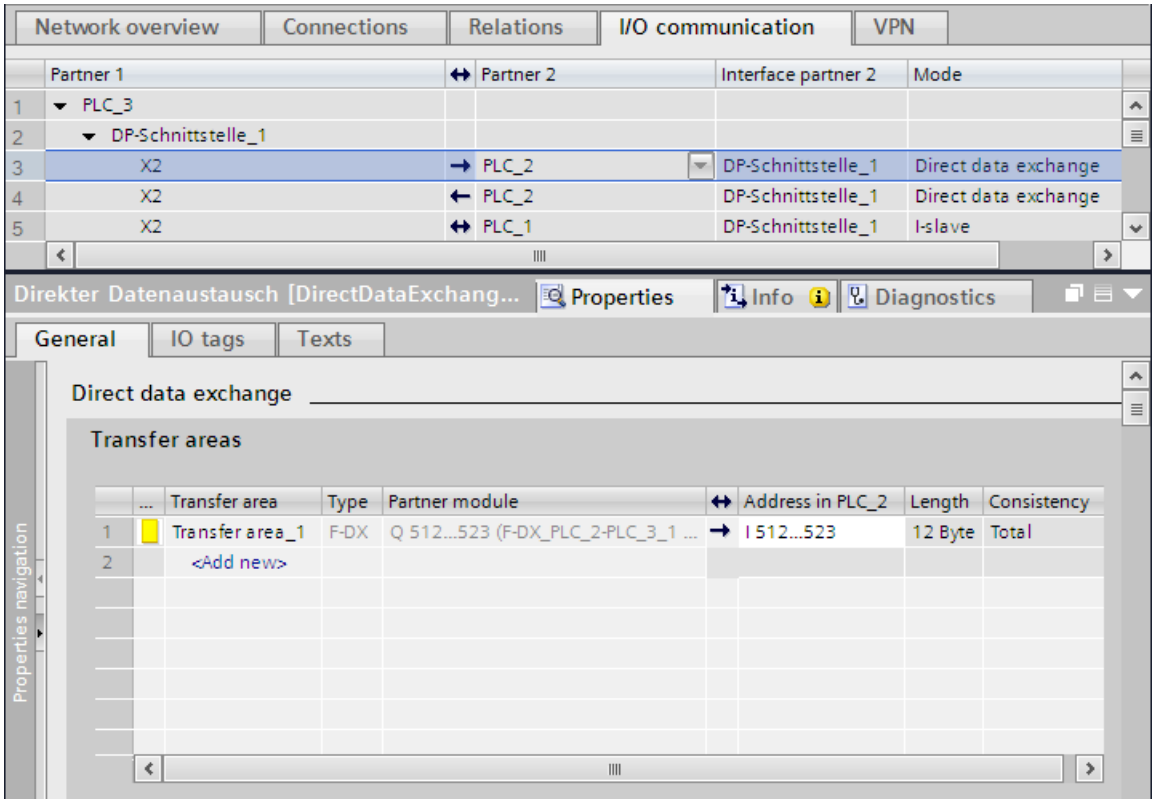

8. In the "I/O communication" tab, select the automatically created line with "Direct data exchange" mode for receiving from the I-slave (F-CPU 2) (←).
9. In "Transfer areas" ("Direct data exchange" table), create another F-DX connection for receiving from the I-slave (F-CPU 3).
   In this case, as well, an acknowledgment connection (→, transfer area x_Ack) is created automatically in the "Direct data exchange table" and two transfer areas (type F-MS) for the master CPU are created in the "I-slave communication" table of both I-slaves.

This completes the configuration for receiving from F-CPU 2.

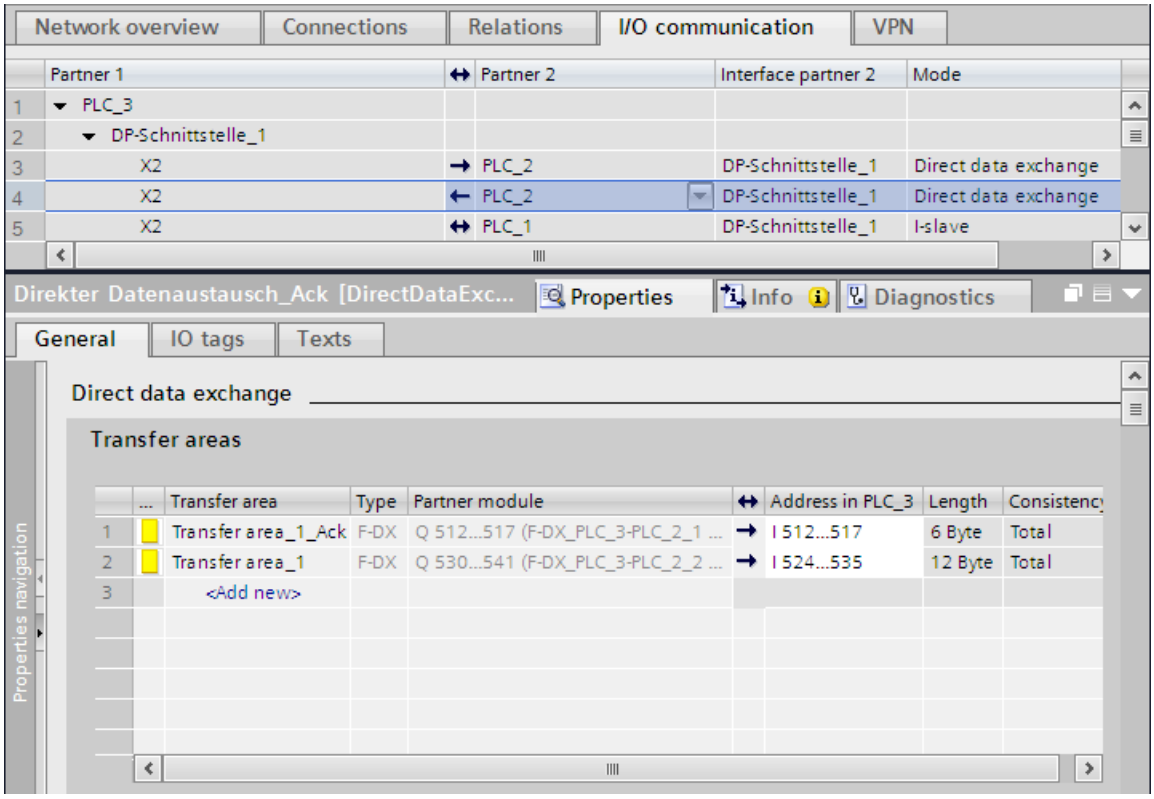

Changing disabled local address areas of the transfer areas

To change the disabled local address area of the "Transfer area x", you must change the start address of the address area of the corresponding acknowledgment connection "Transfer area x_Ack".

1. In "I/O communication", select the line with the arrow pointing in the same direction as the arrow of "Transfer area x" in the "Direct data exchange" table.
2. Then select the line with "Transfer area x_Ack" in the "Direct data exchange" table.
3. Change the start address of the address range there.

9.1.6.2 Safety-related I-slave-I-slave communication via SENDDP and RCVDP

Reference

The description of the communication via SENDDP and RCVDP for safety-related I-slave-I-slave communication can be found in SENDDP and RCVDP: Send and receive data via PROFIBUS DP/PROFINET IO (STEP 7 Safety V18) (Page 529-530).

9.1.6.3 Programming safety-related I-slave-I-slave communication

Reference

The description of the programming of safety-related I-slave-I-slave communication can be found in Program the safety-related master-I-slave or I-slave-I-slave communication (Page 204).
The assignment of the start addresses of the transfer areas to the LADDR input of the SENDDP/RCVDP instructions can be obtained from the following table.

Instruction	Start address LADDR	
	From row	From column
SENDDP in the 1st I-slave	→	Address in the <1st I-slave> (in example column "Address in PLC_2")
RCVDP in the 1st I-slave	←	Address in the <1st I-slave> (in example column "Address in PLC_2")
SENDDP in the 2nd I-slave	←	Address in the <2nd I-slave> (in example column "Address in PLC_3")
RCVDP in the 2nd I-slave	→	Address in the <2nd I-slave> (in example column "Address in PLC_3")

9.1.6.4 Limits for data transfer of safety-related I-slave-I-slave communication

Limits for data transfer

The description of the limits for the data transfer of safety-related I-slave-I-slave communication can be found in Limits for data transfer of safety-related master-I-slave or I-slave-I-slave communication (Page 207).

9.1.7 Safety-Related I-Slave-Slave Communication

9.1.7.1 Configuring Safety-Related I-Slave-Slave Communication

Introduction

Safety-related communication between the safety program of the F-CPU of an I-slave and F-I/O in a DP slave takes place using direct data exchange (**F**-DX-Mod), same as in standard programs.
You do not need any additional hardware for I-slave-slave communication.

I-slave-slave communication is also possible:

- when the assigned DP master is a standard CPU, if the standard CPU supports direct data exchange
- when instead of a DP master, an IO controller is networked with the I-slaves via an IE/PB link

An F-I/O DB is automatically generated for each F-I/O when it is configured in the *hardware and network editor*; this is required for the F-I/O access via safety-related I-slave-slave communication. The F-I/O DB is initially created in the safety program of the DP master, provided it is an F-CPU with F-activation. Only with the setup of the F-DX-Mod connection is the F-I/O DB created in the safety program of the I-slave and deleted in the safety program of the DP master.

The process image input is used to access the channels of the F-I/O in the safety program of the F-CPU of the I-slave (see description in Safety-Related I-Slave-Slave Communication - F-I/O Access (Page 217)).

Restrictions

NOTE

Safety-related I-slave-slave communication with F-I/O is possible in a DP slave that supports safety-related I-slave-slave communication, for example with all ET 200SP F-modules with IM 155-6 DP HF, firmware > V3.1, with all ET 200S F-modules with IM 151-1 HF, with all fail-safe S7-300 signal modules with IM 153-2, as of article number 6ES7153-2BA01-0XB0, firmware > V4.0.0.

NOTE

With safety-related I-slave-slave communication, make sure that the CPU of the DP master is powered up before the F-CPU of the I-slave.

Otherwise, depending on the F-monitoring time specified for the F-I/O, the F-system can detect an error in safety-related communication (communication error) between the F-CPU and the F-I/O assigned to the I-slave. This means that the F-I/O are not reintegrated automatically after F-system startup. They are instead only reintegrated after a user acknowledgment with a positive edge in the ACK_REI tag of the F-I/O DB (see also After communication errors (Page 156) and After startup of F-system (Page 154)).

Configuring transfer areas

For every safety-related communication connection between an I-slave and slave, you must configure transfer areas in the *hardware and network editor*.

The transfer area is assigned a label when it is created to identify it as the communication relationship. For example, "F-DX-Mod_PLC_2-PLC_1_1" for the first F-DX-Mod connection between F-CPU 1 and F-CPU 2.

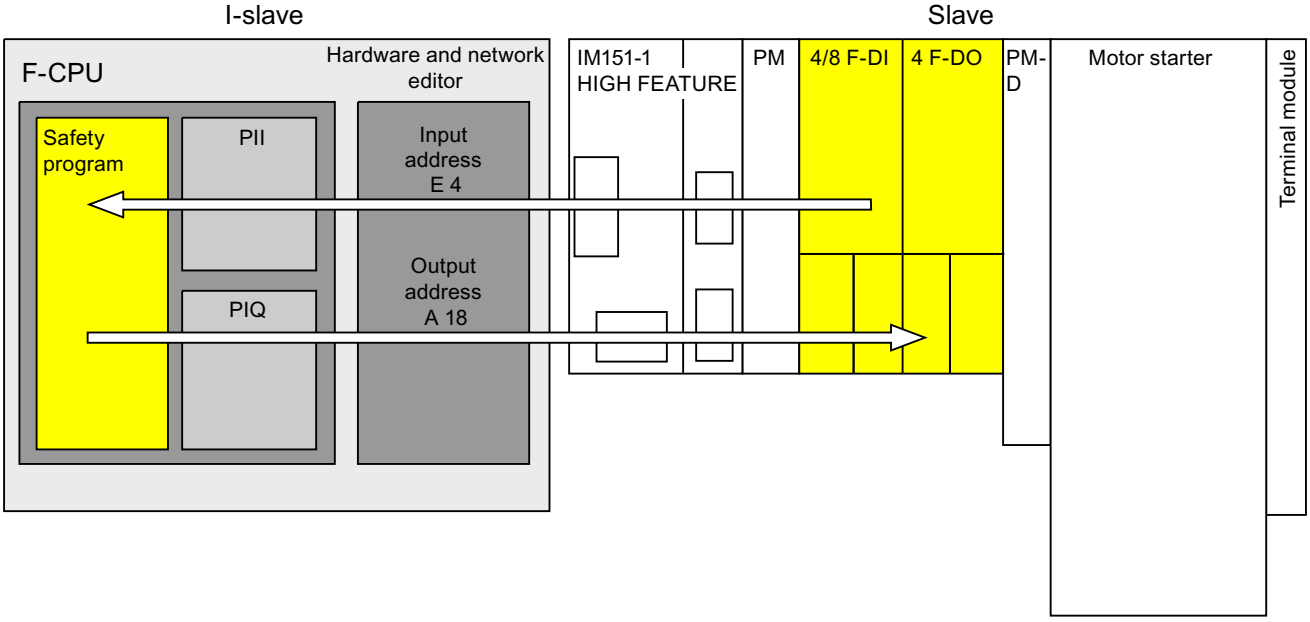

Configuration procedure using the example of an ET 200S with F-modules in the slave

The procedure for configuring safety-related I-slave-slave communication is identical to that in the standard system.

Proceed as follows:

1. Insert two F-CPUS from the "Hardware catalog" task card into the project.
2. Insert a suitable DP slave, e.g. IM 151-1 HF, article no. 6ES7151-1BA0... from the "Hardware catalog" task card into the network view of the *hardware and network editor*.
3. Insert a power module, a 4/8 F-DI module and a 4 F-DQ module in the device view of the ET 200S.
4. Activate "DP slave" mode (I-slave) for F-CPU 2 in the properties of its DP interface and assign this to F-CPU 1.
5. Assign the DP interface of the IM 151-1 HF to the DP master (F-CPU 1).
6. Select the DP interface of F-CPU 2 (I-slave) in the network view.
7. Select the "I/O communication" tab.

8. Use a drag-and-drop operation in the network view to move the ET 200S to the "Partner 2" column in the "I/O-communication" tab.

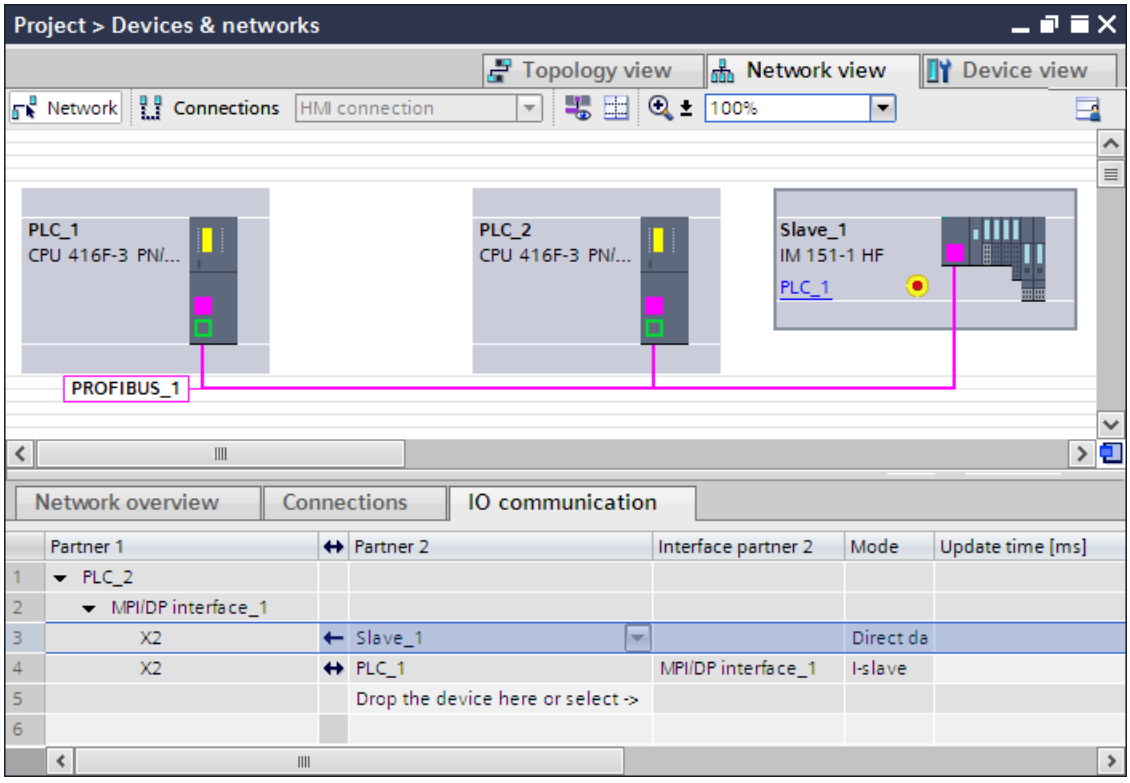

9. Click in the newly created line (←).
10. In "Transfer areas", create an F-DX-Mod connection (type "F-DX-Mod"). The F-DX-Mod connection is marked in yellow in the table. The addresses for the "partner module" 4/8 F-DI in the I-Slave (PLC_2) are displayed. You can change the addresses directly in the table, if required.
    This completes the configuration for the 4/8 F-DI module.
11. In "Transfer areas", create another F-DX-Mod connection.

12. Change the partner module to the 4 F-DO module, either directly in the "Transfer areas" table or in the details of transfer area 2, if the 4 F-DO module was not already selected. This completes the configuration for the 4 F-DO module.

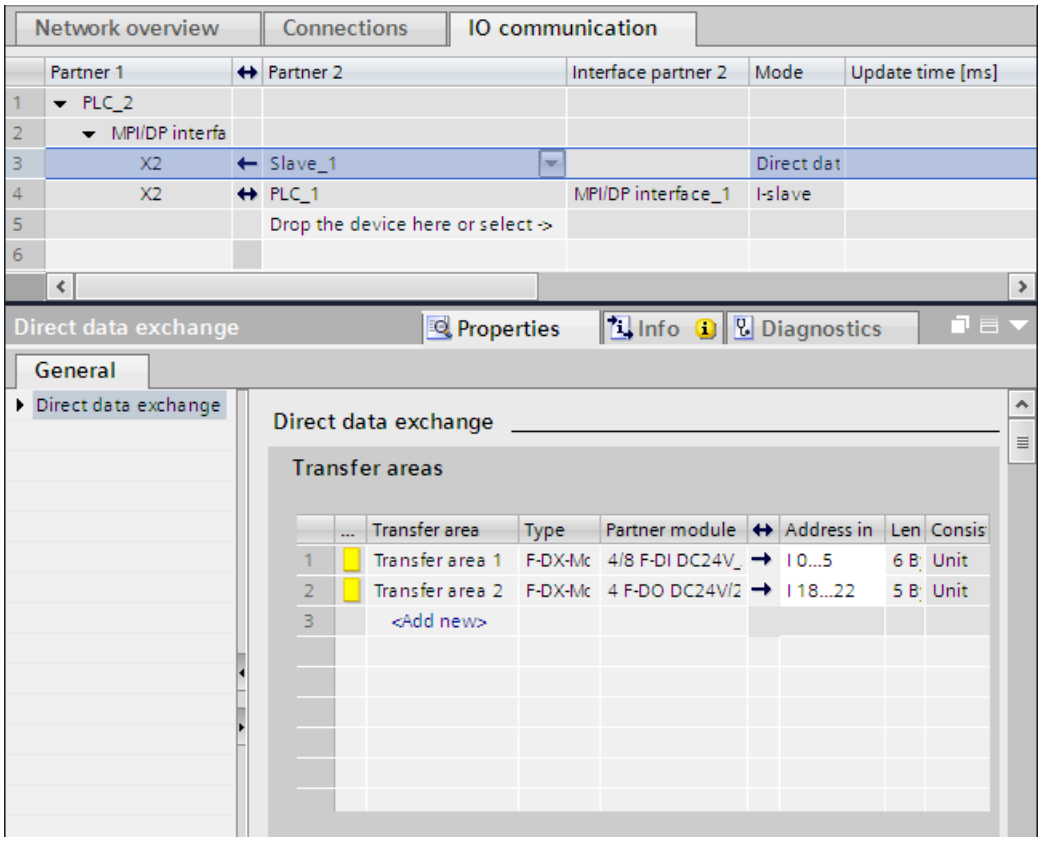

In the "I-slave communication table" of the I-slave, a transfer area (type F-MS) for the master CPU is automatically created for each F-DX-Mod connection:

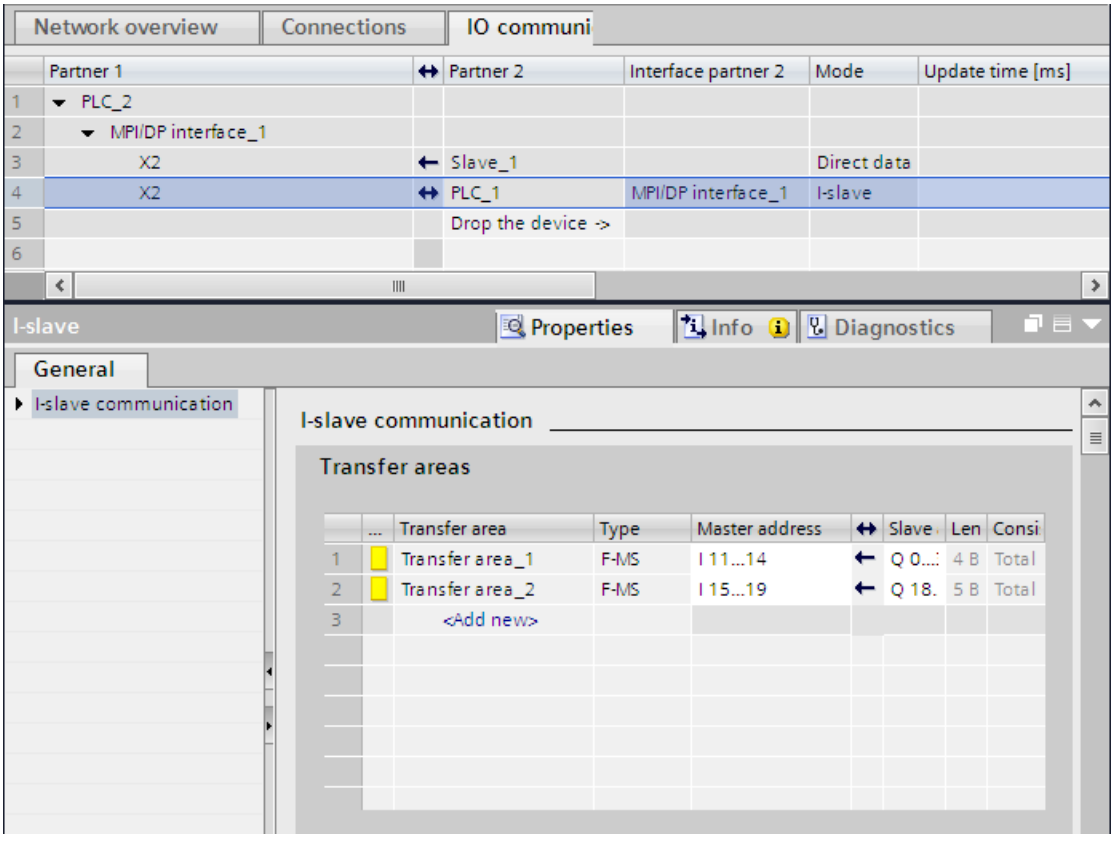

Change in configuration of I-slave-slave communication

WARNING

If you have added or deleted I-slave-slave communication for an F-I/O, you must compile and download the hardware configuration of the DP master as well as the hardware configuration of the I-slave.

The Collective F-Signature in the F-CPU of the I-slave and the Collective F-Signature in the F-CPU of the DP master (if a safety program exists there, too) are set to "0". You must then recompile the safety program(s). *(S019)*

9.1.7.2 Safety-Related I-Slave-Slave Communication - F-I/O Access

Access via the process image

In safety-related I-slave-slave communication, you use the process image (PII or PIQ) to access the F-I/O in the safety program of the F-CPU of the I-slave. This is the same as F-I/O access to

F-I/O that are directly assigned to an I-slave or DP master. In the I-slave you access the F-I/O with the addresses that were assigned for the F-DX-Mod connection in "Transfer areas" ("Direct data exchange" table).
In this case, ignore the displayed operand area. Access F-I/O with inputs using the PII and F-I/O with outputs using PIQ.
Information on I/O access can be found in F-I/O access (Page 139).

9.1.7.3 Limits for data transfer of safety-related I-slave-I-slave communication

Limits for data transfer

Note the maximum limit of 244 bytes of input data or 244 bytes of output data for transfer between an I-slave and a DP master.
An example of the amount of output data and input data that are assigned for safety-related communication is shown in the table below for an ET 200S 4/8 F-DI and an ET 200S 4 F-DO:

Safety-related communication	Communication connection	Assigned input and output data*	
		Between I-slave and DP master	
		Output Data in the I-slave	Input data in the I-slave
I-slave-slave	I-slave-slave communication with 4/8 F-DI	4 bytes	6 bytes
	I-slave-slave communication with 4 F-DO	5 bytes	5 bytes

* Example for 4/8 F-DI and 4 F-DO of ET 200S

Consider all additional configured safety-related and standard communication connections (F-MS, F-DX, F-DX-Mod., MS and DX connections) for the maximum limit of 244 bytes of input data or 244 bytes of output data for transfer between an I-slave and a DP master. If the maximum limit of 244 bytes of input data or 244 bytes of output data is exceeded, you will receive a corresponding error message.

9.1.8 Safety-related IO controller-I-slave communication

Introduction

Safety-related communication between the safety program of the F-CPU of an IO-controller and the safety program(s) of the F-CPU(s) of one or more I-slaves takes place over master-I-slave connections (**F-**MS), as in standard systems.

IE/PB link

For the safety-related IO-controller-I-slave communication, the IE/PB link is mandatory. Each of the two F-CPUs is linked to the IE/PB link by means of its PROFIBUS DP or PROFINET-interface.

NOTE

If you are using an IE/PB link, you must take this into account when configuring the F-specific monitoring times and when calculating the maximum response time of your F-system (see also Monitoring and response times (Page 546)).

Note that the Excel file for calculating response times (https://support.industry.siemens.com/cs/ww/en/view/109783831) for S7-300/400 F-CPUs does not support all conceivable configurations.

Reference

The information on safety-related master-I-slave communication in Safety-related master-I-slave communication (Page 201) also applies.

9.1.9 Safety-related communication via S7 connections

9.1.9.1 Configuring safety-related communication via S7 connections

Introduction

Safety-related communication between the safety programs of F-CPUs via S7 connections takes place by means of established S7 connections that you create in the network view of the *hardware and network editor* - same as in standard programs.

Restrictions

NOTE

In SIMATIC Safety, S7 connections are generally permitted only via Industrial Ethernet.

Safety-related communication via S7 connections is possible from and to the following CPUs:

- S7-300 F-CPUs via the integrated PROFINET interface
- S7-400 F-CPUs via the integrated PROFINET interface or a CP 443-1 or CP 443-1 Advanced-IT

Creating S7 connections

For each connection between two F-CPUs, you must create an S7 connection in the network view of the *hardware and network editor*.
For every end-point of a connection, a local and a partner ID is automatically assigned from the perspective of the end-point (the F-CPU). If necessary, you can change both IDs in the "Connections" tab. You assign the local ID to the "ID" input of the SENDS7 and RCVS7 instructions in the safety programs.

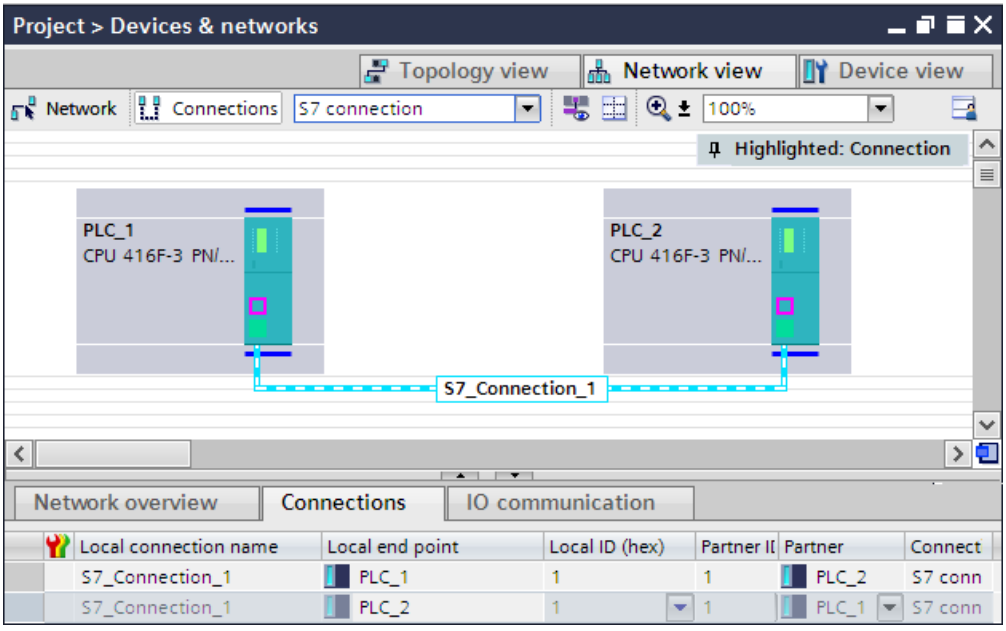

Procedure for configuring S7 connections

You configure the S7 connections for safety-related CPU-to-CPU communication in the same way as in *STEP 7 Professional* (see *Help on STEP 7 Professional* "S7 connections").

9.1.9.2 Communication via SENDS7, RCVS7, and F-Communication DB

Communication via the SENDS7 and RCVS7 instructions

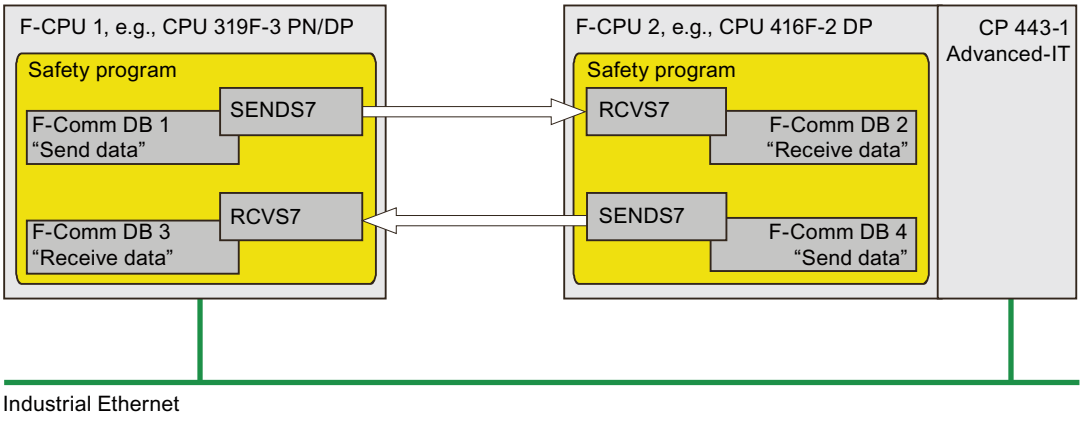

You use the **SENDS7 and RCVS7** instructions for fail-safe sending and receiving of data via S7 connections.

These instructions can be used to transmit a specified amount of fail-safe data of data types BOOL, INT, WORD, DINT, DWORD, and TIME in a fail-safe manner. The fail-safe data are stored in F-DBs (F-communication DBs) that you have created.

You can find these instructions in the "Instructions" task card under "Communication". The RCVS7 instruction **must** be called at the start of the main safety block. The SENDS7 instruction **must** be called at the end of the main safety block.

Note that the send signals are sent only after calling the SENDS7 instruction at the end of the relevant F-runtime group execution.

A detailed description of the SENDS7 and RCVS7 instructions is found in SENDS7 and RCVS7: Communication via S7 connections (STEP 7 Safety Advanced V18) (S7-300, S7-400) (Page 539).

F-communication DB

For each connection, send data are stored in an F-DB (F-communication DBx) and receive data are stored in an F-DB (F-communication DBy).

You can assign the F-communication DB numbers in the SENDS7 and RCVS7 instructions.

9.1.9.3 Programming safety-related communication via S7 connections

Introduction

The programming of safety-related CPU-CPU communication via S7 connections is described below. You must set up the following in the safety programs of the relevant F-CPUs:

- Create F-DBs (F-Communication-DBs) in which send/receive data for communication are stored.
- Call and assign parameters for instructions for communication from the "Instructions" Task Card in the safety program.

Requirement for programming

The S7 connections between the relevant F-CPUs must be configured in the network view in the "Connections" tab of the *hardware and network editor*.

Creating and Editing an F-Communication DB

F-communication DBs are F-DBs that you create and edit in the same way as other F-DBs in the project tree. You can assign the F-communication DB numbers in the SENDS7 and RCVS7 instructions.

NOTE

The length and structure of the F-communication DB on the receiver side must match the length and structure of the associated F-communication DB on the sender side.

If the F-communication DBs do not match, the F-CPU can go to STOP mode. A diagnostics event is entered in the diagnostics buffer of the F-CPU.

For this reason, we recommend that you use the following procedure:

1. Create an F-communication DB in the project tree in or below the "Program blocks" folder of the F-CPU at the sender end.
2. Specify the appropriate structure of the F-communication DB, taking into account the data to be transferred.
3. Copy this F-communication DB to the project tree in or below the "Program blocks" folder of the F-CPU at the receiver end, and change the name, if necessary.

Other requirements for F-communication DBs

F-communication DBs must also conform to the following properties:

- They are not permitted to be instance DBs.
- Their length is not permitted to exceed 100 bytes.
- In F-communication DBs, only the following data types may be declared: BOOL, INT, WORD, DINT, DWORD, and TIME.
- The data types must be arranged block-wise and in the following order: BOOL, data types with bit length of 16 bits (INT, WORD), and data types with bit length of 32 bits (DINT, DWORD, and TIME). Within the data blocks with lengths of 16 bits and 32 bits, the data types can be arranged in any order.
- No more than 128 data elements of data type BOOL are permitted to be declared.
- The amount of data of data type BOOL must always be an integer multiple of 16 (word limit). Reserve data must be added, if necessary.

If these criteria are not fulfilled, *STEP 7 Safety Advanced* outputs an error message during compilation.

Assignment of fail-safe values

Fail-safe values are made available at the receiver end:

- While the connection between the communication partners is being established the first time after startup of the F-systems
- Whenever a communication error occurs

The values you specified as initial values in the F-communication DB at the receiver end are made available as initial values.

Programming procedure

You program safety-related communication via S7 connections as follows:

1. Supply the tags in the F-communication DB at the sender end with send signals using fully qualified access (e.g., "Name of F-communication DB".tag name).
2. Read the tags in the F-communication DB at the receiver end (receive signals) that you want to process further in other sections of the program using fully qualified access (e.g., "Name of F-communication DB".tag name).
3. In the safety program from which data is to be sent, call the SENDS7 instruction for sending at the end of the main safety block.
4. In the safety program in which data is to be received, call the instruction RCVS7 for receiving at the start of the main safety block.
5. Assign F-communication DB numbers to the SEND_DB input of SENDS7 and the RCV_DB input of RCVS7.
6. Assign the local ID of the S7 connection (data type: WORD) from the perspective of the F-CPU that was configured in the "Connections" tab of the network view to the ID input of SENDS7.
7. Assign the local ID of the S7 connection (data type: WORD) that was configured in the "Connections" tab of the network view to the ID input of RCVS7.
8. Assign an odd number (data type: DWORD) to the R_ID inputs of SENDS7 and RCVS7. This serves to specify that a SENDS7 instruction belongs to an RCVS7 instruction. The associated instructions receive the same value for R_ID.

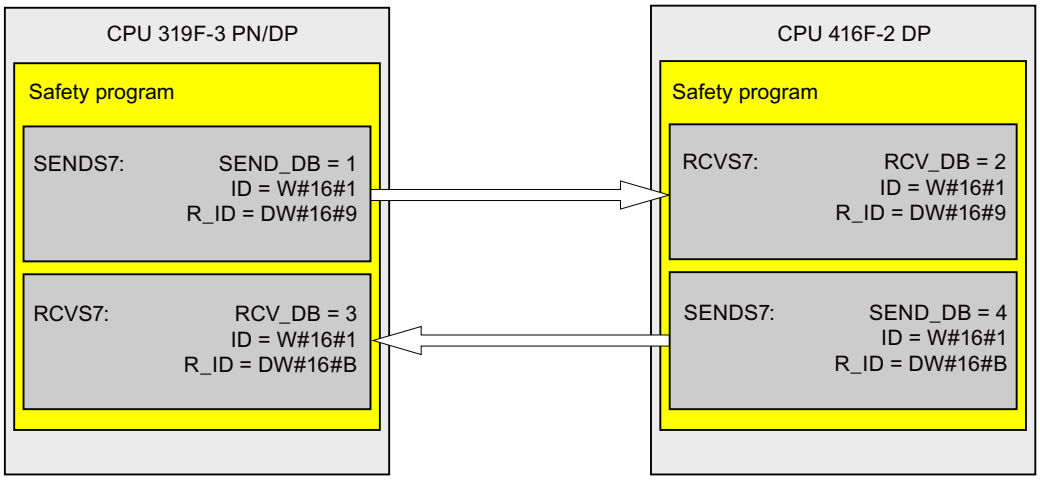

WARNING

The value of the respective F-communication ID (input R_ID; data type: DWORD) can be freely selected; however, it must be odd and unique for all safety-related communication connections network-wide* and CPU-wide. The value R_ID + 1 is internally assigned and must not be used.

You must supply inputs ID and R_ID with constant values when calling the instruction. Direct read or write access to the associated instance DB is not permitted in the safety program. *(S020)*

* A network consists of one or more subnets. "Network-wide" means beyond the boundaries of the subnet. In PROFIBUS, a network includes all the nodes accessible via PROFIBUS DP. In PROFINET IO, a network includes all nodes accessible via RT_Class_1/2/3 (Ethernet/WLAN/Bluetooth, Layer 2) and if applicable RT_Class_UDP (IP, Layer 3).

9. Assign the TIMEOUT inputs of the SENDS7 and RCVS7 instructions with the required monitoring time.

⚠ WARNING

It can only be ensured (from a fail-safe standpoint) that a signal state to be transferred will be acquired and transferred to the receiver if the signal level is pending for at least as long as the assigned monitoring time. *(S018)*

Information on calculating the monitoring times can be found in Monitoring and response times (Page 546).

10. To reduce the bus load, you can temporarily shut down communication between the F-CPUs at input EN_SEND of the SENDS7 instruction. To do so, supply input EN_SEND (initial value = "TRUE") with 0. In this case, send data is no longer sent to the F-communication DB of the associated RCVS7 instruction and the receiver RCVS7 provides fail-safe values for this period (initial values in its F-communication DB). If communication was already established between the partners, a communication error is detected.
11. Optional: Evaluate the ACK_REQ output of RCVS7, for example, in the standard user program or on the HMI system in order to query or to indicate whether user acknowledgment is required.
12. Supply the ACK_REI input of RCVS7 with the signal for the acknowledgment for reintegration.
13. Optional: evaluate the SUBS_ON output of RCVS7 or SENDS7 in order to query whether the RCVS7 instruction is outputting the fail-safe values you specified as initial values in the F-communication DB.
14. Optional: Evaluate the ERROR output of RCVS7 or SENDS7, for example, in the standard user program or on the HMI system in order to query or to indicate whether a communication error has occurred.
15. Optional: evaluate the SENDMODE output of RCVS7 in order to query whether the F-CPU with the associated SENDS7 instruction is in disabled safety mode (Page 310).

Particularities for migrated projects

If you have migrated a project from *S7 Distributed Safety V5.4 SP5* to *STEP 7 Safety Advanced* in which safety-related communication via S7 connections is programmed, you must note the following:

- Do not delete migrated instance DBs for the SENDS7 and RCVS7 instructions in the project tree in the "STEP 7 Safety" folder under "Program blocks > System blocks".

Otherwise, communication errors may occur in the relevant communication connections.

A migrated instance DB for the SENDS7 and RCVS7 instructions has been deleted if, after compiling the safety program, the "User-defined ID" in the newly generated is not identical to "FRCVS7CL" or "FSNDS7CL".

You can find the "User-defined ID" of a block in its properties in the "Information" area.

9.1.9.4 Safety-related communication via S7 connections - Limits of data transfer

NOTE

If the amount of data to be transmitted exceeds the permitted length for the F-communication DB (100 bytes), you can create another F-communication DB that you transfer to additional SENDS7/RCVS7 instructions with modified R_ID.

Note that USEND and URCV instructions are called internally at each SENDS7 or RCVS7 call and use connection resources in the F-CPU. This affects the maximum number of communication connections available (*see manuals for F-CPUs*).

Additional information on the data transfer limits for S7 connections of individual F-CPUs is available on the Internet (http://support.automation.siemens.com/WW/view/en/38549114).

9.1.10 Safety-related communication with other S7 F-systems

9.1.10.1 Introduction

Safety-related communication from F-CPUs in SIMATIC Safety to F-CPUs in S7 Distributed Safety F-systems is possible via a PN/PN coupler or DP/DP coupler that you use between the two F-CPUs as IO controller-IO controller communication, master-master communication or communication via established S7 connections.

Safety-related communication from F-CPUs in SIMATIC Safety to F-CPUs in S7 F/FH Systems F-systems is possible via established S7 connections.

9.1.10.2 Communication with S7 Distributed Safety via PN/PN coupler (IO controller-IO controller communication)

Communication functions between SENDDP/RCVDP instructions at the *STEP 7 Safety Advanced* end and F-application blocks F_SENDDP/F_RCVDP at the *S7 Distributed Safety* end:

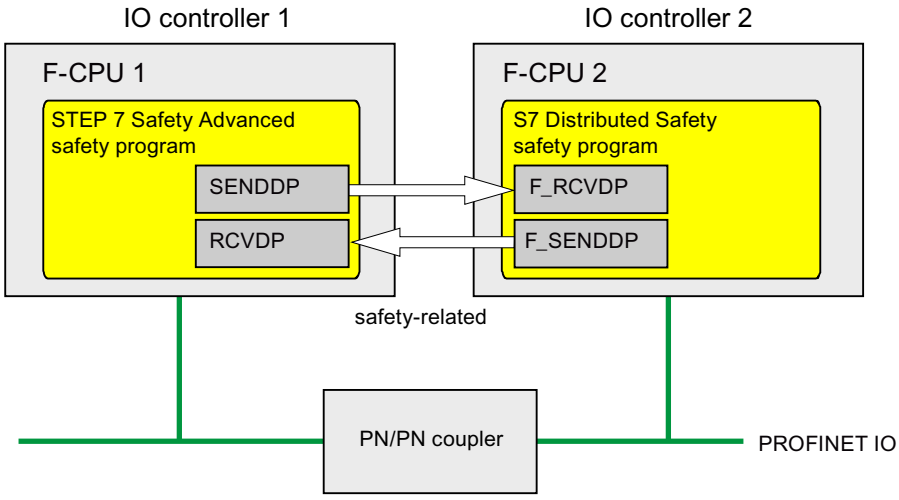

Procedure at the *S7 Distributed Safety* end

At the *S7 Distributed Safety* end, proceed as described in "Safety-related IO controller-IO controller communication" in the S7 Distributed Safety - Configuring and Programming (http://support.automation.siemens.com/WW/view/en/22099875) manual.

Procedure at the *STEP 7 Safety Advanced* end

At the *STEP 7 Safety Advanced* end, proceed as described in Safety-related IO controller-IO controller communication (Page 178).

9.1.10.3 Communication with S7 Distributed Safety via DP/DP coupler (master-master communication)

Communication functions between SENDDP/RCVDP instructions at the *STEP 7 Safety Advanced* end and F-application blocks F_SENDDP/F_RCVDP at the *S7 Distributed Safety* end:

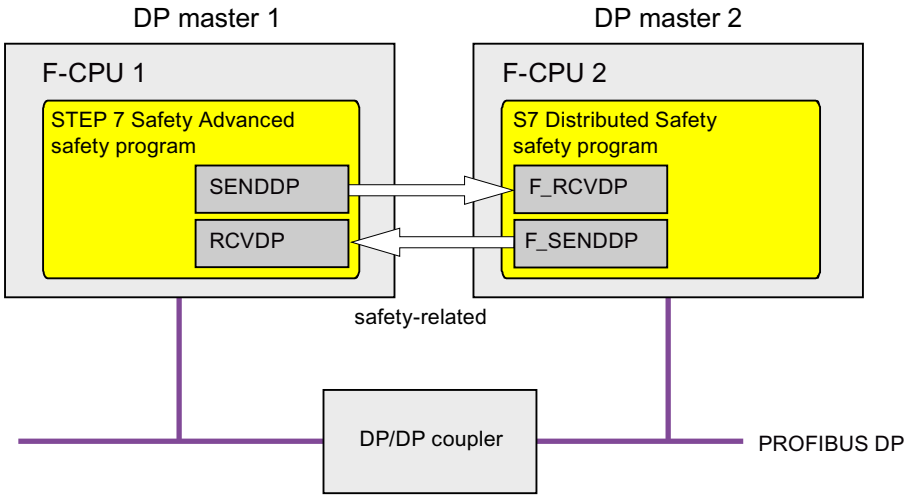

Procedure at the *S7 Distributed Safety* end

At the *S7 Distributed Safety* end, proceed as described in "Safety-related master-master communication" in the S7 Distributed Safety - Configuring and Programming (http://support.automation.siemens.com/WW/view/en/22099875) manual.

Procedure at the *STEP 7 Safety Advanced* end

At the *STEP 7 Safety Advanced* end, proceed as described in Safety-related master-master communication (Page 187).

9.1.10.4 Communication with S7 Distributed Safety via S7 connections

Communication functions between SENDS7/RCVS7 instructions at the *STEP 7 Safety Advanced* end and F_SENDS7/F_RCVS7 F-application blocks at the *S7 Distributed Safety* end:

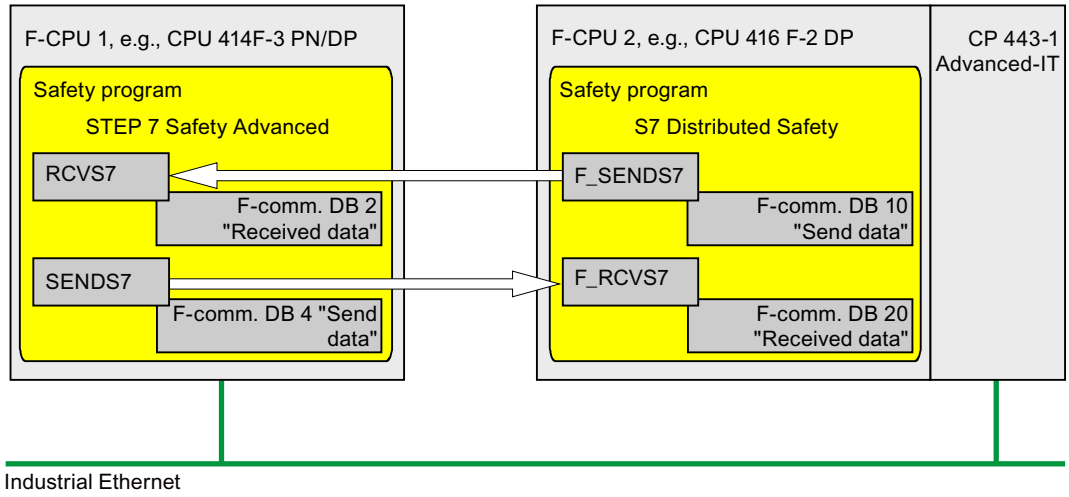

Procedure at the *S7 Distributed Safety* end

At the *S7 Distributed Safety* end, proceed as described in section "Safety-related communication via S7 communications" in the S7 Distributed Safety - Configuring and Programming (http://support.automation.siemens.com/WW/view/en/22099875) manual.

Because safety-related communication via S7 connections is not possible with unspecified partners in S7 Distributed Safety, you must first create a "virtual" SIMATIC station in *S7 Distributed Safety* in which you configure an F-CPU as a proxy for the F-CPU in *STEP 7 Safety Advanced* with its IP address.

You then insert an S7 connection to this F-CPU in the connection table. Both the local connection and partner connection resources (hex) are thereby fixed. You must then set these in the associated, unspecified S7 connection that you created in *STEP 7 Professional*.

In addition, for all communication connections to this F-CPU, you must transfer the F-communication ID that you assigned in the R_ID input of the associated calls of the F_SENDS7 and F_RCVS7 F-application blocks additionally to the CRC_IMP tag in the instance DB of F_SENDS7 and F_RCVS7, respectively, in the standard user program immediately before calling the F-CALL.

Program example:

Network 1: Communication to STEP 7 Safety Advanced: R_ID -> CRC_IMP

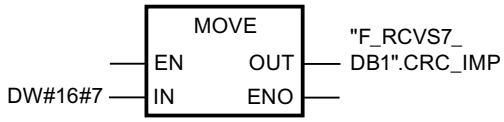

Network 2: Communication to STEP 7 Safety Advanced: R_ID -> CRC_IMP

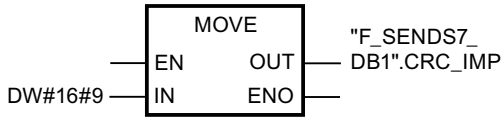

Procedure at the *STEP 7 Safety Advanced* end

At the *STEP 7 Safety Advanced* end, proceed as described in Safety-related communication via S7 connections (Page 219).

For the F-CPU in *S7 Distributed Safety*, you must create and specify an unspecified S7 connection. You can find information on this in the *STEP 7* help, under "Creating an unspecified connection" or "Specifying and unspecified connection".

For these you must set the local and partner connection resources (hex) that are fixed as a result of the associated S7 connection that you have created in *S7 Distributed Safety*.

If the local connection resource (hex) is already occupied by an existing connection, you must change the connection resource (hex) for it.

If the instance DBs of the SENDS7 and RCVS7, instructions that you want to use for communication with *S7 Distributed Safety* were migrated from *S7 Distributed Safety*, you must delete them in the project tree in the "STEP 7 Safety" folder, under "Program blocks > System blocks" (contrary to the information in Programming safety-related communication via S7 connections (Page 221), section "Particularities for migrated projects").

9.1.10.5 Communication with S7 F/FH Systems via S7 connections

Communication functions between SENDS7/RCVS7 instructions at the *STEP 7 Safety Advanced* end and F_SDS_BO/F_RDS_BO F-blocks at the *S7 F Systems* end.

A maximum of 32 data elements of data type BOOL can be exchanged.

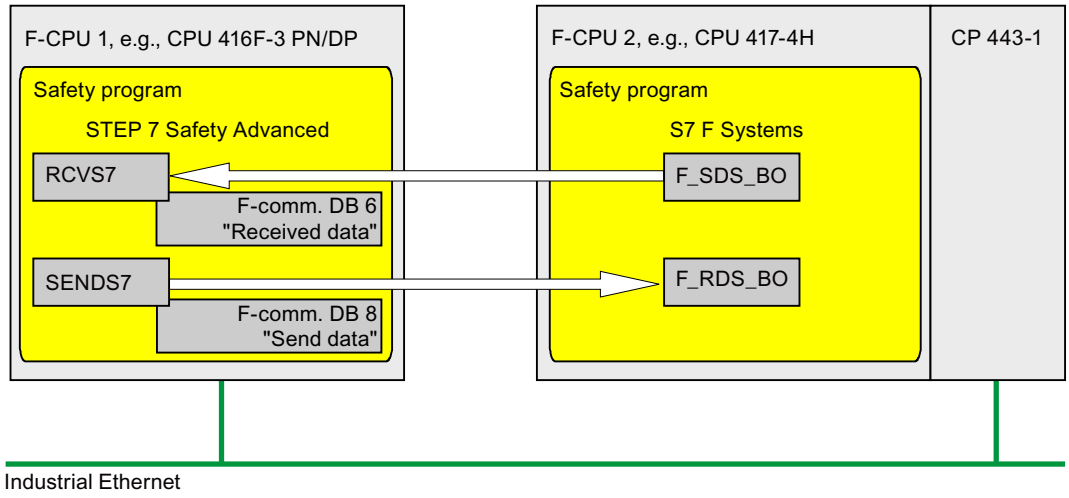

Procedure at the *S7 F Systems* end

At the *S7 F systems* end, proceed as described in section "Safety-related communication between F-CPUs" in the S7 F/FH Systems - Configuring and Programming (http://support.automation.siemens.com/WW/view/en/16537972) manual.

Because safety-related communication via S7 connections is not possible with unspecified partners in *S7 F/FH Systems*, you must first create a "virtual" SIMATIC station in *S7 F/FH Systems* in which you configure an F-CPU as a proxy for the F-CPU in *STEP 7 Safety Advanced* with its IP address.

You then insert an S7 connection to this F-CPU in the connection table. Both the local connection and partner connection resources (hex) are thereby fixed. You must then set these in the associated, unspecified S7 connection that you created in *STEP 7 Safety Advanced*.

In addition, you must insert a function in your S7 program (in the area reserved in CFC for other applications), in which, for all communication connections for this F-CPU, you transfer the F-communication ID that you assigned in the R_ID input of the associated calls of the F_SDS_BO and F_RDS_BO F-blocks additionally to the CRC_IMP tag in the instance DB of the F_SDS_BO and F_RDS_BO, respectively. You obtain the number of the instance DB from the object properties of the block in CFC. Assign descriptive names for these instance DBs. If you perform a compress operation in CFC, you must check whether the numbers of these instance DBs have changed.

Program example:

Network 1: Communication to STEP 7 Safety Advanced: R_ID -> CRC_IMP

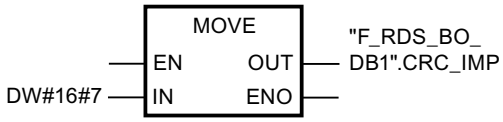

Network 2: Communication to STEP 7 Safety Advanced: R_ID -> CRC_IMP

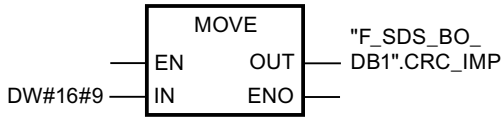

You must then import the function in CFC as block type and insert your standard user program in a chart. In the run sequence, make sure that the associated standard runtime group is processed before the F-runtime group.

Procedure at the *STEP 7 Safety Advanced* end

At the *STEP 7 Safety Advanced* end, proceed as described in "Safety-related communication via S7 connections" (Page 219).

Particularity: In *STEP 7 Safety Advanced*, you must create the F-communication DB with exactly 32 data elements of data type BOOL.

For the F-CPU in *S7 F/FH Systems*, you must create and specify an unspecified S7 connection. You can find information on this in the *STEP 7* help, under "Creating an unspecified connection" or "Specifying an unspecified connection".

For these you must set the local and partner connection resources (hex) that are fixed as a result of the associated S7 connection that you have created in *S7 F Systems*.

If the local connection resource (hex) is already occupied by an existing connection, you must change the connection resource (hex) for it.

9.2 Configuring and programming communication (S7-1200, S7-1500)

9.2.1 Overview of communication

Introduction

This section gives an overview of the safety-related communication options in SIMATIC Safety F-systems.

Options for safety-related communication

Safety-related communication	On subnet	Additional hardware required
Safety-related CPU-CPU communication:		
IO controller-IO controller communication	PROFINET IO	PN/PN coupler
Master-master communication	PROFIBUS DP	DP/DP coupler
IO controller-I-device communication	PROFINET IO	—
Master-I-slave communication	PROFIBUS DP	—
IO controller-I-slave communication	PROFINET IO and PROFIBUS DP	IE/PB link
IO controller-IO controller communication for *S7 Distributed Safety*	PROFINET IO	PN/PN coupler
Master-master communication for *S7 Distributed Safety*	PROFIBUS DP	DP/DP coupler

NOTE

The options for safety-related communication depend on the F-CPUs used.

NOTE

Safety-related communication with S7-1200 F-CPUs is only permitted as of firmware V4.1.2.

Overview of safety-related communication via PROFIBUS DP

The figure below provides an overview of the options for safety-related communication via PROFIBUS DP in SIMATIC Safety F-systems with S7-1200/1500 F-CPUs.

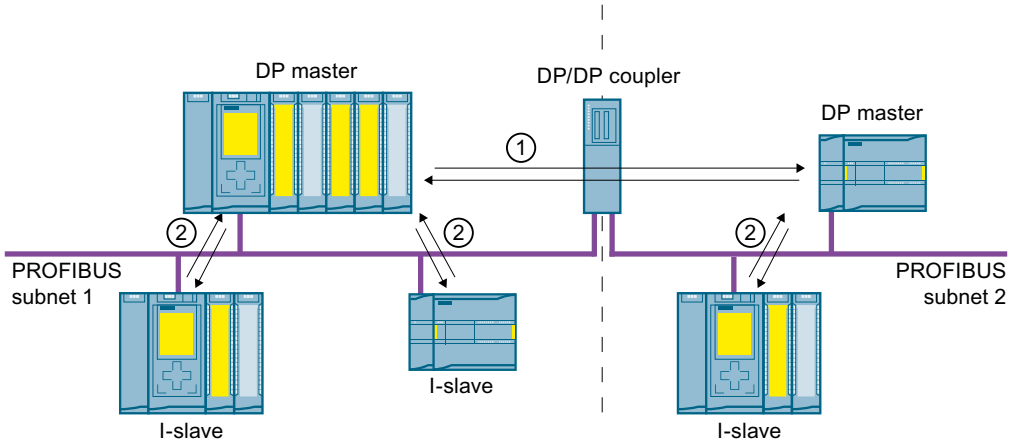

① Safety-related master-master communication

② Safety-related master-I-slave communication

Figure

Overview of safety-related communication via PROFINET IO

The figure below provides an overview of the options for safety-related communication via PROFINET IO in SIMATIC Safety F-systems with S7-1200/1500 F-CPUs.

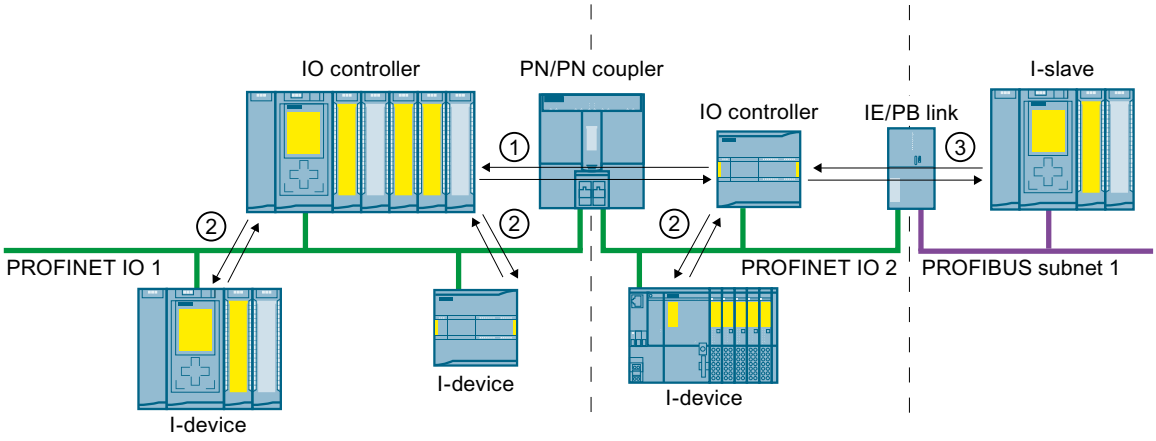

① Safety-related IO controller-IO controller communication

② Safety-related IO controller-I-device communication

③ Safety-related IO controller-I-slave communication

Safety-related CPU-CPU communication via PROFIBUS DP or PROFINET IO

In safety-related CPU-CPU communication, a fixed amount of data of the data type BOOL or INT (DINT as alternative) is transmitted fail-safe between the safety programs in F-CPUs of DP masters/I-slaves or IO controllers/I-devices.

The data are transferred using the SENDDP instruction for sending and the RCVDP instruction for receiving. The data are stored in configured transfer areas of the devices. The hardware identifier (HW identifier) defines the transfer areas configured.

Safety-related CPU-CPU communication for *S7 Distributed Safety*

Safety-related communication is possible from F-CPUs in *SIMATIC Safety* to F-CPUs in *S7 Distributed Safety*.

9.2.2 Safety-related IO controller-IO controller communication

9.2.2.1 Configure safety-related IO controller-IO controller communication

Introduction

Safety-related communication between safety programs of the F-CPUs of IO controllers takes place over a PN/PN coupler that you set up between the F-CPUs.

NOTE

Deactivate the "Data validity display DIA" parameter in the properties for the PN/PN coupler in the *hardware and network editor*. This is the default setting. Otherwise, safety-related IO controller-IO controller communication is not possible.

Configuring transfer areas

You must configure one transfer area for output data and one transfer area for input data in the *hardware and network editor* for each safety-related communication connection between two F-CPUs in the PN/PN coupler. The figure below shows how both of the F-CPUs are able to send **and** receive data (bidirectional communication).

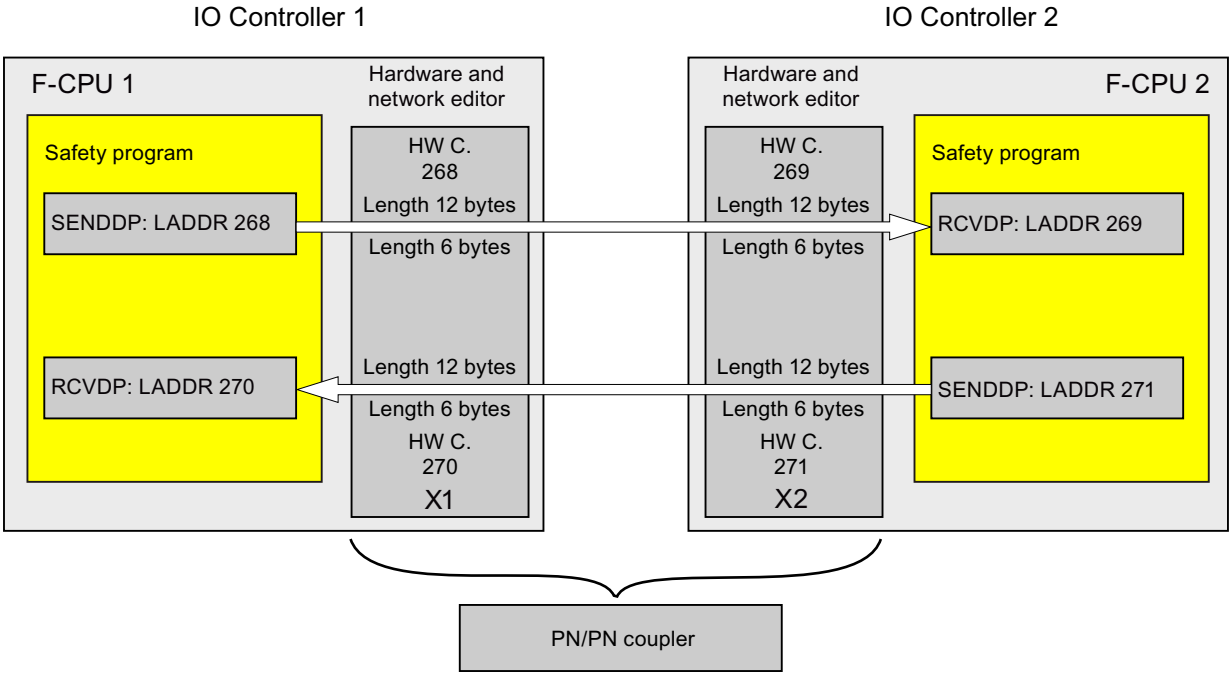

Rules for defining transfer areas

Data to be sent:

A total of 12 bytes (consistent) is required for the transfer area for output data; 6 bytes (consistent) are required for the transfer area for input data.

Data to be received:

A total of 12 bytes (consistent) is required for the transfer area for input data; 6 bytes (consistent) are required for the transfer area for output data.

NOTE

PN/PN Coupler article number 6ES7158-3AD10-0XA0

When configuring the transfer areas for the output and input data, proceed as described in the "SIMATIC bus links PN/PN coupler (https://support.industry.siemens.com/cs/ww/en/view/44319532)" manual, section "Configuring the PN/PN Coupler with STEP 7 TIA Portal".

Procedure for configuration

The procedure for configuring safety-related IO controller-IO controller communication is identical to that in the standard system.

Proceed as follows:

1. Insert two F-CPUS from the "Hardware catalog" task card into the project.
2. Switch to the network view of the *hardware and network editor*.
3. Select a PN/PN Coupler X1 and a PN/PN Coupler X2 from "Other field devices\PROFINET IO\Gateway\Siemens AG\PN/PN Coupler" in the "Hardware catalog" task card and insert them into the network view of the hardware and network editor.

4. Connect the PN interface of the F-CPU 1 with the PN interface of the PN/PN Coupler X1 and the PN interface of the F-CPU 2 with the PN interface of PN/PN Coupler X2.

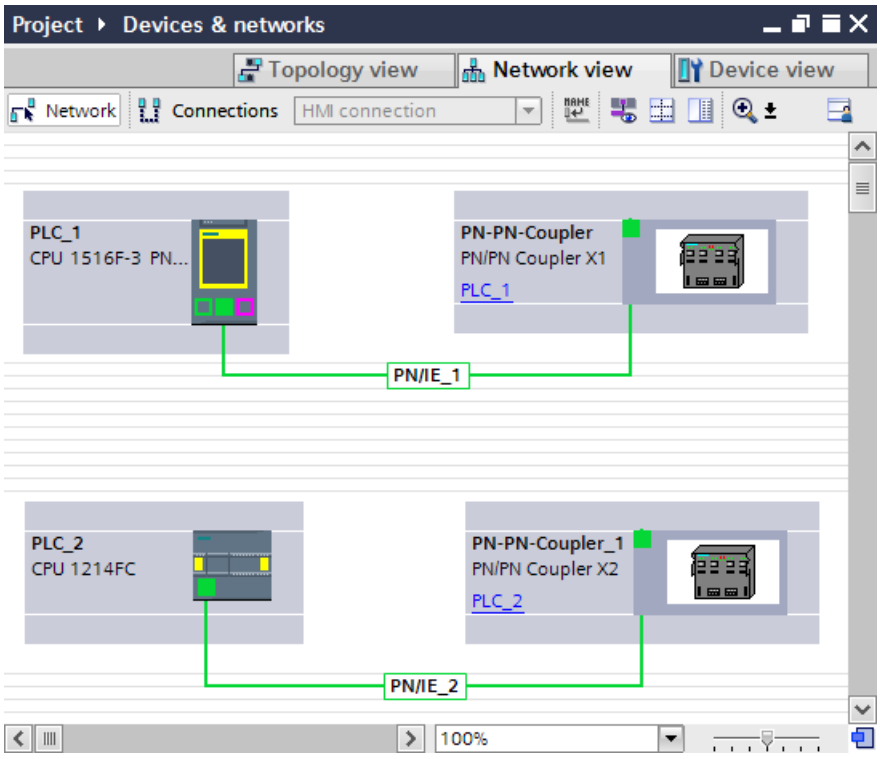

5. Switch to the device view of PN/PN Coupler X1 for bidirectional communication connections i.e. where each F-CPU is both to send and to receive data. Select the following modules from "IN/OUT" in the "Hardware catalog" task card (with filter activated), and insert them in the "Device overview" tab:
   - One "IN/OUT 6 bytes / 12 bytes" module and
   - One "IN/OUT 12 bytes / 6 bytes" module

NOTE

The transfer areas are assigned on the basis of the hardware identifier which is automatically assigned to the modules and devices. You need the HW identifier to program the SENDDP and RCVDP blocks (LADDR input). A system constant is created in the corresponding F-CPU for each hardware identifier of the transfer area. You can assign these system constants symbolically to the SENDDP and RCVDP blocks.

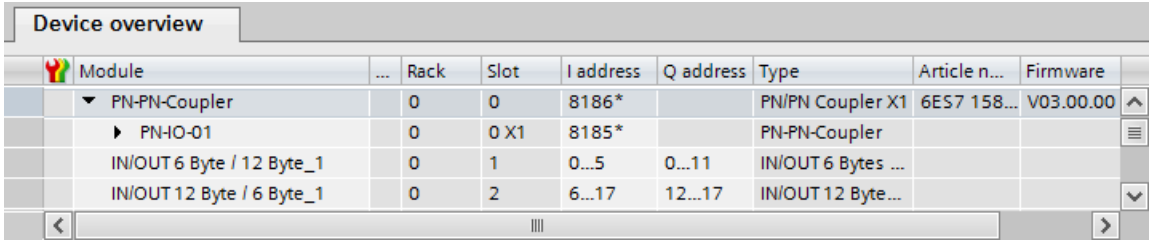

Module	...	Rack	Slot	I address	Q address	Type	Article n...	Firmware
PN-PN-Coupler		0	0	8186*		PN/PN Coupler X1	6ES7 158...	V03.00.00
PN-IO-01		0	0 X1	8185*		PN-PN-Coupler		
IN/OUT 6 Byte / 12 Byte_1		0	1	0...5	0...11	IN/OUT 6 Bytes ...		
IN/OUT 12 Byte / 6 Byte_1		0	2	6...17	12...17	IN/OUT 12 Byte...		

6. Select the following modules from "IN/OUT" in the device view of PN/PN coupler X2 and insert them in the "Device overview" tab:
   – One "IN/OUT 12 bytes / 6 bytes" module and
   – One "IN/OUT 6 bytes / 12 bytes" module

Device overview

Module	...	Rack	Slot	I address	Q address	Type	Article n...	Firmware
PN-PN-Coupler_1		0	0	8186*		PN/PN Coupler X2	6ES7 158...	V03.00.00
PN-IO-02		0	0 X2	8185*		PN-PN-Coupler		
IN/OUT 12 Byte / 6 Byte_1		0	1	0...11	0...5	IN/OUT 12 Byte...		
IN/OUT 6 Byte / 12 Byte_1		0	2	12...17	6...17	IN/OUT 6 Bytes ...		

9.2.2.2 Safety-related IO controller-IO controller communication via SENDDP and RCVDP

Communication via SENDDP and RCVDP instructions

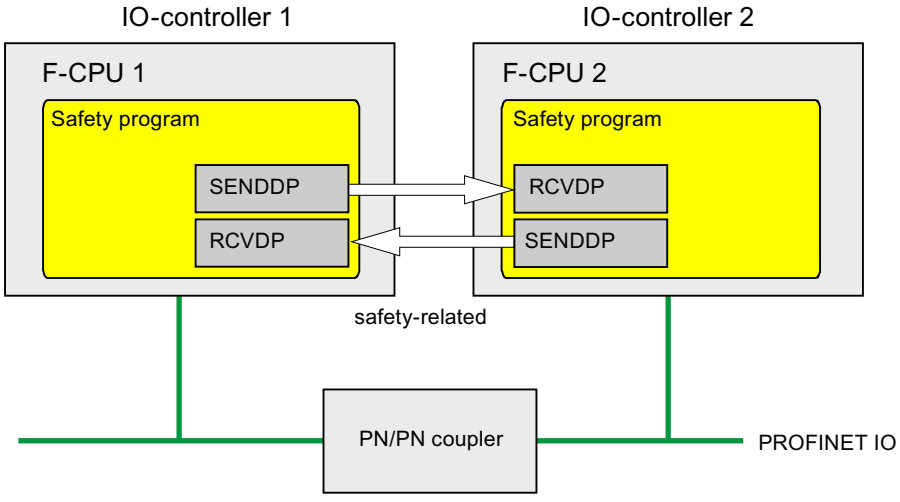

Safety-related communication between the F-CPUs of the IO controllers uses the SENDDP and RCVDP instructions for sending and receiving, respectively. These can be used to perform a fail-safe transfer of a *fixed* amount of fail-safe data of the data type BOOL or INT (DINT as alternative).

You can find these instructions in the "Instructions" task card under "Communication". The RCVDP instruction **must** be called at the start of the main safety block. The SENDDP instruction **must** be called at the end of the main safety block.

You can also call up the RCVDP and SENDDP instructions in separate F-FBs/F-FCs which you have to call at the start or end of the main safety block.

Note that the send signals are not sent until after the SENDDP instruction call at the end of execution of the relevant F-runtime group.

A detailed description of the SENDDP and RCVDP instructions can be found in SENDDP and RCVDP: Send and receive data via PROFIBUS DP/PROFINET IO (STEP 7 Safety V18) (Page 529-530).

9.2.2.3 Program safety-related IO controller-IO controller communication

Requirement for programming

The transfer areas for input and output data for the PN/PN coupler must be configured.

Programming procedure

You program safety-related IO controller-IO controller communication as follows:

1. In the safety program from which data is to be sent, call the SENDDP instruction (Page 529-530) for sending at the end of the main safety block.
2. In the safety program in which data is to be received, call the RCVDP instruction (Page 529-530) for receiving at the start of the main safety block.
3. Assign the respective LADDR inputs HW identifiers (system constants in the default tag table) for the transfer areas for output and input data of the PN/PN coupler that are configured in the hardware and network editor.

   You must carry out this assignment for every communication connection for each of the F-CPUs involved.

4. Assign the value for the respective F-communication ID to the DP_DP_ID inputs. This establishes the communication relationship between the SENDDP instruction in one F-CPU and the RCVDP instruction in the other F-CPU: The associated instructions receive the same value for DP_DP_ID.
   The figure below contains an example of how to specify the F-communication IDs at the inputs of the SENDDP and RCVDP instructions for 5 safety-related IO controller-IO controller communication relationships.

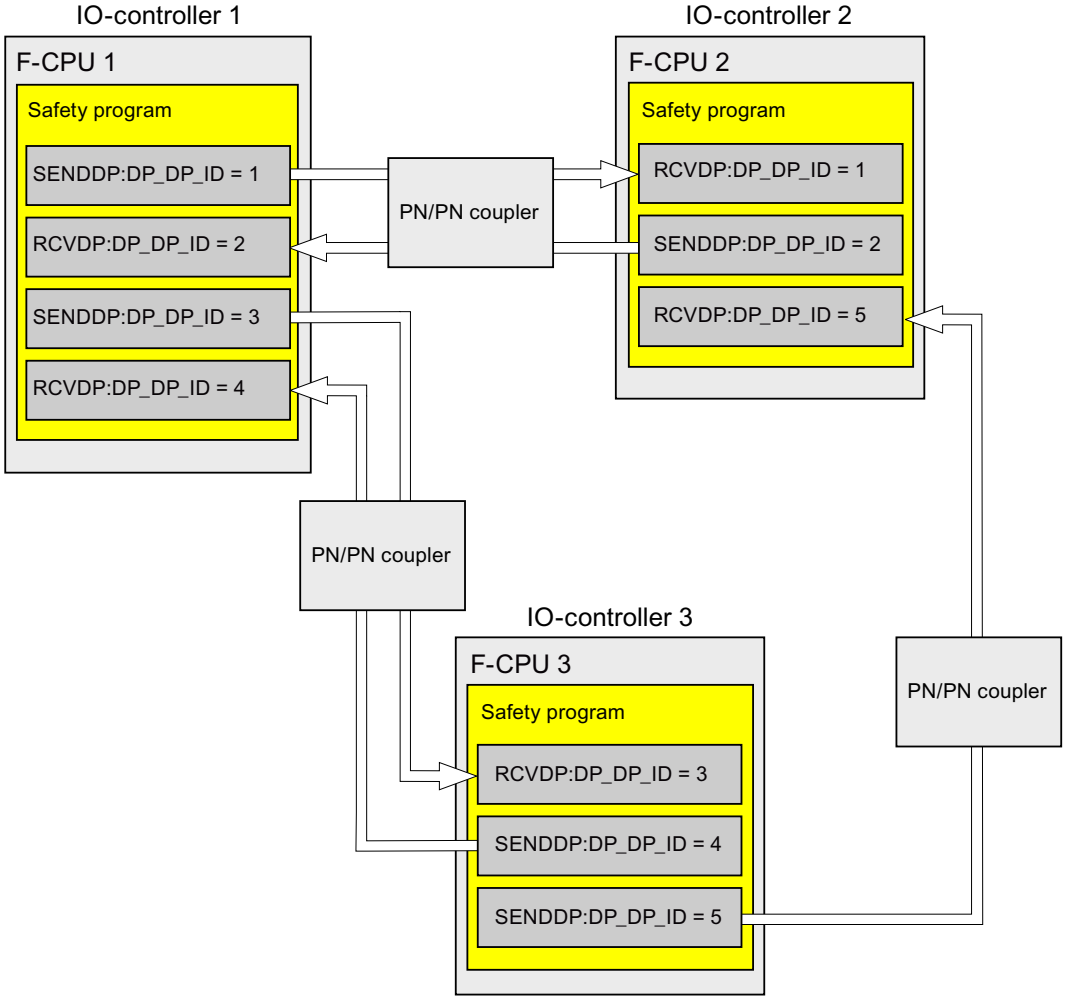

WARNING

The value of the respective F-communication ID (input DP_DP_ID; data type: INT) can be freely selected**; however, it must be unique for all safety-related communication connections network-wide* and CPU-wide**** at all times. The uniqueness must be checked in the safety summary during acceptance of the safety program.

You must supply constant values*** to the inputs DP_DP_ID and LADDR when calling the instruction. Direct write accesses in the associated instance DB to DP_DP_ID and LADDR are not permitted in the safety program! *(S016)*

* A network consists of one or more subnets. "Network-wide" means beyond the boundaries of the subnet. In PROFIBUS, a network includes all the nodes accessible via PROFIBUS DP. In PROFINET IO, a network includes all nodes accessible via RT_Class_1/2/3 (Ethernet/WLAN/Bluetooth, Layer 2) and if applicable RT_Class_UDP (IP, Layer 3).
** S7-1200/1500: As of version V3.0 of the SENDDP and RCVDP instructions, no connection is established at the DP_DP_ID input for a F-communication ID "0".
*** S7-1200/1500: As of version V3.0 of the SENDDP and RCVDP instructions, the DP_DP_ID input can also be supplied with variable values from a global F-DB. In this case as well you have to check during the acceptance of the safety program that the uniqueness is ensured *at every moment*, by checking the algorithm for the creation of the variable value accordingly. If you cannot ensure a unique F-communication ID during startup of the safety program, because it is only specified after startup of the safety program, you must make sure that the value at the DP_DP_ID input is "0" during this phase.
**** With a redundant S7-1500HF system, both F-CPUs of the redundant S7-1500HF system are to be regarded as one F-CPU with regard to the DP_DP_ID.

5. Supply the SD_BO_xx and SD_I_xx inputs (SD_DI_00 as alternative) of SENDDP with the send signals. To cut down on intermediate signals when transferring block parameters, you can write the value directly to the instance DB of SENDDP using fully qualified access (for example, "Name SENDDP_1".SD_BO_02) before calling SENDDP.
6. Supply the RD_BO_xx and RD_I_xx outputs (RD_DI_00 as alternative) of RCVDP with the signals that you want to process further in other program sections or use fully qualified access to read the received signals directly in the associated instance DB in the program sections to be processed further (e.g., "Name RCVDP_1".RD_BO_02).
7. If you want to send the data at the SD_DI_00 input instead of the data at the SD_I_00 and SD_I_01 inputs, supply the DINTMODE input (initial value = "FALSE") of SENDDP with TRUE.
8. Supply the SUBBO_xx and SUBI_xx or alternatively SUBDI_00 inputs of RCVDP with the fail-safe values that are to be output by RCVDP in place of the process data until communication is established for the first time after startup of the sending and receiving F-systems or in the event of an error in safety-related communication.
   - Specification of constant fail-safe values:
     For data of data type INT/DINT, you can enter constant fail-safe values directly as constants in the SUBI_xx or alternatively SUBDI_00 input (initial value = "0"). If you want to specify a constant fail-safe value "TRUE" for data of the data type BOOL, set TRUE for the SUBBO_xx input (initial value = "FALSE").
   - Specification of variable substitute values:
     If you want to specify variable substitute values, define a tag that you calculate through your safety program in an F-DB and specify this tag (fully qualified) in the SUBBO_xx or SUBI_xx or alternatively SUBDI_00 input.

WARNING

Note: The program logic for calculating variable substitute values can only be inserted after the RCVDP calls, because there must be no program logic before the RCVDP calls. This is why the initial values of the substitute values are active in all RCVDP instructions in the first cycle after a startup of the F-system. You must therefore assign appropriate initial values for these tags. *(S017)*

9. Configure the TIMEOUT inputs of the RCVDP and SENDDP instructions with the required monitoring time.

   WARNING

   It can only be ensured (from a fail-safe standpoint) that a signal state to be transferred will be acquired and transferred to the receiver if the signal level is pending for at least as long as the assigned monitoring time. *(S018)*

   Information on calculating the monitoring times can be found in Monitoring and response times (Page 546).
10. Optional: Evaluate the ACK_REQ output of the RCVDP instruction, for example, in the standard user program or on the HMI system in order to query or to indicate whether user acknowledgment is required.
11. Supply the ACK_REI input of the RCVDP instruction with the acknowledgment signal for reintegration.
12. Optional: Evaluate the SUBS_ON output of the RCVDP or SENDDP instruction in order to query whether the RCVDP instruction is outputting the fail-safe values assigned in the SUBBO_xx and SUBI_xx or alternatively SUBDI_00 inputs.
13. Optional: Evaluate the ERROR output of the RCVDP or SENDDP instruction, for example, in the standard user program or on the HMI system in order to query or to indicate whether a communication error has occurred.
14. Optional: Evaluate the SENDMODE output of the RCVDP instruction in order to query whether the F-CPU with the associated SENDDP instruction is in disabled safety mode (Page 310).

9.2.2.4 Safety-related IO controller-IO controller communication - Limits for data transfer

NOTE

If the data quantities to be transmitted exceed the capacity of the SENDDP / RCVDP correlated instructions, a second (or third) SENDDP / RCVDP call can be used. This requires configuration of an additional communication connection via the PN/PN coupler. Whether or not this is possible with one single PN/PN coupler depends on the capacity restrictions of the PN/PN coupler.

9.2.3 Safety-related master-master communication

9.2.3.1 Configure safety-related master-master communication

Introduction

Safety-related communication between safety programs of the F-CPUs of DP masters takes place via a DP/DP coupler.

NOTE

Switch the data validity indicator "DIA" on the DIP switch of the DP/DP coupler to "OFF". Otherwise, safety-related CPU-CPU communication is not possible.

Configuring transfer areas

You must configure one transfer area for output data and one transfer area for input data in the *hardware and network editor* for each safety-related communication connection between two F-CPUs in the DP/DP coupler. The figure below shows how both of the F-CPUs are able to send and receive data (bidirectional communication).

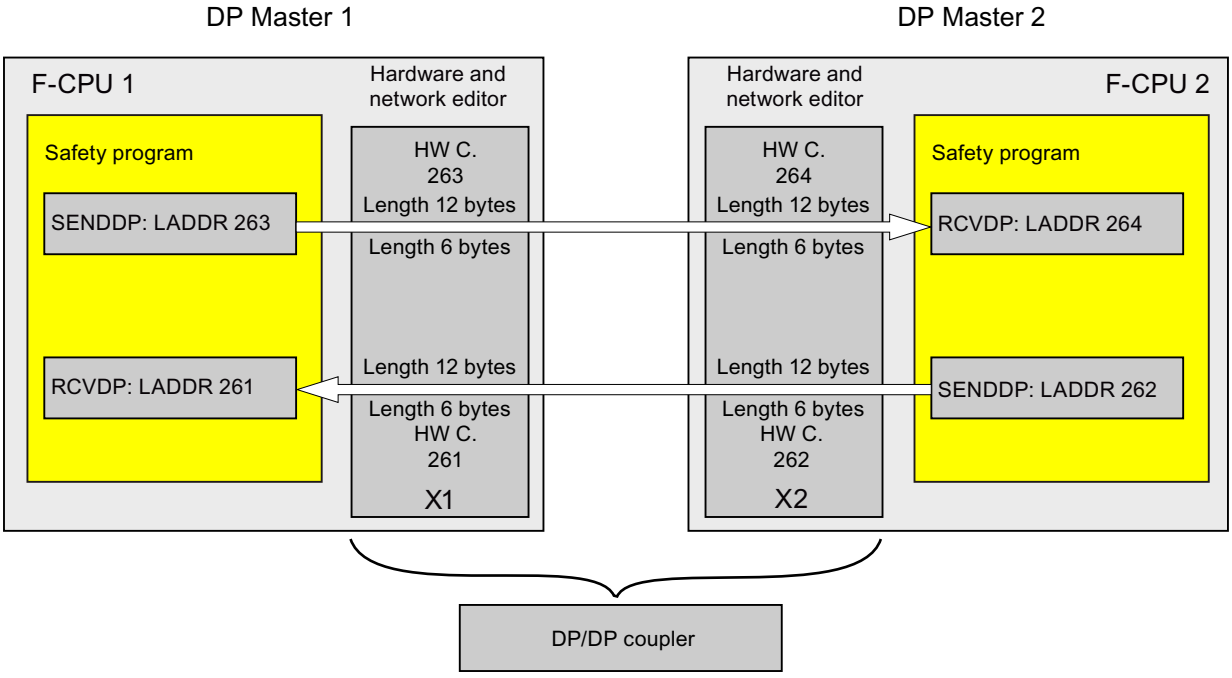

Rules for defining transfer areas

Data to be sent:

A total of 12 bytes (consistent) is required for the transfer area for output data; 6 bytes (consistent) are required for the transfer area for input data.

Data to be received:
A total of 12 bytes (consistent) is required for the transfer area for input data; 6 bytes (consistent) are required for the transfer area for output data.

Procedure for configuration

The procedure for configuring safety-related master-master communication is identical to that in the standard system.
Proceed as follows:

1. Insert two F-CPUS from the "Hardware catalog" task card into the project.
2. Switch to the network view of the *hardware and network editor*.
3. Select a DP/DP coupler from "Other field devices\PROFIBUS DP\Gateways\Siemens AG\DP/DP Coupler" in the "Hardware catalog" task card and insert it into the network view of the hardware and network editor.
4. Insert a second DP/DP coupler.
5. Connect a DP interface of F-CPU 1 to the DP interface of a DP/DP coupler and a DP interface of F-CPU 2 to the DP interface of the other DP/DP coupler.

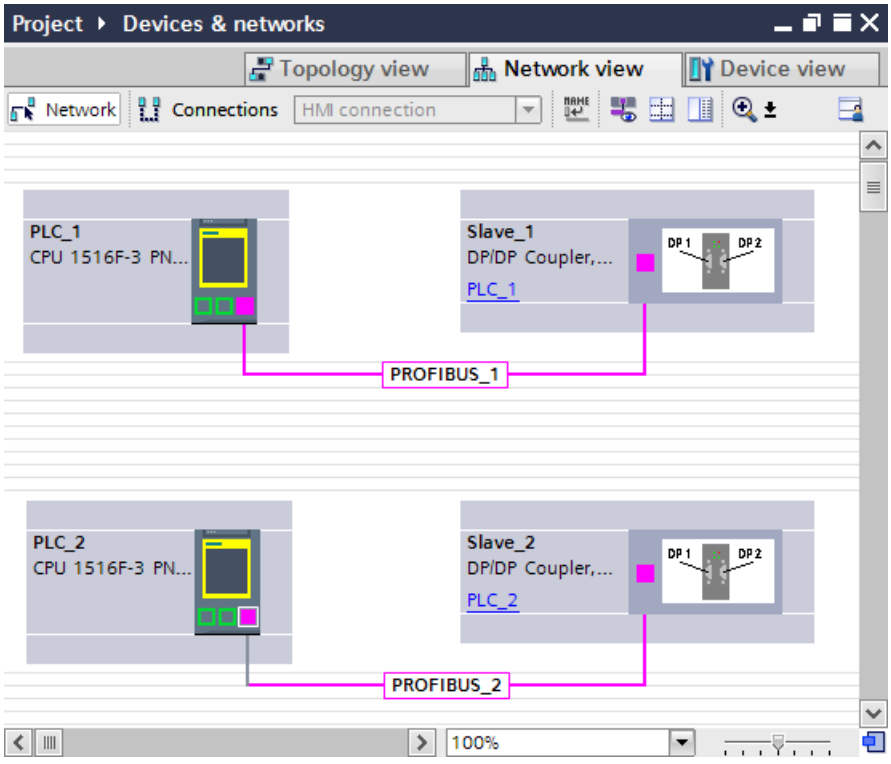

6. A free PROFIBUS address is assigned automatically in the properties of the DP/DP-coupler in the device view. You must set this address on the DP/DP coupler, either via the DIP switch on the device or in the configuration of the DP/DP coupler (see DP/DP Coupler (http://support.automation.siemens.com/WW/view/en/1179382) manual).

7. Switch to the device view of the DP/DP coupler PLC1 for bidirectional communication connections i.e. where each F-CPU should both send and receive data. Select the following modules from the "Hardware catalog" task card (with filter activated), and insert them in the "Device overview" tab of the DP/DP coupler:
   - One "6 bytes I/12 bytes Q consistent" module, and
   - One "12 bytes I/6 bytes Q consistent" module

NOTE

The transfer areas are assigned on the basis of the hardware identifier which is automatically assigned to the modules and devices. You need the HW identifier to program the SENDDP and RCVDP blocks (LADDR input). A system constant is created in the corresponding F-CPU for each hardware identifier of the transfer area. You can assign these system constants symbolically to the SENDDP and RCVDP blocks.

Device overview

...	Module	Rack	Slot	I address	Q address	Type	Article no.	Firmw...
	Slave_1	0	0 0	8186*		DP/DP Co...	6ES7 158-0AD01...	B0
	6 Bytes E/12 Bytes A konsist...	0	0 1	256...261	256...267	6 Bytes I/...		
	12 Bytes E/6 Bytes A konsist...	0	0 2	262...273	268...273	12 Bytes ...		
		0	3					

8. Select the following modules from the "Hardware catalog" task card (with filter activated) in the device view of DP/DP coupler PLC2, and insert them in the "Device overview" tab:
   - One "12 bytes I/6 bytes Q consistent" module, and
   - One "6 bytes I/12 bytes Q consistent" module

Device overview

...	Module	Rack	Slot	I address	Q address	Type	Article no.	Firmw...
	Slave_2	0	0 0	8186*		DP/DP Co...	6ES7 158-0AD01...	B0
	12 Bytes E/6 Bytes A konsist...	0	0 1	256...267	256...261	12 Bytes ...		
	6 Bytes E/12 Bytes A konsist...	0	0 2	268...273	262...273	6 Bytes I/...		
		0	3					

9.2.3.2 Safety-related master-master communication via SENDDP and RCVDP

Communication via SENDDP and RCVDP instructions

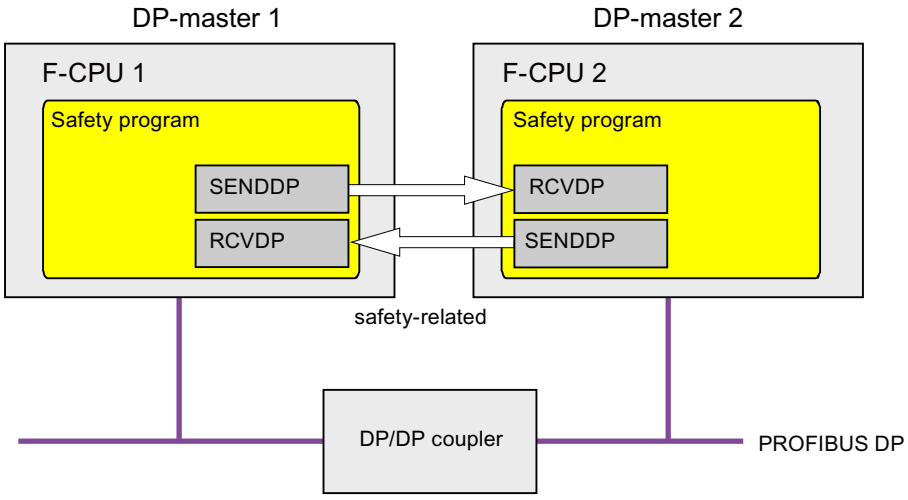

Safety-related communication between the F-CPUs of the DP master uses the SENDDP and RCVDP instructions for sending and receiving, respectively. These can be used to perform a fail-safe transfer of a *fixed* amount of fail-safe data of the data type BOOL or INT (DINT as alternative).

You can find these instructions in the "Instructions" task card under "Communication". The RCVDP instruction **must** be called at the start of the main safety block. The SENDDP instruction **must** be called at the end of the main safety block.

You can also call up the RCVDP and SENDDP instructions in separate F-FBs/F-FCs which you have to call up at the start or the end of the main safety block.

Note that the send signals are not sent until after the SENDDP instruction call at the end of execution of the relevant F-runtime group.

A detailed description of the SENDDP and RCVDP instructions can be found in SENDDP and RCVDP: Send and receive data via PROFIBUS DP/PROFINET IO (STEP 7 Safety V18) (Page 529-530).

9.2.3.3 Program safety-related master-master communication

Requirement for programming

The address areas for input and output data for the DP/DP coupler must be configured.

Programming procedure

You program safety-related master-master communication as follows:

1. In the safety program from which data is to be sent, call the SENDDP instruction (Page 529-530) for sending at the end of the main safety block or a separate F-FC/F-FB.
2. In the safety program in which data is to be received, call the RCVDP instruction (Page 529-530) for receiving at the start of the main safety block or a separate F-FC/F-FB.

3. Assign the HW identifiers for the output and input data of the DP/DP coupler configured in the *hardware and network editor* (constant in the tag table) to the respective LADDR inputs.

   You must carry out this assignment for every communication connection for each of the F-CPUs involved.

4. Assign the value for the respective F-communication ID to the DP_DP_ID inputs. This establishes the communication relationship between the SENDDP instruction in one F-CPU and the RCVDP instruction in the other F-CPU: The associated instructions receive the same value for DP_DP_ID.
   The figure below contains an example of how to specify the F-communication IDs at the inputs of the SENDDP and RCVDP instructions for 5 safety-related master-master communications relationships.

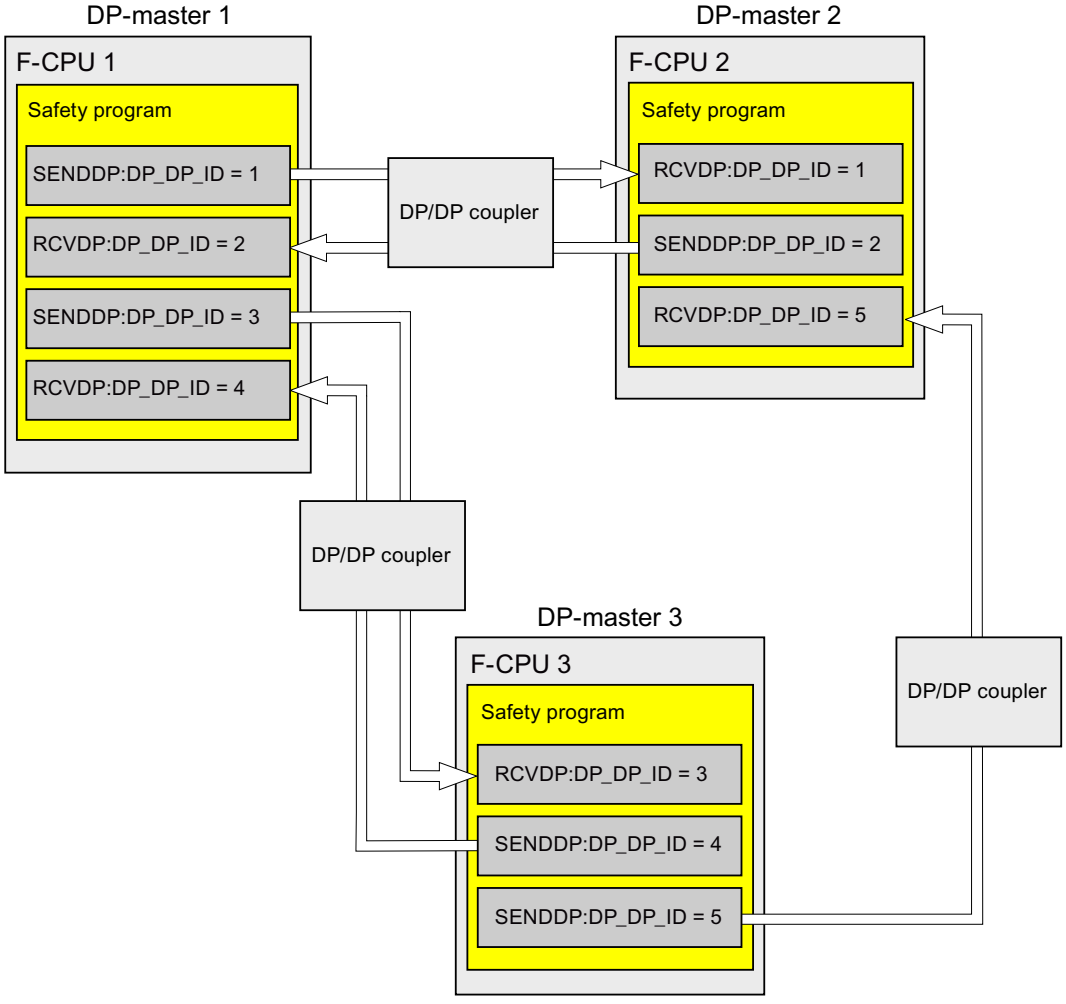

WARNING

The value of the respective F-communication ID (input DP_DP_ID; data type: INT) can be freely selected**; however, it must be unique for all safety-related communication connections network-wide* and CPU-wide at all times. The uniqueness must be checked in the safety summary during acceptance of the safety program.

You must supply constant values*** to the inputs DP_DP_ID and LADDR when calling the instruction. Direct write accesses in the associated instance DB to DP_DP_ID and LADDR are not permitted in the safety program! *(S016)*

* A network consists of one or more subnets. "Network-wide" means beyond the boundaries of the subnet. In PROFIBUS, a network includes all the nodes accessible via PROFIBUS DP. In PROFINET IO, a network includes all nodes accessible via RT_Class_1/2/3 (Ethernet/WLAN/Bluetooth, Layer 2) and if applicable RT_Class_UDP (IP, Layer 3).

** S7-1200/1500: As of version V3.0 of the SENDDP and RCVDP instructions, no connection is established at the DP_DP_ID input for a F-communication ID "0".

*** S7-1200/1500: As of version V3.0 of the SENDDP and RCVDP instructions, the DP_DP_ID input can also be supplied with variable values from a global F-DB. In this case as well you have to check during the acceptance of the safety program that the uniqueness is ensured *at every moment*, by checking the algorithm for the creation of the variable value accordingly. If you cannot ensure a unique F-communication ID during startup of the safety program, because it is only specified after startup of the safety program, you must make sure that the value at the DP_DP_ID input is "0" during this phase.

5. Supply the SD_BO_xx and SD_I_xx inputs (SD_DI_00 as alternative) of SENDDP with the send signals. To cut down on intermediate signals when transferring block parameters, you can write the value directly to the instance DB of SENDDP using fully qualified access (for example, "Name SENDDP_1".SD_BO_02) before calling SENDDP.
6. Supply the RD_BO_xx and RD_I_xx outputs (RD_DI_00 as alternative) of RCVDP with the signals that you want to process further in other program sections or use fully qualified access to read the received signals directly in the associated instance DB in the program sections to be processed further (e.g., "Name RCVDP_1".RD_BO_02).
7. If you want to send the data at the SD_DI_00 input instead of the data at the SD_I_00 and SD_I_01 inputs, supply the DINTMODE input (initial value = "FALSE") of SENDDP with TRUE.
8. Supply the SUBBO_xx and SUBI_xx or alternatively SUBDI_00 inputs of RCVDP with the fail-safe values that are to be output by RCVDP in place of the process data until communication is established for the first time after startup of the sending and receiving F-systems or in the event of an error in safety-related communication.
   - Specification of constant fail-safe values:
     For data of data type INT/DINT, you can enter constant fail-safe values directly as constants in the SUBI_xx or alternatively SUBDI_00 input (initial value = "0"). If you want to specify a constant fail-safe value "TRUE" for data of the data type BOOL, set TRUE for the SUBBO_xx input (initial value = "FALSE").
   - Specification of variable substitute values:
     If you want to specify variable substitute values, define a tag that you calculate through your safety program in an F-DB and specify this tag (fully qualified) in the SUBBO_xx or SUBI_xx or alternatively SUBDI_00 input.

WARNING

Note: The program logic for calculating variable substitute values can only be inserted after the RCVDP calls, because there must be no program logic before the RCVDP calls. This is why the initial values of the substitute values are active in all RCVDP instructions in the first cycle after a startup of the F-system. You must therefore assign appropriate initial values for these tags. *(S017)*

9. Configure the TIMEOUT inputs of the RCVDP and SENDDP instructions with the required monitoring time.

   WARNING

   It can only be ensured (from a fail-safe standpoint) that a signal state to be transferred will be acquired and transferred to the receiver if the signal level is pending for at least as long as the assigned monitoring time. *(S018)*

   Information on calculating the monitoring times can be found in Monitoring and response times (Page 546).
10. Optional: Evaluate the ACK_REQ output of the RCVDP instruction, for example, in the standard user program or on the HMI system in order to query or to indicate whether user acknowledgment is required.
11. Supply the ACK_REI input of the RCVDP instruction with the acknowledgment signal for reintegration.
12. Optional: Evaluate the SUBS_ON output of the RCVDP or SENDDP instruction in order to query whether the RCVDP instruction is outputting the fail-safe values assigned in the SUBBO_xx and SUBI_xx or alternatively SUBDI_00 inputs.
13. Optional: Evaluate the ERROR output of the RCVDP or SENDDP instruction, for example, in the standard user program or on the HMI system in order to query or to indicate whether a communication error has occurred.
14. Optional: Evaluate the SENDMODE output of the RCVDP instruction in order to query whether the F-CPU with the associated SENDDP instruction is in disabled safety mode (Page 310).

9.2.3.4 Safety-related master-master communication:Limits for data transfer

NOTE

If the data quantities to be transmitted exceed the capacity of the SENDDP / RCVDP correlated instructions, a second (or third) SENDDP / RCVDP call can be used. This requires configuration of an additional connection via the DP/DP coupler. Whether or not this is possible with one single DP/DP coupler depends on the capacity restrictions of the DP/DP coupler.

9.2.4 Safety-related IO controller-I-device communication

9.2.4.1 Configuring safety-related communication between IO controller and I-device

Introduction

Safety-related communication between the safety program of the F-CPU of an IO controller and the safety program(s) of the F-CPU(s) of one or more I-devices takes place via IO

controller-I-device connections (F-CD) in PROFINET IO, in the same way as in standard systems.
You do not need any additional hardware for IO controller-I-device communication.

Configuring transfer areas

For every safety-related communication connection between two F-CPUs, you must configure transfer areas in the *hardware and network editor*. The figure below shows how both of the F-CPUs are able to send and receive data (bidirectional communication).

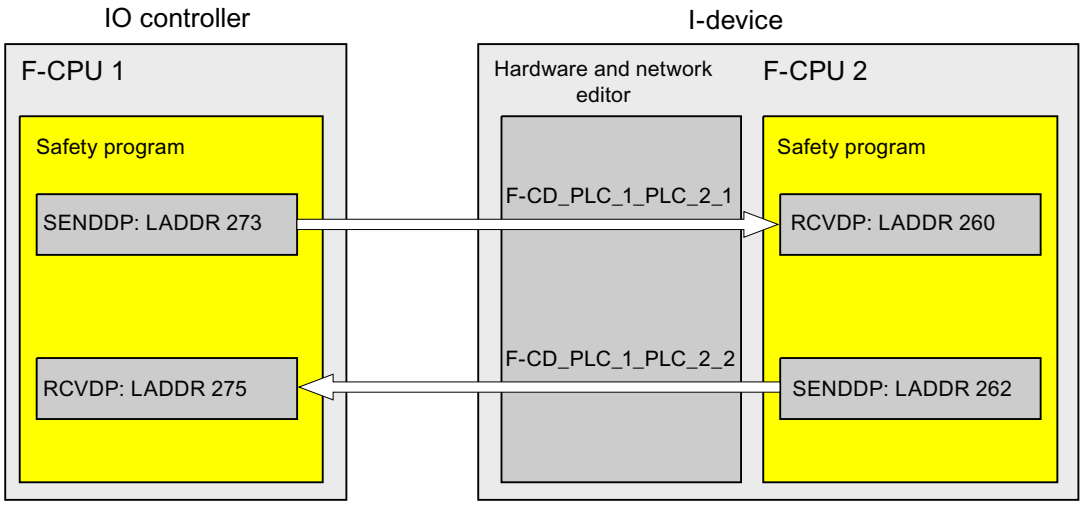

The transfer area is assigned a label when it is created to identify it as the communication relationship. For example, "F-CD_PLC_2 PLC_1_1" for the first F-CD connection between IO controller F-CPU 1 and I-device F-CPU 2.
When you create a transfer area, a system constant with the name of the transfer area is created in the F-CPU of the IO controller and in the F-CPU of the I-device. The system constant contains the hardware identifier of the transfer area for the corresponding F-CPU.
You assign the hardware identifier (system constant from the default tag table) of the transfer areas symbolically to the LADDR input of the SENDDP and RCVDP instructions in the safety programs.

Procedure for configuration

The procedure for configuring safety-related IO controller-I-device communication is identical to that in the standard system.
Proceed as follows:

1. Insert two F-CPUS from the "Hardware catalog" task card into the project.
2. Enable the "IO Device" mode for F-CPU 2 in the properties of its PN interface and assign this PN interface to a PN interface of F-CPU 1.
3. Select the PROFINET interface of F-CPU 2. Under "Transfer areas", you create an F-CD connection (type "F-CD") for receiving from the IO controller (←). The F-CD connection is shown in yellow in the table and the address areas in the I-device and IO controller assigned are displayed.
   In addition, an acknowledgment connection is created automatically for each F-CD connection. (see "Transfer area details").

4. Create an additional F-CD connection for sending to the IO controller.
5. In the transfer area you just created, click on the arrow to change the transfer direction to sending to the IO controller (←).

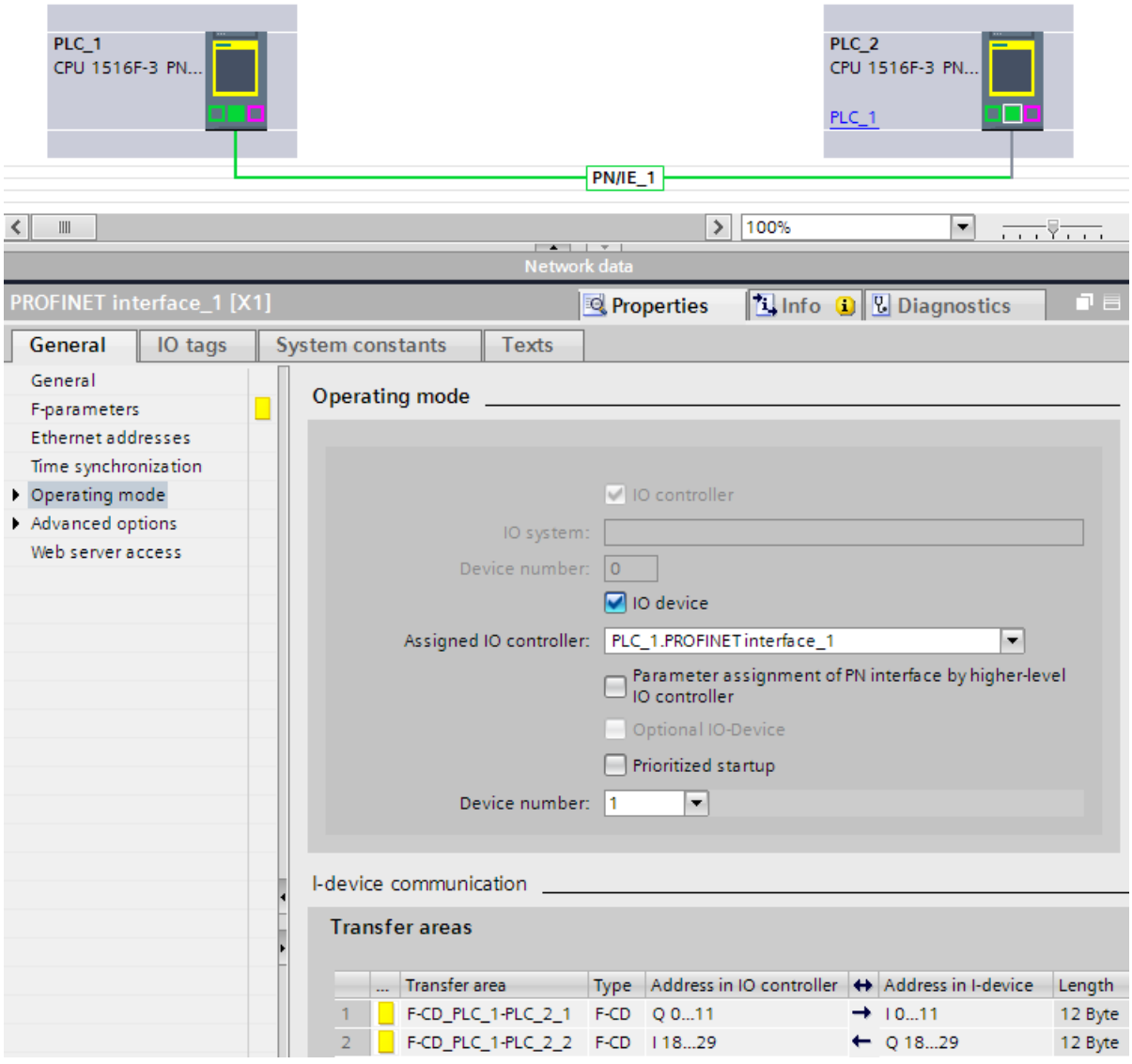

9.2.4.2 Safety-related IO controller-I-device communication via SENDDP and RCVDP

Communication via SENDDP and RCVDP instructions

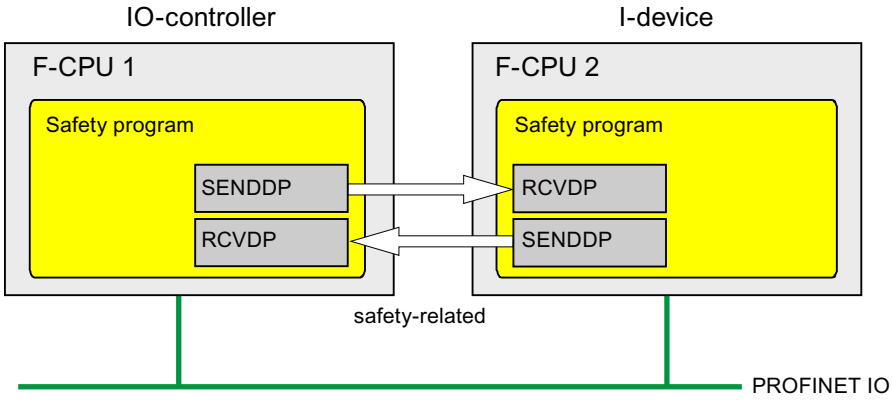

Safety-related communication between the F-CPUs of the IO controller and an I-device makes use of the SENDDP and RCVDP instructions for sending and receiving, respectively. These can be used to perform a fail-safe transfer of a *fixed* amount of data of the data type BOOL or INT (DINT as alternative).

You can find these instructions in the "Instructions" task card under "Communication". The RCVDP instruction **must** be called at the start of the main safety block. The SENDDP instruction **must** be called at the end of the main safety block.

You can also call up the RCVDP and SENDDP instructions in separate F-FBs/F-FCs which you have to call at the start or end of the main safety block.

Note that the send signals are not sent until after the SENDDP instruction call at the end of execution of the relevant F-runtime group.

A detailed description of the SENDDP and RCVDP instructions can be found in SENDDP and RCVDP: Send and receive data via PROFIBUS DP/PROFINET IO (STEP 7 Safety V18) (Page 529-530).

9.2.4.3 Programming safety-related IO controller I-device communication

Requirement for programming

The transfer areas must be configured.

Programming procedure

The procedure for programming safety-related IO controller-I-device communication is the same as that for programming safety-related IO controller-IO controller communication (see Program safety-related IO controller-IO controller communication (Page 237)).

The assignment of the HW identifiers (system constants in the standard tag table) of the transfer areas to the LADDR input of the SENDDP/RCVDP instructions can be obtained from the following table:

Instruction	HW identifier
SENDDP in the IO controller	Hardware identifier of the transfer area in the IO controller
RCVDP in the IO controller	Hardware identifier of the transfer area in the IO controller
SENDDP in the I-device	Hardware identifier of the transfer area in the I-device
RCVDP in the I-device	Hardware identifier of the transfer area in the I-device

The figure below contains an example of how to specify the F-communication IDs for the inputs of the SENDDP and RCVDP instructions for 4 safety-related IO controller-I-device communication relationships.

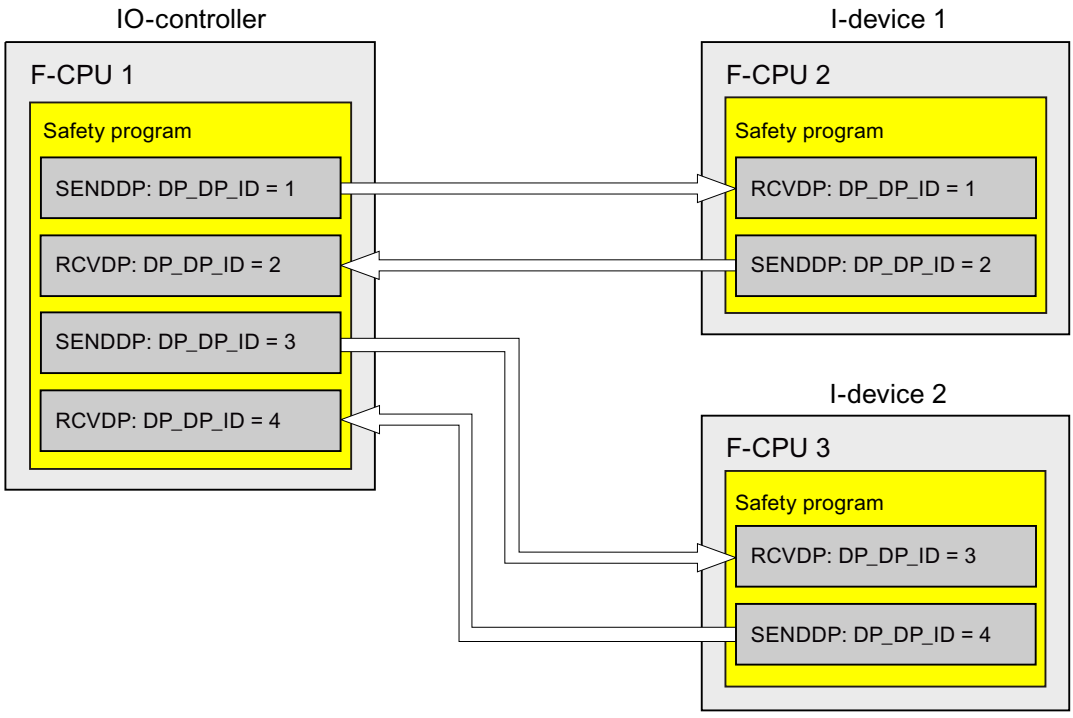

WARNING

The value of the respective F-communication ID (input DP_DP_ID; data type: INT) can be freely selected**; however, it must be unique for all safety-related communication connections network-wide* and CPU-wide**** at all times. The uniqueness must be checked in the safety summary during acceptance of the safety program.

You must supply constant values*** to the inputs DP_DP_ID and LADDR when calling the instruction. Direct write accesses in the associated instance DB to DP_DP_ID and LADDR are not permitted in the safety program! *(S016)*

* A network consists of one or more subnets. "Network-wide" means beyond the boundaries of the subnet. In PROFIBUS, a network includes all the nodes accessible via PROFIBUS DP. In PROFINET IO, a network includes all nodes accessible via RT_Class_1/2/3 (Ethernet/WLAN/Bluetooth, Layer 2) and if applicable RT_Class_UDP (IP, Layer 3).
** S7-1200/1500: As of version V3.0 of the SENDDP and RCVDP instructions, no connection is established at the DP_DP_ID input for a F-communication ID "0".
*** S7-1200/1500: As of version V3.0 of the SENDDP and RCVDP instructions, the DP_DP_ID input can also be supplied with variable values from a global F-DB. In this case as well you have to check during the acceptance of the safety program that the uniqueness is ensured *at every moment*, by checking the algorithm for the creation of the variable value accordingly. If you cannot ensure a unique F-communication ID during startup of the safety program, because it is only specified after startup of the safety program, you must make sure that the value at the DP_DP_ID input is "0" during this phase.
**** With a redundant S7-1500HF system, both F-CPUs of the redundant S7-1500HF system are to be regarded as one F-CPU with regard to the DP_DP_ID.

WARNING

It can only be ensured (from a fail-safe standpoint) that a signal state to be transferred will be acquired and transferred to the receiver if the signal level is pending for at least as long as the assigned monitoring time. *(S018)*

Information on calculating the monitoring times can be found in Monitoring and response times (Page 546).

9.2.4.4 Safety-related IO-Controller-IO-Device communication - Limits for data transfer

Limits for data transfer

If the amount of data to be transferred is greater than the capacity of related SENDDP/RCVDP instructions, you can use additional SENDDP/RCVDP instructions. Configure additional transfer areas for this purpose. Remember the maximum limit of 1440 bytes of input data or 1440 bytes of output data for transfer between an I-device and a IO controller.
The following table shows the amount of output and input data assigned in safety-related communication connections:

Safety-related communication	Communication connection	Assigned input and output data			
		In the IO controller		In the I-device	
		Output data	Input data	Output data	Input data
IO controller-I-Device	**Sending:** I-Device 1 to IO controller	6 bytes	12 bytes	12 bytes	6 bytes
	Receiving: I-Device 1 from IO controller	12 bytes	6 bytes	6 bytes	12 bytes

Consider all additional configured safety-related and standard communication connections (transfer areas of type F-CD and CD) for the maximum limit of 1440 bytes of input data or

1440 bytes of output data for transfer between an I-device and an IO controller. In addition, data are assigned for internal purposes such that the maximum limit may be reached sooner. When the limit is exceeded, a corresponding error message is displayed.

9.2.5 Safety-related master-I-slave communication

9.2.5.1 Configuring safety-related master-I-slave communication

Introduction

Safety-related communication between the safety program of the F-CPU of a DP master and the safety program(s) of the F-CPU(s) of one or more I-slaves takes place over master-I-slave connections (**F**-MS), as in standard systems.
You do not need a DP/DP coupler for master-I-slave communication.

Configuring transfer areas

For every safety-related communication connection between two F-CPUs, you must configure transfer areas in the *hardware and network editor*. The figure below shows how both of the F-CPUs are able to send and receive data (bidirectional communication).

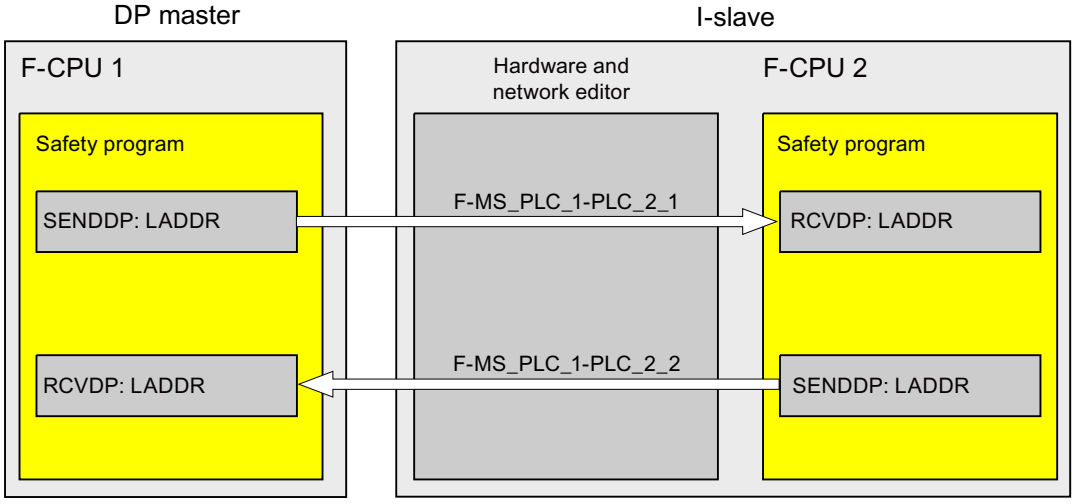

The transfer area is assigned a label when it is created to identify it as the communication relationship. For example, "F-MS_PLC_2-PLC_1_1" for the first F-MS connection between DP master F-CPU 1 and I-slave F-CPU 2.
When you create a transfer area, a system constant with the name of the transfer area is created in the F-CPU of the DP master and in the F-CPU of the I-slave. The system constant contains the hardware identifier of the transfer area for the corresponding F-CPU.
You assign the hardware identifier (system constant from the default tag table) of the transfer areas symbolically to the LADDR input of the SENDDP and RCVDP instructions in the safety programs.

Procedure for configuration

The procedure for configuring safety-related master-I-slave communication is identical to that in the standard system.

Proceed as follows:

1. Insert two F-CPUS from the "Hardware catalog" task card into the project.
2. If the F-CPU which is to be operated as DP master (F-CPU 1) does not have an integrated PROFIBUS DP interface, insert an PROFIBUS-CM, for example.
3. From the device view of the F-CPUs which are to be operated as I-slaves (F-CPU 2), insert a suitable CM DP module or CP DP module.
4. If necessary, enable "DP-slave" (I-slave) mode in the properties for the CM/CP DP module.
5. Assign the DP interface of the CM/CP to a DP interface of F-CPU 1.
6. Select the PROFIBUS interface of F-CPU 2 or of the CM. Under "Transfer areas", you create an F-MS connection (type "F-MS") for sending to the DP master (←). The F-MS connection is shown in yellow in the table and the assigned transfer areas in the I-slave and DP master are displayed.

   In addition, an acknowledgment connection is created automatically for each F-MS connection. (see "Transfer area details").
7. Create an additional F-MS connection for receiving from the DP master.
8. In the transfer area you just created, click the arrow in order to change the transfer direction to receiving from DP master (→).

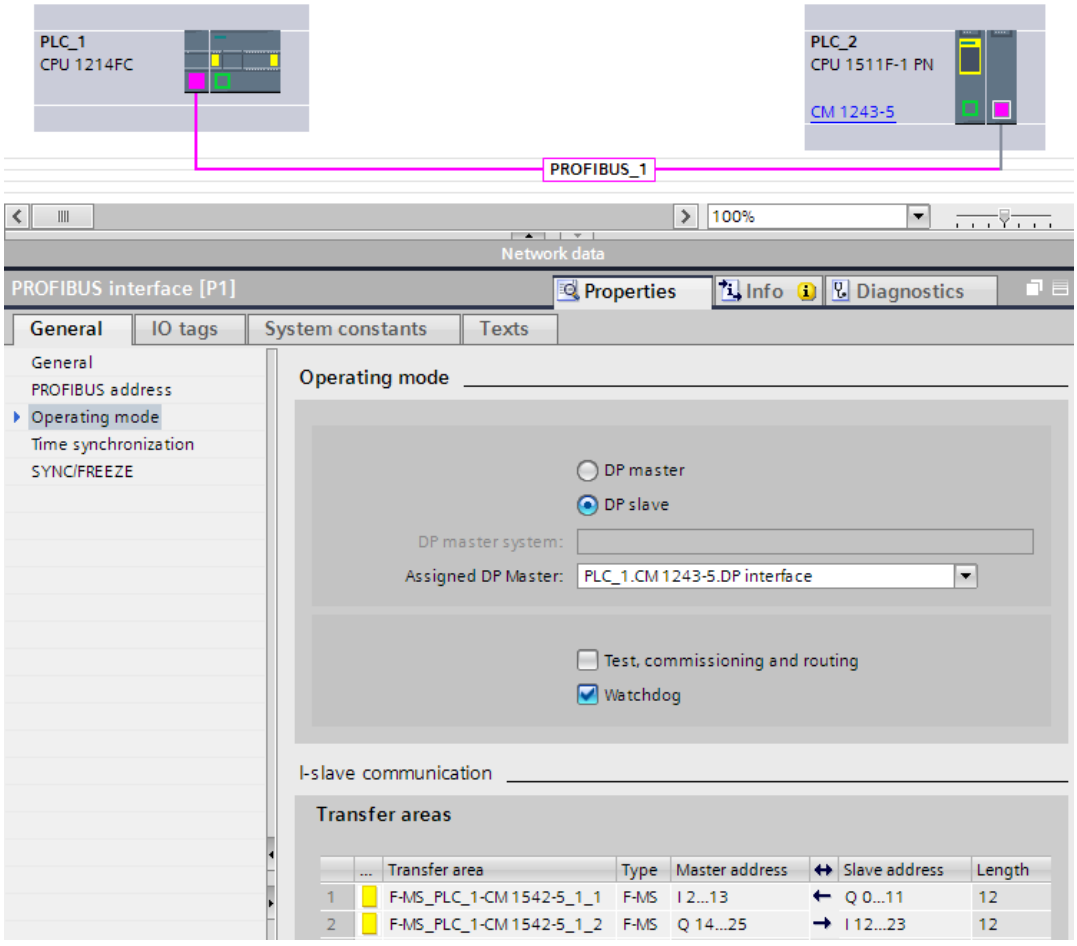

9.2.5.2 Safety-related master-I-slave communication via SENDDP and RCVDP

Communication via SENDDP and RCVDP instructions

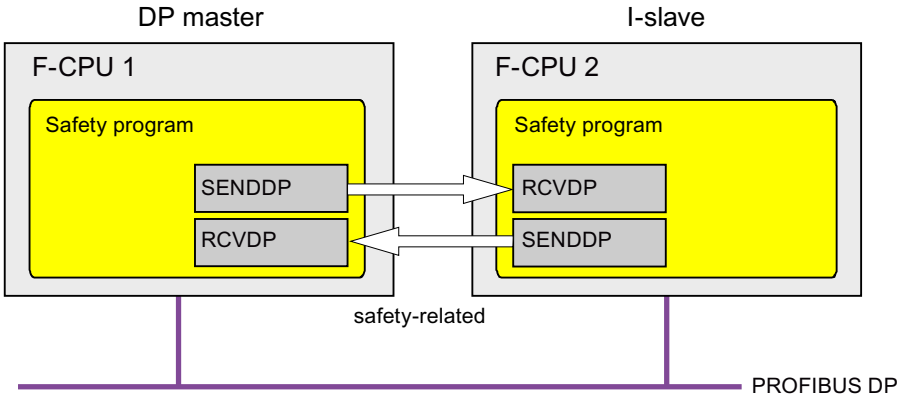

Safety-related communication between the F-CPUs of the DP master and an I-slave makes use of the SENDDP and RCVDP instructions for sending and receiving, respectively. These can be used to perform a fail-safe transfer of a *fixed* amount of fail-safe data of the data type BOOL or INT (DINT as alternative).

You can find these instructions in the "Instructions" task card under "Communication". The RCVDP instruction **must** be called at the start of the main safety block. The SENDDP instruction **must** be called at the end of the main safety block.

You can also call the RCVDP and SENDDP instructions in separate F-FBs/F-FCs which you have to call up at the beginning or end of the main safety block.

Note that the send signals are not sent until after the SENDDP instruction call at the end of execution of the relevant F-runtime group.

A detailed description of the SENDDP and RCVDP instructions can be found in SENDDP and RCVDP: Send and receive data via PROFIBUS DP/PROFINET IO (STEP 7 Safety V18) (Page 529-530).

9.2.5.3 Programming safety-related master-I-slave communication

Requirements

The transfer areas must be configured.

Programming procedure

The procedure for programming safety-related master-I-slave communication is the same as that for programming safety-related master-master communication (see Safety-related master-master communication (Page 241)).

The assignment of the HW identifiers of the transfer areas to the LADDR input of the SENDDP/RCVDP instructions can be obtained from the following table.

Instruction	HW identifier
SENDDP in the DP master	Hardware identifier of the respective transfer area in the DP master
RCVDP in the DP master	Hardware identifier of the respective transfer area in the DP master
SENDDP in the I-slave	Hardware identifier of the transfer area in the I-slave
RCVDP in the I-slave	Hardware identifier of the transfer area in the I-slave

The figure below contains an example of how to specify the F-communication IDs at the inputs of the SENDDP and RCVDP instructions for four safety-related master-I-slave communication relationships.

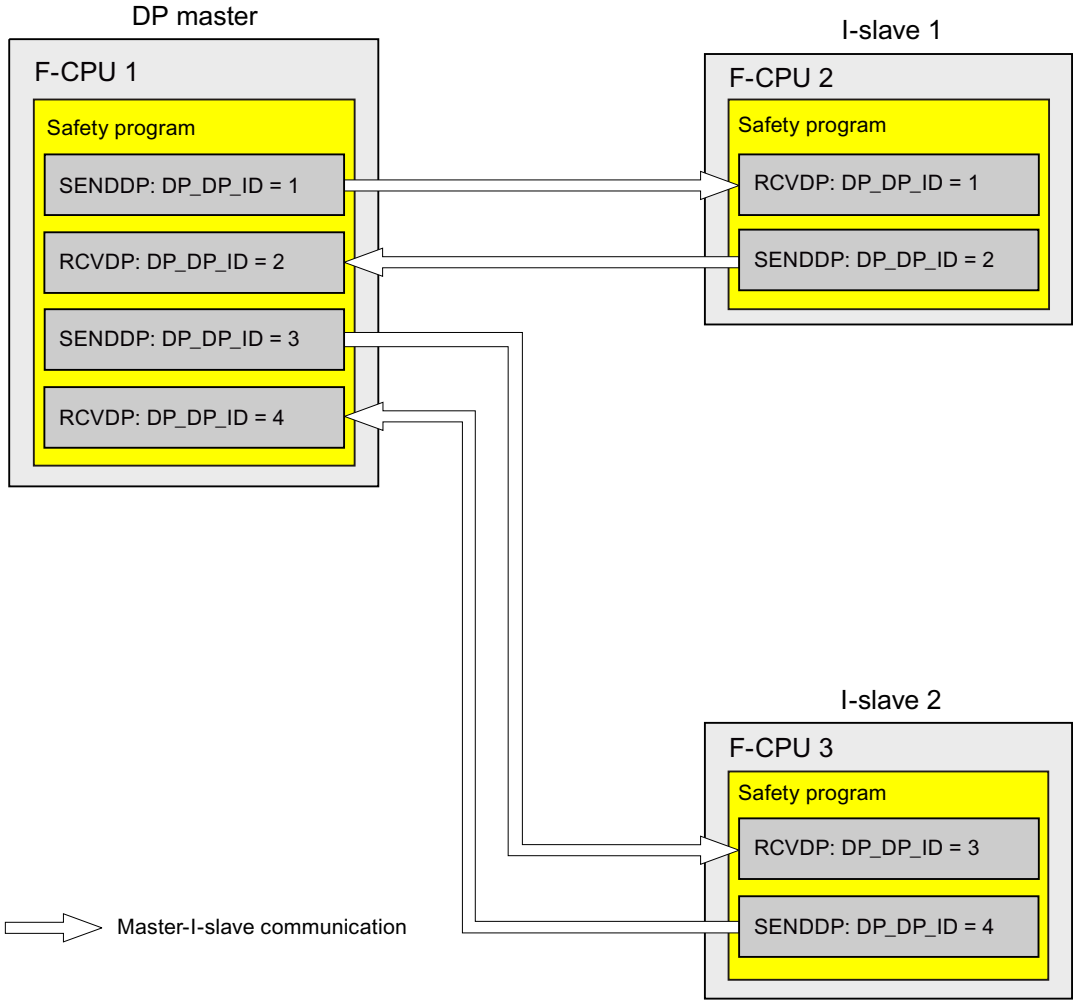

WARNING

The value of the respective F-communication ID (input DP_DP_ID; data type: INT) can be freely selected**; however, it must be unique for all safety-related communication connections network-wide* and CPU-wide at all times. The uniqueness must be checked in the safety summary during acceptance of the safety program.

You must supply constant values*** to the inputs DP_DP_ID and LADDR when calling the instruction. Direct write accesses in the associated instance DB to DP_DP_ID and LADDR are not permitted in the safety program! *(S016)*

* A network consists of one or more subnets. "Network-wide" means beyond the boundaries of the subnet. In PROFIBUS, a network includes all the nodes accessible via PROFIBUS DP. In PROFINET IO, a network includes all nodes accessible via RT_Class_1/2/3 (Ethernet/WLAN/Bluetooth, Layer 2) and if applicable RT_Class_UDP (IP, Layer 3).

** S7-1200/1500: As of version V3.0 of the SENDDP and RCVDP instructions, no connection is established at the DP_DP_ID input for a F-communication ID "0".
*** S7-1200/1500: As of version V3.0 of the SENDDP and RCVDP instructions, the DP_DP_ID input can also be supplied with variable values from a global F-DB. In this case as well you have to check during the acceptance of the safety program that the uniqueness is ensured *at every moment*, by checking the algorithm for the creation of the variable value accordingly. If you cannot ensure a unique F-communication ID during startup of the safety program, because it is only specified after startup of the safety program, you must make sure that the value at the DP_DP_ID input is "0" during this phase.

WARNING

It can only be ensured (from a fail-safe standpoint) that a signal state to be transferred will be acquired and transferred to the receiver if the signal level is pending for at least as long as the assigned monitoring time. *(S018)*

Information on calculating the monitoring times can be found in Monitoring and response times (Page 546).

9.2.5.4 Limits for data transfer of safety-related master-I-slave communication

Limits for data transfer

If the amount of data to be transferred is greater than the capacity of related SENDDP/RCVDP instructions, you can use additional SENDDP/RCVDP instructions. Configure additional transfer areas for this purpose. Note the maximum limit of 244 bytes of input data or 244 bytes of output data for transfer between an I-slave and a DP master.
The following table shows the amount of output and input data assigned in safety-related communication connections:

Safety-related communication	Communication connection	Assigned input and output data			
		DP master		I-slave	
		Output data	Input data	Output data	Input data
Master-I-slave	**Sending:** I-slave 1 to DP master	6 bytes	12 bytes	12 bytes	6 bytes
	Receiving: I-slave 1 from DP master	12 bytes	6 bytes	6 bytes	12 bytes

Consider all additional configured safety-related and standard communication connections (transfer areas of type F-MS-, F-DX-, F-DX-Mod., MS-, DX- and DX-Mod) for the maximum limit of 244 bytes of input data or 244 bytes of output data for transfer between an I-device and a DP master F-MS and MS). If the maximum limit of 244 bytes of input data or 244 bytes of output data is exceeded, you will receive a corresponding error message.

9.2.6 Safety-related IO controller-I-slave communication

9.2.6.1 Safety-related IO controller-I-slave communication

Introduction

Safety-related communication between the safety program of the F-CPU of an IO-controller and the safety program(s) of the F-CPU(s) of one or more I-slaves takes place over master-I-slave connections (**F**-MS), as in standard systems.

IE/PB link

For the safety-related IO-controller-I-slave communication, the IE/PB link is mandatory. Each of the two F-CPUs is linked to the IE/PB link by means of its PROFIBUS DP or PROFINET-interface.

NOTE

If you are using an IE/PB link, you must take this into account when configuring the F-specific monitoring times and when calculating the maximum response time of your F-system (see also Monitoring and response times (Page 546)).

Note that the Excel file for calculating response times (https://support.industry.siemens.com/cs/ww/en/view/109783831) for S7-300/400 F-CPUs does not support all conceivable configurations.

Reference

The information on safety-related master-I-slave communication in Safety-related master-I-slave communication (Page 255) also applies.

9.2.7 Safety-related communication to S7 F-System S7 Distributed Safety

9.2.7.1 Introduction

Safety-related communication from F-CPUs in SIMATIC Safety to F-CPUs in S7 Distributed Safety F-systems is possible, via a PN/PN coupler or DP/DP coupler that you use between the two F-CPUs, as IO controller-IO controller communication or master-master communication.

9.2.7.2 Communication with S7 Distributed Safety via PN/PN coupler (IO controller-IO controller communication)

Communication functions between SENDDP/RCVDP instructions at the *STEP 7 Safety* end and F-application blocks F_SENDDP/F_RCVDP at the *S7 Distributed Safety* end:

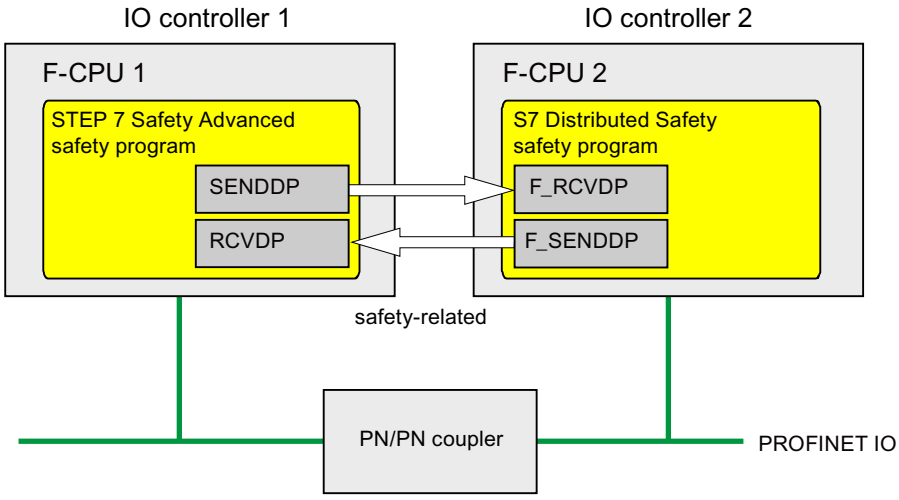

Procedure at the *S7 Distributed Safety* end

At the *S7 Distributed Safety* end, proceed as described in "Safety-related IO controller-IO controller communication" in the S7 Distributed Safety - Configuring and Programming (http://support.automation.siemens.com/WW/view/en/22099875) manual.

Procedure at the *STEP 7 Safety* end

At the *STEP 7 Safety* end, proceed as described in Safety-related IO controller-IO controller communication (Page 233).

9.2.7.3 Communication with S7 Distributed Safety via DP/DP coupler (master-master communication)

Communication functions between SENDDP/RCVDP instructions at the *STEP 7 Safety* end and F-application blocks F_SENDDP/F_RCVDP at the *S7 Distributed Safety* end:

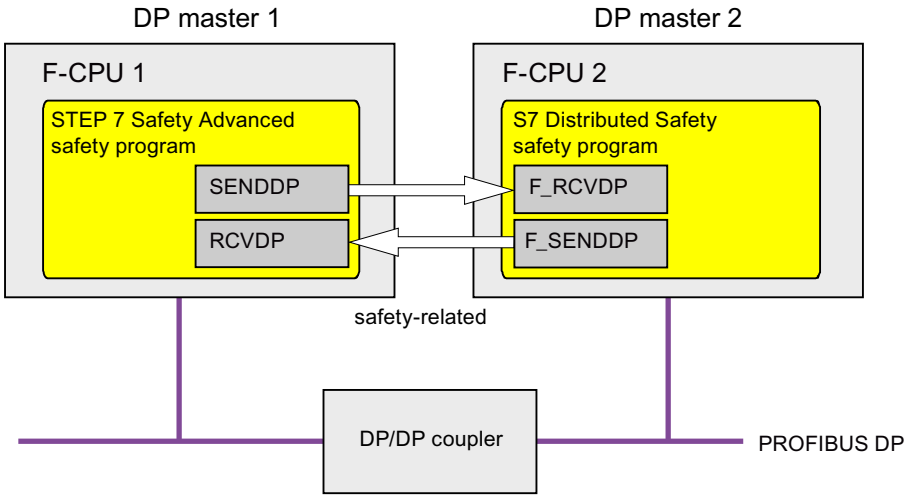

Procedure at the *S7 Distributed Safety* end

At the *S7 Distributed Safety* end, proceed as described in "Safety-related master-master communication" in the S7 Distributed Safety - Configuring and Programming (http://support.automation.siemens.com/WW/view/en/22099875) manual.

Procedure at the *STEP 7 Safety* end

At the *STEP 7 Safety* end, proceed as described in Safety-related master-master communication (Page 241).

9.3 Configuring and programming communication with Flexible F-Link (S7-1200, S7-1500)

9.3.1 Flexible F-Link

Introduction

The fail-safe CPU-CPU communication "Flexible F-Link" is available for S7-1200 and S7-1500 F-CPUs. This means fail-safe data can be easily exchanged as fail-safe arrays with standard communication mechanisms between F-CPUs.

Flexible F-Link offers a series of advantages for exchanging fail-safe data:

- Collection of fail-safe data to be transmitted in F-compliant PLC data types (UDTs) (Nested F-compliant PLC data types (UDT) are not supported.)
- Up to 100 bytes of fail-safe data per UDT
- Easy parameter assignment and automatic generation of fail-safe communication DBs
- Transmission of fail-safe data with standard communication blocks also across network limits
- F-runtime group communication (Page 85) for F-CPUs 1200/1500
- System-integrated and globally sufficiently unique F-communication UUID
- Separate F-communication address signature for easy detection of changes to the F-communication UUID

Requirement

- S7-1500 F-CPUs as of firmware V2.0
- S7-1200 F-CPUs as of firmware V4.2
- As of safety system version V2.2

Principles of communication via Flexible F-Link

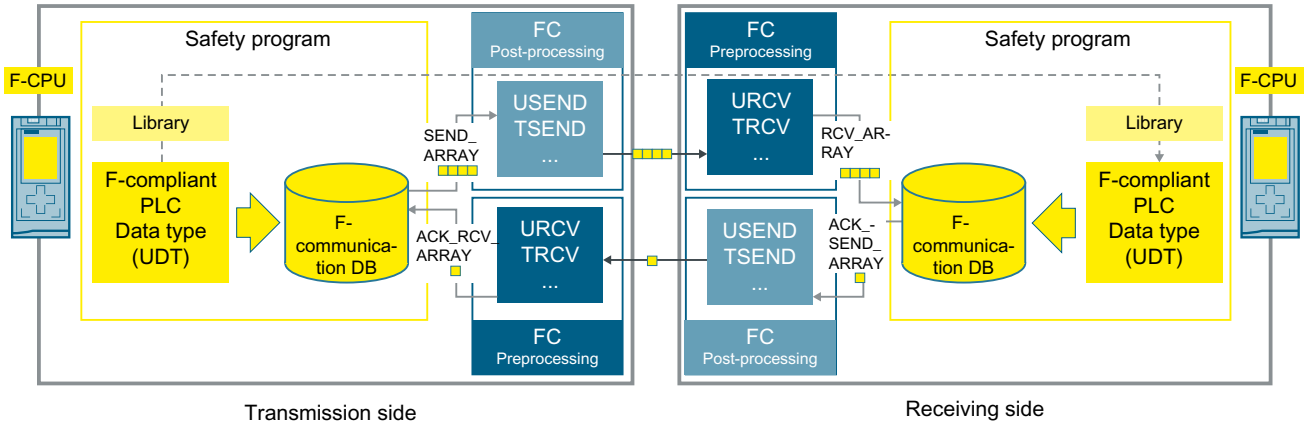

Proceed as follows on the **send side**:

1. Create an F-compliant PLC data type (UDT) for the data to be sent. The size is up to 100 bytes.
2. Create safety-related communication with the "Send" direction in the *Safety Administration Editor* (Page 85).
   A new F-communication DB (Page 266) is created for the safety-related communication under "Program blocks\System blocks\STEP 7 Safety\F-communication DBs".
3. Set the F-monitoring time (Page 551) for the safety-related communication.
4. In the safety program, supply the tags for the send data (SEND_DATA) at the F-communication DB (Page 266) of the safety-related communication.

5. Create standard blocks in which the fail-safe arrays created automatically in the F-communication DB are sent with the send data and received with the acknowledgment data. For processing the process values in the correct chronological order, you can make use of the F-OB Pre-/post-processing (Page 77). When using the communication instructions, ensure that the fail-safe arrays are available consistently at the time of evaluation and that the F-monitoring time (Page 551) is observed. Observe the note below.

Proceed as follows on the **receive side**:

1. Create an F-compliant PLC data type (UDT) with the same structure as on the send side.
   To do so, copy the F-compliant PLC data type (UDT) from the send side or use the project library or global library.
2. Create safety-related communication with the "Receive" direction in the *Safety Administration Editor* (Page 85).
   A new F-communication DB is created for the safety-related communication under "Program blocks\System blocks\STEP 7 Safety\F-communication DBs".
3. Copy the F-communication UUID of the safety-related communication from the send side.
4. Set the same F-monitoring time as for the send side.
5. In the safety program, evaluate the tags for the receive data (RCV_DATA) at the F-communication DB (Page 266).
6. Create standard blocks in which the fail-safe arrays automatically created in the F-communication DB are received with the receive data and sent with the acknowledgment data. For processing the process values in the correct chronological order, you can make use of the F-OB Pre-/post-processing (Page 85). When using the communication instructions, ensure that the fail-safe arrays are available consistently at the time of evaluation and that the F-monitoring time (Page 551) is observed. Observe the note below.

NOTE

When using non-deterministic communication protocols (e.g. TCP/IP), you must take into account the following:

- Increased communication load can fundamentally impair the availability of your application (runtime of the F-monitoring time of the F-communication connection). This holds true especially when OPC UA and Secure Open User Communication (OUC) are used in parallel.
- Communication buffer overflows can adversely affect the availability of your application and should be avoided.
  Refer to the following application example for more helpful information: "Configuring Flexible F-Link Communication (https://support.industry.siemens.com/cs/ww/en/view/109768964)".

NOTE

During simulation with *S7-PLCSIM*, the timer that generates an error message after expiration when communication with real I/Os is interrupted (e.g. by setting a CPU to STOP) is not triggered. This is why no error message is displayed in this case. It is displayed as soon as the connection has been restored. Following user acknowledgment, the current values are once again sent and received.

WARNING

It can only be ensured (from a fail-safe standpoint) that a signal state to be transferred will be acquired and transferred to the receiver if the signal level is pending for at least as long as the assigned monitoring time. *(S018)*

WARNING

When data is sent from an F-CPU simulated with S7-PLCSIM during safety-related CPU-CPU communication with Flexible F-Link, you can no longer assume that this data is generated safely. You must then ensure safety in those units that are influenced by the sent data through organizational measures (Page 560). Alternatively, you must output fail-safe substitute values instead of the received data in the F-CPU that receives the data by evaluating SENDMODE*.

* SENDMODE is available to you as a tag in the F-communication DB.

(S086)

WARNING

When a new Flexible F-Link communication is created in the Safety Administration Editor, a unique F-communication UUID for the communication is provided by the system. By copying communications in the Safety Administration Editor within the parameterization table or when copying to another F-CPU, the F-communication UUIDs are not regenerated and are therefore not unique anymore. If the copy is used to configure a new communication relationship, you yourself must ensure the uniqueness. To do this, select the affected UUIDs and regenerate via the "Generate UUID" shortcut menu. The uniqueness must be checked in the safety summary during acceptance. *(S087)*

WARNING

During acceptance, use the safety summary to verify that the offsets of all elements of the F-compliant PLC data types (UDT) match for the send and receive data within the safety message frame. For this purpose, all members and addresses are listed in the safety summary per UDT. *(S088)*

See also

F-runtime group communication (S7-1200, S7-1500) (Page 128)

9.3.2 F-communication DB (S7-1200, S7-1500)

F-communication DB for sending

The following table shows you the interface of the F-communication DB for the communication connection with the direction "Send":

Section	Name	Data type	Initial value	Description
Input	SEND_DATA	F-compliant PLC data type (UDT)	As in the F-compliant PLC data type (UDT).	User data to be sent.
	ACK_RCV_ARRAY	Array[0..n] of Byte	Each element with 16#0	Array with the received raw data.
Output	ERROR	BOOL	False	Signals currently pending communication errors or communication errors not acknowledged yet at the receiver (not in the initial start). 1=Communication error
	ACTIVATE_FV	BOOL	True	Communication passivated, in the initial start (for example receiver not started), or HOST sends ACTIVATE_FV. DEVICE sends status bit: FV_ACTVATED, but no 0-values. 1=The communication uses fail-safe values
	DIAG	Byte	16#0	Error bits (Timeout or CRC error currently still pending, or communication after error not depassivated yet) Bit 3: Acknowledgement request active at the receiver Bit 4: Timeout detected Bit 6: CRC error detected
	SEND_ARRAY	Array[0..n] of Byte	Each element with 16#0	Array with the raw data to be sent.
	ACK_RCV_LENGTH	UInt	0	Length information to ACK_RCV_ARRAY in bytes
	SEND_LENGTH	UInt	0	Length information to SEND_ARRAY in bytes
InOut	—	—	—	—
Static	—	—	—	—

F-communication DB for receiving

The following table shows you the interface of the F-communication DB for the communication connection with the direction "Receive":

Section	Name	Data type	Initial value	Description
Input	PASS_ON	BOOL	False	This way you can passivate the output data (output of the passivation values) 1=Enable passivation

Section	Name	Data type	Initial value	Description
Input	ACK_REI	BOOL	False	Reintegration (in case of reintegration request) by means of positive edge 1=Acknowledgment for reintegration
	RCV_ARRAY	Array[0..n] of Byte	Each element with 16#0	Array with the received raw data
Output	RCV_DATA	F-compliant PLC data type (UDT)	As in the F-compliant PLC data type (UDT).	Output data (PASS_VALUES or data received).
	ERROR	BOOL	False	Signals currently pending communication errors or communication errors not acknowledged yet (not in the initial start). 1=Communication error
	PASS_OUT	BOOL	True	At PASS_OUT=1 the PASS_VALUES are output Could be: ERROR, PASS_ON, in the initial start (e.g. sender not started), or ACK_REQ is pending (error not acknowledged)
	ACK_REQ	BOOL	False	Reintegration requirement (communication stable again after error, substitute values are still output) 1=Acknowledgment request for reintegration
	SENDMODE	BOOL	False	MOD_MODE is active or communication with PLCSIM Advanced on the sending F-CPU 1=F-CPU with a sender in the deactivated safety operation or on a simulated CPU
	DIAG	Byte	16#0	Error bits (Timeout or CRC error) Bit 0: Timeout detected by the sender Bit 1: Communication error currently pending in the sender Bit 2: CRC error detected by the sender Bit 4: Timeout detected by the receiver Bit 6: CRC error detected by the receiver
	ACK_SEND_ARRAY	Array[0..n] of Byte	Each element with 16#0	Array with the raw data to be sent.
	RCV_LENGTH	UInt	0	Length information of RCV_ARRAY in bytes
	ACK_SEND_LENGTH	UInt	0	Length information of ACK_SEND_ARRAY in bytes
InOut	—	—	—	—
Static	PASS_VALUES	F-compliant PLC data type (UDT)	Same as the F-compliant PLC data type (UDT) or in the I/O DB	Passivation or substitute values

9.4 Configuring and programming communication between S7-300/400 and S7-1200/1500 F-CPUs

9.4.1 Overview of communication

Introduction

This section provides an overview of the options for safety-related communication between S7-300/400 and S7-1200/1500 F-CPUs in SIMATIC Safety F-systems.

Options for safety-related communication

Safety-related communication	On subnet	Additional hardware required
Safety-related CPU-CPU communication:		
Master-master communication	PROFIBUS DP	DP/DP coupler
Master-I-slave communication	PROFIBUS DP	—
IO controller-IO controller communication	PROFINET IO	PN/PN coupler
IO controller-I-device communication	PROFINET IO	—
IO controller-I-slave communication	PROFINET IO and PROFIBUS DP	IE/PB link

Basic procedure for configuring and programming

Configure and program safety-related communication between S7-300/400 F-CPUs and S7-1200/1500 F-CPUs as described in Configuring and programming communication (S7-300, S7-400) (Page 176) and Configuring and programming communication (S7-1200, S7-1500) (Page 231) for your application.

To program an S7-300/400 F-CPU, use the start addresses of the transfer areas. To program an S7-1200/1500 F-CPU, use the HW identifiers of the transfer areas.

9.5 Configuring and programming communication in several projects

9.5.1 Safety-oriented IO Controller I device communication in several projects

9.5.1.1 Configuring safety-related communication between IO controller and I-device

Introduction

Safety-related communication between the safety program of the F-CPU of an IO controller and the safety program(s) of the F-CPU(s) of one or more I-devices takes place via IO controller-I-device connections (F-CD) in PROFINET IO, in the same way as in standard systems.

The following section describes particular aspects when the IO Controller and the I-device are located in different projects.

Requirement

- The IO Controller is an S7-1200/1500 F-CPU that supports the IO Controller functionality.
- The I-device is an S7-300/400/1200/1500 F-CPU that supports the I-device functionality.
- The project in which the I-device is located, must have been created with *S7 Distributed Safety V5.4*, *STEP 7 Safety V13* or later.

Configuring

1. Configure the safety-related communication in the project with the I-device as described under "Configuring safety-related communication between IO controller and I-device (Page 196)" (S7-300/S7-400) or "Configuring safety-related communication between IO controller and I-device (Page 249)" (S7-1200/S7-1500) respectively. In this case the F-CPU 1 (IO Controller) is only a placeholder for the F-CPU in the project of the IO Controller.

   NOTE

   When creating with *STEP 7 Safety* < V14 SP1 avoid a subsequent change from the transfer areas from CD to F-CD.

   When creating with *S7 Distributed Safety V5.4* create the application transfer areas of the address type "Output" and "Input" directly after each other.

2. Export the I-device as a GSD file. Proceed as described in the *STEP 7* help under "Configuring an I-device".
3. Import the GSD file in the project with the IO Controller. Proceed as described in the *STEP 7* help under "Installing a GSD file".
4. Insert the I-device from the "Hardware catalog" task card into the project with the IO Controller.
5. Assign the F-CPU of the IO Controller to the I-device.

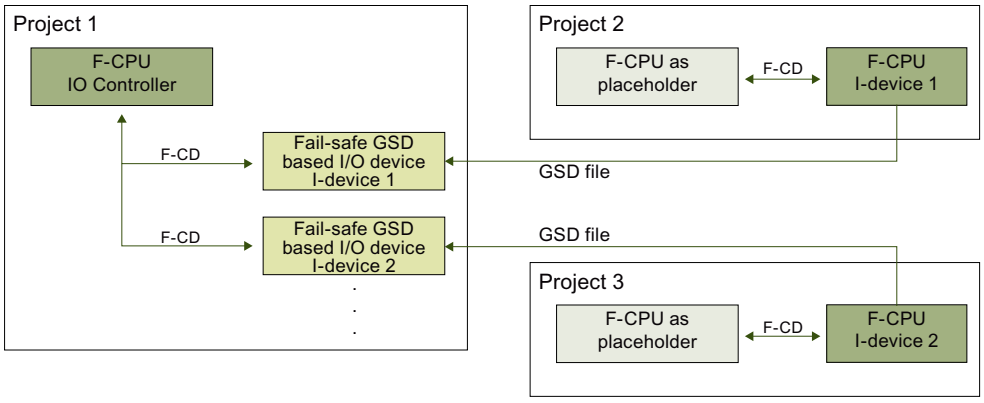

9.5.1.2 Programming safety-related IO Controller I-device communication

Programming procedure

To program the safety-related communication between the IO controller and I-device for an F-CPU S7-300/400, analogously follow the procedure described under "Safety-related IO controller-I-device communication via SENDDP and RCVDP (Page 198)" and "Programming safety-related IO controller I-device communication (Page 199)". To program an S7-300/400 F-CPU, use the start addresses of the transfer areas.

To program the safety-related communication between the IO controller and I-device for an F-CPU S7-1200/1500, analogously follow the procedure described under "Safety-related IO controller-I-device communication via SENDDP and RCVDP (Page 251)" and "Programming safety-related IO controller I-device communication (Page 252)". To program an S7-1200/1500 F-CPU, use the HW identifiers of the transfer areas.

Compiling and commissioning a safety program 10

10.1 Compiling the safety program

To get a consistent safety program, follow these steps:

1. Select the "Program blocks" folder or the Safety Unit folder or a higher level.
2. Start the compile.
   To do this, proceed essentially in the same way as when compiling a standard user program. You can start at various points to accomplish this in *STEP 7*. The basics for compiling user programs can be found in the *Help on STEP 7*.

NOTE

Please note that following a safety-related change to the hardware configuration that not only this, but also the safety program has to be recompiled and downloaded. This also applies for changes to the F-I/O which are not used in the safety program.

NOTE

The following applies for S7-300/400 F-CPUs:

If you want to compile a know-how-protected F-block after a change, you must remove the know-how protection for this F-block before compiling.

Reporting compiling errors

You can recognize whether or not the compilation was successful based on the message in the inspector window under "Info > Compile", error messages and warnings are output.

For information on the procedure you must follow to eliminate compiling errors, see "Eliminating compiling errors" in the *Help on STEP 7*.

10.2 Safety program work memory requirements (S7-300, S7-400)

Estimation

You can estimate the work memory requirement for the safety program as follows:

Work memory required for the safety program

32 KB for F-system blocks
+ 4.4 KB for safety-related communication between F-runtime groups
+ 4.5 x work memory requirement for all F-FB/F-FCs/main safety blocks

+ 4.5 x work memory requirement of all utilized instructions, which are shown in the "Instructions" task card with the block icon.
  (except SENDDP, RCVDP, SENDS7, and RCVS7)
+ Work memory requirement of the utilized SENDDP and RCVDP instructions (4.3 KB each)
+ Work memory requirement of the utilized SENDS7 and RCVS7 instructions (8.5 KB each)

Work memory required for data

5 x work memory requirement for all F-DBs (including F-communication DB, but excluding DB for F-runtime group communication) and I-DBs for main safety block/F-FB

+ 24 x work memory requirement for all DBs for F-runtime group communication
+ 2.3 x work memory requirement for all I-DBs of instructions (except SENDDP, RCVDP, SENDS7 and RCVS7)
+ Work memory requirement of all I-DBs of instructions SENDDP (0.2 KB), RCVDP(0.3 KB), SENDS7 (0.6 KB), and RCVS7 (1.0 KB)
+ 0.7 KB per F-FC
+ 0.7 KB per F-I/O (for F-I/O DBs, etc.)
+ 4.5 KB

Block size of automatically generated F-blocks

Do not utilize the entire maximum size of an F-block, because the automatically generated F-blocks are larger and as a result, the maximum possible size may be exceeded in the F-CPU. If the block size is exceeded, this triggers a corresponding error message with information on which F-blocks are too large. These must be divided up, if necessary.

10.3 Downloading project data

Introduction

Once you have successfully compiled your safety program, you can download it together with the standard application program to the F-CPU.

(S7-1500) If the safety program is in a Safety Unit, you can load the Safety Unit independently into the F-CPU.

To download a safety program, you follow essentially the same approach as for downloading a standard user program, via different starting points in *STEP 7*.

- In the "Load preview" dialog, enter data (e.g. password for the F-CPU) and set the requirements for downloading (e.g. that the F-CPU is switched to STOP mode before downloading).
- The "Load results" dialog shows the results after downloading.

We will show you the options for downloading the safety program later. For basic information on downloading, refer to the *Help on STEP 7*.

Rules for downloading the project data into an F-CPU

WARNING

If **multiple F-CPUs** can be reached over a network (e.g. Industrial Ethernet) by **the same programming device or PC**, you must take the following actions to ensure that the safety-related project data is downloaded to the correct F-CPU:

Use passwords specific to each F-CPU, such as a uniform password for the F-CPUs with attached Ethernet address for each.

Note the following:

- A point-to-point connection must be used to activate the access protection of an F-CPU when the hardware configuration is loaded for the first time (similar to assigning an MPI address to an F-CPU for the first time).
- Before downloading the safety-related project data to an F-CPU, existing access permission for any other F-CPU must first be cancelled.
- The last download of the safety-related project data prior to switching to productive operation must be made with enabled access protection. *(S021)*

NOTE

You can perform the downloading of a consistent safety program only in STOP mode.

NOTE

If *STEP 7 Safety* detects an inconsistent safety program during startup of the F-CPU, the F-CPU cannot be started, provided the F-CPU supports this detection function (see product information for the particular S7-300/400 F-CPU). This is always supported with S7-1200/1500 F-CPUs). A corresponding diagnostics event is entered in the diagnostics buffer of the F-CPU.

If the F-CPU does not support this detection function, the F-CPU can go to STOP mode if an inconsistent safety program is executed in activated safety mode.

The cause of the diagnostics event is entered in the diagnostics buffer of the F-CPU.

When downloading the safety program, ensure that the "Consistent download" action is set for the "Safety program" selection in the "Load preview" dialog.

Inconsistent downloading is only possible in disabled safety mode.

Password prompt before downloading to an F-CPU

If you have assigned a protection level for the F-CPU (Page 91) (in the properties of the F-CPU in the "Protection" tab), the corresponding password is prompted in "Load preview" dialog. Without entry of password, only actions that are allowed without password are possible. As soon as the conditions for downloading are met, the "Load" button becomes active.

"Load preview" dialog

For an F-CPU, the "Load preview" dialog also contains the section "Safety program".

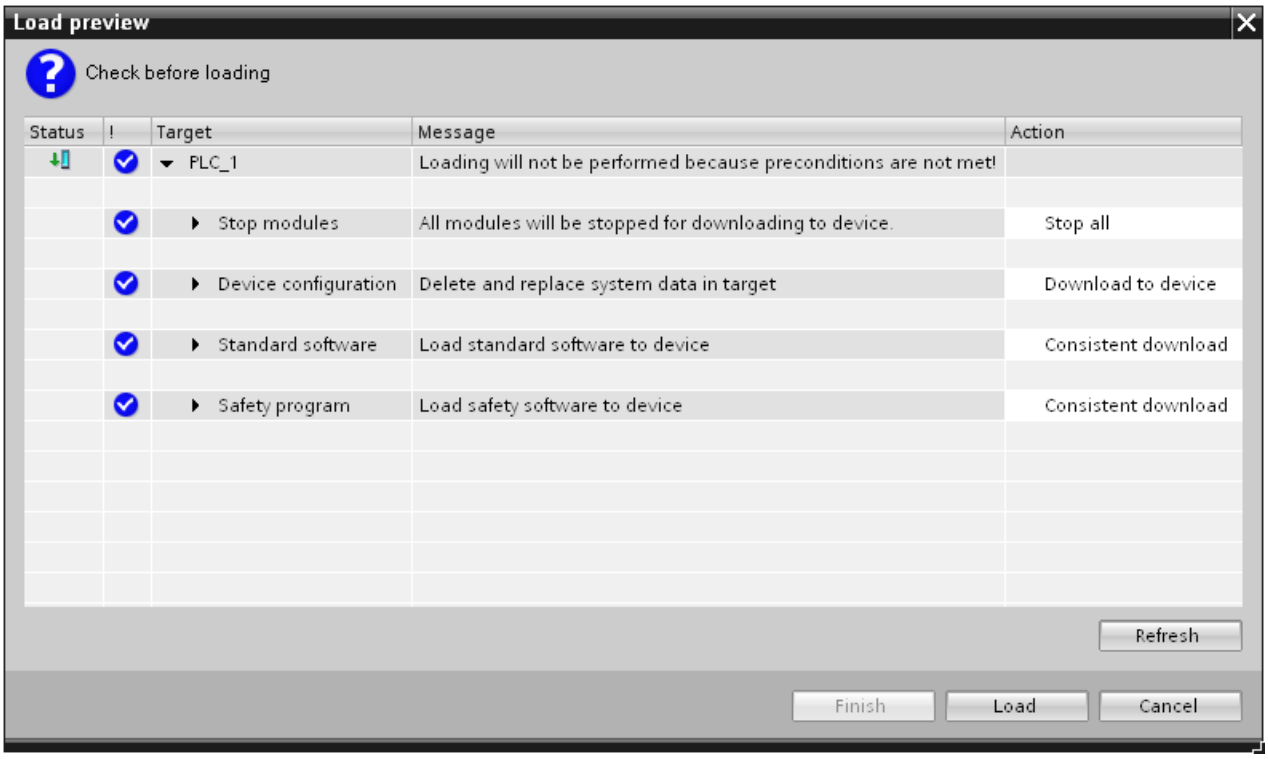

Make the following selection:

- In order to download a consistent safety program, select the "Consistent download" action under target "Safety program".
- (S7-300, S7-400) To download individual F-blocks selectively (Page 278), select the "Download selection" action under the target "Safety program", and then select the required F-blocks. If necessary, you will be prompted to disable safety mode under "Disable safety mode". This setting is only suitable for the online test of individual F-blocks.
- (S7-300, S7-400) In order to download the safety program only, select the "Consistent download" action under target "Safety program" and the "Download selection" action under target" Standard software", and then select only the standard blocks that call the main safety block.
- (S7-300, S7-400) To download no safety program, for example, because you do not know the password of the F-CPU, select the "No action" action under target "Safety program".

For S7-1200/1500 F-CPUs, only the "Consistent download" value is possible as an action in the "Load preview" dialog. You cannot change the selection of program parts to be loaded in this dialog. The selection is made automatically based on the selection in the project tree when starting the loading process.

"Load results" Dialog

After downloading into the F-CPU, the dialog "Load results" is opened. This dialog shows you the status and the necessary actions after downloading.

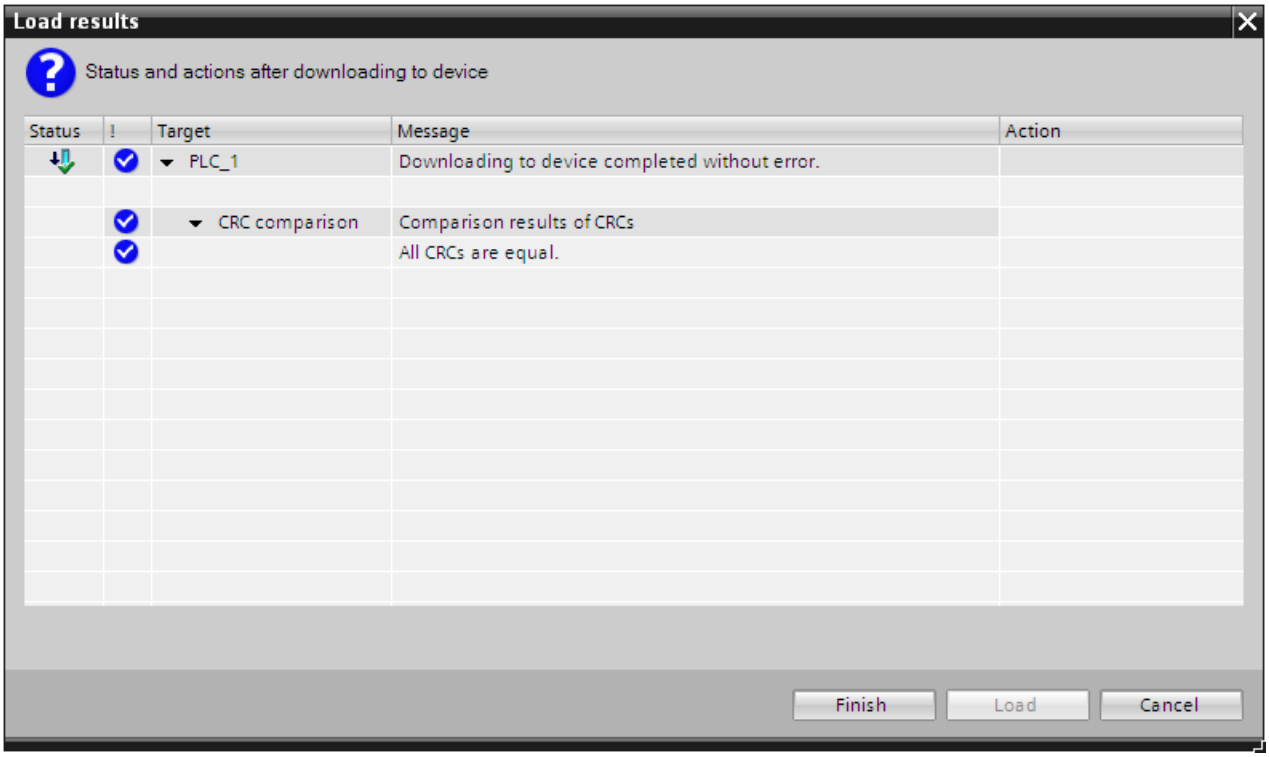

Verify that the "Downloading of safety program completed without errors." message appears in the "Load results" dialog. If not, repeat the download operation.

10.3.1 Downloading project data to an S7-300/400 F-CPU

10.3.1.1 Downloading project data to an S7-300/400 F-CPU with memory card inserted (SIMATIC Micro memory card or flash card)

When you download project data to an S7-300/400 F-CPU with memory card inserted (SIMATIC Micro Memory Card for S7-300 or flash card for S7-400), you must observe the following warning:

WARNING

If the function test of the safety program is not carried out in the destination F-CPU, you must adhere to the following procedure when downloading the safety-related project data to the F-CPU with a **PG/PC** to ensure that the F-CPU does not contain any "old" safety-related project data:

- Download the safety-related project data to the F-CPU.
- Perform a program identification (i.e. check whether the collective F-signatures match online and offline).
- Perform a memory reset of the F-CPU using the mode switch or via the programming device/PC. Once the work memory has been deleted, the project data is again transferred from the load memory (memory card, SIMATIC Micro Memory Card for S7-300 F-CPUs, flash card for S7-400 F-CPUs) to the work memory. *(S022)*

10.3.1.2 Downloading project data to an S7-400 F-CPU without flash card inserted

When you download project data to an S7-400 F-CPU without flash card inserted, you must observe the following warning:

WARNING

If the function test of the safety program is not carried out in the destination F-CPU, you must adhere to the following procedure when downloading the safety-related project data to the F-CPU with a **PG/PC** to ensure that the F-CPU does not contain any "old" safety-related project data:

- Perform a memory reset of the F-CPU using the **mode switch** or via the **programming device/PC**.
- Download the safety-related project data to the F-CPU.
- Perform a program identification (i.e. check whether the collective F-signatures match online and offline). *(S023)*

10.3.1.3 Downloading project data to a WinAC RTX F

When you download project data to a WinAC RTX F, you must observe the following warning:

⚠ WARNING

You must observe the following procedure to ensure that there is no "old" safety-related project data in the WinAC RTX F when you copy the safety-related project data to the WinAC RTX F using a PG/PC:

1. Perform a memory reset of the WinAC RTX F (see Windows Automation Center RTX WinAC RTX (F) 2010 (http://support.automation.siemens.com/WW/view/en/43715176) manual).
2. Download the project data to the WinAC RTX F.

   If the function test of the safety program is not carried out in the destination WinAC RTX F, you must also follow points 3. and 4:
3. Perform a program identification. This means you check whether the Collective F-signatures match online and offline.
4. Perform the F-system startup.

Between the online program identification and the startup of the F-system, the WinAC RTX F must not be closed (for example, as a result of POWER OFF/POWER ON or booting). *(S024)*

10.3.1.4 Downloading individual F-blocks to an S7-300/400 F-CPU

Download F-blocks in disabled safety mode.

You can download F-blocks and standard blocks simultaneously to the F-CPU via the project tree. However, as soon as F-blocks are to be downloaded, a check is carried out to determine whether or not the F-CPU is in STOP mode or disabled safety mode. If not, you have the option of switching to disabled safety mode or placing the F-CPU in STOP mode.

If you want to download individual F-blocks to the F-CPU, for example, to test changes, make sure that you have not selected the folder "Program blocks" or the F-CPU in the project tree but only the blocks you want to download.

Only then will you be prompted in the "Load preview" dialog to disable safety mode once you have changed the option from "Consistent download" to "Download selection" and have changed the option "Stop modules" to "No action".

If you fail to observe this prompt, the blocks will be downloaded without disabling safety mode, which can lead to STOP of the F-CPU.

You can also deactivate the safety mode explicitly in the *Safety Administration Editor* before you start the download.

Be aware that the consistency of the safety program in the F-CPU cannot be guaranteed when individual F-blocks are downloaded. For a consistent safety program, always download the entire safety program to the F-CPU.

Rules for downloading individual F-blocks

The following rules apply to downloading of individual F-blocks:

- Downloading is only possible in disabled safety mode or when the F-CPU is in STOP mode.
- F-blocks can only be downloaded to an F-CPU to which a safety program has already been downloaded.

Consequently, you have to download the entire safety program when initially downloading the safety program and after changing the password for the safety program.

NOTE

If you are downloading F-blocks only, the blocks in which the main safety blocks are called (e.g., cyclic interrupt OB 35) are not downloaded. To do so, select the "Selection" option under "Standard software" in the preview dialog, and select the necessary blocks.

NOTE

Downloading of individual F-blocks is only suitable for testing F-blocks. Prior to the transition to productive mode, you must download the safety program consistently to the F-CPU.

10.3.1.5 Downloading project data to a memory card or removable storage device and inserting a memory card

Proceed as you would in the standard to download project data from an F-CPU to a memory card (flash card for S7-400, SIMATIC Micro Memory Card for S7-300). You must also observe the following warning:

⚠ WARNING

If the function test of the safety program is not performed in the destination CPU, you must ensure that the correct safety-related project data is on the memory card after downloading the safety-related project data to the memory card.

Follow these steps:

1. Download the project data to the memory card.
2. Perform a program identification (Page 302).
3. Clearly label the memory card with a unique name (e.g. with the Collective F-Signature). *(S043)*

When inserting a memory card (flash card for S7-400 or SIMATIC Micro Memory Card for S7-300) or a removable data medium for WinAC RTX F with project data of an F-CPU, you must observe the following warning:

WARNING

If the function test of the safety program is not carried out in the destination F-CPU, you must ensure through online program identification or other suitable measures (e.g. by checking the labeling of the memory card or removable disk) that the inserted memory card or removable disk contains the correct safety-related project data. *(S025)*

When you insert a memory card (flash card for S7-400 or SIMATIC Micro Memory Card for S7-300) into S7-300/400 F-CPUs, you must observe the following warning:

WARNING

If the function test of the safety program is not carried out in the destination F-CPU, you must adhere to the following procedure when inserting the memory card to ensure that the F-CPU does not contain any "old" safety-related project data:

- Switch off the power to the F-CPU. For F-CPUs with battery backup (e.g. CPU 416F-2), remove any battery. (To ensure that the F-CPU is de-energized, wait for the buffer time of the power supply you are using or, if this is not known, remove the F-CPU.)
- Remove the memory card with the old safety-related project data from the F-CPU.
- Insert the memory card with the new safety-related project data into the F-CPU.
- Switch on the F-CPU again. For F-CPUs with battery backup (e.g. CPU 416F-2), reinsert the battery, if one was removed.

(S026)

10.3.2 Downloading project data into an F-CPU S7-1200

10.3.2.1 Downloading project data to an S7-1200 F-CPU without program card inserted

When you download project data to an S7-1200 F-CPU without program card inserted, you must observe the following warning:

WARNING

If the function test of the safety program is not carried out in the destination F-CPU, you must adhere to the following procedure when downloading the safety-related project data to the F-CPU with a **PG/PC** to ensure that the F-CPU does not contain any "old" safety-related project data:

- Download the safety-related project data to the F-CPU.
- Perform a program identification (i.e. check whether the collective F-signatures match online and offline). *(S042)*

10.3.2.2 Downloading project data to an S7-1200 F-CPU with program card inserted

When you download project data to an S7-1200 F-CPU with program card inserted, you must observe the following warning:

WARNING

You must observe the following procedure to ensure that there is no "old" safety-related project data in the internal load memory of the F-CPU when you insert a program card into an S7-1200 F-CPU:

1. Check to see whether **the STOP/RUN LED (orange) and the maintenance LED flash during startup for 3 seconds on an F-CPU without memory card**.
   If this is the case, the internal load memory of the F-CPU has already been deleted (for example, when the F-CPU has already been operated with a program card as external load memory) and you can skip step 3.
2. Insert the program card into the F-CPU.
   If the F-CPU is in RUN, it will change to STOP. The maintenance LED on the F-CPU is flashing to indicate that the program card is being evaluated or that the internal load memory must be deleted.
3. Use one of the following methods to delete the internal load memory:
   – Turn the F-CPU off and back on.
   – Switch the F-CPU from STOP to RUN.
   – Execute the "Memory reset" (MRES) function.

   After restart and deletion of the internal load memory, **the STOP/RUN LED (orange) and the maintenance LED must be flashing**. In this case, the internal load memory of the F-CPU is deleted and does not contain any "old" safety-related project data.
4. Use one of the following methods to evaluate the program card:
   – Turn the F-CPU off and back on.
   – Switch the F-CPU from STOP to RUN.
   – Execute the "Memory reset" (MRES) function.

   The F-CPU restarts and evaluates the program card.

   The F-CPU then enters the startup mode (RUN or STOP) that has been set up for the F-CPU. *(S061)*

For an S7-1200 F-CPU without inserted SIMATIC Memory Card and deleted internal load memory, the status LEDs have the status described in the table below.

Description	STOP/RUN Orange/Green	ERROR Red	MAINT Orange
Internal load memory deleted and SIMATIC Memory Card **not** inserted.	Flashing (orange) (for 3 seconds during startup)	Off	Flashing (for 3 seconds during startup)

WARNING

If you use a programming device/PC to download F-blocks to an S7-1200 F-CPU with inserted program card (external load memory), you must ensure that the transfer takes place to the external load memory. This can be accomplished by the following measures:

- Check to see if the program card is inserted correctly.
- Insert a program card whose memory size is different from the size of the internal load memory. Check in the project tree under "Online & Diagnostics > Diagnostics > Memory" if the memory size displayed for the load memory matches the memory size of the program card. *(S058)*

WARNING

If the function test of the safety program is not carried out in the destination F-CPU, you must adhere to the following procedure when downloading the safety-related project data to the F-CPU with a **PG/PC** to ensure that the F-CPU does not contain any "old" safety-related project data:

- Download the safety-related project data to the F-CPU.
- Perform a program identification (i.e. check whether the collective F-signatures match online and offline). *(S042)*

10.3.2.3 Inserting a transfer card into an S7-1200 F-CPU

When you insert a transfer card into an S7-1200 F-CPU, you must observe the following warning:

WARNING

You must observe the following procedure to ensure that there is no "old" safety-related project data in the internal load memory when you copy the safety-related project data to an S7-1200 F-CPU using a transfer card:

1. Check to see whether **the STOP/RUN LED (orange) and the maintenance LED flash during startup for 3 seconds on an F-CPU without memory card**.
   If this is the case, the internal load memory of the F-CPU has already been deleted and you can skip step 3.
2. Insert the transfer card into the F-CPU.
   If the F-CPU is in RUN, it will change to STOP. The maintenance LED on the F-CPU is flashing to indicate that the transfer card is being evaluated or that the internal load memory must be deleted.
3. Use one of the following methods to delete the internal load memory:
   – Turn the F-CPU off and back on.
   – Switch the F-CPU from STOP to RUN.
   – Execute the "Memory reset" (MRES) function.

   After restart and deletion of the internal load memory, **the STOP/RUN LED (orange) and the maintenance LED must be flashing**. In this case, the internal load memory of the F-CPU is deleted and does not contain any "old" safety-related project data.
4. Use one of the following methods to evaluate the transfer card (transfer from the transfer card to the internal load memory):
   – Turn the F-CPU off and back on.
   – Switch the F-CPU from STOP to RUN.
   – Execute the "Memory reset" (MRES) function.

   After restart and evaluation of the SIMATIC Memory Card, the F-CPU copies the project data to the internal load memory of the F-CPU. Once the copy process is complete, the maintenance LED on the F-CPU is flashing to indicate that you can remove the transfer card.
5. Remove the transfer card from the F-CPU.
6. Use one of the following methods to evaluate the internal load memory:
   – Turn the F-CPU off and back on.
   – Switch the F-CPU from STOP to RUN.
   – Execute the "Memory reset" (MRES) function.

   The F-CPU then enters the startup mode (RUN or STOP) that has been set up for the F-CPU. *(S059)*

For an S7-1200 F-CPU without inserted SIMATIC Memory Card and deleted internal load memory, the status LEDs have the status described in the table below.

Description	STOP/RUN Orange/Green	ERROR Red	MAINT Orange
Internal load memory deleted and SIMATIC Memory Card **not** inserted.	Flashing (orange) (for 3 seconds during startup)	Off	Flashing (for 3 seconds during startup)

10.3.2.4 Downloading project data of an S7-1200 F-CPU from the internal load memory to an empty SIMATIC Memory Card

When you download project data from the internal load memory of an S7-1200 F-CPU to an empty SIMATIC Memory Card, you must observe the following warning:

WARNING

To ensure that the safety-related project data is downloaded from the internal load memory of the F-CPU to the SIMATIC Memory Card when plugging an empty SIMATIC Memory Card into an S7-1200 F-CPU and that the internal load memory of the F-CPU is deleted afterward, you must observe the following procedure:

1. Make sure that you are using an empty SIMATIC Memory Card, for example, by checking in the Windows Explorer that the "SIMATIC.S7S" folder and the "S7_JOB.S7S" file are deleted.
2. Insert the empty SIMATIC Memory Card into the F-CPU.

   If the F-CPU is in RUN, it will change to STOP. The maintenance LED on the F-CPU is flashing to indicate that the program can be copied from the internal load memory to the SIMATIC Memory Card and that the internal load memory is deleted afterward.
3. Use one of these methods to trigger copying from the internal load memory to the SIMATIC Memory Card and subsequent deletion of the internal load memory:
   - Turn the F-CPU off and back on.
   - Switch the F-CPU from STOP to RUN.
   - Execute the "Memory reset" (MRES) function.

   After restart and copying of the project data from the internal load memory to the SIMATIC Memory Card and subsequent deletion of the internal load memory, **the STOP/RUN LED (orange) and the maintenance LED must be flashing**. In this case, the internal load memory of the F-CPU is deleted and no longer contains any safety-related project data. The SIMATIC Memory Card is now a program card.
4. Use one of the following methods to evaluate the program card:
   - Turn the F-CPU off and back on.
   - Switch the F-CPU from STOP to RUN.
   - Execute the "Memory reset" (MRES) function.

   The F-CPU restarts and evaluates the program card.

   The F-CPU then enters the startup mode (RUN or STOP) that has been set up for the F-CPU. *(S057)*

NOTE

Also observe the setting "Disable copying from internal load memory to external load memory" in the hardware configuration of your F-CPU.

10.3.2.5 Updating project data on an S7-1200 F-CPU using a transfer card

When you want to update the project data on an S7-1200 F-CPU using a transfer card, you must observe the following warning:

WARNING

If you run an update of the safety-related project data on an S7-1200 F-CPU using a transfer card, you must ensure that the transfer to the internal load memory took place correctly by means of a subsequent program identification. *(S060)*

10.3.2.6 Downloading project data to a SIMATIC Memory Card and inserting the SIMATIC Memory Card

When downloading project data from an F-CPU to a SIMATIC Memory Card, proceed as in the standard. You must also observe the following warning:

WARNING

If the function test of the safety program is not performed in the destination CPU, you must ensure that the correct safety-related project data is on the memory card after downloading the safety-related project data to the memory card.

Follow these steps:

1. Download the project data to the memory card.
2. Perform a program identification (Page 302).
3. Clearly label the memory card with a unique name (e.g. with the Collective F-Signature). *(S043)*

When inserting a SIMATIC Memory Card with project data from an F-CPU, you must observe the following warning:

WARNING

If the function test of the safety program is not carried out in the destination F-CPU, you must ensure through online program identification or other suitable measures (e.g. by checking the labeling of the memory card or removable disk) that the inserted memory card or removable disk contains the correct safety-related project data. *(S025)*

10.3.3 Downloading project data to an S7-1500 F-CPU

10.3.3.1 Downloading project data to an S7-1500 F-CPU

When you download project data to an S7-1500 F-CPU, you must observe the following warning:

WARNING

If the function test of the safety program is not carried out in the destination F-CPU, you must adhere to the following procedure when downloading the safety-related project data to the F-CPU with a **PG/PC** to ensure that the F-CPU does not contain any "old" safety-related project data:

- Download the safety-related project data to the F-CPU.
- Perform a program identification (i.e. check whether the collective F-signatures match online and offline). *(S042)*

10.3.3.2 Downloading project data into a redundant S7-1500HF system

With a redundant S7-1500HF system, a consistent safety program can only be downloaded in STOP mode of the redundant S7-1500HF system.

To do this, you must heed one of the following warnings:

- Loading the redundant S7-1500HF system in STOP.

WARNING

If the function test of the safety program is not carried out in the redundant destination system S7-1500HF, you must adhere to the following procedure when downloading the safety-related project data to the F-CPUs with a PG/PC to ensure that the HF-CPUs do not contain any "old" safety-related project data:

1. Switch the two HF-CPUs to STOP.
2. If you did not program restart/startup protection in your previous safety program (Programming startup protection (Page 137)), you must format the SIMATIC Memory Card or delete the program, for example, via the display for both HF-CPUs.
3. Download the safety-related project data to one of the two HF-CPUs.
4. Switch the HF-CPU, to which you have downloaded the new safety-related project data, to RUN mode.
5. Switch the second HF-CPU to RUN mode.
6. As soon as the RUN-Redundant mode is reached, perform a program identification on one of the two HF-CPUs (i.e. check whether the Collective F-Signatures match online and offline).

   If you have programmed restart/startup protection in your new safety program, you may only acknowledge this after successful program identification.*(S090)*

- Loading the redundant S7-1500HF system with reduced STOP time.

WARNING

If the function test of the safety program is not carried out in the redundant destination system S7-1500HF, you must adhere to the following procedure when downloading the safety-related project data to the F-CPUs with a PG/PC to ensure that the HF-CPUs do not contain any "old" safety-related project data:

1. Switch one of the two HF-CPUs to STOP.
2. If you did not program restart/startup protection in your previous safety program (Programming startup protection (Page 137)), you must format the SIMATIC Memory Card or delete the program, for example, via the display for the HF-CPU in STOP mode.
3. Download the safety-related project data to the HF-CPU, which is in the STOP mode (to the backup CPU with the shortcut menu command "Download to backup CPU").
4. Switch the HF-CPU that is still in RUN mode to STOP mode.
5. If you did not program restart/startup protection in your previous safety program, you must format the SIMATIC Memory Card or delete the program, for example, via the display for the HF-CPU recently switched in STOP mode.
6. Switch the HF-CPU with the newly downloaded safety-related project data to RUN mode.
7. Switch the second HF-CPU to RUN mode.
8. As soon as the RUN-Redundant mode is reached, perform a program identification on one of the two HF-CPUs (i.e. check whether the Collective F-Signatures match online and offline).

   If you have programmed restart/startup protection in your new safety program, you may only acknowledge this after successful program identification. *(S091)*

10.3.3.3 Downloading project data to an S7-1500 F Software Controller

When you download project data to an S7-1500 F Software Controller, you must observe the following warnings:

WARNING

If the function test of the safety program is not carried out in the destination F-CPU, you must adhere to the following procedure when downloading the safety-related project data to the F-CPU with a **PG/PC** to ensure that the F-CPU does not contain any "old" safety-related project data:

- Download the safety-related project data to the F-CPU.
- Perform a program identification (i.e. check whether the collective F-signatures match online and offline). *(S042)*

The following warning applies to an S7-1500 F Software Controller with firmware ≤ V21.9.x on an IPC 627E, IPC 647E, IPC 677E, or IPC 847E:

WARNING

When you download the safety program, you must perform a POWER OFF/POWER ON afterwards before you run a program identification for acceptance. *(S097)*

WARNING

For safety reasons, the password of an S7-1500 F Software Controller is also stored in a separate memory in addition to the load memory.

Unlike the load memory, this separate memory is not deleted. This means the previous passwords are once again active after deleting the S7-1500 F Software Controller followed by a start-up.

For this reason, note the following:

- The S7-1500 F Software Controller is deleted in case of the following download scenarios of the PC station:
  - Downloading a PC station with revised interface assignment.
  - Downloading a PC station with revised storage location for retentive data.
- We recommend that you do not set up F-access protection until after commissioning. If you still have to change the interface assignment of the PC station or the storage location for retentive data, you do not have to enter the F-password during the subsequent mandatory download of the S7-1500 F Software Controller.
- We recommend that you remove the F-access protection from an S7-1500 F Software Controller that is no longer in use. If you forget the F-password when you want to operate the S7-1500 F Software Controller later, you can remove it by uninstalling/installing/repairing or importing a new image. *(S076)*

See also

Downloading project data (Page 273)
Software Controller (http://support.automation.siemens.com/WW/view/en/109249299)

10.3.3.4 Downloading project data to a SIMATIC Memory Card and inserting the SIMATIC Memory Card or removable storage devices

When downloading project data from an (H)F-CPU to a SIMATIC Memory Card, proceed as in the standard. You must also observe the following warning:

WARNING

If the function test of the safety program is not performed in the destination CPU, you must ensure that the correct safety-related project data is on the memory card after downloading the safety-related project data to the memory card.

Follow these steps:

1. Download the project data to the memory card.
2. Perform a program identification (Page 302).
3. Clearly label the memory card with a unique name (e.g. with the Collective F-Signature). *(S043)*

When inserting a SIMATIC Memory Card or an S7-1500 F Software Controller removable disk with project data of an (H)F-CPU, you must observe the following warning:

WARNING

If the function test of the safety program is not carried out in the destination F-CPU, you must ensure through online program identification or other suitable measures (e.g. by checking the labeling of the memory card or removable disk) that the inserted memory card or removable disk contains the correct safety-related project data. *(S025)*

Inserting SIMATIC Memory Cards in a redundant S7-1500HF system

WARNING

When inserting **two** new SIMATIC Memory Cards with new safety-related project data for a redundant S7-1500HF system, proceed as follows:

1. Switch the two HF-CPUs to STOP.
2. Replace the SIMATIC Memory Cards of both HF-CPUs with
   - Two SIMATIC Memory Cards, each with the new safety-related project data or
   - A SIMATIC Memory Card with the new safety-related project data and an empty SIMATIC Memory Card

Procedure for ensuring correct safety-related project data through online program identification:

1. Check on both HF CPUs in the STOP mode, e.g. via the display, whether the correct safety-related project data is located on the SIMATIC Memory Card or that the second SIMATIC Memory Card is empty.
2. After a successful check, switch the HF-CPUs to RUN mode. If the new safety-related project data is only available on one SIMATIC Memory Card, you must first switch the HF-CPU with the new safety-related project data to RUN mode and then the HF-CPU with the empty SIMATIC Memory Card.

Procedure for ensuring correct safety-related project data by clear labeling of the SIMATIC Memory Cards:

1. Switch the F-CPUs to RUN mode. If the new safety-related project data is only available on one SIMATIC Memory Card, you must first switch the HF-CPU with the new safety-related project data to RUN mode and then the HF-CPU with the empty SIMATIC Memory Card. *(S092)*

WARNING

When inserting **one** new SIMATIC Memory Card with new safety-related project data for a redundant S7-1500HF system, proceed as follows:

1. Switch the two HF-CPUs to STOP.
2. Remove the SIMATIC Memory Card on one of the two HF-CPUs.
3. Format the SIMATIC Memory Cards or delete the program, for example, via Display, for the HF-CPU that you did not remove.
4. Insert the SIMATIC memory card with the new safety-related project data into the HF-CPU without SIMATIC Memory Card.
5. If you cannot ensure by other suitable measures (e.g. by clear labeling of the SIMATIC Memory Card) that the correct safety-related project data is located on the SIMATIC Memory Card, you have to carry out a program identification on the HF-CPU with the new safety-related project data.
6. Switch the HF-CPU with the new safety-related project data to RUN mode.
7. Switch the second HF-CPU to RUN mode. *(S093)*

10.3.4 Restoring a backup of the safety program to an F-CPU

You have the option of backing up an F-CPU in the same way as a standard CPU and then restoring it. You can find information on backing up a CPU in the *help on STEP 7* under "Creating a backup of an S7-CPU". Saving an F-CPU S7-400 is only possible with an inserted flash card.

Note the following warnings when restoring the software and hardware configuration of an F-CPU:

WARNING

Once you have restored a backup of an F-CPU, you must perform a program identification.

With a redundant S7-1500HF system, you must carry out the program identification in the RUN-Redundant mode. *(S055)*

NOTE

We recommend that you use the Collective F-Signature that is included in the name of the backup file for program identification. You must not change the Collective F-Signature in the name in this case.

WARNING

(S7-1200/1500) If multiple F-CPUs with an activated Web server can be reached by the same programming device or PC, you must take additional actions to ensure that the safety program is restored to the correct F-CPU.

Use CPU-specific passwords for the "F-Admin" right on the Web server. For example, select a uniform password with attached IP address (e.g. Password_192.168.0.8) for each F-CPU. *(S065)*

NOTE

When restoring, you must enter the previous password for the F-CPU.

10.3.5 Special features when creating and importing images of an S7-1500 F Software Controller

Creating an image

WARNING

When creating an image with safety-related project data, you must comply with the following points:

- Using organizational measures (Page 560), you must limit access to an S7-1500 F Software Controller to persons who are authorized to create images.
- Before creating the image, you must use program identification to ensure that the correct safety-related project data is located in the S7-1500 F Software Controller.
- Images with safety-related project data must be created on an empty data storage medium (deleted or formatted) or an existing image must be explicitly deleted.
- After creating the image, remove the data storage medium containing the image.
- Clearly label the data storage medium (e.g. with the Collective F-Signature). *(S073)*

NOTICE

If the safety-related project data in the image and the safety-related project data on the S7-1500 F Software Controller is not identical, the contained safety program will not start. In this case, you must download the project data to the F-CPU once again. For example, with TIA Portal. Therefore, you should always keep your image backups up-to-date.

In the same way you can start up a safety program from another CFast card, you can also upload and run the image created by another device or data storage medium.

Import image

WARNING

When importing an image with safety-related project data, you must comply with the following points:

- You must limit access to an S7-1500 F Software Controller through organizational measures (Page 560) to persons who are authorized to import images.
- When importing an image via LAN, remote access or comparable accesses, you have to ensure access protection (e.g. via Windows administrator permission (ADMIN)). Note, however, that only authorized persons are set up as users.
- To ensure that the image is written to the correct S7-1500 F Software Controller, when importing an image via LAN you must ensure that only one S7-1500 F Software Controller can be accessed. For example, by removing the physical connections and routing options to other S7-1500 F Software Controllers.
- You must ensure that the correct safety-related project data is on the image, e.g. by clearly labeling the data storage medium.
- Remove the image and any copies of it once you have imported it into the S7-1500 F-Software Controller.
- After importing the image, you must use program identification to ensure, for example, with the display, that the correct safety-related project data is installed on the S7-1500 F Software Controller. *(S074)*

10.3.6 Load project data (including safety-related project data) from an F-CPU into a PG/PC (S7-1500)

The "Upload from device (software)" or "Upload device as new station (hardware and software)" function is only possible for S7-1500 F-CPUs if the "Enable consistent upload from the F-CPU" option is activated for the F-CPU in the *Safety Administration Editor* and the project data is loaded to the F-CPU afterwards.

To load the project data (including safety-related project data) to a programming device or PC, proceed as in the standard scenario.

If multiple F-CPUs can be reached over a network (e.g. Industrial Ethernet) by the programming device / PC, you have to ensure that the project data is uploaded from the correct F-CPU. For example with "Online & diagnostics" > "Online accesses " > "Flash LED".

After successful loading from the device you can continue working as with a project that was created offline.

WARNING

If you want to carry out an acceptance with the project data loaded to the programming device / PC or want to carry out changes to the safety-related project data, you must ensure that the safety program is executable before loading.

This is fulfilled when loading from an F-CPU if the F-CPU is in RUN mode and in activated safety mode or can be set to RUN before loading. If the F-CPU remains in STOP, you are not allowed to perform acceptance or changes with the safety-related project data.

When loading from a memory card, it must have been in a suitable S7-1500 CPU beforehand. The same conditions apply as for loading from an F-CPU. *(S080)*

You can upload individual F-blocks into a PG/PC irrespective of the "Enable consistent upload from the F-CPU" option.

You cannot upload individual know-how protected F-blocks to a programming device / PC.

As of STEP 7 Safety V18, loading the project data from a memory card is possible as a new station (hardware and software) and device (software).

See also

"Settings" area (Page 80)

Load project data (including safety-related project data) from a memory card into a PG/PC (S7-1500) (Page 296)

10.3.7 Load project data (including safety-related project data) from a memory card into a PG/PC (S7-1500)

The "Upload from device (software)" or "Upload device as new station (hardware and software)" function is only possible for S7-1500 F-CPUs if the "Enable consistent upload from the F-CPU" option is activated for the F-CPU in the *Safety Administration Editor* and the project data is loaded to the memory card afterwards.

To load the project data (including safety-related project data) to a programming device or PC, proceed as in the standard scenario.

After successful loading from the memory card, you can continue working as with a project that was created offline.

WARNING

If you want to carry out an acceptance with the project data loaded to the programming device / PC or want to carry out changes to the safety-related project data, you must ensure that the safety program is executable before loading.

This is fulfilled when loading from an F-CPU if the F-CPU is in RUN mode and in activated safety mode or can be set to RUN before loading. If the F-CPU remains in STOP, you are not allowed to perform acceptance or changes with the safety-related project data.

When loading from a memory card, it must have been in a suitable S7-1500 CPU beforehand. The same conditions apply as for loading from an F-CPU. *(S080)*

See also

"Settings" area (Page 80)

10.3.8 Loading PC station via the configuration file

You have the option to save the system configuration of the PC system in a configuration file, transport it and load it to a target system. The entire configuration of your PC station is saved in a configuration file with the ending *.psc from the TIA Portal.

Saving and loading of the configuration file is supported as of:

- *STEP 7 Safety V15*
- S7-1500 F Software Controller V2.5

Example

You can find a detailed example on the Internet (https://support.industry.siemens.com/cs/ww/en/view/109759142).

Identification parameters

The identification parameters include:

- File name
- Information in the project and the station that was stored from the TIA Portal in the PSC file in the metadata.
  For example:
  - Project version
  - Plant designation
  - Station comment

Save the identification parameters in a file, if necessary, that you store on the target system.

For evaluating and testing these identification parameters via script, you must store this information directly in the script or save the identification parameters in a separate file, if necessary, that you store on the target system.

10.3.8.1 Creating a configuration file

1. In TIA Portal create a new configuration file with "Project > Memory Card file > New > PC system configuration file (.psc)".
   The configuration file is created in the project tree under "Card Reader/USB memory".
2. Use the Collective F-Signature to check in the *Safety Administration Editor* that you have selected the correct project/station.
3. Use your mouse to drag the selected PC station to the configuration file.
   This loads the PC station to the configuration file.

WARNING

Instead of online program identification, you can use a unique name for the configuration file *.psc (**P**C **S**tation **C**onfiguration) to ensure that the correct safety-related project data is located in the configuration file.

In addition, you have to observe the following when creating a configuration file:

When creating a configuration file with the safety-related project data, an existing file must not be used. You have to create a new file.

You should also delete configuration files with incorrect safety-related project data from the data storage.

You must limit access to the configuration file (*.psc) through organizational measures (Page 560) to persons who are authorized to import and modify the configuration file. *(S081)*

10.3.8.2 Importing the configuration file

You have the following options for importing the configuration file:

- Via the PC Station Panel menu (import configuration file)
- By means of a script

Requirement

If you want to start the import of the configuration file via the menu in the PC Station Panel of an S7-150xS(P) F, the executing user must be in the Windows user group "Failsafe Operators".

Procedure

WARNING

If the import operation was successful, you will receive a positive feedback. If you do not receive a positive message, you must assume that the import operation was not successful and that the old safety-related project data is still present.

You must observe the following when using the menu of the Panel to import a configuration file of a PC station with safety-related project data:

- Use the unique name of the configuration file to check that you have selected the required configuration file.
- To ensure that the import is performed on the correct S7-1500 F software controller, when importing a configuration file via LAN you must ensure that you address the correct S7-1500 F software controller. To do this, perform one of the following actions:
  - Remove the physical connections and routing options to other S7-1500 F software controllers.
  - Use unique computer names and unique user logins or use other identification options. *(S084)*

WARNING

You must check in the script based on the specified identification parameters whether the import of the configuration file is permitted for the respective target system (e.g. by evaluating the F-CPU name, project name or using the plant designation).

In addition, checking the respective instance of the target system, which means a diversitary check of your addressing and/or checking the version of the configuration file, for example, only higher versions or the exclusion of specific versions (black list), can also be necessary or useful. You must store this information on the target system beforehand.

Example of checking the respective version for validity:

- The script evaluates the information about the version and only allows configuration files of a higher version, for example.

As a machine manufacturer, you must ensure that the script is protected against manipulation (unauthorized change of content or name).

If, as a machine manufacturer, you only make available the configuration files, you have to ensure that an incorrect configuration file is not imported during import through technical measures (extended checks in the script) and training of the machine operators. *(S082)*

The script checks for:

- Matching machine ID
- Version ID greater than current one. If so, the new version is written to the txt file.
- Instance number

The figure below contains a systematic overview of checking the configuration file in the script with the help of an identification parameter stored in a separate file (shown in violet in the figure below):

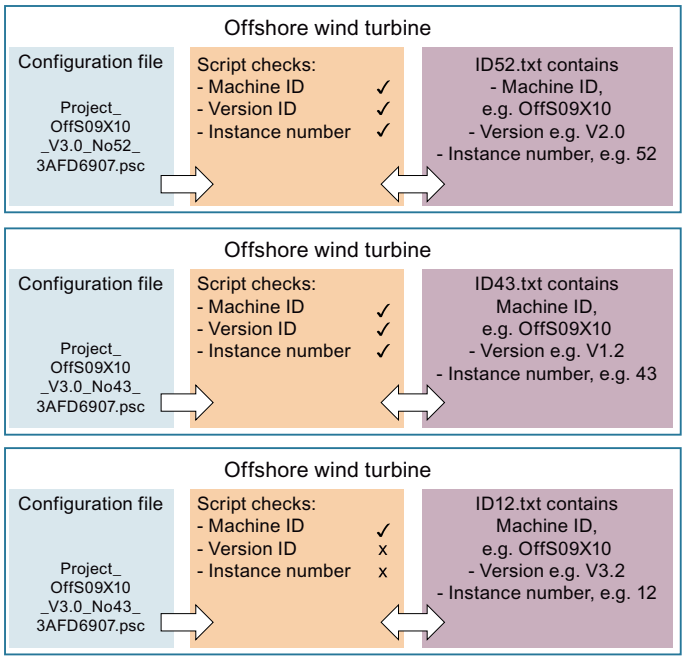

WARNING

You must determine the successful import of the safety-related project data via the script by evaluating the corresponding return value (0x51A3). If the corresponding return value is not returned by the script command PCSystem_Control, the import has failed and the old safety-related project data may still be present.

To ensure that the return value is not from the previous import, you need to reset the return value to 0x3FF ("PCSystem_Control /ImportConfig" without entering a file name) before the import and then check that the return value has been reset to 0x3FF (enter "PCSystem_Control /GetStatus /ImportConfig" and then enter "echo %errorlevel%". This instruction must return the value 0x3FF.)

If the import operation is triggered by a server, feedback about the positive return value must be given.

For traceability we recommend that you document the import operation in a log file.

If the configuration file is imported manually via the Windows command line (via script command), you need to do one of the following:

- Reset the return value to 0x3FF before the import and check it (see above).
  - Carry out the import.
  - Evaluate return value (enter "PCSystem_Control /GetStatus /ImportConfig" and then enter "echo %errorlevel%". This instruction must return the value 0x51A3).
- Carry out the import.
  - Perform manual program identification, e.g. via the Display of the F-CPU.

(S083)

NOTE

The positive return value when importing a configuration file via script is "0x51A3" for an S7-1500 F Software Controller, in contrast to the S7-1500 Software Controller, in which case it is "0x0000".

When the file is imported via script, the authorization should be moved to the script. This means that the executing user does not need a higher authorization level, since the script that was made available to the user by the machine manufacturer contains the necessary authorizations (user group "Failsafe Operators").

The rights are assigned via script by assignment of the Windows service to the corresponding user group. This initial installation must be performed beforehand by the Windows administrator on every computer with S7-150xS(P) F. The Windows service can be called by the executing user and the Windows service executes the script.

10.4 Program identification

You use the program identification to determine that the correct safety-related project data has been downloaded to the F-CPU To do so, you compare the Collective F-Signatures and the assignment of the "F-admin" rights online with an expected value. The expected value can be, for example, the Collective F-Signature offline from the *Safety Administration Editor* or from the safety summary. Check the assignment of the "F-admin" right in the *Safety Administration Editor*.

Use organizational measures to ensure that during the program identification the safety-related project data is not downloaded by any other TIA Portal (on a separate programming device or PC).

With the *Safety Administration Editor*

For a program identification using the *Safety Administration Editor*, follow these steps:

1. Open the *Safety Administration Editor* of the F-CPU you want to check.
2. Connect online with the F-CPU you want to check.
3. Compare the Collective F-Signature displayed online with the expected value in the "General" section.
4. Check whether the offline and online program are consistent (Page 342).

5. Check whether the green symbol is displayed in the column "status" and "Version comparison".

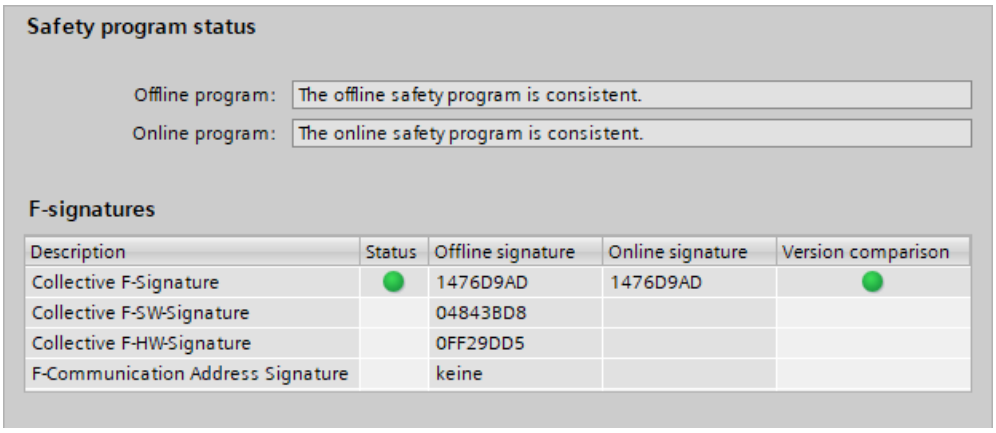

6. Check in the "Web server F-admins" section whether only authorized users have the "F-admin" right offline and online.

With HMI

For a program identification using the HMI, follow these steps:

1. Read the Collective F-Signature of the safety program from the F_PROG_SIG tag of the F-global DB (Page 136) (S7-300, S7-400) or the F_SYSINFO.F_PROG_SIG tag of the F-runtime group information DB (Page 136) (S7-1200, S7-1500).
2. Compare the value of the F_PROG_SIG tag with the expected value.

With the display of an S7-1500 F-CPU

For a program identification using the display of an F-CPU, follow these steps:

1. In the display menu, go to "Overview > Fail-safe".
2. Compare the displayed Collective F-Signature with the expected value.

With the Web server of an S7-1200/1500 F-CPU

For a program identification using the Web server of an S7-1200/1500 F-CPU, follow these steps:

1. Read the Collective F-Signature on the homepage of the Web server.
2. Compare the displayed Collective F-Signature with the expected value.

See also

Safety Administration Editor (Page 72)

10.5 Comparing Safety Programs

Compare safety programs as in standard

You can use the *comparison editor* in *STEP 7* for offline-online or offline-offline comparison of safety programs. The procedure is the same as for standard user programs. The contents of F-blocks are also compared for the comparison of safety programs. As a result, an offline-offline comparison can also be used for an acceptance of changes (Page 345). You enable this comparison by selecting the "Safety" comparison criterion and disabling all other comparison criteria.

NOTE

You must not use the *Comparison editor* to detect changes offline-online in the safety program/configuration of the F-IOs when accepting changes. Only the offline-offline comparison is suitable for this purpose. To accept changes, proceed as described under Acceptance of Changes (Page 345).

Comparison result for safety programs

The representation of the comparison result corresponds to the representation of *STEP 7*.

If you click the "Program blocks" folder on the left of the comparison editor, you can see the Collective F-Signature of the safety program displayed under "Comparison result". You also receive information about whether the safety program is consistent.

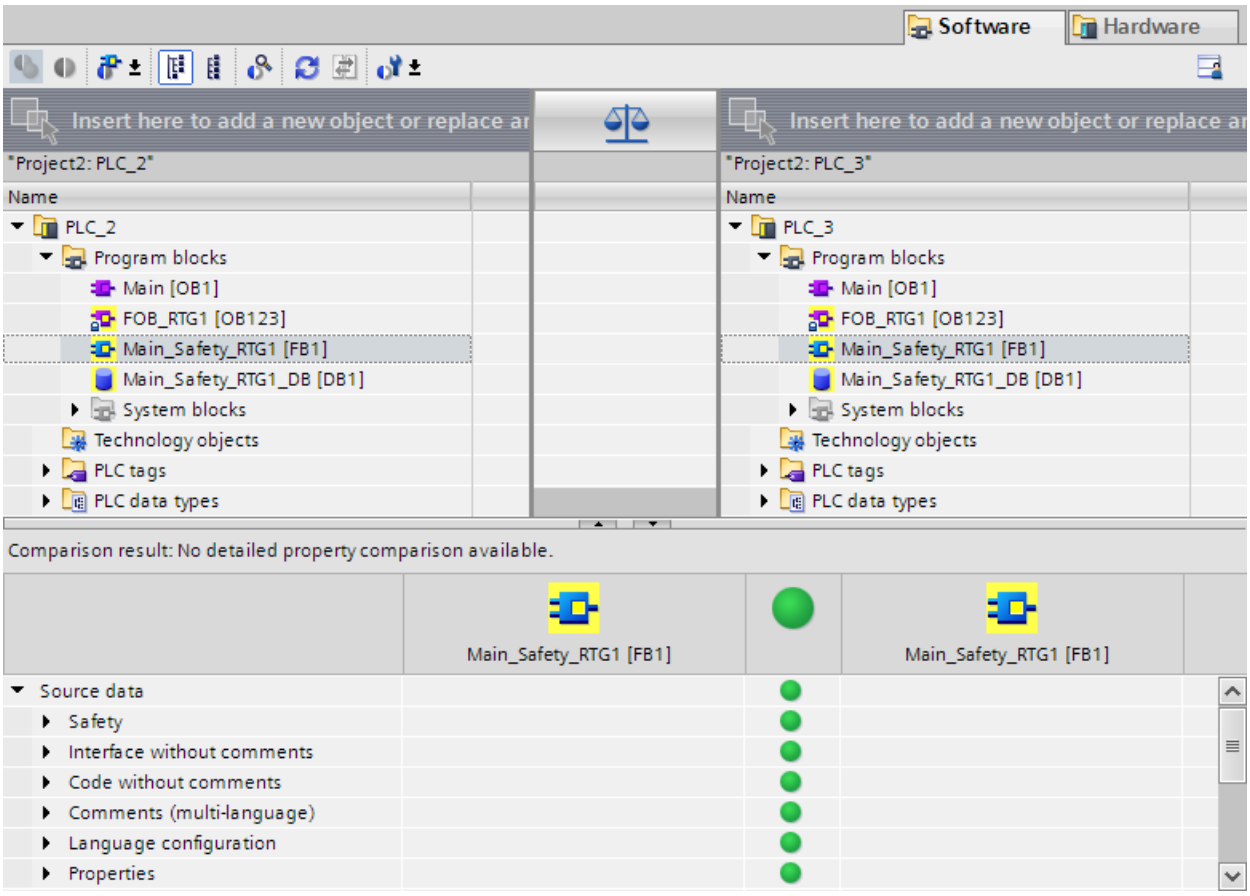

If you click on an F-block, you can see the respective signatures and interface signatures in addition to the standard information.

NOTE

If you interrupt the connection to the F-CPU during the online/offline comparison, the comparison result will be incorrect.

Comparison filter options

You can use filters in the *comparison editor* to limit the comparison result to the following block groups:

- Compare only F-blocks
- Compare only F-blocks relevant for certification
- Compare only standard blocks

You also have the *STEP 7* filter options "Show only objects with differences" and "Show identical and different objects".

For comparison of safety programs, F-blocks in the "System blocks" folder are also relevant.

Comparison criteria

Make sure that under only the comparison criterion "Safety" is enabled.

Classification of displayed changes

Regardless of whether you carried out an offline/online or offline/offline-comparison, the following changes could account for the indicated changes to the automatically generated F-blocks:

- Change in the maximum cycle time of F-runtime group and warn cycle time of F-runtime group
- (S7-1200/1500) Runtime for the deactivated safety mode
- Change in F-parameters of the F-CPU
- changed safety system version or change to the hardware configuration (S7-1200/1500: Displayed as change of the "F_SystemInfo_DB" block).
- (S7-1200/1500) Changes in the group structure of the F-blocks. Displayed as change of the "F_SystemInfo_DB" block.
- (S7-300/400) Change in the F-runtime group communication, for example, change in the number of a DB for F-runtime group communication
- Change in main safety block, F-FB, F-FC, F-DB
- Change of the hardware configuration for the F-I/O addressed in the safety program

It is possible that a block is displayed as changed, but no changes are displayed in the detailed comparison of the block content. This is not a display problem but means that changes of addresses in the tag table, for example, have an effect on this block. Test this block in case of doubt.

Document the result of the comparison

The comparison result can be printed via "Project > Print" in the menu bar or the "Print" icon in the toolbar or create a PDF file. Select "Print objects/area" "All" and "Properties" "All".

After printing, make sure that all pages were printed. Incomplete printouts (e.g. lines cut off, insufficient toner when printing to paper) must not be used for an acceptance of changes.

10.6 Creating a safety summary

You can document all important project data (hardware configuration of the F-CPU and F-I/O, safety program) in the safety summary. You obtain a safety summary that, alongside the documentation, is used as a basis for testing the correctness of the individual components of the system. Correctness is a prerequisite for system acceptance.

The Collective F-signature in the footer of the printout pages ensures that the printout is clearly assigned to a safety program.

Safety summary

The safety summary provides documentation of the safety-related project data which supports you during acceptance of the system. For this purpose, the "safety summary" can also be used in electronic form, for example, as PDF file.

Procedure for creating a safety summary

To create a safety summary, follow these steps:

1. In the project tree, select the *Safety Administration Editor* of the F-CPU whose safety summary you want to create.
2. Select "Print" in the shortcut menu or "Project > Print" in the menu bar or the print button in the toolbar.
   In the displayed dialog, you can make layout settings for the printout and specify the scope of the printout (all/subset), among other things.
3. Under "Document information", select one of the ISO formats, e.g. "DocuInfo_ISO_A4_Portait".
4. Select the "All" option, if the F-blocks and F-compliant PLC data types are to be shown in the printout. This is necessary, for example, to document the program code for the acceptance(see Acceptance of system (Page 329)). Select the "Compact" option to exclude the source code from the printout.
5. Click the "Print" button.

As a result, you receive the safety summary for the F-CPU.

After printing, make sure that all pages were printed. Incomplete printouts (e.g. lines cut off, insufficient toner when printing to paper) must not be used for an acceptance.

Contents of the summary in overview

The topics that are considered in the summary are summarized in the following:

- General information on program identification, signatures, software versions, access protection, settings of the safety program (from the "Settings" work area of the *Safety Administration Editor*), for example safety system version.
- System library elements used in safety program (from the "Instructions" task card) along with their versions
- Information about the F-runtime groups (e.g. cycle time warning limit of the F-runtime group, maximum cycle time of the F-runtime group)
- List of the F-blocks within the "Program blocks" folder (e.g. name, function, associated F-runtime group, signature)
- (S7-1200, S7-1500) List of the know-how protected F-blocks used in the safety program (e.g., name, signature, used safety system version, used versioned instructions or called F-blocks).
- (S7-1200, S7-1500) List of F-compliant PLC data types (UDT), if these exist in the safety program.
- Data from the standard user program that are evaluated in the safety program
- Block parameters of the safety-related CPU-CPU communication
- (S7-300, S7-400) Absolute addresses and names of the F-shared DB tags that can be accessed from the standard user program

- Information on the F-CPU used (e.g. firmware version, F-source address) information on the F-IOs used (e.g. firmware version, general and specific parameters)
- Information on the printout (print date, number of pages)

Content of the footer of the printouts

On the basis of the footer of the printout, you can find out:

- Whether the printed safety-related project data is consistent and whether all pages of the printout belong to the same safety program and the same version (the same Collective F-Signature in the footer of every page means that the printout belongs to the safety program with this Collective F-Signature).

The footer is added to the source code of the F-blocks only if the "All" option was selected for the safety summary.

If F-blocks are printed by other means, the footer is omitted, and you can no longer easily identify whether the block printout belongs to the current safety program version.

Printing a migrated project

You can only print a safety summary for a project migrated from *S7 Distributed Safety V5.4 SP5* if the project was compiled with *STEP 7 Safety Advanced* and the new program structure for safety programs (main safety block) has therefore been applied. Otherwise, the printout is not possible and you will receive a corresponding error message.

We recommend that you create a safety summary for your project in *S7 Distributed Safety V5.4 SP5* before the migration.

10.7 Testing the safety program

10.7.1 Overview of Testing the Safety Program

Complete function test or test of changes

After creating a safety program, you must carry out a complete function test in accordance with your automation task.

For changes made to a safety program that has already undergone a complete function test, only the changes and that there is no effect on the parts of the safety program that were not changed need be tested.

Monitoring

Read-only test functions (such as monitoring tags of the safety program) are available for safety programs as in the standard.

Modifying

Read and write test functions (such as controlling tags of the safety program) are only available to a limited extent for safety programs and only in disabled safety mode.

Simulation via *S7-PLCSIM*

You can test the safety program using *S7-PLCSIM*. You use *S7-PLCSIM* in the same way as for standard user programs.

You start the simulation with *S7-PLCSIM* using menu item "Online > Simulation > Start"

Rules for testing

- Forcing of F-I/O inputs and F-I/O outputs is not possible.
- Controlling F-I/O outputs in connection with the function "Enabling F-I/O outputs" is not possible.
- Setting breakpoints in the standard user program will cause errors in the safety program (see also Testing the safety program (Page 313)).
- Changes in the configuration of F-I/O or safety-related CPU-CPU communication can only be tested after the hardware configuration has been saved and downloaded, and after the safety program has been compiled and downloaded to the F-CPU.

See also

Disabling safety mode (Page 310)

10.7.2 Disabled safety mode

The safety program generally runs in the F-CPU in safety mode after a STOP/RUN transition. This means that all fault control measures are activated. The safety program cannot be modified during operation (in RUN mode) in safety mode. You must disable safety mode of the safety program to, for example, modify tags in the safety program in RUN mode. Safety mode remains disabled until the F-CPU is next switched from STOP to RUN mode.

As of Safety system version V2.4, disabled safety mode for S7-1200/1500 CPUs is time-limited.

After the time limit has expired, the F-CPU or the redundant S7-1500HF system automatically goes to STOP. The cause of the diagnostics event is entered in the diagnostics buffer of the F-CPU.

You can avoid an unplanned STOP of the F-CPU after the time limit has expired as follows:

- Ending the disabled safety mode through a targeted STOP/RUN transition.
- Resetting the remaining runtime. Resetting can be used as often as needed.

10.7.2.1 Configuring the time limit for disabled safety mode (S7-1200, S7-1500)

Introduction

You can configure the duration of the time limit.

Requirements

- In the *Safety Administration Editor*, the "Safety mode can be disabled" option is activated.
- The minimum Safety system version is set to V2.4.

Procedure for configuring the runtime

To configure the time limit, follow these steps:

1. Open the *Safety Administration Editor* of the F-CPU.
2. Open the "Settings (Page 80)" area in the area navigation.
3. Under "Runtime for the deactivated safety mode", configure the time limit for the safety mode. The default time is 4 hours. You have the option to configure the time limit to a maximum of 8 hours and a minimum of 1 minute.

NOTE

The value of the configured time is not included in the Collective F-Signature.

10.7.2.2 Disabling safety mode

Requirements

- In the *Safety Administration Editor*, the "Safety mode can be disabled" option is activated.
- The project is loaded to the F-CPU.
- The F-CPU is in RUN.
- The safety program runs in safety mode.

Rules for disabling safety mode

WARNING

Because changes to the safety program can be made in RUN mode when safety mode is deactivated, you must take the following into account:

- Disabling safety mode is intended for test purposes, commissioning, etc. Whenever safety mode is disabled, the safety of the system must be ensured by organizational measures (Page 560).

  After the test or commissioning, safety mode must be enabled again. To do this, execute a STOP/RUN transition of the F-CPU.

  In a redundant S7-1500HF system you have to set both HF-CPUs or the redundant system S7-1500HF to STOP before you restart the HF-CPUs.
- Disabling of safety mode must be displayed.

  Use the MODE tag in the F-global DB ("F_GLOBDB".MODE) for S7-300/400 F-CPUs or in the F-runtime group information DB (e.g. RTG1SysInfo.F_SYSINFO.MODE) for S7-1200/1500 F-CPUs, which you can evaluate to read the operating mode (1 = Disabled safety mode). This means not only is the disabled safety mode displayed on the programming device or PC in the dialog box for disabling safety mode, but it can also be indicated by means of an indicator light controlled by the standard user program or a message to an HMI system generated by evaluating the above-mentioned "Disabled safety mode" tag in the F-shared DB.
- It must be possible to verify that safety mode has been disabled. A log is required, if possible by recording and, if applicable, archiving alarms to the operator control and monitoring system or, if need be, through organizational measures. In addition, it is recommended that disabling of safety mode be indicated on the HMI system.
- Safety mode is disabled F-CPU-wide. You must, however, take the following into account for safety-related CPU-CPU communication: If the F-CPU that sends the data is in disabled safety mode, you can no longer assume that the data sent by this F-CPU are generated safely. You must then ensure safety in those units that are affected by the sent data through organizational measures. Alternatively, you must output fail-safe substitute values instead of the received data in the F-CPU that receives the data by evaluating SENDMODE*.

* SENDMODE is available to you as output of the RCVDP or RCVS7 instructions or in case of communication via Flexible F-Link as a tag in the F-communication DB.

(S027)

Procedure for disabling safety mode

To disable safety mode, follow these steps:

1. Open the *Safety Administration Editor* of the corresponding F-CPU.
2. Open the "General (Page 74)" area in the area navigation.
3. Click the "Disable safety mode" button.
4. If access protection is set up for the F-CPU, enter the password for the F-CPU.

5. Make sure that you disable the safety mode of the desired F-CPU by checking the Collective F-Signature in the dialog that is displayed next.
   This check is not necessary if access protection is set up for the F-CPU, because the correct F-CPU has already been identified by the unique password for the F-CPU.
6. Confirm the deactivation.

Safety mode is then disabled.

The remaining runtime until an S7-1200/1500 F-CPU goes into STOP, starts immediately after deactivation of the safety mode. The remaining runtime is displayed in the Safety Administration Editor in the "General (Page 74)" area in online mode. In addition, the remaining runtime is displayed in the web server of an S7-1500 F-CPU as of firmware V2.9.

Reset remaining runtime until the F-CPU goes to STOP

To avoid the expiration of the remaining runtime and the associated STOP of the F-CPU, you can reset the remaining runtime in the *Safety Administration Editor*. This resets the remaining runtime to the configured value and starts it running again immediately after that.

Proceed as follows:

1. Open the *Safety Administration Editor* of the corresponding F-CPU.
2. Open the "General (Page 74)" area in the area navigation.
3. Click the "Reset remaining runtime" button.
4. If access protection is set up for the F-CPU, enter the password for the F-CPU.
5. In the dialog that opens next, check the information on the Collective F-Signature.
6. Confirm the reset of the remaining runtime.

NOTE

The remaining runtime is also displayed in the F-runtime group information DB (Page 136) of the respective F-runtime group in the MODE_REMAINING_TIME tag.

In case of two F-runtime groups, different values may be displayed caused by different update times.

The value "0" is not displayed after expiration of the remaining runtime, but the remaining runtime existing in the last cycle.

Enabling safety mode

NOTE

To enable safety mode, the F-CPU must be switched from STOP to RUN mode.

In a redundant S7-1500HF system you have to set both HF-CPUs or the redundant system S7-1500HF to STOP before you restart the HF-CPUs.

Switching the F-CPU from STOP to RUN mode always enables safety mode, even if the safety program has been modified or is not consistent.

If you have changed your safety program, but have not recompiled and downloaded it, the F-CPU can revert to STOP mode.

Evaluating safety mode/disabled safety mode

If you wish to evaluate safety mode/disabled safety mode in the safety program, you can evaluate the "MODE" tag in the F-Global DB (Page 136) for S7-300/400 F-CPUs or F-runtime group information DB for S7-1200/1500 F-CPUs (1 = Disabled safety mode). You use fully qualified access to access this tag (e.g. "F_GLOBDB".MODE or RTG1SysInfo.MODE).
You can use this evaluation, for example, to passivate F-I/O when the safety program is in disabled safety mode. To do so, assign the "MODE" tag in the F-shared DB or F-runtime group information DB to all "PASS_ON" tags in the F-I/O DBs of the F-I/O that you wish to passivate.

WARNING

When the safety program is in disabled safety mode, the "MODE" tag in the F-shared DB or F-runtime group information DB is also evaluated in disabled safety mode.
Even if the F-I/O is passivated in disabled safety mode by evaluating the "MODE" tag, the safety of the plant must be ensured during disabled safety mode by organizational measures (Page 560). *(S028)*

See also

Configuring the time limit for disabled safety mode (S7-1200, S7-1500) (Page 309)

10.7.3 Testing the safety program

Introduction

Tags of the safety program can be monitored at any time.
Controlling tags of the safety program is only possible in deactivated safety mode as some fault control measures of the safety program have to be disabled for this.
You can control the following tags of the safety program:

- Inputs and outputs of the F-I/O (channel values and value status (S7-1200, S7-1500))
- Tags in F-global DB (except DB for F-runtime group communication)
- Tags in instance DBs of F-FBs
- Tags in F-I/O DBs (for permitted tags see F-I/O DB (Page 145))

Procedure for monitoring tags of the safety program

Monitor the required tags of the safety program from an open watch table or from the *program editor* (program status).

1. Proceed as in the standard. Additional information can be found in the *STEP 7 help* in "Testing user programs".

Procedure for controlling tags of the safety program

Control the required tags of the safety program from an open watch table:

1. For modifying, deactivate the safety mode (Page 310) in the automatically shown dialog.
2. Terminate existing modify requests after testing is complete before activating safety mode.

Values in F-DBs can only be modified online in the F-CPU. If the value is also to be changed offline, you must do this by editing the start value offline and compiling the safety program.

Proceed as follows to control tags of F-I/O:

1. Create a separate row for each channel value and value status (S7-1200, S7-1500) to be modified. The control value must correspond to the channel value or value status.
2. Set "start of scan cycle" or "end of scan cycle" and "permanent" or "once".
   Regardless of the trigger point setting, requests to modify inputs (PII) of F-I/O always become effective before the main safety block is executed and requests to modify outputs (PIQ) always become effective after execution of the main safety block.
3. (S7-300, S7-400) Create an additional watch table if you want to control more than 5 inputs/outputs.

NOTE

F-I/O can only be modified in RUN mode of the F-CPU.

You cannot modify a configured F-I/O from which neither a channel value or a value status (S7-1200, S7-1500), nor any tag from the associated F-I/O DB has been used in the safety program. In your safety program, you should therefore always use at least one tag from the associated F-I/O DB or at least one channel value or value status (S7-1200, S7-1500) of the F-I/O to be modified.

For inputs (PII), modify requests take priority over fail-safe value output, while for outputs (PIQ), fail-safe value output takes priority over modify requests. For outputs (channels) that are not activated in the properties for the F-I/O, modify requests affect the PIQ only, and not the F-I/O.

NOTE

The following applies for S7-1200/1500 F-CPUs:

To avoid invalid combinations of channel value and status value:

- The value status is set by the F-system automatically to 1 when setting a channel value to a value <> fail-safe value 0
- The fail-safe value 0 is automatically output when setting the value status to 0 for the associated channel value

---

WARNING

You need to specifically reset constant modify requests in the watch table in disabled safety mode.

Note that constant modify requests that are not correctly reset can remain active in the background even after a STOP/RUN transition of the F-CPU.

Because the F-CPU is in safety mode again after a STOP/RUN transition, the constant modify requests are no longer effective and are not shown in the watch table.

The requests become active again as soon as you disable safety mode again.

With a memory reset of the F-CPU, you can make sure that no constant modify requests are active in the background on the F-CPU. *(S029)*

Wiring test using watch table

You can carry out a wiring test for an input by changing an input signal and verifying whether or not the new value arrives in the PII.

You can carry out a wiring test for an output by changing the output with the Modify function and verifying whether the required actuator responds.

For the wiring test, note that a safety program must be running on the F-CPU, in which at least one channel value or value status (S7-1200, S7-1500) of the F-I/O to be monitored or modified or one tag from the associated F-I/O DB has been used.

For F-I/O that can also be operated as standard I/O (e.g., S7-300 fail-safe signal modules), you can also carry out the wiring test for outputs using the Modify function in STOP mode by operating the F-I/O as standard I/O rather than in safety mode.

Additional rules for testing (S7-300/400/1500)

Setting breakpoints in the standard user program will cause the following errors in the safety program:

- F-cycle time monitoring has expired
- Error during communication with the F-I/O
  (S7-1500) Fail-safe modules switch to safe mode after the configured F-monitoring time has expired.
- Error during safety-related CPU-CPU communication
- Internal CPU faults

If you nevertheless want to use breakpoints for testing, you must first disable safety mode. This will result in the following errors:

- Error during communication with the F-I/O
- Error during safety-related CPU-CPU communication

Difference between S7-1500 F-CPUs and S7-300/400 F-CPUs:

- If a breakpoint is activated and reached, the F-CPU goes directly to STOP after HOLD.
- If you want to switch to RUN again after HOLD to test your standard user program further, you can simulate this with S7-PLCSIM.

No access protection is initially necessary for test purposes, commissioning, etc. This means you can execute all offline and online actions without access protection, that is, without password prompt.

See also

Changing the safety program in RUN mode (S7-300, S7-400) (Page 319)
Downloading project data (Page 273)

10.7.4 Testing the safety program with S7-PLCSIM

You can test your safety program together with your standard program on a simulated CPU with *S7-PLCSIM* and without the need for hardware. Also observe warning S030 in the section "Notes on Safety Mode of the Safety Program (Page 350)".

You use *S7-PLCSIM* for SIMATIC Safety F-systems as you would for S7 standard systems. Note the following special features:

Safety mode/disabled safety mode

We recommend that you test your safety program in safety mode to detect whether the F-CPU goes into STOP as early as in the test phase of your safety program in *S7-PLCSIM* as a result of, for example, that the results of instructions were outside the permitted range for the data type.

The following simulations can be run in *S7-PLCSIM*, just as on an actual F-CPU, in disabled safety mode only.

- Modifying tags in F-DBs and F-I/O DBs.

(S7-1200, S7-1500) To prevent unintentional modification of tags in F-DBs and F-I/O DBs in safety mode, we recommend that you do not select the "Activate/deactivate modification of non-inputs" button in *S7-PLCSIM*

During the simulation with *S7-PLCSIM* , monitoring of the maximum cycle time of the F-runtime group and the cycle time warning limit of the F-runtime group (S7-1200, S7-1500) are disabled.

Differences between a simulated F-CPU and real F-CPU

Note that *S7-PLCSIM* does not fully behave like a real F-CPU down to the individual details. In particular, the startup behavior of an F-I/O cannot be simulated exactly.

Input simulation of F-I/O

Simulation of inputs (channel values) in *S7-PLCSIM:*

You simulate inputs (channel values) of F-I/O in *S7-PLCSIM* as you would inputs (channel values) of standard I/O. Keep in mind the following notes/restrictions:

During the transition of the F-CPU from "STOP" to "RUN" mode in *S7-PLCSIM*, all inputs (channel values) of F-I/O are initialized with 0 in the process image input (PII).

The inputs (channel values) can be simulated starting from the 2nd cycle and are then available in the PII.

Simulation of inputs (value status) in *S7-PLCSIM:*

(S7-1200, S7-1500) By simulating inputs (value status) of F-I/O, you can simulate incoming and outgoing F-I/O / channel faults. Keep in mind the following notes/restrictions:

- To realistically simulate the behavior of the F-I/O, you must note the connection between channel value and value status on the real F-I/O. The combination value status = 0 and channel value <> fail-safe value (0) is invalid and can result in the simulation deviating from the behavior of the real F-CPU.
- During the transition of the F-CPU from "STOP" to "RUN" in *S7-PLCSIM*, all inputs (value status) of F-I/O are initialized with 1 in the process image input (PII). This means you can start with the simulation of inputs (channel values) immediately without simulation of the inputs (value status).
- The simulation of inputs (value status) in *S7-PLCSIM* does not have an effect on the QBAD and PASS_OUT tags in the F-I/O DB. Note that with real F-I/O, QBAD and PASS_OUT can be 1 as soon as the value status is 0 for at least one channel of the F-I/O (see tags of the F-I/O DB: PASS_OUT/QBAD/QBAD_I_xx/QBAD_O_xx and value status (Page 150)).
- For F-I/O configured with "Behavior after channel fault" = "Passivation of the complete F-I/O", use the tag PASS_ON in the F-I/O DB for simulation of the passivation of the complete F-I/O for F-I/O / channel faults. If you limit the simulation to passivation of individual inputs (channel value including value status), the behavior of the simulation will deviate from that of the real F-CPU.
- You can also use the PASS_ON tag in the F-I/O DB for F-I/O without value status to simulate the passivation of the entire F-I/O in case of F-I/O or channel faults.
- To simulate an F-I/O / channel fault of the SM 336; AI 6 x 13Bit or SM 336; F-AI 6 x 0/4...20 mA HART with configuration "Behavior after channel fault" = "Passivate channel", you must simulate the inputs (channel values) with $7FFF_H$ (for overflow) or 8000_H (for underflow).
- For F-I/O which does not support the "RIOforFA-Safety" profile, you must run a user acknowledgment with a positive edge at the ACK_REI tag of the F-I/O DB as with a real F-I/O for reintegration after the value status has changed from 0 to 1 or when the channel value has changed from $7FFF_H$/8000_H to unequal $7FFF_H$/8000_H (see above) when ACK_NEC = 1 of the F-I/O DB. Reintegration takes place automatically in all other cases possibly deviating from the real F-I/O.

Update times

Keep in mind that the status of the inputs (channel values or value status (S7-1200/1500)) that you are monitoring in the SIM table in *S7-PLCSIM* is only identical to the status being processed in the safety program if there is no passivation of the associated F-I/O.

With passivation of the F-I/O, the safety program operates with fail-safe values (channel value and value status (S7-1200/1500) =0).

CPU-CPU-communication with SENDDP / RCVDP instructions

The following applies for SENDDP/RCVDP (S7-300/400) instructions and SENDDP/RCVDP instructions with Version < 3.0 (S7-1200/1500):

You cannot simulate communication between F-CPUs with the SENDDP and RCVDP instructions in *S7-PLCSIM*. You can, however, use the SENDDP and RCVDP instructions together with *S7-PLCSIM*. During simulation in *S7-PLCSIM*, the RCVDP instruction outputs the fail-safe values pending at its inputs SUBBO_xx and SUBI_xx ((S7-1200/1500) or alternatively SUBDI_00). The SENDDP and RCVDP instructions signal this with 1 at output SUBS_ON.

For SENDDP/RCVDP instructions with Version >= 3.0 (S7-1200/1500) the following applies:
During the simulation with *S7-PLCSIM* it is possible to simulate the received data and the information "Deactivated Safety Mode" (RCVDP) or respectively the information "Substitute value output" (SENDDP) in the corresponding transfer area for inputs. Note the following notes:

- The simulated values do not become active until you set the SIMULATION bit for the first time in the respective simulation control word (see the following table) after the F-system has started up. Before setting the SIMULATION bit, the RCVDP instruction outputs the fail-safe values that are pending at its inputs SUBBO_xx and SUBI_yy (or alternatively SUBDI_00).
- The setting of the SEND_MODE bit in the simulation control word causes a setting of the SENDMORE output for the RCVDP instruction.
- The setting of the STATUS_SUBS bit in the simulation control word causes a setting of the SUBS_ON output for the SENDDP instruction.
- Reserved bits in the simulation control word always have to be 0.
- During a STOP/RUN transition from *S7-PLCSIM* the most recently simulated values in the transfer area for inputs are kept.

The start address(es) of the configured transfer area for the input and output data can be found in the respective configuration (see also "Configuring and programming communication (S7-1200, S7-1500) (Page 231)").

Table 10-1 Structure of the relevant transfer area for inputs of the simulation control word (instruction RCVDP)

Byte	Meaning	Comment
0	RD_BO_15 ... RD_BO_08	
1	RD_BO_07 ... RD_BO_00	
	DINTMODE=0:	
2	RD_I_00	Word RD_I_00, MSB[1] first
3		
4	RD_I_01	Word RD_I_01, MSB[1] first
5		
	Alternative DINTMODE=1:	
2	RD_DI_00	High Word from RD_DI_00, MSB[1] first
3		
4		Low Word from RD_DI_00 **XOR 0x8000**, MSB[1] first
5		
6	Simulation control word (High Byte)	Bit 0...6: Reserved Bit 7: SIMULATION: Activating RCVDP simulation
7	Simulation control word (Low Byte)	Bit 0: SEND_MODE: Set output SENDMODE Bit 1...7: Reserved
8 ... 11	Reserved	

[1] MSB: most significant bit

Table 10-2 Structure of the relevant transfer area for inputs of the simulation control word (instruction SENDDP)

Byte	Meaning	Comment
0	Simulation control word (High Byte)	Bit 0: STATUS_SUBS: Set output SUBS_ON Bit 1...6: Reserved Bit 7: SIMULATION: Activating SENDDP simulation
1	Simulation control word (Low Byte)	Bit 0...7: Reserved
2 ... 5	Reserved	

(S7-300, S7-400) CPU-CPU-communication with SENDS7/RCVS7 instructions

You cannot simulate communication between F-CPUs with the SENDS7 and RCVS7 instructions in *S7-PLCSIM*. You can, however, use the SENDS7 and RCVS7 instructions together with *S7-PLCSIM*.

During simulation in *S7-PLCSIM*, the RCVS7 instruction outputs the initial values specified in the communication DB as fail-safe values. The SENDS7 and RCVS7 instructions signal this with 1 at output SUBS_ON.

CPU-CPU communication with Flexible F-Link

If communication between F-CPUs is simulated with Flexible F-Link, then observe the following warning.

WARNING

When data is sent from an F-CPU simulated with *S7-PLCSIM* during safety-related CPU-CPU communication with Flexible F-Link, you can no longer assume that this data is generated safely. You must then ensure safety in those units that are influenced by the sent data through organizational measures (Page 560). Alternatively, you must output fail-safe substitute values instead of the received data in the F-CPU that receives the data by evaluating SENDMODE*.

* SENDMODE is available to you as a tag in the F-communication DB.

(S086)

Inconsistent safety program (S7-1200, S7-1500)

If the CPU goes into STOP in *S7-PLCSIM* with the diagnostic entry "Safety program: inconsistent", the F-CPU is not initialized correctly in *S7-PLCSIM* yet. Perform a memory reset of the F-CPU in *S7-PLCSIM* and download the program once again to the CPU in *S7-PLCSIM*.

10.7.5 Changing the safety program in RUN mode (S7-300, S7-400)

Introduction

You make changes to F-blocks offline in the *program editor* in the same way as for a standard program. You download the changed F-blocks in RUN to the F-CPU in the "disabled safety mode (Page 310)".

NOTE

If you do **not** want to make changes to the safety program during operation, see Creating F-blocks in FBD/LAD (Page 132).

Procedure for changing the safety program in RUN mode

To change the safety program, follow these steps:

1. Change the main safety block or F-FB and its associated instance DB, F-FC, or F-DB in the *Program editor*.
2. Download the changed F-block(s) to the F-CPU (for procedure, see Downloading project data (Page 273)). The entire program is then automatically compiled.
3. If safety mode is active, the "Load preview" dialog will prompt you to deactivate it and to enter the password for the safety program.

NOTE

When downloading in disabled safety mode, you can only download the fail-safe blocks created by you (main safety blocks, F-FB, F-FC, or F-DB), F-application blocks, or standard blocks and their associated instance DBs. If you download automatically added F-blocks (F-SBs or automatically generated F-blocks and associated instance DBs, F-shared DB), the F-CPU can go to STOP mode or safety mode can be activated.

Therefore, always select individual blocks only when downloading in disabled safety mode.

Sequence for downloading changes

Changes in the safety program in RUN mode when safety mode is disabled can, for example, cause the status of an actuator to change as a result of program changes.

After changes, start by downloading the safety program and then the function of the standard user program monitored by the safety program.

Restrictions on safety-related CPU-CPU communication

During operation (in RUN mode), you cannot establish new safety-related CPU-CPU communication by means of new SENDDP/RCVDP or SENDS7/RCVS7 instructions.

To establish new safety-related CPU-CPU communication you must always download the relevant safety program consistently to the F-CPU while in STOP mode after inserting a new SENDDP, SENDS7, RCVDP, or RCVS7 instruction.

Restrictions on F-runtime group communication

You cannot make any changes to the safety-related communication between F-runtime groups in RUN mode. This means that you cannot assign, delete, or change any DBs for F-runtime group communication of an F-runtime group.
Following changes in the F-runtime group communication, you must always download the safety program consistently to the F-CPU while in STOP mode.

Restrictions on F-I/O access

If during operation (in RUN mode), you insert an F-I/O access to an F-I/O of which no single channel value or tag from the associated F-I/O DB has yet been used in the safety program, the F-I/O access only becomes effective when the safety program is downloaded consistently to the F-CPU.

Changing the standard user program

You can download changes in the standard user program when the F-CPU is in RUN mode, regardless of whether safety mode is enabled or disabled.

WARNING

(S7-300, S7-400) When the standard user program is changed in productive operation, access permission must not be granted by the CPU password, as it would also allow changes to the safety program. To rule out this possibility, you must configure the protection level "Write protection for fail-safe blocks" and configure a password for the F-CPU. If only one person is authorized to change the standard user program and the safety program, the protection level "Write protection" or "Read/write protection" should be configured so that other persons have only limited access or no access at all to the entire user program (standard and safety programs). *(S001)*

Procedure for applying changes to the safety program

If you download individual F-blocks to the F-CPU during operation (in RUN mode), the F-system blocks (F-SBs) and the automatically generated F-blocks are neither updated nor downloaded, resulting in an inconsistent safety program in the F-CPU. Use the following procedure to apply changes to the safety program:

1. Download the safety program consistently to the F-CPU, and activate safety mode by switching the F-CPU from STOP to RUN mode (for procedure, see Downloading project data (Page 273)).
2. Follow the steps described in Acceptance of Changes (Page 345).

10.7.6 Safety program in RUN mode (S7-1200, S7-1500)

Introduction

You make changes to F-blocks offline in the *program editor* in the same way as for a standard program. Loading the changed F-blocks in RUN to the F-CPU is done with the Fast Commissioning mode in deactivated safety mode (Page 310).

The Fast Commissioning mode distinguishes between "Fast Compile" (default setting) and "Consistent Compile".

Fast Commissioning mode with "Fast Compile"can be used for minor software changes to the Safety program, e.g. for testing and commissioning. It enables a fast compile, as only the F-blocks created by the user are compiled here.

In contrast, the Fast Commissioning mode with "Consistent Compile" can be used, for example, at the end of commissioning to compile the safety program consistently and then download it consistently to the F-CPU. In this case, you forego the advantage of the fast compiling, but after downloading the safety program to the F-CPU, you can enable safety mode again immediately with a short STOP-RUN transition of the F-CPU.

NOTE

Do not switch the F-CPU to STOP in Fast Commissioning mode with "Fast Compile". Otherwise, the F-CPU does not restart afterwards because the F-CPU contains an inconsistent safety program.

Solution:

- Download a consistent safety program to the F-CPU and then carry out a STOP-RUN transition. The deactivated safety mode is hereby terminated.
- If your F-CPU supports "Consistent Compile", select "Consistent Compile" and download the safety program consistently to your F-CPU. After that, a STOP-RUN transition is possible.

NOTE

Fast Commissioning mode with "Fast Compile" behaves differently with *S7-PLCSIM* than with a real F-CPU.

An *S7-PLCSIM* restarts after a STOP.

Requirements

To activate and use Fast Commissioning mode, the following requirements must be met:

- You can use Fast Commissioning mode with "Fast Compile" as of Safety System version V2.4. It is available for S7-1200 F-CPUs as of firmware V4.5 and for S7-1500 F-CPUs as of firmware V2.0.
- You can use the Fast Commissioning mode with "Consistent Compile" from Safety System version V2.5. It is only available for F-CPUs S7-1500 as of firmware V3.0. With S7-1500 F-Software Controller, it is available as of Safety System version V2.5 only for approved IPCs as of firmware V30.0.

  NOTE

  S7-1500 F-Software Controller

  The approved IPCs can be found in the table in the Product information for the F-CPUs (https://support.industry.siemens.com/cs/ww/en/view/109478599).

  If IPCs that have not been approved are used, an error or restart of the F Software Controller occurs. The download must then be repeated in STOP.

- The "Safety mode can be disabled" option must be selected in the "Settings" area of the *Safety Administration Editor*.
- The offline Safety program must be consistent and identical to the online Safety program.
- The F-CPU is in RUN.

Enabling Fast Commissioning mode

You enable Fast Commissioning mode by clicking the "Enable Fast Commissioning" button in the "General" area of the Safety Administration Editor.

Here, "Fast Compile" is selected as the default setting.

Once Fast Commissioning mode with "Fast Compile" is active, the behavior when compiling changes (shortcut menu "Compile > Software (only changes)" and "Compile > Hardware and software (only changes)") switches to the behavior when compiling changes in Fast Commissioning mode with "Fast Compile".

As soon as you change to the "Consistent Compile" setting, you can also compile the safety program consistently and download it to the F-CPU in RUN.

NOTE

After enabling Fast Commissioning mode, all other areas in the *Safety Administration Editor* are grayed out except the "General" area. Write access in the *Safety Administration Editor* is not permitted, also not via Openness. Read access is still possible.

While Fast Commissioning mode with "Fast Compile" is activated, the *Safety Administration Editor* displays the information "Fast Commissioning is activated" as the status of the safety program.

No signatures are calculated in Fast Commissioning mode with "Fast Compile". Therefore, no statement can be made in this mode about the status of the safety program and the F-blocks with regard to the offline-online comparison. The status of the signature comparisons is displayed with the icon in this case.

Downloading changes in Fast Commissioning mode

To download changes to the Safety program to the F-CPU in RUN in Fast Commissioning mode, the following 3 conditions must be met:

- The F-CPU is in RUN.
- Safety mode is deactivated.
- Fast Commissioning is enabled.

If at least one of these 3 conditions is not met, the "Download" dialog displays a note that download in RUN mode is not possible.

NOTE

In case of a connection abort between the PG/PC and the F-CPU during loading in RUN mode, loading to the F-CPU can **not** be completed properly. Even the indicators of the safety program on the display and in the web server of the F-CPU are no longer current.

A subsequent loading in RUN is no longer possible in this case, even though all requirements for Fast Commissioning mode are being met.

Solution: Switch the F-CPU to STOP mode and download a consistent safety program to the F-CPU.

NOTE

If the work memory utilization of the F-CPU is > 80%, a download in RUN mode with "Consistent Compile" may be aborted and the download to the F-CPU may not be properly completed. Even the indicators regarding the safety program on the display and in the web server of the F-CPU are no longer current.

A subsequent download in RUN is no longer possible, even though all requirements for Fast Commissioning mode are met.

Solution: Switch the F-CPU to STOP mode and download a consistent safety program to the F-CPU.

Supported changes in Fast Commissioning mode

While Fast Commissioning mode is enabled, you cannot arbitrarily change your Safety program. The following is an overview of the supported changes.

- Changes to F-FBs/F-FCs/F-DBs. See "Changes not supported" for exceptions.
- Changes to fail-safe-compliant PLC data types. See "Changes not supported" for exceptions.
- Changes to the standard user program that influence the safety program, for example, DBs used in both the standard user program and the safety program.
- Creating and using F-blocks. See "Changes not supported" for exceptions.

Unsupported changes in Fast Commissioning mode with "Fast Compile"

While Fast Commissioning mode with "Fast Compile" is activated, you cannot make changes to your safety program at will. The following is an overview of the changes **not** supported .

Type of change	System response
All changes to the hardware configuration.	A STOP is required for the download to the F-CPU.
Change in an F-FB/F-FC:	
• Insertion of a new call of a time-processing instruction (for example, TON, TOF, TP, MUT_P...) or an ACK_OP/ACK_GL instruction. (Time value parameters can be reassigned in existing calls).	Compiling errors
• Insertion of a new call of a SENDDP/RCVDP instruction.	
• Insertion of a new access to an F-I/O (access to a tag of the F-I/O DB or to the process image) that has not yet been used in the F-runtime group.	
• Insertion of a new access to a communication with Flexible F-Link (access to a tag of the F-communication DB) which has not yet been used in the F-runtime group.	
Deleting in an F-FB/F-FC:	
• Deletion of a call of a time-processing instruction (for example, TON, TOF, TP, MUT_P...) or an ACK_OP/ACK_GL instruction.	Compiling errors when the instances are also deleted
• Delete a call to a SENDDP/RCVDP instruction.	Compiling errors
• Deletion of the last access to an F-IO (access to a tag of the F-I/O DB or to the process image) so that it is no longer used in the F-runtime group.	
• Deletion of the last access to a communication with Flexible F-Link (access to a tag of the F-communication DB) so that it is no longer used in the F-runtime group.	
Deleting an F-FB or F-FC when it was called before Fast Commissioning mode was activated. However, a call can be deleted.	Compiling errors
Deleting an F-DB when tags of this F-DB were already being used before Fast Commissioning mode was activated.	Compiling errors
Deleting a standard DB when tags of this DB were already being used for reading before Fast Commissioning mode was activated.	Compiling errors
Deleting a tag from the standard user program when it was already being used for reading before Fast Commissioning mode was activated.	Compiling errors
Structural changes of fail-safe-compliant PLC data types that are referenced in a Flexible F-Link communication.	Compiling errors
Creating library types of blocks	Compiling errors
Adding/deleting of:	
• F-OBs	Compiling errors

Type of change	System response
• Flexible F-Link communications	Blocking in the Safety Administration Editor
• F-runtime groups (including changes)	
• F-CD/F-MS connections (including changes)	
Inserting an F-FB/F-FC (e.g. from a library or a different F-CPU) with global access to an F-DB.	Compiling errors
Changing the instruction version in the "Instructions" task card.	Compiling errors
Creating and changing instruction profiles	
Downloading a Safety program compiled in Fast Commissioning mode from the F-CPU to the PG/PC.	Interlocking by loading the station from the device
Changes in the "Settings" area of the *Safety Administration Editor*.	Blocking in the *Safety Administration Editor*
Changes to the password for the safety program.	
Renaming of the F-OB	Errors during download
All changes with Openness. (Name area *SafetyAdministration*)	Are rejected with an exception.

NOTE

For the changes marked with "Compiling errors", the compiling of the safety program is aborted in Fast Commissioning mode. An additional note is displayed in the inspector window under "Info > Compile" indicating the F-block containing the unsupported change.

NOTE

The table "Unsupported changes in Fast Commissioning mode with Fast Compile" serves as an aid. When you see errors during compiling that refer to blocks that you have not programmed yourself, an unsupported change was most likely made. In this case, undo the previous changes or exit Fast Commissioning mode and compile the entire safety program.

NOTE

Logging in the F-change history is incomplete when Fast Commissioning mode with "Fast Compile" is activated, the following entries are not recorded:

- Collective F-Signature
- Compiling time stamp
- Compiled F-blocks with signature and time stamp

Unsupported changes in Fast Commissioning mode with "Consistent Compile"

In Fast Commissioning mode with "Consistent Compile", you also cannot change your safety program at will. Compared to "Fast Compile", however, many more changes to the safety program are possible. The following is an overview of the changes **not** supported .

NOTE

Note that the changes mentioned here must not be present when enabling Fast Commissioning mode with "Consistent Compile". Therefore, make sure that the offline safety program is consistent and identical to the online safety program. If you do not observe this, the F-CPU may STOP.

Type of change	System response
All changes to the hardware configuration.	A STOP is required for the download to the F-CPU.
Adding/deleting of:	
• Flexible F-Link communications	Blocking in the *Safety Administration Editor*
• F-runtime groups (including changes)	
Changes in the "Settings" area of the *Safety Administration Editor*.	
Changes to the password for the safety program.	
Renaming of the F-OB	CPU goes to STOP
All changes with Openness. (Name area *SafetyAdministration*)	Are rejected with an exception.
Insertion of a new call of an ACK_GL instruction.	Possible, but results in passivation of all F-I/Os. Reintegration is only possible with a STOP-RUN transition.
Insertion of a new access to an F-I/O (access to a tag of the F-I/O DB or to the process image) that has not yet been used in the F-runtime group.	Possible, but results in passivation of the affected F-I/O. Reintegration is only possible with a STOP-RUN transition.
Deletion of a call of an ACK_GL instruction.	Possible, but results in passivation of all F-I/Os. Reintegration is only possible with a STOP-RUN transition.
Deletion of the last access to an F-IO (access to a tag of the F-I/O DB or to the process image) so that it is no longer used in the F-runtime group.	Possible, but results in a diagnostic buffer entry via a "Profisafe communication error".

Exiting Fast Commissioning mode

To exit Fast Commissioning mode with "Fast Compile" and return to Safety mode, proceed as follows:

1. Click on the "Deactivate Fast Commissioning" button.
2. Compile the Safety program with Software (rebuild all).
3. Download the Safety program to the F-CPU. The F-CPU is set to STOP mode by this.
   In a redundant S7-1500HF system, you have to select "Stop R/H system" in the "Load preview" dialog.

After that, the online Safety program is consistent again and the F-CPU can be switched to RUN with Safety mode enabled.

To exit Fast Commissioning mode with "Consistent Compile" and return to Safety mode, proceed as follows:

1. Click on the "Deactivate Fast Commissioning" button.
2. Perform a STOP-RUN transition to enable safety mode again.

10.8 F-change history

Enable the logging of changes to the safety program by using the option "Enable F-change history" in the *Safety Administration Editor*. The F-change history behaves like the standard change history.

An F-change history is created for each F-CPU in the project navigation under "Common data/logs".

The following is logged in the F-change history:

- Collective F-Signature
- User name
- Compile time stamp
- Download of the safety program with time stamp
- Compiled F-blocks with signature and time stamp

The F-change history can contain a maximum of 5000 entries per F-CPU. When the 5000 entries are exceeded, a new F-change history is created using the naming scheme "F-change history <CPU name> YYYY-MM-DD hh:mm:ss".

After a project upgrade, the "Go to" function is not supported anymore for the F-change history of the project for the entries which were created before *STEP 7 Safety* V15.1.

NOTICE

The connection between the F-CPU and the associated F-change history is made through the name of the F-change history.

Therefore, do not rename the F-CPU and the F-change history. If you rename the F-CPU or the F-change history, a new F-change history with the current name of the F-CPU is started.

NOTE

You may not use the F-change history to recognize changes in the safety program/in the configuration of the F-I/Os during the acceptance of changes.

To accept changes, proceed as described under Acceptance of Changes (Page 345).

NOTE

We recommend activating the F-change history before changing over to productive operation.

System acceptance 11

11.1 Overview of System Acceptance

Introduction

When performing a system acceptance test, all the standards and guidelines (for example PROFINET Installation Guidelines) relevant to the specific application must be complied with. This also applies to systems that are not "subject to acceptance". For the acceptance, you must consider the requirements in the Certification Report (http://support.automation.siemens.com/WW/view/en/49368678/134200).

As a general rule, the acceptance of an F-System is performed by an independent expert. The independence required of the expert must be defined in the safety plan and depends on the required PL/SIL.

Observe all warnings in this manual.

WARNING

The configuration of F-CPUs and F-I/Os as well as the programming of F-blocks must be carried out in TIA Portal as described in this documentation. You must observe all aspects described in the section System acceptance (Page 329) to ensure safe operation with the system SIMATIC SAFETY. Any other procedures are not permitted. *(S056)*

Proof of the correct implementation of the safety-related project data

In order for a system acceptance to be granted, you must assess and document the correctness of the individual components. For documentation of the component characteristics, you must create a safety summary.

The following characteristics must be covered:

- Correctness of the safety program including hardware configuration (including testing) (Page 330)
- Completeness of the safety summary (Page 331)
- Compliance of the system library elements used in the safety program with Annex 1 of the Report for the TÜV certificate (Page 331)
- Compliance of the know-how protected F-blocks used in the safety program with their safety documentation. (Page 332)
- Completeness and correctness of the hardware configuration (Page 334)
- Correctness and completeness of the communication configuration (Page 340)
- Identity of online and offline program (Page 342)
- Other characteristics (Page 343) such as software version, use of data from the standard user program

After the acceptance, you should archive all relevant documents and also the project data so as to make the accepted project available as a reference for a subsequent acceptance.

Safety summary

The safety summary (Page 306) is the project documentation required for acceptance of the system.

11.2 Correctness of the safety program including hardware configuration (including testing)

The correctness of software cannot only be ensure through tests and verifications during commissioning, but rather already requires the observance of a wide variety of measures during creation. Also see warning S062 on this in chapter "Overview (Page 22)".

Verification/function test

Already during the creation, you will test (Page 308) your safety program and the associated hardware configuration. You must carry out these tests with regard to the specification of your safety functions and document them before you perform the system acceptance.

To allow you to perform a code review of your safety program and document the accepted program code, the source code of all F-blocks is printed as a part of the safety summary (Page 306), provided you have selected the option "All" for the printout.

If you want to carry out a function test after loading, you have to carry out program identification. Additional information is available in "Downloading project data (Page 273)".

The correct function of the safety program must be guaranteed by complying with all steps from the "Overview of System Acceptance (Page 329)" chapter before it can be used productively. When using configuration control (option handling), you must ensure correct operation of the safety program for all possible station options by performing appropriate functional tests. You should archive the test reports along with the safety summary and the acceptance documents.

Times, for example monitoring times (Page 546) and delay times, can only be verified to a limited extent with functional tests (Page 273). You should check these times selectively to determine whether they are dimensioned correctly, for example, using the safety summary.

Some of these times are itemized specially in the safety summary, for example, the F-monitoring time (for communication between F-CPU and F-I/O) and the monitoring time of the safety-related CPU-CPU communication (TIMEOUT). To determine the monitoring times derived under normative conditions, the Excel file for response time calculation is available on the Internet (https://support.industry.siemens.com/cs/ww/en/view/109783831). These have to be considered together with the practically determined conditions of the application. Note that these monitoring times have an impact on the response times of your safety functions.

Consistency of the safety program

Check in the "General information" section of the safety summary to determine whether the safety program was recognized as "consistent".

This is the case for S7-300/400 F-CPUs only if the following signatures are also identical:

- Collective F-Signature ("General information" section, "Collective F-Signature")
- "Signature of F-blocks with F-attribute" ("General information" section, "Current compilation")

Consistency of the safety program is required for the acceptance. If the signatures are not identical, you have the possibility to establish the consistency through recompiling of the safety program and new creation of the safety summary.

11.3 Completeness of the safety summary

Introduction

If you have a version of your safety-related project data that is ready for acceptance, you must carry out and document additional checks on the basis of the safety summary to prove that the safety summary is complete and is part of the safety program to be accepted.

Procedure for creation of safety summary

To generate the safety summary, follow the procedure described in Creating a safety summary (Page 306).
In so doing, use the option "All" in order to include the source code of your F-blocks in the printout.

Checking the safety summary for completeness

If you want to use an existing summary, whose completeness is not exactly known, you must check to determine whether the same Collective F-Signature is contained in the footer on all pages of the printout. This allows you to prove that all included pages belong to the same project.
In section "Supplementary information", you can find the number of pages in the safety summary, among other things. With this, you can prove that all pages of the safety summary are printed. Incomplete printouts (for example due to low on toner) must not be used for an acceptance.
If you created the safety summary with the "All" option, the source code of all F-blocks will also be printed. The printout of this source code also contains the footer to enable you to easily assign the source code to a particular safety summary.
The specification "number of pages in the safety summary" does not include the pages in which the source code of the F-blocks is output.

Association with the safety program

In the "General information" section of the safety summary, check whether the Collective F-Signature corresponds to the Collective F-Signature of the safety program to be accepted in the work area of the *Safety Administration Editor* under "General". If they are not the same, then the summary and safety program do not match.

11.4 Compliance of the system library elements used in the safety program with Annex 1 of the Report for the TÜV certificate

Introduction

STEP 7 Safety contains LAD/FBD instructions for programming of your safety program as well as F-system blocks for creating an executable safety program that have been created and tested by SIEMENS and certified by TÜV. The F-system blocks used are automatically inserted by the F-system based on the set safety system version (see section "Settings" area (Page 80)).
To allow you to check whether the used versioned LAD/FBD instructions and F-system blocks correspond to Annex 1 of the Report for the TÜV certificate and to the versions you intend to use, these are listed in the safety summary.

Procedure

To check, download the current Annex 1 of the report for the TÜV certificate "SIMATIC Safety" from the Internet (http://support.automation.siemens.com/WW/view/en/49368678/134200).
Proceed as follows for the check:

WARNING

- (S7-1200, S7-1500) The versions of the versioned LAD/FBD instructions listed in the safety summary in the section "System library elements used in safety program" must correspond to the versions in Annex 1 of the Report for the TÜV Certificate.
- (S7-300, S7-400) The versions, signatures and initial value signatures of the versioned LAD/FBD instructions and F-system blocks listed in the safety summary in the section "System library elements used in safety program" must correspond to the versions, signatures and initial value signatures in Annex 1 of the Report for the TÜV Certificate.
- The versions of the versioned LAD/FBD instructions listed in the safety summary must meet the safety requirements of your application.

  Keep in mind possible differences in functionality of different versions specified in the section for the respective instruction.
- The safety system version listed in the safety summary under "Safety program settings" must match the versions in Annex 1 of the Report for the TÜV Certificate. *(S054)*

In case of discrepancies, recheck whether you have the correct versions.
(S7-300 / 400) Differences can also arise when there are F-blocks / instructions in your safety program that are not used.

11.5 Compliance of the know-how protected F-blocks used in the safety program with their safety documentation.

If you use know-how protected F-blocks for the programming of your safety program (e.g. from libraries), the source code for these is not printed in the safety summary.

Therefore, the author of the know-how protected F-block must already carry out acceptance of the F-block and provide the following information:

S7-300/400 F-CPUs

- Signature and initial value signature of the know-how protected F-block
- Versions of all the used versioned LAD/FBD instructions
- Signatures and initial value signatures of all called F-blocks
- Signatures of all F-DBs accessed by the fail-safe block to be reused.

When performing a system acceptance, you have to carry out the following checks using the safety summary:

- The signature and initial value signature of each know-how protected F-block listed in the safety summary in the section "F-blocks in the safety program" must be identical with the signature and initial value signature documented by the author.
- The versions of the versioned LAD/FBD instructions listed in the safety summary in the section "System library elements used in safety program" must correspond to the versions of each know-how protected F-block documented by the author or must be functionally identical with them.
- The signatures and initial value signatures of the F-blocks called in each know-how protected F-block listed in the safety summary in the section "F-blocks in the safety program" must be identical with the signatures and initial value signatures (of the called F-blocks) documented by the author.

In case of differences, set the documented (or functionally identical) versions and use the F-blocks with the documented signatures and initial value signatures. If the version conflicts cannot be eliminated due to other dependencies, contact the author of the know-how protected block in order to obtain a compatible approved version.

S7-1200/1500 F-CPUs

- Signature of the know-how protected F-block
- Safety system version that was set while setting up the know-how protection
- Versions of all the used versioned LAD/FBD instructions
- Signatures of all called F-FBs/F-FCs in the know-how protected F-block.
- Signatures of all F-DBs accessed by the know-how protected F-block.

When performing a system acceptance, you have to carry out the following checks using the safety summary:

- The signature of each know-how protected F-block listed in the safety summary in the section "Know-how protected F-blocks in the safety program" must be identical with the signature documented by the author.
- The safety system version of each know-how protected F-block listed in the safety summary under "Know-how protected F-blocks in the safety program" must match one of the versions listed in Annex 1 of the Report for the TÜV Certificate.

- The versions of the versioned LAD/FBD instructions of each know-how protected F-block listed in the safety summary in the section "Know-how protected F-blocks in the safety program" must correspond to the versions documented by the author or must be functionally identical with them.
- The signatures of the F-blocks called in each know-how protected F-block listed in the safety summary in the section "Know-how protected F-blocks in the safety program" must correspond to the signatures (of the called F-blocks) documented by the author.

In case of differences, set the documented (or functionally identical) versions and use the F-blocks with the documented signatures. If the version conflicts cannot be eliminated due to other dependencies, contact the author of the know-how protected block in order to obtain a compatible approved version.

11.6 Completeness and correctness of the hardware configuration

Introduction

The hardware configuration is an essential component of the project to be accepted. With the configuration of the hardware, you have set properties that can influence the safety of signals. You must document these settings with the safety summary to prove that you fulfill the safety requirements for your application.
The section "Hardware configuration of F-I/O" is available in the safety summary for this. This section consists of several tables:

- A table with information about the F-CPU and the ranges of F-destination addresses used and of the "Central F-source address" of the F-CPU.
- Overview tables with the F-I/O used
- A table for each F-I/O with information about the F-I/O and all parameters of the F-I/O with the configured values.

Because the user administration of the web server is also part of the hardware configuration, the assignment of the "F-Admin" right must be checked. You can only check the assignment of the "F-Admin" right in the *Safety Administration Editor* in the "Web server F-admins" area.

NOTE

Note that you will find F-I/O that you address via safety-related I-slave-slave communication in the safety summary of the I-slave F-CPU and not in the F-CPU's safety summary of the assigned DP master.

The safety summary of the F-CPU of the DP master includes a note for this F-I/O in the overview table indicating that the F-I/O is not assigned to this F-CPU.

NOTE

When using shared devices:

F-I/O that you address in a shared device can be found in the safety summary of the F-CPU of the IO controller to which it is assigned.

The safety summary of the F-CPUs of the other IO controllers between which the shared device is divided, includes a note in the overview table for this F-I/O that it is not assigned to this F-CPU.

Procedure for checking that the hardware configuration is complete

Ensure that all configured F-I/O are included in the safety summary. Also make sure that there is no F-I/O that you have not configured as belonging to this F-CPU.

NOTE

If configuration control (option handling) is used, the safety summary must contain all the F-IOs of the maximum configuration. The following checks are to be carried out for al the F-I/Os of the maximum configuration.

Procedure for checking the correctness of the hardware configuration using the safety summary

To check the hardware configuration for correctness, proceed as follows:

1. Check in the "Hardware configuration of F-IO" section to verify the uniqueness of the PROFIsafe addresses.
   See sections PROFIsafe addresses for F-I/O of PROFIsafe address type 1 (Page 61) or PROFIsafe addresses for F-I/O of PROFIsafe address type 2 (Page 62), Peculiarities when configuring fail-safe GSD based DP slaves and fail-safe GSD based I/O devices (Page 69) and Recommendation for PROFIsafe address assignment (Page 57).
   - Check if the "Central F-source address" parameter of the individual F-CPUs differs network-wide. F-CPUs to which solely F-IOs of the PROFIsafe address type 1 are assigned do not have to be considered during this check.
   - For F-I/Os of PROFIsafe address type 1 check whether the F-destination addresses comply with the following warning:

⚠ WARNING

F-I/Os of PROFIsafe address type 1 are uniquely addressed by their F-destination address (e.g. with the switch setting on the address switch).

The F-destination address (and therefore also the switch setting on the address switch) of the F-I/O must be unique network-wide* and CPU-wide**/*** (system-wide) **for the entire** F-I/O. The F-I/O of PROFIsafe address type 2 must also be considered. *(S051)*

* A network consists of one or more subnets. "Network-wide" means beyond the boundaries of the subnet. In PROFIBUS, a network includes all the nodes accessible via PROFIBUS DP. In PROFINET IO, a network includes all nodes accessible via

RT_Class_1/2/3 (Ethernet/WLAN/Bluetooth, Layer 2) and if applicable RT_Class_UDP (IP, Layer 3).
** "CPU-wide" means all F-I/Os assigned to an F-CPU: Central F-I/O of this F-CPU as well as F-I/Os for which the F-CPU is DP master/IO controller and assigned F-I/O in a shared device. An F-I/O that is addressed using I-slave-slave communication is assigned to the F-CPU of the I-slave and not to the F-CPU of the DP master / IO controller.
*** With a redundant S7-1500HF system, both F-CPUs of the redundant S7-1500HF system are to be regarded as one F-CPU with regard to the PROFIsafe addresses. Therefore, the "Central F-source address" is set identically by the system for both F-CPUs.

NOTE

For more information on the assignment of PROFIsafe addresses that are unique for the CPU and across the network, see this FAQ (https://support.industry.siemens.com/cs/ww/en/view/109740240).

– For F-I/Os of PROFIsafe address type 2 check whether the F-destination addresses comply with the following warning:

WARNING

F-I/O of PROFIsafe address type 2 is uniquely addressed using a combination of F-source address ("Central F-source address" parameter of the assigned F-CPU) and F-destination address.

The combination of F-source address and F-destination address for each F-I/O must be unique network-wide* and CPU-wide**/*** (system-wide). In addition, the F-destination address must not be occupied by F-I/O of PROFIsafe address type 1.

To ensure that addresses are unique across F-CPUs for supported configurations (Page 58), you need to ensure that the "Central F-source address" parameter of all F-CPUs is unique network-wide*. This is achieved through different settings for the "Central F-source address" parameter of the F-CPUs. *(S052)*

* A network consists of one or more subnets. "Network-wide" means beyond the boundaries of the subnet. In PROFIBUS, a network includes all the nodes accessible via PROFIBUS DP. In PROFINET IO, a network includes all nodes accessible via RT_Class_1/2/3 (Ethernet/WLAN/Bluetooth, Layer 2) and if applicable RT_Class_UDP (IP, Layer 3).
** "CPU-wide" means all F-I/Os assigned to an F-CPU: Central F-I/O of this F-CPU as well as F-I/Os for which the F-CPU is DP master/IO controller and assigned F-I/O in a shared device. An F-I/O that is addressed using I-slave-slave communication is assigned to the F-CPU of the I-slave and not to the F-CPU of the DP master / IO controller.

*** With a redundant S7-1500HF system, both F-CPUs of the redundant S7-1500HF system are to be regarded as one F-CPU with regard to the PROFIsafe addresses. Therefore, the "Central F-source address" is set identically by the system for both F-CPUs.

NOTE

For more information on the assignment of PROFIsafe addresses that are unique for the CPU and across the network, see this FAQ (https://support.industry.siemens.com/cs/ww/en/view/109740240).

– Check whether the PROFIsafe addresses of fail-safe GSD based DP slaves / GSD based I/O devices comply with the following warning:

WARNING

Check the documentation for your fail-safe GSD based DP slaves / fail-safe GSD based I/O devices to find out the valid PROFIsafe address type. If you do not find the necessary information, assume PROFIsafe address type 1. Proceed as described under PROFIsafe addresses for F-I/O of PROFIsafe address type 1 (Page 61) or PROFIsafe addresses for F-I/O of PROFIsafe address type 2 (Page 62).

Set the F-source address for fail-safe GSD based DP slaves / fail-safe GSD based I/O devices according to the manufacturer's specifications. If the F-source address needs to correspond to the "Central F-source address" parameter of the F-CPU (PROFIsafe address type 2), you will find the latter in the "Properties" tab of the F-CPU. In this case, also check in the safety summary that the value of the F-CPU for the "Central F-source address" parameter matches the value of the F-source address of the fail-safe GSD based DP slave / fail-safe GSD based I/O device. *(S053)*

2. Check the safety-related parameters (including F-monitoring time or F_WD_Time) of all configured F-I/O.

   You can find these parameters in the "Hardware configuration of F-I/O" section in the detailed tables for the F-I/O.

   The table consists of two parts:

   – The left part contains the parameters which refer to the F-I/O itself ("Module data").
   – The right part contains the parameters of the individual channels ("Channel parameters")

   These parameters must be set as prescribed by the safety requirements of your application.

When using fail-safe GSD based DP slaves/GSD based I/O devices, note the relevant documents for the possible additional safety-related (technological) parameters.

NOTE

F-I/O that are to be assigned the same safety-related parameters (except for PROFIsafe addresses) can be copied during configuration. Except for the PROFIsafe addresses, you no longer have to check the safety-related parameters individually. It is sufficient to compare the "F-parameter signature (without addresses)" in the "Hardware configuration of the F-I/O" section in the overview table. This also applies to fail-safe GSD based DP slaves/GSD based I/O devices without i-parameters. For GSD based DP slaves/GSD based I/O devices with i-parameters, it might be that the "F-parameter signature (without addresses)" does not match, even though all safety-related parameters, except for the PROFIsafe addresses, do match. In this case, you need to compare all safety-related parameters.

Exception:

For F-I/Os that do not support the "RIOforFA-Safety" profile, you also need to compare the "Behavior after channel fault" parameter, if any, additionally to the "F-parameter signature (without addresses)".

3. Check whether the article numbers of the F-I/O in the safety summary correspond to the article numbers of the actual F-I/O in the system. If the article numbers are different, the existing F-I/O must be spare-part-compatible to the F-I/O listed in the safety summary.

4. For non-supported configuration, see Configurations supported by the SIMATIC Safety F-system (Page 58).

WARNING

Note the following when using configurations that are not included in supported configurations:

- Make sure that the F-I/O of this configuration appears in the safety summary and that an F-I/O DB has been created for it. Otherwise, you cannot use the F-I/O in this configuration. (Contact Customer Support.)
- For F-I/Os in the PROFINET IO environment**, you must check the PROFIsafe operating mode parameter (F_Par_Version) against the safety summary to make sure that it is correct. V2 mode must be set in the PROFINET IO environment. F-I/O which only support V1 mode must not be used in the PROFINET IO environment.
- You must ensure that the PROFIsafe address assignment is unique CPU-wide*/**** and network-wide***:
  - Check the correctness of the PROFIsafe addresses with the help of the safety summary.
  - Use the safety summary to check that the F-source address corresponds to the "Central F-source address" parameter of the F-CPU for F-I/O of PROFIsafe address type 2.
  - For F-I/O of PROFIsafe address type 1 or if you cannot set the F-source address in accordance with the "Central F-source address" parameter of the F-CPU, you will have to ensure the uniqueness of the PROFIsafe address solely by assigning a unique F-destination address.

  You must check the uniqueness of the F-destination address individually for each F-I/O based on the safety summary in a configuration that is not supported.

  (S050)

* "CPU-wide" means all F-I/Os assigned to an F-CPU: Central F-I/O of this F-CPU as well as F-I/Os for which the F-CPU is DP master/IO controller and assigned F-I/O in a shared device. An F-I/O that is addressed using I-slave-slave communication is assigned to the F-CPU of the I-slave and not to the F-CPU of the DP master / IO controller.

** The F-I/O is located in the "PROFINET IO environment" if at least part of safety-related communication with the F-CPU takes place via PROFINET IO. If the F-I/O is connected via I-slave-slave communication, also keep in mind the communication line to the DP master/IO controller.

*** A network consists of one or more subnets. "Network-wide" means beyond the boundaries of the subnet. In PROFIBUS, a network includes all the nodes accessible via PROFIBUS DP. In PROFINET IO, a network includes all nodes accessible via RT_Class_1/2/3 (Ethernet/WLAN/Bluetooth, Layer 2) and if applicable RT_Class_UDP (IP, Layer 3).

**** With a redundant S7-1500HF system, both F-CPUs of the redundant S7-1500HF system are to be regarded as one F-CPU with regard to the PROFIsafe addresses. Therefore, the "Central F-source address" is set identically by the system for both F-CPUs.

NOTE

For more information on the assignment of PROFIsafe addresses that are unique for the CPU and across the network, see this FAQ (https://support.industry.siemens.com/cs/ww/en/view/109740240).

5. Check that only authorized persons have the "F-Admin" right in the *Safety Administration Editor* or in the standard printout of the project data.

WARNING

The "F-Admin" authorization for the web server without password protection ("Everybody" user) is only intended for test purposes, commissioning, etc. This means only when the system is not in productive operation. In this case, you must ensure the safety of the system through other organizational measures (Page 560).

Before the transition into productive operation, you must remove the "F-Admin" right for the "Everybody" user.

Only authorized personnel are permitted to have access to the password of the web server user with "F-Admin" right. After downloading the hardware configuration, check whether only permitted users of the web server have the "F-Admin" right on the F-CPU. To do so, use the online mode of the *Safety Administration Editor*.

Saving the login file and the password of the web server in the web browser is only permitted when usage by unauthorized persons is prevented through other organizational measures (Page 560).

If you use the ticket mechanism, handling of the tickets must be just as restrictive as handling of the password of the web server user with the "F-Admin" right. *(S064)*

See also

"Web server F-Admins" area (S7-1200, S7-1500) (Page 80)

11.7 Correctness and completeness of the communication configuration

Introduction

Safety-related communication is based on the mechanisms of the standard communication of *STEP 7*.

To ensure that errors which standard communication does not discover are detected, safety-related communication connections between F-CPUs are secured. Further parameters are required for this, which you have to document and check on acceptance.

For this purpose, the "Block parameters for safety-related CPU-CPU-communication" and "Overview of communication via Flexible F-Link" sections are available in the safety summary.

The section "Block parameters for safety-related CPU-CPU-communication" contains up to two tables (for communication via PROFIBUS DP or PROFINET IO and for communication via S7 connections). The section "Overview of communication via Flexible F-Link" contains a table with an overview of the connection configurations and a "Communication via Flexible F-Link for UDT" table for each used F-compliant PLC data type (UDT).

Not all safety-related communication is available for all F-CPUs. For more information, refer to the section "Safety-related communication (Page 176)".

NOTE

The statements made regarding communication via Flexible F-Link in this section also apply when this communication is used between F-runtime groups.

Procedure for checking for correctness of the communication configuration

Observe the following warning for safety-related communication with the SENDS7/RCVS7 instructions:

WARNING

The value of the respective F-communication ID (input R_ID; data type: DWORD) can be freely selected; however, it must be odd and unique for all safety-related communication connections network-wide* and CPU-wide. The value R_ID + 1 is internally assigned and must not be used.

You must supply inputs ID and R_ID with constant values when calling the instruction. Direct read or write access to the associated instance DB is not permitted in the safety program. *(S020)*

* A network consists of one or more subnets. "Network-wide" means beyond the boundaries of the subnet. In PROFIBUS, a network includes all nodes accessible via PROFIBUS DP. In PROFINET IO, a network includes all nodes accessible via RT_Class_1/2/3 (Ethernet/WLAN/Bluetooth, Layer 2) and if applicable RT_Class_UDP (IP, Layer 3).

Observe the following warning for safety-related communication with the SENDDP/RCVDP instructions:

WARNING

The value of the respective F-communication ID (input DP_DP_ID; data type: INT) can be freely selected**; however, it must be unique for all safety-related communication connections network-wide* and CPU-wide**** at all times. The uniqueness must be checked in the safety summary during acceptance of the safety program.

You must supply constant values*** to the inputs DP_DP_ID and LADDR when calling the instruction. Direct write accesses in the associated instance DB to DP_DP_ID and LADDR are not permitted in the safety program! *(S016)*

* A network consists of one or more subnets. "Network-wide" means beyond the boundaries of the subnet. In PROFIBUS, a network includes all the nodes accessible via PROFIBUS DP. In PROFINET IO, a network includes all the nodes accessible via RT_Class_1/2/3 (Ethernet/WLAN/Bluetooth, Layer 2) and if applicable RT_Class_UDP (IP, Layer 3).

** S7-1200/1500: As of version V3.0 of the SENDDP and RCVDP instructions, no connection is established at the DP_DP_ID input for a F-communication ID "0".
*** S7-1200/1500: As of version V3.0 of the SENDDP and RCVDP instructions, the DP_DP_ID input can also be supplied with variable values from a global F-DB. In this case as well you have to check during the acceptance of the safety program that the uniqueness is ensured *at every moment*, by checking the algorithm for the creation of the variable value accordingly. If you cannot ensure a unique F-communication ID during startup of the safety program, because it is only specified after startup of the safety program, you must ensure that the value at the DP_DP_ID input is "0" during this phase.
**** With a redundant S7-1500HF system, both F-CPUs of the redundant S7-1500HF system are to be regarded as one F-CPU with regard to the DP_DP_ID.

Observe the following warnings for communication via Flexible F-Link:

WARNING

When a new Flexible F-Link communication is created in the Safety Administration Editor, a unique F-communication UUID for the communication is provided by the system. By copying communications in the Safety Administration Editor within the parameterization table or when copying to another F-CPU, the F-communication UUIDs are not regenerated and are therefore not unique anymore. If the copy is used to configure a new communication relationship, you yourself must ensure the uniqueness. To do this select the affected UUIDs and regenerate via the "Generate UUID" context menu. The uniqueness must be checked in the safety summary during acceptance. *(S087)*

WARNING

During acceptance, use the safety summary to verify that the offsets of all elements of the F-compliant PLC data types (UDT) match for the send and receive data within the safety message frame. For this purpose, all members and addresses are listed in the safety summary per UDT. *(S088)*

11.8 Identity of online and offline program

Once you have checked all properties of the offline safety program you must ensure that the safety program is identical on the F-CPU on which it is supposed to be run.

WARNING

In a redundant S7-1500HF system, you must perform the verification of identity of the online and offline program in RUN-Redundant mode. In so doing, it is sufficient to perform the verification only for one S7-1500 HF-CPU. *(S098)*

1. Connect online with the F-CPU. If multiple F-CPUs can be reached over a network (e.g. Industrial Ethernet) by the programming device / PC, you have to ensure that you are connected with the correct F-CPU. For example with "Online & diagnostics" > "Online accesses " > "Flash LED".
2. Open the *Safety Administration Editor*.
3. Check whether the online and offline Collective F-Signatures match the Collective F-Signature from the safety summary.
4. Now check in the "General" area under "Safety program status" whether the safety programs are identical online and offline.
   Use the "Status" and "Version comparison" display to check which situation you are dealing with and, if necessary, execute the recommended measure:

Status	Version comparison	Statement	Measure
	not relevant	The safety programs are different.	– Ensure that you are connected with the desired F-CPU. – Download the safety program to the F-CPU.
		The safety programs are identical but different versions of F-blocks are used.	The safety program must be downloaded to the F-CPU for the latest versions to become effective.
		The safety programs are identical.	None

Keep in mind that only a change comparison will provide reliable information as to whether the safety programs are identical. The display of signatures is used for quick identification of changes.

11.9 Other characteristics

Introduction

In addition, you must check a few more characteristics that are also relevant for the acceptance of the project.

Plausibility check for data transfer from the standard program to the safety program

Check to determine whether a plausibility check was programmed for all data transferred from the standard user program to the safety program. For this purpose, the "Data from the standard user program" section lists all tags of the standard user program that you are reading in the safety program. Tags of the standard user program that you are writing in the safety program are not listed here because a plausibility check is not required for them. For more information, refer to the S015 warning in section "Data Transfer from Standard User Program to Safety Program (Page 173)".

Multiple call of an F-FB or an instruction with the same instance (single instance or multi-instance)

Check whether you used a separate instance for each call of an F-FB or an instruction.

Multiple calls with the same instance are usually not worthwhile and require special care:

For example, if you explicitly transfer an operand (for example, as a constant) in the 1st call to the instance, and there is no explicit transfer in the 2nd call (so that the start value is valid), you must verify which value in the 2nd call is valid for this operand. Also consider startup processes in this regard; higher priority OBs or similar in which the 1st call may be present.

Checking the program version

Check whether the version of *STEP 7 Safety* used to create the summary (in the footer of the printout) is as least as high as the version used to compile the safety program. The latter version can be found in the "General information" section of the safety summary under "Used Versions". Both versions must be listed in Annex 1 of the Report for the TÜV certificate.

Ability to disable safety mode

Make sure that safety mode cannot be disabled. For information about this, refer to section "General information" under "Safety program settings". This setting ensures that the safety mode of the safety program cannot be disabled inadvertently. For more information, refer to the S027 warning in section "Disabling safety mode (Page 310)".

Safety system version with an S7-1500 HF-CPU

Check whether the safety system version is V2.4 or higher when using an S7-1500 HF-CPU.

For information about this, refer to section "General information" under "Safety program settings".

Access protection

Check in the "General information" section under "Access protection" to determine whether the setting for access protection is permitted. Note the following warning.

Otherwise, the project must not be accepted, because the safety program in the F-CPU is not protected against unauthorized accesses.

WARNING

(S7-300, S7-400) When the standard user program is changed in productive operation, access permission must not be granted by the CPU password, as it would also allow changes to the safety program. To rule out this possibility, you must configure the protection level "Write protection for fail-safe blocks" and configure a password for the F-CPU. If only one person is authorized to change the standard user program and the safety program, the protection level "Write protection" or "Read/write protection" should be configured so that other persons have only limited access or no access at all to the entire user program (standard and safety programs). *(S001)*

WARNING

(S7-1200, S7-1500) In productive operation, the safety-related project data must be protected by a password. For this purpose, configure at most the access level "Full access (no protection)" and assign a password under "Full access incl. fail-safe (no protection)". This access level only allows full access to the standard user program, not to F-blocks.

If you select a lower access level, for example to protect the standard user program, you must assign an additional password for "Full access (no protection)".

Assign different passwords for the individual access levels. *(S041)*

11.10 Acceptance of Changes

Introduction

In general, you can adopt the same approach for the acceptance of changes as the initial acceptance (see Overview of System Acceptance (Page 329)).

You have to check the entire safety-related project data (safety program and safety-related hardware configuration) for changes and determine the safety-related project data to be validated and approved as part of an impact analysis.

WARNING

In the case of acceptance of changes, you must check whether the intended changes were made correctly and completely.

You must also check whether unintentional changes may have been made at another location (for example, F-I/O or instructions that were added). *(S072)*

To avoid the acceptance of the entire system in case of negligible changes, *STEP 7 Safety* helps you to identify those parts of your safety program that have changed.

To accept changes, proceed as follows:

1. Localize the changes in the safety-related project data:
   - changed or newly added F-blocks
   - changed or newly added instructions and F-system blocks
   - safety-related parameters of the changed or newly added F-I/O
   - structure of the safety-related hardware configuration (e.g. slot positions or start addresses of the F-I/Os)
   - changed safety-related communication via Flexible F-Link
2. From these changes, determine the safety-related project data affected by them (impact analysis). This can also be safety-related project data that has not been changed.
3. Then you carry out a validation and acceptance of the safety-related project data affected by the changes.

NOTE

Acceptance of changes is not possible after CPU migration.

WARNING

When you make changes in which the assignment of input/output addresses and wiring can change, then you must perform a wiring test (Page 313).

Examples for such changes are:

- Adding F-I/O
- Changing the start address of F-I/O
- Changing the slot position of F-I/O
- Changing
  - the rack
  - the slave/device address
  - the PROFIBUS DP/PROFINET IO subnet
  - the IP address
  - the device name

(S071)

Localization of changes in the safety-related project data

To be able to localize relevant changes, you need two TIA projects:

- Reference project: Contains the initially accepted project data. They are the starting point for the upcoming comparison.
- Project to be accepted: Contains the current safety-related project data. It is the result of the reference project and the changes made in it.

To localize changes you have to compare the safety-related project data from the reference project with the safety-related data of the project to be accepted.

The Collective F-Signature is a quick first step to determine whether relevant changes have been made. If the signature has changed, relevant changes are present in the safety-related project data.
(S7-1200, S7-1500) You can now use the Collective F-SW-Signature, the Collective F-HW-Signature and the F-Communication Address Signature to narrow down whether these changes are contained in the safety program (Collective F-SW-Signature changed) and/or in the safety-related hardware configuration (Collective F-HW-Signature) and/or in the communication data (with Flexible F-Link, F-Communication Address Signature).

Localization of changes in the safety program

(S7-1200, S7-1500) A quick possibility to detect changes in the safety program is the comparison of the Collective F-SW-Signature of the safety-related project data in the reference project with the Collective F-SW-Signature in the safety-related project data in the project to be accepted. If they differ from each other, this means that there are changes in the safety program which need to be validated and, if necessary, accepted.

To localize changes in the safety program, perform an offline-offline comparison between the safety program to be accepted of the project to be accepted and the safety program of the reference project (see Comparing Safety Programs (Page 303)). Use filter setting "Compare only F-blocks relevant for certification". This limits the output of the comparison to the relevant F-blocks.

WARNING

Make sure that the comparison criterion "Safety" is enabled so that the criteria relevant for an acceptance of changes are taken into consideration in the comparison. *(S069)*

By disabling the remaining comparison criteria, you can deselect those differences that are irrelevant for the acceptance of changes (e.g. time stamp).
The status of the comparison helps you to identify which F-blocks were changed.
(S7-1200, S7-1500) As an alternative to the offline-offline comparison, you can localize the changes in the safety program by comparing the group signatures. Use the safety summaries of the reference project and the project to be approved for this purpose. Groups with an unchanged signature indicate that no F-blocks in them or lower-level groups have been changed. In groups with a changed group signature, you can localize the changed F-blocks using their changed block signature. Note that the assignment of fail-safe blocks to groups is not recorded by the Collective F-Signature.

Localization of changes in the safety-related hardware configuration

(S7-1200, S7-1500) A quick possibility to detect changes in the safety-related hardware configuration is the comparison of the Collective F-HW-Signature of the safety-related project data in the reference project with the Collective F-HW-Signature of the safety-related project data in the project to be accepted. If they differ from each other, this means that there are changes in the safety-related hardware configuration which need to be validated and, if necessary, accepted.
(S7-1200, S7-1500) If the Collective F-HW-Signature has changed and all F-IOs are unchanged, this indicates that safety-related parameters of the F-CPU have changed, or that

the structure of the safety-related hardware configuration has changed, for example, slot positions.

There are two possible ways for localizing safety-related changes in the safety-related hardware configuration:

- Localization by offline-offline comparison
- Localization by comparing two safety summaries

How to do this is described below.

Localization by offline-offline comparison

The reference project and the project to be accepted must be consistent and compiled for a comparison. To perform the comparison, see Comparing Safety Programs (Page 303).

1. Navigate in the comparison result to the "System blocks > STEP 7 Safety > F-I/O DBs" folder. All data blocks listed in this folder are F-I/O-DBs and are each assigned to an F-I/O.
   - If the F-I/O-DBs in the comparison result are identical, this means that the safety-related configuration of the assigned F-I/O was also not changed. Standard-parameters might have changed.
   - If the F-I/O-DBs in the comparison result are not identical, this means that the safety-related configuration of the assigned F-I/O was also changed.
   - If F-IO DBs in the comparison result are marked as "not existing", associated F-IOs might have been deleted or added or the name or start addresses of the F-IOs have been changed. In this case you can find the assignment of an F-I/O DB to a specific F-I/O in the safety summary under "Hardware configuration of F-I/O".
2. If you have found changed F-I/O, you can check the changed parameters in the safety summary as described below.

Localization by comparing two safety summaries

Carry out a comparison based on two safety summaries as follows:

1. In the section "Hardware configuration of the F-I/O" compare the start addresses (I/O addresses), the parameter "Behavior after channel fault" and the slot of the F-I/O.
2. In the "Hardware configuration of F-I/O" section in the overview table of the F-I/Os used, compare the parameter CRCs of the F-I/O with those in the safety summary of the corresponding F-CPU from the reference project.
   - If the "Parameter signature (without addresses)" is different for an F-I/O, this indicates the existence of a change in the safety-related parameters of the F-I/O.
     In this case, check the corresponding detail table of the safety-related parameters of the F-I/O and verify the uniqueness of the PROFIsafe addresses.
   - If the "Parameter signature (w/o addresses)" is identical, only the PROFIsafe addresses have been changed.
     In this case it is sufficient to verify the uniqueness of the PROFIsafe addresses.

Check as described in section "Completeness and correctness of the hardware configuration (Page 334)".

(S7-1200, S7-1500) Detecting changes in the communication with Flexible F-Link

A quick possibility to detect changes in the configuration of the communication with Flexible F-Link is the comparison of the F-communication address signature of the safety-related project data in the reference project with the F-communication address signature of the safety-related project data in the project to be accepted. If they differ from each other, this

means that there are changes in the configuration of the communication (UUID only) with Flexible F-Link that must be validated and, if necessary, accepted. Other communication parameters such as timeout or transmission direction are covered by the Collective F-SW-Signature (see "Detection of changes in the safety program" above).

To localize changes in the configuration of the communication with Flexible F-Link, compare the table "Overview of communications via Flexible F-Link" of the reference project in the respective safety summary with the one of the project to be accepted.

See also

Accessing tags of the F-I/O DB (Page 153)

Operation and Maintenance 12

12.1 Notes on startup of the F-system

In "STARTUP" mode of an F-CPU, the startup of the standard user program occurs as usual.
In the safety program, all DB contents of the F-DBs are generally reset to their start values from the load memory.
An automatic reintegration of the F-I/O (Page 153) takes place starting from the 2nd cycle of the F-runtime group.

NOTE

Resetting the F-DBs to start values from the load memory also triggers the following:

- Any stored error information is reset.
- Edge memory bits in instructions or F-FBs with edge evaluations (e.g. TON instruction) are reset, so that for a signal that already has the "TRUE" state in the 1st cycle of an F-runtime group, a positive signal edge is detected immediately at a query for positive signal edge.

12.2 Notes on Safety Mode of the Safety Program

Introduction

Pay attention to the following important notes on safety mode of the safety program.

Use of simulation devices/simulation programs

WARNING

Use of simulation devices/simulation programs in plants

If you operate simulation devices or simulation programs that generate safety message frames, for example, based on PROFIsafe, and make them available to the SIMATIC Safety F-system via the bus system (such as PROFIBUS DP or PROFINET IO), you must ensure the safety of the plant through organizational measures (Page 560).

Note, for example, that a protocol analyzer is not permitted to perform any function that reproduces recorded message frame sequences with correct time behavior.

- **S7-PLCSIM version < 15.1 or S7-PLCSIM Advanced version < 2.0 SP1 and Safety System version < V2.2**

  If you use *S7-PLCSIM* (Page 308) to simulate safety programs, the measures mentioned above are not necessary because S7-PLCSIM cannot establish an online connection to a real component.

- **S7-PLCSIM version ≥ 15.1 or S7-PLCSIM Advanced version ≥ 2.0 SP1 or Safety System version ≥ V2.2**

  You must ensure the safety of the plant through organizational measures.

  In addition, the loading of the safety-related project data with Safety System version V2.2 and higher onto an *S7-PLCSIM* is only permissible as of *S7-PLCSIM* V15.1 or *S7-PLCSIM Advanced* V2.0 SP1 and higher.

(S030)

NOTE

For an *S7-PLCSIM* before V15.1 or *S7-PLCSIM Advanced* before V2.0 SP1 and a Safety system version V2.2 and higher, the safety program changes to STOP. The cause of the diagnostics event is entered in the diagnostics buffer of the F-CPU.

Switching F-CPU to STOP mode

WARNING

STOP, for example, via programming device/PC, mode switch, communication function or "STP" instruction

Initiating STOP, for example, by means of programming device/PC operation, mode switch, communication function or "STP" instruction, as well as maintaining the STOP state is not safety-related. This STOP state can be easily (and unintentionally) revoked, for example, by programming device/PC operation.

When an F-CPU is switched from STOP to RUN mode, the standard user program starts up in the usual way. When the safety program is started, all DB contents of the F-DBs are generally reset to their start values from load memory. This means that saved error information is lost. The F-system automatically reintegrates the F-I/O.

If your process does not allow such a startup, you must program a restart/startup protection in the safety program: The output of process values must be blocked until a user acknowledgment is made (see "Implementation of user acknowledgment"). This user acknowledgment must not take place until it is possible to safely output process values and errors have been eliminated (see Programming startup protection (Page 137)). *(S031)*

CRC error in F-I/O or safety-related communication

NOTE

CRC error in F-I/O or safety-related communication

If you observe that an F-CPU requests manual acknowledgement of a CRC error more than once within the space of 100 hours, and this occurs repeatedly, check whether the network technology installation guidelines have been followed.

CRC errors are present:

- For F-I/O access, the ACK_REQ tag of the F-I/O DB is set and the DIAG tag of the F-I/O DB indicates CRC errors with bit 2 or bit 6.
- For safety-related communication with the SENDDP/RCVDP instructions, the ACK_REQ output of the RCVDP instruction is set and the DIAG output of the SENDDP/RCVDP instruction indicates CRC errors with bit 6.
- For safety-related communication with the SENDS7/RCVS7 instructions, the ACK_REQ output of the RCVS7 instruction is set and the DIAG output of the SENDS7/RCVS7 instruction indicates CRC errors with bit 6.
- For communication with Flexible F-Link, the ACK_REQ tag of the F-communication DB is set for receiving and the DIAG tag of the F-communication DB for sending/receiving indicates CRC errors with bit 6.

  or
- A CRC error is entered in the diagnostic buffer of the F-CPU.

In this case, the failure probability values (https://support.industry.siemens.com/cs/ww/en/view/109481784) (PFD_{avg}/PFH) for safety-related communication no longer apply.

Information on installation guidelines for PROFINET and PROFIBUS can be found in:

- PROFIBUS Installation Guidelines (www.profibus.com/PBInstallationGuide)
- PROFIBUS Interconnection Technology (http://www.profibus.com/nc/downloads/downloads/profibus-interconnection-technology/display/)
- PROFINET Installation Guidelines (www.profibus.com/PNInstallationGuide)
- PROFINET Cabling and Interconnection Technology (http://www.profibus.com/nc/downloads/downloads/profinet-cabling-and-interconnection-technology/display/)
- PROFIsafe Environment Requirements (www.profibus.com/PROFIsafeRequirements)

When your review indicates that the configuration guidelines for PROFIBUS and PROFINET have been met, contact Customer Support.

12.3 Replacing Software and Hardware Components

Introduction

Proceed as in the standard. Also note the following sections.

Replacement of software components

When replacing software components on your programming device or PC, e.g. with a new version of *STEP 7*, you must adhere to the information regarding upward and downward compatibility in the documentation and readme files for these products (e.g. *STEP 7 Safety*).

When replacing *STEP 7 Safety*, check whether the version of *STEP 7 Safety* is listed in Annex 1 of the Report for the TÜV certificate.

Replacement of hardware components

Hardware components for SIMATIC Safety (F-CPU, F-I/O, batteries, etc.) are replaced in the same way as in standard automation systems.

If you replace an F-I/O with an F-I/O with a newer article number, which thus occupies more I/O addresses, the now larger I/O address range may already be occupied by another F-I/O.

For example, if you replace an F module F-DI 8x24VDC HF with part number 6ES7136-6BA00-0CA0 by an F module with 6ES7136-6BA01-0CA0. The end address of the input and output addresses is increased by 1 byte each by the exchange. In this case, *STEP 7* assigns a new free I/O address range to the F module. The corresponding tag in the tag table must then be manually adapted to the new I/O addresses.

Replacement of an HF-CPU in the redundant S7-1500 HF system

Note the following warning when replacing an HF-CPU of a redundant S7-1500HF system:

WARNING

If you replace an F-CPU of a redundant S7-1500HF system (e.g. due to CPU failure, defect, etc.), you must put into operation the replacement F-CPU with the SIMATIC Memory Card of the previous F-CPU or with an empty SIMATIC Memory Card. This ensures that after successful SYNCUP of the replacement F-CPU, only the previous safety program is executed. *(S094)*

Replacement of S7-1500 F Software Controllers

WARNING

After replacing a CPU module (e.g. new PC with data storage medium of old PC), replacement of the data storage medium (e.g. data storage medium with safety program 1 is replaced with data storage medium with safety program 2) or an UEFI update, you must use the Display to check if the correct Collective F-Signature is displayed or carry out a program identification. *(S066)*

Removing and inserting F-I/O during operation

If removing and inserting is possible for standard I/O during operation, it is also possible for the respective F-I/O. However, be aware that replacing an F-I/O module during operation can cause a communication error in the F-CPU.

You must acknowledge the communication error in your safety program in the ACK_REI tag of the F-I/O DB (Page 145) or, alternatively, by using the "ACK_GL (Page 443)" instruction. Without an acknowledgment, the F-I/O will remain passivated.

CPU firmware update

Check of the CPU operating system for F-approval: When using a new CPU operating system (firmware update), you must check to see if the CPU operating system you are using is approved for use in an F-system.

The minimum CPU operating system versions with guaranteed F-capability are specified in the appendix of the Certificate. This information and any notes on the new CPU operating system must be taken into account.

Firmware update for interface module

When using a new operating system for an interface module, e.g. IM 151-1 HIGH FEATURE ET 200S (firmware update), you must observe the following:

If you have selected the "Activate firmware after update" option for the firmware update (see *Help on STEP 7*, "Online & Diagnostics"), the IM will be automatically reset following a successful download operation and will then run on the new operating system. Note that the firmware update for interface modules during operation generates a communication error in the F-CPU.

You must acknowledge the communication error in your safety program in the ACK_REI tag of the F-I/O DB (Page 145) or, alternatively, by using the "ACK_GL (Page 443)" instruction. Without an acknowledgment, the F-I/O will remain passivated.

Preventive maintenance (proof test)

Proof test for complex electronic components generally means replacement with new, unused components.

PFD_{avg} and PFH values for S7-300/400 F-CPUs and F-I/O

You will find a list of the failure probability values (PFD_{avg}, PFH values) for components that can be used in SIMATIC Safety on the Internet (https://support.industry.siemens.com/cs/ww/en/view/109481784).

PFD_{avg} and PFH values for S7-1200/1500 F-CPUs

Below are the probability of failure values (PFD_{avg}, PFH values) for S7-1200/1500 F-CPUs with a service life of 20 years and an mission time of 100 hours:

Low demand mode **low demand mode** **According to IEC 61508:2010:** **PFD_{avg} = Average probability of dangerous failure on demand**	**High demand or continuous mode** **high demand/continuous mode** **According to IEC 61508:2010:** **PFH = Average frequency of a dangerous failure [h^{-1}]**
< 2E-05	< 1E-09 up to an operating altitude of 3 000 m or < 2E-09 at an operating altitude greater than 3 000 m up to 5 000 m

You can find more information on the operating conditions of the F-CPUs in the PI F-CPUs (https://support.industry.siemens.com/cs/ww/en/view/109478599), and in the PI of the PFD_{avg}, PFH values (https://support.industry.siemens.com/cs/ww/en/view/109481784).

PFD_{avg} and PFH values for safety-related communication

Below you will find the failure probability values (PFD_{avg}, PFH values) for safety-related communication:

Low demand mode **low demand mode** **According to IEC 61508:2010:** **PFD_{avg} = Average probability of dangerous failure on demand**	**High demand or continuous mode** **high demand/continuous mode** **According to IEC 61508:2010:** **PFH = Average frequency of a dangerous failure [h^{-1}]**
< 1E-05*	< 1E-09*

*** Note on S7-300/400 F-CPUs:**
The PFH value is valid under the assumption that a maximum of 100 F-I/Os are involved in a safety function. If you use more than 100 F-I/Os, you have to also add 4E-12 per F-I/O for the safety function.
The PFD_{avg} value is valid for a mission time of 20 years and under the assumption, that a maximum of 25 F-I/Os are involved in a safety function. If more than 25 F-I/Os are used, you need to add 3.5E-7 per F-I/O for this safety function.

12.4 Guide to diagnostics (S7-300, S7-400)

Introduction

Here you find a compilation of diagnostic capabilities that can be evaluated for your system when an error occurs. Most of the diagnostic capabilities are the same as those in standard automation systems. The sequence of steps represents a recommendation.

Steps for evaluating diagnostic capabilities

The following table shows the steps you take to evaluate diagnostic capabilities.

Step	Procedure	Reference
1	**Evaluate LEDs on the hardware (F-CPU, F-I/O):** • BUSF LED on the F-CPU: Flashes when a communication error occurs on PROFIBUS DP/PROFINET IO; On if a programming error occurs when OB 85 and OB 121 are programmed (e.g. instance DB is not loaded) • STOP LED on the F-CPU: illuminates when the F-CPU is in STOP mode • Fault LEDs on the F-I/O: e.g. SF-LED (group error LED) on if any fault occurs in the individual F-I/O	*Manuals for F-CPU and F-I/O*
2	**Evaluate diagnostic buffer of the modules:** You read the diagnostic buffer of a module (F-CPU, F-I/O, CP) in its online and diagnostic view in the "Diagnostic buffer" group under the "Online & Diagnostics" folder.	*Help on STEP 7 and manuals for the F-CPU and F-I/O*
3	**Evaluate stacks of the F-CPU:** when the F-CPU is in STOP mode, read the following successively: • Block stack: Check whether STOP mode of the F-CPU was triggered by an F-block of the safety program • Interruption stack • Local data stack	*Help on STEP 7*
4	**Evaluate diagnostic tag of the F-I/O DB using testing and commissioning functions, by means of an operator control and monitoring system, or in the standard user program:** Evaluate the DIAG tag in the F-I/O DB	F-I/O access (Page 139)
5	**Evaluate diagnostic outputs of the instance DBs of instructions using testing and commissioning functions, using an operator control and monitoring system, or in the standard user program:** • Evaluate the following for MUTING, EV1oo2DI, TWO_H_EN, MUT_P, ESTOP1, FDBACK, SFDOOR in the assigned instance DB: – Output DIAG • Evaluate the following for SENDDP or RCVDP in the assigned instance DB: – Output RET_DPRD/RET_DPWR – Output DIAG • Evaluate the following for SENDS7 or RCVS7 in the assigned instance DB: – Output STAT_RCV – Output STAT_SND – Output DIAG	Instructions

Tip on RET_DPRD/RET_DPWR

The diagnostic information of the RET_DPRD/RET_DPWR outputs of the SENDDP or RCVDP instructions corresponds to the diagnostic information of the RETVAL return value of the "DPRD_DAT" and "DPWR_DAT" instructions. You can find the description in the help on *STEP 7* for the "DPRD_DAT" and "DPWR_DAT" instructions.

Tip: STAT_RCV and STAT_SND

The diagnostic information of the STAT_RCV output of the SENDS7 or RCVS7 instructions corresponds to the diagnostic information of the STATUS output of the "URCV" instruction.

The diagnostic information of the STAT_SND output of the SENDS7 or RCVS7 instructions corresponds to the diagnostic information of the STATUS output of the "USEND" instruction. You can find the description in the help on *STEP 7* for the instruction "UCRV" or "USEND" .

12.5 Guide to diagnostics (S7-1500)

Detailed information on diagnostics for an S7-1500 F-CPU can be found in the Diagnostics (http://support.automation.siemens.com/WW/view/en/59192926) function manual.

12.6 Guide to diagnostics (S7-1200)

Detailed information on diagnostics for an S7-1200 F-CPU can be found in the S7-1200 Functional Safety manual (http://support.automation.siemens.com/WW/view/en/104547552).

STEP 7 Safety V18 instructions 13

Overview of instructions for the safety program

When programming an F-block, you can find all instructions available for programming an F-block in LAD or FBD with the configured F-CPU in the "Instructions" task card.

In addition to the instructions that are familiar to you from programming a standard block, there are also special safety functions, e.g., for two-hand monitoring, discrepancy analysis, muting, emergency STOP/emergency OFF, safety door monitoring, and feedback monitoring and instructions for safety-related CPU-CPU communication.

Note the following

NOTE

Enable input EN and enable output ENO cannot be connected.

Exception:

(S7-1200, S7-1500) With the following instructions you can program overflow detection by connecting the enable output ENO:

- ADD: Add (STEP 7 Safety V18) (Page 470)
- SUB: Subtract (STEP 7 Safety V18) (Page 472)
- MUL: Multiply (STEP 7 Safety V18) (Page 475)
- DIV: Divide (STEP 7 Safety V18) (Page 478)
- NEG: Create two's complement (STEP 7 Safety V18) (Page 481)
- ABS: Form absolute value (STEP 7 Safety V18) (S7-1200, S7-1500) (Page 484)
- CONVERT: Convert value (STEP 7 Safety V18) (Page 494)

13.1 General

13.1.1 LAD

13.1.1.1 New network (STEP 7 Safety V18)

Requirement

An F-block is open.

Procedure

To insert a new network, follow these steps:

1. Select the network after which you want to insert a new network.
2. Select the "Insert network" command in the shortcut menu.

NOTE

If you insert an element into the last empty network of the F-block in an LAD program, a new empty network is automatically inserted below it.

Result

A new empty network is inserted into the F-block.

13.1.1.2 Empty box (STEP 7 Safety V18)

Requirement

A network is available.

Procedure

To insert an LAD instruction into a network using an empty box, follow these steps:

1. Open the "Instructions" task card.
2. Navigate to "Basic instructions > General > Empty box".
3. Use a drag-and-drop operation to move the "Empty box" element to the desired place in the network.
4. Hover the cursor over the yellow triangle in the top right corner of the empty box.
   A drop-down list is displayed.
5. Select the required instruction from the drop-down list.

If the instruction acts as a function block (FB) within the system, the "Call options" dialog opens. In this dialog, you can create an instance data block for the function block, either as a single instance or, if necessary, multi-instance, in which data of the inserted instruction are stored. Once it is created, the new instance data block can be found in the "Program resources" folder in the project tree under "Program blocks > System blocks". If you have selected "multi-instance", you can find it in the block interface in the "Static" section.

Result

The empty box is changed to the appropriate instruction. Placeholders are inserted for the parameters.

13.1.1.3 Open branching (STEP 7 Safety V18)

Description

Use branches to program parallel connections with the Ladder Logic (LAD) programming language. Branches are inserted into the main current path. You can insert several contacts into the branch, thereby creating a parallel connection from series connections. You can program complex ladder diagrams in this way.

Requirement

- A network is available.
- The network contains elements.

Procedure

To insert a new branch in a network, follow these steps:

1. Open the "Instructions" task card.
2. Navigate to "Basic instructions > General > Open branch".
3. Use a drag-and-drop operation to move the element to the desired place in the network.
4. If you want to connect the new branch directly to the power rail, drag the element to the power rail.

Example

The following figure provides an example of how to use branches:

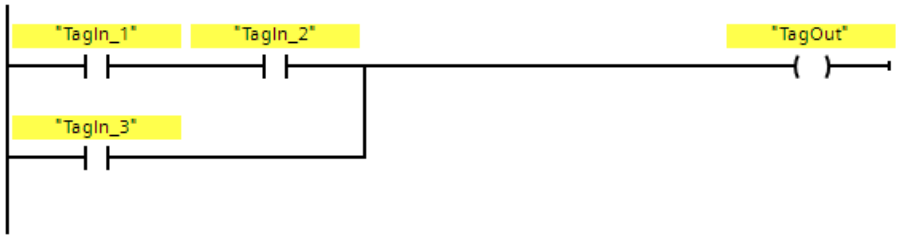

13.1.1.4 Close branching (STEP 7 Safety V18)

Description

Branches must be closed again at suitable places. If necessary, branches will be arranged so that they do not cross each other.

Requirement

A branch is available.

Procedure

To close an open branch, follow these steps:

1. Select the open branch.
2. Press and hold down the left mouse button.
   A dashed line will appear as soon as the cursor is moved.
3. Drag the dashed line to a suitable place on the network. Permissible connections are indicated by green lines.
4. Release the left mouse button.

Example

The figure below provides an example of how to use branches:

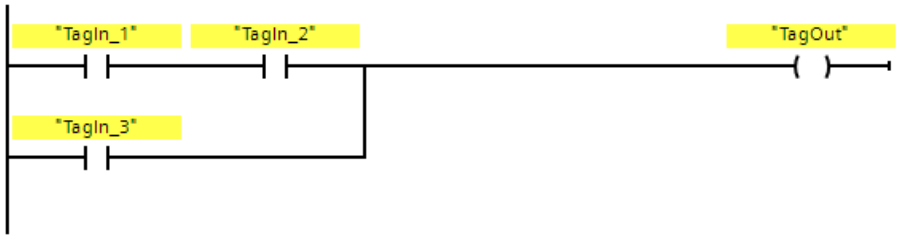

13.1.2 FBD

13.1.2.1 New network (STEP 7 Safety V18)

Requirement

An F-block is open.

Procedure

To insert a new network, follow these steps:

1. Select the network after which you want to insert a new network.
2. Select the "Insert network" command in the shortcut menu.

NOTE

If you insert an element into the last empty network of the F-block in an FBD program, a new empty network is automatically inserted below it.

Result

A new empty network is inserted into the F-block.

13.1.2.2 Empty box (STEP 7 Safety V18)

Requirement

A network is available.

Procedure

To insert FBD elements into a network using an empty box, follow these steps:

1. Open the "Instructions" task card.
2. Navigate to "Basic instructions > General > Empty box".
3. Use a drag-and-drop operation to move the "Empty box" element to the desired place in the network.
4. Hover the cursor over the yellow triangle in the top right corner of the empty box.
   A drop-down list is displayed.
5. Select the desired FBD element from the drop-down list.

If the instruction acts as a function block (FB) within the system, the "Call options" dialog opens. In this dialog, you can create an instance data block for the function block, either as a single instance or, if necessary, multi-instance, in which data of the inserted instruction are stored. Once it is created, the new instance data block can be found in the "Program resources" folder in the project tree under "Program blocks > System blocks". If you have selected "multi-instance", you can find it in the block interface in the "Static" section.

Result

The empty box is changed to the appropriate instruction. Placeholders are inserted for the parameters.

13.1.2.3 Open branching (STEP 7 Safety V18)

Description

You use branches, which you insert between the boxes, to program parallel connections with the Function Block Diagram (FBD) programming language You can insert additional boxes in the branch, thereby programming complex function block diagrams.

Requirement

A network is available.

Procedure

To insert a new branch in a network, follow these steps:

1. Open the "Instructions" task card.
2. Navigate in the pane to "Basic instructions > General > Branch".
3. Use a drag-and-drop operation to move the element to the desired place to a connecting line between two boxes.

Example

The following figure provides an example of how to use branches:

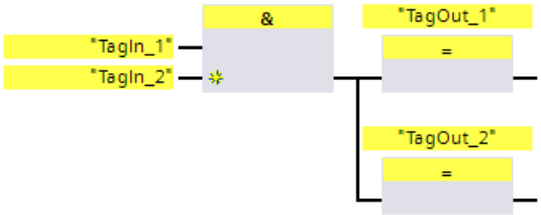

13.1.2.4 Insert binary input (STEP 7 Safety V18)

Description

Use the "Insert binary input" instruction to expand the box of one of the following instructions by a binary input:

- "AND logic operation"
- "OR logic operation"
- "EXCLUSIVE OR logic operation"

You can query the signal state of several operands by expanding the instruction box.

Parameters

The following table shows the parameters of the instruction:

Parameter	Declaration	Data type	Description
<Operand>	Input	BOOL	The operand indicates the bit whose signal state will be queried.

Example

The following example shows how the instruction works:

The box of instruction "AND logic operation" has been expanded by an additional binary input at which the signal state of operand "TagIn_3" is queried. Output "TagOut" is set when the signal state of operands "TagIn_1", "TagIn_2", and "TagIn_3" is "1".

See also

AND logic operation (STEP 7 Safety V18) (Page 379)
OR logic operation (STEP 7 Safety V18) (Page 379)
X: EXCLUSIVE OR logic operation (STEP 7 Safety V18) (Page 380)

13.1.2.5 Invert RLO (STEP 7 Safety V18)

Description

You can use the "Invert RLO" instruction to invert the result of logic operation (RLO).

Example

The following example shows how the instruction works:

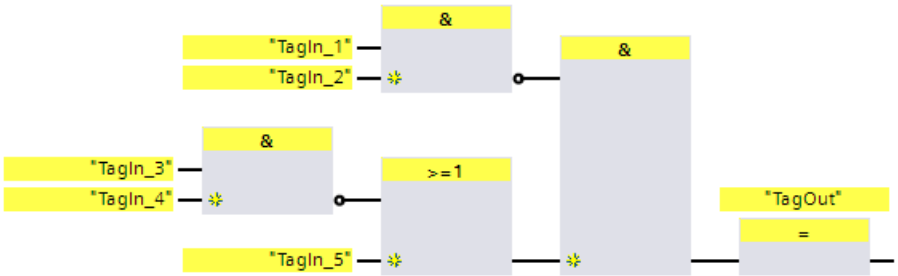

Output "TagOut" is set when the following conditions are fulfilled:

- The "TagIn_1" and/or "TagIn_2" input has the signal state "0".
- The "TagIn_3" or "TagIn_4" input has the signal state "0" or the "TagIn_5" input has the signal state "1".

13.2 Bit logic operations

13.2.1 LAD

13.2.1.1 ---| |---: NO contact (STEP 7 Safety V18)

Description

The activation of the normally open contact depends on the signal state of the associated operand. If the operand has signal state "1," the normally open contact is closed. Power flows

from the left power rail through the normally open contact into the right power rail and the signal state at the output of the instruction is set to "1".

If the operand has signal state "0," the normally open contact is not activated. The power flow to the right power rail is interrupted and the signal state at the output of the instruction is reset to "0".

Two or more normally open contacts are linked bit-by-bit by AND when connected in series. With a series connection, power flows when all contacts are closed.

The normally open contacts are linked by OR when connected in parallel. With a parallel connection, power flows when one of the contacts is closed.

Parameters

The following table shows the parameters of the instruction:

Parameter	Declaration	Data type	Description
<Operand>	Input	BOOL	Operand whose signal state is queried.

Example

The following example shows how the instruction works:

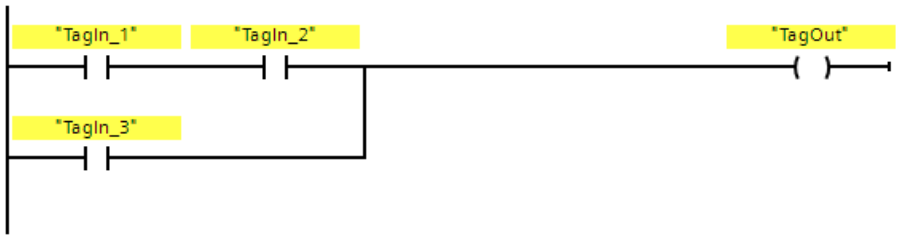

Operand "TagOut" is set when one of the following conditions is fulfilled:

- Operands "TagIn_1" and "TagIn_2" have signal state "1".
- The signal state at operand "TagIn_3" is "1".

13.2.1.2 ---| / |---: NC contact (STEP 7 Safety V18)

Description

The activation of the normally closed contact depends on the signal state of the associated operand. If the operand has signal state "1", the normally closed contact is opened and the signal state at the output of the instruction is reset to "0".

If the operand has signal state "0", the normally closed contact is not activated and the signal state at the output of the instruction is set to "1".

Two or more normally closed contacts are linked bit-by-bit by AND when connected in series. With a series connection, power flows when all contacts are closed.

The normally closed contacts are linked by OR when connected in parallel. With a parallel connection, power flows when one of the contacts is closed.

Parameters

The following table shows the parameters of the instruction:

Parameter	Declaration	Data type	Description
<Operand>	Input	BOOL	Operand whose signal state is queried.

Example

The following example shows how the instruction works:

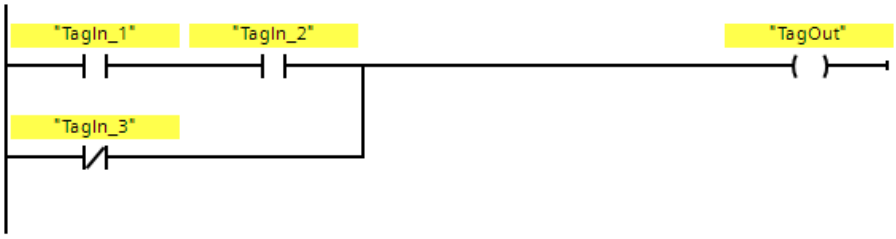

Operand "TagOut" is set when one of the following conditions is fulfilled:

- Operands "TagIn_1" and "TagIn_2" have signal state "1".
- The signal state at operand "TagIn_3" is "0".

13.2.1.3 --|NOT|--: Invert RLO (STEP 7 Safety V18)

Description

You can use the "Invert RLO" instruction to invert the signal state of the result of logic operation (RLO). When the signal state is "1" at the input of the instruction, the output of the instruction has the signal state "0". When the signal state is "0" at the input of the instruction, the output has the signal state "1".

Example

The following example shows how the instruction works:

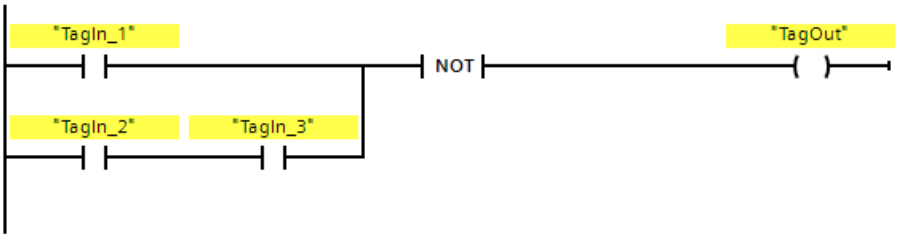

Operand "TagOut" is reset when one of the following conditions is fulfilled:

- Operand "TagIn_1" has signal state "1".
- Operands "TagIn_2" and "TagIn_3" have signal state "1".

13.2.1.4 ---( )---: Assignment (STEP 7 Safety V18)

Description

You can use the "Assignment" instruction to set the bit of a specified operand. When the result of logic operation (RLO) at the input of the coil is "1," the specified operand is set to signal state "1". When the signal state is "0" at the input of the coil, the bit of the specified operand is reset to "0".

The instruction does not influence the RLO. The RLO at the input of the coil is sent immediately to the output.

The "Assignment" instruction can be placed at any position in the network.

Parameters

The following table shows the parameters of the instruction:

Parameter	Declaration	Data type	Description
<Operand>	Output	BOOL	Operand to which the RLO is assigned.

Example

The following example shows how the instruction works:

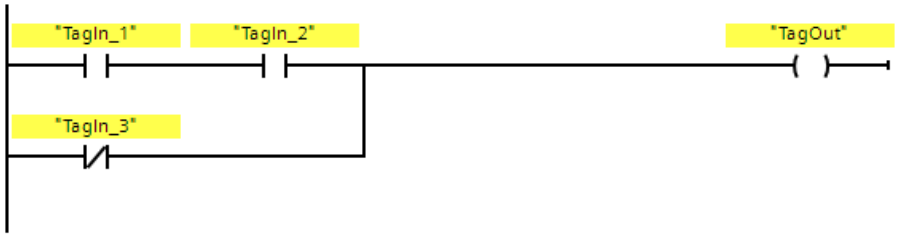

Operand "TagOut" is set when one of the following conditions is fulfilled:

- Operands "TagIn_1" and "TagIn_2" have signal state "1".
- The signal state at operand "TagIn_3" is "0".

13.2.1.5 ---(R)---: Reset output (STEP 7 Safety V18)

Description

You can use the "Reset output" instruction to reset the signal state of a specified operand to "0".

If power flows to the coil (RLO is "1"), the specified operand is set to "0". If the result of logic operation at the input of the coil is "0" (no signal flow to the coil), the signal state of the specified operand remains unchanged.

The instruction does not influence the RLO. The RLO at the input of the coil is sent directly to the output of the coil.

NOTE

If you want to use a formal parameter of an F-FC for the operand of the instruction, it must be declared as an input/output parameter.

NOTE

If the operand area "local data (temp)" is used for the operands of the instruction, the local data bit used must be initialized beforehand.

NOTE

You cannot use the "process image of the inputs", "process image of the outputs" from standard I/O and "standard DB" and "bit memory" operand areas for the operands of the instruction.

Parameters

The following table shows the parameters of the instruction:

Parameter	Declaration	Data type	Description
<Operand>	Output	BOOL	Operand that is reset when RLO = "1".

Example

The following example shows how the instruction works:

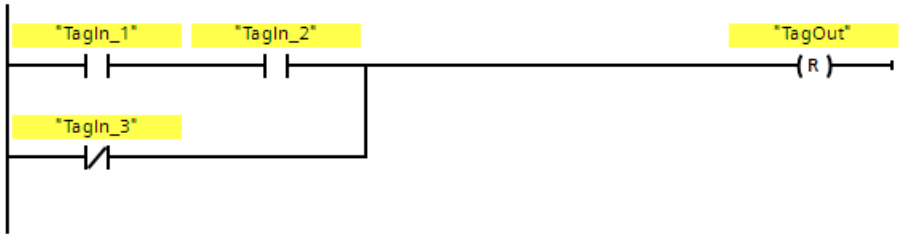

Operand "TagOut" is reset when one of the following conditions is fulfilled:

- Operands "TagIn_1" and "TagIn_2" have signal state "1".
- The signal state of operand "TagIn_3" is "0".

13.2.1.6 ---(S)---: Set output (STEP 7 Safety V18)

Description

You can use the "Set output" instruction to set the signal state of a specified operand to "1".

If power flows to the coil (RLO is "1"), the specified operand is set to "1". If the result of logic operation at the input of the coil is "0" (no signal flow to the coil), the signal state of the specified operand remains unchanged.
The instruction does not influence the RLO. The RLO at the input of the coil is sent directly to the output of the coil.

NOTE

The instruction is not executed if it is applied to an output of an F-I/O that is passivated (e.g., during startup of the F-system). Therefore, it is preferable to access outputs of the F-I/O using only the "Assignment" instruction.

An F-I/O output is passivated if QBAD or QBAD_O_xx = 1 or value status = 0 is set in the corresponding F-I/O DB.

NOTE

If you want to use a formal parameter of an F-FC for the operand of the instruction, it must be declared as an input/output parameter.

NOTE

If the operand area "local data (temp)" is used for the operands of the instruction, the local data bit used must be initialized beforehand.

NOTE

You cannot use the "process image of the inputs", "process image of the outputs" from standard I/O and "standard DB" and "bit memory" operand areas for the operands of the instruction.

Parameter

The following table shows the parameters of the instruction:

Parameter	Declaration	Data type	Description
<Operand>	Output	BOOL	Operand that is set when RLO = "1".

Example

The following example shows how the instruction works:

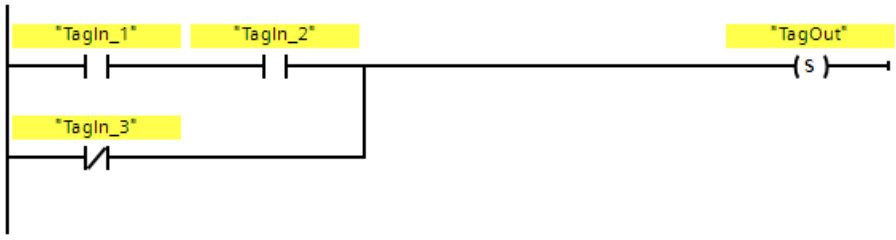

Operand "TagOut" is set when one of the following conditions is fulfilled:

- Operands "TagIn_1" and "TagIn_2" have signal state "1".
- The signal state of operand "TagIn_3" is "0".

13.2.1.7 SR: Set/reset flip-flop (STEP 7 Safety V18)

Description

You can use the "Set/reset flip-flop" instruction to set or reset the bit of the specified operand based on the signal state of inputs S and R1. If the signal state at input S is "1" and the signal state at input R1 is "0", the specified operand is set to "1". If the signal state at input S is "0" and the signal state at input R1 is "1", the specified operand is reset to "0".

Input R1 takes priority over input S. If the signal state is "1" at the two inputs S and R1, the signal state of the specified operand is reset to "0".

The instruction is not executed if the signal state at the two inputs S and R1 is "0". The signal state of the operand then remains unchanged.

The current signal state of the operand is transferred to output Q and can be queried there.

NOTE

If you want to use a formal parameter of an F-FC for the operand of the instruction, it must be declared as an input/output parameter.

NOTE

You cannot use the "process image", "standard DB" and "bit memory" operand areas for the operands of the instruction.

If the operand area "local data (temp)" is used for the operands of the instruction, the local data bit used must be initialized beforehand.

Parameter

The following table shows the parameters of the instruction:

Parameter	Declaration	Data type	Description
S	Input	BOOL	Enable set
R1	Input	BOOL	Enable reset
<Operand>	Output	BOOL	Operand that is set or reset.
Q	Output	BOOL	Signal state of the operand

Example

The following example shows how the instruction works:

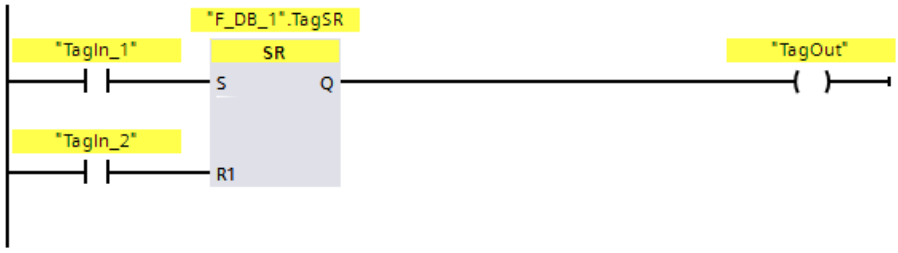

Operands ""F_DB_1".TagSR" and "TagOut" are set when the following conditions are fulfilled:

- Operand "TagIn_1" has signal state "1".
- Operand "TagIn_2" has signal state "0".

Operands ""F_DB_1".TagSR" and "TagOut" are reset when the following conditions are fulfilled:

- Operand "TagIn_1" has signal state "0" and operand "TagIn_2" has signal state "1".
- Both operands "TagIn_1" and "TagIn_2" have signal state "1".

13.2.1.8 RS: Reset/set flip-flop (STEP 7 Safety V18)

Description

You can use the "Reset/set flip-flop" instruction to reset or set the bit of the specified operand based on the signal state of inputs R and S1. When the signal state is "1" at input R and "0" at input S1, the specified operand is reset to "0". When the signal state is "0" at input R and "1" at input S1, the specified operand is set to "1".

Input S1 takes priority over input R. If the signal state is "1" at the two inputs R and S1, the signal state of the specified operand is set to "1".

The instruction is not executed if the signal state at the two inputs R and S1 is "0". The signal state of the operand then remains unchanged.

The current signal state of the operand is transferred to output Q and can be queried there.

NOTE

If you want to use a formal parameter of an F-FC for the operand of the instruction, it must be declared as an input/output parameter.

NOTE

You cannot use the "process image", "standard DB" and "bit memory" operand areas for the operands of the instruction.

If the operand area "local data (temp)" is used for the operands of the instruction, the local data bit used must be initialized beforehand.

Parameter

The following table shows the parameters of the instruction:

Parameter	Declaration	Data type	Description
R	Input	BOOL	Enable reset
S1	Input	BOOL	Enable set
<Operand>	Output	BOOL	Operand that is reset or set.
Q	Output	BOOL	Signal state of the operand

Example

The following example shows how the instruction works:

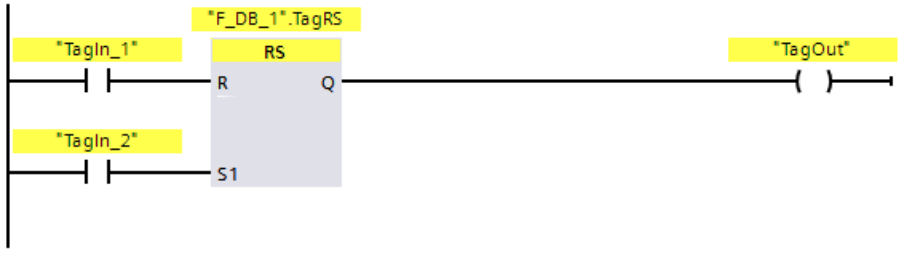

Operands ""F_DB_1".TagRS" and "TagOut" are reset when the following conditions are fulfilled:

- Operand "TagIn_1" has signal state "1".
- Operand "TagIn_2" has signal state "0".

Operands ""F_DB_1".TagRS" and "TagOut" are set when the following conditions are fulfilled:

- Operand "TagIn_1" has signal state "0" and operand "TagIn_2" has signal state "1".
- Operands "TagIn_1" and "TagIn_2" have signal state "1".

13.2.1.9 --|P|--: Scan operand for positive signal edge (STEP 7 Safety V18)

Description

You can use the "Scan operand for positive signal edge" instruction to determine if there is a change from "0" to "1" in the signal state of a specified operand (<Operand1>). The instruction compares the current signal state of <Operand1> with the signal state of the previous query saved in <Operand2>. If the instruction detects a change in the result of logic operation from "0" to "1", there is a positive, rising edge.

If a rising edge is detected, the output of the instruction has signal state "1". In all other cases, the signal state at the output of the instruction is "0".

Enter the operand to be queried (<Operand1>) in the operand placeholder above the instruction. Enter the edge memory bit (<Operand2>) in the operand placeholder below the instruction.

NOTE

The address of the edge memory bit must not be used more than once in the program, otherwise the edge memory bit would be overwritten. This would influence edge evaluation and the result would no longer be unequivocal.

NOTE

If you want to use a formal parameter of an F-FC for the edge memory bit <Operand2> of the instruction, it must be declared as an input/output parameter.

NOTE

You cannot use the "process image", "standard DB" and "bit memory" operand areas for the edge memory bit <Operand2> of the instruction.

If operand area "local data (temp)" is used for the edge memory bit <Operand2> of the instruction, the local data bit used must be initialized beforehand.

Parameter

The following table shows the parameters of the instruction:

Parameter	Declaration	Data type	Description
<Operand1>	Input	BOOL	Signal to be queried
<Operand2>	InOut	BOOL	Edge memory bit in which the signal state of the previous query is saved.

Example

The following example shows how the instruction works:

Operand "TagOut" is set when the following conditions are fulfilled:

- There is a rising edge at input "TagIn_1". The signal state of the previous query is saved at edge memory bit ""F_DB_1".Tag_M".
- The signal state of operand "TagIn_2" is "1".

13.2.1.10 --|N|--: Scan operand for negative signal edge (STEP 7 Safety V18)

Description

You can use the "Scan operand for negative signal edge" instruction to determine if there is a change form "1" to "0" in the signal state of a specified operand. The instruction compares the current signal state of <Operand1> with the signal state of the previous query saved in <Operand2>. If the instruction detects a change in the result of logic operation from "1" to "0", there is a negative, falling edge.

If a falling edge is detected, the output of the instruction has signal state "1". In all other cases, the signal state at the output of the instruction is "0".

Enter the operand to be queried (<Operand1>) in the operand placeholder above the instruction. Enter the edge memory bit (<Operand2>) in the operand placeholder below the instruction.

NOTE

The address of the edge memory bit must not be used more than once in the program, otherwise the edge memory bit would be overwritten. This would influence edge evaluation and the result would no longer be unequivocal.

NOTE

If you want to use a formal parameter of an F-FC for the edge memory bit <Operand2> of the instruction, it must be declared as an input/output parameter.

NOTE

You cannot use the "process image", "standard DB" and "bit memory" operand areas for the edge memory bit <Operand2> of the instruction.

If operand area "local data (temp)" is used for the edge memory bit <Operand2> of the instruction, the local data bit used must be initialized beforehand.

Parameter

The following table shows the parameters of the instruction:

Parameter	Declaration	Data type	Description
<Operand1>	Input	BOOL	Signal to be queried
<Operand2>	InOut	BOOL	Edge memory bit in which the signal state of the previous query is saved.

Example

The following example shows how the instruction works:

Operand "TagOut" is set when the following conditions are fulfilled:

- There is a falling edge at operand "TagIn_1". The signal state of the previous query is saved at edge memory bit ""F_DB_1".Tag_M".
- The signal state of operand "TagIn_2" is "1".

13.2.1.11 P_TRIG: Scan RLO for positive signal edge (STEP 7 Safety V18)

Description

You can use the "Scan RLO for positive signal edge" instruction to query a change in the signal state of the result of logic operation from "0" to "1". The instruction compares the current signal state of the result of logic operation (RLO) with the signal state of the previous query, which is saved in the edge bit memory (<Operand>). If the instruction detects a change in the RLO from "0" to "1", there is a positive, rising edge.

If a rising edge is detected, the output of the instruction has signal state "1". In all other cases, the signal state at the output of the instruction is "0".

NOTE

The address of the edge memory bit must not be used more than once in the program, otherwise the edge memory bit would be overwritten. This would influence edge evaluation and the result would no longer be unequivocal.

NOTE

If you want to use a formal parameter of an F-FC for the edge memory bit <Operand> of the instruction, it must be declared as an input/output parameter.

NOTE

You cannot use the "process image", "standard DB" and "bit memory" operand areas for the edge memory bit <Operand> of the instruction.

If operand area "local data (temp)" is used for the edge memory bit <Operand> of the instruction, the local data bit used must be initialized beforehand.

Parameter

The following table shows the parameters of the instruction:

Parameter	Declaration	Data type	Description
CLK	Input	BOOL	Current RLO
<Operand>	InOut	BOOL	Edge memory bit in which the RLO of the previous query is saved.
Q	Output	BOOL	Result of edge evaluation

Example

The following example shows how the instruction works:

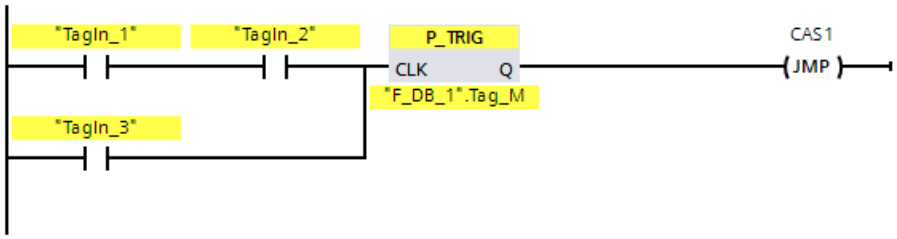

The RLO from the previous bit logic operation is saved in edge memory bit ""F_DB_1".Tag_M". If a change in the RLO signal state from "0" to "1" is detected, the program jumps to jump label CAS1.

13.2.1.12 N_TRIG: Scan RLO for negative signal edge (STEP 7 Safety V18)

Description

You can use the "Scan RLO for negative signal edge" instruction to query a change in the signal state of the result of logic operation from "1" to "0". The instruction compares the current signal state of the result of logic operation with the signal state from the previous query, which is saved in the edge memory bit (<Operand>). If the instruction detects a change in the RLO from "1" to "0", there is a negative, falling edge.

If a falling edge is detected, the output of the instruction has signal state "1". In all other cases, the signal state at the output of the instruction is "0".

NOTE

The address of the edge memory bit must not be used more than once in the program, otherwise the edge memory bit would be overwritten. This would influence edge evaluation and the result would no longer be unequivocal.

NOTE

If you want to use a formal parameter of an F-FC for the edge memory bit <Operand> of the instruction, it must be declared as an input/output parameter.

NOTE

You cannot use the "process image", "standard DB" and "bit memory" operand areas for the edge memory bit <Operand> of the instruction.

If operand area "local data (temp)" is used for the edge memory bit <Operand> of the instruction, the local data bit used must be initialized beforehand.

Parameter

The following table shows the parameters of the instruction:

Parameter	Declaration	Data type	Description
CLK	Input	BOOL	Current RLO
<Operand>	InOut	BOOL	Edge memory bit in which the RLO of the previous query is saved.
Q	Output	BOOL	Result of edge evaluation

Example

The following example shows how the instruction works:

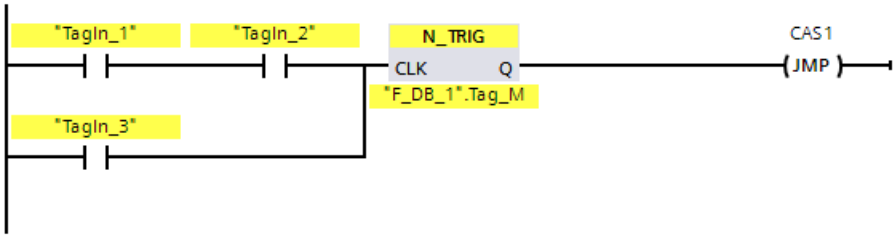

The RLO of the previous bit logic operation is saved in edge bit memory ""F_DB_1".Tag_M". If a change in the RLO signal state from "1" to "0" is detected, the program jumps to jump label CAS1.

13.2.2 FBD

13.2.2.1 AND logic operation (STEP 7 Safety V18)

Description

You can use the "AND logic operation" instruction to query the signal states of two or more specified operands and evaluate them according to the AND truth table.

If the signal state of all the operands is "1", then the conditions are fulfilled and the instruction returns the result "1". If the signal state of one of the operands is "0", then the conditions are not fulfilled and the instruction generates the result "0".

If the "AND logic operation" instruction is the first instruction in a logic string, it saves the result of its signal state query in the RLO bit.

Each "AND logic operation" instruction that is not the first instruction in the logic string logically combines the result of its signal state query with the value saved in the RLO bit. This logical combination is performed according to the AND truth table.

Parameters

The following table shows the parameters of the instruction:

Parameter	Declaration	Data type	Description
<Operand>	Input	BOOL	The operand indicates the bit whose signal state will be queried.

Example

The following example shows how the instruction works:

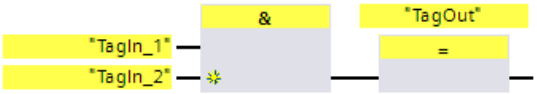

Output "TagOut" is set when the signal state of operands "TagIn_1" and "TagIn_2" is "1".

AND truth table

The following table shows the results when linking two operands by an AND logic operation:

Signal state of the first operand	Signal state of the second operand	Result of logic operation
1	1	1
0	1	0
1	0	0
0	0	0

See also

Insert binary input (STEP 7 Safety V18) (Page 364)

13.2.2.2 OR logic operation (STEP 7 Safety V18)

Description

You can use the "OR logic operation" instruction to get the signal states of two or more specified operands and evaluate them according to the OR truth table.

If the signal state of at least one of the operands is "1", then the conditions are fulfilled and the instruction returns the result "1". If the signal state of all of the operands is "0", then the conditions are not fulfilled and the instruction generates the result "0".

If the "OR logic operation" instruction is the first instruction in a logic string, it saves the result of its signal state query in the RLO bit.

Each "OR logic operation" instruction that is not the first instruction in the logic string, logically combines the result of its signal state query with the value saved in the RLO bit. This logical combination is performed according to the OR truth table.

Parameters

The following table shows the parameters of the instruction:

Parameter	Declaration	Data type	Description
<Operand>	Input	BOOL	The operand indicates the bit whose signal state will be queried.

Example

The following example shows how the instruction works:

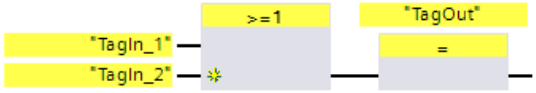

Output "TagOut" is set when the signal state of operand "TagIn_1" or "TagIn_2" is "1".

OR truth table

The following table shows the results when linking two operands by an OR logic operation:

Signal state of the first operand	Signal state of the second operand	Result of logic operation
1	0	1
0	1	1
1	1	1
0	0	0

See also

Insert binary input (STEP 7 Safety V18) (Page 364)

13.2.2.3 X: EXCLUSIVE OR logic operation (STEP 7 Safety V18)

Description

You can use the "EXCLUSIVE OR logic operation" instruction to get the result of a signal state query according to the the EXCLUSIVE OR truth table.
With an "EXCLUSIVE OR logic operation" instruction, the signal state is "1" when the signal state of one of the two specified operands is "1". When more than two operands are queried, the overall result of logic operation is "1" if an odd-numbered quantity of queried operands returns the result "1".

Parameters

The following table shows the parameters of the instruction:

Parameter	Declaration	Data type	Description
<Operand>	Input	BOOL	The operand indicates the bit whose signal state will be queried.

Example

The following example shows how the instruction works:

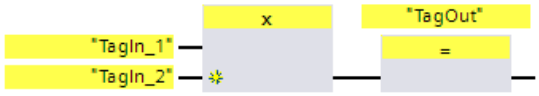

Output "TagOut" is set when the signal state of one of the two operands "TagIn_1" and "TagIn_2" is "1". When both operands have signal state "1" or "0" then output "TagOut" is reset.

EXCLUSIVE OR truth table

The following table shows the results when two operands are linked by an EXCLUSIVE OR:

Signal state of the first operand	Signal state of the second operand	Result of logic operation
1	0	1
0	1	1
1	1	0
0	0	0

The following table shows the results when three operands are linked by an EXCLUSIVE OR:

Signal state of the first operand	Signal state of the second operand	Signal state of the third operand	Result of logic operation
1	0	0	1
0	1	1	0

Signal state of the first operand	Signal state of the second operand	Signal state of the third operand	Result of logic operation
0	1	0	1
1	0	1	0
0	0	1	1
1	1	0	0
1	1	1	1
0	0	0	0

See also

Insert binary input (STEP 7 Safety V18) (Page 364)

13.2.2.4 =: Assignment (STEP 7 Safety V18)

Description

You can use the "Assignment" instruction to set the bit of a specified operand. If the result of logic operation (RLO) at the box input has signal state "1" or the box input for S7-1200/1500 F-CPUs is not connected, the specified operand is set to signal state "1". If the signal state at the box input is "0", the bit of the specified operand is reset to "0".

The instruction does not influence the RLO. The RLO at the box input is assigned directly to the operand located above the Assign box.

The "Assignment" instruction can be placed at any position in the logic operation sequence.

Parameters

The following table shows the parameters of the instruction:

Parameter	Declaration	Data type	Description
<Operand>	Output	BOOL	Operand to which the RLO is assigned.

Example

The following example shows how the instruction works:

Operand "TagOut" at the output of the "Assignment" instruction is set when one of the following conditions is fulfilled:

- Inputs "TagIn_1" and "TagIn_2" have signal state "1".
- The signal state at input "TagIn_3" is "0".

13.2.2.5 R: Reset output (STEP 7 Safety V18)

Description

You can use the "Reset output" instruction to reset the signal state of a specified operand to "0".

If the box input has signal state "1" or the box input for S7-1200/1500 F-CPUs is not connected, the specified operand is reset to "0". If there is a result of logic operation of "0" at the box input, the signal state of the specified operand remains unchanged.

The instruction does not influence the RLO. The RLO at the box input is transferred directly to the box output.

NOTE

If you want to use a formal parameter of an F-FC for the operand of the instruction, it must be declared as an input/output parameter.

NOTE

If the operand area "local data (temp)" is used for the operands of the instruction, the local data bit used must be initialized beforehand.

NOTE

You cannot use the "process image of the inputs", "process image of the outputs" from standard I/O and "standard DB" and "bit memory" operand areas for the operands of the instruction.

Parameter

The following table shows the parameters of the instruction:

Parameter	Declaration	Data type	Description
<Operand>	Output	BOOL	Operand that is reset with RLO = "1".

Example

The following example shows how the instruction works:

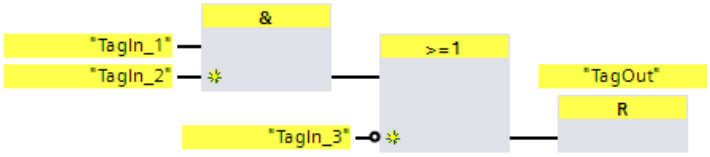

Operand "TagOut" is reset when one of the following conditions is fulfilled:

- Operands "TagIn_1" and "TagIn_2" have signal state "1".
- The signal state of operand "TagIn_3" is "0".

13.2.2.6 S: Set output (STEP 7 Safety V18)

Description

You can use the "Set output" instruction to set the signal state of a specified operand to "1".

If the box input has signal state "1" or the box input for S7-1200/1500 F-CPUs is not connected, the specified operand is set to "1". If there is a result of logic operation of "0" at the box input, the signal state of the specified operand remains unchanged.

The instruction does not influence the RLO. The RLO at the box input is transferred directly to the box output.

NOTE

The instruction is not executed if it is applied to an output of an F-I/O that is passivated (e.g., during startup of the F-system). Therefore, it is preferable to access outputs of the F-I/O using only the "Assignment" instruction.

An F-I/O output is passivated if QBAD or QBAD_O_xx = 1 or value status = 0 is set in the corresponding F-I/O DB.

NOTE

If you want to use a formal parameter of an F-FC for the operand of the instruction, it must be declared as an input/output parameter.

NOTE

If the operand area "local data (temp)" is used for the operands of the instruction, the local data bit used must be initialized beforehand.

NOTE

You cannot use the "process image of the inputs", "process image of the outputs" from standard I/O and "standard DB" and "bit memory" operand areas for the operands of the instruction.

Parameter

The following table shows the parameters of the instruction:

Parameter	Declaration	Data type	Description
<Operand>	Output	BOOL	Operand that is set when RLO = "1".

Example

The following example shows how the instruction works:

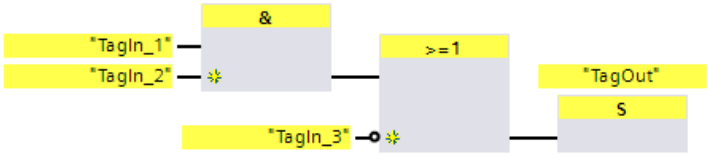

Operand "TagOut" is set when one of the following conditions is fulfilled:

- Operands "TagIn_1" and "TagIn_2" have signal state "1".
- The signal state of operand "TagIn_3" is "0".

13.2.2.7 SR: Set/reset flip-flop (STEP 7 Safety V18)

Description

You can use the "Set/reset flip-flop" instruction to set or reset the bit of the specified operand based on the signal state of inputs S and R1. If the signal state at input S is "1" and the signal state at input R1 is "0", the specified operand is set to "1". If the signal state at input S is "0" and the signal state at input R1 is "1", the specified operand is reset to "0".

Input R1 takes priority over input S. If the signal state is "1" at the two inputs S and R1, the signal state of the specified operand is reset to "0".

The instruction is not executed if the signal state at the two inputs S and R1 is "0". The signal state of the operand then remains unchanged.

The current signal state of the operand is transferred to output Q and can be queried there.

NOTE

If you want to use a formal parameter of an F-FC for the operand of the instruction, it must be declared as an input/output parameter.

NOTE

You cannot use the "process image", "standard DB" and "bit memory" operand areas for the operands of the instruction.

If the operand area "local data (temp)" is used for the edge bit memory of the instruction, the local data bit used must be initialized beforehand.

Parameter

The following table shows the parameters of the instruction:

Parameter	Declaration	Data type	Description
S	Input	BOOL	Enable set
R1	Input	BOOL	Enable reset
<Operand>	Output	BOOL	Operand that is set or reset.

Parameter	Declaration	Data type	Description
Q	Output	BOOL	Signal state of the operand

Example

The following example shows how the instruction works:

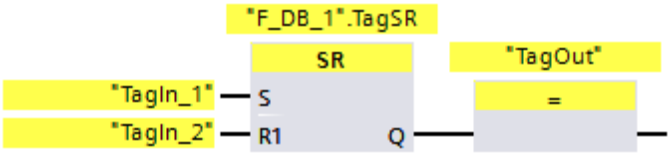

Operands ""F_DB_1".TagSR" and "TagOut" are set when the following conditions are fulfilled:

- Operand "TagIn_1" has signal state "1".
- Operand "TagIn_2" has signal state "0".

Operands ""F_DB_1".TagSR" and "TagOut" are reset when the following conditions are fulfilled:

- Operand "TagIn_1" has signal state "0" and operand "TagIn_2" has signal state "1".
- Both operands "TagIn_1" and "TagIn_2" have signal state "1".

13.2.2.8 RS: Reset/set flip-flop (STEP 7 Safety V18)

Description

You can use the "Reset/set flip-flop" instruction to reset or set the bit of the specified operand based on the signal state of inputs R and S1. When the signal state is "1" at input R and "0" at input S1, the specified operand is reset to "0". When the signal state is "0" at input R and "1" at input S1, the specified operand is set to "1".

Input S1 takes priority over input R. If the signal state is "1" at the two inputs R and S1, the signal state of the specified operand is set to "1".

The instruction is not executed if the signal state at the two inputs R and S1 is "0". The signal state of the operand then remains unchanged.

The current signal state of the operand is transferred to output Q and can be queried there.

NOTE

If you want to use a formal parameter of an F-FC for the operand of the instruction, it must be declared as an input/output parameter.

NOTE

You cannot use the "process image", "standard DB" and "bit memory" operand areas for the operands of the instruction.

If the operand area "local data (temp)" is used for the edge bit memory of the instruction, the local data bit used must be initialized beforehand.

Parameter

The following table shows the parameters of the instruction:

Parameter	Declaration	Data type	Description
R	Input	BOOL	Enable reset
S1	Input	BOOL	Enable set
<Operand>	Output	BOOL	Operand that is reset or set.
Q	Output	BOOL	Signal state of the operand

Example

The following example shows how the instruction works:

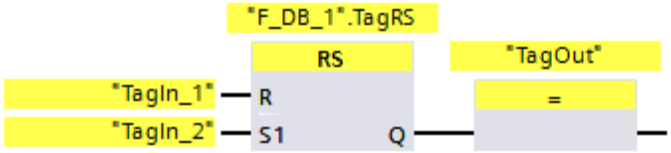

Operands ""F_DB_1".TagRS" and "TagOut" are reset when the following conditions are fulfilled:

- Operand "TagIn_1" has signal state "1".
- Operand "TagIn_2" has signal state "0".

Operands ""F_DB_1".TagRS" and "TagOut" are set when the following conditions are fulfilled:

- Operand "TagIn_1" has signal state "0" and operand "TagIn_2" has signal state "1".
- Operands "TagIn_1" and "TagIn_2" have signal state "1".

13.2.2.9 P: Scan operand for positive signal edge (STEP 7 Safety V18)

Description

You can use the "Scan operand for positive signal edge" instruction to determine if there is a change from "0" to "1" in the signal state of a specified operand (<Operand1>). The instruction compares the current signal state of <Operand1> with the signal state of the previous query saved in <Operand2>. If the instruction detects a change in the result of logic operation from "0" to "1", there is a positive, rising edge.

If a rising edge is detected, the output of the instruction has signal state "1". In all other cases, the signal state at the output of the instruction is "0".

Enter the operand to be queried (<Operand1>) in the operand placeholder above the instruction. Enter the edge memory bit (<Operand2>) in the operand placeholder below the instruction.

NOTE

The address of the edge memory bit must not be used more than once in the program, otherwise the edge memory bit would be overwritten. This would influence edge evaluation and the result would no longer be unequivocal.

NOTE

If you want to use a formal parameter of an F-FC for the edge memory bit <Operand2> of the instruction, it must be declared as an input/output parameter.

NOTE

You cannot use the "process image", "standard DB" and "bit memory" operand areas for the edge memory bit <Operand2> of the instruction.

If operand area "local data (temp)" is used for the edge memory bit <Operand2> of the instruction, the local data bit used must be initialized beforehand.

Parameters

The following table shows the parameters of the instruction:

Parameter	Declaration	Data type	Description
<Operand1>	Input	BOOL	Signal to be queried
<Operand2>	InOut	BOOL	Edge memory bit in which the signal state of the previous query is saved.

Example

The following example shows how the instruction works:

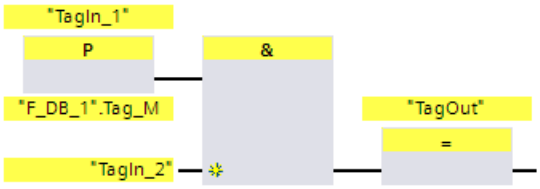

"TagOut" is set when the following conditions are fulfilled:

- There is a rising edge at input "TagIn_1".
- The signal state of operand "TagIn_2" is "1".

13.2.2.10 N: Scan operand for negative signal edge (STEP 7 Safety V18)

Description

You can use the "Scan operand for negative signal edge" instruction to determine if there is a change form "1" to "0" in the signal state of a specified operand. The instruction compares the current signal state of <Operand1> with the signal state of the previous query saved in <Operand2>. If the instruction detects a change in the result of logic operation from "1" to "0", there is a negative, falling edge.

If a falling edge is detected, the output of the instruction has signal state "1". In all other cases, the signal state at the output of the instruction is "0".

Enter the operand to be queried (<Operand1>) in the operand placeholder above the instruction. Enter the edge memory bit (<Operand2>) in the operand placeholder below the instruction.

NOTE

The address of the edge memory bit must not be used more than once in the program, otherwise the edge memory bit would be overwritten. This would influence edge evaluation and the result would no longer be unequivocal.

NOTE

If you want to use a formal parameter of an F-FC for the edge memory bit <Operand2> of the instruction, it must be declared as an input/output parameter.

NOTE

You cannot use the "process image", "standard DB" and "bit memory" operand areas for the edge memory bit <Operand2> of the instruction.

If operand area "local data (temp)" is used for the edge memory bit <Operand2> of the instruction, the local data bit used must be initialized beforehand.

Parameter

The following table shows the parameters of the instruction:

Parameter	Declaration	Data type	Description
<Operand1>	Input	BOOL	Signal to be queried
<Operand2>	InOut	BOOL	Edge memory bit in which the signal state of the previous query is saved.

Example

The following example shows how the instruction works:

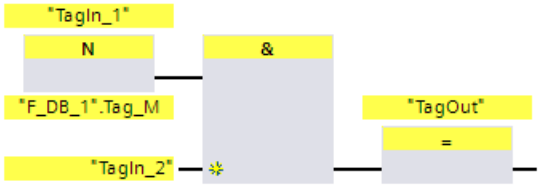

Output "TagOut" is set when the following conditions are fulfilled:

- There is a falling edge at input "TagIn_1".
- The signal state of operand "TagIn_2" is "1".

13.2.2.11 P_TRIG: Scan RLO for positive signal edge (STEP 7 Safety V18)

Description

You can use the "Scan RLO for positive signal edge" instruction to query a change in the signal state of the result of logic operation from "0" to "1". The instruction compares the current signal state of the result of logic operation with the signal state from the previous query, which is saved in the edge memory bit (<Operand>). If the instruction detects a change in the RLO from "0" to "1", there is a positive, rising edge.

If a rising edge is detected, the output of the instruction has signal state "1". In all other cases, the signal state at the output of the instruction is "0".

NOTE

The address of the edge memory bit must not be used more than once in the program, otherwise the edge memory bit would be overwritten. This would influence edge evaluation and the result would no longer be unequivocal.

NOTE

If you want to use a formal parameter of an F-FC for the edge memory bit <Operand> of the instruction, it must be declared as an input/output parameter.

NOTE

You cannot use the "process image", "standard DB" and "bit memory" operand areas for the edge memory bit <Operand> of the instruction.

If operand area "local data (temp)" is used for the edge memory bit <Operand> of the instruction, the local data bit used must be initialized beforehand.

Parameter

The following table shows the parameters of the instruction:

Parameter	Declaration	Data type	Description
CLK	Input	BOOL	Current RLO
<Operand>	InOut	BOOL	Edge memory bit in which the RLO of the previous query is saved.
Q	Output	BOOL	Result of edge evaluation

Example

The following example shows how the instruction works:

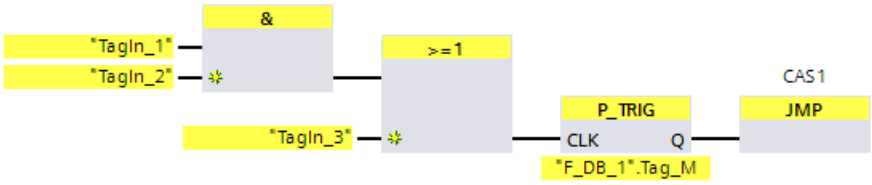

The RLO from the previous bit logic operation is saved in edge memory bit ""F_DB_1".Tag_M". If a change in the RLO signal state from "0" to "1" is detected, the program jumps to jump label CAS1.

13.2.2.12 N_TRIG: Scan RLO for negative signal edge (STEP 7 Safety V18)

Description

You can use the "Scan RLO for negative signal edge" instruction to query a change in the signal state of the result of logic operation from "1" to "0". The instruction compares the current signal state of the result of logic operation with the signal state from the previous query, which is saved in the edge memory bit (<Operand>). If the instruction detects a change in the RLO from "1" to "0", there is a negative, falling edge.

If a falling edge is detected, the output of the instruction has signal state "1". In all other cases, the signal state at the output of the instruction is "0".

NOTE

The address of the edge memory bit must not be used more than once in the program, otherwise the edge memory bit would be overwritten. This would influence edge evaluation and the result would no longer be unequivocal.

NOTE

If you want to use a formal parameter of an F-FC for the edge memory bit <Operand> of the instruction, it must be declared as an input/output parameter.

NOTE

You cannot use the "process image", "standard DB" and "bit memory" operand areas for the edge memory bit <Operand> of the instruction.

If operand area "local data (temp)" is used for the edge memory bit <Operand> of the instruction, the local data bit used must be initialized beforehand.

Parameter

The following table shows the parameters of the instruction:

Parameter	Declaration	Data type	Description
CLK	Input	BOOL	Current RLO
<Operand>	InOut	BOOL	Edge memory bit in which the RLO of the previous query is saved.
Q	Output	BOOL	Result of edge evaluation

Example

The following example shows how the instruction works:

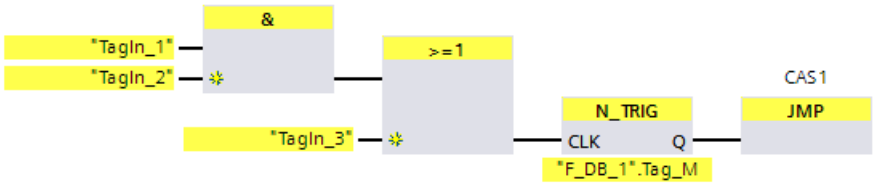

The RLO of the previous bit logic operation is saved in edge bit memory ""F_DB_1".Tag_M". If a change in the RLO signal state from "1" to "0" is detected, the program jumps to jump label CAS1.

13.3 Safety functions

13.3.1 ESTOP1: Emergency STOP/OFF up to stop category 1 (STEP 7 Safety V18)

Description

This instruction supports the implementation of an EMERGENCY STOP/EMERGENCY OFF shutdown with acknowledgment for STOP categories 0 and 1 for the purpose of complying with requirements of IEC 60204 or IEC 61800-5-2. However, additional measures described in the respective standard may have to be taken in order to fully comply with the requirements of the respective standard.

Enable signal Q is reset to 0, as soon as input E_STOP takes a signal state of 0 (Stop category 0). Enable signal Q_DELAY is reset to 0 after the time delay set at input TIME_DEL (Stop Category 1).

Enable signal Q is reset to 1 not before input E_STOP takes a signal state of 1 and an acknowledgment occurs. The acknowledgment for the enable takes place according to the parameter assignment at input ACK_NEC:

- If ACK_NEC = 0, the acknowledgment is automatic.
- If ACK_NEC = 1, you must use a rising edge at input ACK for acknowledging the enable.

Output ACK_REQ is used to signal that a user acknowledgment is required at input ACK for the acknowledgment. The instruction sets output ACK_REQ to 1, as soon as input E_STOP = 1. Following an acknowledgment, the instruction resets ACK_REQ to 0.

Every call of the "Emergency STOP/Emergency OFF up to Stop Category 1" instruction must be assigned a data area in which the instruction data are stored. The "Call options" dialog is automatically opened when the instruction is inserted in the program for this reason. There you can create a data block (single instance) (e.g., ESTOP1_DB_1) or a multi-instance (e.g., ESTOP1_Instance_1) for the "Emergency STOP/Emergency OFF up to Stop Category 1" instruction. Once it is created, you can find the new data block in the project tree in the "STEP 7 Safety" folder under "Program blocks > System blocks" or the multi-instance as a local tag in the "Static" section of the block interface. For more information, refer to the help on *STEP 7*.

Enable input "EN" and enable output "ENO" cannot be connected. The instruction is therefore always executed (regardless of the signal state at enable input "EN").

WARNING

The ACK_NEC tag must not be assigned a value of 0 unless an automatic restart of the affected process is otherwise excluded. *(S033)*

WARNING

When using an instruction with time processing, take the following timing imprecision sources into account when determining your response times:

- The temporal blurring known from the standard user program, which is caused by the cyclic processing
- Timing imprecision resulting from the update time of the time base used in the instruction (see figure in section "Timing imprecision resulting from the update time of the time base used in the instruction")
- Tolerance of internal time monitoring in the F-CPU
  - For time values up to 200 ms, a maximum of 4 ms
  - For time values greater than or equal to 200 ms, a maximum of 2% of the (assigned) time value
- Tolerance of internal time monitoring in the S7-1500 HF-CPU
  - For time values up to 500 ms, a maximum of 10 ms
  - For time values greater than or equal to 500 ms, a maximum of 2% of the (assigned) time value

You must choose the interval between two call times of an instruction with time processing in such a way that the required response times are achieved, taking into account the possible timing imprecision. *(S034)*

Note: In case of two channels according to category 3,4 of ISO 13849-1:2015 or EN ISO 13849-1:2015, the discrepancy monitoring of the two NC contacts of the EMERGENCY STOP/EMERGENCY OFF must already take place in the F-I/O. The F-I/O has to be configured accordingly (sensor evaluation: two-channel, equivalent), and the result of the evaluation interconnected with the E_STOP input. In order to keep the discrepancy time from influencing the response time, you must assign "Supply value 0" for the behavior of discrepancy during configuration.

Parameters

The following table shows the parameters of the instruction:

Parameter	Declaration	Data type	Description
E_STOP	Input	BOOL	EMERGENCY STOP/EMERGENCY OFF
ACK_NEC	Input	BOOL	1=Acknowledgment necessary
ACK	Input	BOOL	1=Acknowledgment
TIME_DEL	Input	TIME	Time delay
Q	Output	BOOL	1=Enable
Q_DELAY	Output	BOOL	Enable is OFF delayed
ACK_REQ	Output	BOOL	1=Acknowledgment necessary
DIAG	Output	BYTE	Non-fail safe service information

Instruction versions

A number of versions are available for this instruction:

Version	S7-300/400	S7-1200	S7-1500	Function
1.0	x	—	—	Version 1.0 requires that the F_TOF block with the number FB 186 is available in the project tree in the "Program blocks/System blocks/STEP 7 Safety" folder. When projects that were created with *S7 Distributed Safety V5.4 SP5* are migrated, version 1.0 of the instruction is used automatically. If you want to compile a migrated safety program with *STEP 7 Safety Advanced* for the first time, we recommend that you first update to the latest available version of the instruction. You will then avoid number conflicts.
1.1	x	—	—	These versions have identical functions to version 1.0, but do not require the F_TOF block to have a particular number.
1.2	x	—	o	
1.3	x	o	o	
1.4	x	o	o	
1.5	x	x	x	
1.6	x	x	x	The reaction of the delay time TIME_DEL for F-CPUs S7-1200/1500 was adapted to the reaction of F-CPUs S7-300/400: If the input ESTOP (0 -> 1 (including acknowledgment) -> 0) is changed while the delay time is running, the delay time is restarted.

o This version is no longer supported.

When a new F-CPU is created with *STEP 7 Safety*, the latest available version for the F-CPU created is automatically preset.

For more information on the use of instruction versions, refer to the help on *STEP 7* under "Using instruction versions".

Startup behavior

After an F-system startup, when ACK_NEC = 1, you must acknowledge the instruction using a rising edge at input ACK.

Output DIAG

The DIAG output provides non-fail-safe information on errors for service purposes. You can read out this information by means of operator control and monitoring systems or, if applicable, you can evaluate it in your standard user program. DIAG bits 4 and 5 are saved until you acknowledge at the ACK input.

Structure of DIAG

Bit no.	Assignment	Possible error causes	Remedies
Bit 0	Incorrect TIM_DEL setting	Time delay setting < 0	Set time delay > 0
Bit 1	Reserved	—	—
Bit 2	Reserved	—	—
Bit 3	Reserved	—	—
Bit 4	Acknowledgment not possible because emergency STOP/emergency OFF is still active	Emergency STOP/Emergency OFF pushbutton is locked	Release Emergency STOP/Emergency OFF pushbutton
		F-I/O fault, channel fault, or communication error, or passivation by means of PASS_ON of F-I/O of emergency STOP/emergency OFF pushbutton	For a solution, see the section "Structure of DIAG", bits 0 to 6 in DIAG (Page 152)
		Emergency STOP/Emergency OFF pushbutton is defective	Check emergency STOP/emergency OFF pushbutton
		Wiring fault	Check wiring of the emergency STOP/emergency OFF pushbutton
Bit 5	If enable is missing: input ACK has a permanent signal state of 1	Acknowledgment button defective	Check acknowledgment button
		Wiring fault	Check wiring of acknowledgment button
Bit 6	Acknowledgment required (= state of ACK_REQ)	—	—
Bit 7	State of output Q	—	—

Timing imprecision resulting from the update time of the time base used in the instruction:

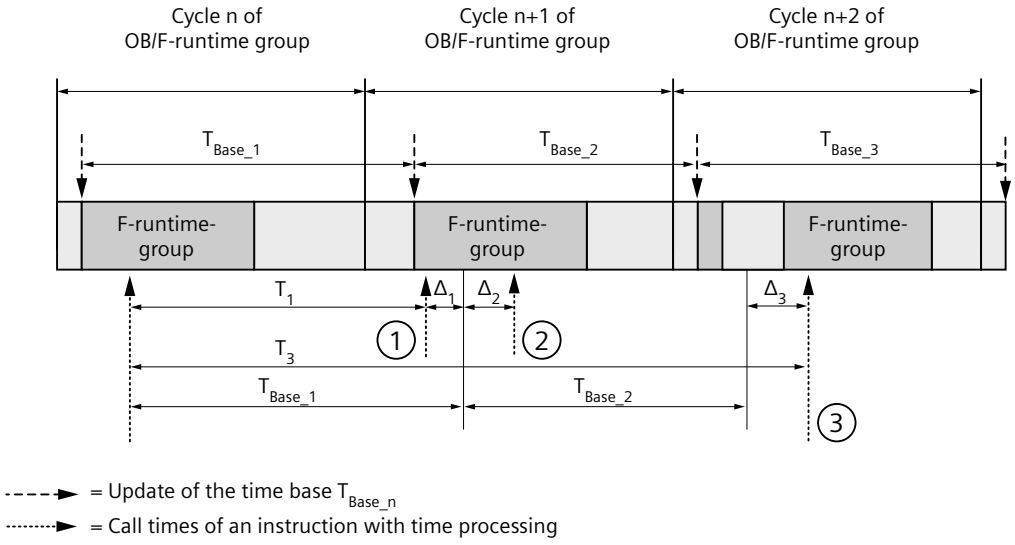

① For the first call in cycle n+1, the call time of the instruction relative to the start of the F-runtime group is earlier than that in cycle n by the amount of Δ_1, e.g. because parts of the safety program of the F-runtime group before the call time of the instruction in cycle n+1 are skipped. For the time update, the instruction takes account of time T_{Base_1} instead of the time T_1 that has actually elapsed in cycle n since the call.

② The instruction is called a second time in cycle n+1. This does not involve another time update (by Δ_2).

③ For the call in cycle n+2, the call time of the instruction relative to the start of the F-runtime group is later than that in cycle n by the amount of Δ_3, e.g. because the F-runtime group was interrupted by a higher priority interrupt before the call time of the instruction in cycle n+2. The instruction took into account time $T_{Base_1} + T_{Base_2}$ instead of the time T_3 that has actually elapsed in cycle n since the call. This would also be the case if no call occurred in cycle n+1.

Example

The following example shows how the instruction works:

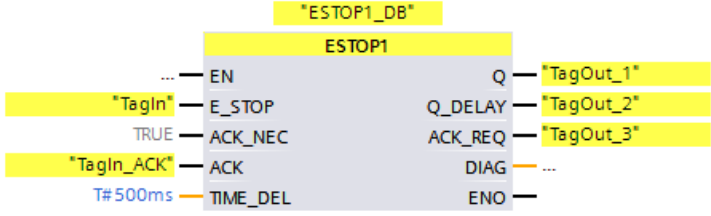

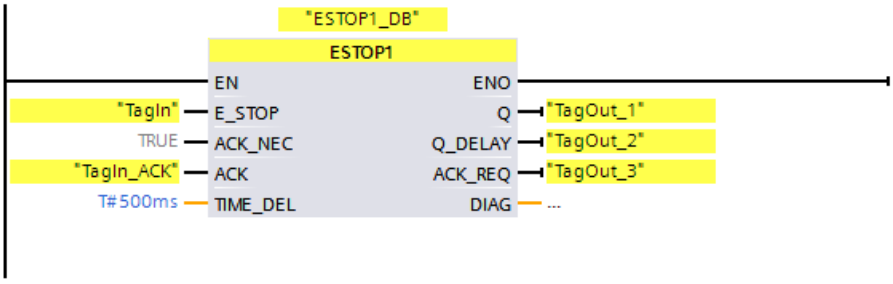

13.3.2 TWO_HAND: Two-hand monitoring (STEP 7 Safety Advanced V18) (S7-300, S7-400)

Description

This instruction supports the implementation of two-hand monitoring for the purpose of complying with requirements of ISO 13851. However, additional measures described in the standard may have to be taken in order to fully comply with the requirements of the standard.

NOTE

This instruction is only available for S7-300 and S7-400 F-CPUs. For S7-1200/1500 F-CPUs, you use the instruction "Two-hand monitoring with enable". The application "Two-hand monitoring with enable" replaces the instruction "Two-hand monitoring" with compatible functions.

If pushbuttons IN1 and IN2 are activated within the permitted discrepancy time DISCTIME ≤ 500 ms (IN1/IN2 = 1) (synchronous activation), output signal Q is set to 1. If the time difference between activation of pushbutton IN1 and pushbutton IN2 is greater than DISCTIME, then the pushbuttons must be released and reactivated.

Q is reset to 0 as soon as one of the pushbuttons is released (IN1/IN2 = 0). Enable signal Q can be reset to 1 only if the other pushbutton has been released, and if both pushbuttons are then reactivated within the discrepancy time. Enable signal Q can never be set to 1 if the discrepancy time is set to values less than 0 or greater than 500 ms.

Every call of the "Two-hand monitoring" instruction must be assigned a data area in which the instruction data are stored. The "Call options" dialog is automatically opened when the instruction is inserted in the program for this reason. There you can create a data block (single instance) (e.g., TWO_HAND_DB_1) or a multi-instance (e.g., TWO_HAND_Instance_1) for the "Two-hand monitoring" instruction. Once it is created, you can find the new data block in the project tree in the "STEP 7 Safety" folder under "Program blocks > System blocks" or the multi-instance as a local tag in the "Static" section of the block interface. For more information, refer to the help on *STEP 7*.

Enable input "EN" and enable output "ENO" cannot be connected. The instruction is therefore always executed (regardless of the signal state at enable input "EN").

Note: Only one signal per pushbutton can be evaluated in the instruction. Discrepancy monitoring of the NC and NO contacts of pushbuttons IN1 and IN2 is performed directly during suitable configuration (sensor evaluation: 1oo2 evaluation, non-equivalent) directly through the F-I/O with inputs. The normally open contact must be wired in such a way that it supplies the useful signal (see manual for the F-I/O you are using). In order to keep the discrepancy time from influencing the response time, you must assign "Supply value 0" for

the behavior of discrepancy during configuration. If a discrepancy is detected, a fail-safe value of 0 is entered in the process image of the inputs (PII) for the pushbutton and QBAD or QBAD_I_xx = 1 is set in the relevant F-I/O DB. (See also F-I/O access (Page 139))

WARNING

When using an instruction with time processing, take the following timing imprecision sources into account when determining your response times:

- The temporal blurring known from the standard user program, which is caused by the cyclic processing
- Timing imprecision resulting from the update time of the time base used in the instruction (see figure in section "Timing imprecision resulting from the update time of the time base used in the instruction")
- Tolerance of internal time monitoring in the F-CPU
  - For time values up to 200 ms, a maximum of 4 ms
  - For time values greater than or equal to 200 ms, a maximum of 2% of the (assigned) time value
- Tolerance of internal time monitoring in the S7-1500 HF-CPU
  - For time values up to 500 ms, a maximum of 10 ms
  - For time values greater than or equal to 500 ms, a maximum of 2% of the (assigned) time value

You must choose the interval between two call times of an instruction with time processing in such a way that the required response times are achieved, taking into account the possible timing imprecision. *(S034)*

Parameters

The following table shows the parameters of the instruction:

Parameter	Declaration	Data type	Description
IN1	Input	BOOL	Pushbutton 1
IN2	Input	BOOL	Pushbutton 2
DISCTIME	Input	TIME	Discrepancy time (0 to 500 ms)
Q	Output	BOOL	1=Enable

Timing imprecision resulting from the update time of the time base used in the instruction:

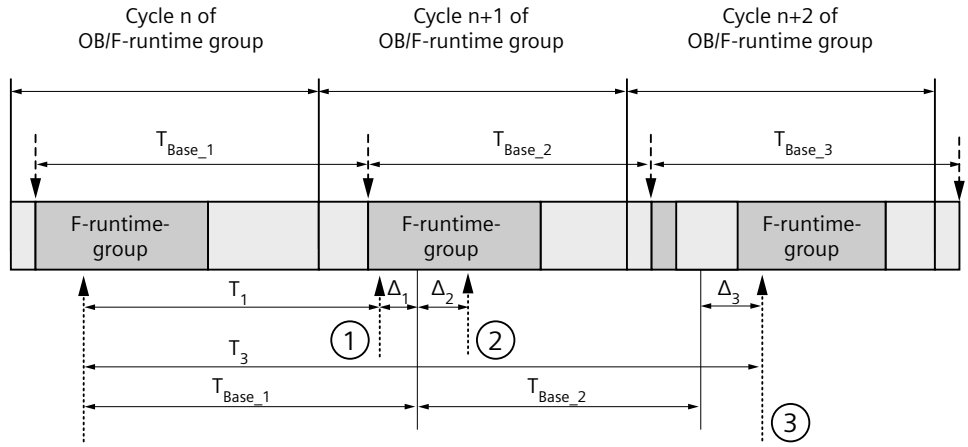

- - - - ► = Update of the time base T_{Base_n}

····· ► = Call times of an instruction with time processing

① For the first call in cycle n+1, the call time of the instruction relative to the start of the F-runtime group is earlier than that in cycle n by the amount of Δ_1, e.g. because parts of the safety program of the F-runtime group before the call time of the instruction in cycle n+1 are skipped. For the time update, the instruction takes account of time T_{Base_1} instead of the time T_1 that has actually elapsed in cycle n since the call.

② The instruction is called a second time in cycle n+1. This does not involve another time update (by Δ_2).

③ For the call in cycle n+2, the call time of the instruction relative to the start of the F-runtime group is later than that in cycle n by the amount of Δ_3, e.g. because the F-runtime group was interrupted by a higher priority interrupt before the call time of the instruction in cycle n+2. The instruction took into account time $T_{Base_1} + T_{Base_2}$ instead of the time T_3 that has actually elapsed in cycle n since the call. This would also be the case if no call occurred in cycle n+1.

Example

The following example shows how the instruction works:

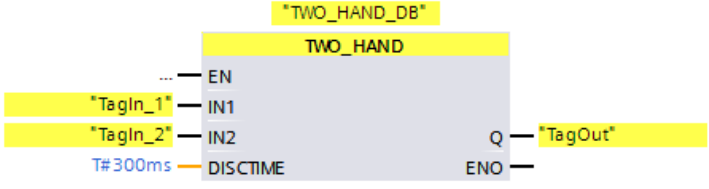

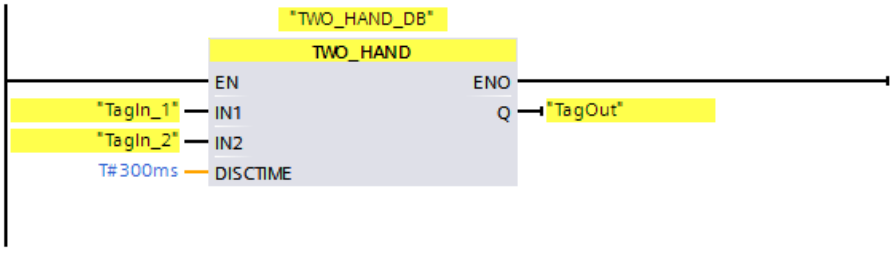

13.3.3 TWO_H_EN: Two-hand monitoring with enable (STEP 7 Safety V18)

Description

This instruction supports the implementation of two-hand monitoring with enable for the purpose of complying with requirements of ISO 13851. However, additional measures described in the standard may have to be taken in order to fully comply with the requirements of the standard.

If pushbuttons IN1 and IN2 are activated within the permitted discrepancy time DISCTIME ≤ 500 ms (IN1/IN2 = 1) (synchronous activation), output signal Q is set to 1 when existing ENABLE = 1. If the time difference between activation of pushbutton IN1 and pushbutton IN2 is greater than DISCTIME, then the pushbuttons must be released and reactivated.

Q is reset to 0 as soon as one of the pushbuttons is released (IN1/IN 2 = 0) or ENABLE = 0. Enable signal Q can be reset to 1 only if the other pushbutton has been released, and if both pushbuttons are then reactivated within the discrepancy time when existing ENABLE = 1.

Every call of the "Two-hand monitoring with enable" instruction must be assigned a data area in which the instruction data are stored. The "Call options" dialog is automatically opened when the instruction is inserted in the program for this reason. There you can create a data block (single instance) (e.g., TWO_H_EN_DB_1) or a multi-instance (e.g., TWO_H_EN_Instance_1) for the "Two-hand monitoring with enable" instruction. Once it is created, you can find the new data block in the project tree in the "STEP 7 Safety" folder under "Program blocks > System blocks" or the multi-instance as a local tag in the "Static" section of the block interface. For more information, refer to the help on *STEP 7*.

Enable input "EN" and enable output "ENO" cannot be connected. The instruction is therefore always executed (regardless of the signal state at enable input "EN").

Note: Only one signal per pushbutton can be evaluated in the instruction. Discrepancy monitoring of the NC and NO contacts of pushbuttons IN1 and IN2 is performed directly during suitable configuration (sensor evaluation: 1oo2 evaluation, non-equivalent) directly through the F-I/O with inputs. The normally open contact must be wired in such a way that it supplies the useful signal (see manual for the F-I/O you are using). In order to keep the discrepancy time from influencing the response time, during the configuration of discrepancy behavior, you must configure "Supply value 0".

If a discrepancy is detected, a fail-safe value of 0 is entered in the process image of the inputs (PII) for the pushbutton and QBAD or QBAD_I_xx = 1 or respectively value status = 0 is set in the relevant F-I/O DB.

WARNING

When using an instruction with time processing, take the following timing imprecision sources into account when determining your response times:

- The temporal blurring known from the standard user program, which is caused by the cyclic processing
- Timing imprecision resulting from the update time of the time base used in the instruction (see figure in section "Timing imprecision resulting from the update time of the time base used in the instruction")
- Tolerance of internal time monitoring in the F-CPU
  - For time values up to 200 ms, a maximum of 4 ms
  - For time values greater than or equal to 200 ms, a maximum of 2% of the (assigned) time value
- Tolerance of internal time monitoring in the S7-1500 HF-CPU
  - For time values up to 500 ms, a maximum of 10 ms
  - For time values greater than or equal to 500 ms, a maximum of 2% of the (assigned) time value

You must choose the interval between two call times of an instruction with time processing in such a way that the required response times are achieved, taking into account the possible timing imprecision. *(S034)*

Parameters

The following table shows the parameters of the instruction:

Parameter	Declaration	Data type	Description
IN1	Input	BOOL	Pushbutton 1
IN2	Input	BOOL	Pushbutton 2
ENABLE	Input	BOOL	Enable input
DISCTIME	Input	TIME	Discrepancy time (0 to 500 ms) For productive use, select a discrepancy time > 0 ms.
Q	Output	BOOL	1=Enable
DIAG	Output	BYTE	Non-fail safe service information

Instruction versions

A number of versions are available for this instruction:

Version	S7-300/400	S7-1200	S7-1500	Function
1.0	x	—	—	When projects that were created with *S7 Distributed Safety V5.4 SP5* are migrated, version 1.0 of the instruction is used automatically. If you want to compile a migrated safety program with *STEP 7 Safety Advanced* for the first time, we recommend that you first update to the latest available version of the instruction.
1.1	x	—	o	These versions have identical functions to version 1.0.
1.2	x	o	o	
1.3	x	x	x	

o This version is no longer supported.

When a new F-CPU is created with *STEP 7 Safety*, the latest available version for the F-CPU created is automatically preset.
For more information on the use of instruction versions, refer to the help on *STEP 7* under "Using instruction versions".

Output DIAG

The DIAG output provides non-fail-safe information on errors for service purposes. You can read out this information by means of operator control and monitoring systems or, if applicable, you can evaluate it in your standard user program. DIAG bits 0 to 5 are saved until the cause of the error has been eliminated.

Structure of DIAG

Bit no.	Assignment	Possible error causes	Remedies
Bit 0	Incorrect discrepancy time DISCTIME setting	Discrepancy time setting is <0 or > 500 ms	Set discrepancy time in range of 0 to 500 ms
Bit 1	Discrepancy time elapsed	Discrepancy time setting is too low	If necessary, set a higher discrepancy time
		Pushbuttons were not activated within the discrepancy time	Release pushbuttons and activate them within the discrepancy time
		Wiring fault	Check wiring of pushbuttons
		Pushbuttons defective	Check pushbuttons
		Pushbuttons are wired to different F-I/O, and F-I/O fault, channel fault, or communication error, or passivation by means of PASS_ON on an F-I/O	For a solution, see the section "Structure of DIAG", bits 0 to 6 in DIAG (Page 152)
Bit 2	Reserved	—	—
Bit 3	Reserved	—	—

Bit no.	Assignment	Possible error causes	Remedies
Bit 4	Incorrect activation sequence	One pushbutton was not released	Release pushbuttons and activate them within the discrepancy time
		Pushbuttons defective	Check pushbuttons
Bit 5	ENABLE does not exist	ENABLE = 0	Set ENABLE = 1, release pushbutton and activate it within the discrepancy time
Bit 6	Reserved	—	—
Bit 7	State of output Q	—	—

Timing imprecision resulting from the update time of the time base used in the instruction:

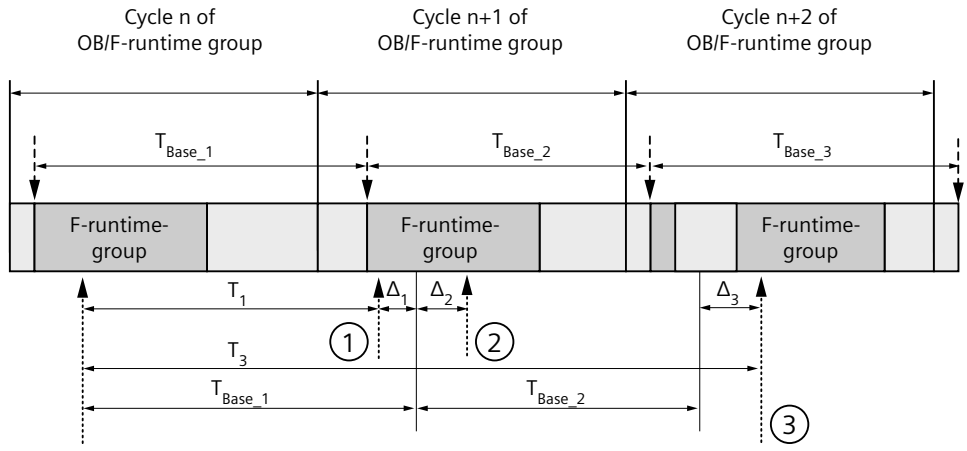

- - - - ► = Update of the time base T_{Base_n}

····· ► = Call times of an instruction with time processing

① For the first call in cycle n+1, the call time of the instruction relative to the start of the F-runtime group is earlier than that in cycle n by the amount of Δ_1, e.g. because parts of the safety program of the F-runtime group before the call time of the instruction in cycle n+1 are skipped. For the time update, the instruction takes account of time T_{Base_1} instead of the time T_1 that has actually elapsed in cycle n since the call.

② The instruction is called a second time in cycle n+1. This does not involve another time update (by Δ_2).

③ For the call in cycle n+2, the call time of the instruction relative to the start of the F-runtime group is later than that in cycle n by the amount of Δ_3, e.g. because the F-runtime group was interrupted by a higher priority interrupt before the call time of the instruction in cycle n+2. The instruction took into account time $T_{Base_1} + T_{Base_2}$ instead of the time T_3 that has actually elapsed in cycle n since the call. This would also be the case if no call occurred in cycle n+1.

Example

The following example shows how the instruction works:

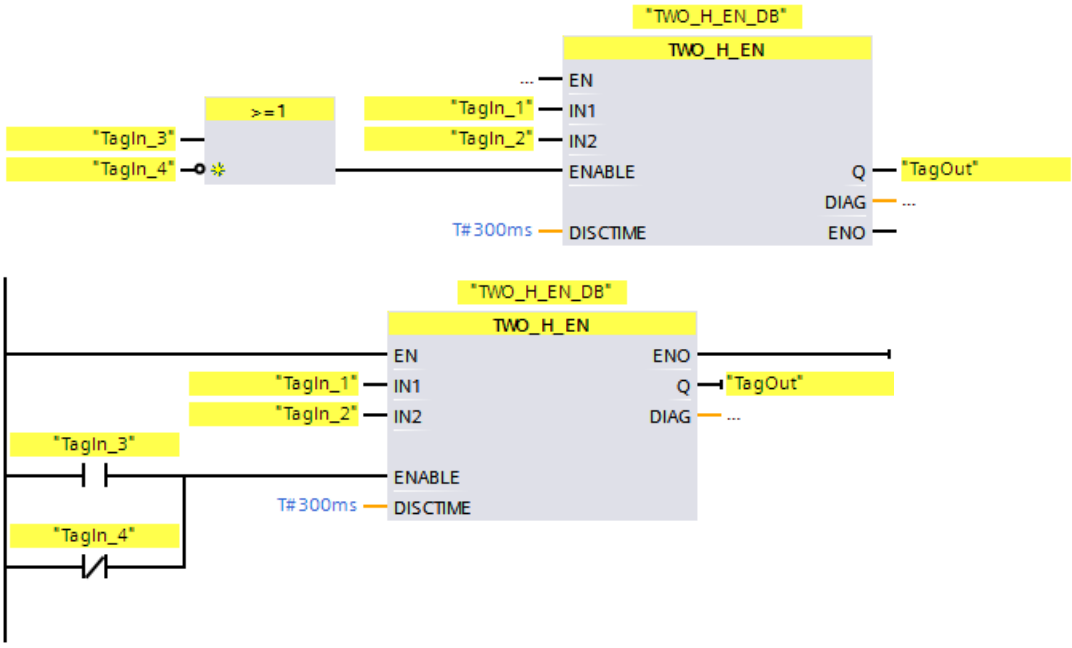

13.3.4 MUTING: Muting (STEP 7 Safety Advanced V18) (S7-300, S7-400)

Description

This instruction performs parallel muting with two or four muting sensors.

NOTE

This instruction is only available for S7-300 and S7-400 F-CPUs. For S7-1200/1500 F-CPUs, you use the instruction "Parallel muting (Page 413)". The instruction "Parallel muting" replaces the instruction "Muting" with compatible functions.

Muting is a defined suppression of the protective function of light curtains. Light curtain muting can be used to introduce goods or objects into the danger area monitored by the light curtain without causing the machine to stop.

To utilize the muting function, at least two independently wired muting sensors must be present. The use of two or four muting sensors and correct integration into the production sequence must ensure that no persons enter the danger area while the light curtain is muted.

Every call of the "Muting" instruction must be assigned a data area in which the instruction data are stored. The "Call options" dialog is automatically opened when the instruction is inserted in the program for this reason. There you can create a data block (single instance) (e.g., MUTING_DB_1) or a multi-instance (e.g., MUTING_Instance_1) for the "Muting" instruction. Once it is created, you can find the new data block in the project tree in the "STEP 7 Safety" folder under "Program blocks > System blocks" or the multi-instance as a local tag in the "Static" section of the block interface. For more information, refer to the help on *STEP 7*.

Enable input "EN" and enable output "ENO" cannot be connected. The instruction is therefore always executed (regardless of the signal state at enable input "EN").

WARNING

When using an instruction with time processing, take the following timing imprecision sources into account when determining your response times:

- The temporal blurring known from the standard user program, which is caused by the cyclic processing
- Timing imprecision resulting from the update time of the time base used in the instruction (see figure in section "Timing imprecision resulting from the update time of the time base used in the instruction")
- Tolerance of internal time monitoring in the F-CPU
  - For time values up to 200 ms, a maximum of 4 ms
  - For time values greater than or equal to 200 ms, a maximum of 2% of the (assigned) time value
- Tolerance of internal time monitoring in the S7-1500 HF-CPU
  - For time values up to 500 ms, a maximum of 10 ms
  - For time values greater than or equal to 500 ms, a maximum of 2% of the (assigned) time value

You must choose the interval between two call times of an instruction with time processing in such a way that the required response times are achieved, taking into account the possible timing imprecision. *(S034)*

Parameter

The following table shows the parameters of the instruction:

Parameter	Declaration	Data type	Description
MS_11	Input	BOOL	Muting sensor 1 of sensor pair 1
MS_12	Input	BOOL	Muting sensor 2 of sensor pair 1
MS_21	Input	BOOL	Muting sensor 1 of sensor pair 2
MS_22	Input	BOOL	Muting sensor 2 of sensor pair 2
STOP	Input	BOOL	1=Conveyor system stopped
FREE	Input	BOOL	1=Light curtain uninterrupted
QBAD_MUT	Input	BOOL	QBAD signal of the F-I/O or QBAD_O_xx signal of the muting lamp channel
DISCTIM1	Input	TIME	Discrepancy time of sensor pair 1 (0 to 3 s)
DISCTIM2	Input	TIME	Discrepancy time of sensor pair 2 (0 to 3 s)
TIME_MAX	Input	TIME	Maximum muting time (0 to 10 min)
ACK	Input	BOOL	Acknowledgment of restart inhibit
Q	Output	BOOL	1= Enable, not off

Parameter	Declaration	Data type	Description
MUTING	Output	BOOL	Display of muting is active
ACK_REQ	Output	BOOL	Acknowledgment necessary
FAULT	Output	BOOL	Group error
DIAG	Output	BYTE	Non-fail safe service information

Schematic sequence of error-free muting procedure with 4 muting sensors (MS_11, MS_12, MS_21, MS_22)

1

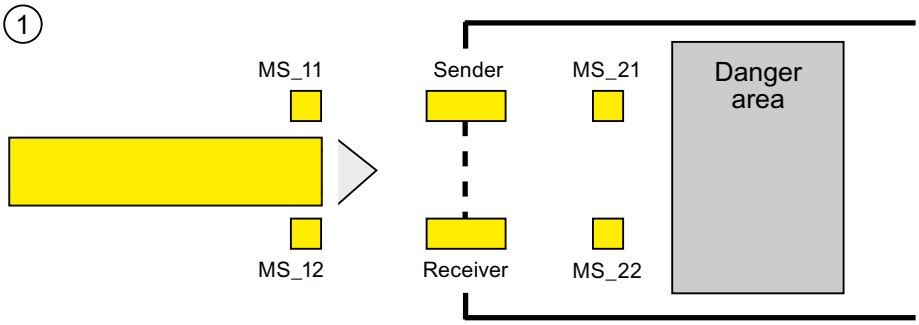

- If both muting sensors MS_11 and MS_12 are activated by the product within DISCTIM1 (apply signal state = 1), the instruction starts the MUTING function. Enable signal Q remains 1, even when input FREE = 0 (light curtain interrupted by product). The MUTING output for setting the muting lamp switches to 1.

NOTE

The muting lamp can be monitored using the QBAD_MUT input. To do this, you must wire the muting lamp to an output with wire break monitoring of an F-I/O and supply the QBAD_MUT input with the QBAD signal of the associated F-I/O or the QBAD_O_xx signal of the associated channel. If QBAD_MUT = 1, muting is terminated by the instruction. If monitoring of the muting lamp is not necessary, you do not have to supply input QBAD_MUT.

F-I/O that can promptly detect a wire break after activation of the muting operation must be used (*see manual for specific F-I/O*).

2

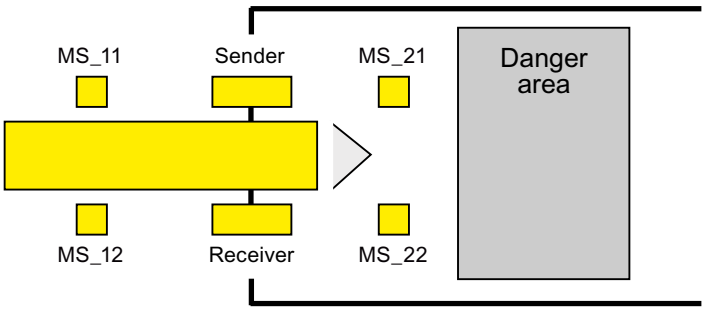

- As long as both muting sensors MS_11 and MS_12 continue to be activated, the MUTING function of the instruction causes Q to remain 1 and MUTING to remain 1 (so that the product can pass through the light curtain without causing the machine to stop).

③

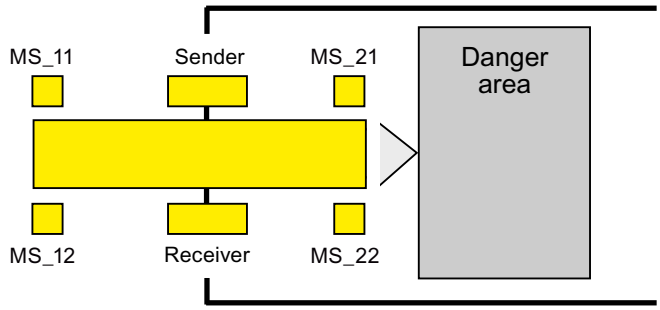

- The two muting sensors MS_21 and MS_22 must be activated (within DISCTIM2) before muting sensors MS_11 and MS_12 are switched to inactive (apply signal state 0). In this way, the instruction retains the MUTING function. (Q = 1, MUTING = 1).

④

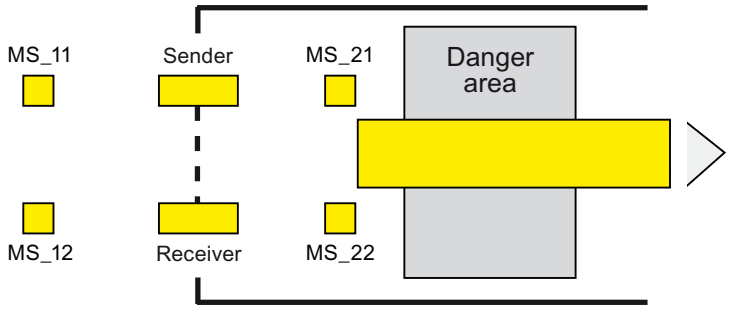

- Only if one of the two muting sensors MS_21 and MS_22 is switched to inactive (product enables sensors) is the MUTING function terminated (Q = 1, MUTING = 0). The maximum activation time for the MUTING function is the time set at input TIME_MAX.

NOTE

The MUTING function is also started if the product passes the light curtain in the reverse direction and the muting sensors are thus activated by the product in reverse order.

Timing diagrams for error-free muting procedure with 4 muting sensors

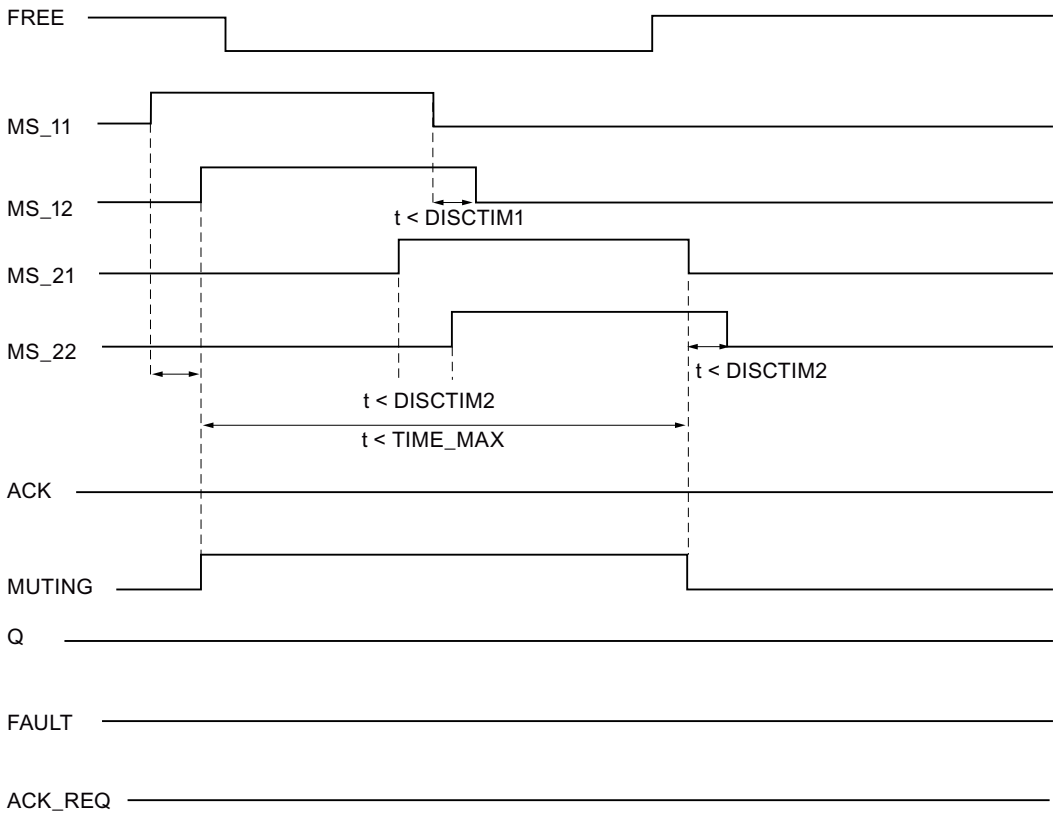

Schematic sequence of muting procedure with reflection light barriers

If reflection light barriers are used as muting sensors, they are generally arranged diagonally. In general, this arrangement of reflection light barriers as muting sensors requires only two light barriers, and only MS_11 and MS_12 are interconnected.

The sequence is similar to that of the muting procedure with 4 muting sensors. Step 3 is omitted. In step 4, replace MS_21 and MS_22 with MS_11 and MS_12, respectively.

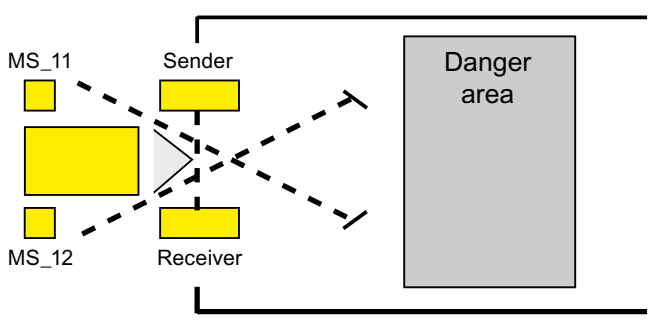

Restart inhibit upon interruption of light curtain (if MUTING is not active), when errors occur, and during F-system startup

Enable signal Q cannot be set to 1 or becomes 0, if:

- Light curtain is interrupted (e.g., by a person or material transport) while the MUTING function is not active
- The muting lamp monitoring function responds at input QBAD_MUT
- Sensor pair 1 (MS_11 and MS_12) or sensor pair 2 (MS_21 and MS_22) is not activated or deactivated during discrepancy time DISCTIM1 or DISCTIM2, respectively
- The MUTING function is active longer than the maximum muting time TIME_MAX
- Discrepancy times DISCTIM1 and DISCTIM2 have been set to values < 0 or > 3 s
- Maximum muting time TIME_MAX has been set to a value< 0 or > 10 min

In the identified cases, output FAULT (group error) is set to 1 (restart inhibit). If the MUTING function is started, it will be terminated and the Muting output becomes 0.

WARNING

When a valid combination of muting sensors is immediately detected at startup of the F-system (for example, because the muting sensors are interconnected to inputs of a standard I/O that immediately provide process values during the F-system startup), the MUTING function is immediately started and the MUTING output and enable signal Q are set to 1. The FAULT output (group error) is not set to 1 (no restart inhibit!). *(S035)*

Acknowledgment of restart inhibit

Enable signal Q becomes 1 again, when:

- The light curtain is no longer interrupted
- If present, errors are eliminated (see output DIAG)
  and
- A user acknowledgment with positive edge occurs at input ACK (see also Implementation of user acknowledgment (Page 165)).

The FAULT output is set to 0. Output ACK_REQ = 1 signals that user acknowledgment at input ACK is required to eliminate the restart inhibit. The instruction sets ACK-REQ = 1 as soon as the light curtain is no longer interrupted or errors have been eliminated. Once acknowledgment has occurred, the instruction resets ACK_REQ to 0.

NOTE

Following discrepancy errors and once the maximum muting time has been exceeded, ACK_REQ is immediately set to 1. As soon as a user acknowledgment has taken place at input ACK, discrepancy times DISCTIM1 and DISCTIM2 and maximum muting time TIME_MAX are reset.

Timing diagrams for discrepancy errors at sensor pair 1 or interruption of the light curtain (if MUTING is not active)

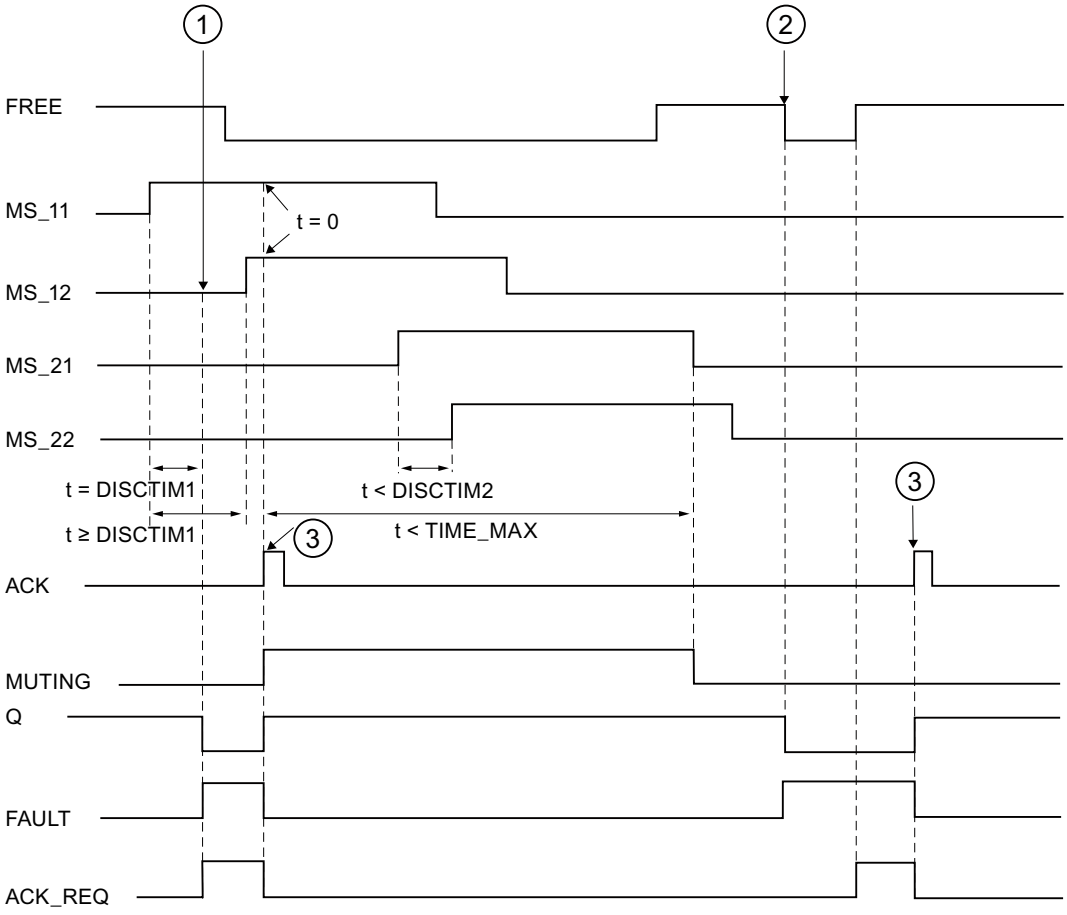

① Sensor pair 1 (MS_11 and MS_12) is not activated within discrepancy time DISCTIM1.

② The light curtain is interrupted even though the MUTING function is not active.

③ Acknowledgment

Behavior with stopped conveyor equipment

If, while the conveyor equipment has stopped, the monitoring for one of the following reasons is to be deactivated:

- To comply with discrepancy time DISCTIM1 or DISCTIM2
- To comply with maximum muting time TIME_MAX

You must supply input STOP with a "1" signal for as long as the conveyor equipment is stopped. As soon as the conveyor equipment is running again (STOP = 0), discrepancy times DISCTIM1 and DISCTIM2 and maximum muting time TIME_MAX are reset.

WARNING

When STOP = 1, the discrepancy monitoring is shut down. During this time, if inputs MSx1/MSx2 of a sensor pair both take a signal state of 1 due to an undetected error, e.g., because both muting sensors fail to 1, the error is not detected and the MUTING function can be started unintentionally. *(S036)*

Output DIAG

The DIAG output provides non-fail-safe information on errors for service purposes. You can read out this information by means of operator control and monitoring systems or, if applicable, you can evaluate it in your standard user program. DIAG bits are saved until acknowledgment at input ACK.

Structure of DIAG

Bit no.	Assignment	Possible error causes	Remedies
Bit 0	Discrepancy error or incorrect discrepancy time DISCTIM 1 setting for sensor pair 1	Malfunction in production sequence	Malfunction in production sequence eliminated
		Sensor defective	Check sensors
		Wiring fault	Check wiring of sensors
		Sensors are wired to different F-I/O, and F-I/O fault, channel fault, or communication error, or passivation by means of PASS_ON on an F-I/O	For a solution, see the section "Structure of DIAG", bits 0 to 6 in DIAG (Page 152)
		Discrepancy time setting is too low	If necessary, set a higher discrepancy time
		Discrepancy time setting is < 0 s or > 3 s	Set discrepancy time in range between 0 s and 3 s
Bit 1	Discrepancy error or incorrect discrepancy time DISCTIM 2 setting for sensor pair 2	Same as Bit 0	Same as Bit 0
Bit 2	Maximum muting time exceeded or incorrect muting time TIME_MAX setting	Malfunction in production sequence	Malfunction in production sequence eliminated
		Maximum muting time setting is too low	If necessary, set a higher maximum muting time
		Muting time setting is < 0 s or > 10 min	Set muting time in range from 0 s to 10 min

Bit no.	Assignment	Possible error causes	Remedies
Bit 3	Light curtain interrupted and muting not active	Light curtain is defective	Check light curtain
		Wiring fault	Check wiring of light curtain (FREE input)
		F-I/O fault, channel fault, or communication error, or passivation by means of PASS_ON of F-I/O of light curtain (FREE input)	For a solution, see the section "Structure of DIAG", bits 0 to 6 in DIAG (Page 152)
		See other DIAG bits	
Bit 4	Muting lamp is defective or cannot be set	Muting lamp is defective	Replace muting lamp
		Wiring fault	Check wiring of muting lamp
		F-I/O fault, channel fault, or communication error, or passivation by means of PASS_ON of F-I/O of muting lamp	For a solution, see the section "Structure of DIAG", bits 0 to 6 in DIAG (Page 152)
Bit 5	Reserved	—	—
Bit 6	Reserved	—	—
Bit 7	Reserved	—	—

Timing imprecision resulting from the update time of the time base used in the instruction:

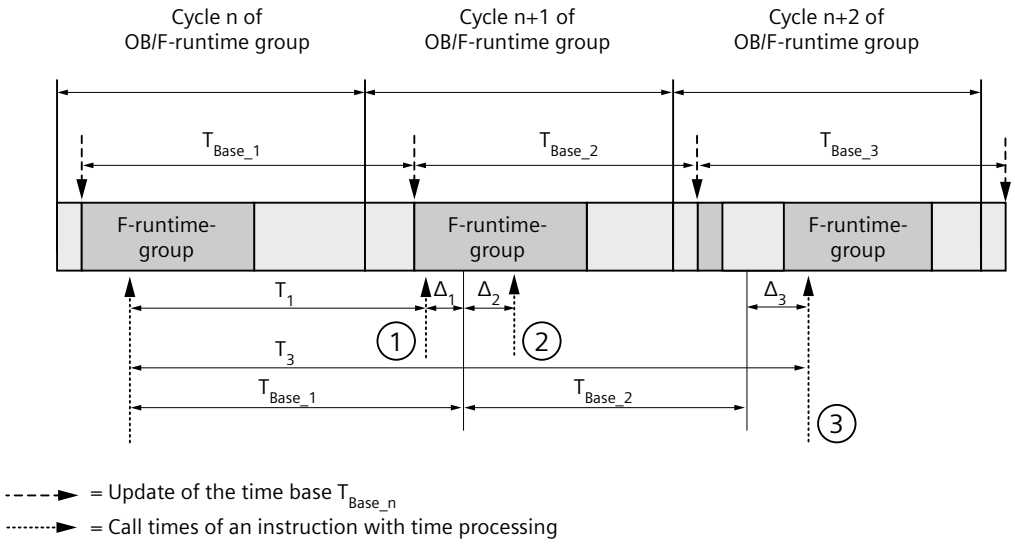

① For the first call in cycle n+1, the call time of the instruction relative to the start of the F-runtime group is earlier than that in cycle n by the amount of Δ_1, e.g. because parts of the safety program of the F-runtime group before the call time of the instruction in cycle n+1 are skipped. For the time update, the instruction takes account of time T_{Base_1} instead of the time T_1 that has actually elapsed in cycle n since the call.

② The instruction is called a second time in cycle n+1. This does not involve another time update (by Δ_2).

③ For the call in cycle n+2, the call time of the instruction relative to the start of the F-runtime group is later than that in cycle n by the amount of Δ_3, e.g. because the F-runtime group was interrupted by a higher priority interrupt before the call time of the instruction in cycle n+2. The instruction took into account time $T_{Base_1} + T_{Base_2}$ instead of the time T_3 that has actually elapsed in cycle n since the call. This would also be the case if no call occurred in cycle n+1.

Example

The following example shows how the instruction works:

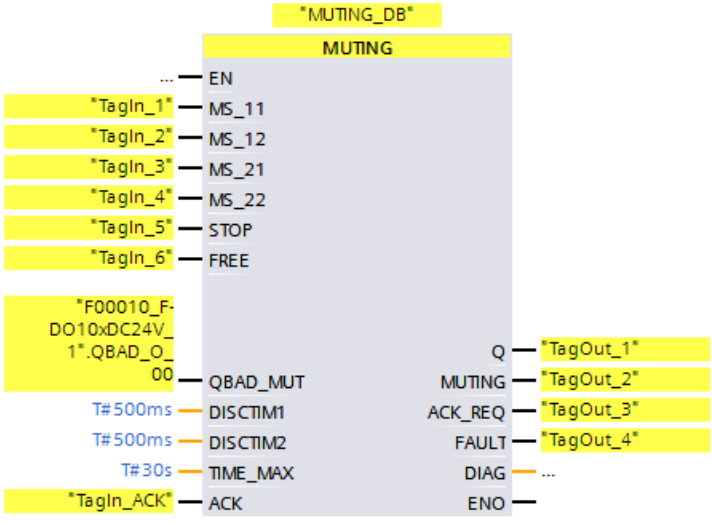

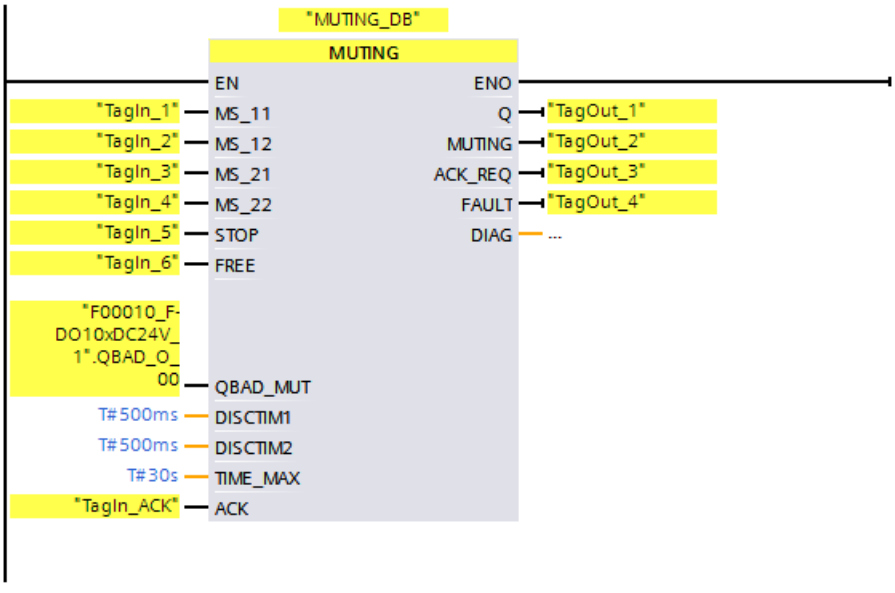

13.3.5 MUT_P: Parallel muting (STEP 7 Safety V18)

Description

This instruction performs parallel muting with two or four muting sensors.

Muting is a defined suppression of the protective function of light curtains. Light curtain muting can be used to introduce goods or objects into the danger area monitored by the light curtain without causing the machine to stop.

To utilize the muting function, at least two independently wired muting sensors must be present. The use of two or four muting sensors and correct integration into the production sequence must ensure that no persons enter the danger area while the light curtain is muted.

Every call of the "Parallel muting" instruction must be assigned a data area in which the instruction data are stored. The "Call options" dialog is automatically opened when the instruction is inserted in the program for this reason. There you can create a data block (single instance) (e.g., MUT_P_DB_1) or a multi-instance (e.g., MUT_P_Instance_1) for the "Parallel muting" instruction. Once it is created, you can find the new data block in the project tree in the "STEP 7 Safety" folder under "Program blocks > System blocks" or the multi-instance as a local tag in the "Static" section of the block interface. For more information, refer to the help on *STEP 7*.

Enable input "EN" and enable output "ENO" cannot be connected. The instruction is therefore always executed (regardless of the signal state at enable input "EN").

WARNING

When using an instruction with time processing, take the following timing imprecision sources into account when determining your response times:

- The temporal blurring known from the standard user program, which is caused by the cyclic processing
- Timing imprecision resulting from the update time of the time base used in the instruction (see figure in section "Timing imprecision resulting from the update time of the time base used in the instruction")
- Tolerance of internal time monitoring in the F-CPU
  - For time values up to 200 ms, a maximum of 4 ms
  - For time values greater than or equal to 200 ms, a maximum of 2% of the (assigned) time value
- Tolerance of internal time monitoring in the S7-1500 HF-CPU
  - For time values up to 500 ms, a maximum of 10 ms
  - For time values greater than or equal to 500 ms, a maximum of 2% of the (assigned) time value

You must choose the interval between two call times of an instruction with time processing in such a way that the required response times are achieved, taking into account the possible timing imprecision. *(S034)*

Parameters

The following table shows the parameters of the instruction:

Parameter	Declaration	Data type	Description
MS_11	Input	BOOL	Muting sensor 11
MS_12	Input	BOOL	Muting sensor 12
MS_21	Input	BOOL	Muting sensor 21
MS_22	Input	BOOL	Muting sensor 22
STOP	Input	BOOL	1=Conveyor system stopped
FREE	Input	BOOL	1=Light curtain uninterrupted
ENABLE	Input	BOOL	1=Enable MUTING
QBAD_MUT	Input	BOOL	QBAD signal of the F-I/O or QBAD_O_xx signal / inverted value status of the muting lamp channel
ACK	Input	BOOL	Acknowledgment of restart inhibit
DISCTIM1	Input	TIME	Discrepancy time of sensor pair 1 (0 to 3 s)
DISCTIM2	Input	TIME	Discrepancy time of sensor pair 2 (0 to 3 s)
TIME_MAX	Input	TIME	Maximum muting time (0 to 10 min)
Q	Output	BOOL	1= Enable, not off
MUTING	Output	BOOL	Display of muting is active
ACK_REQ	Output	BOOL	Acknowledgment necessary
FAULT	Output	BOOL	Group error
DIAG	Output	WORD	Non-fail safe service information

Instruction versions

A number of versions are available for this instruction:

Version	S7-300/400	S7-1200	S7-1500	Function
1.0	x*	—	—	When projects that were created with *S7 Distributed Safety V5.4 SP5* are migrated, version 1.0 of the instruction is used automatically. If you want to compile a migrated safety program with *STEP 7 Safety Advanced* for the first time, we recommend that you first update to the latest available version of the instruction.
1.1	x*	—	—	These versions have identical functions to version 1.0. The output DIAG can now be correctly interconnected with the operand of data type WORD.
1.2	x*	—	o	
1.3	x*	o	o	
1.4	x	x	x	

o This version is no longer supported.

* S7-300/400: When a restart inhibit (output FAULT = 1) and ENABLE = 1 is present, output ACK_REQ is set to 1 even if not at least one muting sensor is activated. Use the DIAG bits 5 and 6 for additional information.

When a new F-CPU is created with *STEP 7 Safety*, the latest available version for the F-CPU created is automatically preset.

For more information on the use of instruction versions, refer to the help on *STEP 7* under "Using instruction versions".

Schematic sequence of error-free muting procedure with 4 muting sensors (MS_11, MS_12, MS_21, MS_22)

1

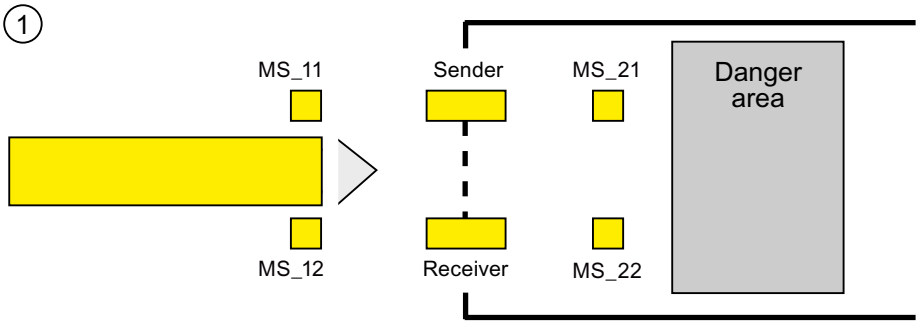

- If muting sensors MS_11 and MS_12 are both activated by the product within DISCTIM1 (apply signal state = 1) and MUTING is enabled by setting the ENABLE input to 1, the instruction starts the MUTING function. Enable signal Q remains 1, even when input FREE = 0 (light curtain interrupted by product). The MUTING output for setting the muting lamp switches to 1.

NOTE

The muting lamp can be monitored using the QBAD_MUT input. To do this, you must wire the muting lamp to an output with wire break monitoring of an F-I/O and supply the QBAD_MUT input with the QBAD signal of the associated F-I/O or the QBAD_O_xx signal / with inverted value statues of the associated channel. If QBAD_MUT = 1, muting is terminated by the instruction. If monitoring of the muting lamp is not necessary, you do not have to supply input QBAD_MUT.

F-I/O that can promptly detect a wire break after activation of the muting operation must be used (*see manual for specific F-I/O*).

2

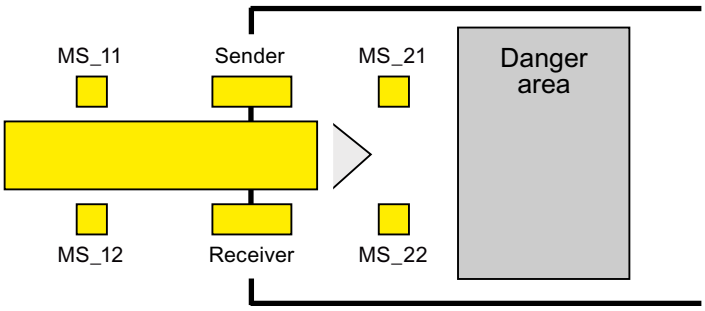

- As long as both muting sensors MS_11 and MS_12 continue to be activated, the MUTING function of the instruction causes Q to remain 1 and MUTING to remain 1 (so that the product can pass through the light curtain without causing the machine to stop). Each of the two muting sensors MS_11 and MS_12 may be switched to inactive (t < DISCTIM1) for a short time (apply signal state 0).

  ③

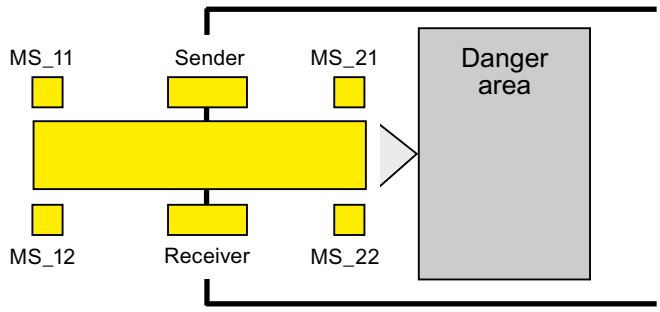

- Muting sensors MS_21 and MS_22 must both be activated (within DISCTIM2) before muting sensors MS_11 and MS_12 are switched to inactive (apply signal state 0). In this way, the instruction retains the MUTING function. (Q = 1, MUTING = 1).

  ④

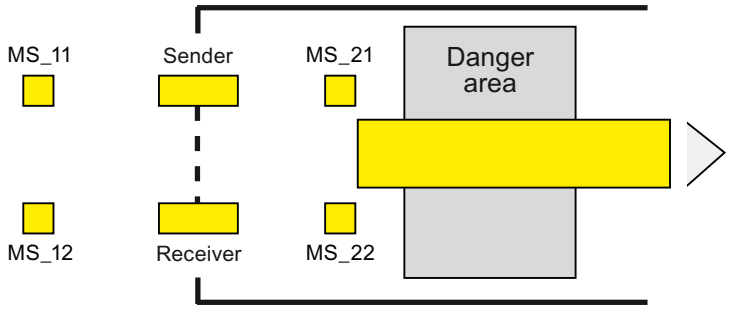

Only if muting sensors MS_21 and MS_22 are both switched to inactive (product enables sensors) is the MUTING function terminated (Q = 1, MUTING = 0). The maximum activation time for the MUTING function is the time set at input TIME_MAX.

NOTE

The MUTING function is also started if the product passes the light curtain in the reverse direction and the muting sensors are thus activated by the product in reverse order.

Timing diagrams for error-free muting procedure with 4 muting sensors

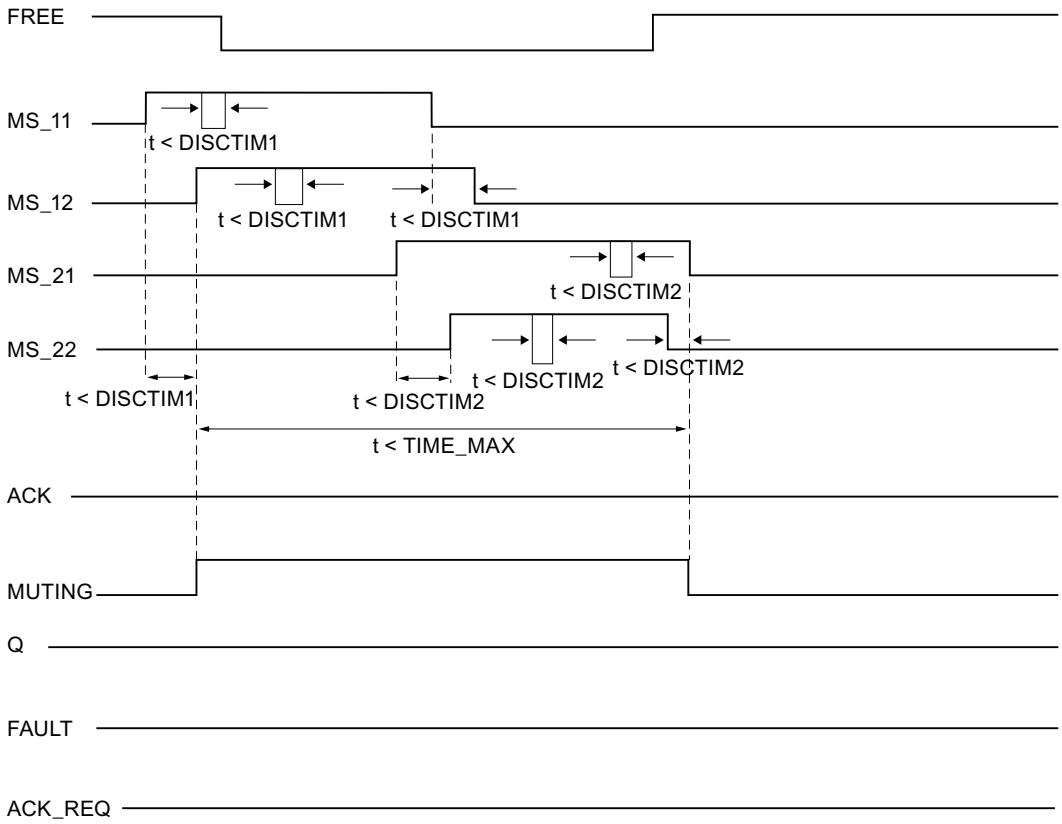

Schematic sequence of muting procedure with reflection light barriers

If reflection light barriers are used as muting sensors, they are generally arranged diagonally. In general, this arrangement of reflection light barriers as muting sensors requires only two light barriers, and only MS_11 and MS_12 are interconnected.

The sequence is similar to that of the muting procedure with 4 muting sensors. Step 3 is omitted. In step 4, replace MS_21 and MS_22 with MS_11 and MS_12, respectively.

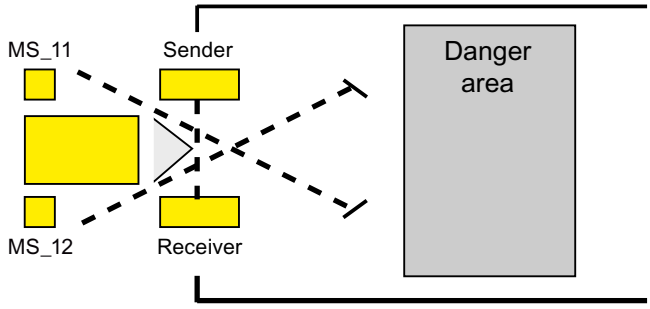

Restart inhibit upon interruption of light curtain (MUTING is not active), as well as when errors occur and during F-system startup

Enable signal Q cannot be set to 1 or becomes 0, if:

- Light curtain is interrupted (e.g., by a person or material transport) while the MUTING function is not active
- Light curtain is (being) interrupted and the muting lamp monitoring at input QBAD_MUT is set to 1
- Light curtain is (being) interrupted and the MUTING function is not enabled by setting input ENABLE to 1
- Sensor pair 1 (MS_11 and MS_12) or sensor pair 2 (MS_21 and MS_22) is not activated or deactivated during discrepancy time DISCTIM1 or DISCTIM2, respectively
- The MUTING function is active longer than the maximum muting time TIME_MAX
- Discrepancy times DISCTIM1 and DISCTIM2 have been set to values < 0 or > 3 s
- Maximum muting time TIME_MAX has been set to a value< 0 or > 10 min
- The F-system starts up (regardless of whether or not the light curtain is interrupted, because the F-I/O is passivated after F-system startup and, thus, the FREE input is initially supplied with 0)

In the identified cases, output FAULT (group error) is set to 1 (restart inhibit). If the MUTING function is started, it will be terminated and the Muting output becomes 0.

User acknowledgment of restart inhibit (no muting sensor is activated or ENABLE = 0)

Enable signal Q becomes 1 again, when:

- The light curtain is no longer interrupted
- If present, errors are eliminated (see output DIAG)
  and
- A user acknowledgment with positive edge occurs at input ACK (see also Implementation of user acknowledgment (Page 165)).

The FAULT output is set to 0. Output ACK_REQ = 1 (and DIAG bit 6) signals that user acknowledgment at input ACK is required to eliminate the restart inhibit. The instruction sets ACK_REQ = 1 as soon as the light curtain is no longer interrupted or the errors have been eliminated. Once acknowledgment has occurred, the instruction resets ACK_REQ to 0.

User Acknowledgment of restart inhibit (at least one muting sensor is activated and ENABLE = 1)

Enable signal Q becomes 1 again, when:

- If present, errors are eliminated (see output DIAG)
- FREE function occurs until a valid combination of muting sensors is detected

The FAULT output is set to 0. The MUTING function is restarted, if necessary, and the MUTING output becomes 1 if a valid combination of muting sensors is detected. When ENABLE = 1, output ACK_REQ = 1 (and DIAG-Bit 5) signals that FREE function is necessary for error elimination and for removal of the restart inhibit. Once FREE function has occurred successfully, the instruction resets ACK_REQ to 0.

NOTE

Once the maximum muting time is exceeded, TIME_MAX is reset as soon as the MUTING function is restarted.

FREE function

If an error cannot be corrected immediately, the FREE function can be used to free the muting range. Enable signal Q and output MUTING =1 temporarily. The FREE function can be used if:

- ENABLE = 1
- At least one muting sensor is activated
- A user acknowledgment with rising edge at input ACK occurs twice within 4 s, and the second user acknowledgment at input ACK remains at a signal state of 1 (acknowledgment button remains activated)

WARNING

When using the FREE function, the action must be observed. A dangerous situation must be able to be interrupted at any time by releasing the acknowledgment button. The acknowledgment button must be mounted in such a way the entire danger area can be observed. *(S037)*

Timing diagrams for discrepancy errors at sensor pair 1 or interruption of the light curtain (MUTING is not active)

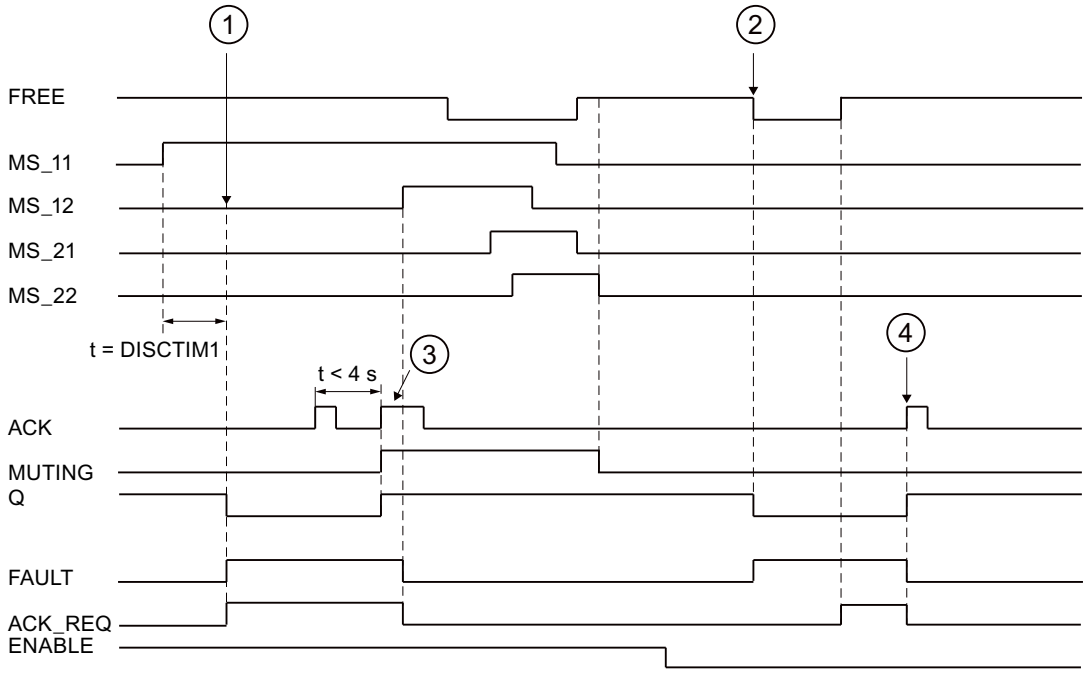

①	Sensor pair 1 (MS_11 and MS_22) is not activated within discrepancy time DISCTIM1.
②	The light curtain is interrupted even though there is no enable (ENABLE=0)
③	FREE function
④	Acknowledgment

Behavior with stopped conveyor equipment

If, while the conveyor equipment has stopped, the monitoring for one of the following reasons is to be deactivated:

- To comply with discrepancy time DISCTIM1 or DISCTIM2
- To comply with maximum muting time TIME_MAX

You must supply input STOP with a "1" signal for as long as the conveyor equipment is stopped. As soon as the conveyor equipment is running again (STOP = 0), discrepancy times DISCTIM1 and DISCTIM2 and maximum muting time TIME_MAX are reset.

⚠ WARNING

When STOP = 1 or ENABLE = 0, discrepancy monitoring is shut down. During this time, if inputs MSx1/MSx2 of a sensor pair both take a signal state of 1 due to an undetected error, e.g., because both muting sensors fail to 1, the fault is not detected and the MUTING function can be started unintentionally (when ENABLE =1). *(S038)*

Output DIAG

The DIAG output provides non-fail-safe information on errors for service purposes. You can read out this information by means of operator control and monitoring systems or, if applicable, you can evaluate it in your standard user program. DIAG bits 0 to 6 are saved until acknowledgment at input ACK.

Structure of DIAG

Bit no.	Assignment	Possible error causes	Remedies
Bit 0	Discrepancy error or incorrect discrepancy time DISCTIM 1 setting for sensor pair 1	Malfunction in production sequence	Malfunction in production sequence eliminated
		Sensor defective	Check sensors
		Wiring fault	Check wiring of sensors
		Sensors are wired to different F-I/O, and F-I/O fault, channel fault, or communication error, or passivation by means of PASS_ON on an F-I/O	For a solution, see the section "Structure of DIAG", bits 0 to 6 in DIAG (Page 152)
		Discrepancy time setting is too low	If necessary, set a higher discrepancy time
		Discrepancy time setting is < 0 s or > 3 s	Set discrepancy time in range between 0 s and 3 s
Bit 1	Discrepancy error or incorrect discrepancy time DISCTIM 2 setting for sensor pair 2	Same as Bit 0	Same as Bit 0
Bit 2	Maximum muting time exceeded or incorrect muting time TIME_MAX setting	Malfunction in production sequence	Malfunction in production sequence eliminated
		Maximum muting time setting is too low	If necessary, set a higher maximum muting time
		Muting time setting is < 0 s or > 10 min	Set muting time in range from 0 s to 10 min
Bit 3	Light curtain interrupted and muting not active	ENABLE = 0	Set ENABLE = 1
		Light curtain is defective	Check light curtain
		Wiring fault	Check wiring of light curtain (FREE input)
		F-I/O fault, channel fault, or communication error, or passivation by means of PASS_ON of F-I/O of light curtain (FREE input)	For a solution, see the section "Structure of DIAG", bits 0 to 6 in DIAG (Page 152)
		Startup of F-system	For FREE function, see DIAG Bit 5
		See other DIAG bits	

Bit no.	Assignment	Possible error causes	Remedies
Bit 4	Muting lamp is defective or cannot be set	Muting lamp is defective	Replace muting lamp
		Wiring fault	Check wiring of muting lamp
		F-I/O fault, channel fault, or communication error, or passivation by means of PASS_ON of F-I/O of muting lamp	For a solution, see the section "Structure of DIAG", bits 0 to 6 in DIAG (Page 152)
Bit 5	FREE function is necessary	See other DIAG bits	Two rising edges at ACK within 4 s, and activate acknowledgment button until ACK_REQ = 0
Bit 6	Acknowledgment necessary	—	—
Bit 7	State of output Q	—	—
Bit 8	State of output MUTING	—	—
Bit 9	FREE function active	—	—
Bit 10	Reserved	—	—
...			
Bit 15	Reserved	—	—

Timing imprecision resulting from the update time of the time base used in the instruction:

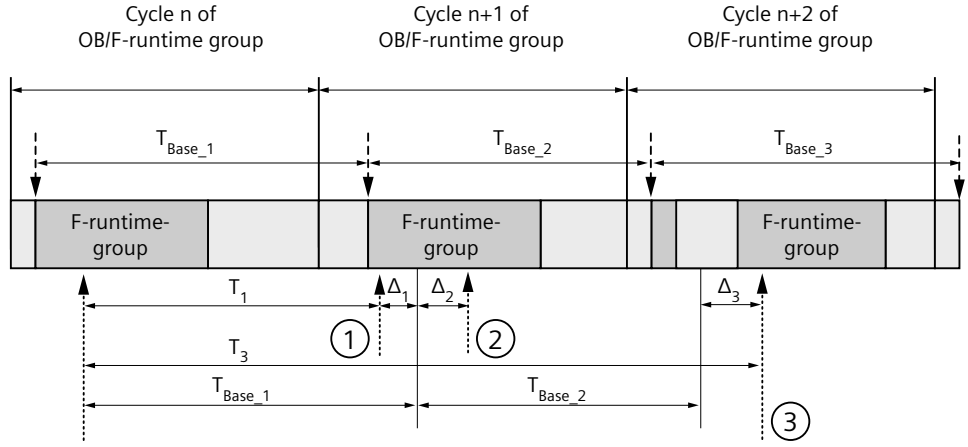

- - - - ► = Update of the time base T_{Base_n}

····· ► = Call times of an instruction with time processing

① For the first call in cycle n+1, the call time of the instruction relative to the start of the F-runtime group is earlier than that in cycle n by the amount of Δ_1, e.g. because parts of the safety program of the F-runtime group before the call time of the instruction in cycle n+1 are skipped. For the time update, the instruction takes account of time T_{Base_1} instead of the time T_1 that has actually elapsed in cycle n since the call.

② The instruction is called a second time in cycle n+1. This does not involve another time update (by Δ_2).

③ For the call in cycle n+2, the call time of the instruction relative to the start of the F-runtime group is later than that in cycle n by the amount of Δ_3, e.g. because the F-runtime group was interrupted by a higher priority interrupt before the call time of the instruction in cycle n+2. The instruction took into account time $T_{Base_1} + T_{Base_2}$ instead of the time T_3 that has actually elapsed in cycle n since the call. This would also be the case if no call occurred in cycle n+1.

Example

The following example shows how the instruction works:

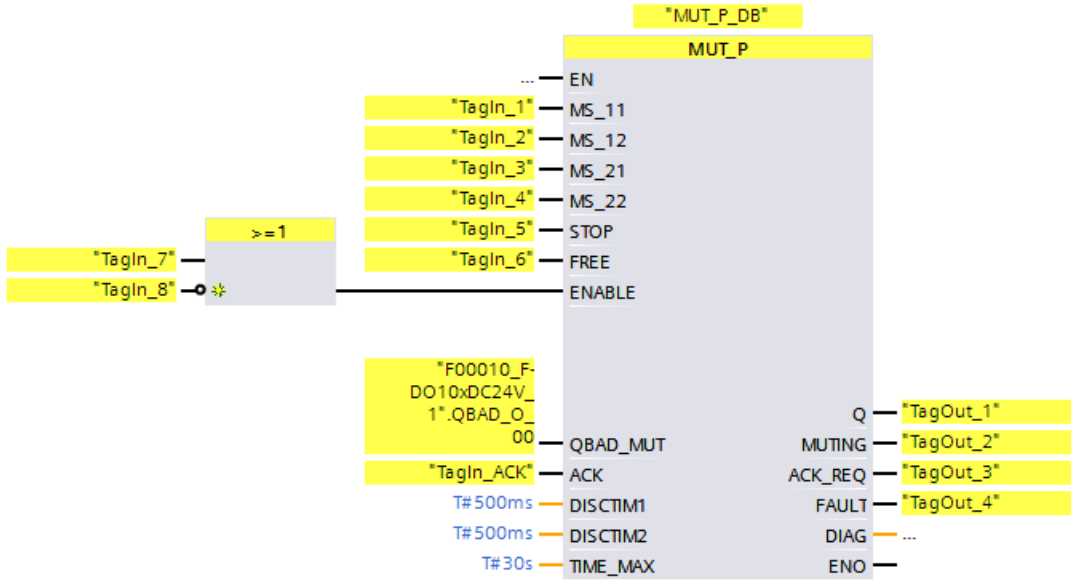

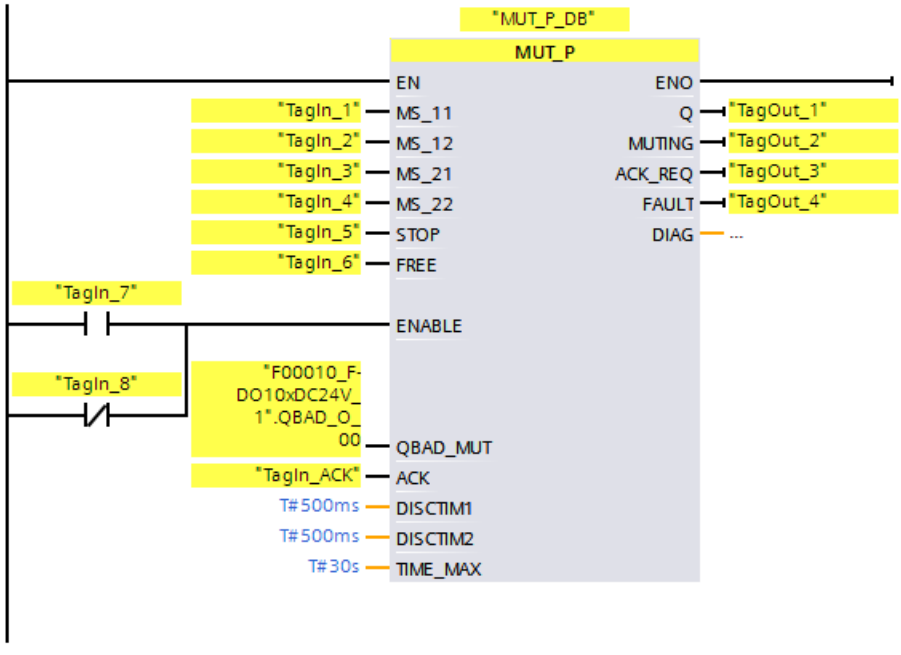

13.3.6 EV1oo2DI: 1oo2 evaluation with discrepancy analysis (STEP 7 Safety V18)

Description

This instruction implements a 1oo2 evaluation of two single-channel sensors combined with a discrepancy analysis.

Output Q is set to 1, if the signal states of inputs IN1 and IN2 both equal 1 and no discrepancy error DISC_FLT is stored. if the signal state of one or both inputs is 0, output Q is set to 0.

As soon as the signal states of inputs IN1 and IN2 are different, the discrepancy time DISCTIME is started. If the signal states of the two inputs are still different once the discrepancy time expires, a discrepancy error is detected and DISC_FLT is set to 1 (restart inhibit).

If the discrepancy between inputs IN1 and IN2 is no longer detected, the discrepancy error is acknowledged according to the parameter assignment of ACK_NEC:

- If ACK_NEC = 0, the acknowledgment is automatic.
- If ACK_NEC = 1, you must use a rising edge at input ACK to acknowledge the discrepancy error.

The output ACK_REQ = 1 signals that a user acknowledgment at input ACK is necessary to acknowledge the discrepancy error (cancel the restart inhibit). The instruction sets ACK_REQ = 1 as soon as discrepancy is no longer detected. After acknowledgment or if, prior to acknowledgment, there is once again a discrepancy between inputs IN1 and IN2, the instruction resets ACK_REQ to 0.

Output Q can never be set to 1 if the discrepancy time setting is < 0 or > 60 s. In this case, output DISC_FLT is also set to 1 (restart inhibit). The call interval of the safety program (e.g., OB 35) must be less than the discrepancy time setting.

Every call of the "1oo2 evaluation with discrepancy analysis" instruction must be assigned a data area in which the instruction data is stored. The "Call options" dialog is automatically opened when the instruction is inserted in the program for this reason. There you can create a data block (single instance) (e.g., EV1oo2DI_DB_1) or a multi-instance (e.g., EV1oo2DI_Instance_1) for the "1oo2 evaluation with discrepancy analysis" instruction. Once it is created, you can find the new data block in the project tree in the "STEP 7 Safety" folder under "Program blocks > System blocks" or the multi-instance as a local tag in the "Static" section of the block interface. For more information, refer to the help on *STEP 7*.

Enable input "EN" and enable output "ENO" cannot be connected. The instruction is therefore always executed (regardless of the signal state at enable input "EN").

⚠ WARNING

The ACK_NEC tag must not be assigned a value of 0 unless an automatic restart of the affected process is otherwise excluded. *(S033)*

WARNING

When using an instruction with time processing, take the following timing imprecision sources into account when determining your response times:

- The temporal blurring known from the standard user program, which is caused by the cyclic processing
- Timing imprecision resulting from the update time of the time base used in the instruction (see figure in section "Timing imprecision resulting from the update time of the time base used in the instruction")
- Tolerance of internal time monitoring in the F-CPU
  - For time values up to 200 ms, a maximum of 4 ms
  - For time values greater than or equal to 200 ms, a maximum of 2% of the (assigned) time value
- Tolerance of internal time monitoring in the S7-1500 HF-CPU
  - For time values up to 500 ms, a maximum of 10 ms
  - For time values greater than or equal to 500 ms, a maximum of 2% of the (assigned) time value

You must choose the interval between two call times of an instruction with time processing in such a way that the required response times are achieved, taking into account the possible timing imprecision. *(S034)*

Parameters

The following table shows the parameters of the instruction:

Parameter	Declaration	Data type	Description
IN1	Input	BOOL	Sensor 1
IN2	Input	BOOL	Sensor 2
DISCTIME	Input	TIME	Discrepancy time (0 to 60 s)
ACK_NEC	Input	BOOL	1 = acknowledgment necessary for discrepancy error
ACK	Input	BOOL	Acknowledgment of discrepancy error
Q	Output	BOOL	Output
ACK_REQ	Output	BOOL	1 = acknowledgment required
DISC_FLT	Output	BOOL	1 = discrepancy error
DIAG	Output	BYTE	Non-fail safe service information

Instruction versions

A number of versions are available for this instruction:

Version	S7-300/400	S7-1200	S7-1500	Function
1.0	x	—	—	When projects that were created with *S7 Distributed Safety V5.4 SP5* are migrated, version 1.0 of the instruction is used automatically. If you want to compile a migrated safety program with *STEP 7 Safety Advanced* for the first time, we recommend that you first update to the latest available version of the instruction.
1.1	x	—	o	These versions have identical functions to version 1.0.
1.2	x	o	o	
1.3	x	x	x	

o This version is no longer supported.

When a new F-CPU is created with *STEP 7 Safety*, the latest available version for the F-CPU created is automatically preset.
For more information on the use of instruction versions, refer to the help on *STEP 7* under "Using instruction versions".

Activating inputs IN1 and IN2

Inputs IN1 and IN2 must both be activated in such a way that their safe state is 0.

Example with QBAD or QBAD_I_xx signal

For non-equivalent signals you need to OR the input (IN1 and IN2) with which you assign the encoder signal to the safe state 1, with the QBAD signal of the associated F-I/O or the QBAD_I_xx signal of the associated channel (with S7-300/400 F-CPUs) and negate the result. Signal state 0 is then at input IN1 or IN2 when fail-safe values are output.

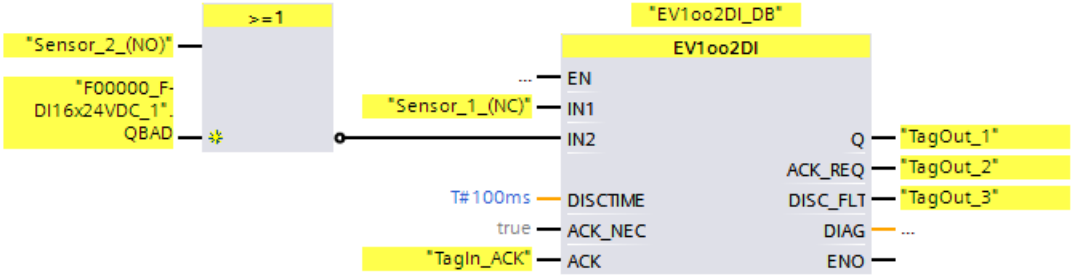

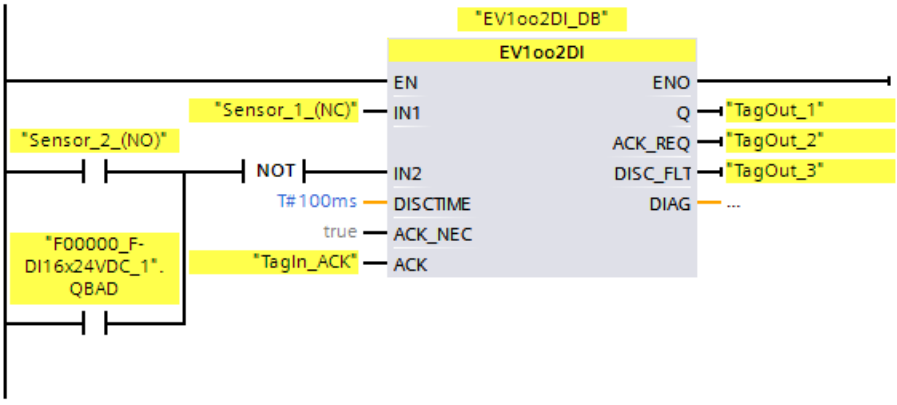

Example with value status

For nonequivalent signals, you have to negate the input (IN1 or IN2) with which you have assigned the encoder signal to a safe state of 1 and AND it with the value status of the associated channel. Signal state 0 is then at input IN1 or IN2 when fail-safe values are output.

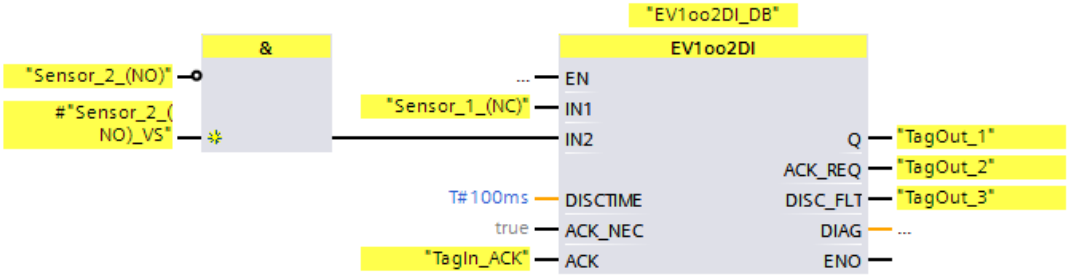

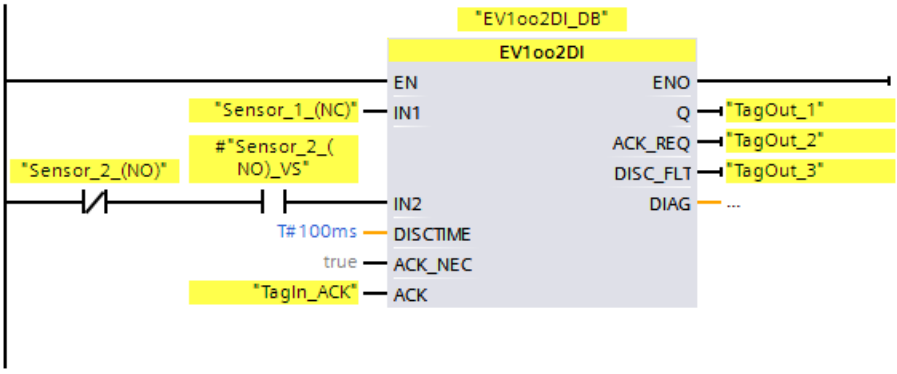

Timing diagrams EV1oo2DI

If ACK_NEC = 1:

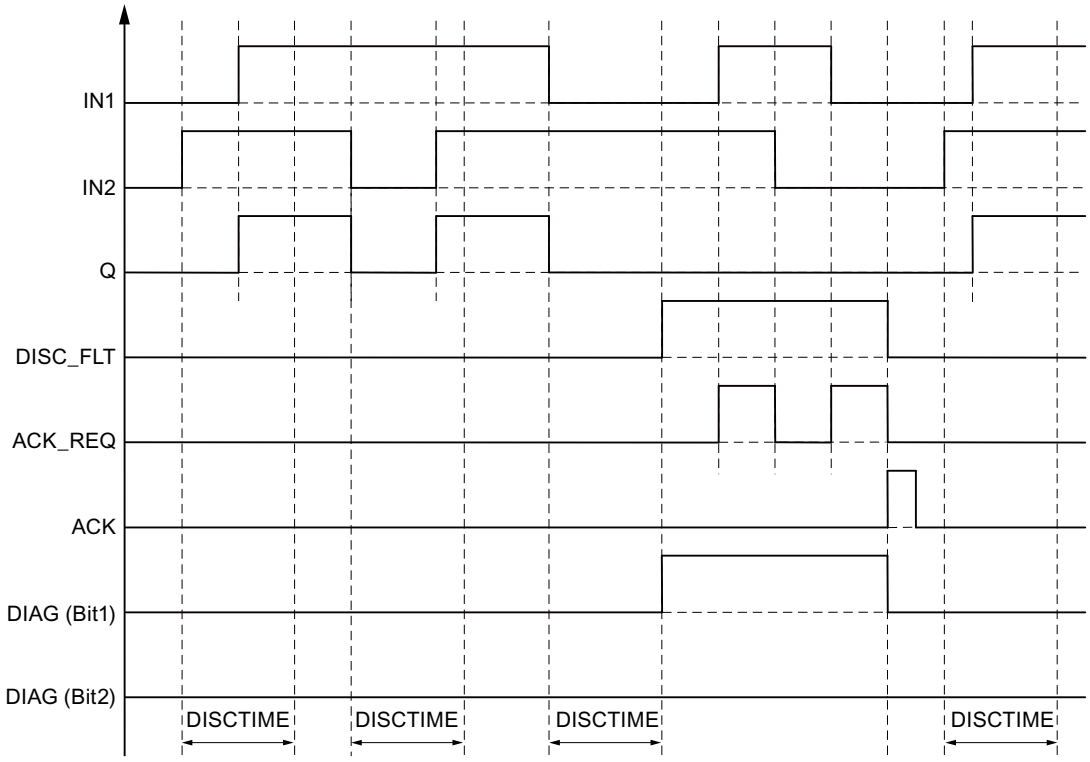

Startup behavior

NOTE

If the sensors at inputs IN1 and IN2 are assigned to different F-I/O, it is possible that the fail-safe values are output for different lengths of time following startup of the F-system due to different startup characteristics of the F-I/O. If the signal states of inputs IN1 and IN2 remain different after the discrepancy time DISCTIME has expired, a discrepancy error is detected after the F-system starts up.

If ACK_NEC = 1 you must acknowledge the discrepancy error with a rising edge at input ACK.

Output DIAG

The DIAG output provides non-fail-safe information on errors for service purposes. You can read out this information by means of operator control and monitoring systems or, if applicable, you can evaluate it in your standard user program. DIAG bits are saved until acknowledgment at input ACK.

Structure of DIAG

Bit no.	Assignment	Possible error causes	Remedies
Bit 0	Discrepancy error or incorrect discrepancy time setting (= status of DISC_FLT)	Sensor defective	Check sensors
		Wiring fault	Check wiring of sensors
		Sensors are wired to different F-I/O, and F-I/O fault, channel fault, or communication error, or passivation by means of PASS_ON on an F-I/O	For a solution, see the section "Structure of DIAG", bits 0 to 6 in DIAG (Page 152)
		Discrepancy time setting is too low	If necessary, set a higher discrepancy time
		Discrepancy time setting is < 0 s or > 60 s	Set discrepancy time in range between 0 s and 60 s
Bit 1	For discrepancy errors: last signal state change was at input IN1	—	—
Bit 2	For discrepancy errors: last signal state change was at input IN2	—	—
Bit 3	Reserved	—	—
Bit 4	Reserved	—	—
Bit 5	For discrepancy errors: input ACK has a permanent signal state of 1	Acknowledgment button defective	Replace acknowledgment button
		Wiring fault	Check wiring of acknowledgment button
Bit 6	Acknowledgment necessary	—	—
Bit 7	State of output Q	—	—

Timing imprecision resulting from the update time of the time base used in the instruction:

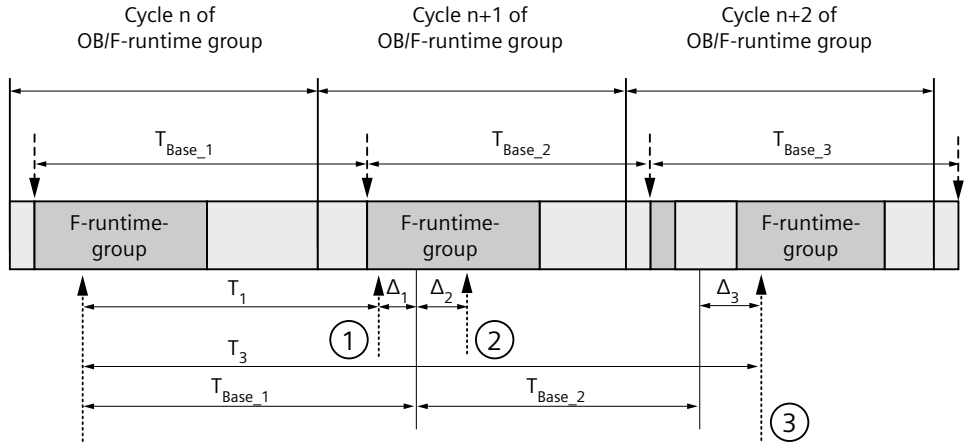

- - - - ► = Update of the time base T_{Base_n}

····· ► = Call times of an instruction with time processing

① For the first call in cycle n+1, the call time of the instruction relative to the start of the F-runtime group is earlier than that in cycle n by the amount of Δ_1, e.g. because parts of the safety program of the F-runtime group before the call time of the instruction in cycle n+1 are skipped. For the time update, the instruction takes account of time T_{Base_1} instead of the time T_1 that has actually elapsed in cycle n since the call.

② The instruction is called a second time in cycle n+1. This does not involve another time update (by Δ_2).

③ For the call in cycle n+2, the call time of the instruction relative to the start of the F-runtime group is later than that in cycle n by the amount of Δ_3, e.g. because the F-runtime group was interrupted by a higher priority interrupt before the call time of the instruction in cycle n+2. The instruction took into account time $T_{Base_1} + T_{Base_2}$ instead of the time T_3 that has actually elapsed in cycle n since the call. This would also be the case if no call occurred in cycle n+1.

Example

The following example shows how the instruction works:

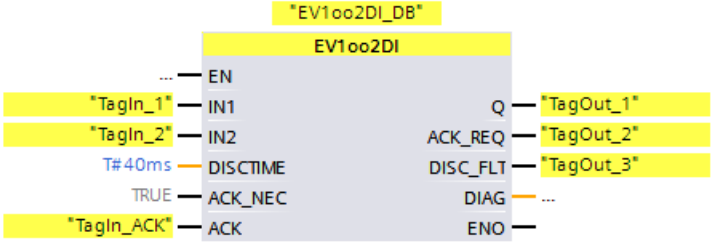

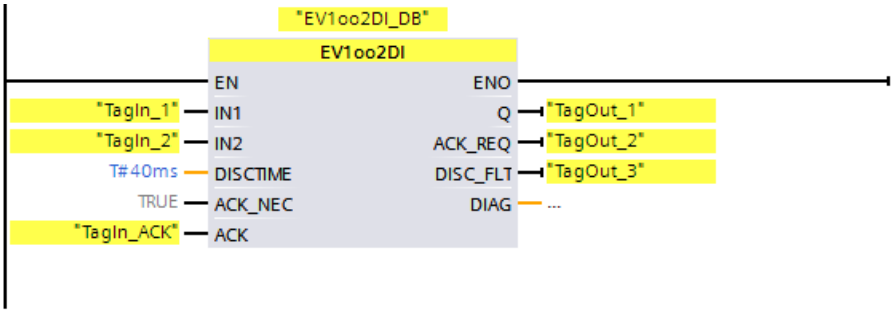

13.3.7 FDBACK: Feedback monitoring (STEP 7 Safety V18)

Description

This instruction implements feedback monitoring.

The signal state of output Q is checked to see whether it corresponds to the inverse signal state of the feedback input FEEDBACK.

Output Q is set to 1 as soon as input ON = 1. Requirement for this is that the feedback input FEEDBACK = 1 and no feedback error is saved.

Output Q is reset to 0, as soon as input ON = 0 or if a feedback error is detected.

A feedback error ERROR = 1 is detected if the inverse signal state of the feedback input FEEDBACK (to input Q) does not follow the signal state of output Q within the maximum tolerable feedback time. The feedback error is saved.

If a discrepancy is detected between the feedback input FEEDBACK and the output Q after a feedback error, the feedback error is acknowledged in accordance with the parameter assignment of ACK_NEC:

- If ACK_NEC = 0, the acknowledgment is automatic.
- If ACK_NEC = 1, you must acknowledge the feedback error with a rising edge at input ACK.

The ACK_REQ = 1 output then signals that a user acknowledgment is necessary at input ACK to acknowledge the feedback error. Following an acknowledgment, the instruction resets ACK_REQ to 0.

To avoid a feedback errors from being detected and acknowledgment from being required when the F-I/O controlled by the Q output are passivated, you need to supply input QBAD_FIO with the QBAD signal of the associated F-I/O or the QBAD_O_xx signal / inverted value status of the associated channel.

Every call of the "Feedback monitoring" instruction must be assigned a data area in which the instruction data is stored. The "Call options" dialog is automatically opened when the instruction is inserted in the program for this reason. There you can create a data block (single instance) (e.g., FDBACK_DB_1) or a multi-instance (e.g., FDBACK_Instance_1) for the "Feedback monitoring" instruction. Once it is created, you can find the new data block in the project tree in the "STEP 7 Safety" folder under "Program blocks > System blocks" or the multi-instance as a local tag in the "Static" section of the block interface. For more information, refer to the help on *STEP 7*.

Enable input "EN" and enable output "ENO" cannot be connected. The instruction is therefore always executed (regardless of the signal state at enable input "EN").

WARNING

The ACK_NEC tag must not be assigned a value of 0 unless an automatic restart of the affected process is otherwise excluded. *(S033)*

WARNING

When using an instruction with time processing, take the following timing imprecision sources into account when determining your response times:

- The temporal blurring known from the standard user program, which is caused by the cyclic processing
- Timing imprecision resulting from the update time of the time base used in the instruction (see figure in section "Timing imprecision resulting from the update time of the time base used in the instruction")
- Tolerance of internal time monitoring in the F-CPU
  - For time values up to 200 ms, a maximum of 4 ms
  - For time values greater than or equal to 200 ms, a maximum of 2% of the (assigned) time value
- Tolerance of internal time monitoring in the S7-1500 HF-CPU
  - For time values up to 500 ms, a maximum of 10 ms
  - For time values greater than or equal to 500 ms, a maximum of 2% of the (assigned) time value

You must choose the interval between two call times of an instruction with time processing in such a way that the required response times are achieved, taking into account the possible timing imprecision. *(S034)*

Parameters

The following table shows the parameters of the instruction:

Parameter	Declaration	Data type	Description
ON	Input	BOOL	1= Enable output
FEEDBACK	Input	BOOL	Feedback input
QBAD_FIO	Input	BOOL	QBAD signal of the F-I/O or QBAD_O_xx signal / inverted value status of the Q output
ACK_NEC	Input	BOOL	1=Acknowledgment necessary
ACK	Input	BOOL	Acknowledgment
FDB_TIME	Input	TIME	Feedback time
Q	Output	BOOL	Output

Parameter	Declaration	Data type	Description
ERROR	Output	BOOL	Feedback error
ACK_REQ	Output	BOOL	Acknowledgment request
DIAG	Output	BYTE	Non-fail safe service information

Instruction versions

A number of versions are available for this instruction:

Version	S7-300/400	S7-1200	S7-1500	Function
1.0	x	—	—	Version 1.0 requires that the F_TOF block with the number FB 186 is available in the project tree in the "Program blocks/System blocks/STEP 7 Safety" folder. When projects that were created with *S7 Distributed Safety V5.4 SP5* are migrated, version 1.0 of the instruction is used automatically. If you want to compile a migrated safety program with *STEP 7 Safety Advanced* for the first time, we recommend that you first update to the latest available version of the instruction. You will then avoid number conflicts.
1.1	x	—	—	These versions have identical functions to version 1.0, but do not require the F_TOF block to have a particular number.
1.2	x	—	o	
1.3	x	o	o	
1.4	x	o	o	
1.5	x	x	x	

o This version is no longer supported.

When a new F-CPU is created with *STEP 7 Safety*, the latest available version for the F-CPU created is automatically preset.

For more information on the use of instruction versions, refer to the help on *STEP 7* under "Using instruction versions".

Interconnection example

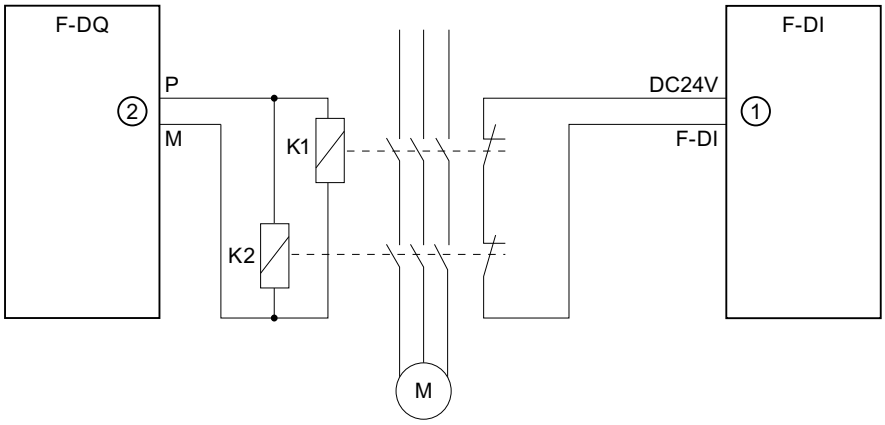

① Sent to the FEEDBACK input of the instruction

② from output Q of the instruction

Output DIAG

The DIAG output provides non-fail-safe information on errors for service purposes. You can read out this information by means of operator control and monitoring systems or, if applicable, you can evaluate it in your standard user program. DIAG bits 0, 2, and 5 are saved until acknowledgment at input ACK.

Structure of DIAG

Bit no.	Assignment	Possible error causes	Remedies
Bit 0	Feedback error or incorrect feedback time setting (= state of ERROR)	Feedback time setting < 0	Set feedback time > 0
		Feedback time setting is too low	If necessary, set a higher feedback time
		Wiring fault	Check wiring of actuator and feedback contact
		Actuator or feedback contact is defective	Check actuator and feedback contact
		I/O fault or channel fault of feedback input	Check I/O
Bit 1	Passivation of F-I/O/channel controlled by output Q (= state of QBAD_FIO)	F-I/O fault, channel fault, or communication error, or passivation by means of PASS_ON of F-I/O	For a solution, see the section "Structure of DIAG", bits 0 to 6 in DIAG (Page 152)
Bit 2	After feedback error: feedback input has permanent signal state of 0	F-I/O fault or channel fault of feedback input	Check I/O
		Feedback contact is defective	Check feedback contact
		F-I/O fault, channel fault, or communication error, or passivation by means of PASS_ON of F-I/O of feedback input	For a solution, see the section "Structure of DIAG", bits 0 to 6 in DIAG (Page 152)

Bit no.	Assignment	Possible error causes	Remedies
Bit 3	Reserved	—	—
Bit 4	Reserved	—	—
Bit 5	For feedback error: input ACK has a permanent signal state of 1	Acknowledgment button defective	Check acknowledgment button
		Wiring fault	Check wiring of acknowledgment button
Bit 6	Acknowledgment required (= state of ACK_REQ)	—	—
Bit 7	State of output Q	—	—

Timing imprecision resulting from the update time of the time base used in the instruction:

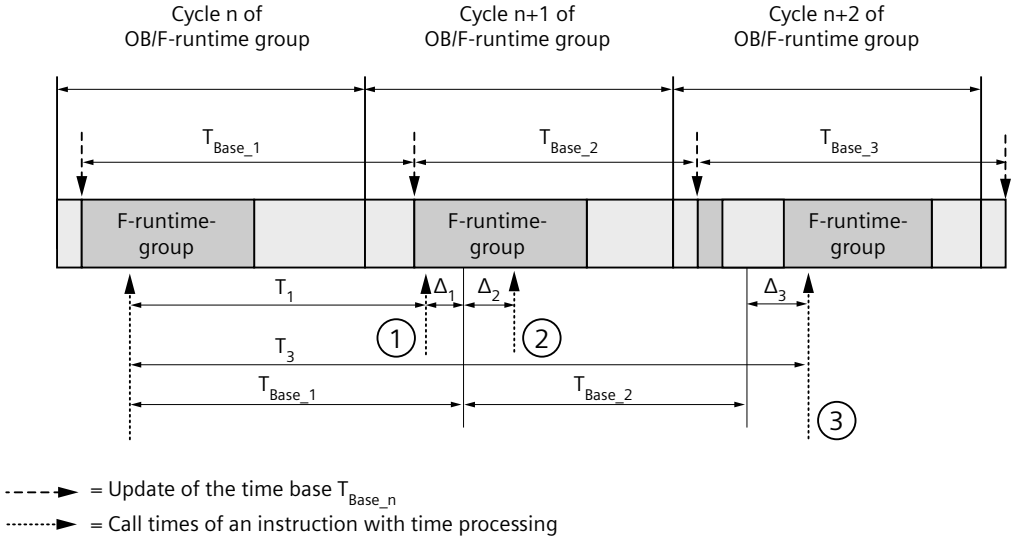

① For the first call in cycle n+1, the call time of the instruction relative to the start of the F-runtime group is earlier than that in cycle n by the amount of Δ_1, e.g. because parts of the safety program of the F-runtime group before the call time of the instruction in cycle n+1 are skipped. For the time update, the instruction takes account of time T_{Base_1} instead of the time T_1 that has actually elapsed in cycle n since the call.

② The instruction is called a second time in cycle n+1. This does not involve another time update (by Δ_2).

③ For the call in cycle n+2, the call time of the instruction relative to the start of the F-runtime group is later than that in cycle n by the amount of Δ_3, e.g. because the F-runtime group was interrupted by a higher priority interrupt before the call time of the instruction in cycle n+2. The instruction took into account time $T_{Base_1} + T_{Base_2}$ instead of the time T_3 that has actually elapsed in cycle n since the call. This would also be the case if no call occurred in cycle n+1.

Example

The following example shows how the instruction for S7-300/400 F-CPUs works:

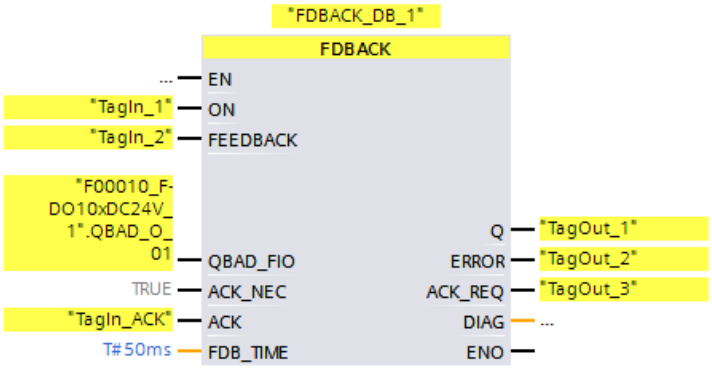

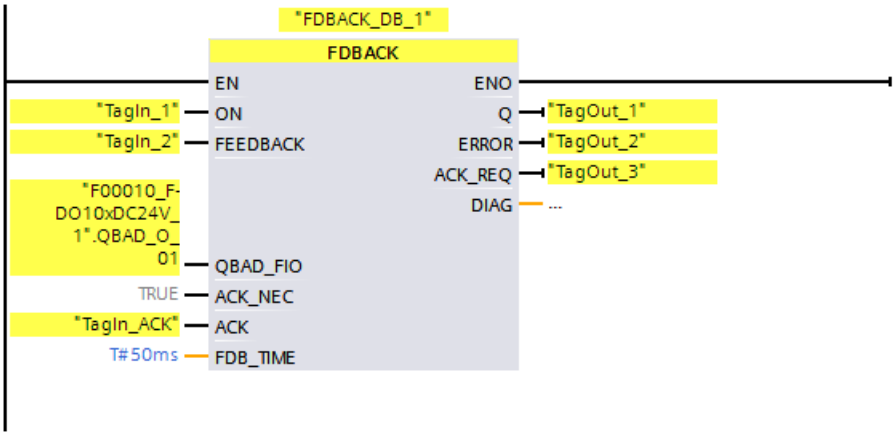

The following example shows how the instruction for S7-1200/1500 F-CPUs works:

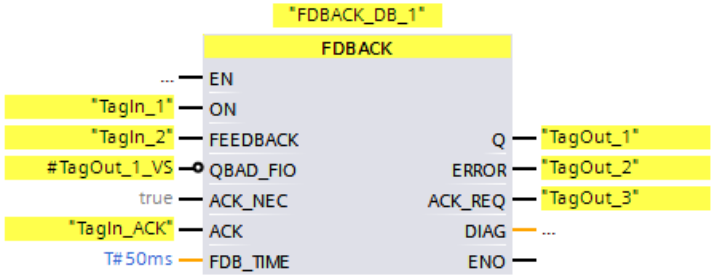

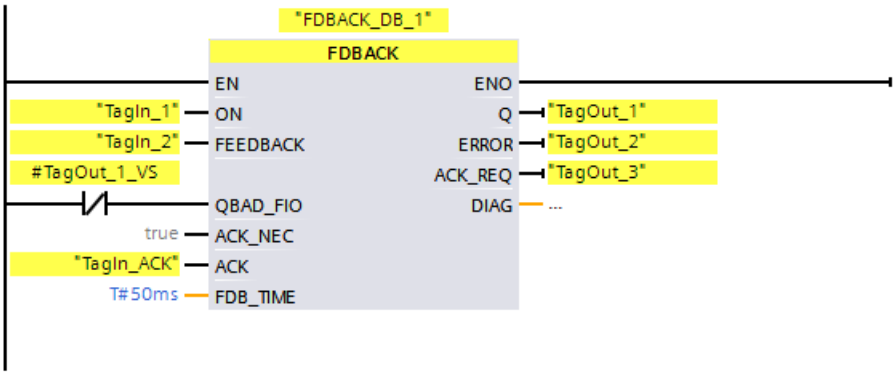

13.3.8 SFDOOR: Protective door monitoring (STEP 7 Safety V18)

Description

This instruction implements safety door monitoring.

Enable signal Q is reset to 0 as soon as one of the inputs IN1 or IN2 take a signal state of 0 (safety door is opened). The enable signal can be reset to 1, only if:

- Inputs IN1 and IN2 both take a signal state of 0 prior to opening the door (safety door has been completely opened)
- Inputs IN1 and IN2 then both take a signal state of 1 (safety door is closed)
- An acknowledgment occurs

The acknowledgment for the enable takes place according to the parameter assignment at input ACK_NEC:

- If ACK_NEC = 0, the acknowledgment is automatic.
- If ACK_NEC = 1, you must use a rising edge at input ACK for acknowledging the enable.

Output ACK_REQ = 1 is used to signal that a user acknowledgment is required at input ACK for the acknowledgment. The instruction sets ACK_REQ = 1 as soon as the door is closed. Following an acknowledgment, the instruction resets ACK_REQ to 0.

In order for the instruction to recognize whether inputs IN1 and IN2 are 0 merely due to passivation of the associated F-I/O, you need to supply inputs QBAD_IN1 or QBAD_IN2 with the QBAD signal of the associated F-I/O or QBAD_I_xx signal / inverted value status of the associated channel. Among other things, this will prevent you from having to open the safety door completely prior to an acknowledgment in the event the F-I/O are passivated.

Every call of the "Safety door monitoring" instruction must be assigned a data area in which the instruction data are stored. The "Call options" dialog is automatically opened when the instruction is inserted in the program for this reason. There you can create a data block (single instance) (e.g., SFDOOR_DB_1) or a multi-instance (e.g., SFDOOR_Instance_1) for the "Safety door monitoring" instruction. Once it is created, you can find the new data block in the project tree in the "STEP 7 Safety" folder under "Program blocks > System blocks" or the multi-instance as a local tag in the "Static" section of the block interface. For more information, refer to the help on *STEP 7*.

Enable input "EN" and enable output "ENO" cannot be connected. The instruction is therefore always executed (regardless of the signal state at enable input "EN").

WARNING

The ACK_NEC tag must not be assigned a value of 0 unless an automatic restart of the affected process is otherwise excluded. *(S033)*

Parameters

The following table shows the parameters of the instruction:

Parameter	Declaration	Data type	Description
IN1	Input	BOOL	Input 1
IN2	Input	BOOL	Input 2

Parameter	Declaration	Data type	Description
QBAD_IN1	Input	BOOL	QBAD signal of the F-I/O or QBAD_O_xx signal / inverted value status of the channel of input IN1
QBAD_IN2	Input	BOOL	QBAD signal of the F-I/O or QBAD_O_xx signal / inverted value status of the channel of input IN2
OPEN_NEC	Input	BOOL	1= Open necessary at startup
ACK_NEC	Input	BOOL	1=Acknowledgment necessary
ACK	Input	BOOL	Acknowledgment
Q	Output	BOOL	1= Enable, safety door closed
ACK_REQ	Output	BOOL	Acknowledgment request
DIAG	Output	BYTE	Non-fail safe service information

Instruction versions

A number of versions are available for this instruction:

Version	S7-300/400	S7-1200	S7-1500	Function
1.0	x	—	—	When projects that were created with *S7 Distributed Safety V5.4 SP5* are migrated, version 1.0 of the instruction is used automatically. If you want to compile a migrated safety program with *STEP 7 Safety Advanced* for the first time, we recommend that you first update to the latest available version of the instruction.
1.1	x	—	o	These versions have identical functions to version 1.0.
1.2	x	o	o	
1.3	x	x	x	

o This version is no longer supported.

When a new F-CPU is created with *STEP 7 Safety*, the latest available version for the F-CPU created is automatically preset.
For more information on the use of instruction versions, refer to the help on *STEP 7* under "Using instruction versions".

Interconnection example

You must interconnect the NC contact of position switch 1 of the safety door at input IN1 and the NO contact of position switch 2 at input IN2. Position switch 1 must be mounted in such a way that it is positively operated when the safety door is open. Position switch 2 must be mounted in such a way that it is operated when the safety door is closed.

Safety door open:

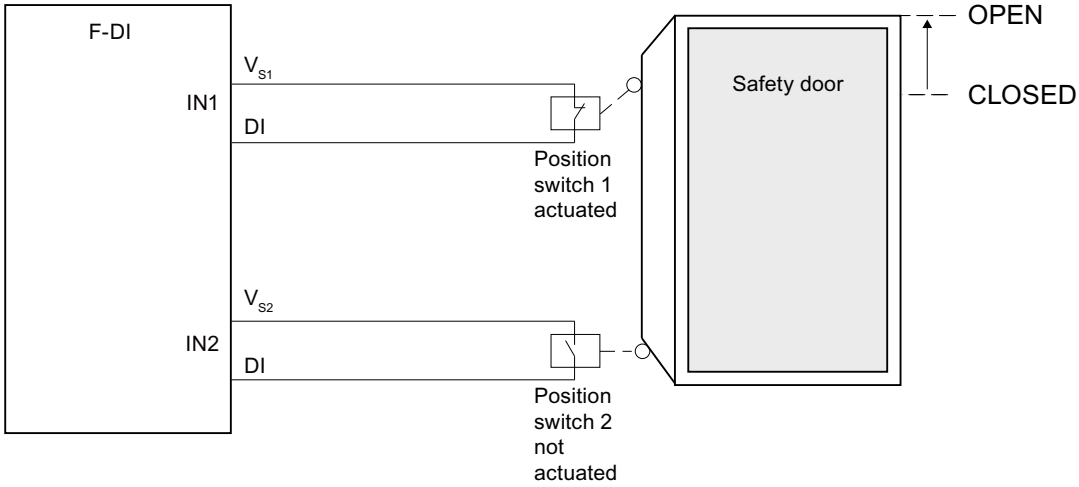

Safety door closed:

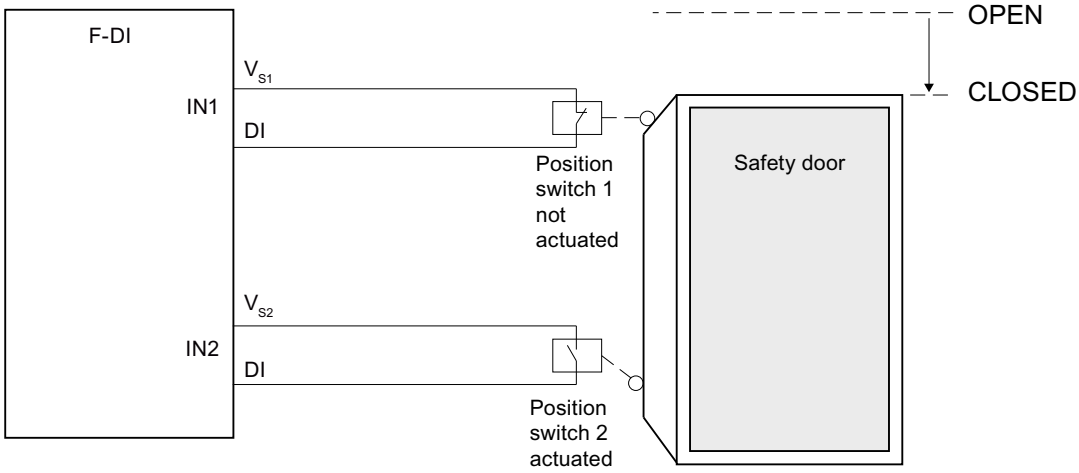

Startup characteristics

After an F-system startup, enable signal Q is reset to 0. The acknowledgment for the enable takes place according to the parameter assignment at inputs OPEN_NEC and ACK_NEC:

- When OPEN_NEC = 0, an automatic acknowledgment occurs **independently** of ACK_NEC, as soon as the two inputs IN1 and IN2 take signal state 1 for the first time following reintegration of the associated F-I/O (safety door is closed).
- When OPEN_NEC = 1 **or** if at least one of the IN1 and IN2 inputs still has a signal state of 0 after reintegration of the associated F-I/O, an automatic acknowledgment occurs **according** to ACK_NEC or you have to use a rising edge at input ACK for the enable. Prior to acknowledgment, inputs IN1 and IN2 both have to take a signal state of 0 (safety door has been completely opened) followed by a signal state of 1 (safety door is closed).

WARNING

The OPEN_NEC tag must not be assigned a value of 0 unless an automatic restart of the affected process is otherwise excluded. *(S039)*

Output DIAG

The DIAG output provides non-fail-safe information on errors for service purposes. You can read out this information by means of operator control and monitoring systems or, if applicable, you can evaluate it in your standard user program.

Structure of DIAG

Bit no.	Assignment	Possible error causes	Remedies
Bit 0	Reserved	—	—
Bit 1	Signal state 0 is missing at both IN1 and IN2 inputs	Safety door was not completely opened when OPEN_NEC = 1 after F-system startup	Open safety door completely
		Open safety door was not completely opened	Open safety door completely
		Wiring fault	Check wiring of position switch
		Position switch is defective	Check position switch
		Position switch is incorrectly adjusted	Adjust position switch properly
Bit 2	Signal state 1 is missing at both IN1 and IN2 inputs	Safety door was not closed	Close safety door
		Wiring fault	Check wiring of position switch
		Position switch is defective	Check position switch
		Position switch is incorrectly adjusted	Adjust position switch properly

Bit no.	Assignment	Possible error causes	Remedies
Bit 3	QBAD_IN1 and/or QBAD_IN2 = 1	F-I/O fault, channel fault, or communication error, or passivation by means of PASS_ON of F-I/O or channel of IN1 and/or IN2	For a solution, see the section "Structure of DIAG", bits 0 to 6 in DIAG (Page 152)
Bit 4	Reserved	—	—
Bit 5	If enable is missing: input ACK has a permanent signal state of 1	Acknowledgment button defective	Check acknowledgment button
		Wiring fault	Check wiring of acknowledgment button
Bit 6	Acknowledgment required (= state of ACK_REQ)	—	—
Bit 7	State of output Q	—	—

Example

The following example shows how the instruction for S7-300/400 F-CPUs works:

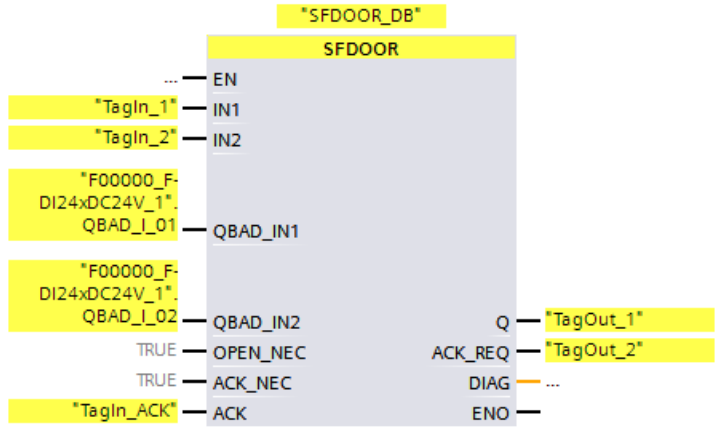

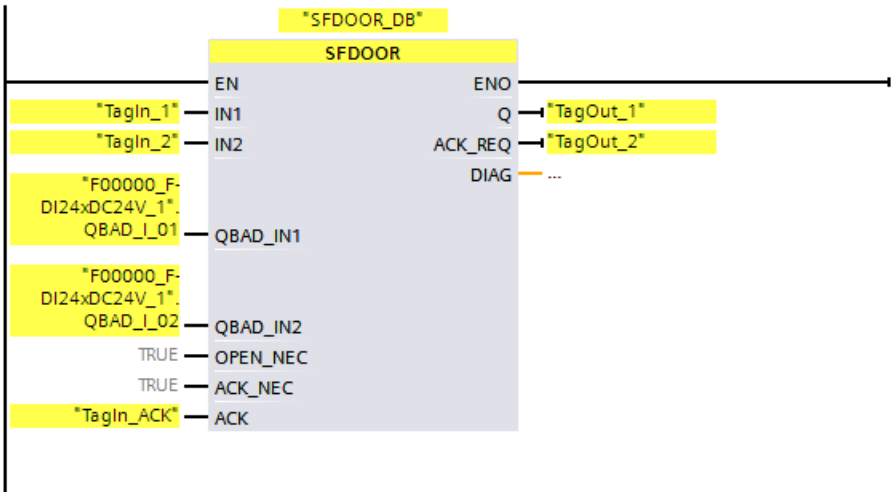

The following example shows how the instruction for S7-1200/1500 F-CPUs works:

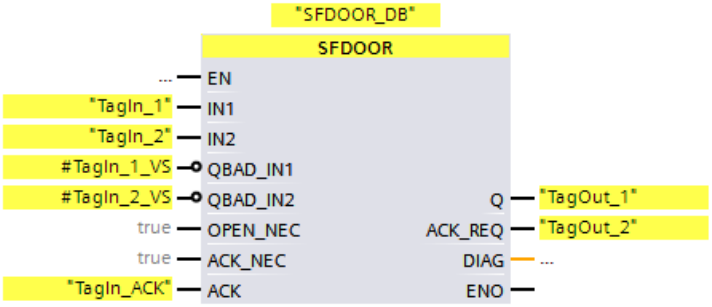

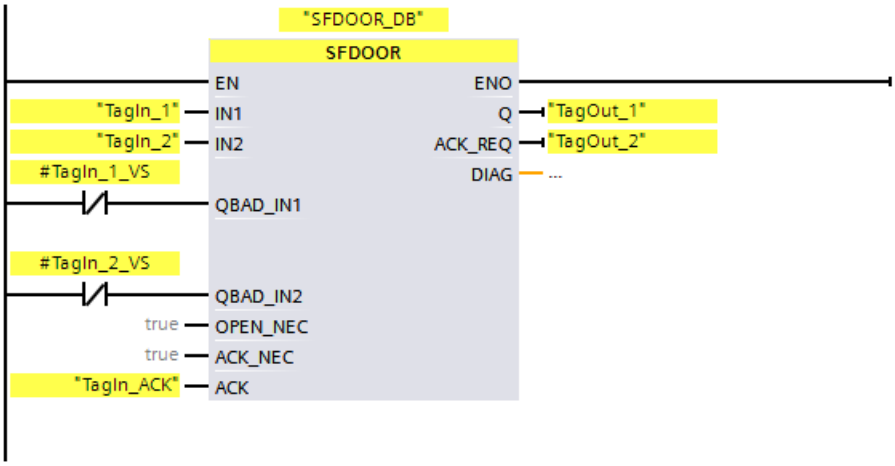

13.3.9 ACK_GL: Global acknowledgment of all F-I/O in an F-runtime group (STEP 7 Safety V18)

Description

This instruction creates an acknowledgment for the simultaneous reintegration of all F-I/O or channels of the F-I/O of an F-runtime group after communication errors, F-I/O errors, or channel faults.

A user acknowledgment (Page 165) with a positive edge at input ACK_GLOB is required for reintegration. The acknowledgment occurs analogously to the user acknowledgment via the ACK_REI tag of the F-I/O DB (Page 148), but it acts simultaneously on all F-I/O of the F-runtime group in which the instruction is called.

If you use the instruction ACK_GL, you do not have to provide a user acknowledgment for each F-I/O of the F-runtime group via the ACK_REI tag of the F-I/O DB.

Every call of the "Global acknowledgment of all F-I/O of a runtime group" instruction must be assigned a data area in which the instruction data are stored. The "Call options" dialog is automatically opened when the instruction is inserted in the program for this reason. There you can create a data block (single instance) (e.g., ACK_GL_DB_1) or a multi-instance (e.g., ACK_GL_Instance_1) for the "Global acknowledgment of all F-I/O of a runtime group" instruction. Once it is created, you can find the new data block in the project tree in the "STEP 7 Safety" folder under "Program blocks > System blocks" or the multi-instance as a local tag in the "Static" section of the block interface. For more information, refer to the help on *STEP 7*.

Enable input "EN" and enable output "ENO" cannot be connected. The instruction is therefore always executed (regardless of the signal state at enable input "EN").

NOTE

An acknowledgment via the ACK_GL instruction is only possible if the tag ACK_REI of the F-I/O DB = 0. Accordingly, an acknowledgment via the tag ACK_REI of the F-I/O DB is only possible if the input ACK_GLOB of the instruction = 0.

The instruction is only allowed to be called once per F-runtime group.

Parameters

The following table shows the parameters of the instruction:

Parameter	Declaration	Data type	Description
ACK_GLOB	Input	BOOL	1=acknowledgment for reintegration

Instruction versions

A number of versions are available for this instruction:

Version	S7-300/400	S7-1200	S7-1500	Function
1.0	x	—	—	When projects that were created with *S7 Distributed Safety V5.4 SP5* are migrated, version 1.0 of the instruction is used automatically. If you want to compile a migrated safety program with *STEP 7 Safety Advanced* for the first time, we recommend that you first update to the latest available version of the instruction.
1.1	x	—	o	These versions have identical functions to version 1.0.
1.2	x	o	o	
1.3	x	x	x	

o This version is no longer supported.

When a new F-CPU is created with *STEP 7 Safety*, the latest available version for the F-CPU created is automatically preset.

For more information on the use of instruction versions, refer to the help on *STEP 7* under "Using instruction versions".

Example

The following example shows how the instruction works:

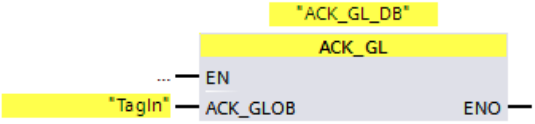

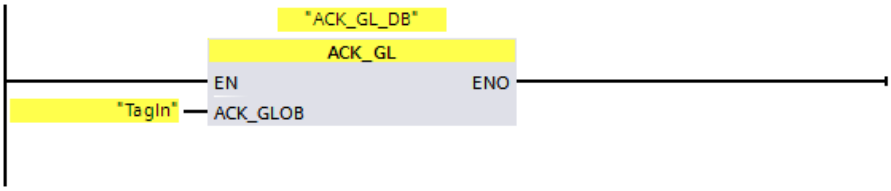

13.4 Timer operations

13.4.1 TP: Generate pulse (STEP 7 Safety V18)

Description

You can use the "Generate pulse" instruction to set output Q for a programmed period. The instruction is started if the result of logic operation (RLO) changes from "0" to "1" (positive edge) at input IN. The programmed period PT starts running when the instruction starts. Output Q is set for period PT, regardless of the subsequent sequence of the input signal. Also the detection of a new positive signal edge does not influence the signal state at output Q as long as period PT runs.

You can query the current time value at the output ET. The time value begins at T#0s and ends when the value of period PT is reached. If period PT is reached and the signal state at input IN is "0", output ET is reset.

Every call of the "Generate pulse" instruction must be assigned a data area in which the instruction data is stored. The "Call options" dialog is automatically opened when the instruction is inserted in the program for this reason. There you can create a data block (single instance) (e.g., F_IEC_Timer_DB_1) or a multi-instance (e.g., F_IEC_Timer_Instance_1) for the "Generate pulse" instruction. Once it is created, you can find the new data block in the project tree in the "STEP 7 Safety" folder under "Program blocks > System blocks" or the multi-instance as a local tag in the "Static" section of the block interface. For more information, refer to the *help on STEP 7*.

WARNING

When using an instruction with time processing, take the following timing imprecision sources into account when determining your response times:

- The temporal blurring known from the standard user program, which is caused by the cyclic processing
- Timing imprecision resulting from the update time of the time base used in the instruction (see figure in section "Timing imprecision resulting from the update time of the time base used in the instruction")
- Tolerance of internal time monitoring in the F-CPU
  - For time values up to 200 ms, a maximum of 4 ms
  - For time values greater than or equal to 200 ms, a maximum of 2% of the (assigned) time value
- Tolerance of internal time monitoring in the S7-1500 HF-CPU
  - For time values up to 500 ms, a maximum of 10 ms
  - For time values greater than or equal to 500 ms, a maximum of 2% of the (assigned) time value

You must choose the interval between two call times of an instruction with time processing in such a way that the required response times are achieved, taking into account the possible timing imprecision. *(S034)*

The operating system resets the instances of the "Generate pulse" instruction on a startup of the F-system.

NOTE

The functionality of this instruction differs from the corresponding standard TP instruction in the following points:

- If the instruction is called while the time is running with PT = 0 ms, the outputs Q and ET are reset.
- If the instruction is called with PT < 0 ms, the outputs Q and ET are reset.

To restart the pulse, a new rising signal edge at input IN is required once PT is greater than 0 again.

Parameters

The following table shows the parameters of the instruction:

Parameter	Declaration	Data type	Description
IN	Input	BOOL	Start input
PT	Input	TIME	Duration of pulse; must be positive.
Q	Output	BOOL	Pulse output
ET	Output	TIME	Current time value

Instruction versions

A number of versions are available for this instruction:

Ver-sion	S7-300/400	S7-1200	S7-1500	Function
1.0	x	—	—	When projects that were created with *S7 Distributed Safety V5.4 SP5* are migrated, version 1.0 of the instruction is used automatically. If you want to compile a migrated safety program with *STEP 7 Safety Advanced* for the first time, we recommend that you first update to the latest available version of the instruction.
1.1	x	—	o	These versions have identical functions to version 1.0.
1.2	x	o	o	
1.3	x	o	o	
1.4	x	x	x	

o This version is no longer supported.

When a new F-CPU is created with *STEP 7 Safety*, the latest available version for the F-CPU created is automatically preset.

For more information on the use of instruction versions, refer to the help on *STEP 7* under "Using instruction versions".

Pulse diagram

The following figure shows the pulse diagram of the instruction "Generate pulse":

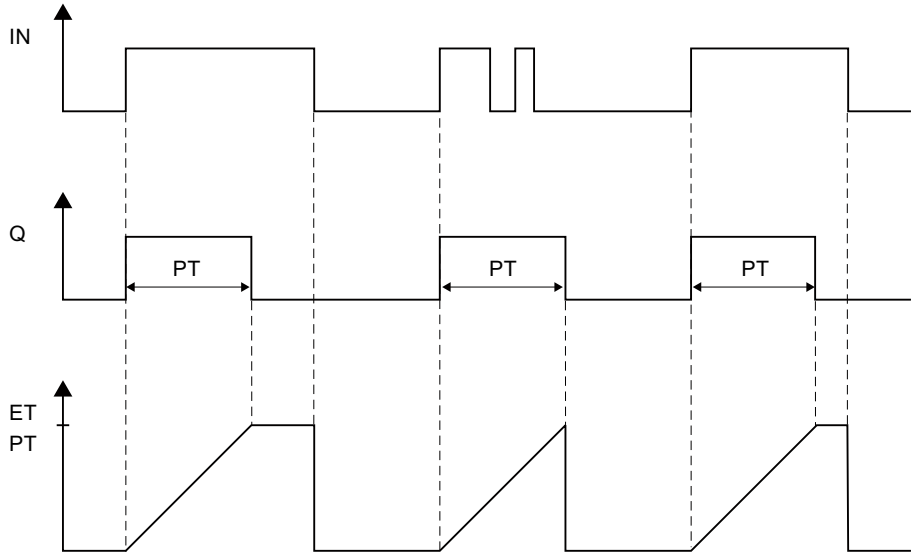

Timing imprecision resulting from the update time of the time base used in the instruction:

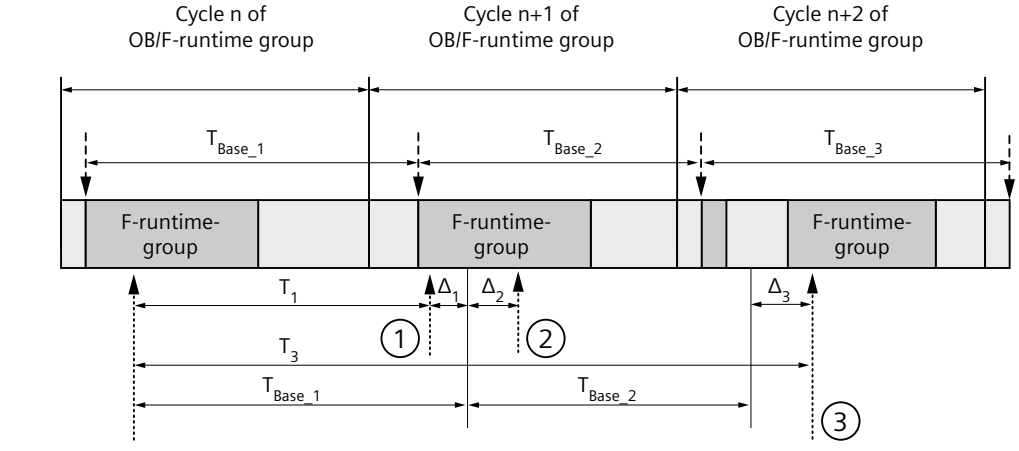

- - - - ► = Update of the time base T_{Base_n}

····· ► = Call times of an instruction with time processing

① For the first call in cycle n+1, the call time of the instruction relative to the start of the F-runtime group is earlier than that in cycle n by the amount of Δ_1, e.g. because parts of the safety program of the F-runtime group before the call time of the instruction in cycle n+1 are skipped. For the time update, the instruction takes account of time T_{Base_1} instead of the time T_1 that has actually elapsed in cycle n since the call.

② The instruction is called a second time in cycle n+1. This does not involve another time update (by Δ_2).

③ For the call in cycle n+2, the call time of the instruction relative to the start of the F-runtime group is later than that in cycle n by the amount of Δ_3, e.g. because the F-runtime group was interrupted by a higher priority interrupt before the call time of the instruction in cycle n+2. The instruction took into account time $T_{Base_1} + T_{Base_2}$ instead of the time T_3 that has actually elapsed in cycle n since the call. This would also be the case if no call occurred in cycle n+1.

Example

The following example shows how the instruction works:

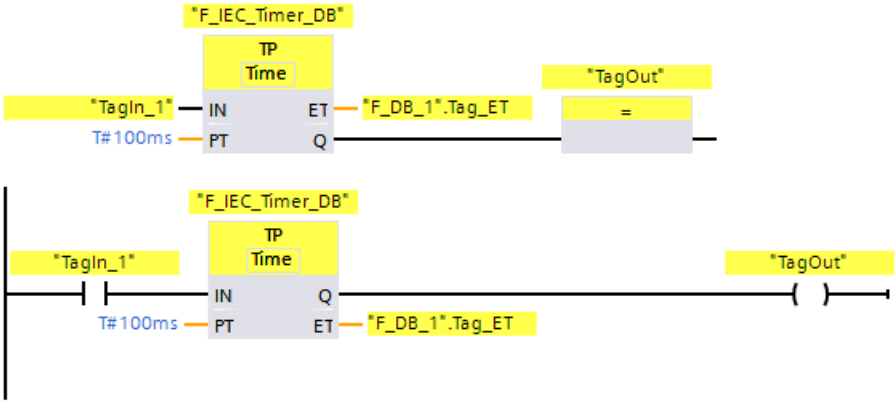

If the signal state of operand "TagIn_1" changes from "0" to "1", the "Generate pulse" instruction is started and the period assigned at input PT (100 ms) runs, regardless of the further course of operand "TagIn_1".
Operand "TagOut" at output Q has signal state "1" as long as the period is running. Operand ""F_DB_1".Tag_ET" contains the current time value.

13.4.2 TON: Generate ON delay (STEP 7 Safety V18)

Description

You use the "Generate on-delay" instruction to delay the setting of output Q by the assigned period PT. The instruction is started if the result of logic operation (RLO) changes from "0" to "1" (positive edge) at input IN. The programmed period PT starts running when the instruction starts. When period PT has expired, output Q is set to signal state "1". Output Q remains set as long as the start input is set to "1". When the signal state at the start input changes from "1" to "0", output Q is reset. The time function is restarted when a new positive signal edge is detected at the start input.
You can query the current time value at the output ET. The time value begins at T#0s and ends when the value of period PT is reached. Output ET is reset, as soon as the signal state at input IN changes to "0".
Every call of the "Generate on-delay" instruction must be assigned a data area in which the instruction data are stored. The "Call options" dialog is automatically opened when the instruction is inserted in the program for this reason. There you can create a data block (single instance) (e.g., F_IEC_Timer_DB_1) or a multi-instance (e.g., F_IEC_Timer_Instance_1) for the "Generate on-delay" instruction. Once it is created, you can find the new data block in the project tree in the "STEP 7 Safety" folder under "Program blocks > System blocks" or the

multi-instance as a local tag in the "Static" section of the block interface. For more information, refer to the *help on STEP 7*.

WARNING

When using an instruction with time processing, take the following timing imprecision sources into account when determining your response times:

- The temporal blurring known from the standard user program, which is caused by the cyclic processing
- Timing imprecision resulting from the update time of the time base used in the instruction (see figure in section "Timing imprecision resulting from the update time of the time base used in the instruction")
- Tolerance of internal time monitoring in the F-CPU
  - For time values up to 200 ms, a maximum of 4 ms
  - For time values greater than or equal to 200 ms, a maximum of 2% of the (assigned) time value
- Tolerance of internal time monitoring in the S7-1500 HF-CPU
  - For time values up to 500 ms, a maximum of 10 ms
  - For time values greater than or equal to 500 ms, a maximum of 2% of the (assigned) time value

You must choose the interval between two call times of an instruction with time processing in such a way that the required response times are achieved, taking into account the possible timing imprecision. *(S034)*

The operating system resets the instances of the "Generate on-delay" instruction on a startup of the F-system.

NOTE

The functionality of this instruction differs from the corresponding standard TON instruction in the following points:

- If the instruction is called while the time is running with PT = 0 ms, the output ET is reset.
- If the instruction is called with PT < 0 ms, the outputs Q and ET are reset.

To restart the on-delay, a new rising signal edge at input IN is required once PT is greater than 0 again.

Parameters

The following table shows the parameters of the instruction:

Parameter	Declaration	Data type	Description
IN	Input	BOOL	Start input
PT	Input	TIME	Duration of on-delay; must be positive.
Q	Output	BOOL	Output that is set after expiration of time PT.

Parameter	Declaration	Data type	Description
ET	Output	TIME	Current time value

Instruction versions

A number of versions are available for this instruction:

Version	S7-300/400	S7-1200	S7-1500	Function
1.0	x	—	—	When projects that were created with *S7 Distributed Safety V5.4 SP5* are migrated, version 1.0 of the instruction is used automatically. If you want to compile a migrated safety program with *STEP 7 Safety Advanced* for the first time, we recommend that you first update to the latest available version of the instruction.
1.1	x	—	o	These versions have identical functions to version 1.0.
1.2	x	o	o	
1.3	x	o	o	
1.4	x	x	x	

o This version is no longer supported.

When a new F-CPU is created with *STEP 7 Safety*, the latest available version for the F-CPU created is automatically preset.
For more information on the use of instruction versions, refer to the help on *STEP 7* under "Using instruction versions".

Pulse diagram

The following figure shows the pulse diagram of the instruction "Generate on-delay":

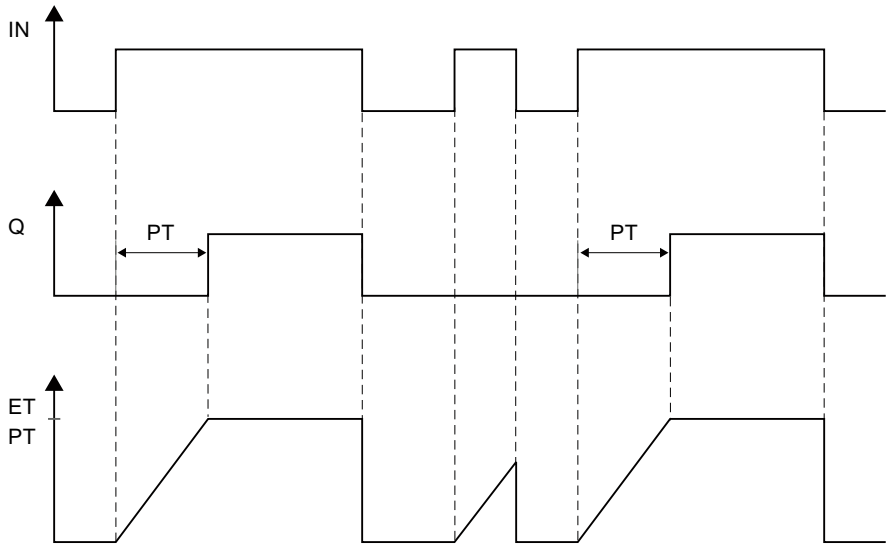

Timing imprecision resulting from the update time of the time base used in the instruction:

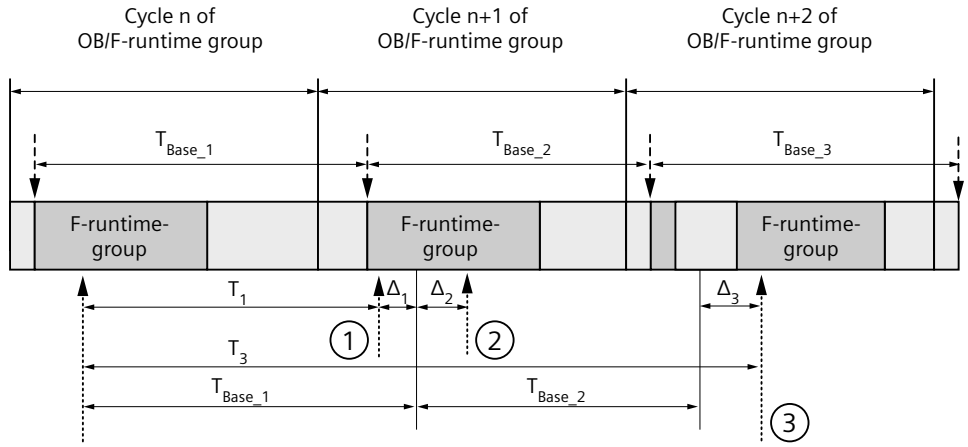

- - - - ► = Update of the time base T_{Base_n}

····· ► = Call times of an instruction with time processing

① For the first call in cycle n+1, the call time of the instruction relative to the start of the F-runtime group is earlier than that in cycle n by the amount of Δ_1, e.g. because parts of the safety program of the F-runtime group before the call time of the instruction in cycle n+1 are skipped. For the time update, the instruction takes account of time T_{Base_1} instead of the time T_1 that has actually elapsed in cycle n since the call.

② The instruction is called a second time in cycle n+1. This does not involve another time update (by Δ_2).

③ For the call in cycle n+2, the call time of the instruction relative to the start of the F-runtime group is later than that in cycle n by the amount of Δ_3, e.g. because the F-runtime group was interrupted by a higher priority interrupt before the call time of the instruction in cycle n+2. The instruction took into account time $T_{Base_1} + T_{Base_2}$ instead of the time T_3 that has actually elapsed in cycle n since the call. This would also be the case if no call occurred in cycle n+1.

Example

The following example shows how the instruction works:

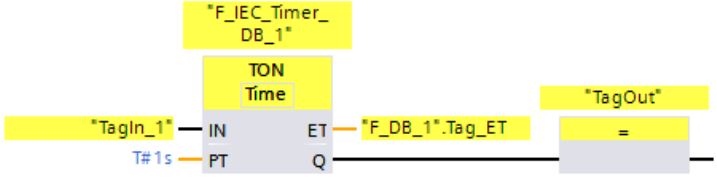

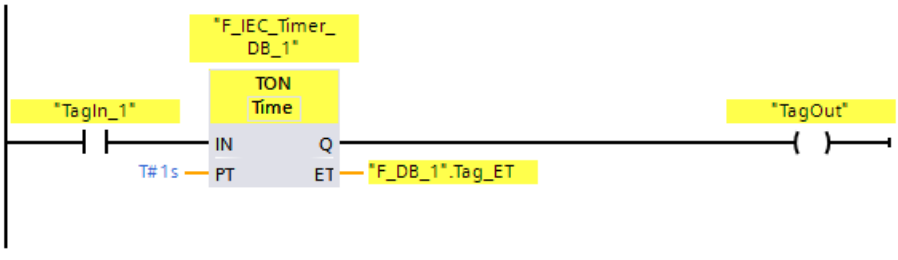

When the signal state of operand "TagIn_1" changes from "0" to "1", the "Generate on-delay" instruction is started and the period assigned at input PT (1 s) runs.

Operand "TagOut" at output Q feeds signal state "1" when the period has elapsed and remains set as long as operand "TagIn_1" still feeds signal state "1". Operand ""F_DB_1".Tag_ET" contains the current time value.

13.4.3 TOF: Generate OFF delay (STEP 7 Safety V18)

Description

You use the "Generate off-delay" instruction to delay the resetting of output Q by the assigned period PT. Output Q is set if the result of logic operation (RLO) changes from "0" to "1" (positive edge) at input IN. When the signal state at input IN changes back to "0", the programmed period PT starts. Output Q remains set as long as period PT runs. After period PT expires, output Q is reset. If the signal state at input IN changes to "1" before period PT has expired, then the time is reset. The signal state at output Q remains at "1".

You can query the current time value at the output ET. The time value begins at T#0s and ends when the value of period PT is reached. After time PT has elapsed, output ET remains at its current value until input IN changes back to "1". If input IN changes to "1" before time PT has expired, the output ET is reset to value T#0.

Every call of the "Generate off-delay" instruction must be assigned a data area in which the instruction data are stored. The "Call options" dialog is automatically opened when the instruction is in inserted in the program for this reason. There you can create a data block (single instance) (e.g., F_IEC_Timer_DB_1) or a multi-instance (e.g., F_IEC_Timer_Instance_1) for the "Generate off-delay" instruction. Once it is created, you can find the new data block in the project tree in the "STEP 7 Safety" folder under "Program blocks > System blocks" or the multi-instance as a local tag in the "Static" section of the block interface. For more information, refer to the *help on STEP 7*.

WARNING

When using an instruction with time processing, take the following timing imprecision sources into account when determining your response times:

- The temporal blurring known from the standard user program, which is caused by the cyclic processing
- Timing imprecision resulting from the update time of the time base used in the instruction (see figure in section "Timing imprecision resulting from the update time of the time base used in the instruction")
- Tolerance of internal time monitoring in the F-CPU
  - For time values up to 200 ms, a maximum of 4 ms
  - For time values greater than or equal to 200 ms, a maximum of 2% of the (assigned) time value
- Tolerance of internal time monitoring in the S7-1500 HF-CPU
  - For time values up to 500 ms, a maximum of 10 ms
  - For time values greater than or equal to 500 ms, a maximum of 2% of the (assigned) time value

You must choose the interval between two call times of an instruction with time processing in such a way that the required response times are achieved, taking into account the possible timing imprecision. *(S034)*

The operating system resets the instances of the "Generate off-delay" instruction on a startup of the F-system.

NOTE

The functionality of this instruction differs from the corresponding standard TOF instruction in the following points:

- If the instruction is called while the time is running with PT = 0 ms, the outputs Q and ET are reset.
- If the instruction is called with PT < 0 ms, the outputs Q and ET are reset.

To restart the off-delay, another falling signal edge at input IN is required once PT is greater than 0 again.

Parameters

The following table shows the parameters of the instruction:

Parameter	Declaration	Data type	Description
IN	Input	BOOL	Start input
PT	Input	TIME	Duration of off delay; must be positive.
Q	Output	BOOL	Output that is reset after expiration of time PT.
ET	Output	TIME	Current time value

Instruction versions

A number of versions are available for this instruction:

Version	S7-300/400	S7-1200	S7-1500	Function
1.0	x	—	—	When projects that were created with *S7 Distributed Safety V5.4 SP5* are migrated, version 1.0 of the instruction is used automatically. If you want to compile a migrated safety program with *STEP 7 Safety Advanced* for the first time, we recommend that you first update to the latest available version of the instruction.
1.1	x	—	o	These versions have identical functions to version 1.0.
1.2	x	o	o	
1.3	x	o	o	
1.4	x	x	x	

o This version is no longer supported.

When a new F-CPU is created with *STEP 7 Safety*, the latest available version for the F-CPU created is automatically preset.

For more information on the use of instruction versions, refer to the help on *STEP 7* under "Using instruction versions".

Pulse diagram

The following figure shows the pulse diagram of the instruction "Generate off-delay":

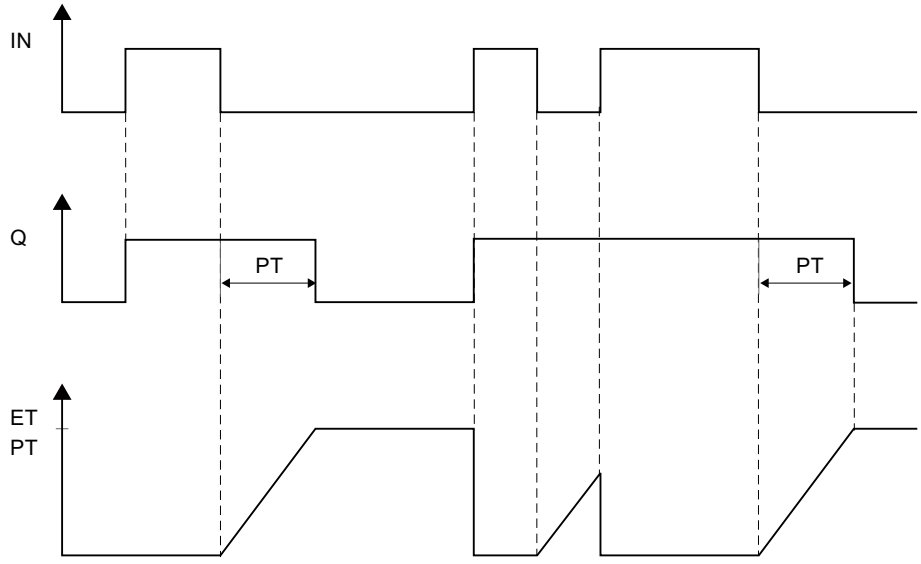

Timing imprecision resulting from the update time of the time base used in the instruction:

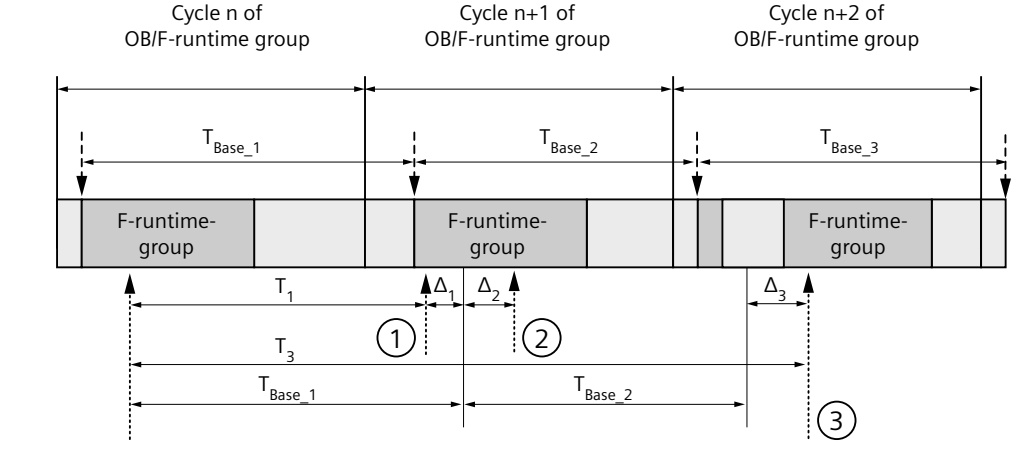

- - - - ► = Update of the time base T_{Base_n}

····· ► = Call times of an instruction with time processing

① For the first call in cycle n+1, the call time of the instruction relative to the start of the F-runtime group is earlier than that in cycle n by the amount of Δ_1, e.g. because parts of the safety program of the F-runtime group before the call time of the instruction in cycle n+1 are skipped. For the time update, the instruction takes account of time T_{Base_1} instead of the time T_1 that has actually elapsed in cycle n since the call.

② The instruction is called a second time in cycle n+1. This does not involve another time update (by Δ_2).

③ For the call in cycle n+2, the call time of the instruction relative to the start of the F-runtime group is later than that in cycle n by the amount of Δ_3, e.g. because the F-runtime group was interrupted by a higher priority interrupt before the call time of the instruction in cycle n+2. The instruction took into account time $T_{Base_1} + T_{Base_2}$ instead of the time T_3 that has actually elapsed in cycle n since the call. This would also be the case if no call occurred in cycle n+1.

Example

The following example shows how the instruction works:

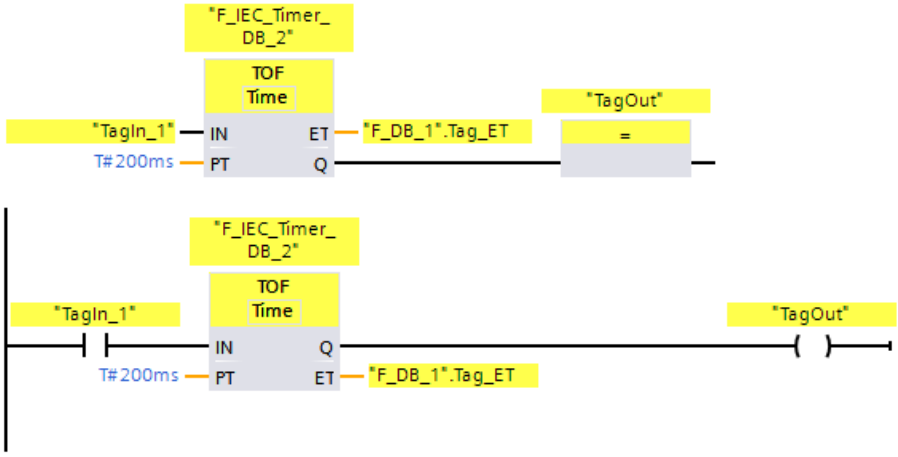

If the signal state of operand "TagIn_1" changes from "0" to "1", the signal state of operand"TagOut" at output Q is set to "1".
If the signal state of operand "TagIn_1" changes back to "0", the period assigned at input PT (200 ms) runs.
The "TagOut" operand at output Q is set back to "0" when the period expires. Operand ""F_DB_1".Tag_ET" contains the current time value.

13.5 Counter operations

13.5.1 CTU: Count up (STEP 7 Safety V18)

Description

You can use the "Count up" instruction to increment the value at output CV. When the signal state at the CU input changes from "0" to "1" (positive signal edge), the instruction is executed and the current count at the CV output increases by one. The count value is increased on each detection of a positive signal edge until it reaches the high limit of the data type specified at the CV output. When the high limit is reached, the signal state at the CU input no longer affects the instruction.
The counter status can be queried at output Q. The signal state at output Q is determined by parameter PV. When the current count value is greater than or equal to the value of parameter PV, output Q is set to signal state "1". In all other cases, the signal state at output Q is "0".

The value at output CV is reset to zero when the signal state at input R changes to "1". As long as signal state "1" exists at input R, the signal state at input CU has no effect on the instruction.

Every call of the "Count up" instruction must be assigned a data area in which the instruction data are stored. The "Call options" dialog is automatically opened when the instruction is inserted in the program for this reason. There you can create a data block (single instance) (e.g., F_IEC_Counter_DB_1) or a multi-instance (e.g., F_IEC_Counter_Instance_1) for the "Count up" instruction. Once it is created, you can find the new data block in the project tree in the "STEP 7 Safety" folder under "Program blocks > System blocks" or the multi-instance as a local tag in the "Static" section of the block interface. For more information, refer to the *help on STEP 7*.

The operating system resets the instances of the "Count up" instruction on a startup of the F-system.

Parameters

The following table shows the parameters of the instruction:

Parameter	Declaration	Data type	Description
CU	Input	BOOL	Counter input
R	Input	BOOL	Reset input
PV	Input	INT	Value for which output Q is set
Q	Output	BOOL	Counter status
CV	Output	INT	Current count value

Instruction versions

A number of versions are available for this instruction:

Version	S7-300/400	S7-1200	S7-1500	Function
1.0	x	—	—	When projects that were created with *S7 Distributed Safety V5.4 SP5* are migrated, version 1.0 of the instruction is used automatically. If you want to compile a migrated safety program with *STEP 7 Safety Advanced* for the first time, we recommend that you first update to the latest available version of the instruction.
1.1	x	—	o	These versions have identical functions to version 1.0.
1.2	x	o	o	
1.3	x	x	x	

o This version is no longer supported.

When a new F-CPU is created with *STEP 7 Safety*, the latest available version for the F-CPU created is automatically preset.

For more information on the use of instruction versions, refer to the help on *STEP 7* under "Using instruction versions".

Example

The following example shows how the instruction works:

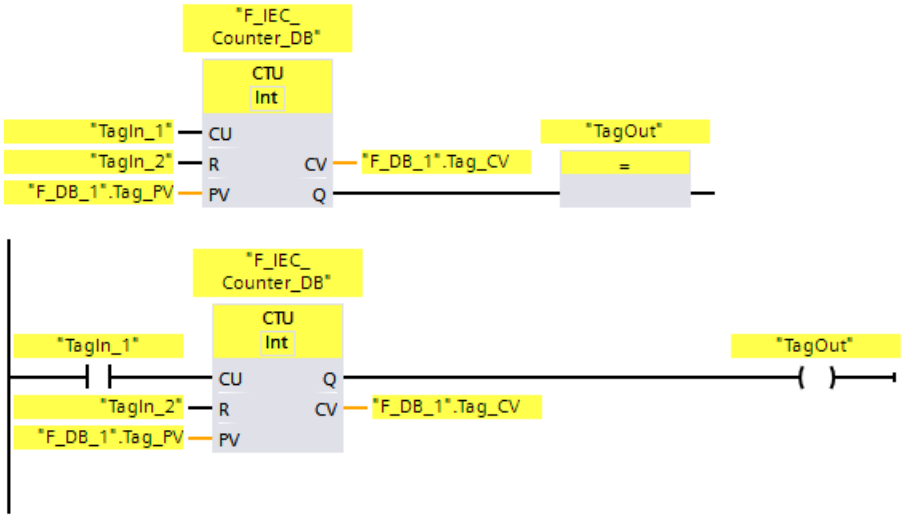

When the signal state of the "CU" input changes from "0" to "1", the "Count up" instruction is executed and the current count of the "CV" output increases by one. The count value is increased on every additional positive signal edge until the high limit of the specified data type (32767) is reached.

The value at the PV parameter is applied as the limit for determining the "TagOut" operands at the Q output. Output "Q" returns the signal state "1" as long as the current count is greater than or equal to the value of operand "PV". In all other cases, the "Q" output has the signal state "0".

13.5.2 CTD: Count down (STEP 7 Safety V18)

Description

You can use the "Count down" instruction to decrement the value at output CV. When the signal state at input CD changes from "0" to "1" (positive signal edge), the instruction is executed and the current count value at output CV is decreased by one. The count value is decreased on each detection of a positive signal edge until it reaches the low limit of the specified data type. When the low limit is reached, the signal state at input CD no longer affects the instruction.

The counter status can be queried at output Q. When the current count value is less than or equal to zero, output Q is set to signal state "1". In all other cases, the signal state at output Q is "0".

The value at output CV is set to the value of parameter "PV" when the signal state at input LD changes to "1". As long as signal state "1" exists at input LD, the signal state at input CD has no effect on the instruction.

Every call of the "Count down" instruction must be assigned a data area in which the instruction data are stored. The "Call options" dialog is automatically opened when the instruction is inserted in the program for this reason. There you can create a data block (single instance) (e.g., F_IEC_Counter_DB_1) or a multi-instance (e.g., F_IEC_Counter_Instance_1) for the "Count down" instruction. Once it is created, you can find the new data block in the project tree in the "STEP 7 Safety" folder under "Program blocks >

System blocks" or the multi-instance as a local tag in the "Static" section of the block interface. For more information, refer to the *help on STEP 7*.

The operating system resets the instances of the "Count down" instruction on a startup of the F-system.

Parameters

The following table shows the parameters of the instruction:

Parameter	Declaration	Data type	Description
CD	Input	BOOL	Counter input
LD	Input	BOOL	Load input
PV	Input	INT	Value at the output CV when LD = 1 is set
Q	Output	BOOL	Counter status
CV	Output	INT	Current count value

Instruction versions

A number of versions are available for this instruction:

Ver-sion	S7-300/400	S7-1200	S7-1500	Function
1.0	x	—	—	When projects that were created with *S7 Distributed Safety V5.4 SP5* are migrated, version 1.0 of the instruction is used automatically. If you want to compile a migrated safety program with *STEP 7 Safety Advanced* for the first time, we recommend that you first update to the latest available version of the instruction.
1.1	x	—	o	These versions have identical functions to version 1.0.
1.2	x	o	o	
1.3	x	x	x	

o This version is no longer supported.

When a new F-CPU is created with *STEP 7 Safety*, the latest available version for the F-CPU created is automatically preset.

For more information on the use of instruction versions, refer to the help on *STEP 7* under "Using instruction versions".

Example

The following example shows how the instruction works:

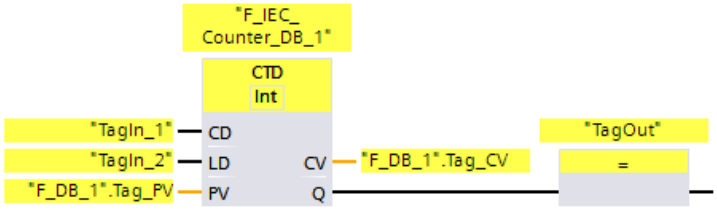

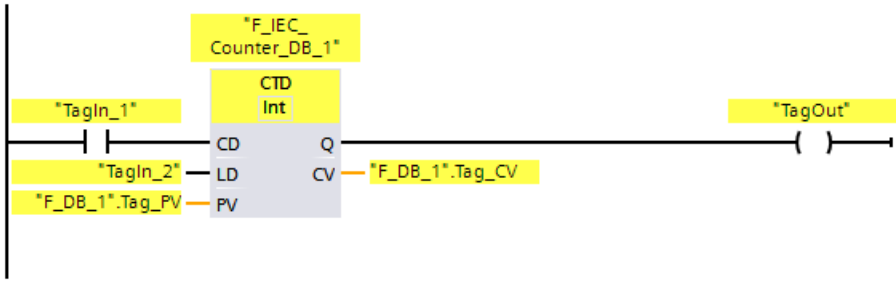

When the signal state of the "CD" input changes from "0" to "1", the "Count down" instruction is executed and the current count at "CV" output decreases by one. The count value is decreased on each additional positive signal edge until the low limit of the specified data type (-32768) is reached.

Output "Q" returns the signal state "1" as long as the current count is less than or equal to zero. In all other cases, output "Q" has signal state "0".

13.5.3 CTUD: Count up and down (STEP 7 Safety V18)

Description

You can use the "Count up and down" instruction to increment and decrement the count value at output CV. If the signal state at the CU input changes from "0" to "1" (positive signal edge), the current count at the CV output increases by one. If the signal state at input CD changes from "0" to "1" (positive signal edge), the count value at output CV is decreased by one. If a positive signal edge is present at inputs CU and CD in one program cycle, the current count value at output CV remains unchanged.

The count value can be increased until it reaches the high limit of the data type specified at output CV. When the high limit is reached, the count value is no longer incremented on a positive signal edge. When the low limit of the specified data type is reached, the count value is no longer decreased.

When the signal state at input LD changes to "1", the count value at output CV is set to the value of parameter PV. As long as signal state "1" exists at input LD, the signal state at inputs CU and CD has no effect on the instruction.

The count value is set to zero, when the signal state at input R changes to "1". As long as signal state "1" exists at input R, the signal state at inputs CU, CD, and LD has no effect on the "Count up and down" instruction.

The status of the up counter can be queried at output QU. When the current count value is greater than or equal to the value of parameter PV, output QU delivers signal state "1". In all other cases, the signal state at output QU is "0".

The status of the down counter can be queried at output QD. When the current count value is lesser than or equal to zero, output QD delivers signal state "1". In all other cases, the signal state at output QD is "0".

Every call of the "Count up and down" instruction must be assigned a data area in which the instruction data are stored. The "Call options" dialog is automatically opened when the instruction is inserted in the program for this reason. There you can create a data block (single instance) (e.g., F_IEC_Counter_DB_1) or a multi-instance (e.g., F_IEC_Counter_Instance_1) for the "Count up and down" instruction. Once it is created, you can find the new data block in the project tree in the "STEP 7 Safety" folder under "Program blocks > System blocks" or the multi-instance as a local tag in the "Static" section of the block interface. For more information, refer to the *help on STEP 7*.

The operating system resets the instances of the "Count up and down" instruction when the F-system is started up.

Parameters

The following table shows the parameters of the instruction:

Parameter	Declaration	Data type	Description
CU	Input	BOOL	Count up input
CD	Input	BOOL	Count down input
R	Input	BOOL	Reset input
LD	Input	BOOL	Load input
PV	Input	INT	Value set at the output QU/ at which the output CV is set at LD = 1.
QU	Output	BOOL	Status of up counter
QD	Output	BOOL	Status of down counter
CV	Output	INT	Current count value

Instruction versions

A number of versions are available for this instruction:

Ver-sion	S7-300/400	S7-1200	S7-1500	Function
1.0	x	—	—	When projects that were created with *S7 Distributed Safety V5.4 SP5* are migrated, version 1.0 of the instruction is used automatically. If you want to compile a migrated safety program with *STEP 7 Safety Advanced* for the first time, we recommend that you first update to the latest available version of the instruction.
1.1	x	—	o	These versions have identical functions to version 1.0.
1.2	x	o	o	
1.3	x	x	x	

o This version is no longer supported.

When a new F-CPU is created with *STEP 7 Safety*, the latest available version for the F-CPU created is automatically preset.
For more information on the use of instruction versions, refer to the help on *STEP 7* under "Using instruction versions".

Example

The following example shows how the instruction works:

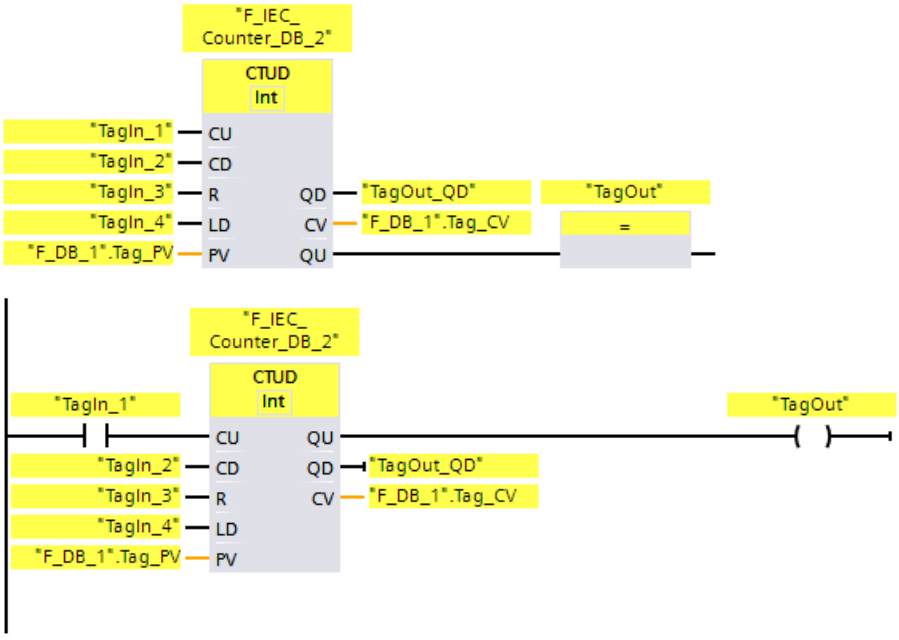

When the signal state at the "CU" input or at the "CD" input changes from "0" to "1" (positive signal edge), the "Count up and down" instruction is executed. When a positive signal edge is present at the "CU" input, the current count of the "CV" output increases by one. When a positive signal edge is present at the "CD" input, the current count at the "CV" output decreases by one. The count value is increased on each positive signal edge at the CU input until it reaches the high limit of 32767. The count value is decreased on each positive signal edge at the CD input until it reaches the low limit of -32768.

Output "QU" returns the signal state "1" as long as the current count is greater than or equal to the value at the "PV" input. In all other cases, output "QU" has signal state "0".

Output "QD" returns the signal state "1" as long as the current count is less than or equal to zero. In all other cases, output "QD" has signal state "0".

13.6 Comparator operations

13.6.1 CMP ==: Equal (STEP 7 Safety V18)

Description

You can use the "Equal" instruction to determine if the first comparison value (IN1 or <Operand1>) is equal to the second comparison value (IN2 or <Operand2>).

If the condition of the comparison is satisfied, the instruction returns result of logic operation (RLO) "1". If the condition of the comparison is not satisfied, the instruction returns RLO "0".

For LAD:

The RLO of the instruction is linked to the RLO of the entire current path as follows:

- By AND, when the comparison instruction is connected in series.
- By OR, when the comparison instruction is connected in parallel.

Enter the first comparison value (<Operand1>) in the operand placeholder above the instruction. Enter the second comparison value (<Operand2>) in the operand placeholder below the instruction.

Parameters

The following table shows the parameters of the instruction:

Parameter	Declaration	Data type	Description
FBD: IN1 LAD: <Operand1>	Input	INT, DINT, TIME, WORD, (S7-300/400) DWORD	First value to compare
FBD: IN2 LAD: <Operand2>	Input	INT, DINT, TIME, WORD, (S7-300/400) DWORD	Second value to compare

You can select the data type of the instruction in the "<???>" drop-down list in the instruction box.

Example

The following example shows how the instruction works:

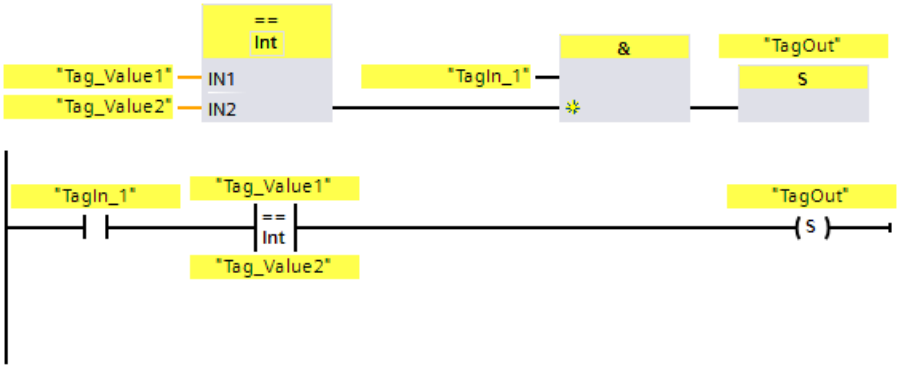

Output "TagOut" is set when the following conditions are fulfilled:

- "Tag_In1" has signal state "1".
- The condition of the comparison instruction is fulfilled ("Tag_Value1" = "Tag_Value2").

13.6.2 CMP <>: Not equal (STEP 7 Safety V18)

Description

You can use the "Not equal" instruction to determine if the first comparison value (IN1 or <Operand1>) is not equal to the second comparison value (IN2 or <Operand2>).

If the condition of the comparison is satisfied, the instruction returns result of logic operation (RLO) "1". If the condition of the comparison is not satisfied, the instruction returns RLO "0".

For LAD:

The RLO of the instruction is linked to the RLO of the entire current path as follows:

- By AND, when the comparison instruction is connected in series.
- By OR, when the comparison instruction is connected in parallel.

Enter the first comparison value (<Operand1>) in the operand placeholder above the instruction. Enter the second comparison value (<Operand2>) in the operand placeholder below the instruction.

Parameters

The following table shows the parameters of the instruction:

Parameter	Declaration	Data type	Description
FBD: IN1 LAD: <Operand1>	Input	INT, DINT, TIME, WORD, (S7-300/400) DWORD	First value to compare
FBD: IN2 LAD: <Operand2>	Input	INT, DINT, TIME, WORD, (S7-300/400) DWORD	Second value to compare

You can select the data type of the instruction in the "<???>" drop-down list in the instruction box.

Example

The following example shows how the instruction works:

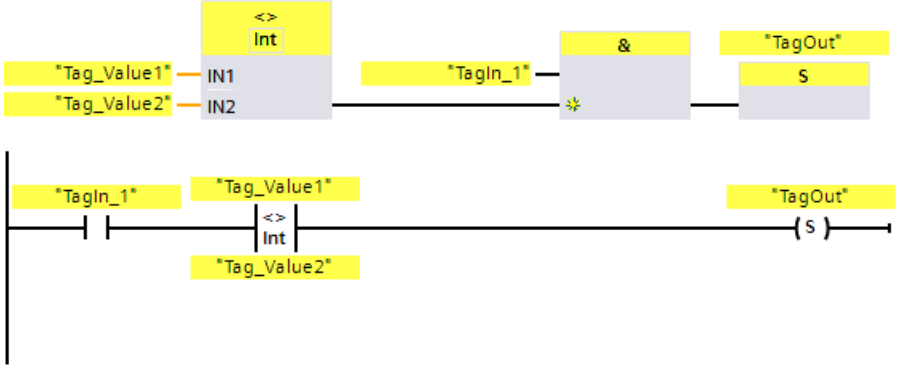

Output "TagOut" is set when the following conditions are fulfilled:

- "Tag_In1" has signal state "1".
- The condition of the comparison instruction is fulfilled ("Tag_Value1" <> "Tag_Value2").

13.6.3 CMP >=: Greater or equal (STEP 7 Safety V18)

Description

You can use the "Greater or equal" instruction to determine if the first comparison value (IN1 or <Operand1>) is greater than or equal to the second comparison value (IN2 or <Operand2>). Both comparison values must be of the same data type.
If the condition of the comparison is satisfied, the instruction returns result of logic operation (RLO) "1". If the condition of the comparison is not satisfied, the instruction returns RLO "0".
For LAD:
The RLO of the instruction is linked to the RLO of the entire current path as follows:

- By AND, when the comparison instruction is connected in series.
- By OR, when the comparison instruction is connected in parallel.

Enter the first comparison value (<Operand1>) in the operand placeholder above the instruction. Enter the second comparison value (<Operand2>) in the operand placeholder below the instruction.

Parameters

The following table shows the parameters of the instruction:

Parameter	Declaration	Data type	Description
FBD: IN1 LAD: <Operand1>	Input	INT, DINT, TIME	First value to compare
FBD: IN2 LAD: <Operand2>	Input	INT, DINT, TIME	Second value to compare

You can select the data type of the instruction in the "<???>" drop-down list in the instruction box.

Example

The following example shows how the instruction works:

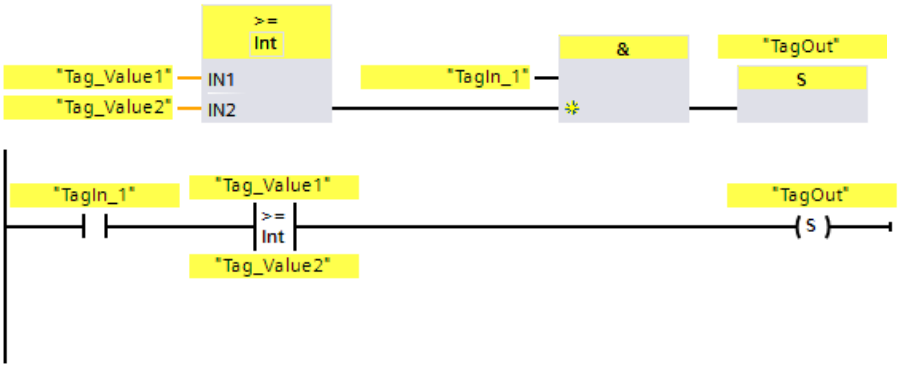

Output "TagOut" is set when the following conditions are fulfilled:

- "Tag_In1" has signal state "1".
- The condition of the comparison instruction is fulfilled ("Tag_Value1" >= "Tag_Value2").

13.6.4 CMP <=: Less or equal (STEP 7 Safety V18)

Description

You can use the "Less or equal" instruction to determine if the first comparison value (IN1 or <Operand1>) is less than or equal to the second comparison value (IN2 or <Operand2>). Both comparison values must be of the same data type.
If the condition of the comparison is satisfied, the instruction returns result of logic operation (RLO) "1". If the condition of the comparison is not satisfied, the instruction returns RLO "0".
For LAD:
The RLO of the instruction is linked to the RLO of the entire current path as follows:

- By AND, when the comparison instruction is connected in series.
- By OR, when the comparison instruction is connected in parallel.

Enter the first comparison value (<Operand1>) in the operand placeholder above the instruction. Enter the second comparison value (<Operand2>) in the operand placeholder below the instruction.

Parameters

The following table shows the parameters of the instruction:

Parameter	Declaration	Data type	Description
FBD: IN1 LAD: <Operand1>	Input	INT, DINT, TIME	First value to compare
FBD: IN2 LAD: <Operand2>	Input	INT, DINT, TIME	Second value to compare

You can select the data type of the instruction in the "<???>" drop-down list in the instruction box.

Example

The following example shows how the instruction works:

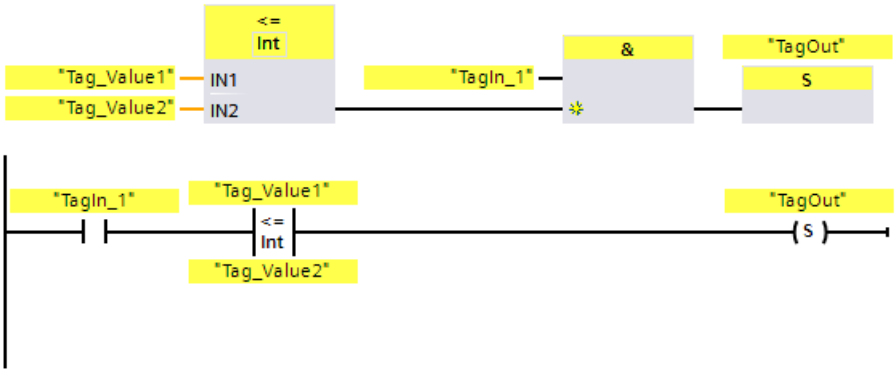

Output "TagOut" is set when the following conditions are fulfilled:

- "Tag_In1" has signal state "1".
- The condition of the comparison instruction is fulfilled ("Tag_Value1" <= "Tag_Value2").

13.6.5 CMP >: Greater than (STEP 7 Safety V18)

Description

You can use the "Greater than" instruction to determine if the first comparison value (IN1 or <Operand1>) is greater than the second comparison value (IN2 or <Operand2>). Both comparison values must be of the same data type.
If the condition of the comparison is satisfied, the instruction returns result of logic operation (RLO) "1". If the condition of the comparison is not satisfied, the instruction returns RLO "0".
For LAD:
The RLO of the instruction is linked to the RLO of the entire current path as follows:

- By AND, when the comparison instruction is connected in series.
- By OR, when the comparison instruction is connected in parallel.

Enter the first comparison value (<Operand1>) in the operand placeholder above the instruction. Enter the second comparison value (<Operand2>) in the operand placeholder below the instruction.

Parameters

The following table shows the parameters of the instruction:

Parameter	Declaration	Data type	Description
FBD: IN1 LAD: <Operand1>	Input	INT, DINT, TIME	First value to compare
FBD: IN2 LAD: <Operand2>	Input	INT, DINT, TIME	Second value to compare

You can select the data type of the instruction in the "<???>" drop-down list in the instruction box.

Example

The following example shows how the instruction works:

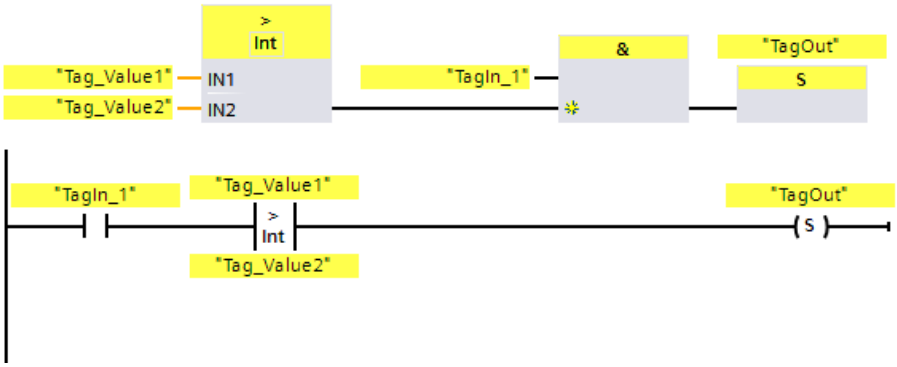

Output "TagOut" is set when the following conditions are fulfilled:

- "Tag_In1" has signal state "1".
- The condition of the comparison instruction is fulfilled ("Tag_Value1" > "Tag_Value2").

13.6.6 CMP <: Less than (STEP 7 Safety V18)

Description

You can use the "Less than" instruction to determine if the first comparison value (IN1 or <Operand1>) is less than the second comparison value (IN2 or <Operand2>). Both comparison values must be of the same data type.
If the condition of the comparison is satisfied, the instruction returns result of logic operation (RLO) "1". If the condition of the comparison is not satisfied, the instruction returns RLO "0".
For LAD:
The RLO of the instruction is linked to the RLO of the entire current path as follows:

- By AND, when the comparison instruction is connected in series.
- By OR, when the comparison instruction is connected in parallel.

Enter the first comparison value (<Operand1>) in the operand placeholder above the instruction. Enter the second comparison value (<Operand2>) in the operand placeholder below the instruction.

Parameters

The following table shows the parameters of the instruction:

Parameter	Declaration	Data type	Description
FBD: IN1 LAD: <Operand1>	Input	INT, DINT, TIME	First value to compare
FBD: IN2 LAD: <Operand2>	Input	INT, DINT, TIME	Second value to compare

You can select the data type of the instruction in the "<???>" drop-down list in the instruction box.

Example

The following example shows how the instruction works:

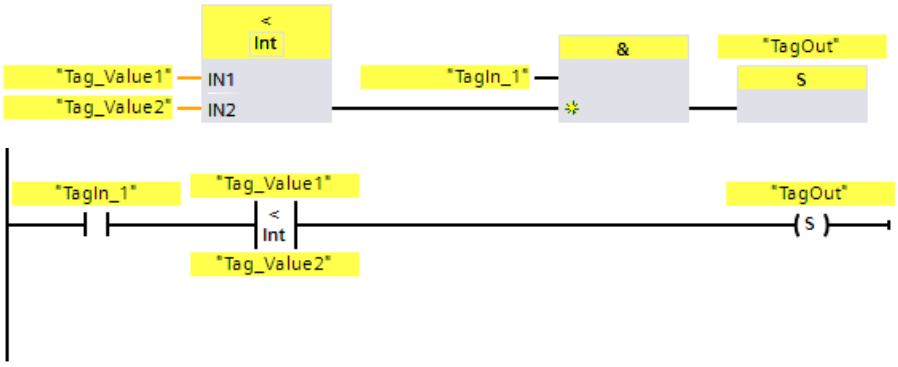

Output "TagOut" is set when the following conditions are fulfilled:

- "Tag_In1" has signal state "1".
- The condition of the comparison instruction is fulfilled ("Tag_Value1" < "Tag_Value2").

13.7 Math functions

13.7.1 ADD: Add (STEP 7 Safety V18)

Description

You can use the "Add" instruction to add the value at input IN1 and the value at input IN2 and query the sum at the OUT output (OUT = IN1 + IN2).

Enable input "EN" or (S7-300, S7-400) enable output "ENO" cannot be connected. The instruction is therefore always executed regardless of the signal state at enable input "EN".

NOTE

When the result of the instruction is located outside the permitted range for this data type, the F-CPU may switch to STOP. The cause of the diagnostics event is entered in the diagnostics buffer of the F-CPU.

You must therefore ensure that the permitted range for the data type is observed when creating the program!

(S7-1200, S7-1500) You can avoid a STOP of the F-CPU by connecting the ENO enable output, thereby programming overflow detection.

Note the following:

- If the result of the instruction is located outside the permitted range for this data type, the enable output ENO returns the signal state "0".
- The result of the instruction reacts like the analogous instruction in a standard block.
- The execution time of the instruction is extended (see also Excel file for response time calculation (https://support.industry.siemens.com/cs/ww/en/view/109783831)).
- Work memory requirement of safety program is increased.

(S7-300, S7-400) You can avoid a STOP of the F-CPU by inserting a "Get status bit OV" instruction in the next network, thereby programming overflow detection.

Note the following:

- The result of the instruction reacts like the analogous instruction in a standard block.
- The network with the "Get status bit OV" instruction must not contain any jump labels.
- The execution time of the instruction is extended (see also Excel file for response time calculation (https://support.industry.siemens.com/cs/ww/en/view/109783831)).
- A warning is issued if you do not insert a "Get status bit OV" instruction.
- Work memory requirement of safety program is increased.

Parameters

The following table shows the parameters of the instruction:

Parameter	Declaration	Data type	Description
ENO	Output	BOOL	(S7-1200, S7-1500) Enable output
IN1	Input	INT, DINT	First addend
IN2	Input	INT, DINT	Second addend
OUT	Output	INT, DINT	Total

You select the data type of the instruction in the "<???>" drop-down list in the instruction box.

Example for S7-300/400 F-CPUs

The following example shows how the instruction works:

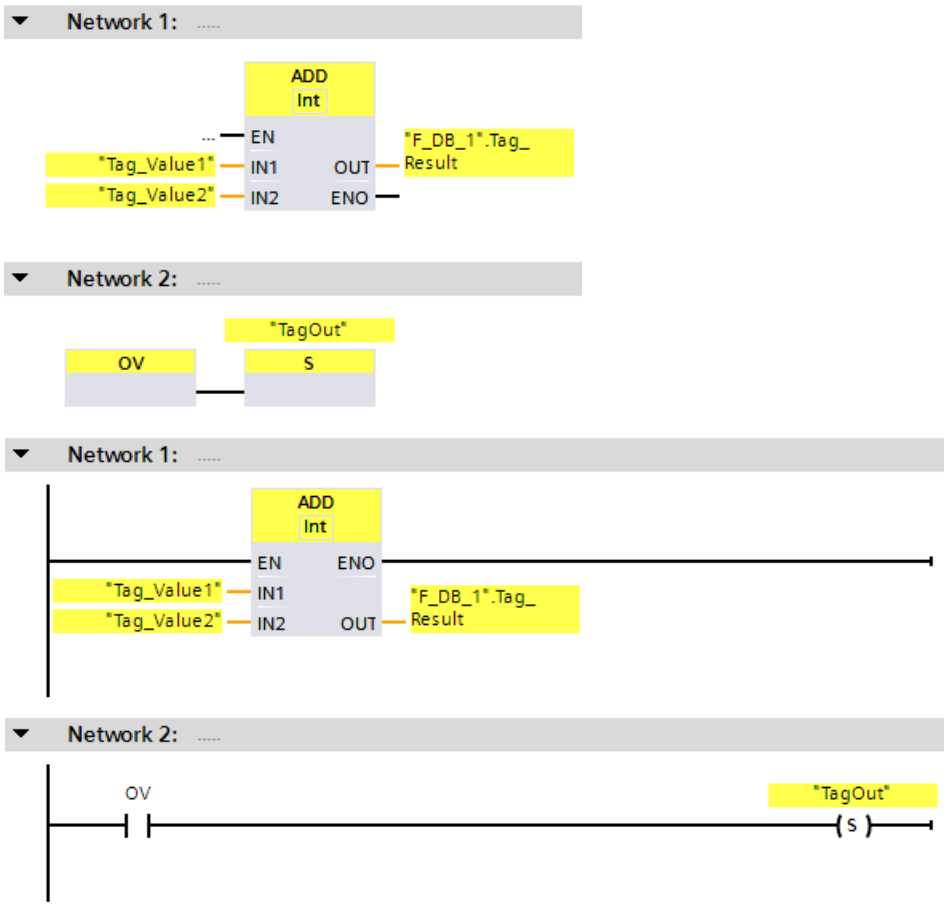

The "Add" instruction is always executed regardless of the signal state at enable input EN.
The value of the "Tag_Value1" operand is added to value of the "Tag_Value2" operand. The result of the addition is stored in the ""F_DB_1".Tag_Result" operand.
If needed, you can also store the signal status of the ENO enable output in an (F-)DB, and centrally evaluate whether overflows have occurred for all or one group of instructions with overflow detection.

When an overflow occurs during execution of the "Add" instruction, the status bit OV is set to "1". In network 2, following the query of the status bit OV, the "Set output" (S) instruction is executed and the "TagOut" operand is set.

Example for S7-1200/1500 F-CPUs

The following example shows how the instruction works:

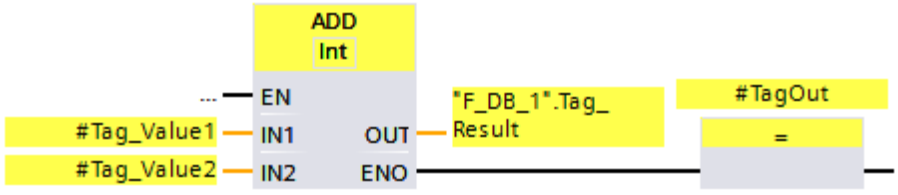

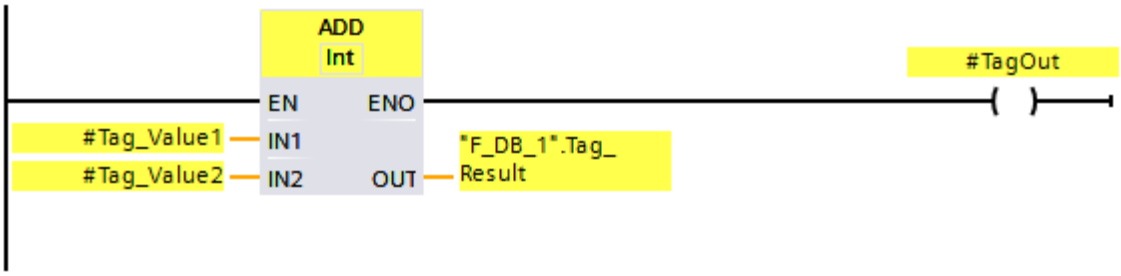

The "Add" instruction is always executed regardless of the signal state at enable input EN.
The value of the "#Tag_Value1" operand is added to value of the "#Tag_Value2" operand. The result of the addition is stored in the ""F_DB_1".Tag_Result" operand.
When no overflow occurs during execution of the "Add" instruction, the ENO enable output has the signal state "1" and the "#TagOut" operand is set.
If needed, you can also store the signal status of the ENO enable output in an (F-)DB, and centrally evaluate whether overflows have occurred for all or one group of instructions with overflow detection.

See also

---| |--- OV: Get status bit OV (STEP 7 Safety Advanced V18) (S7-300, S7-400) (Page 526-527)

---| / |--- OV: Get negated status bit OV (STEP 7 Safety Advanced V18) (S7-300, S7-400) (Page 527)

13.7.2 SUB: Subtract (STEP 7 Safety V18)

Description

You can use the "Subtract" instruction to subtract the value at input IN2 from the value at input IN1 and query the difference at the OUT output (OUT = IN1 – IN2).

Enable input "EN" or (S7-300, S7-400) enable output "ENO" cannot be connected. The instruction is therefore always executed regardless of the signal state at enable input "EN".

NOTE

When the result of the instruction is located outside the permitted range for this data type, the F-CPU may switch to STOP. The cause of the diagnostics event is entered in the diagnostics buffer of the F-CPU.

You must therefore ensure that the permitted range for the data type is observed when creating the program!

(S7-1200, S7-1500) You can avoid a STOP of the F-CPU by connecting the ENO enable output, thereby programming overflow detection.

Note the following:

- If the result of the instruction is located outside the permitted range for this data type, the enable output ENO returns the signal state "0".
- The result of the instruction reacts like the analogous instruction in a standard block.
- The execution time of the instruction is extended (see also Excel file for response time calculation (https://support.industry.siemens.com/cs/ww/en/view/109783831)).
- Work memory requirement of safety program is increased.

(S7-300, S7-400) You can avoid a STOP of the F-CPU by inserting a "Get status bit OV" instruction in the next network, thereby programming overflow detection.

Note the following:

- The result of the instruction reacts like the analogous instruction in a standard block.
- The network with the "Get status bit OV" instruction must not contain any jump labels.
- The execution time of the instruction is extended (see also Excel file for response time calculation (https://support.industry.siemens.com/cs/ww/en/view/109783831)).
- A warning is issued if you do not insert a "Get status bit OV" instruction.
- Work memory requirement of safety program is increased.

Parameters

The following table shows the parameters of the instruction:

Parameter	Declaration	Data type	Description
ENO	Output	BOOL	(S7-1200, S7-1500) Enable output
IN1	Input	INT, DINT	Minuend
IN2	Input	INT, DINT	Subtrahend
OUT	Output	INT, DINT	Difference

You select the data type of the instruction in the "<???>" drop-down list in the instruction box.

Example for S7-300/400 F-CPUs

The following example shows how the instruction works:

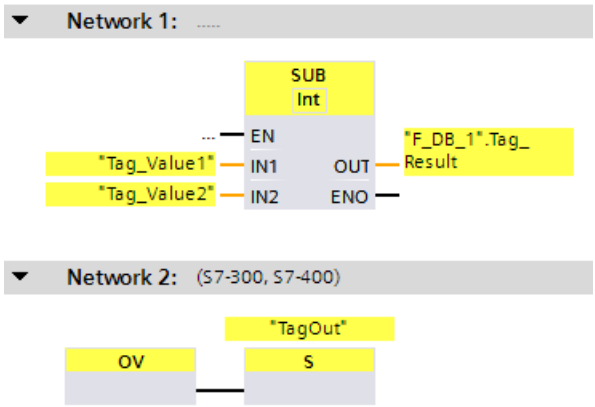

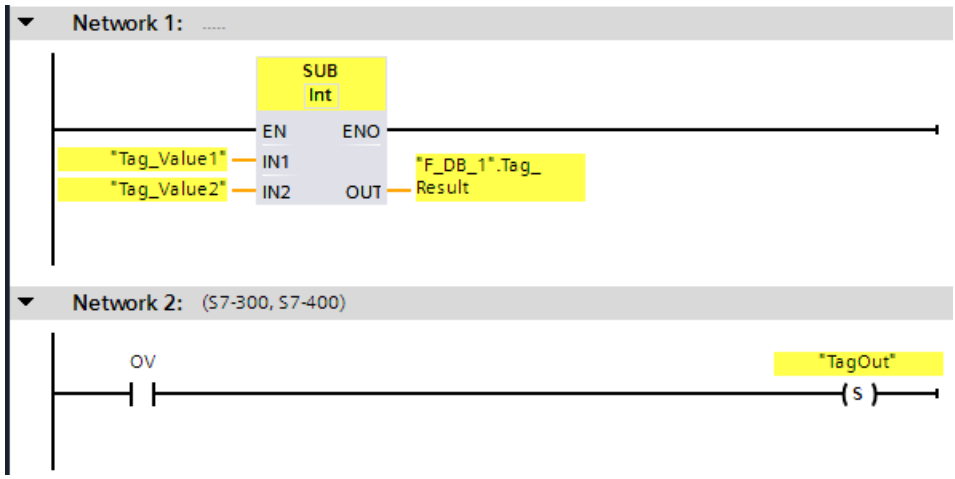

The "Subtract" instruction is always executed regardless of the signal state at enable input EN. The value of the "Tag_Value2" operand is subtracted from the value of the "Tag_Value1" operand. The result of the addition is stored in the ""F_DB_1".Tag_Result" operand.

When an overflow occurs during execution of the "Subtract" instruction, the status bit OV is set to "1". In network 2, following the query of the status bit OV, the "Set output" (S) instruction is executed and the "TagOut" operand is set.

Example for S7-1200/1500 F-CPUs

The following example shows how the instruction works:

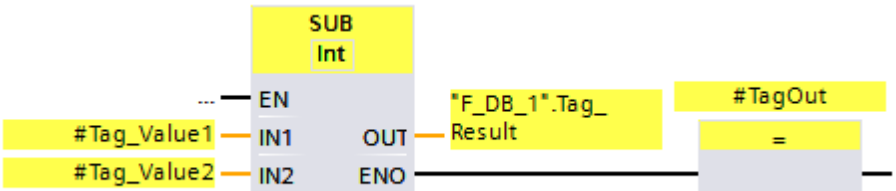

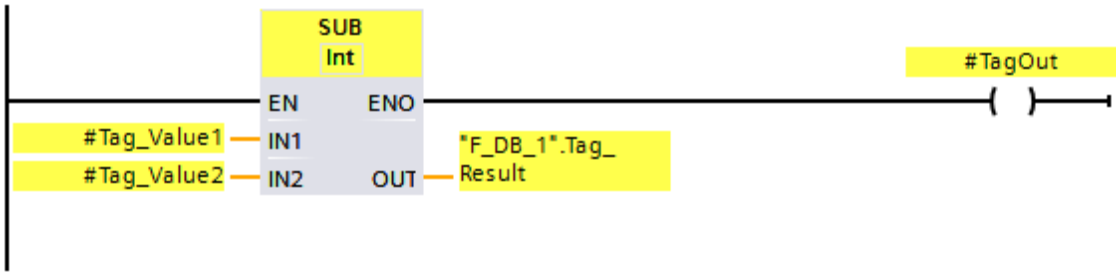

The "Subtract" instruction is always executed regardless of the signal state at enable input EN. The value of the "#Tag_Value2" operand is subtracted from the value of the "#Tag_Value1" operand. The result of the addition is stored in the ""F_DB_1".Tag_Result" operand.
When no overflow occurs during execution of the "Subtract" instruction, the ENO enable output has the signal state "1" and the "#TagOut" operand is set.

See also

---| |--- OV: Get status bit OV (STEP 7 Safety Advanced V18) (S7-300, S7-400) (Page 526-527)

---| / |--- OV: Get negated status bit OV (STEP 7 Safety Advanced V18) (S7-300, S7-400) (Page 527)

13.7.3 MUL: Multiply (STEP 7 Safety V18)

Description

You can use the "Multiply" instruction to multiply the value at input IN1 by the value at input IN2 and query the product at output OUT (OUT = IN1 × IN2).

Enable input "EN" or (S7-300, S7-400) enable output "ENO" cannot be connected. The instruction is therefore always executed regardless of the signal state at enable input "EN".

NOTE

When the result of the instruction is located outside the permitted range for this data type, the F-CPU may switch to STOP. The cause of the diagnostics event is entered in the diagnostics buffer of the F-CPU.

You must therefore ensure that the permitted range for the data type is observed when creating the program!

(S7-1200, S7-1500) You can avoid a STOP of the F-CPU by connecting the ENO enable output, thereby programming overflow detection.

Note the following:

- If the result of the instruction is located outside the permitted range for this data type, the enable output ENO returns the signal state "0".
- The result of the instruction reacts like the analogous instruction in a standard block.
- The execution time of the instruction is extended (see also Excel file for response time calculation (https://support.industry.siemens.com/cs/ww/en/view/109783831)).
- Work memory requirement of safety program is increased.

(S7-300, S7-400) You can avoid a STOP of the F-CPU by inserting a "Get status bit OV" instruction in the next network, thereby programming overflow detection.

Note the following:

- The result of the instruction reacts like the analogous instruction in a standard block.
- The network with the "Get status bit OV" instruction must not contain any jump labels.
- The execution time of the instruction is extended (see also Excel file for response time calculation (https://support.industry.siemens.com/cs/ww/en/view/109783831)).
- A warning is issued if you do not insert a "Get status bit OV" instruction.
- Work memory requirement of safety program is increased.

Parameters

The following table shows the parameters of the instruction:

Parameter	Declaration	Data type	Description
ENO	Output	BOOL	(S7-1200, S7-1500) Enable output
IN1	Input	INT, DINT	Multiplier
IN2	Input	INT, DINT	Multiplicand
OUT	Output	INT, DINT	Product

You select the data type of the instruction in the "<???>" drop-down list in the instruction box.

Example for S7-300/400 F-CPUs

The following example shows how the instruction works:

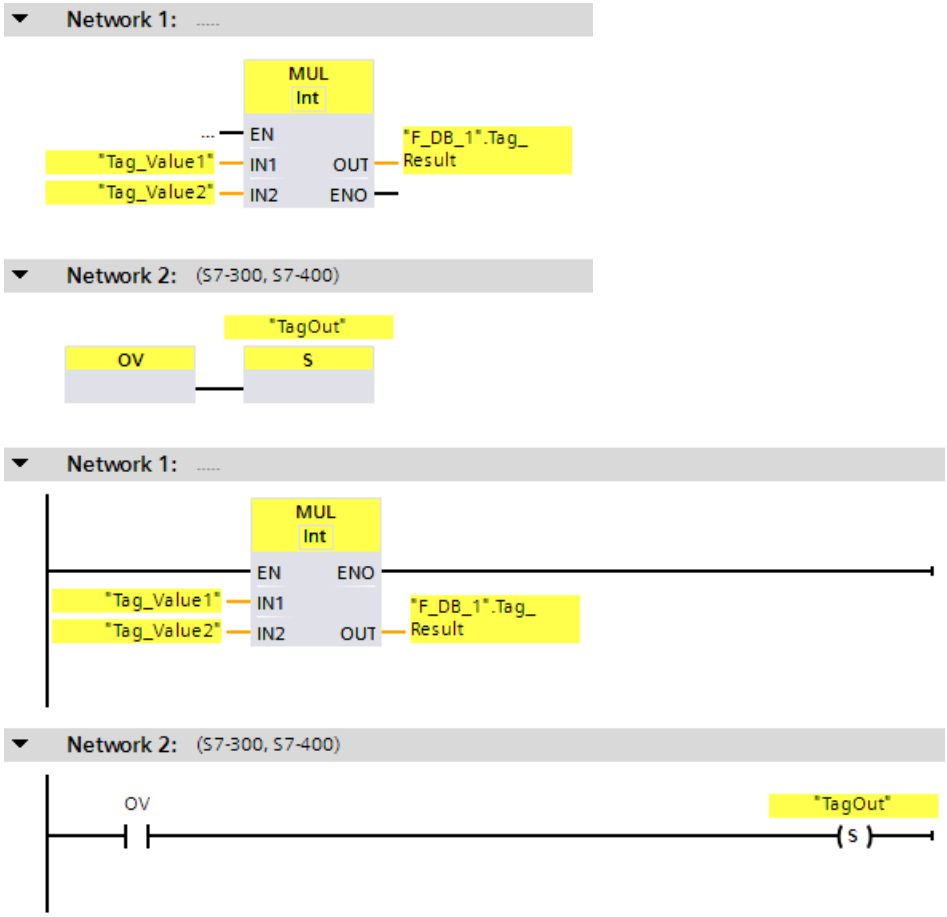

The "Multiply" instruction is always executed regardless of the signal state at enable input EN. The value of the "Tag_Value1" operand is multiplied by the value of the "Tag_Value2" operand. The result of the multiplication is stored in the ""F_DB_1".Tag_Result" operand. When an overflow occurs during execution of the "Multiply" instruction, the status bit OV is set to "1". In network 2, following the query of the status bit OV, the "Set output" (S) instruction is executed and the "TagOut" operand is set.

Example for S7-1200/1500 F-CPUs

The following example shows how the instruction works:

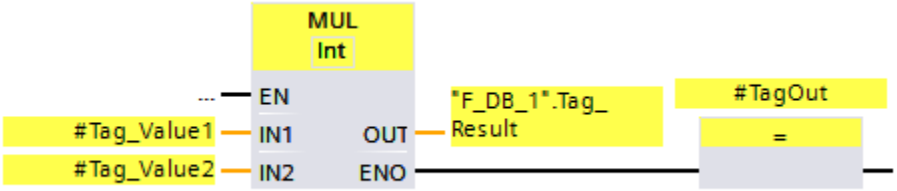

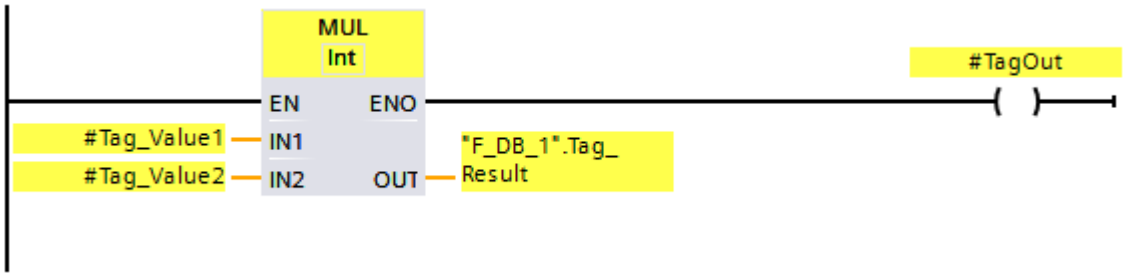

The "Multiply" instruction is always executed regardless of the signal state at enable input EN. The value of the "#Tag_Value1" operand is multiplied by the value of the "#Tag_Value2" operand. The result of the multiplication is stored in the ""F_DB_1".Tag_Result" operand. When no overflow occurs during execution of the "Multiply" instruction, the ENO enable output has the signal state "1" and the "#TagOut" operand is set.

See also

---| |--- OV: Get status bit OV (STEP 7 Safety Advanced V18) (S7-300, S7-400) (Page 526-527)

---| / |--- OV: Get negated status bit OV (STEP 7 Safety Advanced V18) (S7-300, S7-400) (Page 527)

13.7.4 DIV: Divide (STEP 7 Safety V18)

Description

You can use the "Divide" instruction to divide the value at input IN1 by the value at input IN2 and query the quotient at the OUT output (OUT = IN1 / IN2).

Enable input "EN" or (S7-300, S7-400) enable output "ENO" cannot be connected. The instruction is therefore always executed regardless of the signal state at enable input "EN".

NOTE

When the result of the instruction is located outside the permitted range for this data type, the F-CPU may switch to STOP. The cause of the diagnostics event is entered in the diagnostics buffer of the F-CPU.

You must therefore ensure that the permitted range for the data type is observed when creating the program!

(S7-1200, S7-1500) You can avoid a STOP of the F-CPU by connecting the ENO enable output, thereby programming overflow detection.

Note the following:

- If the result of the instruction is located outside the permitted range for this data type, the enable output ENO returns the signal state "0".
- The result of the instruction reacts like the analogous instruction in a standard block.
- The execution time of the instruction is extended (see also Excel file for response time calculation (https://support.industry.siemens.com/cs/ww/en/view/109783831)).
- Work memory requirement of safety program is increased.

(S7-300, S7-400) You can avoid a STOP of the F-CPU by inserting a "Get status bit OV" instruction in the next network, thereby programming overflow detection.

Note the following:

- The result of the instruction reacts like the analogous instruction in a standard block.
- The network with the "Get status bit OV" instruction must not contain any jump labels.
- The execution time of the instruction is extended (see also Excel file for response time calculation (https://support.industry.siemens.com/cs/ww/en/view/109783831)).
- A warning is issued if you do not insert a "Get status bit OV" instruction.
- Work memory requirement of safety program is increased.

NOTE

S7-300/400, S7-1200/1500 (enable output ENO connected):

If the divisor (input IN2) of a DIV instruction = 0, the quotient of the division (result of division at output OUT) = 0. The result reacts like the corresponding instruction in a standard block. The F-CPU does *not* go to STOP mode.

S7-1200/1500 (enable output ENO not connected):

If the divisor (input IN2) of a DIV instruction = 0, the F-CPU goes to STOP. The cause of the diagnostics event is entered in the diagnostics buffer of the F-CPU. We recommend that you rule out a divisor (input IN2) = 0 when creating the program.

Parameters

The following table shows the parameters of the instruction:

Parameter	Declaration	Data type	Description
ENO	Output	BOOL	(S7-1200, S7-1500) Enable output
IN1	Input	INT, DINT	Dividend
IN2	Input	INT, DINT	Divisor
OUT	Output	INT, DINT	Quotient

You select the data type of the instruction in the "<???>" drop-down list in the instruction box.

Example for S7-300/400 F-CPUs

The following example shows how the instruction works:

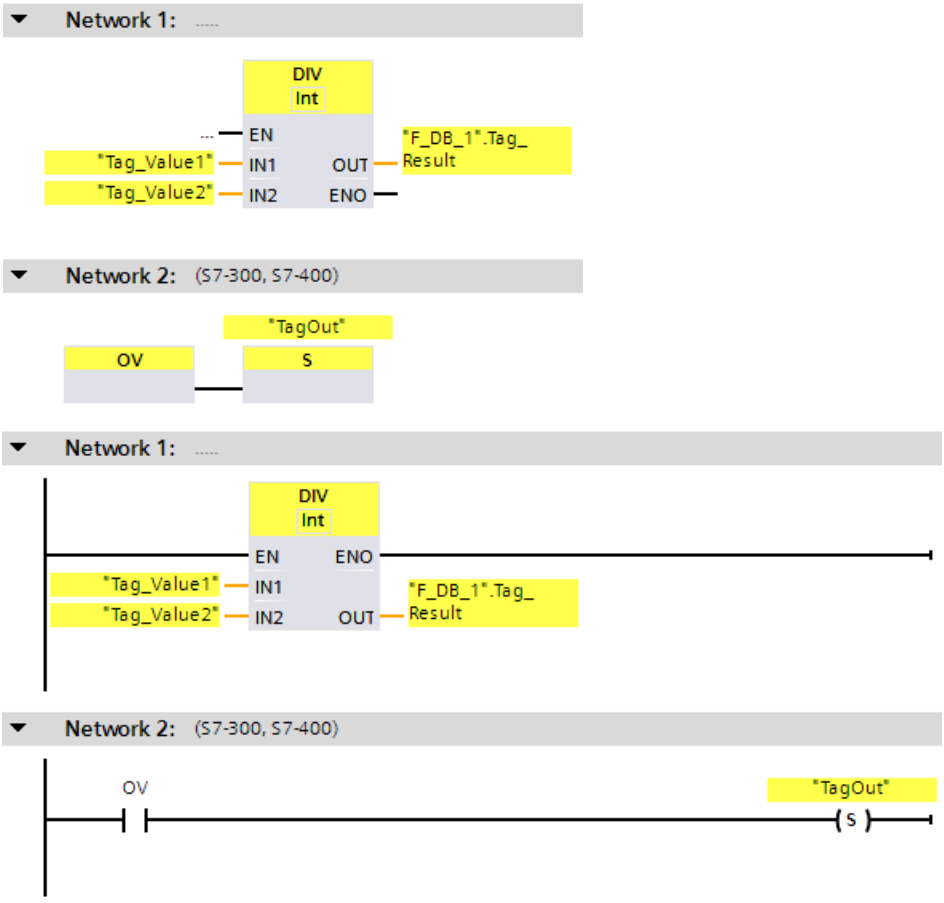

The "Divide" instruction is always execute regardless of the signal state at enable input EN.
The value of the "Tag_Value1" operand is divided by the value of the "Tag_Value2" operand.
The result of the division is stored in the ""F_DB_1".Tag_Result" operand.
When an overflow occurs during execution of the "Divide" instruction, the status bit OV is set to "1". In network 2, following the query of the status bit OV, the "Set output" (S) instruction is executed and the "TagOut" operand is set.

Example for S7-1200/1500 F-CPUs

The following example shows how the instruction works:

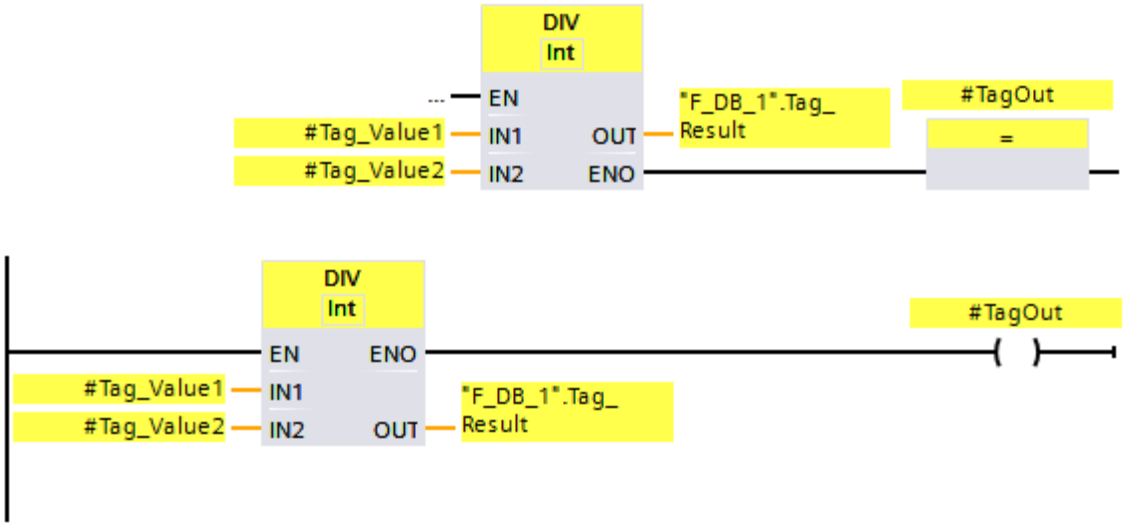

The "Divide" instruction is always execute regardless of the signal state at enable input EN. The value of the "#Tag_Value1" operand is divided by the value of the "#Tag_Value2" operand. The result of the division is stored in the ""F_DB_1".Tag_Result" operand.
When no overflow occurs during execution of the "Divide" instruction, the ENO enable output has the signal state "1" and the "#TagOut" operand is set.

See also

---| |--- OV: Get status bit OV (STEP 7 Safety Advanced V18) (S7-300, S7-400) (Page 526-527)

---| / |--- OV: Get negated status bit OV (STEP 7 Safety Advanced V18) (S7-300, S7-400) (Page 527)

13.7.5 NEG: Create two's complement (STEP 7 Safety V18)

Description

You can use the "Create twos complement" instruction to change the sign of the value at input IN input and query the result at output OUT. If there is a positive value at input IN, for example, the negative equivalent of this value is sent to output OUT.

Enable input "EN" or (S7-300, S7-400) enable output "ENO" cannot be connected. The instruction is therefore always executed regardless of the signal state at enable input "EN".

NOTE

When the result of the instruction is located outside the permitted range for this data type, the F-CPU may switch to STOP. The cause of the diagnostics event is entered in the diagnostics buffer of the F-CPU.

You must therefore ensure that the permitted range for the data type is observed when creating the program!

(S7-1200, S7-1500) You can avoid a STOP of the F-CPU by connecting the ENO enable output, thereby programming overflow detection.

Note the following:

- If the result of the instruction is located outside the permitted range for this data type, the enable output ENO returns the signal state "0".
- The result of the instruction reacts like the analogous instruction in a standard block.
- The execution time of the instruction is extended (see also Excel file for response time calculation (https://support.industry.siemens.com/cs/ww/en/view/109783831)).
- Work memory requirement of safety program is increased.

(S7-300, S7-400) You can avoid a STOP of the F-CPU by inserting a "Get status bit OV" instruction in the next network, thereby programming overflow detection.

Note the following:

- The result of the instruction reacts like the analogous instruction in a standard block.
- The network with the "Get status bit OV" instruction must not contain any jump labels.
- The execution time of the instruction is extended (see also Excel file for response time calculation (https://support.industry.siemens.com/cs/ww/en/view/109783831)).
- A warning is issued if you do not insert a "Get status bit OV" instruction.
- Work memory requirement of safety program is increased.

Parameters

The following table shows the parameters of the instruction:

Parameter	Declaration	Data type	Description
ENO	Output	BOOL	(S7-1200, S7-1500) Enable output
IN	Input	INT, DINT	Input value
OUT	Output	INT, DINT	Twos complement of the input value

You select the data type of the instruction in the "<???>" drop-down list in the instruction box.

Example for S7-300/400 F-CPUs

The following example shows how the instruction works:

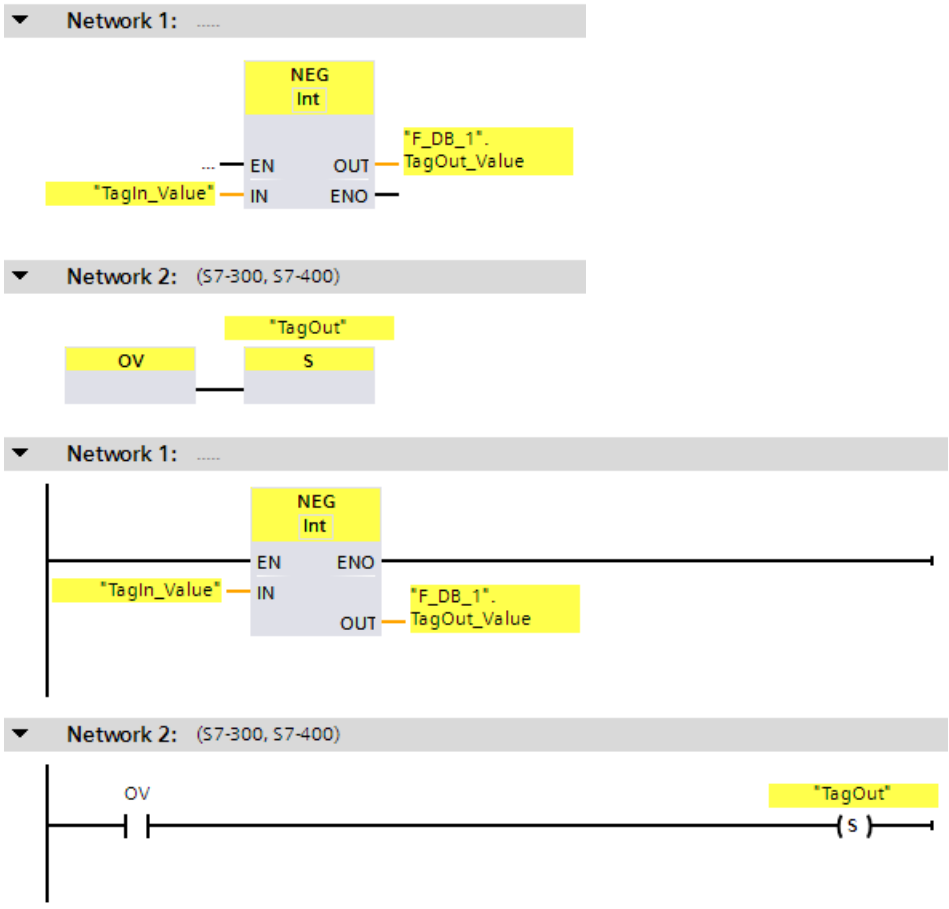

The "Create two's complement" instruction is always executed regardless of the signal state at enable input EN.

The sign of the "TagIn_Value" operand is changed and the result is stored in the ""F_DB_1".TagOut_Value" operand.

When an overflow occurs during execution of the "Create two's complement" instruction, the status bit OV is set to "1". In network 2, following the query of the status bit OV, the "Set output" (S) instruction is executed and the "TagOut" operand is set.

Example for S7-1200/1500 F-CPUs

The following example shows how the instruction works:

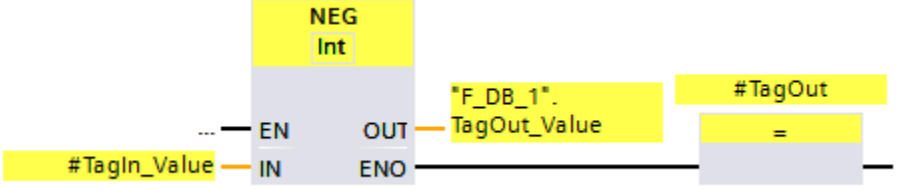

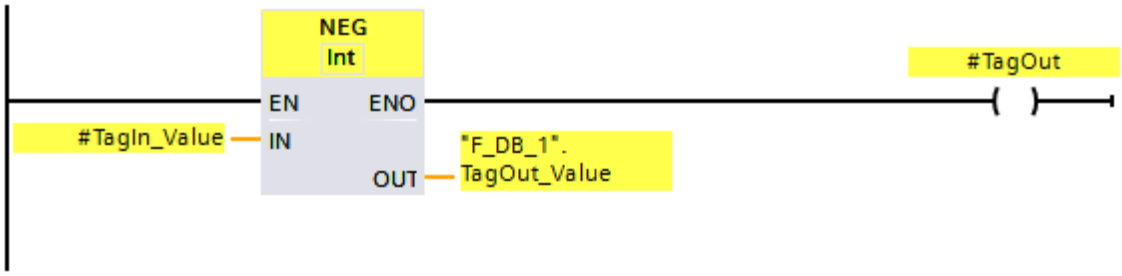

The "Create two's complement" instruction is always executed regardless of the signal state at enable input EN.

The sign of the "#TagIn_Value" operand is changed and the result is stored in the ""F_DB_1".TagOut_Value" operand.

When no overflow occurs during execution of the "Create two's complement" instruction, the ENO enable output has the signal state "1" and the "TagOut" operand is set.

See also

---| |--- OV: Get status bit OV (STEP 7 Safety Advanced V18) (S7-300, S7-400) (Page 526-527)

---| / |--- OV: Get negated status bit OV (STEP 7 Safety Advanced V18) (S7-300, S7-400) (Page 527)

13.7.6 ABS: Form absolute value (STEP 7 Safety V18) (S7-1200, S7-1500)

Description

You use the "Form absolute value" instruction to calculate the absolute amount of the value which is specified at the input "IN". The result of the instruction is output at the OUT output and can be queried there.

Enable input "EN" or (S7-300, S7-400) enable output "ENO" cannot be connected. The instruction is therefore always executed regardless of the signal state at enable input "EN".

NOTE

When the result of the instruction is located outside the permitted range for this data type, the F-CPU may switch to STOP. The cause of the diagnostics event is entered in the diagnostics buffer of the F-CPU.

You must therefore ensure that the permitted range for the data type is observed when creating the program!

You can avoid a STOP of the F-CPU by connecting the ENO enable output, thereby programming overflow detection.

Note the following:

- If the result of the instruction is located outside the permitted range for this data type, the enable output ENO returns the signal state "0".
- The result of the instruction reacts like the analogous instruction in a standard block.
- The execution time of the instruction is extended (see also Excel file for response time calculation (https://support.industry.siemens.com/cs/ww/en/view/109783831)).
- Work memory requirement of safety program is increased.

Parameters

The following table shows the parameters of the instruction:

Parameter	Declaration	Data type	Description
ENO	Output	BOOL	(S7-1200, S7-1500) Enable output
IN	Input	INT, DINT	Input value
OUT	Output	INT, DINT	Absolute value of the input value

You select the data type of the instruction in the "<???>" drop-down list in the instruction box.

Example

The following example shows how the instruction works:

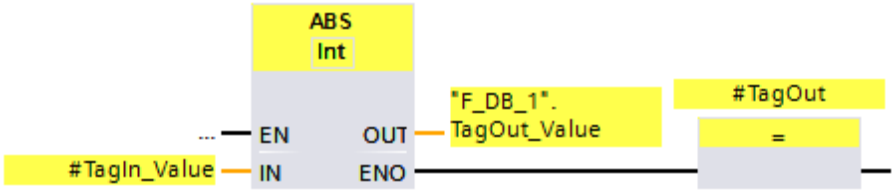

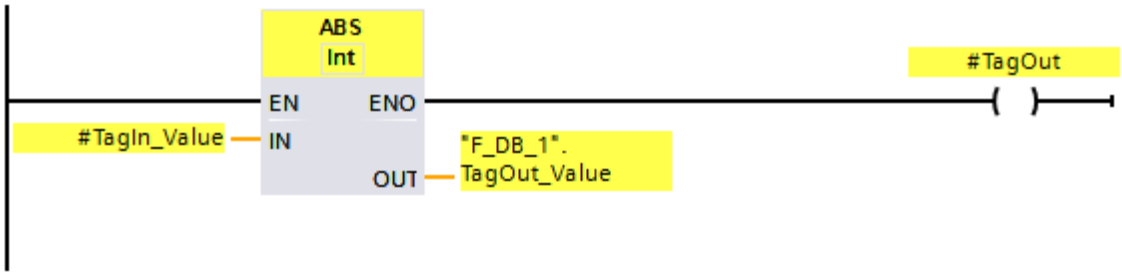

The instruction "Form absolute value"is always executed regardless of the signal state at enable input "EN".
The absolute amount of the value at the "TagIn_Value" operand is calculated and the result is stored in the ""F_DB_1".TagOut_Value" operand.
When no overflow occurs during execution of the "Form absolute value" instruction, the enable output ENO has the signal state "1" and the "#TagOut" operand is set.

13.8 Move operations

13.8.1 MOVE: Move value (STEP 7 Safety V18)

Description

You can use the "Move value" instruction to transfer the content of the operand at input IN to the operand at output OUT1.

Only operands with identical operand width and identical data structure can be specified for input IN and output OUT1.
Enable input "EN" and enable output "ENO" cannot be connected. The instruction is therefore always executed (regardless of the signal state at enable input "EN").
(S7-1200, S7-1500) In the basic state, the instruction box contains an output (OUT1). The number of outputs can be expanded. The inserted outputs are numbered in ascending order on the box. During execution, the content of the operand at the IN input is transferred to all available outputs. The instruction box cannot be expanded if operands with F-compliant PLC data types (UDT) are transferred.

Parameters

The following table shows the parameters of the instruction:

Parameter	Declaration	Data type	Description
IN	Input	INT, DINT, WORD, (S7-300/400) DWORD, TIME, F-compliant PLC data type (UDT)	Source value
OUT1	Output	INT, DINT, WORD, (S7-300/400) DWORD, TIME, F-compliant PLC data type (UDT)	Destination address

Example

The following example shows how the instruction works:

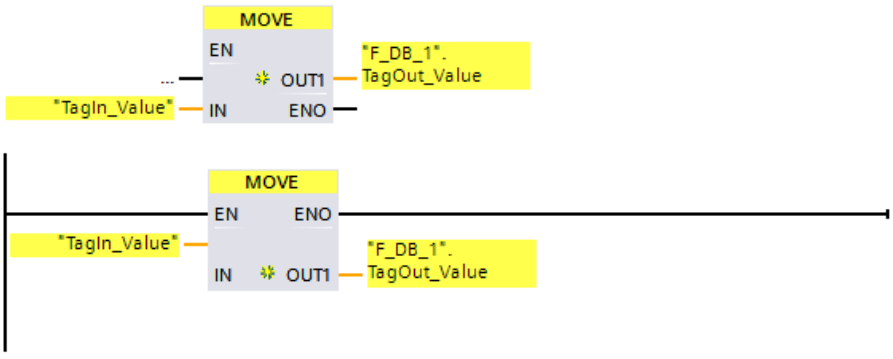

The instruction is always executed regardless of the signal state at enable input "EN". The instruction copies the content of operand "TagIn_Value" to operand ""F_DB_1".TagOut_Value".

13.8.2 RD_ARRAY_I: Read value from INT F-array (STEP 7 Safety V18) (S7-1500)

Description

You use the "Read value from INT F-array" instruction to read an element from the array at the ARRAY input, which refers to the index at the INDEX input, and write its value at the OUT output. If an error occurs while accessing the array during runtime, this is displayed at the output ERROR.

The array must be created in an F-global DB and can contain only one dimension. The elements of the ARRAY must be data type INT. The following applies for the array limits in contrast:

- The low limit must be 0.
- The high limit can be 10000 maximum.

Enable input "EN" and enable output "ENO" cannot be connected. The instruction is therefore always executed (regardless of the signal state at the "EN" enable input).

Parameters

The following table shows the parameters of the instruction:

Parameter	Declaration	Data type	Description
ARRAY	Input	VARIANT	Array from which is read
INDEX	Input	DINT	Element in the array which is read. The specification may be a constant or a tag.
OUT	Output	INT	Value which is read and output.
ERROR	Output	BOOL	Error information The parameter ERROR is set if an error occurs during the processing of the instruction.

ARRAY parameter

In addition to the direct connection with an array within a fail-safe global DB, this input can also be interconnected with an INOUT of data type ARRAY[*] of INT. This enables the decoupling of data and program logic in order, for example, to create a library function without any connection existing to a dedicated data block.

ERROR parameter

The table below shows the meaning of the value of the ERROR parameter:

Value	Description
FALSE	No error
TRUE	Value at the INDEX parameter is outside the limit value of the ARRAY.

Instruction versions

One version is available for this instruction:

Version	S7-300/400	S7-1200	S7-1500	Function
1.0	—	—	x[1]	

[1] supported as of firmware V2.0

When a new F-CPU is created with *STEP 7 Safety*, the latest available version for the F-CPU created is automatically preset.

For more information on the use of instruction versions, refer to the help on *STEP 7* under "Using instruction versions".

Reaction to errors

If the value at the INDEX input is outside the array limits, the output ERROR = 1 is set, and the array value of the element with index = 0 is output at OUT output, regardless of the value passed at the INDEX input.

Therefore, set the value of the element with index = 0 as a fail-safe substitute value.

Example

The following example shows how the instruction works:

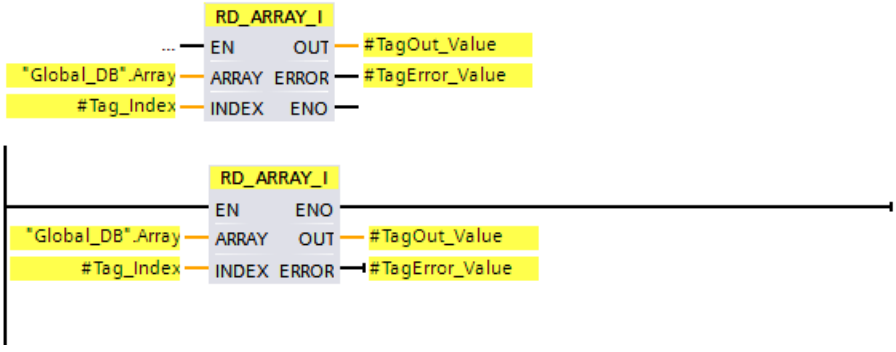

The following table shows how the instruction works using specific operand values:

Parameter	Operand	Value
ARRAY	"Global_DB".Array	The "Global_DB".Array operand is an ARRAY of data type Array[0..10] of INT
INDEX	#Tag_Index	2
OUT	#TagOut_Value	Value of the element at the location array[2]
ERROR	#TagError_Value	False

The instruction "Read value from INT F-array" is always executed regardless of the signal state at enable input "EN".

The content of the 2nd element of the operand "Global_DB.Array" is output at the "#TagOut_Value" output.

13.8.3 RD_ARRAY_DI: Read value from DINT F-array (STEP 7 Safety V18) (S7-1500)

Description

You use the "Read value from DINT F-array" instruction to read an element from the array at the ARRAY input, which refers to the index at the INDEX input, and write its value at the OUT output. If an error occurs while accessing the array during runtime, this is displayed at the output ERROR.

The array must be created in an F-global DB and can contain only one dimension. The elements of the array must be of the DINT data type. The following applies for the array limits in contrast:

- The low limit must be 0.
- The high limit can be 10000 maximum.

Enable input "EN" and enable output "ENO" cannot be connected. The instruction is therefore always executed (regardless of the signal state at the "EN" enable input).

Parameters

The following table shows the parameters of the instruction:

Parameter	Declaration	Data type	Description
ARRAY	Input	VARIANT	Array from which is read
INDEX	Input	DINT	Element in the array which is read. The specification may be a constant or a tag.
OUT	Output	DINT	Value which is read and output.
ERROR	Output	BOOL	Error information The parameter ERROR is set if an error occurs during the processing of the instruction.

ARRAY parameter

In addition to the direct connection with an array within a fail-safe global DB, this input can also be interconnected with an INOUT of data type ARRAY[*] of DINT. This enables the decoupling of data and program logic in order, for example, to create a library function without any connection existing to a dedicated data block.

ERROR parameter

The table below shows the meaning of the value of the ERROR parameter:

Value	Description
FALSE	No error
TRUE	Value at the INDEX parameter is outside the limit value of the ARRAY.

Instruction versions

One version is available for this instruction:

Version	S7-300/400	S7-1200	S7-1500	Function
1.0	—	—	x[1]	

[1] supported as of firmware V2.0

When a new F-CPU is created with *STEP 7 Safety*, the latest available version for the F-CPU created is automatically preset.

For more information on the use of instruction versions, refer to the help on *STEP 7* under "Using instruction versions".

Reaction to errors

If the value at the INDEX input is outside the array limits, the output ERROR = 1 is set, and the array value of the element with index = 0 is output at OUT output, regardless of the value passed at the INDEX input.

Therefore, set the value of the element with index = 0 as a fail-safe substitute value.

Example

The following example shows how the instruction works:

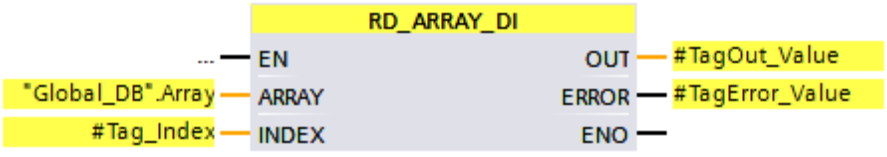

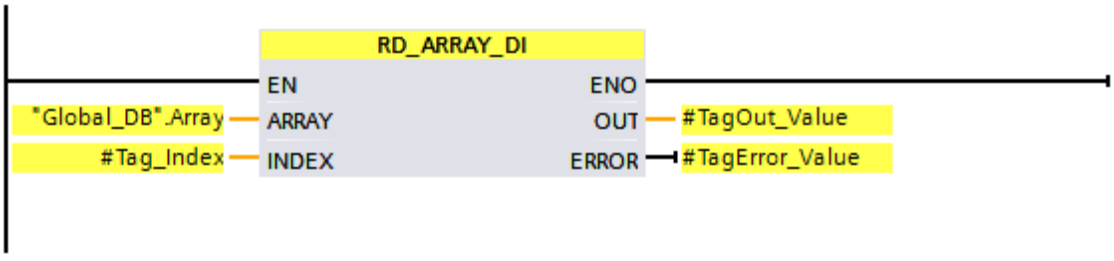

The following table shows how the instruction works using specific operand values:

Parameter	Operand	Value
ARRAY	"Global_DB".Array	The operand "Global_DB".Array is an ARRAY of data type Array[0..10] of DINT
INDEX	#Tag_Index	2
OUT	#TagOut_Value	Value of the element at the location array[2]
ERROR	#TagError_Value	False

The instruction "Read value from DINT F-array" is always executed regardless of the signal state at enable input "EN".

The content of the 2nd element of the operand "Global_DB.Array" is output at the "#TagOut_Value" output.

13.8.4 WR_FDB: Write value indirectly to an F-DB (STEP 7 Safety V18) (S7-300, S7-400)

Description

This instruction writes the value specified in input IN to the tag addressed by INI_ADDR and OFFSET in an F-DB.

The address of the tags addressed using INI_ADDR and OFFSET must be within the address range defined by addresses INI_ADDR and END_ADDR.

If the F-CPU has gone to STOP mode with diagnostics event ID 75E2, check to determine if this condition is satisfied.

The start address of the area in an F-DB to which the value at input IN is to be written is transferred using input INI_ADDR. The associated offset in this area is transferred using input OFFSET.

The addresses transferred in input INI_ADDR or END_ADDR must point to a tag of the selected data type in an F-DB. Only tags of the selected data type are permitted between the INI_ADDR and END_ADDR addresses. The INI_ADDR address must be smaller than the END_ADDR address.

As shown in the following example, the INI_ADDR and END_ADDR addresses must be transferred fully-qualified as "DBx".DBWy or in the corresponding symbolic representation. Transfers in other forms are not permitted.

Enable input "EN" and enable output "ENO" cannot be connected. The instruction is therefore always executed (regardless of the signal state at enable input "EN").

Parameters

The following table shows the parameters of the instruction:

Parameter	Declaration	Data type	Description
IN	Input	INT, DINT	Value to be written to the F-DB
INI_ADDR	Input	POINTER	Start address of the area in an F-DB
END_ADDR	Input	POINTER	End address of the area in an F-DB
OFFSET	Input	INT	Offset

You can select the data type of the instruction in the "<???>" drop-down list in the instruction box.

Examples of parameter assignment of INI_ADDR, END_ADDR, and OFFS

Name	Data type	Initial value	Comment
Static			
VAR_BOOL10	BOOL	false	
VAR_BOOL11	BOOL	false	

Name	Data type	Initial value	Comment
VAR_BOOL12	BOOL	false	
VAR_BOOL13	BOOL	false	
VAR_TIME10	TIME	T#0MS	
VAR_TIME11	TIME	T#0MS	
VAR_INT10	INT	0	<- INI_ADDR = "F-DB_1".VAR_INT10 Example 1
VAR_INT11	INT	0	
VAR_INT12	INT	0	
VAR_INT13	INT	0	<- OFFSET = 3
VAR_INT14	INT	0	
VAR_INT15	INT	0	<- END_ADDR = "F-DB_1".VAR_INT15
VAR_BOOL20	BOOL	false	
VAR_BOOL21	BOOL	false	
VAR_BOOL22	BOOL	false	
VAR_BOOL23	BOOL	false	
VAR_INT20	INT	0	<- INI_ADDR = "F-DB_1".VAR_INT20 Example 2
VAR_INT21	INT	0	
VAR_INT22	INT	0	
VAR_INT23	INT	0	<- END_ADDR = "F-DB_1".VAR_INT23
VAR_INT30	INT	0	<- INI_ADDR = "F-DB_1".VAR_INT30 Example 3
VAR_INT31	INT	0	<- OFFSET = 1
VAR_INT32	INT	0	
VAR_INT33	INT	0	
VAR_INT34	INT	0	<- END_ADDR = "F-DB".VAR_INT34
VAR_TIME20	TIME	T#0MS	
VAR_DINT10	DINT	0	<- INI_ADDR = "F-DB_1".VAR_DINT10 Example 4
VAR_DINT11	DINT	0	
VAR_DINT12	DINT	0	<- OFFSET = 2
VAR_DINT13	DINT	0	<- END_ADDR = "F-DB_1".VAR_DINT13

Example

The following example shows how the instruction works:

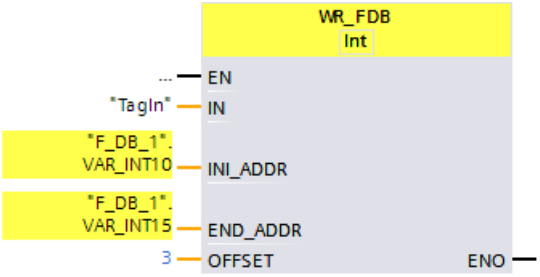

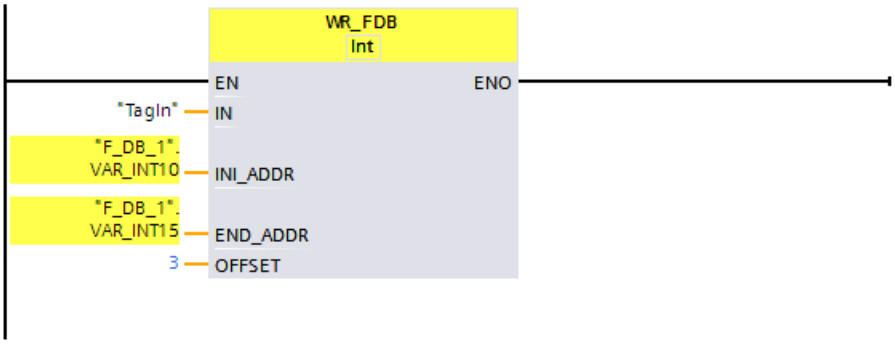

13.8.5 RD_FDB: Read value indirectly from an F-DB (STEP 7 Safety Advanced V18) (S7-300, S7-400)

Description

This instruction reads the tag addressed via INI_ADDR and OFFSET in an F-DB and provides it at output OUT.

The address of the tags addressed using INI_ADDR and OFFSET must be within the address range defined by addresses INI_ADDR and END_ADDR.

If the F-CPU has gone to STOP mode with diagnostics event ID 75E2, check to determine if this condition is satisfied.

The start address of the area in an F-DB from which the tag is to be read is transferred using input INI_ADDR. The associated offset in this area is transferred using input OFFSET.

The addresses transferred in input INI_ADDR or END_ADDR must point to a tag of the selected data type in an F-DB. Only tags of the selected data type are permitted between the INI_ADDR and END_ADDR addresses. The INI_ADDR address must be smaller than the END_ADDR address.

The INI_ADDR and END_ADDR addresses must be transferred fully-qualified as "DBx".DBWy or in the corresponding symbolic representation. Transfers in other forms are not permitted.

Examples of parameter assignment of INI_ADDR, END_ADDR, and OFFSET are contained in WR_FDB: Write value indirectly to an F-DB (STEP 7 Safety V18) (S7-300, S7-400) (Page 491).

Enable input "EN" and enable output "ENO" cannot be connected. The instruction is therefore always executed (regardless of the signal state at enable input "EN").

Parameters

The following table shows the parameters of the instruction:

Parameter	Declaration	Data type	Description
INI_ADDR	Input	POINTER	Start address of the area in an F-DB
END_ADDR	Input	POINTER	End address of the area in an F-DB
OFFSET	Input	INT	Offset
OUT	Output	INT, DINT	Value to be read from the F-DB

You can select the data type of the instruction in the "<???>" drop-down list in the instruction box.

Example

The following example shows how the instruction works:

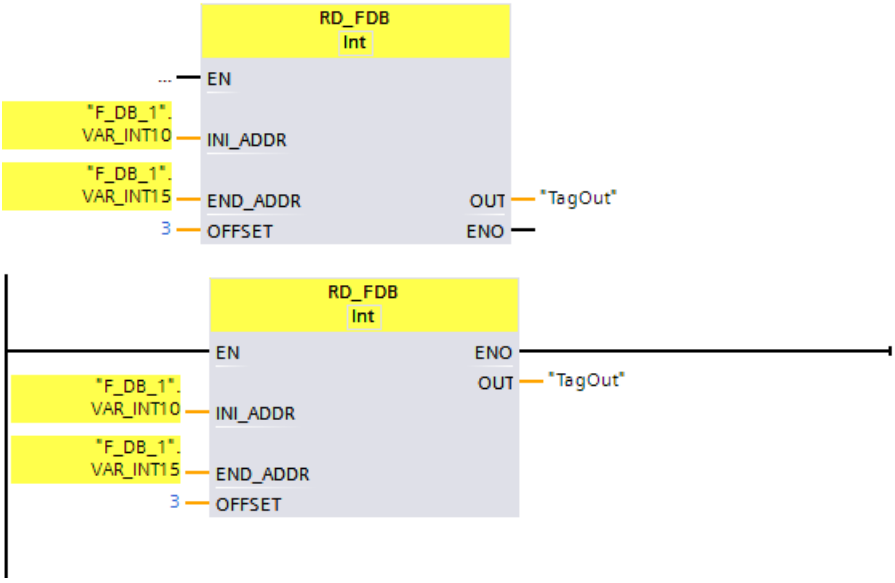

13.9 Conversion operations

13.9.1 CONVERT: Convert value (STEP 7 Safety V18)

Description

The "Convert value" instruction reads the content of parameter IN and converts it according to the data types selected in the instruction box. The converted value is output at the OUT output .

Enable input "EN" cannot be connected. The instruction is therefore always executed (regardless of the signal state at the "EN" enable input). The connection of the "ENO" enable output is only possible and required when converting from the "DINT" to the "INT" data type.

NOTE

When converting from "DINT" to the "INT" data type, you need to connect the ENO enable output and thereby programming overflow detection.

Note the following:

- If the value at the input is outside the INT range, ENO returns 0.
- The result of the instruction reacts like the analogous instruction in a standard block.

Parameters

The following table shows the parameters of the instruction:

Parameter	Declaration	Data type	Description
ENO	Output	BOOL	Enable output
IN	Input	INT, DINT	Value to be converted.
OUT	Output	INT, DINT	Result of the conversion

You can select the data types of the instruction in the "<???>" drop-down lists of the instruction box. The supported conversions are from "INT to DINT" and "DINT to INT".

Example

The following example shows how the "Convert value "DINT to INT"" instruction for S7-1200/1500 F-CPUs works:

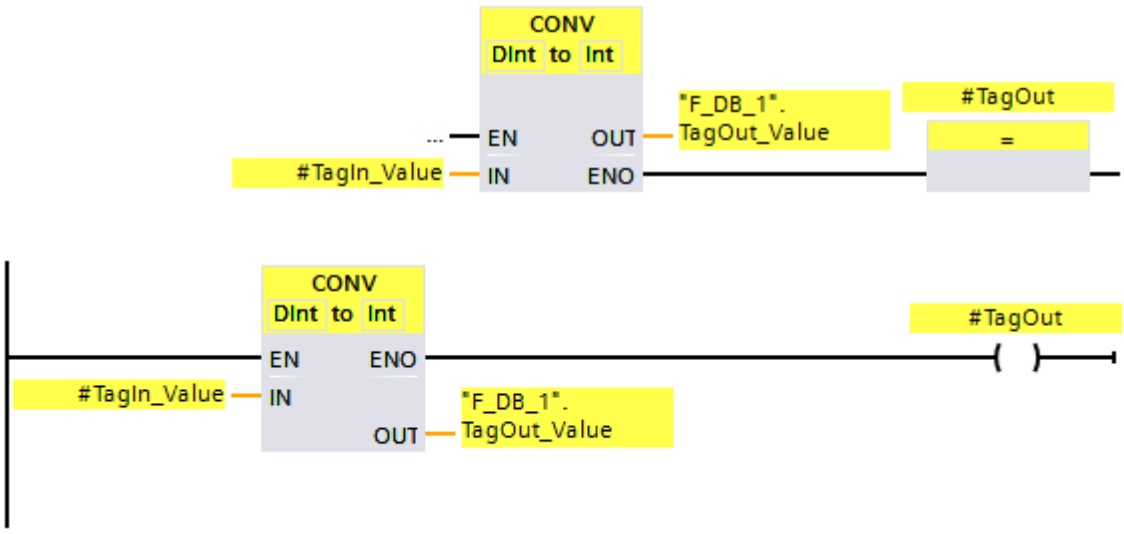

The instruction is always executed regardless of the signal state at enable input EN.
The value of the "TagIn_Value" operand is converted to an integer (16-bit) and the result is stored in the ""F_DB_1".TagOut_Value" operand.
When no overflow occurs during execution of the "Convert value "DINT to INT"" instruction, the ENO enable output has the signal state "1" and the "TagOut" operand is set.
You can also store the signal status of the ENO enable output in an (F-)DB, and centrally evaluate whether overflows have occurred for all or one group of instructions with overflow detection.

13.9.2 BO_W: Convert 16 data elements of data type BOOL to a data element of data type WORD (STEP 7 Safety V18)

Description

This instruction converts the 16 values of data type BOOL at inputs IN0 to IN15 to a value of data type WORD, which is made available at output OUT. The conversion takes place as follows: The i-th bit of the WORD value is set to 0 (or 1), if the value at input INi = 0 (or 1).

Enable input "EN" and enable output "ENO" cannot be connected. The instruction is therefore always executed (regardless of the signal state at enable input "EN").

Parameters

The following table shows the parameters of the instruction:

Parameter	Declaration	Data type	Description
IN0	Input	BOOL	Bit 0 of WORD value
IN1	Input	BOOL	Bit 1 of WORD value
...			...
IN15	Input	BOOL	Bit 15 of WORD value
OUT	Output	WORD	WORD value consisting of IN0 to IN15

Instruction versions

A number of versions are available for this instruction:

Version	S7-300/400	S7-1200	S7-1500	Function
1.0	x	—	—	When projects that were created with *S7 Distributed Safety V5.4 SP5* are migrated, version 1.0 of the instruction is used automatically. If you want to compile a migrated safety program with *STEP 7 Safety Advanced* for the first time, we recommend that you first update to the latest available version of the instruction.
1.1	o	—	o	These versions have identical functions to version 1.0.
1.2	x	—	o	
1.3	x	o	o	
1.4	x	x	x	
2.0	x	x[1]	x[2]	

o This version is no longer supported.

[1] supported as of firmware V4.2

[2] supported as of firmware V2.0

When a new F-CPU is created with *STEP 7 Safety*, the latest available version for the F-CPU created is automatically preset.

For more information on the use of instruction versions, refer to the help on *STEP 7* under "Using instruction versions".

Example

The following example shows how the instruction works:

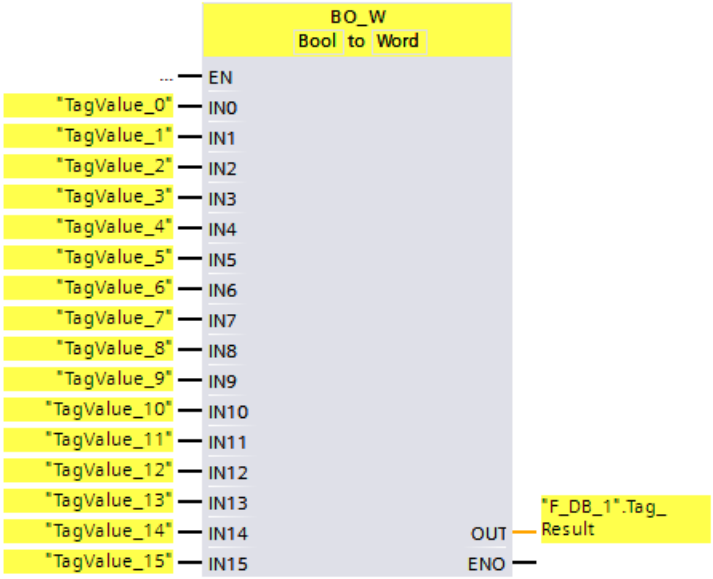

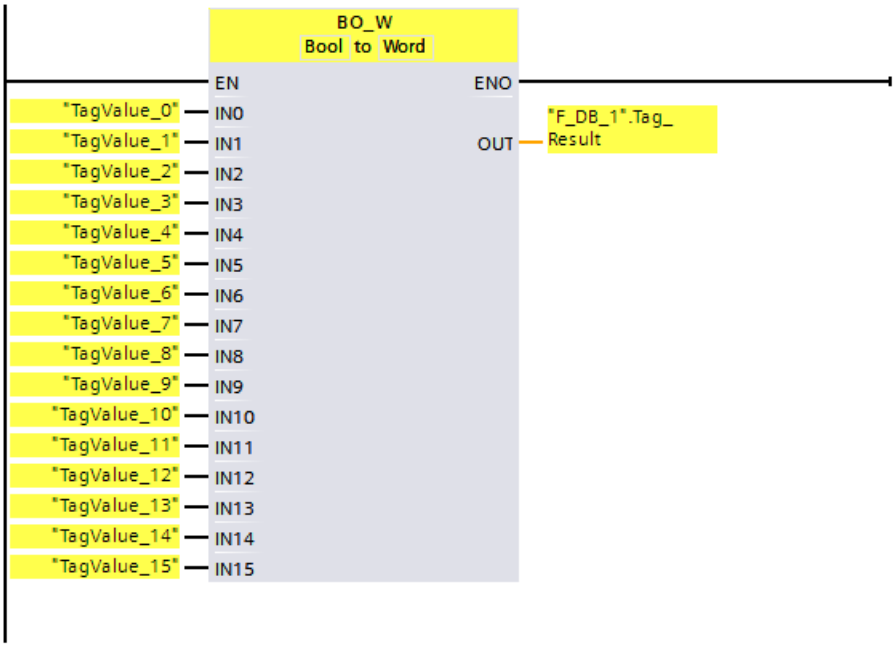

The following table shows how the instruction works using specific operand values:

Parameter	Operand	Value
IN0	TagValue_0	FALSE
IN1	TagValue_1	FALSE
...		...
IN13	TagValue_13	FALSE

Parameter	Operand	Value
IN14	TagValue_14	TRUE
IN15	TagValue_15	TRUE
OUT	"F_DB_1".Result	W#16#C000

The values of operands "TagValue_0" to "TagValue_15" are combined into a value of the data type WORD and assigned to operand ""F_DB_1".TagResult".

13.9.3 W_BO: Convert a data element of data type WORD to 16 data elements of data type BOOL (STEP 7 Safety V18)

Description

This instruction converts the value of data type WORD at input IN to 16 values of data type BOOL, which are provided at outputs OUT0 to OUT15. The conversion takes place as follows: Output OUTi is set to 0 (or 1), if the i-th bit of the WORD value is 0 (or 1).

Enable input "EN" and enable output "ENO" cannot be connected. The instruction is therefore always executed (regardless of the signal state at enable input "EN").

Parameters

The following table shows the parameters of the instruction:

Parameter	Declaration	Data type	Description
IN	Input	WORD	WORD value
OUT0	Output	BOOL	Bit 0 of WORD value
OUT1	Output	BOOL	Bit 1 of WORD value
...			...
OUT15	Output	BOOL	Bit 15 of WORD value

Instruction versions

A number of versions are available for this instruction:

Version	S7-300/400	S7-1200	S7-1500	Function
1.0	x	—	—	When projects that were created with *S7 Distributed Safety V5.4 SP5* are migrated, version 1.0 of the instruction is used automatically. If you want to compile a migrated safety program with *STEP 7 Safety Advanced* for the first time, we recommend that you first update to the latest available version of the instruction.

o This version is no longer supported.

[1] supported as of firmware V4.2

[2] supported as of firmware V2.0

Version	S7-300/400	S7-1200	S7-1500	Function
1.1	o	—	o	These versions have identical functions to version 1.0.
1.2	x	—	o	
1.3	x	o	o	
1.4	x	x	x	
2.0	x	x[1]	x[2]	

o This version is no longer supported.

[1] supported as of firmware V4.2

[2] supported as of firmware V2.0

When a new F-CPU is created with *STEP 7 Safety*, the latest available version for the F-CPU created is automatically preset.
For more information on the use of instruction versions, refer to the help on *STEP 7* under "Using instruction versions".

Example

The following example shows how the instruction works:

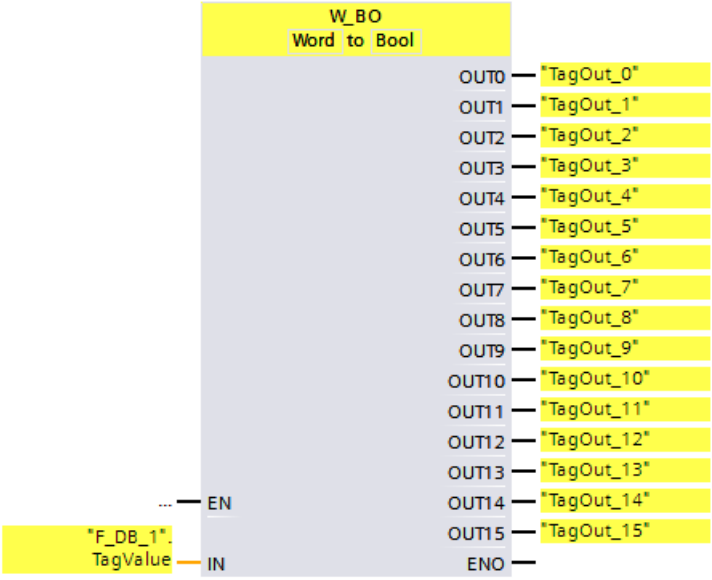

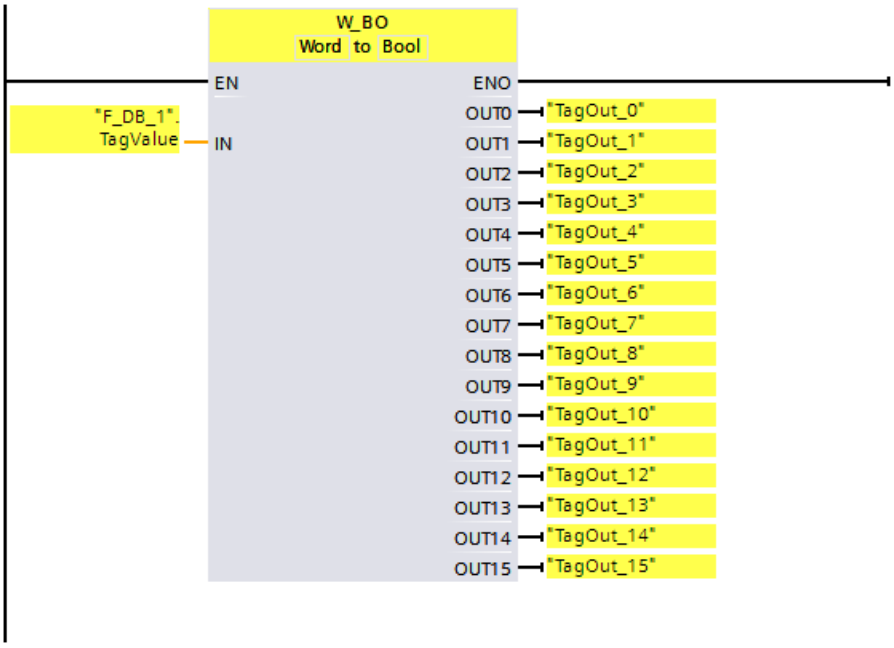

The following table shows how the instruction works using specific operand values:

Parameter	Operand	Value
IN	"F_DB_1".TagValue	W#16#C000
OUT0	TagOUT_0	FALSE
OUT1	TagOUT_1	FALSE
...		...
OUT13	TagOUT_13	FALSE
OUT14	TagOUT_14	TRUE
OUT15	TagOUT_15	TRUE

The value of operand ""F_DB_1".TagValue" of data type WORD is converted to the 16 values "TagOUT_0" to "TagOUT_15" of data type BOOL.

13.9.4 SCALE: Scale value (STEP 7 Safety V18)

Description

This instruction scales the value at input IN in physical units between the low limit value at input LO_LIM and the high limit value at input HI_LIM. It is assumed that the value at input IN is between 0 and 27648. The scaling result is provided at output OUT.

The instruction uses the following equation:

OUT = [IN × (HI_LIM – LO_LIM)] / 27648 + LO_LIM

As long as the value at input IN is greater than 27648, output OUT is linked to HI_LIM and OUT_HI is set to 1.

As long as the value at input IN is less than 0, output OUT is linked to LO_LIM and OUT_LO is set to 1.

For inverse scaling, you must assign LO_LIM > HI_LIM. With inverse scaling, the output value at output OUT decreases while the input value at input IN increases.

Every call of the "Scale value" instruction must be assigned a data area in which the instruction data is stored. In addition, when the instruction is inserted in the program, the "Call options" dialog is automatically opened, where you can create a data block (single instance) (e.g., SCALE_DB_1) or a multi-instance (e.g., SCALE_Instance_1) for the "Scale value" instruction. Once it is created, you can find the new data block in the project tree in the "STEP 7 Safety" folder under "Program blocks > System blocks" or the multi-instance as a local tag in the "Static" section of the block interface. For more information, refer to the help on *STEP 7*.

Enable input "EN" and enable output "ENO" cannot be connected. The instruction is therefore always executed (regardless of the signal state at enable input "EN").

Parameter

The following table shows the parameters of the instruction:

Parameter	Declaration	Data type	Description
IN	Input	INT	Input value to be scaled in physical units
HI_LIM	Input	INT	High limit value of value range of OUT
LO_LIM	Input	INT	Low limit value of value range of OUT
OUT	Output	INT	Result of scaling
OUT_HI	Output	BOOL	1 = Input value > 27648: OUT = HI_LIM
OUT_LO	Output	BOOL	1 = Input value < 0: OUT = LO_LIM

Instruction versions

A number of versions are available for this instruction:

Ver-sion	S7-300/400	S7-1200	S7-1500	Function
1.0	x	—	—	When projects that were created with *S7 Distributed Safety V5.4 SP5* are migrated, version 1.0 of the instruction is used automatically. If you want to compile a migrated safety program with *STEP 7 Safety Advanced* for the first time, we recommend that you first update to the latest available version of the instruction.
1.1	x	—	o	These versions have identical functions to version 1.0.
1.2	x	x	x	

o This version is no longer supported.

When a new F-CPU is created with *STEP 7 Safety*, the latest available version for the F-CPU created is automatically preset.

For more information on the use of instruction versions, refer to the help on *STEP 7* under "Using instruction versions".

Behavior in the event of overflow or underflow of analog values and fail-safe value output

NOTE

If inputs from the PII of an SM 336; AI 6 x 13Bit or SM 336; F-AI 6 x 0/4 ... 20 mA HART are used as input values, note that the F-system detects an overflow or underflow of a channel of this F-SM as an F-I/O fault or channel fault. The fail-safe value 0 is provided in place of $7FFF_H$ (for overflow) or 8000_H (for underflow) in the PII for the safety program.

If other fail-safe values should be output in this case, you need to evaluate the QBAD signal of the associated F-I/O or QBAD_I_xx signal / value status of the corresponding channel.

If the value in the PII of the F-SM is within the overrange or underrange, but is > 27648 or < 0, you can likewise branch to the output of an individual fail-safe value by evaluating outputs OUT_HI and OUT_LO, respectively.

Example

The following example shows how the instruction works:

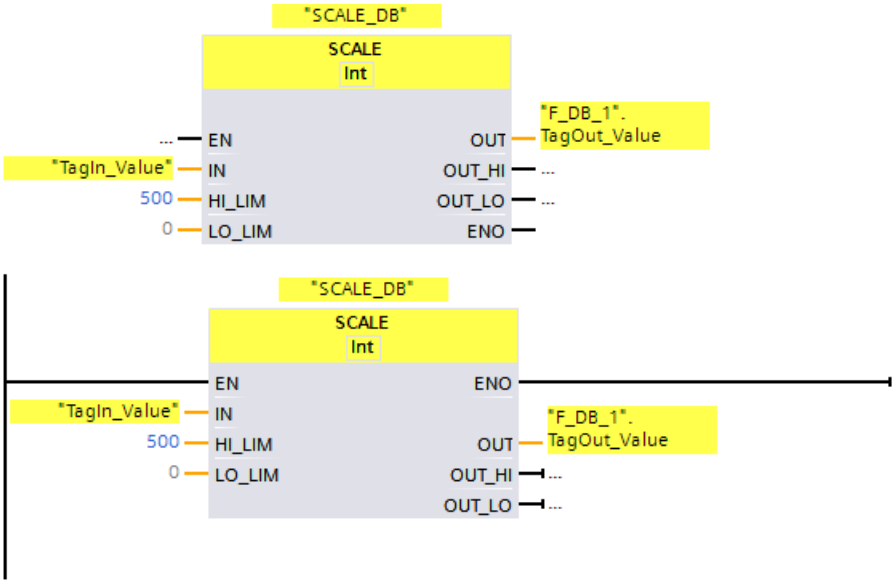

When operand "TagIn_Value" = 20000, the result for ""F_DB_1".TagOut_Value" is 361.

13.9.5 SCALE_D: Scale value to data type DINT (STEP 7 Safety V18) (S7-1200, S7-1500)

Description

This instruction scales the value at input IN in physical units between the low limit value at input LO_LIM and the high limit value at input HI_LIM. It is assumed that the value at input IN is between 0 and 27648. The scaling result is provided at output OUT.

The instruction uses the following equation:

OUT = [IN × (HI_LIM – LO_LIM)] / 27648 + LO_LIM

As long as the value at input IN is greater than 27648, output OUT is linked to HI_LIM and OUT_HI is set to 1.

As long as the value at input IN is less than 0, output OUT is linked to LO_LIM and OUT_LO is set to 1.

For inverse scaling, you must assign LO_LIM > HI_LIM. With inverse scaling, the output value at output OUT decreases while the input value at input IN increases.

Every call of the "Scale value to data type DINT" instruction must be assigned a data area in which the instruction data is stored. In addition, when the instruction is inserted in the program, the "Call options" dialog is automatically opened, where you can create a data block (single instance) (e.g., SCALE_D_DB_1) or a multi-instance (e.g., SCALE_D_Instance_1) for the "Scale value to data type DINT" instruction. Once it is created, you can find the new data block in the project tree in the "STEP 7 Safety" folder under "Program blocks > System blocks" or the multi-instance as a local tag in the "Static" section of the block interface. For more information, refer to the help on *STEP 7*.

Enable input "EN" and enable output "ENO" cannot be connected. The instruction is therefore always executed (regardless of the signal state at enable input "EN").

Parameter

The following table shows the parameters of the instruction:

Parameter	Declaration	Data type	Description
IN	Input	INT	Input value to be scaled in physical units
HI_LIM	Input	DINT	High limit value of value range of OUT
LO_LIM	Input	DINT	Low limit value of value range of OUT
OUT	Output	DINT	Result of scaling
OUT_HI	Output	BOOL	1 = Input value > 27648: OUT = HI_LIM
OUT_LO	Output	BOOL	1 = Input value < 0: OUT = LO_LIM

Instruction versions

One version is available for this instruction:

Version	S7-300/400	S7-1200	S7-1500	Function
2.0	—	x[1]	x[2]	

[1] supported as of firmware V4.2

[2] supported as of firmware V2.0

When a new F-CPU is created with *STEP 7 Safety*, the latest available version for the F-CPU created is automatically preset.

For more information on the use of instruction versions, refer to the help on *STEP 7* under "Using instruction versions".

Behavior in the event of overflow or underflow of analog values and fail-safe value output

NOTE

If inputs from the PII of an SM 336; AI 6 x 13Bit or SM 336; F-AI 6 x 0/4 ... 20 mA HART are used as input values, note that the F-system detects an overflow or underflow of a channel of this F-SM as an F-I/O fault or channel fault. The fail-safe value 0 is provided in place of $7FFF_H$ (for overflow) or 8000_H (for underflow) in the PII for the safety program.

If other fail-safe values should be output in this case, you need to evaluate the QBAD signal of the associated F-I/O or QBAD_I_xx signal / value status of the corresponding channel.

If the value in the PII of the F-SM is within the overrange or underrange, but is > 27648 or < 0, you can likewise branch to the output of an individual fail-safe value by evaluating outputs OUT_HI and OUT_LO, respectively.

Example

The following example shows how the instruction works:

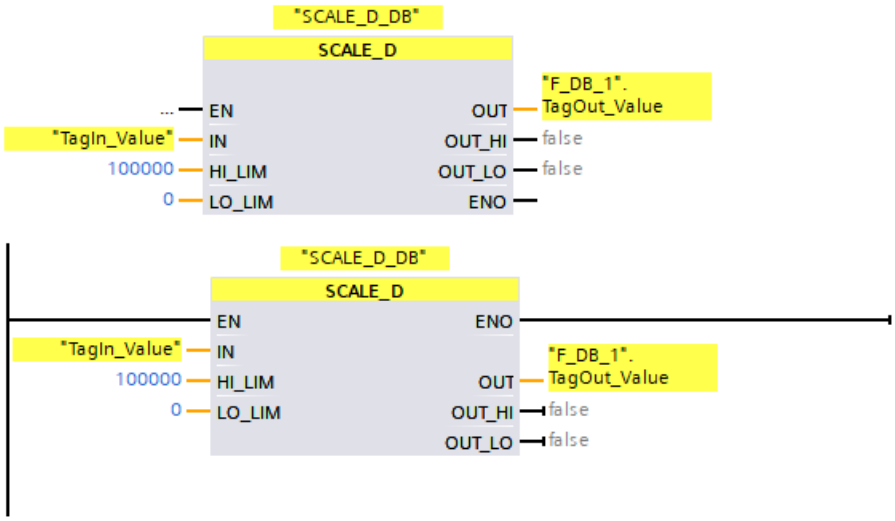

When the operand "TagIn_Value" = 20000, the result for ""F_DB_1".TagOut_Value" is 72337.

13.10 Program control operations

13.10.1 JMP: Jump if RLO = 1 (STEP 7 Safety V18)

Description

You can use the "Jump if RLO = 1" instruction to interrupt the linear execution of the program and resume it in another network. The destination network must be identified by a jump label (Page 508) (LABEL). The description of the jump label is specified in the placeholder above the instruction.

The specified jump label must be in the same block in which the instruction is executed. The name you specify can only occur once in the block.

If the result of logic operation (RLO) at the input of the instruction is "1" or the input is not connected, the jump to the network identified by the jump label is executed. The jump direction can be towards higher or lower network numbers.

If the result of logic operation (RLO) at the input of the instruction is "0", the program continues executing in the next network.

NOTE

(S7-1200, S7-1500)
If the jump destination (jump label) for an instruction "JMP" or "JMPN" is above the associated instruction "JMP" or "JMPN" (backwards jump), you cannot insert any other instructions for program control (JMP, JMPN, RET, jump label) between them.
Exception: You can insert an instruction "JMP" or "JMPN" between them if you also insert the associated jump destination in between as well as below the associated instruction "JMP" or "JMPN" (forward jump).
Non-compliance can lead to compilation errors or to the F-CPU going to STOP.

NOTE

You are not permitted to insert any SENDDP or SENDS7 instructions between an instruction JMP or JMPN and the associated jump destination (jump label).

Example

The following example shows how the instruction works:

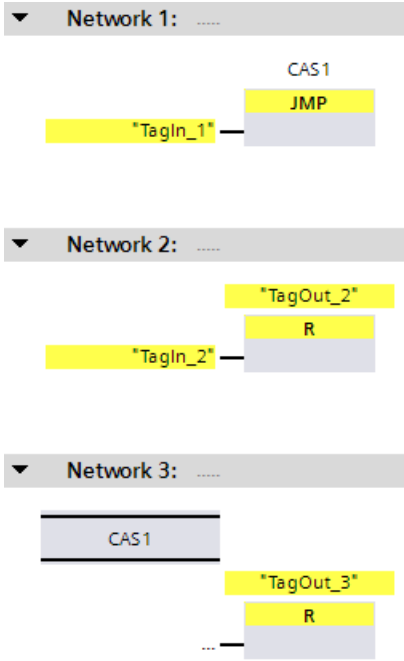

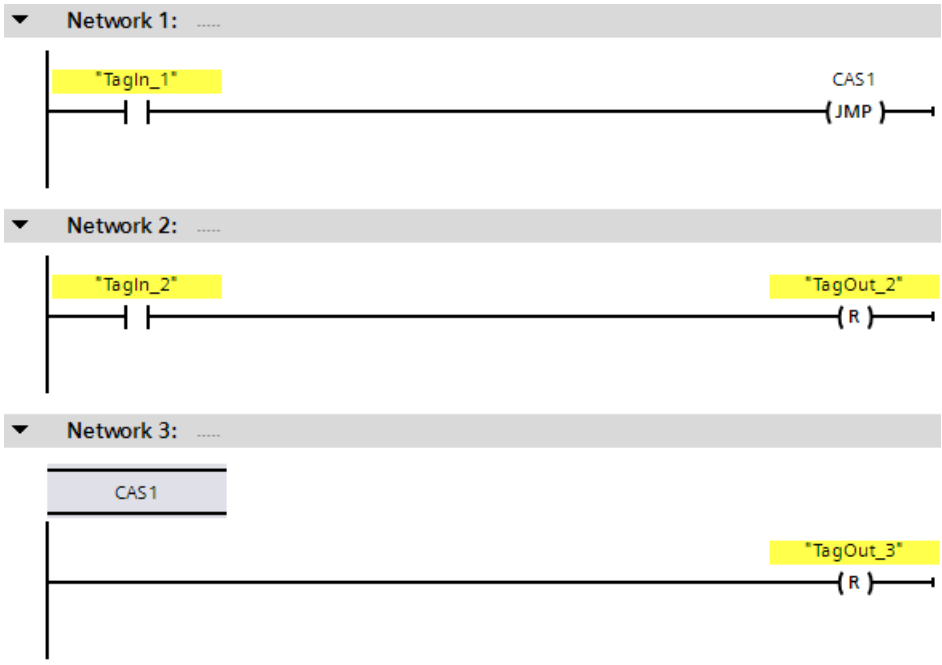

When operand "TagIn_1" has signal state "1", the "Jump if RLO = 1" instruction is executed. The linear execution of the program is interrupted and continues in Network 3, which is identified by the jump label CAS1. When input "TagIn_3" has signal state "1", output "TagOut_3" is reset.

13.10.2 JMPN: Jump if RLO = 0 (STEP 7 Safety V18)

Description

You can use the "Jump if RLO = 0" instruction to interrupt the linear execution of the program and resume it in another network, when the result of logic operation at the input of the instruction is "0". The destination network must be identified by a jump label (Page 508) (LABEL). The description of the jump label is specified in the placeholder above the instruction.

The specified jump label must be in the same block in which the instruction is executed. The name you specify can only occur once in the block.

If the result of logic operation (RLO) at the input of the instruction is "0", the jump to the network identified by the jump label is executed. The jump direction can be towards higher or lower network numbers.

If the result of logic operation (RLO) at the input of the instruction is "1", the program continues executing in the next network.

NOTE

(S7-1200, S7-1500)
If the jump destination (jump label) for an instruction "JMP" or "JMPN" is above the associated instruction "JMP" or "JMPN" (backwards jump), you cannot insert any other instructions for program control (JMP, JMPN, RET, jump label) between them.
Exception: You can insert an instruction "JMP" or "JMPN" between them if you also insert the associated jump destination in between as well as below the associated instruction "JMP" or "JMPN" (forward jump).
Non-compliance can lead to compilation errors or to the F-CPU going to STOP.

NOTE

You are not permitted to insert any SENDDP or SENDS7 instructions between an instruction JMP or JMPN and the associated jump destination (jump label).

Example

The following example shows how the instruction works:

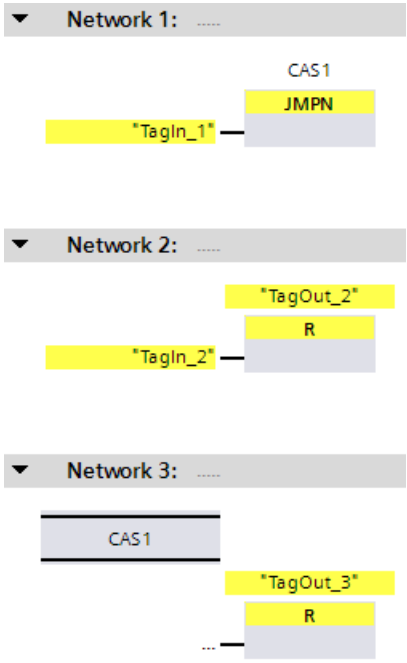

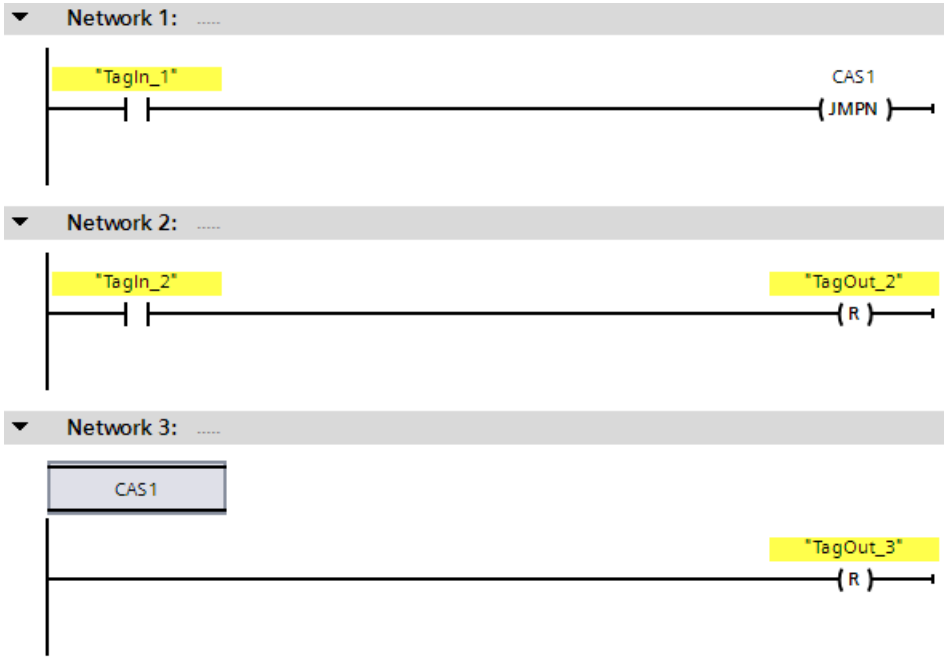

When operand "TagIn_1" has signal state "0", the "Jump if RLO = 0" instruction is executed. The linear execution of the program is interrupted and continues in Network 3, which is identified by the jump label CAS1. When input "TagIn_3" has signal state "1", output "TagOut_3" is reset.

13.10.3 LABEL: Jump label (STEP 7 Safety V18)

Description

You can use a jump label to specify a destination network, in which the program execution should resume after a jump.

The jump label and the instruction in which the jump label is specified must be located in the same block. The name of a jump label can only be assigned once in a block.

Only one jump label can be placed in a network. To each jump label can be jumped from several locations.

Example

The following example shows how the instruction works:

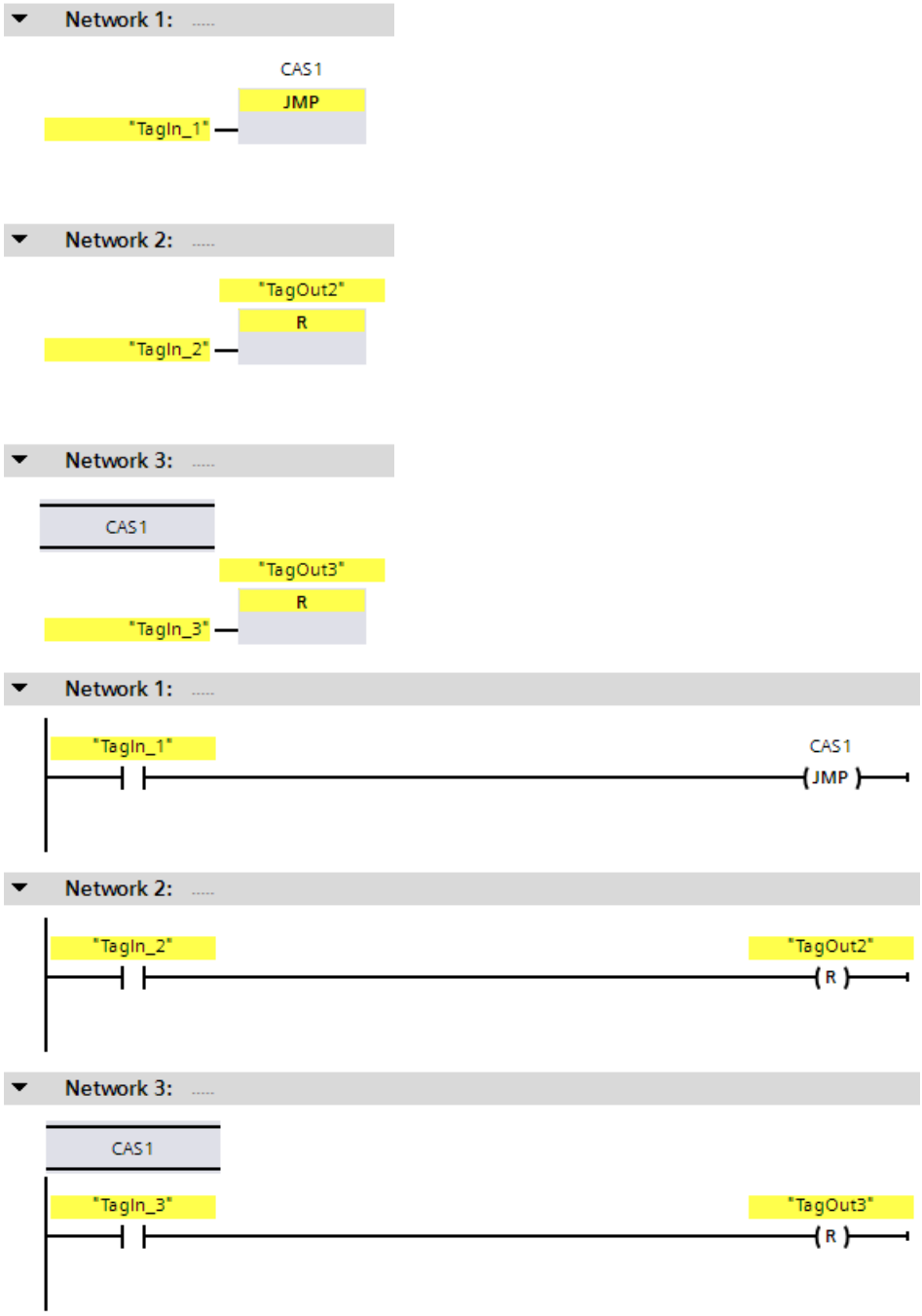

When operand "TagIn_1" has signal state "1", the "Jump if RLO = 1" instruction is executed. The linear execution of the program is interrupted and continues in Network 3, which is identified by the jump label CAS1. When input "TagIn_3" has signal state "1", output "TagOut_3" is reset.

See also

JMP: Jump if RLO = 1 (STEP 7 Safety V18) (Page 504)
JMPN: Jump if RLO = 0 (STEP 7 Safety V18) (Page 506)
RET: Return (STEP 7 Safety V18) (Page 510)

13.10.4 RET: Return (STEP 7 Safety V18)

Description

You can use the "Return" instruction to stop the processing of a block.
If the result of logic operation (RLO) at the input of the "Return" instruction is "1" or the box input of the S7-1200/1500 F-CPUs is not connected in FBD, program execution is terminated in the currently called block and continued in the calling block (for example, in the main safety block) after the call function. If the RLO at the input of the "Return" instruction is "0", the instruction is not executed. Program execution continues in the next network of the called block.
Influencing the status of the call function (ENO) is irrelevant, because the enable output "ENO" cannot be connected.

NOTE

(S7-300, S7-400) You may not program a RET instruction in the main safety block.

Example

The following example shows how the instruction works:

When the "TagIn" operand delivers signal state "1", the "Return" instruction is executed. Program execution is terminated in the called block and continues in the calling block.

See also

JMP: Jump if RLO = 1 (STEP 7 Safety V18) (Page 504)
JMPN: Jump if RLO = 0 (STEP 7 Safety V18) (Page 506)
LABEL: Jump label (STEP 7 Safety V18) (Page 508)

13.10.5 OPN: Open global data block (STEP 7 Safety Advanced V18) (S7-300, S7-400)

Description

You can use the "Open global data block" instruction to open a data block. The number of the data block is transferred to the DB register. Subsequent DB commands access the relevant blocks depending on the register contents.

NOTE

Note when using the "Open global data block" instruction that the content of the DB register can be changed after calls of F-FB/F-FC and "fully qualified DB accesses", such that there is no guarantee that the last data block you opened with "Open global data block" is still open.

You should therefore use the following method for addressing data to avoid errors when accessing data of the DB register:

- Use symbolic addressing.
- Use only fully qualified DB accesses.

If you still want to use the "Open global data block" operation, you must ensure that the DB register is restored by repeating the "Open global data block" instruction following calls of F-FB/F-FC and "fully qualified DB accesses." Otherwise, a malfunction could result.

Parameters

The following table shows the parameters of the instruction:

Parameter	Declaration	Data type	Description
<Data block>	Input	BLOCK_DB	Data block that is opened

"Fully qualified DB access"

The initial access to data of a data block in an F-FB/F-FC must always be a "fully qualified DB access," or it must be preceded by the "Open global data block" instruction. This also applies to the initial access to data of a data block after a jump label.

An example of "fully qualified DB access" and "non-fully qualified DB access" is provided in Restrictions in the programming languages FBD/LAD (Page 103).

Access to instance DBs

You can also access instance DBs of F-FBs with fully qualified access, e.g., for transfer of block parameters. It is not possible to access static local data in single/multi-instances of other F-FBs.

Note that accessing instance DBs of F-FBs that are not called in the safety program can cause the F-CPU to go to STOP mode.

Example

The following example shows how the instruction works:

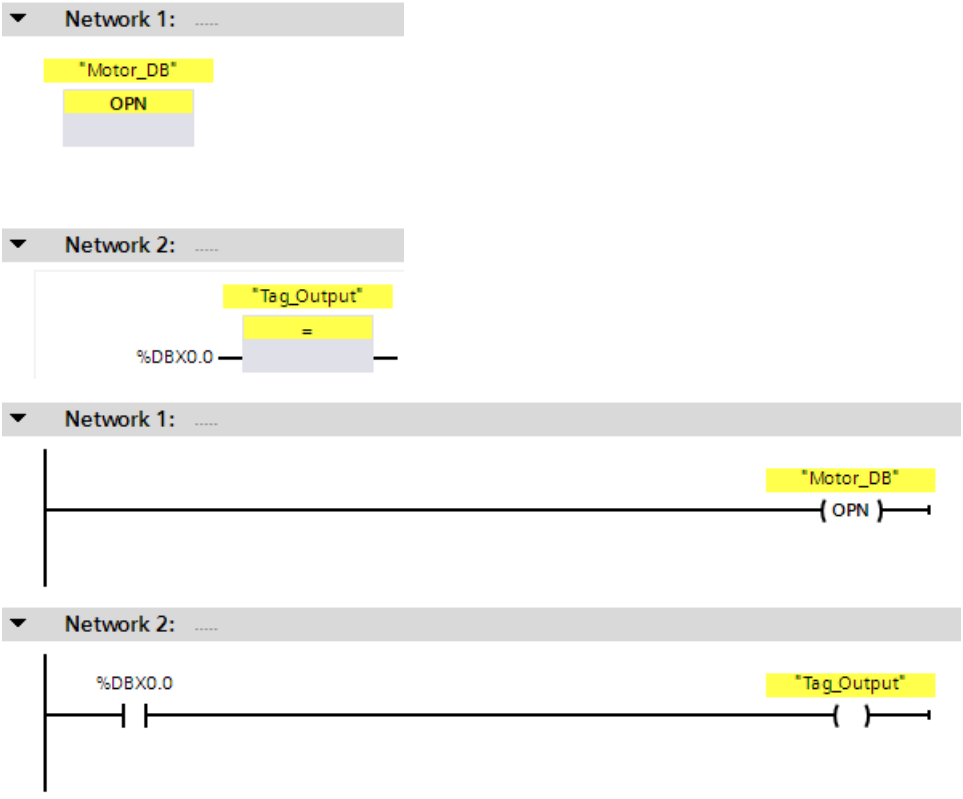

The "Motor_DB" data block is called in network 1. The number of the data block is transferred to the DB register. The "DBX0.0" operand is queried in network 2. The signal state of the "DBX0.0" operand is assigned to the "Tag_Output" operand.

13.11 Word logic operations

13.11.1 AND: AND logic operation (STEP 7 Safety V18)

Description

You can use the "AND logic operation" instruction to combine the value at input IN1 to the value at input IN2 bit-by-bit by AND logic and query the result at output OUT.

When the instruction is executed, bit 0 of the value at input IN1 and bit 0 of the value at input IN2 are ANDed. The result is stored in bit 0 of output OUT. The same logic operation is executed for all other bits of the specified values.

The result bit has signal state "1" only when both of the bits in the logic operation also have signal state "1". If one of the two bits of the logic operation has signal state "0", the corresponding result bit is reset.

Enable input "EN" and enable output "ENO" cannot be connected. The instruction is therefore always executed (regardless of the signal state at enable input "EN").

Parameters

The following table shows the parameters of the instruction:

Parameter	Declaration	Data type	Description
IN1	Input	WORD	First value of logic operation
IN2	Input	WORD	Second value of logic operation
OUT	Output	WORD	Result of the instruction

Example

The following example shows how the instruction works:

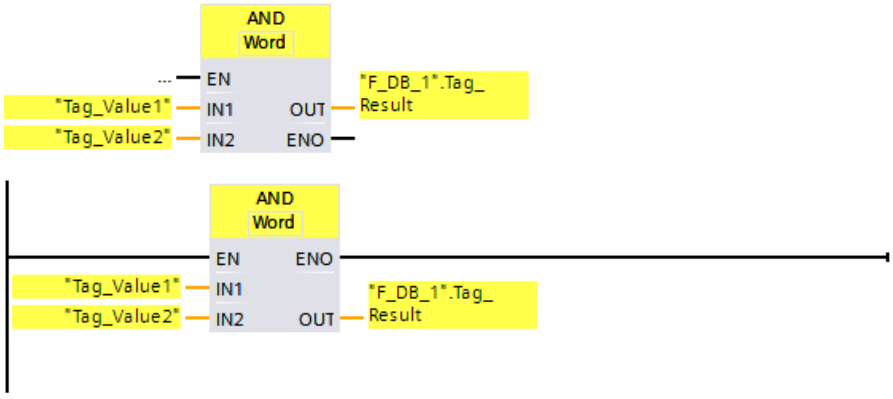

IN1	`"Tag_Value1" = 01010101 01010101`
IN2	`"Tag_Value2" = 00000000 00001111`
OUT	`"F_DB_1"."Tag_Result" = 00000000 00000101`

The instruction is always executed regardless of the signal state at enable input "EN". The value of the "Tag_Value1" operand and the value of the "Tag_Value2" operand are ANDed. The result is mapped bit-by-bit and output in the ""F_DB_1".Tag_Result" operand.

13.11.2 OR: OR logic operation (STEP 7 Safety V18)

Description

You can use the "OR logic operation" instruction to connect the value at input IN1 input to the value at input IN2 bit-by-bit by OR logic and query the result at output OR.

When the instruction is executed, bit 0 of the value at input IN1 and bit 0 of the value at input IN2 are ORed. The result is stored in bit 0 of output OUT. The same logic operation is executed for all bits of the specified tags.

The result bit has signal state "1" when at least one of the two bits in the logic operation has signal state "1". If both of the bits of the logic operation have signal state "0", the corresponding result bit is reset.

Enable input "EN" and enable output "ENO" cannot be connected. The instruction is therefore always executed (regardless of the signal state at enable input "EN").

Parameters

The following table shows the parameters of the instruction:

Parameter	Declaration	Data type	Description
IN1	Input	WORD	First value of logic operation
IN2	Input	WORD	Second value of logic operation
OUT	Output	WORD	Result of the instruction

Example

The following example shows how the instruction works:

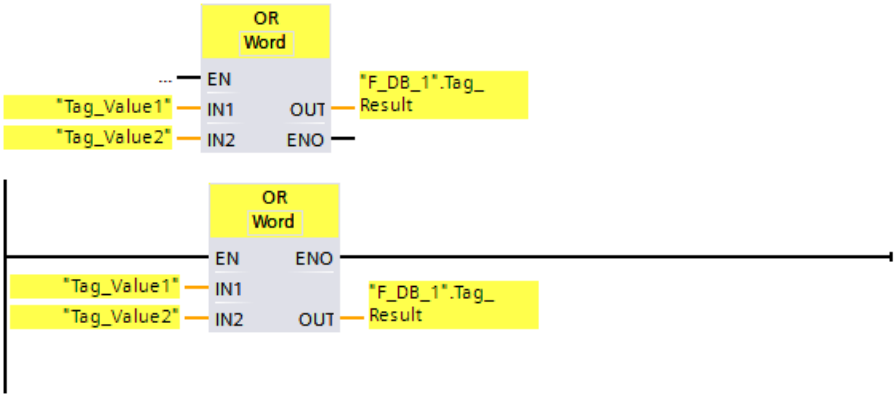

IN1	`"Tag_Value1" = 01010101 01010101`
IN2	`"Tag_Value2" = 00000000 00001111`
OUT	`"F_DB_1"."Tag_Result" = 01010101 01011111`

The instruction is always executed regardless of the signal state at enable input "EN". The value of the "Tag_Value1" operand and the value of the "Tag_Value2" operand are ORed. The result is mapped bit-by-bit and output in the ""F_DB_1".Tag_Result" operand.

13.11.3 XOR: EXCLUSIVE OR logic operation (STEP 7 Safety V18)

Description

You can use the "EXCLUSIVE OR logic operation" instruction to combine the value at input IN1 and the value at input IN2 bit-by-bit by EXCLUSIVE OR logic and query the result at output OUT.

When the instruction is executed, bit 0 of the value at input IN1 input and bit 0 of the value at input IN2 are logically combined by EXCLUSIVE OR. The result is stored in bit 0 of output OUT. The same logic operation is executed for all other bits of the specified value.

The result bit has signal state "1" when one of the two bits in the logic operation has signal state "1". If both of the bits of the logic operation have signal state "1" or "0", the corresponding result bit is reset.

Enable input "EN" and enable output "ENO" cannot be connected. The instruction is therefore always executed (regardless of the signal state at enable input "EN").

Parameters

The following table shows the parameters of the instruction:

Parameter	Declaration	Data type	Description
IN1	Input	WORD	First value of logic operation
IN2	Input	WORD	Second value of logic operation
OUT	Output	WORD	Result of the instruction

Example

The following example shows how the instruction works:

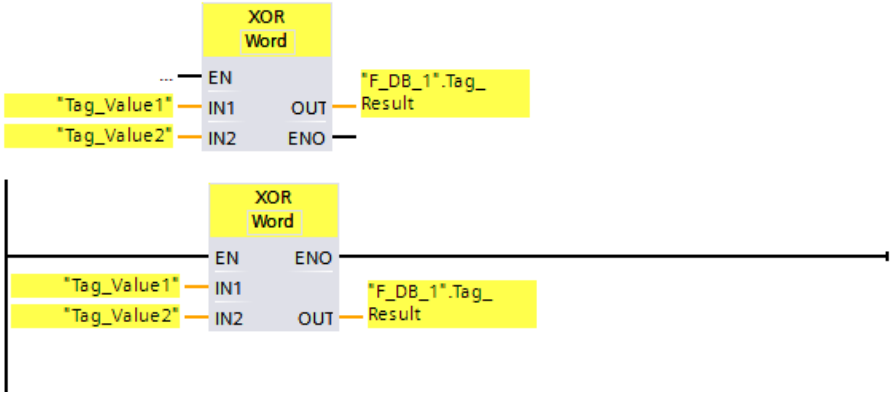

IN1	`"Tag_Value1" = 01010101 01010101`
IN2	`"Tag_Value2" = 00000000 00001111`
OUT	`"F_DB_1"."Tag_Result" = 01010101 01011010`

The instruction is always executed regardless of the signal state at enable input "EN". The value of the "Tag_Value1" operand and the value of the "Tag_Value2" operand are logically combined by EXCLUSIVE OR. The result is mapped bit-by-bit and output in the ""F_DB_1".Tag_Result" operand.

13.12 Shift and rotate

13.12.1 SHR: Shift right (STEP 7 Safety V18)

Description

Use the "Shift right" instruction to shift the content of the operand at input IN bit-by-bit to the right and query the result at output OUT. Use input N to specify the number of bit positions by which the specified value is to be moved.

If the value at input N is "0", the value at input IN is copied to the operand at output OUT.

If the value at input N is greater than the number of available bit positions, the operand value at input IN is shifted to the right by the available number of bit positions.

The bit locations that are freed up in the left area of the operand during the shift operation are filled with zeros.
The following figure shows how the content of an operand of data type WORD is moved by 6 bit positions to the right:

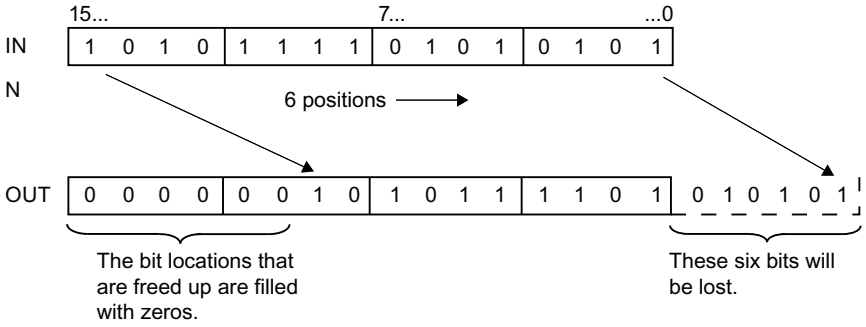

Enable input "EN" and enable output "ENO" cannot be connected. The instruction is therefore always executed (regardless of the signal state at enable input "EN").

NOTE

S7-300/400:

Only the low-byte is evaluated from input N.

S7-1200/1500:

If the value at input N < 0, the output OUT is set to 0.

Parameters

The following table shows the parameters of the instruction:

Parameter	Declaration	Data type	Description
IN	Input	WORD	Value that is shifted
N	Input	INT	Number of bit positions by which the value is shifted
OUT	Output	WORD	Result of the instruction

Instruction versions

A number of versions are available for this instruction:

Version	S7-300/400	S7-1200	S7-1500	Function
1.0	x	—	—	When projects that were created with *S7 Distributed Safety V5.4 SP5* are migrated, version 1.0 of the instruction is used automatically. If you want to compile a migrated safety program with *STEP 7 Safety Advanced* for the first time, we recommend that you first update to the latest available version of the instruction.
1.1	o	—	o	These versions have identical functions to version 1.0.
1.2	x	—	o	
1.3	x	o	o	
1.4	x	x	x	
2.0	x	x[1]	x[2]	

o This version is no longer supported.

[1] supported as of firmware V4.2

[2] supported as of firmware V2.0

When a new F-CPU is created with *STEP 7 Safety*, the latest available version for the F-CPU created is automatically preset.

For more information on the use of instruction versions, refer to the help on *STEP 7* under "Using instruction versions".

Example

The following example shows how the instruction works:

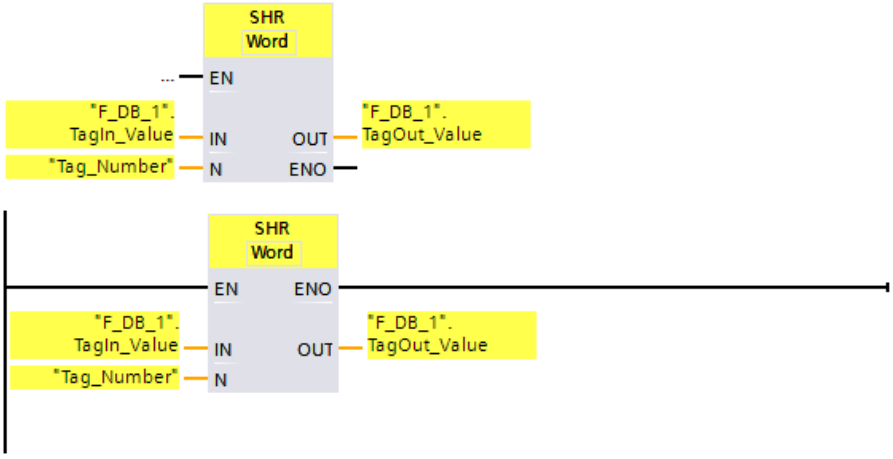

The following table shows how the instruction works using specific operand values:

Parameter	Operand	Value
IN	"F_DB_1".TagIn_Value	0011 1111 1010 1111
N	Tag_Number	3
OUT	"F_DB_1".TagOut_Value	0000 0111 1111 0101

The instruction is always executed regardless of the signal state at enable input "EN". The content of the operand ""F_DB_1".TagIn_Value" is moved three bit positions to the right. The result is output at output ""F_DB_1".TagOut_Value".

13.12.2 SHL: Shift left (STEP 7 Safety V18)

Description

Use the "Shift left" instruction to shift the content of the operand at input IN bit-by-bit to the left and query the result at output OUT. Use input N to specify the number of bit positions by which the specified value is to be moved.

If the value at input N is "0", the value at input IN is copied to the operand at output OUT.

If the value at input N is greater than the number of available bit positions, the operand value at input IN is shifted to the left by the available number of bit positions.

The bit positions that are freed up in the right area of the operand during the shift operation are filled with zeros.

The following figure shows how the content of an operand of data type WORD is moved by 6 bit positions to the left:

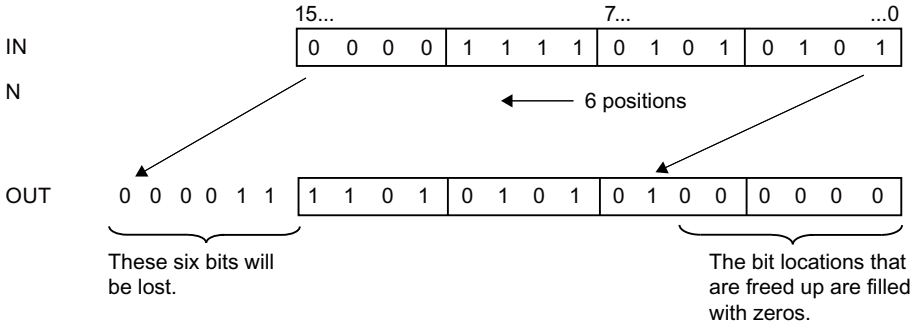

Enable input "EN" and enable output "ENO" cannot be connected. The instruction is therefore always executed (regardless of the signal state at enable input "EN").

NOTE

S7-300/400:

Only the low-byte is evaluated from input N.

S7-1200/1500:

If the value at input N < 0, the output OUT is set to 0.

Parameters

The following table shows the parameters of the instruction:

Parameter	Declaration	Data type	Description
IN	Input	WORD	Value that is shifted
N	Input	INT	Number of bit positions by which the value is shifted

Parameter	Declaration	Data type	Description
OUT	Output	WORD	Result of the instruction

Instruction versions

A number of versions are available for this instruction:

Version	S7-300/400	S7-1200	S7-1500	Function
1.0	x	—	—	When projects that were created with *S7 Distributed Safety V5.4 SP5* are migrated, version 1.0 of the instruction is used automatically. If you want to compile a migrated safety program with *STEP 7 Safety Advanced* for the first time, we recommend that you first update to the latest available version of the instruction.
1.1	o	—	o	These versions have identical functions to version 1.0.
1.2	x	—	o	
1.3	x	o	o	
1.4	x	x	x	
2.0	x	x[1]	x[2]	

o This version is no longer supported.

[1] supported as of firmware V4.2

[2] supported as of firmware V2.0

When a new F-CPU is created with *STEP 7 Safety*, the latest available version for the F-CPU created is automatically preset.

For more information on the use of instruction versions, refer to the help on *STEP 7* under "Using instruction versions".

Example

The following example shows how the instruction works:

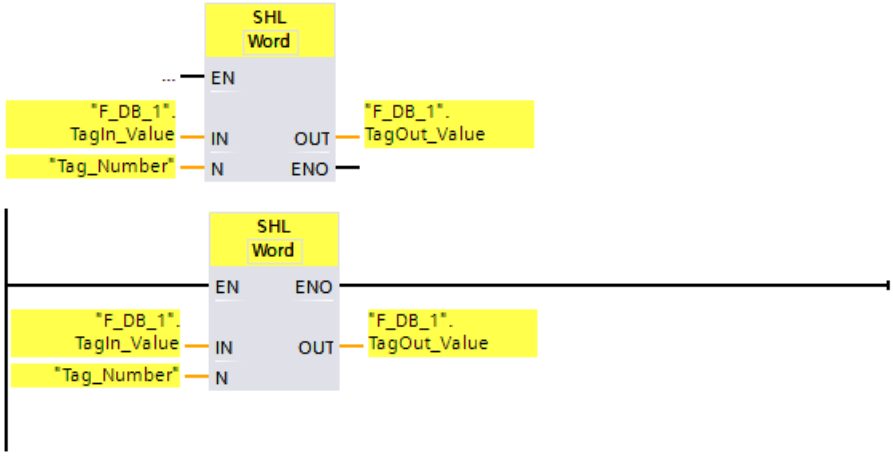

The following table shows how the instruction works using specific operand values:

Parameter	Operand	Value
IN	"F_DB_1".TagIn_Value	0011 1111 1010 1111
N	Tag_Number	4
OUT	"F_DB_1".TagOut_Value	1111 1010 1111 0000

The instruction is always executed regardless of the signal state at enable input "EN". The content of the operand ""F_DB_1".TagIn_Value" is moved four bit positions to the left. The result is output at output ""F_DB_1".TagOut_Value".

13.13 Operating

13.13.1 ACK_OP: Fail-safe acknowledgment (STEP 7 Safety V18)

Description (S7-300, S7-400)

This instruction enables fail-safe acknowledgment from an HMI system. It allows, for example, reintegration of F-I/O to be controlled from the HMI system. Acknowledgment takes place in two steps:

- Input/output parameter IN changes to a value of 6 for exactly one cycle.
- Input/output parameter IN changes to a value of 9 within a minute for exactly one cycle

Once the in/out parameter IN has changed to a value of 6, the instruction evaluates whether this parameter has changed to a value of 9 after 1 second, at the earliest, or one minute, at the latest. Output OUT (output for acknowledgment) is then set to 1 for one cycle.

If an invalid value is input or if in/out parameter IN has not changed to the value 9 within one minute or the change occurred before one second has elapsed, then in/out parameter IN is reset to 0, and both steps listed above must be repeated.

During the time in which in/out parameter IN must change from 6 to the value 9, output Q is set to 1. Otherwise, Q has a value of 0.

Every call of the "Fail-safe acknowledgment" instruction must be assigned a data area in which the instruction data is stored. The "Call options" dialog is automatically opened when the instruction is inserted in the program for this reason. There you can create a data block (single instance) (e.g., ACK_OP_DB_1) or a multi-instance (e.g., ACK_OP_Instance_1) for the "Fail-safe acknowledgment" instruction. Once it is created, you can find the new data block in the project tree in the "STEP 7 Safety" folder under "Program blocks > System blocks" or the multi-instance as a local tag in the "Static" section of the block interface. For more information, refer to the help on *STEP 7*.

NOTE

A separate data area must be used for each call of ACK_OP. Each call can be processed only once in an F-runtime group cycle.

If this is not observed, the behavior described under "Description" is no longer ensured.

Enable input "EN" and enable output "ENO" cannot be connected. The instruction is therefore always executed (regardless of the signal state at enable input "EN").

WARNING

The two acknowledgment steps must **not** be triggered by one single operation, for example by automatically storing them along with the time conditions in a program and using a single key to trigger them.
Having two separate acknowledgment steps also prevents erroneous triggering of an acknowledgment by your non-fail-safe HMI system. *(S013)*

WARNING

If you have HMI systems and F-CPUs that are interconnected and use the ACK_OP instruction for fail-safe acknowledgment, you need to ensure that the intended F-CPU will be addressed **before** you perform the two acknowledgment steps.

- To do this, store a network-wide* unique name for the F-CPU in a DB of your standard user program in each F-CPU.
- In your HMI system, set up a field from which you can read out the F-CPU name from the DB online before executing the two acknowledgment steps.
- Optional:

  in your HMI system, set up a field to permanently store the F-CPU name. Then, you can determine whether the intended F-CPU is being addressed by simply comparing the F-CPU name read out online with the permanently stored designation. *(S014)*

* A network consists of one or more subnets. "Network-wide" means beyond the boundaries of the subnet.

NOTE

You can read out output Q by means of operator control and monitoring systems or, if applicable, evaluate it in your standard user program.

You can provide the in/out parameter IN with a separate memory word or DBW of a DB of the standard user program supply for each call of the ACK_OP instruction.

NOTE

The configuration of your operator control and monitoring system does not have any effect on the Collective F-Signature.

WARNING

When using an instruction with time processing, take the following timing imprecision sources into account when determining your response times:

- The temporal blurring known from the standard user program, which is caused by the cyclic processing
- Timing imprecision resulting from the update time of the time base used in the instruction (see figure in section "Timing imprecision resulting from the update time of the time base used in the instruction")
- Tolerance of internal time monitoring in the F-CPU
  - For time values up to 200 ms, a maximum of 4 ms
  - For time values greater than or equal to 200 ms, a maximum of 2% of the (assigned) time value
- Tolerance of internal time monitoring in the S7-1500 HF-CPU
  - For time values up to 500 ms, a maximum of 10 ms
  - For time values greater than or equal to 500 ms, a maximum of 2% of the (assigned) time value

You must choose the interval between two call times of an instruction with time processing in such a way that the required response times are achieved, taking into account the possible timing imprecision. *(S034)*

Description (S7-1200, S7-1500)

This instruction enables fail-safe acknowledgment from an HMI system. It allows, for example, reintegration of F-I/O to be controlled from the HMI system. Acknowledgment takes place in two steps:

- Input/output parameter IN changes to a value of 6 for exactly one cycle.
- Input/output parameter IN changes to the value at the ACK_ID input within a minute for exactly one cycle

Once the in/out parameter IN has changed to a value of 6, the instruction evaluates whether this parameter has changed to a value at the ACK_ID input after 1 second, at the earliest, or one minute, at the latest. Output OUT (output for acknowledgment) is then set to 1 for one cycle.

If an invalid value is input or if in/out parameter IN has not changed to the value at the ACK_ID input within one minute or the change occurred before one second has elapsed, then in/out parameter IN is reset to 0, and both steps listed above must be repeated.

During the time in which in/out parameter IN must change from 6 to the value at the ACK_ID input, output Q is set to 1. Otherwise, Q has a value of 0.

Every call of the "Fail-safe acknowledgment" instruction must be assigned a data area in which the instruction data is stored. The "Call options" dialog is automatically opened when the instruction is inserted in the program for this reason. There you can create a data block (single instance) (e.g., ACK_OP_DB_1) or a multi-instance (e.g., ACK_OP_Instance_1) for the "Fail-safe acknowledgment" instruction. Once it is created, you can find the new data block in the project tree in the "STEP 7 Safety" folder under "Program blocks > System blocks" or the

multi-instance as a local tag in the "Static" section of the block interface. For more information, refer to the help on *STEP 7*.

NOTE

A separate data area must be used for each call of ACK_OP. Each call can be processed only once in an F-runtime group cycle.

If this is not observed, the behavior described under "Description" is no longer ensured.

Enable input "EN" and enable output "ENO" cannot be connected. The instruction is therefore always executed (regardless of the signal state at enable input "EN").

WARNING

The two acknowledgment steps must **not** be triggered by one single operation, for example by automatically storing them along with the time conditions in a program and using a single key to trigger them.
Having two separate acknowledgment steps also prevents erroneous triggering of an acknowledgment by your non-fail-safe HMI system. *(S013)*

WARNING

If you have HMI systems and F-CPUs that are interconnected and use the ACK_OP instruction for fail-safe acknowledgment, you need to ensure that the intended F-CPU will be addressed **before** you perform the two acknowledgment steps.

Alternative 1:

- The value for each identifier of the acknowledgment (ACK_ID input; data type: INT) can be freely selected in the range from 9 to 30000, but must be unique network-wide* for all instances of the ACK_OP instruction.
  You must supply the ACK_ID input with constant values when calling the instruction. Direct read or write access in the associated instance DB is not permitted in the safety program!

Alternative 2:

- Store a network-wide* unique name for the F-CPU in a DB of your standard user program in each F-CPU.
- In your HMI system, set up a field from which you can read out the F-CPU name from the DB online before executing the two acknowledgment steps.
- Optional:

  in your HMI system, set up a field to permanently store the F-CPU name. Then, you can determine whether the intended F-CPU is being addressed by simply comparing the F-CPU name read out online with the permanently stored designation. *(S047)*

* A network consists of one or more subnets. "Network-wide" means beyond the boundaries of the subnet.

NOTE

You can read out output Q by means of operator control and monitoring systems or, if applicable, evaluate it in your standard user program.

You need to provide the in/out parameter IN with a separate memory word or DBW of a DB of the standard user program for each call of the ACK_OP instruction.

NOTE

The supply of the IN input/output of the ACK_OP instruction as well as the configuration of your operator control and monitoring system do not have any effect on the Collective F-Signature, the Collective F-SW-Signature or the signature of the block that calls the ACK_OP instruction.

Changes to the supply of the IN input/output or to the configuration of your operator control and monitoring system therefore do not result in a changed Collective F-Signature/Collective F-SW-Signature/signature of the calling block.

WARNING

When using an instruction with time processing, take the following timing imprecision sources into account when determining your response times:

- The temporal blurring known from the standard user program, which is caused by the cyclic processing
- Timing imprecision resulting from the update time of the time base used in the instruction (see figure in section "Timing imprecision resulting from the update time of the time base used in the instruction")
- Tolerance of internal time monitoring in the F-CPU
  - For time values up to 200 ms, a maximum of 4 ms
  - For time values greater than or equal to 200 ms, a maximum of 2% of the (assigned) time value
- Tolerance of internal time monitoring in the S7-1500 HF-CPU
  - For time values up to 500 ms, a maximum of 10 ms
  - For time values greater than or equal to 500 ms, a maximum of 2% of the (assigned) time value

You must choose the interval between two call times of an instruction with time processing in such a way that the required response times are achieved, taking into account the possible timing imprecision. *(S034)*

Parameters (S7-300, S7-400)

The following table shows the parameters of the instruction:

Parameter	Declaration	Data type	Description
IN	InOut	INT	Input variable from HMI system
OUT	Output	BOOL	Output for acknowledgment
Q	Output	BOOL	Time status

Parameters (S7-1200, S7-1500)

The following table shows the parameters of the instruction:

Parameter	Declaration	Data type	Description
ACK_ID	Input	INT	Identifier of the acknowledgment (9 to 30000)
IN	InOut	INT	Input variable from HMI system
OUT	Output	BOOL	Output for acknowledgment
Q	Output	BOOL	Time status

Instruction versions

A number of versions are available for this instruction:

Ver-sion	S7-300/400	S7-1200	S7-1500	Function
1.0	x	—	—	When projects that were created with *S7 Distributed Safety V5.4 SP5* are migrated, version 1.0 of the instruction is used automatically. If you want to compile a migrated safety program with *STEP 7 Safety Advanced* for the first time, we recommend that you first update to the latest available version of the instruction.
1.1	x	—	o	These versions have identical functions to version 1.0 for S7-300/400 F-CPUs. The input ACK_ID must also be taken into consideration for S7-1200/1500 F-CPUs.
1.2	x	o	o	
1.3	x	x	x	

o This version is no longer supported.

When a new F-CPU is created with *STEP 7 Safety*, the latest available version for the F-CPU created is automatically preset.

For more information on the use of instruction versions, refer to the help on *STEP 7* under "Using instruction versions".

Timing imprecision resulting from the update time of the time base used in the instruction:

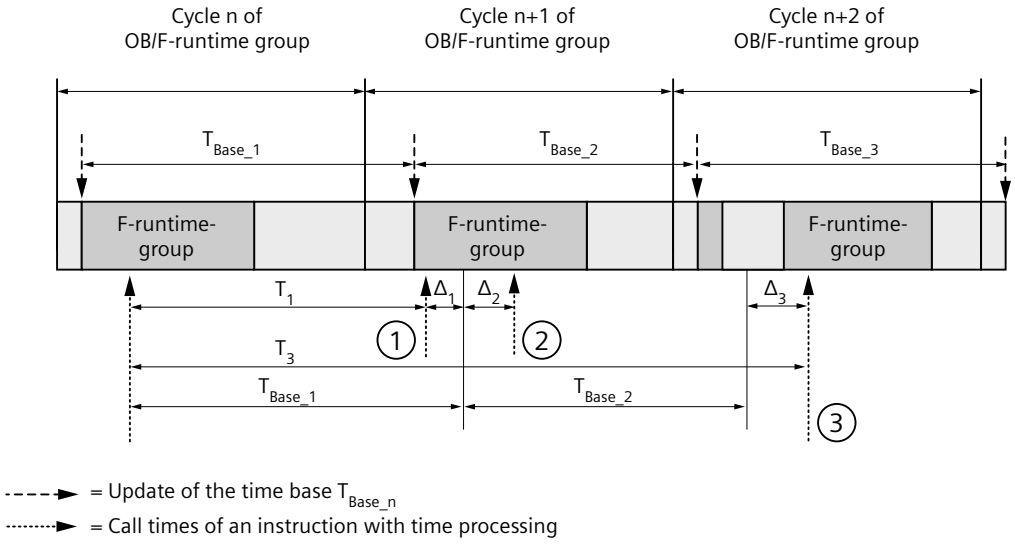

① For the first call in cycle n+1, the call time of the instruction relative to the start of the F-runtime group is earlier than that in cycle n by the amount of Δ_1, e.g. because parts of the safety program of the F-runtime group before the call time of the instruction in cycle n+1 are skipped. For the time update, the instruction takes account of time T_{Base_1} instead of the time T_1 that has actually elapsed in cycle n since the call.

② The instruction is called a second time in cycle n+1. This does not involve another time update (by Δ_2).

③ For the call in cycle n+2, the call time of the instruction relative to the start of the F-runtime group is later than that in cycle n by the amount of Δ_3, e.g. because the F-runtime group was interrupted by a higher priority interrupt before the call time of the instruction in cycle n+2. The instruction took into account time $T_{Base_1} + T_{Base_2}$ instead of the time T_3 that has actually elapsed in cycle n since the call. This would also be the case if no call occurred in cycle n+1.

Example

An example how the instruction is used is available under Implementing User Acknowledgment in the Safety Program of the F-CPU of a DP Master or IO controller (Page 165).

See also

Implementing user acknowledgment in the safety program of the F-CPU of a I-slave or I-device (Page 169)

13.14 Additional instructions

13.14.1 LAD

13.14.1.1 ---| |--- OV: Get status bit OV (STEP 7 Safety Advanced V18) (S7-300, S7-400)

Description

You can use the "Get status bit OV" instruction to detect whether a number range overflow occurred in the last arithmetic instruction processed.
The "Get status bit OV" instruction functions like a normally open contact. If the query is fulfilled, the instruction has signal state "1". If the query is not fulfilled, the instruction has signal state "0".
The "Get status bit OV" evaluation must be inserted in the network that follows the instruction that influences the OV. This network must not contain any jump labels.

NOTE

The execution time of the OV-affecting instruction is extended when the "Get status bit OV " instruction is used (see also Excel file for response time calculation (https://support.industry.siemens.com/cs/ww/en/view/109783831)).

Example

The following example shows how the instruction works:

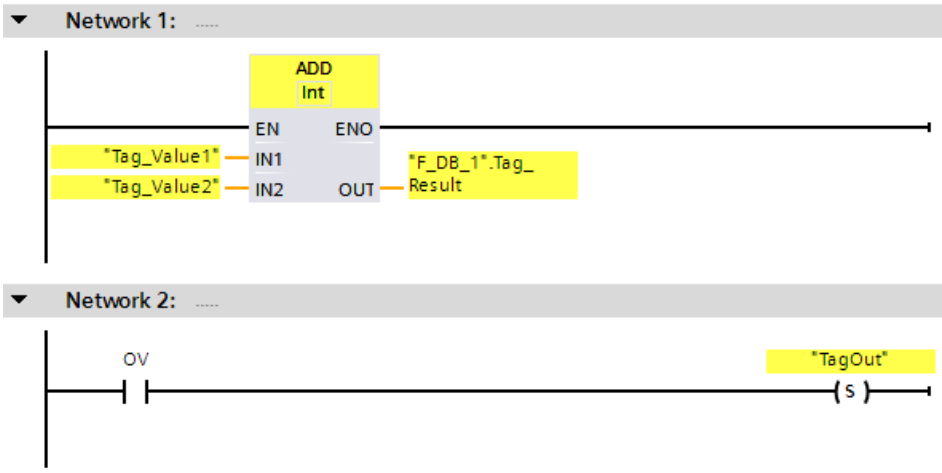

The "Add" instruction is always executed (regardless of the signal state at enable input EN).
The value of the "Tag_Value1" operand is added to value of the Tag_Value2 operand. The result of the addition is stored in the ""F_DB_1".Tag_Result" operand.
If an overflow occurs during execution of the "Add" instruction, the status bit OV is set to "1".
In network 2, following the query of the status bit OV, the "Set output" (S) instruction is executed and the "TagOut" operand is set.

13.14.1.2 ---| / |--- OV: Get negated status bit OV (STEP 7 Safety Advanced V18) (S7-300, S7-400)

Description

You can use the "Get negated status bit OV" instruction to detect whether a number range overflow occurred in the last arithmetic instruction processed. This instruction is only available in LAD.

The "Get negated status bit OV" instruction functions like a normally closed contact. If the query is satisfied, the instruction has signal state "0". If the query is not satisfied, the instruction has signal state "1".

The "Get negated status bit OV" evaluation must be inserted in the network following the instruction that influences the OV. This network must not contain any jump labels.

NOTE

The execution time of the OV-affecting instruction is extended when the "Get negated status bit OV " instruction is used (see also Excel file for response time calculation (https://support.industry.siemens.com/cs/ww/en/view/109783831)).

Example

The following example shows how the instruction works:

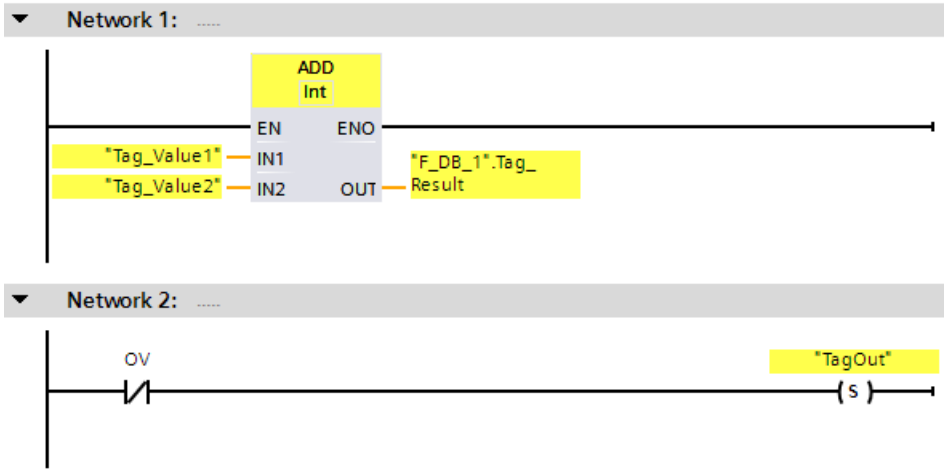

The "Add" instruction is always executed (regardless of the signal state at enable input EN).

The value of the "Tag_Value1" operand is added to value of the Tag_Value2 operand. The result of the addition is stored in the ""F_DB_1".Tag_Result" operand.

If an overflow does *not* occur during execution of the "Add" instruction, the status bit OV is reset to "0". In network 2, following the query of the status bit OV, the "Set output" (S) instruction is executed and the "TagOut" operand is set.

13.14.2 FBD

13.14.2.1 OV: Get status bit OV (STEP 7 Safety Advanced V18) (S7-300, S7-400)

Description

You can use the "Get status bit OV" instruction to detect whether a number range overflow occurred in the last arithmetic instruction processed.

The "Get status bit OV" evaluation must be inserted in the network that follows the instruction that influences the OV. This network must not contain any jump labels.

If the query is fulfilled, the instruction has signal state "1". If the query is not fulfilled, the instruction has signal state "0".

You can program a query of status bit OV for "0" with the "Invert RLO" instruction.

NOTE

The execution time of the OV-affecting instruction is extended when the "Get status bit OV " instruction is used (see also Excel file for response time calculation (https://support.industry.siemens.com/cs/ww/en/view/109783831)).

Example

The following example shows how the instruction works:

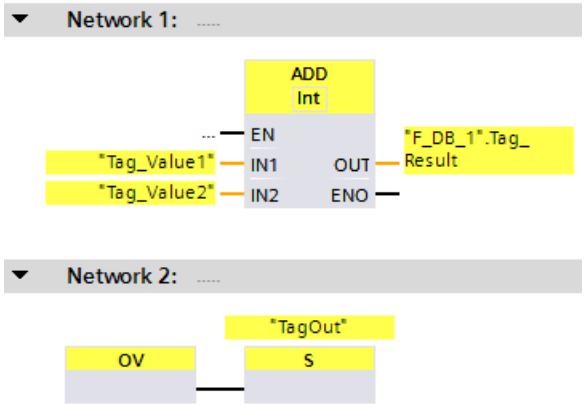

The value of the "Tag_Value1" operand is added to value of the Tag_Value2 operand. The result of the addition is stored in the ""F_DB_1".Tag_Result" operand.

If an overflow occurs during execution of the "Add" instruction, the status bit OV is set to "1". In network 2, following the query of the status bit OV, the "Set output" (S) instruction is executed and the "TagOut" operand is set.

13.15 Communication

13.15.1 PROFIBUS/PROFINET

13.15.1.1 SENDDP and RCVDP: Send and receive data via PROFIBUS DP/PROFINET IO (STEP 7 Safety V18)

Introduction

You use the SENDDP and RCVDP instructions for fail-safe sending and receiving of data using:

- Safety-related master-master communication
- Safety-related master-master communication for S7 Distributed Safety
- Safety-related master-I-slave communication
- Safety-related I-slave-I-slave communication
- Safety-related IO controller-IO controller communication
- Safety-related IO controller-IO controller communication for S7 Distributed Safety
- Safety-related IO controller-I-device communication
- Safety-related IO controller-I-slave communication

Description

The SENDDP instruction sends 16 data elements of data type BOOL and 2 data elements of data type INT or one data element of the data type DINT (S7-1200, S7-1500) in a fail-safe manner to another F-CPU via PROFIBUS DP/PROFINET IO. The data can be received there by the related RCVDP instruction.

Every call of this instruction must be assigned a data area in which the instruction data is stored. The "Call options" dialog is automatically opened when the instruction is inserted in the program for this reason. There you can create a data block (single instance) (e.g. RCVDP_DB_1) for these instructions. Once it is created, the new data block can be found in the "STEP 7 Safety" folder in the project tree under "Program blocks > System blocks". For more information, refer to the help on *STEP 7*.

Enable input "EN" and enable output "ENO" cannot be connected. The instruction is therefore always executed (regardless of the signal state at enable input "EN").

With the SENDDP instruction, the data to be sent (for example, outputs of other F-blocks/instructions) are available at input SD_BO_xx or SD_I_xx or SD_DI_00 as alternative.

With the RCVDP instruction, the data received are available at outputs RD_BO_xx and RD_I_xx or RD_DI_00 as alternative for additional processing by other F-blocks/instructions.

(S7-1200, S7-1500) At the DINTMODE input of the SENDDP instruction you specify if the data at the inputs SD_I_00 and SD_I_01 or the data at the input SD_DI_00 is sent.

The operating mode of the F-CPU with the SENDDP instruction is provided at output SENDMODE. If the F-CPU with the SENDDP instruction is in disabled safety mode, output SENDMODE = 1.

Communication between F-CPUs takes place in the background by means of a special safety protocol. You must define the communication relationship between a SENDDP instruction in one F-CPU and a RCVDP instruction in the other F-CPU by specifying an F-communication ID at the DP_DP_ID inputs of the SENDDP and RCVDP instructions. Associated SENDDP and RCVDP instructions are assigned the same value for DP_DP_ID.

WARNING

The value of the respective F-communication ID (input DP_DP_ID; data type: INT) can be freely selected**; however, it must be unique for all safety-related communication connections network-wide* and CPU-wide**** at all times. The uniqueness must be checked in the safety summary during acceptance of the safety program.

You must supply constant values*** to the inputs DP_DP_ID and LADDR when calling the instruction. Direct write accesses in the associated instance DB to DP_DP_ID and LADDR are not permitted in the safety program! *(S016)*

* A network consists of one or more subnets. "Network-wide" means beyond the boundaries of the subnet. In PROFIBUS, a network includes all the nodes accessible via PROFIBUS DP. In PROFINET IO, a network includes all nodes accessible via RT_Class_1/2/3 (Ethernet/WLAN/Bluetooth, Layer 2) and if applicable RT_Class_UDP (IP, Layer 3).

** S7-1200/1500: As of version V3.0 of the SENDDP and RCVDP instructions, no connection is established at the DP_DP_ID input for a F-communication ID "0".

*** S7-1200/1500: As of version V3.0 of the SENDDP and RCVDP instructions, the DP_DP_ID input can also be supplied with variable values from a global F-DB. In this case as well you have to check during the acceptance of the safety program that the uniqueness is ensured *at every moment*, by checking the algorithm for the creation of the variable value accordingly. If you cannot ensure a unique F-communication ID during startup of the safety program, because it is only specified after startup of the safety program, you must make sure that the value at the DP_DP_ID input is "0" during this phase.

**** With a redundant S7-1500HF system, both F-CPUs of the redundant S7-1500HF system are to be regarded as one F-CPU with regard to the DP_DP_ID.

NOTE

Within a safety program, you must assign a different start address (S7-300/400) or HW identifier (S7-1200/1500) for every call of the SENDDP and RCVDP instructions at input LADDR.

A separate instance DB must be used for each call of the SENDDP and RCVDP instructions. You must not declare and call these instructions as multi-instances.

(S7-300/400) The inputs of the RCVDP and RCVS7 instructions may not have preceding logic operations (for example "AND logic operation").

The inputs of the RCVDP instruction cannot be initialized using fully qualified DB accesses with outputs of a RCVDP or RCVS7 instruction called in an upstream network.

(S7-1200/1500) The RD_D_00 output must not be evaluated for DINTMODE = 0; the RD_I_xx outputs of the RCVDP instruction must not be evaluated for DINTMODE = 1.

(S7-1200/1500) The outputs of the SENDDP and RCVDP instructions must not be supplied with tags from the standard user program. Exception: RET_DPRD, RET_DPWR and DIAG outputs.

Fully qualified access to DP_DP_ID and LADDR is not possible in the safety program.

You cannot use an actual parameter for an output of an RCVDP instruction, if it is already being used for an input of the same or another RCVDP or RCVS7 instruction.

The F-CPU can go to STOP if this is not observed. The cause of the diagnostics event is entered in the diagnostics buffer of the F-CPU.

NOTE

You are not permitted to insert any SENDDP/RCVDP instructions between a JMP or JMPN instruction and the associated jump destination (jump label).

You cannot insert a RET instruction prior to a SENDDP instruction.

SENDDP parameter

The following table shows the parameters of the SENDDP instruction:

Parameter	Declaration	Data type	Description
SD_BO_00	Input	BOOL	Send data BOOL 00
...			...
SD_BO_15	Input	BOOL	Send data BOOL 15
SD_I_00	Input	INT	Send data INT 00
SD_I_01	Input	INT	Send data INT 01
SD_DI_00	Input	DINT	(S7-1200, S7-1500) (hidden) Send data DINT 00

Parameter	Declaration	Data type	Description
DINTMODE	Input	DINT	(S7-1200, S7-1500) (hidden) 0=SD_I_00 u. SD_I_01 are sent 1=SD_DI_00 is sent
DP_DP_ID	Input	INT	F-communication ID between SENDDP and RCVDP
TIMEOUT	Input	TIME	Monitoring time in ms for safety-related communication (see also Monitoring and response times (Page 546))
LADDR	Input	INT (S7-300, S7-400) HW_SUBMODULE (S7-1200, S7-1500)	The start address (S7-300, S7-400) or HW identifier (S7-1200, S7-1500) of the address area/transfer area: • Of DP/DP coupler for safety-related master-master communication • For safety-related master-I-slave communication • For safety-related I-slave-I-slave communication • Of PN/PN coupler for safety-related IO controller-IO controller communication • For safety-related IO controller-I-device communication • For safety-related IO controller-I-slave communication
ERROR	Output	BOOL	1=Communication error
SUBS_ON	Output	BOOL	1=RCVDP outputs fail-safe values
RET_DPRD	Output	WORD	Non-fail-safe error code RET_VAL of the DPRD_DAT instruction (for a description of error codes, refer to the help for the DPRD_DAT instruction ("Extended instructions > Distributed I/O > Other")).
RET_DPWR	Output	WORD	Non-fail-safe error code RET_VAL of the DPWR_DAT instruction (for a description of error codes, refer to the help for the DPWR_DAT instruction ("Extended instructions > Distributed I/O > Other")).
DIAG	Output	BYTE	Non-fail safe service information

RCVDP parameter:

The following table shows the parameters of the RCVDP instruction:

Parameter	Declaration	Data type	Description
ACK_REI	Input	BOOL	1=Acknowledgment for reintegration of send data following communication error
SUBBO_00	Input	BOOL	Fail-safe value for receive data BOOL 00
...			...
SUBBO_15	Input	BOOL	Fail-safe value for receive data BOOL 15
SUBI_00	Input	INT	Fail-safe value for receive data INT 00
SUBI_01	Input	INT	Fail-safe value for receive data INT 01
SUBDI_00	Input	DINT	(S7-1200, S7-1500) (hidden) Fail-safe value for receive data DINT 00
DP_DP_ID	Input	INT	F-communication ID between SENDDP and RCVDP
TIMEOUT	Input	TIME	Monitoring time in ms for safety-related communication (see also Monitoring and response times (Page 546))

Parameter	Declaration	Data type	Description
LADDR	Input	INT (S7-300, S7-400) HW_SUBMODULE (S7-1200, S7-1500)	The start address (S7-300, S7-400) or HW identifier (S7-1200, S7-1500) of the address area/transfer area: • Of DP/DP coupler for safety-related master-master communication • For safety-related master-I-slave communication • For safety-related I-slave-I-slave communication • Of PN/PN coupler for safety-related IO controller-IO controller communication • For safety-related IO controller-I-device communication • For safety-related IO controller-I-slave communication
ERROR	Output	BOOL	1=Communication error
SUBS_ON	Output	BOOL	1=Fail-safe values are output
ACK_REQ	Output	BOOL	1=Acknowledgment for reintegration of send data required
SENDMODE	Output	BOOL	1=F-CPU with SENDDP instruction in disabled safety mode
RD_BO_00	Output	BOOL	Receive data BOOL 00
...			...
RD_BO_15	Output	BOOL	Receive data BOOL 15
RD_I_00	Output	INT	Receive data INT 00
RD_I_01	Output	INT	Receive data INT 01
RD_DI_00	Output	DINT	(S7-1200, S7-1500) (hidden) Receive data DINT 00
RET_DPRD	Output	WORD	Non-fail-safe error code RET_VAL of the DPRD_DAT instruction (for a description of error codes, refer to the help for the DPRD_DAT instruction ("Extended instructions > Distributed I/O > Other")).
RET_DPWR	Output	WORD	Non-fail-safe error code RET_VAL of the DPWR_DAT instruction (for a description of error codes, refer to the help for the DPWR_DAT instruction ("Extended instructions > Distributed I/O > Other")).
DIAG	Output	BYTE	Non-fail safe service information

Instruction versions

A number of versions are available for these instructions:

Version	S7-300/400	S7-1200	S7-1500	Function
1.0	x	—	—	When projects that were created with *S7 Distributed Safety V5.4 SP5* are migrated, version 1.0 of the instruction is used automatically. If you want to compile a migrated safety program with *STEP 7 Safety Advanced* for the first time, we recommend that you first update to the latest available version of the instruction.

o This version is no longer supported.

[1] supported as of firmware V4.2

[2] supported as of firmware V2.0

Version	S7-300/400	S7-1200	S7-1500	Function
1.1	o	—	o	These versions have identical functions to version 1.0.
1.2	x	—	o	
1.4	x	—	x	
1.3	x	—	o	S7-300/400: These versions have identical functions to version 1.0. S7-1200/1500: Instead of 2 data of data type INT, one data of data type DINT can be sent/received as alternative. Otherwise functionally identical to version 1.0.
1.5	x	x	x	
2.0	x	x[1]	x[2]	
3.0	x	x[1]	x[2]	S7-300/400: This version has identical functions to version 2.0. S7-1200/1500: • The DP_DP_ID input can also be supplied with tags of a global F-DB. In case of DP_DP_ID = 0 no connection is established. • Supports the data status byte of the PN/PN coupler as of firmware V4.0 • Supports the simulation of the communication in S7-PLCISM operation Otherwise functionally identical to version 2.0

o This version is no longer supported.

[1] supported as of firmware V4.2

[2] supported as of firmware V2.0

When a new F-CPU is created with *STEP 7 Safety*, the latest available version for the F-CPU created is automatically preset.

For more information on the use of instruction versions, refer to the help on *STEP 7* under "Using instruction versions".

Placement

You need to insert the RCVDP instruction *either* at the start of the main safety block *or* (with S7-1200/1500 F-CPUs) in an F-FB/F-FC called directly at the start of the main safety block. No other instructions can be located before in the main safety block and no other instructions can be located before or afterwards in the F-FB/F-FC.

You need to insert the SENDDP instruction *either* at the end of the main safety block *or* (with S7-1200/1500 F-CPUs) in an F-FB/F-FC called directly at the end of the main safety block. No other instructions can be located afterwards in the main safety block and no other instructions can be located before or afterwards in the F-FB/F-FC.

Startup behavior

After the sending and receiving F-systems are started up, communication must be established between the connection partners for the fist time (SENDDP and RCVDP instructions). During this time, the receiver (RCVDP instruction) outputs the fail-safe values present at its inputs SUBBO_xx and SUBI_xx or alternatively SUBDI_00.

The SENDDP and RCVDP instructions signal this with 1 at output SUBS_ON. The SENDMODE output has default setting "0" and is not updated as long as output SUBS_ON = 1.

As of version V3.0 of the SENDDP and RCVDP instructions, communication is only established when DP_DP_ID <> 0.

Behavior in the event of communication errors

If a communication error occurs, for example, due to a signature error (CRC) or when monitoring time TIMEOUT expires or for F-CPUs S7-1200/1500 as of V3.0 due to a change of the DP_DP_ID to 0 after establishment of communication, the outputs ERROR and SUBS_ON = 1 are set. The receiver (RCVDP instruction) then outputs the fail-safe values assigned at its inputs SUBBO_xx and SUBI_xx or alternatively SUBDI_00 inputs. Output SENDMODE is not updated while output SUBS_ON = 1.

The send data of the SENDDP instruction present at inputs SD_BO_xx and SD_I_xx, SD_DI_00 as alternative, are only output again when communication errors are no longer detected (ACK_REQ = 1) and you acknowledge (Page 165) the RCVDP instruction with a positive edge at input ACK_REI.

Communication errors also occur if the values of the DP_DP_IDs between associated SENDDP and RCVDP are temporarily different on a change of the values of variable DP_DP_IDs after communication establishment.

⚠ WARNING

For the user acknowledgment, you must interconnect input ACK_REI with a signal generated by the operator input.

An interconnection with an automatically generated signal is not permitted.* *(S040)*

* If variable F-communication IDs are used, the communication partner of the SENDDP or RCVDP instructions can be changed during running operation. The resultant communication errors may only be acknowledged with an automatically generated signal at the ACK_REI input under the following conditions:

- The safety program reliably forms a signal "Communication partner change is in progress" with the RCVDP instruction on the basis of the process state.
- The signal "Communication partner change is in progress" is only formed if there is no communication error.
- While the signal "Communication partner change is in progress" is active, no evaluation of the received process values is carried out at the RCVDP instruction.
- The automatic acknowledgement is only carried out if the "Communication partner change is in progress" signal is available.
- From a safety standpoint automatic reintegration is permitted for the relevant process.

Note that output ERROR (1=communication error) for a communication error will not be set unless communication between the connection partners (SENDDP and RCVDP instructions) has been previously established. If communication cannot be established after startup of the sending and receiving F-Systems, check the configuration of the safety-related CPU-CPU communication, the parameter assignment of the SENDDP and the RCVDP instructions, and the bus connection. You also obtain information on possible error causes by evaluating outputs DIAG, RET_DPRD and RETDP_WR.

In general, always evaluate RET_DPRD and RETDP_WR, since it is possible that only one of the two outputs will contain error information.

Timing diagrams SENDDP/RCVDP

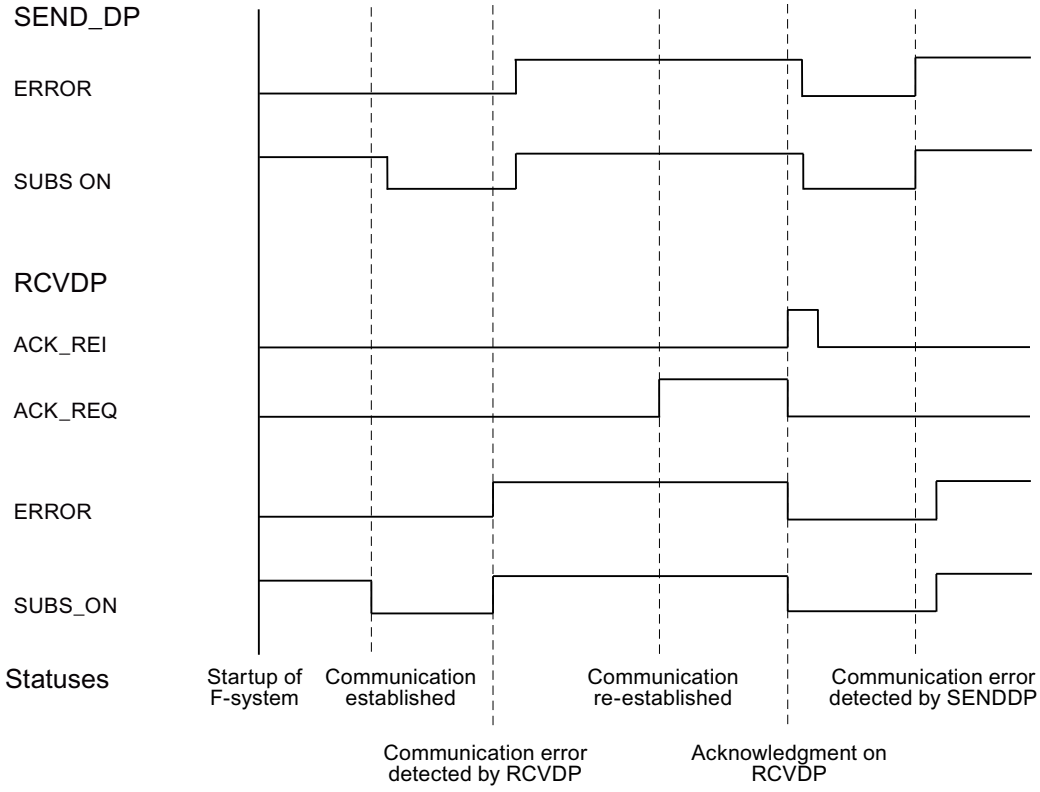

Output DIAG

In addition, non-fail-safe information about the type of communication errors that occurred is provided at output DIAG of the SENDDP and RCVDP instructions for service purposes.

You can read out this information by means of operator control and monitoring systems or, if applicable, you can evaluate it in your standard user program. DIAG bits are saved until you acknowledge the errors at input ACK_REI of the RCVDP instruction.

Structure of DIAG of the SENDDP/RCVDP instruction

Bit no.	Assignment	Possible error causes	Remedies
Bit 0	Reserved	—	—
Bit 1	Reserved	—	—
Bit 2	Reserved	—	—
Bit 3	Invalid DP_DP_ID	The DP_DP_ID is 0.	Check the DP_DP_ID of SENDDP or RCVDP.

Bit no.	Assignment	Possible error causes	Remedies
Bit 4	Timeout of SENDDP/RCVDP detected	The standard user program overwrites transfer areas of SENDDP and RCVDP.	Check the standard user program for write access to the transfer areas of SENDDP and RCVDP. Also take indirect accesses into account.
		DP_DP_ID of SENDDP and RCVDP different.	Check the DP_DP_ID of SENDDP and RCVDP.
		For variable F-communication IDs the values are changed at the DP_DP_ID input.	When the DP_DP_ID of SENDDP and RCVD is consistent again, perform an acknowledgment at the ACK_REI input.
		Interference in bus connection to partner F-CPU.	Check the bus connection and ensure that there are no external sources of interference.
		Monitoring time setting for F-CPU and partner F-CPU is too low.	Check the parameterized monitoring time TIMEOUT at SENDDP and RCVDP of both CPUs. Set a higher value if necessary. Recompile the safety program.
		Configuration of the DP/DP coupler or PN/PN coupler is invalid.	Check the configuration of the DP/DP coupler or of the PN/PN coupler.
		Data validity indicator "DIA" of the DP/DP coupler is "ON".	Set the data validity indicator "DIA" at the DIL switch of the DP/DP coupler to "OFF".
		Parameter "Data validity indicator DIA" of the PN/PN coupler is activated.	Deactivate the "Data validity display DIA" parameter in the properties for the PN/PN coupler.
		Parameter "Activate data status" of the PN/PN coupler (as of V4.0) is activated.	Deactivate the "Activate data status" parameter in the properties for the PN/PN coupler (as of V4.0) or S7-1200/1500: Use Version V3.0 of the SEND-DP and RCVDP instructions.
		Internal fault of DP/DP coupler or PN/PN coupler	Replace the DP/DP coupler or PN/PN coupler
		CP in STOP mode, or internal fault in CP	Switch the CP to RUN. Check the diagnostics buffer of the CP. If necessary, replace the CP.
		F-CPU/partner F-CPU in STOP mode, or internal fault in F-CPU/partner F-CPU	Switch the F-CPUs to RUN. Check the diagnostics buffer of the F-CPUs. If necessary, replace the F-CPUs.
Bit 5	Sequence number error of SENDDP/RCVDP detected	See description for bit 4	See description for bit 4
Bit 6	CRC-error of SENDDP/RCVDP detected	See description for bit 4	See description for bit 4
		DP_DP_ID of SENDDP and RCVDP different	Check DP_DP_ID of SENDDP and RCVDP
Bit 7	Reserved	—	—

See also

Communication with S7 Distributed Safety via PN/PN coupler (IO controller-IO controller communication) (Page 225)

Communication with S7 Distributed Safety via DP/DP coupler (master-master communication) (Page 226)

Configuring and programming communication (S7-300, S7-400) (Page 176)
Safety-related IO controller-IO controller communication (Page 178)
Safety-related master-master communication (Page 187)
Safety-related IO controller-I-device communication (Page 196)
Safety-related master-I-slave communication (Page 201)
Safety-related IO controller-I-slave communication (Page 218)

13.15.2 S7 communication

13.15.2.1 SENDS7 and RCVS7: Communication via S7 connections (STEP 7 Safety Advanced V18) (S7-300, S7-400)

Introduction

You use the SENDS7 and RCVS7 instructions for fail-safe sending and receiving of data using S7 connections.

NOTE

In *STEP 7 Safety Advanced*, S7 connections are generally permitted over Industrial Ethernet only.

Safety-related communication via S7 connections is possible from and to F-CPUs with PROFINET interface or S7-400 F-CPUs with PROFINET-capable CPs. See also Safety-related communication via S7 connections (Page 219).

Description

The SENDS7 instruction sends the send data contained in an F-communication DB to the F-communication DB of the associated RCVS7 instruction of another F-CPU in a fail-safe manner using an S7 connection.

Every call of this instruction must be assigned a data area in which the instruction data is stored. The "Call options" dialog is automatically opened when the instruction is inserted in the program for this reason. There you can create a data block (single instance) (e.g., SENDS7_DB_1) or a multi-instance (e.g., SENDS7_Instance_1) for this instruction. Once it is created, you can find the new data block in the project tree in the "STEP 7 Safety" folder under "Program blocks > System blocks" or the multi-instance as a local tag in the "Static" section of the block interface. For more information, refer to the help on *STEP 7*.

Enable input "EN" and enable output "ENO" cannot be connected. The instruction is therefore always executed (regardless of the signal state at enable input "EN").

Information on the F-communication DB is contained in "Programming safety-related communication via S7 connections (Page 221)".

An F-communication DB is an F-DB for safety-related CPU-CPU communication with special properties. You must specify the numbers of the F-communication DBs at inputs SEND_DB and RCV_DB of instructions SENDS7 and RCVS7.

The operating mode of the F-CPU with the SENDS7 instruction is provided at output SENDMODE of the RCVS7 instruction. If the F-CPU with the SENDS7 instruction is in disabled safety mode, then output SENDMODE = 1.

To reduce the bus load, you can temporarily shut down communication between the F-CPUs at input EN_SEND of the SENDS7 instruction. To do so, supply input EN_SEND with "0" (default = "1"). In this case, send data is no longer sent to the F-communication DB of the associated RCVS7 instruction, and the receiver provides fail-safe values for this period of time (initial values in its F-communication DB). If communication was already established between the partners, a communication error is detected.

You must specify the local ID - from the perspective of the F-CPU - of the S7 connection (from the connection table in the network view) at input ID of the SENDS7 instruction (see also Configuring (Page 39)).

Communication between F-CPUs takes place in the background by means of a special safety protocol. You must define a communication relationship between an SENDS7 instruction in one F-CPU and a communication relationship between an RCVS7 instruction and the other F-CPU by assigning an odd number at input R_ID (of the SENDS7 and RCVS7 instructions). Associated SENDS7 and RCVS7 instructions receive the same value for R_ID.

WARNING

The value of the respective F-communication ID (input R_ID; data type: DWORD) can be freely selected; however, it must be odd and unique for all safety-related communication connections network-wide* and CPU-wide. The value R_ID + 1 is internally assigned and must not be used.

You must supply inputs ID and R_ID with constant values when calling the instruction. Direct read or write access to the associated instance DB is not permitted in the safety program. *(S020)*

* A network consists of one or more subnets. "Network-wide" means beyond the boundaries of the subnet. In PROFIBUS, a network includes all nodes accessible via PROFIBUS DP. In PROFINET IO, a network includes all nodes accessible via RT_Class_1/2/3 (Ethernet/WLAN/Bluetooth, Layer 2) and if applicable RT_Class_UDP (IP, Layer 3).

NOTE

A separate instance DB must be used for each call of the SENDS7 and RCVS7 instructions within a safety program. You must not declare and call these instructions as multi-instances.

The inputs of the RCVS7 instruction cannot be initialized with outputs (using fully qualified DB accesses) of a RCVS7 or RCVDP instruction called in an upstream network.

You cannot use an actual parameter for an output of an RCVS7 instruction, if it is already being used for an input of the same or another RCVS7 or RCVDP instruction.

The F-CPU can go to STOP if this is not observed. A diagnostics event is entered in the diagnostics buffer of the F-CPU.

NOTE

You must not program any SENDS7/RCVS7 instruction between a JMP or JMPN instruction and the associated destination network of the JMP or JMPN instruction.

You cannot program a RET instruction prior to a SENDS7 instruction.

SENDS7 parameter

The following table shows the parameters of the SENDS7 instruction:

Parameter	Declaration	Data type	Description
SEND_DB	Input	BLOCK_DB	Number of F-communication DB
TIMEOUT	Input	TIME	Monitoring time in ms for safety-related communication (see also Monitoring and response times (Page 546))
EN_SEND	Input	BOOL	1= Send enable
ID	Input	WORD	Local ID of the S7 connection
R_ID	Input	DWORD	Network-wide unique value for a F-communication ID between a SENDS7 instruction and a RCVS7 instruction
ERROR	Output	BOOL	1=Communication error
SUBS_ON	Output	BOOL	1=Receiving block outputs fail-safe values
STAT_RCV	Output	WORD	Non-fail-safe status parameter STATUS of the URCV instruction (You can find a description of error codes in the help for the URCV instruction ("Communication > S7 Communication"))
STAT_SND	Output	WORD	Non-fail-safe status parameter STATUS of the USEND instruction (You can find a description of error codes in the help for the USEND instruction ("Communication > S7 Communication"))
DIAG	Output	BYTE	Non-fail safe service information

RCVS7 parameter

The following table shows the parameters of the RCVS7 instruction.

Parameter	Declaration	Data type	Description
ACK_REI	Input	BOOL	Acknowledgment for reintegration of send data after communication error
RCV_DB	Input	BLOCK_DB	Number of F-communication DB
TIMEOUT	Input	TIME	Monitoring time in ms for safety-related communication (see also Monitoring and response times (Page 546))
ID	Input	WORD	Local ID of the S7 connection
R_ID	Input	DWORD	Network-wide unique value for a F-communication ID between a SENDS7 instruction and a RCVS7 instruction
ERROR	Output	BOOL	1=Communication error
SUBS_ON	Output	BOOL	1=Fail-safe values are output
ACK_REQ	Output	BOOL	1=Acknowledgment for reintegration of send data required

Parameter	Declaration	Data type	Description
SENDMODE	Output	BOOL	1=F-CPU with the SENDS7 instruction in disabled safety mode
STAT_RCV	Output	WORD	Non-fail-safe status parameter STATUS of the URCV instruction (You can find a description of error codes in the help for the URCV instruction ("Communication > S7 Communication"))
STAT_SND	Output	WORD	Non-fail-safe status parameter STATUS of the USEND instruction (You can find a description of error codes in the help for the USEND instruction ("Communication > S7 Communication"))
DIAG	Output	BYTE	Non-fail safe service information

Instruction versions

A number of versions are available for these instructions:

Version	S7-300/400	S7-1500	Function
1.0	x	—	
1.1	x	—	This version has identical functions to version 1.0. It also supports later versions of internally called instructions. When projects that were created with *S7 Distributed Safety V5.4 SP5* are migrated, version 1.1 of the instruction is used automatically. If you want to compile a migrated safety program with *STEP 7 Safety Advanced* for the first time, we recommend that you first update to the latest available version of the instruction.
1.2	x	—	This version has identical functions to version 1.0/1.1. It also supports later versions of internally called instructions.

When a new F-CPU is created with *STEP 7 Safety Advanced*, the latest available version for the F-CPU created is automatically preset.

For more information on the use of instruction versions, refer to the help on *STEP 7* under "Using instruction versions".

Placement

You must insert the RCVS7 instruction at the start of the main safety block. No other instructions may be located before it in the main safety block.

You must insert the SENDS7 instruction at the end of the main safety block. No other instructions may be located after it in the main safety block.

Startup characteristics

After the sending and receiving F-systems are started up, communication must be established between the connection partners for the fist time (SENDS7 and RCVS7 instructions). The receiver (RCVS7 instruction) provides fail-safe values for this time period (initial values in its F-communication DB).

The SENDS7 and RCVS7 instructions signal this with 1 at output SUBS_ON. The SENDMODE output (RCVS7 instruction) has default setting "0" and is not updated as long as output SUBS_ON = 1.

Behavior in the event of communication errors

If a communication error occurs, for example, due to a signature error (CRC) or when monitoring time TIMEOUT expires, outputs ERROR and SUBS_ON = 1 are set. The receiver (RCVS7 instruction) then provides fail-safe values (initial values in its F-communication DB). Output SENDMODE is not updated while output SUBS_ON = 1.

The send data present in the F-communication DB (SENDS7 instruction) are not output before the communication error is no longer detected (ACK_REQ = 1) and you acknowledge (Page 165) with a positive edge at input ACK_REI of the RCVS7 instruction.

WARNING

For the user acknowledgment, you must interconnect input ACK_REI with a signal generated by the operator input.

An interconnection with an automatically generated signal is not permitted. *(S040)*

Note that output ERROR (1=communication error) will be set for the first time on a communication error if communication has already been established between the connection partners (SENDS7 and RCVS7 instructions). If communication cannot be established after startup of the sending and receiving F-Systems, check the configuration of the safety-related CPU-CPU communication, the parameter assignment of the SENDS7 and the RCVS7 instructions, and the bus connection. You can also receive information on possible error causes by evaluating the STAT_RCV and STAT_SND outputs.

In general, always evaluate STAT_RCV and STAT_SND, since it is possible that only one of the two outputs will contain error information.

If one of the DIAG bits is set at output DIAG, also check whether the length and structure of the associated F-communication DB on both the sending and receiving ends match.

Timing diagrams SENDS7 and RCVS7

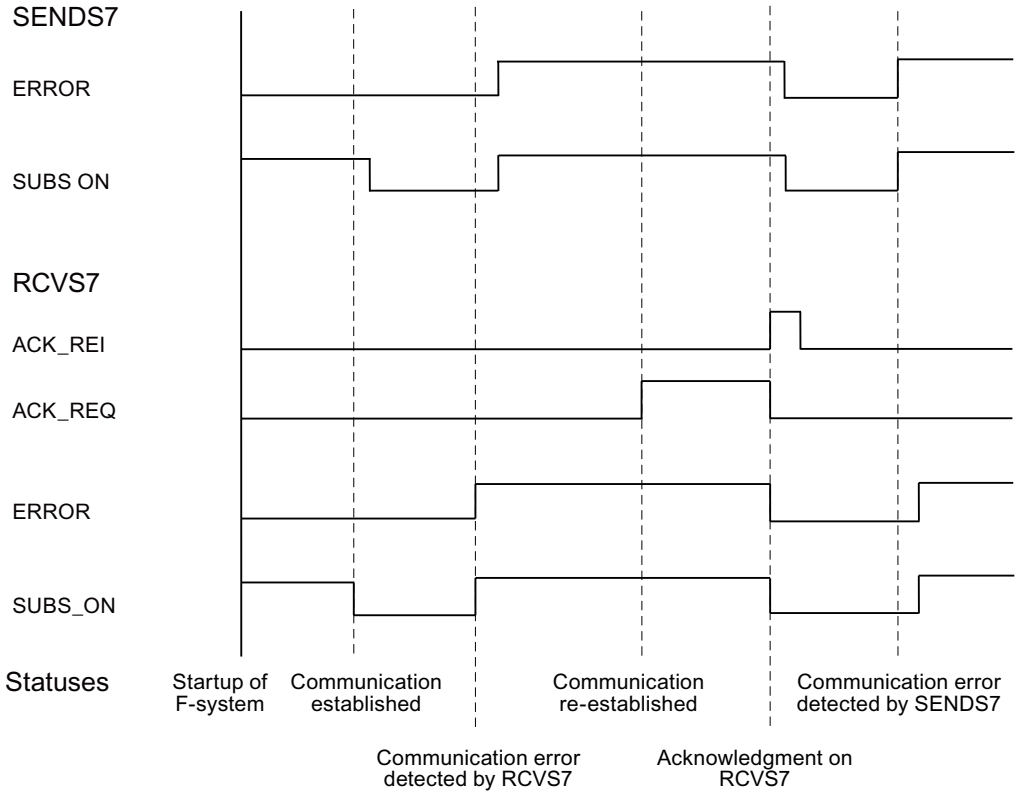

Output DIAG

Non-fail-safe information on the type of communication errors that have occurred is made available at output DIAG for service purposes. You can read out this information by means of operator control and monitoring systems or, if applicable, you can evaluate it in your standard user program. DIAG bits are saved until you acknowledge them at input ACK_REI of the associated RCVS7 instruction.

Structure of DIAG

Bit no.	Assignment of SENDS7 and RCVS7	Possible error causes	Remedies
Bit 0	Reserved	—	—
Bit 1	Reserved	—	—
Bit 2	Reserved	—	—
Bit 3	Reserved	—	—

Bit no.	Assignment of SENDS7 and RCVS7	Possible error causes	Remedies
Bit 4	Timeout detected by SENDS7 and RCVS7	Fault in bus connection to partner F-CPU	Check bus connection and ensure that no external fault sources are present.
		Monitoring time setting for F-CPU and partner F-CPU is too low	Check assigned monitoring time TIMEOUT for SENDS7 and RCVS7 of both F-CPUs. If possible, set a higher value. Recompile safety program
		CPs in STOP mode, or internal fault in CPs	• Switch CPs to RUN mode • Check diagnostic buffer of CPs • Replace CPs, if necessary
		F-CPU/partner F-CPU in STOP mode, or internal fault in F-CPU/partner F-CPU	• Switch F-CPUs to RUN mode • Check diagnostic buffer of F-CPUs • Replace F-CPUs, if necessary
		Communication was shut down with EN_SEND = 0.	Enable communication again at the associated SENDS7 with EN_SEND = 1
		S7 connection has changed, the IP address of the CP has changed, for example	Recompile the safety programs and download them to the F-CPUs
Bit 5	Sequence number error detected by SENDS7 and RCVS7	See description for bit 4	See description for bit 4
Bit 6	CRC-error detected by SENDS7 and RCVS7	See description for bit 4	See description for bit 4
Bit 7	RCVS7: Communication cannot be established	Configuration of the safety-related CPU-CPU communication is incorrect, parameter assignment of the SENDS7 and RCVS7 instructions is incorrect See also description for Bit 4	Check configuration of the safety-related CPU-CPU communication, the parameter assignment of the SENDS7 and the RCVS7 instructions is incorrect See also description for Bit 4
	SENDS7: Reserved	—	—

Monitoring and response times

A

Introduction

In the following, you will learn:

- Which F-specific monitoring times you must configure
- Which rules must be followed when specifying monitoring times
- Where you enter the F-specific monitoring times
- Which rules must be followed with regard to the maximum response time of a safety function

Support for calculations

An Excel file is available on the Internet (https://support.industry.siemens.com/cs/ww/en/view/109783831) to support you in the approximative calculation of the runtimes of the F-runtime groups, the F-specific minimum monitoring times and the maximum response times for your F-system.

Additional information

The monitoring and response times for the standard part are calculated in SIMATIC Safety in exactly the same way as for standard S7-300, S7-400, S7-1200 and S7-1500 automation systems and are not addressed here. For a description of this calculation, refer to the *hardware manuals for the CPUs*. For redundant S7-1500HF systems, also observe the system manual "Redundant System S7-1500R/H (https://support.industry.siemens.com/cs/ww/en/view/109754833)".

A.1 Configuring monitoring times

Monitoring times to be configured

You must configure the following monitoring times:

Monitoring...	Setting...	Parameters	See
F-cycle time or cycle time warning limit of the F-runtime groups that contain the safety program	in *Safety Administration Editor*: • Dialog for definition of an F-runtime group	Maximum cycle time of the F-runtime group	• Procedure for defining an F-runtime group (S7-300, S7-400) (Page 118) • Procedure for defining an F-runtime group (S7-1200, S7-1500) (Page 122)

Monitoring...	Setting...	Parameters	See
of the safety-related communication between F-CPU and F-I/O via PROFIsafe (PROFIsafe monitoring time)	In the *hardware and network editor*: • Centrally when configuring the F-CPU; properties of the F-CPU; or • when configuring the F-I/O; properties of the F-I/O	F-monitoring time F_WD_TIME	• Configuring an F-CPU (Page 43) • Configuring F-I/O (Page 47) • Peculiarities when configuring fail-safe GSD based DP slaves and fail-safe GSD based I/O devices (Page 69)
of the safety-related CPU-CPU communication	At the TIMEOUT input of the instructions: • SENDDP; RCVDP; SENDS7; RCVS7	TIMEOUT	• Communication (Page 529)
(S7-1200, S7-1500) Communication with Flexible F-Link	in Safety Administration Editor: • "Flexible F-Link" area	F-monitoring time of F-communication	• "Flexible F-Link" area (S7-1200, S7-1500) (Page 85) • F-runtime group communication (S7-1200, S7-1500) (Page 128) • Configuring and programming communication with Flexible F-Link (S7-1200, S7-1500) (Page 263)

(S7-300, S7-400) You do not have to configure the monitoring time for safety-related communication between F-runtime groups.

Rules for configuring monitoring times

When configuring monitoring times, you must take into account the availability as well as the safety of the F-system as follows:

- Availability: Sufficiently large monitoring times must be selected so that time monitoring is not exceeded in an error-free scenario.
- Safety: Sufficiently small monitoring times must be selected so that the process safety time of the process is not exceeded.

⚠ WARNING

It can only be ensured (from a fail-safe standpoint) that a signal state to be transferred will be acquired and transferred to the receiver if the signal level is pending for at least as long as the assigned monitoring time. *(S018)*

General procedure for configuring monitoring times

Use the following procedure for configuring monitoring times:

1. Configure the standard system.
   Refer to the applicable *hardware manuals* and *Help on STEP 7* for the necessary information.
2. Configure the specific monitoring times of the F-System with respect to availability. You use the Excel file for response time calculation (https://support.industry.siemens.com/cs/ww/en/view/109783831) to calculate the approximate minimum monitoring time.

   NOTE

   To avoid a triggering of the time monitoring in the special operating and system states of the redundant S7-1500HF system in case of error-free operation, higher minimum monitoring times are required for a redundant S7-1500HF system with regard to availability. This is taken into account accordingly in the Excel file for the response time calculation.

3. Use the Excel file for response time calculation to calculate the maximum response time and then verify that the process safety time of the process is not exceeded. If necessary, you must reduce the specific monitoring times of the F-System.

See also

Redundant System S7-1500R/H
(https://support.industry.siemens.com/cs/ww/en/view/109754833)

A.1.1 Minimum monitoring time for the F-runtime group cycle time

Parameter "Maximum cycle time of the F-runtime group"

You configure the monitoring time for the F-runtime group cycle time in the *Safety Administration Editor* in the work area for definition of the F-runtime group (Page 116).

To prevent F-runtime group cycle time monitoring from being triggered when there are no pending faults and causing the F-CPU to go to STOP, you must set the maximum cycle time of the F-runtime group high enough.

Use the Excel file for response time calculation (https://support.industry.siemens.com/cs/ww/en/view/109783831) to determine the minimum monitoring time for the F-runtime group cycle time. Note also the comments in the Excel file.

For S7-1200/1500 F-CPUs, you can also use the tags TCYC_CURR (Page 136) and TCYC_LONG (Page 136) to determine the current and longest cycle time of the F-runtime group that occurred since the last STOP-RUN transition for dimensioning.

A.1.2 Minimum monitoring time for safety-related communication between F-CPU and F-I/O

Parameter "F-monitoring time"

You have two options for configuring the monitoring time of safety-related communication between the F-CPU and F-I/O:

- Centrally in the *hardware and network editor* during parameter assignment of the F-CPU (Page 43); in the properties of the F-CPU, or
- During parameter assignment of the F-I/O (Page 47) in the *hardware and network editor*; in the properties of the F-I/O

NOTE

Note that in a redundant S7-1500HF system and use of an IO device that does not support system redundancy S2, there is an interruption of PROFINET communication with this device when the primary CPU fails and thus a communication error in the F-I/Os of this IO device, which requires reintegration of the F-I/Os (see section "After communication errors (Page 156)").

For IO devices with system redundancy S2, the redundant S7-1500HF system switches to the backup CPU without interruption if the primary CPU fails. During the primary backup switchover, the fail-safe outputs remain active.

"F-monitoring time" = PROFIsafe monitoring time T_{PSTO}

The specified PROFIsafe monitoring time T_{PSTO} must be high enough to prevent tripping the F-cycle time monitoring when no faults are present.

Use the Excel file for response time calculation (https://support.industry.siemens.com/cs/ww/en/view/109783831) available for SIMATIC Safety to calculate the minimum monitoring time for safety-related communication between the F-CPU and F-I/O.

Note also the comments in the Excel file.

Check to determine whether configured PROFIsafe monitoring time is too short

NOTE

During commissioning of the F-system, you can perform a check while safety mode is active to determine whether the configured PROFIsafe monitoring time is too short.

This check of the PROFIsafe monitoring time is useful if you want to ensure that the configured monitoring time exceeds the minimum monitoring time by a sufficient amount. In this way, you can avoid the possible occurrence of sporadic monitoring time errors.

Procedure:

1. Insert an F-I/O (one that will not be needed later for system operation).
2. Assign a shorter monitoring time for this F-I/O than for the F-I/O of the system.
3. If the additional F-I/O fails and the "Monitoring time for safety message frame exceeded" diagnostic is signaled, you have fallen below the minimum possible PROFIsafe monitoring time.
4. Increase the monitoring time for the added F-I/O just to the point where it no longer fails. This monitoring time corresponds approximately to the minimum possible monitoring time.

Conditions:

The F-I/O to be inserted additionally and the F-I/O whose PROFIsafe monitoring time is to be checked must have the following properties in common:

- They must be inserted in the same rack
- They must be nodes in the same subnet

Tip:

It may be useful to leave the additional F-I/O in place for systems that will be modified or expanded during operation after commissioning. This F-I/O will then provide an early warning in the event of changes in the time behavior, enabling you to avoid a process shutdown triggered by the F-I/O in the process.

In a redundant S7-1500HF system, the check as to whether the configured PROFIsafe monitoring time is too short should be carried out in all operating and system states, because the response times there also depend on the respective operating and system state.

A.1.3 Minimum monitoring time of safety-related CPU-CPU communication

Input TIMEOUT at SENDDP and RCVDP or SENDS7 and RCVS7/F-monitoring time for communication via Flexible F-Link

The time monitoring is performed in the SENDDP and RCVDP (Page 529-530) or SENDS7 and RCVS7 (Page 539) instructions of the communication partner. You must assign the time monitoring with identical monitoring time for both instructions at the TIMEOUT input.

You must specify a monitoring time TIMEOUT that is large enough so that monitoring is not initiated when no faults are present.

For communication via Flexible F-Link, you specify the F-monitoring time for the safety-related communication when creating safety-related communication (Page 85).

Use the Excel file for response time calculation (https://support.industry.siemens.com/cs/ww/en/view/109783831) that is available for SIMATIC Safety to determine the minimum value for TIMEOUT or the F-monitoring time.
Note also the comments in the Excel file.

A.1.4 Monitoring Time for Safety-Related Communication between F-Runtime Groups

Monitoring time for safety-related communication between F-runtime groups (S7-300, S7-400)

The monitoring time for safety-related communication between F-runtime groups with Flexible F-Link is determined automatically from the values of the "Maximum cycle time of F-runtime group" (work area for Definition of the F-runtime group (Page 116) in the *Safety Administration Editor*).
Monitoring time = (maximum cycle time of the 1st F-runtime group) + (maximum cycle time of the 2nd F-runtime group)

Monitoring time for safety-related communication between F-runtime groups (S7-1200, S7-1500)

You can calculate the monitoring time for safety-related communication between F-runtime groups from the values for the "Maximum cycle time of the F-runtime group" (area for Definition of the F-runtime group (Page 116) in the *Safety Administration Editor*), if you place the default user program for the F-runtime group communication into pre-/postprocessing (Page 77).
Monitoring time = (Maximum cycle time of the 1st F-runtime group) + (Maximum cycle time of the 2nd F-runtime group).

A.2 Response Times of Safety Functions

Definition of response time

The response time is the time from detection of an input signal until the linked output signal changes.

Fluctuation range

The actual response time lies between a minimum response time and maximum response time. You must always take the maximum response time into account in your system configuration.

Also note the comments in the Excel file for response time calculation (https://support.industry.siemens.com/cs/ww/en/view/109783831).

NOTE

In a redundant S7-1500HF system, the current operating and system state influences the actual response time.

Rules for maximum response time of a safety function

The maximum response time of a safety function must be shorter than the process safety time of the process.

Definition for process safety time of a process

The process safety time of a process is the time interval between the occurrence of an error, within which the process can be left on its own without causing injury to operating personnel or damage to the environment, and the point in time the response is completed.

The controlling F-system can perform any control during the process safety time, this includes incorrectly or not at all. The process safety time of a process depends on the process type and must be determined on a case-by-case basis.

Procedure for response time calculation

The Excel file for response time calculation (https://support.industry.siemens.com/cs/ww/en/view/109783831) is available for calculating the maximum response time of a safety function.

Use the Excel file to calculate the approximate maximum response time of the safety function and then check that the process safety time of the process is not exceeded.

If necessary, you must reduce the specific monitoring times of the F-system (see Minimum monitoring time for safety-related communication between F-CPU and F-I/O (Page 548)).

WARNING

You may only use the Excel file for response time calculation or for timeout calculation when using Flexible F-Link communication, if you have observed the following instructions with regard to the standard instructions for consistent transfer of data:

CPU-CPU communication (Page 263)

You must call the standard instruction for consistent sending of data and acknowledgment in the post-processing of the F-runtime group (Page 77). With the standard instructions for receiving data and acknowledgments consistently, you must differentiate whether or not the standard communication connection is deterministic. For deterministic connections (such as DPRD_DAT / DPWR_DAT), you need to call the standard instruction in the pre-processing of the F-runtime group (Page 77). If the connection is non-deterministic (e.g. S7 connection, TCP connections), you must call the standard instruction in a cyclic interrupt OB. This cyclic interrupt OB must be called at shorter intervals than the F-runtime group. A ratio of 1:5 is recommended for this.

F-runtime group communication (Page 128)

You have to call up the standard instruction UMOVE_BLK for transferring the data to be sent in the postprocessing of the sending F-runtime group. You have to call the standard instruction UMOVE_BLK for transferring the acknowledgment to be sent in the postprocessing of the receiving F-runtime group. *(S089)*

WARNING

The response time of your safety function depends, among other things, on the cycle time of the F-OB, the runtime of the F-runtime group and, when distributed F-I/O is used, the parameter assignment of PROFINET/PROFIBUS.

Therefore, the configuration/parameter assignment of the standard system influences the response time of your safety function.

Examples:

- Increasing the priority of a standard OB compared to an F-OB can extend the cycle time of the F-OB or the runtime of the F-runtime group due to the higher-priority processing of the standard OB. Note that during the creation of technology objects, OBs with very high priority may be created automatically.
- The change of the send clock cycle of PROFINET changes the cycle time of an F-OB with event class "Synchronous cycle".

Note that the configuration / parameter assignment of the standard system is not subject to access protection for the safety program and does not lead to a modification of the Collective F-Signature.

If you do not take organizational measures to prevent changes in the configuration / parameter assignment of the standard system with influence on the response time, you must always use the monitoring times for the calculation of the maximum response time of a safety function (see Configuring monitoring times (Page 546)).

The monitoring times are protected against change with the access protection of the safety program and are recorded by the Collective F-Signature as well as the Collective F-SW-Signatures.

When calculating with the Excel file for response time calculation (https://support.industry.siemens.com/cs/ww/en/view/109783831) you need to consider the value that is specified for "Any standard system runtimes" as value for the maximum response time. *(S085)*

Checklist

B

Life cycle of fail-safe automation systems

The following table contains a checklist summarizing all activities in the life cycle of a fail-safe SIMATIC Safety system, including requirements and rules that must be observed for each activity.

Checklist

Legend:

- Stand-alone section references refer to this documentation.
- *"F-SMs Manual"* refers to the Automation System S7-300, ET 200M Distributed I/O System, Fail-Safe Signal Modules (http://support.automation.siemens.com/WW/view/en/19026151) manual.
- *"F-Modules Manual"* refers to the ET 200S Distributed I/O System, Fail-Safe Modules (http://support.automation.siemens.com/WW/view/en/27235629) manual.
- *"ET 200eco Manual"* refers to the ET 200eco Distributed I/O Station, Fail-Safe I/O Module (http://support.automation.siemens.com/WW/view/en/19033850) manual.
- *"ET 200eco PN Manual"* refers to the ET 200eco PN F-DI 8 x 24 VDC, 4xM12 / F-DQ 3 x 24 VDC/2.0A PM, 3xM12 (https://support.industry.siemens.com/cs/ww/en/view/109765611) manual.
- *"ET 200pro Manual"* refers to the ET 200pro Distributed I/O System, Fail-Safe I/O Module (http://support.automation.siemens.com/WW/view/en/22098524) manual.
- *"ET 200iSP Manual"* refers to the ET 200iSP Distributed I/O Device, Fail-Safe Modules (http://support.automation.siemens.com/WW/view/en/47357221) manual.
- *"ET 200SP Manual"* refers to the ET 200SP System (http://support.automation.siemens.com/WW/view/en/58649293) manual
- *"ET 200AL Manual"* refers to the ET 200AL System Manual (https://support.industry.siemens.com/cs/ww/en/view/89254965)
- *"ET 200MP Manual"* refers to the S7-1500/ET 200MP Distributed I/O System (http://support.automation.siemens.com/WW/view/en/59191792) manual
- *"S7-1500R/H Manual"* refers to the S7-1500R/H System Manual (https://support.industry.siemens.com/cs/ww/en/view/109754833)
- *"HB SIMATIC Drive Controller"* refers to the SIMATIC Drive Controller System Manual (https://support.industry.siemens.com/cs/ww/en/view/109766665) manual
- *"ET 200SP Modules Manual"* refers to the equipment manuals for F-Modules of the ET 200SP Distributed I/O System (https://support.industry.siemens.com/cs/ww/en/ps/14059/man)
- *"ET 200SP Modules Manual"* refers to the equipment manuals for F-Modules of the ET 200MP Distributed I/O System (https://support.industry.siemens.com/cs/ww/en/ps/14141/man)
- *"ET 200AL Module Manual"* refers to the equipment manual F-Modules of the ET 200AL Distributed I/O System (https://support.industry.siemens.com/cs/ww/en/view/109798489)

Phase	Note the following	Reference	Check
Planning			
Requirement: "Safety requirements specification" available for the intended application	Process-dependent	—	
Specification of system architecture	Process-dependent	—	
Assignment of functions and subfunctions to system components	Process-dependent	under Product Overview (Page 22)	
Selection of sensors and actuators	Requirements for actuators	*F-SMs Manual*, section 6.5; *F-Modules Manual*, section 4.5; *ET 200eco Manual*, section 5.5 *ET 200eco PN Manual*, section 5.2; *ET 200pro Manual*, section 4.4 *ET 200iSP Manual*, section 4.5 *ET 200SP Manual*, section 6.2.2 *ET 200MP Manual*, section 6.2.2	
Specification of required safety properties for individual components	IEC 61508:2010	—	
Configuration			
Installing license	Requirement for installation	under Installing/uninstalling the STEP 7 Safety Basic V18 license (Page 29) orInstalling/uninstalling the STEP 7 Safety Advanced V18 license (Page 29)	
Selection of S7 components	Descriptions of configuration	under Product Overview (Page 22); *F-SMs Manual*, section 3; *F-Modules Manual*, section 3; *ET 200eco Manual*, section 3 *ET 200eco PN Manual*, section 4; *ET 200pro Manual*, section 2 *ET 200iSP Manual*, section 3 *ET 200SP Manual*, section 4 *ET 200AL Manual*, section 3 *ET 200MP Manual*, section 4 *S7-1500R/H Manual*, section 4 *HB SIMATIC Drive Controller*, section 4	
Configuration of hardware	• Description of F-systems • Verification of utilized hardware components based on Annex 1 of Report in the Certificate	under Configuring (Page 39); Annex 1 of Report on the Certificate	
Configuration of F-CPU	• Protection level, "Write protection for F-blocks" (S7-300, S7-400) • Protection level, at least "Full access" (S7-1200, S7-1500) • Password • F-capability enabled	under Configuring an F-CPU (Page 43); *Standard-S7-300 Manual;* *Standard-S7-400 Manual;* *Standard-S7-1200 Manual;* *Standard-S7-1500 Manual;* under Monitoring and response times (Page 546)	

Phase	Note the following	Reference	Check
	• Definition/setting of F-specific parameters • Cycle time for the F-runtime group in which the safety program is to be executed, defined in accordance with the requirements and safety regulations - same as with standard system		
Configuration of F-I/O	• Settings for safety mode • Setting of passivation type • Configuring monitoring times • Defining sensor evaluation • Defining diagnostic behavior • Special F-parameters • Assigning names • Unique PROFIsafe address	under Configuring F-I/O (Page 47) orPeculiarities when configuring fail-safe GSD based DP slaves and fail-safe GSD based I/O devices (Page 69) under Monitoring and response times (Page 546); *F-SMs Manual*, sections 3, 9, 10; *F-Modules Manual*, sections 2.4, 7; *ET 200eco Manual*, sections 3, 8; *ET 200eco PN Manual*, section 6; *ET 200pro Manual,* Sections 2.4, 8; *ET 200iSP Manual,* Sections 2.4, 7, 8 *ET 200SP Modules Manual*, section 4 *ET 200MP Modules Manual*, section 4 *ET 200AL Module Manual*, section 4	
Programming			
Defining program design and structure	• Follow warnings and notes on programming	under Overview of Programming (Page 96), Program structure of the safety program (S7-300, S7-400) (Page 96), Program structure of the safety program (S7-1200, S7-1500) (Page 98); Programming startup protection (Page 137);	
Creating the F-runtime groups	• Assignment of F-FB or F-FC as main safety block to the calling block (S7-300, S7-400) or F-OB (S7-1200, S7-1500) • Setting maximum cycle time for the F-runtime group in accordance with requirements (dependent on process and safety regulations) • Creating DB for F-runtime group communication • (S7-300, S7-400) Call of main safety blocks directly in OBs (e.g. OB 35), FBs, or FCs • (S7-1200, S7-1500) Call of the main safety block from the F-OB	under Defining F-Runtime Groups (Page 116) under Monitoring and response times (Page 546)	
Creating/inserting the F-blocks	• Generating, editing, and saving F-FBs, F-FCs, and F-DBs in accordance with the requirements of the program structure	under Creating F-blocks in FBD / LAD (Page 132) under Addressing F-I/O (Page 139) under Implementation of user acknowledgment (Page 165) under Reuse of F-blocks (Page 134) under Configuring and programming communication (S7-300, S7-400) (Page 176) and Configuring and programming communication (S7-1200, S7-1500) (Page 231)	

Phase	Note the following	Reference	Check
	• Description: – F-I/O access – Passivation and reintegration of F-I/O – Inserting F-blocks from global libraries – Safety-related CPU-CPU communication – Communication with the standard user program	under Data exchange between standard user program and safety program (Page 172)	
Compiling the safety program	—	under Compiling the safety program (Page 272)	
Implementing safety program call (S7-300, S7-400)	Check whether the main safety block is called directly in OBs (e.g., OB 35), FBs, or FCs.	under Defining F-Runtime Groups (Page 116)	
Installation			
Hardware configuration	Description of • Installation • Wiring	under Overview of Configuration (Page 39); Particularities for configuring the F-System (Page 42); *F-SMs Manual*, sections 5, 6; *F-Modules Manual*, sections 3, 4; *ET 200eco Manual*, sections 3, 4; *ET 200eco PN Manual*, sections 4, 5; *ET 200pro Manual,* Sections 2, 3; *ET 200iSP Manual,* sections 3 and 4; *ET 200SP Manual*, sections 5 and 6 *ET 200AL Manual*, sections 4, 5 *ET 200MP Manual*, sections 5 and 6 *S7-1500R/H Manual*, sections 5, 6 *HB SIMATIC Drive Controller*, section 5, 6	
Commissioning, Testing			
Switching on	Description of commissioning – same as in standard	*Standard-S7-300 Manual;* *Standard-S7-400 Manual;* *Standard-S7-1200 Manual;* *Standard-S7-1500 Manual;* *Standard-S7-1500 Software Controller Manual;* *WinAC RTX F Manual* *S7-1500R/H Module Manual* *HB SIMATIC Drive Controller Manual*	
Downloading safety program and standard user program	Description • Downloading • Program identification • Comparing safety programs	under Downloading project data (Page 273) under Comparing Safety Programs (Page 303)	
Testing the safety program	• Description of disabling of safety mode • Procedures for changing safety program data	under Downloading project data (Page 273); Testing the safety program (Page 313); Disabling safety mode (Page 310)	

Phase	Note the following	Reference	Check
Changing the safety program	Description • Disabling safety mode • Changing the safety program	under Changing the safety program in RUN mode (S7-300, S7-400) (Page 319), Safety program in RUN mode (S7-1200, S7-1500) (Page 321), Disabling safety mode (Page 310), Deleting the safety program (Page 115)	
Testing the safety-related parameters	Description of configuration	under Creating a safety summary (Page 306); *F-SMs Manual*, sections 4, 9, 10; *F-Modules Manual*, sections 2.4, 7; *ET 200eco Manual*, sections 3, 8; *ET 200eco Manual*, section 6; *ET 200pro Manual,* Sections 2.4, 8; *ET 200iSP Manual,* Sections 2.4, 7, 8 *ET 200SP Modules Manual*, section 4 *ET 200MP Modules Manual*, section 4 *ET 200AL Module Manual*, section 4	
System acceptance			
Acceptance	• Description and notes on acceptance • Printouts	under System acceptance (Page 329)	
Operation, maintenance			
General operation	Notes on operation	under Notes on Safety Mode of the Safety Program (Page 350)	
Access protection	—	under Access protection (Page 88)	
Diagnostics	Responses to faults and events	under Guide to diagnostics (S7-300, S7-400) (Page 356); Guide to diagnostics (S7-1200) (Page 358); Guide to diagnostics (S7-1500) (Page 358);	
Replacement of software and hardware components	Description • Module replacement • Update of operating systems of F-CPU – same as in standard • Update of SW components Notes • Operating system update of IMs	under Replacing Software and Hardware Components (Page 353); Addressing F-I/O (Page 139); Help on *STEP 7*	
Uninstalling the license, Disassembly	• Notes for uninstalling the license • Notes for disassembling modules	under Installing/uninstalling the STEP 7 Safety Basic V18 license (Page 29); Installing/uninstalling the STEP 7 Safety Advanced V18 license (Page 29); Replacing Software and Hardware Components (Page 353);	

Glossary

Access protection

→ Fail-safe systems must be protected against dangerous, unauthorized access. Access protection for F-systems is implemented by assigning a password for the → F-CPU and a password or → project protection for the → safety program).

Automatically generated F-blocks

→ F-blocks that are automatically generated and, if necessary, called when the → safety program is compiled, in order to generate an executable safety program from the safety program programmed by the user.

Category

Category in accordance with ISO 13849-1:2015 or EN ISO 13849-1:2015
With SIMATIC Safety, use in → safety mode up to category 4 is possible.

Channel fault

Channel-specific fault, such as a wire break or short circuit.

Collective F-HW-Signature

The Collective F-HW-Signature uniquely identifies a particular state of safety-related hardware configuration. The Collective F-HW-Signature is important to document the change/non-change of the safety-related hardware configuration, for example in the context of an acceptance of changes.

Collective F-Signature

The Collective F-Signature uniquely identifies a particular state of safety-related project data. It is important for the program identification as well as the on-site acceptance of the safety program, for example by → experts.

Collective F-SW-Signature

The Collective F-SW-Signature uniquely identifies a particular state of the safety program. The Collective F-SW-Signature is important to document the change/non-change of the safety program, for example in the context of an acceptance of changes.

CPU-wide

In the context of F-I/Os, "CPU-wide" means all F-I/Os assigned to an F-CPU: Central F-I/O of this F-CPU as well as F-I/Os for which the F-CPU is DP master/IO controller and assigned F-I/O in a shared device. An F-I/O that is addressed using I-slave-slave communication is assigned to the F-CPU of the I-slave and not to the F-CPU of the DP master / IO controller.
In the context of safety-related CPU-CPU communication, "CPU-wide" encompasses all the safety-related communication connections that are configured in an F-CPU.

With a redundant S7-1500HF system, both F-CPUs of the redundant S7-1500HF system are to be regarded as one F-CPU.

CRC

Cyclic Redundancy Check → CRC signature

CRC signature

The validity of the process data in the → safety message frame, the correctness of the assigned address relationships, and the safety-related parameters are validated by means of a CRC signature contained in the safety message frame.

DB for F-runtime group communication

-> F-DB for safety-related communication between F-runtime groups of a safety program.

Depassivation

→ Reintegration

Disabled safety mode

Temporary deactivation of → safety mode for test purposes, commissioning, etc.
A timer is started when safety mode is deactivated. After the timer has expired, the → F-CPU goes to STOP. The time for the timer is parameterizable.
The following actions are possible only in deactivated safety mode:

- Downloading changes of the → safety program to the -> F-CPU during operation (in RUN mode)
- Test functions such as "Modify" or other write access to data of the → safety program (with limitations)

Whenever safety mode is deactivated, the safety of the system must be ensured by other organizational measures, such as operation monitoring and manual safety shutdown.

Discrepancy analysis

Discrepancy analysis for equivalence or non-equivalence is used for fail-safe inputs to detect errors caused by the time characteristic of two signals with the same functionality. The discrepancy analysis is initiated when different levels are detected in two associated input signals (when testing for non-equivalence: the same level). On expiration of an assignable period (→ discrepancy time), a check is made to determine whether the difference in levels (for non-equivalence testing, the same level) has disappeared after an assignable time period, the so-called discrepancy time. If not, there is a discrepancy error. The discrepancy analysis is performed between the two input signals of the 1oo2 evaluation of the sensors (→ sensor evaluation) in the fail-safe input.

Discrepancy time

Assignable time for the → discrepancy analysis. If the discrepancy time is set too high, the fault detection time and → fault reaction time are prolonged unnecessarily. If the discrepancy time is set too low, availability is decreased unnecessarily because a discrepancy error is detected when, in reality, no error exists.

DP/DP coupler

Device for coupling two PROFIBUS DP subnets required for master-master communication between → safety programs in different → F-CPUs in SIMATIC Safety and S7 Distributed Safety.

Expert

The acceptance of a system, i.e., the safety-related acceptance test of the system, is usually carried out by an independent expert (for example, from TÜV).

Fail-safe GSD based DP slaves

Fail-safe GSD based DP slaves are standard slaves that are operated on PROFIBUS with the DP protocol. They must operate in accordance with IEC 61784-1:2010 (Fieldbus profiles) and the PROFIsafe bus profile. A GSD file is used for their configuration.

Fail-safe GSD based I/O devices

Fail-safe GSD based I/O devices are standard devices that are operated on PROFINET with the I/O protocol. They must operate in accordance with IEC 61784-1:2010 (Fieldbus profiles) and the PROFIsafe bus profile in V2-MODE. A GSD file is used for their configuration.

Fail-safe I/O modules

ET 200AL modules, ET 200eco modules and ET 200eco PN modules that can be used for safety-related operation (→ Safety mode). These modules are equipped with integrated → safety functions. They operate in accordance with IEC 61784-1:2010 (Fieldbus profiles) and the PROFIsafe bus profile.

Fail-safe modules

Fail-safe modules ET 200SP, ET 200S, ET 200pro, ET 200iSP that can be used in the ET 200SP, ET 200S, ET 200pro or ET 200iSP distributed I/O systems.

Fail-safe modules S7-1500/ET 200MP, which can be used centrally in an S7-1500 or in a distributed I/O ET 200MP system.

Fail-safe module S7-1200 which can be used centrally in an S7-1200 system.

These modules are equipped with integrated safety functions (→ Safety mode) for fail-safe operation (→ Fail-safe operation). They operate in accordance with the → PROFIsafe bus profile.

Fail-safe systems

Fail-safe systems (F-systems) are systems that remain in a safe state or immediately switch to another safe state as soon as particular failures occur.

Fault reaction function

→ User safety function

Fault reaction time

The maximum fault reaction time for an F-system specifies the time between the occurrence of any error and a safe reaction at all affected fail-safe outputs.

F-blocks

The following fail-safe blocks are designated as F-blocks:

- those created by the user in LAD or FBD
- those created by the user as → F-DBs
- those selected by the user from a global library
- those added automatically in the → safety program (→ F-SBs, → automatically generated F-blocks, → F-shared DB, → F-I/O DBs; instance DBs of F-FBs)

All F-blocks are shown in yellow in the project tree.

F-CALL

"F-call blocks" for the → safety program in *S7 Distributed Safety*.

F-Communication Address Signature

The F-communication address signature is formed from the names and the F-communication UUIDs of communication connections with Flexible F-Link that are used in the safety program.

F-communication DBs

Fail-safe data blocks for the

- safety-related CPU-CPU communication via S7 connections
- Communication with Flexible F-Link

F-compliant PLC data type (UDT)

An F-compliant PLC data type (UDT) is a PLC data type (UDT) in which you can use all data types that can be used in safety programs.

F-CPU

An F-CPU is a central processing unit with fail-safe capability that is approved for use in SIMATIC Safety and in which a → safety program can run in addition to the → standard user program.

F-cycle time

The F-cycle time is the time between two calls of an F-runtime group. It is monitored by the F-CPU. As soon as it exceeds the maximum F-cycle time (property of the F-runtime group), the F-CPU is set to the STOP operating state.

(S7-1200, S7-1500): The F-runtime group also has a warning limit. If the F-cycle time exceeds this warning limit, an entry is written to the diagnostic buffer.

F-DBs

Optional fail-safe data blocks that can be read-/write-accessed from anywhere within the safety program (exception: DBs for F-runtime group communication).

F-destination address

→ PROFIsafe address

F-FBs

Fail-safe function blocks (with instance DBs), in which the user programs the → safety program in FBD or LAD.

F-FCs

Fail-safe FCs, in which the user programs the → safety program in → FBD or → LAD.

F-I/O

Collective name for fail-safe inputs and outputs available in *SIMATIC S7* for integration in SIMATIC Safety, among others. The following are available:

- → ET 200eco fail-safe I/O module
- → ET 200eco PN fail-safe I/O module
- → ET 200AL fail-safe I/O module
- → S7-300 fail-safe signal modules
- → Fail-safe modules for S7-1200
- → Fail-safe modules for ET 200MP
- → Fail-safe modules for ET 200SP
- → Fail-safe modules for ET 200S
- → Fail-safe modules for ET 200pro
- → Fail-safe modules for ET 200iSP
- → Fail-safe GSD based DP slaves
- → Fail-safe GSD based I/O devices

F-I/O DB

Fail-safe data block for F-CPUs to an → F-I/O in *STEP 7 Safety*. An F-I/O DB is automatically created for each F-I/O when the F-I/O is configured in the *hardware and network editor*. The F-I/O DB contains tags that the user can or must evaluate or write in the safety program as follows:

- For reintegration of the F-I/O after communication errors
- For reintegration of F-I/O after F-I/O or channel faults
- If the F-I/O must be passivated as a result of particular states of the safety program (for example, group passivation)
- For reassignment of parameters for fail-safe GSD based DP slaves/GSD based I/O devices or enabling HART communication for the F-I/O with the corresponding functionality
- In order to evaluate whether fail-safe values or process data are output

F-I/O faults

Module-related F-I/O fault, such as a communication error or parameter assignment error

F-I/Os of PROFIsafe address type 1

F-I/Os which ensure the uniqueness of the PROFIsafe address solely with the F-destination address, for example, ET 200S F-modules. The PROFIsafe address is usually assigned by DIP switches.

F-I/Os of PROFIsafe address type 2

F-I/Os which can ensure the uniqueness of the PROFIsafe address with a combination of F-source address and F-destination address, for example, S7-1500/ET 200MP F-modules. The PROFIsafe address is usually assigned with *STEP 7 Safety*.

F-modules

→ Fail-safe modules

F-OB

The F-OB calls the main safety block of an F-runtime group in S7-1200/1500 F-CPUs.

F-runtime group

The → safety program consists of one or two F-runtime groups. An F-runtime group is a logical construct of several associated → F-blocks. It is generated internally by the F-system. An F-runtime group consists of the following F-blocks:

→ Main safety block, F-OB (S7-1200, S7-1500), if applicable → F-FBs/ → F-FCs, if applicable → F-DBs, → F-I/O DBs, F-blocks of global libraries, instance DBs, → F-SBs, and → automatically generated F-blocks.

F-runtime group information DB

The F-runtime group information DB provides key information on the corresponding → F-runtime group and on the → safety program as a whole.

F-shared DB

(S7-300, S7-400) Fail-safe data block that contains all of the shared data of the → safety program and additional information needed by the F-system. The F-shared DB is automatically inserted and expanded when the hardware configuration is compiled. Using its name F_GLOBDB, the user can evaluate certain data of the → safety program.

F-SMs

→ S7-300 fail-safe signal modules

F-source address

→ PROFIsafe address

F-system blocks

Fail-safe system blocks that are automatically inserted and called when the → safety program is compiled in order to generate an executable safety program from the user's safety program.

F-systems

→ Fail-safe systems

Hardware configuration

The hardware configuration includes the configuration of standard CPUs and standard I/Os as well as the configuration of F-CPUs and F-I/Os.

I-device

The functionality of the "I-device" (intelligent I/O-device) of a CPU allows data exchange with an I/O-controller and thus, its use as an intelligent preprocessor of sub-processes, for example. In this case, the I-device is connected as an I/O-device to a "parent" I/O-controller.

IE/PB link

Device for coupling PROFINET IO and PROFIBUS DP-systems required, among other things, for IO-controller-I-slave communication between -> safety programs in different → F-CPUs in SIMATIC Safety.

i-parameter

Individual parameters of → fail-safe GSD based DP slaves and → fail-safe GSD based I/O devices

I-slave

The functionality of the "I-slave" (intelligent DP slave) of a CPU allows data exchange with a DP master and, thus, its use as an intelligent preprocessor of sub-processes, for example. In this case, the I-slave is connected as a DP slave to a "parent" DP master.

Main safety block

"Introductory F-block" for fail-safe programming of the → safety program in *STEP 7 Safety*. The main safety block is an → F-FB or → F-FC that the user assigns to the calling F-OB (S7-1200, S7-1500) or block (OB, FC, FB) (S7-300, S7-400) of an → F-runtime group.

The main safety block contains the safety program and any calls of other → F-FBs/F-FCs for program structuring.

Network-wide

A network consists of one or more subnets. "Network-wide" means beyond the boundaries of the subnet. In PROFIBUS, a network includes all the nodes accessible via PROFIBUS DP. In PROFINET IO, a network includes all nodes accessible via RT_Class_1/2/32 (Ethernet/WLAN/Bluetooth, Layer 2) and if applicable RT_Class_UDP (IP, Layer 3).

Organizational measures

For the *SIMATIC Safety* F-system, these are suitable measures to be defined by the operator of the plant:

- To ensure the safety of the plant in certain operating situations, for example:
  - Monitored operation with manual safety shutdown
  - Operating instructions
  - Regular instructions
- To protect the plant against unauthorized operation or access, for example:
  - Access control to the plant or to the F-CPU or to the PG/PC
  - Operating instructions
  - Regular instructions

Passivation

When passivation occurs in an → F-I/O with inputs, the → F-system provides the safety program with fail-safe values (0) instead of the process data pending at the fail-safe inputs in the PII.

When passivation occurs in an F-I/O with outputs, the F-system transfers fail-safe values (0) to the fail-safe outputs instead of the output values in the PIQ provided by the safety program.

PL

Performance Level (PL) in accordance with ISO 13849-1:2015 or EN ISO 13849-1:2015

With SIMATIC Safety, use up to Performance Level (PL) e is possible in → safety mode.

PN/PN coupler

Device for coupling two PROFINET IO systems required for IO controller-IO controller communication between → safety programs in different → F-CPUs in SIMATIC Safety and S7 Distributed Safety.

Productive operation

Operation of a plant in the specified runtime environment for which the safety requirements have been specified and in which all safety requirements must be observed.

By contrast, safety requirements in a test or simulation environment must only be implemented to a limited extent because the risk potential is not the same (for example, there are no physical actuators that could pose a risk).

PROFIsafe

Safety-related bus profile of PROFIBUS DP and PROFINET IO for communication between the → safety program and the → F-I/O in an → F-system. See IEC 61784-3-3:2021 or PROFIsafe – Profile for Safety Technology on PROFIBUS DP and PROFINET IO; Order No: 3.192 (V2.6.1).

PROFIsafe address

The PROFIsafe address (code name according to IEC 61784-3-3:2021) is used as a safety measure for standard addressing mechanisms, such as IP addresses. The PROFIsafe address consists of an F-source address and an F-destination address. Each → F-I/O therefore has two address parts, an F-source address and an F-destination address.

The F-source address is automatically assigned and is displayed for fail-safe GDS based DP slaves/fail-safe GSD-based I/O devices and ET 200SP F-modules, ET 200MP F-modules, ET 200AL F-modules, ET 200eco PN and S7-1200 F-modules. The F-source address for F-modules ET 200S, ET 200eco, ET 200pro, ET 200iSP and F-SMs S7-300 is always 1. For ET 200SP F-modules, ET 200MP F-modules, ET 200AL F-modules and ET 200eco PN, the F-source address corresponds to the "Central F-source address" parameter of the assigned F-CPU.

You need to configure the F-destination address in the *hardware and network editor*. You assign the F-destination address for the ET 200S, ET 200eco, ET 200pro, ET 200iSP and F-SMs S7-300 F-modules with a switch. For ET 200SP F-modules, ET 200MP F-modules, ET 200AL F-modules and ET 200eco PN assign the PROFIsafe address in the *hardware and network editor*. For S7-1200 F-modules, the F-destination address is automatically assigned by the F-system.

Program signature

→ Collective F-Signature

Project data

The project data includes the → hardware configuration and the → user program.

Project protection

A user administration (UMAC - User Management and Access Control) to create and manage users and roles for projects. In addition, you can protect your project and determine which users are allowed to carry out which functions. For safety-related project data, you have the function right "Edit safety-related project data".

Redundant systems

Redundant systems are characterized by the fact they contain important automation components present multiple times (redundantly). If a redundant component fails, control of the process is maintained.

Reintegration

The switchover from fail-safe values (0) to process data (reintegration of an → F-I/O) takes place automatically or following user acknowledgment in the F-I/O DB. The reintegration method depends on the following:

- The reason for → passivation of the F-I/O/channels of the F-I/O
- The parameter assignment in the → F-I/O DB or in the configuration itself (for example, ET 200MP fail-safe modules on an S7-1500 F-CPU and S7-1200 fail-safe modules on an S7-1200 F-CPU)

Following reintegration for an → F-I/O module with inputs, the process data pending at the inputs in the PII are provided again for the safety program. For an F-I/O with outputs, the F-system again transfers the output values provided in the PIQ in the safety program to the fail-safe outputs.

RIOforFA Safety

Remote IO for Factory Automation with PROFIsafe; profile for F-I/O

S7-300 fail-safe signal modules

Fail-safe signal modules of the S7-300 module series that can be used for safety-related operation (→ Safety mode) as centralized modules in an S7-300 or as distributed modules in the ET 200M distributed I/O system. The fail-safe signal modules are equipped with integrated → safety functions. They operate in accordance with the → PROFIsafe bus profile.

S7-PLCSIM

The *S7-PLCSIM* application enables you to execute and test your program on a simulated automation system on your programming device or PC. Because the simulation takes place completely in your programming device or PC, you do not need any hardware (CPU, I/O).

Safe state

The basic principle of the safety concept in → fail-safe systems is the existence of a safe state for all process variables. For digital → F-I/O that conform to IEC 61508:2010, this is always the value "0".

Safety Administration Editor

The *Safety Administration Editor* provides support for the main tasks of your safety program.

Safety function

Mechanism integrated in the → F-CPU and → F-I/O that allows them to be used in -> fail-safe systems.
According to IEC 61508:2010, a function that is implemented by a safety device in order to maintain the system in the safe state or bring the system to a safe state in the event of a specific fault. (fault reaction function -> user safety function)

Safety message frame

In → safety mode, data are transferred in a safety message frame between the → F-CPU and → F-I/O, or between the F-CPUs in safety-related CPU-CPU communication.

Safety mode

1. Operating mode of → F-I/O in which → safety-related communication can take place using → safety message frames.
2. Operating mode of the safety program. In safety mode of the safety program, all safety mechanisms for error detection and fault reaction are enabled. In safety mode, the safety program cannot be modified during operation. Safety mode can be disabled by the user (→ disabled safety mode).

Safety program

Safety-related user program

Safety protocol

→ Safety message frame

Safety summary

The safety summary provides documentation of the safety-related project data which supports you during acceptance of the system. For this purpose, the safety summary can also be used in electronic form, for example as PDF file.

Safety Unit

A Software Unit that contains the entire safety program of an F-CPU.

Safety-related communication

Safety-related communication is used to exchange fail-safe data.

Safety-related hardware configuration

The safety-related hardware configuration includes the safety-related parameters of the F-CPUs and F-I/Os.

Safety-related project data

The safety-related project data includes the safety-related hardware configuration as well as the → safety program.

Sensor evaluation

There are two types of sensor evaluation:

- 1oo1 evaluation – sensor signal is read once
- 1oo2 evaluation - sensor signal is read twice by the same → F-I/O and compared internally

Shared device

The "Shared Device" functionality enables distribution of the submodules of an IO-device between different IO-controllers.

Signature

→ Collective F-Signature

SIL

Safety integrity level SIL in accordance with IEC 61508:2010. The higher the Safety Integrity Level, the more rigid the measures for prevention of systematic faults and for management of systematic faults and random hardware failures.
With SIMATIC Safety, up to Safety Integrity Level SIL3 is possible in safety mode.

Standard communication

Communication used to exchange non-safety-related data

Standard mode

Operating mode of → F-I/O in which → safety-related communication between the F-CPU and the F-I/O by means of → safety message frames is not possible; only → standard communication is possible in this operating mode.

Standard project data

The standard project data includes the standard hardware configuration and the → standard user program.

Standard user program

Non-safety-related user program

Startup of F-system

See section "Notes on startup of the F-system".

User program

The user program comprises the → standard user program and the → safety program.

User safety function

The → safety function for the process can be provided through a user safety function or a fault reaction function. The user only has to program the user safety function. In the event of an error, if the → F-system can no longer execute its actual user safety function, it executes the fault reaction function: for example, the associated outputs are disabled, and the → F-CPU switches to STOP mode, if necessary.

Value status

The value status is additional binary information for a channel value. The value status is entered in the process image input and provides information on the validity of the channel value.

1: A valid process data is output for the channel value.

0: A fail-safe value is output for the channel value.

Versioned instruction

Instruction for which a version is displayed in the "Version" column of the "Instructions" task card:

Index

=

=, 382

A

ABS, 484

Acceptance, 69
  of system, 329
  of safety-related changes, 345

Acceptance of safety-related changes, 345

Access
  To tags of F-I/O DB, 153

Access permission
  Validity, 89
  Setup for F-CPU, 93
  Canceling, 94
  Validity, 94

Access protection, 88
  safety-related project data, 89
  Setting up for the safety program, 89
  CPU-wide, 89
  UMAC, 91
  project-wide, 91
  for the F-CPU, 91
  through organizational measures, 94

ACK_GL, 443

ACK_NEC, 148

ACK_OP, 520

ACK_REI, 148

ACK_REQ, 151

Acknowledgment
  Channel fault, 49
  Fail-safe, 520

Add, 470

ADD, 470

Address assignment
  Rules, 62
  Rules, 63

AND, 379, 512, 512

Approvals, 5

Assignment, 368, 382

B

Behavior
  After startup, 154
  After communication errors, 157
  After F-I/O or channel faults, 159

Bit logic operation
  Insert binary input, 364
  Invert RLO, 365
  Normally open contact, 365
  Normally closed contact, 366
  Invert RLO, 367
  Assignment, 368
  Reset output, 368
  Set output, 369
  Set/reset flip-flop, 371
  Reset/set flip-flop, 372
  Scan operand for positive signal edge, 374
  Scan operand for negative signal edge, 375
  Scan RLO for positive signal edge, 376
  Scan RLO for negative signal edge, 377
  AND, 379
  OR, 380
  EXCLUSIVE OR, 381
  Assignment, 382
  Reset output, 383
  Set output, 384
  Set/reset flip-flop, 385
  Reset/set flip-flop, 386
  Scan operand for positive signal edge, 387
  Scan operand for negative signal edge, 388
  Scan RLO for positive signal edge, 390
  Scan RLO for negative signal edge, 391

Bit memory, 172

Block size of automatically generated F-blocks, 273

BO_W, 496

Breakpoints, 315

C

Category, 22

Central F-source address, 45

Change
- of the safety program in RUN mode, 320
- Detecting, 345
- Acceptance, 345

changes not supported , 322

Changing
- Data of the safety program, 313
- of the safety program in RUN mode, 322

Channel fault, 49
- Acknowledgment, 49

Checking the program version, 344

Checklist, 555

Checks
- through the F-system, 60

CMP <, 469

CMP <=, 467

CMP <>, 464

CMP ==, 463

CMP >, 468

CMP >=, 466

Code review of the safety program, 330

Collective F-Signature, 311

Communication
- Standard user program and safety program, 172
- Standard user program and safety program, 173
- Monitoring time, 549
- Monitoring time, 550

Communication error, 157
- SENDDP/RCVDP, 530

Comparator operations
- Equal, 463
- Not equal, 464
- Greater or equal, 466
- Less or equal, 467
- Greater than, 468
- Less than, 469

Comparing
- Safety programs, 304

Compiling errors
- Alarms, 272

Completeness
- Checking the safety summary, 331

Configuration control, 51

Configuring
- Overview, 39
- of F-components, 42
- Special features, 42
- F-CPU, 43
- F-I/O, 47
- Shared device, 56
- Fail-safe GSD based I/O devices, 69
- Fail-safe GSD based DP slaves, 69

constants
- Boolean, 107
- TRUE, 107
- FALSE, 107

Conversion operations
- Convert value, 494
- Convert BOOL to WORD, 496
- Convert WORD to BOOL, 498
- Scale values, 500
- Scale values to data type DINT, 502

Convert
- Value, 494
- Data, 496
- Data, 498

CONVERT, 494

Convert data, 496, 498

Conveyor equipment, stopped, 404

Correctness
- Hardware configuration, 334
- Safety-related CPU-CPU communication, 340

Count
- Up, 457
- Down, 459
- Up and down, 461

Count down, 459

Count up, 457

Count up and down, 461

CPU-CPU communication, 39
- Options for safety-related, 39
- Overview of safety-related, 176
- Overview of safety-related, 231
- Overview of safety-related, 269

Create twos complement, 481

CTD, 459

CTU, 457

CTUD, 461
Cycle time
F-runtime group, 119
F-runtime group, 122
Maximum, 546
Monitoring time for, 548

D

Data block, 172
Data exchange
between standard user program and safety program, 172
Data transfer
From safety program to standard user program, 172
From standard user program to safety program, 173
Data type conversion, 107
Data types
For safety program, 104
DB access, fully qualified, 108, 153
DB access, non-fully qualified, 109
Deleting
F-blocks, 115
DIAG
F-I/O DB, 152
ESTOP1: Emergency STOP up to Stop Category 1, 392
TWO_H_EN: Two-hand monitoring with enable, 400
MUTING: Muting, 404
MUT_P: Parallel muting, 414
EV1oo2DI: 1oo2 evaluation with discrepancy analysis, 425
FDBACK: Feedback monitoring, 432
SFDOOR: Safety door monitoring, 438
SENDDP/RCVDP, 530
SENDS7, 539
RCVS7, 539
Diagnostic parameters, 356
Diagnostics
Fail-safe system, 356
Guide, 358
Guide, 358
Diagnostic tag, 356
DISABLE, 150
Disabling
F-capability, 43
Safety mode, 310
Safety mode, 310
Discrepancy error, 404
DIV, 478
Divide, 478
Downloading
Standard user program, 273
Hardware configuration, 273
Safety program, 273
Downloading Standard user program, 273
DP/DP coupler, 187, 242

E

Empty box
Inserting a LAD element, 360
Inserting an FBD element, 363
EN, 104
Enabling
F-capability, 43
Safety mode, 312
Enabling/disabling F-capability, 43
ENO, 104
ESTOP1, 392
EV1oo2DI, 425
EXCLUSIVE OR, 381, 514
Executing a system acceptance, 329

F

F_CRC_Seed, 71
F_IO_StructureDescCRC, 69, 71
F_Passivation, 71
Fail-safe acknowledgment, 520, 525
Fail-safe GSD based DP slaves
Configuring, 69
Fail-safe GSD based I/O devices
Configuring, 69
Fail-safe system, 22
Fail-safe value, 126, 143
F-array
read, 486
read, 489

Fast Commissioning mode, 322
Fault reaction function, 10, 22
FBD element
  Inserting, 363
F-block
  Deleting, 115
  Copying, 133
F-change history, 328
F-channel faults, fail-safe value output, 143
F-Communication UUID, 85
F-compliant PLC data type (UDT), 110
F-components, 39
F-CPU, 33
  migrating, 33
  Configuring, 43
  Setting up access permission, 93
  Going to STOP mode, 350
F-cycle time, monitoring time, 548
F-DB, 102
  for F-runtime group communication, 126
  Creating, 133
  F-shared DB, 136
FDBACK, 432
F-destination address, 61, 62
F-destination address range, 44
F-FB, 102, 133
F-FC, 102, 133
F-I/O, 39
  Configuring, 47
  addressing, 139
  Reintegration, 144
  Reintegration, 154
  Reintegration, 157
  Reintegration, 159
  Removing and inserting during operation, 354
F-I/O access, 139
  Via the process image, 139
  Via the process image, 217
  During operation, 320
  Restrictions in RUN mode, 321
F-I/O DB, 146
  Structure of DIAG, 152
  Access to, 153
F-I/O DB, 50
  Number, 50
  Name, 50
  Access to, 145
  Number, 153
  Name, 153
F-I/O faults, fail-safe value output, 143
F-I/O or channel faults, 159
Firmware update, 354
First steps, 37
Flexible F-Link, 85
  F-monitoring time, 550
Flip-flop
  Set/reset, 371
  Reset/set, 372
  Set/reset, 385
  Reset/set, 386
F-monitoring time, 45
  F-communication, 85
F-OB, 49
  Copying, 133
Form absolute value, 484
F-parameters, 42
F-runtime group, 96
  Rules, 117
  Default setting, 119
  Defining, 119
  Maximum cycle time, 119
  Default setting, 122
  Defining, 122
  Maximum cycle time, 122
  Safety-related communication, 126
  Deleting, 131
  Changing, 132
  Changing, 132
  Maximum cycle time, 551
F-runtime group communication, 119
  Restrictions in RUN mode, 320
  Monitoring time, 551
F-runtime group information DB, 136
F-runtime groups signature, 136
F-shared DB, 136, 172, 311
F-source address, 45, 62

F-system
Checks, 60
Monitoring time, 546
Response time, 546

Fully qualified DB access, 108, 153

Function test of the safety program, 308, 330

G

Getting Started, 37

Global data block
Open, 511

Group diagnostics for fail-safe signal modules, 50

Group passivation, 163

GSD files
Configuration, 69

H

Hardware components, 23

Hardware configuration, 42
Downloading, 273
Checking for correctness, 334

HW identifier, 530

I

IE/PB link, 218, 261

Image
Creating, 294
running, 294

Implementation of user acknowledgment, 169

Importing of images, 294

Insert binary input, 364

Installation
STEP 7 Safety, 29
STEP 7 Safety, 29
STEP 7 Safety, 30

Instance DB, 109, 133

Instructions
for the safety program, 102
Testing for acceptance, 332
Get status bit OV, 529

IPAR_EN, 149

IPAR_OK, 152

J

JMP, 504

JMPN, 506

Jump
If RLO = 1, 504
If RLO = 0, 506

Jump label, 508

L

LABEL, 508

LAD element
Inserting, 360

Life cycle of fail-safe automation systems, 555

Light curtain, 404

Local data, 108

M

Main safety block, 102, 133

Math functions
Add, 470
Subtract, 472
Multiply, 475
Divide, 478
Create twos complement, 481
Form absolute value, 484

Maximum cycle time, 546, 551

Memory reset, 313

Migrating projects
from S7 Distributed Safety, 30

Migration
from S7 Distributed Safety, 30
F-CPU, 33
from S7 Distributed Safety, 221
Printout, 308

Modifying, 309
Safety program, 313
Safety program, 314

Monitoring, 308
Safety program, 313
Safety program, 314
Two-hand monitoring, 397
Two-hand monitoring, 400
Monitoring time, 546
F-cycle time, 548
Communication between I-salve and slave, 549
Communication between F-CPU and F-I/O, 549
Communication between F-CPUs, 550
Move
Move value, 485
Read F-array, 486
Read F-array, 489
Write value indirectly to an F-DB, 491
MOVE, 485
Move operations
Read value indirectly from an F-DB, 493
MUL, 475
Multiply, 475
MUT_P, 414
MUTING, 404
Structure of DIAG, 404
Muting operation
With reflection light barriers, 404
With 4 muting sensors, 404

N

N, 375, 388
N_TRIG, 377, 391
NEG, 481
Network
Inserting, 359
Inserting, 362
Normally closed contact, 366
Normally open contact, 365
NOT, 367

O

Off delay, 453
Offline-online comparison of safety programs, 304
On delay, 449
Operand
Scan for positive signal edge, 374
Scan for negative signal edge, 375
Scan for positive signal edge, 387
Scan for negative signal edge, 388
Operand area
For safety program, 105
Operating principle
RCVDP, 530
SENDDP, 530
SENDS7, 539
RCVS7, 539
Operating system update, 354
Operational safety of the system, 10
OPN, 511
Option handling, 51
OR, 380, 513, 513
Output
Reset, 368
Set, 369
Reset, 383
Set, 384
OV, 527, 528, 529

P

P, 374, 387
P_TRIG, 376, 390
Parameters, 43
Safety-related, 43
Parameter types, 104
PASS_ON, 147
PASS_OUT, 151
Passivation
Channel-granular, 49
Output of fail-safe values, 143
F-I/O, 154

Passivation of F-I/O, 154
After startup, 154
After communication errors, 157
After F-I/O or channel faults, 159
Group passivation, 163

Password, 89
Safety program, 89
F-CPU, 93

Performance level, 22

Plausibility check, 173
Data transfer from standard program to safety program, 343

PLC data type
F-compliant, 110

PLCSIM, 309, 313

PN/PN coupler, 179, 234

Process image, 49, 139, 172

Process safety time, 552

Productive operation, 88

PROFIBUS DP, 23

PROFINET IO, 23

PROFIsafe address
Recommendations, 57-58
Assigning, 64
assign, 65
assign, 67
Changing, 69
Assigning, 70

PROFIsafe address type, 39

PROFIsafe address type 1, 44

PROFIsafe address type 2, 45

PROFIsafe destination address, 44

Program control operations
Jump if RLO = 1, 504
Jump if RLO = 0, 506
Jump label, 508
Return, 510
Open global data block, 511

Programming
Overview, 96
Startup protection, 138
Group passivation, 163
Plausibility checks, 173

Programming an F-communication DB, 221

Projects
upgrading, 34
upgrading, 35
upgrading, 36

Proof test, 354

Protection level of the F-CPU, 47

Pulse
Generate, 445

Q

QBAD, 151, 153, 154

QBAD_I_xx, 151

QBAD_O_xx, 151

R

R, 368, 383

RCVDP, 183
Receiving data, 530
Timing diagrams, 530
Structure of DIAG, 530
Behavior in the event of communication errors, 530

RCVS7, 220, 221, 311, 539

RD_ARRAY_DI, 486, 489

RD_FDB, 493

Recommendations
PROFIsafe address, 57-58

Reflection light barriers, 404

Reintegration of F-I/O, 144
After startup of F-system, 154
After communication errors, 157
After F-I/O or channel faults, 159
with group passivation, 163
Programming a user acknowledgment, 165
Programming a user acknowledgment, 169

Replacing
Software components, 354

Response time of F-system, 546, 551

Restart inhibit
MUTING, 404
On interruption of the light curtain, 404
On interruption of the light curtain, 414
MUT_P, 414

Restart protection, 138
RET, 510
Return, 510
RLO
Invert, 365
Invert, 367
Scan for positive signal edge, 376
Scan for negative signal edge, 377
Scan for positive signal edge, 390
Scan for negative signal edge, 391
RS, 372, 386
Rules
Address assignment, 62
Address assignment, 63
for testing, 313
RUN, 320
RUN mode, 320

S

S, 369, 384
S7 connection
Safety-related communication, 219
S7-PLCSIM, 309
testing with, 316
Safety Administration Editor, 72
Safety function, 22
Example, 23
Calculation of response time, 551
Safety functions
ESTOP1: Emergency STOP up to Stop Category 1, 392
TWO_HAND: Two-hand monitoring, 397
TWO_H_EN: Two-hand monitoring with enable, 400
MUTING: Muting, 404
MUT_P: Parallel muting, 414
EV1oo2DI: 1oo2 evaluation with discrepancy analysis, 425
FDBACK: Feedback monitoring, 432
SFDOOR: Safety door monitoring, 438
ACK_GL: Global acknowledgment of all F-I/O in an F-runtime group, 443
Safety integrity level, 22
Safety mode
Disabling, 310
Disabling, 310
Enabling, 312
Safety program, 23
Automatic generation, 46
Password, 89
Structuring, 96
Structuring, 98
Instructions, 102
Data types, 104
Deleting, 131
Output of fail-safe values, 143
Work memory requirement, 272
Downloading, 273
Comparing, 304
Function test, 308
Monitoring, 308
Modifying, 309
Testing, 313
Modifying, 313
Monitoring, 313
Modifying, 314
Monitoring, 314
Code review, 330
Online consistency, 342
Safety-related communication between F-runtime groups, 126
Safety-related communication via S7 connections
Configuring, 219
Data transfer limits, 225
Safety-related CPU-CPU communication, 39
Options, 39
F-communication DB, 221
Restrictions in RUN mode, 320
Checking for correctness, 340
SENDDP, 530
RCVDP, 530
Safety-related IO controller-I-device communication
Configuring, 196
Programming, 199
Data transfer limits, 201
Configuring, 249
Programming, 252
Data transfer limits, 254
Configuring, 270

Safety-related IO controller-IO controller communication
Configuring, 179
Programming, 183
Data transfer limits, 187
Configuring, 234
Programming, 238
Data transfer limits, 241

Safety-related IO controller-I-slave communication, 218, 261

Safety-related I-slave-I-slave communication
Programming, 204
Data transfer limits, 207
Configuring, 208

Safety-related I-slave-slave communication
Configuring, 212
Data transfer limits, 218

Safety-related master-I-slave communication
Configuring, 202
Programming, 204
Data transfer limits, 207
Configuring, 255
Programming, 257
Data transfer limits, 260

Safety-related master-master communication
Configuring, 187
Programming, 192
Data transfer limits, 196
Configuring, 242
Programming, 245
Data transfer limits, 249

Safety-related parameters, 43

Safety requirements, 10, 22

Safety summary, 69, 330

Scale
Values, 500
Values, 502

SCALE, 500

SCALE_D, 502

SENDDP, 183
Structure of DIAG, 530
Sending data, 530
Timing diagrams, 530
Behavior in the event of communication errors, 530

Sending and receiving data via S7 connections, 539

SENDS7, 220, 221, 311, 539

SFDOOR, 438

Shared device
Configuring, 56

Shift and rotate
Shift right, 515
Shift left, 518

Shift left, 518

Shift right, 515

SHL, 518

SHR, 515

Signature, 36

SIL, 22

SIMATIC Safety, 4
Product overview, 22
Principles of safety functions, 22
Hardware and software components, 23
Configuring and programming software, 23
Safety program, 23

Simulation, 309

Simulation devices in the F-system, 350

Slice access, 107

Software components, 23, 354

Software requirements, 29, 29, 30

SR, 371, 385

Startup, 138, 154

Startup behavior
MUT_P, 414
RCVDP, 530
SENDDP, 530

Startup characteristics
SENDS7, 539
RCVS7, 539

Startup protection, 138

Status bit OV
Get, 527
Get negated, 528
Get, 529

STEP 7 Safety, 4
Additional support, 4
Service & Support, 4
Basic knowledge, required, 4
Documentation, 5
Information landscape, 5
Writing conventions, 9

STOP, 350
STP, 350
Structure of the safety program, 96, 98
SUB, 472
Subtract, 472
Supported configurations, 59

T

Tag
  F-I/O DB, 146
  Monitoring/modifying, 313
Testing of safety program, 313
TIMEOUT, 546, 550
Timer operations
  Generate pulse, 445
  Generate on-delay, 449
  Generate off-delay, 453
Timing diagrams, 404
  RCVDP, 530
  SENDDP, 530
TOF, 453
TON, 449
TP, 445
Training center, 4
Transfer area, 233
Truth table
  AND, 379
  OR, 380
  EXCLUSIVE OR, 381
TÜV certificate, 332
TWO_H_EN, 400
TWO_HAND, 397

U

UMAC, 91
Uninstalling
  STEP 7 Safety, 29
  STEP 7 Safety, 30
  STEP 7 Safety, 30
Upgrading
  Projects, 34
  Projects, 35
  Projects, 36
User acknowledgment, 165
  HMI system, 166
  HMI system, 167
  Example, 169
User safety function, 4, 23

V

V2-MODE, 69
Value
  Move, 485
  Write indirectly to an F-DB, 491
  Read indirectly from an F-DB, 493
  Convert, 494
  Scale, 500
  Scale to data type DINT, 502
Value status, 140, 151

W

W_BO, 498
Watch table, 315
Wiring test, 313
Word logic operations
  AND, 512
  OR, 513
  EXCLUSIVE OR, 514
Work memory requirement of safety program, 272
WR_FDB, 491

X

X, 381
XOR, 514

SIEMENS

Function manual

SIMATIC

S7-1500

Isochronous mode

Edition 10/2018

support.industry.siemens.com

SIEMENS

SIMATIC

S7-1500
Isochronous mode

Function Manual

Preface

Documentation guide 1

What is isochronous mode? 2

Use of isochronous mode 3

Time sequence of synchronization 4

Configuring isochronous mode 5

Programming isochronous mode 6

10/2018

A5E43884988-AA

Legal information

Warning notice system

This manual contains notices you have to observe in order to ensure your personal safety, as well as to prevent damage to property. The notices referring to your personal safety are highlighted in the manual by a safety alert symbol, notices referring only to property damage have no safety alert symbol. These notices shown below are graded according to the degree of danger.

⚠ DANGER

indicates that death or severe personal injury **will** result if proper precautions are not taken.

⚠ WARNING

indicates that death or severe personal injury **may** result if proper precautions are not taken.

⚠ CAUTION

indicates that minor personal injury can result if proper precautions are not taken.

NOTICE

indicates that property damage can result if proper precautions are not taken.

If more than one degree of danger is present, the warning notice representing the highest degree of danger will be used. A notice warning of injury to persons with a safety alert symbol may also include a warning relating to property damage.

Qualified Personnel

The product/system described in this documentation may be operated only by **personnel qualified** for the specific task in accordance with the relevant documentation, in particular its warning notices and safety instructions. Qualified personnel are those who, based on their training and experience, are capable of identifying risks and avoiding potential hazards when working with these products/systems.

Proper use of Siemens products

Note the following:

⚠ WARNING

Siemens products may only be used for the applications described in the catalog and in the relevant technical documentation. If products and components from other manufacturers are used, these must be recommended or approved by Siemens. Proper transport, storage, installation, assembly, commissioning, operation and maintenance are required to ensure that the products operate safely and without any problems. The permissible ambient conditions must be complied with. The information in the relevant documentation must be observed.

Trademarks

All names identified by ® are registered trademarks of Siemens AG. The remaining trademarks in this publication may be trademarks whose use by third parties for their own purposes could violate the rights of the owner.

Disclaimer of Liability

We have reviewed the contents of this publication to ensure consistency with the hardware and software described. Since variance cannot be precluded entirely, we cannot guarantee full consistency. However, the information in this publication is reviewed regularly and any necessary corrections are included in subsequent editions.

Siemens AG
Division Digital Factory
Postfach 48 48
90026 NÜRNBERG
GERMANY

A5E43884988-AA
℗ 09/2018 Subject to change

Copyright © Siemens AG 2018.
All rights reserved

Preface

Purpose of the documentation

This function manual provides an overview of the isochronous mode function for I/O modules that you operate isochronously:

- As central I/O in a SIMATIC S7-1500
- In distributed I/O systems on PROFINET IO
- In distributed I/O systems on PROFIBUS DP
- Jointly as central and distributed I/O on PROFINET IO

The documentation supports you in the configuring and programming of isochronous mode.

Basic knowledge required

The following knowledge is required in order to understand the manual:

- General knowledge of automation technology
- Knowledge of the industrial automation system SIMATIC
- Knowledge about the use of Windows-based computers
- Knowledge about how to use STEP 7 (TIA Portal)

Scope

This documentation is the basic documentation for the SIMATIC S7-1500 automation system and all SIMATIC products from the PROFINET and PROFIBUS environments. The product documentation is based on this documentation.

The manual applies to the SIMATIC S7-1500 automation system with CPUs Firmware Version V2.6 or higher (except S7-1500 Compact CPUs and S7-1500R/H CPUs). SIMATIC STEP 7 Professional V15.1 or higher is also required.

Conventions

STEP 7: We refer to "STEP 7" in this documentation as a synonym for the configuration and programming software "STEP 7 as of V15.1 (TIA Portal)" and subsequent versions.

This documentation contains pictures of the devices described. The figures may differ slightly from the device supplied.

You should also pay particular attention to notes such as the one shown below:

Note

A note contains important information on the product, on handling of the product and on the section of the documentation to which you should pay particular attention.

Security information

Siemens provides products and solutions with industrial security functions that support the secure operation of plants, systems, machines and networks.

In order to protect plants, systems, machines and networks against cyber threats, it is necessary to implement – and continuously maintain – a holistic, state-of-the-art industrial security concept. Siemens' products and solutions constitute one element of such a concept.

Customers are responsible for preventing unauthorized access to their plants, systems, machines and networks. Such systems, machines and components should only be connected to an enterprise network or the internet if and to the extent such a connection is necessary and only when appropriate security measures (e.g. firewalls and/or network segmentation) are in place.

For additional information on industrial security measures that may be implemented, please visit (https://www.siemens.com/industrialsecurity).

Siemens' products and solutions undergo continuous development to make them more secure. Siemens strongly recommends that product updates are applied as soon as they are available and that the latest product versions are used. Use of product versions that are no longer supported, and failure to apply the latest updates may increase customers' exposure to cyber threats.

To stay informed about product updates, subscribe to the Siemens Industrial Security RSS Feed under (https://www.siemens.com/industrialsecurity).

Siemens Industry Online Support

You can find current information on the following topics quickly and easily here:

- **Product support**

  All the information and extensive know-how on your product, technical specifications, FAQs, certificates, downloads, and manuals.

- **Application examples**

  Tools and examples to solve your automation tasks – as well as function blocks, performance information and videos.

- **Services**

  Information about Industry Services, Field Services, Technical Support, spare parts and training offers.

- **Forums**

  For answers and solutions concerning automation technology.

- **mySupport**

  Your personal working area in Industry Online Support for messages, support queries, and configurable documents.

This information is provided by the Siemens Industry Online Support in the Internet (https://support.industry.siemens.com).

Industry Mall

The Industry Mall is the catalog and order system of Siemens AG for automation and drive solutions on the basis of Totally Integrated Automation (TIA) and Totally Integrated Power (TIP).

You can find catalogs for all automation and drive products on the Internet (https://mall.industry.siemens.com).

Table of contents

Preface 3
1 Documentation guide 7
2 What is isochronous mode? 12
3 Use of isochronous mode 15
4 Time sequence of synchronization 17
4.1 Time sequence of synchronization on PROFINET IO and PROFIBUS DP 17
4.2 Time sequence of synchronization in the central configuration 19
5 Configuring isochronous mode 22
5.1 Configuring isochronous mode for distributed I/O on PROFINET IO 24
5.2 Configuring isochronous mode for central I/O in S7-1500 26
5.3 Configuring joint isochronous operation of central and distributed I/O 30
5.4 Configuring isochronous mode for distributed I/O on PROFIBUS DP 32
5.5 Configuring isochronous mode for a Motion Control application 34
5.6 Setting the application cycle and delay time 41
6 Programming isochronous mode 43
6.1 Program execution according to the IPO model 44
6.2 Program execution according to the OIP model 46
6.3 Programming of isochronous mode for Motion Control applications 48
Glossary 49
Index 54

Documentation guide

1

The documentation for the SIMATIC S7-1500 automation system, for CPU 1516pro-2 PN based on SIMATIC S7-1500, and for the distributed I/O systems SIMATIC ET 200MP, ET 200SP and ET 200AL is divided into three areas.
This division allows you easier access to the specific information you require.

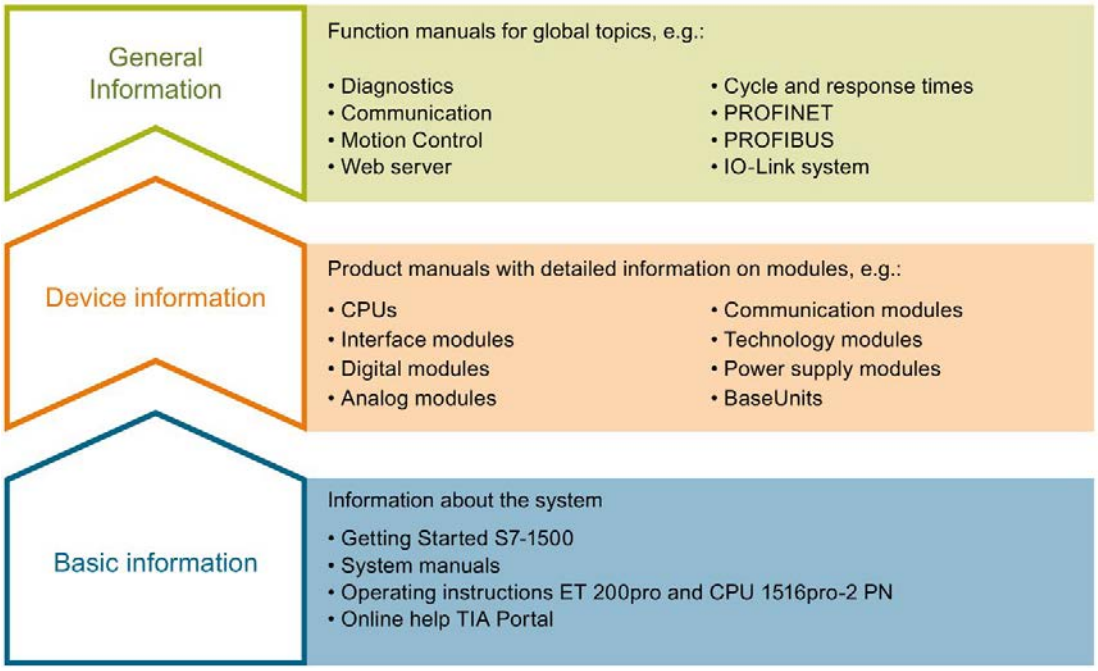

Basic information

System manuals and Getting Started manuals describe in detail the configuration, installation, wiring and commissioning of the SIMATIC S7-1500, ET 200MP, ET 200SP and ET 200AL systems; use the corresponding operating instructions for CPU 1516pro-2 PN. The STEP 7 online help supports you in configuration and programming.

Device information

Product manuals contain a compact description of the module-specific information, such as properties, terminal diagrams, characteristics and technical specifications.

General information

The function manuals contain detailed descriptions on general topics such as diagnostics, communication, Motion Control, Web server, OPC UA.

You can download the documentation free of charge from the Internet (https://support.industry.siemens.com/cs/ww/en/view/109742705).

Changes and additions to the manuals are documented in product information sheets.

You will find the product information on the Internet:

- S7-1500/ET 200MP (https://support.industry.siemens.com/cs/us/en/view/68052815)
- ET 200SP (https://support.industry.siemens.com/cs/us/en/view/73021864)
- ET 200AL (https://support.industry.siemens.com/cs/us/en/view/99494757)

Manual Collections

The Manual Collections contain the complete documentation of the systems put together in one file.

You will find the Manual Collections on the Internet:

- S7-1500/ET 200MP (https://support.industry.siemens.com/cs/ww/en/view/86140384)
- ET 200SP (https://support.industry.siemens.com/cs/ww/en/view/84133942)
- ET 200AL (https://support.industry.siemens.com/cs/ww/en/view/95242965)

"mySupport"

With "mySupport", your personal workspace, you make the best out of your Industry Online Support.

In "mySupport", you can save filters, favorites and tags, request CAx data and compile your personal library in the Documentation area. In addition, your data is already filled out in support requests and you can get an overview of your current requests at any time.

You must register once to use the full functionality of "mySupport".

You can find "mySupport" on the Internet (https://support.industry.siemens.com/My/ww/en).

"mySupport" - Documentation

In the Documentation area in "mySupport" you can combine entire manuals or only parts of these to your own manual.
You can export the manual as PDF file or in a format that can be edited later.

You can find "mySupport" - Documentation on the Internet (https://support.industry.siemens.com/My/ww/en/documentation).

"mySupport" - CAx data

In the CAx data area in "mySupport", you can access the current product data for your CAx or CAe system.

You configure your own download package with a few clicks.

In doing so you can select:

- Product images, 2D dimension drawings, 3D models, internal circuit diagrams, EPLAN macro files
- Manuals, characteristics, operating manuals, certificates
- Product master data

You can find "mySupport" - CAx data on the Internet (https://support.industry.siemens.com/my/ww/en/CAxOnline).

Application examples

The application examples support you with various tools and examples for solving your automation tasks. Solutions are shown in interplay with multiple components in the system - separated from the focus on individual products.

You will find the application examples on the Internet (https://support.industry.siemens.com/sc/ww/en/sc/2054).

TIA Selection Tool

With the TIA Selection Tool, you can select, configure and order devices for Totally Integrated Automation (TIA).
This tool is the successor of the SIMATIC Selection Tool and combines the known configurators for automation technology into one tool.
With the TIA Selection Tool, you can generate a complete order list from your product selection or product configuration.

You can find the TIA Selection Tool on the Internet (https://w3.siemens.com/mcms/topics/en/simatic/tia-selection-tool).

SIMATIC Automation Tool

You can use the SIMATIC Automation Tool to run commissioning and maintenance activities simultaneously on different SIMATIC S7 stations as a bulk operation, independently of the TIA Portal.

The SIMATIC automation tool provides a variety of functions:

- Scanning of a PROFINET/Ethernet plant network and identification of all connected CPUs
- Address assignment (IP, subnet, gateway) and station name (PROFINET device) to a CPU
- Transfer of the date and programming device/PC time converted to UTC time to the module
- Program download to CPU
- Operating mode switchover RUN/STOP
- CPU localization by means of LED flashing
- Reading out CPU error information
- Reading of CPU diagnostic buffer
- Reset to factory settings
- Updating the firmware of the CPU and connected modules

You can find the SIMATIC Automation Tool on the Internet (https://support.industry.siemens.com/cs/ww/en/view/98161300).

PRONETA

With SIEMENS PRONETA (PROFINET network analysis), you analyze the plant network during commissioning. PRONETA features two core functions:

- The topology overview independently scans PROFINET and all connected components.
- The IO check is a fast test of the wiring and the module configuration of a plant.

You can find SIEMENS PRONETA on the Internet (https://support.industry.siemens.com/cs/ww/en/view/67460624).

SINETPLAN

SINETPLAN, the Siemens Network Planner, supports you in planning automation systems and networks based on PROFINET. The tool facilitates professional and predictive dimensioning of your PROFINET installation as early as in the planning stage. In addition, SINETPLAN supports you during network optimization and helps you to exploit network resources optimally and to plan reserves. This helps to prevent problems in commissioning or failures during productive operation even in advance of a planned operation. This increases the availability of the production plant and helps improve operational safety.

The advantages at a glance

- Network optimization thanks to port-specific calculation of the network load
- Increased production availability thanks to online scan and verification of existing systems
- Transparency before commissioning through importing and simulation of existing STEP 7 projects
- Efficiency through securing existing investments in the long term and optimal exploitation of resources

You can find SINETPLAN on the Internet (https://www.siemens.com/sinetplan).

What is isochronous mode? 2

Objectives of isochronous operation

The advantages of the isochronous mode function in automation engineering can be seen in an example from everyday life.

The transmission of data corresponds to the transport of people on public transport. Assuming public transport were to operate at maximum speed while reducing stop times at the passenger terminals to absolute minimum, the last thing many potential passengers would notice of the departing contraption are its red tail lights. The overall travel time is, however, decided by the train, bus or underground-railway clock, because well adjusted timing is essential to a good service. This also applies in automation engineering. Not only fast cycles but also the coordination and synchronization of the individual cycles result in optimum throughput.

Just-In-Time

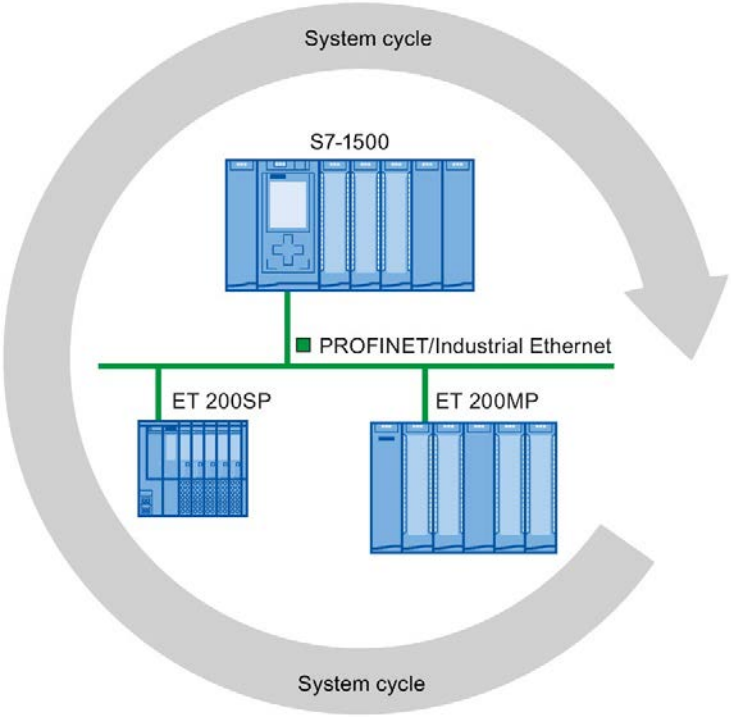

Figure 2-1 System cycle

The fast and reliable reaction time of a system operating in isochronous mode is based on the fact that all data are provided just-in-time. The basis for this is a constant bus cycle.

The isochronous mode function guarantees synchronization of the following at constant time intervals:

- Signal acquisition and output by the central and distributed I/O
- Signal transmission via backplane bus, PROFINET IO or PROFIBUS DP
- Program execution in the CPU in local time, in time with the constant bus cycle time PROFINET IO or PROFIBUS DP

The result is a system that acquires its input signals, processes them and outputs the output signals at constant time intervals. Isochronous mode guarantees precisely reproducible and defined process reaction times as well as constant bus cycle and synchronous signal processing for central and distributed I/O.

Advantages of isochronous mode

The use of isochronous mode enables high-precision control loops.

- Optimized control loops through constant, calculable dead times
- Determinism, reliable reproducibility of reaction times
- Consistent (simultaneous) reading in of input data
- Consistent (simultaneous) output of output data
- Oversampling for processing of fast processes thanks to higher sampling rates than the send clock permits

Use of isochronous mode 3

An isochronous system acquires measured values and process data within a fixed system cycle, processes the signals and outputs them synchronously to the process. Isochronous mode contributes to a high control quality and increased production accuracy. With isochronous mode, the possible fluctuations of process reaction times are drastically reduced. You make use of the time-assured processing to improve machine cycle times. Even fast processes can be reliably controlled thanks to the precise time reproducibility of all sequences. Shorter cycle times increase the processing speed and help to lower production costs.

In principle, isochronous mode lends itself to being used whenever measured values must be acquired synchronously, movements must be coordinated, and process responses must be defined and carried out simultaneously. There are thus numerous applications for isochronous mode.

Example: Measuring at multiple measurement points with isochronous mode

Automation task

A camshaft production process requires precise measurement of the camshafts for quality assurance purposes.

Feature

For this purpose, a component is needed that can synchronously measure the positions and displacements of the cam during a rotation of the camshaft.

Solution

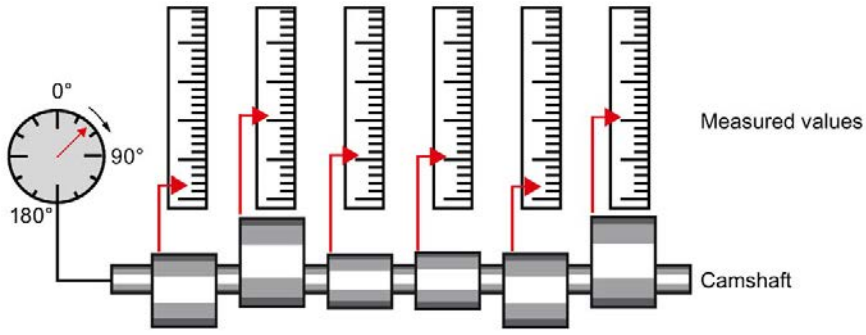

Figure 3-1 Measuring of camshafts

With use of isochronous mode, the measured values are simultaneously acquired at the various measuring points at fixed times. This yields the following sequence of operations:

- Continuously rotate the camshaft
- During the continuous rotation, synchronously measure the positions and cam displacements
- Process the next cam shaft

Thus, during a single rotation of the camshaft, all the positions of the camshaft and the associated measured values (red) are measured synchronously. The machine cycle time improves with the same or better measuring accuracy.

Advantage and benefits

The time required for measurement is reduced.

Time sequence of synchronization 4

Introduction

The basic time sequence of all components involved in the synchronization is explained in the following sections: The synchronization is differentiated according to distributed configuration and central configuration in an S7-1500. You can combine isochronous I/O with non-isochronous I/O in the configuration.

4.1 Time sequence of synchronization on PROFINET IO and PROFIBUS DP

Introduction

You can operate I/O modules in distributed I/O systems isochronously on a CPU:

- On PROFINET IO, e.g. in distributed I/O systems ET 200SP, ET 200MP
- On PROFIBUS DP, e.g. in distributed I/O systems ET 200S, ET 200M.

Like the I/O modules, the interface modules of the I/O systems must support isochronous mode.

From reading-in of input data to outputting of output data

The basic time sequence of all components involved in synchronization is explained in the following:

① Measured value acquisition in the process

② Isochronous read-in of input data

③ Transport of input data to the IO controller/DP master (CPU) via the subnet

④ Further processing in the isochronous application of the CPU

⑤ Transport of output data to the outputting IO device/DP slave via the subnet

⑥ Isochronous output of output data

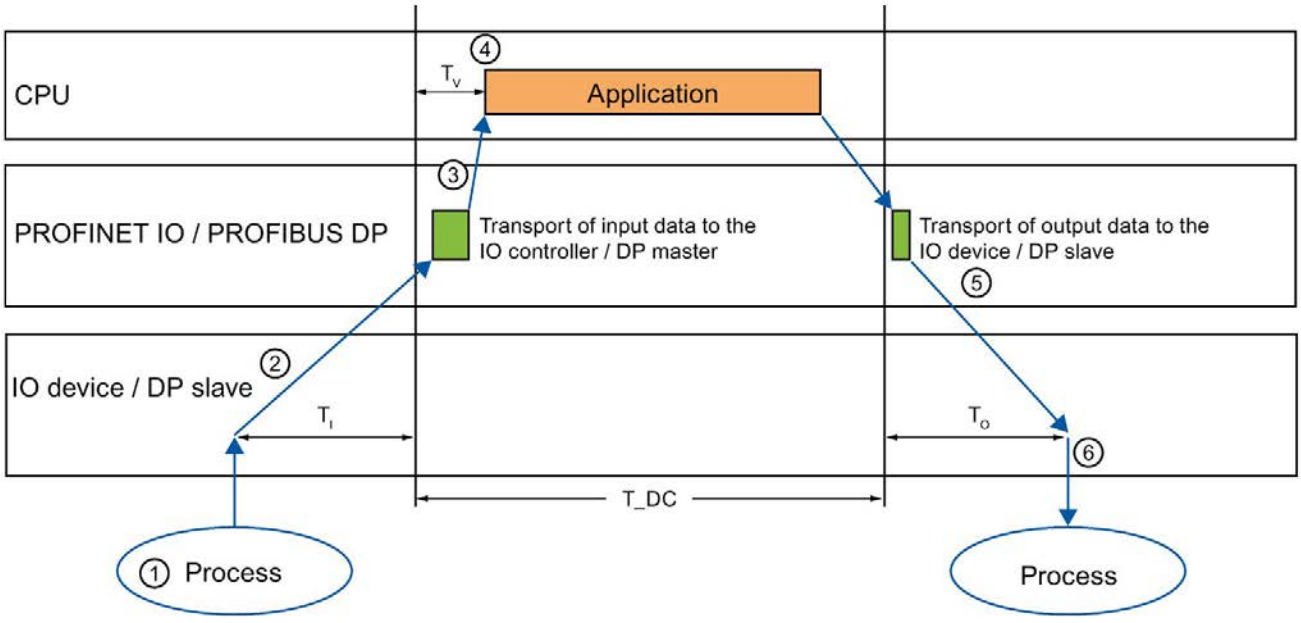

T_DC Data cycle (Time_DataCycle)

T_I Time for reading in the input data

T_O Time for outputting the output data

T_V Configured delay time

Figure 4-1 Time sequence of synchronization on PROFINET IO/PROFIBUS DP

So that all input data is ready for transport via the subnet at the next start of the PROFINET IO-/PROFIBUS DP cycle, the start of the I/O read-in cycle is advanced by the amount of lead time T_I. T_I is the "flashbulb" for the inputs. All synchronized inputs are read in at this time. T_I is necessary in order to compensate for analog-to-digital conversion, backplane bus times and the like. The lead time T_I can be configured by STEP 7 or by you. Let the lead time T_I be assigned automatically by STEP 7. With the default setting, STEP 7 ensures that a common, minimum T_I is set.

The subnet transports the input data to the IO controller/DP master. The application is started synchronized to the cycle. That is, the isochronous mode interrupt OB is called after a configurable delay time T_V. The user program in the isochronous mode interrupt OB defines the process response and provides the output data in time for the start of the next data cycle. The length of the data cycle (send clock/DP cycle time) is always configured by you.

T_O is the time for the compensation arising from the backplane bus and the digital-to-analog conversion within the IO device/DP slave. T_O is the "flashbulb" for the outputs. The synchronized outputs are output at this time. Time T_O can be configured by STEP 7 or by you. Let time T_O be assigned automatically by STEP 7. STEP 7 automatically calculates a common, minimum T_O.

4.2 Time sequence of synchronization in the central configuration

Introduction

You can operate I/O modules isochronously downstream of an S7-1500 CPU starting with Firmware Version 2.6.

Exception: Isochronous operation of I/O modules in the central configuration is generally **not** possible:

- With compact CPUs of S7-1500
- With CPUs of S7-1500R/H
- With PROFINET IO and PROFIBUS DP systems on centrally configured communications processors (CPs) or communication modules (CMs)
- With communications processors (CPs) or communication modules (CMs) as I-devices or I-slaves in the central configuration

When using isochronous I/O in the central configuration, you cannot make use of the configuration control (option handling) function.

From reading-in of input data to outputting of output data

The basic time sequence of all components involved in synchronization is explained in the following:

① Measured value acquisition in the process

② Isochronous read-in of input data from the central I/O

③ Transport of input data to the CPU

④ Further processing in the isochronous application of the CPU

⑤ Transport of output data to the central I/O

⑥ Isochronous output of output data

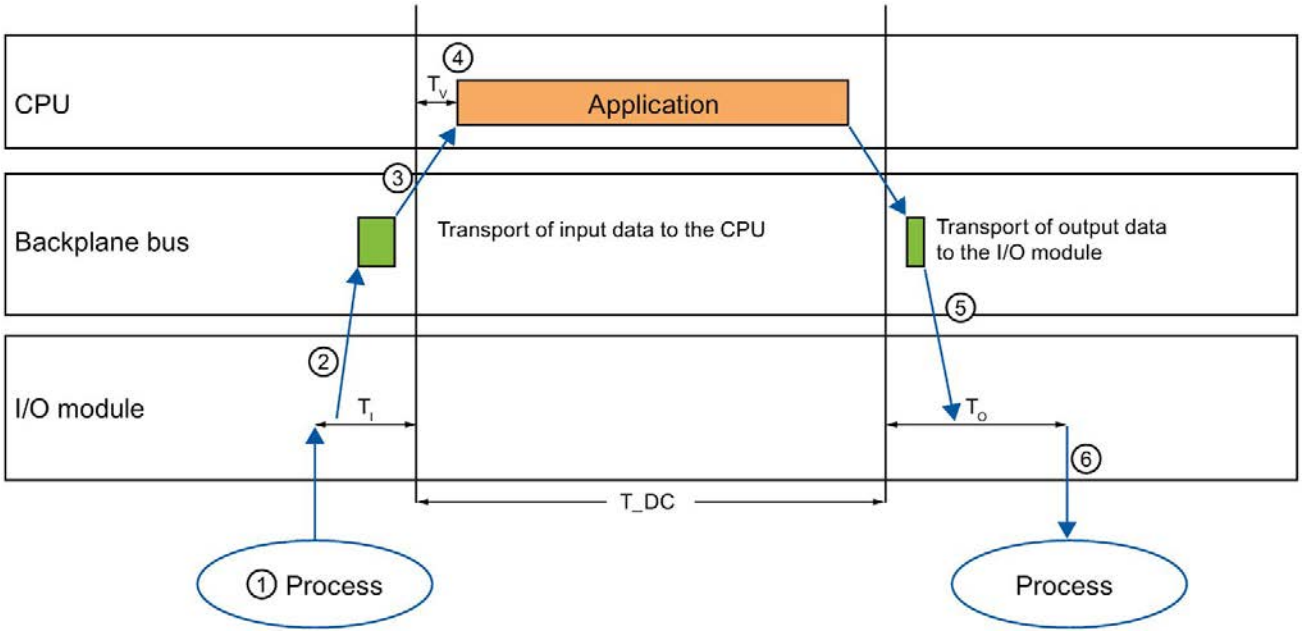

T_DC Data cycle (Time_DataCycle)

T_I Time for reading in the input data

T_O Time for outputting the output data

T_V Configured delay time

Figure 4-2 Time sequence of synchronization in the central configuration

So that all input data is ready for transport to the CPU at the next start of the cycle, the start of the I/O read-in cycle is advanced by the amount of lead time T_I. T_I is the "flashbulb" for the inputs. After that, all synchronized inputs are read in. T_I is necessary in order to compensate for analog-to-digital conversion and the like. The lead time T_I can be configured by STEP 7 or by you. Let the lead time T_I be assigned automatically by STEP 7. With the default setting, STEP 7 ensures that a common, minimum T_I is set.

The backplane bus transports the input data to the CPU. The application is started synchronized to the cycle. That is, the isochronous mode interrupt OB is called after a configurable delay time T_V. The user program in the isochronous mode interrupt OB defines the process response and provides the output data in time for the start of the next data cycle. The length of the data cycle (send clock) is always configured by you.

Within time T_O, the data is:

- Transported to the I/O module over the backplane bus
- Processed in the I/O module, e.g. converted to an analog value

After expiration of time T_O, the data is output to the process.

Time T_O can be configured by STEP 7 or by you. Let time T_O be assigned automatically by STEP 7. STEP 7 automatically calculates a common, minimum T_O.

Configuring isochronous mode 5

You can operate I/O modules isochronously both as central I/O in SIMATIC S7-1500 and as distributed I/O in a distributed I/O system.

You can also jointly operate central and distributed I/O on PROFINET IO isochronously.

The following sections describe the procedure for configuring this using examples.

Configuring at a glance

Setting parameters for isochronous operation of the I/O module

You use the properties of the I/O addresses of the corresponding I/O module to:

- Set isochronous mode for the module
- Assign the inputs and outputs of the module to a process image partition and an isochronous mode interrupt OB

  The data of the process image partition is updated synchronously to the assigned OB. Isochronous mode interrupts give you the option of starting programs isochronously with the backplane bus, with the PROFIBUS DP cycle or PROFINET send clock. Isochronous mode interrupts are processed with high priority.

Setting the send clock or DP cycle time

The send clock/DP cycle time is the shortest possible transmission interval for the data exchange. In isochronous mode, the send clock/DP cycle time corresponds to data cycle T_DC.

For distributed I/O in S7-1500, you set the send clock in the properties of the CPU. For PROFINET IO, you set the send clock in the properties of the PROFINET interface of the CPU or in the sync domain. For PROFIBUS DP, you set the DP cycle time in the properties of the DP master system.

Setting the application cycle

The application cycle is a multiple of data cycle T_DC. If the runtime of the isochronous mode interrupt OB is short, the application cycle can be identical to the data cycle (= send clock/DP cycle time).

You can reduce the application cycle of the isochronous mode interrupt OB relative to the send clock of an isochronous system. Set an integer multiple of the send clock as the reducing factor.

You use the factor to reduce the CPU utilization by executing the isochronous mode interrupt OB less frequently. You set the application cycle in the properties of the isochronous mode interrupt OB.

You can find more information in the section Programming isochronous mode (Page 43).

Setting the delay time

The delay time is the time between the start of the send clock and the start of the isochronous mode interrupt OB. During this time, the IO controller/DP master performs the cyclic data exchange with the IO devices/DP slaves.

STEP 7 sets the default delay time in such a way that the isochronous update of the process image partition automatically falls within the execution window of the application cycle.

You set the delay time in the properties of the isochronous mode interrupt OB. A shorter delay time enables you to increase the processing time for your user program in the isochronous mode interrupt OB.

Additional configurations for isochronous mode on PROFINET IO:

- **Setting IRT as the RT class for the interconnected PROFINET interfaces**

  A precondition for isochronous operation on PROFINET IO is IRT communication (Isochronous Real Time Communication). IRT means synchronized data exchange at reserved time intervals.

- **Configuring the topology of the configuration**

  A precondition for IRT communication is the topology configuration. In addition to the reserved bandwidth, the exchange of frames on defined transmission paths is used for further optimization of data communication. For this, the topological information of the configuration is used for planning the communication.

- **Using a sync domain** you assign the IO devices (sync slaves) to an IO controller (sync master) for the isochronous data exchange.

  A precondition for IRT communication is a synchronization cycle for all PROFINET devices in a sync domain, for distribution of a common time base. With this base synchronization, a synchronous operation of the transmission cycle of the PROFINET devices within a sync domain is achieved.

5.1 Configuring isochronous mode for distributed I/O on PROFINET IO

Introduction

The configuring of isochronous mode for a module is described in the following for an IO device based on the ET 200MP distributed I/O system. The procedure described also applies to other distributed I/O systems (e.g., ET 200S or ET 200SP).

The IO controller is an S7-1500 CPU.

Requirements

- The network view of STEP 7 is open.
- An S7-1500 CPU has been placed (e.g. CPU 1516-3 PN/DP).
- An IM 155-5 PN HF interface module (ET 200MP) has been placed and networked with the CPU via PROFINET IO.
- All requirements for an IRT configuration are met:
  - The ports of the networked PROFINET interfaces of the CPU and interface module are interconnected (topology configuration).
  - The RT class of the PROFINET interface of the interface module is set to "IRT" (area "Advanced options > Real time settings > Synchronization").
  - The "sync master" and "sync slave" roles are assigned for the PROFINET interfaces of the CPU and interface module (in the properties of a PROFINET interface: area "Advanced options" > "Real time settings" > "Synchronization").

Procedure

To create an isochronous connection between the I/O and user program, follow these steps:

1. Select the "IM 155-5 PN HF" in the network view of STEP 7. Change to the device view.
2. Insert an I/O module that can be operated isochronously (e.g. DI 16 x 24VDC HF).
3. Go to the "I/O addresses" area in the Inspector window of the selected I/O module.

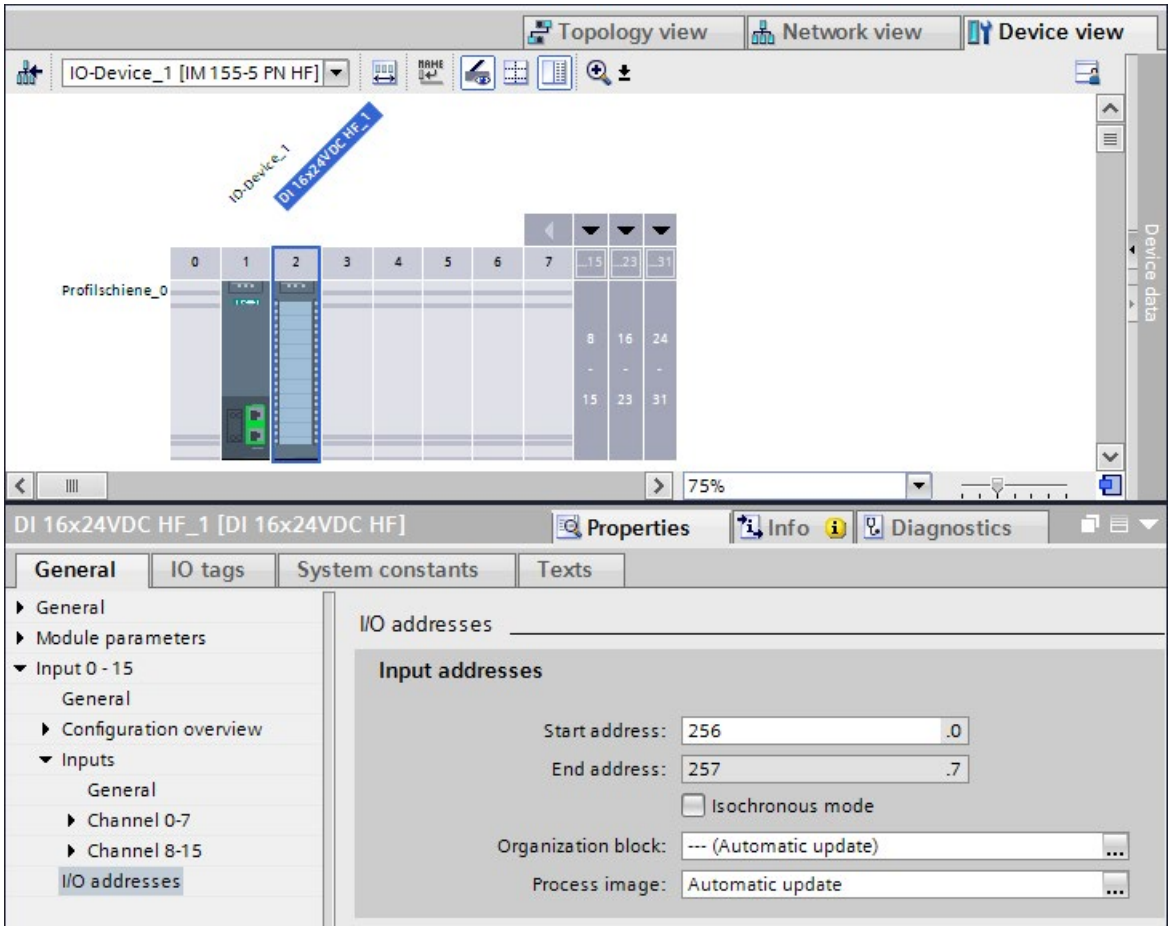

Figure 5-1 Configuring isochronous mode on PROFINET IO

4. Make the following settings in the I/O addresses area:
   - Select the "Isochronous mode" option.
   - Select a process image partition, e.g., process image partition 1.
   - Click the "Organization block" drop-down list. Click the "Add" button or select an already existing OB. A dialog box for selecting organization blocks opens.
   - Select the "Synchronous Cycle" OB. Confirm the selection with "OK".

     In the case of automatic number assignment, OB 61 will be generated and opened.

     In the Inspector window, you can continue directly with the setting of the application cycle and delay time (Page 41) in the "Isochronous mode" area and start the programming of the OB in the instruction section.

5. If required, add additional I/O modules in the central configuration and IO devices in the hardware configuration. Adapt the configuration and the settings for the isochronous mode.
6. You want to retrieve information about calculated bandwidths or for adapting the send clock. Select the PROFINET interface in the network view and navigate to the area "Advanced options" > "Real time settings" > "Synchronization" > "Domain settings".

Reference

You can find more information on PROFINET functions, such as IRT, in the PROFINET (http://support.automation.siemens.com/WW/view/en/49948856) function manual.

You can find examples of parameter assignment and possible settings of isochronous mode for distributed I/O and drives in STEP 7 as FAQs on the Internet (https://support.industry.siemens.com/cs/ww/en/view/109480489).

5.2 Configuring isochronous mode for central I/O in S7-1500

Introduction

The configuring of isochronous mode for a module is described in the following based on an analog input module in S7-1500. The procedure is also valid for other I/O modules that support isochronous mode.

Requirements

- The network view of STEP 7 is open.
- An S7-1500 CPU has been placed (e.g. CPU 1516-3 PN/DP).

Procedure

To create an isochronous connection between the I/O and user program, follow these steps:

1. Select the CPU 1516-3 PN/DP in the network view of STEP 7. Change to the device view.
2. Insert an I/O module that can be operated isochronously (e.g. AI 8 x U/I HS).
3. Go to the "I/O addresses" area in the Inspector window of the selected I/O module.

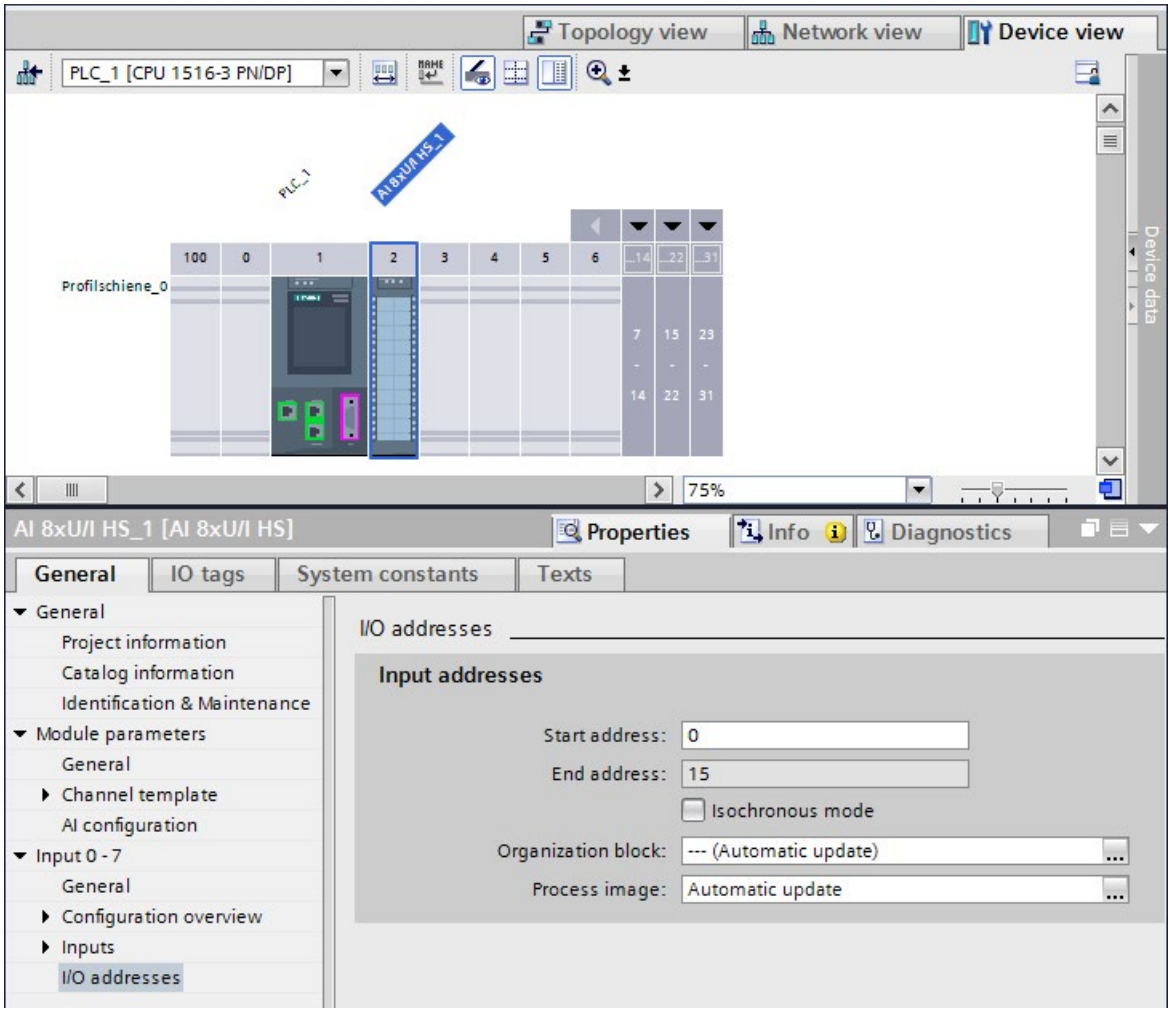

Figure 5-2 Configuring isochronous mode centrally on the AI module

4. Make the following settings in the I/O addresses area:
   - Select the "Isochronous mode" option.
   - Select a process image partition, e.g., process image partition 1.
   - Click on the "Organization block" drop-down list and click the "Add new" button or select an already existing OB. A dialog box for selecting organization blocks opens.
   - Select the "Synchronous Cycle" OB. Confirm the selection with "OK".

     In the case of automatic number assignment, OB 61 will be generated and opened. The "Isochronous mode" area is selected in the Inspector window, and you can continue directly with the setting of the application cycle and delay time (Page 41) and start the programming of the OB in the instruction section.
5. If, due to the utilized modules, the isochronous system only operates with a certain send clock (e.g. 1 ms) but the process values must be sampled faster, use the oversampling function. In the example, you minimize the send clock into 4 sub-clocks using the sampling rate. In this way you sample the process values for the channels of the analog input module every 250 µs.

   In the properties of the analog input module in the "Module parameters" > "AI configuration" area, set a sampling rate of 4 samples per cycle under "Oversampling".

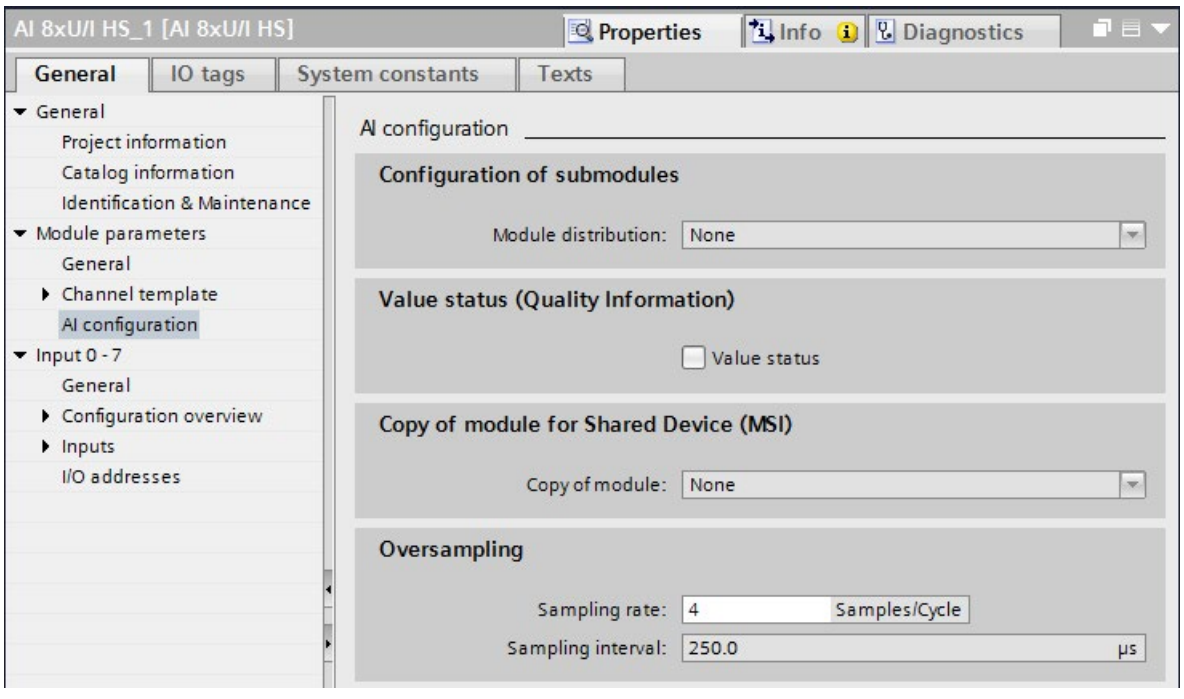

Figure 5-3 Configuring oversampling on the AI module

6. If required, insert additional I/O modules in the device view. Adapt the configuration and the settings for isochronous mode.
7. Select the CPU 1516-3 PN/DP in the device view of STEP 7 in order to check the settings for isochronous mode.
8. Navigate to the "Isochronous mode" area in the Inspector window of the selected CPU

9. In the "Isochronous mode for local modules" area, check to determine if:
   - Isochronous mode is selected
   - "Local send clock" is selected as the synchronization type

   If necessary, you can adapt the send clock and times T_i/T_o for the isochronous read-in/output of data.
10. In the "Detail overview" area, you see all modules of the configuration you can operate isochronously. Select or deselect isochronous mode for the desired modules as appropriate.

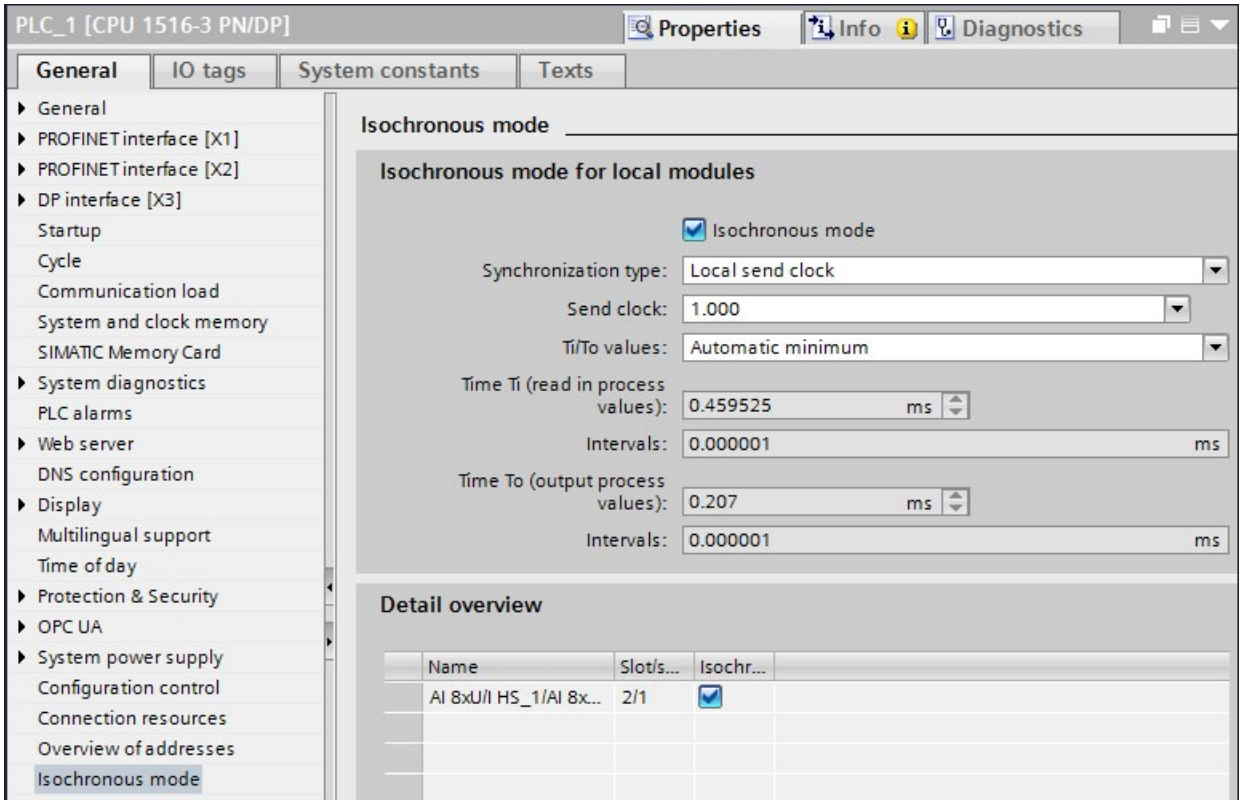

Figure 5-4 Configuring isochronous mode centrally on the CPU

5.3 Configuring joint isochronous operation of central and distributed I/O

Introduction

You can jointly operate central I/O in S7-1500 and distributed I/O on PROFINET IO isochronously.

For the coordination and synchronization of the processing cycles of the central and distributed I/O, you set the same send clock and isochronous mode interrupt OB in STEP 7.

The system clock results from the values for the central and distributed configurations. Foremost here is the PROFINET send clock to which the central configuration is synchronized. If necessary, you must set a higher send clock for PROFINET IO, which takes the overall system into account.

Setting the same send clock for central and distributed I/O

You want to operate modules configured as central I/O in S7-1500 and modules configured as distributed I/O in ET 200MP isochronously with the same send clock.

Requirements

- You have connected distributed I/O in an ET 200MP as isochronous I/O to PROFINET IO (see section Configuring isochronous mode for distributed I/O on PROFINET IO (Page 24)).
- The IO controller is an S7-1500 CPU.
- You have connected central I/O of the S7-1500 as isochronous I/O (see section Configuring isochronous mode for central I/O in S7-1500 (Page 26)).
- You have configured the same isochronous mode interrupt OB and the same process image partition for central and distributed I/O.

Procedure

1. Navigate to the "Isochronous mode" area in the properties of the CPU.
2. In the "Isochronous mode for local modules" area, use "Use send clock of PROFINET interface [X1]" in the "Synchronization type" drop-down list.

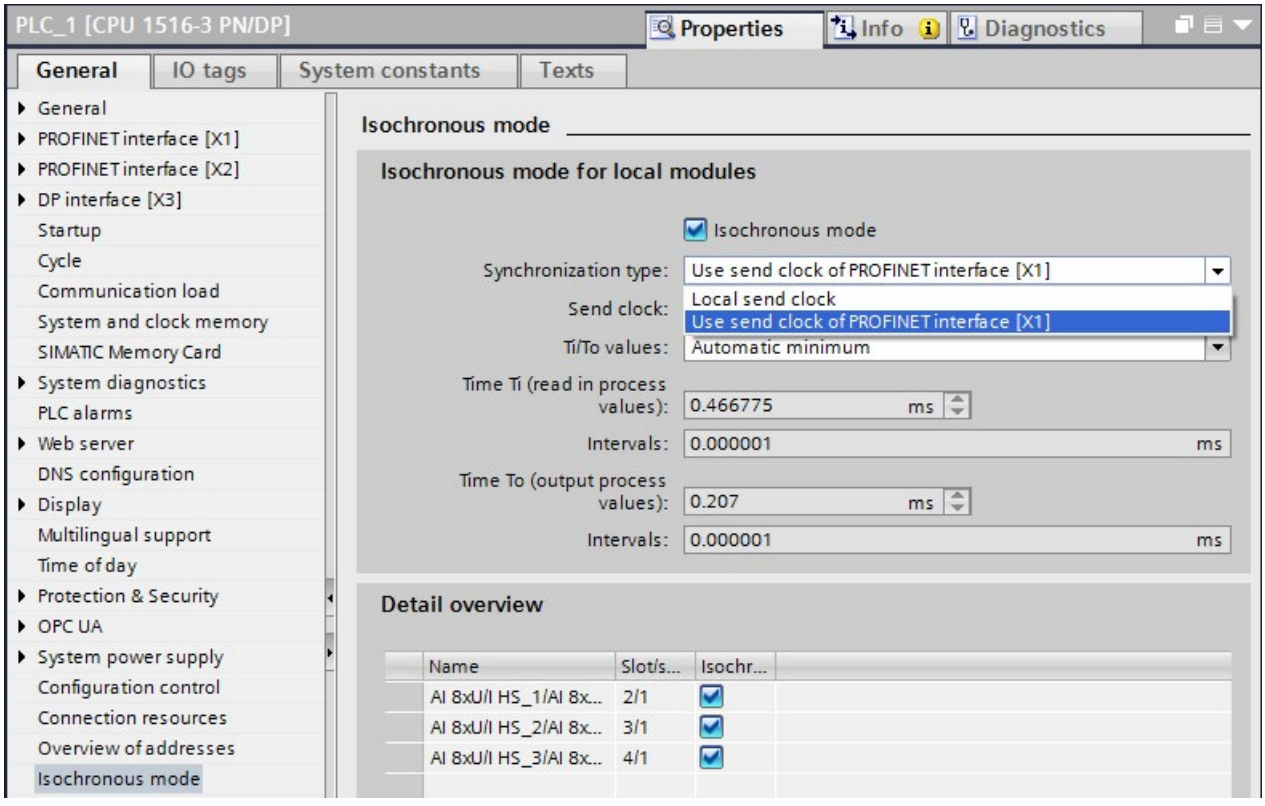

Figure 5-5 Setting the same send clock for central and distributed I/O

Result: The modules in the central configuration have adopted the send clock and the T_I/T_O values from the PROFINET interface X1.

Isochronous mode interrupt OB and process image partition

For joint isochronous operation of central and distributed I/O in a project, the following condition must be met:

Note

Ensure that you have configured the same isochronous mode interrupt OB and the same process image partition for the central and distributed I/O you want to jointly operate isochronously.

5.4 Configuring isochronous mode for distributed I/O on PROFIBUS DP

Introduction

The configuring of isochronous mode is described in the following for a DP slave based on the ET 200S distributed I/O system. The procedure described also applies to other distributed I/O systems, e.g. for ET 200M.

The IO controller is an S7-1500 CPU.

Requirements

- The network view of STEP 7 is open.
- A CPU has been placed (e.g., CPU 1516-3 PN/DP).
- An interface module which supports isochronous mode has been placed and networked with the CPU (e.g., IM 151-1 HF).
- I/O modules have been placed (e.g. 2DI x DC24V HF and 2DO x DC24V/0,5A HF).
- Only the constant bus cycle time master is permitted as active station on the isochronous PROFIBUS DP.
- Assignment of a SYNC/FREEZE group to the DP slave is not permitted.

Procedure for configuring isochronous mode on the DP slave

1. Select the DP slave in the network view. Navigate to the "Isochronous mode" area in the Inspector window.
2. Enable the option for synchronization to the DP cycle for the DP slave.

   Default: The DP slaves get the Ti/To values from the subnet. Therefore, the values are automatically the same for all DP slaves of the DP master system.
3. In the "Detail overview", select the "Isochronous mode" option for all I/O modules you want to operate isochronously.
4. Repeat steps 1 and 3 for all DP slaves that you want to operate in isochronous mode.

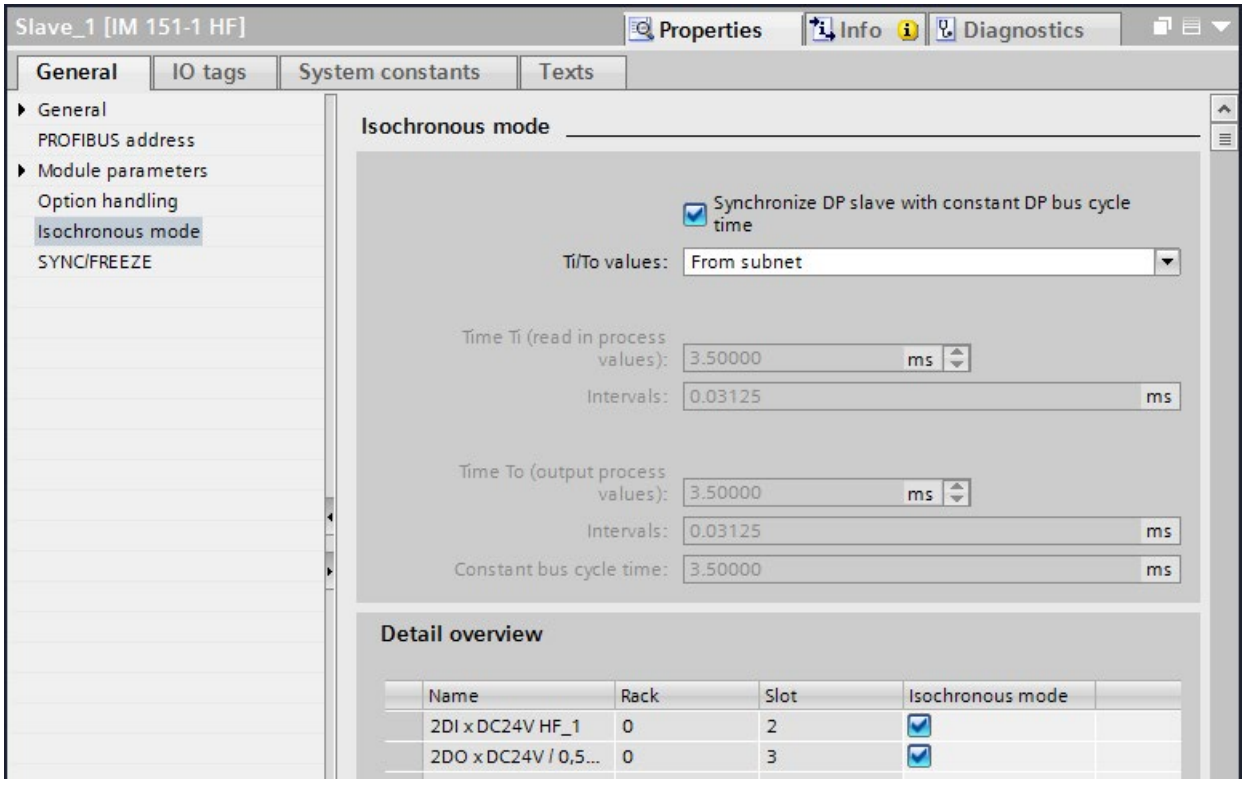

Figure 5-6 Configuring isochronous mode on the DP slave

Procedure for configuring the I/O module

1. Select an I/O module in the device view. Navigate to the "I/O addresses" area in the Inspector window.
   – The option for isochronous mode is selected.

Assign the process image partition and OB to the I/O modules as described in section Configuring isochronous mode for distributed I/O on PROFINET IO (Page 24).

5.5 Configuring isochronous mode for a Motion Control application

Introduction

The configuring of isochronous mode for a Motion Control application with cam output is described in the following.

You connect a SINAMICS V90 drive with a positioning axis to an S7-1500 CPU as isochronous distributed I/O.

The drive is controlled using the CPU-internal Motion Control functions.

You connect the cam output to the CPU as an isochronous cam output using technology module TM Timer DIDQ 16 x 24V.

Requirements

- The network view of STEP 7 is open.
- An S7-1500 CPU has been placed (e.g. CPU 1516-3 PN/DP).

Procedure for configuring isochronous mode for a drive

For isochronous operation of a drive, you configure the drive frame as an isochronous frame. So that the CPU can control the drive, you then assign the drive to a Motion Control technology object of the CPU.

Follow these configuration steps:

1. Insert a SINAMICS V90 drive from the hardware catalog in the network view (Additional Field Devices > PROFINET IO > Drives > SIEMENS AG > SINAMICS > SINAMICS V90 PN).
2. Connect the PROFINET interface of the V90 to the PROFINET interface X1 of the CPU in the network view.
3. Change to the topology view. Interconnect the corresponding ports of the PROFINET interfaces of the devices.
4. Select the V90 and change to the device view.
5. In the properties of the V90, navigate via General > PROFINET interface > Advanced options to the "Isochronous mode" area.
6. Select the "Isochronous mode" option.

7. In the hardware catalog, double-click on Standard Frame 3, ...

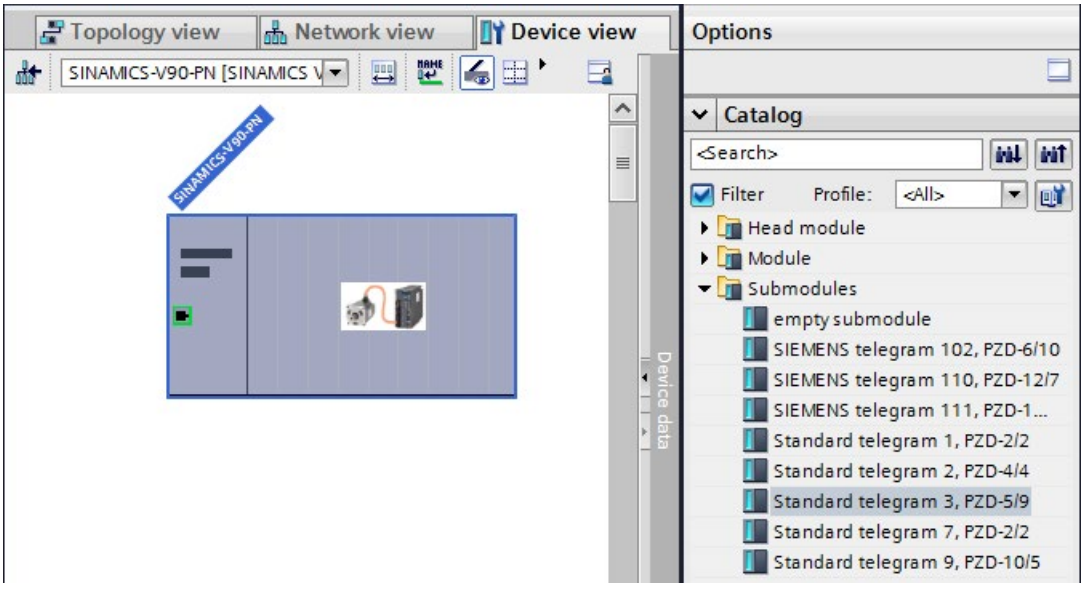

Figure 5-7 Assigning Standard Frame 3 to the V90

8. In the properties of the V90, select the "Isochronous mode" option for Standard Frame 3 in the detail overview.

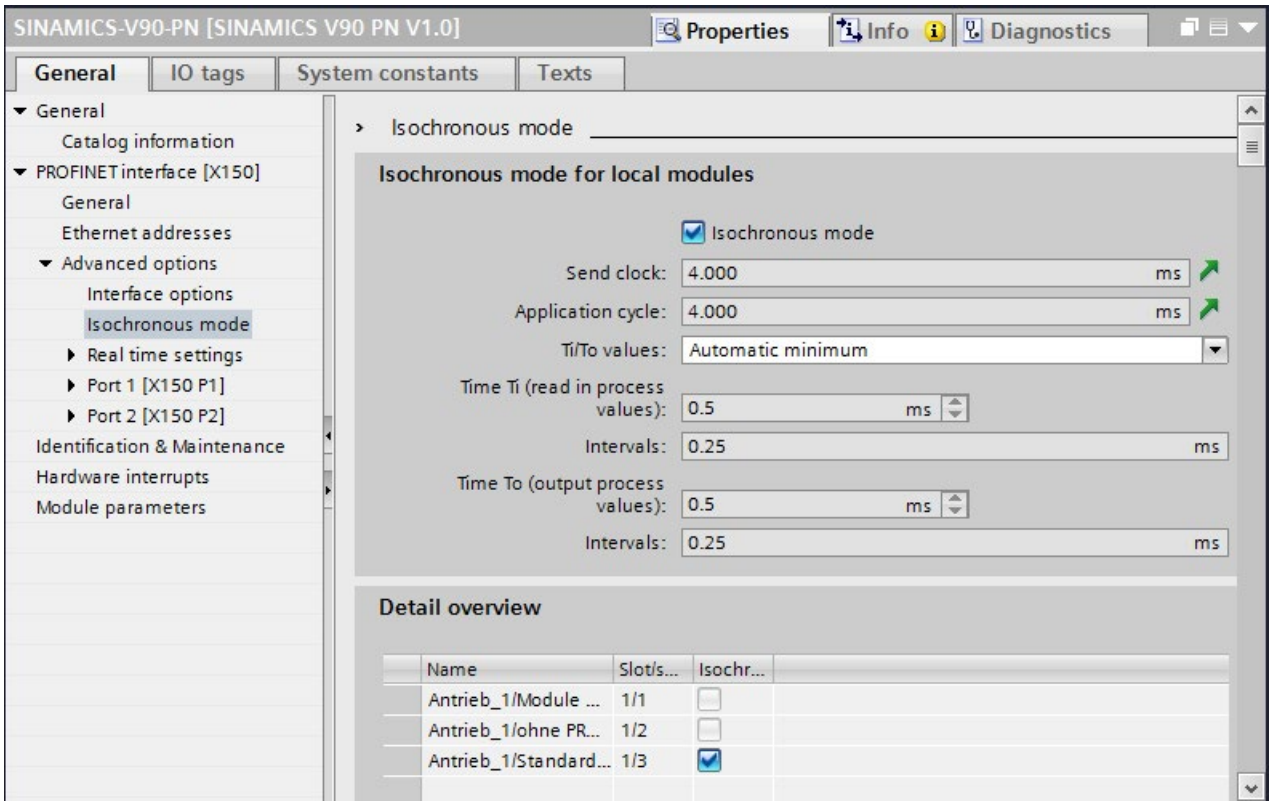

Figure 5-8 Assigning isochronous mode to Standard Frame 3

9. In the project tree, navigate in the folder of the CPU to "Technology objects".
10. Insert a "Positioning axis" technology object.

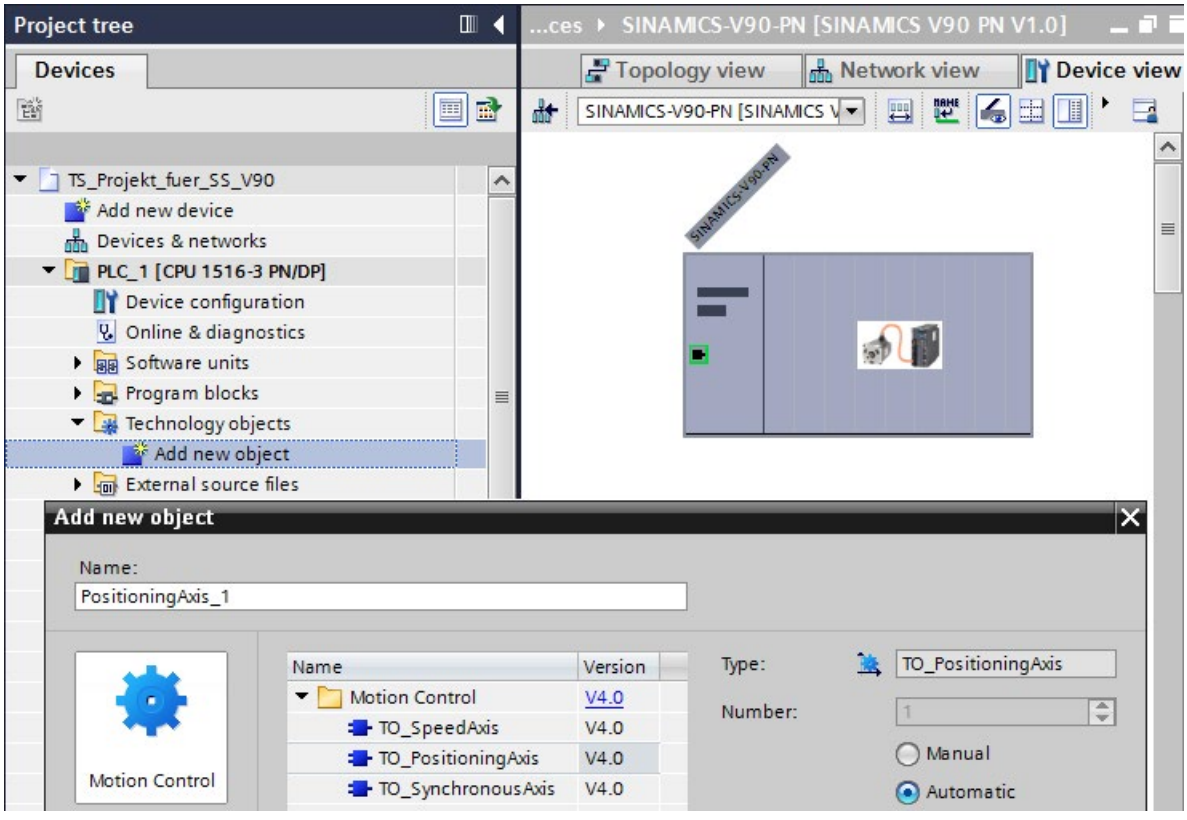

Figure 5-9 Creating a positioning axis technology object

11. Assign the drive V90 to the positioning axis.

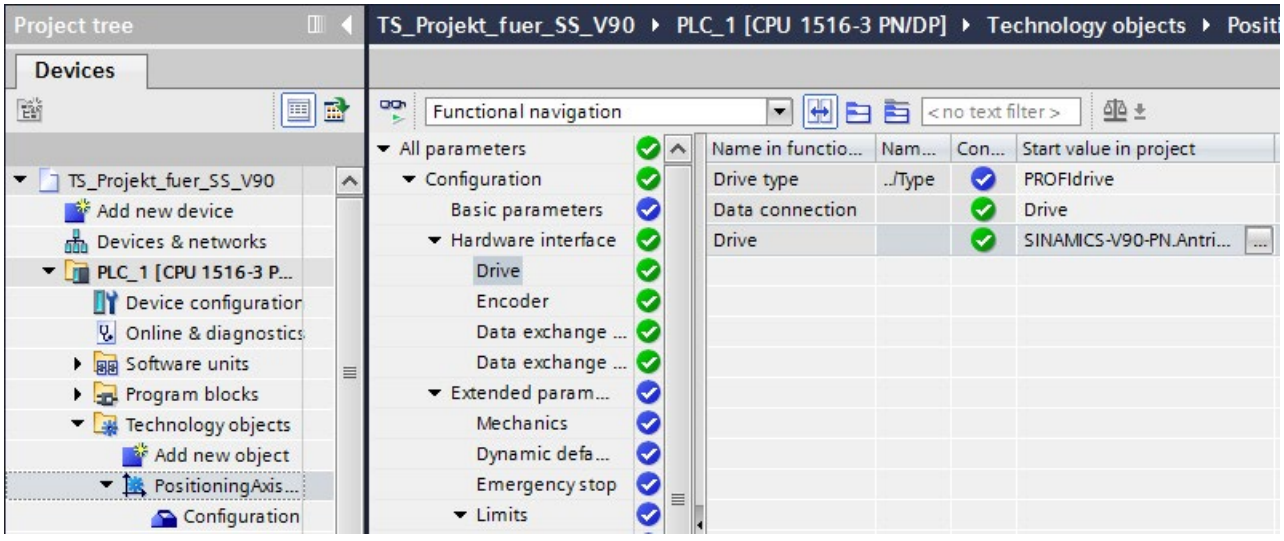

Figure 5-10 Assigning the drive to the positioning axis

Results:

- As soon as an axis was created for the CPU, the MC Servo OB is automatically created and set synchronous to the PROFINET IO.
- The drive is automatically assigned to the MC Servo OB and the TPA OB Servo process image partition when the axis is created.
- The drive is connected as an isochronous drive.

Procedure for configuring isochronous mode for a cam controller using a Timer technology module

For isochronous operation of a cam controller on a CPU, you configure a TM Timer technology module as an isochronous technology module. So that the CPU can control an output cam of the axis isochronously, you assign an output cam to the TM Timer technology module.

Follow these configuration steps:

1. Switch to the device view of the CPU.
2. Select technology module TM Timer DIDQ 16 x 24V from the hardware catalog. Place the technology module in a slot to the right of the CPU.
3. The channel configuration "0 inputs, 16 outputs" and operating mode "Timer DQ" are preset in the properties of the technology module for the individual outputs.
4. In the properties of the technology module, "I/O addresses", select the "Isochronous mode" option.
5. Set the same send clock for central and distributed I/O. You can find more information in the section Configuring joint isochronous operation of central and distributed I/O (Page 30).
6. In the project tree for the positioning axis, add a new output cam under "Output cams".

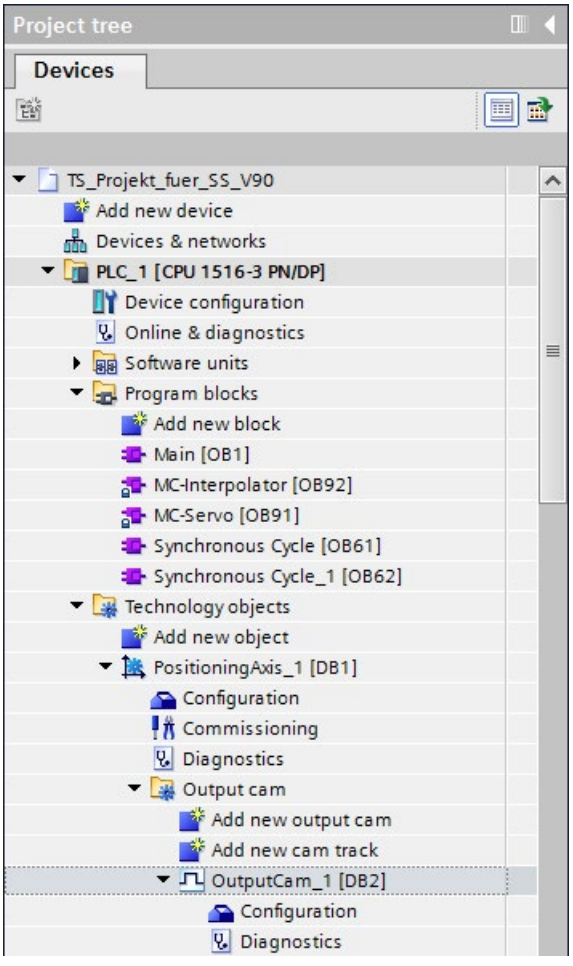

Figure 5-11 Assigning the output cam to the positioning axis

7. In the "Output cam output" area of the configuration, enable output by the technology module for the output cam. Assign a cam output.

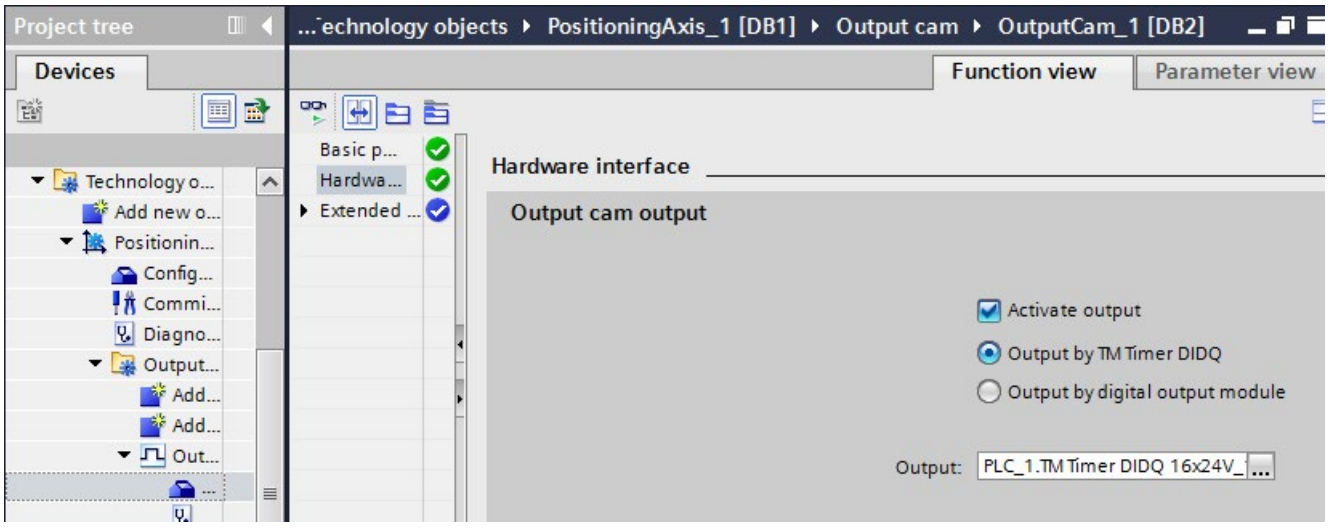

Figure 5-12 Assigning output of the technology module to the output cam

The addresses and TPA OB Servo process image partition are automatically assigned to the technology module.

Result: The cam output is configured as isochronous cam output.

Reference

You can find information on programming isochronous mode for Motion Control applications in section Programming isochronous mode.

You can find additional information on the above-mentioned OBs and their use in the STEP 7 online help.

You can find examples of parameter assignment and possible settings of isochronous mode for distributed I/O and drives in STEP 7 as FAQs on the Internet (https://support.industry.siemens.com/cs/ww/en/view/109480489).

5.6 Setting the application cycle and delay time

Requirements

- You have created an isochronous mode configuration in STEP 7.
- You have created an isochronous mode interrupt OB Synchronous Cycle (OB 6x).
- The isochronous mode interrupt OB is open.

Setting the application cycle

The application cycle is a multiple of data cycle T_DC (send clock). You use the application cycle setting to reduce the CPU utilization caused by execution of the isochronous mode interrupt OB. In the following example, the OB is called only after every 2nd data cycle T_DC in the CPU.

To set the application cycle for your isochronous mode application, follow these steps:

1. Open the "Properties" dialog of the isochronous mode interrupt OB under consideration.
2. In the area navigation, click the "Isochronous mode" group .
3. Set the application cycle in "Application cycle (ms)". Open the drop-down list box and select the application cycle. The drop-down list offers multiples of data cycle T_DC as possible values for the application cycle. Data cycle T_DC is set to 2 ms in the following figure.

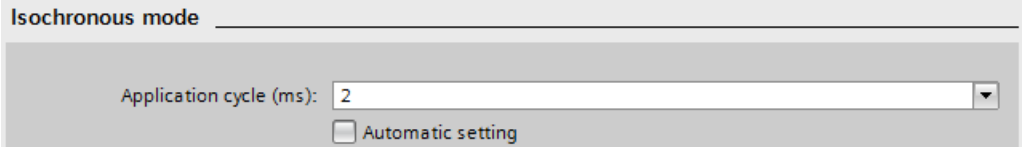

Figure 5-13 Setting the application cycle

Setting the delay time

The delay time is the time between the start of the send clock and the start of the isochronous mode interrupt OB. STEP 7 sets the delay time automatically to the start of the execution window by default. As a result, the isochronous mode update of the process image partition automatically falls within the execution window of the application cycle. Note that you must call the "SYNC_PI" and "SYNC_PO" instructions in the execution window of the application cycle.

You can also set the delay time manually. A shorter delay time enables you to increase the processing time for your user program in the isochronous mode interrupt OB.

To set the delay time for your isochronous mode application, follow these steps:

1. Open the "Properties" dialog of the isochronous mode interrupt OB under consideration.
2. In the area navigation, click the "Isochronous mode" group .
3. Clear the "Automatic setting" check box.
4. Enter your desired delay time in "Delay time (ms)".

Figure 5-14 Setting the delay time

Programming isochronous mode 6

Programming in the isochronous mode interrupt OBs

You program the isochronous section of the program exclusively in the isochronous mode interrupt OBs Synchronous Cycle (OB 6x) and, for Motion Control applications, in the OBs MC-PreServo and MC-PostServo.

The isochronous mode interrupt OBs Synchronous Cycle (OB 6x) apply to the isochronous operation of modules centrally in S7-1500 and in the assigned distributed I/O systems.

Because the isochronous mode interrupts are processed with high priority, only the time-critical sections of the program should be processed in the isochronous mode interrupt OB. The isochronous mode interrupt is called with a configured delay time.

Access to isochronous I/O through call of instructions

You access the isochronous I/O via a process image partition. That is, the addresses of the isochronous modules must be within one process image partition.

The CPU updates the process image partitions of the isochronous I/O in the central and distributed configurations by calling the instructions SYNC_PI and SYNC_PO .

These instructions are not necessary for Motion Control applications. OB MC-Servo automatically updates the process image partitions.

Note

Recommendation: To prevent inconsistent data from being returned to OB 6x, do not use the "DPRD_DAT" and "DPWR_DAT" instructions (direct data access) in the isochronous mode interrupt OB.

The "SYNC_PI" and "SYNC_PO" instructions update the process image partition only within the permitted execution window. The execution window stretches from the end of the cyclical data exchange to the point in time before the end of T_DC at which the outputs can still be copied in time. The data exchange must be started within this time window. If the execution window is violated by the processing of the "SYNC_PI" and "SYNC_PO" instructions, the instructions indicate a corresponding error message.

Program execution models

Depending on your requirements regarding reaction time and execution time of the isochronous mode interrupt OB, there are two basic models for processing the program:

- **IPO** model (read **I**nputs - **P**rocessing - write **O**utputs)
- **OIP** model (write **O**utputs - read **I**nputs - **P**rocessing)

You implement the respective model through the different call sequence of SYNC_PI and SYNC_PO in the user program.

6.1 Program execution according to the IPO model

If the execution time of the isochronous mode interrupt OB is significantly shorter than one data cycle T_DC, use the IPO model. In the IPO model, you do not reduce the data cycle. That is, the application cycle of the isochronous mode interrupt OB is equal to data cycle T_DC.

The IPO model enables the shortest reaction times.

Programming according to the IPO model in the isochronous mode interrupt OB

For programming according to the IPO model:

1. Call the SYNC_PI instruction at the start of the isochronous mode interrupt OB.
2. Then, call the actual user program.
3. Call the "SYNC_PO" instruction at the end of the isochronous mode interrupt OB.

Table 6- 1 Sequence according to the IPO model

Step	Action	Explanation
1	Read in (I)	The SYNC_PI instruction reads in the inputs of the process image partition and provides them to the isochronous mode interrupt OB.
2	Process (P)	The user program in the isochronous mode interrupt OB is executed.
3	Output (O)	The SYNC_PO instruction outputs the data changed by the user program via the process image partition.

Signal sequence in the IPO model

The following figure shows the signal sequence in the IPO model from the acquisition and the processing in the CPU to the output of the process values:

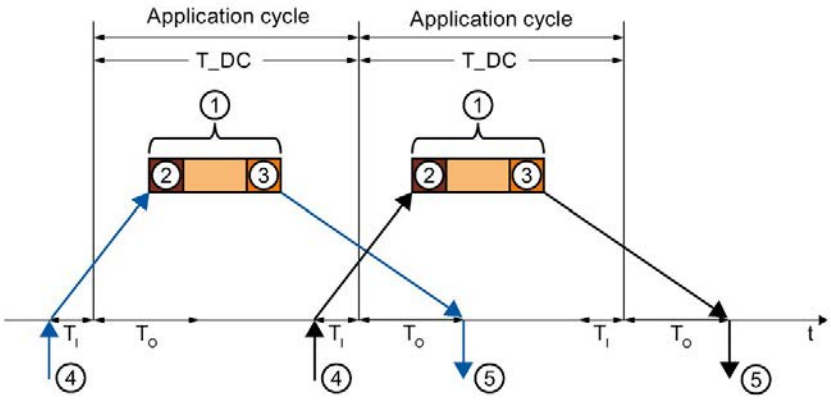

① Execution of isochronous mode interrupt OB
② "SYNC_PI" instruction
③ "SYNC_PO" instruction
④ Isochronous read-in of process values on I/O module at time T_I
⑤ Isochronous output of process values on I/O module at time T_O

Figure 6-1 Signal sequence in the IPO model

At time T_I the process values are read in isochronously on the I/O. The processing of the data in the IPO model is completed within one data cycle T_DC. The output data is always available on the I/O in the next data cycle T_DC at time T_O.

With the IPO model, there is a constant execution time from the "input terminal" to the "output terminal" of T_I + T_DC + T_O.

T_I + 2×T_DC + T_O can be guaranteed for the process response time for asynchronous events.

6.2 Program execution according to the OIP model

Use the OIP model in the case of execution cycles of the isochronous mode interrupt OB of different lengths, if the application cycle is greater than data cycle T_DC.

The data exchange with the process is always deterministic also in the OIP model, which means it takes place at a precisely specified time.

Programming according to the OIP model in the isochronous mode interrupt OB

For programming according to the OIP model:

1. Call the SYNC_PO instruction at the start of the isochronous mode interrupt OB.
2. Then call the SYNC_PI instruction:
3. Then, call the actual user program.

Table 6- 2 Sequence according to the OIP model

Step	Action	Explanation
1	Output (O)	The SYNC_PO instruction outputs the data that was changed by the user program in the previous cycle via the outputs of the process image partition.
2	Read in (I)	The SYNC_PI instruction reads in the inputs of the process image partition of the current cycle and provides the inputs to the isochronous mode interrupt OB.
3	Process (P)	The user program in the isochronous mode interrupt OB is executed.

Signal sequence in the OIP model

The following figure shows the signal sequence in the OIP model from the acquisition of process values and the processing in the CPU to the output of the process values: The application cycle is twice as long as data cycle T_DC in this example.

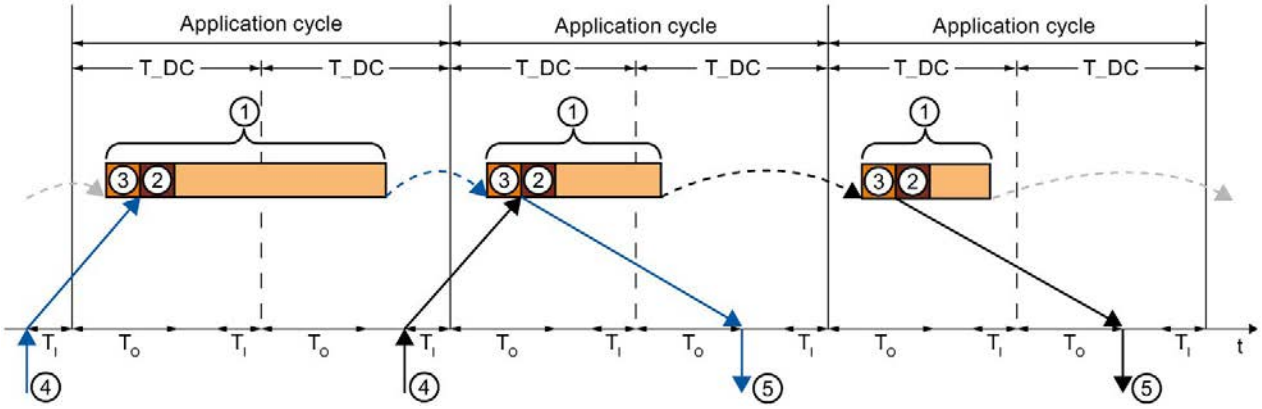

① Execution of isochronous mode interrupt OB
② "SYNC_PI" instruction
③ "SYNC_PO" instruction
④ Isochronous read-in of process values on I/O module at time T_I
⑤ Isochronous output of process values on I/O module at time T_O

Figure 6-2 Signal sequence in the OIP model

At time T_I the process values are read in isochronously on the I/O. The data is processed over 2 application cycles in the OIP model. The output data is always available on the I/O in the following application cycle at time T_DC + T_O.

With the IPO model, there is a constant execution time from the "input terminal" to the "output terminal" of T_I + application cycle + T_DC + T_O.

T_I + 2 x application cycle + T_DC + T_O can be ensured as the process reaction time.

6.3 Programming of isochronous mode for Motion Control applications

MC-Servo, MC-PreServo and MC-PostServo OBs

The CPU-internal Motion Control functions are to control a drive. When an axis is created in the CPU, the MC Servo OB is automatically created in the user program. This OB contains an automatic update of the process image partitions.

If user programs are to be processed synchronized to the MC-Servo OB, integrate the user programs in the MC PreServo or MC PostServo OBs. The SNYC_PI and SYNC_PO instructions are not necessary.

The process image partitions are always updated as follows:

- The inputs are read prior to processing the MC-PreServo OB.
- The outputs are output after processing the MC-PostServo OB.

The runtime of the MC Servo OB must never be longer than the send clock of the isochronous PROFINET IO system. When the runtime of the MC-Servo OB reaches the length of the send clock, you must:

- reduce the application cycle in the properties of the MC-Servo OB

  and

- extend the send clock in the properties of the PROFINET interface of the CPU

Note

The reduction ratio of the MC-Servo OB also influences the axis control of the Axis technology object.

Interferences at the axis may not be compensated for satisfactorily by a reduction ratio that is set too high.

Reference

You can find additional information on the above-mentioned OBs and their use in the STEP 7 online help.

You can find examples of parameter assignment and possible settings of isochronous mode for distributed I/O and drives in STEP 7 as FAQs on the Internet (https://support.industry.siemens.com/cs/ww/en/view/109480489).

Glossary

Analog-to-digital conversion

Conversion of analog input signals into digital signals for processing in the CPU.

Application, isochronous

User program in the isochronous mode interrupt OB. The user program in the isochronous mode interrupt OB ensures the isochronous and consistent updating of the assigned process image participation.

Automation system

Programmable logic controller for the open-loop and closed-loop control of process chains in process and production engineering. The automation system consists of different components and integrated system functions depending on the automation task.

Backplane bus

The backplane bus is a serial data bus for module intercommunication and the distribution of the necessary power to the modules.

Bus

A bus is a transmission medium that interconnects several devices. Data transmission can take place electrically or via optical fiber, both in series and in parallel.

CPU

Central **P**rocessing **U**nit - Central module of the S7 automation system with a control and arithmetic unit, memory, operating system and interface for programming device.

Delay time

In isochronous mode, the delay time is the time between the send clock and the start of the isochronous mode interrupt OB. During this time, the IO controller/DP master performs the cyclic data exchange with the IO devices/DP slaves.

Determinism

Determinism means that a system responds in a predictable (deterministic) manner.

Direct access, direct data access

As an alternative to access via the process image, you also have direct read and write access to the I/O, if this is necessary for programming reasons. A direct (write) I/O access also writes to the process image. This prevents a subsequent output of the process image from overwriting the value written by direct access.

Distributed I/O system

System with I/O modules at a distance from the CPU controlling them.

DP master

A master that behaves in accordance with EN 50170, Part 3, is called a DP master.

→ *See also Master*

DP slave

A slave operated on PROFIBUS with the PROFIBUS DP protocol and in accordance with EN 50170, Part 3 is called a DP slave.

→ *See also Slave*

Execution window

The "SYNC_PI" and "SYNC_PO" instructions can update the process image partition only within the permitted execution window in isochronous mode. The execution window refers to the time period during which a call of the SYNC_PI and SYNC_PO instructions is possible, i.e. from the end of the cyclic data exchange until the point in time before the end of data cycle T_DC at which the outputs can still be transferred to the I/O in time. In STEP 7 the delay time is preset to the start of the execution window. A violation of the execution window is signaled by an error message at the block call.

I/O modules

All modules that can be operated with a CPU or an interface module.

I-device

The "I-device" (intelligent IO device) functionality of a CPU allows it to exchange data with an IO controller and thus to be used as an intelligent preprocessing unit of sub-processes. In its role as an IO device, the I-device is connected to a "higher-level" IO controller.

Interface module

Module in the distributed I/O system. The interface module connects the distributed I/O system to the CPU (IO controller) via a fieldbus and processes the data for and from I/O modules.

IO controller, PROFINET IO controller

Central device in a PROFINET system, usually a classic programmable logic controller or PC. The IO controller sets up connections to the IO devices, exchanges data with them and thus controls and monitors the system.

IO device, PROFINET IO device

Distributed I/O device of a PROFINET system that is monitored and controlled by an IO controller (e.g. distributed inputs/outputs, valve blocks, frequency converters, switches).

IRT

IRT is a synchronized transmission method for the cyclic exchange of IRT data between PROFINET devices. A reserved bandwidth within the send clock is available for the IRT data. The reserved bandwidth guarantees that the IRT data can be transferred at reserved, synchronized intervals without being affected by other higher network loads (e.g. TCP/IP communication or additional real-time communication).

I-slave

The "I-slave" functionality of a CPU allows it to exchange data with a DP master and thus to be used, for example, as an intelligent preprocessing unit of sub-processes. In its role as a DP slave, the I-slave is connected to a "higher-level" DP master.

Master

Higher-level, active device on the communication network/PROFIBUS subnet. It has bus access rights (token), sends data and requests data.

Network

A network consists of one or more linked subnets with any number of devices. Several networks can exist alongside each other.

Organization block

Organization blocks (OBs) form the interface between the operating system of the CPU and the user program. The organization blocks determine the order in which the user program is executed.

Parameter

1. Variable of a STEP 7 code block:
2. Variable for setting the behavior of a module (one or more per module)

In its delivery state, each module has an appropriate basic setting that can be changed by configuring in STEP 7.

There are static and dynamic parameters

Parameter assignment

Parameter assignment is the transfer of parameters from the IO controller/DP master to the IO device/DP slave.

Process image (I/O)

The CPU transfers the values from the input and output modules to this memory area. At the start of the cyclic program, the CPU transfers the process image output as a signal state to the output modules. The CPU then reads the signal states of the input modules to the process image inputs. Next the CPU executes the user program.

Process image partition

In a process image partition, you group input and output data according to its use in the program and assign the data to an OB.

PROFIBUS

Process **Fi**eld **Bus** - European Fieldbus standard.

PROFIBUS DP

A PROFIBUS with DP protocol that acts in conformance with EN 50170. DP stands for decentralized peripherals (fast, real-time capable, cyclic data exchange). From the perspective of the user program, the distributed I/O is addressed in exactly the same way as the central I/O.

PROFINET

Open component-based industrial communication system based on Ethernet for distributed automation systems. Communication technology promoted by the PROFIBUS User Organization.

PROFINET IO

Communication concept for the realization of modular, decentralized applications within the scope of PROFINET.

PROFINET IO is based on switched Ethernet with full-duplex operation and a transmission bandwidth of 100 Mbps.

PROFINET IO system

PROFINET IO controller with assigned PROFINET IO devices.

Reaction time

The reaction time in the case of cyclic or time-controlled program execution is the time between the detection of an input signal and the change of a connected output signal.

RT

PROFINET IO with **R**eal **T**ime communication (RT) is the optimal transmission method for time-critical applications in factory automation. PROFINET IO frames are prioritized over standard frames in accordance with IEEE802.1Q. This ensures the required determinism in the automation technology.

Send clock

Period between two consecutive intervals for IRT or RT communication. The send clock is the shortest possible transmission interval for the data exchange. If IRT is activated for an IO device, T_DC is equal to the send clock.

Slave

A slave can only exchange data with a master after a request by the master.

→ *See also DP slave*

STEP 7

STEP 7 is an engineering system and includes programming languages for the creation of user programs for SIMATIC S7 controllers.

Subnet

Part of a network whose parameters must be coordinated for the devices (e.g. for PROFINET). A subnet includes the bus components and all connected devices. Subnets can be connected, for example, using gateways or routers, to form a network.

T_DC

→ *See Send clock*

User program

SIMATIC differentiates between the operating system of the CPU and user programs. The user program contains all instructions and declarations as well as data for the signal processing that enable a plant or process to be controlled. The user program is assigned to a programmable module (e.g. CPU) and can be structured in smaller units.

Index

A

Application cycle, 22
    Setting, 41
Axis
    Isochronous, 39

C

Cam
    Isochronous, 39

D

Data cycle, 18, 20
Delay time, 22
    Setting, 41
DP cycle time, 18, 22
DP slave, 33
Drive
    Isochronous, 34

E

Execution window, 43

I

I/O addresses, 22
IO device, 25
IPO model, 43, 44
IRT, 22
Isochronous mode
    Configuring, 25, 27, 33
    Definition, 12
    Example, 16
    Time synchronization, 18, 20
Isochronous mode interrupt OB, 18, 20, 22, 31
    OB 6x, 43

L

Lead time, 18, 20

M

Motion Control application, 34

O

OB MC PostServo, 48
OB MC PreServo, 48
OB MC Servo, 43, 48
OIP model, 43, 46
Oversampling, 27

P

Process image partition, 31

R

RT class, 22

S

Send clock, 18, 20, 22, 30
Sync domain, 22
SYNC_PI, 43, 44, 46
SYNC_PO, 43, 44, 46
Synchronous Cycle, 43

T

T_DC, 18, 20, 22, 45, 47
Ti, 18, 20
To, 18, 20
Topology configuration, 22